APPROVED
Nov 06 2025
BOARD OF RECREATION
AND PARK COMMISSIONERS

BOARD REPORT **NO**. 25-199

DATE November 06, 2025 C.D. 2,6

BOARD OF RECREATION AND PARK COMMISSIONERS

SUBJECT: VALLEY VILLAGE PARK STORMWATER CAPTURE (SCP0009) (W.O.#EW40085F) PROJECT, FERNANGELES PARK STORMWATER CAPTURE (SCP0002) (W.O#EW40079F) PROJECT, AND STRATHERN PARK NORTH STORMWATER CAPTURE (SCP0003) (W.O#EW40080F) PROJECT – APPROVAL OF FINAL PLANS AND SPECIFICATIONS; CONCURRENCE WITH THE BOARD OF WATER AND POWER COMMISSIONERS' ADOPTION OF THE INITIAL STUDY/MITIGATED NEGATIVE DECLARATION AND RELATED FINDINGS PURSUANT TO THE CALIFORNIA ENVIRONMENTAL QUALITY ACT (CEQA)

B. Aguirre		M. Rudnick	
B. Jones		for * C. Santo Domingo	DF
C. Stoneham		N. Williams	

General Manager

Approved x Disapproved Withdrawn

RECOMMENDATIONS

1. Review, consider and concur with the adoption of the Initial Study/Mitigated Negative Declaration (IS/MND) for the Stormwater Capture Parks Program (SCH Number 2021010053), which includes the Valley Village Park project, Fernangeles Park project, and the Strathern Park North project, by the Board of Water and Power Commissioners, finding that on the basis of the whole record of proceedings of the projects, including the Draft IS/MND, all comments received, and the Final IS/MND on file in the Board Office and in custody of the RAP, Planning, Construction and Maintenance Branch located at 221 North Figueroa Street, Suite 400, Los Angeles, California, that there is no substantial evidence that the projects will have a significant effect on the environment or effects have been mitigated to a level less than significant, that all potentially significant environmental effects of the projects have been properly disclosed and evaluated in the IS/MND in compliance with the California Environmental Quality Act (CEQA) and the State and City CEQA Guidelines, and reflects RAP's independent judgment and analysis (Attachment No. 1);

2. Review, consider and concur with the adoption by the Board of Water and Power Commissioners of the Mitigation Monitoring and Reporting Program (MMRP), which specifies the mitigation measures to be implemented in accordance with CEQA Guidelines Section 15074(d)) (Attachment No. 2);

3. Approve the final plans (Attachment No. 4) and specifications (Attachment No. 5) substantially in the form on file in the Board of Recreation and Park Commissioners

(Board) Office and as attached to this Report, for the Valley Village Park Stormwater Capture project (SCP0009) (W.O # EW40085F);

4. Approve the final plans (Attachment No. 6) and specifications (Attachment No. 7) substantially in the form on file in the Board Office and as attached to this Report, for the Fernangeles Park Stormwater Capture project (SCP0002) (W.O # EW40079F);

5. Approve the final plans (Attachment No. 8) and specifications (Attachment No. 9) substantially in the form on file in the Board Office and as attached to this Report, for the Strathern Park North Stormwater Capture project (SCP0003) (W.O # EW40080F); and,

6. Authorize RAP staff to make technical corrections as necessary to carry out the intent of this Report.

SUMMARY

The Los Angeles Department of Water and Power (LADWP), Department of Public Works, Bureau of Engineering (BOE), and the Department of Recreation and Parks (RAP) are committed to continuing the delivery of the Stormwater Capture Parks Program (Program). The goal of the Program is to alleviate local flooding, increase water supplies through stormwater capture and groundwater infiltration recharge, improve the quality of stormwater, and provide recreational, social, and economic benefits.

On January 15, 2019, the Board of Public Works approved the execution of the Memorandum of Agreement (MOA) between the BOE and the LADWP to provide design services for the Stormwater Capture Parks Program. Throughout the design process, BOE and LADWP received technical reviews from RAP staff on all nine projects.

Originally, the Program consisted of nine project sites, all located at RAP facilities; however, due to the lack of funding secured for the North Hollywood Park and Alexandria Park, these two projects are not part of the Implementation MOA that was approved by the Board of Recreation and Park Commissioners on August 1, 2024. The remaining seven projects will capture approximately 1,800 acre-feet of stormwater and urban runoff per year from a 3,410-acre drainage area and divert the runoff into subterranean infiltration galleries located under City of Los Angeles parks for infiltration into the underlying groundwater basin.

The **Valley Village Park Stormwater Capture project** is located at 5000 N. Westpark Dr, North Hollywood, CA 91601. This project consists of installing a 0.7-acre underground infiltration gallery to capture, infiltrate stormwater, and recharge the San Fernando Groundwater Basin (SFGB). Construction of the underground infiltration gallery will include installation of one storm drain diversion structure, storm drain pipes, one hydrodynamic separator (HDS) unit, infiltration galleries, flow measuring devices, a new irrigation system and educational signage. Above ground improvements will include permeable paved grasscrete, stabilized decomposed granite, grass surface pavers and installation of steel benches. Runoff will be collected from approximately a 453-acre tributary area and diverted into the infiltration gallery with an estimated average yield of up to 136 Acre Feet per Year (AFY).

The **Fernangeles Park Stormwater Capture project** is located at 8851 Laurel Canyon Blvd, Sun Valley, Ca 91352. This project consists of installing a 1.7-acre underground infiltration gallery to capture, infiltrate stormwater, and recharge the SFGB. Construction of the underground infiltration gallery will include installation of catch basins, storm drain pipes, three HDS units, infiltration gallery, flow measuring devices, a new irrigation system and education signage. Above ground improvements will include restoration of two baseball fields, bleachers, dugouts, sports lighting, batting cages, bullpens, parking lot restriping, and green street elements. Runoff will be collected from approximately a 317-acre tributary area and diverted into the infiltration gallery with an estimated average yield of up to 202 AFY.

The **Stathern Park North Stormwater Capture project** is located at 8041 Whitsett Ave, North Hollywood, CA 91605. This project consists of installing a 1.4-acre underground infiltration gallery to capture, infiltrate stormwater, and recharge the SFGB. Construction of the underground infiltration gallery will include installation of a diversion structure, maintenance holes, storm drain pipes, a hydrodynamic separator, infiltration gallery, desilting basin, flow measuring device, a new irrigation system and educational signage. Above ground improvements will include the installation of two new baseball fields, including bleachers, dugouts, sports lighting, fencing and gates, batting cages, and bullpens. Runoff will be collected from approximately a 445-acre tributary area and diverted into the infiltration gallery with an estimated average yield of up to 225 AFY.

On December 16, 2024, the Board of Public Works adopted the following:

- Memorandum of Agreement (MOA) detailing the working arrangement between LADWP, BOE, and RAP, for the construction and maintenance of the Stormwater Capture Parks Program (Attachment No. 10)

- Under the California Public Resources Code, Section 21166 and CEQA Guidelines Section 15162, on the basis of substantial evidence contained in the whole record, no additional environmental review is necessary.

On August 1, 2024, the Board of Recreation and Park Commissioners approved the MOA. On July 23, 2024, the Board of Water and Power Commissioners approved the MOA.

On September 21, 2021, Board of Water and Power Commissioners adopted the following:

- Initial Study/Mitigated Negative Declaration (IS/MND) pursuant to California Environmental Quality Act (CEQA), which found that, on the basis of the whole record, with the incorporation of described mitigation measures, there was no substantial evidence that the projects will have a significant effect on the environment and that the IS/MND reflects the City of Los Angeles' independent judgment and analysis (Attachment No. 1)

Community outreach was performed throughout the Predesign and Design phases of the three projects. Council Districts 2 and 6 (CD2 & CD6) have ensured the community was involved throughout the design process, by assisting staff from RAP, BOE, and LADWP in coordinating community meetings between August 2020 through February 2022. The communities showed

interest in these projects due to their multi-use benefits, and the long-term impact it will have on their respective community. The communities, CD2 & CD6 are in full support of their respective projects.

The plans for the Valley Village Park were prepared by Carollo under the supervision of the BOE, Clean Water Division.

The plans for Fernangeles Park and Strathern Park North were prepared by CDM Smith, with the supervision of the BOE, Clean Water Division.

These projects will be bid and awarded through the Department of Public Works. Construction will be managed by the Department of Public Works, Bureau of Engineering, Construction Management Division.

FUNDING SOURCE

Valley Village Park	AMOUNT
Measure W Awarded Funding	$3,177,344
Storm Water Grant (SWGP) Prop 1 R2	$5,000,000
Bureau of Reclamation (BOR) WaterSMART	$5,000,000
LADWP	$2,591,656

Fernangeles Park	AMOUNT
Measure W Awarded Funding	$8,360,748
Caltrans	$17,070,000
LADWP	$10,556,252

Strathern Park North	AMOUNT
Measure W Awarded Funding	$9,278,606
Integrated Regional Water Management (IRWM) Prop 1 R1	$786,626
Caltrans	$13,141,000
LADWP	$11,651,768

TREES AND SHADE

The overall projects were designed to capture the 85th percentile 24-hour storm event, while also avoiding the removal of existing trees to the extent feasible. There are 203 existing trees within the **Valley Village Park** project site. Thirty-eight of the trees are required to be removed to make room for the infiltration gallery construction. In total 320 caliper inches will be removed. As a replacement, and following the RAP tree replacement policy, 80 new trees will be planted at the project site, which would result in 320 caliper inches added. The trees will be fully mitigated onsite. Per the MOA, if necessary, LADWP will collaborate with RAP after construction of the Program and enter into a separate contract to identify locations and complete any unfulfilled tree mitigation requirements at LADWP's cost, as set by RAP.

The proposed new trees include eight Jacaranda Mimosifolia “Jacaranda”, eleven Lophostemon Confertus “Brisbane Box”, sixteen Pinus Torreyana “Torrey Pine”, Twenty-seven Pistacia X ‘Red Push’ “Pistache”, Thirteen Quercus Argrifolia “Coast Live Oak”, and five Quercus Buckleyi “Buckley Oak.”

There are 109 existing trees within the **Fernangeles Park** project site. Nine of the trees are required to be removed to make room for the infiltration gallery construction. In total 172 caliper inches will be removed. As a replacement, and following the RAP tree replacement policy, 35 new trees will be planted at the project site, which would result in 108 caliper inches added. There is a delta of minus 64 caliper inches because there isn’t sufficient space within the project site to plant more than 35 trees. Per the MOA, if necessary, LADWP will collaborate with RAP after construction of the Program and enter into a separate contract to identify locations and complete any unfulfilled tree mitigation requirements at LADWP’s cost, as set by RAP.

The proposed new trees include six Lophostemon Confertus “Brisbane Box”, eighteen Pistache Chinensis “Chinese Pistache”, eight Quercus Virginiana “Southern Live Oak” and three Tipuana Tipu “Tipu Tree.”

Lastly, there are 18 existing trees within the **Strathern Park North** project site. Zero trees will be removed from this project site. Thirty-six new trees will be planted at the project site, which would result in seventy-two caliper inches added.

The proposed new trees include sixteen Lophostemon Confertus “Brisbane Box”, eighteen Pistache Chinensis “Chinese Pistache”, and two Quercus Buckleyi “Texas Red Oak”.

ENVIRONMENTAL IMPACT

LADWP served as the City’s California Environmental Quality Act (CEQA) Lead City Department and prepared an Initial Study/Mitigated Negative Declaration (IS/MND) that analyzed all nine original Program sites. The Draft IS/MND was released for public review in January 2021, and the Final IS/MND, prepared July 2021, was adopted by the Board of Water and Power Commissioners on September 14, 2021, along with the Mitigation Monitoring and Reporting Program (MMRP). A Notice of Determination (NOD) was filed with the Los Angeles County Clerk on September 21, 2021. The MMRP includes 22 mitigation measures to reduce environmental impacts from construction activities.

In accordance with the requirements of the CEQA, an Initial Study (IS) determined that a Mitigated Negative Declaration (MND) could be prepared for the Program, which includes the Valley Village Park, Fernangeles Park and Strathern Park North projects, because all its potentially significant environmental effects could be mitigated to a level less than significant. The IS/MND was circulated to all interested parties and responsible agencies for a 30-day review and comment period from January 7, 2021 to February 8, 2021. During this public review period, eight comment letters were received. Comments pertaining to environmental issues and the information and analysis contained in the Draft IS/MND received detailed responses. Comments that raise issues not directly related to the substance of the environmental analysis in the IS/MND were noted but, in accordance with CEQA, did not receive a detailed response.

The Draft IS/MND identified environmental impacts from construction activities related to air quality, biological resources, cultural resources, geology and soils, noise, transportation, and wildfire that required mitigation measures to reduce these impacts to less than significant.

In accordance with Section 15097 of the State CEQA Guidelines, an MMRP, attached to this report as Attachment No. 2, has been prepared that specifies all the mitigation measures identified in the IS/MND, which will either reduce to a level of insignificance or eliminate the potentially significant environment impact of the proposed project. These measures include stringent air quality controls such as using low-emission equipment and managing dust; protecting biological resources by conducting pre construction surveys and avoiding nesting seasons; safeguarding cultural resources through monitoring by qualified professionals and implementing cultural sensitivity training; ensuring paleontological oversight during excavations; managing hazardous materials and coordinating safety protocols near schools; and reducing construction noise impacts with equipment restrictions, noise barriers, and community notifications. The MMRP also includes specific guidelines for addressing impacts on historical structures and protocols for dealing with unanticipated discoveries of significant resources during construction.

Additionally, for the Strathern Park North site, the MMRP (Section HAZ-3) directed the City to conduct further investigation of the nature and extent of landfill materials and contaminated soil at this site. An Additional Phase II Environmental Site Assessment (ESA) was performed. Based on the presence of waste found at the site, and the recommendations per the ESA, a Waste Management Plan, Community Health and Safety Plan and a Post Closure Land Use (PCLU) plan were prepared. A letter of approval from the Local Enforcement Agency (LEA) was obtained on October 13, 2022.

BOE's Environmental Management Division reviewed the environmental documents for the Program, including the IS/MND and MMRP, and prepared a technical memo (Attachment No. 3) analyzing whether additional environmental review was triggered under CEQA Guidelines Section 15162. Per the technical memo, their analysis was the following, "...the City has determined that on the basis of the substantial evidence, in light of the whole record, that no substantial changes have occurred to the Program, no substantial changes have occurred regarding the circumstances under which the Program is undertaken that would require major revisions of the adopted IS/MND, and no new information has come to light since adoption of the IS/MND that causes significant effects not discussed in the IS/MND."

Based on this information, after reviewing the IS/MND, the MMRP and the technical memo, RAP staff recommends that the Board of Recreation and Park Commissioners (Board) concur with the Board of Water and Power Commissioners' adoption of the IS/MND on the basis of the whole record of proceedings of the project, including the Draft IS/MND, all comments received, and the Final IS/MND on file in the Board Office and in custody of RAP Planning, Construction and Maintenance Branch located at 221 North Figueroa Street, Suite 400, Los Angeles, California. Staff also recommends that the Board concur with the Board of Water and Power Commissioners' adoption of the MMRP.

FISCAL IMPACT

Valley Village Park

The City Engineer's estimate of the Project's construction cost is $12,517,100. The budgeted amount for construction contingency is $1,251,900.

LADWP has secured $11,177,344 through the Measure W, Safe Clean Water Program, SWGP Prop 1 R2, and BOR WaterSmart grants. The remaining amount will be funded by LADWP's internal funding sources. LADWP continues to seek additional state and federal grants for this project.

There will be no fiscal impact to RAP's General Fund associated with the project. Operations and maintenance costs will be evaluated and included in future RAP annual budget requests.

Fernangeles Park

The City Engineer's estimate of the Project's construction cost is $33,325,400. The budgeted amount for construction contingency is $2,661,600.

The proposed construction costs, as well as RAP's additional staff to perform tasks related to this project and additional storage bin costs, is approximately $33,507,904. LADWP has secured $25,430,748 through the Measure W, Safe Clean Water Program, and Caltrans grants. The remaining amount will be funded by LADWP's internal funding sources. LADWP continues to seek additional state and federal grants for this project.

There will be no fiscal impact to RAP's General Fund associated with the project. Operations and maintenance costs will be evaluated and included in future RAP annual budget requests.

Strathern Park North

The City Engineer's estimate of the Project's construction cost is $31,689,524. The budgeted amount for construction contingency is $3,168,476.

LADWP has secured $23,206,232 through the Measure W, Safe Clean Water Program, IRWM Prop 1 R1, and Caltrans grants. The remaining amount will be funded by LADWP' internal funding sources. LADWP continues to seek additional state and federal grants for this project.

There will be no fiscal impact to RAP's General Fund associated with the three projects. Operations and maintenance costs will be evaluated and included in future RAP annual budget requests

This Report was prepared by Eduardo Hernandez, Project Manager, Department of Public Works, BOE Clean Water Division; reviewed by Roshanak Varjavand, Senior Civil Engineer / Clean Water Division and Christopher Johnson, Principal Civil Engineer, BOE Clean Water Division; and Darryl Ford, Superintendent, Department of Recreation Parks, Planning, Construction and Maintenance Branch.

LIST OF ATTACHMENTS

Attachment No. 1 – Draft IS/MND and Final IS/MND for the Program
Attachment No. 2 – Revised MMRP, dated November 2024

Note: Attachments Nos. 1 and 2 can be downloaded from the link below:
https://engineering.lacity.gov/about/divisions/clean-water/ladwp-stormwater-capture-parks-program

Attachment No. 3 – Technical Memorandum regarding the CEQA subsequent review
Attachment No. 4 – Final Plans (Valley Village Park)
Attachment No. 5 – Final Specifications (Valley Village Park)
Attachment No. 6 – Final Plans (Fernangeles Park)
Attachment No. 7 – Final Specifications (Fernangeles Park)
Attachment No. 8 – Final Plans (Strathern Park North)
Attachment No. 9 – Final Specifications (Strathern Park North)
Attachment No. 10 – Implementation MOA

Final Mitigated Negative Declaration
Stormwater Capture Parks Program

Los Angeles Department of Water and Power
Environmental Affairs
111 North Hope Street, Room 1044
Los Angeles, California 90012

July 2021

CEQA Initial Study and Mitigated Negative Declaration

Stormwater Capture Parks Program

July 2021

General Manager

Marty L. Adams

Senior Assistant General Manager
Water System

Richard F. Harasick

Senior Assistant General Manager
External and Regulatory Affairs and Chief Sustainability Officer

Nancy H. Sutley

Director of Environmental Affairs

Mark J. Sedlacek

Manager of Environmental Planning and Assessment

Charles C. Holloway

Prepared by

Los Angeles Department of Water and Power

111 North Hope Street, Room 1044
Los Angeles, CA 90012

Technical Assistance Provided by

ESA

626 Wilshire Blvd., Suite 1100
Los Angeles, CA 90017

TABLE OF CONTENTS

Final Initial Study and Mitigated Negative Declaration for Stormwater Capture Parks Program

Page

Section 3: Comment Letters **3-1**

Comment Letter 1: California Department of Transportation
Comment Letter 2: Luis Suarez
Comment Letter 3: Marie Gordon
Comment Letter 4: Brenda Dalusong
Comment Letter 5: California Department of Fish and Wildlife
Comment Letter 6: Diana Nicole, Sunshine Hills Residents Association
Comment Letter 7: County of Los Angeles Fire Department
Comment Letter 8: Joanne D'Antonio

Section 4: Response to Comments **4-1**

Comment Letter 1: California Department of Transportation
Comment Letter 2: Luis Suarez
Comment Letter 3: Marie Gordon
Comment Letter 4: Brenda Dalusong
Comment Letter 5: California Department of Fish and Wildlife
Comment Letter 6: Diana Nicole, Sunshine Hills Residents Association
Comment Letter 7: County of Los Angeles Fire Department
Comment Letter 8: Joanne D'Antonio

Section 5: Mitigation Monitoring and Reporting Program **5-1**

Appendix AA (not included)

Previously published in the Draft IS/MND

Section 1: Project Description

Section 2: Initial Study/Environmental Checklist

SECTION 3
Comment Letters

The City of Los Angeles Department of Water and Power (LADWP), Department of Public Works Bureau of Engineering (BOE) and Bureau of Sanitation (LASAN), and Department of Recreation and Parks (RAP), are collectively referred to herein as the "City." LADWP acting as Lead Agency circulated the Draft Initial Study/Mitigated Negative Declaration (Draft IS/MND) for the Stormwater Capture Parks Program (Program) for public review for 30 days (January 7, 2021 through February 7, 2021) in accordance with the requirements of the California Environmental Quality Act (CEQA) Guidelines Section 15072(a). BOE, LASAN, and RAP will act as Responsible Agencies. The City received a total of eight comment letters during the public review period, which are listed in **Table 3-1** and are included within this chapter. The letters have been marked with brackets that delineate comments pertaining to environmental issues and the information and analysis contained in the Draft IS/MND. Responses to such comments are provided in Section 4.

TABLE 3-1
COMMENT LETTERS RECEIVED

Comment Letter No.	Commenter	Date of Comment
1	California Department of Transportation	January 13, 2021
2	Luis Suarez	January 15, 2021
3	Marie Gordon	January 22, 2021
4	Brenda Dalusong	February 2, 2021
5	California Department of Fish and Wildlife	February 5, 2021
6	Diana Nicole, Sunshine Hills Residents Association	February 8, 2021
7	County of Los Angeles Fire Department	February 9, 2021
8	Joanne D'Antonio	February 8, 2021

SECTION 4
Response to Comments

4.1 Comments on the Draft IS/MND and Response to Comments

The responses to comments included in this section correspond to each comment letter outlined in Section 3.

Letter 1: Miya Edmonson (California Department of Transportation)

Comment 1-A

The commenter summarizes the project description.

Response 1-A

The comment is noted and will be included in the project record.

Comment 1-B

The commenter states that an encroachment permit would likely be required for any project work, including road closures, done on or near California Department of Transportation's (Caltrans) right of way.

Response 1-B

As noted on page 33 of the Draft IS/MND, the City and/or its contractors will coordinate with Caltrans and will obtain all necessary permits prior to construction activities. In addition, Caltrans is an active partner in the Program, providing some funding and assisting with project level designs.

Comment 1-C

The commenter states that a Caltrans transportation permit is required for transporting any heavy construction equipment and/or materials with oversized-transport vehicles on State Highways.

Response 1-C

The City and/or its contractors will coordinate with Caltrans and will obtain all necessary permits prior to construction activities.

Comment 1-D

The commenter recommends that project construction traffic is limited to off-peak periods to minimize potential impacts on State facilities.

Response 1-D

As outlined in Mitigation Measure TR-1, the City and/or its contractors will coordinate with Los Angeles Department of Transportation (LADOT) in order to prepare a construction traffic management plan (CTMP) for the Program which will include time of day restrictions, and time limitations for construction traffic.

Comment 1-E

The commenter requests submission of a construction traffic management plan to Caltrans for review if State facilities are expected to have delays. The commenter request that the traffic management plan includes details on any traffic delays that would occur on State facilities during construction, and alternate bicycle and pedestrian routes for any routes that would be affected during construction.

Response 1-E

The City will submit the CTMP to Caltrans for review if delays are expected on State facilities.

Comment 1-F

The commenter expresses support for Transportation Demand Management (TDM) strategies which the City has incorporated into the Program and recommends additional options to further reduce Vehicle Miles Traveled (VMT) and greenhouse gas emissions impacts.

Response 1-F

The Draft IS/MND concluded that Program impacts to VMT and greenhouse gas emissions would occur at levels that are below CEQA significance thresholds, without implementation of any mitigation measures.

Letter 2: Luis Suarez

Comment 2-A

The commenter requests more information regarding the environmental impacts that would occur on homes surrounding Fernangeles Park.

Response 2-A

Residents in the vicinity of Program sites may experience temporary impacts related to construction. The City and its construction contractors are required to implement mitigation measures to ensure that nearby residents are notified of tentative construction schedules and that Program impacts remain below the specific impact thresholds identified in Appendix G of the

CEQA Guidelines. For a detailed discussion of anticipated environmental impacts, please refer to the Draft IS/MND. With respect to neighborhood impacts, the IS/MND describes effects to aesthetics on page 46, air quality on page 51, biological resources on page 72, noise on page 122, recreational resources on page 138, and traffic on page 140.

Comment 2-B

The commenter expresses concern regarding the potential for groundwater saturation in surrounding neighborhoods as a result of the proposed infiltration galleries at Fernangeles Park.

Response 2-B

The Program would include construction of underground infiltration galleries, which would capture surface flow and divert stormwater runoff from the Caltrans pump discharge to recharge the San Fernando Groundwater Basin. The infiltration galleries will be constructed of concrete and are designed to retain flows for percolation into the San Fernando Groundwater Basin. The ground surface surrounding the park would be restored to support recreational uses similar to current conditions. The Draft IS/MND evaluates the potential for groundwater mounding to occur that could affect surface infrastructure. A technical analysis prepared by Todd Groundwater Consultants is included as Appendix E. As noted in Table 1 of Appendix E, the infiltration galleries would range from 16 to 29 feet below ground surface and the groundwater levels in the area range from 105 to 335 feet below the ground surface. Mitigation measure GEO-1 has been included to monitor groundwater levels and reduce flow diversions when groundwater is within 50 feet of the surface. With mitigation implemented, the Draft IS/MND concludes that the potential for elevated groundwater levels would be minimized.

Letter 3: Marie Gordon

Comment 3-A

The commenter requests information regarding start and end dates for Program construction activities that would occur near two senior citizen apartment buildings located along Vanowen Street, between Whitsett Avenue and Rhodes Avenue, just south of Whitsett Fields Park North.

Response 3-A

As noted in Table 1-6 on page 40 of the Draft IS/MND, construction activities at Whitsett Fields Park North are expected to take approximately 18 months, starting in June 2025 and ending in November 2026. Construction at Valley Plaza Park North, located east of I-170 on Vanowen Street, is expected to take approximately 17 months, starting in November 2023 and ending in March 2025. Construction work hours would generally be restricted to times between 7 A.M. and 7 P.M., Monday through Friday.

Comment 3-B

The commenter expresses concern regarding construction mitigation measures and their potential to minimize environmental impacts on senior citizens living in nearby apartments. The commenter states that the environmental impacts of prior projects were not effectively mitigated.

Response 3-B

Residents in the vicinity of Program sites may experience temporary impacts related to construction. The City and its construction contractors are required to implement mitigation measures to ensure that nearby residents are notified of tentative construction schedules, and that Program impact levels remain below the specific thresholds identified in Appendix G of the CEQA Guidelines. For a detailed discussion of anticipated environmental impacts, please refer to the Draft IS/MND. With respect to neighborhood impacts, the IS/MND describes effects to aesthetics on page 46, air quality on page 51, biological resources on page 72, noise on page 122, recreational resources on page 138, and traffic on page 140.

Comment 3-C

Commenter states that the Notice of Intent (NOI) for the Program is dated January 7, 2021 but was not received until January 20, 2021.

Response 3-C

The comment is noted and will be included in the project record. The public review period for the Draft IS/MND was from January 7, 2021, to February 7, 2021. The commenter received the NOI within the public review period of the Draft IS/MND in compliance with CEQA.

Letter 4: Brenda Dalusong

Comment 4-A

The commenter requests that the City consider construction of sidewalks around the perimeter of Fernangeles Park as part of the Program's proposed recreational facilities enhancements. The commenter states concern for pedestrian/motor vehicle safety around the park due to the lack of sidewalks available for pedestrian use.

Response 4-A

Figures 1-4 through 1-12 provide architectural drawings for each of the proposed parks that include public access and pedestrian circulation to support existing recreational uses.

Letter 5: Erinn Wilson-Olgin (California Department of Fish and Wildlife)

Comment 5-A

The comment acknowledges that California Department of Fish and Wildlife (CDFW) received the Draft IS/MND for review and to provide comments.

Response 5-A

Comment noted.

Comment 5-B

CDFW disagrees with the City's impact analysis, which finds that the Project's diversion of water would not impact biological resources

The Project would divert dry season flow and stormwater totaling 3,010 acre-feet per year (AFY). The water would otherwise proceed downstream via concrete channels to the Los Angeles River. The Draft IS/MND concluded that "no beneficial uses would be impacted." However, flow reduction could have a significant impact on downstream biological resources, especially during the dry season proceeding after a below-average water year.

Response 5-B

The Draft IS/MND on pages 74 and 77 describes that the Program would reduce dry season flows from the Tujunga Central Branch channel that would reduce water in the Los Angeles River. In response to the comment the sentence on page 77 of the Draft IS/MND has been revised as follows:

> The Los Angeles River currently discharges an average of over 100 cubic feet per second (cfs) to the ocean during dry weather (City of Los Angeles 2018). The volume of water diverted during dry weather flow by the proposed Program would be a small percentage of the current downstream flows (1.4 percent of total annual flow or approximately 4 percent of dry weather flow), and as a result no beneficial uses, including biological resources, would be significantly impacted.

As noted in the comment, the reduction of dry weather flows is itself an impact. Therefore, the changes to the text provided above as requested in the comment are appropriate. The Draft IS/MND identifies the reduced flow impact on page 74, but concludes that no riparian or aquatic habitat would be removed or adversely affected within the downstream reaches of the Los Angeles River. Therefore, since no habitat would be lost or stressed, the flow reduction would be a less than significant impact. The analysis relies on a de minimis impact conclusion. That is, the reduction of 1.4 percent of total flow and approximately 4 percent of dry weather flow in the river would not result in loss of habitat or result in reduced habitat quality. Rather, diverting dry-weather urban runoff would benefit water quality. The Draft IS/MND describes on pages 74 and 77 how beneficial uses are well supported by the remaining dry season flows. This evidence is outlined further below.

The Draft IS/MND describes in Section 1.5 that six of the nine Program sites (see table below) would require insertion of diversion structures within underground storm drain pipes. No habitat values exist within the buried storm drain pipes. The remaining four Program sites would require installation of diversion structures within existing Tujunga Central Branch concrete box channel or reinforced concrete box culvert. The watershed drained by this Tujunga Central Branch

channel is a small portion of the San Fernando Valley adjacent to but outside of the Tujunga Wash drainage area, representing 1.7 percent of the total Los Angeles River watershed.

Infiltration Gallery Location	Diversion Structure Installation
David M. Gonzales Recreation Center	Underground Storm Drain Pipe
FernAngeles Park	Underground Storm Drain Pipe
Whitsett Fields Park North	Underground Storm Drain Pipe
Strathern Park North	Underground Storm Drain Pipe
Valley Plaza Park North	Underground Reinforced Concrete Box Culvert
Valley Plaza Park South	Concrete Channel
Alexandria Park	Concrete Channel
North Hollywood Park	Concrete Channel
Valley Village Park	Underground Storm Drain Pipe

The Draft IS/MND describes on page 74 that the Tujunga Central Branch channel is concrete-lined with no ecological value. As a result, direct impacts to habitat values from installing diversion structures would not adversely affect biological resources. Furthermore, the Draft IS/MND concludes on pages 74 and 77 that the proposed diversions would result in a small reduction of the flow in the Los Angeles River compared to the current flow, including in the dry season, and would not result in measurable effects to biological resources. The Draft IS/MND references the hydrological analysis conducted by the City for the One Water LA Program and cites that currently an average of 100 cubic feet per second (cfs) reaches the ocean in the concrete channel of the Los Angeles River during dry weather (City of Los Angeles 2018). The Program diversions represent an annual average flow of approximately 4 cfs or 4 percent of the dry weather flows to the ocean. The Draft IS/MND concludes on page 77 that the reduction caused by the project would represent 1.4 percent of the total flow in the river on an annual average. Since the river discharges substantial flow to the ocean in the dry season (>100 cfs), the Draft IS/MND concludes that the proposed project's 1.4 percent diversion of total flows and 4 percent of dry season flows would not result in significant impacts to biological resources.

The Draft IS/MND also concludes on page 153 that the flow reductions would not result in a cumulatively significant reduction, including in the dry season. This conclusion is consistent with the One Water LA Study, which provides an overview of stormwater flows in Chapter 3and the Los Angeles River in Chapter 4. (City of Los Angeles 2018).

In addition to the published One Water LA study, the City has been participating in the Los Angeles River Flows Project, a comprehensive new hydrologic study of the river led by the Southern California Coastal Watershed Research Project (SCCWRP) in partnership with the State Water Resources Control Board (SWRCB). This new study is called the Los Angeles River Flows Project and is sponsored by the City of Los Angeles (by and through LADWP and LASAN), Los Angeles Regional Water Quality Control Board (LARWQCB), and the Los Angeles County Sanitation Districts (LACSD). SCCWRP is a quasi-public agency established to

support Southern California governmental agencies with third-party, science-based analysis. The Los Angeles River Flows Project was initiated in 2019 expressly to evaluate potential effects of cumulative flow reductions in the Los Angeles River, including reductions in WRP discharges and future stormwater capture projects such as the proposed Project. CDFW has been actively participating in the Project as a member of the Technical Advisory Committee (TAC).

In May 2021, SCCWRP published a report titled Process and Decision Support Tools for Evaluating Flow Management Targets to Support Aquatic Life and Recreational Beneficial Uses of the Los Angeles River as part of the Los Angeles River Flows Project (LA River Flows Project Final Report) (SCCWRP, 2021b). This new Final report, included by reference with this Final IS/MND, characterizes the environmental attributes of the river channel and evaluates flows that support those attributes, providing flow-ecology relationships helpful in understanding dry season flow reduction impacts on ecological values. The report develops a set of tools to evaluate future flow management scenarios. One of the three objectives noted in the report is to:

> "Produce tools and approaches to help evaluate how potential modified flow regimes in the LA River may affect the likelihood of supporting aquatic life and recreational beneficial uses" (SCCWRP, 2021b)

The results of this study directly confirm the conclusions outlined in the IS/MND, including an evaluation of the effects to focal species of reduced storm flows during the dry season. See response to comment 5-I for more discussion on the new study and the conclusions regarding impacts to ecological values from reduced dry weather flow.

Comment 5-C

The Draft IS/MND does not provide sufficient analysis of the Project's potential biological impacts to allow CDFW to determine the Project's significance or need for mitigation.

Data Source: The Draft IS/MND uses data from the 2015 *Los Angeles River Ecosystem Restoration Integrated Feasibility Report* (USACE 2015). The U.S. Army Corp of Engineers (USACE) report analyzes the feasibility of restoring an 11-mile stretch of the Los Angeles River from Pollywog Park to Downtown Los Angeles, referred to in the report as the ARBOR reach (Area with Restoration Benefits and Opportunities for Revitalization) (USACE 2015). Citing the USACE report, page 77 of the Draft IS/MND states, "USACE estimated that existing water sources provide 211,348 AFY of flow within the Los Angeles River watershed on an annual basis. The proposed diversion would be approximately 1.4 percent of the existing water source […]. The volume of water diverted during dry weather flow by the proposed Program would be a small percentage of the current downstream flows (1.4 percent), and no beneficial uses would be impacted.

The Draft IS/MND may have underestimated the percentage of water diverted from the Los Angeles River in using 211,348 AFY as the basis for deriving 1.4 percent. After factoring in water demand (e.g., infiltration, evaporation, evapotranspiration), the USACE estimated that flow would be reduced from 211,348 AFY to 143,793 AFY annually and 29,166 AFY in the summer

(April through September) (USACE 2015). Based on reduced volumes, the Project's proposed diversion would be approximately 2.2 percent annually, an increase from 1.4 percent. During the summer, diversion would be approximately 10.3 percent. Based on the above, the Draft IS/MND's impact analysis may not have accurately estimated the proportion of water the Project would divert from the Los Angeles River.

Response 5-C

The calculation in the comment asserting a 10.3 percent reduction is inaccurate in that it assumes the entire diversion estimate of the proposed Program (3,010 AFY) will occur between April and September. It would be more appropriate when calculating the six-month dry season percentage from the 29,166 AFY flow assumption to compare half the annual anticipated diversion, which would be 1,505 AFY, calculated as 5.14 percent of the total dry season flow. A different way of calculating the contribution of flows attributed to the Tujunga Central Branch channel is to compare the project's diversion estimates with flow estimates at the ocean. The One Water LA Report (City of Los Angeles 2018) estimates that the river discharges 100 cfs to the ocean during summer months. The Program's proposed diversion of 3,010 AFY would constitute approximately 4 percent of the existing flow to the ocean during the summer months. This would be a conservative assumption since it does not attribute any stormwater capture to the proposed Program. The Draft IS/MND concludes that the contribution of flow to the Los Angeles River from the Tujunga Central Branch channel during the dry season is small (1.4 percent of the total volume and 4 percent of dry weather flow) compared to other sources. Furthermore, the watershed represents only 1.7 percent of the total watershed feeding stormwater to the Los Angeles River. Based on these flow estimates, the Draft IS/MND concludes that the proposed project would not significantly affect the ecology of the river.

The City, including LADWP, is participating in the Los Angeles River Flows Project in partnership with the SWRCB, and in close coordination with CDFW. The Los Angeles River Flows Project has been initiated by SWRCB to better understand the water demands of beneficial uses in the river, and to support future flow management priorities with science-based demand characterizations. See response to comment 5-I for more discussion on the new study.

Comment 5-D

Seasonality: The Draft IS/MND does not thoroughly analyze the potential significance of water diversion depending on the season. During the dry season, typically April through September in southern California, the Los Angeles River is largely maintained by urban runoff and discharge from WRPs. Diverting water could be significant during the dry season and could either significantly reduce water flow or result in complete loss of water flow from the Tujunga Central Branch channel to the Los Angeles River.

Response 5-D

The Draft IS/MND does evaluate the seasonality of the potential effects of the Program on page 74. The assessment describes the effects of the proposed Program on both dry weather flows and

wet weather flows. The Draft IS/MND notes on pages 74 and 77 that dry weather flows would be reduced slightly but would not result in loss of habitat. This is substantiated by the fact that 100 cfs currently discharges to the ocean in dry weather indicating a surplus of flow. Furthermore, the Draft IS/MND also points out that the ecological values of the river would be enhanced with the reduction of pollutant daily loads conveyed in dry weather flow. The water quality benefits of stormwater capture on downstream habitat values are described further in One Water LA, Chapter 4 Los Angeles River Study (City of Los Angeles 2018), as a fundamental benefit of the City's Program, and supports the water quality objectives of the regional Municipal Separate Storm Sewer System (MS4) stormwater NPDES permit of which the City is a participating permittee. See response to comments 5-C and 5-G.

Comment 5-E

Drought: The Draft IS/MND does not analyze the potential significance of water diversion during a below-normal water year. Since 2000, the longest duration of drought in California lasted between 2011 and 2019 (USGS 2021) and in southern California, between 2012 through 2016 (Los Angeles Almanac 2021). The 2017-2018 rainfall season was below normal and the driest for Los Angeles since 2006-2007 (Los Angeles Almanac 2021). Diverting water during a below normal rainfall year may significantly reduce water flow or result in complete loss of water flow.

Response 5-E

Annual rainfall amounts vary in the Los Angeles River watershed, with multi-year droughts likely becoming more common. The City's Stormwater Capture Master Plan states that "although the average annual precipitation in downtown Los Angeles is 15.3 inches, it ranges from a low of 4.69 inches (2007) to a high of 30.6 (1998). The mountains that surround the coastal plain, and are tributary to the City, experience considerably more rainfall than downtown Los Angeles. For example, in Big Tujunga Canyon, annual rainfall ranged from 9.62 inches in 1989 to 53.93 in 1998." (LADWP Stormwater Capture Master Plan, 2015; p. 3) The watershed represents only 1.7 percent of the total LA River watershed. The reduction would not significantly reduce dry season flows. The comment does not provide any additional information not already considered in the Draft IS/MND. See response to comment 5-I.

Comment 5-F

Beneficial Uses: The concrete lined portions of the Los Angeles River support wildlife. These portions of the Los Angeles River are regionally significant, especially in a dense urban environment with substantial loss or alteration of the natural hydrologic regime and river ecosystems. A reduction of flow, especially dry season flow, could directly or indirectly impact biological resources through habitat modifications. Where the Los Angeles River overtops the concrete-lined channel, the resulting sheet flows allow phytoplankton (algae and cyanobacteria), microorganisms, and herbaceous vegetation to establish. The algae provide habitat and a food source for benthic invertebrates, a vital food source for wading birds. The Los Angeles River provides habitat for hundreds of bird species, making these areas birding hotspots. The least Bell's vireo (*Vireo bellii pusillus*), an Endangered Species Act and CESA-listed endangered

species, has been documented within the Glendale Narrows area. Least Bell's vireo depends on willow (*Salix* genus) riparian habitat. The ARBOR reach examined in the USACE report contains soft-bottom channels that support herbaceous and woody vegetation. Dominant species include black willow (*Salix gooddingii*), Fremont cottonwood (*Populus fremontii*), and arroyo willow (*Salix laevigata*) (USACE 2015). The middle reach of the Los Angeles River, specifically Glendale Narrows, supports anadromous fish that includes the Pacific lamprey (*Entosphenus tridentatus*), a California Species of Special Concern.

The Draft IS/MND concludes that "no beneficial uses would be impacted." The Draft IS/MND does not offer a quantitative analysis as to how it determined no impacts would occur. Moreover, the Draft IS/MND does not define what it considered to be "beneficial uses." Diverting water during the dry season could reduce the availability and extent of shallow water sheet flow downstream. This could potentially impact algae, benthic invertebrates, and birds. Willow riparian habitat may be impacted if reduction in flow leads to receding shoreline or lower water depth. Preliminary work of the Los Angeles River Flows Project show that black willow (*Salix gooddingii*) seedling mortality increases as water depth decreases (SWRCB 2019). Loss of suitable habitat may impact sensitive species such as least Bell's vireo. Anadromous fish have specific habitat requirements including water depth, velocity, and vegetation.

Response 5-F

The Draft IS/MND on pages 74-78 describes the valuable biological resources existing in the Los Angeles River that are supported by consistent surface flow. The Draft IS/MND cites the One Water LA Program to substantiate the values found in the river, including all the species described in the comment. The 4 percent reduction of the current 100 cfs in the lower river channel would not reduce habitat from sheet flow in the lower reaches of the river since the flows would continue to be greater than the low flow channel and would continue to overflow and maintain the sheetflow condition. Phytoplankton and herbaceous vegetation would continue to provide a food source for benthic invertebrates, and for wading birds, as noted in the comment. The Draft IS/MND does provide a quantitative assessment of the potential effect of the proposed Program by estimating a 1.4 percent flow reduction. This small average flow reduction would not result in measurable effects to habitat values in the concrete-lined Los Angeles River either in the Arbor Reach or in the concrete-lined portion of the lower river. Furthermore, the Draft IS/MND cites the One Water LA Study that states that far more water exits the Arbor Reach under current conditions than is proposed to be diverted by the proposed Program. That is to say, since more water exits the system than is contributed by stormwater, there would be sufficient quantity of flow to meet the existing ecological demand. The Draft IS/MND concludes that the calculated flow reductions would not impact beneficial uses.

The comment cites information from a report published for the Los Angeles River Flows Project in January 2021 that provides a habitat suitability assessment for species known to occur in the Los Angeles River. The citation notes that black willow seedling mortality increases with water depth reduction. This information is extracted from a life stage suitability curve provided in the report. The Assessment Report does not provide a conclusion on the optimal water flow depth in

the Los Angeles River. Rather, the Habitat Assessment Report (SCCWRP 2021a) provides suitability curves that show a relationship with water depth and different life cycle stages for various species.

The figure below taken from that report shows that willow seedling mortality is more complex than stated in the comment: mortality is at a minimum at mean depths of around 5 cm and then increases with both reductions and increases in flow depth. In other words, germination occurs within a specific range of flow depth.

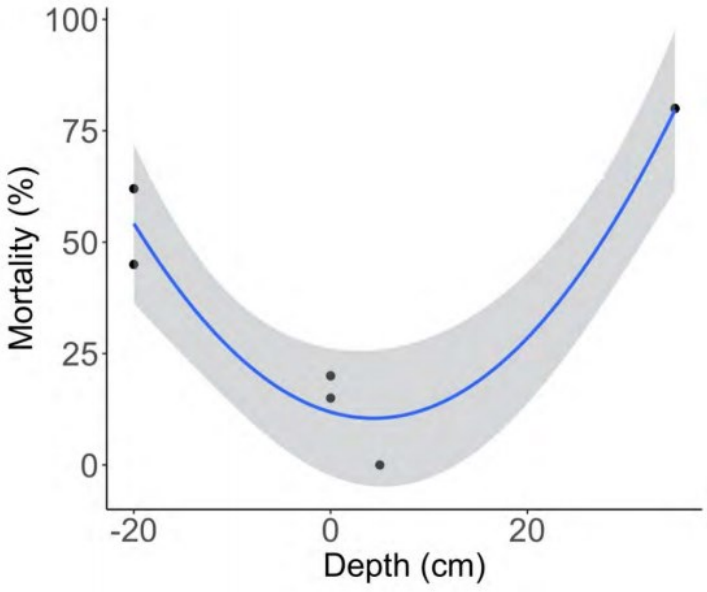

Figure 35. Habitat suitability curve of seedling mortality as a function of inundation/depth from water surface of Salix Gooddingii calculated through quadratic linear regression. Depth is defined as depth from surface i.e., -20 cm = 20 cm below surface, 20 cm = 20 cm above surface. Mean = 5 cm, p = 0.002, n=5.

The second figure, taken from the recently published SCCWRP flow study (SCCWRP 2021b) shows that willow in the Glendale Narrows area of the Los Angeles River can sustain a wide range of flow conditions. The graph shown below from the study shows that WRP discharges could be reduced by 80 percent and still support the existing willow. The WRP flow reduction of 80 percent illustrated, from 75 cfs to 15 cfs, is an order of magnitude greater than the proposed flow reduction from the proposed Program. The graph also shows that if all urban baseflows were captured, WRP discharges could be reduced by up to 68 percent and the existing willow habitat would be maintained. That is to say, a 100 percent reduction in urban baseflow across the Los Angeles River watershed (of which the proposed Program watershed comprises 1.7 percent by area) would still allow for a 68 percent reduction in WRP flow and continue to support willow habitat. This substantiates the conclusion that the proposed Program dry weather flow reductions would not affect downstream beneficial uses significantly, and that it would be unreasonable to assume otherwise.

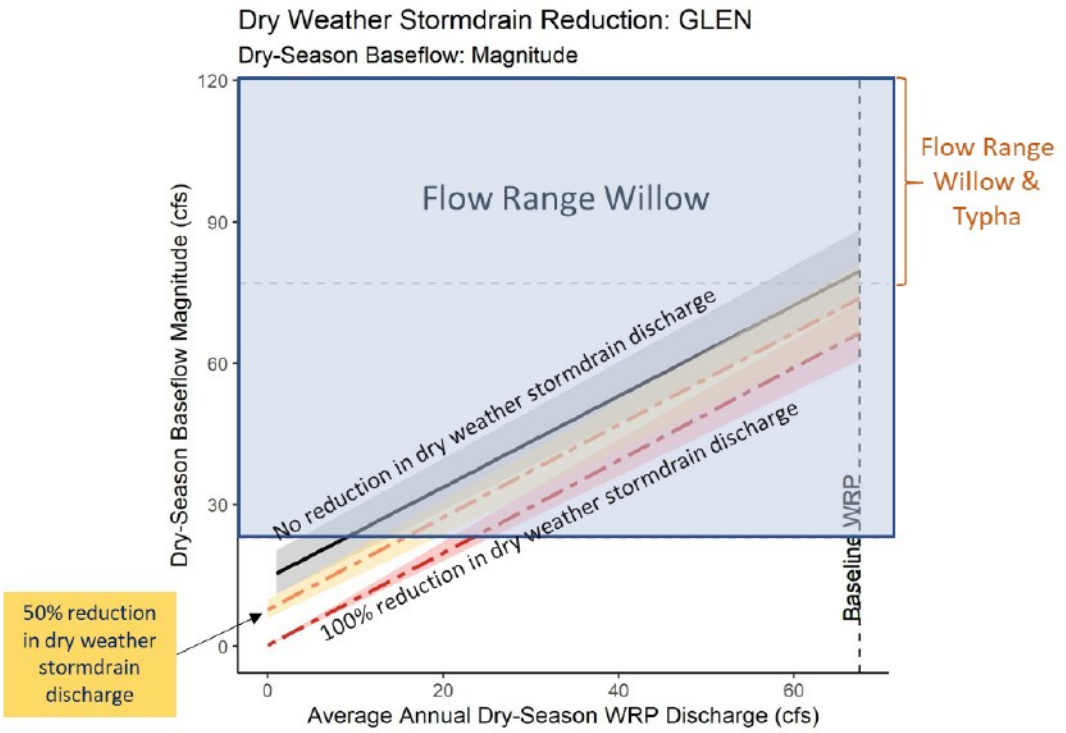

The effect of stormwater diversion would reduce Los Angeles River flows less than 4 cfs in the dry season, compared to the current dry season average of 75 cfs in the Arbor Reach and 100 cfs where the Los Angeles River confluences with the Pacific Ocean. The remaining flow would provide for the needs of willow and other riparian vegetation. The conclusions illustrated in the SCCWRP study for black willow show that surface water depth is not a driving factor in the suitability of black willow habitat in the Los Angeles River. The comment does not identify any other citation supporting water needs for the riparian habitats See response to comment 5-I.

Comment 5-G

Cumulative Flow Reductions: The Draft IS/MND does not analyze whether the Program would result in significant impacts when considered with other existing or proposed water diversion projects in the Los Angeles River watershed. The cities of Burbank, Glendale, and Los Angeles plan to recycle more wastewater and reduce their discharges to the Los Angeles River for this purpose (SWRCB 2019).

Response 5-G

The Draft IS/MND concludes on page 153 that the proposed Program would not result in cumulatively significant effects to the environment. This conclusion is based on the quantitative analysis that 4 percent of dry weather flow (1.4 percent of total annual flow) is too small an amount to result in an appreciable, or measurable change in the habitat values currently exhibited in the Los Angeles River. Furthermore, the City has acknowledged that cumulative flow reductions in the future may include potential reductions in WRP discharges to support regional

recycled water program objectives. To evaluate the effects of cumulative reductions in future flows that may include future diversions of WRP discharges, the SWRCB has conducted the Los Angeles River Flows Project. The study published by SCCWRP through the Los Angeles River Flows Project (SCCWRP 2021b) provides tools to all the river stakeholders to best manage the resource's beneficial uses. Future projects that may propose further diversions in dry weather flow may rely on this study to assess potential direct and cumulative effects of WRP discharge diversions. These future WRP diversions will be subject to Water Code Section 1211 Petitions, approved by the SWRCB.

In January 2021, SCCWRP published a report titled the Assessment of Aquatic Life Use Needs for the Los Angeles River Report (Assessment of Aquatic Life Report) (SCCWRP 2021a). This report characterizes habitat values in the river, and evaluates water demands of riparian and aquatic species known to occur in the river system. Habitat suitability curves have been developed for certain focal species based on the assessment. Habitat suitability curves were developed as part of a technical tool to assist the SWRCB in assessing potential WRP flow reductions in the Los Angeles River, but are not themselves flow recommendations.

The Assessment of Aquatic Life Report outlines habitat suitability criteria for three species: black willow, cattails (*Typha sp*.), and algae (*Cladophora sp*.). The study provides an overview of the cumulative effects of stormwater diversions to the overall flow in the Los Angeles River. The graphic provided in response to comment 5-F above summarizing the relationship between flow in the river and ecological water demands of willow substantiates the conclusion that the proposed Program dry weather flow reductions would not affect downstream beneficial uses significantly, and that it would be unreasonable to assume otherwise.

The City, including LADWP, is committed to maintaining a supportive role in the Los Angeles River Flows Project. See response to comment 5-I.

Comment 5-H

Diverting water from the Los Angeles River may impact biological resources downstream, especially during the dry season proceeding after a below-average water year. Impacts to any sensitive or special status species should be considered significant under CEQA unless they are clearly mitigated below a level of significance. Inadequate avoidance, minimization, and mitigation measures for impacts to sensitive or special status species will result in the Project continuing to have a substantial adverse direct, indirect, and cumulative effect, either directly or through habitat modifications, on any species identified as a candidate, sensitive, or special-status species by CDFW or U.S. Fish and Wildlife Service.

Response 5-H

See responses to comments 5-G and 5-I.

Comment 5-I

Mitigation Measure #1: CDFW recommends LADWP provide additional analysis and evaluation of potential impacts on biological resources as part of the final environmental document. At a minimum, an additional analysis and report should provide the following:

Study Reach

1. CDFW recommends LADWP define the study area as a 15-mile reach of the Los Angeles River, bounded by the Los Angeles River's confluence with the Tujunga Wash tributary and proceeding downstream to the river's confluence with the Arroyo Seco tributary. LADWP should identify all sources of flow input within the study area to estimate the total annual and dry season flow. LADWP should assess potential Project related impacts on biological resources within this study reach.

Changes to Hydrology and Hydraulics

1. Under pre-Project (i.e., baseline) conditions, the volume of water flow from the Tujunga Central Branch channel into the 15-mile study reach during a) the wet (November through March); b) the dry season (April through October); and c) above-average and below-average water year (i.e., wet season/above-average water year, wet season/below-average water year, dry season/above-average water year, and dry season/below-average water year). LADWP should clearly define what it would consider to be above-average or below-average rainfall year.

2. Under proposed Project conditions, the percent reduction in flow from 1) the Tujunga Central Branch channel tributary and 2) 15-mile study reach for a wet season/above-average water year, wet season/below-average water year, dry season/above-average water year, and dry season/below-average water year.

3. An analysis of potential Project-related changes to river hydraulics in both concrete and soft-bottom reaches. This includes water depth (percent change), wetted perimeter (acres gained/lost), and velocity (percent change). CDFW requests a map modeling potential changes to channel hydraulics overlain on a map of plant communities and habitat for sensitive wildlife species and birds.

4. A quantitative analysis comparing the flow from the Tujunga Wash, Burbank Wastewater Reclamation Plant (WRP), Tillman WRP, Verdugo Wash, and Glendale WRP, and their relative contribution to the hydrograph of the 15-mile study reach.

Biological Resources Impact Assessment

5. A map of plant communities and important bird foraging and nesting habitat occurring in the 15-mile study reach. Plant communities should be mapped at the alliance/association level using the Manual of California Vegetation, second edition (Sawyer et al. 2009). Also, CDFW recommends an updated and thorough floristic-based assessment of plant communities, following CDFW's Protocols for Surveying and Evaluating Impacts to Special Status Native Plant Populations and Sensitive Natural Communities (CDFW 2018).

6. A comprehensive list of sensitive and special status plant and wildlife species, and sensitive plant communities, occurring in the 15-mile study reach. CDFW recommends a nine-quad

search of the California Natural Diversity Database (CNDDB) for sensitive and special status biological resources that could occur downstream. For each biological resource, provide:

a. A summary of species-specific habitat requirements;

b. A discussion as to how the species or plant community may be significantly impacted directly or indirectly through habitat modification, as result of changes to hydrology (reduced flow) and hydraulics (water depth, wetted perimeter, velocity); and,

c. A quantitative analysis and/or adequate discussion to evaluate whether the Project would result in those significant impacts.

7. A discussion of whether diversion devices such as rubber dams would have direct and/or indirect impact on biological resources.

8. An adequate discussion to address how the Project may potentially affect on-going habitat recovery and restoration efforts.

9. An adequate discussion of Project-related impacts on biological resources in relation to cumulative flow reductions.

Response 5-I

The IS/MND concludes that based on the evidence provided in the existing literature, the proposed Program would not result in significant impacts to biological resources in the Los Angeles River considering the small contribution of flow provided by the Tujunga Central Branch channel, and that it would be unreasonable to assume otherwise. The IS/MND concludes that since the Program's effects would not result in a significant impact directly or cumulatively, no mitigation is required. However, in response to the comment and request for mitigation, the Los Angeles River Flows Project Final report (LA River Flows Project Final Report), published after the Draft IS/MND was published is incorporated by reference into this Final IS/MND. This robust hydrological, hydraulic, and ecological study of the Los Angeles River conducted by SCCWRP for SWRCB is designed to develop a set of tools and approaches to help evaluate future flow management scenarios. The Project applies the California Environmental Flow Framework (CEFF) approach to evaluating ecological flow relationships in California streams. The City is participating in the Los Angeles River Flows Project to assess how future flow diversions from WRPs may be best managed to support beneficial uses and management priorities in the river.

The LA River Flows Project Final Report is presented in this Final IS/MND to respond to this detailed comment. The Report was conducted over a two-year period, including input from numerous stakeholders including both LADWP and CDFW. The Report assists in evaluating the potential significance of the impacts of stormwater capture projects, such as the proposed Project, and includes all of the elements proposed in the comment and recommended mitigation measure. The following responses address each point in the comment:

Comment 5-Ia: Study Reach

1. CDFW recommends LADWP define the study area as a 15-mile reach of the Los Angeles River, bounded by the Los Angeles River's confluence with the Tujunga Wash tributary and proceeding downstream to the river's confluence with the Arroyo Seco tributary. LADWP should identify all sources of flow input within the study area to estimate the total annual and dry season flow. LADWP should assess potential Project related impacts on biological resources within this study reach.

Response to Comment 5-Ia

With respect to the Study Reach, the Los Angeles River Flows Project includes assessments of habitat values in the entire Los Angeles River from the Sepulveda Dam to the Pacific Ocean. This study area is larger than requested in the comment. The model domain included as Figure 5 in the study is included below. The Tujunga Central Branch channel confluences with the Los Angeles River at approximately node F300 shown in in the figure.

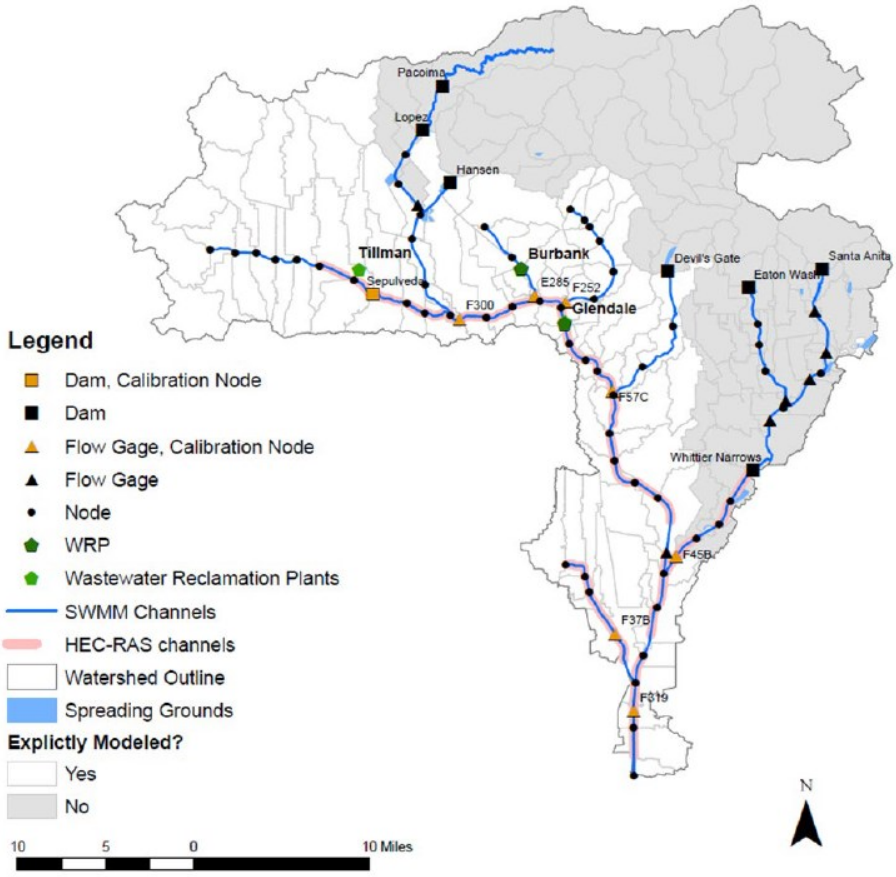

Comment 5-Ib: Hydrology and Hydraulics

2. Under pre-Project (i.e., baseline) conditions, the volume of water flow from the Tujunga Central Branch channel into the 15-mile study reach during a) the wet (November through March); b) the dry season (April through October); and c) above-average and below-average water year (i.e., wet season/above-average water year, wet season/below-average water year, dry season/above-average water year, and dry season/below-average water year). LADWP should clearly define what it would consider to be above-average or below-average rainfall year.

Response to Comment 5-Ib

With respect to Changes to Hydrology and Hydraulics, the Los Angeles River Flows Project includes results from a comprehensive modelling effort that meets all the parameters in the comment. As noted on pages 7 through 9 of the study, estimated flow conditions were modeled using a coupled hydrologic-hydraulic model created in EPA's Storm Water Management Model (SWMM) and the Hydrology Engineering Center's River Analysis System (HEC-RAS). The hydrologic model simulates discharge on the mainstem of the LA River, Compton Creek, and Rio Hondo at an hourly time step from WY 2011 through 2017. The model includes wet season and dry season discharges and uses a dry period to represent conservative flow estimates as shown in the figure below taken from Figure 3 of the study.

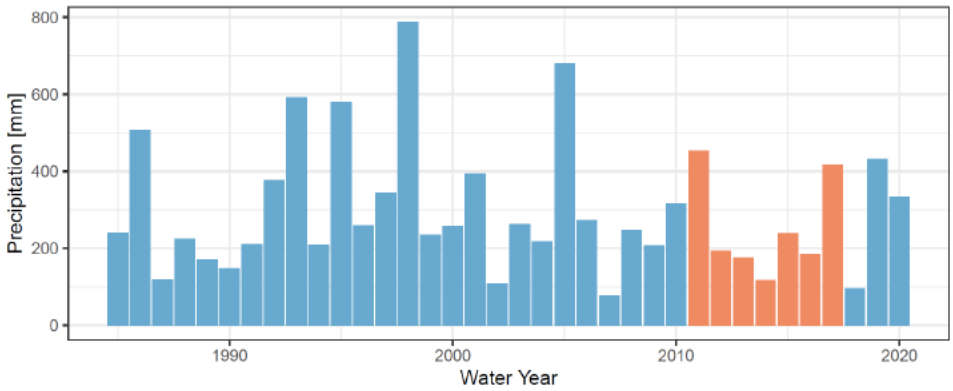

The one-dimensional hydraulic model was created by combining existing HEC-RAS models for the LA River and updating channel geometry and Manning's roughness based on field observations and calibration. The hydraulic model was run under steady-state conditions, which were used to develop rating curves to apply to the simulated hydrographs, producing time series hydraulic data for velocity, maximum channel depth, and shear stress.

Some excerpts from the SCCWRP 2021 report that describes the Flows Project are included here:

> *"We estimated current flow condition in the study area using a coupled hydrologic-hydraulic model created in EPA SWMM and HEC-RAS (ES-2). Current hydrologic conditions are defined as the flows and operations that occurred during water year (WY) 2011 to 2017." (SCCWRP, 2021; p ii)*

"Calculated ranges for the wet season and dry season baseflow metrics increase downstream of the three water reclamation plants, illustrating the contributions of discharges from the water reclamation plants…. The wet season metrics, baseflows from the start of the storm season to the start of the dry season, and dry season metrics, base flows from the start of the dry season to the start of the following wet season, are calculated on an annual basis. Typically, the start of the wet season is between November to January and the start of the dry season is between May to July depending on the climatic conditions for a given water year. The broader ranges and higher values of wet season baseflow metrics reflects the contribution of residual stormdrain discharge following storm events. Rio Hondo and Compton Creek both have the lowest wet season and dry season baseflow magnitudes compared to all other reporting nodes on the mainstem." (SCCWRP, 2021; p iv.)

Comment 5-Ic: Hydrology and Hydraulics

3. Under proposed Project conditions, the percent reduction in flow from 1) the Tujunga Central Branch channel tributary and 2) 15-mile study reach for a wet season/above-average water year, wet season/below-average water year, dry season/above-average water year, and dry season/below-average water year.

Response to Comment 5-Ic

As noted Figure ES-5 of the LA River Flows Project Final Report and excerpted below, dry weather storm flow contributions are a key consideration in the study. The graph illustrates average baseline flows with the black line accompanied by a grey band that indicates the 10 percent and 90 percent percentiles. This grey shading following the black line accounts for extremely dry years. In other words, the analysis represented by this graph takes dry year and wet year flows into consideration.

The graph compares potential future combined flow reductions of both dry weather runoff and WRP reductions with habitat value impacts. The large grey box represents habitat suitability for black willow habitat. The graph shows that a small percentage decline in dry weather storm channel flows (even in very dry years) would not reduce flows in the river below suitability thresholds for willow habitat, resulting in no reductions in habitat acreage or habitat quality. (The flow range for typha [cattails] is also included in the graph to show flow requirements for typha across the entire channel width. The flow rate is needed due to the wide channel width. Less flow could support typha within a narrower side channel such as shown in the HEC-RAS cross section provided in response to comment 5-!d below)As a result, the impact would be less than significant from a direct, indirect and cumulative perspective.

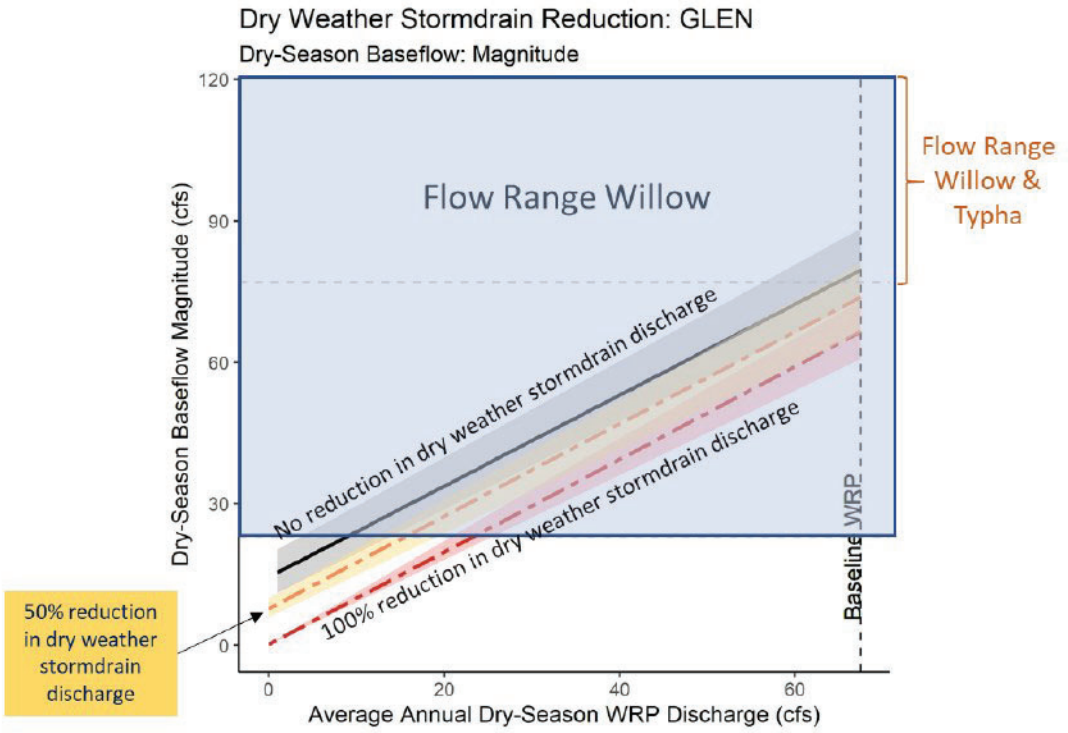

Figure ES-5. Flow-based sensitivity curves illustrating the combined effects of change in WRP discharge and 50% (yellow) and 100% reduction (red) in dry weather stormdrain discharge at GLEN reporting node. Solid and dashed lines represent median values; bounds of the gray and colored bands are the 10th and 90th percentile dry-season instream flows across the modeled period. Optimal flow range in this example is based on a 50% (medium) probability of occurrence of Willow and Typha.

Comment 5-Id: Hydrology and Hydraulics

4. An analysis of potential Project-related changes to river hydraulics in both concrete and soft-bottom reaches. This includes water depth (percent change), wetted perimeter (acres gained/lost), and velocity (percent change). CDFW requests a map modeling potential changes to channel hydraulics overlain on a map of plant communities and habitat for sensitive wildlife species and birds.

Response to Comment 5-Id

The Los Angeles River Flows Project published the "Assessment of Aquatic Life Use Needs for the Los Angeles River" (Assessment of Aquatic Life Report) in February 2021 (Stein, 2021). This document provides a detailed summary of hydraulic HEC-RAS modeling done to support the overall program objectives. Over 1,000 cross sections were generated by the HEC-RAS model in the river that show impacts of flow reductions to depth and wetted perimeter (as requested in the comment). Since the roughness of the Los Angeles river changes over time and greatly influences depth and wetted perimeter in specific locations, the model characterized typical channel dimensions and roughnesses to provide meaningful ecological-flow relationships. An excerpt from page 15 of this study is included below:

"Channel hydraulics (i.e., maximum channel depth, velocity, and shear stress) can vastly differ across different sections of the channel at a single site. For every soft-bottom output node in the HEC-RAS model, three output locations were selected at the three most significant morphological zones to capture the variability in hydraulics for each node and were designated as left overbank (LOB), center channel (Main), and right overbank (ROB)"

The figure below provided on page 15 of the Assessment of Aquatic Life Report shows how channel characteristics were accommodated in the ecological-flow relationship analysis provided in the report. Habitat suitability curves were developed to reflect water depth and velocity requirements of existing habitat within these three different parts of the channel: side channel, main channel, and high floodplain. Although the Assessment of Aquatic Life Report does not provide a map of the habitat within the Los Angeles River associated with each of these cross sections, it does inventory the species and habitat values that occur within the soft-bottom portion of the river (the 15-mile segment highlighted in the comment) and presents a detailed HEC-RAS model that provides depth and width impacts associated with flow reductions at specific cross section locations that were also measured in the field for model calibration purposes. The evaluation of habitat suitability within this segment of the river (see graph provided in response to comment 5-F) is then expressed in cubic feet per second (cfs) impacts rather than depth and width in order to provide a meaningful model for the total 15 miles of the soft-bottom segment.

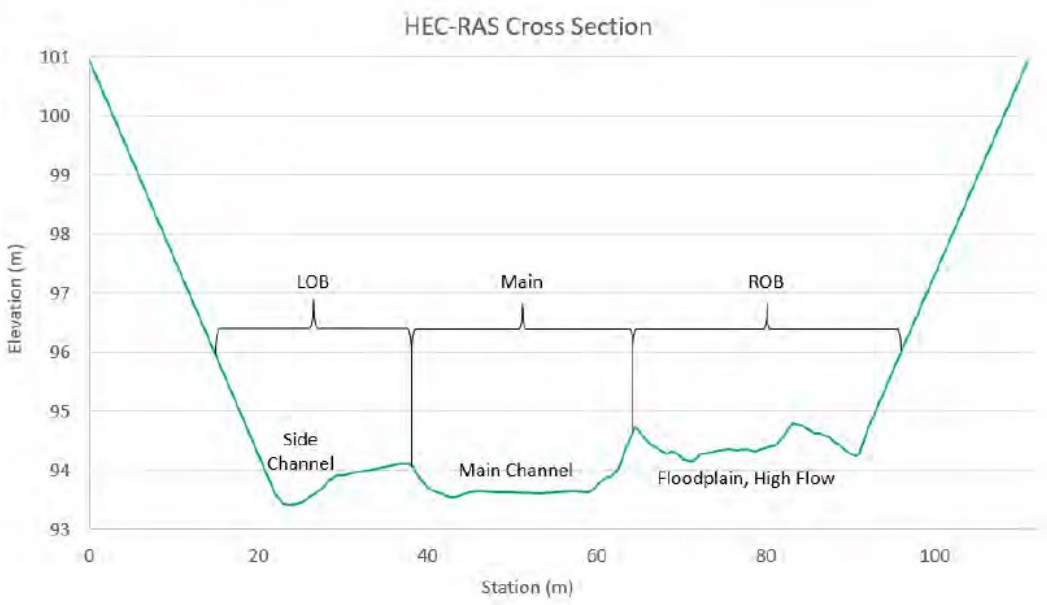

Comment 5-Ie: Hydrology and Hydraulics

5. A quantitative analysis comparing the flow from the Tujunga Wash, Burbank Wastewater Reclamation Plant (WRP), Tillman WRP, Verdugo Wash, and Glendale WRP, and their relative contribution to the hydrograph of the 15-mile study reach.

Response to Comment 5-Ie

As described in responses above, the Assessment of Aquatic Life Report as well as the LA River Flows Project Final Report provide a comprehensive assessment of flow in the Los Angeles River including each of the flow sources noted in the comment. The Assessment of Aquatic Life Report describes average dry season river flows in each segment of the river accounting for contributions from WRPs, groundwater, and storm drain channel inputs.

Comment 5-If: Biological Resources Impact Assessment

1. A map of plant communities and important bird foraging and nesting habitat occurring in the 15-mile study reach. Plant communities should be mapped at the alliance/association level using the Manual of California Vegetation, second edition (Sawyer et al. 2009). Also, CDFW recommends an updated and thorough floristic-based assessment of plant communities, following CDFW's Protocols for Surveying and Evaluating Impacts to Special Status Native Plant Populations and Sensitive Natural Communities (CDFW 2018).

Response to Comment 5-If

The Assessment of Aquatic Life Report provides an inventory of habitat and species occurrences within the 15-mile segment mentioned in the comment. Figure 34 of the Assessment of Aquatic Life Report reproduced below illustrates which reaches exhibit aquatic and riparian habitat values. Habitat mapping was not conducted as part of the study. Rather, flow ranges supporting habitat suitability for all aquatic values were developed, assuming that the entire 15-mile river segment may exhibit habitat values.

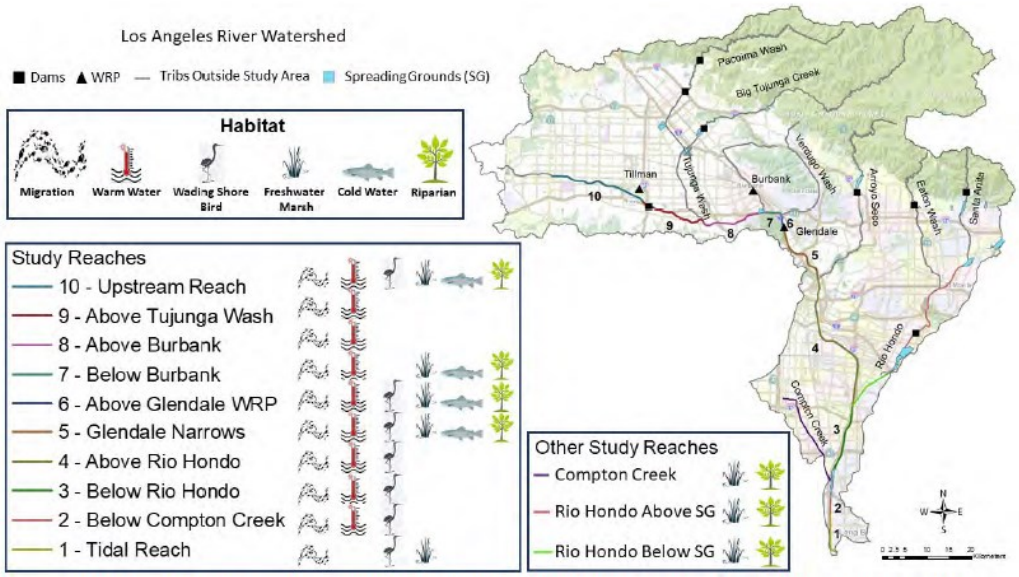

Figure 34. Map of study reaches with identified habitats that could potentially be supported in each reach.

Comment 5-Ig: Biological Resources Impact Assessment

2. A comprehensive list of sensitive and special status plant and wildlife species, and sensitive plant communities, occurring in the 15-mile study reach. CDFW recommends a nine-quad search of the California Natural Diversity Database (CNDDB) for sensitive and special status biological resources that could occur downstream. For each biological resource, provide:

    d. A summary of species-specific habitat requirements;

    e. A discussion as to how the species or plant community may be significantly impacted directly or indirectly through habitat modification, as result of changes to hydrology (reduced flow) and hydraulics (water depth, wetted perimeter, velocity); and,

    f. A quantitative analysis and/or adequate discussion to evaluate whether the Project would result in those significant impacts.

Response to Comment 5-Ig

The Los Angeles River Flows Project Final Report includes a comprehensive inventory and assessment of biological habitat values in the Los Angeles River:

> *"The overarching goal of this project is to consider potential effects of reduced WRP discharge and increased stormwater capture on existing and potential future beneficial uses. Therefore, our analysis included characterizing species and habitats that current occur and those that could reasonably occur in the future (based on a comparison to similar southern California watersheds). "(SCCWRP, 2021; p vii)*
>
> *"The aquatic life use assessment began with a compilation of observational data from the LA River and surrounding watersheds which was used to identify priority focal habitats and endmember species that represent a range of tolerances for each habitat. We then determined the flow conditions necessary to support the life history needs of each species and used those to create "flow-ecology" curves or models relating key hydrologic, hydraulic, and temperature conditions to the probability of occurrence for each focal species, or the probably of being able to complete specific life-history requirements." (SCCWRP, 2021; p vii)*

The Assessment of Aquatic Life Report provides the CNDDB listed species of concern in a concise map excerpted below. Beginning on page 38, the Assessment of Aquatic Life Report provides a summary of "life history needs" for key species within the habitat types. Habitat suitability curves are prepared based on the target vegetation's needs for water as measured by flow in the river (ie., cfs). This analysis defines future water flow reductions as the impact, and provides suitability curves to evaluate significance of the impact. The graph included in response to comment 5-F summarizes the relationship of flow in the river with habitat suitability for willow habitat. Since willow habitat (the key indicator species for riparian values in Southern California) is sustained with substantially less flow than currently exists or is projected to exist with future flow reductions, the contribution of 4 percent flow reduction resulting from the proposed project is considered cumulatively less than significant. That is to say, the scientific analysis contained in the LA Rivers Flows Project Final Report and companion study Assessment of Aquatic Life Report provide the information requested in this comment and support the conclusions of the IS/MND.

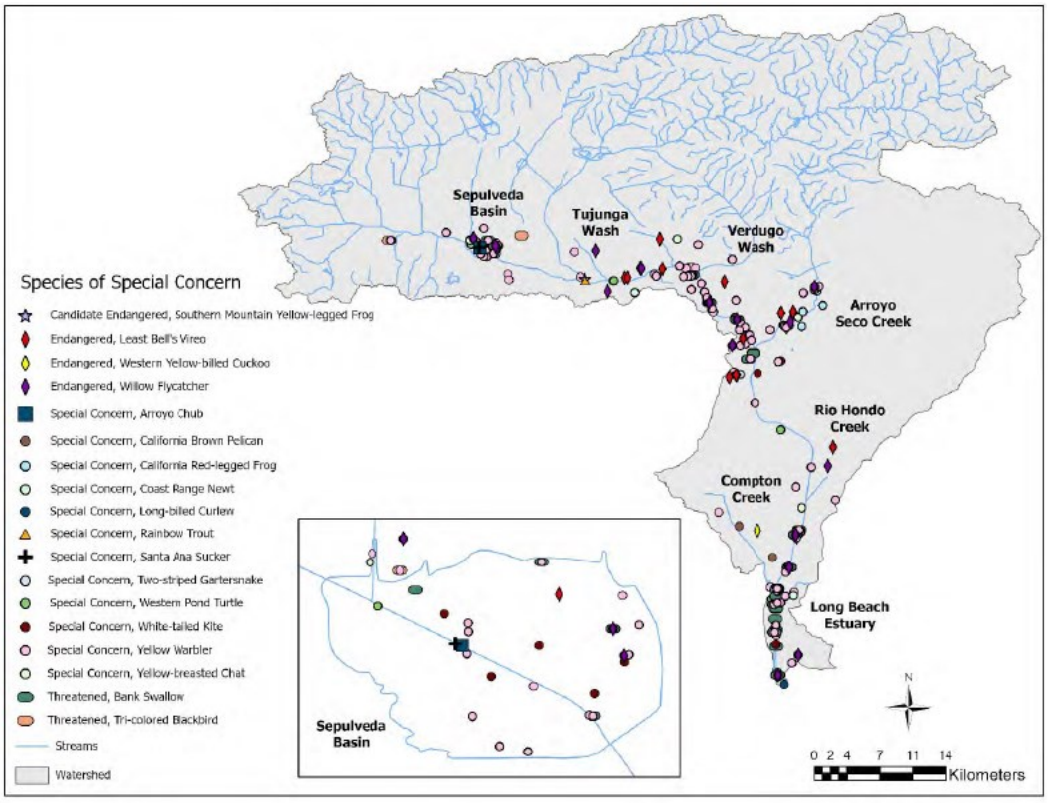

Figure 33. Species observations along the mainstem of the LA River and tributaries included in this study.

Comment 5-Ii: Biological Resources Impact Assessment

3. A discussion of whether diversion devices such as rubber dams would have direct and/or indirect impact on biological resources.

Response to Comment 5-Ii

As described on page 74 of the IS/MND, the proposed diversion structures would not impact any biological resources since they would be installed within either underground storm drain pipes or concrete box channels. The only effect to biological resources that could occur would result from reduced flow to downstream resources. No habitat would be removed as a result of the Project. As described in detail in this response to comment 5-I those effects are determined to be less than significant.

Comment 5-Ij: Biological Resources Impact Assessment

4. An adequate discussion to address how the Project may potentially affect on-going habitat recovery and restoration efforts.

Response to Comment 5-Ij

As described in this response to comment 5-I, the proposed Project would not significantly affect the habitat values within the Los Angeles River. No restoration projects are currently occurring within the river channel that would be adversely affected by the proposed Project.

Comment 5-Ik: Biological Resources Impact Assessment

5. An adequate discussion of Project-related impacts on biological resources in relation to cumulative flow reductions.

Response to Comment 5-Ik

As described in responses to comments 5-F and 5-I, the proposed Project would not significantly affect the habitat values within the Los Angeles River. The LA Flows Project Final Report provides ecology-flow relationship analysis for cumulative reductions including incremental storm flow and WRP reductions. The Project would not contribute to a cumulative reduction in habitat acreage or quality.

Comment 5-J

Mitigation Measure #2: CDFW recommends LADWP develop a discharge operation plan that would always allow sufficient water to pass downstream. CDFW also recommends LADWP develop an Adaptive Management Plan that would direct LADWP to reduce or suspend water diversion if at any point the Project may impact biological resources downstream exceeding a defined threshold/trigger.

Response 5-J

The IS/MND concludes that based on the evidence provided in the existing literature, the proposed Program would not result in significant impacts to biological resources in the Los Angeles River considering the small contribution of flow provided by the Tujunga Central Branch channel. Downstream ecological values would not be measurably affected by the Project. The IS/MND concludes that since the Program's effects would not result in a significant impact directly or cumulatively, no mitigation is required.

LADWP recognizes that the placement of diversion structures within streams and drainages must comply with Fish and Game Code Section 5901 which prohibits installing "any device or contrivance that prevents, impedes, or tends to prevent or impede, the passing of fish up and down stream." Fish and Game Code 5937 requires that operators of dams "allow sufficient water to pass over, around or through the dam, to keep in good condition any fish that may be planted or exist below the dam." Currently, no fish exist within the underground urban storm collection system or concrete box channel. The Tujunga Central Branch channel does not lead to natural stream resources at higher elevation. As a result, the channel would not provide a migratory route for steelhead spawning grounds now or in the future. The entire watershed area is urbanized, mostly within underground storm drain pipes with no ecological values. Future fish migration in the channel is highly unlikely. Furthermore, the instream diversion structures have been designed and operated to allow for storm flows to bypass the diversion mechanism. Each of the diversion structures would include a slide gate. If fish re-colonized the channel in the future these slide gates would be able to allow bypass flows. Therefore, based on the ability to allow for storm flows, the diversion structures would also be able to accommodate fish passage during periods of receding flow when migration opportunities exist, if fish were present. The project would not prevent future habitat restoration or fish occupation in the drainage. The proposed designs would

be compliant with California Fish and Game Code 5901 and 5937. Since no fish are currently in the concrete channel and dry weather flow depths do not accommodate ponding sufficient for fish to survive, there is no reason to prepare a discharge operation plan or adaptive management plan at this time.

See responses to comments 5-G and 5-I.

Comment 5-K

Mitigation Measure #3: CDFW recommends LADWP provide compensatory mitigation at no less than 3:1 for permanent impacts to the concrete-lined Tujunga Central Branch channel due to the installation of diversion structures including (but not limited to) rubber dams and channel drop inlets. CDFW also recommends LADWP provide compensatory mitigation commensurate with the permanent diversion of discharge from Los Angeles River.

Response 5-K

The IS/MND concludes that based on the evidence provided in the existing literature, the proposed Program would not result in significant impacts to biological resources in the Los Angeles River considering the small contribution of flow provided by the Tujunga Central Branch channel. The IS/MND concludes that since the Program's effects would not result in a significant impact directly or cumulatively, no mitigation is required.

The purpose of compensatory mitigation for impacts to waters of the State is to ensure that habitat values and hydrologic functions are maintained at least at the level of the system prior to the initiation of the project. The current concrete channel into which the diversion structures will be placed currently provides no habitat value. Six of the diversion structures will be placed in underground reinforced concrete pipe. The City does not believe that compensation is required for placing diversion structures in underground concrete pipes or concrete channels. As noted on page 74 of the Draft IS/MND, the City will be required to obtain a Lake and Streambed Alteration Agreement (LSAA) from CDFW for the three park projects that will place diversion structures within concrete channels. See response to comment 5-N.

Comment 5-L

Recommendation #1: CDFW recommends the following data and information sources:

- Stream gage data available from Los Angeles County Public Works (LADPW 2021);
- Los Angeles River Master Plan (Geosyntec et al. 2020); and,
- Los Angeles River Flows Project (SWRCB 2019).

Response 5-L

The IS/MND (on page 74) includes annual flow estimates for the Los Angeles River provided by USACE. The data provided in the Draft IS/MND regarding flows is consistent with the river flow data provided in the references cited in the comment. The City is participating in the Los

Angeles River Flows Project which has compiled hydrologic and hydraulic data for the river. The data mentioned in the comment from the County are continuously collected and are indicative of the flow data used by the USACE to ensure flood protection for the City of Los Angeles. The recently published Los Angeles River Master Plan compiles historic river flow data consistent with the USACE and County data. All of this data is consistent with the annual flow totals cited in the IS/MND that document the percentage of flow from the Tujunga Central Branch channel. See response to comments 5-C and 5-G.

Comment 5-M

Recommendation #2: Based on the inadequacy of the Draft IS/MND as elaborated in our preceding comments, CDFW recommends that LADWP revise and recirculate the Draft IS/MND so CDFW may provide more appropriate comments on avoidance, minimization, and mitigation measures (CEQA Guidelines, § 15073.5).

Response 5-M

The comment provides no new information supporting the inadequacy of the analysis in the Draft IS/MND. Re-circulation of the Draft IS/MND is not necessary since existing evidence supports a conclusion that impacts would be less than significant, and that it would be unreasonable to assume otherwise. Furthermore, the study recently published by SCCWRP (SCCWRP 2021b) provides all of the hydrology and hydraulics data and analysis requested in the comment. The study substantiates the conclusions made in the Draft IS/MND, and satisfies CDFW's request for additional information.

Comment 5-N

The Project would potentially alter streams. The Project would divert dry season flow and stormwater. In addition, the Project proposes to install devices within and adjacent to a stream to facilitate water diversion.

The Project would divert water from the Tujunga Central Branch channel and Los Angeles River. The Project proposes to install water diversion structures within or adjacent to the Tujunga Central Branch channel. This includes inflatable rubber dams. Accordingly, the Project may obstruct water flow and change the bed and channel of a stream (confinement).

Fish and Game Code section 1602 requires any person, state or local governmental agency, or public utility to notify CDFW prior to beginning any activity that may do one or more of the following:

- Divert or obstruct the natural flow of any river, stream, or lake;
- Change the bed, channel, or bank of any river, stream, or lake;
- Use material from any river, stream, or lake; or,
- Deposit or dispose of material into any river, stream, or lake.

Response 5-N

The Draft IS/MND states on page 74 that the City would be required to obtain a Streambed Alteration Agreement pursuant to the California Fish and Game Code section 1602. The City will consult with CDFW to obtain a 1602 LSAA for the Program sites that include construction of diversions structures at the Tujunga Central Branch channel. Installation of diversion structures into underground storm drain pipes may require notification, but would not likely result in the need for a full LSAA. The table below identifies LADWP's assumptions of which Program sites may require a LSAA LADWP understands that CDFW will ultimately determine which of these sites will require a LSAA based on information in the initial notification.

Infiltration Gallery Location	Diversion Structure Installation	LSAA Required?
David M. Gonzales Recreation Center	Underground Storm Drain Pipe	No
FernAngeles Park	Underground Storm Drain Pipe	No
Whitsett Fields Park North	Underground Storm Drain Pipe	No
Strathern Park North	Underground Storm Drain Pipe	No
Valley Plaza Park North	Underground Reinforced Concrete Box Culvert	No
Valley Plaza Park South	Concrete Channel	Yes
Alexandria Park	Concrete Channel	Yes
North Hollywood Park	Concrete Channel	Yes
Valley Village Park	Underground Storm Drain Pipe	No

Comment 5-O

Mitigation Measure #1: CDFW has concluded that the [Program] may result in the alteration of streams. As such, the applicant (or "entity") must provide notification to CDFW pursuant to Fish and Game Code, section 1600 *et seq*. Based on this notification and other information, CDFW determines whether an LSAA with the applicant is required prior to conducting the proposed activities. Please visit CDFW's Lake and Streambed Alteration Program webpage to for information about LSAA Notification and online submittal through the Environmental Permit Information Management System Permitting Portal (CDFW 2021a).

Response 5-O

The Draft IS/MND states on page 74 that the City would be required to obtain a LSAA pursuant to the California Fish and Game Code section 1602. A new mitigation measure requiring compliance with regulations is not needed. The City will consult with CDFW to obtain a 1602 LSAA for the Program sites that include construction of diversions structures at the Tujunga Central Branch channel (see table in response 5-N).

Comment 5-P

Mitigation Measure #2: CDFW recommends the LSAA Notification include a hydrological evaluation of the 200, 100, 50, 25, 10, 5, and 2-year frequency storm event for existing and proposed conditions.

Recommendation: CDFW's issuance of an LSAA for a Project that is subject to CEQA will require CEQA compliance actions by CDFW as a Responsible Agency. As a Responsible Agency, CDFW may consider the CEQA document from LADWP for the Project. To minimize additional requirements by CDFW pursuant to Fish and Game Code section 1600 *et seq*. and/or under CEQA, the CEQA document should fully identify the potential impacts to the stream or riparian resources and provide adequate avoidance, mitigation, monitoring, and reporting commitments for issuance of the LSAA. As such, CDFW recommends LADWP consider CDFW's comments and revise the Draft IS/MND. To compensate for any on- and off-site impacts to aquatic and riparian resources, additional mitigation conditioned in any LSAA may include the following: erosion and pollution control measures, avoidance of resources, protective measures for downstream resources, on and/or off-site habitat creation, enhancement or restoration, and/or protection, and management of mitigation lands in perpetuity.

Response 5-P

The Draft IS/MND states on page 74 that the City would be required to obtain a LSAA pursuant to the California Fish and Game Code section 1602(See response to comment 5-N). Hydrologic assessments have been conducted for each of these park projects to determine the capacity of the infiltration galleries and the quantity of feasible wet weather diversions. The rubber dam diversion structures would be lowered when flow rates exceeded the diversion capacity, allowing most of the storm flows in larger storms (including the 2, 5, 10, 25, 50, 100, and 200 year storms) to bypass the diversions. Additional modeling is not necessary to make this conclusion.

Comment 5-Q

CDFW is concerned that the Program may result in significant impacts to bats, including hoary bat (*Lasiurus cinereus*) and silver haired bat (*Lasionycteris Octavian's*).

The Program may result in direct and indirect impacts to bats. Direct impacts include removal of trees and that may provide roosting habitat. Indirect impacts to bats and roosts could result from increased human activity, noise disturbances, dust, vegetation clearing, ground-disturbing activities (e.g., staging, mobilizing, excavating, and grading), and vibrations caused by heavy equipment.

Native and non-native ornamental trees at each park could provide potential roosting habitat for bats. Bats can fit into very small seams, as small as a ¼ inch. Therefore, crevices in buildings and other man-made structures within and adjacent to each park could provide roosting habitat for bats. Despite the availability of potential roosting habitat, the Program concludes that there would not be significant impacts to bats.

Page 60 of Appendix B concludes that while bats "may use western sycamore trees to roost, special-status bat species including hoary bat and silver-haired bat have low potential to occur within all of the project locations, since they are situated in an urban environment with constant ambient nighttime lighting (e.g., street lights, baseball field lights)." The presence of constant ambient lighting may be insufficient to conclude that bats do not occur. Bat response to artificial lighting could vary between species and not all bat species are repelled by light (Longcore and Rich 2004; Opéra et al. 2009). Faster-flying species of bats are attracted to insects that congregate around light sources (Longcore and Rich 2004). Foraging is still possible in the presence of ambient lighting, although forging may be reduced. Also, based on Program site photos in Appendix B, it appears that not all areas within certain parks are illuminated, for instance Valley Plaza North and Valley Plaza South. Based on the above, the probability of bats occurring within each park could be higher than previously concluded.

Accordingly, if bats are present, extra noise, vibration, or the reconfiguration of large objects can lead to the disturbance of roosting bats. Human disturbance can also lead to a change in humidity, temperatures, or the approach to a roost that could force the animals to change their mode of egress and/or ingress to a roost. Modifications to roost sites can have significant impacts on the bats' usability of the roost and can impact the bats' fitness and survivability (Johnston et al. 2004). Although temporary, such disturbances can lead to the abandonment of a maternity roost (Johnston et al. 2004).

Response 5-Q

The Draft IS/MND identifies on page 73 that removal of trees may affect wildlife commonly found in the parks, including bat species, although the Draft IS/MND concludes that the potential for encountering bat roosts in the affected trees is low. Nonetheless, in response to this comment, Mitigation Measure BIO-1 has been modified to require that bat surveys be conducted at each of the Program sites to ascertain whether bats are utilizing the trees to be removed by the Program. With this modification to the BIO-1 mitigation measure, impacts to bats would remain less than significant.

The following text is added to Mitigation Measure BIO-1:

- Prior to removal of trees in any of the Program sites, the City shall retain a qualified bat specialist to conduct bat surveys to confirm whether bats are using the trees as roosting sites. The surveys should encompass a minimum buffer area of 100 feet around the Program sites. The results of the surveys will be provided to CDFW. In the event that bat roosts are identified, an additional bat species survey will be conducted using acoustic survey techniques necessary to confirm the species of bat using the area. If the species survey concludes that sensitive bat species are present, the City shall consult with CDFW pursuant to the California Fish and Game Code section 2081. Removal of special status bats would not be conducted without prior approval from CDFW.

Comment 5-R

Bats are considered non-game mammals and are afforded protection by State law from take and/or harassment (Fish & G. Code, § 4150; Cal. Code of Regs, § 251.1). Additionally, several bat species are considered Species of Special Concern and meet the CEQA definition of rare, threatened, or endangered species (CEQA Guidelines, § 15380). Take of SSC could require a mandatory finding of significance by the Lead Agency (CEQA Guidelines, § 15065).

Response 5-R

See response to comment 5-Q.

Comment 5-S

Mitigation Measure #1: Where Program-related implementation, construction, and activities would occur near potential roosting habitat for bats, CDFW recommends a qualified bat specialist conduct bat surveys within these areas (plus a 100-foot buffer as access allows) in order to identify potential habitat that could provide daytime and/or nighttime roost sites, and any maternity roosts. CDFW recommends using acoustic recognition technology to maximize detection of bats. A discussion of survey results, including negative findings should be provided to LADWP. Depending on the survey results, a qualified bat specialist should discuss potentially significant effects of the Project on bats and include species specific mitigation measures to reduce impacts to below a level of significance (CEQA Guidelines, § 15125). Surveys, reporting, and preparation of robust mitigation measures by a qualified bat specialist should be completed and submitted to the LADWP prior to any Project-related ground-disturbing activities or vegetation removal at or near locations of roosting habitat for bats.

Response 5-S

Mitigation Measure BIO-1 has been modified to accommodate CDFW suggested mitigation requirements. See response to comment 5-Q.

Comment 5-T

Mitigation Measure #2: If bats are not detected, but the bat specialist determines that roosting bats may be present at any time of year and could roost in trees at a given location, during tree removal, trees should be pushed down using heavy machinery rather than felling with a chainsaw. To ensure the optimum warning for any roosting bats that may still be present, trees should be pushed lightly two or three times, with a pause of approximately 30 seconds between each nudge to allow bats to become active. The tree should then be pushed to the ground slowly and remain in place until it is inspected by a bat specialist. Trees that are known to be bat roosts should not be bucked or mulched immediately. A period of at least 24 hours, and preferable 48 hours, should elapse prior to such operations to allow bats to escape.

Response 5-T

Mitigation Measure BIO-1 provides for bat surveys to confirm that bats are not using the trees. If bats are encountered the City will consult with CDFW to ensure an effective bat removal effort in compliance with the California Fish and Game Code. Bats will not be removed from the Program sites without prior CDFW approval. No additional tree removal techniques would be required. No new mitigation is required.

Comment 5-U

Mitigation Measure #3: If maternity roosts are found, to the extent feasible, work should be scheduled between October 1 and February 28, outside of the maternity roosting season when young bats are present but are yet ready to fly out of the roost (March 1 to September 30).

Response 5-U

Mitigation measure BIO-1 has been modified to require approval from CDFW if bats are found to be using the affected trees. As part of any bat removal effort that may be necessary, seasonality of the removal will be a consideration. No additional mitigation measure is required.

Comment 5-V

Mitigation Measure #4: If maternity roosts are found and LADWP determines that impacts are unavoidable, a qualified bat specialist should conduct a preconstruction survey to identify those trees proposed for disturbance that could provide hibernacula or nursery colony roosting habitat. Acoustic recognition technology should be used to maximize the detection of bats. Each tree identified as potentially supporting an active maternity roost should be closely inspected by the bat specialist no more than 7 days prior to tree disturbance to determine the presence or absence of roost bats more precisely. If maternity roosts are detected, trees determined to be maternity roosts should be left in place until the end of the maternity season. Work should not occur within 100 feet of or directly under or adjacent to an active roost. Work should also not occur between 30 minutes before subset and 30 minutes after sunrise.

Response 5-V

As noted in response to comment 5-Q, mitigation measure BIO-1 has been modified to include bat presence surveys. If bats are found, the mitigation measure would require that the City implement a bat removal program in consultation with CDFW.

Comment 5-W

Devices Impeding Fish. The Program includes installation of rubber dams in the stream channel. Per California Fish and Game Code section 5901, it is unlawful to construct or maintain in any stream any device or contrivance the prevents, impedes, or tends to prevent or impeded, the passing of fish up and downstream. Accordingly, LADWP should coordinate with CDFW prior to commencing the Program to ensure that the Program would comply with Fish and Game Code section 5901.

Response 5-W

The concrete pipeline and channel do not support fish species. The Program would not install any devices that would impede fish migration since fish do not occur in the concrete channel and underground pipeline associated with the Tujunga Central Branch channel. The primary impediment for migrating fish under existing conditions is the velocity of the fast-moving storm water in confined pipelines and channels and the lack of refugia habitat at the channel edges. Nonetheless, the in-channel devices for four of the Program sites will require an LSAA from CDFW. The City will consult with CDFW to ensure diversion structures are compliant with Fish and Game Code section 5901.

Comment 5-X

Southern California Black Walnut Tree (*Juglans californica*). According to page 73 in the Draft IS/MND, one Southern California black walnut tree may be removed at North Hollywood Park. Southern California black walnut is a California Rare Plant Rank 4.2 species. If removal of Southern California black walnut is required, CDFW recommends LADWP replace each tree at no less than 3:1 in consideration of the species rarity, temporal loss of black walnut tree canopy and structure while the tree grows, and potential attrition associated with transplanting. Southern California black walnut trees should be replaced with trees of the same species.

Response 5-X

As noted on pages 78-80 of the Draft IS/MND, any protected tree required to be removed would be replaced with 24-inch box size specimens of the same tree species at a ratio of 4:1 in accordance with the City's Tree Protection Ordinance (No.177404) and the RAP's Tree Preservation Policy.

Comment 5-Y

Tree Replacement. In the greater Los Angeles, urban forests and street trees, both native and some non-native species, provide habitat for a high diversity of birds (Wood and Esaian 2020). Some species of raptors have adapted to and exploited urban areas for breeding and nesting (Cooper et al. 2020). For example, raptors (Accipitridae, Falconidae) such as red-tailed hawks (*Buteo jamaicensis*) and Cooper's hawks (*Accipiter cooperii*) can nest successfully in urban sites. Red-tailed hawks commonly nest in ornamental vegetation such as eucalyptus (Cooper et al. 2020). CDFW recommends planting native tree species preferred by birds. This includes coast live oak (*Quercus agrifolia*) and California sycamore (*Platanus racemosa*) (Wood and Esaian 2020). CDFW recommends Audubon Society's Plants for Birds for more information (Audubon Society 2020).

Response 5-Y

The proposed Program would require the removal of existing trees; however, the removal of trees would be replaced on a trunk caliper size basis, 1-inch replaced to 1-inch removed. As noted on pages 78-80 of the Draft IS/MND, any protected tree required to be removed would be replaced

with 24-inch box size specimens at a ratio of 4:1 in accordance with the City's Tree Protection Ordinance (No.177404) and RAP's Tree Preservation Policy. The replacement trees would be planted near the original tree's location, but if there is not adequate space, the City would coordinate with RAP to identify the closest appropriate locations for new plantings. Mitigation Measure BIO-1 is included in the Draft IS/MND to ensure construction activities do not disturb nesting birds. The requirement to replace mature trees would encourage future nesting opportunities for raptors.

Comment 5-Z

Landscaping. CDFW strongly recommends avoiding non-native, invasive plants. CDFW recommends LADWP restrict use of any species, particularly 'Moderate' or 'High' listed by the California Invasive Plant Council (Cal-IPC 2020a). CDFW recommends LADWP use native species found in naturally occurring vegetation communities within or adjacent to the Program sites. Information on alternatives for invasive, non-native, or landscaping plants may be found on the California Invasive Plant Council's, Don't Plant a Pest webpage for southern California (CalIPC 2020b). The California Native Plant Society's Gardening and Xerces Society's PollinatorFriendly Native Plant Lists webpage has information on native plant species that invite insects and pollinators (CNPS 2020; Xerces Society 2020).

Response 5-Z

As noted in the project description, each of the Program sites will be re-landscaped following the installation of the stormwater capture infrastructure. The landscaping plans will use primarily native species to the extent feasible, per RAP landscaping guidelines.

Comment 5-AA

Move Out of Harm's Way. The proposed Program is anticipated to result in clearing of habitats that support wildlife species common in developed areas. CDFW recommends a qualified biological monitor be on site during initial ground disturbing activities and vegetation removal. The qualified biological monitor should move wildlife of low mobility out of harm's way to avoid wildlife injury or mortality.

Response 5-AA

Mitigation Measure BIO-1 would ensure that impacts to any avian species currently utilizing the Program sites would be avoided. As required in mitigation measure BIO-1, contractors will be encouraged to remove vegetation outside of the affected avian or bat nesting seasons. If nesting season cannot be avoided, the mitigation measure provides for measures to ensure impacts to nesting birds is avoided, including delaying activities if necessary. Since the Program sites do not support any native habitat values, a biological monitor is not recommended other than for nesting birds as required in mitigation measure BIO-1.

Comment 5-AB

Data. CEQA requires that information developed in environmental impact reports and negative declarations be incorporated into a database (i.e., California Natural Diversity Database) which may be used to make subsequent or supplemental environmental determinations [Pub. Resources Code, § 21003, subd. (e)]. Accordingly, please report any special status species detected by completing and submitting CNDDB Field Survey Forms (CDFW 2020b). LADWP should ensure the data has been properly submitted, with all data fields applicable filled out, prior to finalizing/adopting the environmental document. LADWP should provide CDFW with confirmation of data submittal.

Response 5-AB

The City acknowledges that survey data identifying special status species should be provided to the CDFW. Appendix B of the Draft IS/MND includes a Biological Technical Report prepared for the Program.

Comment 5-AC

Mitigation and Monitoring Reporting Plan. CDFW recommends LADWP update the Program's proposed Biological Resources Mitigation Measures and condition the environmental document to include mitigation measures recommended in this letter. CDFW provides comments to assist LADWP in developing mitigation measures that are specific, detailed (i.e., responsible party, timing, specific actions, location), and clear in order for a measure to be fully enforceable and implemented successfully via a mitigation monitoring and/or reporting program (CEQA Guidelines, § 15097; Pub. Resources Code, § 21081.6). LADWP is welcome to coordinate with CDFW to further review and refine the Program's mitigation measures. Per Public Resources Code section 21081.6(a)(1), CDFW has provided LADWP with a summary of our suggested mitigation measures and recommendations in the form of an attached Draft Mitigation and Monitoring Reporting Plan (MMRP; Attachment A).

Response 5-AC

The City will adopt the MMRP when approving the Final IS/MND that will include implementation of Mitigation Measure BIO-1.

Comment 5-AD

The Project, as proposed, would have an impact on fish and/or wildlife, and assessment of filing fees is necessary. Fees are payable upon filing of the Notice of Determination by LADWP and serve to help defray the cost of environmental review by CDFW. Payment of the fee is required for the underlying Project approval to be operative, vested, and final (Cal. Code Regs., tit. 14, § 753.5; Fish & G. Code, § 711.4; Pub. Resources Code, § 21089).

Response 5-AD

The City recognizes that the CDFW filing fee for this IS/MND is applicable and the appropriate funds will be included with the Notice of Determination (NOD) when filed with the County Clerk as required by the CEQA Guidelines Section 15094.

Comment 5-AE

The comment includes a table with all of the CDFW proposed Mitigation Measures outlined in the letter.

Response 5-AE

As discussed in the responses to comments 5-A through 5-AE, no new mitigation measures are needed to ensure less than significant effects to biological resources. The MMRP will include the modified Mitigation Measure BIO-1 that reflects CDFW's comments on bat species.

Letter 6: Diana Nicole (Sunshine Hills Residents Association)

Comment 6-A

The commenter expresses concern regarding the diversion of City plans, codes, and funds from parks and tree-oriented initiatives toward green infrastructure.

Response 6-A

The comment does not state a specific concern about the adequacy of the Draft IS/MND or otherwise comment on the contents of the Draft IS/MND analysis. The comment is noted and will be included in the Program record, but a response is not required pursuant to CEQA.

Comment 6-B

The commenter expresses concern regarding the depletion of existing trees/urban forest resources as a result of the Program.

Response 6-B

Once the stormwater capture infiltration galleries are installed, the Program sites will be returned to preconstruction condition with park improvements. The park improvements will include but are not limited to, the addition of green infrastructure elements such as landscape areas with California native drought-tolerant plant material, new irrigation system, shade trees, new lighting. The proposed Program would require the removal of existing trees; however, the removal of trees would be replaced on a trunk caliper size basis, 1-inch replaced to 1-inch removed. Any protected tree required to be removed would be replaced with 24-inch box trees at a ratio of 4:1 in accordance with the City's Tree Protection Ordinance (No.177404) and the RAP's Tree Preservation Policy. The replacement trees would be planted near the original tree's location, but if there is not adequate space, the City would coordinate with RAP to identify the closest appropriate locations for new plantings.

Comment 6-C

The commenter states that the City's protected trees, groves, and related habitat should be subject to higher conservation standards than those that are provided in the Draft IS/MND.

Response 6-C

The City would comply with the existing tree ordinance. See response to 6-B above.

Letter 7: County of Los Angeles Fire Department

Comment 7-A

The commenter provides introduction of the County of Los Angeles Fire Department.

Response 7-A

The comment is noted and will be included in the Program record.

Comment 7-B

The commenter states that since the Program is within the City, the Program would not impact the County of Los Angeles Fire Department.

Response 7-B

The comment is noted and will be included in the Program record.

Comment 7-C

The commenter states that the Program would not have an impact on the County Fire Department Land Development Unit.

Response 7-C

The comment is noted and will be included in the Program record.

Comment 7-D

The comment states that under the Los Angeles County Oak Tree Ordinance, a permit is required to cut, destroy, remove, relocate, inflict damage or encroach into the protected zone of any tree of the Oak genus which is 25 inches or more in circumference (eight inches in diameter), as measured 4 1/2 feet above mean natural grade.

Response 7-D

The Draft IS/MND describes the Oak Tree Ordinance in detail on pages 78-81. The Draft IS/MND concludes that compliance with the ordinance and RAP's Tree Preservation Policy would ensure that impacts to mature trees would not result in significant impacts.

Comment 7-E

The commenter states that the Program would not impact the Health Hazardous Materials Division.

Response 7-E

The comment is noted and will be included in the project record.

Letter 8: Joanne D'Antonio

Comment 8-A

The commenter raises objection to the proposed removal of any mature and healthy trees, most notably the eucalyptus grove at North Hollywood Park. The commenter states that this park has experienced great tree loss during the drought and that all parks are important for the physical and psychological health of residents. They provide much needed shade in the heat-island-effect-plagued San Fernando Valley. The commenters asks where the wildlife will go during construction and how disruptive construction noise may be.

Commenter would like to see the project redesigned to not remove any trees and references several reports on biodiversity and the loss of trees and tree canopy by the City of Los Angeles and Tree People.

Response 8-A

All nine project sites are currently located within developed City parks containing active recreational facilities or open disturbed areas. All nine park project sites will undergo some enhancements and improvements to the park aesthetic and recreational facilities after the installation of the projects. As stated in the IS/MND page 7, park enhancements and improvements are being designed with input from RAP and the community. The City has been coordinating the design effort with RAP and has engaged the local community through several community meetings to solicit input. Conceptual design drawings were included in the IS/MND as Figures 1-4 through 1-12 to depict the current preliminary design associated with each park project site. The stormwater capture facilities are mainly being placed beneath existing ball fields, where feasible, to minimize impacts to landscaped areas within the park. The designs for each park attempt to minimize tree removal where feasible, but as stated in section 2.4, Biological Resources, some trees will be removed in compliance with the City of Los Angeles Tree Protection Ordinance and the RAP Tree Preservation Policy for protection of native and non-native trees. The City has been in coordination with the RAP Forestry Division and none of the parks' mature or healthy trees will be removed without their approval. Revisions to the park designs are being made in coordination with RAP in order to preserve mature trees and any other trees deemed sacred by RAP. RAP has identified two eucalyptus trees at North Hollywood Park that have died and have requested these be removed as part of the project. Tree surveys will be conducted at each part project site prior to tree removal to determine which trees are protected and which trees would need replacement under the RAP Tree Preservation Policy. Further, Mitigation Measure BIO-1was included to protect wildlife species from impacts during

construction. This mitigation measure will require construction activities to occur outside of the nesting bird season or to avoid or minimize impacts to nesting birds and raptors by requiring preconstruction surveys and nest avoidance and/or monitoring during construction.

The City acknowledges that the City of Los Angeles is considered a biodiversity hotspot. As stated in the 2020 Biodiversity Report prepared by the City of Los Angeles and referenced by the commenter, the Program area would fall primarily within Ecotope 20: Los Angeles River Alluvial Plain. As shown in Appendix B, page 428 of the report, only 0.5 percent of the natural vegetation remains across the ecotope, mostly within the Sepulveda Basin. Riparian vegetation is the dominant remaining type of vegetation and provides nesting habitat for the federally endangered least Bell's vireo (*Vireo bellii pusillus*) and potentially the southwestern willow flycatcher (*Empidonax traillii extimus*). The Program site does not include riparian vegetation and is located in an area that is surrounded by a vegetation alliance characterized by urban/developed, and falls mostly within areas characterized by non-native alliances. In addition, the program site is not located within an area characterized as a natural area by the study, and it is located within areas with higher pollution and population percentiles and a lower habitat quality score due to the urban nature of its location. (City of Los Angeles 2020, pages 436 through 442) As such, although the City of Los Angeles is rich in biodiversity, construction within the Program area would not add to the decline of biodiversity in the area.

Comment 8-B

The commenter requests that all trees in the vicinity of construction be protected with orange fencing and no construction material placed under the drip line.

Response 8-B

The construction impact areas will be clearly delineated and trees to be retained will be clearly marked to avoid any impacts to them. As stated in Response 8-A, the City will comply with the City of Los Angeles Tree Protection Ordinance and the RAP Tree Preservation Policy for protection of native and non-native trees that are being retained onsite and/or are being removed.

The RAP Tree Preservation Policy is the primary regulatory tool that gives direction for orderly protection of specified trees, maintains their value, and avoids significant negative effects to the ecosystem. By assuring preservation and protection through regulation and standards of care, these resources will remain significant contributions to the environment and landscape, and continue to add to the unique character of Los Angeles City Parks. (RAP 2004).

As outlined in the Policies for the Installation and Preservation of Landscaping Trees on Public Property of Recreation and Parks Department, included as Appendix M of the City of Los Angeles RAP Urban Forest Program (RAP 2004), "whenever trees are removed, the existing trees' aggregate diameter, measured at breast height (DBH [diameter at breast height], or 4.5-feet above the ground; multi-trunk trees are to be measured immediately below the lowest trunk) shall be replaced at an equal or greater rate of caliper of new trees. Each one-inch DBH of existing tree shall be replaced with a minimum one-inch caliper new tree." For example, if an existing tree with a DBH of 24 inches is removed, the City would need to replace that tree with a newly

planted trees with a total DBH of 24 inches. The replacement tree can have a DBH of 24 inches or if smaller trees are planted, with a DBH of 2 inches, then 12 trees would be planted, or any combination that equates to the 24-inch DBH being replaced.

Comment 8-C

The commenter is concerned about imported soil and improper soil being substituted for naturally occurring soil which create the best environment for replanting. The commenter asks if there is a plan for replanting at the parks to be done with viable new trees. The commenter states that ideally construction projects such as these would not be happening in our parks.

Response 8-C

As stated on page 38 of the IS/MND, once installation of the stormwater system is complete, soils excavated from the site that are stockpiled on-site would be used to backfill the impact areas. Additional imported soils would be used to regrade as needed to return the project impact areas to pre-project conditions. The City will ensure that the soil to backfill the impacted areas would be suitable for the required design elements as shown on preliminary Figures 1-4 through 1-12 of the IS/MND including landscape planting. The City is coordinating with RAP to ensure compliance with park requirements.

Comment 8-D

The commenter states that a one-month comment period is too short to get input from neighborhood councils.

Response 8-D

The comment is noted and will be included in the project record. The CEQA Guidelines require that MNDs be circulated for a total of 30 days per Section 15105(b).

4.2 Changes Made to the Draft IS/MND

The City has made the following changes to the Draft IS/MND and has incorporated them into the Final IS/MND. These modifications clarify, amplify, or make minor changes to the Draft IS/MND. Revisions to the Draft IS/MND have not resulted in new significant impacts or increased the severity of an impact.

Where the responses indicate additions or deletions to the text of the Draft IS/MND, additions are included as <u>underlined text</u>, deletions as ~~stricken text~~. The changes are listed by section and page number.

4.2.1 Changes Made in Response to Comments

Clarification/Revision

The following modifications have been made to page 75 of the Draft IS/MND to augment Mitigation Measure BIO-1 for the inclusion of bat surveys.

Section 2.4, Biological Resources – Page 75

Mitigation Measure

BIO-1: Special-Status Wildlife Species. Construction activities at any of the nine park project sites could result in impacts to the Cooper's hawk (*Accipiter cooperii*), a California Species of Special Concern, where mature trees are present. Similarly, construction activities may also impact other nesting bird species that may nest in a variety of vegetation as well as man-made structures. Construction activities should occur outside of the avian nesting season. If the avian nesting season cannot be avoided and construction or vegetation removal occurs from February 1 to September 1, the City ~~project~~ shall implement the following to avoid and minimize impacts to nesting birds and raptors:

- During the avian breeding season, a qualified biologist shall conduct a preconstruction avian nesting survey no more than 7 days prior to vegetation disturbance or ground-disturbing activities. If construction begins in the non-breeding season and proceeds continuously into the avian nesting season, no surveys are required. However, if there is a break of 7 days or more in construction activities during the nesting season, a new nesting bird survey shall be conducted before construction begins again.
- The preconstruction survey shall cover all reasonably potential nesting locations on and within 100 feet of the construction areas. A 300-foot radius shall be surveyed in areas containing suitable habitat for nesting raptors, such as trees and utility poles.
- If an active nest is found during the preconstruction avian nesting survey, a qualified biologist shall designate a suitable buffer for all passerine birds and raptor species. The nest site area shall not be disturbed until the nest becomes inactive, the young have fledged, the young are no longer being fed by the parents, the young have left the area, and the young will no longer be impacted by the project. Buffer areas may be increased upon recommendation of a qualified biologist if any endangered, threatened, California Fully Protected, or California Species of Special Concern are identified during preconstruction surveys.
- If the nest(s) are found in an area where ground disturbance is scheduled to occur, the City or its contractor shall avoid the area by delaying ground disturbance in the area until a qualified biologist has determined that the birds have fledged and are no longer reliant upon the nest or parental care for survival.
- Prior to removal of trees in any of the Program sites, the City shall retain a qualified bat specialist to conduct bat surveys to confirm whether bats are using the trees as roosting sites. The surveys should encompass a minimum buffer area of 100 feet around the Program sites. The results of the surveys will be provided to CDFW. In the event that bat roosts are identified, an additional bat species survey will be conducted using acoustic survey techniques necessary to confirm the species of bat using the area. If the species survey concludes that sensitive bat species are present, the City shall consult with CDFW pursuant to the California Fish and Game Code section 2081. Removal of special status bats would not be conducted without prior approval from CDFW.

4.2.2 Changes Made by the Lead Agency

Clarification/Revision

The following modifications have been made to page 1 of the Draft IS/MND to include The Metropolitan Water District of Southern California (Metropolitan) as a Responsible Agency of the Program.

Section 1.0, Project Description – Page 1

1.1 Introduction

The City of Los Angeles Department of Water and Power (LADWP), Department of Public Works (Bureau of Engineering [BOE]), Los Angeles Sanitation and Environment (LASAN), and City of Los Angeles Department of Recreation and Parks (RAP), collectively referred to herein as the City, propose to implement the Stormwater Capture Parks Program (Program). The Program would include construction of stormwater capture facilities at nine City-owned parks to help capture surface flow and divert stormwater runoff from the Tujunga Wash Central Branch storm drain to recharge the San Fernando Groundwater Basin. All nine parks are located in the east San Fernando Valley along State Route (SR) 170 (**Figure 1-1**); these parks include: David M. Gonzales Recreation Center; Fernangeles Park; Strathern Park North; Whitsett Fields Park North; Valley Plaza Park North; Valley Plaza Park South; Alexandria Park; North Hollywood Park; and Valley Village Park (**Figure 1-2**).

The City is proposing to obtain financial assistance for the park projects through the Stormwater for Recharge Pilot Program (Recharge Pilot) that is administered by The Metropolitan Water District of Southern California (Metropolitan). The Recharge Pilot encourages development and monitoring of new and existing stormwater recharge projects by providing financial incentives for construction and/or monitoring equipment installation of project and supplemental reporting costs.

Metropolitan offers different incentive amounts for the Recharge Pilot based on project type (New Construction or Monitoring Equipment Installation):

<table>
<tr><td>PROJECT TYPE</td><td colspan="2">FUNDING COMPONENTS</td></tr>
<tr><td></td><td>Construction/Installation</td><td>Monitoring & Reporting</td></tr>
<tr><td rowspan="2">Monitoring Equipment Installation</td><td>Up to $350,000 reimbursement for eligible costs</td><td>$50,000/report</td></tr>
<tr><td colspan="2">Maximum of $500,000</td></tr>
<tr><td rowspan="2">New Construction</td><td>Up to 50% reimbursement of eligible costs, max of $850,000</td><td>$50,000/report</td></tr>
<tr><td colspan="2">Maximum of $1 million</td></tr>
</table>

The City has chosen the New Construction Project Type.

As a Responsible Agency, Metropolitan's Board of Directors will review and consider the proposal and environmental documentation prepared by the City in determining whether or not to approve financial assistance for the Program within the Recharge Pilot administrative process.

The Program would be consistent with Metropolitan's commitment to develop Recharge Pilot activities that would provide a better understanding of the connection between captured stormwater and water supply yield.

Clarification/Revision

The following modifications have been made to pages 82 and 83 of the Draft IS/MND to update the name of the library.

Section 2.5, Cultural Resources – Pages 82 and 83

Page 82

Less than Significant Impact with Mitigation. The cultural resources assessment identified three historic architectural resources within the Program area. These resources include: the David M. Gonzales Recreation Center featuring a clubhouse building dating to the park's period of significance of 1950 located approximately 65 feet from the Program construction footprint; North Hollywood Park featuring a maintenance building and pool house (65 feet and 100 feet from the Program construction footprint, respectively) and the North Hollywood Amelia Earhart Regional ~~Branch~~ Library (located 100 feet from the Program construction footprint) dating to the park's period of significance of 1928–1931; and the 170 Freeway Pedestrian Overpass connecting Valley Plaza Park North and Whitsett Fields Park North located approximately 90 feet from a proposed diversion structure in Valley Plaza Park North. The North Hollywood Amelia Earhart Regional ~~Branch~~ Library is National Register of Historic Places (NRHP)-listed and, therefore qualifies as a historical resource.

Page 83

Mitigation Measures

CUL-1: In the event Program designs are further refined and individual Program site components change to encroach more closely than 50 feet to the North Hollywood Amelia Earhart Regional ~~Branch~~ Library (P-19-167303), the pool house and maintenance building associated with North Hollywood Park, the clubhouse associated with the David M. Gonzales Recreation Center, and/or the 170 Freeway Pedestrian Overpass, the City shall retain a qualified architectural historian meeting the Secretary of the Interior's Standards for Architectural History to review design plans for conformance with the Secretary of the Interior's Standards for the Treatment of Historic Properties (Standards). Should potential Program redesign not conform to the Standards, the City shall work with the qualified architectural historian to mitigate impacts to these resources. Should Program redesign place Program components within 50 feet of these resources, the qualified architectural historian shall also assess potential construction-related impacts resulting from ground-borne vibration. Should ground-borne vibrations have the potential to impact the historical resources, the City and the qualified architectural historian shall develop a plan to monitor ground-borne vibration during construction to ensure it does not exceed thresholds that could damage, or otherwise alter the historical resources.

SECTION 5
Mitigation Monitoring and Reporting Program

The Mitigation Monitoring and Reporting Program (MMRP) for the proposed Program has been prepared in accordance with Public Resources Code section 21081.6 and State CEQA Guidelines section 15091(d). The City will use this MMRP to track compliance with the Program mitigation measures. The City will consider the MMRP during the certification hearing for the Final IS/MND. The MMRP will incorporate all mitigation measures adopted for the proposed Program.

This MMRP summarizes potentially significant impacts and mitigation commitments identified in the Stormwater Capture Parks Program IS/MND. Table 5-1 provides the MMRP which includes all mitigation measures, monitoring/reporting action, monitoring timing, and responsible person(s) for implementation. Impacts and mitigation measures are presented in the same order as in the IS/MND. The columns in the table provide the following information:

- **Mitigation Measures:** The action(s) that will be taken to reduce the impact to a less-than-significant level.
- **Monitoring /Reporting Action:** This column outlines the appropriate steps to implement and verify compliance with the mitigation measures.
- **Monitoring Timing:** This column indicates the general schedule for conducting each monitoring task, either prior to construction, during construction, and/or after construction.
- **Responsible Person(s):** This column lists the agency responsible for ensuring implementation of the mitigation measure.

TABLE 5-1
MITIGATION MONITORING AND REPORTING PROGRAM - STORMWATER CAPTURE PARKS PROGRAM

Mitigation Measure	Monitoring / Reporting Action	Monitoring Timing	Responsible Person(s)
Air Quality			
AQ-1: Construction of the Program shall incorporate the following conditions: a. For all Program sites: The Program shall use off-road diesel-powered construction equipment that meets or exceeds the CARB and USEPA Tier 4 off-road emissions standards for equipment rated at 50 horsepower or greater and not identified under b or c. below. Such equipment will be outfitted with Best Available Control Technology (BACT) devices, including a CARB-certified Level 3 Diesel Particulate Filter or equivalent. These requirements shall be included in applicable bid documents and successful contractor(s) must demonstrate the ability to supply such equipment. b. All dumpers/tenders used on-site shall either be certified Tier 3 with a CARB-certified Level 3 Diesel Particulate Filter or equivalent; certified Tier 4 with a CARB-certified Level 3 Diesel Particulate Filter or equivalent, or alternatively fueled (e.g., gasoline, electric, CNG). c. At a minimum, the following equipment shall be electric: air compressors, cement and mortar mixers, concrete saws, forklifts, pumps. Diesel generators shall be replaced with electricity from the grid either permanent or temporary, or replaced with alternative (non-diesel) fuels. d. Equipment requirements identified under a, b, and c above shall be included in applicable bid documents and successful contractor(s) must demonstrate the ability to supply such equipment. A copy of each unit's certified tier specification or model year specification and CARB or SCAQMD operating permit (if applicable) shall be available upon request at the time of mobilization of each applicable unit of equipment. e. During the site clearing and preparation, grading and excavation, and soil filling, revegetation, and park improvement phases, watering must be conducted a minimum of 4 times per day during dry weather. f. For Valley Plaza Park North only 2 dozers are allowed to operate on any portion of the site at one time. g. The City shall ensure: i. On-road haul trucks including delivery and those conveying excavated material do not exceed the following daily truck limits: 1. 185 trucks when 2 parks are concurrently under construction; 2. 180 trucks when 3 parks are currently under construction; 3. 170 trucks when 4 parks are concurrently under construction; 4. 160 trucks when 5 parks are concurrently under construction; 5. 150 trucks when 6 parks are concurrently under construction; 6. 140 trucks when 7 parks are concurrently under construction. Or;	Site Monitoring	Prior to Construction During Construction	The City Construction Contractor

Mitigation Measure	Monitoring / Reporting Action	Monitoring Timing	Responsible Person(s)
ii. If the fleet is composed of a mix of 2014 or newer trucks, the City shall ensure that on-road haul trucks including delivery and those conveying excavated material do not exceed the following daily truck limits: 1. 240 trucks when 2 parks are concurrently under construction; 2. 230 trucks when 3 parks are concurrently under construction; 3. 220 trucks when 4 parks are concurrently under construction; 4. 210 trucks when 5 parks are concurrently under construction; 5. 200 trucks when 6 parks are concurrently under construction; 6. 190 trucks when 7 parks are concurrently under construction.			
Biological Resources			
BIO-1: Special-Status Wildlife Species. Construction activities at any of the nine park project sites could result in impacts to the Cooper's hawk (*Accipiter cooperii*), a California Species of Special Concern, where mature trees are present. Similarly, construction activities may also impact other nesting bird species that may nest in a variety of vegetation as well as man-made structures. Construction activities should occur outside of the avian nesting season. If the avian nesting season cannot be avoided and construction or vegetation removal occurs from February 1 to September 1, the City shall implement the following to avoid and minimize impacts to nesting birds and raptors: ● During the avian breeding season, a qualified biologist shall conduct a preconstruction avian nesting survey no more than 7 days prior to vegetation disturbance or ground-disturbing activities. If construction begins in the non-breeding season and proceeds continuously into the avian nesting season, no surveys are required. However, if there is a break of 7 days or more in construction activities during the nesting season, a new nesting bird survey shall be conducted before construction begins again. ● The preconstruction survey shall cover all reasonably potential nesting locations on and within 100 feet of the construction areas. A 300-foot radius shall be surveyed in areas containing suitable habitat for nesting raptors, such as trees and utility poles. ● If an active nest is found during the preconstruction avian nesting survey, a qualified biologist shall designate a suitable buffer for all passerine birds and raptor species. The nest site area shall not be disturbed until the nest becomes inactive, the young have fledged, the young are no longer being fed by the parents, the young have left the area, and the young will no longer be impacted by the Program. Buffer areas may be increased upon recommendation of a qualified biologist if any endangered, threatened, California Fully Protected, or California Species of Special Concern are identified during preconstruction surveys. ● If the nest(s) are found in an area where ground disturbance is scheduled to occur, the City or its contractor shall avoid the area by delaying ground disturbance in the area until a qualified biologist has determined that the birds have fledged and are no longer reliant upon the nest or parental care for survival. ● Prior to removal of trees in any of the parks, the City shall retain a qualified bat specialist to conduct bat surveys to confirm whether bats are using the trees as roosting sites. The	Site Survey by a Qualified Biologist	Prior to Construction During Construction	The City

Mitigation Measure	Monitoring / Reporting Action	Monitoring Timing	Responsible Person(s)
surveys should encompass a minimum buffer area of 100 feet around the parks. The results of the surveys will be provided to CDFW. In the event that bat roosts are identified, an additional bat species survey will be conducted using acoustic survey techniques necessary to confirm the species of bat using the area. If the species survey concludes that sensitive bat species are present, the City shall consult with CDFW pursuant to the California Fish and Game Code section 2081. Removal of special status bats would not be conducted without prior approval from CDFW.			
Cultural Resources			
CUL-1: In the event Program designs are further refined and individual park project components change to encroach more closely than 50 feet to the North Hollywood Amelia Earhart Regional Library (P-19-167303), the pool house and maintenance building associated with North Hollywood Park, the clubhouse associated with the David M. Gonzales Recreation Center, and/or the 170 Freeway Pedestrian Overpass, the City shall retain a qualified architectural historian meeting the Secretary of the Interior's Standards for Architectural History to review design plans for conformance with the Secretary of the Interior's Standards for the Treatment of Historic Properties (Standards). Should potential Program redesign not conform to the Standards, the City shall work with the qualified architectural historian to mitigate impacts to these resources. Should Program redesign place Program components within 50 feet of these resources, the qualified architectural historian shall also assess potential construction-related impacts resulting from ground-borne vibration. Should ground-borne vibrations have the potential to impact the historical resources, the City and the qualified architectural historian shall develop a plan to monitor ground-borne vibration during construction to ensure it does not exceed thresholds that could damage, or otherwise alter the historical resources.	Plan Preparation Site Monitoring by a Qualified Archeologist Historian	Prior to Construction During Construction	The City
CUL-2: Prior to the start of ground-disturbing activities, the City shall retain a qualified archaeologist meeting the Secretary of the Interior's Professional Qualifications Standards for archaeology (U.S. Department of the Interior, 2008) to carry out the following cultural resources mitigation measures.	Site Monitoring by a Qualified Archeologist	Prior to Construction During Construction	The City
CUL-3: Prior to start of ground-disturbing activities, the qualified archaeologist shall prepare a cultural resources sensitivity training module to be used as part of the City's Worker Environmental Awareness Program (WEAP) training. All construction personnel shall receive sensitivity training prior to beginning work onsite. Construction personnel should be informed of the types of archaeological resources that may be encountered, and of the proper procedures to be enacted in the event of an inadvertent discovery of archaeological resources or human remains. The City should ensure that construction personnel are made available for and attend the training and retain documentation demonstrating attendance.	Personnel Training by a Qualified Archeologist	Prior to Construction During Construction	The City Construction Contractor
CUL-4: Prior to the start of any project-related ground-disturbing activities, the qualified archaeologist shall prepare a Cultural Resources Monitoring Plan (CRMP) in consultation with Tribes that requested consultation under AB52. The CRMP shall stipulate the location and timing of archaeological and Native American monitoring, which shall include all ground-disturbing activities in each of the nine parks that exceed the depths of undocumented fill as documented by geotechnical testing. The qualified archaeologist shall review engineering plans for each of the nine parks to determine where ground-disturbing activities will exceed the depths of undocumented fill at each park to determine the timing and locations of monitoring to be included in the CRMP. The CRMP shall include monitoring protocols to be carried out during Program-related construction. The CRMP shall stipulate that Native	Plan Preparation Site Monitoring by a Qualified Archeologist	Prior to Construction During Construction Post Construction	The City

Mitigation Measure	Monitoring / Reporting Action	Monitoring Timing	Responsible Person(s)
American monitors associated with any of the Tribes that have been consulted with under AB52 be retained to monitor Program-related ground disturbance stipulated in the CRMP. The CRMP shall contain an allowance that the Qualified Archaeologist, based on observations of subsurface soil stratigraphy or other factors during initial grading, and in coordination with the Native American monitor(s) and the City, may reduce or discontinue monitoring as warranted if it is determined that the possibility of encountering archaeological deposits is low. The CRMP shall outline the appropriate measures to be followed in the event of unanticipated discovery of cultural resources during Program implementation, including that all ground disturbance within 100 feet of an unanticipated discovery shall cease until a treatment plan is developed by the qualified archaeologist in coordination with the City and the Native American monitor(s) and which will consider the resources archaeological and tribal value. The CRMP shall identify avoidance as the preferred manner of mitigating impacts to cultural resources. The CRMP shall establish the criteria utilized to evaluate the significance (per CEQA) of the discoveries, methods of avoidance consistent with CEQA Guidelines Section 15126.4(b)(3), as well as identify the appropriate treatment to mitigate the effect of the Program if avoidance of a significant resource is determined to be infeasible. The CRMP will also include provisions for the treatment of archaeological sites that qualify as unique archaeological resources pursuant to Public Resources Code Section 21083.2, which places limits on the costs of mitigation for unique archaeological resources. The plan shall also require the preparation of a monitoring report following the completion. The monitoring report will be submitted to the City for review and comment and a final copy will be filed at the SCCIC. The CRMP shall be submitted to the City and the appropriate Native American representatives who have been consulted with under AB52 for review prior to the start of Program-related ground disturbance.			
CUL-5: In the event of the unanticipated discovery of archaeological materials during Program implementation, all work shall immediately cease in the area (within approximately 100 feet) of the discovery until it can be evaluated by the qualified archaeologist. Construction shall not resume until the qualified archaeologist has conferred with the City and the Native American monitors on the significance of the resource. If it is determined that the discovered archaeological resource constitutes a significant resource, avoidance and preservation in place is the preferred manner of mitigation. Preservation in place may be accomplished by, but is not limited to, avoidance, incorporating the resource into open space, capping, or deeding the site into a permanent conservation easement. In the event that preservation in place is demonstrated to be infeasible and data recovery through excavation is the only feasible mitigation available, a Cultural Resources Treatment Plan shall be prepared and implemented by the qualified archaeologist in consultation with the City and Native American monitors that provides for the adequate recovery of the scientifically consequential information contained in the archaeological resource. The City shall consult the appropriate Native American representatives in determining treatment and disposition for prehistoric or Native American resources to ensure cultural values ascribed to the resource beyond those that are scientifically important are considered.	Site Monitoring by a Qualified Archeologist	During Construction	The City Construction Contractor
CUL-6: If human remains are encountered, all work shall halt in the vicinity (within 100 feet) of the find and the Los Angeles County Coroner shall be contacted in accordance with PRC Section 5097.98 and Health and Safety Code Section 7050.5. If the County Coroner determines that the remains are Native American, the NAHC will be notified in accordance with Health and Safety Code Section 7050.5, subdivision (c), and PRC Section 5097.98 (as amended by Assembly Bill 2641). The NAHC will designate a Most Likely Descendent (MLD) for the remains per PRC Section 5097.98. Until the landowner has conferred with the MLD, the City shall ensure that the immediate vicinity where the discovery occurred is not disturbed by further activity, is adequately protected according to generally	Site Inspection	During Construction	The City

Mitigation Measure	Monitoring / Reporting Action	Monitoring Timing	Responsible Person(s)
accepted cultural or archaeological standards or practices, and that further activities take into account the possibility of multiple burials.			
Geology and Soils			
GEO-1: The City shall implement the recommendations provided in the geotechnical investigations for each of the park project sites. In the event that the depth to groundwater rises to less than 50 feet bgs as measured in nearby wells, the stormwater infiltration process shall be stopped and the stormwater routed to the surface storm drain system until groundwater depths decrease to below 50 bgs.	Site Monitoring	During Construction Post Construction	The City
GEO-2: Prior to the start of construction activities, the City shall retain a Qualified Paleontologist that meets the standards of the Society of Vertebrate Paleontology (2010) to carry out all mitigation measures related to paleontological resources.	Site Monitoring	Prior to Construction During Construction	The City
GEO-3: Prior to start of any ground-disturbing activities, the Qualified Paleontologist shall contribute to any construction worker cultural resources sensitivity WEAP training materials outlined in Mitigation Measure CUL-2, either in person or via a training module provided to the Qualified Archaeologist. This training shall include information on what types of paleontological resources could be encountered during excavations, what to do in case an unanticipated discovery is made by a worker, and laws protecting paleontological resources. All construction personnel shall be informed of the possibility of encountering fossils and instructed to immediately inform the construction foreman or supervisor if any fossils are unexpectedly unearthed in an area where a paleontological monitor is not present. The City shall ensure that construction personnel are made available for and attend the training and retain documentation demonstrating attendance.	Personnel Training by a Qualified Paleontologist	Prior to Construction During Construction	The City
GEO-4: The Qualified Paleontologist shall supervise a paleontological monitor meeting the Society for Vertebrate Paleontology standards (2010) who shall be present during all excavations exceeding 15 feet. Monitoring shall consist of visually inspecting fresh exposures of rock for larger fossil remains and, where appropriate, collecting wet or dry screened sediment samples of promising horizons for smaller fossil remains. Monitoring can be reduced to part-time inspections or ceased entirely if determined adequate by the Qualified Paleontologist in consultation with the City. Monitoring activities shall be documented in a Paleontological Resources Monitoring Report to be prepared by the Qualified Paleontologist at the completion of construction and shall be provided to the City and filed with the Natural History Museum of Los Angeles County within 6 months of Program completion.	Site Monitoring by a Qualified Paleontologist	During Construction	The City
GEO-5: If a unique geologic feature or paleontological resource is discovered during construction, the paleontological monitor shall be empowered to temporarily divert or redirect grading and excavation activities in the area of the exposed fossil to facilitate evaluation of the discovery. An appropriate buffer area shall be established by the Qualified Paleontologist around the find where construction activities shall not be allowed to continue. Work shall be allowed to continue outside of the buffer area. At the Qualified Paleontologist's discretion and to reduce any construction delay, the grading and excavation contractor shall assist in removing rock samples for initial processing and evaluation of the find. All significant fossils shall be collected by the paleontological monitor and/or the Qualified Paleontologist. Collected fossils shall be prepared to the point of identification and catalogued before they are submitted to their final repository. Any fossils collected shall be curated at a public, non-profit institution with a research interest in the materials, such as the Los Angeles County Natural History	Site Monitoring by a Qualified Paleontologist	During Construction	The City

Mitigation Measure	Monitoring / Reporting Action	Monitoring Timing	Responsible Person(s)
Museum, if such an institution agrees to accept the fossils. If no institution accepts the fossil collection, they shall be donated to a local school in the area for educational purposes. Accompanying notes, maps, and photographs shall also be filed at the repository and/or school.			
Hazards and Hazardous Materials			
HAZ-1: The City or its construction contractor shall ensure that fueling of vehicles or storage of fuel or other chemicals would occur at the furthest extent possible from an existing school site.	Site Monitoring	During Construction	The City Construction Contractor
HAZ-2: For all schools located adjacent to a proposed work area, the City shall coordinate school safety routes, which should include, but not be limited to: ● Maintaining in place all crosswalks along the safe routes to and from the school (for Pacoima Charter School these would include Norris Avenue, Van Nuys Boulevard, Pierce Street, and Herrick Avenue). ● Designating a safe location for school buses and parents to drop off and pick up students. ● Designating a safe parking area for parents to wait for/pick up school children. ● Maintaining sidewalks open to pedestrian traffic during construction. ● Additional safety measures must be adopted during construction to protect the students and the public, including k-railing, secured fencing with screen, clear signing, temporary striping, and a flagger for trucks entering and existing the construction zone. Flaggers should also be considered at crosswalks while students are present. ● Close coordination with the impacted school and the Los Angeles Unified School District for input on the school safety route design and frequent communication during construction. ● Extensive outreach program for the school and the community describing safety measures and construction schedules. ● Restrict construction times to avoid before and after school timeframes while children may be walking to and from school, and while school is in session, as feasible.	Safety Planning Notification Site Monitoring	During Construction	The City Construction Contractor
HAZ-3: The City and its contractor shall conduct further investigation of the nature and extent of landfill materials and contaminated soil at the Strathern Park North site, under the oversight of the City of Los Angeles Local Enforcement Agency (LEA). Undocumented waste shall be delineated and sampled for chemicals of concern related to waste materials. The project shall avoid construction within the delineated waste mass, as feasible. If avoidance of the waste mass is not feasible, the City shall submit a work plan to the LEA that documents the results of the waste delineation, details the specifics of the construction project and how it relates to the onsite waste, describes the procedures for dealing with the waste, and outlines the environmental monitoring procedures that would be implemented during construction. Upon approval of the work plan, the City and its contractor shall remove the landfill materials and any soil with chemical concentrations above regulatory action levels to the satisfaction of the LEA and properly dispose of it at a permitted facility. An as-built report shall be submitted to the LEA after completion of the project.	Site Survey Plan Preparation	Prior to Construction During Construction Post Construction	The City

Mitigation Measure	Monitoring / Reporting Action	Monitoring Timing	Responsible Person(s)
Noise			
NOI-1: For construction activities adjacent to noise-sensitive receptors (e.g., residences and schools), the contractor shall ensure that all construction equipment, fixed or mobile, are equipped with properly operating and maintained noise shielding and muffling devices, consistent with manufacturers' standards. The contractor shall use muffler systems (e.g., absorptive mufflers) that provide a minimum reduction of 5 dBA compared to the same equipment without an installed muffler system, reducing maximum construction noise levels. The contractor shall keep documentation on-site demonstrating that the equipment has been maintained in accordance with the manufacturers' specifications. The contractor shall also keep documentation on-site verifying compliance with this measure.	Site Monitoring	During Construction	The City Construction Contractor
NOI-2: For construction activities adjacent to noise-sensitive receptors (e.g., residences and schools), where physically and technically feasible, the contractor shall provide an 8-foot-tall to 20-foot-tall temporary fence or other barrier placed between the project construction area and the sensitive receptor with a performance standard of achieving a 15 dBA noise level reduction at the sensitive receptors. The temporary fence or barrier shall be used during peak noise-generating construction phases when the use of heavy equipment is prevalent. A noise barrier is not required if it would pose a safety risk or unreasonably prevent access to the construction area as deemed by the on-site construction manager, such as in areas that have limited equipment maneuvering space or access.	Temporary Fence/Barrier Site Monitoring	During Construction	The City Construction Contractor
NOI-3: Limit engine idling of construction equipment (e.g., haul trucks, loaders) to a minimum of 200 feet from any boundary of the nearest sensitive receptors.	Site Monitoring	During Construction	The City Construction Contractor
NOI-4: Prior to commencement of construction activities, the City shall notify in writing adjacent residents, schools and businesses near the various park project sites, of proposed construction activities and the tentative schedule. The notices shall also provide a contact person and hotline where local residents, schools, or business owners can call during active construction with questions or comments. The City shall respond to inquiries regarding construction noise and vibration. Notices and construction signs will include a website address which will be updated quarterly and will include Program-related information.	Notification	Prior to Construction	The City
NOI-5: The operation of construction equipment that generates high levels of vibration, such as large bulldozers and loaded trucks, shall be prohibited within 45 feet of the property lines of existing residential and school uses adjacent to the various park project sites. Instead, rubber-tired equipment not exceeding 247 horsepower shall be used in these areas during construction within 45 feet from the sensitive receptor locations.	Site Monitoring	During Construction	The City Construction Contractor
Transportation			
TR-1: For parks where construction would occur outside of park facilities or that may impact roadways surrounding park areas, a CTMP shall be developed by the City or its contractor and approved by LADOT prior to the start of construction. The CTMP may include, but is not limited to the following:	Plan Preparation Site Survey Notification	Prior to Construction During Construction	The City Construction Contractor

Mitigation Measure	Monitoring / Reporting Action	Monitoring Timing	Responsible Person(s)
● Work area traffic control plans for all in-street construction sites to the satisfaction of LADOT, as appropriate prior to the start of any construction work. The plans shall include such elements as the location of any lane closures, restricted hours during which lane closures would not be allowed, local traffic detours, protective devices and traffic controls (such as pavement markings, barricades, cones, flagmen, lights, warning beacons, temporary traffic signals, turning movement restrictions, warning signs), access to abutting properties, and provisions to maintain emergency access through construction work areas. ● The dates and locations where in-street and off-street construction activities are planned. ● If any street segments will be limited to one-way traffic, prepare detour plans over parallel routes. ● Require signage indicated alternative routes where construction will occur. ● Identify and consolidate staging areas for equipment and materials, as feasible. ● Consolidate truck trips, such that multiple worksites can be served, as feasible. ● Promote carpooling among workers. ● Contact emergency service providers in the project vicinity to notify of the location, hours, and duration of in-street construction. Provide advance notice of any lane closures and changes to local access and identity alternative routes where appropriate.			

References

City of Los Angeles, 2015. Stormwater Capture Master Plan. August 2015.

City of Los Angeles, 2018. One Water LA 2040 Plan. Chapters 3 and 4. April 2018.

City of Los Angeles Recreation and Parks Department (RAP), 2004. Urban Forest Program. October 2004.

County of Los Angeles, 2021. LA River Master Plan, January 2021.

Southern California Coastal Water Research Project (SCCWRP), 2021a. Biological Needs Assessment.

SCCWRP, 2021b, Process and Decision Support Tools for Evaluating Flow Management Targets to Support Aquatic Life and Recreational Beneficial Uses of the Los Angeles River *Los Angeles River Environmental Flows Project;* Technical Report #1196

LADWP Stormwater Capture Parks Program

INTERNAL ROLES AND RESPONSIBILITIES FOR THE MITIGATION MONITORING AND REPORTING PROGRAM

November 2024

Mitigation Measure	Name of the Site	Phase of Construction (Design, Construction, Operation)	Need Monitoring during Construction	Responsibility: DWP, DWP Contractor, BOE-Engineering, BOE-EMG, BOE-Contractor	Implementation Method (Monitoring, Specification and Plans) Report	Implementation Record (Report filed with DWP, BOE-EMG, and any responsible regulatory agencies, Specifications and Plans)	Enforcement Responsibility (BOE-PE, BOE-PM, CONTRACTOR, DWP-Mitigation Monitor, PW-CON-AD).
Air Quality							
AQ-1: Construction of the Program shall incorporate the following conditions:							
a. For all Program sites: The Program shall use off-road diesel-powered construction equipment that meets or exceeds the CARB and USEPA Tier 4 off-road emissions standards for equipment rated at 50 horsepower or greater and not identified under b or c. below. Such equipment will be outfitted with Best Available Control Technology (BACT) devices, including a CARB-certified Level 3 Diesel Particulate Filter or equivalent. These requirements shall be included in applicable bid documents and successful contractor(s) must demonstrate the ability to supply such equipment.	All Sites	Construction	Yes	BOE Contractor	Specifications Pre-construction verification submitted to BOE with annual recertification	BOE CARB AQMD USEPA	BOE Contractor
b. All dumpers/tenders used on-site shall either be certified Tier 3 with a CARB-certified Level 3 Diesel Particulate Filter or equivalent; certified Tier 4 with a CARB-certified Level 3 Diesel Particulate Filter or equivalent, or alternatively fueled (e.g., gasoline, electric, CNG).	All Sites	Construction	Yes	BOE Contractor	Specifications Pre-construction verification submitted to BOE with annual recertification	BOE CARB	BOE Contractor
c. At a minimum, the following equipment shall be electric: air compressors, cement and mortar mixers, concrete saws, forklifts, pumps. Diesel generators shall be replaced with electricity from the grid either permanent or temporary, or replaced with alternative (non-diesel) fuels.	All Sites	Construction	Yes	BOE Contractor	Specifications Pre-construction verification submitted to BOE with annual recertification	BOE CARB AQMD	BOE Contractor
d. Equipment requirements identified under a, b, and c above shall be included in applicable bid documents and successful contractor(s) must demonstrate the ability to supply such equipment. A copy of each unit's certified tier specification or model year specification and CARB or SCAQMD operating permit (if applicable) shall be available upon request at the time of mobilization of each applicable unit of equipment.	All Sites	Construction	Yes	BOE Contractor	Specifications	BOE	Contractor
e. During the site clearing and preparation, grading and excavation, and soil filling, revegetation, and park improvement phases, watering must be conducted a minimum of 4 times per day during dry weather.	All Sites	Construction	Yes	BOE Contractor	Specifications Monitoring Reporting	AQMD, SWRCB, RWQCB	Contractor
f. For Valley Plaza Park North only 2 dozers are allowed to operate on any portion of the site at one time.	Valley Plaza Park North	Construction	Yes	BOE Contractor	Specifications	BOE	Contractor
g. The City shall ensure:							
i. On-road haul trucks including delivery and those conveying excavated material do not exceed the following daily truck limits:	All Sites	Construction	Yes	BOE Contractor	Specifications	BOE	Contractor
1. 185 trucks when 2 parks are concurrently under construction;							
2. 180 trucks when 3 parks are currently under construction;							
3. 170 trucks when 4 parks are concurrently under construction;							
4. 160 trucks when 5 parks are concurrently under construction;							
5. 150 trucks when 6 parks are concurrently under construction;							
6. 140 trucks when 7 parks are concurrently under construction. Or;							
ii. If the fleet is composed of a mix of 2014 or newer trucks, the City shall ensure that on-road haul trucks including delivery and those conveying excavated material do not exceed the following daily truck limits:	All Sites	Construction	Yes	BOE Contractor	Specifications	BOE	Contractor
1. 240 trucks when 2 parks are concurrently under construction;							
2. 230 trucks when 3 parks are concurrently under construction;							
3. 220 trucks when 4 parks are concurrently under construction;							
4. 210 trucks when 5 parks are concurrently under construction;							
5. 200 trucks when 6 parks are concurrently under construction;							
6. 190 trucks when 7 parks are concurrently under construction.							

Biological Resources							
BIO-1: Special-Status Wildlife Species. Construction activities at any of the nine park project sites could result in impacts to the Cooper's hawk (*Accipiter cooperii*), a California Species of Special Concern, where mature trees are present. Similarly, construction activities may also impact other nesting bird species that may nest in a variety of vegetation as well as man-made structures. Construction activities should occur outside of the avian nesting season. If the avian nesting season cannot be avoided and construction or vegetation removal occurs from February 1 to September 1, the City shall implement the following to avoid and minimize impacts to nesting birds and raptors: During the avian breeding season, a qualified biologist shall conduct a preconstruction avian nesting survey no more than 7 days prior to vegetation disturbance or ground-disturbing activities. If construction begins in the non-breeding season and proceeds continuously into the avian nesting season, no surveys are required. However, if there is a break of 7 days or more in construction activities during the nesting season, a new nesting bird survey shall be conducted before construction begins again. The preconstruction survey shall cover all reasonably potential nesting locations on and within 100 feet of the construction areas. A 300-foot radius shall be surveyed in areas containing suitable habitat for nesting raptors, such as trees and utility poles. If an active nest is found during the preconstruction avian nesting survey, a qualified biologist shall designate a suitable buffer for all passerine birds and raptor species. The nest site area shall not be disturbed until the nest becomes inactive, the young have fledged, the young are no longer being fed by the parents, the young have left the area, and the young will no longer be impacted by the Program. Buffer areas may be increased upon recommendation of a qualified biologist if any endangered, threatened, California Fully Protected, or California Species of Special Concern are identified during preconstruction surveys. If the nest(s) are found in an area where ground disturbance is scheduled to occur, the City or its contractor shall avoid the area by delaying ground disturbance in the area until a qualified biologist has determined that the birds have fledged and are no longer reliant upon the nest or parental care for survival. Prior to removal of trees in any of the parks, the City shall retain a qualified bat specialist to conduct bat surveys to confirm whether bats are using the trees as roosting sites. The surveys should encompass a minimum buffer area of 100 feet around the parks. The results of the surveys will be provided to CDFW. In the event that bat roosts are identified, an additional bat species survey will be conducted using acoustic survey techniques necessary to confirm the species of bat using the area. If the species survey concludes that sensitive bat species are present, the City shall consult with CDFW pursuant to the California Fish and Game Code section 2081. Removal of special status bats would not be conducted without prior approval from CDFW.	All Sites	Pre-construction and Construction	Yes	DWP/DWP Contractor	Specifications Surveys and Monitoring Report	Report to be filed with DWP Environmental Planning and Assessment Group and shared with BOE	DWP – Environmental Planning and Assessment Group
Cultural Resources							
CUL-1: In the event Program designs are further refined and individual park project components change to encroach more closely than 50 feet to the North Hollywood Branch Library (P-19-167303), the pool house and maintenance building associated with North Hollywood Park, the clubhouse associated with the David M. Gonzales Recreation Center, and/or the 170 Freeway Pedestrian Overpass, the City shall retain a qualified architectural historian meeting the Secretary of the Interior's Standards for Architectural History to review design plans for conformance with the Secretary of the Interior's Standards for the Treatment of Historic Properties (Standards). Should potential Program redesign not conform to the Standards, the City shall work with the qualified architectural historian to mitigate impacts to these resources. Should Program redesign place Program components within 50 feet of these resources, the qualified architectural historian shall also assess potential construction-related impacts resulting from ground-borne vibration. Should ground-borne vibrations have the potential to impact the historical resources, the City and the qualified architectural historian shall develop a plan to monitor ground-borne vibration during construction to ensure it does not exceed thresholds that could damage, or otherwise alter the historical resources.	North Hollywood Park David M. Gonzales, Valley Plaza Park North	Design/Pre-Construction	TBD	DWP/DWP Contractor	Design review by qualified architectural historian and monitoring, if required.	Report to be filed with DWP Environmental Planning and Assessment Group and shared with BOE	DWP – Environmental Planning and Assessment Group
CUL-2: Prior to the start of ground-disturbing activities, the City shall retain a qualified archaeologist meeting the Secretary of the Interior's Professional Qualifications Standards for archaeology (U.S. Department of the Interior, 2008) to carry out the following cultural resources mitigation measures.	All sites	Design/Pre-Construction	NA	DWP/DWP Contractor	Retention of qualified archaeologist	BOE	DWP – Environmental Planning and Assessment Group
CUL-3: Prior to start of ground-disturbing activities, the qualified archaeologist shall prepare a cultural resources sensitivity training module to be used as part of the City's Worker Environmental Awareness Program (WEAP) training. All construction personnel shall receive sensitivity training prior to beginning work onsite. Construction personnel should be informed of the types of archaeological resources that may be encountered, and of the proper procedures to be enacted in the event of an inadvertent discovery of archaeological resources or human remains. The City should ensure that construction personnel are made available for and attend the training and retain documentation demonstrating attendance.	All sites	Pre-construction	NA	DWP/DWP Contractor	Pre-construction WEAP training	Training materials/handouts Training records sent to BOE	DWP – Environmental Planning and Assessment Group

CUL-4: Prior to the start of any project-related ground-disturbing activities, the qualified archaeologist shall prepare a Cultural Resources Monitoring Plan (CRMP) in consultation with Tribes that requested consultation under AB52. The CRMP shall stipulate the location and timing of archaeological and Native American monitoring, which shall include all ground-disturbing activities in each of the nine parks that exceed the depths of undocumented fill as documented by geotechnical testing. The qualified archaeologist shall review engineering plans for each of the nine parks to determine where ground-disturbing activities will exceed the depths of undocumented fill at each park to determine the timing and locations of monitoring to be included in the CRMP. The CRMP shall include monitoring protocols to be carried out during Program-related construction. The CRMP shall stipulate that Native American monitors associated with any of the Tribes that have been consulted with under AB52 be retained to monitor Program-related ground disturbance stipulated in the CRMP.	All sites	Design/Pre-construction/ Construction	Yes	DWP/DWP Contractor	Cultural Resources Monitoring Plan/Monitoring	Report to be filed with DWP Environmental Planning and Assessment Group and shared with BOE	DWP – Environmental Planning and Assessment Group
CUL-5: In the event of the unanticipated discovery of archaeological materials during Program implementation, all work shall immediately cease in the area (within approximately 100 feet) of the discovery until it can be evaluated by the qualified archaeologist. Construction shall not resume until the qualified archaeologist has conferred with the City and the Native American monitors on the significance of the resource. If it is determined that the discovered archaeological resource constitutes a significant resource, avoidance and preservation in place is the preferred manner of mitigation. Preservation in place may be accomplished by, but is not limited to, avoidance, incorporating the resource into open space, capping, or deeding the site into a permanent conservation easement. In the event that preservation in place is demonstrated to be infeasible and data recovery through excavation is the only feasible mitigation available, a Cultural Resources Treatment Plan shall be prepared and implemented by the qualified archaeologist in consultation with the City and Native American monitors that provides for the adequate recovery of the scientifically consequential information contained in the archaeological resource. The City shall consult the appropriate Native American representatives in determining treatment and disposition for prehistoric or Native American resources to ensure cultural values ascribed to the resource beyond those that are scientifically important are considered.	All Sites	Construction	Yes	DWP/DWP Contractor	Monitoring/Treatment Plan	Report to be filed with DWP Environmental Planning and Assessment Group and shared with BOE	DWP – Environmental Planning and Assessment Group
CUL-6: If human remains are encountered, all work shall halt in the vicinity (within 100 feet) of the find and the Los Angeles County Coroner shall be contacted in accordance with PRC Section 5097.98 and Health and Safety Code Section 7050.5. If the County Coroner determines that the remains are Native American, the NAHC will be notified in accordance with Health and Safety Code Section 7050.5, subdivision ©, and PRC Section 5097.98 (as amended by Assembly Bill 2641). The NAHC will designate a Most Likely Descendent (MLD) for the remains per PRC Section 5097.98. Until the landowner has conferred with the MLD, the City shall ensure that the immediate vicinity where the discovery occurred is not disturbed by further activity, is adequately protected according to generally accepted cultural or archaeological standards or practices, and that further activities take into account the possibility of multiple burials.	All Sites	Construction	Yes	DWP/DWP Contractor	Monitoring/ Notification	Report to be filed with DWP Environmental Planning and Assessment Group and shared with BOE	DWP – Environmental Planning and Assessment Group
Geology and Soils							
GEO-1: The City shall implement the recommendations provided in the geotechnical investigations for each of the park project sites. In the event that the depth to groundwater rises to less than 50 feet bgs as measured in nearby wells, the stormwater infiltration process shall be stopped and the stormwater routed to the surface storm drain system until groundwater depths decrease to below 50 bgs.	All Sites	Design, Construction, Operations	Yes	BOE Contractor (construction phase) DWP	DWP monitoring	DWP and shared with BOE and contractor	DWP shared with Contractor during construction and RAP during operations
GEO-2: Prior to the start of construction activities, the City shall retain a Qualified Paleontologist that meets the standards of the Society of Vertebrate Paleontology (2010) to carry out all mitigation measures related to paleontological resources.	All Sites	Design/Pre-Construction	Yes	DWP/DWP Contractor	Retention of qualified Paleontologist	DWP Contracted Archeologist BOE	DWP – Environmental Planning and Assessment Group Contractor
GEO-3: Prior to start of any ground-disturbing activities, the Qualified Paleontologist shall contribute to any construction worker cultural resources sensitivity WEAP training materials outlined in Mitigation Measure CUL-2, either in person or via a training module provided to the Qualified Archaeologist. This training shall include information on what types of paleontological resources could be encountered during excavations, what to do in case an unanticipated discovery is made by a worker, and laws protecting paleontological resources. All construction personnel shall be informed of the possibility of encountering fossils and instructed to immediately inform the construction foreman or supervisor if any fossils are unexpectedly unearthed in an area where a paleontological monitor is not present. The City shall ensure that construction personnel are made available for and attend the training and retain documentation demonstrating attendance.	All Sites	Pre-construction	Yes	DWP/DWP Contractor	Pre-construction WEAP Training	Training materials/handouts Records provided to BOE	DWP – Environmental Planning and Assessment Group

GEO-4: The Qualified Paleontologist shall supervise a paleontological monitor meeting the Society for Vertebrate Paleontology standards (2010) who shall be present during all excavations exceeding 15 feet. Monitoring shall consist of visually inspecting fresh exposures of rock for larger fossil remains and, where appropriate, collecting wet or dry screened sediment samples of promising horizons for smaller fossil remains. Monitoring can be reduced to part-time inspections or ceased entirely if determined adequate by the Qualified Paleontologist in consultation with the City. Monitoring activities shall be documented in a Paleontological Resources Monitoring Report to be prepared by the Qualified Paleontologist at the completion of construction and shall be provided to the City and filed with the Natural History Museum of Los Angeles County within 6 months of Program completion.	All Sites	Construction	Yes	DWP/DWP Contractor	Monitoring	Report to be filed with DWP Environmental Planning and Assessment Group and shared with BOE	DWP – Environmental Planning and Assessment Group
GEO-5: If a unique geologic feature or paleontological resource is discovered during construction, the paleontological monitor shall be empowered to temporarily divert or redirect grading and excavation activities in the area of the exposed fossil to facilitate evaluation of the discovery. An appropriate buffer area shall be established by the Qualified Paleontologist around the find where construction activities shall not be allowed to continue. Work shall be allowed to continue outside of the buffer area. At the Qualified Paleontologist's discretion and to reduce any construction delay, the grading and excavation contractor shall assist in removing rock samples for initial processing and evaluation of the find. All significant fossils shall be collected by the paleontological monitor and/or the Qualified Paleontologist. Collected fossils shall be prepared to the point of identification and catalogued before they are submitted to their final repository. Any fossils collected shall be curated at a public, non-profit institution with a research interest in the materials, such as the Los Angeles County Natural History Museum, if such an institution agrees to accept the fossils. If no institution accepts the fossil collection, they shall be donated to a local school in the area for educational purposes. Accompanying notes, maps, and photographs shall also be filed at the repository and/or school.	All Sites	Construction	Yes	DWP/DWP Contractor	Monitoring/Treatment Plan	Report to be filed with DWP Environmental Planning and Assessment Group and shared with BOE	DWP – Environmental Planning and Assessment Group
Hazards and Hazardous Materials							
HAZ-1: The City or its construction contractor shall ensure that fueling of vehicles or storage of fuel or other chemicals would occur at the furthest extent possible from an existing school site.	David M. Gonzales	Construction	No	BOE Contractor	Specifications	BOE	Contractor
HAZ-2: For all schools located adjacent to a proposed work area, the City shall coordinate school safety routes, which should include, but not be limited to:	David M. Gonzales	Construction	Yes	BOE Contractor	Specifications	BOE	BOE Contractor
Maintaining in place all crosswalks along the safe routes to and from the school (for Pacoima Charter School these would include Norris Avenue, Van Nuys Boulevard, Pierce Street, and Herrick Avenue).							
Designating a safe location for school buses and parents to drop off and pick up students.							
Designating a safe parking area for parents to wait for/pick up school children.							
Maintaining sidewalks open to pedestrian traffic during construction.							
Additional safety measures must be adopted during construction to protect the students and the public, including k-railing, secured fencing with screen, clear signing, temporary striping, and a flagger for trucks entering and existing the construction zone. Flaggers should also be considered at crosswalks while students are present.							
Close coordination with the impacted school and the Los Angeles Unified School District for input on the school safety route design and frequent communication during construction.							
Extensive outreach program for the school and the community describing safety measures and construction schedules.							
Restrict construction times to avoid before and after school timeframes while children may be walking to and from school, and while school is in session, as feasible.							
HAZ-3: The City and its contractor shall conduct further investigation of the nature and extent of landfill materials and contaminated soil at the Strathern Park North site, under the oversight of the City of Los Angeles Local Enforcement Agency (LEA). Undocumented waste shall be delineated and sampled for chemicals of concern related to waste materials. The project shall avoid construction within the delineated waste mass, as feasible. If avoidance of the waste mass is not feasible, the City shall submit a work plan to the LEA that documents the results of the waste delineation, details the specifics of the construction project and how it relates to the onsite waste, describes the procedures for dealing with the waste, and outlines the environmental monitoring procedures that would be implemented during construction. Upon approval of the work plan, the City and its contractor shall remove the landfill materials and any soil with chemical concentrations above regulatory action levels to the satisfaction of the LEA and properly dispose of it at a permitted facility. An as-built report shall be submitted to the LEA after completion of the project.	Strathern Park North	Design and Construction Post construction closure report	Yes	BOE Contractor BOE Engineering	Specifications	LADBS LEA BOE	LADBS BOE Contractor

Noise							
NOI-1: For construction activities adjacent to noise-sensitive receptors (e.g., residences and schools), the contractor shall ensure that all construction equipment, fixed or mobile, are equipped with properly operating and maintained noise shielding and muffling devices, consistent with manufacturers' standards. The contractor shall use muffler systems (e.g., absorptive mufflers) that provide a minimum reduction of 5 dBA compared to the same equipment without an installed muffler system, reducing maximum construction noise levels. The contractor shall keep documentation on-site demonstrating that the equipment has been maintained in accordance with the manufacturers' specifications. The contractor shall also keep documentation on-site verifying compliance with this measure.	All sites	Construction	Yes	BOE Contractor	Specifications	BOE Contractor	Contractor
NOI-2: For construction activities adjacent to noise-sensitive receptors (e.g., residences and schools), where physically and technically feasible, the contractor shall provide an 8-foot-tall to 20-foot-tall temporary fence or other barrier placed between the project construction area and the sensitive receptor with a performance standard of achieving a 15 dBA noise level reduction at the sensitive receptors. The temporary fence or barrier shall be used during peak noise-generating construction phases when the use of heavy equipment is prevalent. A noise barrier is not required if it would pose a safety risk or unreasonably prevent access to the construction area as deemed by the on-site construction manager, such as in areas that have limited equipment maneuvering space or access.	Applies portions of Fernangeles, Strathern, Valley Plaza South, and Valley Village which may be within 25' of residences.	Construction	Yes	BOE Contractor	Specifications	BOE Contractor	Contractor
NOI-3: Limit engine idling of construction equipment (e.g., haul trucks, loaders) to a minimum of 200 feet from any boundary of the nearest sensitive receptors.	All sites	Construction	Yes	BOE Contractor	Specifications	BOE	Contractor
NOI-4: Prior to commencement of construction activities, the City shall notify in writing adjacent residents, schools and businesses near the various park project sites, of proposed construction activities and the tentative schedule. The notices shall also provide a contact person and hotline where local residents, schools, or business owners can call during active construction with questions or comments. The City shall respond to inquiries regarding construction noise and vibration. Notices and construction signs will include a website address which will be updated quarterly and will include Program-related information.	All sites	Construction	Yes	BOE Contractor	Specifications	BOE	Contractor
NOI-5: The operation of construction equipment that generates high levels of vibration, such as large bulldozers and loaded trucks, shall be prohibited within 45 feet of the property lines of existing residential and school uses adjacent to the various park project sites. Instead, rubber-tired equipment not exceeding 247 horsepower shall be used in these areas during construction within 45 feet from the sensitive receptor locations.	All sites, especially David M. Gonzalez and North Hollywood	Construction	Yes	BOE Contractor	Specifications	BOE	Contractor
Transportation							
TR-1: For parks where construction would occur outside of park facilities or that may impact roadways surrounding park areas, a CTMP shall be developed by the City or its contractor and approved by LADOT prior to the start of construction. The CTMP may include, but is not limited to the following:	All Sites	Design and Construction	Yes	BOE Contractor	Approved Traffic Control Plans or WATCH Manual	LADOT Contractor BOE-EMG	Contractor
Work area traffic control plans for all in-street construction sites to the satisfaction of LADOT, as appropriate prior to the start of any construction work. The plans shall include such elements as the location of any lane closures, restricted hours during which lane closures would not be allowed, local traffic detours, protective devices and traffic controls (such as pavement markings, barricades, cones, flagmen, lights, warning beacons, temporary traffic signals, turning movement restrictions, warning signs), access to abutting properties, and provisions to maintain emergency access through construction work areas.							
The dates and locations where in-street and off-street construction activities are planned.							
If any street segments will be limited to one-way traffic, prepare detour plans over parallel routes.							
Require signage indicated alternative routes where construction will occur.							
Identify and consolidate staging areas for equipment and materials, as feasible.							
Consolidate truck trips, such that multiple worksites can be served, as feasible.							
Promote carpooling among workers.							
Contact emergency service providers in the project vicinity to notify of the location, hours, and duration of in-street construction. Provide advance notice of any lane closures and changes to local access and identity alternative routes where appropriate.							

California Environmental Quality Act (CEQA) Technical Memorandum

I. INTRODUCTION

This memo, prepared by Dr. Jan Green Rebstock, Environmental Affairs Officer with the City's Bureau of Engineering (BOE), analyzes whether additional environmental review is triggered under CEQA Guidelines Section 15162 prior to the BOE approving the Memorandum of Agreement (MOA) for the Stormwater Capture Parks Program (Program). The memo summarizes the changes to the Program, changed circumstances, and new information and determines that there have not been any substantial changes to the Program, substantial changed circumstances, or new information of substantial importance that would lead to the need for a subsequent CEQA document under Public Resources Code section 21151 and CEQA Guidelines section 15162.

II. BACKGROUND

On September 14, 2021, the LADWP Board of Water and Power Commissioners adopted an Initial Study/Mitigated Negative Declaration (IS/MND) and approved the Program. Originally, the Program consisted of nine project sites, all located at RAP facilities. However, due to the lack of funding secured for North Hollywood Park and Alexandria Park, these two projects are not part of this MOA. The remaining seven projects will capture approximately 1,800 acre-feet of stormwater and urban runoff per year from a 3,410-acre drainage area and divert the runoff into subterranean infiltration galleries located under parks for infiltration into the underlying groundwater basin. Overflow for the proposed infiltration system will drain into the existing downstream storm drains, flood control channels, or catch basins. The approved Program under the MOA consists of the following seven projects located in the San Fernando Valley in Council District Nos. 2, 6, and 7: David M. Gonzales Recreation Center, Valley Village Park, Fernangeles Park, Strathern Park, Valley Plaza Park North, Valley Plaza Park South, and Whitsett Fields Park North (Projects).

An electronic copy of the previously adopted MND can be downloaded from this link: https://www.ladwp.com/reports/environmental-reports/archived-environmental-reports.

LADWP, as the City's CEQA Lead Agency, prepared an MND that analyzed all nine original Program sites. The Draft IS/MND was released for public review in January 2021 and the Final IS/MND, prepared July 2021, was adopted by the LADWP Board of Water and Power Commissioners on September 14, 2021, along with the Mitigation Monitoring and Reporting Program (MMRP). A Notice of Determination was filed with the Los Angeles County Clerk on September 21, 2021.

The previously adopted IS/MND concluded that the Program required twenty-two (22) mitigation measures to reduce significant impacts from construction activities to the following resources to a less than significant level: air quality, biological resources, cultural resources, geology and soils, hazards and hazardous materials, noise and transportation. Specifically, the mitigation measures require the following:

- *Air Quality* – For all Program sites, off-road diesel-powered construction equipment rated at 50 horsepower or greater must meet or exceed CARB and USEPA Tier 4 off-road emissions standards; at a minimum, the following equipment shall be electric: air compressors, cement and mortar mixers, concrete saws, forklifts, and pumps. Diesel generators shall be replaced with electricity from the grid either permanent or temporary, or replaced with alternative (non-diesel) fuels. Bid documents must specify equipment requirements consistent with the MMRP and successful contractors must demonstrate the ability to supply such equipment. A copy of each unit's certified tier specification or model year specification and CARB or SCAQMD operating permit shall be available at the time of mobilization of each piece of equipment. During specified construction phases, watering must be conducted a minimum of four times per day during dry weather. For the Valley Plaza Park North site, only two dozers are allowed to operate on any portion of the site at one time. The City is required to ensure that on-road haul trucks, including delivery trucks and those conveying excavated material, do not exceed daily truck limits as specified in Mitigation Measure AQ-1.

- *Biological Resources* – Mitigation Measure Bio-1 addresses special-status wildlife. Cooper's hawk, a California Species of Special Concern, may be present in the Program area. Construction activities are advised to occur outside of the avian nesting season. However, if that cannot be avoided and construction or vegetation removal occurs from February 1 to September 1, a qualified biologist shall conduct preconstruction nesting surveys, enforce buffers and monitor active nests consistent with the requirements of Mitigation Measure BIO-1. In addition, prior to any tree removals, the City shall retain a qualified bat specialist to conduct bat surveys to confirm whether bats are using the trees as roosting sites. The results of the surveys shall be provided to the California Department of Fish and Wildlife (CDFW). In the event that bat roosts are identified, additional bat surveys will be required using acoustic survey techniques. If sensitive bat species are identified, the City shall consult with CDFW pursuant to the California Fish and Game Code section 2081. Removal of special status bats would not be conducted with prior approval from CDFW.

- *Cultural Resources* – There are six mitigation measures related to cultural resources. If Program designs encroach more closely than 50 feet to the clubhouse associated with David M. Gonzales Recreation Center, and/or the 170 Freeway Pedestrian Overpass, the City shall retain a qualified architectural historian meeting the Secretary of Interior's Standards for Architectural History to review design plans for conformance with the Secretary of Interior's Standards for the Treatment of Historic Properties (Standards). Should potential Program redesign not conform to the Standards, the City shall work with the qualified architectural historian to mitigate impacts to these resources. Should Program redesign place Program components within 50 feet of these resources, potential construction-related impacts resulting from ground-borne vibration shall be assessed and monitored to ensure damage to historic resources does not occur. See Mitigation Measure CUL-1 for specific details. Prior to the start of ground-disturbing activities, a qualified archeologist shall be retained by the City to prepare a cultural resources sensitivity training for all construction personnel and a Cultural Resources Monitoring Plan (CRMP), in consultation with Tribes that requested consultation under AB 52. The CRMP shall stipulate that Native American

monitors associated with any of the consulting Tribes be retained to monitor Program-related ground disturbance, as directed in the CRMP. See Mitigation Measures CUL-2, CUL-3, CUL-4, CUL-5 and CUL-6 for details.

- *Geology and Soils* – There are five mitigation measures related to geology and soils, requiring implementation of the recommendations provided in the geotechnical investigations for each of the Program sites, including the requirement that should be depth to groundwater rise to less than 50 feet bgs as measured by nearby wells, the stormwater filtration process shall be stopped and the stormwater routed to the surface storm drain system until groundwater depths decrease to below 50 feet bgs. Prior to the start of construction activities, the City shall retain a Qualified Paleontologist, who will contribute to construction worker training, supervise a paleontological monitor that will be present for all excavations exceeding 15 feet, and redirect construction activities and implement a buffer should a unique geologic feature or resource be found. See mitigation measures GEO-1, GEO-2, GEO-3, GEO-4 and GEO-5 for details.

- *Hazards and Hazardous Materials* – There are three mitigation measures (HAZ-1, HAZ-2, and HAZ-3) that require the fueling of vehicles and storage of fuel and other chemicals to occur the furthest extent possible from existing school sites, that the City coordinate school safety routes for all schools located adjacent to Program sites, including ensuring crosswalks are maintained and safe parking for school buses and parents is available, close coordination with LAUSD during construction, and that there is an extensive outreach program for the school and community describing safety measures and construction schedules. In addition, construction times are restricted to avoid before and after school timeframes while children are walking to and from school, and while school is in session, as feasible. Finally, the City and its contractor shall conduct further site investigations of the nature and extent of the landfill materials and contaminated soil at the Strathern Park North site, under the oversight of the City of LA Department of Building and Safety Local Enforcement Agency (LEA), which has authority over all regulated and unregulated landfills in the city. Undocumented waste shall be delineated and sampled for chemicals of concern. The Program shall avoid construction within the delineated waste mass, as feasible. If avoidance is not feasible, the City shall submit a work plan to the LEA that documents the results of the waste delineation, the procedures for addressing the waste, and monitoring during construction. Upon approval of the workplan, the City and its contractor shall remove the landfill materials and any soil with chemical concentrations above regulatory action levels to the satisfaction of the LEA and properly dispose of it at a permitted facility. An as-built report shall be submitted to the LEA after completion.

- *Noise and Vibration* – Five mitigation measures (NOI-1, NOI-2, NOI-3, NOI-4 and NOI-5) address construction activities near noise-sensitive receptors (residences and schools) and vibration impacts. These measures include requiring 8 feet tall to 20 feet tall noise barriers between the construction activities and noise receptors, with a performance standard of achieving 15 dBa noise level reductions and prohibiting large bulldozers and loaded trucks within 45 feet of the property lines of existing residences and schools adjacent to the Program sites. Instead, rubber-tired equipment not exceeding 247 horsepower shall be used in these areas during construction within 45 feet from the sensitive receptor locations.

- *Transportation*- A construction traffic management plan for the Program sites shall be prepared and approved by LADOT prior to the start of construction. See mitigation measure TR-1 for details.

When adopting the IS/MND on September 21, 2024, the LADWP Board of Water and Power Commissioners, made the following findings:

- Implementation of the mitigation measures would lessen the environmental impacts of the proposed Project to a level of less than significant.
- The MMRP was developed to ensure implementation of the mitigation measures in the IS/MND, and LADWP was identified as the responsible party to maintain oversight and act as the monitoring agent.
- The IS/MND was prepared in compliance with CEQA and constitutes a complete, accurate, adequate, and good faith effort at full disclosure under CEQA.
- The Board reviewed and considered the information contained in the IS/MND and that the IS/MND reflects the independent judgement and analysis of the Board.
- The Board finds on the basis of the whole of the record, including the IS/MND, that there is no substantial evidence that the proposed Project, with mitigation incorporated, will have a significant effect on the environment.
- The LADWP Board adopted the IS/MND, required incorporation of the mitigation measures, adopted the MMRP, approved the Project, authorized its construction, and approved the payment for permit, mitigation, and tribal support costs associated with the Project.

RAP approved the MOA with BOE and LADWP to implement the Program on RAP facilities on August 1, 2024. As noted in the MOA with RAP, as each Program site is brought to RAP for review and approval, RAP staff will provide appropriate CEQA recommendations to support actions by the RAP Board.

The Board of Public Works is now being requested to approve an MOA among BOE, LADWP and RAP to fund BOE to facilitate the implementation of the Program, including project management, construction management, CEQA compliance, and project inspection efforts.

III. ENVIRONMENTAL ANALYSIS

As the CEQA Lead Agency, the City has determined that on the basis of the substantial evidence, in light of the whole record, that no substantial changes have occurred to the Program, no substantial changes have occurred regarding the circumstances under which the Program is undertaken that would require major revisions of the adopted IS/MND, and no new information has come to light since adoption of the IS/MND that causes significant effects not discussed in the IS/MND.

Since September 2021 when the LADWP Board adopted the IS/MND and approved the Program, the following changes have occurred:

1. **Program Scope** - Two of the nine Program sites analyzed in the IS/MND, North Hollywood Park and Alexandria Park, are not included in the MOU for implementation at this time due to funding availability.

2. **City Department Responsibilities in the MMRP and Strathern Park North Post Closure Requirements**- There has been some reassignment of duties among City departments regarding which City department (LADWP, BOE, LASAN or RAP) would implement the various mitigation measures. Additionally, some post closure requirements and monitoring duties for the Strathern Park North site have occurred since adoption of the IS/MND in 2021. These changes are noted in the Revised MMRP dated November 2024 and the additional requirements are summarized further in item 5, Strathern Park North Site.
3. **Diversion System Design** - Changes to the diversion system from a rubber dam/side inlet design to a drop inlet structure were made for the Valley Plaza Park South, Alexandria Park, and North Hollywood Park projects. These modifications were made because LA County does not allow the installation of rubber dams within their open channels.
4. **CRMP** – As required by the MMRP, the CRMP was prepared by LADWP for the Program (November 2023). SurveyLA indicates the David M. Gonzalez Recreation Center and North Hollywood Park (currently not included in the MOA) appear eligible for listing in the National Register of Historic Places and the California Register of Historic Places. In addition, the 170 Freeway Pedestrian Overpass connecting Valley Plaza Park North and Whitsett Fields Park North located approximately 20 feet from a proposed diversion structure in Valley Plaza Park North is eligible for local listing. All of these historic architectural resources qualify as historical resources under CEQA. No archaeological resources were identified as a result of the records search or cultural assessment survey (ESA 2021). The CRMP provides further guidance on tribal monitoring, monitoring protocols, and LADWP's role in coordinating the Archeological and Native American monitors. Native American monitors from the consulting tribes, Fernandeño Tataviam Band of Mission Indians Fernandeño Tataviam Band of Mission Indian (FTBMI) and Gabrieleño Band of Mission Indians Kizh Nation (Kizh), will be assigned to monitor project-related ground-disturbing activities that have a reasonable likelihood of encountering tribal resources. All tribal monitoring and training shall be compensated.
5. **Strathern Park North Site** – The MMRP (Section HAZ-3) directed the City to conduct further investigation of the nature and extent of landfill materials and contaminated soil at the Strathern Park North site. An Additional Phase II Site Assessment (ESA) was performed. Based on the presence of waste found at the site, and the recommendations per the ESA, a Waste Management Plan, Community Health and Safety Plan and a Post Closure Land Use (PCLU) plan were prepared. A letter of approval from the LEA was obtained on October 13, 2022. A summary of the site requirements from the LEA follows.

Summary of Strathern Park North Site Requirements – Construction & Operations

Strathern Park North Waste Management Plan (Dated December 7, 2021 and Finalized October 13, 2022) - All soil and construction waste excavated from the site shall become the property and responsibility of the selected Contractor to dispose of properly. If excavated soil material on site is free of observable construction waste, it may be temporarily stockpiled in the vacant northern portion of the transmission line easement area on the west side of the site, if certain conditions are met in coordination with LADWP. All construction waste material excavated on the site by the Contractor from within the footprint of the infiltration gallery, per direction from the LEA, shall be

hauled offsite at the Contractor's expense to a City of LA LEA approved landfill. Since the waste material was mixed with mostly clean sandy soil, the Contractor will be required to sort the waste from the soil on site and thereby substantially reduce the volume of material that must be hauled to a licensed landfill. Sunshine Canyon and Landcaster Landfill are two LEA licensed landfills in the vicinity that will accept construction debris and burned waste material. By employing a reasonable level of care in setting the limits of the ground disturbing activities associated with excavation at the site, it is anticipated that the Contractor should be able to minimize the amount of burned waste material encountered during the excavation for the infiltration gallery. If the Contractor encounters any identifiable burned waste material within the footprint of the infiltration gallery, the material should be sorted separately from the general construction waste material and the LEA should be notified after the material has been removed from the site and disposed of in an LEA-regulated landfill site. The Contractor shall exercise proper care when handling burned waste material (gloves, face masks, eye protection, etc.) and follow Cal OSHA safety procedures for potentially hazardous waste. Burned waste material should be bagged and removed from the site to an LEA- licensed disposal facility. The Contractor shall remove all waste encountered within the excavated footprint of the infiltration gallery. If odiferous waste material becomes exposed during excavation, the Contractor will give priority to promptly removing it from the site. The Contractor shall coordinate his actions with the City-provided construction inspector, who shall be on-site during all excavation operations to verify that all construction waste material is removed from the site by the Contractor. The Contractor will not be required by the LEA to sample stockpiles of excavated material containing construction waste to characterize the material before hauling it off-site to an LEA-licensed landfill. Similarly, the LEA is not requiring the Contractor to stockpile, sample, and characterize any burned waste material that is excavated prior to bagging and hauling it to an LEA-licensed landfill.

Strathern Park North Community Health and Safety Plan (Dated December 7, 2021 and Finalized October 13, 2022) – The Contractor shall be responsible for the following:

- Provide continuous methane gas monitoring during the excavation phase of the Project. Occupants of the neighboring residential properties adjoining the project site shall be promptly notified by the Contractor should any large gas pockets become exposed.
- Any foul-smelling waste uncovered by the Contractor shall be promptly collected, covered, and hauled off site and properly disposed of as quickly as possible.
- The Contractor shall install and maintain adequate perimeter security fencing, motion sensor security lighting and alarms to deter unauthorized individuals from entering the work site during non-work hours for the duration of the project. Security lighting shall be arranged so as not to send furtive light into the residential area on the north side of the project site. The Contractor shall also implement a sign-in register so that only authorized visitors are allowed onto the Project site during working hours.
- The Contractor shall utilize sufficient dust control measures so that only minimal visible dust leaves the site during the excavation and waste sorting operations. Typical dust control measures include use of water spray, placing tarps over stockpiles when they are not being actively worked on, and suspension of earth moving activities when windy conditions develop.
- The Contractor shall be responsible for installing all erosion control measures outlined in the approved project Stormwater Pollution Prevention Plan (SWPPP). The condition of all erosion control measures shall be inspected by the Contractor on a weekly basis, and

after any precipitation event that exceed 0.25 inches of rainfall, and promptly repaired as necessary to maintain its effectiveness.

- Training - The Contractor shall always provide a project Safety Monitor onsite during the excavation phase of the project. The Safety Monitor shall have an up to date 40-hour HAZWOPER training certificate and will be responsible for determining appropriate personal protective equipment (PPE) and clothing for all personnel working on the project and for maintaining gas monitoring equipment.

Strathern Park North Closure Land Use Plan (Revised June 23, 2022) - To reduce the quantity of material that needed to be hauled to a landfill, the selected contractor for the Project will first be required to sort the material on site to separate the construction waste from the soil that it is mixed with. The LEA will also require that three gas monitoring wells be installed around three sides of the infiltration gallery as part of the project. Since construction waste, including burned waste, which is considered to be hazardous by the State of California, was found on the site, a California Solid Waste Information System number (SWIS #) was assigned to the site and it was entered into the statewide data base. The assigned SWIS number for Strathern Park is 19-CR-0835.

Construction of the facility will require excavation of a large pit approximately 26 feet in depth below the ground surface. The Contractor will be responsible for monitoring for methane gas on a daily basis during the excavation phase of the project, and maintain a log of those samplings. If the contractor detects any readings above the Lower Explosive Limit (LEL) for methane, work will be suspended until the readings return to below the LEL.

It is therefore anticipated that within the approximately 1.5 acre footprint of the facility that all construction waste material will be removed from the site and hauled offsite to an LEA-approved landfill, thereby allowing for what the LEA terms a “clean closure” to be achieved for all buried construction wastes found at the site within the footprint of the infiltration gallery.

An additional LEA requirement for the Strathern Park infiltration gallery area calls for the installation of a series of three gas monitoring wells around the perimeter of the infiltration gallery once it has been constructed. The proposed locations for each of these gas monitoring wells are indicated on Figure 1 of the Post Closure Land Use Plan. The intent of placing gas monitoring wells at the three proposed locations is to provide the ability to detect the presence of methane gas accumulation around the perimeter of the infiltration gallery. Once project construction is completed and the project is turned over to the operating City department for maintenance, this City department will also assume primary long-term responsibility for sampling the three gas monitoring wells on a quarterly basis using a gas sniffer probe or other appropriate technology. The results of all sampling performed by this City department will be reported to LEA within 30 days of the sampling run. The LEA will also conduct quarterly sampling of the monitoring wells on their own schedule.

Currently the Closure Land Use Plan identifies LASAN has having these responsibilities. However, it is BOE staff’s understanding that these responsibilities will be transferred to LADWP, as LASAN is no longer involved in the implementation of the Program.

Further, the Post Closure Plan requires that if readings at any of the monitoring wells are determined to exceed the Lower Explosive Limit (LEL) for methane gas, LASAN (to be changed to LADWP) will promptly notify the LEA and RAP, and additional supplemental gas sampling of the interior of the infiltration gallery will then be conducted by opening the access hatches and

inserting gas probes monitoring probes into the structure. If dangerous levels of methane are detected from within the infiltration gallery, an appropriate plan of action for mitigation will be jointly developed by LEA and LASAN (LADWP) and implemented by LASAN (LADWP) as the lead response agency.

Copies of the results from all sampling runs of the gas monitoring wells will be retained in the files of the LEA and RAP for a period of ten (10) years, then discarded. LASAN (LADWP) will be responsible for promptly notifying the LEA and RAP directly if sampling shows methane gas levels in any of the monitoring wells exceeds the LEL for methane and shall have responsibility for coordinating with those agencies in the development of an appropriate corrective action plan. The LEA may, at its discretion, require RAP to extend the gas monitoring program outlined in this document to include additional areas beyond the limits of the infiltration gallery project beneath the surface of the already developed portion of Strathern Park to the east of the proposed infiltration gallery site.

When comparing the previously approved Program and the changes that have occurred since adoption of the IS/MND by LADWP, none of the changes are found to be substantial or outside of the scope of the previously approved Program. The reduction in the scope of the Program implementation, the shifting of the responsibilities among City departments regarding implementation of mitigation measures or site closure requirements, change in diversion system design, and development of the CHMP and Strathern Park North waste management and site closure requirements do not result in any new significant environmental impacts.

As previously discussed, twenty-two (22) mitigation measures are required to reduce impacts from the following resource areas: air quality, biological resources, cultural resources, geology and soils, hazards and hazardous materials, noise and vibration, and transportation. No new significant environmental impacts will occur due to the Program changes. Additionally, there is no substantial increase in the severity of the significant effects identified and mitigated in the previously adopted IS/MND due to the project changes. All environmental impacts continue to be mitigated to less than significant. No new mitigation measures are required. Site closure requirements identified by the LEA for the Strathern Park North site will be added to the project bid specifications and plans as regulatory requirements.

Regarding changed circumstances, since adoption of the IS/MND by the LADWP Board in 2021, there have been several new designations of special status species under the California Endangered Species Act (CESA), including the western burrowing owl, as a candidate species, longfin smelt, and white sturgeon. To address this, BOE has added the following best management practice:

"A biologist shall evaluate the site to assess the vegetation and substrate for potential habitat that may support a protected species. Should potential habitat exist to support a protected or candidate species, the City shall retain a qualified biologist to conduct a habitat assessment and survey and monitoring protocols for the species in accordance with the California Department of Fish and Wildlife (CDFW) and/or U.S. Fish and Wildlife Service (USFWS). If a protected species is confirmed on the project site, the qualified biologist, BOE and LADWP will develop avoidance measures in collaboration with CDFW and/or USFWS to ensure avoidance of impacts to the protected species."

BOE staff biologists will perform this first look at the sites and determine the presence of supporting habitat. City staff will document the results and submit a memo to file. If there is a potential habitat present, DWP can then get a "qualified" biologist to further assess the habitat according to the protocol. This BMP shall be added to the project bid specs administered by BOE as applicable.

Construction activities within the nine project sites are not anticipated to have an impact on special-status species due to the highly disturbed nature of the areas, which include manicured turf grass, playgrounds and baseball fields, and are regularly used by people for recreation. Common species adapted to urban environments are expected to occur, such as raccoon, opossum, squirrel, and various resident and migratory bird species. As previously discussed, a biological mitigation measure for Cooper's Hawk, a special-status species with potential to occur within the proposed project area, is already included. Longfin smelt and white sturgeon habitat are not present at the Program sites.

No new information, present at the time of the original approval by LADWP in September 2021, has come to light that needs to be considered in this analysis.

IV. CONCLUSION

Based on the analysis above, while project changes have occurred since adoption of the IS/MND by LADWP in 2021 and new plans and site closure requirements have been identified for the Strathern Park North site, none of the changes and requirements summarized above require subsequent CEQA documentation, a change in CEQA findings, or new mitigation measures. No new significant environmental impacts will occur due to the Program changes. There is no substantial increase in the severity of the significant effects identified and mitigated in the previously adopted IS/MND due to the project changes and site closure requirements or changed circumstances. All environmental impacts continue to be mitigated to less than significant.

Attachments

Stormwater Capture Parks Program Project

Cultural Resource Management Plan

November 2023



TABLE OF CONTENTS

Section 1. Introduction 2
Section 2. Project Description 2
Section 3. Project Conditions 2
Section 4. Cultural Resources 3
4.1 Archeological and Historic Resource Sensitivity 3
4.2 Project Mitigation Measures 4
Section 5. Archaeological and Native American Monitoring 6
5.1 Personnel and Organization 6
5.2 Pre-Construction 9
5.3 Monitoring Protocols 9
5.3.1 Monitoring 10
5.3.2 Halt of Construction 12
5.3.3 Discovered Cultural Materials 12
5.3.4 Discovered Human Remains 14
5.3.5 Non-Compliance and Disputes 14
5.4 Documentation 15
5.4.1 Daily Monitoring Logs 15
5.4.2 Site Records 15
5.4.3 Additional Documentation 15
Referenced Documents 16
Attachment A 18

Section 1. Introduction

This Cultural Resource Monitoring Plan (CRMP) describes the approach for cultural resources monitoring for the Stormwater Capture Parks Program Project (Project) located within the City of Los Angeles, California. This CRMP includes the methods of implementation for archeological and Native American monitoring as well as treatment protocol for the inadvertent discovery of cultural resources and human remains pursuant to state and local requirements and regulations where applicable and consistent with the mitigation measures for archaeological resources and Native American resources as outlined in the *LADWP Stormwater Capture Parks Program, City of Los Angeles, California Final Initial Study/Mitigated Negative Declaration (*ESA 2021*)* and the *Comprehensive Cultural Resource Monitoring Plan* (Dudek 2023).

Section 2. Project Description

The Project includes the capture of stormwater surface flows in the Program area within the City of Los Angeles, diverting the runoff from the Tujunga Wash Central Branch storm drain to recharge the San Fernando Groundwater Basin. Underground infiltration galleries will be constructed within open space portions of each of the nine parks and other appurtenances will be installed to connect to and manage flow from existing storm drains. The project areas within each park will be fully restored to maintain their recreational uses following installation. No existing park buildings or structures will be impacted or otherwise modified during construction. The Program has a tributary area of 5,690 acres with an estimated yield of 2,900-acre feet per year (AFY) and will improve water quality by reducing pollutants such as trash, bacteria, and metals from entering the Los Angeles River. The Project is designed to help meet the goals of LADWP's Stormwater Capture Master Plan, 2015 Urban Water Management Plan and the Mayor's 2015 Sustainable City Plan with the following objectives: recharge the groundwater basin, alleviate localized flooding in the area, improve water quality of stormwater runoff, and peak flow attenuation at downstream water bodies (i.e. Los Angeles River). Other ancillary benefits include park improvements, improved recreation opportunities, and Environmental educational opportunities to local residents and students.

Section 3. Project Conditions

Based on the Final Mitigated Negative Declaration, engineering and design plans as well as geotechnical reports were carefully reviewed to determine the existence and depth of fill and native soils in relation to the estimated depths of disturbances incurred as a result of Project implementation. The following table includes a summary of the findings:

TABLE 1. PROJECT CONDITIONS BASED ON ENGINEERING PLANS AND GEOTECHNICAL REPORTS

PARK	APN	DEPTH OF FILL	DEPTH OF NATIVE SOILS	PREVIOUS DEPTH OF DISTURBANCE	ESTIMATED DEPTH OF DISTURBANCE
David M. Gonzalez Recreation Center	2534-024-905	0-6 ft	alluvium at 1 - 50.7 ft	unknown	29 ft
Fernangeles Park	2634-011-900	0-2 ft	alluvium at 1.5 - 58 ft	unknown	18 ft
Strathern Park North	2308-010-901	0-13 ft	alluvium at 1.5 - 70.5 ft	construction debris found 0-10.25 ft.	23 ft
Whitsett Fields Park North	2324-035-900	0-4 ft	alluvium at 0 - 70.9 ft	unknown	23 ft
Valley Plaza Park North	2321-006-902	~5 ft	alluvium at ~5 - 52 ft	unknown	26 ft
Valley Plaza Park South	2322-001-902	~5 ft	~5 - 48.98 ft	unknown	24 ft
Alexandria Park	2334-002-900	~5 ft	~5 - 81.5 ft	unknown	24 ft
North Hollywood Park	2350-011-901 and -903	5 ft	alluvium at 5 - 81.5	5 ft	27 ft
Valley Village Park	2353-001-902	1 ft	alluvium at 1 - 76.5 ft	1 ft	25 ft

Section 4. Cultural Resources

4.1 Archeological and Historic Resource Sensitivity

Results of the California Historic Resources Information System (CHRIS) records search indicate that twenty-six (26) previously recorded resources exist within 0.5-mile radius of the nine parks including two (2) historic-period sites, one (1) historic-period linear resource, and twenty-three (23) historic built environment resources consisting of residential, commercial, and governmental buildings (Strauss et al. 2020). Of these twenty-six (26) resources, only one is located within the Project site, specifically, North Hollywood Park. This resource is a historic built environment architectural resource consisting of a one-story red brick building designed by architects Weston and Weston and constructed in 1930 and is listed in the National Register of Historic Places (NRHP) and qualifies as a historical resource under CEQA. This structure currently serves as the North Hollywood Branch of the Los Angeles Library System and is located on the northwest corner of the Tujunga Avenue and Magnolia Boulevard intersection approximately 100 feet from one of the seven proposed infiltration galleries. A review of SurveyLA identified three additional resources located within or very near the Project site including David M. Gonzalez Recreation Center consisting of a clubhouse building located approximately 65 feet from the project area; the North Hollywood Park maintenance building and pool house located 65 feet and 100 feet from the Project site respectively; and the 170 Freeway Pedestrian Overpass connecting Valley Plaza Park North and Whitsett Fields Park North located approximately 20 feet from a proposed diversion structure in Valley Plaza Park North. SurveyLA indicates the David M. Gonzalez Recreation

Center and North Hollywood Park appear eligible for listing in the NRHP and the California Register of Historic Resources (CRHR) under Criteria A/1 and C/1 (NRHP Status Codes 3S and 3S2) and are eligible for local listing under Criteria 1 and 3 (NRHP Status Code 5S3) and that the 170 Freeway Pedestrian Overpass is eligible for local listing under Criteria 1 and 3 (NRHP Status Code 5S3). All four historic architectural resources mentioned qualify as historical resources under CEQA. No archaeological resources were identified as a result of the records search or cultural assessment survey (ESA 2021).

4.2 Project Mitigation Measures

MM - CUL - 1	In the event Program designs are further refined and individual park project components change to encroach more closely than 50 feet to the North Hollywood Amelia Earhart Regional Library (P-19-167303), the pool house and maintenance building associated with North Hollywood Park, the clubhouse associated with the David M. Gonzales Recreation Center, and/or the 170 Freeway Pedestrian Overpass, the City shall retain a qualified architectural historian meeting the Secretary of the Interior's Standards for Architectural History to review design plans for conformance with the Secretary of the Interior's Standards for the Treatment of Historic Properties (Standards). Should potential Program redesign not conform to the Standards, the City shall work with the qualified architectural historian to mitigate impacts to these resources. Should Program redesign place Program components within 50 feet of these resources, the qualified architectural historian shall also assess potential construction-related impacts resulting from ground-borne vibration. Should ground-borne vibrations have the potential to impact the historical resources, the City and the qualified architectural historian shall develop a plan to monitor ground-borne vibration during construction to ensure it does not exceed thresholds that could damage, or otherwise alter the historical resources.
MM - CUL - 2	Prior to the start of ground-disturbing activities, the City shall retain a qualified archaeologist meeting the Secretary of the Interior's Professional Qualifications Standards for archaeology (U.S. Department of the Interior, 2008) to carry out the following cultural resources mitigation measures.
MM - CUL - 3	Prior to start of ground-disturbing activities, the qualified archaeologist shall prepare a cultural resources sensitivity training module to be used as part of the City's Worker Environmental Awareness Program (WEAP) training. All construction personnel shall receive sensitivity training prior to beginning work onsite. Construction personnel should be informed of the types of archaeological resources that may be encountered, and of the proper procedures to be enacted in the event of an inadvertent discovery of archaeological resources or human remains. The City should ensure that construction personnel are made available for and attend the training and retain documentation demonstrating attendance.
MM - CUL - 4	Prior to the start of any project-related ground-disturbing activities, the qualified archaeologist shall prepare a Cultural Resources Monitoring Plan (CRMP) in consultation with Tribes that requested consultation under AB52. The CRMP shall stipulate the location and timing of archaeological and Native American monitoring, which shall include all ground-disturbing activities in each of the nine parks that exceed the depths of undocumented fill as documented by geotechnical testing. The qualified archaeologist shall review engineering plans for each of the nine parks to determine where ground-disturbing activities will exceed the depths of undocumented fill at each park to determine the timing and locations of monitoring to be included in the CRMP. The CRMP shall include

	monitoring protocols to be carried out during Program-related construction. The CRMP shall stipulate that Native American monitors associated with any of the Tribes that have been consulted with under AB52 be retained to monitor Program-related ground disturbance stipulated in the CRMP. The CRMP shall contain an allowance that the Qualified Archaeologist, based on observations of subsurface soil stratigraphy or other factors during initial grading, and in coordination with the Native American monitor(s) and the City, may reduce or discontinue monitoring as warranted if it is determined that the possibility of encountering archaeological deposits is low. The CRMP shall outline the appropriate measures to be followed in the event of unanticipated discovery of cultural resources during Program implementation, including that all ground disturbance within 100 feet of an unanticipated discovery shall cease until a treatment plan is developed by the qualified archaeologist in coordination with the City and the Native American monitor(s) and which will consider the resources archaeological and tribal value. The CRMP shall identify avoidance as the preferred manner of mitigating impacts to cultural resources. The CRMP shall establish the criteria utilized to evaluate the significance (per CEQA) of the discoveries, methods of avoidance consistent with CEQA Guidelines Section 15126.4(b)(3), as well as identify the appropriate treatment to mitigate the effect of the Program if avoidance of a significant resource is determined to be infeasible. The CRMP will also include provisions for the treatment of archaeological sites that qualify as unique archaeological resources pursuant to Public Resources Code Section 21083.2, which places limits on the costs of mitigation for unique archaeological resources. The plan shall also require the preparation of a monitoring report following the completion. The monitoring report will be submitted to the City for review and comment and a final copy will be filed at the SCCIC. The CRMP shall be submitted to the City and the appropriate Native American representatives who have been consulted with under AB52 for review prior to the start of Program-related ground disturbance.
MM - CUL - 5	In the event of the unanticipated discovery of archaeological materials during Program implementation, all work shall immediately cease in the area (within approximately 100 feet) of the discovery until it can be evaluated by the qualified archaeologist. Construction shall not resume until the qualified archaeologist has conferred with the City and the Native American monitors on the significance of the resource. If it is determined that the discovered archaeological resource constitutes a significant resource, avoidance and preservation in place is the preferred manner of mitigation. Preservation in place may be accomplished by, but is not limited to, avoidance, incorporating the resource into open space, capping, or deeding the site into a permanent conservation easement. In the event that preservation in place is demonstrated to be infeasible and data recovery through excavation is the only feasible mitigation available, a Cultural Resources Treatment Plan shall be prepared and implemented by the qualified archaeologist in consultation with the City and Native American monitors that provides for the adequate recovery of the scientifically consequential information contained in the archaeological resource. The City shall consult the appropriate Native American representatives in determining treatment and disposition for prehistoric or Native American resources to ensure cultural values ascribed to the resource beyond those that are scientifically important are considered.
MM - CUL - 6	If human remains are encountered, all work shall halt in the vicinity (within 100 feet) of the find and the Los Angeles County Coroner shall be contacted in accordance with PRC

	Section 5097.98 and Health and Safety Code Section 7050.5. If the County Coroner determines that the remains are Native American, the NAHC will be notified in accordance with Health and Safety Code Section 7050.5, subdivision (c), and PRC Section 5097.98 (as amended by Assembly Bill 2641). The NAHC will designate a Most Likely Descendent (MLD) for the remains per PRC Section 5097.98. Until the landowner has conferred with the MLD, the City shall ensure that the immediate vicinity where the discovery occurred is not disturbed by further activity, is adequately protected according to generally accepted cultural or archaeological standards or practices, and that further activities take into account the possibility of multiple burials.

Section 5. Archaeological and Native American Monitoring

5.1 Personnel and Organization

As lead agency, LADWP coordinates monitoring operations and is ultimately responsible for ensuring compliance with the project CRMP. The LADWP Environmental Project Manager will represent LADWP and oversee monitoring. In support of MM-CUL-4, the qualification and organization of monitoring efforts are as follows:

Monitoring Oversight - All monitoring activities shall be managed and overseen by a Project's Senior Archaeologist/Principal Investigator, who has significant experience in both historic and prehistoric archaeological resources within California and specifically within the southern California region. Response and treatment of resources determined to be built environment in nature shall be addressed by Project's Architectural Historian. The Project's Senior Archaeologist/Principal Investigator or if applicable, the Project's Architectural Historian, or their representative, shall perform regular communication with the onsite monitor/s to ensure adherence to the protocols and treatment plans outlined in the CRMP; coordinate monitoring needs and shall be available to respond to inadvertent discoveries or suspected discoveries of archaeological material. The Project's Senior Archaeologist/Principal Investigator shall communicate regularly with the monitoring staff, Tribal representatives and LADWP staff and if necessary, with construction staff, to ensure that appropriate monitors are present for all ground disturbing activities that require monitoring in accordance with the requirements outlined herein.

Archaeologist monitors shall be equipped with technology capable of appropriate data collection and will record the location of all areas monitored, discoveries of archaeological resources and sufficient notes for documentation of monitoring efforts. These forms shall be kept confidential and only available to LADWP staff and tribal representatives upon request. The Project's Senior Archaeologist/Principal Investigator or if applicable, the Project's Architectural Historian will communicate with LADWP, as appropriate, to manage monitoring activities and to respond quickly and appropriately to discoveries in the field. All transmittals of monitoring forms and data shall be conducted either by a secure and encrypted electronic delivery system or by delivery of a hard copy to the requesting and eligible entity.

Archaeological Monitor – The role of the archaeological monitor is to:

- Observe all ground disturbance activities as instructed by the Project's Senior Archaeologist/Principal Investigator or if applicable, the Project's Senior Architectural Historian;

- Instruct construction personnel to suspend ground disturbance activities upon discovery or suspected discovery of cultural material;
- Immediately perform initial assessment of potential cultural material;
- Notify the Project's Senior Archaeologist/Principal Investigator or if applicable, the Project's Senior Architectural Historian immediately if assessment results in a determination that the potential cultural material requires further examination or evaluation;
- Delineate and maintain 100-foot buffer boundary around cultural discoveries to ensure its clear visibility until boundary in no longer considered necessary;
- Completion of daily monitoring logs and transmittal of logs to Project's Senior Archaeologist/Principal Investigator and if applicable, the Project's Senior Architectural Historian; and
- Confer with construction foreman at beginning and end of each day to determine monitoring needs and report to Project's Senior Archaeologist/Principal Investigator and if applicable, the Project's Senior Architectural Historian any changes in the construction schedule resulting in monitoring needs.

The Archaeological and Native American monitors shall have the authority to temporarily divert construction in order to inspect exposures and possible discoveries. As instructed by the Project's Senior Archaeologist/Principal Investigator or if applicable, the Project's Senior Architectural Historian, the monitors shall be present at morning tailboard meetings and other necessary meetings with the construction foreman to determine what activities are taking place, and transmit this information to the Project's Senior Archaeologist/Principal Investigator or if applicable, the Project's Senior Architectural Historian for development of a weekly schedule for monitoring. The archaeological monitor shall be overseen and report directly to the Project's Senior Archaeologist/Principal Investigator or if applicable, the Project's Senior Architectural Historian. The archaeological monitor present during ground disturbing activities shall have experience with both historic and prehistoric cultural sites located within the general Los Angeles area (at the very least Southern California) and preferably a minimum of two years of experience with Native American archaeological sites within the local area.

Native American Monitor - The Native American monitor(s) from the tribe(s) which consulted on this project shall be qualified by their tribe to monitor tribal cultural resources. Native American monitors from the consulting tribes, Fernandeño Tataviam Band of Mission Indians Fernandeño Tataviam Band of Mission Indian (FTBMI) and Gabrieleño Band of Mission Indians Kizh Nation (Kizh), will be assigned to monitor project-related ground-disturbing activities that have a reasonable likelihood of encountering tribal resources. All monitoring and training will be compensated.

The LADWP Environmental Project Manager will identify ground-disturbing activities that may have the potential to impact tribal cultural resources. Native American monitoring will be conducted during ground-disturbing activities, including grading and trenching, at the discretion of the LADWP Environmental Project Manager with the input of each tribe. LADWP will communicate schedules and other information to each Tribe's designated monitoring coordinator or monitor.

Native American monitoring will be conducted by a qualified individual as identified by their tribe and confirmed by LADWP. The Native American monitor should have some archaeological knowledge and

the ability to represent the interests of the Tribe during construction activities. The monitor will be responsible for conducting Native American monitoring and for making initial discoveries, making initial notifications in the event of finds, requesting equipment diversions and preparing daily monitoring notes and logs.

Human Osteologist – The Project's Senior Archaeologist/Principal Investigator overseeing archaeological services for this project shall be on call throughout the duration of the ground disturbing activities to address any potential discovery of human remains. Initial determination of the nature of suspect bones shall be made by a human osteologist trained in such analysis and selected by the Project's Senior Archaeologist/Principal Investigator and accomplished through the examination of pictures and through phone discussion. If the identification of "non-human" is not absolutely certain, the human osteologist and if appropriate Project's Senior Archaeologist/Principal Investigator will travel to the project site within 24 hours of discovery, if possible, to make a determination on site. A 100-foot buffer around the discovery shall be allocated, marked and enforced until a full determination of the discovery can be completed and appropriately treated. Please refer to Treatment Protocol of Human Burials and Burial-Associated Artifacts for further details regarding required treatments and protocols in the event of an inadvertent discovery of human remains.

The responsibilities of key personnel are outlined in Table 2.

TABLE 2 MONITORING PERSONNEL

Role/ Responsibility	Name and Contact Information	Organization
Environmental Project Manager Oversees monitoring program	Amanda Jimenez **Office:** 213-367-0873 Amanda.Jimenez@ladwp.com	LADWP
Qualified Archaeologist	TBD	
Construction Manager	TBD	
Tribal Chairperson	Rudy Ortega	Fernandeño Tataviam Band of Mission Indians Fernandeño Tataviam Band of Mission Indian
Tribal Representative		Fernandeño Tataviam Band of Mission Indians Fernandeño Tataviam Band of Mission Indian
Tribal Chairperson	Andy Salas	Gabrieleño Band of Mission Indians Kizh Nation
Tribal Representative		Gabrieleño Band of Mission Indians Kizh Nation

5.2 Pre-Construction

Pursuant to MM-CUL-3 before the start of any ground disturbing activities at each Project location, a Worker Environmental Awareness Training will be provided for all field personnel. The preconstruction meeting shall include an explanation of types of cultural materials that may be encountered during ground disturbing activities, potential indicators for the presence of cultural materials, examples of cultural materials commonly found in the region and the procedures and communication protocols that must be followed upon the inadvertent discovery of cultural resources and human remains or suspect human remains. The training shall also establish procedures for temporary halting and redirecting work to permit sampling, identification, and evaluation of possible cultural resources, as appropriate. All personnel attending the Pre-Construction Worker Environmental Awareness Training shall be provided a pamphlet outlining the details discussed in the meeting along with important contact information. Both hard and electronic copies of the Pre-Construction Worker Environmental Awareness Presentation pamphlet will be available for any personnel that begin work on the Project after the commencement of ground disturbing activities. Additional Construction Worker Environmental Awareness Trainings will be provided upon request. A sign in sheet shall be distributed for signature of all attendees and submitted to LADWP.

5.3 Monitoring Protocols

All initial ground disturbing activities occurring within soil depths from surface (0 ft) until ground disturbance activities have reached a depth or condition that cultural deposits are not likely to exist at each Project location, shall be monitored by a Native American monitor. Determination to cease Native American monitoring will be made by the Project's Senior Archaeologist/Principal Investigator, defined from hereafter as an archaeologist who meets the Secretary of the Interior's Standards for archaeology, in consultation with Tribal Representatives and LADWP.

An archaeological monitor overseen by the Project's Senior Archaeologist/Principal Investigator, and if applicable, the Project's qualified Architectural Historian, defined from hereafter as an architectural historian meeting the Secretary of the Interior's Standards for architectural history, shall monitor all initial ground disturbing activities occurring within soil depths from between surface (0 ft) and 5 ft below current grade, depending on the Project site location, until ground disturbing activities have reached a depth or condition that cultural deposits are not likely to exist. Determination to cease archaeological monitoring will be made by the Project's Senior Archaeologist/Principal Investigator. Initial ground disturbance is defined as initial construction-related earthmoving of sediments from their place of deposition. As it pertains to cultural resource monitoring (archaeological, architectural history, or Native American), this definition excludes movement of sediments after they have been initially disturbed or displaced by current Project-related construction. Table 3 below summarizes all locations to be monitored and the starting depths and estimated maximum depths to be monitored during Project implementation.

TABLE 3 MONITORING ACTIONS

PARK	APN	MONITORING OVERSEEN BY AN ARCHITECTURAL HISTORIAN REQUIRED	DEPTH AT WHICH NATIVE AMERICAN (NA) AND ARCHAEOLOGICAL (ARCH) MONITORING IS REQUIRED	ESTIMATED DEPTH OF DISTURBANCE
David M. Gonzalez Recreation Center	2534-024-905	If construction occurs closer than 50 ft from the clubhouse building **	**NA and Arch: 0 ft** until determined no longer necessary * and if construction occurs closer than 50 ft from the clubhouse building **	29 ft
Fernangeles Park	2634-011-900	Not necessary	**NA and Arch: 0 ft** until determined no longer necessary *	16 ft
Strathern Park North	2308-010-901	Not necessary	**NA and Arch: 0 ft** until determined no longer necessary *	15-20 ft
Whitsett Fields Park North	2324-035-900	If construction occurs closer than 50 ft from the 170 Freeway Pedestrian Overpass**	**NA and Arch: 0 ft** until determined no longer necessary * and if construction occurs closer than 50 ft from the 170 Freeway Pedestrian Overpass**	16 ft
Valley Plaza Park North	2321-006-902	if construction occurs closer than 50 ft from the 170 Freeway Pedestrian Overpass**	**NA: 0 ft** until determined no longer necessary * **Arch: 4.5 ft**. until determined no longer necessary * and if construction occurs closer than 50 ft from the 170 Freeway Pedestrian Overpass**	16-20 ft
Valley Plaza Park South	2322-001-902	Not necessary	**NA: 0 ft** until determined no longer necessary * **Arch: 4.5 ft.** until determined no longer necessary *	16-20 ft
Alexandria Park	2334-002-900	Not necessary	**NA: 0 ft** until determined no longer necessary * **Arch: 4.5 ft.** until determined no longer necessary *	+23 ft
North Hollywood Park	2350-011-901 and -903	If construction occurs closer than 50 ft from the North Hollywood Branch Library building, cultural resource P-19-167303, pool house or maintenance building **	**NA: 0 ft** until determined no longer necessary * **Arch: 5 ft** until determined no longer necessary * and if construction occurs closer than 50 ft from the North Hollywood Branch Library building, cultural resource P-19-167303, pool house or maintenance building **	16-20+ ft
Valley Village Park	2353-001-902	Not necessary	**NA: 0 ft** until determined no longer necessary * **Arch: 1 ft** until determined no longer necessary *	22 to 31 ft

5.3.1 Monitoring

The archaeological and Native American monitors shall be authorized to halt construction immediately upon discovery or suspected discovery of cultural resources. Pursuant to MM-CUL-4, determination to reduce or discontinue monitoring shall be made by the Project's Senior Archaeologist/Principal

Investigator and if applicable, the Project's Architectural Historian, in coordination with the Tribal representatives and LADWP, based on observations of subsurface soil stratigraphy or other factors observed during initial grading demonstrating that the potential for encountering archaeological deposits is low.

If ground disturbing activities occur simultaneously at multiple locations resulting in appropriate observation by monitors infeasible, upon the judgment of the Project's Senior Archaeologist/Principal Investigator and if applicable, the Project's Architectural Historian, in coordination with the Tribal representatives and LADWP, additional monitors may be required.

Pursuant to MM-CUL-1, in the event Project designs are further refined and individual Project components change to encroach more closely than 50 feet to the North Hollywood Branch Library (P-19-167303), the pool house and maintenance building associated with North Hollywood Park, the clubhouse associated with the David M. Gonzalez Recreation Center, and/or the 170 Freeway Pedestrian Overpass, LADWP shall retain a qualified architectural historian, as previously defined, to review design plans for conformance with the Secretary of the Interior's Standards for the Treatment of Historic Properties (Standards). Should Project re-design not conform to the Standards, LADWP shall work with the Project's Architectural Historian to mitigate impacts to these resources. Should Program re-design place Program components within 50 feet of these resources, the Project's Architectural Historian shall also assess potential construction-related impacts resulting from ground-borne vibration. Should ground-borne vibrations have the potential to impact the historical resources, LADWP and the Project's Architectural Historian shall develop a plan to monitor ground-borne vibration during construction to ensure it does not exceed thresholds that could damage, or otherwise alter the historical resources. All monitoring personnel shall wear Personal Protective Equipment (PPE) on the job site including, but not limited to, hard hat, safety vest, long pants, and steel-toed or composite-toed boots. Monitors will report each morning to the designated on-site project representative and, if requested, will sign in at the construction trailer. Monitors will also participate in project tailgate safety meetings.

Archaeological and Native American monitoring will include direct observation of all ground-disturbing activities and ground disturbance, inspection of exposed surfaces for evidence of cultural resources, and recordation of all activities and findings.

If considered prudent by the Native American monitor, small soil samples (for example, approximately the size of a 5-gallon bucket) may be taken and sieved on site to prospect for the presence of small artifacts that may be missed during typical monitoring.

Evidence of a potential discovery may include the following:

- Prehistoric artifacts such as flaked tools or debitage (e.g., obsidian, chert, or basalt debitage) and groundstone implements, or ceramics;
- Historic artifacts such as cans, farm implements, bottles, glass, and ceramic fragments that appear to be 50 years or older;
- Bone or shell;

- Charred materials;
- Midden soil, which often contains heat-affected rock, ash and charcoal, faunal remains, and other cultural materials;
- Potential human-made features, such as hearths; and

The monitor may at their discretion request that equipment be temporarily redirected while potential discoveries are investigated.

5.3.2 Halt of Construction

If construction personnel, the archaeological monitor, or the Native American monitor observes any of the above-mentioned materials during construction, a potential discovery situation will exist. The archaeological and Native American monitors shall be authorized to halt construction immediately upon discovery or suspected discovery of cultural resources. Pursuant to MM-CUL-4, determination to reduce or discontinue monitoring shall be made by the Project's Senior Archaeologist/Principal Investigator and if applicable, the Project's Architectural Historian, in coordination with the Tribal representatives and LADWP, based on observations of subsurface soil stratigraphy or other factors observed during initial grading demonstrating that the potential for encountering archaeological deposits is low.

If resources are encountered, the monitors will notify the on-site LADWP Construction Manager, the contractor's foreman, and any construction workers operating in the vicinity of the find. The monitors will then notify the LADWP Environmental Project Manager.

5.3.3 Discovered Cultural Materials

Pursuant to state and local requirements and MM-CUL-5, if previously unidentified cultural resources are encountered or suspected as a result of ground disturbing activities, the following protocols shall be adhered to:

1. All ground disturbing activities shall be diverted away from the area of discovery and the Project's Senior Archaeologist/Principal Investigator and if applicable the Project's Architectural Historian shall be contacted to assess the nature, extent and potential significance of any discoveries. If the find is considered a potentially significant cultural resource, LADWP shall be notified immediately and if the cultural resource is Native American in nature, the Tribal representatives shall be contacted immediately.

2. Work within 100 feet of the find (physically delineated by easily visible marking such as temporary plastic fencing or flagging tape) shall cease until the discovery is addressed appropriately and consistent with state and local requirements and guidelines. Once temporary avoidance measures are in place, the Project's Senior Archaeologist/Principal Investigator or qualified representative including if applicable, the Project's Architectural Historian shall formally record and delineate the resource boundaries and evaluate the significance of the

resource in accordance with CEQA criteria outlined in Section 21083.2. Depending on the resource, effort to evaluate the resource may require subsurface testing and laboratory analysis.

3. If the resource meets the criteria set forth in Section 21083.2, the Project's Senior Archaeologist/Principal Investigator or if applicable, the Project's Architectural Historian shall develop management recommendations for cultural resource treatment of the discovery in accordance with the provisions outlined in Section 21083.2 of CEQA with an avoidance of the resource taking precedence.

4. If avoidance of the resources is determined feasible by the Project's Senior Archaeologist/Principal Investigator or if applicable, the Project's Architectural Historian, in consultation with LADWP and if the resource is of Native American origin, Tribal representatives and the Project's Senior Archaeologist/Principal Investigator or if applicable, the Project's Architectural Historian shall develop a plan of avoidance consistent with Section 21083.1(a) in CEQA which include incorporating the resource into open space, deeding the site into a permanent conservation easement, or capping the resource. The avoidance treatment plan shall include specific details with enough specificity to ensure successful avoidance of the resource.

5. If avoidance of the resources is determined infeasible by the Project's Senior Archaeologist/Principal Investigator or if applicable, the Project's Architectural Historian, in consultation with LADWP and if the resource is of Native American origin, Tribal representatives and the Project's Senior Archaeologist/Principal Investigator or if applicable, the Project's Architectural Historian shall develop a treatment plan to mitigate the impact of the Project on the resource consistent with Section 15126.4(b)(3). The treatment plan shall be designed in a customized manner taking into account the unique traits of the resource and the Project conditions in order to minimize as much as possible the impact of the Project on the resource. These mitigation measures may include but are not limited to data recovery (excavation, analysis and report preparation), continued or additional cultural and Native American monitoring, partial preservation and curation.

6. Preservation of recovered artifacts by means of curation, either onsite or at a curation facility, shall be carried out per state and local requirements and guidelines and, if the resource is Native American in origin, in consultation with the Tribal representatives.

If the resource is determined neither an archeological resource nor a tribal cultural resource, then the resource will be appropriately documented by the project archaeologist. Documentation will at a minimum consist of the completion of appropriate forms and preparation of a map. With this documentation and evaluation, treatment will be complete. The resource may be repatriated to the Tribal Chairperson if so requested.

If sufficient data cannot immediately be gathered to determine the significance of the find, then an archaeological testing plan will be developed by the Qualified Archaeologist for approval by LADWP in consultation with the involved tribe(s).

5.3.4 Discovered Human Remains

Pursuant to federal, state and local requirements, if human remains are discovered, Health and Safety Code §7050.5 requires that any further disturbances and activities must cease in any area or nearby area suspected to overlie remains, and the County of Los Angeles Coroner must be contacted. As such, the following protocols shall be followed upon discovery of human remains or suspected discovery of human remains:

1. All ground disturbing activities shall be diverted away from the area of discovery and the County of Los Angeles Coroner shall be contacted immediately. If it is unknown if the bones are human, the Project's Senior Archaeologist/Principal Investigator and Human Osteologist shall be contacted to assess the nature of the remains and shall contact the County of Los Angeles Coroner if the remains are determined human. Once the coroner has been contacted, LADWP staff shall be contacted.
2. Work within 100 feet of the cease in any area or nearby area suspected to overlie remains (physically delineated by easily visible marking such as temporary plastic fencing or flagging tape) until the discovery is addressed appropriately and consistent with state and local requirements and guidelines.
3. Pursuant to PRC §5097.98, if the remains are thought to be Native American, the coroner shall notify the Native American Heritage Commission (NAHC), who shall then notify the Most Likely Descendant (MLD).
4. Pursuant to Health and Safety Code Section 7050.5, subdivision (c), and PRC Section 5097.98 (as amended by Assembly Bill 2641) consultation shall be limited to between the MLD and the landowner with respect to treatment of the remains by preservation in place if feasible or reinternment.
5. LADWP and the Project's Senior Archaeologist/Principal Investigator shall support consultation regarding the discovery and shall communicate all germane information to ensure that all procedures set forth in federal and state requirements and regulations pertaining to the appropriate treatment and disposition of human remains and items directly associated with Native American burials are followed correctly.

5.3.5 Non-Compliance and Disputes

Any incident of non-compliance with monitoring procedures by construction personnel, such as a refusal to halt work when requested, encroachment on a flagged environmentally sensitive area, or carrying out ground-disturbing work without a monitor present, will be reported immediately upon discovery to the LADWP Environmental Project Manager. LADWP will determine if any further actions regarding non-compliance are required.

In the event of disputes between the monitor and designated LADWP contractors, the LADWP Environmental Project Manager will be notified. LADWP will make the final determination in the event of such disputes.

5.4 Documentation

5.4.1 Daily Monitoring Logs

Monitors will complete daily monitoring logs documenting the date and time of work; area of work; type of work and equipment present; construction activities performed; monitoring activities performed (e.g., protection of sites, temporary halt of work, etc.); cultural resources present and any incidents of non-compliance.

Monitors will provide the daily monitoring logs to the LADWP Environmental Project Manager by end of each week monitored. In addition, if requested by LADWP, the tribal monitor or monitoring coordinator will prepare a final summary report for the proposed project.

To ensure Project compliance the following communication protocols shall be implemented: Archaeological and Native American monitors shall report to the Project's Senior Archaeologist/Principal Investigator or if applicable, the Project's Architectural Historian regarding the following: occurrence of inadvertent discovery of cultural material, human remains or suspicion of human remains; lack of availability to monitor no less than 48 hours in advance; the need to leave the Project site prior to the completion of daily construction activities; any change to scheduled construction activities; lack of presence of any scheduled monitor when one is required.

Any inadvertent discovery of cultural material, human remains, or suspicion of human remains by construction personnel shall be reported immediately to the archaeological and Native American monitors upon discovery. If the archaeological or Native American monitor is not present, construction personnel are responsible for contacting the LADWP Environmental Project Manager and Senior Archaeologist/Principal Investigator immediately upon discovery.

5.4.2 Site Records

Cultural resources discovered during monitoring will be documented, at a minimum, using California DPR Form 523A ("Primary Record"). Additional forms within the DPR 523 series will be completed as necessary. The cultural resources discovered, as well as their context, will also be photographed. The location of the find will also be mapped.

Upon completion of all monitoring efforts, a monitoring report shall be prepared, commensurate with City of Los Angeles requirements and guidelines. The Monitoring Report shall be presented to LADWP electronically, in pdf format, within no more than 20 working days of the completion of monitoring services. The revised report shall be submitted to LADWP staff, the South Central Coastal Information Center (SCCIC), and Native American tribes who have consulted on the project under AB52 within 40 working days of the completion of all monitoring efforts.

5.4.3 Additional Documentation

If significant resources are identified during the course of monitoring and they cannot be avoided, then additional documentation may be required. The nature of this documentation will be specified in the testing and/or treatment plan.

Referenced Documents

DUDEK. 2023. *Stormwater Capture Parks Program Project - Comprehensive Cultural Resource Monitoring Plan, City of Los Angeles, California*. Prepared for Los Angeles Department of Water and Power by DUDEK.

ESA. 2021. *LADWP Stormwater Capture Parks Program, City of Los Angeles, California Final Initial Study/Mitigated Negative Declaration*. Prepared for Los Angeles Department of Water and Power by Environmental Science Associates.

Strauss, Monica, and Michael Vader and Chris Lockwood. 2020. *LADWP Stormwater Capture Parks Program, City of Los Angeles, California Cultural Resources Assessment Report*. Prepared for Los Angeles Department of Water and Power by Environmental Science Associates.

INTENTIONALLY LEFT BLANK

Attachment A

Mitigation Measures extracted from the *LADWP Stormwater Capture Parks Program, City of Los Angeles, California Final Initial Study/Mitigated Negative Declaration*.

INTENTIONALLY LEFT BLANK

Memorandum

To: *City of Los Angeles, Bureau of Engineering*

Client: *City of Los Angeles, Bureau of Engineering*

From: *Anthony (Scott) Dellinger and Lawrence M. Magura, CDM Smith Inc*

Date: *Draft: December 7, 2021* ***Revised/Final: October 13, 2022***

Subject: **Strathern Park North Waste Management Plan (SWIS #19-CR-0832) and Community Health and Safety Plan During Project Construction**

Applicability

This Waste Management Plan (WMP) is applicable to the entirety of the presently undeveloped portion of Strathern Park North, which is owned and operated by the City of Los Angeles Department of Recreation and Parks (RAP) and is located in the San Fernando Valley region of the City of Los Angeles. If, at some future date, RAP seeks to expand or redevelop any portion of the park, a new Waste Management Plan must be created and approved for that activity by the City of Los Angeles Department of Building and Safety Local Enforcement Agency (LEA). The park consists of the area on the north side of Strathern Street, east of an LADWP powerline easement, west of Whitsett Avenue, and south of a residential neighborhood immediately north of the park. This area is depicted in Figure 1 and is further subdivided into two zones. Zone 1 contains the entirety of the Strathern Park infiltration gallery construction site, and Zone 2, which comprises the previously developed portion of the park east of the construction site.

Introduction and Background

While conducting a standard geotechnical field investigation for the Strathern Park North stormwater capture infiltration gallery site, as part of CDM Smith's design effort for the City of Los Angeles Bureau of Engineering (LABOE) TOS No. 25 Stormwater Capture Parks Program, our geotechnical subconsultant, Ninyo & Moore, encountered previously undocumented construction waste material at the site. This finding was communicated to both the client, LABOE, and to the City of Los Angeles Department of Building and Safety Local Enforcement Agency (LEA) which has authority over all regulated and unregulated landfills in the city. LABOE subsequently authorized Ninyo & Moore to conduct an LEA-approved Additional Phase II Environmental Site Assessment to quantify the type and amount of waste material at the site.

The site is a public park owned by the City of Los Angeles Department of Recreation and Parks located in North Hollywood, east of California State Highway 170 (SR-170) approximately one mile south of Interstate 5 (I-5). The Park consists of an eastern developed portion containing four baseball fields and an undeveloped western portion. The LEA only required that the roughly 2+ acre undeveloped western portion of the site where the future stormwater infiltration gallery will be located needed to be further investigated. The follow-up investigation of the western portion of the park was conducted by Ninyo & Moore with field work conducted on March 27-28, 2021. The results of this additional investigation are described in Ninyo & Moore's report: *"Additional Phase II Environmental Site Assessment, LABOE TOS 25 Stormwater Capture Parks Program, Portion of Strathern Park North, 8041 Whitsett Avenue, North Hollywood, California, SWIS# 19-CR-0835"*, dated July 30, 2021. A copy of the Ninyo & Moore report is included with the construction documents for the Strathern Park North Stormwater Capture Project for reference.

Ninyo & Moore's Phase II investigation confirmed the presence of previously undocumented construction-related waste materials and debris on nearly half of the project site. Based on a review of historic aerial photographs of the site, the materials were most likely deposited between the early 1950s and the mid-to-late 1960s, as major development occurred in the surrounding area. What is generally referred to as "construction wastes" that were encountered on the site consisted of a variety of construction demolition-related materials, such as chunks of concrete and asphalt, rebar, miscellaneous metal debris, and lesser amounts of other waste debris such as floor tile, bricks, old tires, pieces of ceramics, glass bottles, broken glass, and plastic interspersed with fill soils. In addition, a minor amount (estimated to be less than 100 cubic yards in volume) of burned waste was also encountered on the site, which is further described below.

A total of 22 exploratory test pits were excavated during the field work conducted on March 27-28, 2021, by Ninyo & Moore. The locations of all test pits are shown on Figure 2 for this Waste Management Plan. At most of the test pits, the amount of construction-related debris encountered was a minor constituent of the material excavated from the test pit and was generally inter-mixed with both native and imported alluvial fill soil. Samples were collected by a Ninyo & Moore representative from each test pit and sent to an independent testing laboratory for analysis. Full analytical results for the collected samples are contained in the above-referenced Ninyo & Moore report.

The Ninyo & Moore report noted that "*Waste depths were relatively consistent at the site, typically extending to maximum depths of 5 to 7.5 feet bgs (most commonly 6 to 6.5 feet bgs), based on the locations explored. At locations where wastes mixed with fill soils are present, it appears that for the most part, the wastes are adequately covered, typically with approximately 1.5 to 3 feet of cover soils. Some occasional or minor wastes were observed at/near the surface."* It should be noted that no construction waste was encountered on approximately 40% of the site, as is shown on Figure 2.

Disposal of Construction Waste Materials Encountered During Excavation for the Strathern Park Infiltration Gallery

All soil and construction waste excavated from the site shall become the property and responsibility of the selected Contractor to dispose of properly. If excavated soil material on site is free of observable construction waste, it may be temporarily stockpiled in the vacant northern portion of the transmission line easement area on the west side of the site as shown on Figure 2, if temporary storage there does not interfere with the operations of the LADWP tree trimming contractor's composting operation located on the southern portion of the transmission line easement. The contractor shall coordinate any temporary stockpiling in this area with the following individuals:

- Juan Carlos Pelayo **(**Juan.Pelayo@ladwp.com**, 818-771-**3711), ***Superintendent, Tree Trimming Group***
- Edgar Perez **(**edgar.perez@ladwp.com**, 213-367-0084),** point of contact for the ***PS TLRW Group***

The maximum height of stockpiled material beneath the overhead power transmission lines must be approved in advance by LADWP. It shall be the Contractor's responsibility to stockpile additional material offsite at the Contractor's expense. It is anticipated that this available adjacent stockpiling area will not have sufficient capacity to hold all the material excavated from the site for the infiltration gallery, and the Contractor will need to make arrangements for storing it elsewhere off-site. Uncontaminated stockpiled soil excavated from the site may be reused for compacted backfill and cover material on the site. Surplus uncontaminated soil that is excess to the project requirements becomes the property of the Contractor.

All construction waste material excavated on the site by the Contractor from within the footprint of the infiltration gallery, per direction from the LEA, shall be hauled offsite at the Contractor's expense to a City of Los Angeles LEA approved landfill. Figure 3 shows the location of two landfills licensed by the LEA in the vicinity of the project site. Both landfills have been contacted by CDM Smith and have reviewed the laboratory results from the test pit program and have confirmed that they will accept both construction waste and burned waste from the Strathern Park infiltration gallery site. Current tipping fees associated with each of the landfills shown on Figure 3 appear in Table 1.

Based on the conclusions developed by Ninyo & Moore, CDM Smith has performed a preliminary neat line calculation of the volume of soil on the Strathern Park site that may contain an unknown quantity of construction waste material contained within the red shaded areas on Figure 2 between 1.5 feet bgs and 6.5 feet bgs and has arrived at a figure of approximately 14,000 cubic yards. This is approximately 25% of the estimated 60,386 cubic yards of total excavation required for emplacing the infiltration gallery at this site. Since the waste material was mixed with mostly clean sandy soil,

the Contractor will be required to sort the waste from the soil on site and thereby substantially reduce the volume of material that must be hauled to a licensed landfill.

The site area explored by Ninyo & Moore for this project is the undeveloped western portion of the Strathern Park North site. The adjacent eastern portion of Strathern Park North (see Figure 1) was previously developed by the City of Los Angeles Department of Recreation and Parks (RAP)as a youth baseball facility with four separate turf baseball fields, including an irrigation system, parking lot, concessions, field lights and restroom facilities and is not part of the infiltration gallery project.

While most of the construction-related debris found on the currently undeveloped portion of the site is as described above, two test pits (TP-7 and TP-21) were excavated in an area that contained some burned wastes and evidence of a former burn pit in that area, along with the miscellaneous construction-related debris and sandy cover soil previously noted. It should be noted that both Test Pits 7 and 21 lie ***outside*** of the footprint of the proposed infiltration gallery as shown on Figure 2. The Contractor shall be responsible for exercising care to avoid disturbing any burned or unburned construction waste material from areas that are outside of the infiltration gallery footprint. The Ninyo & Moore report notes that where encountered, the burned wastes "*typically consist of darkly colored ashy soils with abundant broken glass, fused and melted glass, metal debris and other wastes typical of sites where wastes were burned*." Where burned waste was encountered, it was generally overlain by some of the construction waste as previously described.

Table 1 – LEA-Licensed Landfills Near Strathern Park that Will Accept Construction Debris and Burned Waste Material

Site	Cost	Address	Link
Sunshine Canyon	$88.97/ton	Sunshine Canyon Rd, Sylmar, CA 91342	https://sunshinecanyonlandfill.com/drop-off-information/disposal-costs/)
Lancaster Landfill	$74.00/ton	600 E Ave F, Lancaster, CA 93535	https://www.wm.com/location/california/antelope-valley/_documents/LLF-LandfillFlyer01-01-2020.pdf

The unit prices shown in Table 1 apply to both construction debris and burned waste.

By employing a reasonable level of care in setting the limits of the ground disturbing activities associated with excavation at the site, the Contractor should be able to minimize the amount of burned waste material encountered during the excavation for the infiltration gallery. A minor additional amount of apparently burned waste material was also encountered during the excavation of Test Pit 10 (see Figure 2), which was found intermixed with the construction waste material previously described, but no evidence of a burn pit was found at that location. This burned waste material may have originated from the suspected former burn pit location in the vicinity of TP-7 and TP-10 and inadvertently been re-transported to the vicinity of TP-10 during the initial period of waste disposal activity many years ago. The Ninyo & Moore report notes that the buried construction waste and burned waste material apparently continues easterly offsite for an unknown distance where it likely underlies the developed baseball fields in the park. During the backfilling of TP-10, the minor amount of burned waste encountered there may have become intermingled with non-burned construction waste material and may no longer be clearly identifiable as burned waste.

If the Contractor encounters any identifiable burned waste material within the footprint of the infiltration gallery, the material should be sorted separately from the general construction waste material and Mr. David Thompson, Environmental Affairs Officer, City of Los Angeles Department of Building and Safety, Local Enforcement Agency (LEA) at (213) 252-3932 should be notified after the material has been removed from the site and disposed of in an LEA-regulated landfill. site. The Contractor shall exercise proper care when handling burned waste material (gloves, face masks, eye protection, etc.) and follow Cal OSHA safety procedures for potentially hazardous waste. Burned waste material should be bagged and removed from the site to an LEA- licensed disposal facility.

Contractor Responsibilities for this Waste Management Plan

- The Contractor shall sort construction waste material on site to reduce the volume of material to be transported to the selected landfill.
- Contractor shall remove all waste encountered within the excavated footprint of the infiltration gallery. If odiferous waste material becomes exposed during excavation, the Contractor will give priority to promptly removing it from the site.
- The Contractor shall coordinate his actions with the City-provided construction inspector, who shall be on-site during all excavation operations to verify that all construction waste material is removed from the site by the contractor.
- The Contractor shall be responsible for the erection and maintenance of security fencing around the perimeter of the construction site and provide warning signage excluding the public from within the security perimeter.

- The Contractor will not be required by the LEA to sample stockpiles of excavated material containing construction waste to characterize the material before hauling it off-site to an LEA-licensed landfill.
- Similarly, the LEA is not requiring the Contractor to stockpile, sample, and characterize any burned waste material that is excavated prior to bagging and hauling it to an LEA-licensed landfill.

References

Geotechnical Evaluation, LABOE TOS No. 25, Stormwater Capture Parks Program, Strathern Park North, 8041 Whitsett Avenue, North Hollywood, California, Ninyo & Moore, August 31, 2020.

Additional Phase II Environmental Site Assessment, LABOE TOS No. 25, Stormwater Capture Parks Program, Portion of Strathern Park North, 8041 Whitsett Avenue, North Hollywood, California, SWIS #19-CR-0835, Ninyo & Moore, July 30, 2021.

Letter dated November 8, 2021, from Mr. David Thompson, City of Los Angeles Local Enforcement Agency (LEA), Subject: Strathern Park North (SWIS No. 19-CR-0835) Comments on Additional Phase II Environmental Site Assessment.

Figures

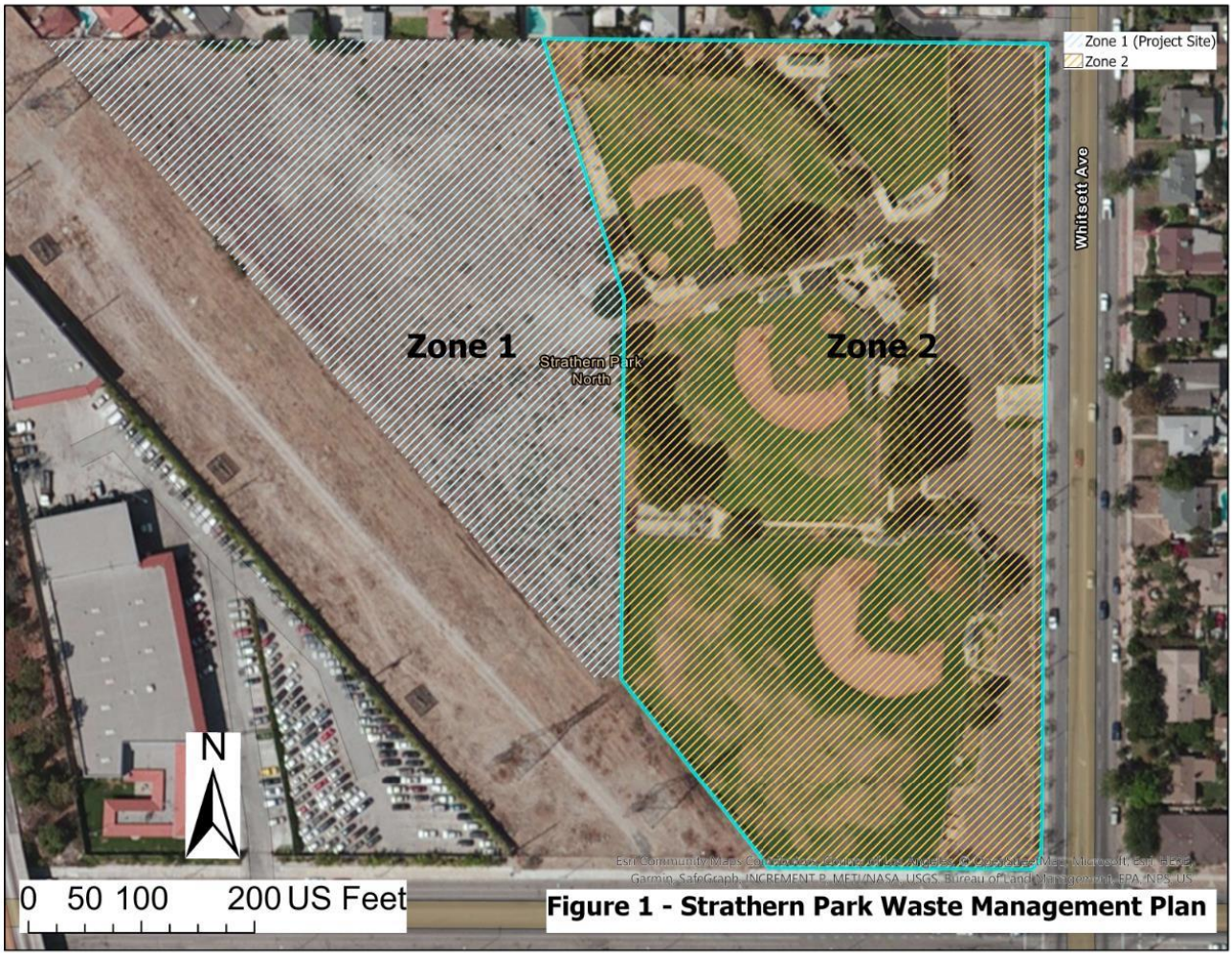

Figure 1 - Strathern Park Waste Management Plan Construction Zones

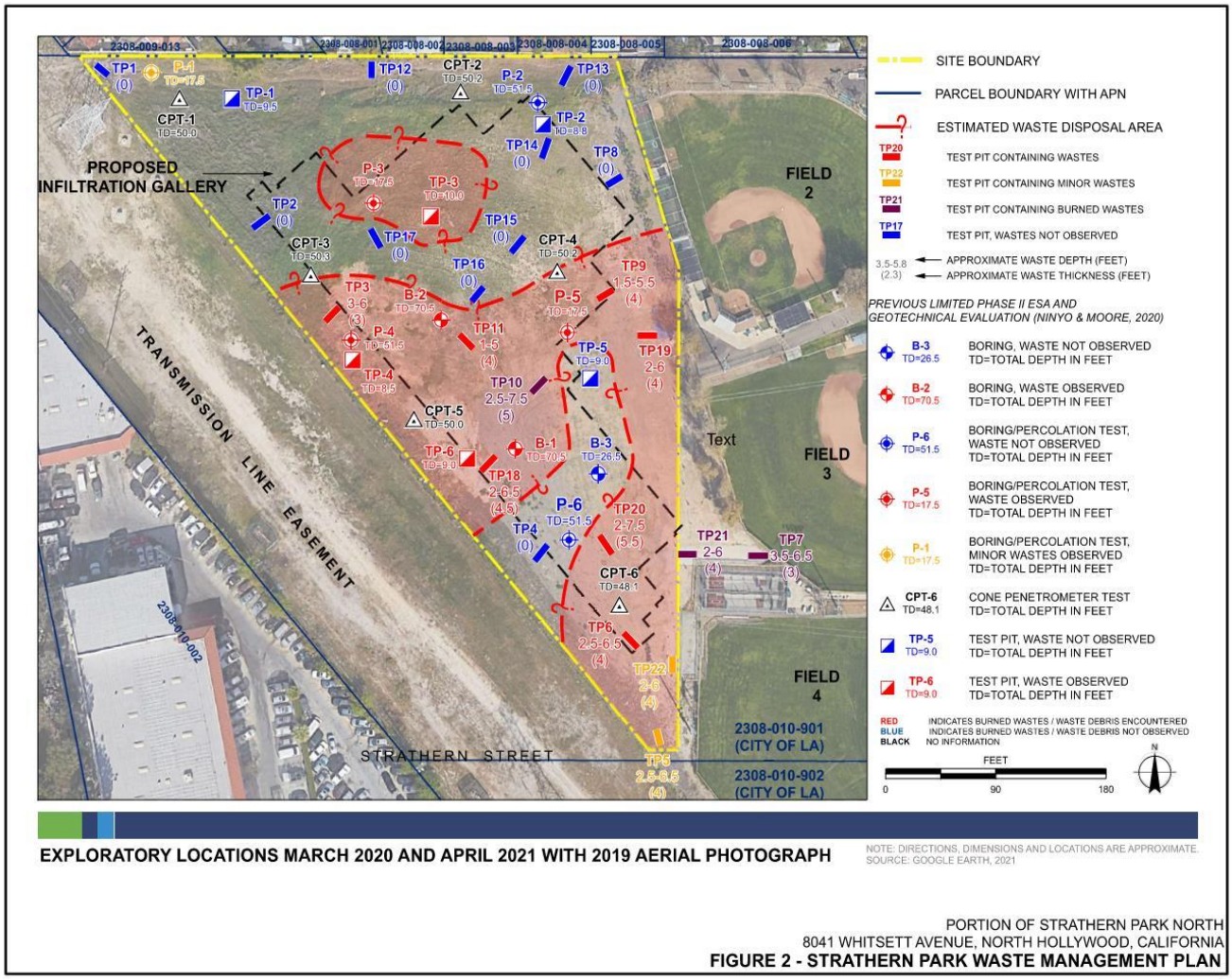

Figure 2 - Exploratory Locations March 2020 and April 2021 with 2019 Aerial Photograph

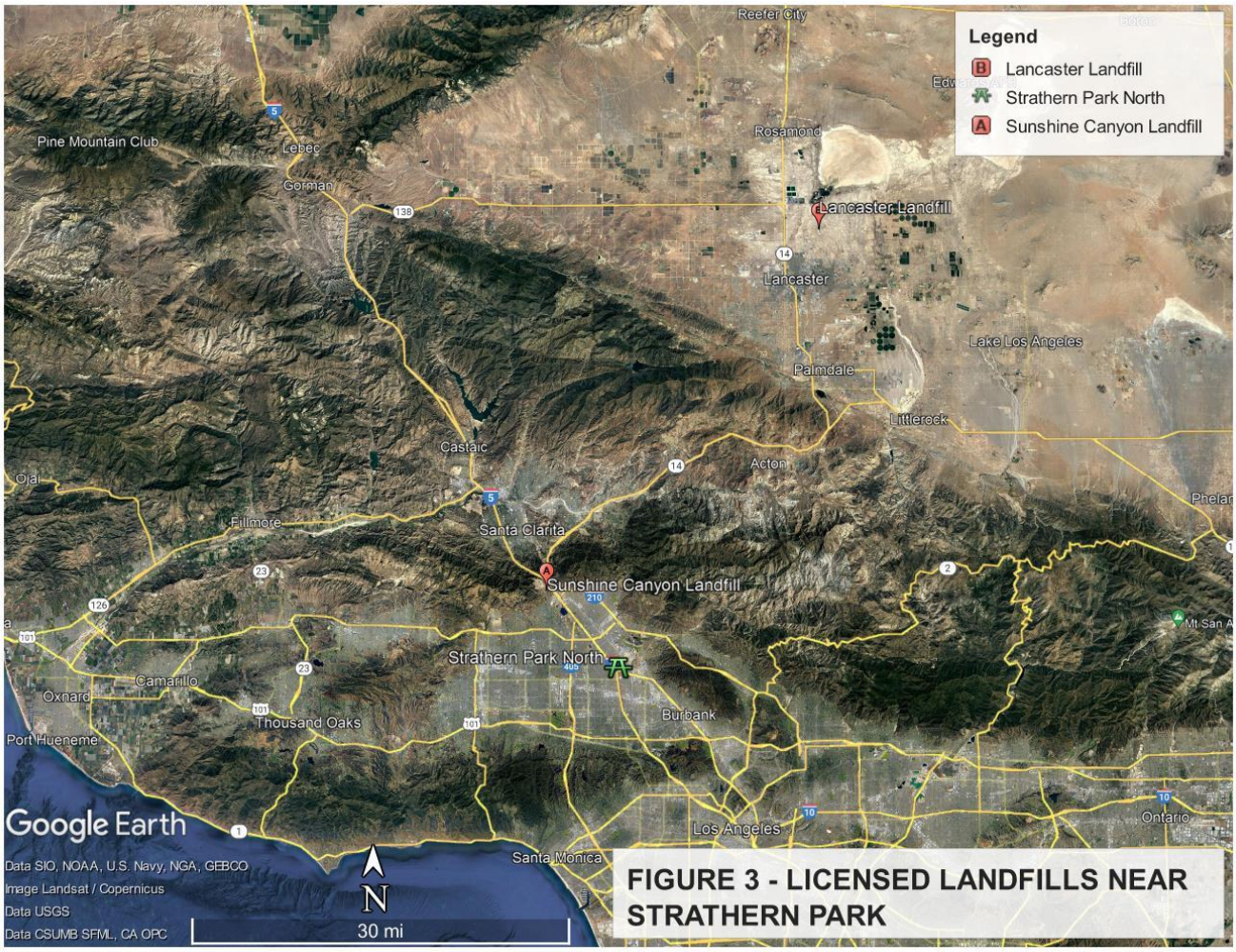

Figure 3 - Licensed Landfills Near Strathern Park

Appendix A

November 8, 2021, letter from City of Los Angeles Local Enforcement Agency

CITY OF LOS ANGELES
CALIFORNIA

BOARD OF
BUILDING AND SAFETY
COMMISSIONERS

VAN AMBATIELOS
PRESIDENT

JAVIER NUNEZ
VICE PRESIDENT

JOSELYN GEAGA-ROSENTHAL
GEORGE HOVAGUIMIAN
ELVIN W. MOON

ERIC GARCETTI
MAYOR

DEPARTMENT OF
BUILDING AND SAFETY
201 NORTH FIGUEROA STREET
LOS ANGELES, CA 90012

OSAMA YOUNAN, P.E.
GENERAL MANAGER
SUPERINTENDENT OF BUILDING

JOHN WEIGHT
EXECUTIVE OFFICER

November 9, 2021

Ms. Beth Abramson-Beck, Principal Geologist
Ninyo & Moore
5710 Ruffin Road
San Diego, CA 92123

Subject: Strathern Park North (SWIS No. 19-CR-0835)
Comments on Additional Phase II Environmental Site Assessment

Dear Ms. Abramson-Beck,

The City of Los Angeles Local Enforcement Agency (LEA) received the ***Additional Phase II Environmental Site Assessment,*** dated July 30, 2021, for the Stormwater Capture Parks Program at a portion of Strathern Park North. The Phase II was conducted to characterize and delineate the lateral and vertical extent of wastes at the site, evaluate the presence of cover overlying wastes and to conduct sampling and analytical testing to characterize the wastes. The LEA has shared the current Phase II report with our partnering state agency, California Department of Resources Recycling and Recovery (CalRecycle) for their review and comment.

After discussion with CalRecycle, the LEA has the following comments regarding the site:

- Pursuant to 27 CCR 21190, a Post Closure Land-use plan will be required for the upcoming infiltration basin project and any future development at the site. The plan should reflect the findings from this Phase II study. As part of this plan, a landfill gas monitoring plan should be included that demonstrates the protection of the adjacent residential property, discusses the long-term maintenance of the site and how it will meet the State Minimum Standards for a closed disposal site.

- A community Health and Safety Plan and workers health and safety plan should be developed to ensure the health and safety of any individual working on the proposed Stormwater Capture Parks project.

- A Waste Management Plan (WMP) should be developed to be used any time subsurface activities are conducted at Strathern Park North due to the site being

located on top of the waste disposal area. The WMP is required to include the entire park. This is critical due to the sampling results collected from TP7, TP10 and TP 21 that show elevated levels of lead and zinc.

- If any future development is to be conducted at this facility, it will require additional exploratory work to define the lateral and vertical extents of the waste on that side of the park, especially in the Eastern side of the park.

If you have any questions regarding this approval, please feel free to contact me at 213-252-3932.

Sincerely,

David Thompson
LEA Program Manager

Cc: Dawn Liang, CalRecycle

Appendix B

Community Health and Safety Plan During Project Construction

Strathern Park North Stormwater Capture Parks Program
Community Health and Safety Plan During Project Construction

Purpose

The purpose of this community Health and Safety Plan is to protect the general public and the residents of housing that is in the immediate vicinity of the Strathern Park North City of Los Angeles Stormwater Capture Parks program infiltration gallery construction site from any potentially deleterious effects associated with the project.

Scope

The Contractor selected for construction of this project shall be required to follow the actions outlined below in this plan. Failure to do so can represent a violation of the terms and conditions of this construction contract. These requirements are in addition to those contained in the Contractor-provided health and safety plan which shall govern the actions of all of the Contractor's workers on the project site.

Contractor's Responsibilities

- The contractor shall provide continuous methane gas monitoring during the excavation phase of the project. Occupants of the neighboring residential properties adjoining the project site shall be promptly notified by the Contractor should any large gas pockets become exposed.

- Any foul-smelling waste uncovered by the Contractor shall be promptly collected, covered, and hauled off site and properly disposed of as quickly as possible.

- The Contractor shall install and maintain adequate perimeter security fencing, motion sensor security lighting and alarms to deter unauthorized individuals from entering the work site during non-work hours for the duration of the project. Security lighting shall be arranged so as not to send furtive light into the residential area on the north side of the project site.

- The Contractor shall also implement a sign-in register so that only authorized visitors are allowed onto the project site during working hours.

- The Contractor shall utilize sufficient dust control measures so that only minimal visible dust leaves the site during the excavation and waste sorting operations. Typical dust control measures include use of water spray, placing tarps over stockpiles when they are not being actively worked on, and suspension of earth moving activities when windy conditions develop.

- The contractor shall be responsible for installing all erosion control measures outlined in the approved project Stormwater Pollution Prevention Plan (SWPPP). The condition of all erosion control measures shall be inspected by the Contractor on a weekly basis, and after

any precipitation event that exceed 0.25 inches of rainfall, and promptly repaired as necessary to maintain its effectiveness.

- Training. The Contractor shall always provide a project Safety Monitor onsite during the excavation phase of the project. The Safety Monitor shall have an up to date 40-hour HAZWOPER training certificate and will be responsible for determining appropriate personal protective equipment (PPE) and clothing for all personnel working on the project and for maintaining gas monitoring equipment.

END OF STRATHERN PARK NORTH STORMWATER CAPTURE PROGRAM
COMMUNITY HEALTH AND SAFETY PLAN DURING PROJECT CONSTRUCTION

STRATHERN PARK NORTH POST CLOSURE LAND USE PLAN

FOR

STORMWATER CAPTURE PROJECT

Submitted: April 19, 2022
Revised: June 23, 2022

1. Introduction

CDM Smith, under the provisions of LABOE Task Order Supplement No. 25 (TOS-25), was retained by the City of Los Angeles Bureau of Engineering to provide design services for the Strathern Park North Stormwater Capture Project. As part of the project design effort, a standard pre-design geotechnical investigation of the site was conducted by the design team's geotechnical engineering subconsultant, Ninyo & Moore. The Ninyo & Moore investigation discovered evidence that the proposed site had previously been used for the undocumented disposal of construction-related debris. The Bureau of Engineering subsequently authorized Ninyo & Moore to conduct a more detailed environmental site assessment for Strathern Park North and a report of findings was prepared *(Additional Phase II Environmental Site Assessment, LABOE TOS No. 25, Stormwater Capture Parks Program, Portion of Strathern Park North, 8041 Whitsett Avenue, North Hollywood, California SWIS #19-CR-0835, Ninyo & Moore, July 30, 2021)* for the site. Copies of the report are on file at the City of Los Angeles Bureau of Engineering (LABOE), and the City of Los Angeles Department of Building and Safety, Local Enforcement Agency (LEA).

Ninyo & Moore's Phase II investigation determined that the project site did in fact contain undocumented buried construction waste material over approximately half of the site for the infiltration gallery, and that the site had never been registered with the State of California as a solid waste landfill site. The Phase II investigation included historic aerial photograph research, a review of historic topographic maps of the area, and document research. The Phase II investigation also included the excavation of 22 additional test pits across the site and the collection of samples for laboratory analysis. A geophysical survey of the site was also conducted as part of the investigation.

Based on the research conducted for the investigation, the site apparently was an active disposal site for construction waste from the early 1950s into the late 1960s as the Hollywood Freeway and residential development took place in the area. The use of the site as a waste dump for this construction-related debris was never registered with either the State of California or either the city or county of Los Angeles.

The construction waste discovered in the test pits consisted of miscellaneous debris commonly associated with construction demolition activities (chunks of broken concrete, broken roof and floor tiles, pieces of wood and scrap structural steel, broken glass, bottles, tires, plastic, and miscellaneous ceramic debris. A small amount of burned waste was also encountered at a couple of locations within the footprint of the proposed infiltration gallery.

The construction waste was typically covered with from 1.5 to 3 feet of imported clean soil and was generally confined to within 7 – 8 feet below the ground surface. A total of 101 samples from the test

pits were taken to an analytical laboratory for testing for an array of potential contaminants. Full laboratory results are contained in the Ninyo & Moore July 30, 2021, report for the Additional Phase II Environmental Site Assessment. The report showed the presence of arsenic, lead, copper, and zinc in many of the samples tested. However, only a small percentage of the heavy metals tests produced results that exceeded human health screening levels. Low levels of hydrocarbons, polychlorinated biphenyls (PCBs), organochlorine pesticides, volatile organic compounds and semi-volatile organic compounds were also tested for but were generally found to not be present.

When the results of the Additional Phase II Environmental Site Assessment were presented to the City of Los Angeles Department of Building and Safety, Local Enforcement Agency (LEA), the LEA determined that the construction waste could be safely disposed of at one of the LEA-approved landfills in the area, and no special treatment or processing of the construction waste material was required. Additionally, the LEA required that ALL construction waste material should be removed from within the footprint of the proposed infiltration gallery to achieve a clean closure of the portion of the park that will be impacted by project construction activity.

To reduce the quantity of material that needed to be hauled to a landfill, the selected contractor for the project will first be required to sort the material on site to separate the construction waste from the soil that it is mixed with. The LEA will also require that three gas monitoring wells be installed around three sides of the infiltration gallery as part of the project. Since construction waste, including burned waste, which is considered to be hazardous by the State of California, was found on the site, a California Solid Waste Information System number (SWIS #) was assigned to the site and it was entered into the statewide data base. The assigned SWIS number for Strathern Park is 19-CR-0835.

The Ninyo & Moore report also concluded that an unknown additional quantity of construction waste and burned waste is likely to extend some distance to the east away from the infiltration gallery project site, presumably under the existing baseball fields that have been developed on the eastern portion of the park. Further investigation to establish the limits of the construction waste deposit would be required by the LEA as part of any plan for redevelopment or expansion of the eastern portion of the park beyond the limits of the current infiltration galley site.

Preparation of a Waste Management Plan (WMP) for Strathern Park North, which will govern how the selected contractor will remove the identified construction waste material and properly dispose of it in an LEA-approved landfill was prepared and submitted to the LEA for their approval on March 21, 2022.

2. Strathern Park North Stormwater Capture Project

Strathern Park North is a public park owned and operated by the City of Los Angeles Department of Recreation and Parks (LARAP). The park is located in North Hollywood, east of California highway SR-170, approximately one-mile south of the Interstate 5 (I-5) freeway. The park consists of a relatively level, roughly triangular-shaped parcel of land totaling approximately 9 acres in extent. The western one-third of the park is currently undeveloped and is the selected location for the proposed stormwater infiltration gallery, which will be constructed utilizing precast reinforced concrete components with a footprint of approximately 1.5 acres. Ground surface elevations at the site range from about 810 to 805

feet above mean sea level, NGVD. The entire infiltration gallery facility will be constructed below ground surface level and then covered with 10 – 12 feet of compacted clean soil to restore the pre-project lines and grades. The project also includes the construction of two new baseball fields over the top of the infiltration gallery.

Construction of the facility will require excavation of a large pit approximately 26 feet in depth below the ground surface. The contractor will be responsible for monitoring for methane gas on a daily basis during the excavation phase of the project, and maintain a log of those samplings. If the contractor detects any readings above the Lower Explosive Limit (LEL) for methane, work will be suspended until the readings return to below the LEL.

Since the buried construction waste was determined during the Additional Phase II site assessment for the site to generally be confined to the first 8 – 10 feet below ground surface, and excavation for the infiltration gallery facility will require excavating down to some 26 feet below ground surface, it is therefore anticipated that within the approximately 1.5 acre footprint of the facility that all construction waste material will be removed from the site and hauled offsite to an LEA-approved landfill, thereby allowing for what the LEA terms a "clean closure" to be achieved for all buried construction wastes found at the site within the footprint of the infiltration gallery.

3. Responsibility for Long-Term Gas Well Monitoring at the Strathern Park Infiltration Gallery Site

An additional LEA requirement for the Strathern Park Infiltration Gallery project calls for the installation of a series of three gas monitoring wells around the perimeter of the infiltration gallery once it has been constructed. The proposed locations for each of these gas monitoring wells are indicated on Figure 1 for this Post Closure Land Use Plan. The intent of placing gas monitoring wells at the three proposed locations is to provide the ability to detect the presence of methane gas accumulation around the perimeter of the infiltration gallery. Once project construction is completed and the project is turned over to the City of Los Angeles Bureau of Sanitation (LASAN) for operation and maintenance, LASAN will also assume primary long-term responsibility for sampling the three gas monitoring wells on a quarterly basis using a gas sniffer probe or other appropriate technology. The results of all sampling performed by LASAN will be reported to LEA within 30 days of the sampling run. The LEA will also conduct quarterly sampling of the monitoring wells on their own schedule.

If readings at any of the monitoring wells are determined to exceed the Lower Explosive Limit (LEL) for methane gas, LASAN will promptly notify the LEA and LARAP, and additional supplemental gas sampling of the interior of the infiltration gallery will then be conducted by opening the access hatches and inserting gas probes monitoring probes into the structure. If dangerous levels of methane are detected from within the infiltration gallery, an appropriate plan of action for mitigation will be jointly developed by LEA and LASAN and implemented by LASAN as lead response agency.

Figure 2 shows the detail for a typical gas monitoring well such as is proposed for the Strathern Park North infiltration gallery project. Each monitoring well will be developed down to a depth of 12 feet, which is below the maximum depth of the construction waste material (the potential source of methane

gas generation) and a couple of feet below that depth into the undisturbed sandy native alluvial soil. Each well will consist of a 12-foot-long section of perforated or slotted Schedule 80 PVC pipe with a cap

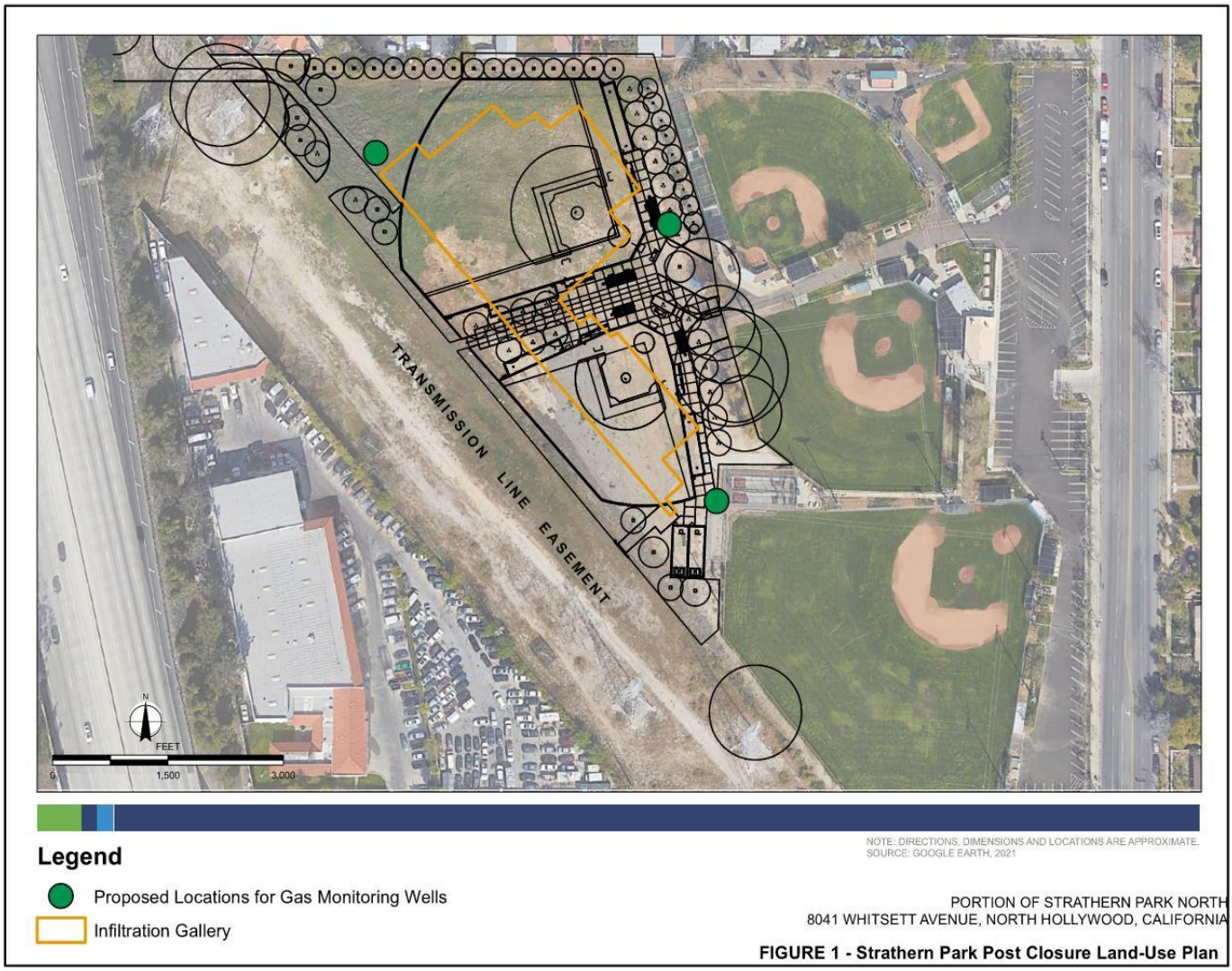

at the bottom end. The pipe will be wrapped in non-woven geotextile material (Mirafi 140N or equal) and placed into a 12-inch diameter augured bore hole. The lowered section of the monitoring well will be encased in a gravel pack. The middle section of the monitoring well will be encased in clay or clean native backfill or cuttings from the boring. The top 12-18 inches of the monitoring well will be encased in a cement-bentonite grout. The top of the monitoring well will be protected with a cast iron cap, as shown in Figure 2.

Copies of the results from all sampling runs of the gas monitoring wells will be retained in the files of the LEA and LARAP for a period of ten (10) years, then discarded. LASAN will be responsible for promptly notifying LEA and LARAP directly if sampling shows methane gas levels in any of the monitoring wells exceeds the LEL for methane and shall have responsibility for coordinating with those agencies in the development of an appropriate corrective

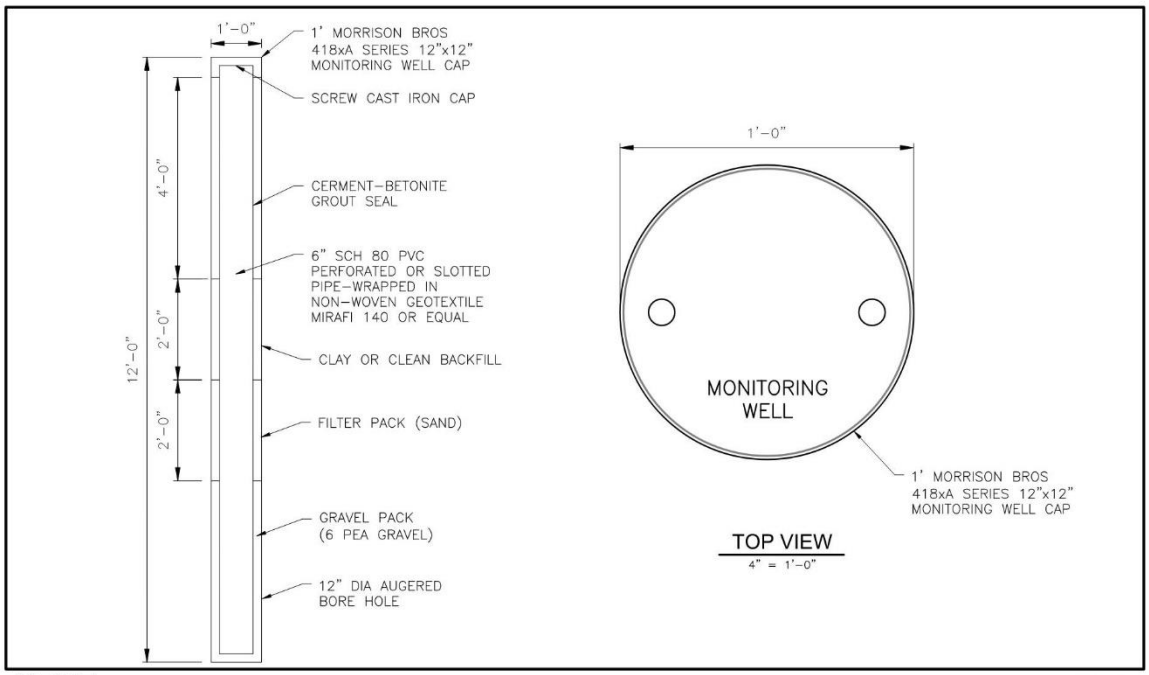

CDM Smith

Figure No. 2
Proposed Gas Monitoring Probe Detail
MARCH 2022

action plan. The LEA may, at its discretion, require LARAP to extend the gas monitoring program outlined in this document to include additional areas beyond the limits of the infiltration gallery project beneath the surface of the already developed portion of Strathern Park to the east of the proposed infiltration gallery site.

4. Post Closure Responsibilities of City of Los Angeles Department of Recreation and Parks (LARAP) for the Strathern Park Stormwater Infiltration Project

Once the construction phase of the Strathern Park infiltration gallery has been completed, the project will be turned over to the City of Los Angeles Bureau of Sanitation (LASAN) for long-term operation and maintenance. At that time the following specific post closure land use responsibilities will remain permanently with the City of Los Angeles Department of Recreation and Parks (LARAP):

- In the event that additional construction waste material is encountered by LARAP or their contractors during any subsequent ground-disturbing activity in the developed portion of the park, LARAP will be responsible for collection of the waste material and properly disposing of it at an LEA-licensed landfill. Once the additional waste material has been discovered, LARAP must

promptly notify LEA of this discovery prior to initiating any action to collect and remove it from the site.

- LARAP is cautioned to avoid any future excavations in the park that are more than 24 inches in depth below the ground surface for irrigation system upgrades, field lighting improvements or any other improvements

- LARAP will be responsible for discussing any proposed future major improvement projects for Strathern Park North that will require ground surface excavation greater than 12 inches below the ground surface with LEA prior to commencing any work.

5. Strathern Park North Post Closure Land Use Plan (PCLUP) Periodic Update and Revision

This plan shall be reviewed and updated as needed by LASAN at least once every 5 years. It shall be the responsibility of LASAN to initiate and coordinate any updates or revisions to this plan with LEA.

BOARD OF
BUILDING AND SAFETY
COMMISSIONERS

VAN AMBATIELOS
PRESIDENT

JAVIER NUNEZ
VICE PRESIDENT

JOSELYN GEAGA-ROSENTHAL
GEORGE HOVAGUIMIAN
ELVIN W. MOON

CITY OF LOS ANGELES
CALIFORNIA

ERIC GARCETTI
MAYOR

DEPARTMENT OF
BUILDING AND SAFETY
201 NORTH FIGUEROA STREET
LOS ANGELES, CA 90012

OSAMA YOUNAN, P.E.
GENERAL MANAGER
SUPERINTENDENT OF BUILDING

JOHN WEIGHT
EXECUTIVE OFFICER

October 13, 2022

Mr. Lawrence M. Magura
CDM Smith
5710 Ruffin Road
San Diego, CA 92123

Subject: Strathern Park North (SWIS No. 19-CR-0835)
LEA Approval of Stormwater Capture Project

Dear Mr. Magura,

The City of Los Angeles Local Enforcement Agency (LEA) received the Strathern Park North Post Closure Land Use Plan, dated April 19, 2022 and revised June 23, 2022 and Waste Management Plan, dated December 7, 2021 and finalized on October 13, 2022. These plans were submitted as part of the Stormwater Capture Parks Program at the undeveloped western portion of Strathern Park North. This project will require the excavation and removal of waste material, consisting of mostly construction and demolition debris, in a section of the undeveloped old dump site. The section of the dump site beneath the baseball fields will not be disturbed during this project. The plans were submitted to the LEA, along with the Los Angeles Regional Water Quality Control Board and the Department of Toxic Substances Control for review and approval.

After reviewing the plans and having several discussions with CalRecycle, the LEA is approving the project with the following conditions:

- This approval is only for the construction of the stormwater capture parks project. Any other work at Strathern Park North site will require consultation with the LEA and the approval of a new postclosure land use plan and waste management plan prior to the start of construction. Additional exploratory work to define the lateral and vertical extents of the waste at the park would be required.

- All solid waste excavated from the project site is to be properly disposed of at a permitted landfill.

- Soil and debris from the project site shall be managed according to the guidance and regulations of the Los Angeles Regional Water Quality Control Board and/or the California Department of Toxic Substances Control depending upon the nature of the material excavated.

- The property owner is responsible to ensure that the project is constructed and maintained pursuant to State solid waste regulations found in Title 27 of the California Code of Regulations.

- The LEA shall be notified 30 days prior to the start of the project so as to arrange for the scheduling of an LEA inspector to periodically monitor the work.

The LEA reserves the right to modify or suspend this approval, if problems arise during the construction activities. The LEA shall be notified within 24 hours of any special occurrence that may occur at the site.

This approval is specifically for regulations under our authority and does not relieve the owner or operator from complying with all other local, state, and federal requirements.

If you have any questions regarding the LEA approval, please feel free to contact me at 213-252-3932.

Sincerely

David Thompson
LEA Program Manager

Cc: Dawn Liang, CalRecycle

CITY OF LOS ANGELES
DEPARTMENT OF PUBLIC WORKS
BUREAU OF ENGINEERING

SCP0009 - VALLEY VILLAGE PARK STORM WATER CAPTURE PROJECT

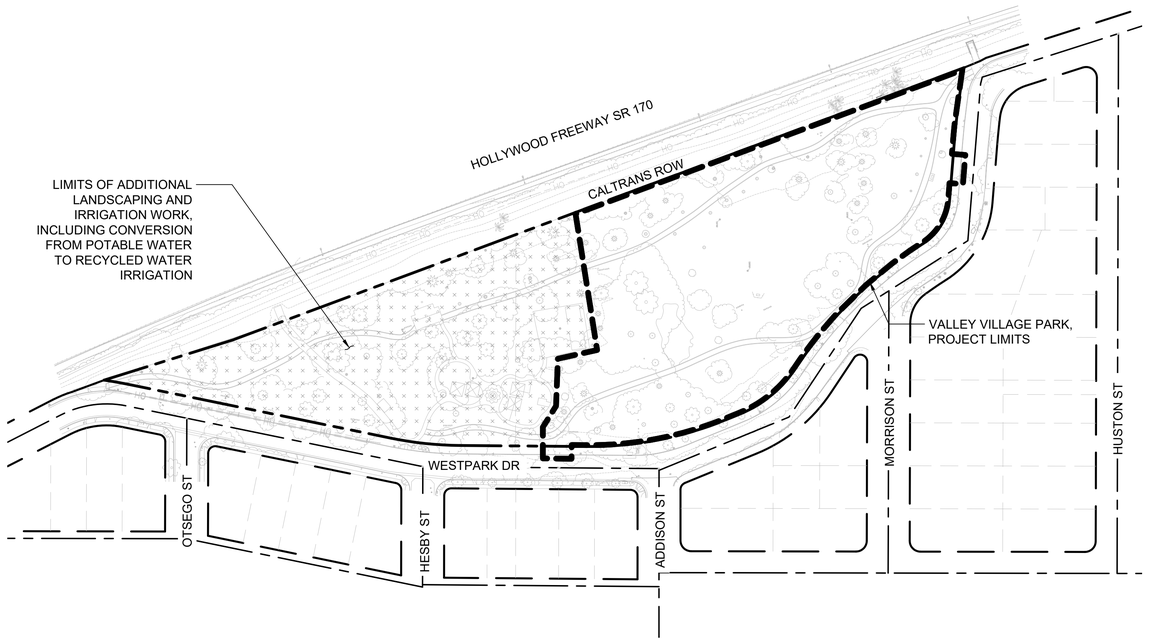

LOCATION PLAN
NOT TO SCALE

This plan has been reviewed and conforms to recommendations of soils engineering report dated August 12, 2020.

REGISTERED PROFESSIONAL ENGINEER DANIEL B. CHU No. GE2096 GEOTECHNICAL STATE OF CALIFORNIA

STORMWATER MITIGATION
LOW IMAPCT DEVELOPMENT (LID)
APPROVED WITH CONDITIONS

This set of plans and specifications must be at the jobsite during construction

Stormwater Observation Report (SOR) is required prior to issuance of Certificate of Occupancy or final sign off.

Total Pages 48

Digitally Signed By: *S. Garcia* Date: 12/12/2023
Department of Public Works - Bureau of Sanitation
Watershed Protection Division

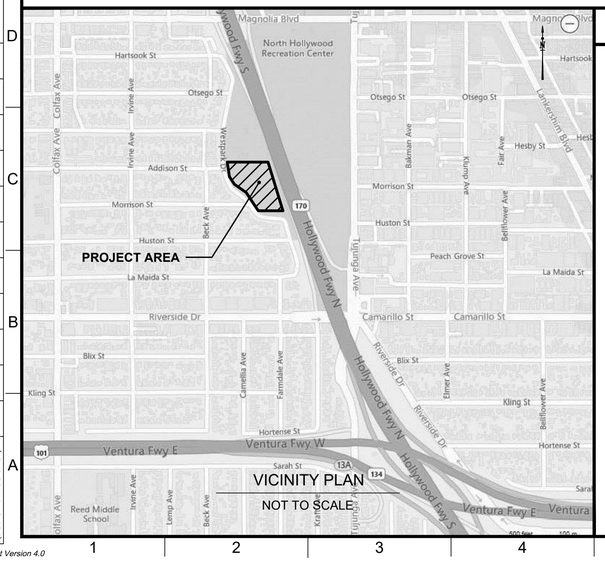

VICINITY PLAN
NOT TO SCALE

PROJECT TEAM

CLIENT:
LOS ANGELES DEPARTMENT OF WATER AND POWER
JANISSE QUINONES
CHIEF EXECUTIVE OFFICER AND CHIEF ENGINEER
ART CASTRO, P.E.
WATERSHED MANAGEMENT MANAGER
PETER TONTHAT, P.E.
PROJECT MANAGER

DEPARTMENT OF RECREATION AND PARKS
JIMMY KIM
GENERAL MANAGER
DARRYL FORD
SUPERINTENDENT

PROJECT MANAGEMENT:
CLEAN WATER DIVISION
CHRISTOPHER F. JOHNSON, P.E., G.E.
DIVISION ENGINEER
ROSHANAK VARJAVAND, Ph.D., P.E.
SENIOR PROJECT MANAGER
EDUARDO HERNANDEZ, P.E.
PROJECT MANAGER
WIRIKIT WICHIANCHAN, P.E., ENV SP
PROJECT ENGINEER
AMY LAM, E.I.T., ENV SP
PROJECT ENGINEER

PROJECT MANAGEMENT:
CLEAN WATER DIVISION
ELENA LOPEZ, P.E.
PROJECT ENGINEER
THOMAS K. LANG, E.I.T., ENV SP
PROJECT ENGINEER

DESIGN SUPPORT:
BUREAU OF ENGINEERING - ARCHITECTUAL DIVISION
STEVEN FIERCE, AIA
PRINCIPAL ARCHITECT
RICHARD FISHER, ASLA
LANDSCAPE ARCHITECT

DESIGN MANAGEMENT/ CIVIL:
CAROLLO ENGINEERS, INC.
ERIC MILLS, P.E.
PRINCIPAL IN CHARGE
MIKO AIVAZIAN, P.E.
PROJECT MANAGER
MATT HUCKABY, P.E.
PROJECT ENGINEER
JERRY GANTNEY, P.E., P.L.S.
CIVIL ENGINEER

LANDSCAPE:
STUDIO-MLA
ALEX SAN DIEGO, PLA, ASLA, WWLP
LANDSCAPE ARCHITECT

SURVEY:
CALVADA SURVEYING, INC.
ARMANDO DUPONT, P.L.S.
SURVEYOR

GEOTECHNICAL:
NINYO & MOORE
DANIEL CHU, PhD, P.E., G.E.
GEOTECHNICAL ENGINEER
GREG M. CORSON, P.G., C.E.G.
PRINCIPAL GEOLOGIST

STRUCTURAL:
CAROLLO ENGINEERS, INC.
KIKO ANTUNIVICH, P.E.
STRUCTURAL ENGINEER

ELECTRICAL AND INSTRUMENTATION:
PROJECTLINE
ROBERT GETTER, P.E.
ELECTRICAL ENGINEER

BID AND AWARD:
PROJECT AWARD AND CONTROL DIVISION
ARSEN VOSKERCHYAN, P.E.
DIVISION MANAGER

CONSTRUCTION MANAGEMENT:
CONSTRUCTION MANAGEMENT DIVISION
MEGHAN ALDRICH, P.E.
DIVISION ENGINEER

INSPECTION:
BUREAU OF CONTRACT ADMINISTRATION
JOHN L. REAMER, JR
INSPECTOR OF PUBLIC WORKS

PLANS PREPARED BY:
carollo®
707 WILSHIRE BLVD, SUITE 3920
LOS ANGELES, CA 90017
(213) 489-1587

ENGINEERING
CITY OF LOS ANGELES

• THIS PLAN WAS ELECTRONICALLY SIGNED AND STAMPED •

BUREAU OF ENGINEERING
VERTICAL CONTROL: CITY OF LOS ANGELES BM 08-20990; 698.94 FEET (NAVD 88)
HORIZONTAL CONTROL: CA STATE PLANE COORD., ZONE 5 (NAD 83 EPOCH 2017.50)

SHEET TITLE: COVER SHEET
PROJECT: VALLEY VILLAGE PARK STORM WATER CAPTURE PROJECT
ADDRESS: VALLEY VILLAGE PARK, 5900 WESTPARK DR, NORTH HOLLYWOOD, CA 91601

DEPARTMENT OF PUBLIC WORKS
CITY OF LOS ANGELES
TED ALLEN, P.E.

NO.	REVISIONS:	BY:	DATE:

CIP NO. SCP0009
SHEET TYPE GENERAL
INDEX NO.

CITY ENGINEER _____ DATE _____
DEPUTY CITY ENGINEER/PROGRAM MANAGER
CITY ENGINEER _____ DATE _____

WORK ORDER NO. EW40085F

SHEET NAME G-01
SHEET 01 OF 80 SHEETS

REVISION DATES (DESIGN STAGE ONLY)

THE CITY OF LOS ANGELES OR ITS OFFICERS OR AGENTS SHALL NOT BE RESPONSIBLE FOR THE ACCURACY OR COMPLETENESS OF ELECTRONIC COPIES OF THIS PLAN SHEET.

NOTICE TO CONTRACTORS

1. SPECIFICATIONS: ALL WORK SHALL CONFORM TO THE PROJECT SPECIFICATIONS. WORK NOT COVERED BY THE PROJECT SPECIFICATIONS SHALL CONFORM TO THE LATEST EDITION AND SUPPLEMENTS OF "THE STANDARD SPECIFICATIONS FOR PUBLIC WORKS CONSTRUCTION" PARTS 2 THROUGH 6 (GREEN BOOK) AND THE CORRESPONDING "ADDITIONS AND AMENDMENTS TO THE LATEST EDITION OF THE STANDARD SPECIFICATIONS FOR PUBLIC WORKS CONSTRUCTION" (BROWN BOOK). ALL T, C, S, E AND I SHEETS SHALL CONFORM TO THEIR RESPECTIVE PLANS AND THE PROJECT SPECIFICATION BOOK. ANY CONFLICTS SHALL BE BROUGHT TO THE CITY'S PROJECT MANAGER'S ATTENTION IMMEDIATELY.
2. THIS IMPROVEMENT CONSISTS OF WORK CALLED FOR ONLY IN THIS DOCUMENT.
3. IN ADDITION TO OTHER SUBMITTALS REQUIRED BY THE OFFICE OF CONTRACT COMPLIANCE, PRIOR TO THE START OF WORK AND NO LATER THAN 10 CALENDAR DAYS AFTER ISSUANCE OF THE NOTICE TO PROCEED. THE CONTRACTOR SHALL SUBMIT TO THE ENGINEER THE LABOR COSTS BY TRADE. THESE COSTS SHALL INCLUDE ACTUAL DOCUMENTED PAYROLL COSTS INCLUDING WAGES, PAYROLL TAXES AS ESTABLISHED BY LAW (I.E. FICA, FEDERAL AND STATE UNEMPLOYMENT TAXES), FRINGE BENEFITS AS ESTABLISHED BY NEGOTIATED LABOR AGREEMENTS, AND ANY INSURANCE COSTS (SUCH AS WORKMAN'S COMPENSATION, PUBLIC LIABILITY AND PROPERTY DAMAGE INSURANCE) WHICH ARE ASSESSED AGAINST LABOR COSTS. THE CONTRACTOR SHALL ALSO SUBMIT A LIST OF ALL EQUIPMENT PLANNED FOR THIS CONTRACT AND INDICATE THE OWNERSHIP THEREOF.
4. INSPECTION: ALL WORK AND MATERIALS ARE SUBJECT TO INSPECTION PURSUANT TO SECTION 2-11 OF THE STANDARD SPECIFICATIONS. CALL (213) 485-5080 FOR INSPECTION BEFORE NOON OF THE WORKING DAY BEFORE INSPECTION IS REQUIRED.

   CONTINUOUS INSPECTIONS ARE REQUIRED FOR CONCRETE OVER 2500 PSI. CONTINUOUS INSPECTIONS BY SOILS ENGINEER ARE REQUIRED FOR EXCAVATION.
5. THE CONTRACTOR, IN CONFORMANCE WITH LOS ANGELES CITY ORDINANCE NO. 150,478 SHALL POTHOLE EXISTING SUBSURFACE INSTALLATIONS CARRYING UNSTABLE SUBSTANCES TO DETERMINE THEIR LOCATIONS AND ELEVATIONS BEFORE COMMENCING EXCAVATION.
6. UNDERGROUND SERVICE ALERT: BEFORE COMMENCING ANY EXCAVATION, THE CONTRACTOR SHALL OBTAIN AN UNDERGROUND SERVICE ALERT (USA) INQUIRY I.D. NUMBER BY CALLING (800) 227-2600. TWO WORKING DAYS SHALL BE ALLOWED AFTER THE I.D. NUMBER IS OBTAINED AND BEFORE THE CONTRACTOR STARTS THE EXCAVATION WORK SO THAT UTILITY OWNERS CAN BE NOTIFIED. IF THE UTILITY OWNER IS THE CITY OF LOS ANGELES, A CONFIRMATION NUMBER INDICATING THE CITY HAS BEEN NOTIFIED SHALL BE OBTAINED BY USA AND/OR THE CONTRACTOR FROM THE APPROPRIATE CITY DEPARTMENT. THE I.D. NUMBER TOGETHER WITH THE DATE ACQUIRED SHALL BE REPORTED TO THE BUREAU OF CONTRACT ADMINISTRATION WHEN CALLING FOR INSPECTION. I.D. NUMBERS WILL NOT BE GIVEN MORE THAN 10 DAYS BEFORE STARTING EXCAVATION WORK.
7. NOTIFICATION: AT LEAST TEN (10) DAYS BEFORE THE START OF CONSTRUCTION, THE CONTRACTOR SHALL NOTIFY, IN WRITING, ABUTTING PROPERTY OCCUPANTS OF THE PROPOSED CONSTRUCTION START DATE. A COPY OF SAID WRITTEN NOTIFICATION SHALL BE PROVIDED TO THE INSPECTOR FOR APPROVAL BEFORE THEY ARE DISTRIBUTED TO THE OCCUPANTS OF THE ABUTTING PROPERTY.
8. ADVANCE CONSTRUCTION NOTICE SIGNS: IN ADDITION TO SIGNS REQUIRED BY THE PROVISIONS OF THE WORK AREA TRAFFIC CONTROL HANDBOOK (WATCH), LATEST EDITION, AND THE CALIFORNIA MANUAL OF UNIFORM TRAFFIC CONTROL DEVICES (MUTCD), LATEST EDITION, FURNISH AND PLACE SIGNS FOR GIVING ADVANCE NOTICE TO MOTORISTS OF TRAFFIC DISRUPTION AS PART OF THIS PROJECT IN ACCORDANCE WITH STANDARD PLANS S-791-1. TIME AND INFORMATION TYPE CONSTRUCTION NOTICE SIGNS (TWO EACH) PER STANDARD PLAN S-791-1 ARE REQUIRED. THE INSPECTOR WILL DETERMINE APPROPRIATE LOCATION(S). THE TIME FOR SIGN AND THE TELEPHONE NUMBER FOR THE INFORMATION SIGN WILL BE FURNISHED BY THE ENGINEER AT THE TIME OF CONSTRUCTION. TWO TYPE IV CREDIT SIGNS PER STANDARD PLAN S-792-0 ARE REQUIRED. THE CONTRACTOR SHALL SUBMIT A SHOP DRAWING OF THE SIGN FOR APPROVAL. THE INSPECTOR WILL DETERMINE THE APPROPRIATE LOCATION(S) FOR EACH SEQUENCE OF CONSTRUCTION AND FINAL LOCATION ONCE CONSTRUCTION IS COMPLETED.
9. GRANT FUNDS SIGN:

   ONE (1) SIGN SHALL BE PROVIDED FOR GRANT FUNDS. GRANT FUNDS SIGN SHALL COMBINE COLOR LOGOS AND DISCLOSURE STATEMENTS FROM STATE OF CALIFORNIA STROM WATER GRANT PROGRAM AND COUNTY OF LOS ANGELES SAFE, CLEAN WATER PROGRAM. COLOR LOGOS AND DISCLOSURE STATEMENTS SHALL BE EQUALLY PROMINENT ON THE SIGN. THE SIGN SHALL BE PREPARED IN A PROFESSIONAL MATTER. THE CONTRACTOR SHALL CREATE A GRANT FUNDS SIGN AT LEAST FOUR (4) FEET TALL BY EIGHT (8) FEET WIDE MADE OF 3/4" THICK EXTERIOR GRADE PLYWOOD OR OTHER APPROVED MATERIAL IN A PROMINENT LOCATION ON THE PROJECT SITE AND SHALL MAINTAIN THE SIGN IN GOOD CONDITION FOR THE DURATION OF THE CONSTRUCTION PERIOD. THE CONTRACTOR SHALL SUBMIT A SHOP DRAWING OF THE GRANT FUNDS SIGN FOR APPROVAL. THE CONTENTS OF THE SIGN WILL INCLUDE:

   "FUNDING FOR THIS PROJECT HAS BEEN PROVIDED IN FULL OR IN PART BY PROPOSITION 1 THE WATER QUALITY, SUPPLY, AND INFRASTRUCTURE IMPROVEMENT ACT OF 2014 THROUGH AN AGREEMENT WITH THE STATE WATER RESOURCES CONTROL BOARD"

   "FUNDING FOR THIS PROJECT HAS BEEN PROVIDED IN FULL OR IN PART FROM THE LOS ANGELES COUNTY FLOOD CONTROL DISTRICT'S SAFE, CLEAN WATER PROGRAM."
10. THE CONTRACTOR SHALL NOT SHUT OFF WATER SERVICE AT THE CURB AT ANY TIME PER CITY OF LOS ANGELES RULES GOVERNING WATER AND ELECTRIC, RULE 16-W, SECTION A.3. SHOULD THE CONTRACTOR REQUIRE THE WATER SERVICE TO BE SHUT OFF TO THE PRIVATE PROPERTY, ARRANGEMENTS SHALL BE MADE SOLELY BY THE CONTRACTOR WITH THE PROPERTY OWNER AND THE CONTRACTOR SHALL PROVIDE THE PROPERTY OWNER WITH AT LEAST 48 HOURS PRIOR NOTICE.
11. SURVEY MONUMENT PRESERVATION IS REQUIRED AND SHALL INCLUDE SUBMITTAL OF PRE AND POST CONSTRUCTION SURVEY MONUMENT TIES TO THE ENGINEER, AS NOTED BY SECTION 2-9.3 OF THE "BROWN BOOK".
12. PRIOR TO EXCAVATION WORK, STRIP AND REMOVE ALL VEGETATION TO A DEPTH OF 6 INCHES AND ALL EXISTING STORMWATER MANAGEMENT RELATED ITEMS WITHIN THE PROJECT LIMITS.
13. TRAFFIC LANE REQUIREMENTS:

    THE CONTRACTOR SHALL COMPLY WITH THE LATEST VERSION OF THE WORK AREA TRAFFIC CONTROL HANDBOOK "WATCH MANUAL" ADOPTED BY THE BOARD OF PUBLIC WORKS FOR ALL TRAFFIC CONTROL AND THE CALIFORNIA MANUAL OF UNIFORM TRAFFIC CONTROL DEVICES (MUTCD), LATEST EDITION.

    AT LEAST 6 WEEKS PRIOR TO THE BEGINNING OF CONSTRUCTION WITHIN THE STREET, THE CONTRACTOR SHALL PREPARE AND SUBMIT THE TRAFFIC MITIGATION PLANS TO THE ENGINEER FOR THE LOS ANGELES DEPARTMENT OF TRANSPORTATION (LADOT) REVIEW AND APPROVAL. THE TRAFFIC MITIGATION PLANS SHALL BE PREPARED AND STAMPED BY A TRAFFIC ENGINEER LICENSED BY THE STATE OF CALIFORNIA.
14. TRAFFIC SIGNAL NOTES
    A. TRAFFIC CONTROL SHALL BE IN ACCORDANCE WITH THE LATEST EDITION OF THE WORK AREA TRAFFIC CONTROL HANDBOOK (WATCH) ADOPTED BY THE BOARD OF PUBLIC WORKS OF THE CITY OF LOS ANGELES AND THE CALIFORNIA MANUAL OF UNIFORM TRAFFIC CONTROL DEVICES (MUTCD), LATEST EDITION.
    B. THE CONTRACTOR SHALL MAINTAIN ALL EXISTING LADOT TRAFFIC SIGNS. CONTACT THE LADOT SIGN FOREMAN, AT TELEPHONE (323-957-6843), THREE (3) WORKING DAYS PRIOR TO CONSTRUCTION FOR REMOVAL OR REINSTALLATION OF SIGNS. ANY SIGNS LOST OR DAMAGED BY THE CONTRACTOR SHALL BE REPLACED AT CONTRACTOR'S EXPENSE.
    C. IN THE EVENT THAT CONDUIT OR TRAFFIC SIGNAL PULL BOXES INTERFERE WITH PROPOSED CONSTRUCTION, THE CONTRACTOR WILL BE AUTHORIZED BY THE PROJECT ENGINEER TO RELOCATE OR REPLACE THE CONDUIT AND/OR THE PULL BOXES AND WILL BE PAID IN ACCORDANCE WITH SECTION 01254 - CHANGE ORDERS OF THE GENERAL REQUIREMENTS. ALL WORK MUST BE PERFORMED BY A LICENSED CONTRACTOR EXPERIENCED IN TRAFFIC SIGNAL CONSTRUCTION.
    D. IN THE EVENT OF DAMAGE TO EXISTING TRAFFIC SIGNAL EQUIPMENT, CONDUIT AND DETECTOR LOOPS, THE CONTRACTOR SHALL IMMEDIATELY NOTIFY THE LADOT TRAFFIC SIGNAL SUPERINTENDENT, TELEPHONE (213) 972-4990, AND SHALL BE RESPONSIBLE FOR REPAIR OR REPLACEMENT AT NO COST TO THE CITY. REPAIRED OR REPLACED EQUIPMENT/CONDUIT SHALL BE INSPECTED BY THE TRAFFIC SIGNAL INSPECTOR BEFORE SIGNAL CIRCUITS ARE ENERGIZED.
    E. IF THE METHOD OF CONSTRUCTION INTERFERES WITH ADEQUATE VISIBILITY OF THE VEHICLE AND/OR THE PEDESTRIAN SIGNAL HEADS AT THEIR EXISTING LOCATIONS, THE CONTRACTOR SHALL PREPARE TEMPORARY AND RESTORATION SIGNAL PLANS IN SUPPORT OF THE TRAFFIC CONTROL PLAN. NECESSARY SIGNAL PLANS SHALL BE PREPARED BY A REGISTERED CIVIL/TRAFFIC ENGINEER AND SUBMITTED TO LADOT FOR APPROVAL PRIOR TO START OF CONSTRUCTION. THE CONTRACTOR SHALL BE RESPONSIBLE FOR REMOVAL AND INSTALLATION OF TEMPORARY, AS WELL AS PERMANENT TRAFFIC SIGNAL EQUIPMENT AND THE ENTIRE COST THEREOF SHALL BE BORNE BY THE CONTRACTOR.
15. TRAFFIC SIGNAL NOTES
    A. TRAFFICLANE REQUIREMENTS:

       MAINTAIN ONE LANE OF TRAFFIC IN EACH DIRECTION AT ALL TIMES; OTHERWISE, MAINTAIN ONE LANE OF TRAFFIC WITH FLAG CONTROL FROM 9AM TO 4PM WEEKDAYS. MAINTAIN LOCAL AND EMERGENCY ACCESS AT ALL TIMES. FOLLOW THE 2012 "WATCH" MANUAL AND THE CALIFORNIA MANUAL OF UNIFORM TRAFFIC CONTROL DEVICES (MUTCD), LATEST EDITION. IN THE EVENT THAT THE ROAD NEEDS TO BE CLOSED FOR THE CONSTRUCTION OF THE DIVERSION STRUCTURE, TRAFFIC MITIGATION PLANS SHALL BE PREPARED IN ACCORDANCE WITH NOTE 13 ON THIS SHEET.

       THE CONTRACTOR SHALL NOTIFY LADOT'S SPECIAL TRAFFIC CONTROL DIVISION AT (213) 485-2298, FOUR (4) WORKDAYS PRIOR TO THE START OF CONSTRUCTION FOR THE POSTING OF TEMPORARY "TOW AWAY NO STOPPING" SIGNS AS NEEDED.
    B. TRAFFIC CONTROL DEVICE MAINTENANCE:

       THE CONTRACTOR SHALL MAKE ARRANGEMENTS FOR THE RESTORATION OF ALL OBLITERATED STRIPING AND PAVEMENT MARKINGS AND FOR THE REINSTALLATION OF ALL OTHER MISSING OR DAMAGED TRAFFIC CONTROL DEVICES (I.E., SIGNS, CURB MARKINGS, STAMPED CROSSWALKS, PARKING METERS, ETC.). WHEN NECESSARY, ADDITIONAL RELATED TRAFFIC CONTROL DEVICES, INCLUDING, BUT NOT LIMITED TO, DETOUR/CONSTRUCTION WORKSITE TRAFFIC CONTROL DEVICES SHALL BE INSTALLED IN SUPPORT OF THE PROJECT. THE CONTRACTOR WILL BE REQUIRED TO PHYSICALLY INSTALL THESE TRAFFIC CONTROL DEVICES TO THE FULL SATISFACTION OF LADOT, BUT THE CITY MAY CHOOSE TO INSTALL NONE, SOME, OR ALL OF THE SAID TRAFFIC CONTROL DEVICES. THE ENTIRE COST THEREOF SHALL BE BORNE BY THE CONTRACTOR (UNLESS PAYMENT BY THE CITY IS PRE-APPROVED BY A CITY AGENCY). ALL STRIPING AND PAVEMENT MARKINGS SHALL BE INSTALLED UTILIZING THERMOPLASTIC MATERIALS PER LADOT SPECIFICATIONS. THE CONTRACTOR SHALL CONTACT LADOT'S WESTERN DISTRICT OFFICE AT (310) 575-8138 FIVE (5) MAINTENANCE.

       FOR QUESTIONS REGARDING TRAFFIC LANE REQUIREMENTS, PLEASE CALL THE CENTRAL DISTRICT OFFICE, LADOT AT (213) 972-4990.
16. STREET IMPROVEMENTS:
    A. PAVING OF ROADWAY AREAS SHALL BE WITHHELD UNTIL THE STORM DRAIN WORK HAS BEEN APPROVED BY UNDERGROUND FINAL INSPECTION.
    B. DRIVEWAYS SHALL BE CONSTRUCTED PER STANDARD PLAN S-440-4, UNLESS OTHERWISE SHOWN ON THE PLAN.
    C. ALL DRIVEWAYS SHALL BE CONSTRUCTED ON BASE MATERIAL OF THE SAME KIND AND THICKNESS AS THAT PLACED UNDER THE CONCRETE SIDEWALK.
    D. CURB RAMPS SHALL BE CONSTRUCTED PER STANDARD PLAN PWC 111-5, AS SHOWN ON THE PLAN.
    E. CONSTRUCTION STAKES FOR CURB AND LONGITUDINAL GUTTER, WITH GRADE LESS THAN 0.50 %, SHALL BE SET 12.5 FEET ON THE CENTER.
17. STORM WATER POLLUTION CONTROL: THE CONTRACTOR SHALL COMPLY WITH THE PROVISIONS IN SPECIFICATIONS SECTION 01571.
18. ELEVATIONS SHOWN ON THESE PLANS ARE REFERENCED FROM MEAN SEA LEVEL DATUM.
19. CONTRACTORS ARE REQUIRED TO EXAMINE AND JUDGE, AS THEIR OWN RESPONSIBILITY, THE LOCATION, PHYSICAL CONDITIONS, AND SURROUNDINGS OF PROPOSED WORK.
20. THE LOCATION OF THE EXISTING UTILITIES AND SUBSTRUCTURES SHOWN HEREON HAVE BEEN TAKEN FROM RECORDS. THE ENGINEER DOES NOT WARRANT THE COMPLETENESS OR CORRECTNESS OF THE LOCATIONS. IT SHALL BE THE CONTRACTOR'S RESPONSIBILITY TO LOCATE ALL UNDERGROUND FACILITIES, BEFORE COMMENCING WORK, AND PROTECT THEM FROM DAMAGE. SHOULD UTILITIES BE ENCOUNTERED THAT ARE NOT INDICATED, NOTIFY THE ENGINEER IMMEDIATELY. MARK HIGH VOLTAGE ELECTRICAL SERVICES WITH PROPER WARNING SIGNS AND BARRICADES.
21. THE CONTRACTOR SHALL BE RESPONSIBLE FOR ALL PERMITS AND INSPECTIONS REQUIRED BY THE DEPARTMENT OF BUILDING AND SAFETY AND SECTION 01112 OF THE SPECIFICATIONS.
22. THE CONTRACTOR SHALL BE RESPONSIBLE FOR BARRICADING ITS WORK AREA TO PREVENT VEHICLES FROM PARKING IN THE PROPOSED LINE OF OPERATIONS. ANY DAMAGE TO PARKED VEHICLES CAUSED BY THE CONSTRUCTION OPERATIONS SHALL BE THE CONTRACTOR'S LIABILITY.
23. THE LOCATIONS OF IRRIGATION PIPING, WIRING AND EQUIPMENT ARE UNKNOWN. THE CONTRACTOR SHALL MAINTAIN A TEMPORARY SYSTEM AND REPLACE ANY IRRIGATION FACILITIES DAMAGED BY CONSTRUCTION TO PRE-CONSTRUCTION CONDITIONS.
23. ANY STREET, CURB, GUTTER, DRAIN OR PAVED AREA WHICH ARE DAMAGED OR REMOVED DURING CONSTRUCTION OF THIS PROJECT SHALL BE RETURNED TO ITS ORIGINAL CONDITION.
24. GEOTECHNICAL EVALUATION LABOE TOS NO. 25 STORMWATER CAPTURE PARKS PROGRAM VALLEY VILLAGE PARK NORTH HOLLYWOOD, CALIFORNIA PROJECT PREPARED BY NINYO & MOORE GEOTECHNICAL SCIENCES CONSULTS (PROJECT NO. 211307001), REPORT DATE AUGUST 12, 2020 . HAS BEEN INCORPORATED INTO THE PROJECT PLANS & SPECIFICATIONS AS A GEOTECHNICAL DATA REPORT. THE CONTRACTOR SHALL COMPLY WITH THE RECOMMENDATIONS PRESENTED IN THE REPORT.
25. PROVIDE FIRE DEPARTMENT ACCESS DURING CONSTRUCTION - THERE SHALL BE NO BLOCKAGE OF EXISTING HYDRANTS IF EXISTING HYDRANTS ARE TO BE REMOVED OR ARE INACCESSIBLE CHECK WITH FIRE DEPARTMENT FOR INTERIM REQUIREMENTS.
26. CONTRACTOR SHALL PROVIDE ALL REQUIRED NOISE AND VIBRATION ABATEMENT TO MEET ALL STATE AND LOCAL ORDINANCES AND CODES.
27. ALL EXCAVATIONS SHALL BE KEPT FREE OF WATER. DEWATERING EFFLUENT SHALL BE DISCHARGED TO THE CITY SEWER SYSTEM OR THE ADJACENT STORM DRAIN. CONTRACTOR SHALL OBTAIN A PERMIT FOR THE DISCHARGE FROM THE CITY OF LOS ANGELES, BUREAU OF SANITATION (BOS) OR THE RWQCB AS NECESSARY. WATER SHALL BE TREATED PER BOS (OR RWQCB). REQUIREMENTS PRIOR TO DISCHARGING TO THE SEWER OR STORM DRAIN. DISCHARGE FLOWS TO THE SEWER SYSTEM MAY BE RESTRICTED DUE TO THE LIMITED CAPACITY.
28. STORM DRAIN CONSTRUCTION NOTES:
    A. PER BUREAU OF ENGINEERING SPECIAL ORDER NO. 007-0701, DATED JULY 16, 2001, THE LATEST APWA STANDARD PLANS FOR PUBLIC WORKS CONSTRUCTION - SOUTHERN CALIFORNIA CHAPTER, SHALL BE UTILIZED IN LIEU OF OLDER/RETIRED BUREAU OF ENGINEERING STANDARD PLANS FOR STORM DRAIN CONSTRUCTION.
    B. TRENCH BACKFILL FOR ALL STORM DRAINS CONSTRUCTED IN DRAINAGE EASEMENTS SHALL BE MECHANICALLY COMPACTED TO A RELATIVE DENSITY OF 90%.
30. REMOVALS:
    A. REMOVE ALL EXISTING IMPROVEMENTS THAT INTERFERE WITH THE CONSTRUCTION OF THIS PROJECT.
    B. ALL UTILITIES SHALL BE REMOVED OR RELOCATED BY OTHERS.
31. CASE 1 BEDDING PER STANDARD PLAN S-251-1 SHALL BE PLACED IN ALL TRENCHES.
32. SHORING SHALL COMPLY WITH THE CALIFORNIA ADMINISTRATIVE CODE, TITLE 8; CONSTRUCTION SAFETY ORDERS, "INJURY AND ILLNESS PREVENTION - SAFETY MEASURES" OF THE GENERAL CONDITIONS AND "EXCAVATION SHORING, FORMS, & FALSE WORK" OF THE GENERAL REQUIREMENTS. SHORING PLANS SHALL BE SUBMITTED TO THE PROJECT ENGINEER FOR REVIEW AND APPROVAL. SHORING PLANS SHALL BE DESIGNED IN ACCORDANCE WITH RECOMMENDATIONS OF THE PROJECT GEOTECHNICAL ENGINEERING REPORT.
33. FOR TRENCHES OR EXCAVATIONS 5 FEET OR MORE IN DEPTH INTO WHICH A PERSON IS REQUIRED TO DESCEND, THE CONTRACTOR SHALL OBTAIN NECESSARY PERMITS FROM THE STATE OF CALIFORNIA DIVISION OF INDUSTRIAL SAFETY PRIOR TO THE ISSUANCE OF A BUILDING OR GRADING PERMIT.
34. THE CONTRACTOR SHALL PROTECT ALL EXISTING UTILITIES, THAT DO NOT INTERFERE WITH THE CONSTRUCTION OF THIS PROJECT, AND SUPPORT WATER CONDUITS AT TRENCH CROSSINGS IN ACCORDANCE WITH DEPARTMENT OF WATER AND POWER STANDARD DRAWINGS B1453-1A, A3615-A, A3716, AND A9219. THE CONTRACTOR SHALL SUPPORT POWER CONDUITS IN ACCORDANCE WITH DEPARTMENT OF WATER AND POWER STANDARD DRAWINGS 1-222 AND 1-224.
35. LAY DOWN AREA:
    A. ALL REPAIRS TO CONSTRUCTION LAYDOWN AREAS AND TEMPORARY IMPROVEMENTS SHALL BE INSPECTED AND APPROVED BY THE INSPECTOR AND/OR AN AUTHORIZED REPRESENTATIVE OF THE PROPERTY OWNER PER REQUEST.
    B. THE CONTRACTOR SHALL REMOVE, RE-GRADE AND, WHEN NECESSARY, BACKFILL TO RESTORE THE CONSTRUCTION LAYDOWN ACCESS AND TEMPORARY IMPROVEMENTS TO ITS ORIGINAL/FORMER CONDITION AT THE COMPLETION OF THE WORK.
    C. THE CONTRACTOR SHALL BACKFILL EXCAVATED AREAS WITH ENGINEERED FILL UP TO THE ORIGINAL GRADE, UNLESS OTHERWISE SPECIFIED OR INDICATED ON THESE PLANS. BACKFILL PIPE TRENCH ACCESSES ONLY AFTER PIPING HAS BEEN INSPECTED.
    D. THE LAYDOWN AREA MAY BE MOVED THROUGHOUT CONSTRUCTION TO FACILITATE CONSTRUCTION AT NO ADDITIONAL COST TO THE CITY.
36. GRADING NOTES
    A. REGISTERED DEPUTY GRADING INSPECTOR IS REQUIRED ON GRADING EARTHWORK WHERE SITE EXCEEDS 60,000 SF.
    B. ALL GRADING SLOPES SHALL BE PLANTED AND SPRINKLERED PER THE PLANS AND SPECIFICATIONS.
    C. STANDARD 12-INCH-HIGH BERM IS REQUIRED AT TOP OF ALL GRADE SLOPES.
    D. NO FILL TO BE PLACED, UNTIL THE CITY GRADING INSPECTOR HAS INSPECTED AND APPROVED THE BOTTOM EXCAVATION.
    E. ENGINEERED FILL SHALL BE COMPACTED TO A MINIMUM RELATIVE COMPACTION OF 90% MAXIMUM DRY DENSITY WITHIN 40 FEET BELOW FINISH GRADE AND 93% OF MAXIMUM DRY DENSITY DEEPER THAN 40 FEET BELOW FINISH GRADE, UNLESS A LOWER RELATIVE COMPACTION (NOT LESS THAN 90% OF MAXIMUM DRY DENSITY) IS JUSTIFIED BY THE SOILS ENGINEER, UNLESS A HIGHER RELATIVE COMPACTION PERCENTAGE IS NOTED ELSEWHERE IN THE CONTRACT DOCUMENTS.
    F. TEMPORARY EROSION CONTROL TO BE INSTALLED BETWEEN OCTOBER 1 AND APRIL 15. OBTAIN GRADING INSPECTOR'S AND DEPARTMENT OF PUBLIC WORKS APPROVAL OF PROPOSED PROCEDURES.
    G. CONTRACTOR SHALL COMPLY WITH THE GRADING REQUIREMENTS AND CONDITIONS DEFINED IN THE PROJECT SPECIFIC GRADING PERMIT ISSUED BY LOS ANGELES DEPARTMENT OF BUILDING AND SAFETY INCLUDED IN THE PROJECT SPECIFICATIONS.
37. CONTINUOUS INSPECTION BY THE SOILS ENGINEER/GEOLOGIST IS REQUIRED FOR REMOVAL AND RECOMPACTION. IT IS ALSO REQUIRED FOR THE EXCAVATION FOR SHORING.
38. THE CONSTRUCTION SHALL NOT RESTRICT A FIVE-FOOT CLEAR AND UNOBSTRUCTED ACCESS TO ANY WATER OR POWER DISTRIBUTION FACILITIES (POWER POLES, PULL-BOXES, TRANSFORMERS, VAULTS, PUMPS, VALVES, METERS, APPURTENANCES, ETC.) OR TO THE LOCATION OF THE HOOKUP. THE CONSTRUCTION SHALL NOT BE WITHIN TEN FEET OF ANY POWER LINES-WHETHER OR NOT THEY ARE LOCATED ON THE PROPERTY. FAILURE TO COMPLY MAY CAUSE CONSTRUCTION DELAYS AND/OR ADDITIONAL EXPENSES.
39. RETAINING WALLS LOCATED CLOSER TO THE PROPERTY LINE THAN THE HEIGHT OF THE WALL SHALL BE BACKFILLED NOT LATER THAN 10 DAYS AFTER CONSTRUCTION OF THE WALL AND NECESSARY STRUCTURAL SUPPORTING MEMBERS UNLESS RECOMMENDED OTHERWISE BY RESPONSIBLE ENGINEER.
40. COMPLY WITH NOTIFICATION OF ADJOINING PROPERTY BY GIVING A 30-DAY WRITTEN NOTICE (BY CERTIFIED MAIL AND RETURN RECEIPT) PER LADBS P/BC 2014-060 TO ADJACENT PROPERTY OWNERS, OF INTENT TO EXCAVATE WHERE EXCAVATION IS DEEPER THAN THE FOUNDATION OF ADJOINING BUILDING OR LOCATION CLOSER TO PROPERTY LINE THAN THE DEPTH OF EXCAVATION.
41. ALL MANHOLE COVERS AND ACCESS HATCHES MUST BE WITHOUT TROUGH HOLE, OR UTILIZE A MOSQUITO EXCLUSION INSERT.
42. SYSTEM VENTING MUST CONTAIN SCREENING OF AT LEAST #16 MESH OR SMALLER.

STANDARD PLANS FOR THIS PROJECT

CITY OF LOS ANGELES - BUREAU OF ENGINEERING STANDARD PLAN

NUMBER	ITEM
S-241-0	REINFORCED CONCRETE PIPE
S-251-1	PIPE LAYING IN TRENCHES
S-283-3	MAINTENANCE HOLE FRAME AND COVER 30-INCH
S-284-2	PRESSURE MANHOLE FRAME AND COVER
S-333-0	CONCRETE COLLAR FOR STORM DRAIN PIPE
S-387-1	PRECAST CONCRETE MANHOLE SHAFT
S-410-2	TYPES OF CURB AND GUTTER
S-440-4	DRIVEWAYS
S-627-0	SYMBOLS FOR CONSTRUCTION NOTES
S-658-0	ELECTRICAL IRRIGATION CONTROLLER
S-660-1	ELECTRICAL SERVICE
S-791-1	ADVANCE CONSTRUCTION NOTICE SIGNS
S-792-0	BUILDING CREDIT SIGNS

PLANS PREPARED BY:
carollo
707 WILSHIRE BLVD., SUITE 3920
LOS ANGELES, CA 90017
(213) 489-1587

THE CITY OF LOS ANGELES OR ITS OFFICERS OR AGENTS SHALL NOT BE RESPONSIBLE FOR THE ACCURACY OR COMPLETENESS OF ELECTRONIC COPIES OF THIS PLAN SHEET.

REVISION DATES (DESIGN STAGE ONLY)

CITY OF LOS ANGELES DEPARTMENT OF PUBLIC WORKS
BUREAU OF ENGINEERING
THIS PLAN WAS ELECTRONICALLY • SIGNED AND STAMPED

ENGINEERING
CITY OF LOS ANGELES

Digitally signed by Matthew B. Huckaby
Contact Info: Carollo Engineers, Inc.
Date: 2023.12.01 11:55:48 -08'00'
REGISTERED PROFESSIONAL ENGINEER MATTHEW B. HUCKABY No. 76961 CIVIL STATE OF CALIFORNIA

VERTICAL CONTROL: VERTICAL CONTROL
HORIZONTAL CONTROL: HORIZONTAL CONTROL

SHEET TITLE: NOTICE TO CONTRACTOR

PROJECT: VALLEY VILLAGE PARK STORM WATER CAPTURE PROJECT

ADDRESS: VALLEY VILLAGE PARK
5000 Westpark Dr, North Hollywood, CA 91601

CITY ENGINEER: TED ALLEN, P.E.

DESIGN GROUP	DATE
ENGINEER: PVT - MATT HUCKABY	YY/MM/DD
ARCHITECT: XXX	YY/MM/DD
DESIGNED BY: PVT - JERRY GANTNEY	YY/MM/DD
DRAWN BY: PVT - ATTILA SIMON	YY/MM/DD
CHECKED BY: PVT - RAPHAEL BUI	YY/MM/DD
APPROVED BY: PVT - MIKO AIVAZIAN	YY/MM/DD

NO.	REVISIONS	DATE	BY
		YY/MM/DD	
		YY/MM/DD	
		YY/MM/DD	
		YY/MM/DD	

CIP NO. SCP0009

INDEX NO.

WORK ORDER EW40085F

SHEET NAME G-02

SHEET 02 OF 80 SHEETS

SHEET INDEX

SHT. NO.	DRAWING NUMBER	SHEET TITLE
GENERAL		
1	G-01	COVER SHEET
2	G-02	NOTICE TO CONTRACTOR
3	G-03	SHEET INDEX, LEGEND AND ABBREVIATIONS
4	G-04	BORING LOGS AND LID FORMS
5	G-05	OVERALL CONSTRUCTION SEQUENCE PLAN
CIVIL		
6	C-01	EXISTING CONDITIONS PLAN - 1
7	C-02	EXISTING CONDITIONS PLAN - 2
8	C-03	DEMOLITION PLAN - 1
9	C-04	DEMOLITION PLAN - 2
10	C-05	HORIZONTAL CONTROL AND PAVING PLAN - 1
11	C-06	HORIZONTAL CONTROL AND PAVING PLAN - 2
12	C-07	HORIZONTAL CONTROL DATA
13	C-08	GRADING AND DRAINAGE PLAN - 1
14	C-09	GRADING AND DRAINAGE PLAN - 2
15	C-10	INFILTRATION GALLERIES AND STORM DRAIN PLAN
16	C-11	STORM DRAIN PLAN AND PROFILE
17	C-12	GRADING SECTION
18	C-13	CIVIL DETAILS - 1
19	C-14	CIVIL DETAILS - 2
20	C-15	CIVIL DETAILS - 3
21	C-16	CIVIL DETAILS - 4
STRUCTURAL		
22	S-01	STRUCTURAL GENERAL NOTES
23	S-02	DIVERSION STRUCTURE PLANS
24	S-03	DIVERSION STRUCTURE SECTIONS
25	S-04	STRUCTURAL DETAILS - 1
26	S-05	STRUCTURAL DETAILS - 2
27	S-06	STRUCTURAL DETAILS - 3
MECHANICAL		
28	M-01	MECHANICAL GENERAL NOTES AND SCHEDULE
29	M-02	MECHANICAL PLAN AND SECTION VIEW
30	M-03	MECHANICAL DETAILS
ELECTRICAL		
31	EG-01	ELECTRICAL GENERAL NOTES
32	EG-02	ELECTRICAL SYMBOLS
33	ES-01	ELECTRICAL SINGLE LINE DIAGRAM
34	ES-02	ELECTRICAL SITE PLAN
35	EP-01	MP-1, MCC-1, AND LCP-01 PLAN AND ELEVATION
36	EP-02	LADWP XFM-1, MP-1, AND IP-1 POWER PLAN
37	EP-03	INFILTRATION GALLERY POWER AND INSTUMENTATION PLAN
38	EP-04	ELECTRICAL GROUNDING DETAILS
39	EP-05	ELECTRICAL SECTIONS AND DETAILS
40	EP-06	ELECTRICAL CONTROL SCHEMATIC DIAGRAM - SLIDE GATE

SHT. NO.	DRAWING NUMBER	SHEET TITLE
41	EP-07	TYPICAL POWER DISTRIBUTION SCHEMATIC DIAGRAM - LCP-01
42	EP-08	LADWP POLE MOUNTED TRANSFORMER REQUIREMENT AT VALLEY VILLAGE PARK
43	EP-09	NOT USED
INSTRUMENTATION		
44	IG-01	INSTRUMENTATION LEGEND AND SYMBOLS
45	IG-02	INSTRUMENTATION SYMBOLS
46	IP-01	INFILTRATION GALLERY - P&ID
47	IP-02	INSTRUMENTATION SCHEDULE AND I/O LISTS
48	IP-03	LOCAL CONTROL PANEL LAYOUT
STORMWATER SEDIMENTATION CONTROL PLANS		
49	EC-01	EROSION AND SEDIMENTATION CONTROL PLAN
LANDSCAPING		
50	L-001	GENERAL NOTES AND SHEET INDEX
51	L-002	OVERALL REFERENCE PLAN
52	L-100A	TREE PROTECTION NOTES AND SCHEDULE
53	L-100B	TREE PROTECTION NOTES
54	L-101	TREE PROTECTION PLAN - SHEET 1
55	L-102	TREE PROTECTION PLAN - SHEET 2
56	L-103	TREE PROTECTION PLAN - SHEET 3
57	L-200	CONSTRUCTION NOTES AND SCHEDULE
58	L-201	CONSTRUCTION PLAN - SHEET 1
59	L-202	CONSTRUCTION PLAN - SHEET 2
60	L-203	CONSTRUCTION PLAN - SHEET 3
61	L-501	CONSTRUCTION DETAILS - SHEET 1
62	L-502	CONSTRUCTION DETAILS - SHEET 2
63	L-503	CONSTRUCTION DETAILS - SHEET 3
64	L-600A	IRRIGATION NOTES AND CALCULATIONS
65	L-600B	IRRIGATION NOTES
66	L-600C	IRRIGATION SCHEDULE
67	L-600D	IRRIGATION BOOSTER PUMP NOTES
68	L-600E	IRRIGATION AS-BUILTS
69	L-601	IRRIGATION PLAN - SHEET 1
70	L-602	IRRIGATION PLAN - SHEET 2
71	L-603	IRRIGATION PLAN - SHEET 3
72	L-604	IRRIGATION DETAILS - SHEET 1
73	L-605	IRRIGATION DETAILS - SHEET 2
74	L-606	IRRIGATION DETAILS - SHEET 3
75	L-700	PLANTING NOTES AND SCHEDULE
76	L-701	PLANTING PLAN - SHEET 1
77	L-702	PLANTING PLAN - SHEET 2
78	L-703	PLANTING PLAN - SHEET 3
79	L-704	PLANTING DETAILS
REFERENCED RECORD DRAWINGS		
80	R-01	EXISITNG 90-IN RCP STORM DRAIN

SECTION AND DETAIL IDENTIFICATION:

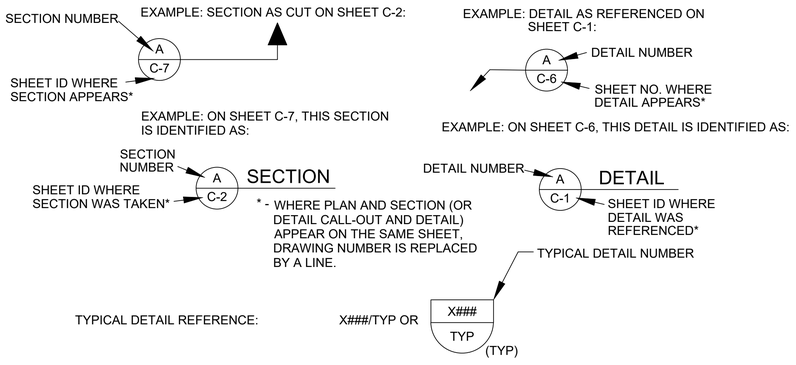

LEGEND



ASPHALT PAVEMENT
BACK-FLOW VALVE
CONCRETE PAVEMENT
CONTROL POINT
DECORATIVE BRICK
DOOR
FIRE HYDRANT
FLOW DIRECTION
FOUND MONUMENT AS NOTED
GATE
GUARD POST
GUY WIRE
IRRIGATION CONTROL VALVE
LIGHT STANDARD
LIGHT STANDARD
PINE TREE
POTHOLE
POWER POLE
POWER POLE W/TRANSFORMER
SEWER CLEAN OUT
SEWER MANHOLE
SIGN
STORM DRAIN MANHOLE
STREET LIGHT
TREE (TYPICAL)
UTILITY POLE
WATER VALVE
ASSESSOR'S PARCEL NUMBER
CATCH BASIN
CENTERLINE
DIAMETER OF EXISTING TREE
DRAIN INLET
DRIVEWAY
ELECTRIC PULL BOX
FINISH SURFACE
FLOW LINE
GRADE BREAK
HANDICAP RAMP
IRRIGATION CONTROL VALVE
NATURAL GROUND
PROPERTY LINE
TOP OF BERM
TOP OF CURB
TOP OF STRUCTURE
WATER METER
WATER VAULT
CANOPY
CENTERLINE
CHAIN LINK FENCE
CONCRETE/RETAINING WALL
EDGE OF PAVEMENT
INTERIOR LOT LINE
OVERHANG
OVERHEAD LINE
PROPERTY LINE
RIGHT-OF-WAY
SANITARY SEWER LINE
STORM DRAIN LINE
WATER LINE PAINTED
WATER LINE
GAS LINE
LIMIT OF WORK
PROPERTY LINE
REMOVE EXISTING WALKWAY WITH CURB
PROTECT IN PLACE WALKWAY
REMOVE EXISTING GRASS
CONCRETE PAVEMENT
GRASSCRETE PAVEMENT
TREE PROTECTION ZONE
TREE PROTECTION FENCE
REMOVABLE GUARD POST
CONSTRUCT
REMOVE
EXISTING-PROTECTING IN PLACE
REMOVE & CONSTRUCT
WORK BY OTHERS

ABBREVIATIONS

AC	ASPHALT CONCRETE	LABC	LOS ANGELES BUILDING CODE
ACC	ACCESSIBLE	LABOE	LOS ANGELES BUREAU OF ENGINEERING
AGG	AGGREGATE		
BBALL FIELD	BASKETBALL COURT/BASEBALL	LACFCD	LOS ANGELES COUNTY FLOOD CONTROL DISTRICT
BC	BEGINNING OF CURVE	LF	LINEAR FOOT
BCR	BEGINNING OF CURB RETURN	LP	LOW POINT ELEVATION
BE	BOTTOM ELEVATION	MAX	MAXIMUM
BEG	BEGIN	MH	MAINTENANCE HOLE
BG	BOTTOM GRADE	MIL	MILLILITERS
BMP	BEST MANAGEMENT PRACTICE	MIN	MINIMUM
CA MUTCD	CALIFORNIA MANUAL ON UNIFORM TRAFFIC CONTROL DEVICES	N.A.P.	NOT A PART
		NO	NUMBER
CB	CATCH BASIN	NOS	NORTH OUTFALL SEWER
CF	CUBIC FEET	NTS	NOT TO SCALE
CFS	CUBIC FEET PER SECOND	OC	ON CENTER
CH	CHAPTER	OD	OUTSIDE DIAMETER
CLF	CHAIN LINK FENCE	PI	POINT OF INTERSECTION
CMP	CORRUGATED METAL PIPE	PLNT	PLANTER
CO	CLEAN OUT	POC	POINT OF CONNECTION
CONC	CONCRETE	PSI	POUNDS PER SQUARE INCH
DIA	DIAMETER	PVC	POLYVINYL CHLORIDE PIPE
DG	DECOMPOSED GRANITE	PVMT	PAVEMENT
DHW	DESIGN HIGH WATER	PWC	APWA STANDARD PLANS FOR
DLH	DESIGN LOW WATER		SOUTHERN CALIFORNIA PUBLIC
DOC	DOCUMENT		WORKS CONSTRUCTION
DS	DIVERSION STRUCTURE	RAP	RECREATION AND PARKS
DWG	DRAWING	R & S	REMOVE AND SALVAGE
DWP	DEPARTMENT OF WATER AND POWER	RCP	REINFORCED CONCRETE PIPE
		RP	RADIAL POINT
DWPWS	DEPARTMENT OF WATER AND POWER WATER SERVICE	R/W or ROW	RIGHT OF WAY
		SCG	SOUTHERN CALIFORNIA GAS
(E)	EXISITNG	SD	STORM DRAIN
E	ELECTRICAL LINE	SH	SHEET
EA	EACH	SIMMS	SEWER INVENTORY MAINTENANCE MANAGEMENT SYSTEM
EC	END OF CURVE		
EL	ELEVATION	SPK	SPIKE
ELEV	ELEVATION	SS	SANITARY SEWER OR STAINLESS STEEL
EP	EDGE OF PAVEMENT		
EX	EXISTING	SST	STAINLESS STEEL
FG	FINISH GRADE	STA	STATION
FL	FLOW LINE	STD	STANDARD
FS	FINISH SURFACE	SW	SIDEWALK
G	GAS LINE	TB	TOP OF BERM
GA	GAUGE	TC	TOP OF CURB
GALV	GALVINIZED	TEL	TELEPHONE
GB	GRADE BREAK	TF	TOP OF FOOTING ELEVATION
GPR	GROUND PENETRATING RADAR	TG	TOP OF GRATE
GTR	GUTTER	TOS	TASK ORDER SOLICITATION
HDPE	HIGH DENSITY POLYETHYLENE	TV	TREATMENT VALVE
HDS	HYDRO DYNAMIC SEPARATOR	TW	TOP OF WALL ELEVATION
HP	HIGH POINT ELEVATION	TYP	TYPICAL
HR	HOUR	VCP	VITRIFIED CLAY PIPE
HW	HIGH WATER LEVEL	W	DOMESTIC WATER
IN	INCHES	WSE	WATER SURFACE ELEVATION
INV	INVERT	WSTP	WATERSTOP
		WV	WATER VALVE, WATER VAULT

LEGAL DESCRIPTION

A PORTION OF LOT 4 AND 5 OF TRACT NO. 10157 IN THE CITY OF LOS ANGELES, COUNTY OF LOS ANGELES, STATE OF CALIFORNIA, FIELD IN BOOK 180, PAGES 41 TROUGH 45, IN THE OFFICE OF THE COUNTY RECORDER OF SAID COUNTY.

SOILS REPORT AND INVESTIGATION

GEOTECHNICAL EVALUATION FOR FOR LABOE TOS NO. 25 STORMWATER CAPTURE PARKS PROGRAM VALLEY VILLAGE PARK PREPARED BY NINYO & MOORE GEOTECHNICAL SCIENCES CONSULTANTS (PROJECT NO. 211307001), REPORT DATED AUGUST 12, 2020

PLANS PREPARED BY:
carollo
707 WILSHIRE BLVD, SUITE 3920
LOS ANGELES, CA 90017
(213) 489-1587

CITY OF LOS ANGELES DEPARTMENT OF PUBLIC WORKS
BUREAU OF ENGINEERING
THIS PLAN WAS ELECTRONICALLY • SIGNED AND STAMPED

ENGINEERING
CITY OF LOS ANGELES

Digitally signed by Matthew B. Huckaby
Contact Info: Carollo Engineers, Inc.
Date: 2024.02.20 11:29:40 -08'00'

REGISTERED PROFESSIONAL ENGINEER MATTHEW B. HUCKABY No. 76961 CIVIL STATE OF CALIFORNIA

VERTICAL CONTROL:
HORIZONTAL CONTROL:
SHEET TITLE: SHEET INDEX, LEGEND AND ABBREVIATIONS
PROJECT: VALLEY VILLAGE PARK STORM WATER CAPTURE PROJECT
ADDRESS: VALLEY VILLAGE PARK 5000 Westpark Dr, North Hollywood, CA 91601

NO.	REVISIONS	DATE	BY
		YY/MM/DD	
		YY/MM/DD	
		YY/MM/DD	
		YY/MM/DD	

CIP NO. SCP0009
INDEX NO.

CITY ENGINEER
TED ALLEN, P.E.

DESIGN GROUP	DATE
ENGINEER: PVT - MATT HUCKABY	YY/MM/DD
ARCHITECT: XXX	YY/MM/DD
DESIGNED BY: PVT - JERRY GANTNEY	YY/MM/DD
DRAWN BY: PVT - ATTILA SIMON	YY/MM/DD
CHECKED BY: PVT - RAPHAEL BUI	YY/MM/DD
APPROVED BY: PVT - MIKO AVAZIAN	YY/MM/DD

WORK ORDER EW40085F

SHEET NAME G-03
SHEET 03 OF 80 SHEETS

THE CITY OF LOS ANGELES OR ITS OFFICERS OR AGENTS SHALL NOT BE RESPONSIBLE FOR THE ACCURACY OR COMPLETENESS OF ELECTRONIC COPIES OF THIS PLAN SHEET.

REVISION DATES (DESIGN STAGE ONLY)

SOIL BORING INFORMATION

B-1

DEPTH (feet)	SAMPLES Bulk	SAMPLES Driven	BLOWS/FOOT	MOISTURE (%)	DRY DENSITY (PCF)	SYMBOL	CLASSIFICATION U.S.C.S.	DESCRIPTION/INTERPRETATION
0							SM	FILL: Brown, moist, loose, silty SAND; organics; few pieces of asphalt concrete.
							SP-SM	ALLUVIUM: Reddish gray, moist, loose, poorly graded SAND with silt; trace gravel; cobbles.
			15					Light brown; medium dense.
10			18	14.3	105.5			Brown.
			17					
20			22	6.3	97.9		SM	Reddish brown, moist, medium dense, silty SAND.
			12				SC	Brown, moist, medium dense, clayey SAND.
							SM	Brown, moist, medium dense, silty SAND.
30			31	11.6	115.3		SP	Light brown, moist, medium dense, poorly graded SAND.
			50/3"				CL-ML	Brown, moist, hard, silty CLAY.
40							ML	Brown, moist, very dense, sandy SILT.

DATE DRILLED 3/26/20 BORING NO. B-1
GROUND ELEVATION 618' ± (MSL) SHEET 1 OF 3
METHOD OF DRILLING 8" Hollow-Stem Auger (Baja Exploration)
DRIVE WEIGHT 140 lbs. (Auto. Trip Hammer) DROP 30"
SAMPLED BY KMB LOGGED BY KMB REVIEWED BY GMC

FIGURE A- 1

Ninyo & Moore Geotechnical & Environmental Sciences Consultants

LABOE TOS NO. 25 - VALLEY VILLAGE PARK
NORTH HOLLYWOOD, CALIFORNIA
211307001 | 8/20

DEPTH (feet)	SAMPLES Bulk	SAMPLES Driven	BLOWS/FOOT	MOISTURE (%)	DRY DENSITY (PCF)	SYMBOL	CLASSIFICATION U.S.C.S.	DESCRIPTION/INTERPRETATION
40			50/6"				ML	ALLUVIUM: (Continued) Brown, moist, very dense, sandy SILT.
							SP	Light brown, moist, very dense, poorly graded SAND; few gravel.
			84					Few to little gravel.
50			19	27.2	97.3		CL	Brown, moist, very stiff, sandy lean CLAY.
			16				SM	Brown, moist, medium dense, silty SAND.
60			63/9"					Very dense.
			30					Light olive brown; dense; fine sand.
70			52				ML	Light brown, moist, dense, sandy SILT; laminated; oxidation staining.
							SM	Light olive brown, moist, dense, silty SAND; fine sand.
			37				CL	Olive brown, moist, hard, lean CLAY.
80								Total Depth = 76.5 feet. Groundwater was not encountered during drilling. Backfilled with cement-bentonite grout on 3/27/20.

DATE DRILLED 3/26/20 BORING NO. B-1
GROUND ELEVATION 618' ± (MSL) SHEET 2 OF 3
METHOD OF DRILLING 8" Hollow-Stem Auger (Baja Exploration)
DRIVE WEIGHT 140 lbs. (Auto. Trip Hammer) DROP 30"
SAMPLED BY KMB LOGGED BY KMB REVIEWED BY GMC

FIGURE A- 2

Ninyo & Moore Geotechnical & Environmental Sciences Consultants

LABOE TOS NO. 25 - VALLEY VILLAGE PARK
NORTH HOLLYWOOD, CALIFORNIA
211307001 | 8/20

DEPTH (feet)	SAMPLES Bulk	SAMPLES Driven	BLOWS/FOOT	MOISTURE (%)	DRY DENSITY (PCF)	SYMBOL	CLASSIFICATION U.S.C.S.	DESCRIPTION/INTERPRETATION
80								Notes: Groundwater, though not encountered at the time of drilling, may rise to a higher level due to seasonal variations in precipitation and several other factors as discussed in the report. The ground elevation shown above is an estimation only. It is based on our interpretations of published maps and other documents reviewed for the purposes of this evaluation. It is not sufficiently accurate for preparing construction bids and design documents.
90								
100								
110								
120								

DATE DRILLED 3/26/20 BORING NO. B-1
GROUND ELEVATION 618' ± (MSL) SHEET 3 OF 3
METHOD OF DRILLING 8" Hollow-Stem Auger (Baja Exploration)
DRIVE WEIGHT 140 lbs. (Auto. Trip Hammer) DROP 30"
SAMPLED BY KMB LOGGED BY KMB REVIEWED BY GMC

FIGURE A- 3

Ninyo & Moore Geotechnical & Environmental Sciences Consultants

LABOE TOS NO. 25 - VALLEY VILLAGE PARK
NORTH HOLLYWOOD, CALIFORNIA
211307001 | 8/20

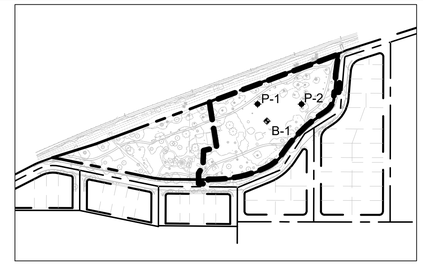

BORING KEY MAP

NTS

STORMWATER MITIGATION
LOW IMAPCT DEVELOPMENT (LID)
APPROVED WITH CONDITIONS

This set of plans and specifications must be at the jobsite during construction

Stormwater Observation Report (SOR) is required prior to issuance of Certificate of Occupancy or final sign off.

Total Pages 48

Digitally Signed By: S. Garcia Date: 12/12/2023
Department of Public Works - Bureau of Sanitation
Watershed Protection Division

EARTHWORK QUANTITIES

TOTAL EARTHWORK QUANTITIES	
CUT (RAW)	47,218 CY
FILL (RAW)	30,456 CY
(IMPORT)/ EXPORT	17,313 CY

INFILTRATION GALLERY EARTHWORK QUANTITIES	
CUT (RAW)	44,796 CY
FILL (RAW)	29,711 CY
(IMPORT)/ EXPORT	15,705 CY

EARTHWORK QUANTITIES SHOWN ON THIS PLAN ARE APPROXIMATE ESTIMATES SHOWN FOR AGENCY APPROVAL PURPOSES ONLY, AND ARE BASED UPON THE PLAN ELEVATIONS SHOWN AND ON THE GROUND ELEVATIONS WHICH EXISTED AT THE TIME OF THE TOPOGRAPHIC

SOIL PERCOLATION TEST INFORMATION

P-1 AND P-2

DEPTH (feet)	SAMPLES Bulk	SAMPLES Driven	BLOWS/FOOT	MOISTURE (%)	DRY DENSITY (PCF)	SYMBOL	CLASSIFICATION U.S.C.S.	DESCRIPTION/INTERPRETATION
0							SM	FILL: Reddish brown, moist, medium dense, silty SAND; trace gravel; few clay pockets.
							SM	ALLUVIUM: Yellowish brown, moist, medium dense, silty SAND; trace gravel.
			15	4.6	104.5		SP	Yellowish brown, moist, medium dense, poorly graded SAND; trace gravel.
10			6					Loose.
			30	3.7	123.5		ML	Reddish brown, moist, medium dense, sandy SILT.
			21				SP	Yellowish brown, moist, dense, poorly graded SAND.
							SM	Reddish brown, moist, dense, silty SAND.
30			25	16.9	113.0		CL	Reddish brown, moist, very stiff, sandy lean CLAY.
40								Total Depth = 25.0 feet. Groundwater was not encountered during drilling. In-situ percolation test performed on 3/27/20. Backfilled with cement bentonite grout on 3/27/20. Notes: Groundwater, though not encountered at the time of drilling, may rise to a higher level due to seasonal variations in precipitation and several other factors as discussed in the report. The ground elevation shown above is an estimation only. It is based on our interpretations of published maps and other documents reviewed for the purposes of this evaluation. It is not sufficiently accurate for preparing construction bids and design documents.

DATE DRILLED 3/26/20 BORING NO. P-1
GROUND ELEVATION 615' ± (MSL) SHEET 1 OF 1
METHOD OF DRILLING 8" Hollow-Stem Auger (Baja Exploration)
DRIVE WEIGHT 140 lbs. (Auto. Trip Hammer) DROP 30"
SAMPLED BY GM LOGGED BY GM REVIEWED BY GMC

FIGURE A- 4

Ninyo & Moore Geotechnical & Environmental Sciences Consultants

LABOE TOS NO. 25 - VALLEY VILLAGE PARK
NORTH HOLLYWOOD, CALIFORNIA
211307001 | 8/20

DEPTH (feet)	SAMPLES Bulk	SAMPLES Driven	BLOWS/FOOT	MOISTURE (%)	DRY DENSITY (PCF)	SYMBOL	CLASSIFICATION U.S.C.S.	DESCRIPTION/INTERPRETATION
0							SM	FILL: Dark grayish brown, moist, medium dense, silty SAND with gravel; cobbles.
							SM	ALLUVIUM: Olive brown, moist, medium dense, silty SAND; trace gravel; cobbles.
			68/11"					Very dense.
10			17	2.7	95.2		SP	Olive brown to light brown, moist, medium dense, poorly graded SAND.
			18					
20			18	14.1	107.0		SM	Reddish brown, moist, medium dense, silty SAND; trace gravel.
			15					
30								Total Depth = 25.0 feet. Groundwater was not encountered during drilling. In-situ percolation test performed on 3/27/20. Backfilled with cement bentonite grout on 3/27/20. Notes: Groundwater, though not encountered at the time of drilling, may rise to a higher level due to seasonal variations in precipitation and several other factors as discussed in the report. The ground elevation shown above is an estimation only. It is based on our interpretations of published maps and other documents reviewed for the purposes of this evaluation. It is not sufficiently accurate for preparing construction bids and design documents.
40								

DATE DRILLED 3/26/20 BORING NO. P-2
GROUND ELEVATION 617' ± (MSL) SHEET 1 OF 1
METHOD OF DRILLING 8" Hollow-Stem Auger (Baja Exploration)
DRIVE WEIGHT 140 lbs. (Auto. Trip Hammer) DROP 30"
SAMPLED BY GM LOGGED BY GM REVIEWED BY GMC

FIGURE A- 5

Ninyo & Moore Geotechnical & Environmental Sciences Consultants

LABOE TOS NO. 25 - VALLEY VILLAGE PARK
NORTH HOLLYWOOD, CALIFORNIA
211307001 | 8/20

STORMWATER OBSERVATION REPORT FORM

(Residential ≥ 5 units & All other Development)

LOW IMPACT DEVELOPMENT

IN THE EVENT THAT THE APPROVED STORMWATER BMP CANNOT BE BUILT PER PLANS (OR ANY MODIFICATION), CONSULT WITH BUREAU OF SANITATION STAFF PRIOR TO ANY PLAN MODIFICATIONS. FAILURE TO DO SO MAY DELAY OBTAINING A FINAL APPROVAL AND CERTIFICATE OF OCCUPANCY (C OF O).

STORMWATER OBSERVATION means the visual observation of the stormwater related Best Management Practices (BMPs) for conformance with the approved LID Plan at significant construction stages and at completion of the project. Stormwater observation does not include or waive the responsibility for the inspections required by Section 108 or other sections of the City of Los Angeles Building Code;

STORMWATER OBSERVATION must be performed by the engineer or architect responsible for the approved LID Plan or designated staff in their employment. As part of the observation, provide photos of the BMPs taken during various construction phases.

STORMWATER OBSERVATION REPORT must be signed and stamped (see below) by the engineer or architect responsible for the approved LID Plan and submitted to the city prior to the issuance to the certificate of occupancy. PRIOR TO CERTIFICATE OF OCCUPANCY (C of O), SOR FORM, PRINTED PHOTOS OF THE BMPS TAKEN DURING VARIOUS CONSTRUCTION PHASES AND APPROVED STAMPED PLANS BY THE BUREAU OF SANITATION MUST BE SUBMITTED TO THE PUBLIC COUNTER FOR STAFF APPROVAL.

Project Address:	Building Permit No.:
5000 N. Westpark Dr, North Hollywood, CA 91601	22030-10000-00242
Name of Engineer/Architect responsible for the approved LID Plan: Matthew Huckaby	Phone Number: (213) 212-0788

List all BMPs installed as part of the project: Coordinates of the most significant (or typical) BMPs:

BMP Type: Underground Infiltration Gallery (282-ft x 100-ft x 14-ft) # of units: 1	BMP Type: Baffle Box # of units: 1
Lat: 34.16100 Long: -118.38221 *Ex: Lat: 34.04152; Long: -118.25962 (5 sig digits)*	Lat: 34.16113 Long: -118.38245
BMP Type: Grasscrete # of units: 1	BMP Type: # of units:
Lat: 34.16100 Long: -118.38221	Lat: Long:

I DECLARE THAT THE FOLLOWING STATEMENTS ARE TRUE TO THE BEST OF MY KNOWLEDGE:

1. I am the engineer or architect responsible for the approved LID Plan, and;
2. I, or designated staff under my responsible charge, has preformed the required site visits at each significant construction stage and at the completion to verify that the Best Management Practices (BMPs) as shown on approved plans have been constructed and installed in accordance with the approved LID Plan.

Signature 11-30-23 Date

Wet Stamp of Engineer or Architect

Low Impact Development (LID)
Post Construction Stormwater Mitigation
Best Management Practices (BMPs)

STORMWATER BMP(S) VERIFICATION

Upon installation of the approved stormwater BMPs, a Stormwater Observation Report (SOR) Form shall be submitted to Department of Public Works, Bureau of Sanitation. 201 N. Figueroa, 3rd floor, station 18. The SOR Form must be with filed and approved by the Bureau of Sanitation prior to the issuance of a Certificate of Occupancy.

Project Address: 5000 N. Westpark Dr, North Hollywood, CA 91601

RESIDENTIAL (4 UNITS OR LESS, <10,000SF, < 2,500 SF within a ESA)

Item #	Stormwater BMP	Description (Units, total)	Reference Sheet(s)* (Sheet #)
1	Rain Tank(s) – 55 to 130 gal each		
2	Rain Tank(s) – > 130 gal min		
3	Shade Tree - min 15 gal		
4	Flow thru Planter(s)		
5	Permeable pavers / Porous concrete (min 10% open space)	☐ Incidental; _____ total SF ☐ Infiltration; _____ total SF	
6	Rain Garden	☐ #____ - Lined; _____ total SF ☐ # ____ - Unlined; _____ total SF	
7	Dry Well		
8	SUMP Pump (modification was not required)		

ALL OTHER DEVELOPMENT

(Residential: 5 ≥ units, 10,000 ≥ SF, within a ESA and ≥2,500SF)

	Item #	Stormwater BMP	Description (Units, total)	Reference Sheet(s)* (Sheet #)
Infiltration	1	Infiltration Basin / Trench	Underground Infiltration Gallery (282-ft x 100-ft x 14-ft)	C-10, C-11, C-12, C-13, C-14
	2	Dry Well		
	3	Permeable pavers / Porous concrete (min 10% open space)	☒ Incidental; 5,300 total SF ☐ Infiltration; _____ total SF	Grasscrete C-05, C06
Capture & Use	4	Rain Tank(s) – 530 gal min		
	5	Cistern	☐ Above Grade ☐ Below Grade	
Treat & Discharge	6	Flow thru Planter(s)		
	7	Biofiltration	☐ #____ - Lined; _____ total SF ☐ # ____ - Unlined; _____ total SF	
	8	Vegetative Swale / Filter Strip		
	9	~~Catch Basin Filter(s)~~ Baffle Box	11' x 24'	C-10, C-11, C-13
	10	Trench Drain Filter(s)		
	11	Down Spout Filter(s)		
	12	SUMP Pump (modification was not required)		

* At a minimum: Site Plan, Architectural Elevations, Roof Plan, Civil Sheets and Detail

PLANS PREPARED BY:

carollo
707 WILSHIRE BLVD., SUITE 3920
LOS ANGELES, CA 90017
(213) 489-1587

CITY OF LOS ANGELES DEPARTMENT OF PUBLIC WORKS
BUREAU OF ENGINEERING

THIS PLAN WAS ELECTRONICALLY • SIGNED AND STAMPED

ENGINEERING
CITY OF LOS ANGELES

Digitally signed by Matthew B. Huckaby
Contact Info: Carollo Engineers, Inc.
Date: 2023.12.06 12:48:47 -08'00'

REGISTERED PROFESSIONAL ENGINEER MATTHEW B. HUCKABY No. 76961 STATE OF CALIFORNIA CIVIL

VERTICAL CONTROL:
HORIZONTAL CONTROL:

SHEET TITLE: BORING LOGS AND LID FORMS

PROJECT: VALLEY VILLAGE PARK STORM WATER CAPTURE PROJECT

ADDRESS: VALLEY VILLAGE PARK
5000 Westpark Dr, North Hollywood, CA 91601

NO.	REVISIONS	BY	DATE
			YY/MM/DD
			YY/MM/DD
			YY/MM/DD
			YY/MM/DD

CIP NO. SCP0009

INDEX NO.

CITY ENGINEER	DESIGN GROUP	DATE
TED ALLEN, P.E.		YY/MM/DD
ENGINEER:	PVT - MATT HUCKABY	YY/MM/DD
ARCHITECT:	XXX	YY/MM/DD
DESIGNED BY:	PVT - JERRY GANTNEY	YY/MM/DD
DRAWN BY:	PVT - ATTILA SIMON	YY/MM/DD
CHECKED BY:	PVT - RAPHAEL BUI	YY/MM/DD
APPROVED BY:	PVT - MIKO AIVAZIAN	YY/MM/DD

WORK ORDER EW40085F

SHEET NAME G-04

SHEET 04 OF 80 SHEETS

THE CITY OF LOS ANGELES OR ITS OFFICERS OR AGENTS SHALL NOT BE RESPONSIBLE FOR THE ACCURACY OR COMPLETENESS OF ELECTRONIC COPIES OF THIS PLAN SHEET.

REVISION DATES (DESIGN STAGE ONLY)



STORMWATER MITIGATION
LOW IMPACT DEVELOPMENT (LID)
APPROVED WITH CONDITIONS

This set of plans and specifications must be at the jobsite during construction

Stormwater Observation Report (SOR) is required prior to issuance of Certificate of Occupancy or final sign off.

Total Pages 48

Digitally Signed By: S. Garcia Date: 12/12/2023
Department of Public Works - Bureau of Sanitation
Watershed Protection Division

WORK ITEM LEGEND

- WORK ITEM 1
- WORK ITEM 2
- WORK ITEM 3
- WORK ITEM 4

WORK ITEM NOTES

WORK ITEM 1:

WORK ITEM 1 INCLUDES ALL CONSTRUCTION OF INFILTRATION GALLERIES, PRE-TREATMENT STRUCTURES, AND ALL ON SITE PIPING TO BE INSTALLED.

WORK ITEM 2:

WORK ITEM 2 INCLUDES ALL CONSTRUCTION OF THE DIVERSION STRUCTURE. A DIVERSION SYSTEM TO DIVERT ALL DRY WEATHER FLOW SHALL BE IN PLACE PRIOR TO CONNECTING TO THE EXISTING STORM DRAIN LINE. IF THE DIVERSION IS CONSTRUCTED PRIOR TO WORK ITEM 1 BEING FULLY OPERATIONAL, THE 42" OUTLET PIPE LEADING TO THE INFILTRATION GALLERY SHALL BE PLUGGED TO PREVENT DIVERSION OF FLOW.

WORK ITEM 3:

WORK ITEM 3 SHALL INCLUDE CONSTRUCTION OF PARK FEATURES, MAINTENANCE ACCESS ROAD, LANDSCAPING, HARDSCAPING, AND IRRIGATION WORK.

CONTRACTOR SHALL USE EXISTING DRIVEWAY CUTS FOR ACCESS AND/OR AS APPROVED BY THE CITY.

WORK ITEM 4:

WORK ITEM 4 INCLUDES ADDITIONAL LANDSCAPING AND IRRIGATION WORK. WORK IN THIS AREA SHALL BE LIMITED TO TREE PLANTING, HARDSCAPING, AND CONVERSION OF IRRIGATION SYSTEM FROM POTABLE WATER TO RECYCLED WATER.

PROJECT LIMITS NOTES

PROJECT LIMIT LINE IS AN OFFSET FOR CLARITY PURPOSES. CURBS AND GUTTERS ALONG THE PROJECT LIMITS SHALL BE PROTECTED IN PLACE UNLESS NOTED OTHERWISE ON DEMOLITION PLANS.

NOTICE TO CONTRACTOR

1. CONTRACTOR IS RESTRICTED FROM ALL AREAS OUTSIDE OF THE PROJECT LIMITS EXCEPT AS SHOWN ON THE CONTRACT DRAWINGS.
2. CONTRACTOR SHALL PREPARE AN ACCESS PLAN PRIOR TO THE PLACEMENT OF ANY CONSTRUCTION FENCE, FOR REVIEW AND APPROVAL BY THE CITY. IF DURING CONSTRUCTION THE CONSTRUCTION FENCE IS REQUIRED TO BE MOVED, A REVISED PLAN SHALL BE SUBMITTED TO THE CITY FOR REVIEW AND APPROVAL.
3. CONTRACTOR SHALL MAINTAIN ACCESS TO THE EXISTING RESIDENTIAL HOMES. THE STREET MAY ONLY BE CLOSED FOR THE SHORT PERIOD TO CONSTRUCT THE STREET OR AS APPROVED BY THE CITY.
4. CONTRACTOR WILL BE WORKING ADJACENT TO EXISTING RESIDENTIAL STRUCTURES. CONTRACTOR TO PROVIDE PARKING AND SAFE PEDESTRIAN AND VEHICULAR ACCESS TO THE PROPERTIES FOR THE RESIDENTS AS WELL AS SUBMITTAL FOR CITY'S APPROVAL.
5. CONTRACTOR SHALL LIMIT PARKING RESTRICTIONS ALONG WESTPARK DRIVE TO THE GREATEST EXTENT FEASIBLE.
6. TREE PROTECTION: SEE TREE PROTECTION REQUIREMENTS ON SHEETS L-101 THEN L-103. NO DEMOLITION OR EXCAVATION WORK SHALL BE COMMENCED PRIOR TO TREE PROTECTION FENCING BEING INSTALLED AND APPROVED BY THE PROJECT MANAGER.
7. LAYDOWN/STAGING AREAS SHELL BE OUTSIDE OF TREE PROTECTION ZONES.

NOTES FOR TURF AREAS

THE CONSTRUCTION SHALL CONSIST OF TWO PRIMARY STAGES:

STAGE 1: CIVIL CONSTRUCTION OF ALL THE STORMWATER RELATED ELEMENTS AND THE SITE IMPROVEMENTS SHOWN INSIDE THE PRIMARY CONSTRUCTION AREA /L.O.W. (I.E. CONSTRUCTION FENCING).

A. OUTSIDE OF THE PRIMARY CONSTRUCTION AREA: ALL EXISTING TURF AND LANDSCAPING TO REMAIN OUTSIDE THE CONSTRUCTION FENCING SHALL REMAIN OPEN AND ACCESSIBLE TO THE PUBLIC DURING CONSTRUCTION AND WILL BE MAINTAINED BY THE PARKS DEPARTMENT STAFF. DURING THIS PERIOD THE CONTRACTOR SHALL NOT INTERRUPT THE EXISTING IRRIGATION WATER SUPPLY TO THESE AREAS AND SHALL ASSURE THE EXISTING CONTROL SYSTEM REMAINS IN OPERATION. INSTALLATION OF TEMPORARY MAINLINE AND CONTROL WIRE ABOVE OR BELOW GROUND AND LOCATED INSIDE THE CONSTRUCTION FENCING IS ALLOWABLE AND MAY BE NECESSARY.
1. ANY DISRUPTION TO IRRIGATION IN THESE AREAS OUTSIDE OF THE CONSTRUCTION FENCING THAT CAUSES DAMAGE TO THE EXISTING TURF HEALTH OR COVERAGE SHALL BE REPAIRED AT THE CONTRACTOR'S EXPENSE BY OVERSEEDING WITH A SEED MIX OF SIMILAR COMPOSITION AS THE SPECIFIED REPLACEMENT SOD, AND FERTILIZED WITH A BALANCED LONG-RELEASE TURF FERTILIZER.

B. INSIDE THE PRIMARY CONSTRUCTION AREA: ALL AREAS OF EXISTING TURF WHICH ARE REMOVED, KILLED OR DAMAGED BY CONSTRUCTION ACTIVITY (INCLUDING ANY AREAS IMPACTED BY VEHICLE OR EQUIPMENT TRAFFIC; OR USED FOR PARKING, STORAGE, LAYDOWN, IRRIGATION TRENCHING ETC.) MUST BE REPLACED WITH THE SPECIFIED SOD AFTER THE AREA HAS BEEN DE-COMPACTED TO THE SATISFACTION OF THE ENGINEER AND AMENDED PER THE LANDSCAPE PLANTING SPECIFICATIONS.
1. ANY AREAS OF EXISTING TURF REMAINING INSIDE THE PRIMARY CONSTRUCTION AREA THAT HAVE NOT BEEN ADVERSELY IMPACTED BY CONSTRUCTION AND ARE DETERMINED BY THE ENGINEER TO BE ACCEPTABLE FOR REMEDIATION MAY BE REPAIRED.
2. ALL BARE AREAS LARGER THAN 12" X 12" SHALL BE REPAIRED BY OVERSEEDING WITH A SEED MIX OF SIMILAR COMPOSITION AS THE SPECIFIED REPLACEMENT SOD. DEAD OR BARE AREAS LARGER THAN 5' X 5' SHALL BE REPAIRED WITH THE SPECIFIED SOD. AT THE COMPLETION OF THE MAINTENANCE AND ESTABLISHMENT PERIOD (SEE LANDSCAPE PLANTING SPECIFICATIONS), A FULL, HEALTHY AND CONTINUOUS COVER OF TURF IS EXPECTED.

STAGE 2: DURING THIS STAGE, ADDITIONAL SITE AND IRRIGATION IMPROVEMENTS OUTSIDE THE PRIMARY L.O.W. SHALL BE COMPLETED IN THE REMAINDER OF THE PARK AREA AS INDICATED ON THE CONSTRUCTION, PLANTING AND IRRIGATION PLANS. ANY AREAS OF EXISTING TURF DETERMINED BY THE ENGINEER TO BE DAMAGED BY CONSTRUCTION RELATED ACTIVITY OR IRRIGATION TRENCHING SHALL BE DE-COMPACTED TO THE SATISFACTION OF THE ENGINEER AND AMENDED PER THE LANDSCAPE PLANTING SPECIFICATIONS AND REPLACED WITH THE SPECIFIED SOD AT THE CONTRACTOR'S EXPENSE. AREAS WHERE EXISTING TURF HAS SUFFERED SOIL COMPACTION BUT REMAINS IN ACCEPTABLE CONDITION MAY BE AERIFIED INSTEAD OF REPLACED AT THE DISCRETION OF THE ENGINEER. AT THE COMPLETION OF THE MAINTENANCE AND ESTABLISHMENT PERIOD (SEE LANDSCAPE PLANTING SPECIFICATIONS), A FULL, HEALTHY AND CONTINUOUS COVER OF TURF IS EXPECTED.

40' 0 40' 80'
1" = 40'

PLANS PREPARED BY:
carollo
707 WILSHIRE BLVD, SUITE 3920
LOS ANGELES, CA 90017
(213) 489-1587

THE CITY OF LOS ANGELES OR ITS OFFICERS OR AGENTS SHALL NOT BE RESPONSIBLE FOR THE ACCURACY OR COMPLETENESS OF ELECTRONIC COPIES OF THIS PLAN SHEET.

REVISION DATES (DESIGN STAGE ONLY)

ENGINEERING
CITY OF LOS ANGELES

Digitally signed by Matthew B. Huckaby
Contact Info: Carollo Engineers, Inc.
Date: 2023.12.12 09:47:47 -08'00'

REGISTERED PROFESSIONAL ENGINEER MATTHEW B. HUCKABY No. 76961 CIVIL STATE OF CALIFORNIA

THIS PLAN WAS ELECTRONICALLY • SIGNED AND STAMPED

BUREAU OF ENGINEERING

VERTICAL CONTROL:	VERTICAL CONTROL
HORIZONTAL CONTROL:	HORIZONTAL CONTROL
SHEET TITLE:	OVERALL CONSTRUCTION SEQUENCE PLAN
PROJECT:	VALLEY VILLAGE PARK STORM WATER CAPTURE PROJECT
ADDRESS:	VALLEY VILLAGE PARK 5000 Westpark Dr, North Hollywood, CA 91601

CITY OF LOS ANGELES DEPARTMENT OF PUBLIC WORKS

CITY ENGINEER	DATE
TED ALLEN, P.E.	YY/MM/DD

DESIGN GROUP	
ENGINEER:	PVT - MATT HUCKABY
ARCHITECT:	XXX
DESIGNED BY:	PVT - JERRY GANTNEY
DRAWN BY:	PVT - ATTILA SIMON
CHECKED BY:	PVT - RAPHAEL BUI
APPROVED BY:	PVT - MIKO AIVAZIAN

NO.	REVISIONS	BY	DATE
			YY/MM/DD
			YY/MM/DD
			YY/MM/DD
			YY/MM/DD

CIP NO. SCP0009

INDEX NO.

WORK ORDER
EW40085F

SHEET NAME
G-05
SHEET 05 OF 80 SHEETS

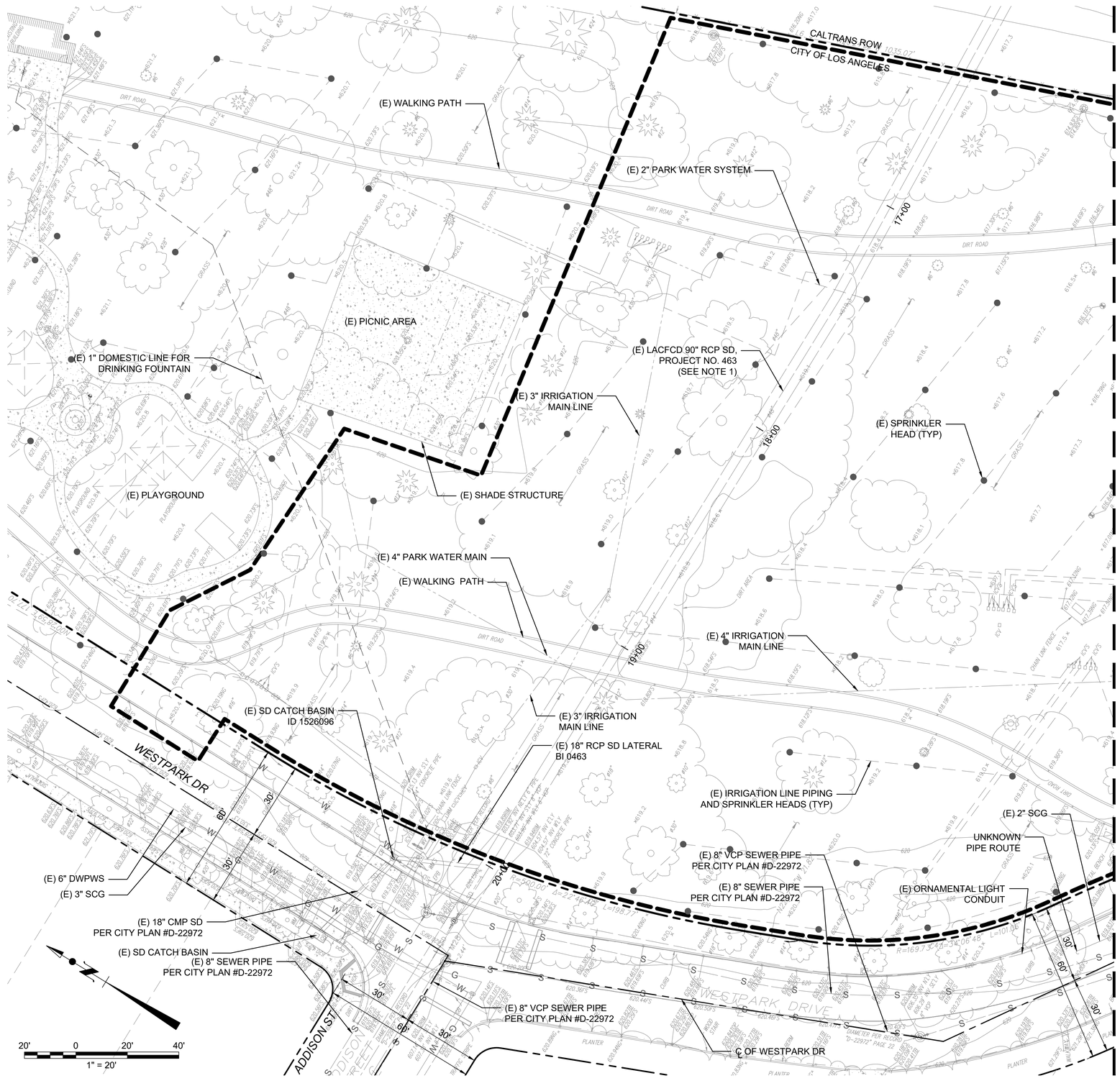

MATCH LINE: SEE SHEET C-02

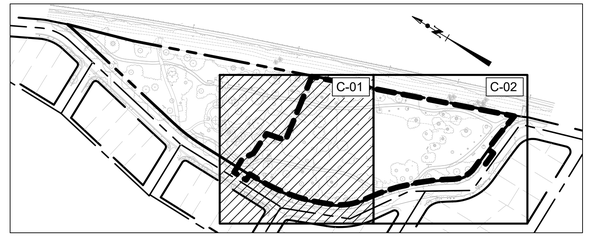

KEY MAP
NTS

LEGEND:

- LIMIT OF WORK
- PROPERTY LINE

NOTES:

1. PERMISSION FOR THE LACFCD TO CONSTRUCT, OPERATE, AND MAINTAIN THIS STORM DRAIN WAS GRANTED BY CITY OF LOS ANGELES ORDINANCE NO. 117,659

HORIZONTAL AND VERTICAL CONTROL

BASIS OF BEARINGS:
BEARING AND DISTANCES ARE BASED UPON THE CALIFORNIA COORDINATE SYSTEM OF 1983, CCS83, ZONE 5, (2017.50) IN ACCORDANCE TO THE CALIFORNIA PUBLIC RESOURCES CODE SECTIONS 8801-8819; SAID BEARINGS ARE DETERMINED LOCALLY UPON FIELD-OBSERVED TIES TO THE FOLLOWING CALIFORNIA SPATIAL REFERENCE NETWORK CONTINUOUS OPERATING REFERENCE STATIONS (C.O.R.S.):

C.S.R.C VIMT:
NORTHING = 1868796.75' EASTING = 6405986.88'

C.S.R.C LAPC:
NORTHING = 1889083.32' EASTING = 6387872.13'

BENCHMARK:
ELEVATIONS SHOWN HEREON ARE BASED UPON CITY OF LOS ANGELES BENCHMARK 08-02583, ELEVATION 627.78 FEET (NAVD 88).

DESCRIPTION:
SPK E CURB TUJUNGA AVE; 35' N/O BCR N/O MAGNOLIA BLVD.

STORMWATER MITIGATION
LOW IMAPCT DEVELOPMENT (LID)
APPROVED WITH CONDITIONS

This set of plans and specifications must be at the jobsite during construction

Stormwater Observation Report (SOR) is required prior to issuance of Certificate of Occupancy or final sign off.

Total Pages 48

Digitally Signed By: S. Garcia Date: 12/12/2023
Department of Public Works - Bureau of Sanitation
Watershed Protection Division

PLANS PREPARED BY:
carollo
707 WILSHIRE BLVD, SUITE 3920
LOS ANGELES, CA 90017
(213) 489-1587

CITY OF LOS ANGELES DEPARTMENT OF PUBLIC WORKS
BUREAU OF ENGINEERING

CITY ENGINEER: TED ALLEN, P.E.

DESIGN GROUP		DATE
ENGINEER:	PVT - MATT HUCKABY	YY/MM/DD
ARCHITECT:	XXX	YY/MM/DD
DESIGNED BY:	PVT - JERRY GANTNEY	YY/MM/DD
DRAWN BY:	PVT - ATTILA SIMON	YY/MM/DD
CHECKED BY:	PVT - RAPHAEL BUI	YY/MM/DD
APPROVED BY:	PVT - MIKO AVAZIAN	YY/MM/DD

NO.	REVISIONS	BY	DATE
			YY/MM/DD
			YY/MM/DD
			YY/MM/DD
			YY/MM/DD

VERTICAL CONTROL:
HORIZONTAL CONTROL:

SHEET TITLE: EXSITING CONDITIONS PLAN - 1
PROJECT: VALLEY VILLAGE PARK STORM WATER CAPTURE PROJECT
ADDRESS: VALLEY VILLAGE PARK
5000 Westpark Dr, North Hollywood, CA 91601

CIP NO. SCP0009

INDEX NO.

WORK ORDER
EW40085F

SHEET NAME
C-01
SHEET 06 OF 80 SHEETS

Digitally signed by Matthew B. Huckaby
Contact Info: Carollo Engineers, Inc.
Date: 2023.12.06 12:47:09 -08'00'

REGISTERED PROFESSIONAL ENGINEER
MATTHEW B. HUCKABY
No. 76961
CIVIL
STATE OF CALIFORNIA

THIS PLAN WAS ELECTRONICALLY SIGNED AND STAMPED

THE CITY OF LOS ANGELES OR ITS OFFICERS OR AGENTS SHALL NOT BE RESPONSIBLE FOR THE ACCURACY OR COMPLETENESS OF ELECTRONIC COPIES OF THIS PLAN SHEET.

REVISION DATES (DESIGN STAGE ONLY)

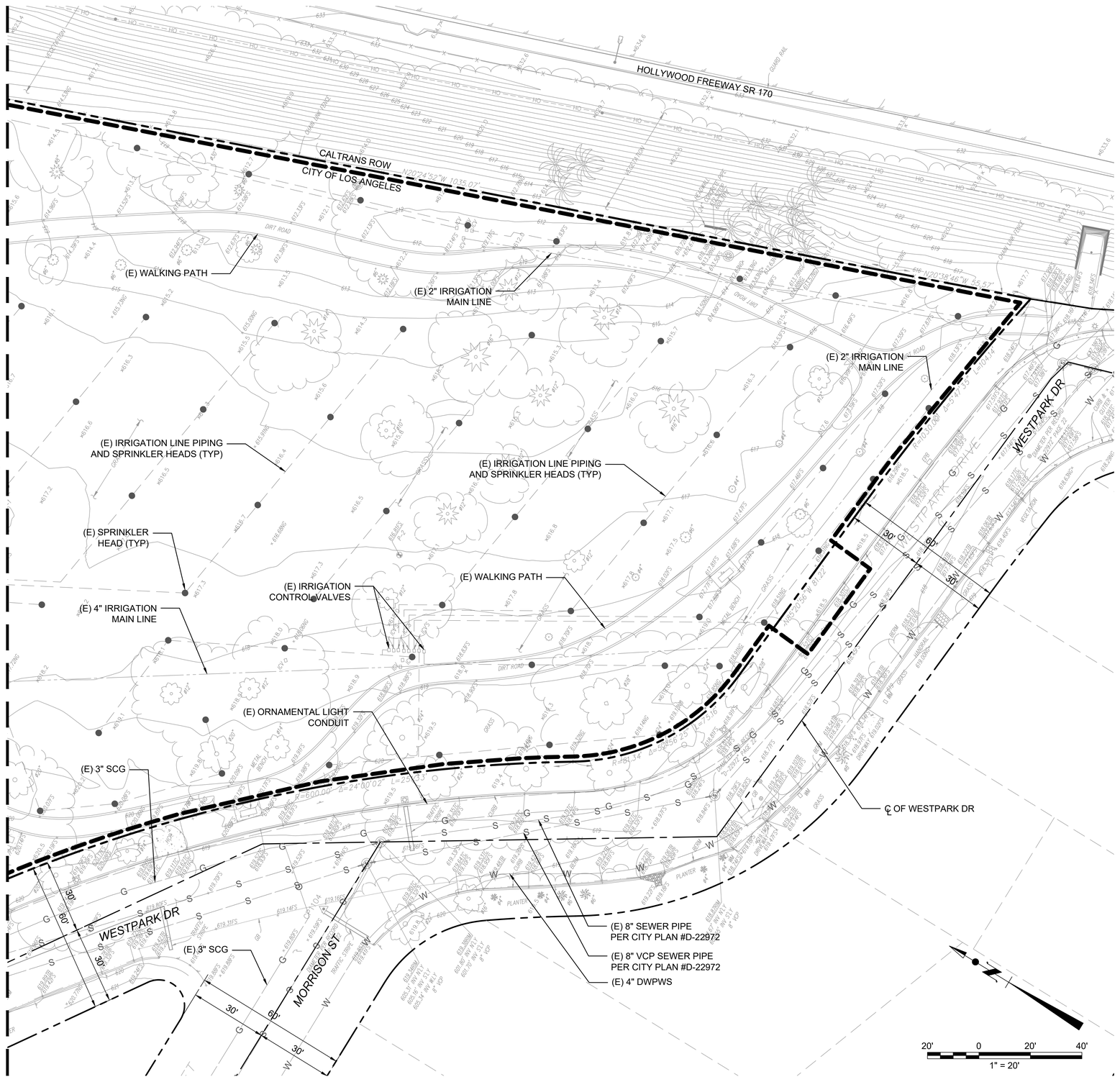

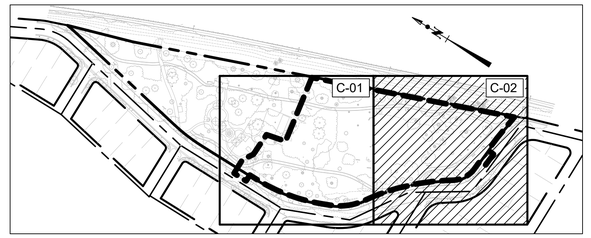

KEY MAP

NTS

LEGEND:

LIMIT OF WORK

PROPERTY LINE

HORIZONTAL AND VERTICAL CONTROL

BASIS OF BEARINGS:
BEARING AND DISTANCES ARE BASED UPON THE CALIFORNIA COORDINATE SYSTEM OF 1983, CCS83, ZONE 5, (2017.50) IN ACCORDANCE TO THE CALIFORNIA PUBLIC RESOURCES CODE SECTIONS 8801-8819; SAID BEARINGS ARE DETERMINED LOCALLY UPON FIELD-OBSERVED TIES TO THE FOLLOWING CALIFORNIA SPATIAL REFERENCE NETWORK CONTINUOUS OPERATING REFERENCE STATIONS (C.O.R.S.):

C.S.R.C VIMT:
NORTHING = 1868796.75' EASTING = 6405986.88'

C.S.R.C LAPC:
NORTHING = 1889083.32' EASTING = 6387872.13'

BENCHMARK:
ELEVATIONS SHOWN HEREON ARE BASED UPON CITY OF LOS ANGELES BENCHMARK 08-02583, ELEVATION 627.78 FEET (NAVD 88).

DESCRIPTION:
SPK E CURB TUJUNGA AVE; 35' N/O BCR N/O MAGNOLIA BLVD.

STORMWATER MITIGATION
LOW IMAPCT DEVELOPMENT (LID)
APPROVED WITH CONDITIONS

This set of plans and specifications must be at the jobsite during construction

Stormwater Observation Report (SOR) is required prior to issuance of Certificate of Occupancy or final sign off.

Total Pages 48

Digitally Signed By: S. Garcia Date: 12/12/2023
Department of Public Works - Bureau of Sanitation
Watershed Protection Division

PLANS PREPARED BY:
carollo
707 WILSHIRE BLVD, SUITE 3920
LOS ANGELES, CA 90017
(213) 489-1587

THIS PLAN WAS ELECTRONICALLY SIGNED AND STAMPED

ENGINEERING
CITY OF LOS ANGELES

Digitally signed by Matthew B. Huckaby
Contact Info: Carollo Engineers, Inc.
Date: 2023.12.12 12:24:22 -08'00'

REGISTERED PROFESSIONAL ENGINEER
MATTHEW B. HUCKABY
No. 76961
CIVIL
STATE OF CALIFORNIA

BUREAU OF ENGINEERING

VERTICAL CONTROL: VERTICAL CONTROL
HORIZONTAL CONTROL: HORIZONTAL CONTROL

SHEET TITLE: EXISTING CONDITIONS PLAN - 2

PROJECT: VALLEY VILLAGE PARK STORM WATER CAPTURE PROJECT

ADDRESS: VALLEY VILLAGE PARK
5000 Westpark Dr, North Hollywood, CA 91601

CIP NO. SCP0009

INDEX NO.

NO.	REVISIONS	DATE	BY
		YY/MM/DD	
		YY/MM/DD	
		YY/MM/DD	
		YY/MM/DD	

CITY OF LOS ANGELES DEPARTMENT OF PUBLIC WORKS

CITY ENGINEER

	DESIGN GROUP	DATE
ENGINEER:	PVT - MATT HUCKABY	YY/MM/DD
ARCHITECT:	XXX	YY/MM/DD
DESIGNED BY:	PVT - JERRY GANTNEY	YY/MM/DD
DRAWN BY:	PVT - ATTILA SIMON	YY/MM/DD
CHECKED BY:	PVT - RAPHAEL BUI	YY/MM/DD
APPROVED BY:	PVT - MIKO AIVAZIAN	YY/MM/DD

TED ALLEN, P.E.

WORK ORDER
EW40085F

SHEET NAME
C-02

SHEET 07 OF 80 SHEETS

THE CITY OF LOS ANGELES OR ITS OFFICERS OR AGENTS SHALL NOT BE RESPONSIBLE FOR THE ACCURACY OR COMPLETENESS OF ELECTRONIC COPIES OF THIS PLAN SHEET.

REVISION DATES (DESIGN STAGE ONLY)

SHEET VERSION 4.0.1 FILE PATH: C:\PW_WORKING\PROJECTWISE\CAROLLO_ASIMON\D1118218\0009_C_SH_C02EXCOND.DWG PLOT DATE: 12/1/2023 11:56 AM SAVED: 11/19/2021 1:45 PM SAVED BY:ASIMON

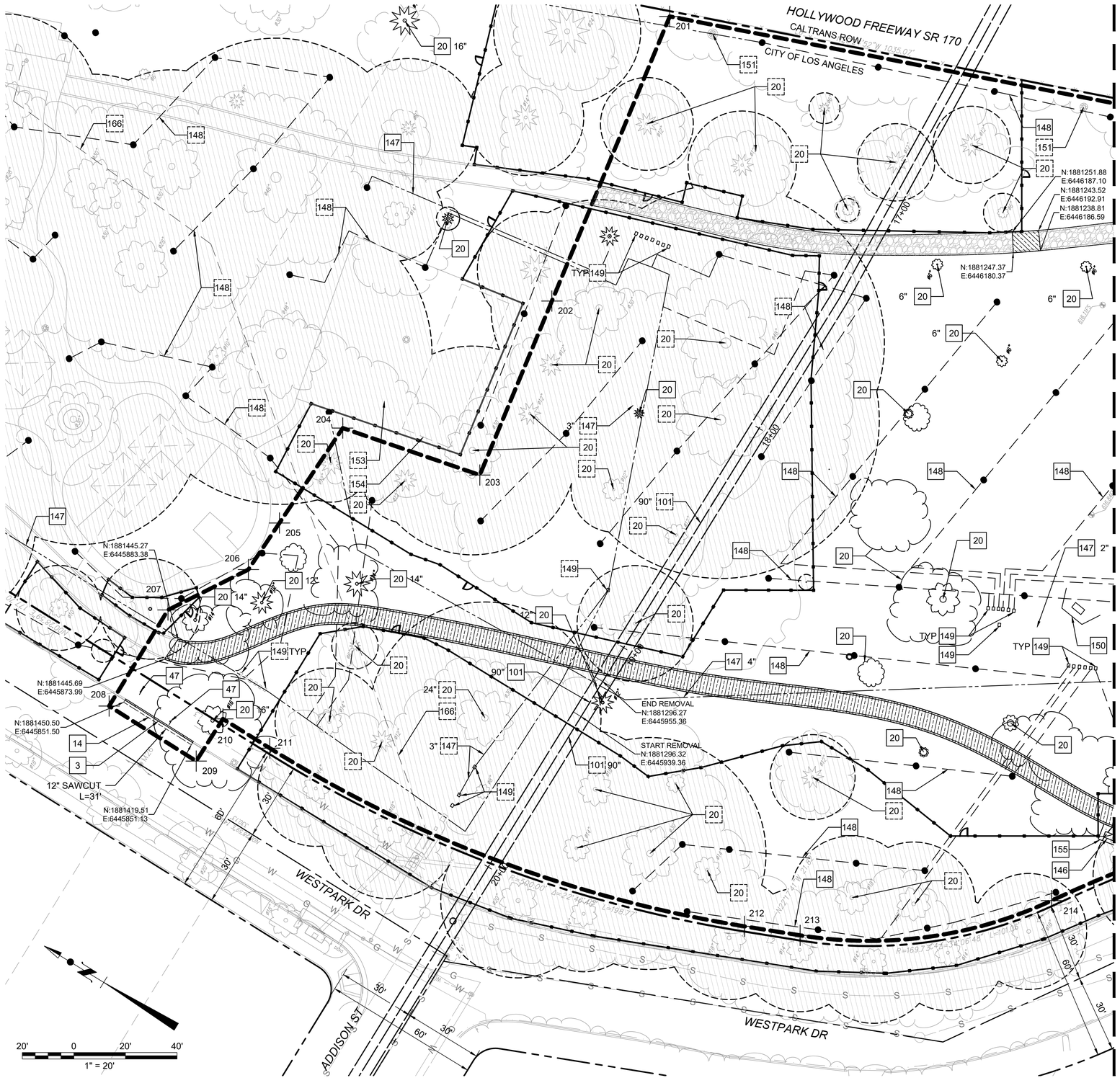

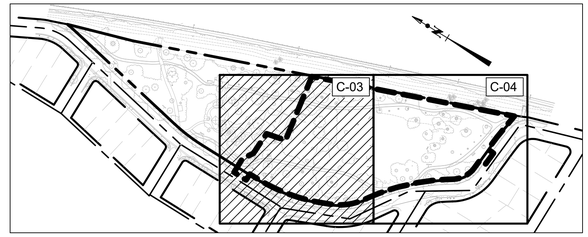

KEY MAP

NTS

LEGEND:

- REMOVE EXISTING WALKWAY WITH CURB
- PROTECT IN PLACE WALKWAY
- REMOVE EXISTING GRASS
- TREE PROTECTION ZONE - SEE SHEET L-100A
- TREE PROTECTION FENCE PER SHEET L-100A, DETAIL 1
- LIMIT OF WORK
- PROPERTY LINE

CONSTRUCTION NOTES:

- CONSTRUCT
- REMOVE
- EXISTING-PROTECTING IN PLACE
- REMOVE & CONSTRUCT
- WORK BY OTHERS

3. CONCRETE CURB
14. ASPHALT CONCRETE PAVEMENT
20. TREE
47. RELOCATE STREET SIGN
101. EXISTING LACFCD 90" RCP SD, PROJECT NO. 463
146. BENCH
147. IRRIGATION MAINLINE PIPING
148. IRRIGATION LATERAL LINE PIPING AND SPRINKLER HEADS
149. IRRIGATION SYSTEM COMPONENTS
150. FENCE BASEBALL BACK STOP
151. LIGHT POLE
153. PICNIC AREA
154. SHADE STRUCTURE
155. CONCRETE PAD
166. 1" DOMESTIC LINE FOR DRINKING FOUNTAIN

STORMWATER MITIGATION
LOW IMAPCT DEVELOPMENT (LID)
APPROVED WITH CONDITIONS

This set of plans and specifications must be at the jobsite during construction

Stormwater Observation Report (SOR) is required prior to issuance of Certificate of Occupancy or final sign off.

Total Pages 48

DEMOLITION NOTES:

1. LOCATION OF EXISTING UTILITIES IS APPROXIMATE AND BASED ON RECORD DRAWINGS. ACTUAL CONDITIONS MAY VARY.
2. SEE IRRIGATION PLANS FOR IRRIGATION DEMOLITION NOTES.
3. EXISTING UNDERGROUND UTILITIES MUST BE PROTECTED IN PLACE UNLESS NOTED OTHERWISE SPECIFIED PER PLAN.
4. TREES TO BE REMOVED SHALL BE TAGGED BY CONTRACTOR PRIOR TO DEMOLITION. CONTRACTOR SHALL REMOVE TREES AFTER APPROVAL FROM THE CITY OF LOS ANGELES DEPARTMENT OF RECREATION AND PARKS.
5. ALL WORK PERFORMED WITHIN THE TREE PROTECTION ZONES SHALL ADHERE TO THE TREE PROTECTION SPECIFICATIONS LISTED ON SHEET L-100A.

EXISTING TREE PROTECTION NOTE:

REFER TO THE TREE PROTECTION REQUIREMENTS (IN LANDSCAPE PLANS) FOR IRRIGATION OF EXISTING TREES TO REMAIN DURING CONSTRUCTION

POINT TABLE		
POINT #	NORTHING	EASTING
201	1881408.86	6446188.98
202	1881390.18	6446070.94
203	1881378.75	6445998.79
204	1881433.59	6445986.58
205	1881435.30	6445942.34
206	1881436.13	6445920.64
207	1881454.53	6445891.00
208	1881454.54	6445847.28
209	1881414.57	6445846.72
210	1881414.30	6445866.07
211	1881392.86	6445865.89
212	1881199.74	6445903.10
213	1881179.55	6445911.37
214	1881103.46	6445973.76

Digitally signed by Matthew B. Huckaby
Contact Info: Carollo Engineers, Inc.
Date: 2023.12.05 15:08:47 -08'00'

REGISTERED PROFESSIONAL ENGINEER MATTHEW B. HUCKABY No. 76961 CIVIL STATE OF CALIFORNIA

Approved by: S. Garcia
Department of Public Works - Bureau of Sanitation
Watershed Protection Division
Date: 12/12/2023

THIS PLAN WAS ELECTRONICALLY • SIGNED AND STAMPED

ENGINEERING
CITY OF LOS ANGELES

CITY OF LOS ANGELES DEPARTMENT OF PUBLIC WORKS
BUREAU OF ENGINEERING

VERTICAL CONTROL:
HORIZONTAL CONTROL:
SHEET TITLE: DEMOLITION PLAN - 1
PROJECT: VALLEY VILLAGE PARK STORM WATER CAPTURE PROJECT
ADDRESS: VALLEY VILLAGE PARK 5000 Westpark Dr, North Hollywood, CA 91601

NO.	REVISIONS	DATE	BY
		YY/MM/DD	
		YY/MM/DD	
		YY/MM/DD	
		YY/MM/DD	

CIP NO. SCP0009

INDEX NO.

CITY ENGINEER
TED ALLEN, P.E.
DATE

DESIGN GROUP		DATE
ENGINEER:	PVT - MATT HUCKABY	YY/MM/DD
ARCHITECT:	XXX	YY/MM/DD
DESIGNED BY:	PVT - JERRY GANTNEY	YY/MM/DD
DRAWN BY:	PVT - ATTILA SIMON	YY/MM/DD
CHECKED BY:	PVT - RAPHAEL BUI	YY/MM/DD
APPROVED BY:	PVT - MIKO AVAZIAN	YY/MM/DD

PLANS PREPARED BY:
carollo
707 WILSHIRE BLVD, SUITE 3920
LOS ANGELES, CA 90017
(213) 489-1587

WORK ORDER
EW40085F

SHEET NAME
C-03
SHEET 08 OF 80 SHEETS

THE CITY OF LOS ANGELES OR ITS OFFICERS OR AGENTS SHALL NOT BE RESPONSIBLE FOR THE ACCURACY OR COMPLETENESS OF ELECTRONIC COPIES OF THIS PLAN SHEET.

REVISION DATES (DESIGN STAGE ONLY)

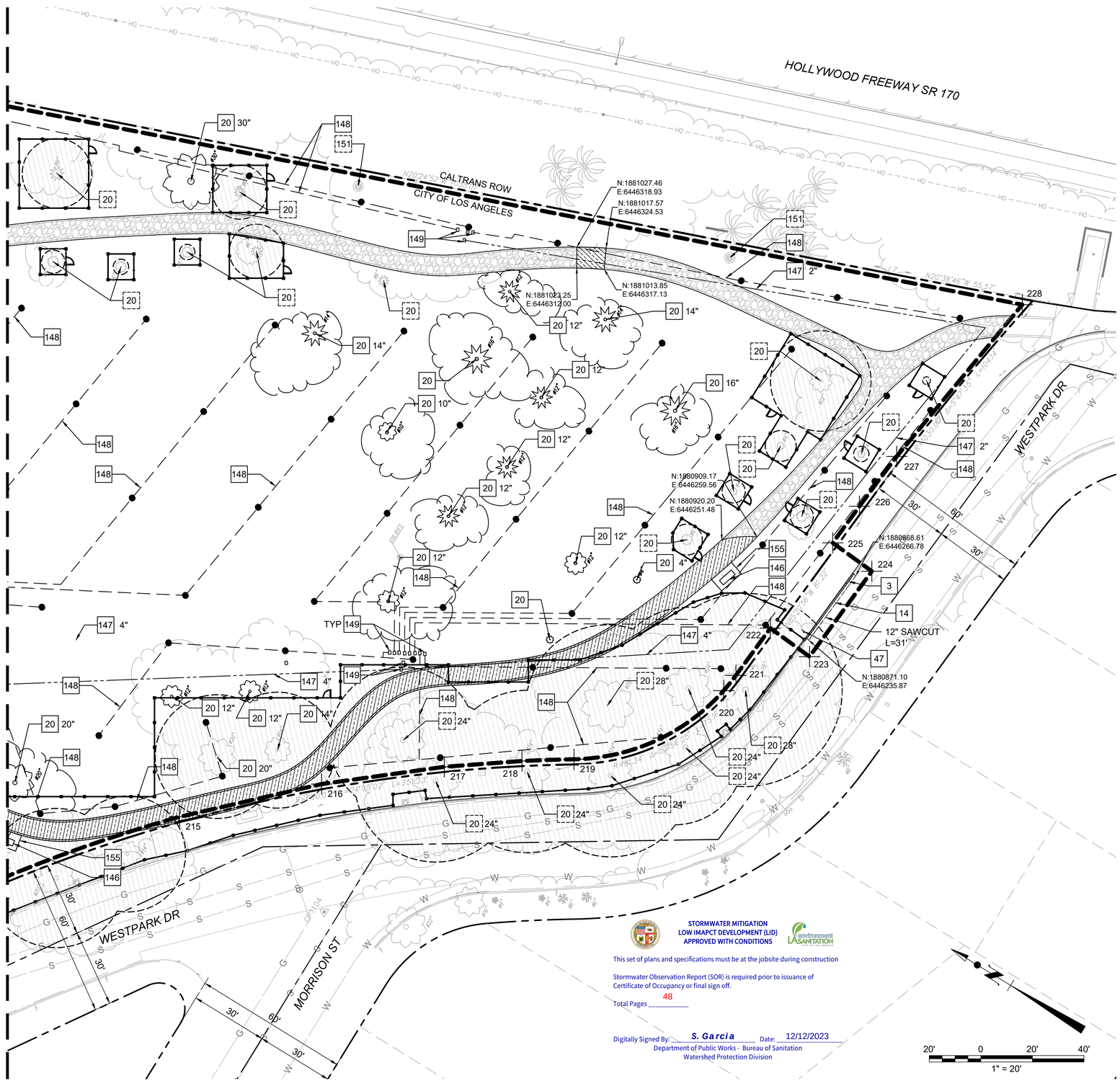

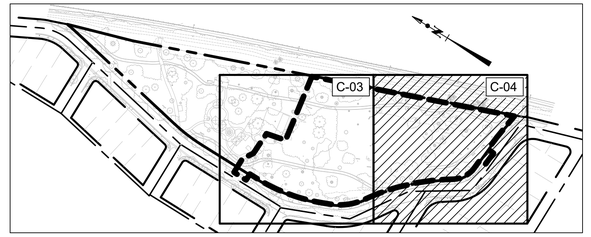

KEY MAP

NTS

LEGEND:

- REMOVE EXISTING WALKWAY WITH CURB
- PROTECT IN PLACE WALKWAY
- REMOVE EXISTING GRASS
- TREE PROTECTION ZONE - SEE SHEET L-100A
- TREE PROTECTION FENCE PER SHEET L-100A, DETAIL 1
- LIMIT OF WORK
- PROPERTY LINE

CONSTRUCTION NOTES:

- CONSTRUCT
- REMOVE
- EXISTING-PROTECTING IN PLACE
- REMOVE & CONSTRUCT
- WORK BY OTHERS

3. CONCRETE CURB
14. ASPHALT CONCRETE PAVEMENT
20. TREE
47. RELOCATE STREET SIGN
146. BENCH
147. IRRIGATION MAINLINE PIPING
148. IRRIGATION LATERAL LINE PIPING AND SPRINKLER HEADS
149. IRRIGATION SYSTEM COMPONENTS
151. LIGHT POLE
155. CONCRETE PAD

DEMOLITION NOTES:

1. LOCATION OF EXISTING UTILITIES IS APPROXIMATE AND BASED ON RECORD DRAWINGS. ACTUAL CONDITIONS MAY VARY.
2. SEE IRRIGATION PLANS FOR IRRIGATION DEMOLITION NOTES.
3. EXISTING UNDERGROUND UTILITIES MUST BE PROTECTED IN PLACE UNLESS NOTED OTHERWISE SPECIFIED PER PLAN.
4. TREES TO BE REMOVED SHALL BE TAGGED BY CONTRACTOR PRIOR TO DEMOLITION. CONTRACTOR SHALL REMOVE TREES AFTER APPROVAL FROM THE CITY OF LOS ANGELES DEPARTMENT OF RECREATION AND PARKS.
5. ALL WORK PERFORMED WITHIN THE TREE PROTECTION ZONES SHALL ADHERE TO THE TREE PROTECTION SPECIFICATIONS LISTED ON SHEET L-100A.

EXISTING TREE PROTECTION NOTE:

REFER TO THE TREE PROTECTION REQUIREMENTS (IN LANDSCAPE PLANS) FOR IRRIGATION OF EXISTING TREES TO REMAIN DURING CONSTRUCTION

POINT TABLE		
POINT #	NORTHING	EASTING
215	1881043.43	6446050.01
216	1881003.08	6446089.62
217	1880965.99	6446120.18
218	1880941.48	6446137.84
219	1880924.63	6446148.94
220	1880889.02	6446201.96
221	1880888.08	6446209.49
222	1880886.24	6446232.06
223	1880867.52	6446230.58
224	1880864.22	6446271.45
225	1880882.92	6446272.93
226	1880881.49	6446290.44
227	1880879.25	6446314.48
228	1880868.47	6446390.11

STORMWATER MITIGATION
LOW IMAPCT DEVELOPMENT (LID)
APPROVED WITH CONDITIONS

This set of plans and specifications must be at the jobsite during construction

Stormwater Observation Report (SOR) is required prior to issuance of Certificate of Occupancy or final sign off.

Total Pages 48

Digitally Signed By: S. Garcia Date: 12/12/2023
Department of Public Works - Bureau of Sanitation
Watershed Protection Division

PLANS PREPARED BY:
carollo
707 WILSHIRE BLVD, SUITE 3920
LOS ANGELES, CA 90017
(213) 469-1587

CITY OF LOS ANGELES DEPARTMENT OF PUBLIC WORKS
BUREAU OF ENGINEERING

VERTICAL CONTROL:	VERTICAL CONTROL
HORIZONTAL CONTROL:	HORIZONTAL CONTROL
SHEET TITLE:	DEMOLITION PLAN - 2
PROJECT:	VALLEY VILLAGE PARK STORM WATER CAPTURE PROJECT
ADDRESS:	VALLEY VILLAGE PARK 5000 Westpark Dr, North Hollywood, CA 91601

NO.	REVISIONS	DATE	BY
		YY/MM/DD	
		YY/MM/DD	
		YY/MM/DD	
		YY/MM/DD	

CITY ENGINEER	DATE
TED ALLEN, P.E.	YY/MM/DD
DESIGN GROUP	
ENGINEER: PVT - MATT HUCKABY	YY/MM/DD
ARCHITECT: XXX	YY/MM/DD
DESIGNED BY: PVT - JERRY GANTNEY	YY/MM/DD
DRAWN BY: PVT - ATTILA SIMON	YY/MM/DD
CHECKED BY: PVT - RAPHAEL BUI	YY/MM/DD
APPROVED BY: PVT - MIKO AIVAZIAN	YY/MM/DD

CIP NO. SCP0009

INDEX NO.

WORK ORDER EW40085F

SHEET NAME C-04

SHEET 09 OF 80 SHEETS

THIS PLAN WAS ELECTRONICALLY SIGNED AND STAMPED

ENGINEERING CITY OF LOS ANGELES

Digitally signed by Matthew B. Huckaby
Contact Info: Carollo Engineers, Inc.
Date: 2023.12.12 11:57:00 -08'00'

REGISTERED PROFESSIONAL ENGINEER MATTHEW B. HUCKABY No. 76961 STATE OF CALIFORNIA CIVIL

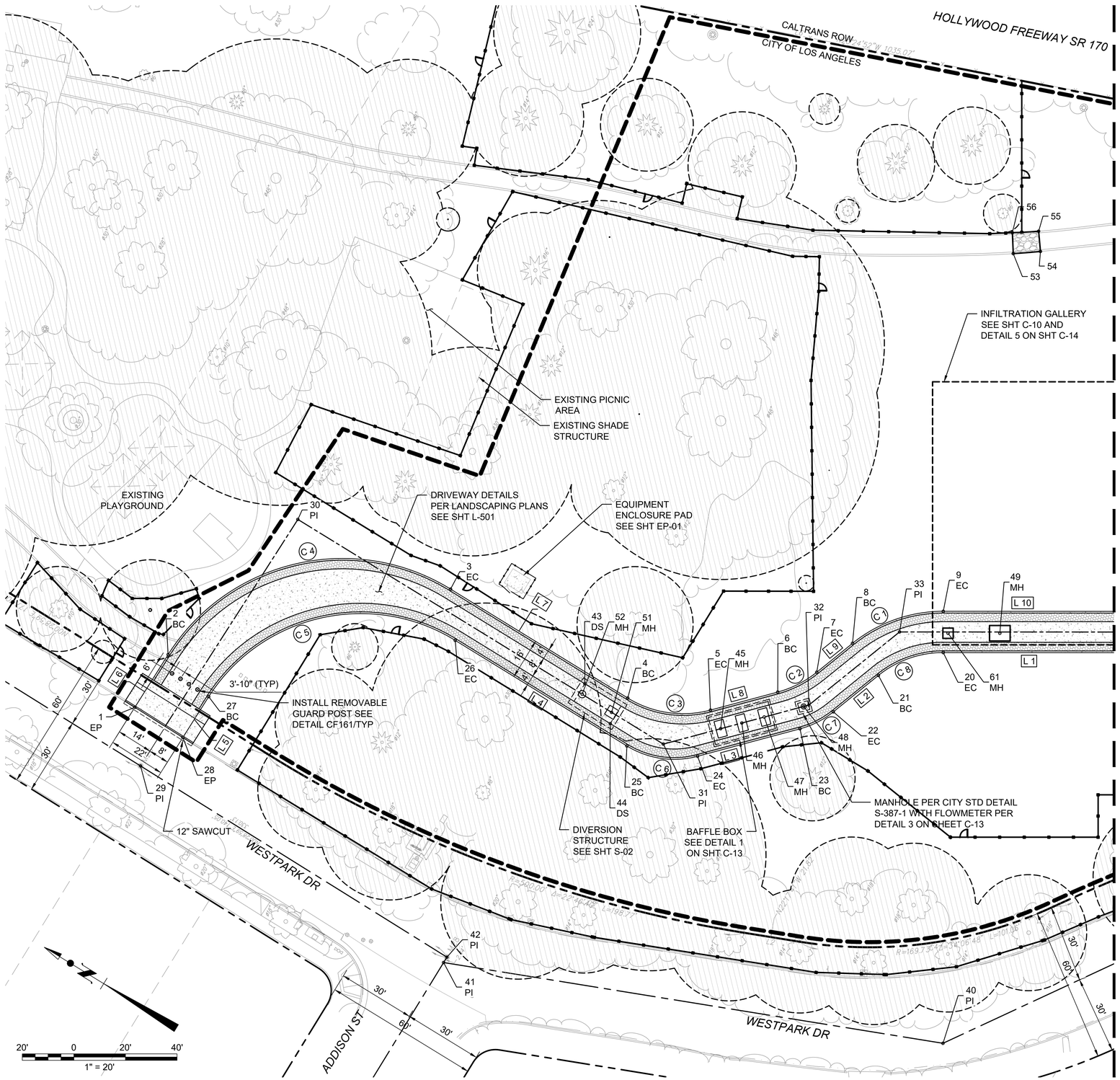

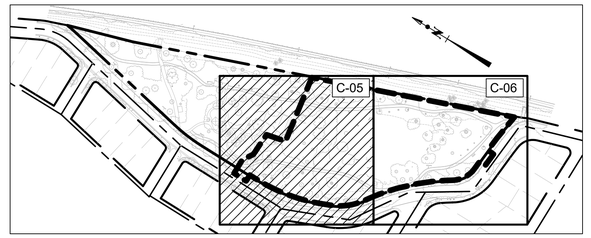

KEY MAP
NTS

LEGEND:

- CONCRETE PAVEMENT
- GRASSCRETE PAVEMENT
- DG WALKWAY REPAIR
- TREE PROTECTION ZONE - SEE SHEET L-100A
- TREE PROTECTION FENCE PER SHEET L-100A, DETAIL 1
- LIMIT OF WORK
- PROPERTY LINE
- REMOVABLE GUARD POST SEE DETAIL CF161, SHEET C-16
- EP EDGE OF PAVEMENT
- PI POINT OF INTERSECTION
- BC BEGINNING OF CURVE
- EC END OF CURVE
- MH MAINTENANCE HOLE
- DS DIVERSION STRUCTURE

NOTES:

1. FOR PI DATA SEE POINT TABLE ON SHEET C-07.
2. FOR LINE DATA SEE LINE TABLE ON SHEET C-07.
3. FOR CURVE DATA SEE CURVE TABLE ON SHEET C-07.
4. ALL WORK PERFORMED WITHIN THE TREE PROTECTION ZONES SHALL ADHERE TO THE TREE PROTECTION SPECIFICATIONS LISTED ON SHEET L-100A

STORMWATER MITIGATION
LOW IMAPCT DEVELOPMENT (LID)
APPROVED WITH CONDITIONS

This set of plans and specifications must be at the jobsite during construction

Stormwater Observation Report (SOR) is required prior to issuance of Certificate of Occupancy or final sign off.

Total Pages 48

Digitally Signed By: S. Garcia Date: 12/12/2023
Department of Public Works - Bureau of Sanitation
Watershed Protection Division

PLANS PREPARED BY:
carollo
707 WILSHIRE BLVD., SUITE 3920
LOS ANGELES, CA 90017
(213) 489-1587

CITY OF LOS ANGELES DEPARTMENT OF PUBLIC WORKS
BUREAU OF ENGINEERING

ENGINEERING
CITY OF LOS ANGELES

THIS PLAN WAS ELECTRONICALLY • SIGNED AND STAMPED

Digitally signed by Matthew B. Huckaby
Contact Info: Carollo Engineers, Inc.
Date: 2023.12.12 08:00:00 -08'00'

REGISTERED PROFESSIONAL ENGINEER MATTHEW B. HUCKABY No. 76961 CIVIL STATE OF CALIFORNIA

VERTICAL CONTROL:	VERTICAL CONTROL
HORIZONTAL CONTROL:	HORIZONTAL CONTROL
SHEET TITLE:	HORIZONTAL CONTROL PLAN AND PAVING - 1
PROJECT:	VALLEY VILLAGE PARK STORM WATER CAPTURE PROJECT
ADDRESS:	VALLEY VILLAGE PARK 5000 Westpark Dr, North Hollywood, CA 91601

NO.	REVISIONS	DATE	BY
		YY/MM/DD	
		YY/MM/DD	
		YY/MM/DD	
		YY/MM/DD	

CIP NO. SCP0009

INDEX NO.

CITY ENGINEER		DATE
TED ALLEN, P.E.		YY/MM/DD
DESIGN GROUP		
ENGINEER:	PVT - MATT HUCKABY	YY/MM/DD
ARCHITECT:	XXX	YY/MM/DD
DESIGNED BY:	PVT - JERRY GANTNEY	YY/MM/DD
DRAWN BY:	PVT - ATTILA SIMON	YY/MM/DD
CHECKED BY:	PVT - RAPHAEL BUI	YY/MM/DD
APPROVED BY:	PVT - MIKO AIVAZIAN	YY/MM/DD

WORK ORDER
EW40085F

SHEET NAME
C-05
SHEET 10 OF 80 SHEETS

THE CITY OF LOS ANGELES OR ITS OFFICERS OR AGENTS SHALL NOT BE RESPONSIBLE FOR THE ACCURACY OR COMPLETENESS OF ELECTRONIC COPIES OF THIS PLAN SHEET.

REVISION DATES (DESIGN STAGE ONLY)

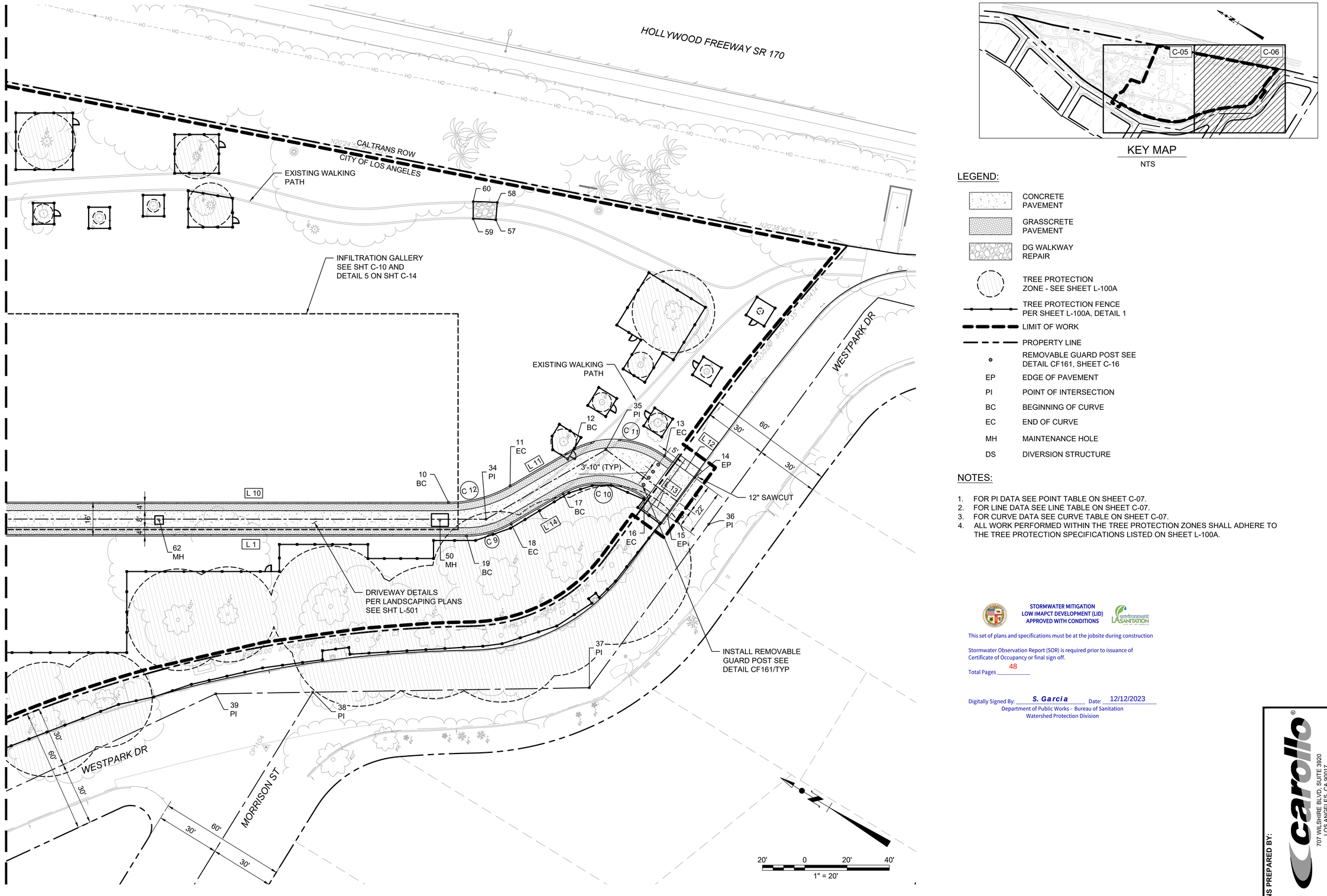

KEY MAP
NTS

LEGEND:

- CONCRETE PAVEMENT
- GRASSCRETE PAVEMENT
- DG WALKWAY REPAIR
- TREE PROTECTION ZONE - SEE SHEET L-100A
- TREE PROTECTION FENCE PER SHEET L-100A, DETAIL 1
- LIMIT OF WORK
- PROPERTY LINE
- REMOVABLE GUARD POST SEE DETAIL CF161, SHEET C-16
- EP EDGE OF PAVEMENT
- PI POINT OF INTERSECTION
- BC BEGINNING OF CURVE
- EC END OF CURVE
- MH MAINTENANCE HOLE
- DS DIVERSION STRUCTURE

NOTES:

1. FOR PI DATA SEE POINT TABLE ON SHEET C-07.
2. FOR LINE DATA SEE LINE TABLE ON SHEET C-07.
3. FOR CURVE DATA SEE CURVE TABLE ON SHEET C-07.
4. ALL WORK PERFORMED WITHIN THE TREE PROTECTION ZONES SHALL ADHERE TO THE TREE PROTECTION SPECIFICATIONS LISTED ON SHEET L-100A.

STORMWATER MITIGATION
LOW IMAPCT DEVELOPMENT (LID)
APPROVED WITH CONDITIONS

This set of plans and specifications must be at the jobsite during construction

Stormwater Observation Report (SOR) is required prior to issuance of Certificate of Occupancy or final sign off.

Total Pages 48

Digitally Signed By: S. Garcia Date: 12/12/2023
Department of Public Works - Bureau of Sanitation
Watershed Protection Division

THE CITY OF LOS ANGELES OR ITS OFFICERS OR AGENTS SHALL NOT BE RESPONSIBLE FOR THE ACCURACY OR COMPLETENESS OF ELECTRONIC COPIES OF THIS PLAN SHEET.

REVISION DATES (DESIGN STAGE ONLY)

ENGINEERING
CITY OF LOS ANGELES

Digitally signed by Matthew B. Huckaby
Contact Info: Carollo Engineers, Inc.
Date: 2023.12.08 12:04:09 -08'00'

REGISTERED PROFESSIONAL ENGINEER MATTHEW B. HUCKABY No. 76961 CIVIL STATE OF CALIFORNIA

THIS PLAN WAS ELECTRONICALLY • SIGNED AND STAMPED

BUREAU OF ENGINEERING

VERTICAL CONTROL:
HORIZONTAL CONTROL:

SHEET TITLE: HORIZONTAL CONTROL PLAN AND PAVING - 2

PROJECT: VALLEY VILLAGE PARK STORM WATER CAPTURE PROJECT

ADDRESS: VALLEY VILLAGE PARK
5000 Westpark Dr, North Hollywood, CA 91601

NO.	REVISIONS	DATE	BY
		YY/MM/DD	
		YY/MM/DD	
		YY/MM/DD	
		YY/MM/DD	

CIP NO. SCP0009

INDEX NO.

CITY OF LOS ANGELES DEPARTMENT OF PUBLIC WORKS

CITY ENGINEER: TED ALLEN, P.E. DATE

DESIGN GROUP		DATE
ENGINEER:	PVT - MATT HUCKABY	YY/MM/DD
ARCHITECT:	XXX	YY/MM/DD
DESIGNED BY:	PVT - JERRY GANTNEY	YY/MM/DD
DRAWN BY:	PVT - ATTILA SIMON	YY/MM/DD
CHECKED BY:	PVT - RAPHAEL BUI	YY/MM/DD
APPROVED BY:	PVT - MIKO AIVAZIAN	YY/MM/DD

PLANS PREPARED BY:
carollo
707 WILSHIRE BLVD, SUITE 3920
LOS ANGELES, CA 90017
(213) 489-1587

WORK ORDER
EW40085F

SHEET NAME
C-06
SHEET 11 OF 80 SHEETS

POINT TABLE		
POINT #	NORTHING	EASTING
1	1881445.99	6445852.46
2	1881445.66	6445876.60
3	1881365.53	6445955.48
4	1881284.87	6445955.34
5	1881255.07	6445968.11
6	1881236.47	6445987.69
7	1881227.59	6446002.16
8	1881221.60	6446018.95
9	1881198.08	6446047.91
10	1880963.24	6446191.62
11	1880942.49	6446213.51
12	1880925.81	6446244.46
13	1880887.58	6446263.77
14	1880870.02	6446262.38
15	1880871.74	6446240.45
16	1880885.47	6446241.53
17	1880919.02	6446223.28
18	1880932.52	6446198.31
19	1880947.55	6446182.45
20	1881189.73	6446034.27
21	1881206.53	6446013.57
22	1881214.08	6445992.40
23	1881221.66	6445980.05
24	1881249.99	6445950.22
25	1881275.43	6445939.32
26	1881353.62	6445939.46
27	1881423.72	6445870.92
28	1881424.00	6445852.18
29	1881432.25	6445834.22
30	1881430.12	6445947.59
31	1881263.79	6445947.30

POINT TABLE		
POINT #	NORTHING	EASTING
32	1881223.53	6445989.71
33	1881208.37	6446032.24
34	1880943.91	6446194.05
35	1880912.75	6446251.72
36	1880852.92	6446246.98
37	1880860.68	6446151.64
38	1880971.05	6446081.57
39	1881009.77	6446056.99
40	1881110.71	6445905.01
41	1881292.21	6445830.60
42	1881292.20	6445833.04
43	1881301.95	6445951.39
44	1881285.47	6445943.33
45	1881247.93	6445964.01
46	1881242.08	6445970.18
47	1881235.88	6445976.70
48	1881224.98	6445988.18
49	1881174.93	6446052.12
50	1880962.30	6446182.34
51	1881287.29	6445947.34
52	1881300.71	6445947.38
53	1881247.37	6446180.37
54	1881238.81	6446186.59
55	1881243.52	6446192.91
56	1881251.88	6446187.10
57	1881013.85	6446317.13
58	1881017.57	6446324.53
59	1881023.25	6446312.00
60	1881027.46	6446318.93
61	1881192.06	6446041.63
62	1881075.48	6446113.03

LINE TABLE		
LINE #	LENGTH (FT)	DIRECTION
L 1	283.92	S31° 27' 40"E
L 2	22.48	S70° 23' 00"E
L 3	41.13	S46° 29' 00"E
L 4	78.19	S00° 05' 55"W
L 5	18.74	S89° 09' 33"E
L 6	24.14	S89° 12' 05"E
L 7	80.66	S00° 05' 55"W
L 8	27.01	S46° 29' 00"E
L 9	17.82	S70° 23' 00"E
L 10	275.32	S31° 27' 47"E
L 11	32.82	S61° 36' 46"E
L 12	17.61	S04° 31' 28"W
L 13	13.77	S04° 31' 28"W
L 14	28.39	S61° 36' 46"E

CURVE TABLE				
CURVE #	LENGTH (FT)	RADIUS (FT)	DELTA	TANGENT (FT)
C 1	38.04	56.00	038°55'13"	19.79
C 2	17.10	41.00	023°54'00"	8.68
C 3	33.33	41.00	046°34'55"	17.65
C 4	124.69	80.00	089°18'01"	79.03
C 5	108.62	70.00	088°54'16"	68.67
C 6	28.46	35.00	046°34'55"	15.07
C 7	14.60	35.00	023°54'00"	7.41
C 8	27.17	40.00	038°55'20"	14.13
C 9	22.10	42.00	030°09'06"	11.31
C 10	40.40	35.00	066°08'14"	22.79
C 11	47.33	41.00	066°08'14"	26.70
C 12	30.52	58.00	030°08'59"	15.62

STORMWATER MITIGATION
LOW IMAPCT DEVELOPMENT (LID)
APPROVED WITH CONDITIONS

This set of plans and specifications must be at the jobsite during construction

Stormwater Observation Report (SOR) is required prior to issuance of Certificate of Occupancy or final sign off.

Total Pages 48

Digitally Signed By: S. Garcia Date: 12/12/2023
Department of Public Works - Bureau of Sanitation
Watershed Protection Division

BOARD OF BUILDING AND SAFETY COMMISSIONERS
JAVIER NUNEZ, PRESIDENT
ELVIN W. MOON, VICE PRESIDENT
JOSELYN GEAGA-ROSENTHAL
LAUREL GILLETTE
GEORGE HOVAGUIMIAN

CITY OF LOS ANGELES
CALIFORNIA
ERIC GARCETTI, MAYOR

DEPARTMENT OF BUILDING AND SAFETY
201 NORTH FIGUEROA STREET
LOS ANGELES, CA 90012
OSAMA YOUNAN, P.E., GENERAL MANAGER
SUPERINTENDENT OF BUILDING
JOHN WEIGHT, EXECUTIVE OFFICER

GEOLOGY AND SOILS REPORT APPROVAL LETTER

October 12, 2022

LOG # 121936-01
SOILS/GEOLOGY FILE - 2
LIQ-Exempt

City of Los Angeles, Department of Recreation and Parks
221 N. Figueroa Street, Ste. 400
Los Angeles, CA 90012

TRACT: 10157
LOT(S): 4 and 5
LOCATION: 5000 N. Westpark Drive

CURRENT REFERENCE REPORT/LETTER(S)	REPORT No.	DATE OF DOCUMENT	PREPARED BY
Addendum Report	211307001	08/31/2022	Ninyo & Morre

PREVIOUS REFERENCE REPORT/LETTER(S)	REPORT No.	DATE OF DOCUMENT	PREPARED BY
Dept. Review Letter	121936	07/07/2022	LADBS
Geology/Soils Report	211307001	08/12/2020	Ninyo & Morre

The Grading Division of the Department of Building and Safety has reviewed the referenced report that provides recommendations for a proposed stormwater capture and infiltration system to be constructed in southwesterly part of North Hollywood Park. According to the reports, the proposed facility is intended to capture up to 2,912 acre-feet of stormwater runoff by diversion structures, water storage structures and infiltration devises. The proposed conceptual infiltration gallery is about 24,000 square feet in area with an internal height of 12 feet. According to the current report, the proposed infiltration will be at the bottom of the open gallery, with two feet of drain rock and filter fabric. Drywells are not proposed.

The earth materials at the subsurface exploration locations consist of up to 1 feet of uncertified fill underlain by alluvium. Exploration consisted of one hollow-stem auger (HSA) boring to 76.5 feet in depth, two HAS boring 25 feet in depth in which percolation tests were conducted, and two Cone Penetrometer Test soundings to about 35 feet deep. The percolation test results include 38.3 inches /hour in percolation test 1 (constant head method) and 1.1 inches/hour from the second test (falling head method).

The consultants recommend to support the proposed structure(s) on conventional foundations bearing on native undisturbed soils. Temporary excavations of about 28 feet are to be trimmed at a gradient of 1.5:1 (H:V).

The referenced report(s) is (are) acceptable, provided the following conditions are complied with during site development:

(Note: Numbers in parenthesis ( ) refer to applicable sections of the 2020 City of LA Building Code. P/BC numbers refer the applicable Information Bulletin. Information Bulletins can be accessed on the internet at LADBS.ORG.)

1. The geologist and soils engineer shall review and approve the detailed plans prior to issuance of any permits. This approval shall be by signature on the plans that clearly indicates the geologist and soils engineer have reviewed the plans prepared by the design engineer; and, that the plans include the recommendations contained in their reports (7006.1).
2. All recommendations of the report(s) that are in addition to or more restrictive than the conditions contained herein shall be incorporated into the plans.
3. A copy of the subject and appropriate referenced reports and this approval letter shall be attached to the District Office and field set of plans (7006.1). Submit one copy of the above reports to the Building Department Plan Checker prior to issuance of the permit.
4. A grading permit shall be obtained for all structural fill and retaining wall backfill (106.1.2).
5. All man-made fill shall be compacted to a minimum 90 percent of the maximum dry density of the fill material per the latest version of ASTM D 1557. Where cohesionless soil having less than 15 percent finer than 0.005 millimeters is used for fill, it shall be compacted to a minimum of 95 percent relative compaction based on maximum dry density. Placement of gravel in lieu of compacted fill is only allowed if complying with LAMC Section 91.7011.3.
6. Existing uncertified fill shall not be used for support of footings, concrete slabs or new fill (1809.2, 7011.3).
7. Drainage in conformance with the provisions of the Code shall be maintained during and subsequent to construction (7013.12).
8. Grading shall be scheduled for completion prior to the start of the rainy season, or detailed temporary erosion control plans shall be filed in a manner satisfactory to the Grading Division of the Department and the Department of Public Works, Bureau of Engineering, B-Permit Section, for any grading work in excess of 200 cubic yards (7007.1).

   6262 Van Nuys Blvd. Ste 351, Van Nuys (818) 374-4605

9. The applicant is advised that the approval of this report does not waive the requirements for excavations contained in the General Safety Orders of the California Department of Industrial Relations (3301.1).

10. Prior to the issuance of the permits, the soils engineer and/or the structural designer shall evaluate the surcharge loads used in the report calculations for the design of the retaining walls and shoring. If the surcharge loads used in the calculations do not conform to the actual surcharge loads, the soil engineer shall submit a supplementary report with revised recommendations to the Department for approval.
11. Unsurcharged temporary excavations shall be trimmed back at a gradient not exceeding 1.5:1, as recommended.
12. The soils engineer shall review and approve the shoring and/or underpinning plans prior to issuance of the permit (3307.3.2).
13. A shoring monitoring program shall be implemented to the satisfaction of the soils engineer.
14. Installation of shoring shall be performed under the inspection and approval of the soils engineer and deputy grading inspector (1705.6, 1705.8).
15. The seismic design shall be based on a Site Class D, as recommended. All other seismic design parameters shall be reviewed by LADBS building plan check.
16. Retaining walls shall be designed for the lateral earth pressures specified on Figure 10 of the 08/12/2022 report. All surcharge loads shall be included into the design.
17. All retaining walls shall be provided with a standard surface backdrain system and all drainage shall be conducted in a non-erosive device to the street in an acceptable manner (7013.11).
18. With the exception of retaining walls designed for hydrostatic pressure, all retaining walls shall be provided with a subdrain system to prevent possible hydrostatic pressure behind the wall. Prior to issuance of any permit, the retaining wall subdrain system recommended in the soils report shall be incorporated into the foundation plan which shall be reviewed and approved by the soils engineer of record (1805.4).
19. Installation of the subdrain system shall be inspected and approved by the soils engineer of record and the City grading/building inspector (108.9).
20. All concentrated drainage shall be conducted in an approved device and disposed of in a manner approved by the LADBS (7013.10).
21. Any recommendations prepared by the geologist and/or the soils engineer for correction of geological hazards found during grading shall be submitted to the Grading Division of the Department for approval prior to use in the field (7008.2, 7008.3).
22. The geologist or soils engineer shall inspect all excavations to determine that conditions anticipated in the report have been encountered and to provide recommendations for the correction of hazards found during grading (7008, 1705.6 & 1705.8).
23. Prior to pouring concrete, a representative of the consulting soils engineer shall inspect and approve the footing excavations. The representative shall post a notice on the job site for the LADBS Inspector and the Contractor stating that the work inspected meets the conditions of the report. No concrete shall be poured until the LADBS Inspector has also

inspected and approved the footing excavations. A written certification to this effect shall be filed with the Grading Division of the Department upon completion of the work. (108.9 & 7008.2)

24. Prior to excavation an initial inspection shall be called with the LADBS Inspector. During the initial inspection, the sequence of construction; shoring; protection fences; and, dust and traffic control will be scheduled (108.9.1).
25. Prior to the placing of compacted fill, a representative of the soils engineer shall inspect and approve the bottom excavations. The representative shall post a notice on the job site for the LADBS Inspector and the Contractor stating that the soil inspected meets the conditions of the report. No fill shall be placed until the LADBS Inspector has also inspected and approved the bottom excavations. A written certification to this effect shall be included in the final compaction report filed with the Grading Division of the Department. All fill shall be placed under the inspection and approval of the soils engineer. A compaction report together with the approved soil report and Department approval letter shall be submitted to the Grading Division of the Department upon completion of the compaction. In addition, an Engineer's Certificate of Compliance with the legal description as indicated in the grading permit and the permit number shall be included (7011.3).

DANIEL C. SCHNEIDEREIT
Engineering Geologist II

DAN RYAN EVANGELISTA
Structural Engineering Associate IV

DCS/DRE:dcs/dre
Log No. 121936-01
213-482-0480

cc: Micko, Applicant
Ninyo & Morre, Project Consultant
VN District Office

THIS PLAN WAS ELECTRONICALLY • SIGNED AND STAMPED

ENGINEERING
CITY OF LOS ANGELES

Digitally signed by Matthew B. Huckaby
Contact Info: Carollo Engineers, Inc.
Date: 2023.12.01 11:59:47 -08'00'

REGISTERED PROFESSIONAL ENGINEER MATTHEW B. HUCKABY No. 76961 STATE OF CALIFORNIA CIVIL

BUREAU OF ENGINEERING

VERTICAL CONTROL:
HORIZONTAL CONTROL:

SHEET TITLE: HORIZONTAL CONTROL DATA

PROJECT: VALLEY VILLAGE PARK STORM WATER CAPTURE PROJECT

ADDRESS: VALLEY VILLAGE PARK
5000 Westpark Dr, North Hollywood, CA 91601

CITY OF LOS ANGELES DEPARTMENT OF PUBLIC WORKS

NO.	REVISIONS	DATE	BY
		YY/MM/DD	
		YY/MM/DD	
		YY/MM/DD	
		YY/MM/DD	

CIP NO. SCP0009

INDEX NO.

CITY ENGINEER
TED ALLEN, P.E.
DATE

DESIGN GROUP		DATE
ENGINEER:	PVT - MATT HUCKABY	YY/MM/DD
ARCHITECT:	XXX	YY/MM/DD
DESIGNED BY:	PVT - JERRY GANTNEY	YY/MM/DD
DRAWN BY:	PVT - ATTILA SIMON	YY/MM/DD
CHECKED BY:	PVT - RAPHAEL BUI	YY/MM/DD
APPROVED BY:	PVT - MIKO AIVAZIAN	YY/MM/DD

PLANS PREPARED BY:
carollo
707 WILSHIRE BLVD., SUITE 3920
LOS ANGELES, CA 90017
(213) 469-1587

WORK ORDER
EW40085F

SHEET NAME
C-07
SHEET 12 OF 80 SHEETS

THE CITY OF LOS ANGELES OR ITS OFFICERS OR AGENTS SHALL NOT BE RESPONSIBLE FOR THE ACCURACY OR COMPLETENESS OF ELECTRONIC COPIES OF THIS PLAN SHEET.

REVISION DATES (DESIGN STAGE ONLY)

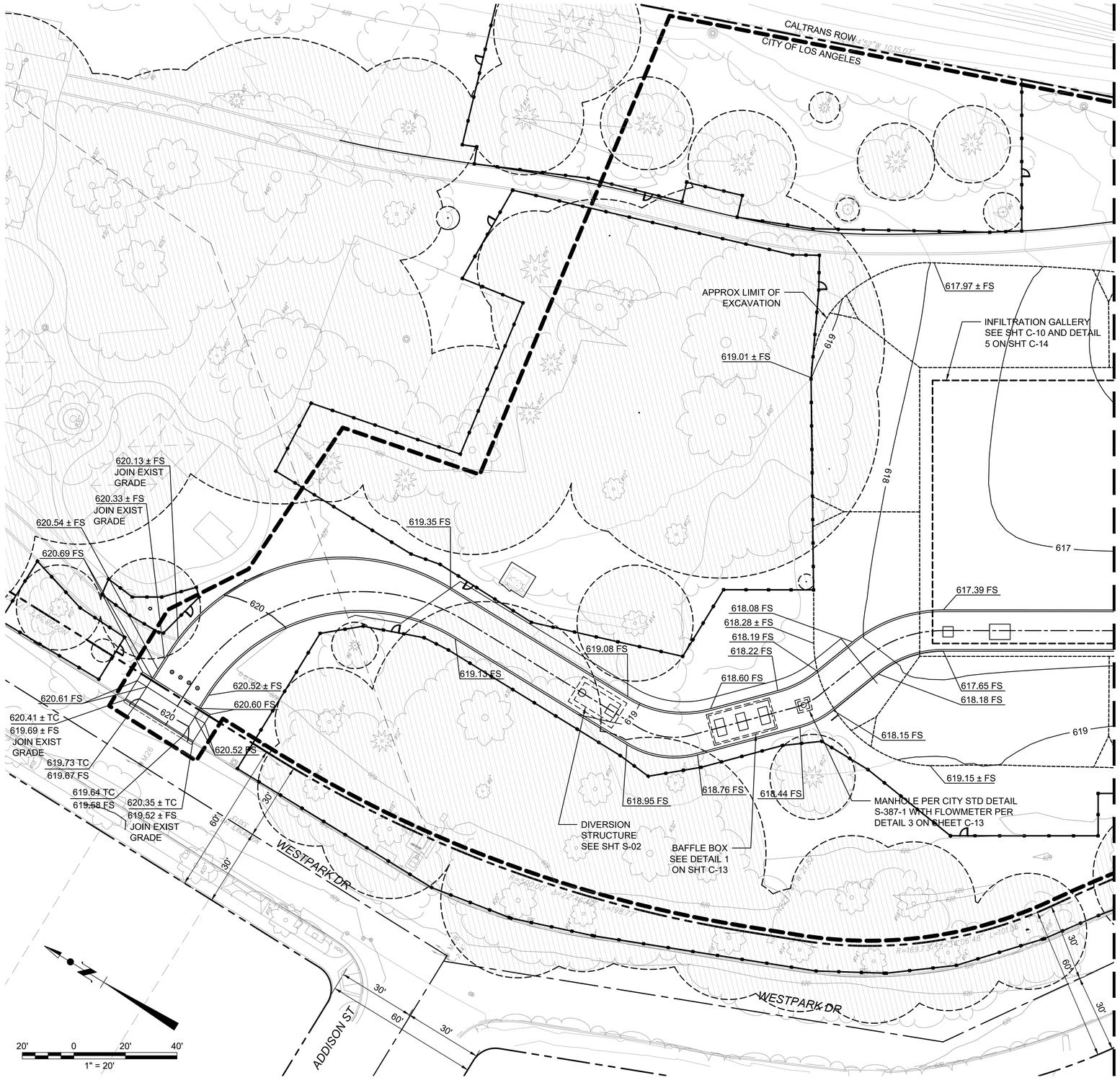

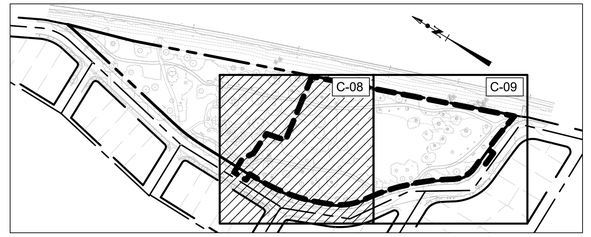

KEY MAP
NTS

LEGEND:

- TREE PROTECTION ZONE - SEE SHEET L-100A
- TREE PROTECTION FENCE PER SHEET L-100A, DETAIL 1
- LIMIT OF WORK
- PROPERTY LINE
- REMOVABLE GUARD POST SEE DETAIL CF161, SHEET C-16

NOTES:

1. DRIVEWAY MATERIAL PER LANDSCAPING PLANS.
2. SITE FURNISHINGS PER LANDSCAPING PLANS.
3. UNDERGROUND INFILTRATION GALLERIES, MAINTENANCE HOLES, HDS UNITS, DIVERSION STRUCTURE, AND STORM DRAIN SYSTEM PER STORM DRAIN PLANS.
4. ALL WORK PERFORMED WITHIN THE TREE PROTECTION ZONES SHALL ADHERE TO THE TREE PROTECTION SPECIFICATIONS LISTED ON SHEET L-100A.

STORMWATER MITIGATION
LOW IMAPCT DEVELOPMENT (LID)
APPROVED WITH CONDITIONS

This set of plans and specifications must be at the jobsite during construction

Stormwater Observation Report (SOR) is required prior to issuance of Certificate of Occupancy or final sign off.

Total Pages 48

Digitally Signed By: S. Garcia Date: 12/12/2023
Department of Public Works - Bureau of Sanitation
Watershed Protection Division

PLANS PREPARED BY:
carollo
707 WILSHIRE BLVD, SUITE 3920
LOS ANGELES, CA 90017
(213) 489-1587

CITY OF LOS ANGELES DEPARTMENT OF PUBLIC WORKS BUREAU OF ENGINEERING

ENGINEERING
CITY OF LOS ANGELES

Digitally signed by Matthew B. Huckaby
Contact Info: Carollo Engineers, Inc.
Date: 2023.12.12 09:47:00 -08'00'

REGISTERED PROFESSIONAL ENGINEER MATTHEW B. HUCKABY No. 76961 CIVIL STATE OF CALIFORNIA

THIS PLAN WAS ELECTRONICALLY • SIGNED AND STAMPED

VERTICAL CONTROL:
HORIZONTAL CONTROL:

SHEET TITLE: GRADING AND DRAINAGE PLAN - 1

PROJECT: VALLEY VILLAGE PARK STORM WATER CAPTURE PROJECT

ADDRESS: VALLEY VILLAGE PARK
5000 Westpark Dr, North Hollywood, CA 91601

NO.	REVISIONS	DATE	BY
		YY/MM/DD	
		YY/MM/DD	
		YY/MM/DD	
		YY/MM/DD	

CIP NO. SCP0009

INDEX NO.

CITY ENGINEER: TED ALLEN, P.E. DATE

DESIGN GROUP		DATE
ENGINEER:	PVT - MATT HUCKABY	YY/MM/DD
ARCHITECT:	XXX	YY/MM/DD
DESIGNED BY:	PVT - JERRY GANTNEY	YY/MM/DD
DRAWN BY:	PVT - ATTILA SIMON	YY/MM/DD
CHECKED BY:	PVT - RAPHAEL BUI	YY/MM/DD
APPROVED BY:	PVT - MIKO AIVAZIAN	YY/MM/DD

WORK ORDER
EW40085F

SHEET NAME
C-08
SHEET 13 OF 80 SHEETS

THE CITY OF LOS ANGELES OR ITS OFFICERS OR AGENTS SHALL NOT BE RESPONSIBLE FOR THE ACCURACY OR COMPLETENESS OF ELECTRONIC COPIES OF THIS PLAN SHEET.

REVISION DATES (DESIGN STAGE ONLY)

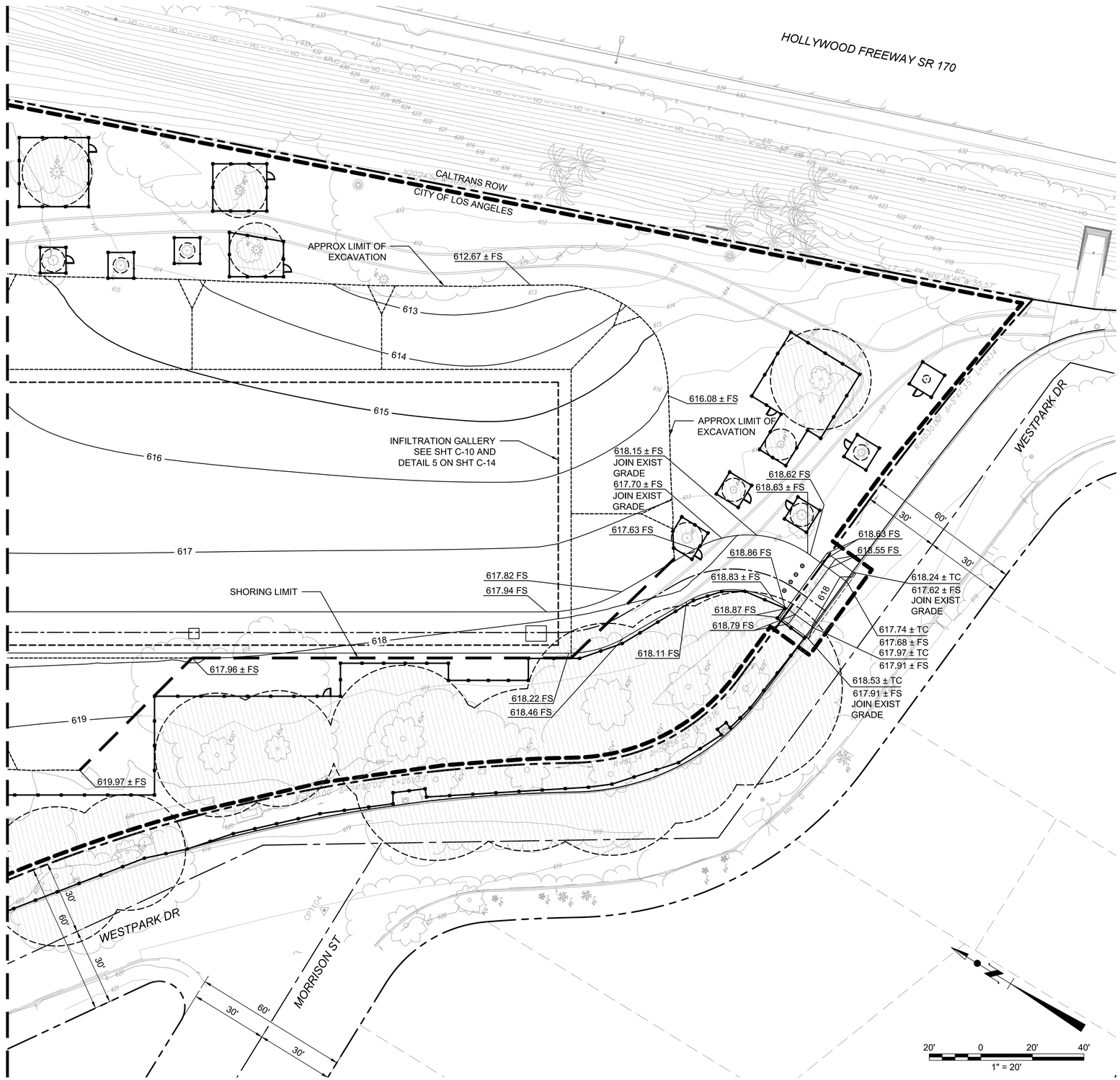

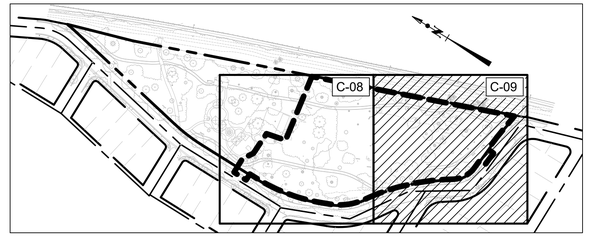

KEY MAP

NTS

LEGEND:

- TREE PROTECTION ZONE - SEE SHEET L-100A
- TREE PROTECTION FENCE PER SHEET L-100A, DETAIL 1
- LIMIT OF WORK
- PROPERTY LINE
- REMOVABLE GUARD POST SEE DETAIL CF161, SHEET C-16

NOTES:

1. DRIVEWAY MATERIAL PER LANDSCAPING PLANS.
2. SITE FURNISHINGS PER LANDSCAPING PLANS.
3. UNDERGROUND INFILTRATION GALLERIES, MAINTENANCE HOLES, HDS UNITS, DIVERSION STRUCTURE, AND STORM DRAIN SYSTEM PER STORM DRAIN PLANS.
4. ALL WORK PERFORMED WITHIN THE TREE PROTECTION ZONES SHALL ADHERE TO THE TREE PROTECTION SPECIFICATIONS LISTED ON SHEET L-100A.

STORMWATER MITIGATION
LOW IMAPCT DEVELOPMENT (LID)
APPROVED WITH CONDITIONS

This set of plans and specifications must be at the jobsite during construction

Stormwater Observation Report (SOR) is required prior to issuance of Certificate of Occupancy or final sign off.

Total Pages 48

Digitally Signed By: S. Garcia Date: 12/12/2023
Department of Public Works - Bureau of Sanitation
Watershed Protection Division

PLANS PREPARED BY:
carollo
707 WILSHIRE BLVD., SUITE 3920
LOS ANGELES, CA 90017
(213) 499-1567

CITY OF LOS ANGELES DEPARTMENT OF PUBLIC WORKS BUREAU OF ENGINEERING

THIS PLAN WAS ELECTRONICALLY • SIGNED AND STAMPED

ENGINEERING
CITY OF LOS ANGELES

Digitally signed by Matthew B. Huckaby
Contact Info: Carollo Engineers, Inc.
Date: 2023.12.12 08:00:00 -08'00'

REGISTERED PROFESSIONAL ENGINEER MATTHEW B. HUCKABY No. 76961 STATE OF CALIFORNIA CIVIL

VERTICAL CONTROL: VERTICAL CONTROL
HORIZONTAL CONTROL: HORIZONTAL CONTROL

SHEET TITLE: GRADING AND DRAINAGE PLAN - 2
PROJECT: VALLEY VILLAGE PARK STORM WATER CAPTURE PROJECT
ADDRESS: VALLEY VILLAGE PARK 5000 Westpark Dr, North Hollywood, CA 91601

NO.	REVISIONS	DATE	BY
		YY/MM/DD	
		YY/MM/DD	
		YY/MM/DD	
		YY/MM/DD	

CIP NO. SCP0009

INDEX NO.

CITY ENGINEER: TED ALLEN, P.E. DATE YY/MM/DD

DESIGN GROUP		DATE
ENGINEER:	PVT - MATT HUCKABY	YY/MM/DD
ARCHITECT:	XXX	YY/MM/DD
DESIGNED BY:	PVT - JERRY GANTNEY	YY/MM/DD
DRAWN BY:	PVT - ATTILA SIMON	YY/MM/DD
CHECKED BY:	PVT - RAPHAEL BUI	YY/MM/DD
APPROVED BY:	PVT - MIKO AIVAZIAN	YY/MM/DD

WORK ORDER
EW40085F

SHEET NAME
C-09
SHEET 14 OF 80 SHEETS

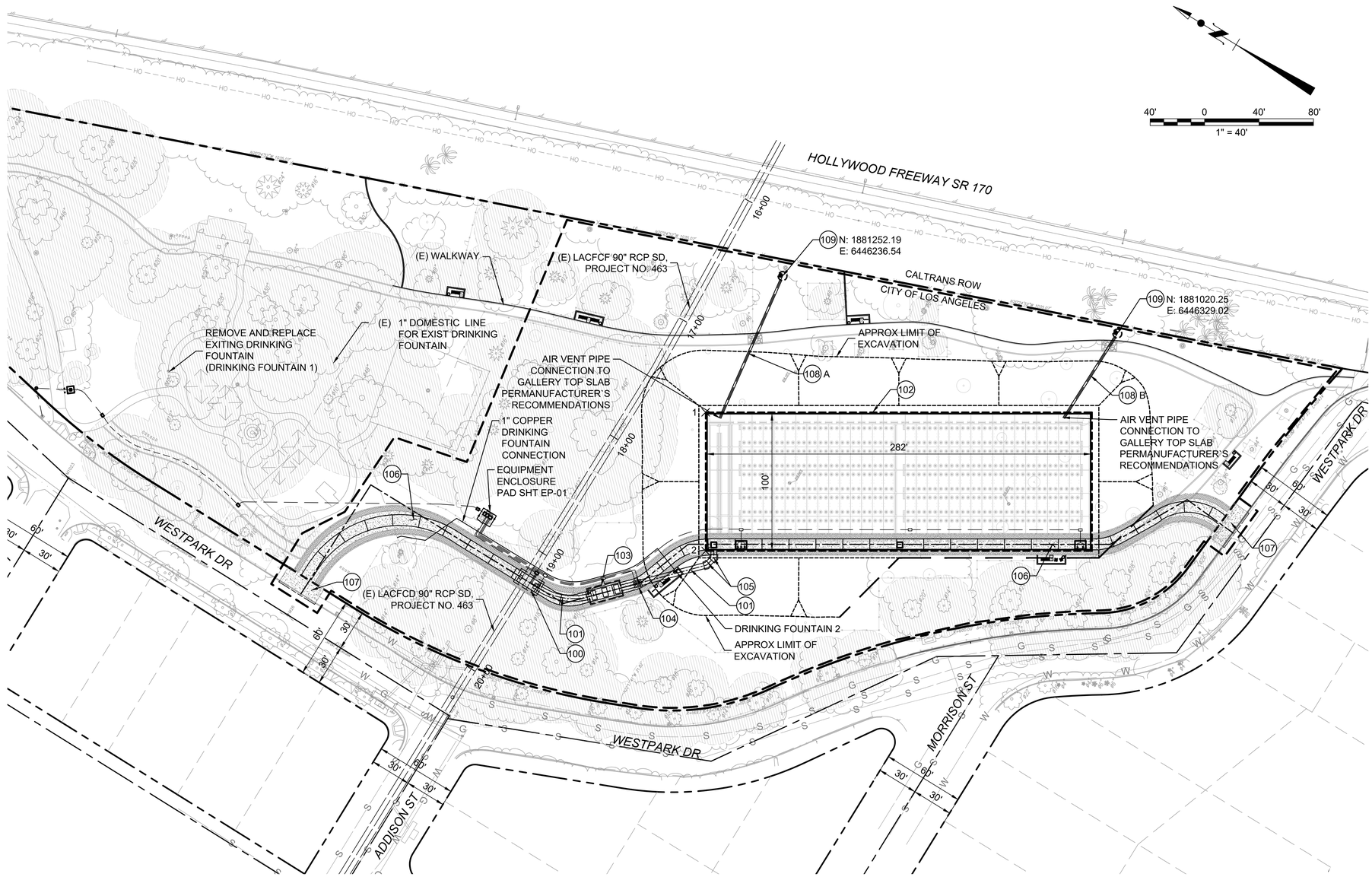

CONSTRUCTION NOTES:

CONSTRUCT — REMOVE & CONSTRUCT

REMOVE — WORK BY OTHERS

EXISTING-PROTECTING IN PLACE

100. DIVERSION STRUCTURE, SEE SHT S-02, S-03 AND M-02
101. 42" RCP STORM DRAIN, SEE SHT C-11 FOR PLAN AND PROFILE - BEDDING AND BACKFILL PER CITY STD DETAIL S-251-1
102. INFILTRATION GALLERY, PER SPECIFICATION SECTION 13330 AND DETAILS 5 AND 6 ON SHT C-14
103. PRETREATMENT DEVICE (BAFFLE BOX) PER SPECIFICATION SECTION 13240 AND DETAIL 1 ON SHT C-13
104. MAINTENANCE HOLE PER CITY STD DETAIL S-387-1 WITH FLOWMETER PER DETAIL 3 ON SHEET C-13.
105. CONCRETE COLLAR PER CITY STD DETAIL S-333-0
106. DRIVEWAY PER LANDSCAPING PLANS
107. CONCRETE DRIVEWAY ENTRANCE PER CITY STD S440-4 CASE 2, X=4.5 FT, Y=8.75 FT, W/2=11FT.
108. INSTALL 18" PVC AIR VENT PIPING - BEDDING AND BACKFILL PER CITY STD DETAIL S-251-1
109. INSTALL 18" SCHEDULE TO PVC AIR VENT PIPE RISER PER DETAIL 7 ON SHEET C-15 - BEDDING AND BACKFILL PER CITY STD DETAIL S-251-1

NOTES:

1. DRIVEWAY MATERIAL PER LANDSCAPING PLANS. DRIVEWAY CONCRETE PAVEMENT SHALL BE 4,000 PSI STRUCTURAL CONCRETE PER SPECIFICATION SECTION 03300.
2. SITE FURNISHINGS PER LANDSCAPING PLANS.
3. UNDERGROUND INFILTRATION GALLERIES, MAINTENANCE HOLES, BAFFLE BOX, DIVERSION STRUCTURE, AND STORM DRAIN SYSTEM PER STORM DRAIN PLANS.
4. THE DIVERSION STRUCTURE, INFILTRATION GALLERY, PRETREATMENT DEVICE, AND ASSOCIATED STORM DRAIN PIPING AND APPURTENANCES ARE TO BE MAINTAINED BY LADWP.
5. ALL WORK PERFORMED WITHIN THE TREE PROTECTION ZONES SHALL ADHERE TO THE TREE PROTECTION SPECIFICATIONS LISTED ON SHEET L-100A.
6. IMPROVEMENTS WITHIN THE LOS ANGELES COUNTY FLOOD CONTROL DISTRICT (LACFCD) RIGHT-OF-WAY ARE NOT TO BE MAINTAINED BY THE LACFCD.

POINT TABLE		
POINT #	NORTHING	EASTING
1	1881248.10	6446121.65
2	1881194.83	6446034.66

STORMWATER MITIGATION
LOW IMAPCT DEVELOPMENT (LID)
APPROVED WITH CONDITIONS

This set of plans and specifications must be at the jobsite during construction

Stormwater Observation Report (SOR) is required prior to issuance of Certificate of Occupancy or final sign off.

Total Pages 48

Digitally Signed By: S. Garcia Date: 12/12/2023
Department of Public Works - Bureau of Sanitation
Watershed Protection Division

PLANS PREPARED BY:
carollo
707 WILSHIRE BLVD, SUITE 3920
LOS ANGELES, CA 90017
(213) 499-1587

CITY OF LOS ANGELES DEPARTMENT OF PUBLIC WORKS
BUREAU OF ENGINEERING
THIS PLAN WAS ELECTRONICALLY • SIGNED AND STAMPED

ENGINEERING
CITY OF LOS ANGELES

Digitally signed by Matthew B. Huckaby
Contact Info: Carollo Engineers, Inc.
Date: 2023.12.12 12:00:00 -08'00'

REGISTERED PROFESSIONAL ENGINEER MATTHEW B. HUCKABY No. 76961 CIVIL STATE OF CALIFORNIA

VERTICAL CONTROL:
HORIZONTAL CONTROL:
SHEET TITLE: INFILTRATION GALLERIES AND STORM DRAIN PLAN
PROJECT: VALLEY VILLAGE PARK STORM WATER CAPTURE PROJECT
ADDRESS: VALLEY VILLAGE PARK 5000 Westpark Dr, North Hollywood, CA 91601

NO.	REVISIONS	DATE	BY
		YY/MM/DD	
		YY/MM/DD	
		YY/MM/DD	
		YY/MM/DD	

CIP NO. SCP0009

INDEX NO.

CITY ENGINEER	DESIGN GROUP	DATE
TED ALLEN, P.E.	ENGINEER: PVT - MATT HUCKABY	YY/MM/DD
	ARCHITECT: XXX	YY/MM/DD
	DESIGNED BY: PVT - JERRY GAITNEY	YY/MM/DD
	DRAWN BY: PVT - ATTILA SIMON	YY/MM/DD
	CHECKED BY: PVT - RAPHAEL BUI	YY/MM/DD
	APPROVED BY: PVT - MIKO ALVAZIAN	YY/MM/DD

WORK ORDER
EW40085F

SHEET NAME
C-10
SHEET 15 OF 80 SHEETS

THE CITY OF LOS ANGELES OR ITS OFFICERS OR AGENTS SHALL NOT BE RESPONSIBLE FOR THE ACCURACY OR COMPLETENESS OF ELECTRONIC COPIES OF THIS PLAN SHEET.

REVISION DATES (DESIGN STAGE ONLY)

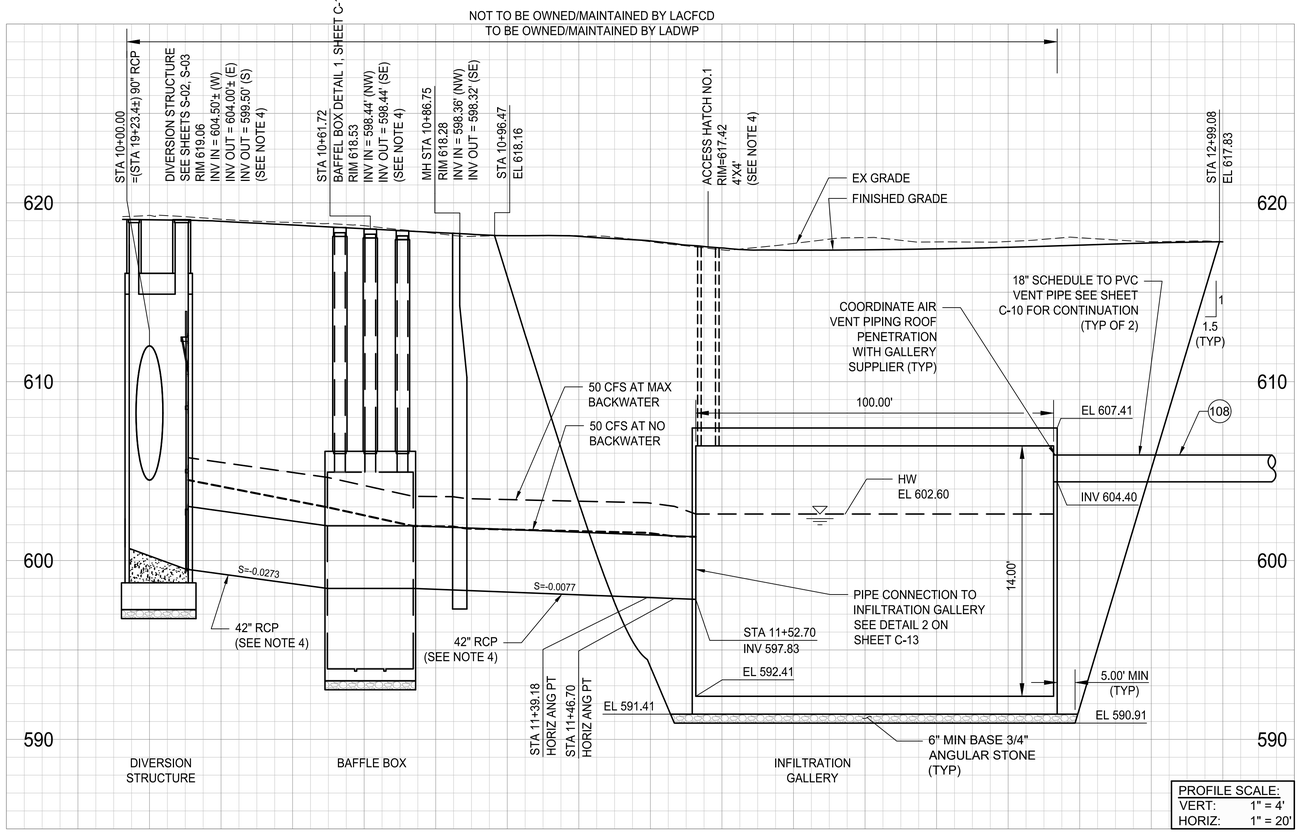

PROFILE SCALE:
VERT: 1" = 4'
HORIZ: 1" = 20'

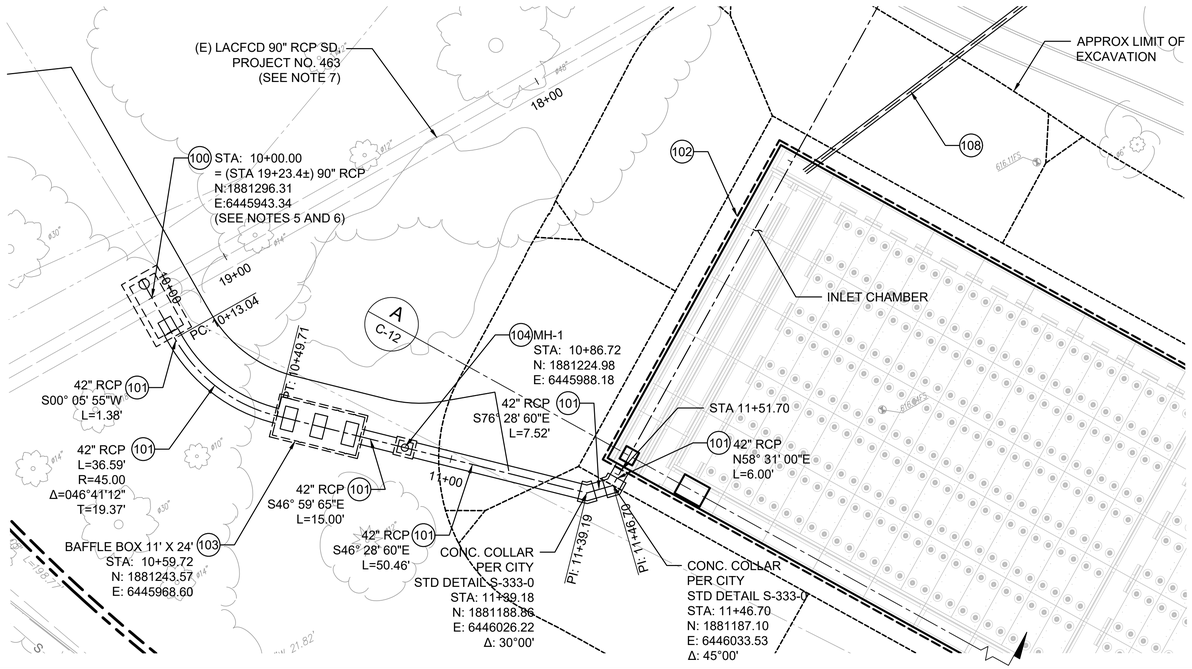

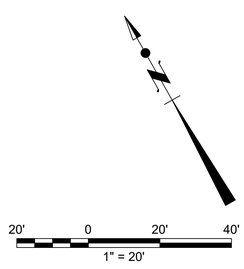

CONSTRUCTION NOTES:

CONSTRUCT — REMOVE & CONSTRUCT
REMOVE — WORK BY OTHERS
EXISTING-PROTECTING IN PLACE

100. DIVERSION STRUCTURE, SEE SHT S-02, S-03 AND M-02
101. 42" RCP SD PIPE, SEE THIS SHEET FOR PLAN AND PROFILE - BEDDING AND BACKFILL PER CITY STD DETAIL S-251-1
102. INFILTRATION GALLERY, PER SPECIFICATION SECTION 13330 AND DETAILS 5 AND 6 ON SHT C-14
103. PRETREATMENT DEVICE (BAFFLE BOX) PER SPECIFICATION SECTION 13240 AND DETAIL 1 ON SHT C-13
104. MAINTENANCE HOLE PER CITY STD DETAIL S-381-0 TYPE I WITH 30" PRESSURE MH COVER PER STD DETAILS S-284-2 AND S-283-3 AND WITH FLOWMETER PER DETAIL 3 ON SHEET C-13.
108. INSTALL 18" PVC AIR VENT PIPING - BEDDING AND BACKFILL PER CITY STD DETAIL S-251-1

NOTES:

1. FINAL LOCATIONS OF ACCESS MANHOLES TO INFILTRATION GALLERIES TO BE DETERMINED BY MANUFACTURER.
2. RCP SHALL BE CLASS IV, WALL B TONGUE AND GROOVE JOINTS.
3. REFER TO GEOTECHNICAL REPORT FOR ADDITIONAL REQUIREMENTS.
4. THE DIVERSION STRUCTURE, INFILTRATION GALLERY, PRETREATMENT DEVICE, AND ASSOCIATED STORM DRAIN PIPING AND APPURTENANCES ARE TO BE MAINTAINED BY LADWP.
5. IMPROVEMENTS WITHIN THE LOS ANGELES COUNTY FLOOD CONTROL DISTRICT (LACFCD) RIGHT-OF-WAY ARE NOT TO BE MAINTAINED BY THE LACFCD.
6. BEFORE WORK CAN BEGIN ON THE EXISTING LACFCD 90-IN STORM DRAIN, THE CONTRACTOR MUST SUBMIT A SHORING PLAN AND DRAINAGE DIVERSION PLAN FOR LAFCD APPROVAL. NO WORK CAN TAKE PLACE WITHIN THE STORM DRAIN DURING STORM SEASON (OCTOBER 15 - APRIL 15). THE DESIGN CAPACITY IS 395 CFS
7. PERMISSION FOR THE LACFCD TO CONSTRUCT, OPERATE, AND MAINTAIN THIS STORM DRAIN WAS GRANTED BY CITY OF LOS ANGELES ORDINANCE NO. 117,659

STORMWATER MITIGATION
LOW IMAPCT DEVELOPMENT (LID)
APPROVED WITH CONDITIONS

This set of plans and specifications must be at the jobsite during construction

Stormwater Observation Report (SOR) is required prior to issuance of Certificate of Occupancy or final sign off.

Total Pages 48

Digitally Signed By: S. Garcia Date: 12/12/2023
Department of Public Works - Bureau of Sanitation
Watershed Protection Division

PLANS PREPARED BY:
carollo
707 WILSHIRE BLVD., SUITE 3920
LOS ANGELES, CA 90017
(213) 489-1587

CITY OF LOS ANGELES DEPARTMENT OF PUBLIC WORKS
BUREAU OF ENGINEERING

THIS PLAN WAS ELECTRONICALLY • SIGNED AND STAMPED

ENGINEERING
CITY OF LOS ANGELES

Digitally signed by Matthew B. Huckaby
Contact Info: Carollo Engineers, Inc.
Date: 2023.12.12 12:01:00 -08'00'

REGISTERED PROFESSIONAL ENGINEER
MATTHEW B. HUCKABY
No. 76961
STATE OF CALIFORNIA

VERTICAL CONTROL:	VERTICAL CONTROL
HORIZONTAL CONTROL:	HORIZONTAL CONTROL
SHEET TITLE:	STORM DRAIN PLAN AND PROFILE
PROJECT:	VALLEY VILLAGE PARK STORM WATER CAPTURE PROJECT
ADDRESS:	VALLEY VILLAGE PARK 5000 Westpark Dr, North Hollywood, CA 91601

NO.	REVISIONS	DATE	BY
		YY/MM/DD	
		YY/MM/DD	
		YY/MM/DD	
		YY/MM/DD	

CIP NO. SCP0009

INDEX NO.

	DESIGN GROUP	DATE
CITY ENGINEER		YY/MM/DD
TED ALLEN, P.E.		
ENGINEER:	PVT - MATT HUCKABY	YY/MM/DD
ARCHITECT:	XXX	YY/MM/DD
DESIGNED BY:	PVT - JERRY GANTNEY	YY/MM/DD
DRAWN BY:	PVT - ATTILA SIMON	YY/MM/DD
CHECKED BY:	PVT - RAPHAEL BUI	YY/MM/DD
APPROVED BY:	PVT - MIKO AVAZIAN	YY/MM/DD

WORK ORDER
EW40085F

SHEET NAME
C-11
SHEET 16 OF 80 SHEETS

THE CITY OF LOS ANGELES OR ITS OFFICERS OR AGENTS SHALL NOT BE RESPONSIBLE FOR THE ACCURACY OR COMPLETENESS OF ELECTRONIC COPIES OF THIS PLAN SHEET.

REVISION DATES
(DESIGN STAGE ONLY)

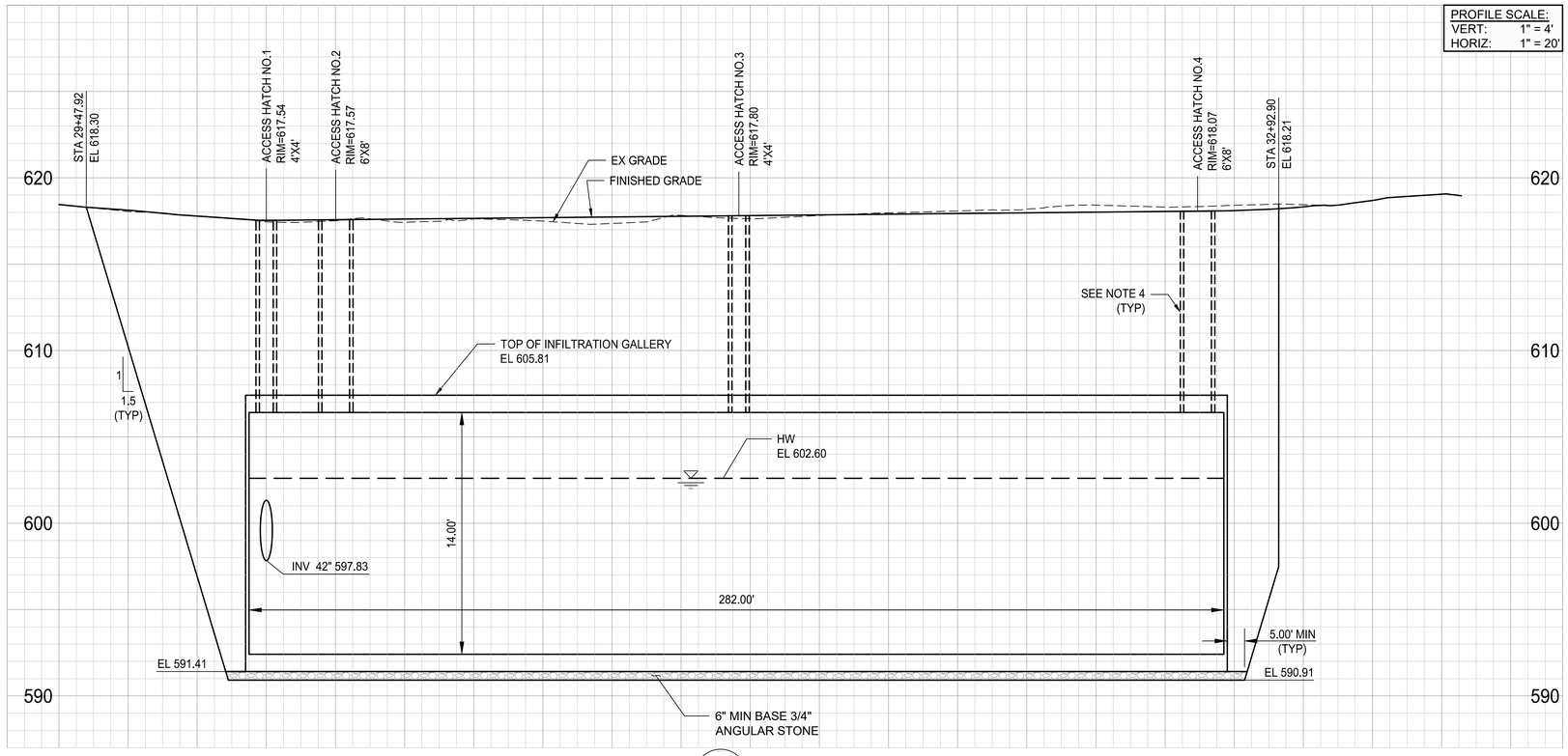

A
-
SECTION
SCALE: 1"=20"

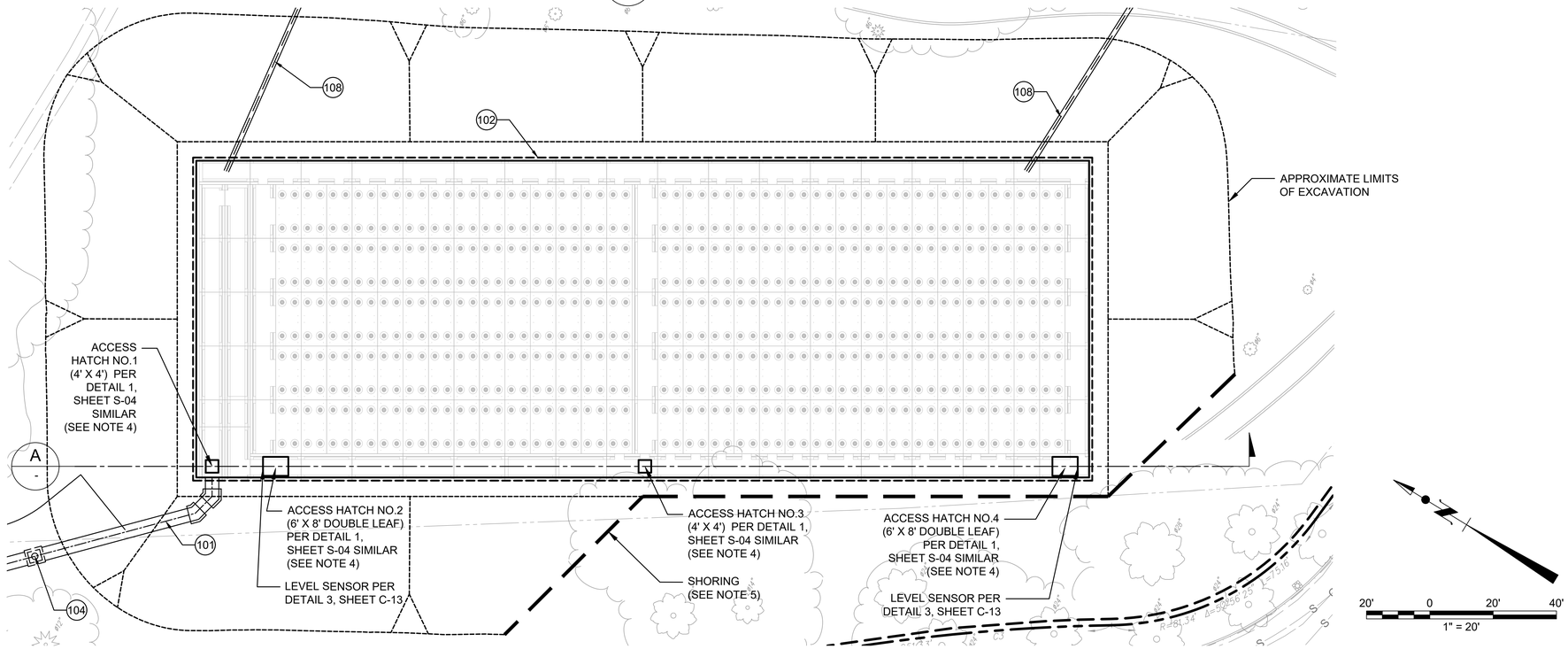

CONSTRUCTION NOTES:

- CONSTRUCT
- REMOVE & CONSTRUCT
- REMOVE
- WORK BY OTHERS
- EXISTING-PROTECTING IN PLACE

101. 42" STORM DRAIN SYSTEM, SEE SHT C-11 FOR PLAN AND PROFILE - BEDDING AND BACKFILL PER CITY STD DETAIL S-251-1
102. INFILTRATION GALLERY, PER SPECIFICATION SECTION 13330 AND DETAILS 5 AND 6 ON SHT C-14
104. MAINTENANCE HOLE PER CITY STD DETAIL S-381-0 TYPE I WITH 30" PRESSURE MH COVER PER STD DETAILS S-284-2 AND S-283-3 AND WITH FLOWMETER PER DETAIL 3 ON SHEET C-13.
108. INSTALL 18" SCHEDULE TO PVC AIR VENT PIPING - BEDDING AND BACKFILL PER CITY STD DETAIL S-251-1

NOTES:

1. FINAL LOCATIONS OF ACCESS MANHOLES TO INFILTRATION GALLERIES TO BE DETERMINED BY MANUFACTURER.
2. RCP SHALL BE CLASS IV, WALL B TONGUE AND GROOVE JOINTS.
3. REFER TO GEOTECHNICAL REPORT FOR ADDITIONAL REQUIREMENTS.
4. RISER FROM GALLERY TOP SLAB TO GRADE SHALL BE PRECAST AND PROVIDED BY GALLERY SUPPLIER (TYP ALL GALLERY ACCESS HATCHES)
5. SHORING LIMITS SHOWN ON PLAN ARE APPROXIMATE. CONTRACTOR SHALL DESIGN THE SHORING SYSTEM COMPLETE WITH CALCULATIONS PER PROJECT SPECIFICATIONS SECTION 02240.

STORMWATER MITIGATION
LOW IMAPCT DEVELOPMENT (LID)
APPROVED WITH CONDITIONS

This set of plans and specifications must be at the jobsite during construction

Stormwater Observation Report (SOR) is required prior to issuance of Certificate of Occupancy or final sign off.

Total Pages 48

Digitally Signed By: S. Garcia Date: 12/12/2023
Department of Public Works - Bureau of Sanitation
Watershed Protection Division

ENGINEERING
CITY OF LOS ANGELES

Digitally signed by Matthew B. Huckaby
Contact Info: Carollo Engineers, Inc.
Date: 2023.12.12 12:01:24 -08'00'

REGISTERED PROFESSIONAL ENGINEER
MATTHEW B. HUCKABY
No. 76961
CIVIL
STATE OF CALIFORNIA

THIS PLAN WAS ELECTRONICALLY • SIGNED AND STAMPED

CITY OF LOS ANGELES DEPARTMENT OF PUBLIC WORKS BUREAU OF ENGINEERING

VERTICAL CONTROL:
HORIZONTAL CONTROL:
SHEET TITLE: GRADING SECTION
PROJECT: VALLEY VILLAGE PARK STORM WATER CAPTURE PROJECT
ADDRESS: VALLEY VILLAGE PARK 5000 Westpark Dr, North Hollywood, CA 91601

NO.	REVISIONS	DATE	BY
		YY/MM/DD	
		YY/MM/DD	
		YY/MM/DD	
		YY/MM/DD	

CIP NO. SCP0009

INDEX NO.

CITY ENGINEER
DATE YY/MM/DD

DESIGN GROUP		DATE
ENGINEER:	PVT - MATT HUCKABY	YY/MM/DD
ARCHITECT:	XXX	YY/MM/DD
DESIGNED BY:	PVT - JERRY GANTNEY	YY/MM/DD
DRAWN BY:	PVT - ATTILA SIMON	YY/MM/DD
CHECKED BY:	PVT - RAPHAEL BUI	YY/MM/DD
APPROVED BY:	PVT - MIKO AIVAZIAN	YY/MM/DD

TED ALLEN, P.E.

PLANS PREPARED BY:
carollo
707 WILSHIRE BLVD, SUITE 3920
LOS ANGELES, CA 90017
(213) 489-1587

WORK ORDER
EW40085F

SHEET NAME
C-12
SHEET 17 OF 80 SHEETS

THE CITY OF LOS ANGELES OR ITS OFFICERS OR AGENTS SHALL NOT BE RESPONSIBLE FOR THE ACCURACY OR COMPLETENESS OF ELECTRONIC COPIES OF THIS PLAN SHEET.

REVISION DATES (DESIGN STAGE ONLY)

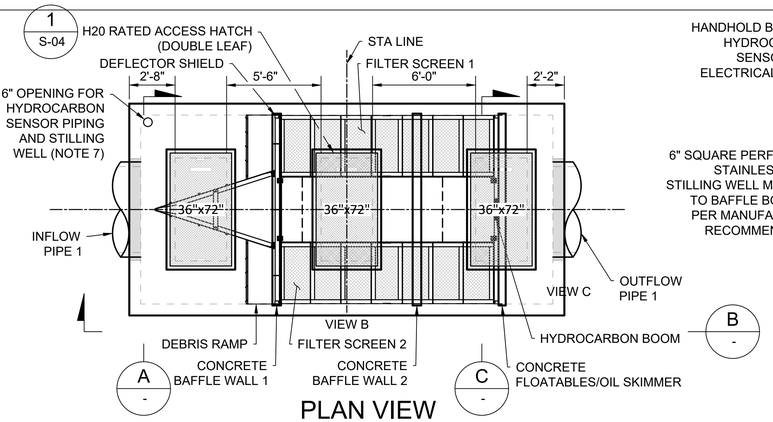

PLAN VIEW

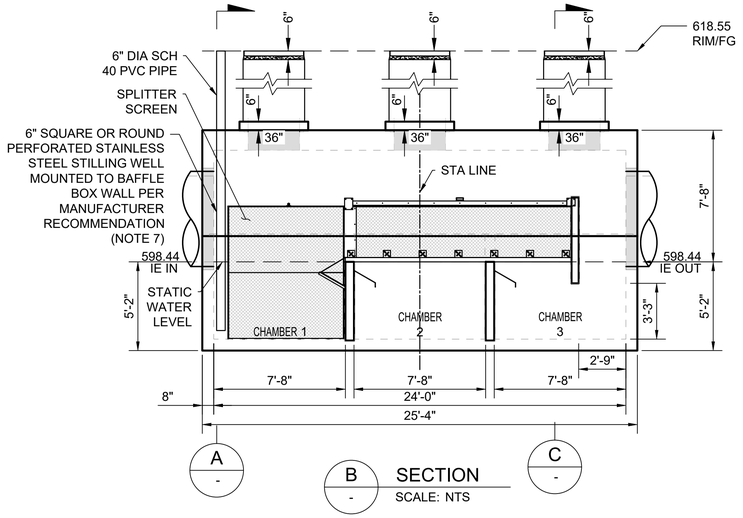

SECTION
SCALE: NTS

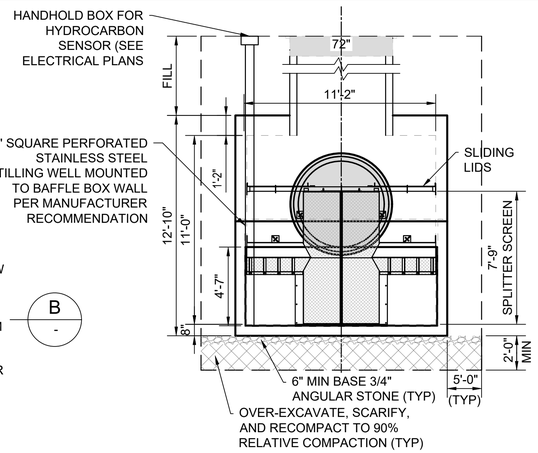

A - INLET SECTION
SCALE: NTS

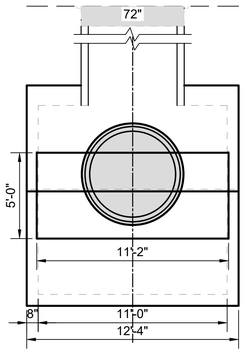

C - OUTLET SECTION
SCALE: NTS

SITE SPECIFIC DATA*			
PEAK FLOW RATE (CFS)			50 CFS
PIPE DATA	I.E.	MATERIAL	DIAMETER
INFLOW PIPE 1	596.84	RCP	42
OUTFLOW PIPE 1	596.84	RCP	42
RIM ELEVATION	618.55		
SURFACE LOADING REQUIREMENT			HS20
FRAME AND COVER			(3) 36"x72"
CORROSIVE SOIL CONDITIONS			NA
KNOWN GROUNDWATER ELEVATION			NA
NOTES:			
*PER ENGINEER OF RECORD			

DSBB STORAGE CAPACITIES				
CAGE SCREEN CAPACITY				
	LENGTH (FT)	WIDTH (FT)	HEIGHT (FT)	TOTAL (CF)
SCREEN 1	13.17	3.33	3.00	131.67
SCREEN 2	13.17	3.33	3.00	131.67
SEDIMENT CHAMBER CAPACITY				
CHAMBER 1	7.67	11.00	4.50	379.50
CHAMBER 2	7.67	11.00	4.50	379.50
CHAMBER 3	7.67	11.00	4.50	379.50

GENERAL NOTES

1. ALL DIMENSIONS, ELEVATIONS, SPECIFICATIONS, AND CAPACITIES ARE SUBJECT TO CHANGE. CONTRACTOR TO COORDINATE WITH BAFFLE BOX SUPPLIER PRIOR TO EXCAVATION.

INSTALLATION NOTES

1. CONTRACTOR TO PROVIDE ALL LABOR, EQUIPMENT, MATERIALS, AND INCIDENTALS REQUIRED TO OFFLOAD AND INSTALL THE DEBRIS SEPARATING BAFFLE BOX AND APPURTENANCES IN ACCORDANCE WITH THIS DRAWING AND THE MANUFACTURER'S SPECIFICATIONS, UNLESS OTHERWISE STATED IN MANUFACTURER'S CONTRACT.
2. SEE SPECIFICATION SECTION 13240 FOR ADDITIONAL REQUIREMENTS.
3. ALL PIPES MUST BE FLUSH WITH INSIDE SURFACE OF CONCRETE. (PIPES CANNOT INTRUDE BEYOND FLUSH).
4. ALL GAPS AROUND PIPES SHALL BE SEALED WATERTIGHT WITH A NON-SHRINK GROUT PER MANUFACTURER'S STANDARD CONNECTION DETAIL AND SHALL MEET OR EXCEED REGIONAL PIPE CONNECTION STANDARDS.
5. CONTRACTOR RESPONSIBLE FOR INSTALLATION OF ALL PIPES, RISERS AND COVERS. ALL COVERS SHALL BE SHIPPED LOOSE. CONTRACTOR TO GROUT ALL MANHOLES AND COVERS TO MATCH FINISHED SURFACE UNLESS SPECIFIED OTHERWISE.
6. ALL ACCESS OPENINGS SHALL BE H-20 RATED.
7. CONTRACTOR SHALL COORDINATE HYDROCARBON SENSOR INSTALLATION WITH PRETREATMENT UNIT. CONTRACTOR SHALL PROVIDE SHOP DRAWING SUBMITTALS FOR ENGINEER REVIEW AND APPROVAL. HYDROCARBON SENSOR STILLING WELL PIPE SHALL BE 6" OR 8" SCHEDULE 40 PVC FROM GRADE TO TOP OF BAFFLE BOX AND THEN TRANSITION TO PERFORATED STAINLESS STEEL ROUND OR SQUARE BOX.

STORMWATER MITIGATION
LOW IMAPCT DEVELOPMENT (LID)
APPROVED WITH CONDITIONS

This set of plans and specifications must be at the jobsite during construction

Stormwater Observation Report (SOR) is required prior to issuance of Certificate of Occupancy or final sign off.

Total Pages 48

Digitally Signed By: S. Garcia Date: 12/12/2023
Department of Public Works - Bureau of Sanitation
Watershed Protection Division

1 BAFFLE BOX DETAIL

NTS

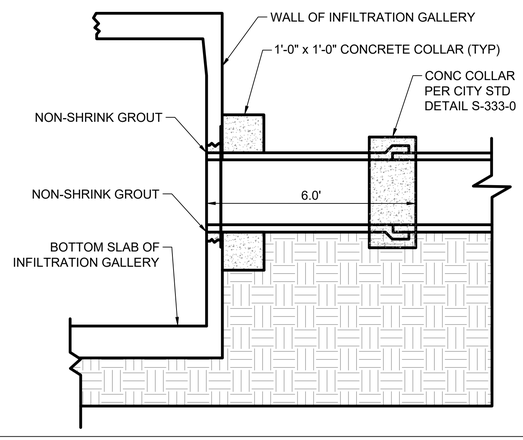

2 PIPE CONNECTION TO INFILTRATION GALLERY

NTS

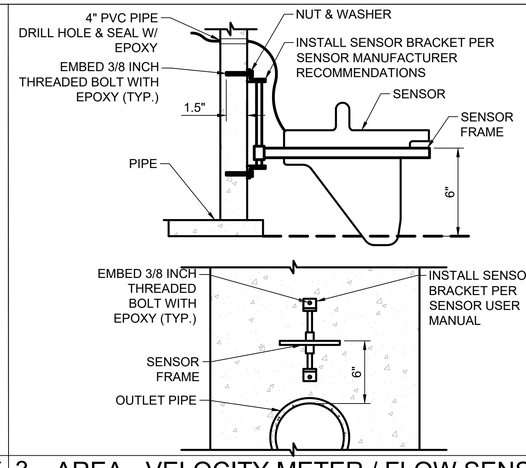

INSTALLATION NOTES

1. TOP OF SENSOR FRAME MUST BE 6" ABOVE THE INTERIOR CROWN OF THE PIPE.
2. IF THE PIPE LIP IS LONGER THAN 5.5", INSTALL THE 12" SPACER BETWEEN THE WALL MOUNT AND THE BRACKET FRAME.

3 AREA - VELOCITY METER / FLOW SENSOR

NTS

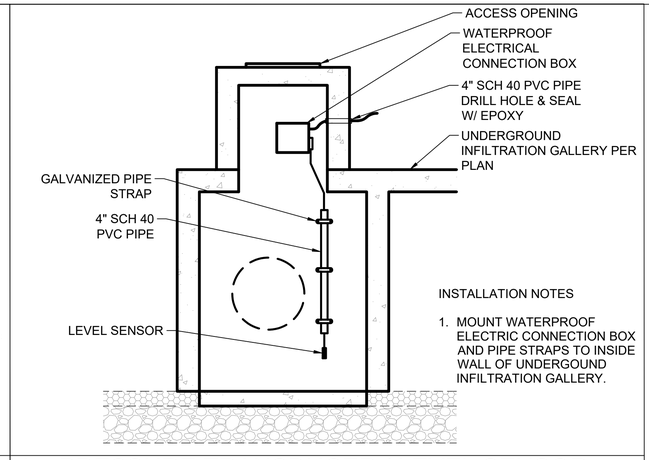

INSTALLATION NOTES

1. MOUNT WATERPROOF ELECTRIC CONNECTION BOX AND PIPE STRAPS TO INSIDE WALL OF UNDERGOUND INFILTRATION GALLERY.

4 PRESSURE TRANSDUCER / LEVEL SENSOR

NTS

PLANS PREPARED BY:
carollo
707 WILSHIRE BLVD, SUITE 3920
LOS ANGELES, CA 90017
(213) 489-1587

CITY OF LOS ANGELES DEPARTMENT OF PUBLIC WORKS
BUREAU OF ENGINEERING

CITY ENGINEER: TED ALLEN, P.E. DATE: YY/MM/DD

DESIGN GROUP	
ENGINEER:	PVT - MATT HUCKABY
ARCHITECT:	XXX
DESIGNED BY:	PVT - JERRY GANTNEY
DRAWN BY:	PVT - ATTILA SIMON
CHECKED BY:	PVT - RAPHAEL BUI
APPROVED BY:	PVT - MIKO AIVAZIAN

VERTICAL CONTROL:
HORIZONTAL CONTROL:
SHEET TITLE: CIVIL DETAILS - 1
PROJECT: VALLEY VILLAGE PARK STORM WATER CAPTURE PROJECT
ADDRESS: VALLEY VILLAGE PARK 5000 Westpark Dr, North Hollywood, CA 91601

NO.	REVISIONS	DATE	BY
		YY/MM/DD	
		YY/MM/DD	
		YY/MM/DD	
		YY/MM/DD	

CIP NO. SCP0009

INDEX NO.

WORK ORDER EW40085F

SHEET NAME C-13
SHEET 18 OF 80 SHEETS

ENGINEERING
CITY OF LOS ANGELES

Digitally signed by Matthew B. Huckaby
Contact Info: Carollo Engineers, Inc.
Date: 2023.12.12 12:01:24 -08'00'

REGISTERED PROFESSIONAL ENGINEER MATTHEW B. HUCKABY No. 76961 STATE OF CALIFORNIA CIVIL

THIS PLAN WAS ELECTRONICALLY • SIGNED AND STAMPED

THE CITY OF LOS ANGELES OR ITS OFFICERS OR AGENTS SHALL NOT BE RESPONSIBLE FOR THE ACCURACY OR COMPLETENESS OF ELECTRONIC COPIES OF THIS PLAN SHEET.

REVISION DATES (DESIGN STAGE ONLY)

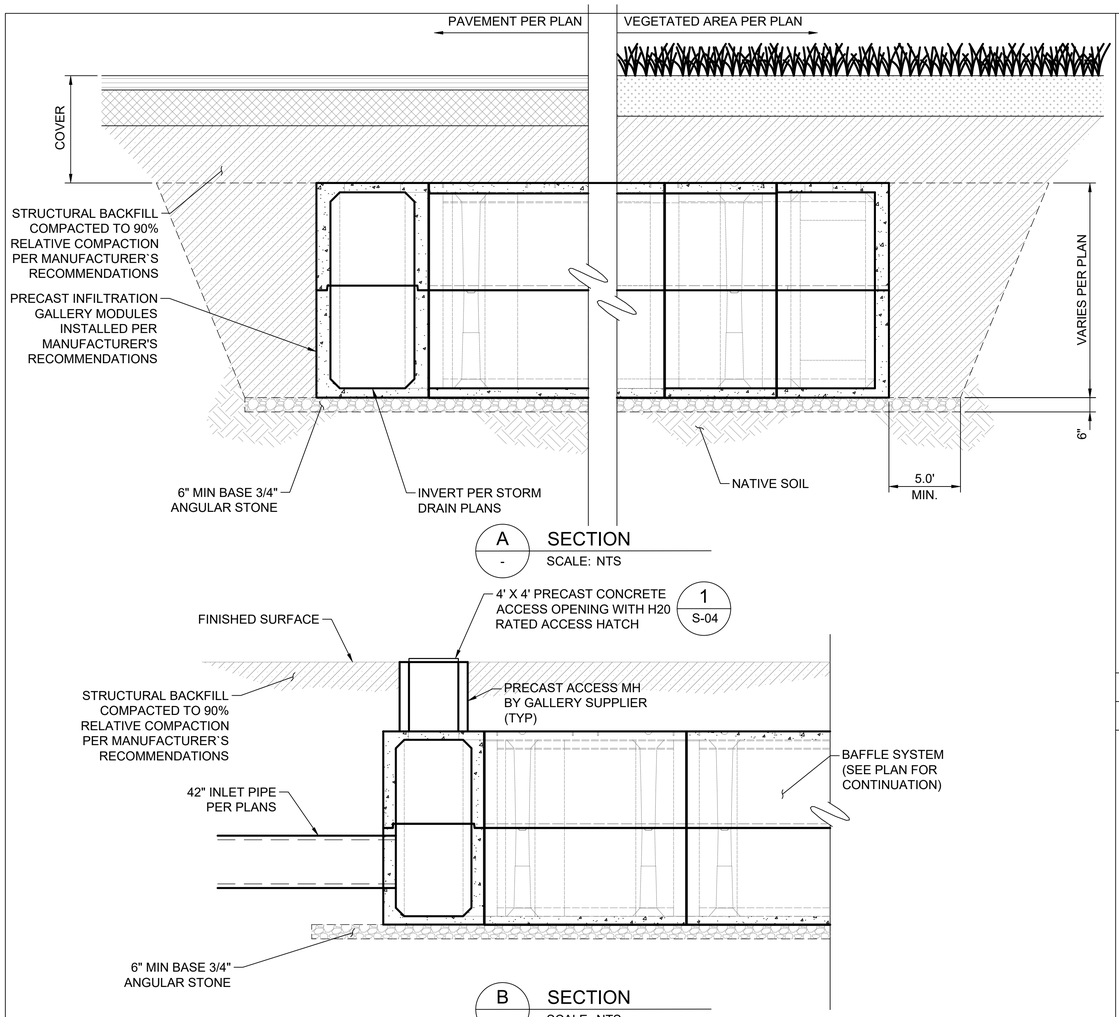

A - SECTION
SCALE: NTS

B - SECTION
SCALE: NTS

PLAN VIEW

NOTES:

1. REFER TO CIVIL DRAWINGS FOR LOCATIONS OF UNDERGROUND INFILTRATION GALLERIES.
2. ALL MODULES AND APPURTENANCES SHALL BE INSTALLED PER MANUFACTURER'S RECOMMENDATIONS.
3. A PRECAST MODULAR SYSTEM IS THE REQUIRED TYPE AS PER THE SPECIFICATION SECTION 13330.
4. SEE SPECIFICATION SECTION 01330 FOR ADDITIONAL REQUIREMENTS.

5 TYPICAL INFILTRATION GALLERY

NTS

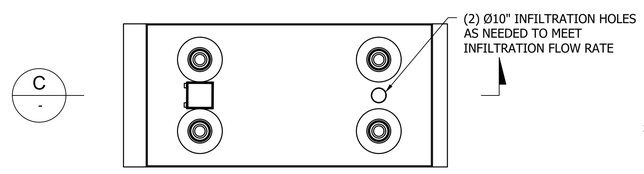

PLAN VIEW OF BASE ONLY

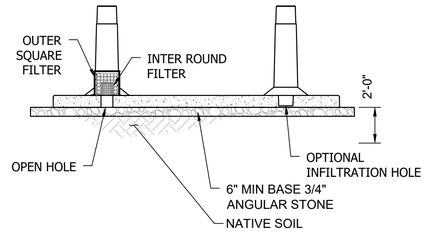

C - SECTION
SCALE: NTS

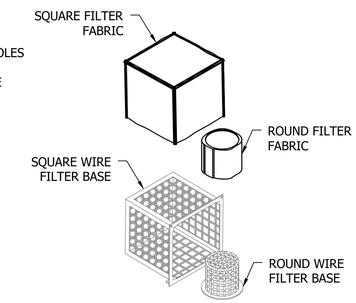

FILTER

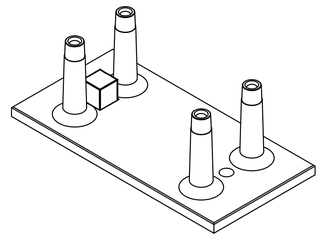

6 INFILTRATION GALLERY - FILTER DETAIL

NTS

STORMWATER MITIGATION
LOW IMAPCT DEVELOPMENT (LID)
APPROVED WITH CONDITIONS

This set of plans and specifications must be at the jobsite during construction

Stormwater Observation Report (SOR) is required prior to issuance of Certificate of Occupancy or final sign off.

Total Pages 48

Digitally Signed By: S. Garcia Date: 12/12/2023
Department of Public Works - Bureau of Sanitation
Watershed Protection Division

PLANS PREPARED BY:
carollo
707 WILSHIRE BLVD., SUITE 3920
LOS ANGELES, CA 90017
(213) 489-1587

CITY OF LOS ANGELES DEPARTMENT OF PUBLIC WORKS
BUREAU OF ENGINEERING
ENGINEERING CITY OF LOS ANGELES

THIS PLAN WAS ELECTRONICALLY • SIGNED AND STAMPED

Digitally signed by Matthew B. Huckaby
Contact Info: Carollo Engineers, Inc.
Date: 2023.12.12 14:47:48 -08'00'

REGISTERED PROFESSIONAL ENGINEER MATTHEW B. HUCKABY No. 76961 CIVIL STATE OF CALIFORNIA

VERTICAL CONTROL:
HORIZONTAL CONTROL:
SHEET TITLE: CIVIL DETAILS - 2
PROJECT: VALLEY VILLAGE PARK STORM WATER CAPTURE PROJECT
ADDRESS: VALLEY VILLAGE PARK 5000 Westpark Dr, North Hollywood, CA 91601

NO.	REVISIONS	DATE	BY
		YY/MM/DD	
		YY/MM/DD	
		YY/MM/DD	
		YY/MM/DD	

CIP NO. SCP0009

INDEX NO.

CITY ENGINEER		DATE
TED ALLEN, P.E.		YY/MM/DD
DESIGN GROUP		
ENGINEER:	PVT - MATT HUCKABY	YY/MM/DD
ARCHITECT:	XXX	YY/MM/DD
DESIGNED BY:	PVT - JERRY GANTNEY	YY/MM/DD
DRAWN BY:	PVT - ATTILA SIMON	YY/MM/DD
CHECKED BY:	PVT - RAPHAEL BUI	YY/MM/DD
APPROVED BY:	PVT - MIKO AIVAZIAN	YY/MM/DD

WORK ORDER
EW40085F

SHEET NAME
C-14
SHEET 19 OF 80 SHEETS

THE CITY OF LOS ANGELES OR ITS OFFICERS OR AGENTS SHALL NOT BE RESPONSIBLE FOR THE ACCURACY OR COMPLETENESS OF ELECTRONIC COPIES OF THIS PLAN SHEET.

REVISION DATES (DESIGN STAGE ONLY)

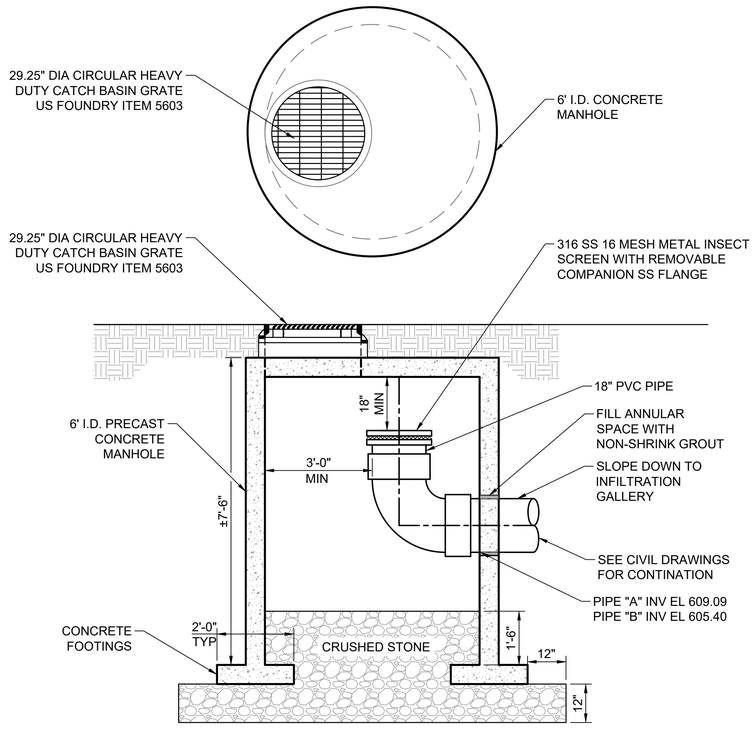

7 PASSIVE AIR VENT PIPE DETAIL

NTS

THE CITY OF LOS ANGELES OR ITS OFFICERS OR AGENTS SHALL NOT BE RESPONSIBLE FOR THE ACCURACY OR COMPLETENESS OF ELECTRONIC COPIES OF THIS PLAN SHEET.

REVISION DATES (DESIGN STAGE ONLY)

PLANS PREPARED BY:

carollo®
707 WILSHIRE BLVD, SUITE 3920
LOS ANGELES, CA 90017
(213) 489-1587

CITY OF LOS ANGELES DEPARTMENT OF PUBLIC WORKS BUREAU OF ENGINEERING

ENGINEERING
CITY OF LOS ANGELES

THIS PLAN WAS ELECTRONICALLY SIGNED AND STAMPED

Digitally signed by Matthew B. Huckaby
Contact Info: Carollo Engineers, Inc.
Date: 2023.12.12 12:23:24

REGISTERED PROFESSIONAL ENGINEER MATTHEW B. HUCKABY No. 76961 CIVIL STATE OF CALIFORNIA

VERTICAL CONTROL: VERTICAL CONTROL
HORIZONTAL CONTROL: HORIZONTAL CONTROL

SHEET TITLE: CIVIL DETAILS - 3

PROJECT: VALLEY VILLAGE PARK STORM WATER CAPTURE PROJECT

ADDRESS: VALLEY VILLAGE PARK
5000 Westpark Dr, North Hollywood, CA 91601

NO.	REVISIONS	DATE	BY
		YY/MM/DD	
		YY/MM/DD	
		YY/MM/DD	
		YY/MM/DD	

CIP NO. SCP0009

INDEX NO.

		CITY ENGINEER	DATE
TED ALLEN, P.E.	DESIGN GROUP		
ENGINEER:	PVT - MATT HUCKABY		YY/MM/DD
ARCHITECT:	XXX		YY/MM/DD
DESIGNED BY:	PVT - JERRY GANTNEY		YY/MM/DD
DRAWN BY:	PVT - ATTILA SIMON		YY/MM/DD
CHECKED BY:	PVT - RAPHAEL BUI		YY/MM/DD
APPROVED BY:	PVT - MIKO AIVAZIAN		YY/MM/DD

WORK ORDER
EW40085F

SHEET NAME
C-15

SHEET 20 OF 80 SHEETS

SHEET VERSION 4.0.1 FILE PATH: C:\PW_WORKING\PROJECTWISE\CAROLLO_ASIMON\D1118218\0009_C_SH_C15.DWG PLOT DATE: 12/1/2023 12:03 PM SAVED: 2/8/2022 11:19 AM SAVED BY:ASIMON

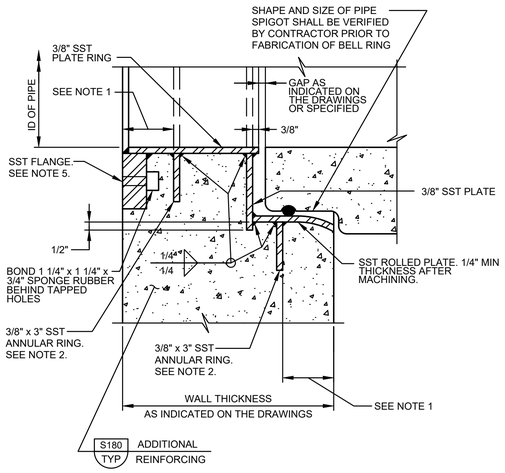

NOTES:

1. REINFORCING BAR COVER PLUS DIAMETER OF OUTSIDE BARS.
2. INSTALL ANNULAR RINGS IN PLANE THAT IS PARALLEL TO FACE OF WALL AFTER ACCOUNTING FOR SLOPE OF PIPE. INSTALL BELL RING INSERT PERPENDICULAR TO CENTERLINE OF PIPE.
3. GRIND SMOOTH ALL METAL EDGES AND ALL SURFACES IN PIPE SEATING AREA.
4. BELL RING SHALL HAVE SPIDER BRACING INSTALLED AT POINT OF MANUFACTURE.
5. DRILL AND TAP FLANGE FOR SLIDE GATE.

P326 TYP N SST BELL RING INSERT FOR CONCRETE PIPE 48"Ø & SMALLER W/ FLUSH FLANGE FOR SLIDE GATE

03/26/15

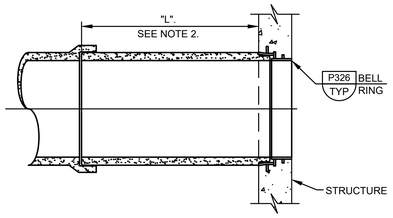

NOMINAL PIPE DIAMETER IN INCHES	"L"
24" THROUGH 30"	7'-0"
36"	8'-0"
42" THROUGH 48"	9'-0"
54"	10'-0"
60"	11'-0"

NOTES:

1. PIPES SHALL BE INSTALLED STRAIGHT WITHOUT HORIZONTAL OR VERTICAL OFFSET. DO NOT USE JOINT ANGULAR DEFLECTION TO MAKE UP FOR MISALIGNED PIPE.
2. DO NOT LOCATE FIELD CLOSURE ON FIRST SECTION OF PIPE.

P348 TYP N RCP FLEXIBLE CONNECTION AT WALL PENETRATION

08/01/05

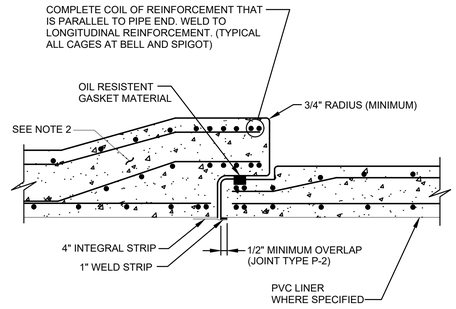

TYPE I JOINT

NOTES:

1. ALL EXPOSED PEGS OR CHAIRS FOR REINFORCEMENT CAGE SUPPORT SHALL BE STAINLESS STEEL.
2. EXTEND DOUBLE CAGE OF REINFORCEMENT SHOWN INTO BELL WITH INNER CAGE FAVORING INNER FACE OF BELL INTERIOR SURFACE.
3. LINER JOINT TYPE P-2 SHOWN. FOR ALTERNATE TYPE P-1, PROVIDE 4" JOINT STRIP WITH WELD STRIP EACH SIDE.

P802 TYP N ACCEPTABLE JOINTS FOR LARGER THAN 36" DIA RCP

SHEET 1 OF 3 09/19/12

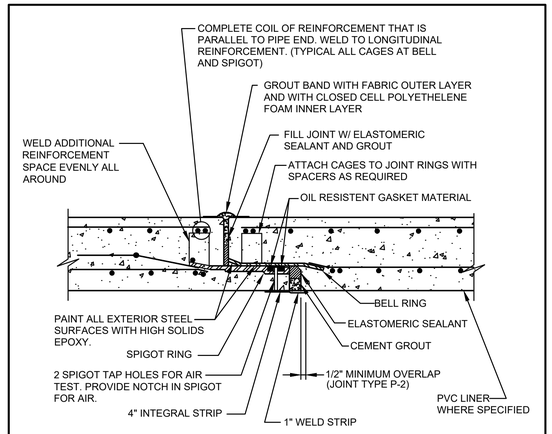

TYPE II JOINT

NOTES:

1. ALL EXPOSED PEGS OR CHAIRS FOR REINFORCEMENT CAGE SUPPORT SHALL BE STAINLESS STEEL.
2. LINER JOINT TYPE P-2 SHOWN. FOR ALTERNATE TYPE P-1, PROVIDE 4" JOINT STRIP WITH WELD STRIP EACH SIDE.
3. THIS TYPE OF JOINT SHALL ONLY BE USED FOR NON-PRESSURE PIPE THAT HAS A WALL THICKNESS OF 7" OR GREATER.

P802 TYP N ACCEPTABLE JOINTS FOR LARGER THAN 36" DIA RCP

SHEET 2 OF 3 09/19/12

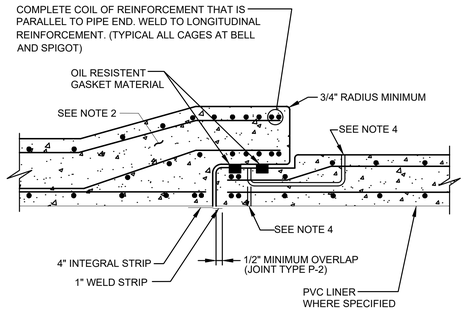

TYPE III JOINT

NOTES:

1. ALL EXPOSED PEGS OR CHAIRS FOR REINFORCEMENT CAGE SUPPORT SHALL BE STAINLESS STEEL.
2. EXTEND DOUBLE CAGE OF REINFORCEMENT SHOWN INTO BELL WITH INNER CAGE FAVORING INNER FACE OF BELL INTERIOR SURFACE.
3. LINER JOINT TYPE P-2 SHOWN. FOR ALTERNATE TYPE P-1, PROVIDE 4" JOINT STRIP WITH WELD STRIP EACH SIDE.
4. SST OR PVC TESTING PLUG TO SUIT TESTING APPARATUS.

P802 TYP N ACCEPTABLE JOINTS FOR LARGER THAN 36" DIA RCP

SHEET 3 OF 3 09/19/12

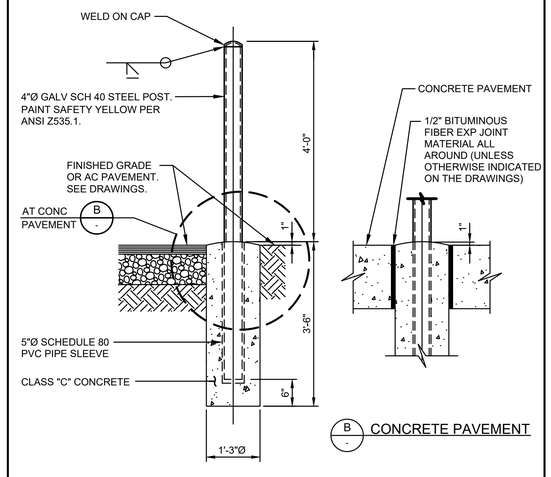

CF161 TYP GUARD POST - REMOVABLE

12/29/2020

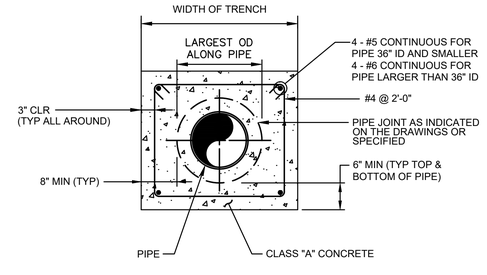

SECTION

NOTE:

1. TYPE OF PIPE AND TYPE OF PIPE JOINT OR COUPLER AS INDICATED ON THE DRAWINGS.

CP119 TYP S PIPE ENCASEMENT - CONCRETE

12/29/2020

PLANS PREPARED BY:

carollo

707 WILSHIRE BLVD, SUITE 3920
LOS ANGELES, CA 90017
(213) 489-1057

CITY OF LOS ANGELES DEPARTMENT OF PUBLIC WORKS BUREAU OF ENGINEERING

ENGINEERING CITY OF LOS ANGELES

THIS PLAN WAS ELECTRONICALLY • SIGNED AND STAMPED

Digitally signed by Matthew B. Huckaby
Contact Info: Carollo Engineers, Inc.
Date: 2023.12.01 12:02:54 -08'00'

REGISTERED PROFESSIONAL ENGINEER MATTHEW B. HUCKABY No. 76961 CIVIL STATE OF CALIFORNIA

NO.	REVISIONS	DATE	BY
		YY/MM/DD	
		YY/MM/DD	
		YY/MM/DD	
		YY/MM/DD	

CITY ENGINEER

	DESIGN GROUP	DATE
TED ALLEN, P.E.		YY/MM/DD
ENGINEER:	PVT - MATT HUCKABY	YY/MM/DD
ARCHITECT:	XXX	YY/MM/DD
DESIGNED BY:	PVT - JERRY GANTNEY	YY/MM/DD
DRAWN BY:	PVT - ATTILA SIMON	YY/MM/DD
CHECKED BY:	PVT - RAPHAEL BUI	YY/MM/DD
APPROVED BY:	PVT - MIKO AVAZIAN	YY/MM/DD

VERTICAL CONTROL: VERTICAL CONTROL:
HORIZONTAL CONTROL: HORIZONTAL CONTROL:

SHEET TITLE: CIVIL DETAILS - 4

PROJECT: VALLEY VILLAGE PARK STORM WATER CAPTURE PROJECT

ADDRESS: VALLEY VILLAGE PARK
5000 Westpark Dr, North Hollywood, CA 91601

CIP NO. SCP0009

INDEX NO.

WORK ORDER EW40085F

SHEET NAME C-16

SHEET 21 OF 80 SHEETS

THE CITY OF LOS ANGELES OR ITS OFFICERS OR AGENTS SHALL NOT BE RESPONSIBLE FOR THE ACCURACY OR COMPLETENESS OF ELECTRONIC COPIES OF THIS PLAN SHEET.

REVISION DATES (DESIGN STAGE ONLY)

SHEET VERSION 4.0.1 FILE PATH: C:\PW_WORKING\PROJECTWISE\CAROLLO_ASIMON\D1118218\0009_C_SH_C16.DWG PLOT DATE: 12/1/2023 12:03 PM SAVED: 11/23/2021 11:09 AM SAVED BY:ASIMON

GENERAL NOTES:

1. USE STRUCTURAL DRAWINGS IN CONJUNCTION WITH PROJECT DRAWINGS BY OTHER DISCIPLINES AND WITH THE SPECIFICATIONS.

2. UNLESS DETAILED, SPECIFIED, OR INDICATED OTHERWISE, CONSTRUCTION SHALL BE AS INDICATED IN THE GENERAL NOTES AND TYPICAL DETAILS.

3. PRESENTATION CONVENTIONS FOR STRUCTURAL DRAWINGS:
   A. SCREENED LINE WORK INDICATES EXISTING CONDITIONS.
   B. WRITTEN DIMENSIONS TAKE PRECEDENCE OVER SCALED SIZES.
   C. PLANS ARE TREATED AS HORIZONTAL SECTIONS. (I.E.: "PLAN AT ELEVATION 110" SHOWS CONSTRUCTION AT AND BELOW ELEVATION 110.)

4. VERIFY DIMENSIONS AND CONDITIONS BEFORE BEGINNING WORK. ADVISE ENGINEER IMMEDIATELY OF DISCREPANCIES BETWEEN EXISTING CONDITIONS AND DIMENSIONS, AND INFORMATION SHOWN ON THESE DRAWINGS. CONFIRM THE FOLLOWING BEFORE PREPARATION AND SUBMITTAL OF SHOP DRAWINGS:
   A. DIMENSIONS AND WEIGHTS FOR EQUIPMENT SELECTED.
   B. SIZES AND LOCATIONS OF EQUIPMENT PADS FOR EQUIPMENT SELECTED.

5. TYPICAL DETAILS.
   A. TYPICAL DETAILS ARE INTENDED TO APPLY AT LOCATIONS DESCRIBED BY THEIR TITLES, EVEN WHEN NOT SPECIFICALLY REFERENCED ON THE DRAWINGS.
   B. IN STRUCTURAL TYPICAL DETAILS, ORIENTATION OF BARS IN EACH MAT OF REINFORCEMENT (WHETHER "LINES" OR "DOTS"ARE CLOSER TO THE FACE OF THE CONCRETE) IS GENERALLY ARBITRARY. SEE DRAWINGS OF EACH STRUCTURE FOR ORIENTATION REQUIRED AT THAT STRUCTURE.

6. SEE CIVIL DRAWINGS FOR STRUCTURE COORDINATES. POINTS ON THE STRUCTURES TO WHICH SITE COORDINATES REFER ARE SHOWN ON THE STRUCTURAL PLANS.

7. DRAWINGS PREPARED BY OTHER DISCIPLINES INCLUDE OPENINGS, ANCHORS, PIPES, CONDUITS, AND OTHER ITEMS THAT ARE EMBEDDED INTO OR PASS THROUGH STRUCTURES.
   A. CONFIRM SIZE AND LOCATIONS OF OPENINGS, PENETRATIONS AND EMBEDMENT FOR ITEMS AND EQUIPMENT FURNISHED.
   B. IN GENERAL, OPENINGS, EMBEDMENTS, AND PENETRATIONS LESS THAN 12 INCHES IN DIAMETER ARE NOT SHOWN ON THE STRUCTURAL DRAWINGS.
   C. SEE MECHANICAL DRAWINGS FOR DETAILS OF PIPE PENETRATIONS, PIPE SUPPORTS, AND ASSOCIATED STRUCTURAL REQUIREMENTS.
   D. SEE MECHANICAL DRAWINGS FOR EQUIPMENT PADS AND PIPE SUPPORTS.

8. NO STRUCTURAL MEMBERS SHALL BE CUT FOR PIPES, DUCTS, ETC., UNLESS SPECIFICALLY DETAILED OR APPROVED IN WRITING BY THE ENGINEER.

9. THESE PLANS DO NOT INCLUDE THE NECESSARY COMPONENTS FOR THE SAFETY OF THE STRUCTURES OR EQUIPMENT DURING CONSTRUCTION. THE CONTRACTOR IS RESPONSIBLE FOR ALL WORK RELATING TO CONSTRUCTION, ERECTION METHODS, BRACING, SHORING, RIGGING, GUYS, SCAFFOLDING, FORM-WORK, AND OTHER WORK AIDS REQUIRED TO SAFELY PERFORM THE WORK SHOWN.

10. VISITS TO THE JOB SITE BY THE ENGINEER TO OBSERVE THE CONSTRUCTION DO NOT IN ANY WAY MEAN THAT THEY ARE GUARANTORS OF THE CONSTRUCTOR'S WORK, NOR RESPONSIBLE FOR COMPREHENSIVE OR SPECIAL INSPECTIONS, COORDINATION, SUPERVISION, NOR SAFETY AT THE JOB SITE.

STRUCTURAL DESIGN CRITERIA - GENERAL:

SEE DRAWINGS OF INDIVIDUAL STRUCTURES FOR SPECIFIC DESIGN CRITERIA BASED ON THESE OVERALL CRITERIA FOR THE SITE.

1. BUILDING CODE:
   A. 2016 CALIFORNIA BUILDING CODE ("CBC 2016") WITH ASCE 7-16.
   B. REINFORCED CONCRETE: AMERICAN CONCRETE INSTITUTE ACI 318-14.
   C. ENVIRONMENTAL ENGINEERING CONCRETE STRUCTURES ACI 350-06.

2. STRUCTURE RISK CATEGORY: III

3. DEAD LOADS: CALCULATED FOR STRUCTURE SELF-WEIGHT.

4. LIVE LOADS: (REDUCTIONS NOT USED)
   ROOF LIVE LOAD: H20 LOADING

5. FLUID PRESSURE LOADS: 63 PSF/FT (UNO).

6. WIND DESIGN DATA:
   A. BASIC WIND SPEED (3 SEC GUST, 33 FEET ABOVE GROUND): 101 MPH.

7. EARTHQUAKE DESIGN DATA:

		0.2 SECOND	*1.0 SECOND
A.	SITE CLASS: D.		
B.	MAPPED SPECTRAL RESPONSE ACCELERATIONS:	Ss = 2.055 g	S1 = 0.678 g
C.	MAXIMUM CONSIDERED ACCELERATIONS:*	Sms =2.094 g	Sm1 = 1.691 g
D.	DESIGN SPECTRAL RESPONSE ACCELERATIONS:*	Sds = 1.396 g	Sd1 = 1.127 g

(* 5% DAMPED)

8. CONSTRUCTION LOADS:
   STRUCTURES HAVE BEEN DESIGNED FOR OPERATING LOADS ON COMPLETED FACILITIES. UNTIL CONSTRUCTION IS COMPLETE AND MEMBERS HAVE ACHIEVED THEIR DESIGN STRENGTH, PROTECT STRUCTURES AS REQUIRED BY SHORING, BRACING, AND BALANCING.

GEOTECHNICAL REPORT / FOUNDATION DESIGN CRITERIA:

1. GEOTECHNICAL INVESTIGATION REPORT:

   TITLE: GEOTECHNICAL EVALUATION
   LABOE TOS NO. 25
   STORMWATER CAPTURE PARKS PROGRAM VALLEY VILLAGE PARK
   NORTH HOLLYWOOD, CALIFORNIA

   PREPARED BY: NINYO AND MOORE GEOTECHNICAL & ENVIRONMENTAL SCIENCES CONSULTANTS.

   DATED: AUGUST 12, 2020.

2. FOUNDATION DESIGNS ARE BASED ON RECOMMENDATIONS IN THE GEOTECHNICAL INVESTIGATION REPORT.
   A. SPREAD FOOTINGS
      NET ALLOWABLE BEARING PRESSURE: 2,500 PSF
      ALLOWABLE PASSIVE PRESSURE: 300 PCF LIMITED TO 3,000 PSF.
   B. MAT FOUNDATIONS
      NET ALLOWABLE BEARING PRESSURE: 4,000 PSF
   C. COEFFICIENT OF FRICTION: 0.35
   D. LATERAL EARTH PRESSURE: SEE GEOTECHNICAL REPORT.

TYPICAL STRUCTURAL MATERIALS:

1. MATERIALS SHALL CONFORM TO THE FOLLOWING REQUIREMENTS UNLESS OTHERWISE INDICATED ON THE DRAWINGS.

2. SEE PROJECT SPECIFICATIONS AND NOTES ON DRAWINGS OF SPECIFIC STRUCTURES FOR DETAILED AND LOCATION-SPECIFIC REQUIREMENTS.

REINFORCING STEEL (FOR CONCRETE AND MASONRY):
1. DEFORMED BARS:
   A. TYPICAL: ASTM A 615, GRADE 60.
   B. WHERE INDICATED ON THE DRAWINGS: ASTM A 706.

   C. WELDED WIRE FABRIC: ASTM A 185.

CONCRETE:
1. NORMAL DENSITY.

2. MINIMUM SPECIFIED CONCRETE COMPRESSIVE STRENGTH, f'c (AT 28 DAYS UNO).
   A. STRUCTURES: "CLASS A"OR "CLASS B" f'c = 4000 PSI, UNLESS NOTED OTHERWISE.
   B. FILL, THRUST BLOCKS, PIPE ENCASEMENT: "CLASS C" f'c = 2500 PSI.
   C. ELECTRICAL DUCT ENCASEMENT: "CLASS CE" f'c = 2500 PSI.
   D. PRECAST AND PRECAST-PRESTRESSED MEMBERS: "CLASS D" f'c = 5000 PSI.

STRUCTURAL STEEL:
1. SECTIONS
   A. SHAPES W, WT: ASTM A 992 (Fy = 50 KSI)
   B. SHAPES S, ST, M, MT, HP, C, MC, L: ASTM A 36 (Fy = 36 KSI)
   C. PLATES AND BARS: ASTM A 36 (Fy = 36 KSI)
   D. PIPES: ASTM A 53, GRADE B (Fy = 35 KSI)
   E. HOLLOW STRUCTURAL SECTIONS:
      ROUND: ASTM A 500, GRADE B (Fy = 42 KSI)
      SQUARE AND RECTANGULAR: ASTM A 500, GRADE B (Fy = 46 KSI)

2. CONNECTIONS:
   A. BOLTS - STEEL TO-STEEL:
      ASTM A 325 HIGH-STRENGTH BOLTS, WITH LOAD INDICATOR WASHERS.
   B. BOLTS - STEEL TO CONCRETE OR MASONRY:
      ANCHOR BOLTS WITH HEX FORGED HEAD.
      ASTM A193, STAINLESS TYPE 316 (304)
      ASTM F 1554, GRADE 36 GALVANIZED.
   C. WELDS - SHIELDED METAL ARC PROCESS USING E70-XX ELECTRODES.

STAINLESS STEEL:
1. ANSI TYPE 316/316L EXCEPT WHERE TYPE 304/304L IS INDICATED ON THE DRAWINGS.

2. SECTIONS: SHAPES AND BARS: ASTM A 276.

3. BOLTED CONNECTIONS - BOLTS AND ANCHOR BOLTS:
   A. MATCH ALLOY OF THE STRUCTURAL MEMBERS CONNECTED.
   B. TYPE 316/316L: ASTM A 193, GRADE B8M, CLASS 1, HEAVY HEX.
   C. TYPE 304/304L: ASTM A 193, GRADE B8, CLASS 1, HEAVY HEX.

4. WELDED CONNECTIONS:
   A. TYPE 316L: E316L-15 ELECTRODES.
   B. TYPE 304L: E304L-15 ELECTRODES.

STRUCTURAL ALUMINUM:
1. SECTIONS
   A. SHAPES: ASTM B 308, ALLOY 6061-T6.
   B. SHEET AND PLATE: ASTM B 209, ALLOY 6061-T6.

2. BOLTED CONNECTIONS - BOLTS AND ANCHOR BOLTS:
   A. STAINLESS STEEL - TYPE 316, ASTM A 193, GRADE B8M, CLASS 1, HEAVY HEX.

3. WELDED CONNECTIONS:
   A. GAS METAL ARC (MIG) OR GAS TUNGSTEN ARC (TIG) PROCESS USING FILLER ALLOY 4043 ELECTRODES.

CONSTRUCTION:

CONFORM TO THE FOLLOWING REQUIREMENTS UNLESS OTHERWISE INDICATED ON THE DRAWINGS.

CONCRETE:

1. SEE S101/TYP FOR CONCRETE NOTES, INCLUDING CLEAR COVER AND LAP SPLICE LENGTH REQUIREMENTS FOR REINFORCING.

2. SUBMIT LOCATIONS OF CONSTRUCTION JOINTS NOT SHOWN ON THE DRAWINGS FOR ACCEPTANCE BY THE ENGINEER BEFORE FORM LAYOUT.

3. PROVIDE CHAMFER AT EXPOSED EDGES OF CAST-IN-PLACE CONCRETE. SEE SPECIFICATION 03102 FOR CHAMFERS.

4. PROVIDE REINFORCING:
   A. AT CORNERS AND JUNCTIONS - AS INDICATED IN S144/TYP, SUPPLEMENT WITH ADDED BARS WHERE INDICATED ON THE DRAWINGS.
   B. AT OPENINGS - AS INDICATED IN S180/TYP.

5. WELDING OF REINFORCING IS NOT PERMITTED UNLESS DETAILED ON THE DRAWINGS OR ACCEPTED IN ADVANCE BY THE ENGINEER.

6. MAINTAIN MINIMUM 3 INCHES CLEAR CONCRETE COVER BETWEEN REINFORCING AND EMBEDMENTS.

7. FINISH CONCRETE AS SPECIFIED IN SECTION 03366.

STEEL, STAINLESS STEEL, AND ALUMINUM - CONNECTIONS:

1. BOLTED:
   A. MADE USING 3/4-INCH DIAMETER BOLTS.
   B. HAVING A MINIMUM OF 2 BOLTS, SPACED NOT CLOSER THAN 3 INCHES ON CENTER.
   C. WITH A DISTANCE OF AT LEAST 1 1/2 INCHES FROM CENTER OF BOLT TO ANY EDGE OF A PLATE OR STRUCTURAL ELEMENT.

2. WELDED:
   A. FILLET WELDS: PER AWS CODE BASED ON THE THICKNESS OF THE MATERIALS BEING JOINED, AND FULL LENGTH OF THE JOINT.

3. INTERFACE BETWEEN MATERIALS:
   A. AT BOLTED CONNECTIONS THAT INCLUDE DIFFERENT METALS (E.G.: STEEL AND STAINLESS STEEL, OR ALUMINUM AND STAINLESS STEEL) PROVIDE ISOLATING SLEEVES AND WASHERS AS SPECIFIED IN SECTION 05190.
   B. WHERE ALUMINUM IS IN CONTACT WITH MASONRY OR CONCRETE, COAT ALUMINUM SURFACES AS SPECIFIED IN SECTION 09960.

4. POST-INSTALLED ANCHORS IN CONCRETE AND MASONRY:
   A. INSTALL IN FULL COMPLIANCE WITH ACCEPTED BUILDING CODE EVALUATION REPORT AND MANUFACTURER'S INSTRUCTIONS.
   B. DO NOT CUT, DAMAGE, OR INTERRUPT EXISTING REINFORCEMENT TO INSTALL ANCHORS. USE NON-DESTRUCTIVE TESTING EQUIPMENT TO IDENTIFY LOCATIONS OF REINFORCEMENT IN MEMBERS BEFORE DRILLING HOLES FOR ANCHORS.

METAL FABRICATIONS:

1. HANDRAILS AND GUARDRAILS:
   A. ALUMINUM, EXCEPT WHERE OTHER MATERIALS ARE NOTED.

2. GRATING:
   A. ALUMINUM WITH TYPE 316 STAINLESS STEEL FASTENERS, UNLESS OTHERWISE NOTED.
   B. GRATING AND ITS SEATS OR SUPPORTS SHALL BE OF THE SAME MATERIAL.
   C. UNLESS INDICATED ON THE DRAWINGS AS "REMOVABLE GRATING", SECURELY FASTEN GRATING TO SUPPORTS AS INDICATED IN A414/TYP.

3. COVER PLATES:
   A. ALUMINUM WITH TYPE 316 STAINLESS STEEL FASTENERS, UNLESS OTHERWISE NOTED.
   B. COVER PLATE AND ITS SEATS OR SUPPORTS SHALL BE OF THE SAME MATERIAL.

SPECIAL INSPECTION:

1. SPECIAL INSPECTION IS REQUIRED FOR THE FOLLOWING STRUCTURAL MATERIALS AND CONSTRUCTION. SEE SPECIFICATION SECTION 01452 FOR DETAILS.

2. DIVISION 2 SITE CONSTRUCTION (EARTHWORK):
   A. EXCAVATION DEPTH.
   B. ADEQUACY OF EXPOSED SURFACE TO PROVIDE REQUIRED SUPPORT.
   C. PREPARATION OF SOILS/SURFACES SUPPORTING CONSTRUCTION.
   D. FILL AND BACKFILL.
   E. DEEP FOUNDATIONS PILES DRILLED PIERS HELICAL ANCHORS.

3. DIVISION 3 CONCRETE:
   A. LOCATIONS.
   B. FORMWORK AND MEMBER SIZES.
   C. REINFORCING STEEL.
   D. ANCHORS: CAST-IN AND POST-INSTALLED.
   E. CONCRETE MIX AND PLACEMENT.
   F. PROTECTION AND CURING PROCEDURES.
   G. PRECAST CONCRETE.

4. DIVISION 5 METALS:
   A. GENERAL ALL METALS:
      1) MEMBER LOCATIONS.
      2) MEMBER SIZES/TYPES.
      3) ANCHORS - CAST-IN AND BUILT-IN ANCHOR BOLTS.
      4) ANCHORS - POST-INSTALLED MECHANICAL AND ADHESIVE.
   B. STRUCTURAL STEEL (CARBON AND STAINLESS).
      1) HIGH-STRENGTH BOLTING.
      2) WELDING.
   C. STRUCTURAL ALUMINUM.
      1) BOLTING.
      2) WELDING.
   D. COLD-FORMED STEEL LIGHT-FRAME CONSTRUCTION.

STRUCTURAL OBSERVATION:

1. STRUCTURAL OBSERVATION IS REQUIRED DURING AND AT SPECIFIC STAGES OF CONSTRUCTION. SEE SPECIFICATION SECTION 01452 FOR DETAILS.

STRUCTURAL SYMBOLS:

1. SEE SHEET G-03 FOR KEY TO DRAWING TITLES AND SECTION CUTS, AND FOR DEFINITION OF MATERIALS SHADING PATTERNS.

2. WELDING: SYMBOLS: IN ACCORDANCE WITH AMERICAN WELDING SOCIETY (AWS) A2.4.

STRUCTURAL ABBREVIATIONS:

1. SEE SHEET G-03 FOR GENERAL LIST OF ABBREVIATIONS USED ON DRAWINGS.

2. ABBREVIATIONS FOR NAMES OF TECHNICAL GROUPS MAY BE FOUND IN THE PROJECT SPECIFICATIONS.

3. STRUCTURAL MEMBERS:

   A. STEEL: ABBREVIATIONS AND DESIGNATIONS ARE IN ACCORDANCE WITH THE AMERICAN INSTITUTE OF STEEL CONSTRUCTION'S STEEL CONSTRUCTION MANUAL, CURRENT EDITION.

   B. ALUMINUM: ABBREVIATIONS AND DESIGNATIONS ARE IN ACCORDANCE WITH THE ALUMINUM ASSOCIATION'S ALUMINUM DESIGN MANUAL, CURRENT EDITION.

4. ABBREVIATIONS FOR STRUCTURAL DRAWINGS:
   WHEN USED ON THE STRUCTURAL DRAWINGS, THE FOLLOWING ABBREVIATIONS HAVE THE MEANINGS LISTED.

REINFORCEMENT:		OTHER:	
EF	EACH FACE	L	ANGLE
IF	INSIDE FACE	PL	PLATE
OF	OUTSIDE FACE		
TO	TOP OF		
#	NUMBER (REINFORCING BAR SIZE)		

THE CITY OF LOS ANGELES OR ITS OFFICERS OR AGENTS SHALL NOT BE RESPONSIBLE FOR THE ACCURACY OR COMPLETENESS OF ELECTRONIC COPIES OF THIS PLAN SHEET.

REVISION DATES (DESIGN STAGE ONLY)

PLANS PREPARED BY:
carollo
707 WILSHIRE BLVD, SUITE 3920
LOS ANGELES, CA 90017
(213) 489-1587

CITY OF LOS ANGELES DEPARTMENT OF PUBLIC WORKS
BUREAU OF ENGINEERING
THIS PLAN WAS ELECTRONICALLY • SIGNED AND STAMPED

ENGINEERING
CITY OF LOS ANGELES

Digitally signed by Iyresimir I. Antunovich
Contact Info: Carollo Engineers, Inc
Date: 2023.12.01 12:03:47 -08'00'

REGISTERED PROFESSIONAL ENGINEER · IYRESIMIR I. ANTUNOVICH · No. 87904 · STATE OF CALIFORNIA · CIVIL

VERTICAL CONTROL: VERTICAL CONTROL
HORIZONTAL CONTROL: HORIZONTAL CONTROL

SHEET TITLE: STRUCTURAL GENERAL NOTES
PROJECT: VALLEY VILLAGE PARK STORM WATER CAPTURE PROJECT
ADDRESS: VALLEY VILLAGE PARK, 5000 Westpark Dr, North Hollywood, CA 91601

NO.	REVISIONS	DATE	BY
		YY/MM/DD	
		YY/MM/DD	
		YY/MM/DD	
		YY/MM/DD	

CIP NO. SCP0009

INDEX NO.

CITY ENGINEER: TED ALLEN, P.E. DATE YY/MM/DD

DESIGN GROUP		DATE
ENGINEER:	PVT - MATT HUCKABY	YY/MM/DD
ARCHITECT:	XXX	YY/MM/DD
DESIGNED BY:	PVT - JERRY GANTNEY	YY/MM/DD
DRAWN BY:	PVT - ATTILA SIMON	YY/MM/DD
CHECKED BY:	PVT - RAPHAEL BUI	YY/MM/DD
APPROVED BY:	PVT - MIKO AIVAZIAN	YY/MM/DD

WORK ORDER EW40085F

SHEET NAME S-01

SHEET 22 OF 80 SHEETS

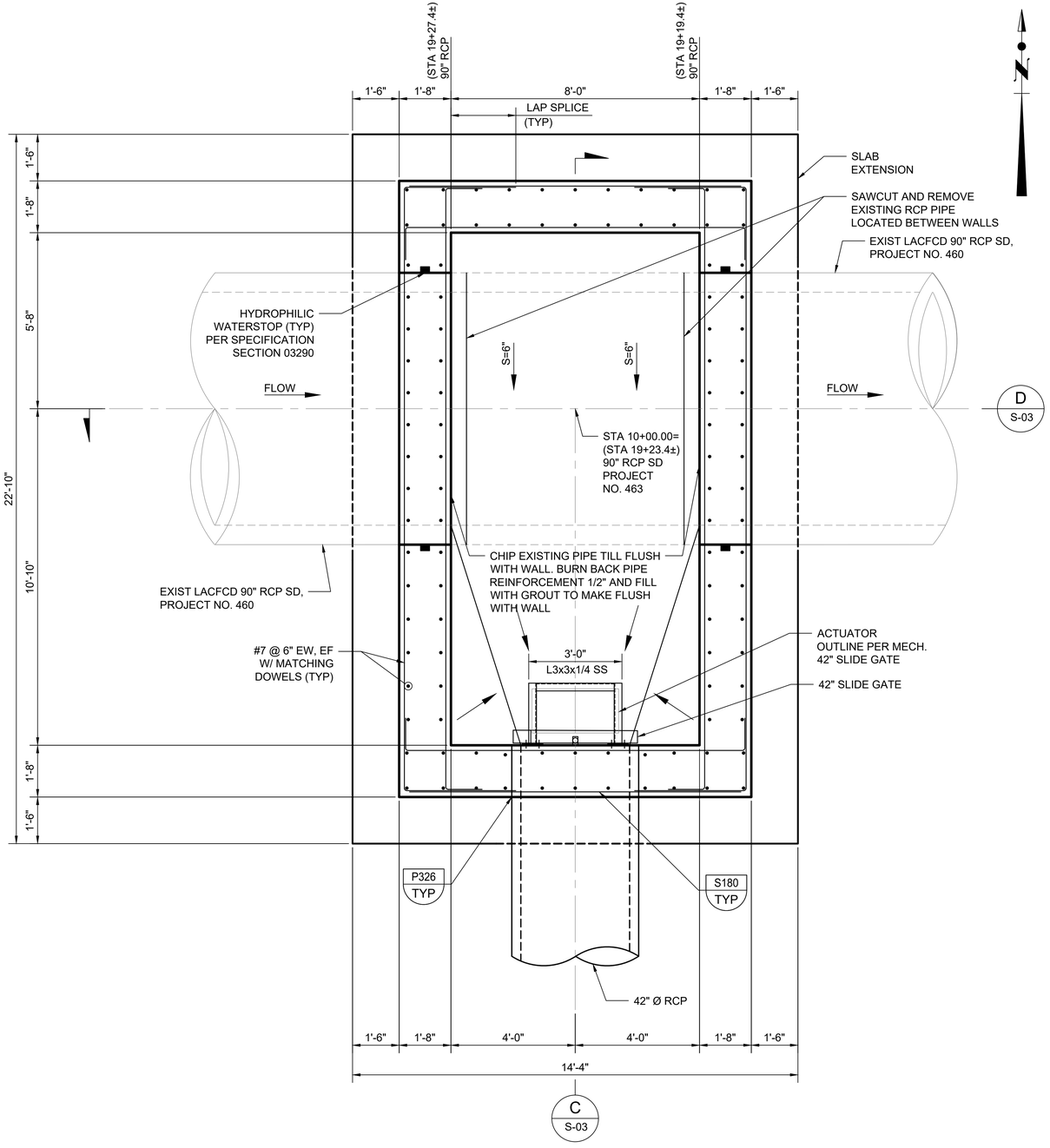

A BOTTOM PLAN
SCALE: 1/2"=1'-0"

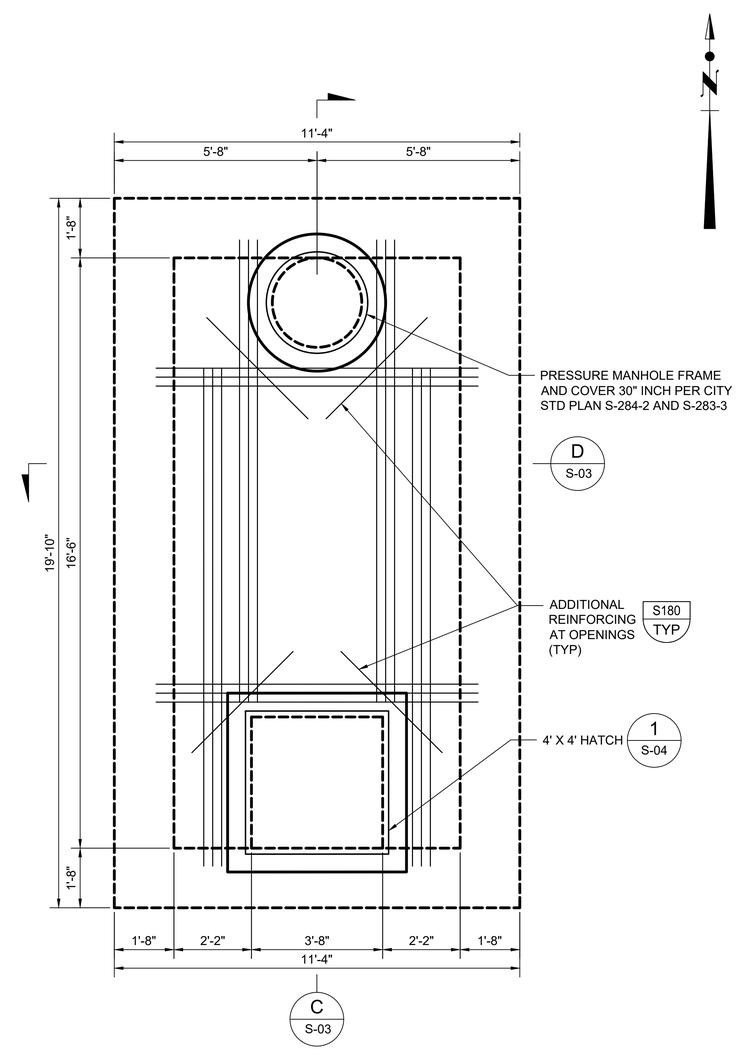

B TOP PLAN
SCALE: 1/2"=1'-0"

GENERAL NOTES

1. FOR GENERAL STRUCTURAL NOTES, EXCAVATION AND BACKFILLING, SEE SHEET S-01.
2. FOR REINFORCED CONCRETE NOTES SEE S101/TYP.
3. THE DIVERSION STRUCTURE, INFILTRATION GALLERY, PRETREATMENT DEVICE, AND ASSOCIATED STORM DRAIN PIPING AND APPURTENANCES ARE TO BE MAINTAINED BY LADWP.

THE CITY OF LOS ANGELES OR ITS OFFICERS OR AGENTS SHALL NOT BE RESPONSIBLE FOR THE ACCURACY OR COMPLETENESS OF ELECTRONIC COPIES OF THIS PLAN SHEET.

REVISION DATES (DESIGN STAGE ONLY)

PLANS PREPARED BY:
carollo
707 WILSHIRE BLVD, SUITE 3920
LOS ANGELES, CA 90017
(213) 489-1587

CITY OF LOS ANGELES DEPARTMENT OF PUBLIC WORKS BUREAU OF ENGINEERING

ENGINEERING
CITY OF LOS ANGELES

THIS PLAN WAS ELECTRONICALLY SIGNED AND STAMPED

Digitally signed by Kresimir I. Antunovich
Contact Info: Carollo Engineers, Inc
Date: 2023.12.01 12:11:11 -07'00'

REGISTERED PROFESSIONAL ENGINEER KRESIMIR I. ANTUNOVICH No. 87904 CIVIL STATE OF CALIFORNIA

VERTICAL CONTROL: VERTICAL CONTROL
HORIZONTAL CONTROL: HORIZONTAL CONTROL

SHEET TITLE: DIVERSION STRUCTURE PLANS
PROJECT: VALLEY VILLAGE PARK STORM WATER CAPTURE PROJECT
ADDRESS: VALLEY VILLAGE PARK 5000 Westpark Dr, North Hollywood, CA 91601

NO.	REVISIONS	DATE	BY
		YY/MM/DD	
		YY/MM/DD	
		YY/MM/DD	
		YY/MM/DD	

CIP NO. SCP0009

INDEX NO.

CITY ENGINEER
TED ALLEN, P.E.

	DESIGN GROUP	DATE
ENGINEER:	PVT - MATT HUCKABY	YY/MM/DD
ARCHITECT:	XXX	YY/MM/DD
DESIGNED BY:	PVT - JERRY GANTNEY	YY/MM/DD
DRAWN BY:	PVT - ATTILA SIMON	YY/MM/DD
CHECKED BY:	PVT - RAPHAEL BUI	YY/MM/DD
APPROVED BY:	PVT - MIKO AIVAZIAN	YY/MM/DD

WORK ORDER
EW40085F

SHEET NAME
S-02
SHEET 23 OF 80 SHEETS

SHEET VERSION 4.0.1 FILE PATH: C:\PW_WORKING\PROJECTWISE\CAROLLO_ASIMON\D1118221\0009_S_SH_S02.DWG PLOT DATE: 12/1/2023 12:03 PM SAVED: 12/1/2023 11:20 AM SAVED BY:ASIMON

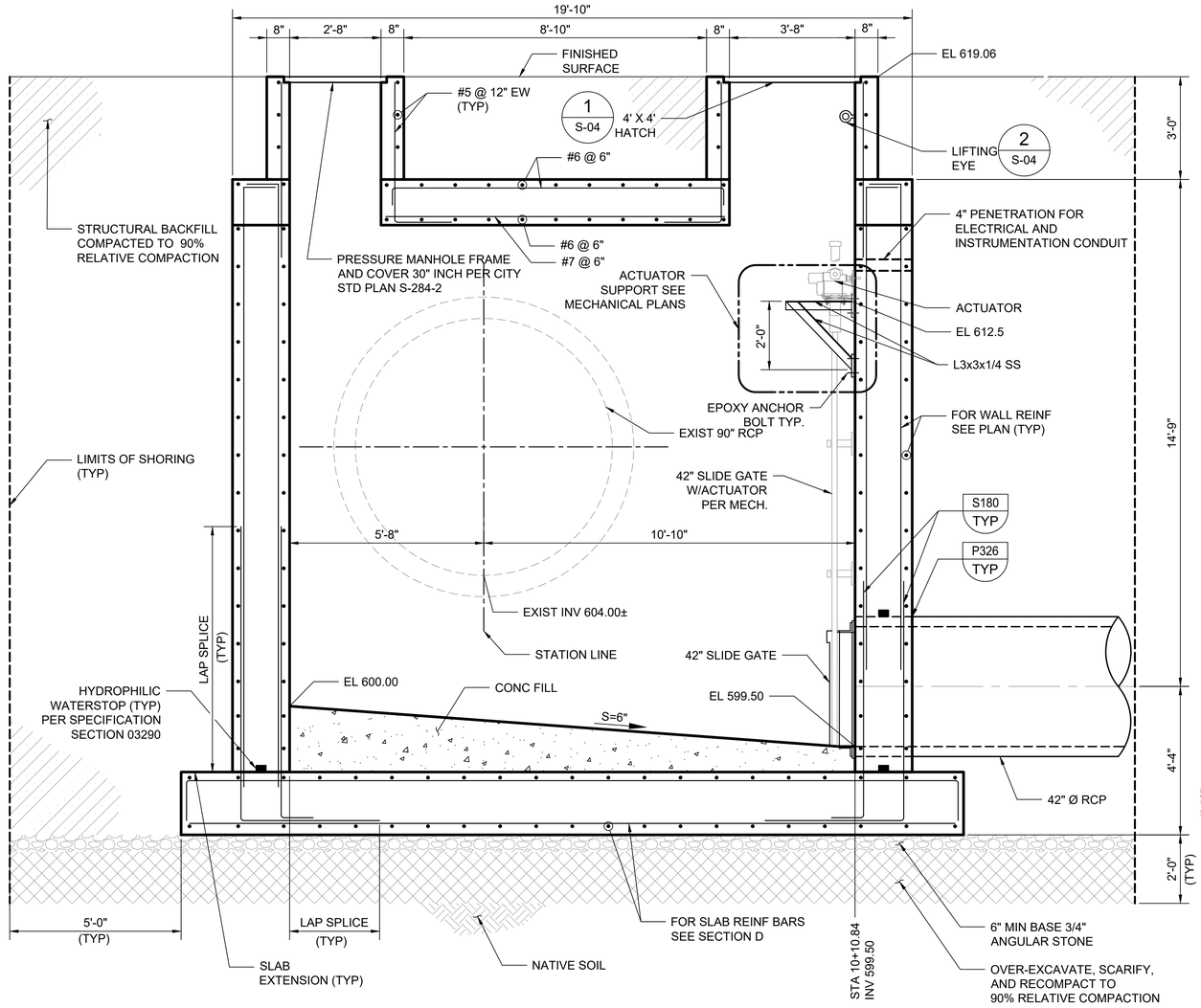

C S-02 SECTION
SCALE: 1/2"=1'-0"

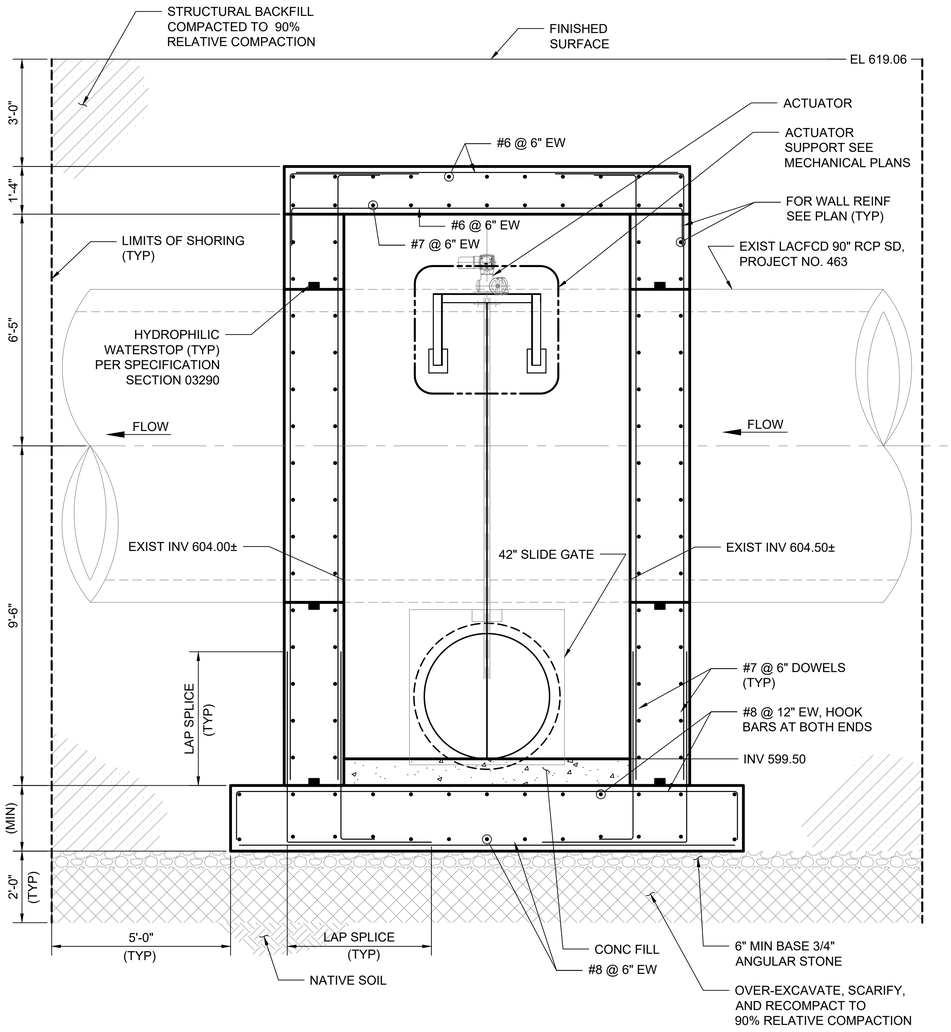

D S-02 SECTION
SCALE: 1/2"=1'-0"

GENERAL NOTES

1. FOR GENERAL STRUCTURAL NOTES, EXCAVATION AND BACKFILLING, SEE SHEETS S0-1.
2. FOR REINFORCED CONCRETE NOTES SEE S101/TYP.
3. THE DIVERSION STRUCTURE, INFILTRATION GALLERY, PRETREATMENT DEVICE, AND ASSOCIATED STORM DRAIN PIPING AND APPURTENANCES ARE TO BE MAINTAINED BY LADWP.

THE CITY OF LOS ANGELES OR ITS OFFICERS OR AGENTS SHALL NOT BE RESPONSIBLE FOR THE ACCURACY OR COMPLETENESS OF ELECTRONIC COPIES OF THIS PLAN SHEET.

REVISION DATES (DESIGN STAGE ONLY)

PLANS PREPARED BY:
carollo®
707 WILSHIRE BLVD., SUITE 3920
LOS ANGELES, CA 90017
(213) 489-1587

CITY OF LOS ANGELES DEPARTMENT OF PUBLIC WORKS
BUREAU OF ENGINEERING
THIS PLAN WAS ELECTRONICALLY • SIGNED AND STAMPED

ENGINEERING
CITY OF LOS ANGELES

Digitally signed by Iyresimir I. Antunovich
Contact Info: Carollo Engineers, Inc
Date: 2023.12.01 12:03:00 -08'00'
REGISTERED PROFESSIONAL ENGINEER IYRESIMIR I. ANTUNOVICH No. 87904 CIVIL STATE OF CALIFORNIA

VERTICAL CONTROL:	
HORIZONTAL CONTROL:	
SHEET TITLE:	DIVERSION STRUCTURE SECTIONS
PROJECT:	VALLEY VILLAGE PARK STORM WATER CAPTURE PROJECT
ADDRESS:	VALLEY VILLAGE PARK 5000 Westpark Dr, North Hollywood, CA 91601

NO.	REVISIONS	DATE	BY
		YY/MM/DD	
		YY/MM/DD	
		YY/MM/DD	
		YY/MM/DD	
		YY/MM/DD	

CIP NO. SCP0009

INDEX NO.

CITY ENGINEER	DATE
TED ALLEN, P.E.	YY/MM/DD

DESIGN GROUP	
ENGINEER:	PVT - MATT HUCKABY
ARCHITECT:	XXX
DESIGNED BY:	PVT - JERRY GAYTNEY
DRAWN BY:	PVT - ATTILA SIMON
CHECKED BY:	PVT - RAPHAEL BUI
APPROVED BY:	PVT - MIKO AIVAZIAN

WORK ORDER
EW40085F

SHEET NAME
S-03
SHEET 24 OF 80 SHEETS

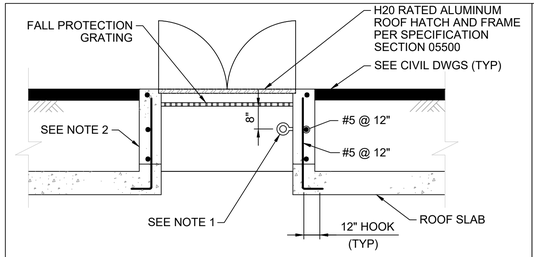

NOTES:

1. LIFTING EYE, WHERE OCCURS ON PLANS, PER DETAIL 2 ON THIS SHEET
2. FOR INFILTRATION GALLERY ACCESS HATCHES, WALLS SHALL BE PRECAST CONCRETE AND PROVIDED BY GALLERY SUPPLIER

1 - H20 REATED ACCESS HATCH
SCALE: NTS

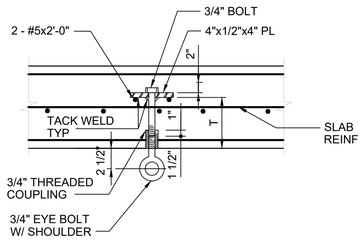

NOTES:

1. ALL METAL PARTS SHALL BE GALVANIZED STEEL.
2. A CLEARANCE OF 2" MIN SHALL BE MAINTAINED BETWEEN THE LIFTING EYE ASSEMBLY AND THE REINFORCING STEEL.
3. LOAD CAPACITY T=4" 2000#

2 - LIFTING EYE
SCALE: NTS

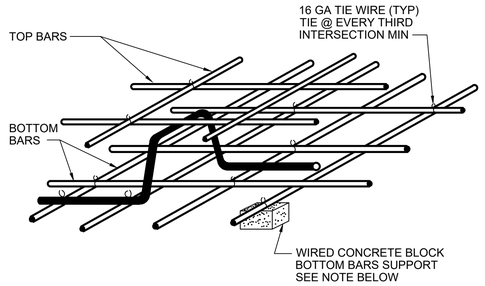

NOTE:

METAL BAR SUPPORTS, IF USED IN SLABS NOT ON GROUND, SHALL NOT MAKE CONTACT WITH FORMS

3 - REINFORCEMENT SUPPORT
SCALE: NTS

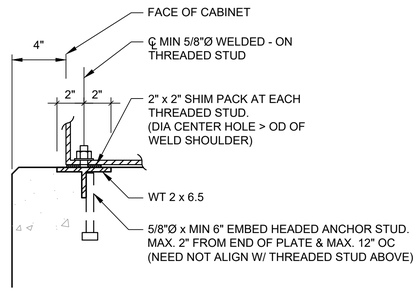

A - CAST-IN-ANCHOR
SCALE: NTS

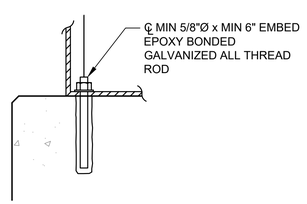

B - POST-INSTALLED ANCHOR
SCALE: NTS

NOTES:

ANCHOR BOLTS AND MOUNTING HARDWARE SHALL BE HOT-DIP GALVANIZED.

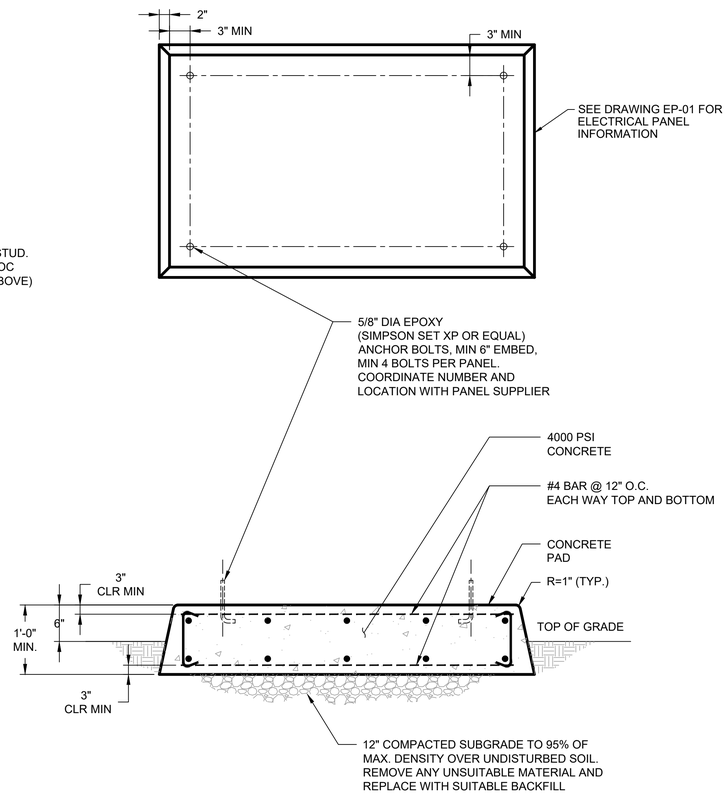

4 - EQUIPMENT ENCLOSURE PAD
SCALE: NTS

THE CITY OF LOS ANGELES OR ITS OFFICERS OR AGENTS SHALL NOT BE RESPONSIBLE FOR THE ACCURACY OR COMPLETENESS OF ELECTRONIC COPIES OF THIS PLAN SHEET.

REVISION DATES (DESIGN STAGE ONLY)

ENGINEERING
CITY OF LOS ANGELES

THIS PLAN WAS ELECTRONICALLY • SIGNED AND STAMPED

Digitally signed by Igresimir I. Antunovich
Contact Info: CA@AECOM.com, Inc
Date: 2023.12.01 12:03:00 PM

REGISTERED PROFESSIONAL ENGINEER IGRESIMIR I. ANTUNOVICH No. 87904 STATE OF CALIFORNIA CIVIL

BUREAU OF ENGINEERING

VERTICAL CONTROL:
HORIZONTAL CONTROL:

SHEET TITLE: STRUCTURAL DETAILS - 1

PROJECT: VALLEY VILLAGE PARK STORM WATER CAPTURE PROJECT

ADDRESS: VALLEY VILLAGE PARK
5000 Westpark Dr, North Hollywood, CA 91601

CITY OF LOS ANGELES DEPARTMENT OF PUBLIC WORKS

NO.	REVISIONS	DATE	BY
		YY/MM/DD	
		YY/MM/DD	
		YY/MM/DD	
		YY/MM/DD	

CIP NO. SCP0009

INDEX NO.

CITY ENGINEER

	DESIGN GROUP	DATE
TED ALLEN, P.E.		YY/MM/DD
ENGINEER:	PVT - MATT HUCKABY	YY/MM/DD
ARCHITECT:	XXX	YY/MM/DD
DESIGNED BY:	PVT - JERRY GANTNEY	YY/MM/DD
DRAWN BY:	PVT - ATTILA SIMON	YY/MM/DD
CHECKED BY:	PVT - RAPHAEL BUI	YY/MM/DD
APPROVED BY:	PVT - MIKO AIVAZIAN	YY/MM/DD

PLANS PREPARED BY:
carollo
707 WILSHIRE BLVD, SUITE 3920
LOS ANGELES, CA 90017
(213) 488-1057

WORK ORDER
EW40085F

SHEET NAME
S-04

SHEET 25 OF 80 SHEETS

1. SEE DIVISION 03 SPECIFICATIONS FOR REQUIREMENTS FOR CONCRETE CONSTRUCTION.
2. UNLESS OTHERWISE INDICATED ON THE DRAWINGS, MINIMUM REINFORCEMENT OF CONCRETE WALLS OR SLABS SHALL BE:
   10" THICK OR LESS: .....#5 @ 12" EACH WAY.
   MORE THAN 10" THICK: .....#5 @ 12" EACH WAY, EACH FACE.
3. WALL REINFORCEMENT AT CORNERS OR JUNCTIONS OF WALLS SHALL BE CONTINUOUS, LAP SPLICED, OR TERMINATED IN AN ACI STANDARD 90 DEGREE HOOK. SEE DETAIL S144/TYP.
4. UNLESS OTHERWISE INDICATED ON THE DRAWINGS, BARS SHALL BE DOWELED. DOWELS SHALL BE THE SAME SIZE AND SPACING AS THE REINFORCEMENT WHICH IS SPLICED TO THE DOWELS.
5. SLAB, BEAM AND COLUMN REINFORCING BARS SHALL HAVE A MINIMUM EXTENSION OR ANCHORAGE INTO SUPPORTS IN ACCORDANCE WITH ACI 318 AND ACI 350.
6. STIRRUP SUPPORT BARS SHALL BE PROVIDED TO SECURE TOP BARS AGAINST DISPLACEMENT AS REQUIRED.
7. UNLESS OTHERWISE INDICATED ON THE DRAWINGS, CONCRETE COVER OVER #11 AND SMALLER REINFORCING BARS SHALL BE AS FOLLOWS:
   A. SLABS AND JOISTS:
      FORMED CONCRETE SURFACES AND UNFORMED TOP SURFACES FOR DRY CONDITIONS
      #7 BARS AND SMALLER.....1"
      #8 BARS AND LARGER.....1 1/2"
      FORMED CONCRETE SURFACES AND UNFORMED TOP SURFACES EXPOSED TO WEATHER, IN CONTACT WITH SOIL OR FLUIDS, OR LOCATED OVER FLUIDS.....2"
   B. BEAMS AND COLUMNS:
      FORMED CONCRETE SURFACES FOR DRY CONDITIONS:
      STIRRUPS, SPIRALS, AND TIES.....1 1/2"
      PRINCIPAL REINFORCEMENT.....2"
      FORMED CONCRETE SURFACES EXPOSED TO WEATHER, IN CONTACT WITH SOIL OR FLUIDS, OR IN BEAMS LOCATED OVER FLUIDS:
      STIRRUPS AND TIES.....2"
      PRINCIPAL REINFORCEMENT.....2 1/2"
   C. WALLS:
      FORMED CONCRETE SURFACES FOR DRY CONDITIONS:
      #7 BARS AND SMALLER.....1"
      #8 BARS AND LARGER.....1 1/2"
      FORMED CONCRETE SURFACES EXPOSED TO WEATHER, OR IN CONTACT WITH SOIL OR FLUIDS.....2"

S101 TYP S — REINFORCED CONCRETE NOTES

   D. FOOTINGS AND SLABS ON GRADE:
      FORMED VERTICAL CONCRETE SURFACES.....2"
      AT UNFORMED CONCRETE SURFACES CAST AGAINST SOIL, ROCK, OR CONCRETE WORK MATS.....3"
      TOP SURFACE OF FOOTINGS AND SLABS.....SAME AS SLABS
8. WATERSTOPS:
   A. PROVIDE WATERSTOPS AT JOINTS IN SLABS AND WALLS OF LIQUID-CONTAINING STRUCTURES, AND PORTIONS OF STRUCTURES BELOW THE DESIGN GROUNDWATER LEVEL. MAKE WATERSTOPS CONTINUOUS THROUGH STRUCTURE, SPLICING WATERSTOPS IN SLABS WITH WATERSTOPS IN WALLS.
   B. END WATERSTOPS 3" BELOW TOP OF WALLS. WHERE TOP OF WALL IS COVERED BY A SLAB WITHOUT WATERSTOPS, CONTINUE WATERSTOP TO WALL/SLAB JOINT. WHERE TOP OF WALL IS COVERED BY A SLAB WITH WATERSTOPS, MAKE WATERSTOPS CONTINUOUS, SPLICING WATERSTOPS IN WALLS WITH WATERSTOPS IN SLAB.
9. CURE CONCRETE IN ACCORDANCE WITH THE CONTRACT DOCUMENTS. WHERE WATER CURING IS SPECIFIED, MEMBRANE CURING IS NOT ALLOWED.
   A. THE CONTRACTOR IS WARNED THAT WATER CURING IS DIFFICULT AT TIMES DUE TO WIND AND DRY CONDITIONS. STUDY SPECIFICATION REQUIREMENTS AND FURNISH ADEQUATE SYSTEMS TO PROVIDE WATER CURING WHERE REQUIRED.
   B. KEEP WATER CURED SURFACES VISIBLY MOIST AT ALL TIMES. FLOOD TOPS OF WALLS NOT LESS THEN 3 TIMES DAILY.
10. DO NOT PLACE BACKFILL AGAINST WALLS OR FILL TANK W/ WATER UNTIL:
    A. WALLS HAVE BEEN CAST TO FULL HEIGHT OF STRUCTURE AND CONCRETE HAS REACHED THE MINIMUM SPECIFIED COMPRESSIVE STRENGTH (f'c).
    B. CONNECTING SLABS AND BEAMS HAVE BEEN CAST AND CONCRETE IN THOSE ELEMENTS HAS REACHED THE MINIMUM SPECIFIED COMPRESSIVE STRENGTH (f'c).
11. LAP SPLICES:
    A. SEE TABLE 1 OF THIS DETAIL FOR LAP SPLICE LENGTHS.
    B. WHEN MULTIPLE BARS ARE SPLICED AT THE SAME SECTION, THE "CLEAR BAR SPACING" IS DEFINED AS THE MINIMUM CLEAR DISTANCE BETWEEN THE BARS OUTSIDE THE SPLICE LENGTH MINUS ONE BAR DIAMETER.
    C. UNLESS OTHERWISE INDICATED ON THE DRAWINGS, BARS AT A LAP SPLICE SHALL BE IN CONTACT WITH EACH OTHER.
    D. "TOP BARS" ARE HORIZONTAL REINFORCEMENT AT LOCATIONS WHERE MORE THAN 12 INCHES OF FRESH CONCRETE IS CAST IN THE MEMBER BELOW THE BAR.
12. FORM EXPOSED CONCRETE CORNERS AND EDGES WITH 3/4" CHAMFER UNLESS OTHERWISE INDICATED ON THE DRAWINGS.

S101 TYP S — REINFORCED CONCRETE NOTES

TABLE 1: REINFORCING BAR LAP SPLICES: f'c = 4000 TO 5000 PSI, Fy = 60,000 PSI

BAR SIZE	MINIMUM COVER (BAR DIA)	MINIMUM CLEAR BAR SPACING (BAR DIA)	LAP SPLICE LENGTH (INCHES)	
			TOP BARS	OTHER BARS
#4	MORE THAN 1	MORE THAN 2	32 *	25 *
	MORE THAN 2	MORE THAN 4	20	16
#5	MORE THAN 1	MORE THAN 2	40 *	31 *
	MORE THAN 2	MORE THAN 4	26	20
#6	MORE THAN 1	MORE THAN 2	48 *	37 *
	MORE THAN 2	MORE THAN 4	30	24
#7	MORE THAN 1	MORE THAN 2	70 *	54 *
	MORE THAN 2	MORE THAN 4	43	33
#8	MORE THAN 1	MORE THAN 2	81 *	62 *
	MORE THAN 2	MORE THAN 4	50	38
#9	MORE THAN 1	MORE THAN 2	90 *	70 *
	MORE THAN 2	MORE THAN 4	56	42
#10	MORE THAN 1	MORE THAN 2	104 *	81 *
	MORE THAN 2	MORE THAN 4	62	48
#11	MORE THAN 1	MORE THAN 2	114 *	88 *
	MORE THAN 2	MORE THAN 4	69	54

REINFORCING BAR LAP SPLICE TABLE NOTES:

1. TABULATED SPLICE LENGTHS ARE APPLICABLE ONLY WHEN BOTH REQUIREMENTS FOR MINIMUM COVER AND FOR MINIMUM CLEAR BAR SPACING ARE SATISFIED.
2. * = IF THE CLEAR BAR SPACING IS LESS THAN OR EQUAL TO TWO BAR DIAMETERS, OR THE COVER IS LESS THAN OR EQUAL TO ONE BAR DIAMETER, THE LAP SPLICE LENGTH SHALL BE INCREASED BY 50 PERCENT.

S101 TYP M — REINFORCED CONCRETE NOTES

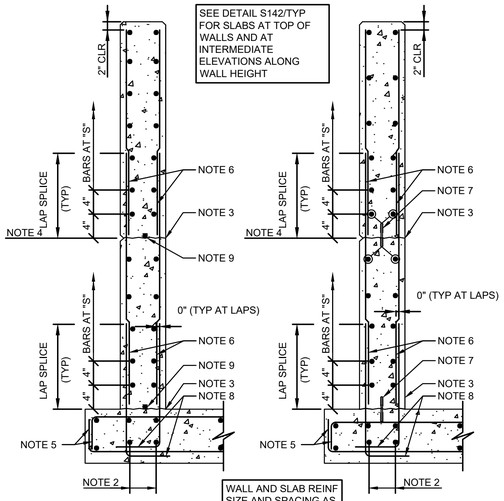

A - SECTION

B - SECTION - "W/ WSTP"

S140 TYP M — CONSTRUCTION JOINT - WALLS

NOTES:

1. "S" EQUALS TYPICAL BAR SPACING INDICATED ON THE DRAWINGS.
2. PLACE AND ALIGN BARS BEFORE PLACING DOWELS. BAR SIZE TO MATCH SLAB BARS.
3. WATER-BLAST JOINT FACE AND PROJECTING REINFORCEMENT BEFORE PLACING CONCRETE.
4. CONSTRUCTION JOINT WHERE INDICATE ON THE DRAWINGS.
5. STANDARD 90° HOOK WHERE INDICATED ON THE DRAWINGS. (ALTERNATE: PROVIDE 180° HOOK WHERE REQUIRED BY SLAB THICKNESS.)
6. DOWELS: SAME SIZE AND SPACING AS VERTICAL WALL BARS, UNLESS OTHERWISE NOTED.
7. 6" PVC WATERSTOP CENTERED VERTICALLY ON JOINT. PROVIDE WIRE TIES MAX 2'-0" OC. HOG RINGS MAY BE USED IN LIEU OF WIRE LOOPS. THOROUGHLY CLEAN WATERSTOP BEFORE PLACING CONCRETE.
8. STANDARD 90° HOOK UNLESS OTHERWISE INDICATED ON THE DRAWINGS.
9. WHERE DRAWINGS INDICATE "W/ HYDROPHILIC WSTP" PROVIDE LOW EXPANSION HYDROPHILIC WATERSTOP AT TOP SURFACE OF JOINT AND CENTERED BETWEEN VERTICAL BARS.

S140 TYP M — CONSTRUCTION JOINT - WALLS

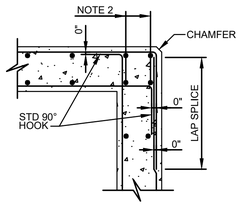

A - DETAIL - CORNER: DOUBLE MAT

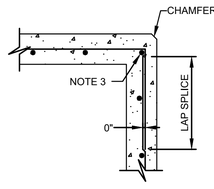

B - DETAIL - CORNER: SINGLE MAT

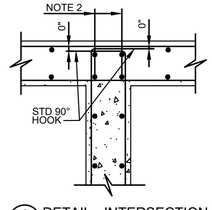

C - DETAIL - INTERSECTION: DOUBLE MAT

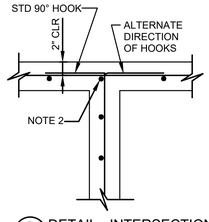

D - DETAIL - INTERSECTION: SINGLE MAT

NOTES:

1. BAR SIZE, SPACING, AND ORIENTATION OF BAR LAYERS SHALL BE AS INDICATED ON THE DRAWINGS.
2. AT INTERSECTION, MAKE BAR SIZE THE LARGER OF BAR SIZES IN CONNECTING WALLS. PLACE BARS IN SAME LAYERS AS AT CONNECTING WALLS (TYP).
3. BAR TAILS: 12 BAR DIAMETERS PLUS 12".

S144 TYP S — WALL REINFORCEMENT AT CORNERS & INTERSECTIONS

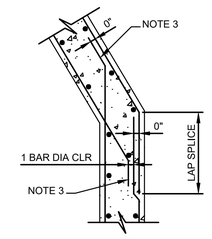

E - DETAIL - INTERSECTION: DOUBLE MAT

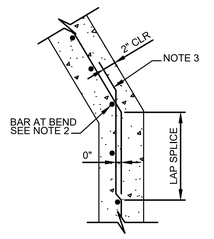

F - DETAIL - INTERSECTION: SINGLE MAT

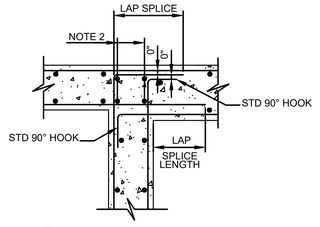

G - DETAIL - INTERSECTION: CHANGE IN WALL THICKNESS

S144 TYP S — WALL REINFORCEMENT AT CORNERS & INTERSECTIONS

PLANS PREPARED BY:
carollo
707 WILSHIRE BLVD, SUITE 3920
LOS ANGELES, CA 90017
(213) 489-1587

CITY OF LOS ANGELES DEPARTMENT OF PUBLIC WORKS BUREAU OF ENGINEERING • THIS PLAN WAS ELECTRONICALLY SIGNED AND STAMPED

ENGINEERING CITY OF LOS ANGELES

Digitally signed by Yevsmir I. Antonovich
Contact Info: Carollo Engineers, Inc
Date: 2023.12.01 15:03:47 -08'00'

REGISTERED PROFESSIONAL ENGINEER YEVSMIR I. ANTONOVICH No. 87904 CIVIL STATE OF CALIFORNIA

VERTICAL CONTROL:
HORIZONTAL CONTROL:
SHEET TITLE: STRUCTURAL DETAILS - 2
PROJECT: VALLEY VILLAGE PARK STORM WATER CAPTURE PROJECT
ADDRESS: VALLEY VILLAGE PARK 5000 Westpark Dr, North Hollywood, CA 91601

NO.	REVISIONS	DATE	BY
		YY/MM/DD	
		YY/MM/DD	
		YY/MM/DD	
		YY/MM/DD	

CIP NO. SCP0009

INDEX NO.

CITY ENGINEER	DATE
TED ALLEN, P.E.	YY/MM/DD

DESIGN GROUP	
ENGINEER:	PVT - MATT HUCKABY
ARCHITECT:	XXX
DESIGNED BY:	PVT - JERRY GANTNEY
DRAWN BY:	PVT - ATTILA SIMONIN
CHECKED BY:	PVT - RAPHAEL BUI
APPROVED BY:	PVT - MIKO AIVAZIAN

WORK ORDER EW40085F

SHEET NAME S-05

SHEET 26 OF 80 SHEETS

THE CITY OF LOS ANGELES OR ITS OFFICERS OR AGENTS SHALL NOT BE RESPONSIBLE FOR THE ACCURACY OR COMPLETENESS OF ELECTRONIC COPIES OF THIS PLAN SHEET.

REVISION DATES (DESIGN STAGE ONLY)

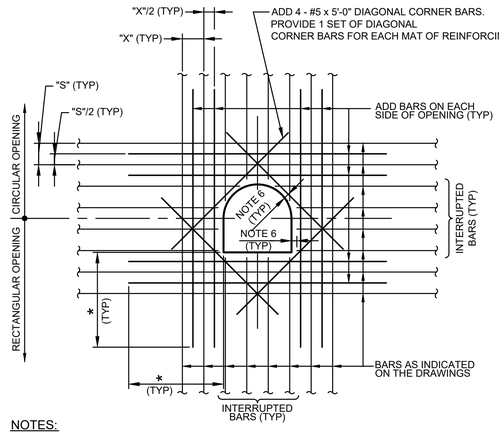

NOTES:

1. AREA OF ADD BARS AT EACH EDGE OF OPENING IN EACH DIRECTION SHALL BE EQUAL TO OR GREATER THAN 1/2 THE CROSS SECTIONAL AREA OF THE INTERRUPTED BARS.
2. PROVIDE STANDARD ACI HOOKS ON BARS IF STRAIGHT EXTENSION PAST THE OPENING, CANNOT BE ACHIEVED.
3. PLACE ADD BARS IN SAME PLANES AS INTERRUPTED REINFORCING.
4. PLACE #5 DIAGONAL BARS ON INSIDE OF INTERRUPTED REINFORCING.
5. * DIMENSION EQUALS OPENING DIMENSION MEASURED PERPENDICULAR TO ADD BARS PLUS LAP SPLICE LENGTH.
6. 2" CLEAR TO CONCRETE OPENINGS OR OUTSIDE FACE OF PIPES AND PIPE SLEEVES. DO NOT OVERCUT REINFORCMENT FOR EASIER PLACEMENT OF WEEP RINGS AND FLANGES.
7. ADD BARS ARE NOT REQUIRED AT SIDES OF OPENINGS PARALLEL TO AND WITHIN 6" OF A WALL OR BEAM.

S180 TYP S — ADDITIONAL REINFORCING AT OPENINGS IN CONCRETE SLABS OR WALLS

06/01/17

THE CITY OF LOS ANGELES OR ITS OFFICERS OR AGENTS SHALL NOT BE RESPONSIBLE FOR THE ACCURACY OR COMPLETENESS OF ELECTRONIC COPIES OF THIS PLAN SHEET.

REVISION DATES (DESIGN STAGE ONLY)

PLANS PREPARED BY:
carollo
707 WILSHIRE BLVD, SUITE 3920
LOS ANGELES, CA 90017
(213) 489-1587

CITY OF LOS ANGELES DEPARTMENT OF PUBLIC WORKS BUREAU OF ENGINEERING

ENGINEERING
CITY OF LOS ANGELES

THIS PLAN WAS ELECTRONICALLY SIGNED AND STAMPED

Digitally signed by Kresimir I. Antunovich
Contact Info: Carollo Engineers, Inc
Date: 2023.12.01 15:11:19 -07'00'

REGISTERED PROFESSIONAL ENGINEER KRESIMIR I. ANTUNOVICH No. 87904 CIVIL STATE OF CALIFORNIA

VERTICAL CONTROL: VERTICAL CONTROL
HORIZONTAL CONTROL: HORIZONTAL CONTROL

SHEET TITLE: STRUCTURAL DETAILS - 3

PROJECT: VALLEY VILLAGE PARK STORM WATER CAPTURE PROJECT

ADDRESS: VALLEY VILLAGE PARK
5000 Westpark Dr, North Hollywood, CA 91601

NO.	REVISIONS	DATE	BY
		YY/MM/DD	
		YY/MM/DD	
		YY/MM/DD	
		YY/MM/DD	

CIP NO. SCP0009

INDEX NO.

CITY ENGINEER	DESIGN GROUP	DATE
ENGINEER:	PVT - MATT HUCKABY	YY/MM/DD
ARCHITECT:	XXX	YY/MM/DD
DESIGNED BY:	PVT - JERRY GANTNEY	YY/MM/DD
DRAWN BY:	PVT - ATTILA SIMON	YY/MM/DD
CHECKED BY:	PVT - RAPHAEL BUI	YY/MM/DD
APPROVED BY:	PVT - MIKO AIVAZIAN	YY/MM/DD

TED ALLEN, P.E.

WORK ORDER EW40085F

SHEET NAME S-06

SHEET 27 OF 80 SHEETS

SHEET VERSION 4.0.1 FILE PATH: C:\PW_WORKING\PROJECTWISE\CAROLLO_ASIMON\D1118221\0009_S_SH_S06.DWG PLOT DATE: 12/1/2023 12:04 PM SAVED: 11/15/2021 9:42 AM SAVED BY:ASIMON

GENERAL NOTES

GENERAL

1. PROCESS MECHANICAL EQUIPMENT AND PIPING LOCATIONS, DIMENSIONS, AND LAYOUTS ARE BASED ON THE EQUIPMENT SELECTED AND SPECIFIED BY THE ENGINEER. IF THE CONTRACTOR PROPOSES TO FURNISH EQUIPMENT THAT REQUIRES AN ARRANGEMENT OR SPACE OTHER THAN THAT INDICATED ON THE DRAWINGS OR AS SPECIFIED, THE CONTRACTOR SHALL PREPARE AND SUBMIT TO THE ENGINEER FOR APPROVAL DETAILED DRAWINGS AND EQUIPMENT LISTS (FOR IMPACTED DISCIPLINES) SHOWING EQUIPMENT AND PIPING LOCATIONS, DIMENSIONS, AND LAYOUTS PROPOSED. THIS INFORMATION SHALL INCLUDE, BUT NOT BE LIMITED TO, PLANS, SECTIONS, DETAILS, AND SCHEMATICS OF EQUIPMENT AND APPURTENANCES REQUIRED. THE CONTRACTOR SHALL PROVIDE DETAILS OF CHANGES TO ADJACENT PIPE ROUTING TO ACCOMMODATE TIE-IN LOCATIONS FOR PROPOSED EQUIPMENT.
2. OTHER DISCIPLINE BACKGROUND DRAWINGS AND DIMENSIONS SHOWN ON THE PROCESS MECHANICAL DRAWINGS ARE FOR REFERENCE ONLY. THE CONTRACTOR SHALL CLARIFY DISCREPANCIES BETWEEN DISCIPLINES WITH THE ENGINEER PRIOR TO THE FABRICATION OR CONSTRUCTION.
3. EQUIPMENT FOUNDATION AND PAD DIMENSIONS SHOWN ON THE PROCESS MECHANICAL DRAWINGS ARE APPROXIMATE. THE CONTRACTOR SHALL COORDINATE EQUIPMENT PAD DIMENSIONS WITH THE MANUFACTURER TO ACCOMMODATE THE ACTUAL SIZE OF EQUIPMENT FURNISHED (AS SHOWN ON THE APPROVED SHOP DRAWINGS) AND AVAILABLE SPACE. REFER TO THE STRUCTURAL DRAWINGS AND STRUCTURAL STANDARD DETAILS FOR EQUIPMENT PAD DESIGN REQUIREMENTS.
4. EQUIPMENT BASES HAVING DRAIN OUTLETS, EQUIPMENT DRAINS, AND PIPING DRAINS SHALL BE PIPED WITH A CONTINUOUS SLOPE TO THE PUMP WELL.
5. WHERE WELDING OF STAINLESS STEEL IS REQUIRED, PASSIVATE STAINLESS STEEL AFTER WELDING PER ASTM A967.

PIPING

1. CONTRACTOR SHALL PROVIDE INTERCONNECTING PIPING, FITTINGS, WALL PIPES, AND PIPE SUPPORTS (INCLUDING THOSE REQUIRED FOR INSTRUMENTS, DRAINS, AND OTHER APPURTENANCES) AS REQUIRED FOR A COMPLETE PROCESS MECHANICAL PIPING SYSTEM.
2. FOR CLARITY, SMALL DIAMETER PROCESS PIPING MAY NOT BE SHOWN IN ITS ENTIRETY. THE CONTRACTOR SHALL REFER TO THE CONTRACT DOCUMENTS TO DETERMINE THE NEW WORK ASSOCIATED WITH EACH PIPING SYSTEM TO COMPLETE THE WORK.
3. PROCESS MECHANICAL PIPING SYSTEMS AND EQUIPMENT SHALL BE INSTALLED IN SUCH A WAY TO BE EASILY DISMANTLED AND REMOVED WITHOUT DISTURBING THE REMAINING AND ADJACENT EQUIPMENT, PIPING, AND SUPPORTS.
4. PIPING CONNECTED TO PROCESS MECHANICAL EQUIPMENT SHALL BE INSTALLED AND SUPPORTED SUCH THAT IT DOES NOT IMPART STRAIN ON THE EQUIPMENT.
5. UNLESS OTHERWISE SHOWN, HORIZONTAL REDUCERS INSTALLED IN PIPING SYSTEMS SHALL BE ECCENTRIC (BOTTOM FLAT). HORIZONTAL REDUCERS CONNECTED TO PUMP SUCTIONS SHALL BE ECCENTRIC (TOP FLAT).
6. UNLESS OTHERWISE SHOWN, ELBOWS 2-1/2" AND LARGER SHALL BE STANDARD LONG RADIUS ELBOWS. WHERE REQUIRED IN TIGHT AREAS FOR FIT-UP, USE SHORT RADIUS OR REDUCING ELBOWS.
7. SLEEVE COUPLINGS, FLANGED COUPLING ADAPTERS, AND FLEXIBLE COUPLINGS SUBJECT TO A POSITIVE INTERNAL FLUID PRESSURE SHALL BE PROVIDED WITH RESTRAINT SYSTEMS.

PIPE SUPPORTS

1. FOR MATERIALS, SPACING, AND ADDITIONAL REQUIREMENTS RELATED TO PIPE SUPPORTS, SEE THE SPECIFICATION SECTION `PIPE SUPPORTS'.
2. PROVIDE PIPE SUPPORTS REQUIRED FOR A COMPLETE PIPING SYSTEM. PIPE SUPPORTS SHALL BE PROVIDED WHERE REQUIRED BY THE SPECIFICATION SECTION 'PIPE SUPPORTS' AND/OR AT POINTS MARKED WITH AN "[]" ON PLAN VIEW DRAWINGS.
3. WHEN FIBERGLASS OR PVC-COATED PIPE SUPPORT MATERIALS ARE CUT OR DRILLED, THE CUT EXPOSED END OF THE MATERIAL SHALL BE RE-COATED OR SEALED IN ACCORDANCE WITH THE MANUFACTURER'S RECOMMENDATIONS.
4. PIPE SUPPORTS FOR PLASTIC PIPE OR FIBERGLASS PIPE SHALL BE PROVIDED WITH EXTRA WIDE PIPE SADDLES OR METALLIC SHIELDS WITH LOOSE FIT AROUND THE FULL CIRCUMFERENCE OF THE PIPE AT EACH PIPE SUPPORT.
5. PIPE SUPPORTS FOR COPPER PIPE OR TUBING SHALL BE PROVIDED WITH A 2" WIDE BY 1/8" THICK STRIP OF RUBBER FABRIC (OR SIMILAR SUITABLE MATERIAL) AROUND FULL CIRCUMFERENCE OF THE PIPE AT EACH PIPE SUPPORT.
6. SUPPORT STRUT CHANNEL ENDS THAT EXTEND INTO PERSONNEL TRAFFIC AREAS SHALL HAVE PLASTIC END CAPS.

VALVES AND GATES

1. VALVE AND GATE ACTUATORS SHALL BE MOUNTED TO ALLOW PROPER OPENING AND CLOSING WITHOUT INTERFERENCE WITH ADJACENT PIPING OR EQUIPMENT. UNLESS INDICATED ON THE DRAWINGS, ORIENTATION OF OPERATORS SHALL BE APPROVED BY THE ENGINEER.
2. UNLESS INDICATED ON THE DRAWINGS, REFER TO THE MANUFACTURER'S RECOMMENDATIONS AND PROJECT SPECIFICATIONS REGARDING THE LOCATION OF THE VALVE SEAT (UPSTREAM OR DOWNSTREAM) AND STEM ORIENTATION.

VALVE SCHEDULE

VALVE #	DESCRIPTION	LOCATION	FLUID SERVICE	TYPE	SIZE	CLASS	OPERATOR	REMARKS	SPEC
GV-101	SLIDE GATE VALVE	VALLEY VILLAGE PARK	STORM WATER	SLIDE GATE	42"	150	MOTORIZED AC REVERSING	NON RISING STEM	11815

THE CITY OF LOS ANGELES OR ITS OFFICERS OR AGENTS SHALL NOT BE RESPONSIBLE FOR THE ACCURACY OR COMPLETENESS OF ELECTRONIC COPIES OF THIS PLAN SHEET.

REVISION DATES (DESIGN STAGE ONLY)

PLANS PREPARED BY:
carollo
707 WILSHIRE BLVD, SUITE 3920
LOS ANGELES, CA 90017
(213) 489-1587

CITY OF LOS ANGELES DEPARTMENT OF PUBLIC WORKS
BUREAU OF ENGINEERING

ENGINEERING
CITY OF LOS ANGELES

THIS PLAN WAS ELECTRONICALLY • SIGNED AND STAMPED

Digitally signed by Matthew B. Huckaby
Contact Info: Carollo Engineers, Inc.
Date: 2023.12.01 12:04:24 -08'00'

REGISTERED PROFESSIONAL ENGINEER MATTHEW B. HUCKABY No. 76961 STATE OF CALIFORNIA CIVIL

VERTICAL CONTROL:	VERTICAL CONTROL
HORIZONTAL CONTROL:	HORIZONTAL CONTROL
SHEET TITLE:	MECHANICAL GENERAL NOTES AND SCHEDULE
PROJECT:	VALLEY VILLAGE PARK STORM WATER CAPTURE PROJECT
ADDRESS:	VALLEY VILLAGE PARK 5000 Westpark Dr, North Hollywood, CA 91601

NO.	REVISIONS	DATE	BY
		YY/MM/DD	
		YY/MM/DD	
		YY/MM/DD	
		YY/MM/DD	
		YY/MM/DD	

CIP NO. SCP0009

INDEX NO.

CITY ENGINEER		DATE
TED ALLEN, P.E.		
DESIGN GROUP		DATE
ENGINEER:	PVT - MATT HUCKABY	YY/MM/DD
ARCHITECT:	XXX	YY/MM/DD
DESIGNED BY:	PVT - JERRY GANTNEY	YY/MM/DD
DRAWN BY:	PVT - ATTILA SIMON	YY/MM/DD
CHECKED BY:	PVT - RAPHAEL BUI	YY/MM/DD
APPROVED BY:	PVT - MIKO AIVAZIAN	YY/MM/DD

WORK ORDER
EW40085F

SHEET NAME
M-01
SHEET 28 OF 80 SHEETS

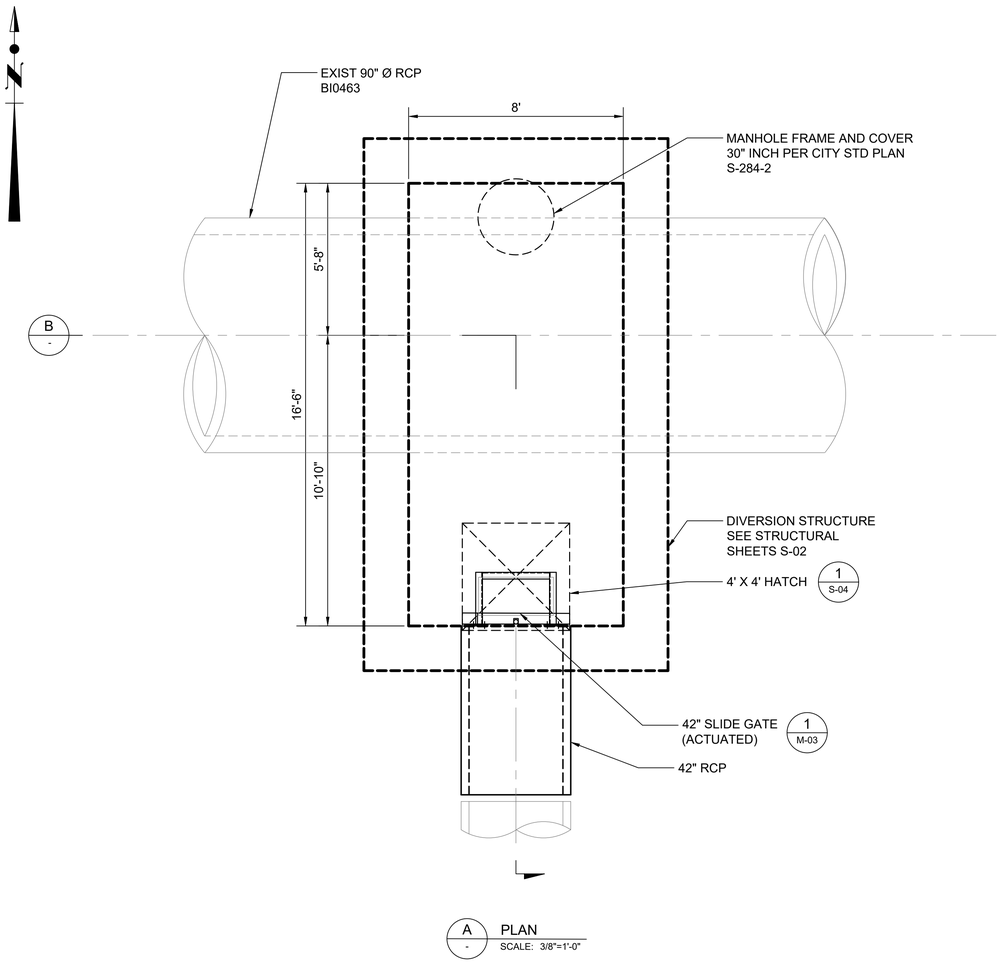

A PLAN
SCALE: 3/8"=1'-0"

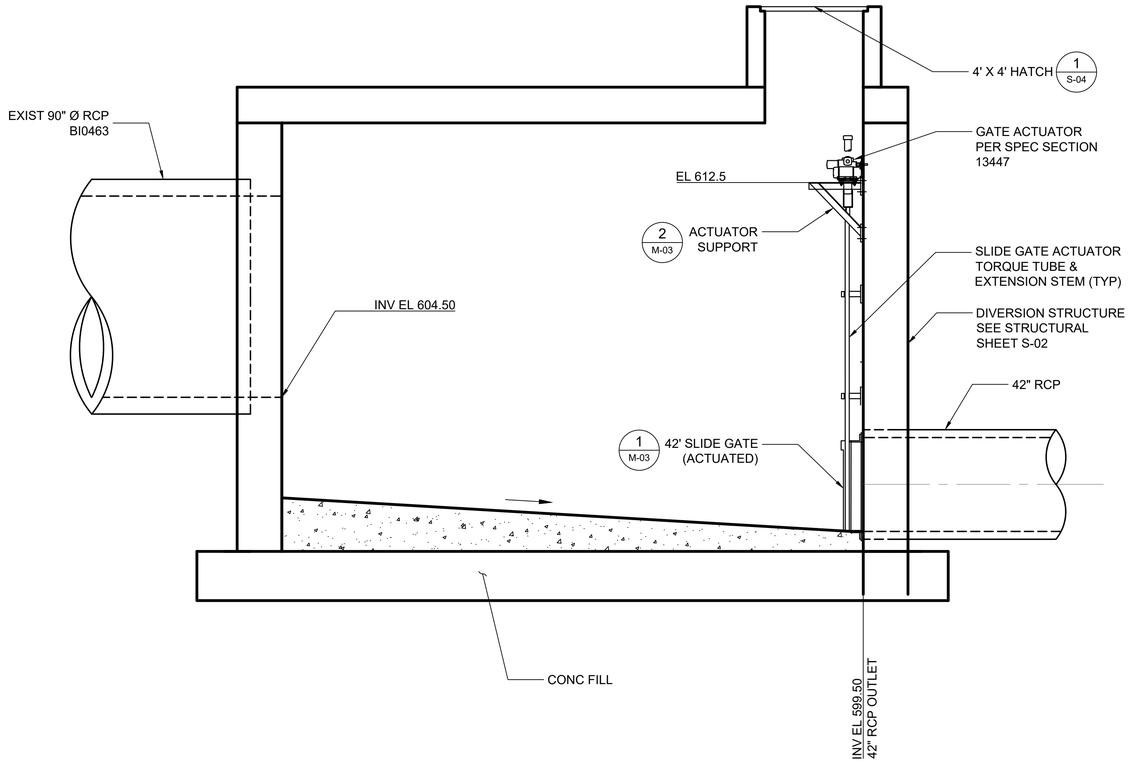

B SECTION
SCALE: 3/8"=1'-0"

NOTE:

1. SLIDE GATE SHALL WITHSTAND UP TO 15FT OF SEATED HEAD. THE GATE SHALL BE SELF-CONTAINED WITH SS NON-RISING STEM, TORQUE TUBE & WALL THIMBLE BY RODNEY HUNT, WATERMAN, OR EQUAL, ALL MOUNTING HARDWARE, ANCHOR BOLTS AND NUTS SHALL BE OF TYPE 316 SS. THE CONTRACTOR SHALL SUBMIT SHOP DRAWINGS INCLUDING INSTALLATION DETAILS RECOMMENDED BY MANUFACTURER TO THE ENGINEER FOR APPROVAL.
2. CONTRACTOR TO FIELD LOCATE ACTUATOR TO AVOID INTERFERENCE WITH HATCH.
3. LOCATE DIVERSION STRUCTURE PER STATIONING SHOWN ON SHEET C-11.
4. FOR DEMOLITION AND MODIFICATION OF EXISTING 90" REINFORCED CONCRETE STORM DRAIN AND DETAILS OF JOINT BETWEEN REINFORCED CONCRETE PIPE AND DIVERSION STRUCTURE, SEE STRUCTURAL DRAWINGS.
5. DRAWINGS SHOW DESIGN INTENT. CONTRACTOR IS TO FIELD FIT SLIDE GATE, ACTUATOR, AND ACTUATOR SUPPORT THAT WILL MEET THE DESIGN INTENT DETAILED IN THE DRAWINGS AND SPECIFICATIONS. SUBMIT FIELD DRAWINGS WITH PROPOSED INSTALLATION OF SLIDE GATE, ACTUATOR AND ACTUATOR SUPPORT; AS WELL AS ANY MODIFICATIONS REQUIRED TO THE STRUCTURE TO ALLOW FOR INSTALLATION TO THE PROFESSIONAL ENGINEER FOR APPROVAL PRIOR TO CASTING CONCRETE STRUCTURE. SUBMIT ACTUATOR SUPPORT STRUCTURAL CALCULATIONS STAMPED BY CALIFORNIA PROFESSIONAL ENGINEER FOR BOTH WEIGHT AND IMPARTED LOAD TO ENGINEER FOR APPROVAL PRIOR TO CASTING CONCRETE STRUCTURE.

PLANS PREPARED BY:
carollo
707 WILSHIRE BLVD, SUITE 3920
LOS ANGELES, CA 90017
(213) 489-1587

CITY OF LOS ANGELES DEPARTMENT OF PUBLIC WORKS
BUREAU OF ENGINEERING
ENGINEERING
CITY OF LOS ANGELES

THIS PLAN WAS ELECTRONICALLY • SIGNED AND STAMPED

Digitally signed by Matthew B. Huckaby
Contact Info: Carollo Engineers, Inc.
Date: 2023.12.01 12:04:43 -08'00'

REGISTERED PROFESSIONAL ENGINEER MATTHEW B. HUCKABY No. 76961 CIVIL STATE OF CALIFORNIA

VERTICAL CONTROL:
HORIZONTAL CONTROL:
SHEET TITLE: DIVERSION STRUCTURE PLAN AND SECTION VIEW
PROJECT: VALLEY VILLAGE PARK STORM WATER CAPTURE PROJECT
ADDRESS: VALLEY VILLAGE PARK 5000 Westpark Dr, North Hollywood, CA 91601

NO.	REVISIONS	DATE	BY
		YY/MM/DD	
		YY/MM/DD	
		YY/MM/DD	
		YY/MM/DD	

CIP NO. SCP0009

INDEX NO.

CITY ENGINEER: TED ALLEN, P.E. DATE

DESIGN GROUP		DATE
ENGINEER:	PVT - MATT HUCKABY	YY/MM/DD
ARCHITECT:	XXX	YY/MM/DD
DESIGNED BY:	PVT - JERRY GANTNEY	YY/MM/DD
DRAWN BY:	PVT - ATTILA SIMON	YY/MM/DD
CHECKED BY:	PVT - RAPHAEL BUI	YY/MM/DD
APPROVED BY:	PVT - MIKO AIVAZIAN	YY/MM/DD

WORK ORDER
EW40085F

SHEET NAME
M-02
SHEET 29 OF 80 SHEETS

THE CITY OF LOS ANGELES OR ITS OFFICERS OR AGENTS SHALL NOT BE RESPONSIBLE FOR THE ACCURACY OR COMPLETENESS OF ELECTRONIC COPIES OF THIS PLAN SHEET.

REVISION DATES (DESIGN STAGE ONLY)

SHEET VERSION 4.0.1 FILE PATH: C:\PW_WORKING\PROJECTWISE\CAROLLO_ASIMON\D1118222\0009_M_SH_M02.DWG PLOT DATE: 12/1/2023 12:04 PM SAVED: 10/21/2021 4:32 PM SAVED BY:MHUCKABY

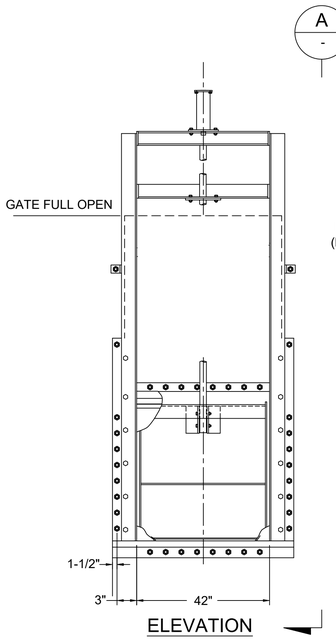

ELEVATION

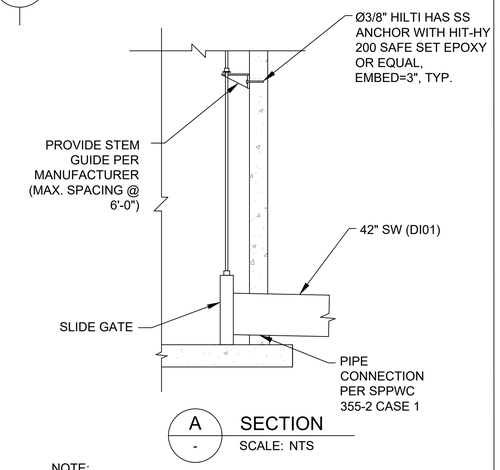

A / - SECTION

SCALE: NTS

NOTE:

1. SLIDE GATE SHALL WITHSTAND UP TO 15 FT OF SEATED HEAD. THE GATE SHALL BE SELF-CONTAINED WITH SS RISING STEM, TORQUE TUBE & WALL THIMBLE BY RODNEY HUNT, WATERMAN, OR EQUAL, ALL MOUNTING HARDWARE, ANCHOR BOLTS AND NUTS SHALL BE OF TYPE 316 SS. THE CONTRACTOR SHALL SUBMIT SHOP DRAWINGS INCLUDING INSTALLATION DETAILS RECOMMENDED BY MANUFACTURER TO THE ENGINEER FOR APPROVAL.
2. FRAME ANCHOR BOLTS TO BE SLOTTED HOLES.

1 SLIDE GATE DETAIL

NTS

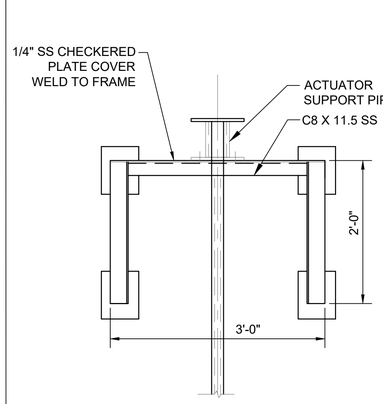

FRONT VIEW

SECTION A

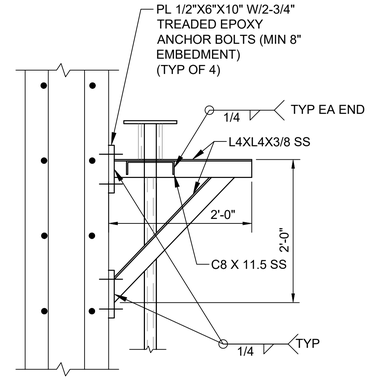

SIDE VIEW

SECTION B

NOTE:

1. ALL PARTS SHALL BE STAINLESS STEEL.
2. CONTRACTOR SHALL COORDINATE WITH ACTUATOR MANUFACTURER PRIOR TO FABRICATION AND INSTALLATION.
3. ACTUATOR FOR 42" SLIDE GATE, SHALL BE AUMA SA. OR EQUAL, WITH UMBILICAL REMOTE MOUNT PER SPECIFICATION SECTION 13447.
4. CONTRACTOR SHALL COORDINATE ACTUATOR SUPPORT DETAIL WITH MANUFACTURER PRIOR TO FABRICATION.

2 ACTUATOR SUPPORT DETAIL

NTS

THE CITY OF LOS ANGELES OR ITS OFFICERS OR AGENTS SHALL NOT BE RESPONSIBLE FOR THE ACCURACY OR COMPLETENESS OF ELECTRONIC COPIES OF THIS PLAN SHEET.

REVISION DATES (DESIGN STAGE ONLY)

PLANS PREPARED BY:
carollo
707 WILSHIRE BLVD, SUITE 3920
LOS ANGELES, CA 90017
(213) 489-1587

ENGINEERING
CITY OF LOS ANGELES

THIS PLAN WAS ELECTRONICALLY • SIGNED AND STAMPED

Digitally signed by Matthew B. Huckaby
Contact Info: Carollo Engineers, Inc.
Date: 2023.12.01 12:04:47 -08'00'

REGISTERED PROFESSIONAL ENGINEER MATTHEW B. HUCKABY No. 76961 CIVIL STATE OF CALIFORNIA

BUREAU OF ENGINEERING

VERTICAL CONTROL:
HORIZONTAL CONTROL:

SHEET TITLE: MECHANICAL DETAILS

PROJECT: VALLEY VILLAGE PARK STORM WATER CAPTURE PROJECT

ADDRESS: VALLEY VILLAGE PARK
5000 Westpark Dr, North Hollywood, CA 91601

CITY OF LOS ANGELES DEPARTMENT OF PUBLIC WORKS

NO.	REVISIONS	DATE	BY
		YY/MM/DD	
		YY/MM/DD	
		YY/MM/DD	
		YY/MM/DD	

CITY ENGINEER: DATE

TED ALLEN, P.E. YY/MM/DD

DESIGN GROUP		DATE
ENGINEER:	PVT - MATT HUCKABY	YY/MM/DD
ARCHITECT:	XXX	YY/MM/DD
DESIGNED BY:	PVT - JERRY GANTNEY	YY/MM/DD
DRAWN BY:	PVT - ATTILA SIMON	YY/MM/DD
CHECKED BY:	PVT - RAPHAEL BUI	YY/MM/DD
APPROVED BY:	PVT - MIKO AVAZIAN	YY/MM/DD

CIP NO. SCP0009

INDEX NO.

WORK ORDER EW40085F

SHEET NAME M-03

SHEET 30 OF 80 SHEETS

ABBREVIATIONS

A	AMPERE, AUTO, AMMETER	MBS	MAINTENANCE BYPASS SWITCH
AC	ALTERNATING CURRENT	MCC	MOTOR CONTROL CENTER
AF	AMPERE FRAME SIZE OF CIRCUIT BREAKERS	MCP	MOTOR CIRCUIT PROTECTOR
		MECH	MECHANICAL
AFF	ABOVE FINISHED FLOOR	MR	MULTIPLE RATIO
AMP	AMPERES, AMPERAGE	MFR	MANUFACTURER
APPROX	APPROXIMATE	MH+	MOUNTING HEIGHT
ASYM	ASYMMETRIC,ASYMMETRICAL	MH	MAINTENANCE HOLE
AT	AMPERE TRIP	MIN	MINUTES, MINIMUM
ATS	AUTOMATIC TRANSFER SWITCH	MISC	MISCELLANEOUS
AUTO	AUTOMATIC	MLO	MAIN LUGS ONLY
AUX	AUXILIARY	MOV	MOTOR OPERATED VALVE
AWG	AMERICAN WIRE GAUGE	MS	MANUAL MOTOR STARTER
		MSA	MAIN SERVICE ENTRANCE EQUIPMENT "A"
BC	BARE COPPER		
BKR	BREAKER	MSDA	MAIN DISTRIBUTION SWITCHBOARD "A"
BLDG	BUILDING	MTG	MOUNTING
		MTR	MOTOR
C	CONDUIT, CLOSED CLOSING RELAY OR CONTACTOR	(N)	NEW
		N	NEUTRAL
CAB	CABINET	NA	NON-AUTOMATIC
CAP	CAPACITOR, CAPACITY	NC	NORMALLY CLOSED
CAT	CATALOG	NF	UNFUSED, NON-FUSED
CB	CIRCUIT BREAKER	NO, NOS	NUMBER, NUMBERS
CKT	CIRCUIT	NIC	NOT IN CONTRACT
CM	CIRCULAR MIL	NTS	NOT TO SCALE
CO	CONDUIT ONLY		
COAX	COAXIAL (CABLE)	OC	ON CENTER
COMM	COMMUNICATION	OD	OUTSIDE DIAMETER
CONN	CONNECTION, CONNECTOR	OL	OVERLOAD RELAY
COT'N	CONTINUATION		
CP	CONTROL PANEL	P	POLE, POWER OR PRESSURE
CPT	CONTROL POWER TRANSFORMER	PB	PULL BOX, PUSHBUTTON
		PB STA	PUSHBUTTON STATION
CR	CONTROL RELAY	PCM	PROCESS CONTROL MODULE
CS	CONTROL SWITCH	PH,Ø	PHASE
CSI	CONTROL SYSTEM INTERFACE	PM	POWER MONITOR
CT	CONTROL TRANSFORMER	PMM	PROCESS MONITORING MODULE
CU	COPPER	PNL	PANEL
		POS	POSITIVE
DBS	DEPARTMENT OF BUILDING AND SAFETY	PQM	POWER QUALITY METER
		PS	PRESSURE SWITCH
DC	DIRECT CURRENT	PT	POTENTIAL TRANSFORMER
DIA	DIAMETER	PV	PHOTOVOLTAIC
DIAG	DIAGRAM	PVC	POLYVINYL CHLORIDE
DIM	DIMENSION	PWR	POWER
DISC	DISCONNECT	P & ID	PROCESS & INSTRUMENTATION DIAGRAM
DISTR	DISTRIBUTION		
DN	DOWN		
DS	DISCONNECT SWITCH	R	REACTOR OR RECTIFIER
DWG	DRAWING	REC	RECEPTACLE
		RECPTS	RECEPTACLES
EA	EACH	REF	REFERENCE
EL	ELEVATION (HEIGHT)	REQ'D	REQUIRED
ELEV	ELEVATION (VIEW)	REV	REVERSE CONTACTOR COIL
EMLA	EMERGENCY LIGHTING PANEL "A"	RGS	RIGID GALVANIZED STEEL
EMT	ELECTRICAL METALLIC TUBING	RM	ROOM
ENCL	ENCLOSURE		
EP	EXPLOSION PROOF	SBDB	STANDBY DISTRIBUTION BOARD
EPL	ETHERNET PRIVATE LINE	SEC	SECOND OR SECONDARY
EQPT	EQUIPMENT	SC	SHORT CIRCUIT
ER	CONDUCTANCE LEVEL RELAY	SCH	SCHEDULE
EXIST		SEC	SECONDS, SECONDARY
OR (E)	EXISTING	SECT	SECTION
		SEL SW	SELECTOR SWITCH
FA	FIRE ALARM	SEQ	SEQUENCE
FACP	FIRE ALARM CONTROL PANEL	SHLD	SHIELDED
FC	FOOT CANDLE	SHT	SHEET
FDR	FEEDER	SN	SOLID NEUTRAL
FIG	FIGURE	SOL	SOLENOID
FIN	FINISHED	SP	SPARE
FIXT	FIXTURE	SST	STAINLESS STEEL
FLEX	FLEXIBLE	STA	STATION
FLA	FULL LOAD AMPS	STD	STANDARD
FT	FOOT	STL	STEEL
FTG	FOOTING	SV	SOLENOID VALVE
FUT	FUTURE	SW	SWITCH
		SWBD	SWITCHBOARD
GALV	GALVANIZED	SWGR	SWITCHGEAR
GFCI	GROUND FAULT CIRCUIT INTERRUPT	SYMM	SYMMETRICAL
GRD, GND	GROUND	SYS	SYSTEM
HOA	HAND - OFF - AUTOMATIC	TB	TERMINAL BOX
HP	HORSEPOWER	TEMP	TEMPERATURE
HZ	HERTZ	TERM	TERMINAL
HGT	HEIGHT	TR	TRANSFORMER
HV	HIGH VOLTAGE	TYP	TYPICAL
HS	HANDSWITCH		
		UG	UNDERGROUND
IC	INTERRUPTING CAPACITY	UPS	UNINTERRUPTABLE POWER SUPPLY
ID	INSIDE DIAMETER		
I/O	INPUT/OUTPUT	UNO	UNLESS NOTED OTHERWISE
INSTR	INSTRUMENT	UST	UNIT SUBSTATION TRANSFORMER
JB	JUNCTION BOX	VA	VOLT-AMPS
		V	VOLTAGE, VOLTS
KCMIL	KILO-CIRCULAR MILS	VFD	VARIABLE FREQUENCY DRIVE
KHZ	KILOHERTZ	VSD	VARIABLE SPEED DRIVE (OTHER THAN VFD)
KV	KILOVOLT		
KVA	KILO VOLT AMPERE	W	WATTS, WIRE
KVAR	KILOVAR	WP	WEATHERPROOF
KW	KILOW ATT	XFMR	TRANSFORMER
LCP	LOCAL CONTROL PANEL	MISCELLANEOUS	
LED	LIGHT EMITTING DIODE		
LOC	LOCAL	1/C	SINGLE CONDUCTOR
LOS	LOCKOUT STOP	2/C	TWO CONDUCTOR
LS	LEVEL SWITCH	3P	THREE-POLE
LTG	LIGHTING	3PH	THREE PHASE
LACEC	LOS ANGELES CITY ELECTRICAL CODE	3W	THREE WIRE
		4/C	FOUR CONDUCTOR
M	MOTOR CONTACTOR COIL	4P	FOUR-POLE
MA	MILLIAMPERE	% IMP	PERCENT IMPEDANCE
MAX	MAXIMUM		

GENERAL NOTES

RACEWAYS

1. CONDUIT RUNS WHERE SHOWN ARE DIAGRAMMATIC, AND SHOULD BE RUN TO SUIT SITE CONDITIONS EXCEPT WHERE SHOWN DIMENSIONED ON THE DRAWINGS. THE RACEWAY SYSTEM SHALL COMPLY WITH ALL CODES, INCLUDING BUT NOT LIMITED TO:
   a. NEC.
   b. CITY OF LA ELECTRICAL CODES AND PLAN CHECK REQUIREMENTS.
   c. GROUNDING PER NEC ARTICLE 250.
2. CONTRACTOR SHALL PROVIDE AND INSTALL ALL NECESSARY CONDUITS, FITTINGS, JUNCTION BOXES AND ALL NECESSARY COMPONENTS WHETHER SHOWN OR NOT ON THE DRAWINGS. TO MAKE ELECTRICAL INSTALLATION COMPLETE AND OPERATIONAL.
3. ALL ELECTRICAL CONDUITS ARE SHOWN DIAGRAMMATICALLY AND PANEL AND EQUIPMENT LOCATIONS SHALL BE PLACED TO SUIT FIELD CONDITIONS.
4. ELECTRICAL CONTRACTOR TO LIMIT THE NUMBER OF 90° BENDS BETWEEN PULL POINTS TO COMPLY WITH THE REQUIREMENTS OF THE CALIFORNIA ELECTRICAL SAFETY ORDERS, THE NATIONAL ELECTRICAL CODE AND THE LOS ANGELES CITY ELECTRICAL CODE.
5. PROVIDE 30" (MAXIMUM) LENGTH OF FLEXIBLE CONDUIT WHERE RIGID CONDUIT TERMINATES AT EQUIPMENT SUBJECT TO MOVEMENT FROM VIBRATION, EXPANSION AND CONTRACTION.
6. ELECTRICAL CONTRACTOR SHALL PROVIDE GALVANIZE STEEL SUPPORTS FOR ALL ELECTRICAL WORK (CONDUIT, PANELS, BOXES ETC.)
7. CONDUITS TERMINATED AT MOTOR CONTROL CENTER, SWITCHGEAR CONTROL CABINETS, ETC. SHALL BE EQUIPPED WITH GROUNDING BUSHINGS AND SHALL BE EFFECTIVELY BONDED TO GROUNDING BUSES.
8. ALL OUTDOOR ELECTRICAL DEVICES AND ENCLOSURES SHALL BE WEATHERPROOF AND CORROSION RESISTANT (NEMA 4X OR 3R) ALL INDOOR DEVICES AND ENCLOSURES SHALL BE NEMA 12.
9. SWITCHGEAR, MOTOR CONTROL CENTERS, AND ALL OUTDOOR FREE STANDING CABINETS/PANELS SHALL BE SET ON A 4" HIGH MINIMUM CONCRETE PAD.
10. ALL SWITCHES, PULL BOXES, ETC. SHALL BE MOUNTED 48" ABOVE FLOOR SURFACES UNLESS NOTED OTHERWISE.
11. ALL BENDS IN CABLES SHALL BE MADE SO THAT THE PROTECTIVE COVERING OF THE CABLE WILL NOT BE INJURED. NO BEND SHALL HAVE A RADIUS LESS THAN THE MINIMUM RECOMMENDED BY THE CABLE MANUFACTURER.
12. THE MINIMUM SIZE OF CONDUIT INSTALLED ABOVE GRADE SHALL BE 3/4" UNLESS OTHERWISE NOTED.
13. INSTALLATIONS SHALL BE IN ACCORDANCE WITH ALL CODES AND STANDARDS. ALL LIGHTING AND RECEPTACLE CIRCUITS SHALL INCLUDE 1#12 GROUND WIRE.
14. ALL ABOVE GRADE CONDUITS AND FITTINGS SHALL BE RIGID GALVANIZED STEEL. USE RIGID STEEL CONDUIT, INCLUDING BUSHINGS, COUPLINGS, ELBOWS, NIPPLES, AND OTHER FITTINGS, GALVANIZED BY HOT-DIPPING, AND MEETING THE REQUIREMENTS OF ANSI C80.1, ANSI C80.4, UL, AND THE LAEC. DO NOT USE SETSCREW TYPE COUPLINGS, BUSHINGS, BENDS, NIPPLES, AND OTHER FITTINGS, UNLESS APPROVED BY THE ENGINEER OR THE INSPECTOR. FACTORY BENDS ARE NOT PERMITTED UNLESS APPROVED BY THE ENGINEER OR THE INSPECTOR.
15. REQUIRE ALL INSTALLED UNDERGROUND CONDUITS, ENCASED IN CONCRETE SHALL BE PVC SCHEDULE 40, AS A MINIMUM. ALL UNDERGROUND CONDUIT SHALL BE BURIED A MINIMUM OF 24 INCHES BELOW GRADE WITH TRACEABLE WARNING TAPE 12" ABOVE CONDUIT. SEE TYPICAL CONDUIT PLACEMENT IN TRENCH DETAIL (SEE SHEET EP-06, DETAIL E-15).

CONDUCTORS

1. PROVIDE CONDUCTORS WITH TYPE THW OR TYPE THHN/THWN INSULATION. EXCEPT FOR SIZES NO. 6 AND LARGER SHALL HAVE WITH XHHW INSULATION.
2. ALL POWER AND CONTROL CABLES SHALL BE COPPER. NETWORK CABLES SHALL BE FIBER OPTIC CABLE WHERE SPECIFIED.
3. PROVIDE CABLE THAT IS UL LISTED TYPE TC AND CONFORMS TO THE REQUIREMENTS OF UL 1277 AND NEC ARTICLE 340, OR UL LISTED POWER LIMITED CIRCUIT CABLE THAT CONFORMS TO THE REQUIREMENTS OF ARTICLE 725 OF THE LAEC. PROVIDE CABLES PERMANENTLY AND LEGIBLY MARKED WITH THE MANUFACTURER'S NAME, THE MAXIMUM WORKING VOLTAGE FOR WHICH THE CABLE WAS TESTED, THE TYPE OF CABLE, AND LABELED UL (OR SUBMIT EVIDENCE OF UL LISTING).
4. ACCEPTABLE MANUFACTURERS: SOUTHWIRE, HOUSTON WIRE AND CABLE COMPANY, BELDEN ALPHA WIRE COMPANY, GENERAL CABLE OR EQUAL.

TYPE 1 (600-VOLT MULTI-CONDUCTOR CONTROL CABLE, TYPE TC)

1. MULTI-CONDUCTOR CONTROL CIRCUIT INTERCONNECTION CABLE WITH GROUND. SUITABLE FOR INSTALLATION IN OPEN AIR, IN CABLE TRAYS, CONDUIT, OR OTHER APPROVED RACEWAYS. MAXIMUM CABLE TEMPERATURE RATING 90 DEGREES C DRY LOCATIONS, 75 DEGREES C WET LOCATIONS. PASSES VERTICAL TRAY FLAME TEST.

TYPE 2 (600-VOLT NO. 16 AWG TWISTED, SHIELDED PAIR INSTRUMENTATION CABLE, TYPE TC)

1. SINGLE PAIR INSTRUMENTATION CABLE DESIGNED FOR NOISE REJECTION FOR PROCESS CONTROL, COMPUTER, OR DATA LOG APPLICATIONS. SUITABLE FOR INSTALLATION IN CABLE TRAYS, CONDUIT, OR OTHER APPROVED RACEWAYS. MAXIMUM CABLE TEMPERATURE RATING SHALL BE 90 DEGREES C DRY LOCATIONS, 75 DEGREES C WET LOCATIONS.
2. INDIVIDUAL CONDUCTORS: BARE SOFT ANNEALED COPPER, CLASS B, 7-STRAND CONCENTRIC PER ASTM B 8; 20 AWG, 7-STRAND TINNED COPPER DRAIN WIRE.

TYPE 3 (600-VOLT MULTI-CONDUCTOR POWER CABLE, TYPE TC):

1. 3 OR 4 -CONDUCTOR, WITH GROUND AND OVERALL JACKET. SUITABLE FOR INSTALLATION IN OPEN AIR, IN CABLE TRAYS, CONDUIT, OR OTHER APPROVED RACEWAYS. MAXIMUM CABLE TEMPERATURE RATING 90 DEGREES C DRY LOCATIONS, 75 DEGREES C WET LOCATIONS.
2. INDIVIDUAL CONDUCTORS: CLASS B STRANDED, COATED, OR UNCOATED COPPER.

TYPE 4 (600-VOLT NO. 16 TWISTED, SHIELDED TRIAD INSTRUMENTATION CABLE, TYPE TC):

1. SINGLE TRIAD INSTRUMENTATION CABLE DESIGNED FOR NOISE REJECTION FOR PROCESS CONTROL, COMPUTER, OR DATA LOG APPLICATIONS. SUITABLE FOR INSTALLATION IN CABLE TRAY, CONDUIT, OR OTHER APPROVED RACEWAYS. MAXIMUM CABLE TEMPERATURE RATING SHALL BE 90 DEGREES C DRY LOCATIONS, 75 DEGREES C WET LOCATIONS.
2. CONDUCTORS: BARE SOFT ANNEALED COPPER, CLASS B, 7-STRAND CONCENTRIC PER ASTM B 8; 20 AWG, 7-STRAND, TINNED COPPER DRAIN WIRE.

TYPE 5 (600-VOLT NO. 18 AWG, MULTI-TWISTED SHIELDED PAIRS WITH A COMMON OVERALL SHIELD INSTRUMENTATION CABLE, TYPE TC):

1. TWISTED, SHIELDED PAIRS OF INSTRUMENT CABLES, GROUPED IN A SINGLE CABLE, DESIGNED FOR USE AS INSTRUMENTATION, PROCESS CONTROL, AND COMPUTER CABLE. SUITABLE FOR INSTALLATION IN CABLE TRAY, CONDUIT, OR OTHER APPROVED RACEWAYS. MAXIMUM CABLE TEMPERATURE RATING SHALL BE 90 DEGREES C DRY LOCATIONS, 75 DEGREES C WET LOCATIONS.
2. BARE SOFT ANNEALED COPPER, CLASS B, 7-STRAND, CONCENTRIC PER ASTM B 8. TINNED COPPER DRAIN WIRES. PAIR DRAIN WIRE SIZE AWG 20, GROUP DRAIN WIRE SIZE AWG 18.

GROUNDING

1. ALL METALLIC STRUCTURES AND EQUIPMENT SUCH AS STRUCTURAL STEEL, GENERATOR AND MOTOR FRAMES, ENCLOSURES, CABINETS FOR SWITCHGEAR AND OTHER ELECTRIC EQUIPMENT, METALLIC CONDUITS, CABLE TRAYS, STAIRS, FENCES AND HANDRAILS SHALL BE PERMANENTLY AND EFFECTIVELY GROUNDED. THE GROUND CONNECTION SHALL BE MADE TO THE PLANT GROUND GRID. REFER TO STANDARD DETAILS.
2. ALL GROUNDING CONDUCTORS SHALL BE BARE STRANDED SOFT DRAWN COPPER, CLASS B, UNLESS OTHERWISE NOTED.
3. THE GROUND CABLE SHALL BE INSTALLED, WHERE POSSIBLE, BENEATH SLABS, ATTACHED TO BUILDING STEEL OR RUN IN RACEWAYS AS SHOWN.
4. BURIED GROUND CABLES SHALL BE A MINIMUM OF 18" BELOW GRADE EXCEPT UNDER BUILDINGS WHERE THEY SHALL BE A MINIMUM OF 6" BELOW BOTTOM OF SLAB.
5. CONDUIT RUNS SHALL BE BONDED TOGETHER TO FORM A CONTINUOUS ELECTRICAL CONDUCTOR.
6. WHERE SEAL-TIGHT FLEXIBLE CONDUIT FOR MOTOR CONNECTION IS USED, PROVIDE GROUNDING JUMPER BETWEEN THE RIGID STEEL CONDUIT (MOTOR FEEDER) AND THE MOTOR BOX OR FRAME.
7. GENERATOR CASINGS, EXCITERS, SWITCHGEARS, MOTOR CONTROL CENTERS, LARGE METAL TANKS, TRANSFORMER CORES, AND MOTOR FRAMES LARGER THAN 150HP SHALL BE GROUNDED AT TWO POINTS.
8. THE FRAMES OF MOTORS SMALLER THAN 150HP SHALL BE GROUNDED DIRECTLY TO THE GROUND GRID OR TO THE STEEL COLUMN CONNECTED TO THE GROUND LOOP WITH COPPER WIRE OF SIZE AS REQUIRED BY THE LOS ANGELES CITY ELECTRICAL CODE.
9. ALL EQUIPMENT GROUND TERMINAL LUGS SHALL BE OF THE MECHANICAL TYPE.
10. BENDS IN GROUND CABLE SHALL BE GREATER THAN 12 TIMES THE CABLE OUTSIDE DIAMETER.
11. GROUNDING CONDUCTOR PIGTAIL AND INSERT LOCATIONS ARE APPROXIMATE ONLY. CONTRACTOR SHALL VERIFY IN THE FIELD AND LOCATE THEM CLOSE TO MOTOR, EQUIPMENT, GENERATOR, OR METAL STRUCTURE SERVED.
12. GROUNDING PIGTAIL SHALL BE THE SAME SIZE AS THE PHASE WIRE BUT NO LESS THAN NUMBER 8 AWG.
13. WHERE BARE GROUND CONDUCTORS ARE EXPOSED, CONTRACTOR SHALL PROVIDE PVC SCHEDULE 80 CONDUITS WITH ULTRA-VIOLET LIGHT PROTECTION.
14. ALL FLEXIBLE MOTOR CONDUITS SHALL HAVE OUTER GROUND CONDUCTOR.

EQUIPMENT AND DEVICES

1. ALL EQUIPMENT DIMENSIONS SHOWN ON PLANS AND ELEVATIONS ARE APPROXIMATE ONLY. THE CONTRACTOR SHALL USE THE SHOP DRAWINGS FOR PROPER FOUNDATION AND PAD LAYOUT, ETC. FOR FINAL INSTALLATION WITHOUT ANY ADDITIONAL COST TO THE CITY.
2. IT IS INCUMBENT UPON THE CONTRACTOR TO COORDINATE WITH HIS SUBCONTRACTORS TO MAKE SURE THAT EQUIPMENT SUPPLIERS PROVIDE ALL NECESSARY ELECTRICAL INFORMATION TO THE ELECTRICAL SUBCONTRACTOR FOR INCLUSION OF COSTS IN BID PACKAGE. ALL NECESSARY MATERIALS AND LABOR TO COMPLETE ELECTRICAL INSTALLATION SHALL BE PROVIDED WHETHER SHOWN OR NOT SHOWN ON THE DRAWINGS. ALL ELECTRICAL WORK SHALL BE IN ACCORDANCE WITH ALL CODES AND STANDARDS PER SPECIFICATION.
3. SWITCHGEARS, SWITCHBOARDS, MOTOR CONTROL CENTERS AND ALL FREE STANDING PANELS SHALL BE SET WITH LEVELING CHANNELS UNLESS OTHERWISE NOTED.
4. CONTRACTOR TO PROVIDE DESIGNS AND DETAILS FOR ALL MOUNTING AND ANCHORAGE OF EQUIPMENT IN ACCORDANCE WITH CHAPTER 23 OF THE LATEST EDITION OF THE UNIFORM BUILDING CODE AND LOS ANGELES BUILDING CODE.

MISCELLANEOUS

1. THE CONTRACTOR TO CONFIRM EXISTING CONDITIONS INCLUDING CONDUIT RUNS. ELECTRICAL DESIGN UPGRADE IS BASED ON CITY-PROVIDED, EXISTING "AS-BUILT" DRAWINGS WHICH MAY NOT BE ENTIRELY ACCURATE.
2. IN CASE OF INTERFERENCE BETWEEN ELECTRICAL EQUIPMENT AND OTHER EQUIPMENT THE CONTRACTOR SHALL NOTIFY THE ENGINEER IN WRITING AND THE ENGINEER SHALL REVIEW PROPOSED CHANGES BEFORE THEY ARE MADE.
3. ALL RECEPTACLES SHALL BE MOUNTED 18" ABOVE FLOOR SURFACE, UNLESS OTHERWISE NOTED ON THE DRAWINGS.
4. ALL RECEPTACLES IN OUTDOOR AND ANTICIPATED WET AREAS SHALL BE GROUND FAULT INTERRUPTER TYPE RECEPTACLES WITH WEATHER PROOF COVER PLATES.
5. SEE MECHANICAL DRAWINGS FOR INFORMATION ON EQUIPMENT TO BE WIRED.
6. PROVIDE MAINTENANCE HOLES OR PULL BOXES WHEREVER THEY ARE REQUIRED TO MAKE A WORKABLE INSTALLATION.
7. CIRCUITS OF DIFFERENT SERVICE VOLTAGE RANGES SHALL BE INSTALLED IN SEPARATE RACEWAYS, PULLBOXES AND JUNCTION BOXES. THE VOLTAGE AND SERVICE LEVELS ARE:
   (1) 120V-480VOLT
   (2) INSTRUMENTATION AND CONTROL LESS THAN 50VDC
      a) ANALOG
      b) SIGNAL
   (3) TELEPHONE AND COMMUNICATIONS.
   (4) FIBER OPTICS
8. RECEPTACLES, LIGHTING AND CONTROL CIRCUITS SHALL BE TYPE THHN/THWN WIRE.
9. ALL ELECTRICAL EQUIPMENT AND DEVICES SHALL BE UL APPROVED OR OTHER INDEPENDENT AGENCIES APPROVED BY THE CITY OF LOS ANGELES.
10. NO PIPING, DUCTS OR FOREIGN EQUIPMENT SHALL BE PERMITTED TO BE LOCATED WITHIN THE DEDICATED SPACE ABOVE THE ELECTRICAL EQUIPMENT.

MINIMUM SUBMITTAL REQUIREMENTS FOR SCHEMATIC DIAGRAMS:

1. ALL CONTROLS SHOWN DE-ENERGIZED.
2. CONTRACTOR SHALL INCORPORATE NECESSARY FUNCTIONS FOR PROPER OPERATIONS AND PROTECTION OF SYSTEMS.
3. SLAVE OR INTERPOSING RELAYS SHALL BE ADDED WHERE REQUIRED TO PROVIDE ALL NECESSARY CONTACTS REQUIRED FOR THE SCHEMATIC DIAGRAM SHOWN.
4. ALL DEVICES SHOWN ON MOTOR STARTER SCHEMATIC DIAGRAMS SHALL BE MOUNTED IN MOTOR STARTER CUBICLES, UNLESS OTHERWISE NOTED.

ELECTRICAL STUDIES

1. CONTRACTOR IS RESPONSIBLE FOR PREPARING A POWER SYSTEM ANALYSIS REPORT INCLUDING SHORT CIRCUIT CALCULATIONS, A PROTECTIVE DEVICE COORDINATION STUDY, ARC-FLASH STUDY, AND A HARMONIC ANALYSIS. THE STUDY SHALL BEGIN WITH THE UTILITY COMPANY'S FEEDER PROTECTIVE DEVICE AND INCLUDE ALL OF THE ELECTRICAL DISTRIBUTION EQUIPMENT DOWN TO AND INCLUDING LOW VOLTAGE MOTOR CONTROL CENTERS, POWER DISTRIBUTION PANEL BOARDS AND LIGHTING PANELS AND TRANSFORMERS.
2. ALL INFORMATION REQUIRED TO PERFORM THE STUDY SHALL BE OBTAINED BY THE ENTITY PERFORMING THE STUDY. ALL COSTS FOR THIS WORK INCLUDING FIELD SETTINGS OF DEVICES, ADJUSTMENTS, AND MODIFICATIONS TO EQUIPMENT THAT ARE REQUIRED FOR CONFORMANCE WITH THE APPROVED STUDY SHALL BE INCLUDED IN THE CONTRACTOR BID PROPOSAL AND IS NOT REIMBURSABLE BY THE CITY.
3. PROVIDE AND INSTALL ARC-FLASH AWARENESS WARNING LABELS ON EACH ELECTRICAL EQUIPMENT PANEL AS REQUIRED.

ELECTRIC MOTORS

1. UNLESS OTHERWISE SPECIFIED, ALL 3-PHASE MOTORS SHALL BE TEFC, SQUIRREL-CAGE INDUCTION, CONSTANT SPEED, HAVE ANTI-FRICTION BEARINGS AND CLASS F INSULATION, AND BE IN ACCORDANCE WITH ALL NEMA STANDARDS. MOTORS SHALL HAVE A MINIMUM SERVICE FACTOR OF 1.15 AT 40°C AMBIENT, AND STAINLESS STEEL AUTOMATIC BREATHER-DRAINS AT THE LOWEST POINT OF THE MOTOR ENCLOSURE.
2. ALL SINGLE-PHASE MOTORS, UNLESS OTHERWISE SPECIFIED, SHALL MEET ALL NEMA STANDARDS, BE TEFC, WITH ANTI-FRICTION BEARINGS, CLASS F INSULATION, AND HAVE A 1.15 SERVICE FACTOR AT 40°C AMBIENT.
3. ALL MOTORS LARGER THAN 3 HORSEPOWER SHALL BE PREMIUM EFFICIENCY, CAST IRON, CORROSIVE RESISTANT, HOSTILE ENVIRONMENT DESIGN, BALDOR "ECP", RELIANCE "XE", U. S. MOTORS "CORRO-DUTY", OR EQUAL. MOTORS LESS THAN 3 HORSEPOWER SHALL BE OF CAST IRON, STEEL OR ALUMINUM CONSTRUCTION, PREMIUM EFFICIENCY, AND CORROSIVE RESISTANT, HOSTILE ENVIRONMENT DESIGN.
4. MOTORS AND CONTROLS SHALL BE ADEQUATELY SIZED SO THE NAMEPLATE RATING WILL NOT BE EXCEEDED UNDER THE MAXIMUM DESIGN CAPACITY OF THE EQUIPMENT SUPPLIED.
5. ALL MOTOR NAMEPLATES SHALL BE STAINLESS STEEL, PERMANENTLY SECURED TO THE MOTOR, AND PROVIDE THE FOLLOWING INFORMATION: (1) NEMA DESIGN LETTER, (2) VOLTAGE, (3) PHASES, (4) FREQUENCY, (5) HORSEPOWER, (6) FULL LOAD CURRENT, (7) CLASS OF INSULATION, (8) FULL LOAD RPM, (9) AMBIENT TEMPERATURE/SERVICE FACTOR, (10) TIME RATING, (11) KVA CODE, (12) FRAME SIZE, (13) MFG. TYPE OR MODEL, (14) MFG. CATALOG NUMBER WITH DATE CODE, AND (15) SERIAL NUMBER.

THE CITY OF LOS ANGELES OR ITS OFFICERS OR AGENTS SHALL NOT BE RESPONSIBLE FOR THE ACCURACY OR COMPLETENESS OF ELECTRONIC COPIES OF THIS PLAN SHEET.

REVISION DATES (DESIGN STAGE ONLY)

PLANS PREPARED BY:
carollo
707 WILSHIRE BLVD, SUITE 3920
LOS ANGELES, CA 90017
(213) 489-1587

ProjectLine
Technical Services, Inc
2900 BRISTOL ST, SUITE D-103, COSTA MESA, CA
92626, TEL (714) 540-5460
www.projectlinets.com

CITY OF LOS ANGELES DEPARTMENT OF PUBLIC WORKS
BUREAU OF ENGINEERING

ENGINEERING
CITY OF LOS ANGELES

THIS PLAN WAS ELECTRONICALLY • SIGNED AND STAMPED

REGISTERED PROFESSIONAL ENGINEER
ROBERT D. GETTER
No. E 21884
Exp. 06-30-25
ELECTRICAL
STATE OF CALIFORNIA

VERTICAL CONTROL:
HORIZONTAL CONTROL:

SHEET TITLE: ELECTRICAL GENERAL NOTES

PROJECT: VALLEY VILLAGE PARK STORM WATER CAPTURE PROJECT

ADDRESS: VALLEY VILLAGE PARK
5000 Westpark Dr, North Hollywood, CA 91601

NO.	REVISIONS	DATE	BY
		YY/MM/DD	
		YY/MM/DD	
		YY/MM/DD	
		YY/MM/DD	

CITY ENGINEER
TED ALLEN, P.E.
DATE

DESIGN GROUP	DATE
ENGINEER: PVT - MATT HUCKABY	YY/MM/DD
ARCHITECT: N/A	YY/MM/DD
DESIGNED BY: PVT - JUSTIN CHIN	YY/MM/DD
DRAWN BY: PVT - JUSTIN CHIN	YY/MM/DD
CHECKED BY: PVT - ROBERT GETTER	YY/MM/DD
APPROVED BY: PVT - MIKO AVAZIAN	YY/MM/DD

CIP NO. SCP0009

INDEX NO.

WORK ORDER EW40085F

SHEET NAME EG-01

SHEET 31 OF 80 SHEETS

E L E C T R I C A L S Y M B O L S

P L A N

- CONDUIT RUN EXPOSED
- CONDUIT RUN, UNDERGROUND
- CONDUIT RUN, CONCEALED IN CEILING OR WALL.
- CONDUIT RUN, CHANGE IN ELEVATION
- CONDUIT BENDS UP OR TOWARD OBSERVER
- CONDUIT BENDS DOWN OR AWAY FROM OBSERVER
- T — CONDUIT CONTAINING: T=TELEPHONE, FA=FIRE ALARM, S=SIGNAL, ET=EMERGENCY TELEPHONE, PA=PUBLIC ADDRESS
- FLEXIBLE CONDUIT
- CONDUIT FITTING
- CONDUIT CAPPED
- CONDUIT SEAL
- ¾"C WITH 8 NO.12 WIRES MAX. AS SHOWN. NO CIRCUIT # NOTED, CONDUIT RUNS NOT MARKED ARE ¾"C WITH 2#12 WIRES ONLY. WIRE SIZES OTHER THAN #12 ARE MARKED. PROVIDE 1#12 WIRE FOR GROUNDING
- LPA-1/3/5, 2/4,7 — CROSS MARKS ON CONDUIT WITH CKT # NOTED INDICATE NUMBER OF NO. 12 WIRES IN ¾"C HOMERUN ONLY,3/4" CONDUIT WITH 9 NO.12 WIRES SHOWN, CIRCUITS 1,3 & 5 WITH COMMON NEUTRAL CIRCUITS 2 & 4 WITH COMMON NEUTRAL & CIRCUIT 7 WITH SEPARATE NEUTRAL HOMERUN TO PANEL `LPA'.
- P15 — CONDUIT NUMBER, SEE CONDUIT SCHEDULE P = POWER, C = CONTROL, S = SIGNAL; 15 =ARBITRARY SEQUENTIAL NUMBER
- 3/4"C- 2#10 — CONDUIT RUNS NOT LISTED IN CONDUIT SCHEDULE ARE NOTED AS SHOWN.
- J — JUNCTION BOX
- GROUND INSERT
- GROUND WIRE, MAIN LOOP (UNDERGROUND)
- GROUND WIRE, TAP EXPOSED
- UNDERGROUND TAP
- GROUND ROD
- GROUND WELL AND ROD FOR PAVED AREAS
- GROUND WELL AND ROD FOR UNPAVED AREAS
- GROUNDING CONDUCTOR PIGTAILED ABOVE FINISHED FLOOR
- LIGHTNING PROTECTION SYS., AIR TERMINAL
- 2A — CEILING OR PENDANT MTD. LTG. FIXTURE "2" INDICATES CIRCUIT NUMBER. "a" INDICATES FIXTURE CONTROLLED BY SW "a".
- 2 — CEILING OR PENDANT MTD. LED LTG. FIXTURE "2" INDICATES CIRCUIT NO.
- WALL MOUNTED LED LTG. FIXTURE
- EMERGENCY LED LIGHTING FIXTURE
- 1 — LIGHTING FIXTURE CONNECTED TO EMERGENCY CIRCUIT "1" INDICATES CIRCUIT NO.
- LED STRIP LIGHTING FIXTURE
- LED STRIP EMERGENCY LIGHTING FIXTURE
- LED STRIP LIGHTING FIXTURE TANDEM WIRED
- WALL MOUNTED LIGHTING FIXTURE
- FLOODLIGHT
- STREETLIGHT
- E — EMERGENCY LIGHTING UNIT, SELF CHARGING BATTERY TYPE WITH LOW VOLTAGE SEALED LAMPS
- EXIT LIGHT
- RE — RECESSED EXIT LIGHT
- A, 2/40, 3, ±8'-6" — LTG. FIXTURE TYPE `A', 2-40 WATT LAMPS, 3=NUMBER OF FIXTURES; 8'-6"=ACTUAL MOUNTING HEIGHT
- J — 3/4"C-(2)TSP#16, 3/4"C-2#12 + 1#12 GND; 3/4"C-(2)TSP#16, 3/4"C-2#12 + 1#12 GND — (2)JUNCTION BOXES AND CORRESPONDING CONDUITS AS SHOWN

- T — THERMOSTAT
- C — CLOCK HANGER, RECEPTACLE
- 120V, 1Ø ELECTRIC MOTOR
- HORIZONTAL MOTOR
- VERTICAL MOTOR
- H — HEATER
- SS — PUSHBUTTON STATION; "SS"=START-STOP, LOS=LOCK-OUT-STOP, "SLOS"=START-LOCK-OUT-STOP
- H-O-A — SELECTOR SWITCH H-O-A=HAND, OFF, AUTOMATIC, L-O-R=LOCAL OFF REMOTE
- TELEPHONE OUTLET, PUBLIC
- TELEPHONE OUTLET, PRIVATE
- BELL
- BUZZER
- P — H=HORN, S=SPEAKER, SN=SIREN, P=PUBLIC ADDRESS
- S — SPEAKER, CEILING MOUNTED - SURFACE MOUNTED
- LIGHTING PANEL/POWER PANEL
- CONTROL PANEL
- MOTOR CONTROL CENTER
- TC — TERMINAL CABINET
- MH — MAINTENANCE HOLE
- HH — HANDHOLE
- PB — PULLBOX
- FA — FIRE ALARM MANUAL STATION
- T — TRANSFORMER
- MAGNETIC MOTOR STARTER
- MAGNETIC CONTACTOR
- F — DISCONNECT SWITCH, N=NON FUSIBLE, F=FUSIBLE
- EMERGENCY TELEPHONE STATION
- TC — TELEPHONE TERMINAL CABINET
- $a — SINGLE POLE SWITCH. "a" INDICATES CIRCUIT CONTROLLED
- $3 — THREE-WAY SWITCH
- $P — SWITCH AND PILOT LIGHT
- $MC — MANUAL MOTOR STARTER
- $WP — WEATHERPROOF SWITCH

WALL FLOOR

- 120V SINGLE RECEPTACLE, NEMA CONFIGURATION 5-20.
- 120V DUPLEX RECEPTACLE, NEMA CONFIGURATION 5-20
- SPECIAL PURPOSE RECEPTACLE (INDICATE RATING)
- WP, VP — POWER RECEPTACLE, XP=EXPLOSION PROOF, WP=WEATHERPROOF, VP=VAPORTIGHT
- LS(T) — DEVICE AS IDENTIFIED ON P&ID:
  LS (T) = LEVEL SWITCH (TRANSMITTER)
  TS (T) = TEMPERATURE SWITCH (TRANSMITTER)
  FS (T) = FLOW SWITCH (TRANSMITTER)
  PS (T) = PRESSURE SWITCH (TRANSMITTER)
  TE = THERMAL ELEMENT (THERMOCOUPLE)
  LMS = LIMIT SWITCH
  SV = SOLENOID VALVE
  TI = TEMPERATURE INDICATOR
  LX = TRANSDUCER
  :OR REFER TO THE I&C LEGEND AND SYMBOLS.
- 1 / 0-E-2 — DETAIL #1, ON DWG. 0-E-3
- DELTA-WYE CONNECTION
- ZIG-ZAG CONNECTION FOR GRD. XFMR
- B — "B" DENOTES SECTION LETTER 0-E-3 DENOTES REFERENCE TO DRAWING ON WHICH DETAIL IS SHOWN.

O N E L I N E D I A G R A M

- N — N — NETWORK
- BUS
- POWER CONDUCTOR
- CONTROL METERING, SIGNAL OR INDICATING LIGHT CONDUCTOR
- ELECTRIC INPUT (OR FUTURE)
- K — INTERLOCK (K=MECHANICAL KEY)
- E — ELECTRIC INTERLOCK
- BUS-DUCT, AMPERE RATING & NO. OF CONDUCTOR SHOWN
- CROSSING OF CONDUCTOR NOT CONNECTED
- CONNECTION OF CONDUCTORS
- CABLE TERMINATION
- SEPARABLE CONNECTOR (DRAW-OUT TYPE)
- THERMAL OVERLOAD
- GROUND CONNECTION
- LIGHTNING ARRESTOR
- SURGE CAPACITOR
- M — HIGH OR LOW VOLTAGE DISCONNECT SWITCH, AIR BREAK M=MOTOR OPERATED
- FUSE
- FUSED DISCONNECT SWITCH
- RECTIFIER
- RES — RESISTOR
- SPACE HEATER
- RHEOSTAT, ADJUSTABLE RESISTOR
- BATTERY (MULTICELL)
- CONTACT, NORMALLY OPEN
- CONTACT, NORMALLY CLOSED
- POWER RECEPTACLE
- 400AF / 600AT, E — AIR CIRCUIT BREAKER AF=AMPERE FRAME RATING, AT=AMPERE TRIP RATING E=ELECTRIC OPERATED, ST=SHUNT TRIP, NO=NORMALLY OPEN, NC=NORMALLY CLOSED WITHOUT CIRCLE = MANUALLY OPERATED.
- 1200A, 52, NA — AIR OR VACUUM CIRCUIT BREAKER (GENERAL) HIGH OR MEDIUM VOLTAGE 34.5KV, 13.8KV OR 4.8KV (DEVICE NO. 52) NA=NON AUTOMATIC AIC=AMPERE CAPACITY, IC=INTERRUPTING CAPACITY.
- STC, 3 — 3=QUANTITY REQUIRED (INDICATE CURRENT RATIO), STC=SATURATED CURRENT XFMR.
- 3 — POTENTIAL TRANSFORMER 3=QUANTITY REQ'D. CPT=CONTROL POWER TRANSFORMER, PPT=POTENTIAL POWER TRANSFORMER, PST=PHASE SHIFT TRANSFORMER
- ZERO SEQUENCE CURRENT TRANSFORMER
- 1200 / 5 / MR, 3 — BUSHING TYPE CURRENT TRANSFORMER 3=QUANTITY REQUIRED. 1200/5 SIGNIFIES CT RATIO MR SIGNIFIES MULTIPLE RATIOS OF CT
- POWER TRANSFORMER TWO WINDINGS.
- WINDING , GENERAL SYMBOL OR REACTOR
- WYE CONNECTION SYMBOL WITH SOLID GROUNDING NEUTRAL.
- WYE CONNECTION SYMBOL WITH NEUTRAL GROUNDING RESISTOR
- WYE CONNECTION SYMBOL WITH NEUTRAL GROUNDING TRANSFORMER AND SEC. SHUNT RESISTOR.

- GENERATOR, WITH SEPARATE EXCITER
- 10, 2S — 3Ø INDUCTION MOTOR, 10 HORSEPOWER, 2S=2 SPEED WINDING, 2S2W=2 SPEED 2 WINDINGS
- 30 — 3Ø WOUND ROTOR INDUCTION MOTOR 10 HORSEPOWER.
- 51 — PROTECTIVE RELAY FUNCTION NUMBERS PER ANSI STANDARD C37.2 51 = AC TIME OVERCURRENT RELAY.
- 50/51 — MULTI-FUNCTION PROTECTIVE RELAY 50 = INSTANTANEOUS OVERCURRENT RELAY 51 = TIME OVERCURRENT RELAY.
- A — INSTRUMENT A=AMMETER, V=VOLTMETER, W=WATTMETER, KWH=KILOWATT HOUR METER, PF=POWER FACTOR METER, VAR=VARMETER, mA= MILLIAMPERE, AH=AMPERE-HOUR, uA=MICROAMMETER, FM=FREQUENCY METER SI=SPEED INDICATOR ETM=ELAPSED TIME METER AR=RECORDER, AMPS VR=RECORDER, VOLTS WR=RECORDER, WATTS WHD=WATT-HOUR DEMAND METER
- A, VAR — TRANSDUCER, A=CURRENT, W=WATT F=FREQUENCY, V=VOLTAGE, VAR=VAR
- SELECTOR SWITCH, HOA=HAND-OFF-AUTOMATIC, LOR=LOCAL-OFF-REMOTE SPSEL=HIGH-OFF-LOW
- ST,SP,J — PUSHBUTTON STATION, 3=NUMBER OF STATIONS, RES=RESET, OP=OPEN, CL=CLOSE EX=EXTEND, RT=RETRACT, ST=START SP=STOP, F=FORWARD, R=REVERSE, L=LEFT, R=RIGHT, J=JOG, U=UP, D=DOWN, FA=FAST, SL=SLOW, H=HAND O=OFF, A=AUTO.
- E — AUTOMATIC TRANSFER SWITCH
- THMS — EQUIPMENT AUXILIARIES: RTD= RESISTANCE TEMPERATURE DETECTOR THMS = THERMISTOR VIB = VIBRATION SWITCH TC = THERMOCOUPLE
- A — INDICATING LIGHT A=AMBER, B=BLUE C=CLEAR, G=GREEN, NE=NEON, O=ORANGE, OP=OPALESCENT, P=PURPLE, R=RED, W=WHITE, Y=YELLOW.
- VR — VOLTAGE REGULATOR
- A — INTERLOCK K=KEY, R=RELAY, ARROW TERMINATES AT DEVICE
- AS — INSTRUMENT & CONTROL SWITCHES AS=AMMETER SWITCH VS=VOLTMETER SWITCH TS=TEST SWITCH SS=SYNCHRONIZING SWITCH SEL=SELECTOR SWITCH CS=CONTROL SWITCH
- VFD — VARIABLE FREQUENCY DRIVE EQUIPMENT
- P — PULSER
- TD — TIME DELAY RELAY
- 1, R — MAGNETIC STARTER FULL VOLTAGE, R=REVERSING, RV=REDUCED VOLTAGE, 2S=TWO SPEED, 2SR= TWO SPEED REVERSING 2=NEMA SIZE OF CONTACTOR
- 3A, MCP, 1, R — COMBINATION MAGNETIC STARTER AND CIRCUIT BREAKER 3A=CONTINUOUS RATING IN AMPERES 1=DENOTES STARTER SIZE MCP=DENOTES MOTOR CIRCUIT PROTECTOR R=REVERSING

- COMBINATION MAGNETIC STARTER AND FUSED DISCONNECT SWITCH-LOW VOLTAGE.
- MAGNETIC STARTER, MEDIUM VOLTAGE
- 3 — POTENTIAL TRANSFORMER AND DRAWOUT FUSE. 3=QUANTITY REQUIRED.
- DISCONNECT SWITCH AND FUSE
- ADJUSTABLE OR VARIABLE FUNCTION
- 3-PHASE, DELTA CONNECTION
- 3-PHASE, 3-WIRE, GROUNDED CORNER DELTA
- 3-PHASE, OPEN DELTA
- 3-PHASE, OPEN DELTA, GROUNDED AT COMMON POINT.
- TIP-P022A/B/C — CABLE TAG NUMBER: TIP = AREA DESIGNATION 022 = ARBITRARY SEQUENTIAL NUMBER P = POWER A/B/C = PHASES AND CABLE COUNT C = CONTROL I = INSTRUMENTATION AL = ALARM CC = COMMUNICATION DC = DIRECT CURRENT FO = FIBER OPTICS
- EQUIPMENT OR DEVICE LOCATED IN CENTRAL CONTROL ROOM.
- EQUIPMENT OR DEVICE LOCATED IN SWITCHGEAR OR MOTOR CONTROLLER
- EQUIPMENT OR DEVICE LOCATED IN LOCAL CABINET
- DA, 123A — DIGITAL ALARM INPUT (HARD-WIRED) TO ANNUNCIATOR PANEL.
- 4753, UA, 123A — DIGITAL ALARM INPUT TO SCADA SYSTEM 4753 INDICATES LOOP NUMBER
- 4753, UI, 123A — IMPULSE OR ANALOG INPUT TO SCADA SYSTEM 4753 - INDICATES LOOP NUMBER
- EQUIPMENT OR DEVICE LOCATED IN CSI
- 2 — SPECIAL NOTE DESIGNATION
- KWH — UTILITY COMPANY ELECTRICAL METER
- PM — POWER METER

REVISION DATES (DESIGN STAGE ONLY)

THE CITY OF LOS ANGELES OR ITS OFFICERS OR AGENTS SHALL NOT BE RESPONSIBLE FOR THE ACCURACY OR COMPLETENESS OF ELECTRONIC COPIES OF THIS PLAN SHEET.

PLANS PREPARED BY:
carollo
707 WILSHIRE BLVD, SUITE 3920
LOS ANGELES, CA 90017
(213) 488-1597

ProjectLine
Technical Services, Inc
2900 BRISTOL ST, SUITE D-103, COSTA MESA, CA 92626, TEL (714) 540-5460
www.projectlines.com

CITY OF LOS ANGELES DEPARTMENT OF PUBLIC WORKS
BUREAU OF ENGINEERING • THIS PLAN WAS ELECTRONICALLY • SIGNED AND STAMPED

ENGINEERING
CITY OF LOS ANGELES

REGISTERED PROFESSIONAL ENGINEER
ROBERT D. GETTER
No. E 21884
Exp. 06-30-25
ELECTRICAL
STATE OF CALIFORNIA

VERTICAL CONTROL:
HORIZONTAL CONTROL:
SHEET TITLE: ELECTRICAL SYMBOLS
PROJECT: VALLEY VILLAGE PARK STORM WATER CAPTURE PROJECT
ADDRESS: VALLEY VILLAGE PARK 5000 Westpark Dr, North Hollywood, CA 91601

NO.	REVISIONS	DATE	BY
		YY/MM/DD	
		YY/MM/DD	
		YY/MM/DD	
		YY/MM/DD	

CITY ENGINEER — DATE

DESIGN GROUP		DATE
ENGINEER:	PVT - MATT HUCKABY	YY/MM/DD
ARCHITECT:	N/A	YY/MM/DD
DESIGNED BY:	PVT - JUSTIN CHIN	YY/MM/DD
DRAWN BY:	PVT - JUSTIN CHIN	YY/MM/DD
CHECKED BY:	PVT - ROBERT GETTER	YY/MM/DD
APPROVED BY:	PVT - MIKO AIVAZIAN	YY/MM/DD

TED ALLEN, P.E.

CIP NO. SCP0009

INDEX NO.

WORK ORDER EW40085F

SHEET NAME EG-02

SHEET 32 OF 80 SHEETS

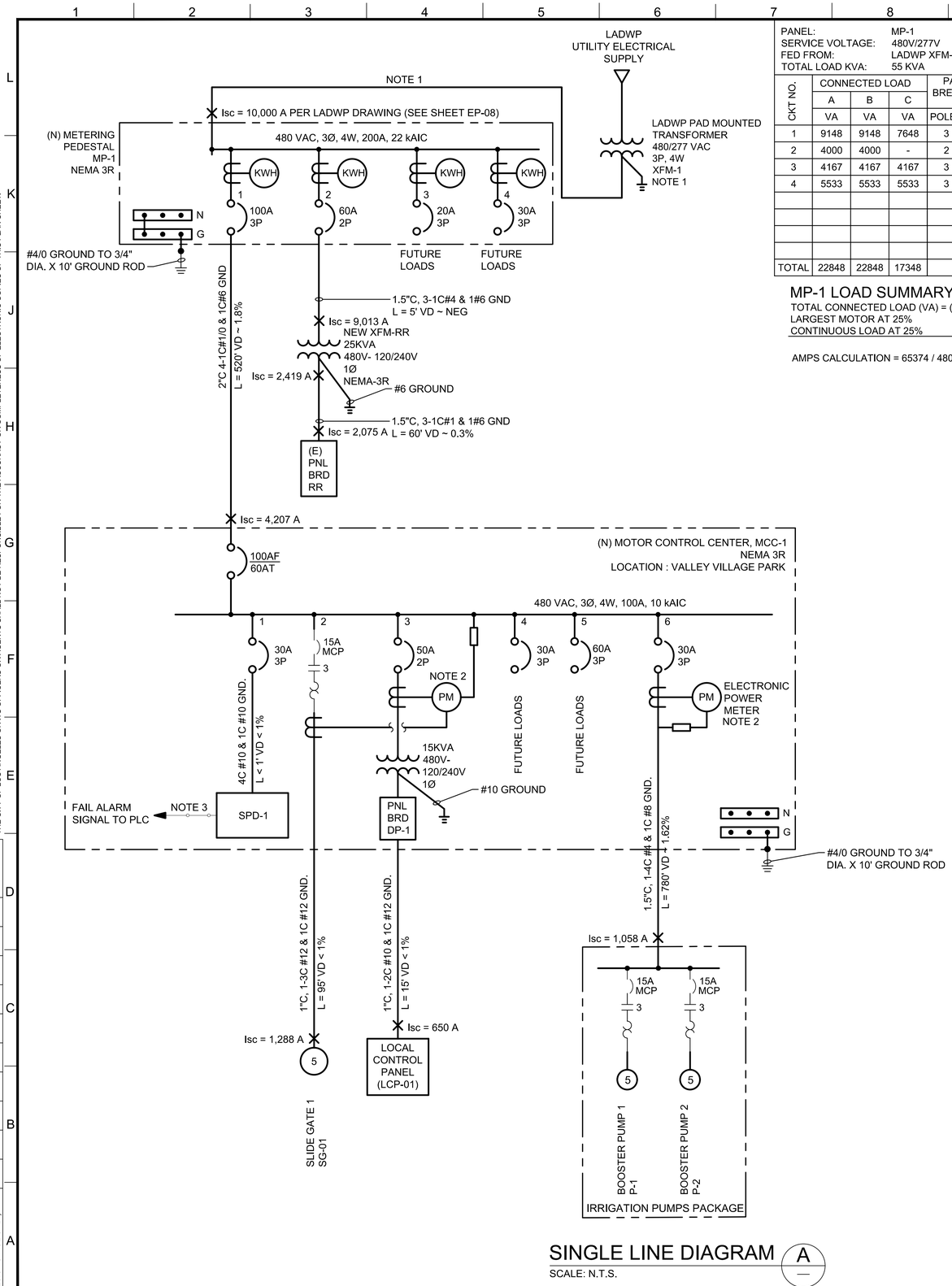

SINGLE LINE DIAGRAM

SCALE: N.T.S.

PANEL:	MP-1	LOCATION:	VALLEY VILLAGE PARK	MOUNTING:	SURFACE MOUNT
SERVICE VOLTAGE:	480V/277V	BUS SIZE:	200A	AIC RATING:	22KA
FED FROM:	LADWP XFM-1	MAIN BREAK:	200A	TYPE:	NEMA 3R
TOTAL LOAD KVA:	55 KVA	WIRE:	4W		

CKT NO.	CONNECTED LOAD A (VA)	B (VA)	C (VA)	PANEL BREAKERS POLES	AMPS	SERVICE
1	9148	9148	7648	3	100	MCC-1
2	4000	4000	-	2	60	EXISTING RR PANEL
3	4167	4167	4167	3	20	FUTURE LOADS
4	5533	5533	5533	3	30	FUTURE LOADS
TOTAL	22848	22848	17348			

MP-1 LOAD SUMMARY

TOTAL CONNECTED LOAD (VA) = (A) + (B) + (C) = 63044 VA
LARGEST MOTOR AT 25% = 1580 VA
CONTINUOUS LOAD AT 25% = 750 VA
65,374 VA

AMPS CALCULATION = 65374 / 480 / 1.732 = 78.68 A

PANEL:	MCC-1	LOCATION:	VALLEY VILLAGE PARK	MOUNTING:	SURFACE MOUNT
SERVICE VOLTAGE:	480V/277V	BUS SIZE:	100A	AIC RATING:	10KA
FED FROM:	MP-1	MAIN BREAK:	60A	TYPE:	NEMA 3R
TOTAL LOAD KVA:	25.9 KVA	WIRE:	4W		

MCC SECTION	CONNECTED LOAD A (VA)	B (VA)	C (VA)	PANEL BREAKERS POLES	AMPS	SERVICE
2F	1500	1500	-	2	30	DISTRIBUTION PANEL, DP-1
3B	-	-	-	3	30	SURGE PROTECTIVE DEVICE, SPD-1
3E	2106	2106	2106	3	15	SLIDE GATE, SLG-1 (5 HP)
3G	-	-	-	3	60	SPARE BREAKER (FUTURE LOAD)
3I	-	-	-	3	30	SPARE BREAKER (FUTURE LOAD)
3K	5542	5542	5542	3	30	IRRIGATION PUMPS PACKAGE
TOTAL	9148	9148	7648			

MCC-1 LOAD SUMMARY

TOTAL CONNECTED LOAD (VA) = (A) + (B) + (C) = 25944 VA
LARGEST MOTOR AT 25% = 1580 VA
CONTINUOUS LOAD AT 25% = 750 VA
28274 VA

AMPS CALCULATION = 28274 / 480 / 1.732 = 34 A

PANEL:	DP-1	LOCATION:	VALLEY VILLAGE PARK	MOUNTING:	WALL MOUNT
SERVICE VOLTAGE:	240V/120V	PHASE:	1 Ø	A/C RATING:	10K
FED FROM:	MCC-1	MAIN BREAK:	60A	TYPE:	NEMA 1
TOTAL LOAD KVA:	3 KVA	WIRE:	3W		

LOAD IN VA A	B	CIRCUIT DESCRIPTION	NOTE	BRK TRIP	BRK POLES	CKT	CKT	BRK TRIP	BRK POLES	NOTE	CIRCUIT DESCRIPTION	LOAD IN VA A	B
3000		LOCAL CONTROL PANEL		30	1	1	2	20	1		SPARE		
		SPARE		20	1	3	4	15	1		SPARE		
		SPARE		15	1	5	6	20	1		SPARE		
		SPARE		15	1	7	8	15	1		SPARE		
		SPARE		15	1	9	10	15	1		SPARE		
						11	12						
3000		TOTAL	TOTAL CONNECTED VA = 3000			PANEL DEMAND AMPS = 12.5A							

NOTES:

1. CONTRACTOR TO CONFIRM WITH LADWP ACTUAL TRANSFORMER SIZE.
2. SEE SPECIFICATION SECTION 16180 "WIRING DEVICES" FOR ELECTRONIC POWER METER REQUIREMENTS.
3. SIZE THE SURGE PROTECTIVE DEVICE PER MANUFACTURER'S RECOMMENDATION.

ProjectLine
Technical Services, Inc
2900 BRISTOL ST, SUITE D-103, COSTA MESA, CA 92626, TEL (714) 540-5460
www.projectlinets.com

PLANS PREPARED BY:
carollo
707 WILSHIRE BLVD, SUITE 3920
LOS ANGELES, CA 90017
(213) 489-1587

THE CITY OF LOS ANGELES OR ITS OFFICERS OR AGENTS SHALL NOT BE RESPONSIBLE FOR THE ACCURACY OR COMPLETENESS OF ELECTRONIC COPIES OF THIS PLAN SHEET.

REVISION DATES (DESIGN STAGE ONLY)

CITY OF LOS ANGELES DEPARTMENT OF PUBLIC WORKS
BUREAU OF ENGINEERING
ENGINEERING
CITY OF LOS ANGELES
THIS PLAN WAS ELECTRONICALLY SIGNED AND STAMPED
REGISTERED PROFESSIONAL ENGINEER
ROBERT D. GETTER
No. E 21884
Exp. 06-30-25
ELECTRICAL
STATE OF CALIFORNIA

VERTICAL CONTROL:
HORIZONTAL CONTROL:
CITY ENGINEER
TED ALLEN, P.E.
DATE

DESIGN GROUP	
ENGINEER:	PVT - MATT HUCKABY
ARCHITECT:	N/A
DESIGNED BY:	PVT - JUSTIN CHIN
DRAWN BY:	PVT - JUSTIN CHIN
CHECKED BY:	PVT - ROBERT GETTER
APPROVED BY:	PVT - MIKO ALVAZIAN

NO.	REVISIONS	BY	DATE
			YY/MM/DD
			YY/MM/DD
			YY/MM/DD
			YY/MM/DD

SHEET TITLE: ELECTRICAL SINGLE LINE DIAGRAM
PROJECT: VALLEY VILLAGE PARK STORM WATER CAPTURE PROJECT
ADDRESS: VALLEY VILLAGE PARK
5000 Westpark Dr, North Hollywood, CA 91601

CIP NO. SCP0009
INDEX NO.
WORK ORDER EW40085F
SHEET NAME ES-01
SHEET 33 OF 80 SHEETS

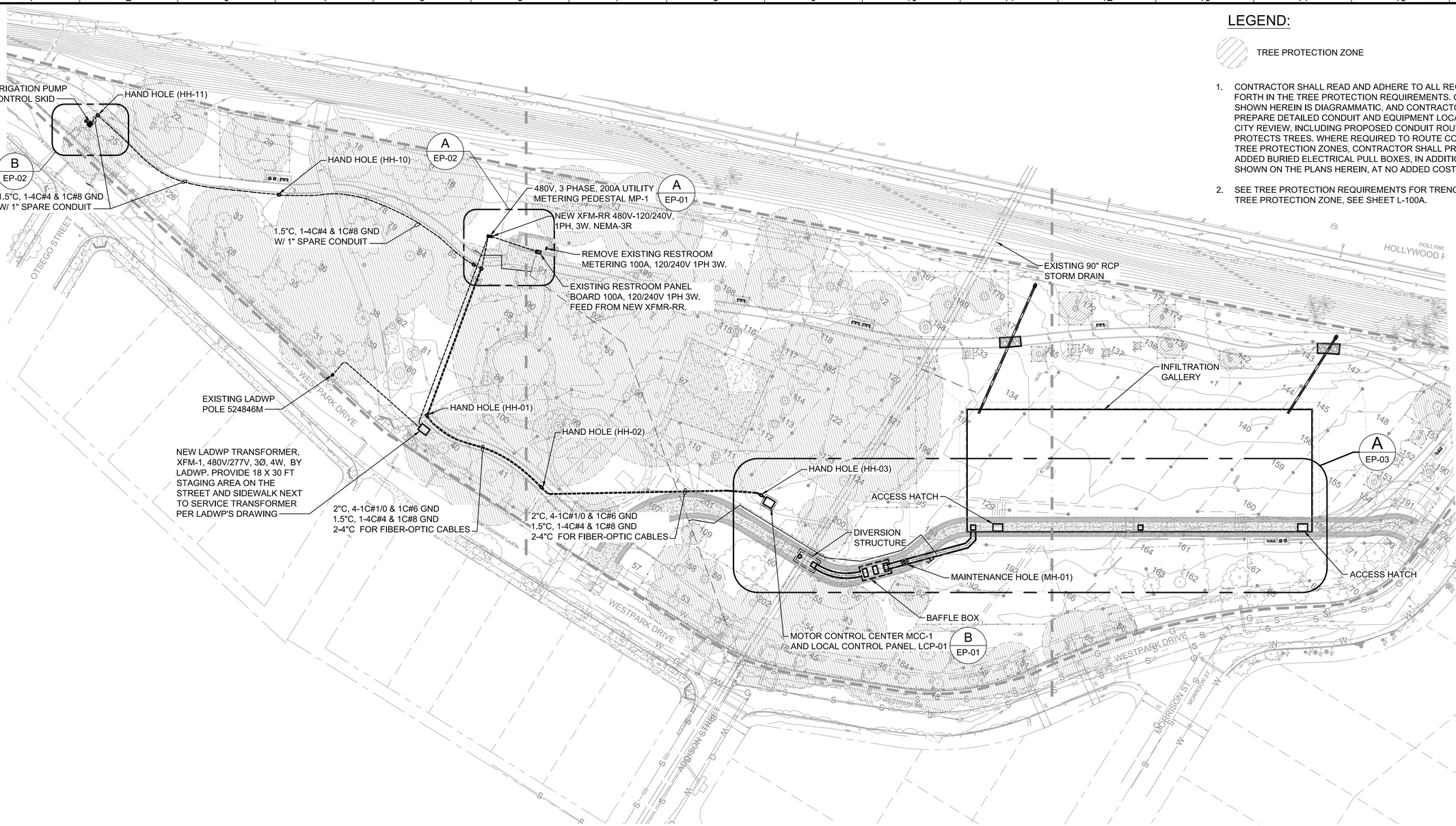

LEGEND:

TREE PROTECTION ZONE

1. CONTRACTOR SHALL READ AND ADHERE TO ALL REGULATIONS SET FORTH IN THE TREE PROTECTION REQUIREMENTS. CONDUIT ROUTING SHOWN HEREIN IS DIAGRAMMATIC, AND CONTRACTOR SHALL PREPARE DETAILED CONDUIT AND EQUIPMENT LOCATION PLANS FOR CITY REVIEW, INCLUDING PROPOSED CONDUIT ROUTING THAT PROTECTS TREES. WHERE REQUIRED TO ROUTE CONDUITS OUTSIDE TREE PROTECTION ZONES, CONTRACTOR SHALL PROVIDE UP TO 10 ADDED BURIED ELECTRICAL PULL BOXES, IN ADDITION TO THOSE SHOWN ON THE PLANS HEREIN, AT NO ADDED COST TO THE CITY.
2. SEE TREE PROTECTION REQUIREMENTS FOR TRENCHING INSIDE OF TREE PROTECTION ZONE, SEE SHEET L-100A.

ELECTRICAL SITE PLAN A

SCALE: 1" = 40'-0"

40' 0 40' 80'
1" = 40'

THE CITY OF LOS ANGELES OR ITS OFFICERS OR AGENTS SHALL NOT BE RESPONSIBLE FOR THE ACCURACY OR COMPLETENESS OF ELECTRONIC COPIES OF THIS PLAN SHEET.

REVISION DATES (DESIGN STAGE ONLY)

ENGINEERING
CITY OF LOS ANGELES

REGISTERED PROFESSIONAL ENGINEER
ROBERT D. GETTER
No. E 21884
Exp. 06-30-25
ELECTRICAL
STATE OF CALIFORNIA

THIS PLAN WAS ELECTRONICALLY • SIGNED AND STAMPED

BUREAU OF ENGINEERING

VERTICAL CONTROL:
HORIZONTAL CONTROL:

SHEET TITLE: ELECTRICAL SITE PLAN

PROJECT: VALLEY VILLAGE PARK STORM WATER CAPTURE PROJECT

ADDRESS: VALLEY VILLAGE PARK
5000 Westpark Dr, North Hollywood, CA 91601

NO.	REVISIONS	BY	DATE
			YY/MM/DD
			YY/MM/DD
			YY/MM/DD
			YY/MM/DD
			YY/MM/DD

CIP NO. SCP0009

INDEX NO.

CITY OF LOS ANGELES DEPARTMENT OF PUBLIC WORKS

CITY ENGINEER: TED ALLEN, P.E.

DESIGN GROUP		DATE
ENGINEER:	PVT - MATT HUCKABY	YY/MM/DD
ARCHITECT:	N/A	YY/MM/DD
DESIGNED BY:	PVT - JUSTIN CHIN	YY/MM/DD
DRAWN BY:	PVT - JUSTIN CHIN	YY/MM/DD
CHECKED BY:	PVT - ROBERT GETTER	YY/MM/DD
APPROVED BY:	PVT - MIKO AVAZIAN	YY/MM/DD

ProjectLine
Technical Services, Inc
2900 BRISTOL ST. SUITE D-103, COSTA MESA, CA 92626, TEL (714) 540-5460
www.projectlinets.com

PLANS PREPARED BY:
carollo
707 WILSHIRE BLVD, SUITE 3920
LOS ANGELES, CA 90017
(213) 489-1587

WORK ORDER
EW40085F

SHEET NAME
ES-02

SHEET 34 OF 80 SHEETS

SHEET VERSION 4.0.1 FILE PATH: \\192.168.1.2\DISK2\PROJECTLINETS\LATEST\DRIVEQ\PROJECTS\CITY OF LA -TOS-25\CAROLLO\VALLEY VILLAGE\PROJECTLINE DRAWING\CAD\ES-02.DWG PLOT DATE: 2/20/2024 10:16 AM SAVED: 2/20/2024 10:10 AM SAVED BY:HENRY

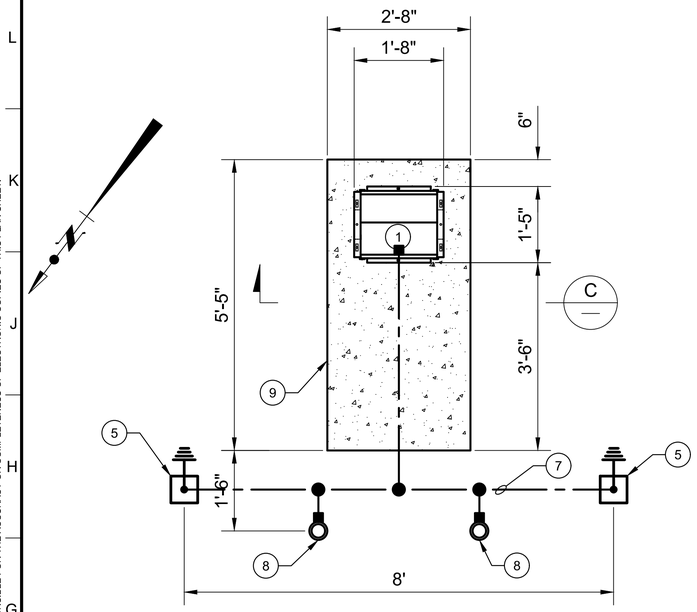

UTILITY METERING PEDESTAL (MP-1) PLAN

SCALE: 3/4" = 1'-0"

A ES-02

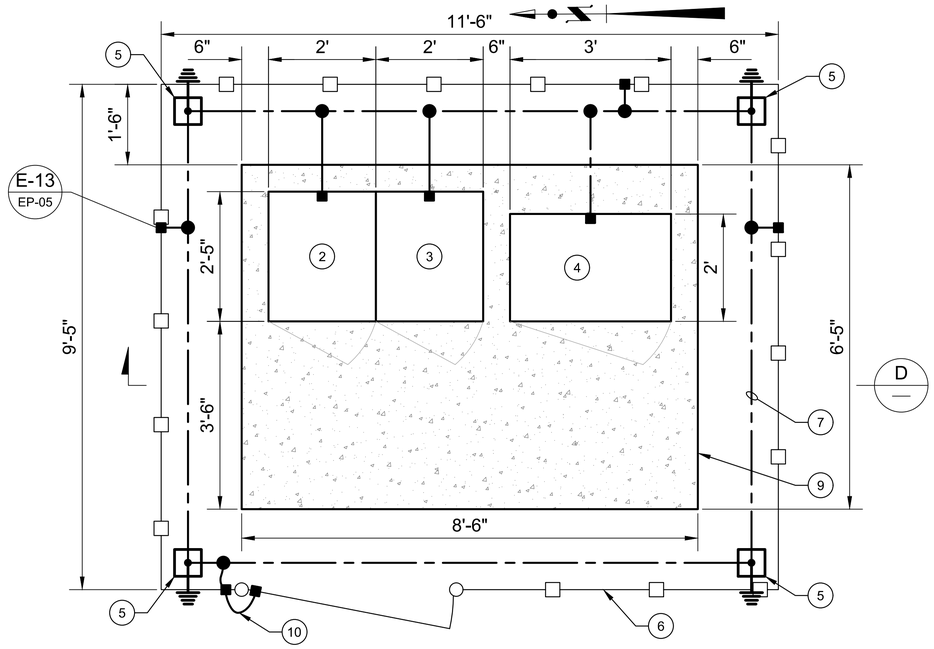

MCC-1 AND LCP-01 PLAN

SCALE: 3/4" = 1'-0"

B ES-02

KEY NOTES:

1	LADWP APPROVED ELECTRICAL SERVICE PEDESTAL (MP-1), NEMA 3R, 316 SS CABINET. SEE CURRENT ELECTRICAL SERVICE REQUIREMENTS MANUAL.
2	MAIN BREAKER, 15KVA TRANSFORMER WITH DISTRIBUTION PANEL DP-01, SEE SB-1 INTERIOR ELEVATION, NEMA 3R, 316 SS CABINET.
3	SLIDE GATE (SG-01) STARTER, SPARE BREAKER, SEE SB-1 INTERIOR ELEVATION, NEMA 3R, 316 SS CABINET WITH DEAD FRONT.
4	LOCAL CONTROL PANEL, LCP-01, NEMA 4X, 316 SS CABINET. SEE SHEET IP-03 FOR INTERIOR LAYOUT OF LCP-01.
5	3/4" D x 10' COPPER CLAD GROUND ROD INSTALL IN GROUND WELL SEE SHEET EP-03 AT DETAIL E-01 AND E-03.
6	10' TALL PLASTIC COATED CHAIN LINK FENCE ENCLOSURE WITH 4' WIDE DOOR AND TOP COVER.
7	#4/0 BARE SOFT DRAWN COPPER GROUNDING CONDUCTOR. BURY A MINIMUM DEPTH OF 2'-6" BELOW GRADE. CADWELD GROUND TAP CONNECTIONS AND CONNECTION AT GROUND ELECTRODE.
8	4" Ø BOLLARD. SPACING BETWEEN BOLLARDS MAX. DISTANCE @ 4'-0" O.C. (FOR INSTALLATION DETAIL SEE CIVIL SHEET C-16, DETAIL CF161). (FOR GROUNDING DETAIL SEE ELECTRICAL SHEET EP-06, DETAIL E-17).
9	EQUIPMENT CONCRETE PAD DETAIL. (SEE SHEET S-04, DETAIL 4)
10	FENCE GROUNDING DETAIL (SEE SHEET EP-05, DETAIL E-13).

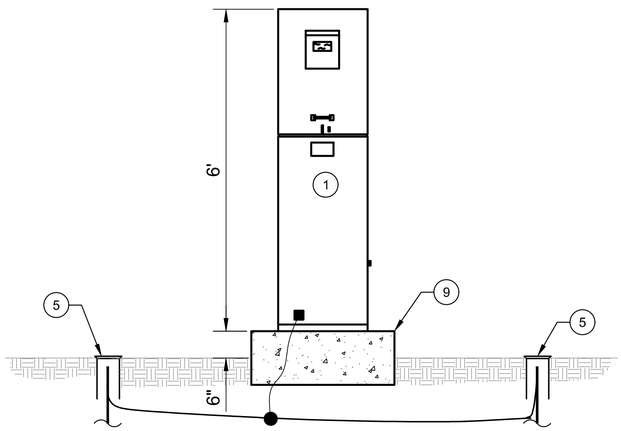

UTILITY METERING PEDESTAL (MP-1) ELEVATION

SCALE: 3/4" = 1'-0"

C —

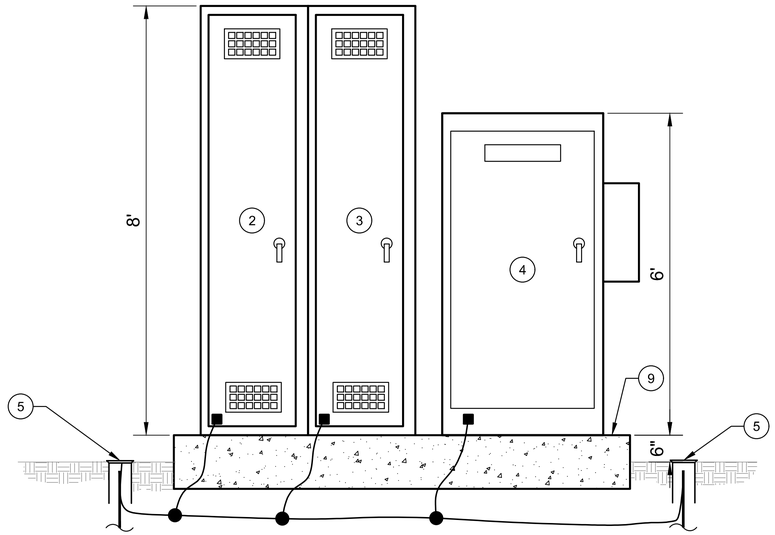

MCC-1 AND LCP-01 EXTERIOR ELEVATION

SCALE: 3/4" = 1'-0"

D —

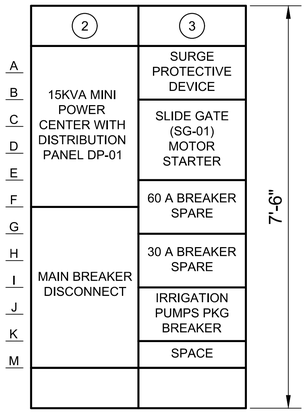

MCC-1 INTERIOR ELEVATION

SCALE: 3/4" = 1'-0"

E —

1' 0 1' 2'

3/4" = 1'

THE CITY OF LOS ANGELES OR ITS OFFICERS OR AGENTS SHALL NOT BE RESPONSIBLE FOR THE ACCURACY OR COMPLETENESS OF ELECTRONIC COPIES OF THIS PLAN SHEET.

REVISION DATES (DESIGN STAGE ONLY)

ENGINEERING
CITY OF LOS ANGELES

REGISTERED PROFESSIONAL ENGINEER
ROBERT D. GETTER
No. E 21884
Exp. 06-30-25
ELECTRICAL
STATE OF CALIFORNIA

THIS PLAN WAS ELECTRONICALLY SIGNED AND STAMPED

BUREAU OF ENGINEERING

VERTICAL CONTROL:
HORIZONTAL CONTROL:

SHEET TITLE: MP-1, MCC-1 AND LCP-01 PLAN AND ELEVATION

PROJECT: VALLEY VILLAGE PARK STORM WATER CAPTURE PROJECT

ADDRESS: VALLEY VILLAGE PARK
5000 Westpark Dr, North Hollywood, CA 91601

CITY OF LOS ANGELES DEPARTMENT OF PUBLIC WORKS

NO.	REVISIONS	DATE	BY
		YY/MM/DD	
		YY/MM/DD	
		YY/MM/DD	
		YY/MM/DD	

CIP NO. SCP0009

INDEX NO.

ProjectLine
Technical Services, Inc
2900 BRISTOL ST, SUITE D-103, COSTA MESA, CA 92626, TEL (714) 540-5460
www.projectlinets.com

PLANS PREPARED BY:
carollo
707 WILSHIRE BLVD, SUITE 3920
LOS ANGELES, CA 90017
(213) 488-1057

CITY ENGINEER		
TED ALLEN, P.E.	DATE	
DESIGN GROUP		
ENGINEER:	PVT - MATT HUCKABY	YY/MM/DD
ARCHITECT:	N/A	YY/MM/DD
DESIGNED BY:	PVT - JUSTIN CHIN	YY/MM/DD
DRAWN BY:	PVT - JUSTIN CHIN	YY/MM/DD
CHECKED BY:	PVT - ROBERT GETTER	YY/MM/DD
APPROVED BY:	PVT - MIKO AIVAZIAN	YY/MM/DD

WORK ORDER
EW40085F

SHEET NAME
EP-01

SHEET 35 OF 80 SHEETS

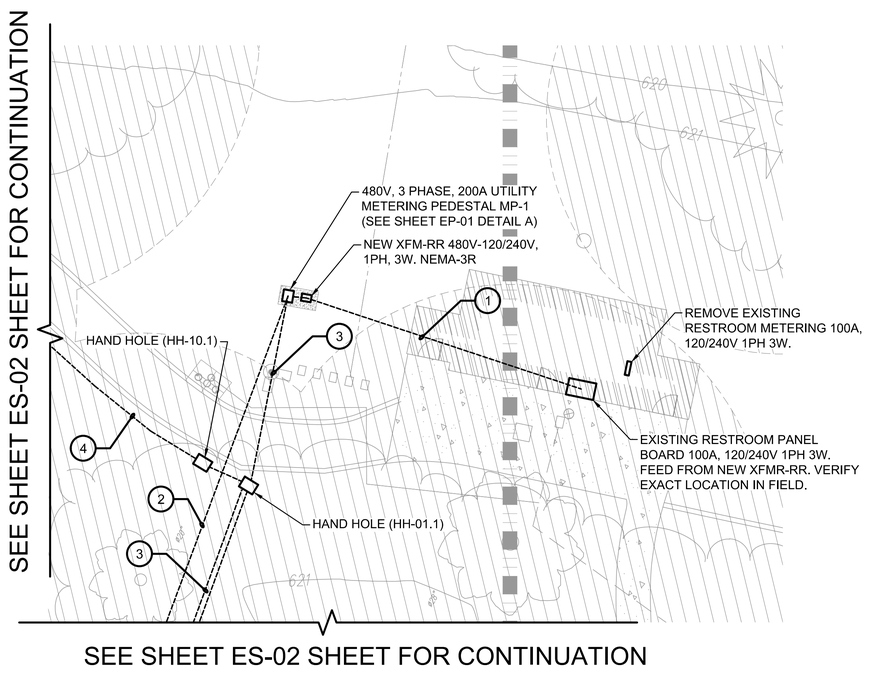

MP-1 POWER PLAN

SCALE:1" = 10'-0"

A
ES-02

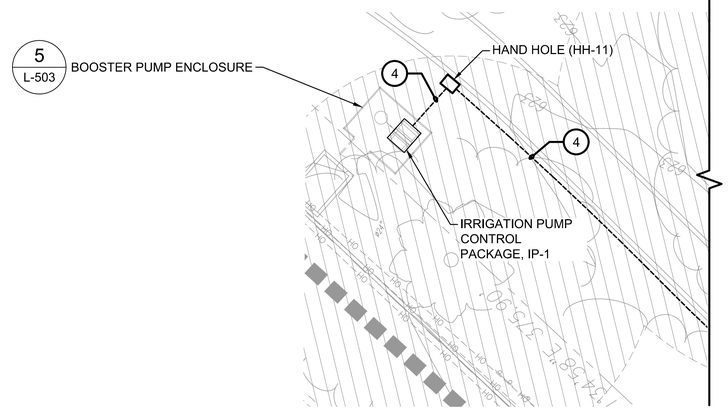

IRRIGATION PUMP CONTROL PACKAGE POWER PLAN

SCALE:1" = 10'-0"

B
ES-02

10' 0 10' 20'
1" = 10'

KEY NOTES:

1. 1-1/2"C, 3-1C#1 & 1#6 GND (120/240V 1PHASE, 3 WIRE, POWER) FROM (N) 25KVA TRANSFORMER, XFM-RR TO EXISTING "RR" PANELBOARD. FINAL ROUTE TO BE DETERMINED IN FIELD.
2. 2-5"C, 4-1C#4/0 & 1C#2 GND (480V, 3 PHASE, 4 WIRE, POWER) FROM (N) LADWP TRANSFORMER, XFM-1 TO UTILITY METERING PEDESTAL, MP-1.
3. 2"C, 4-1C#1/0,& 1C#6 GND (480V, 3 PHASE, POWER) FROM UTILITY METERING PEDESTAL, MP-1 TO MOTOR CONTROL CENTER MCC-1. 2-4"C, FIBER CONNECTION EPL SERVICE FROM LCP-01 TO MP-1 AND PROVIDE CAP ENDS NEAR MP-1.
4. 1.5"C, 1-4C#4 & 1C#8 GND W/ 1" SPARE CONDUIT FROM MOTOR CONTROL CENTER, MCC-1 TO IRRIGATION PUMP CONTROL PACKAGE, IP-01.
5. 1"C, 1-2C#10, 1C#12 GND (120V, SINGLE PHASE, POWER) FROM MOTOR CONTROL CENTER, MCC-1 TO LCP-01.
6. 1"C, 1-5C#14 (120VAC, SLIDE GATE CONTROL SIGNALS) 1"C, 1-5C#16, (24VDC, SLIDE GATE DIGITAL SIGNAL) FROM SLIDE GATE MOTOR STARTER PANEL AT MCC-1-3E TO LCP-01.
7. 1"C, 1-3C#12, 1C#12 GND (480V, POWER) FROM SLIDE GATE MOTOR STARTER PANEL AT MCC-1-3E TO SLIDE GATE ACTUATOR AT DIVERSION STRUCTURE.
8. 1.5"C, 1-19C#14, 1C#14 GND (120V, LIMIT SW SIGNALS AND GATE COMMAND SIGNALS) FROM SLIDE GATE ACTUATOR AT DIVERSION STRUCTURE TO SLIDE GATE STARTER PANEL AT MCC-1-3E.
9. 1"C, 1-5C#16, (24VDC, SLIDE GATE DIGITAL SIGNAL) 1-4C#16 (24VDC, INTRUSION ALARM SIGNAL) FROM DIVERSION STRUCTURE TO LCP-01.
10. 1.5"C, 1-3C #16 UNTWISTED STRANDED CABLE OR MANUFACTURER'S SPECIFIED CABLE (24VDC, HYDROCARBON SENSOR) FROM HYDROCARBON SENSOR AT BAFFLE BOX TO THE TRANSMITTER AT LCP-01.
11. 1"C, 1 FLOW SENSOR MANUFACTURER'S CABLES FROM MH-01 TO LCP-01. FLOW SENSOR TO BE INSTALLED BY MANUFACTURER'S RECOMMENDATION. PROVIDE CHUTE EXTENSION TO PIPE INTO FLOW METER VAULT AS RECOMMENDED BY FLOW METER MANUFACTURER. SEE CIVIL DETAIL 3, SHEET C-23 FOR FLOW SENSOR MOUNTING DETAIL.
12. 1"C, 1-4C#14, (24VDC, INTRUSION ALARM) FROM MH-01 TO LCP-01.
13. 1.5"C, 1-2TSP#16 (24VDC, FLOAT AND LEVEL SIGNAL) 2-4C#14, (24VDC, INTRUSION ALARM) FROM ACCESS HATCH AT INFILTRATION GALLERY TO LCP-01.
14. 1.5"C, 1-2TSP#16 (24VDC, LEVEL SIGNAL) 1-4C#14, (24VDC, INTRUSION ALARM)
15. 2"C, 2-2TSP#16 (24VDC, FLOAT AND 2 LEVEL SIGNALS) 1-4C#14, (24VDC, INTRUSION ALARM).
16. 2"C, 2-2TSP#16 (24VDC, FLOAT AND 2 LEVEL SIGNALS) 2-4C#14, (24VDC, INTRUSION ALARM).
17. 2"C, 2-2TSP#16(24VDC, FLOAT AND 2 LEVEL SIGNALS) 3-4C#14, (24VDC, INTRUSION ALARM), 1-5C#16, (24VDC, SLIDE GATE DIGITAL SIGNAL).

GENERAL NOTES:

1. BURIED ELECTRICAL PULLBOXES AND HANDHOLES SHALL BE PRECAST CONCRETE WITH CAST IRON OR CORROSION RESISTANT STEEL LIDS ON METAL FRAMES, SUCH THAT THEY CAN BE WELDED SHUT AND COMPLY WITH NEC 314.30, AND BE UL LISTED. LID SHALL BE MARKED AS "POWER" OR "SIGNAL" AS APPROPRIATE AND TOP OF LID TO BE FLUSH WITH FINISHED GRADE. PROVIDE ALL PULLBOXES AND HANDHOLES MINIMUM SIZES AT 10" x17"x30" DEEP AND PENTA-HEAD BOLTS. PROVIDE LIDS WITH H20 TRAFFIC RATING. PULLBOXES AND HANDHOLES SHALL BE BY CHRISTY, OLDCASTLE, AND JENSEN OR EQUAL.

HANDHOLE -ID	SIZE	DEPTH
HH-01,02,03	36"x20"	30"
HH-04 TO HH-11	10"x17"	30"

PLANS PREPARED BY:
carollo
707 WILSHIRE BLVD, SUITE 3920
LOS ANGELES, CA 90017
(213) 489-1587

ProjectLine
Technical Services, Inc
2900 BRISTOL ST, SUITE D-103, COSTA MESA, CA 92626 TEL (714) 540-5460
www.projectlinets.com

ENGINEERING
CITY OF LOS ANGELES

REGISTERED PROFESSIONAL ENGINEER
ROBERT D. GETTER
No. E 21884
Exp. 06-30-25
ELECTRICAL
STATE OF CALIFORNIA

THIS PLAN WAS ELECTRONICALLY SIGNED AND STAMPED

BUREAU OF ENGINEERING

VERTICAL CONTROL:
HORIZONTAL CONTROL:

SHEET TITLE: LADWP XFM-1, MP-1 AND IP-1 POWER PLAN

PROJECT: VALLEY VILLAGE PARK STORM WATER CAPTURE PROJECT

ADDRESS: VALLEY VILLAGE PARK
5000 Westpark Dr, North Hollywood, CA 91601

CITY OF LOS ANGELES DEPARTMENT OF PUBLIC WORKS

NO.	REVISIONS	DATE	BY
		YY/MM/DD	
		YY/MM/DD	
		YY/MM/DD	
		YY/MM/DD	

CIP NO. SCP0009

INDEX NO.

CITY ENGINEER
TED ALLEN, P.E.
DATE YY/MM/DD

DESIGN GROUP	
ENGINEER:	PVT - MATT HUCKABY
ARCHITECT:	N/A
DESIGNED BY:	PVT - JUSTIN CHIN
DRAWN BY:	PVT - JUSTIN CHIN
CHECKED BY:	PVT - ROBERT GETTER
APPROVED BY:	PVT - MIKO AIVAZIAN

WORK ORDER
EW40085F

SHEET NAME
EP-02

SHEET 36 OF 80 SHEETS

REVISION DATES (DESIGN STAGE ONLY)

THE CITY OF LOS ANGELES OR ITS OFFICERS OR AGENTS SHALL NOT BE RESPONSIBLE FOR THE ACCURACY OR COMPLETENESS OF ELECTRONIC COPIES OF THIS PLAN SHEET.

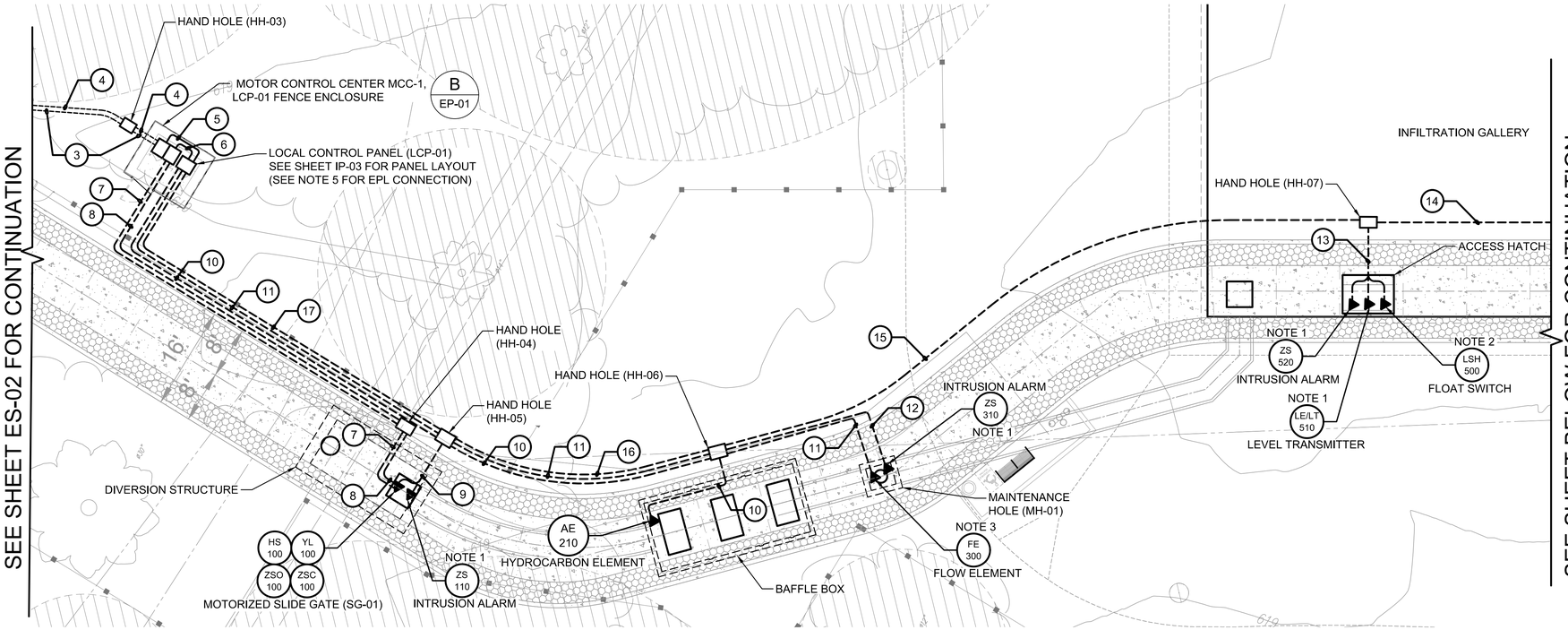

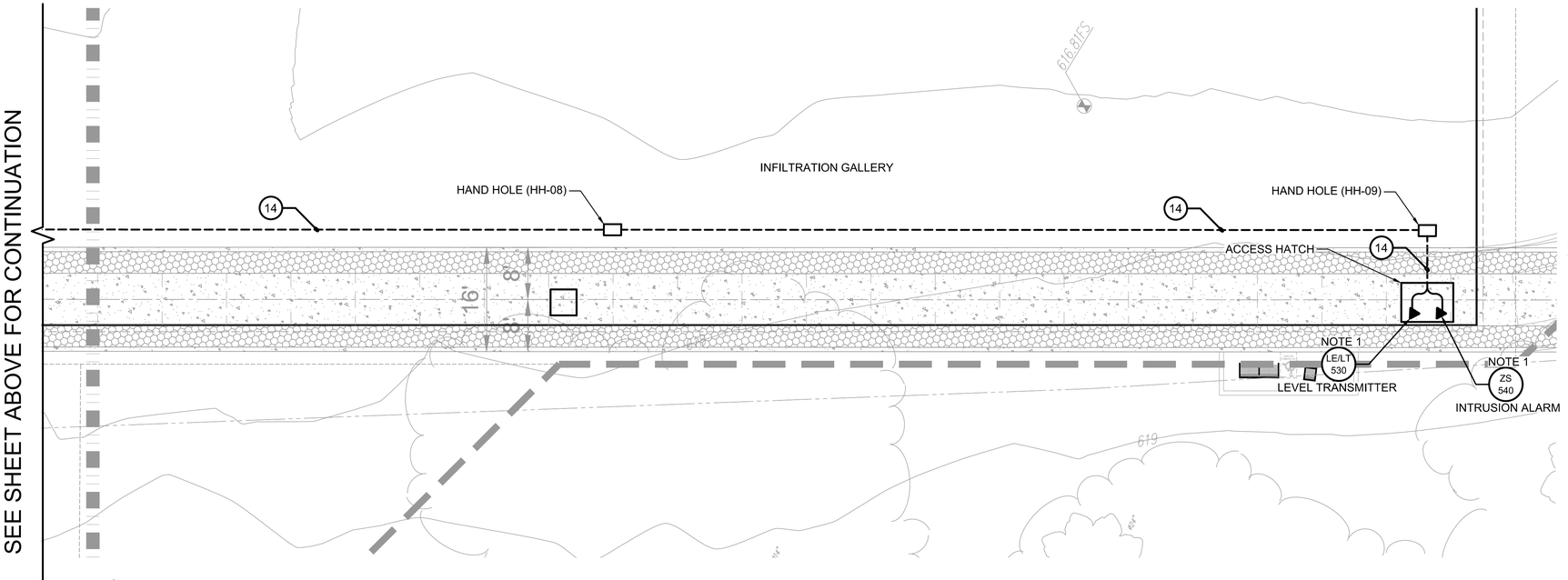

INFILTRATION GALLERY POWER AND INSTRUMENTATION PLAN

A
ES-02

SCALE:1" = 10'-0"

10' 0 10' 20'
1" = 10'

KEY NOTES:

1. (N) OVERHEAD CONDUCTORS TO BE INSTALLED BY LADWP.
2. 4"C, 4-1C#1/0 & 1C#6 GND (480V, 3 PHASE, 4 WIRE, POWER) FROM (N) POLE MOUNTED LADWP TRANSFORMER, XFM-1 TO UTILITY METERING PEDESTAL, MP-1.
3. 2"C, 4-1C#1/0,& 1C#6 GND (480V, 3 PHASE, POWER) FROM UTILITY METERING PEDESTAL, MP-1 TO MOTOR CONTROL CENTER MCC-1. 2-4"C, FIBER CONNECTION EPL SERVICE FROM LCP-01 TO MP-1 AND PROVIDE CAP ENDS NEAR MP-1.
4. 1.5"C, 1-4C#4 & 1C#8 GND W/ 1" SPARE CONDUIT FROM MOTOR CONTROL CENTER, MCC-1 TO IRRIGATION PUMP CONTROL PACKAGE, IP-01.
5. 1"C, 1-2C#10, 1C#12 GND (120V, SINGLE PHASE, POWER) FROM MOTOR CONTROL CENTER, MCC-1 TO LCP-01.
6. 1"C, 1-5C#14 (120VAC, SLIDE GATE CONTROL SIGNALS) 1"C, 1-5C#16, (24VDC, SLIDE GATE DIGITAL SIGNAL) FROM SLIDE GATE MOTOR STARTER PANEL AT MCC-1-3E TO LCP-01.
7. 1"C, 1-3C#12, 1C#12 GND (480V, POWER) FROM SLIDE GATE MOTOR STARTER PANEL AT MCC-1-3E TO SLIDE GATE ACTUATOR AT DIVERSION STRUCTURE.
8. 1.5"C, 1-19C#14, 1C#14 GND (120V, LIMIT SW SIGNALS AND GATE COMMAND SIGNALS) FROM SLIDE GATE ACTUATOR AT DIVERSION STRUCTURE TO SLIDE GATE STARTER PANEL AT MCC-1-3E.
9. 1"C, 1-5C#16, (24VDC, SLIDE GATE DIGITAL SIGNAL) 1-4C#16 (24VDC, INTRUSION ALARM SIGNAL) FROM DIVERSION STRUCTURE TO LCP-01.
10. 1.5"C, 1-3C #16 UNTWISTED STRANDED CABLE OR MANUFACTURER'S SPECIFIED CABLE (24VDC, HYDROCARBON SENSOR) FROM HYDROCARBON SENSOR AT BAFFLE BOX TO THE TRANSMITTER AT LCP-01.
11. 1"C, 1 FLOW SENSOR MANUFACTURER'S CABLES FROM MH-01 TO LCP-01. FLOW SENSOR TO BE INSTALLED BY MANUFACTURER'S RECOMMENDATION. PROVIDE CHUTE EXTENSION TO PIPE INTO FLOW METER VAULT AS RECOMMENDED BY FLOW METER MANUFACTURER. SEE CIVIL DETAIL 3, SHEET C-23 FOR FLOW SENSOR MOUNTING DETAIL.
12. 1"C, 1-4C#14, (24VDC, INTRUSION ALARM) FROM MH-01 TO LCP-01.
13. 1.5"C, 1-2TSP#16 (24VDC, FLOAT AND LEVEL SIGNAL) 2-4C#14, (24VDC, INTRUSION ALARM) FROM ACCESS HATCH AT INFILTRATION GALLERY TO LCP-01.
14. 1.5"C, 1-2TSP#16 (24VDC, LEVEL SIGNAL) 1-4C#14, (24VDC, INTRUSION ALARM)
15. 2"C, 2-2TSP#16 (24VDC, FLOAT AND 2 LEVEL SIGNALS) 1-4C#14, (24VDC, INTRUSION ALARM).
16. 2"C, 2-2TSP#16 (24VDC, FLOAT AND 2 LEVEL SIGNALS) 2-4C#14, (24VDC, INTRUSION ALARM).
17. 2"C, 2-2TSP#16(24VDC, FLOAT AND 2 LEVEL SIGNALS) 3-4C#14, (24VDC, INTRUSION ALARM). 1-5C#16, (24VDC, SLIDE GATE DIGITAL SIGNAL).

GENERAL NOTES:

1. PROVIDE JUNCTION BOX INSIDE BASIN ABOVE WATER LEVEL & ACCESSIBLE FROM HATCH FOR BOTH INTRUSION LIGHT SWITCH & LEVEL TRANSMITTER. SECURE LEVEL TX VENT TUBE IN JUNCTION BOX AS MANUFACTURERS INSTRUCTIONS.
2. PROVIDE JUNCTION BOX FOR FLOAT SWITCH INSIDE BASIN.
3. PROVIDE JUNCTION BOX INSIDE FLOW METER VAULT. CABLE AS SPECIFIED BY MANUFACTURER. SEE SHEET C-13 FOR FLOW METER MOUNTING DETAIL.
4. BURIED ELECTRICAL PULLBOXES AND HANDHOLES SHALL BE PRECAST CONCRETE WITH CAST IRON OR CORROSION RESISTANT STEEL LIDS ON METAL FRAMES, SUCH THAT THEY CAN BE WELDED SHUT AND COMPLY WITH NEC 314.30, AND BE UL LISTED. LID SHALL BE MARKED AS "POWER" OR "SIGNAL" AS APPROPRIATE AND TOP OF LID TO BE FLUSH WITH FINISHED GRADE. PROVIDE ALL PULLBOXES AND HANDHOLES MINIMUM SIZES AT 10" x17"x30" DEEP AND PENTA-HEAD BOLTS. PROVIDE LIDS WITH H20 TRAFFIC RATING. PULLBOXES AND HANDHOLES SHALL BE BY CHRISTY, OLDCASTLE, AND JENSEN OR EQUAL.
5. CONTRACTOR TO PROVIDE A 1" CONDUIT IN A DUCTBANK FROM WEST PARK DRIVE TO THE LCP-01. CONTRACTOR TO AGREE ON EXACT PATH WITH EPL SERVICE PROVIDER AND ENGINEER. FIBER-OPTIC CABLE PROVIDED BY SERVICE PROVIDER.

HANDHOLE -ID	SIZE	DEPTH
HH-1,2,3	36"x20"	30"
HH-4 TO HH-11	10"x17"	30"

ProjectLine
Technical Services, Inc
2900 BRISTOL ST. SUITE D-103, COSTA MESA, CA
92626, TEL (714) 540-5460
www.projectlinets.com

PLANS PREPARED BY:
carollo
707 WILSHIRE BLVD, SUITE 3920
LOS ANGELES, CA 90017
(213) 466-1567

ENGINEERING
CITY OF LOS ANGELES

REGISTERED PROFESSIONAL ENGINEER
ROBERT D. GETTER
No. E 21884
Exp. 06-30-25
ELECTRICAL
STATE OF CALIFORNIA

THIS PLAN WAS ELECTRONICALLY
• SIGNED AND STAMPED

BUREAU OF ENGINEERING

VERTICAL CONTROL:
HORIZONTAL CONTROL:

SHEET TITLE: INFILTRATION GALLERY POWER AND INSTRUMENTATION PLAN

PROJECT: VALLEY VILLAGE PARK STORM WATER CAPTURE PROJECT

ADDRESS: VALLEY VILLAGE PARK
5000 Westpark Dr, North Hollywood, CA 91601

NO.	REVISIONS	DATE	BY
		YY/MM/DD	
		YY/MM/DD	
		YY/MM/DD	
		YY/MM/DD	

CIP NO. SCP0009

INDEX NO.

CITY OF LOS ANGELES DEPARTMENT OF PUBLIC WORKS

CITY ENGINEER		DATE
TED ALLEN, P.E.		
DESIGN GROUP		
ENGINEER:	PVT - MATT HUCKABY	YY/MM/DD
ARCHITECT:	N/A	YY/MM/DD
DESIGNED BY:	PVT - JUSTIN CHIN	YY/MM/DD
DRAWN BY:	PVT - JUSTIN CHIN	YY/MM/DD
CHECKED BY:	PVT - ROBERT GETTER	YY/MM/DD
APPROVED BY:	PVT - MIKO AVAZIAN	YY/MM/DD

WORK ORDER
EW40085F

SHEET NAME
EP-03
SHEET 37 OF 80 SHEETS

THE CITY OF LOS ANGELES OR ITS OFFICERS OR AGENTS SHALL NOT BE RESPONSIBLE FOR THE ACCURACY OR COMPLETENESS OF ELECTRONIC COPIES OF THIS PLAN SHEET.

REVISION DATES (DESIGN STAGE ONLY)

THE CITY OF LOS ANGELES OR ITS OFFICERS OR AGENTS SHALL NOT BE RESPONSIBLE FOR THE ACCURACY OR COMPLETENESS OF ELECTRONIC COPIES OF THIS PLAN SHEET.

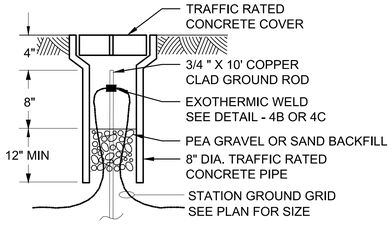

NOTE:
1. PROVIDE MINIMUM OF FOUR GROUND RODS IN GROUND WELLS.

GROUND WELL | E-01

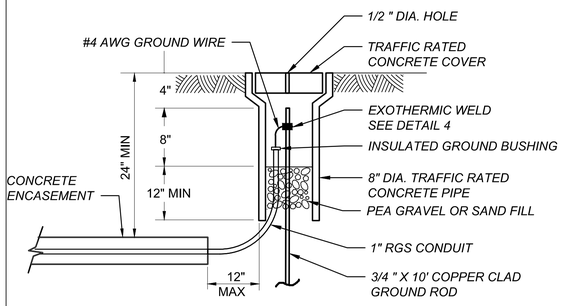

INSULATED GROUND CABLE MOUNTING IN GROUND WELL | E-02

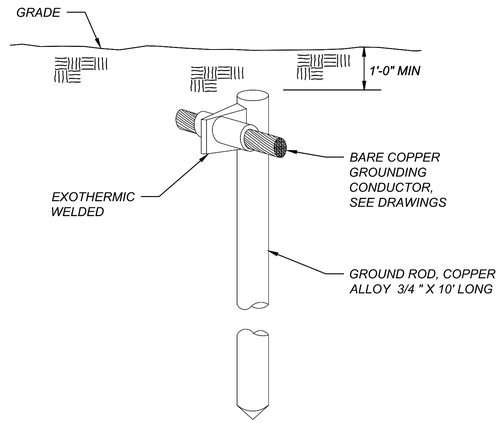

NOTE:
1. CONTRACTOR SHALL PROVIDE UP TO FOUR GROUND RODS CONNECTED TO GROUND LOOPS AROUND ELECTRICAL ENCLOSURE. CONTRACTOR SHALL SUBMIT PROPOSED GROUNDING PLAN FOR APPROVAL.

BURIED GROUND ROD | E-03

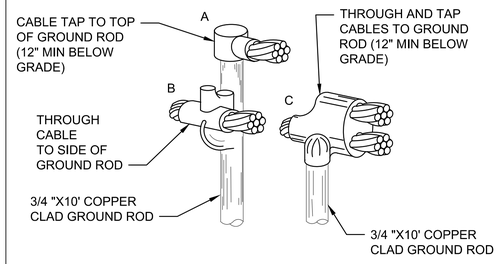

EXOTHERMIC WELDS CABLE TO GROUND ROD | E-04

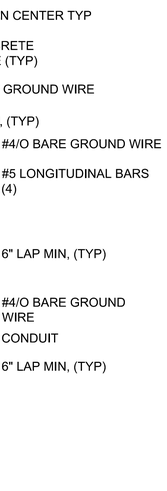

NOTES:
1. TYPICAL REINFORCEMENT DETAILS FOR ALL DUCT BANKS EVEN IF NUMBER OF CONDUITS AND CONFIGURATION VARIES.
2. ALL UNDERGROUND CONDUIT SHALL BE ENCASED IN CONCRETE DUCTS.

DUCT BANKS DETAIL | E-05

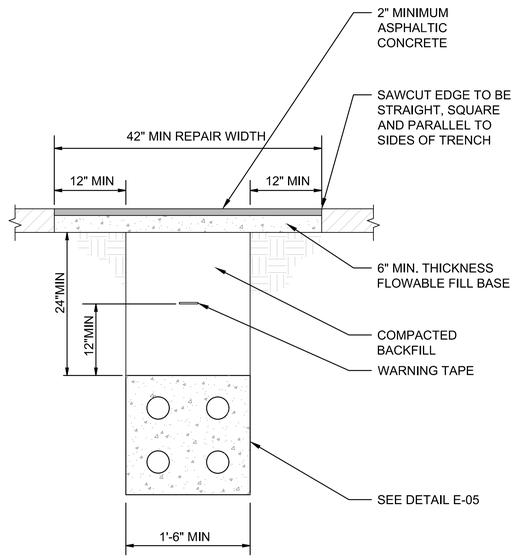

CONDUIT PLACEMENT IN TRENCH | E-06

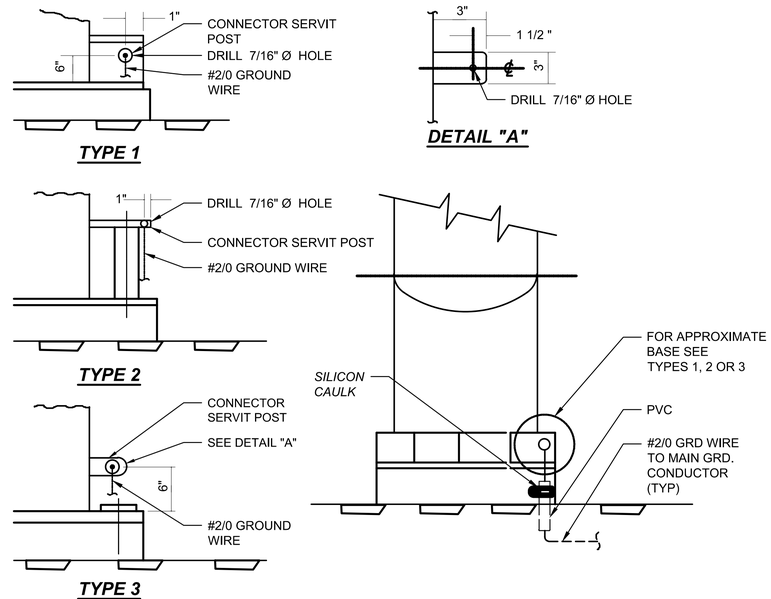

NOTE:
1. ALL TANKS, LADDERS AND HANDRAILS TO BE GROUNDED.

TYPICAL EQUIPMENT GROUNDING | E-07

PLANS PREPARED BY:
carollo
707 WILSHIRE BLVD, SUITE 3920
LOS ANGELES, CA 90017
(213) 499-1567

ProjectLine
Technical Services, Inc
2900 BRISTOL ST, SUITE D-103, COSTA MESA, CA
92626, TEL (714) 540-5460
www.projectlinets.com

REVISION DATES
(DESIGN STAGE ONLY)

CITY OF LOS ANGELES DEPARTMENT OF PUBLIC WORKS
BUREAU OF ENGINEERING
THIS PLAN WAS ELECTRONICALLY • SIGNED AND STAMPED •

ENGINEERING
CITY OF LOS ANGELES

REGISTERED PROFESSIONAL ENGINEER
ROBERT D. GETTER
No. E 21884
Exp. 06-30-25
ELECTRICAL
STATE OF CALIFORNIA

VERTICAL CONTROL:
HORIZONTAL CONTROL:
SHEET TITLE: ELECTRICAL GROUNDING DETAILS
PROJECT: VALLEY VILLAGE PARK STORM WATER CAPTURE PROJECT
ADDRESS: VALLEY VILLAGE PARK
5000 Westpark Dr, North Hollywood, CA 91601

NO.	REVISIONS	DATE	BY
		YY/MM/DD	
		YY/MM/DD	
		YY/MM/DD	
		YY/MM/DD	

CIP NO. SCP0009

INDEX NO.

CITY ENGINEER

	DESIGN GROUP	DATE
TED ALLEN, P.E.		YY/MM/DD
ENGINEER:	PVT - MATT HUCKABY	YY/MM/DD
ARCHITECT:	N/A	YY/MM/DD
DESIGNED BY:	PVT - JUSTIN CHIN	YY/MM/DD
DRAWN BY:	PVT - JUSTIN CHIN	YY/MM/DD
CHECKED BY:	PVT - ROBERT GETTER	YY/MM/DD
APPROVED BY:	PVT - MIKO AIVAZIAN	YY/MM/DD

WORK ORDER
EW40085F

SHEET NAME
EP-04
SHEET 38 OF 80 SHEETS

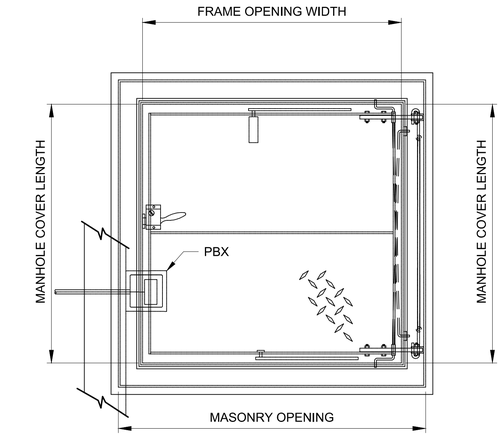

PLAN

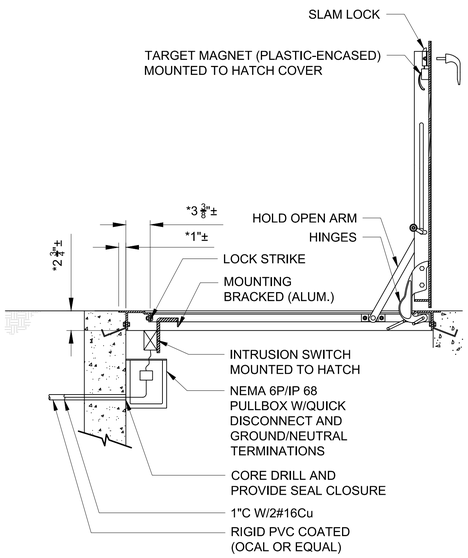

* VERIFY ALL DIMENSIONS

SECTION A-A

* VERIFY TYPICAL FRAME DIMENSIONS

NOTES:

1. PROVIDE SERIES II (SQUARE BODY) TOPWORX GO SWITCH BY EMERSON OR EQUAL (CLASS I, DIV 2). PROVIDE AMP3 TARGET MAGNET, NEMA 4X SST BODY, AND MINI QUICK DISCONNECT. INSTALL PER MANUFACTURER'S RECOMMENDATIONS.
2. FASTEN TARGET TO UNDERSIDE OF ACCESS HATCH. PROVIDE MOUNTING BRACKETS WHERE REQUIRED TO PLACE TARGET WITHIN RANGE OF SENSING AREA. MECHANICALLY FASTEN MOUNTING BRACKET TO HATCH COVER, AND SWITCH TO VAULT STRUCTURE.
3. ALL MOUNTING HARDWARE SHALL BE TYPE 316 SST. PROVIDE MIN. 1/4" DIA. BOLTS FOR ATTACHMENTS.
4. ADJUST DETAIL AS REQUIRED FOR FIELD INSTALLATION ARRANGEMENT
5. PROVIDE SEPARATION BETWEEN DISSIMILAR METALS TO PREVENT GALVANIC CORROSION.

DETAIL - VAULT HATCH COVER | E-11

SWITCH LOCATION	TAG
DIVERSION STRUCT	ZS-110
BAFFLE BOX	ZS-200
INFILTR BASIN	ZS-520 ZS-540

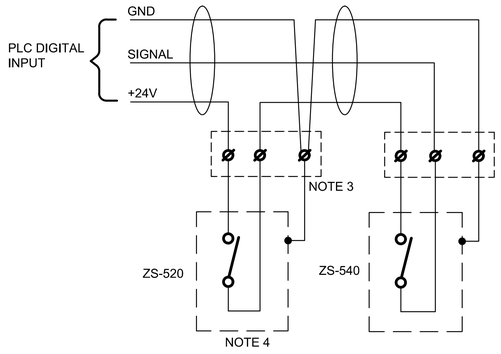

NOTES:

1. SEE PROXIMITY SWITCH INSTALLATION DETAIL E-11.
2. PROVIDE SEPARATE PLC DIGITAL INPUTS FOR DIVERSION STRUCTURE, BAFFLE BOX & INFILTRATION BASIN.
3. PROVIDE NEMA 4X, SS JUNCTION BOX LOCATED INSIDE BASIN/ BOX
4. INTRUSION SWITCH CONTACT CLOSED WHEN HATCH CLOSED.

DETAIL - HATCH INTRUSION ALARM TYPICAL WIRING DIAGRAM (WIRING FOR BASIN SHOWN) | E-08

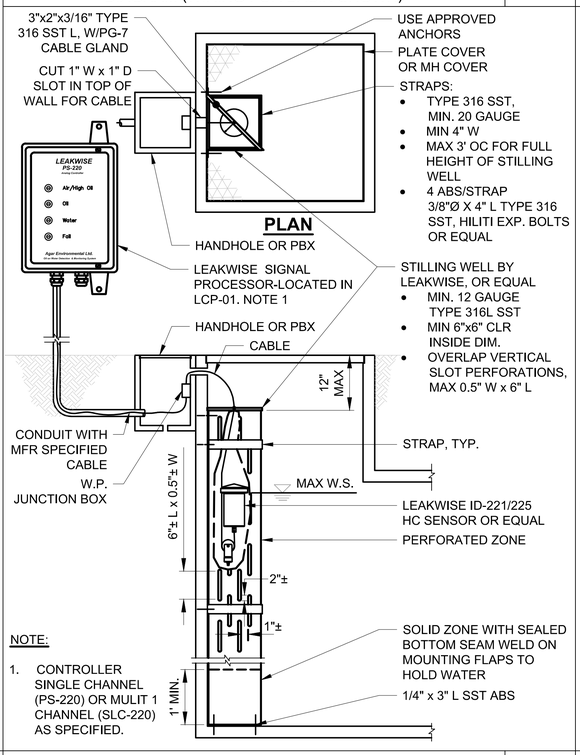

NOTE:

1. CONTROLLER SINGLE CHANNEL (PS-220) OR MULIT 1 CHANNEL (SLC-220) AS SPECIFIED.

HC SENSOR WITH STILLER DETAIL | E-12

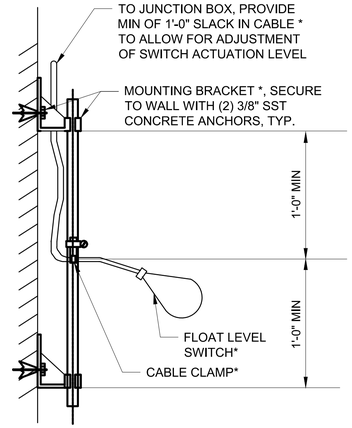

NOTE:

1. COMPONENTS DESIGNATED BY * ARE SUPPLIED BY INSTRUMENT MANUFACTURER.

TYPICAL FLOAT TYPE LEVEL SWITCH INSTALLATION | E-09

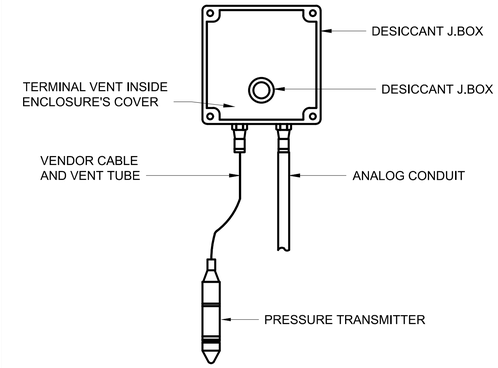

DROP-IN PRESSURE TRANSMITTER DESICCANT J-BOX DETAIL | E-10

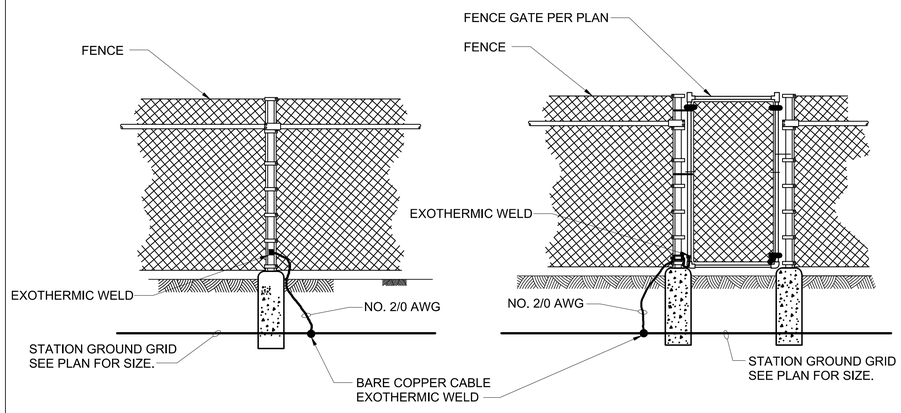

FENCE GROUNDING WITH GATE | E-13

ProjectLine
Technical Services, Inc
2900 BRISTOL ST, SUITE D-103, COSTA MESA, CA 92626 TEL (714) 540-5460
www.projectlinets.com

PLANS PREPARED BY:
carollo
707 WILSHIRE BLVD, SUITE 3920
LOS ANGELES, CA 90017
(213) 489-1587

CITY OF LOS ANGELES DEPARTMENT OF PUBLIC WORKS
BUREAU OF ENGINEERING
THIS PLAN WAS ELECTRONICALLY • SIGNED AND STAMPED

ENGINEERING
CITY OF LOS ANGELES

REGISTERED PROFESSIONAL ENGINEER
ROBERT D. GETTER
No. E 21884
Exp. 06-30-25
ELECTRICAL
STATE OF CALIFORNIA

NO.	REVISIONS	DATE	BY
		YY/MM/DD	
		YY/MM/DD	
		YY/MM/DD	
		YY/MM/DD	

CIP NO. SCP0009

INDEX NO.

VERTICAL CONTROL:	VERTICAL CONTROL	
HORIZONTAL CONTROL:	HORIZONTAL CONTROL	
SHEET TITLE:	ELECTRICAL SECTIONS AND DETAILS	
PROJECT:	VALLEY VILLAGE PARK STORM WATER CAPTURE PROJECT	
ADDRESS:	VALLEY VILLAGE PARK 5000 Westpark Dr, North Hollywood, CA 91601	

CITY ENGINEER		DATE	
TED ALLEN, P.E.			
DESIGN GROUP			
ENGINEER:	PVT - MATT HUCKABY	YY/MM/DD	
ARCHITECT:	N/A	YY/MM/DD	
DESIGNED BY:	PVT - JUSTIN CHIN	YY/MM/DD	
DRAWN BY:	PVT - JUSTIN CHIN	YY/MM/DD	
CHECKED BY:	PVT - ROBERT GETTER	YY/MM/DD	
APPROVED BY:	PVT - MIKO AIVAZIAN	YY/MM/DD	

WORK ORDER
EW40085F

SHEET NAME
EP-05
SHEET 39 OF 80 SHEETS

THE CITY OF LOS ANGELES OR ITS OFFICERS OR AGENTS SHALL NOT BE RESPONSIBLE FOR THE ACCURACY OR COMPLETENESS OF ELECTRONIC COPIES OF THIS PLAN SHEET.

REVISION DATES (DESIGN STAGE ONLY)

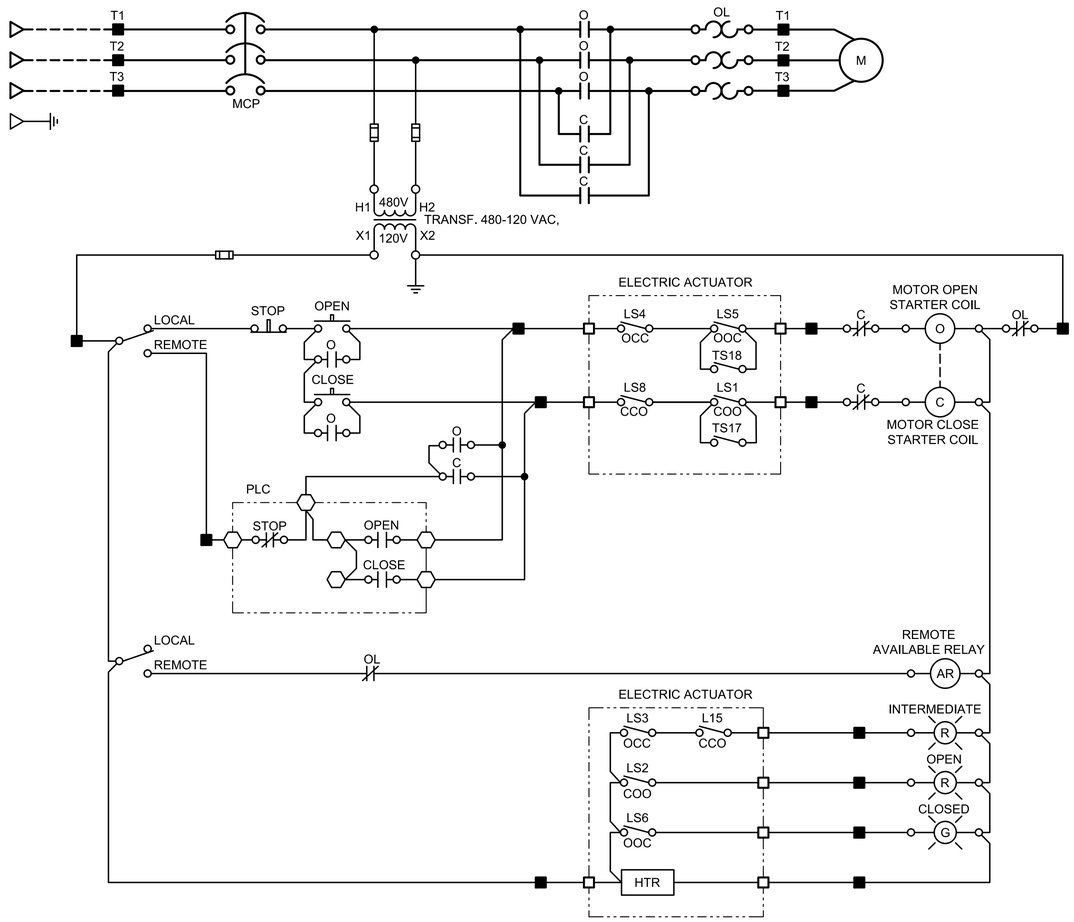

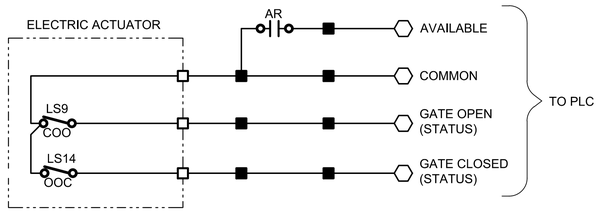

TYPICAL CONTROL SCHEMATIC - SLIDE GATE WITH STARTER IN MCC (A)

SCALE: N.T.S.

SLIDE GATE LIMIT SWITCH CONTACT DEVELOPMENT				
CONTACT	GATE FULLY OPEN	GATE INTERMEDIATE POSITION	GATE FULLY CLOSED	CONTACT FUNCTION
1	CLOSED	OPEN	OPEN	BYPASS CTRL
2	CLOSED	OPEN	OPEN	INDICATION
3	OPEN	CLOSED	CLOSED	INDICATION
4	OPEN	CLOSED	CLOSED	OPEN LIMIT
5	OPEN	OPEN	CLOSED	BYPASS CIR
6	OPEN	OPEN	CLOSED	INDICATION
7	CLOSED	CLOSED	OPEN	SPARE
8	CLOSED	CLOSED	OPEN	CLOSE LIMIT
9	CLOSED	OPEN	OPEN	INDICATION
10	CLOSED	OPEN	OPEN	SPARE
11	OPEN	CLOSED	CLOSED	SPARE
12	OPEN	CLOSED	CLOSED	SPARE
13	OPEN	OPEN	CLOSED	SPARE
14	OPEN	OPEN	CLOSED	INDICATION
15	CLOSED	CLOSED	OPEN	INDICATION
16	CLOSED	CLOSED	OPEN	SPARE
17	CLOSING THRUST SWITCH INTERRUPTS CONTROL CIRCUIT IF MECHANICAL OVERLOAD OCCURS DURING CLOSING CYCLE.			
18	OPENING THRUST SWITCH INTERRUPTS CONTROL CIRCUIT IF MECHANICAL OVERLOAD OCCURS DURING OPENING CYCLE.			

LEGEND

- ☐ TERMINAL BLOCK IN ELECTRIC ACTUATOR
- ■ TERMINAL BLOCK IN MOTOR STARTER AT MCC-01
- ⬡ TERMINAL BLOCK IN PLC

MCC	MOTOR CONTROL CENTER
PLC	PROGRAMMABLE LOGIC CONTROLLER
COO	CLOSED WHEN GATE IS FULLY OPENED
OOC	CLOSED WHEN GATE IS FULLY CLOSED
CCO	OPEN WHEN GATE IS FULLY CLOSED
OCC	OPEN WHEN GATE IS FULLY OPEN
LSX	LIMIT SWITCH IN GATE SWITCH COMPARTMENT
TSX	TORQUE SWITCH IN GATE SWITCH COMPARTMENT
X	SWITCH IDENTIFICATION NUMBER IN GATE SWITCH COMPARTMENT

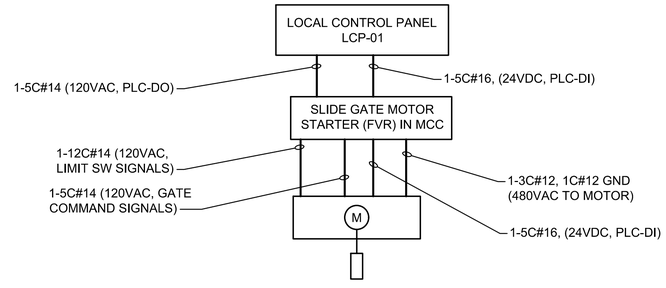

CABLE BLOCK DIAGRAM

THE CITY OF LOS ANGELES OR ITS OFFICERS OR AGENTS SHALL NOT BE RESPONSIBLE FOR THE ACCURACY OR COMPLETENESS OF ELECTRONIC COPIES OF THIS PLAN SHEET.

REVISION DATES (DESIGN STAGE ONLY)

ENGINEERING
CITY OF LOS ANGELES

REGISTERED PROFESSIONAL ENGINEER
ROBERT D. GETTER
No. E 21884
Exp. 06-30-25
ELECTRICAL
STATE OF CALIFORNIA

THIS PLAN WAS ELECTRONICALLY • SIGNED AND STAMPED •

BUREAU OF ENGINEERING

VERTICAL CONTROL:
HORIZONTAL CONTROL:

SHEET TITLE: ELECTRICAL CONTROL SCHEMATIC DIAGRAM
SLIDE GATE

PROJECT: VALLEY VILLAGE PARK STORM WATER CAPTURE PROJECT

ADDRESS: VALLEY VILLAGE PARK
5000 Westpark Dr, North Hollywood, CA 91601

NO.	REVISIONS	DATE	BY
		YY/MM/DD	
		YY/MM/DD	
		YY/MM/DD	
		YY/MM/DD	
		YY/MM/DD	

CIP NO. SCP0009

INDEX NO.

CITY OF LOS ANGELES DEPARTMENT OF PUBLIC WORKS

CITY ENGINEER: TED ALLEN, P.E. DATE

DESIGN GROUP	
ENGINEER:	PVT - MATT HUCKABY
ARCHITECT:	N/A
DESIGNED BY:	PVT - JUSTIN CHIN
DRAWN BY:	PVT - JUSTIN CHIN
CHECKED BY:	PVT - ROBERT GETTER
APPROVED BY:	PVT - MIKO AVAZIAN

ProjectLine
Technical Services, Inc
2900 BRISTOL ST. SUITE D-103, COSTA MESA, CA 92626, TEL (714) 540-5460
www.projectlines.com

PLANS PREPARED BY:
carollo
707 WILSHIRE BLVD, SUITE 3920
LOS ANGELES, CA 90017
(213) 469-1587

WORK ORDER
EW40085F

SHEET NAME
EP-06

SHEET 40 OF 80 SHEETS

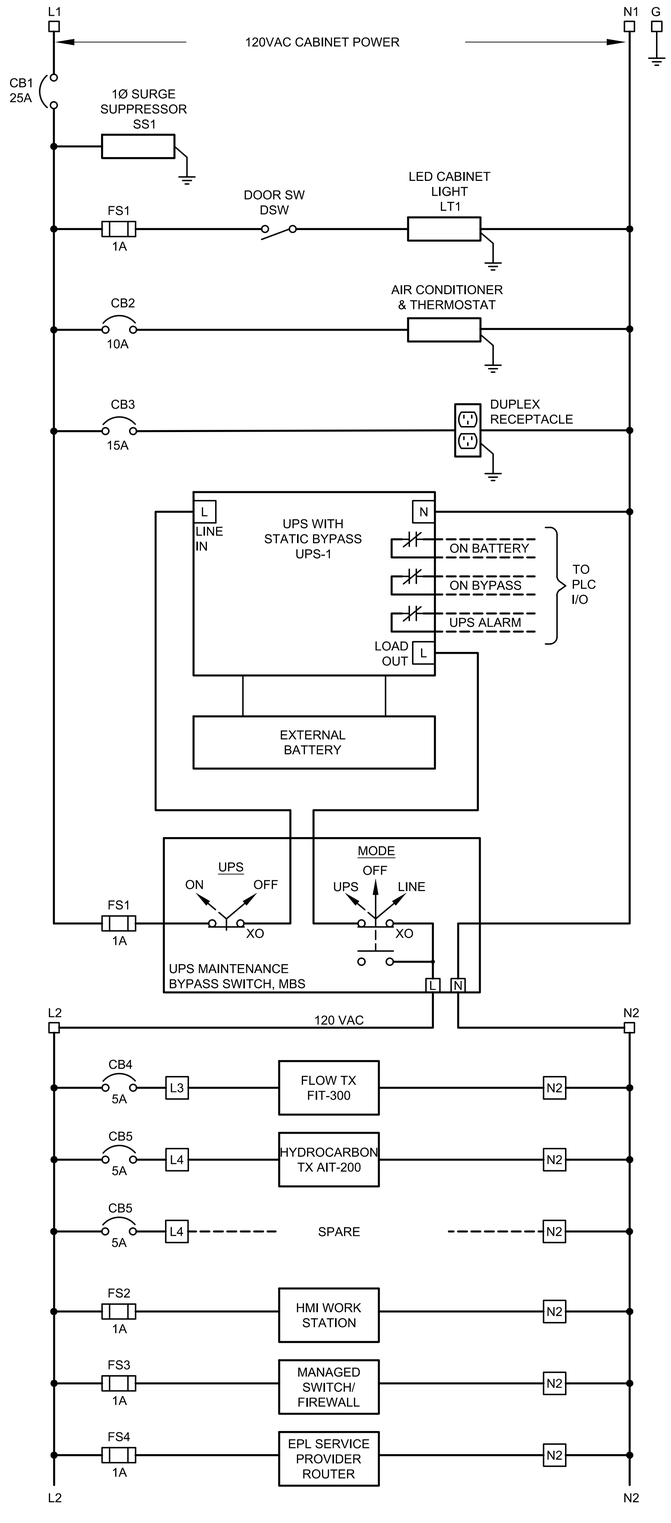

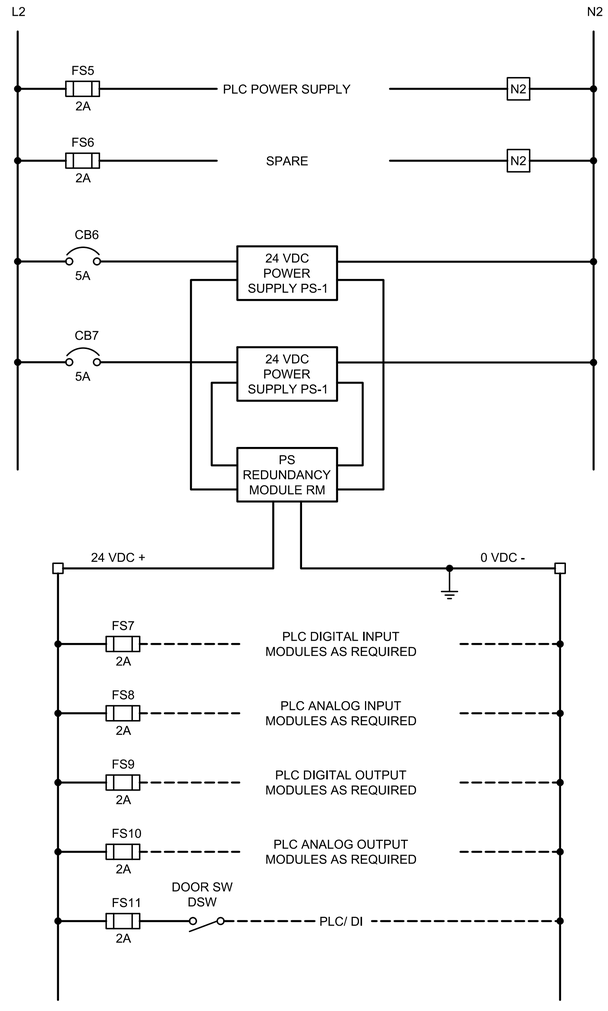

TYPICAL POWER DISTRIBUTION - LOCAL CONTROL PANEL

SCALE: N.T.S.

A

THE CITY OF LOS ANGELES OR ITS OFFICERS OR AGENTS SHALL NOT BE RESPONSIBLE FOR THE ACCURACY OR COMPLETENESS OF ELECTRONIC COPIES OF THIS PLAN SHEET.

REVISION DATES
(DESIGN STAGE ONLY)

PLANS PREPARED BY:
carollo
707 WILSHIRE BLVD, SUITE 3920
LOS ANGELES, CA 90017
(213) 489-1567

ProjectLine
Technical Services, Inc
2900 BRISTOL ST, SUITE D-103, COSTA MESA, CA
92626, TEL (714) 540-5460
www.projectlinets.com

CITY OF LOS ANGELES DEPARTMENT OF PUBLIC WORKS

BUREAU OF ENGINEERING • THIS PLAN WAS ELECTRONICALLY • SIGNED AND STAMPED

ENGINEERING
CITY OF LOS ANGELES

REGISTERED PROFESSIONAL ENGINEER
ROBERT D. GETTER
No. E 21884
Exp. 06-30-25
ELECTRICAL
STATE OF CALIFORNIA

VERTICAL CONTROL:	VERTICAL CONTROL
HORIZONTAL CONTROL:	HORIZONTAL CONTROL
SHEET TITLE:	TYPICAL POWER DISTRIBUTION SCHEMATIC DIAGRAM - LCP-01
PROJECT:	VALLEY VILLAGE PARK STORM WATER CAPTURE PROJECT
ADDRESS:	VALLEY VILLAGE PARK 5000 Westpark Dr, North Hollywood, CA 91601

NO.	REVISIONS	DATE	BY
		YY/MM/DD	
		YY/MM/DD	
		YY/MM/DD	
		YY/MM/DD	

CIP NO.
SCP0009

INDEX NO.

CITY ENGINEER		DATE
TED ALLEN, P.E.		YY/MM/DD
DESIGN GROUP		
ENGINEER:	PVT - MATT HUCKABY	YY/MM/DD
ARCHITECT:	N/A	YY/MM/DD
DESIGNED BY:	PVT - JUSTIN CHIN	YY/MM/DD
DRAWN BY:	PVT - JUSTIN CHIN	YY/MM/DD
CHECKED BY:	PVT - ROBERT GETTER	YY/MM/DD
APPROVED BY:	PVT - MIKO ARVAZIAN	YY/MM/DD

WORK ORDER
EW40085F

SHEET NAME
EP-07
SHEET 41 OF 80 SHEETS

CUST	3
ENGR (FD)	2
ESR (111)	2
DDFT	1
FILE	1
TOTAL	7

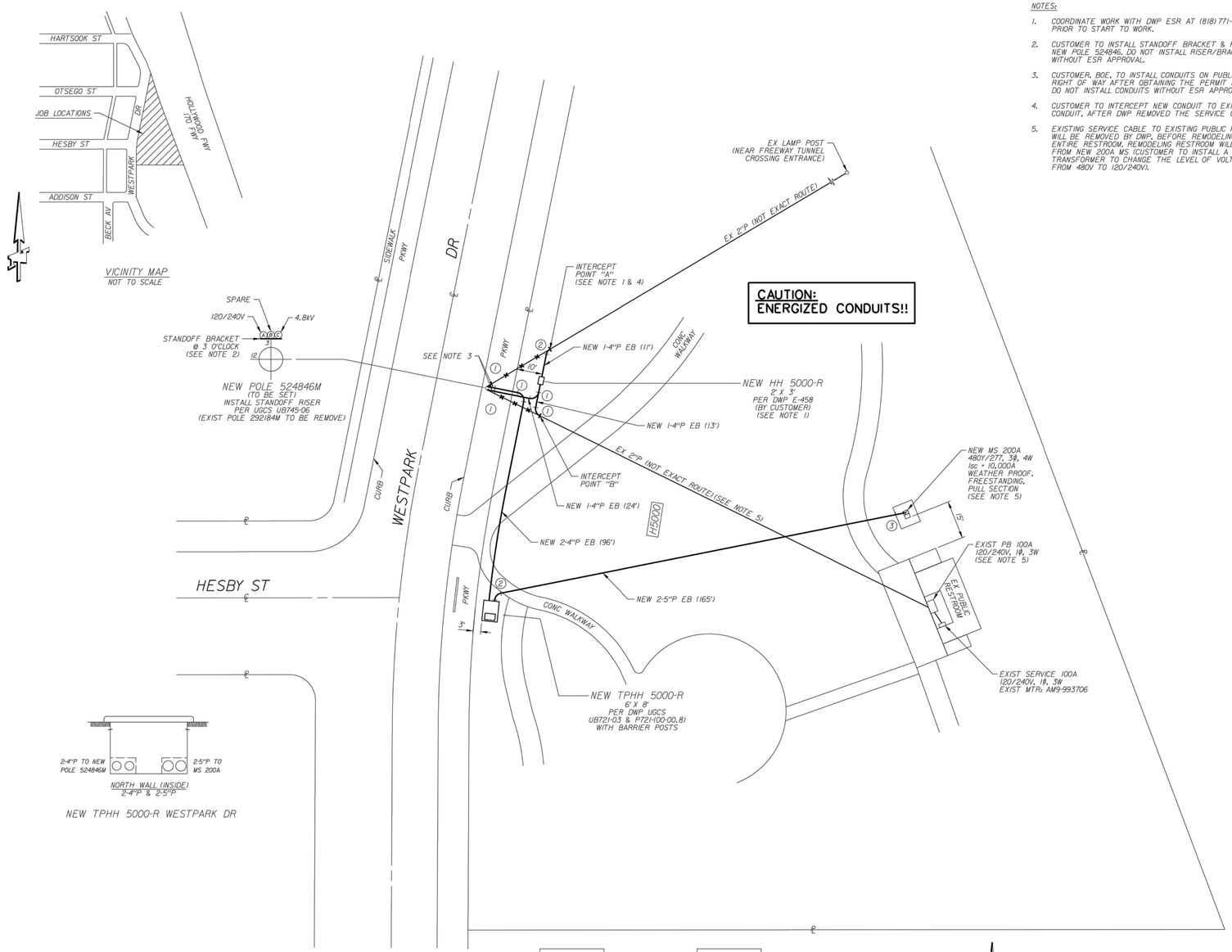

NOTES:

1. COORDINATE WORK WITH DWP ESR AT (818) 771-4052 PRIOR TO START TO WORK.
2. CUSTOMER TO INSTALL STANDOFF BRACKET & RISER ON NEW POLE 524846. DO NOT INSTALL RISER/BRACKET WITHOUT ESR APPROVAL.
3. CUSTOMER, BOE, TO INSTALL CONDUITS ON PUBLIC RIGHT OF WAY AFTER OBTAINING THE PERMIT FROM BOE. DO NOT INSTALL CONDUITS WITHOUT ESR APPROVAL.
4. CUSTOMER TO INTERCEPT NEW CONDUIT TO EXISTING CONDUIT. AFTER DWP REMOVED THE SERVICE CABLE.
5. EXISTING SERVICE CABLE TO EXISTING PUBLIC RESTROOM WILL BE REMOVED BY DWP. BEFORE REMODELING THE ENTIRE RESTROOM. REMODELING RESTROOM WILL BE FED FROM NEW 200A MS (CUSTOMER TO INSTALL A DRY TRANSFORMER TO CHANGE THE LEVEL OF VOLTAGE FROM 480V TO 120/240V).

INSPECTION

1. FULL INSPECTION AND APPROVAL BY A DEPARTMENT OF WATER AND POWER (DWP) ELECTRIC SERVICE REPRESENTATIVE IS REQUIRED PRIOR TO THE INSTALLATION OF CABLE AND EQUIPMENT.
2. NOTIFY THE DWP ELECTRIC SERVICE REPRESENTATIVE FOR AREA III TELEPHONE NUMBER (818) 771-4052 FIVE (5) NORMAL WORKING DAYS IN ADVANCE OF CONSTRUCTION.
3. THE CUSTOMER SHALL ARRANGE FOR ELECTRICAL INSPECTION BY THE LOS ANGELES DEPARTMENT OF BUILDING AND SAFETY FOR THEIR ELECTRICAL WORK. THE SERVICE WILL NOT BE ENERGIZED UNTIL NOTIFICATION OF APPROVAL HAS BEEN RECEIVED BY THE DWP.

GENERAL

1. ALL FACILITIES MUST BE PROVIDED AND INSTALLED IN ACCORDANCE WITH THE DWP'S ELECTRIC SERVICE REQUIREMENTS.
2. CONDUITS AND STRUCTURES SHALL BE INSTALLED PER DWP'S UNDERGROUND SPECIFICATION 104 AND APPENDIX I AS LAST REVISED.

SCHEDULE

1. IN ORDER TO AVOID SCHEDULING DELAYS IN THE INSTALLATION OF DWP EQUIPMENT FOR YOUR PROJECT, THE CUSTOMER MUST COMPLETE THE INSTALLATION AND DWP'S INSPECTION OF THE CONDUIT, TRANSFORMER PAD AND SWITCHBOARD A MINIMUM OF SIX (6) WEEKS PRIOR TO THE RELEASE FROM THE DEPARTMENT OF BUILDING AND SAFETY.
2. DWP WILL INSTALL ELECTRICAL METERS AND ENERGIZE THE ELECTRICAL SERVICE TYPICALLY WITHIN TEN (10) WORKING DAYS, AFTER ALL RELEASES HAVE BEEN OBTAINED FROM BOTH DWP AND THE DEPARTMENT OF BUILDING AND SAFETY.

CONDUIT

1. PRIMARY CONDUITS: 2-4" (POWER) PLASTIC ENCASED BURIED TYPE (EB-35) CONDUITS ENCASED IN 3" OF CONCRETE. MINIMUM COVER FROM TOP OF CONCRETE ENVELOPE TO FINISHED GRADE, EXCEPT AT TRANSFORMER PAD, SHALL BE 30 INCHES IN PAVED AREAS AND 36 INCHES IN LANDSCAPED AREAS. WHEN TERMINATING CONDUIT FOR SUBSEQUENT CONNECTION BY THE DWP, THE DEPTH AT THE PROPERTY LINE MUST BE A MINIMUM OF 30 INCHES IN AREAS SUPPLIED FROM UNDERGROUND DISTRIBUTION FACILITIES OR 36 INCHES IN AREAS SUPPLIED FROM OVERHEAD DISTRIBUTION FACILITIES. DEPTH MEASUREMENTS AT PROPERTY LINE ARE TO BE TAKEN FROM GUTTER GRADE.
2. SECONDARY CONDUITS: 3-4" PLASTIC ENCASED BURIED TYPE (EB-35) CONDUITS ENCASED IN 3" OF CONCRETE. CONDUITS SHALL HAVE A MINIMUM COVER OF 24 INCHES. THE 4" CONDUIT SHALL TERMINATE IN THE SPECIFIED PULL BOX ADJACENT TO THE UNDERGROUND PULL SECTION.
3. WHEN THE PRIMARY CONDUITS ARE BEING INSTALLED ON FILLED GROUND, FOUR #4 REINFORCING BARS SHALL BE INSTALLED IN THE CONCRETE ENVELOPE.
4. INSTALL RISERS ON POLE 524846M PER DWP DRAWING UB745-06 AS LAST REVISED. CONFIRM POLE AND RISER LOCATIONS WITH THE DWP ELECTRIC SERVICE REPRESENTATIVE BEFORE START OF CONSTRUCTION. DO NOT CONSTRUCT CONDUIT TO POLE PRIOR TO INSTALLATION OF NEW POLE.
5. ALL PLASTIC CONDUITS SHALL BE IN ACCORDANCE WITH RECOGNIZED STANDARDS. FOR PVC THE STANDARD IS ASTM F-512 AS LAST REVISED. CONDUIT MAY BE SUBJECTED TO TESTING BY THE DWP AT THE REQUEST OF THE DWP ELECTRIC SERVICE REPRESENTATIVE.
6. CONDUIT SHALL BE MANDRELLED WITH A MANDREL PROVIDED BY THE DWP. INSTALL A FLAT, WOVEN MULTI-FIBER POLYESTER RIBBON, MINIMUM 3/8-INCH NOMINAL WIDTH AND 250 POUND MINIMUM TENSILE STRENGTH PULLING TAPE IN ALL DUCTS. THE PULLING TAPE SHALL BE PRINTED WITH THE RATED TENSILE STRENGTH AND SEQUENTIAL FOOTAGE MARKINGS WITH LEGIBLE AND STABLE PRINT. THE TAPE SHALL BE IN ONE CONTINUOUS LENGTH THROUGH EACH DUCT WITH NO CUTS, SPLICES OR TIES ALLOWED.

STRUCTURE

1. PROVIDE AND INSTALL ONE 6' X 8' TRANSFORMER PAD WITH HANDHOLE AND PROTECTIVE BARRIERS IN ACCORDANCE WITH DWP DRAWINGS PT21(100-00.8) AND UB721-03 AS LAST REVISED.
3. THE DEPARTMENT OF BUILDING AND SAFETY REQUIRES A BUILDING PERMIT FOR STRUCTURES EXCEEDING 48 INCHES IN DEPTH, INSTALLED ON PRIVATE PROPERTY.
4. THE CUSTOMER'S STRUCTURAL ENGINEER IS RESPONSIBLE FOR THE DESIGN OF FOUNDATIONS IN THE VICINITY OF THE VAULT TO ELIMINATE SURCHARGE LOADING ON THE WALLS OF THE VAULT.
5. PROVIDE AND INSTALL ONE 2' X 3' HANDHOLE AS SHOWN ON DWP UNDERGROUND CONSTRUCTION STANDARD E-458 AS LAST REVISED.
6. THE CONDUIT, STRUCTURES AND SERVICE POINT SHALL BE LOCATED AS SHOWN UNLESS CHANGES ARE APPROVED BY THE DWP DESIGN ENGINEER AND CONFIRMED BY THE CUSTOMER.

FAULT CURRENT

THE MAXIMUM AVAILABLE SYMMETRICAL FAULT CURRENT AT THE SERVICE POINT WILL BE:

SERVICE	AMPS	VOLTAGE	PHASE	WIRE	FAULT CURRENT
MS	200A	480Y/277V	3Ø	4W	10,000A

CUSTOMER CHARGES

1. THE DWP WILL BILL THE CUSTOMER $2,406.00 FOR EXCESS SERVICE CABLE.
2. THE DWP WILL BILL THE CUSTOMER $8,850.00 FOR TRANSFORMER DEPOSIT FEE. DEPOSIT FEE ELIGIBLE FOR REFUND AFTER FIVE YEARS PER DWP RULE 16-E, ELECTRIC SYSTEM OF THE RULES GOVERNING WATER AND ELECTRIC SERVICE.
3. YOUR PAYMENT OF A STREET DAMAGE RESTORATION FEE (SDRF), PAID DIRECTLY TO THE DEPARTMENT OF PUBLIC WORKS, IS REQUIRED PRIOR TO ISSUING AN EXCAVATION PERMIT. CONTACT THE DWP ENGINEER REGARDING THIS FEE.

PROPERTY LINES

PROPERTY LINES ARE TO BE LOCATED BY THE CUSTOMER'S SURVEYOR.

CURVE DATA		
(1)	Δ = 90°	R = 3' L = 4.71'
(2)	Δ = 45°	R = 3' L = 2.36'
(3)	Δ = 90°	R = 4' L = 6.28'

No.	DATE	INIT'L	REVISION	APP'V'D

THIS COMMITMENT IS VALID FOR SIX MONTHS ONLY. ANY CHANGE IN LOAD OR DESIGN WILL REQUIRE REVISED PLANS TO BE SUBMITTED FOR RE-EVALUATION

REFERENCES

NB02 2187769, 21F0846
NB02 2480620, 23E2150
NBIAC 2187698
SJ1634 (RECORD ONLY)

CITY OF LOS ANGELES
DEPARTMENT OF
WATER AND POWER
POWER SYSTEM ENGINEERING

DESIGN: F. DORMANI
D.R.: FDormani
APPROVED: Rodolfo Monroy JR
PHONE: (818) 771-4004
DRAFTING: M. AUDUE
DATE: MAR 15, 2023

WR #: 2160166 | PROJECT #: P295917 | TC #: 562-H3

4.8kV CUSTOMER REQUIREMENTS
5000 WESTPARK DR
BUREAU OF ENG. DEPT OF PUBLIC WORKS
STORMWATER CAPTURE

21P0366 | SHEET 1 OF 1

REVISION DATES (DESIGN STAGE ONLY)

THE CITY OF LOS ANGELES OR ITS OFFICERS OR AGENTS SHALL NOT BE RESPONSIBLE FOR THE ACCURACY OR COMPLETENESS OF ELECTRONIC COPIES OF THIS PLAN SHEET.

ENGINEERING
CITY OF LOS ANGELES

REGISTERED PROFESSIONAL ENGINEER
ROBERT D. GETTER
No. E 21884
Exp. 06-30-25
ELECTRICAL
STATE OF CALIFORNIA

THIS PLAN WAS ELECTRONICALLY • SIGNED AND STAMPED •

BUREAU OF ENGINEERING

VERTICAL CONTROL:
HORIZONTAL CONTROL:

SHEET TITLE: LADWP POLE MOUNTED TRANSFORMER REQUIREMENT AT VALLEY VILLAGE PARK

PROJECT: VALLEY VILLAGE PARK STORM WATER CAPTURE PROJECT

ADDRESS: VALLEY VILLAGE PARK
5000 Westpark Dr, North Hollywood, CA 91601

NO.	REVISIONS	DATE	BY
		YY/MM/DD	
		YY/MM/DD	
		YY/MM/DD	
		YY/MM/DD	

CIP NO. SCP0009

INDEX NO.

CITY OF LOS ANGELES DEPARTMENT OF PUBLIC WORKS

CITY ENGINEER	DATE
TED ALLEN, P.E.	

DESIGN GROUP		DATE
ENGINEER:	PVT - MATT HUCKABY	YY/MM/DD
ARCHITECT:	N/A	YY/MM/DD
DESIGNED BY:	PVT - JUSTIN CHIN	YY/MM/DD
DRAWN BY:	PVT - JUSTIN CHIN	YY/MM/DD
CHECKED BY:	PVT - ROBERT GETTER	YY/MM/DD
APPROVED BY:	PVT - MIKO AIVAZIAN	YY/MM/DD

ProjectLine
Technical Services, Inc
2900 BRISTOL ST, SUITE D-103, COSTA MESA, CA 92626 TEL (714) 540-5460
www.projectlinets.com

PLANS PREPARED BY:
carollo
707 WILSHIRE BLVD, SUITE 3920
LOS ANGELES, CA 90017
(213) 489-1057

WORK ORDER
EW40085F

SHEET NAME
EP-08
SHEET 42 OF 80 SHEETS

INSTRUMENTATION CALL - OUT

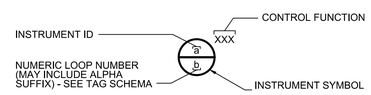

INSTRUMENT SYMBOLS

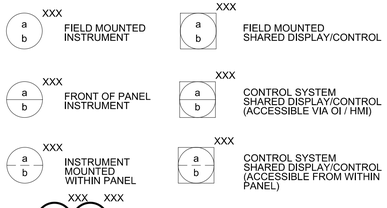

a INSTRUMENT IDENTIFICATION/TAG NUMBER
(SEE MODIFIED ISA TABLE FOR MORE INFO)

b INSTRUMENT LOOP NUMBER

XXX CONTROL FUNCTION

XXXV PRIMARY ELECTRICAL POWER
(e.g. 24VDC, 120VAC, 220VAC, 480VAC)

NOTE1: IF INSTRUMENT POWER NOT INDICATED, REFER TO INSTRUMENT SCHEDULE FOR CONFIRMATION.

* REFER TO PROJECT CONTROL PHILOSOPHY FOR DETAILS.

CONTROL FUNCTION DESIGNATIONS

AHC	AUTO / HOLD / CLOSE	OLH	OFF / LOW / HIGH
AM	AUTO / MANUAL	O/O	ON / OFF
AS	AIR SUPPLY	O/R	OVERRIDE
BEAR	BEARING	OOR	OUT OF RANGE
CLSD	CLOSED	OSC	OPEN / STOP / CLOSE
CV	CONTROL VARIABLE	PID	PROPORTIONAL / INTEGRAL / DERIVATIVE
DEV	DEVIATION	POT	POTENTIOMETER
E-STOP	EMERGENCY STOP	PV	PROCESS VARIABLE
ETM	ELAPSED TIME METER	RDY	READY
FOR	FORWARD / OFF / REVERSE	R/L	RAISE / LOWER
HML	HIGH / MID / LOW	RSL	RAISE / STOP / LOWER
HOA	HAND / OFF / AUTO	RST	RESET
HOR	HAND / OFF / REMOTE	RTD	RESISTANCE TEMPERATURE DETECTOR
LEAK	MOISTURE INSTRUSION	SD	SHUTDOWN
LOR	LOCAL / OFF / REMOTE	SEL	SELECT
L/R	LOCAL / REMOTE	SP	SET POINT
LSR	LOCAL / STOP / REMOTE	S/R	START / RESET
MOA	MANUAL / OFF / AUTO	S/S	START / STOP
MN	MAINTENANCE / NORMAL	STR	START
O/C	OPEN / CLOSE	STP	STOP
OCA	OPEN / CLOSE / AUTO	TMR	TIMER
OL	OVERLOAD	WIND	WINDING

NOTE:

1. REFER TO DRAWING GI-2 FOR ANALYTICAL INSTRUMENT DESIGNATIONS.

INSTRUMENT SYMBOLS - CONT

COMPUTING OR CONVERTING FUNCTIONS



SUMMING	DERIVATIVE	EXPONENTIAL
MULTIPLYING	AVERAGING	BIAS
DIVIDING	RATIO	HIGH LIMITING
SQ ROOT EXTRACTION	DIFFERENCE	LOW LIMITING
PROPORTIONAL	HIGH SELECTING	LINEARIZER
INTEGRAL	LOW SELECTING	



E	VOLTAGE	R	RESISTANCE (ELECT)	A	ANALOG
I	CURRENT	D	DIGITAL	B	BINARY
P	PNEUMATIC			H	HYDRAULIC

PLC / REMOTE I/O POINTS

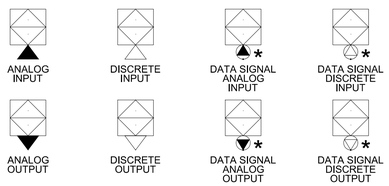

* FIELD NETWORK INTERFACE.
SEE SPECIFICATION FOR MORE INFORMATION

INSTRUMENTATION LINE SYMBOLOGY



INSTRUMENT LINE DEFINITIONS
(UNLESS SPECIFICALLY NOTED OTHERWISE PER DRAWING LEGEND)



COMMUNICATION LINE DEFINITIONS
(UNLESS SPECIFICALLY NOTED OTHERWISE PER DRAWING LEGEND)

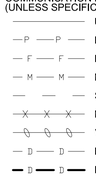

SIGNAL AND PROCESS OFF-PAGE CONNECTORS

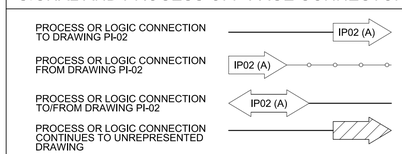

NOTE: REFER TO INSTRUMENTATION LINE SYMBOLOGY FOR PROCESS AND LOGIC LINESTYLE DEFINITION.

ISA TABLE (MODIFIED)

	FIRST LETTER		SUCCEEDING LETTER(S)		
	MEASURED OR INITIATING VARIABLE	MODIFIER	READOUT OR PASSIVE FUNCTION	OUTPUT FUNCTION	MODIFIER
A	ANALYSIS		ALARM		
B	BURNER, COMBUSTION				
C	CONDUCTIVITY			CONTROL	CLOSED
D	DENSITY	DIFFERENTIAL			
E	VOLTAGE		SENSOR (PRIMARY ELEMENT)		
F	FLOW RATE	RATIO (FRACTION)			FORWARD
G			GAUGE, GLASS, VIEWING DEVICE		
H	HAND				HIGH
I	CURRENT (ELECTRICAL)		INDICATE		
J	POWER	SCAN			
K	TIME, TIME SCHEDULE	TIME RATE OF CHANGE		CONTROL STATION	
L	LEVEL		LIGHT		LOW
M	MOISTURE	MOMENTARY			MIDDLE, INTERMEDIATE
N	TORQUE		ISOLATE	ISOLATOR	
O			ORIFICE, RESTRICTION		OPEN
P	PRESSURE, VACUUM		POINT (TEST) CONNECTION		
Q	QUANTITY	INTEGRATE, TOTALIZE			
R	RADIATION		RECORD		REVERSE
S	SPEED, FREQUENCY	SAFETY		SWITCH	
T	TEMPERATURE			TRANSMIT	
U	MULTIVARIABLE		MULTIFUNCTION	MULTIFUNCTION	MULTIFUNCTION
V	VIBRATION, MECHANICAL ANALYSIS			VALVE, DAMPER, LOUVER	
W	WEIGHT, FORCE		WELL		
X	INTRUSION	X AXIS			
Y	EVENT, STATE, OR PRESENCE	Y AXIS		COMPUTE, CONVERT	
Z	POSITION, DIMENSION	Z AXIS		DRIVER, ACTUATOR, FINAL CONTROL ELEMENT	

TAG SCHEMA

TYPICAL INSTRUMENT & CONTROL VALVE TAGGING

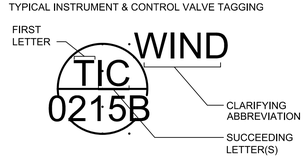

TYPICAL PIPE LINE TAG FORMAT

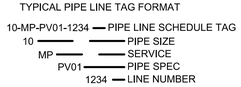

TYPICAL VALVE TAG / SPEC FORMAT

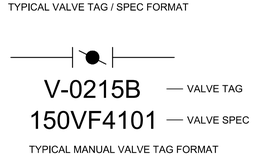

TYPICAL MANUAL VALVE TAG FORMAT

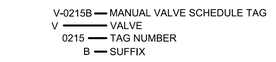

VALVE SPECIFICATION TAG FORMAT

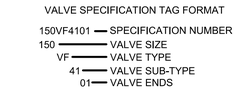

ANALYTICAL INSTRUMENTS

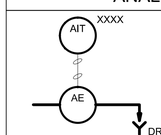

FLOW THROUGH ANALYZING ELEMENT WITH REMOTE TRANSMITTER

ALK	ALKALINITY
CL_2	CHLORINE CONCENTRATION
COMB	COMBUSTIBLE GAS
COND	CONDUCTIVITY
DO	DISSOLVED OXYGEN
TEMP	TEMPERATURE
NH_2CL	MONO-CHLORAMINE

LEL	LOWER EXPLOSIVE LIMIT
NO_3 / NO_2	NITRATE / NITRITE
NH_3 / NH_4	AMMONIA / AMMONIUM
O_2	OXYGEN CONCENTRATION
O_3	OZONE
ORP	OXIDATION - REDUCTION POTENTIAL
PC	PARTICLE COUNTER
pH	HYDROGEN ION CONCENTRATION
SCU	STREAMING CURRENT UNIT
SO_2	SULFUR DIOXIDE
TKN	TOTAL KJELDAHL NITROGEN
TN	TOTAL NITROGEN
TOC	TOTAL ORGANIC CARBON
TURB	TURBIDITY
TSS	TOTAL SUSPENDED SOLIDS
UVI	ULTRA VIOLET INTENSITY
UVT	ULTRA VIOLET TRANSMITTANCE

ABBREVIATIONS

ATM	ATMOSPHERE
APF	AWPF PROCESS FEED
ATC	AUTO TRANSFER CONTROLLER
CT	CONTACT TIME
CP	CONTROL PANEL
DCS	DISTRIBUTED CONTROL SYSTEM
DOL	DIRECT ONLINE STARTER
DR	DRAIN
FC	FAIL CLOSED
FOC	FIBER OPTIC CABLE
FOT	FIBER OPTIC TRANSCEIVER
FVNR	FULL VOLTAGE NON-REVERSING STARTER
HMI	HUMAN MACHINE INTERFACE
LC	LOCKED CLOSED
LCP	LOCAL CONTROL PANEL
LCS	LOCAL CONTROL STATION
LO	LOCKED OPEN
LSA	LIGHTNING SURGE ARRESTOR
MCC	MOTOR CONTROL CENTER
MCP	MAIN CONTROL PANEL
MFAS	MF AIR SCOUR
MFBWS	MF BACKWASH SUPPLY
MFBWW	MF BACKWASH WASTE
MFCIPR	MF CIP RETURN
MFCIPS	MF CIP SUPPLY
MFF	MF FILTRATE
MFS	MF SUPPLY
MS	MULTIMODE FIBER
MTR	MOTOR STARTER
MK##	MOTOR
N/A	MARK (MECH DETAIL REFERENCE)
NC	NOT APPLICABLE NORMALLY CLOSED
NIC	NOT IN CONTRACT
NO	NORMALLY OPEN
OI	OPERATOR INTERFACE
OIT	OPERATOR INTERFACE TERMINAL
PC	PERSONAL COMPUTER
PLC	PROGRAMMABLE LOGIC CONTROLLER
PCN	PLANT CONTROL NETWORK
PDU	POWER DISTRIBUTION UNIT
PW	PRODUCT WATER
RIO	REMOTE I/O
ROCIPF	RO CIP FEED
ROCIPP	RO CIP PERMEATE RETURN
ROCIPR	RO CIP RETURN
ROF	RO FEED
ROFL	RO FLUSH SUPPLY
ROI	RO INTERSTAGE
RVSS	REDUCED VOLTAGE SOLID-STATE STARTER
RTU	REMOTE TERMINAL UNIT
SAM	SAMPLE
SBWW	STRAINER BACKWASH WASTE
SCADA	SUPERVISORY CONTROL AND DATA ACQUISITION
SMF	SINGLE MODE FIBER
SSM	SOLID STATE METER
STP	SHIELDED TWISTED PAIR
TC	THERMOCOUPLE
UPS	UNINTERRUPTABLE POWER SUPPLY
UTP	UNSHIELDED TWISTED PAIR
UVE	UV EFFLUENT
UVF	UV FEED
VCP	VENDOR CONTROL PANEL
VFD	VARIABLE FREQUENCY DRIVE
VSD	VARIABLE SPEED DRIVE

REVISION DATES
(DESIGN STAGE ONLY)

THE CITY OF LOS ANGELES OR ITS OFFICERS OR AGENTS SHALL NOT BE RESPONSIBLE FOR THE ACCURACY OR COMPLETENESS OF ELECTRONIC COPIES OF THIS PLAN SHEET.

PLANS PREPARED BY:

carollo
707 WILSHIRE BLVD, SUITE 3920
LOS ANGELES, CA 90017
(213) 469-1587

ProjectLine
Technical Services, Inc
2900 BRISTOL ST, SUITE D-103, COSTA MESA, CA
92626, TEL (714) 540-5460
www.projectlinets.com

CITY OF LOS ANGELES DEPARTMENT OF PUBLIC WORKS BUREAU OF ENGINEERING

ENGINEERING
CITY OF LOS ANGELES

THIS PLAN WAS ELECTRONICALLY
• SIGNED AND STAMPED •

REGISTERED PROFESSIONAL ENGINEER
ROBERT D. GETTER
No. E 21884
Exp. 06-30-25
ELECTRICAL
STATE OF CALIFORNIA

VERTICAL CONTROL:	VERTICAL CONTROL
HORIZONTAL CONTROL:	HORIZONTAL CONTROL
SHEET TITLE:	INSTRUMENTATION LEGEND AND SYMBOLS
PROJECT:	VALLEY VILLAGE PARK STORM WATER CAPTURE PROJECT
ADDRESS:	VALLEY VILLAGE PARK 5000 Westpark Dr, North Hollywood, CA 91601

CITY ENGINEER		DATE
TED ALLEN, P.E.	DESIGN GROUP	
	ENGINEER: PVT - MATT HUCKABY	YY/MM/DD
	ARCHITECT: N/A	YY/MM/DD
	DESIGNED BY: PVT - JUSTIN CHIN	YY/MM/DD
	DRAWN BY: PVT - JUSTIN CHIN	YY/MM/DD
	CHECKED BY: PVT - ROBERT GETTER	YY/MM/DD
	APPROVED BY: PVT - MIKO AIVAZIAN	YY/MM/DD

NO.	REVISIONS	DATE	BY
		YY/MM/DD	
		YY/MM/DD	
		YY/MM/DD	
		YY/MM/DD	

CIP NO. SCP0009

INDEX NO.

WORK ORDER
EW40085F

SHEET NAME
IG-01
SHEET 44 OF 80 SHEETS

PROCESS ABBREVIATIONS

ANTISCALANT	AS
AIR	A
AQUEOUS AMMONIA	AA
ALUM	AL
AIR VENT	AV
AUTOMATIC SPRINKER RISER	ASR
BLEND	B
BIOLOGICALLY ACTIVATED CARBON	BAC
BAC AIR SCOUR	BACAS
BAC BACKWASH SUPPLY	BACBWS
BAC BACKWASH WASTE	BACBWW
BAC EFFLUENT	BACE
BAC FEED	BACF
BYPASS	BP
BACKWASH WATER	BW
CONDENSATE	C
CALCIUM HYDROXIDE (HYDRATED LIME)	CAH
CALCIUM OXIDE (QUICK LIME)	CAO
CARBON SOURCE	CA
CHANNEL AGITATION WATER	CAW
CALCIUM CHLORIDE	CC
MEMBRANE CLEANING CONCENTRATE RETURN	CCR
CHEMICAL DRAIN	CD
CONDENSER WATER RETURN	CDR
CONDENSER WATER SUPPLY	CDS
CHILLED WATER RETURN	CHR
CHILLED WATER SUPPLY	CHS
CHILLED WATER	CHW
CHEMICAL INHIBITOR SOL	CIS
CHLORINE GAS	CLG
CHLORINE LIQUID	CLL
CHLORINE SOLUTION	CLS
COAGULANT	COA
CAUSTIC SODA	CS
CHEMICAL CONTAINMENT	CP
CLEANING PERMEATE RETURN	CPR
CIRCULATED SLUDGE	CSL
CITRIC ACID	CTA
CHLORINATOR VENT AND DETECTION	CV
CHEMICAL VENT	CVT
CHEMICAL VENT THRU ROOF	CVTR
COAGULATED WATER	CW
COOLING WATER RETURN	CWR
COOLING WATER SUPPLY	CWS
DEFOAMING CHEMICAL	DC
DOMESTIC COLD WATER	DCW
DIESEL FUEL OIL	DFO
DISINFECTED MEMBRANE FILTRATE	DMF
DEIONIZED WATER	DI
DEMINERALIZED WATER	DMW
DECANT	DN
DRY POLYMER SOLUTION	DPOL
DRAIN	DR
DIGESTED SLUDGE	DSL
DOMESTIC HOT WATER RETURN	DWR
DOMESTIC HOT WATER SUPPLY	DWS
ENGINE EXHAUST	EE
ENGINE COOLING WATER RETURN	EWR
ENGINE COOLING WATER SUPPLY	EWS
FLUOROSILICIC ACID	FA
FILTER AIR WASH	FAW
FILTER BACKWASH	FBW
FINAL EFFLUENT	FE
FERRIC CHLORIDE	FC
FERRIC SULFATE	FES
FUEL GAS	FG
FILTER INFLUENT	FI
FORCE MAIN	FM
FIRE PROTECTION	FP
FROTH	FR
FROTH SPRAY	FS
FILTER SURFACE WASHWATER	FSW
FILTER TO WASTE	FTW
FILTERED WATER	FW
FILTER WASTE WASHWATER	FWW
GRIT	G
GRANULAR ACTIVATED CARBON	GAC
GAC BACKWAS SUPPLY	GACBWS
GAC CONTACTED WATER	GACCW
GAC BACKWASH WASTE	GACWW
GASEOUS OXYGEN	GOX
GRAY WATER	GW
HYDROCHLORIC ACID	HCA
HYDROGEN PEROXIDE	HP
HYDROFLUROSILICIC ACID	HFA
POTABLE HOT WATER	HW
HOT WATER RETURN	HWR
HOT WATER SUPPLY	HWS
INSTRUMENT AIR	IA
IRRIGATION WATER	IRW
LIQUID AMMONIA SULPHATE	LAS
LANDFILL GAS	LFG
LUBE OIL	LO
LIQUID OXYGEN	LOX
LIQUEFIED PETROLEUM	LP
LIQUEFIED PETROLEUM GAS	LPG
LIQUID POLYMER	LPOL
MEMBRANE BACKWASH WASTE	MBW
MEMBRANE CONCENTRATE	MC
MEMBRANE CLEANING RETURN	MCR
MEMBRANE CLEANING SUPPLY	MCS
MEMBRANE CLEANING WASTE	MCW
MECHANICAL DEWATERING POLYMER	MDP
MEMBRANE FILTRATION	MF
MEMBRANE FILTRATION AIR SCOUR	MFAS
MEMBRANE FILTRATION BACKWASH SUPPLY	MFBWS
MEMBRANE FILTRATION BACKWASH WASTE	MFBWW
MEMBRANE FILTRATION CLEAN-IN-PLACE RETURN	MFCIPR
MEMBRANE FILTRATION CLEAN-IN-PLACE SUPPLY	MFCIPS
MEMBRANE FILTRATION CLEANING WASTE	MFCW
MEMBRANE FILTRATION EFFLUENT	MFE
MEMBRANE FILTRATION FEED	MFF
METHANE GAS	MG
MIXED LIQUOR	ML
MIXED LIQUOR RECYCLE	MLR
MEMBRANE PERMEATE	MP
MAKE-UP WATER	MW
NITROGEN	N
NATURAL GAS	NG
OZONE CONTACTOR	OC
OVERFLOW	OF
OFFGAS	OG
OXIDATION TOWER EFFLUENT	OTE
OXYGEN (GAS)	OX
OZONE	OZ
PLANT AIR	PA
POWDERED ACTIVATED CARBON	PAC
POLYALUMINUM CHLORIDE	PCL
PHOSPHORIC ACID	PHA
PROCESS DRAIN	PD
PLANT DRAIN	PDR
PRIMARY EFFLUENT	PE
PLANT INFLUENT	PI
PLANT EFFLUENT	PLE
PLANT OVERFLOW	PO
ANIONIC POLYMER	POA
CATIONIC POLYMER	POC
FILTER AID POLYMER	POF
NONIONIC POLYMER	PON
THICKENER POLYMER	POT
PRESSURIZED RECYCLE	PRR
PRESSATE	PRS
PRODUCT WATER	PRW
POTASSIUM PERMANGANATE	PTP
POTABLE WATER	PW

PROCESS ABBREVIATIONS

RETURN ACTIVATED SLUDGE	RAS
REVERSE OSMOSIS CLEAN-IN-PLACE FEED	RCIPF
REVERSE OSMOSIS CLEAN-IN-PLACE PERMEATE	RCIPP
REVERSE OSMOSIS CLEAN-IN-PLACE RETURN	RCIPR
RECLAIMED WATER	REW
REFRIGERANT LIQUID	RFL
REFRIGERANT SUCTION	RFS
RO CONCENTRATE	ROC
REVERSE OSMOSIS FEED	ROF
REVERSE OSMOSIS FLUSH	ROFL
REVERSE OSMOSIS FLUSH WASTE	ROFW
REVERSE OSMOSIS INTERSTAGE	ROI
REVERSE OSMOSIS PERMEATE	ROP
RETURN SECONDARY SLUDGE	RSS
RAW WATER	RW
RAW WATER RETURN	RWR
RAW WATER SUPPLY	RWS
RECLAIMED WASHWATER	RWW
SULPHURIC ACID	SA
SAMPLE LINE	SAM
SCUM	S
SCREENED EFFLUENT	SE
SCREENINGS	SC
SUBNATANT	SBN
SUBNATANT OVERFLOW	SBO
SANITARY DRAIN	SD
SODIUM BISULFITE	SDB
SODIUM HYDROXIDE (CAUSTIC SODA)	SDH
STORM DRAIN	SDR
SANITARY DRAIN VENT	SDV
SECONDARY EFFLUENT	SE
SLUDGE FILTRATE	SF
SULFURIC ACID	SFA
SOFT WATER	SFW
SLUDGE GAS	SG
SODIUM HYPOCHLORITE	SHC
SCALE INHIBITOR	SI
SLUDGE	SLG
SUPERNATANT	SN
SAND SLURRY	SND
SULFUR DIOXIDE (GAS OR LIQUID)	SO
SULFUR DIOXIDE SOLUTION	SOS
SULFUR DIOXIDE GAS UNDER VACUUM	SOV
SPARE	SP
SUMP PUMP DISCHARGE	SPD
SANITARY SEWER	SS
SODIUM SILICOFLUORIDE	SSF
STEAM	STM
SUBDRAIN	SUBD
STRUCTURE UNDERDRAIN	SU
STRUCTURE UNDERDRAIN COLLECTOR	SUC
SERVICE WATER	SW
TRICKLING FILTER EFFLUENT	TFE
TRICKLING FILTER INFLUENT	TFI
TRICKLING FILTER RECYCLE	TFR
THICKENED SLUDGE	TS
THICKENED SUPERNATANT	TSN
TREATED WATER	TW
UNDERDRAIN	UD
ULTRAVIOLET EFFLUENT	UVE
ULTRAVIOLET FEED	UVF
UTILITY WATER	UW
USED WASHWATER	UWW
VENT	VT
VACUUM	VC
WASTE ACTIVATED SLUDGE	WAS
WASTE LUBE OIL	WLO
WASTE SECONDARY SLUDGE	WSS

EQUIPMENT ABBREVIATIONS

AIR COMPRESSOR	ACP
AIR COMPRESSOR PACKAGE	ACPP
AIR DAMPER	AD
AIR DRYER	ADR
AIR FILTER	AF
AFTER COOLER	AFC
AIR HANDLING UNIT	AHU
AIR RELEASE VALVE	ARV
BACK FLOW PREVENTER	BFP
BACK PRESSURE VALVE	BPV
BLOWER	B
BULK STORAGE TANK	BTK
CARTRIDGE FILTER	CF
CLEAN IN PLACE	CIP
CONVEYOR	CN
DAY TANK	DTK
DEGASIFIER	DG
ELECTRIC FAN / EXHAUST	EF
EYE WASH	EW
FLOW CONTROL VALVE	FCV
FILTER (GENERAL)	FTR
SLIDE GATE / SLUICE GATE	G
HEATER	H
LINE FILTER (STRAINER)	LF
LEVEL CONTROL VALVE	LCV
MECHANICAL EQUIPMENT (GENERAL)	ME
MIXER	MX
MOTOR OPERATOR VALVE	MOV
PRESSURE CONTROL VALVE	PCV
PNEUMATIC OPERATOR VALVE	POV
PRESSURE REDUCING OR REGULATING VALVE	PRV
PRESSURE SAFETY VALVE	PSV
PUMP	P
RUPTURE DISK	RD
SLIDE GATE	SG
SOLENOID OPERATOR VALVE	SOV
TEMPERATURE CONTROL VALVE	TCV
TANK	TK
VALVE (MANUAL)	V
POSITION CONTROL VALVE	ZCV

VALVE ABBREVIATIONS

GATE VALVE	VG
BALL VALVE	VB
BUTTERFLY VALVE	VF
CHECK VALVE	VC
DIAPHRAGM VALVE	VD
GLOBE VALVE	VO
NEEDLE VALVE	VN
PLUG VALVE	VP
SPECIALITY VALVES	VX

VALVES

- 3 WAY MULTI-PORT VALVE
- 4 WAY MULTI-PORT VALVE
- AIR VACUUM, AIR RELEASE, OR COMBINATION AIR VACUUM AND AIR RELEASE ASSEMBLY
- ANGLE VALVE
- BACK-PRESSURE VALVE
- BACKFLOW PREVENTER VALVE
- BALL VALVE
- BUTTERFLY VALVE
- CHECK VALVE
- CONE VALVE
- DIAPHRAGM VALVE
- FLAP VALVE
- GATE VALVE
- GLOBE VALVE
- HOSE BIBB VALVE
- NEEDLE VALVE
- PINCH VALVE
- PLUG VALVE
- PRESSURE REGULATING VALVE
- PRESSURE RELIEF VALVE
- SLEEVE VALVE
- TELESCOPING VALVE
- FLOAT VALVE

VALVE AND GATE ACTUATORS

- DIAPHRAGM ACTUATOR
- E/H = ELECTROHYDRAULIC, P = PNEUMATIC, S = SOLENOID
- MOTOR ACTUATOR
- PISTON ACTUATOR
- WEIGHT BALANCED ACTUATOR

GATES

- SLIDE GATE
- STOP GATE OR SHEAR GATE

WASTEWATER EQUIPMENT

- BELT FILTER PRESS
- SHAFTLESS CONVEYOR
- SCREW CONVEYOR
- CENTRIFUGE
- GRAVITY BELT THICKENER
- BELT CONVEYOR
- SLUDGE GRINDER
- SLIDE GATE (NORMALLY OPEN)
- SLIDE GATE (NORMALLY CLOSED)

PUMPS & COMPRESSORS

- SLUDGE DIAPHRAGM PUMP
- HORIZONTAL CENTRIFUGAL PUMP
- GENERIC PUMP
- CHEMICAL METERING PUMP
- DRUM PUMP
- ROTARY GEAR PUMP
- SPLIT-CASE PUMP
- HOSE / PERISTALTIC PUMP
- PLUNGER / PISTON PUMP
- PROGRESSIVE CAVITY PUMP
- ROTARY LOBE PUMP
- SUBMERSIBLE SUMP PUMP
- SUBMERSIBLE TURBINE PUMP
- VERTICAL TURBINE PUMP
- VERTICAL CENTRIFUGAL PUMP
- INCLINED ARCHIMEDES SCREW PUMP
- VERTICAL SUMP PUMP
- RECIPROCATING COMPRESSOR
- ROTARY SCREW COMPRESSOR

- LSH — LEVEL DETECTION SWITCH FLOAT ACTUATED TYPE
- FE / M — MAGNETIC FLOW METER
- FE — ULTRASONIC (DOPPLER) TYPE FLOW METER
- LE / LIT — LEVEL TRANSMITTER SONIC TYPE
- LIT / LE — LEVEL SUBMERSIBLE PRESSURE TYPE

PIPING ACCESSORIES

- ANNULAR SEAL
- ATMOSPHERIC VENT
- BLIND FLANGE
- CAP - BREATHER
- CAP - SCREW / THREADED
- CAP - WELDED
- CAP - QUICK DISCONNECT
- CHLORINE INJECTOR OR CHEMICAL EDUCTOR
- DIAPHRAGM SEAL
- DRAIN
- EXPANSION CHAMBER WITH RUPTURE DISK
- EDUCTOR
- FLANGED
- OR — FLEXIBLE CONNECTION - BELLOWS TYPE
- FLAME ARRESTOR
- FCO / FCO — FLOOR CLEANOUT
- F — FILTER
- HUB DRAIN
- INLINE MIXER
- PIPE MATERIAL CHANGE
- PULSATION DAMPENER
- REDUCER - CONCENTRIC
- REDUCER - ECCENTRIC
- REMOVABLE SPOOL PIECE
- UNION
- RUPTURE DISK
- STRAINER - BASKET TYPE
- STRAINER - DUPLEX BASKET TYPE
- STRAINER - WYE TYPE
- SLOPE
- T — TRAP
- OR / WCO / WCO — WALL CLEANOUT
- TP — TIE-IN POINT

BLOWERS

- AERATOR
- BLOWER
- POSITIVE DISPLACEMENT BLOWER
- SINGLE STAGE CENTRIFUGAL BLOWER

MISCELLANEOUS

- BRIDGE CRANE
- CALIBRATION COLUMN
- CONTAINER SCALE
- CARTRIDGE FILTER
- DEMISTOR
- FIRE HYDRANT
- GAS BOTTLE
- HEAT EXCHANGER - PLATE TYPE
- HEAT EXCHANGER - STRAIGHT TYPE
- HEAT EXCHANGER - U TUBE
- HEATER
- HORN
- PANEL-MOUNTED HORN
- BEACON
- MISCELLANEOUS EQUIPMENT
- MIXER
- M — MOTOR SYMBOL
- HORIZONTAL PRESSURE VESSEL
- VERTICAL PRESSURE VESSEL
- RADIO ANTENNA
- REFRIGERATOR DRYER
- SAMPLE COOLER
- AUTO-BACKWASHING STRAINER
- TANK WITH CONE SHAPED ROOF
- TANK WITH DOME ROOF
- TANK WITH FLOATING COVER
- TANK, VESSEL, OR BIN
- TEMPERING TANK
- TOTE TANK
- WATER LEVEL
- AIR COMPRESSOR
- DISCHARGE SILENCER

THE CITY OF LOS ANGELES OR ITS OFFICERS OR AGENTS SHALL NOT BE RESPONSIBLE FOR THE ACCURACY OR COMPLETENESS OF ELECTRONIC COPIES OF THIS PLAN SHEET.

REVISION DATES (DESIGN STAGE ONLY)

ENGINEERING — CITY OF LOS ANGELES

REGISTERED PROFESSIONAL ENGINEER — ROBERT D. GETTER — No. E 21884 — Exp. 06-30-25 — ELECTRICAL — STATE OF CALIFORNIA

THIS PLAN WAS ELECTRONICALLY SIGNED AND STAMPED

BUREAU OF ENGINEERING

VERTICAL CONTROL: VERTICAL CONTROL
HORIZONTAL CONTROL: HORIZONTAL CONTROL

SHEET TITLE: INSTRUMENTATION SYMBOLS

PROJECT: VALLEY VILLAGE PARK STORM WATER CAPTURE PROJECT

ADDRESS: VALLEY VILLAGE PARK, 5000 Westpark Dr, North Hollywood, CA 91601

DEPARTMENT OF PUBLIC WORKS

CITY OF LOS ANGELES

NO.	REVISIONS	DATE	BY
		YY/MM/DD	
		YY/MM/DD	
		YY/MM/DD	
		YY/MM/DD	

CIP NO. SCP0009

INDEX NO.

CITY ENGINEER: TED ALLEN, P.E. — DATE: YY/MM/DD

DESIGN GROUP	
ENGINEER:	PVT - MATT HUCKABY
ARCHITECT:	N/A
DESIGNED BY:	PVT - JUSTIN CHIN
DRAWN BY:	PVT - JUSTIN CHIN
CHECKED BY:	PVT - ROBERT GETTER
APPROVED BY:	PVT - MIKO AIVAZIAN

PLANS PREPARED BY:

carollo®
707 WILSHIRE BLVD, SUITE 3920
LOS ANGELES, CA 90017
(213) 469-1587

ProjectLine
Technical Services, Inc
2900 BRISTOL ST, SUITE D-103, COSTA MESA, CA
92626, TEL (714) 540-5460
www.projectlinets.com

WORK ORDER EW40085F

SHEET NAME IG-02

SHEET 45 OF 80 SHEETS

THE CITY OF LOS ANGELES OR ITS OFFICERS OR AGENTS SHALL NOT BE RESPONSIBLE FOR THE ACCURACY OR COMPLETENESS OF ELECTRONIC COPIES OF THIS PLAN SHEET.

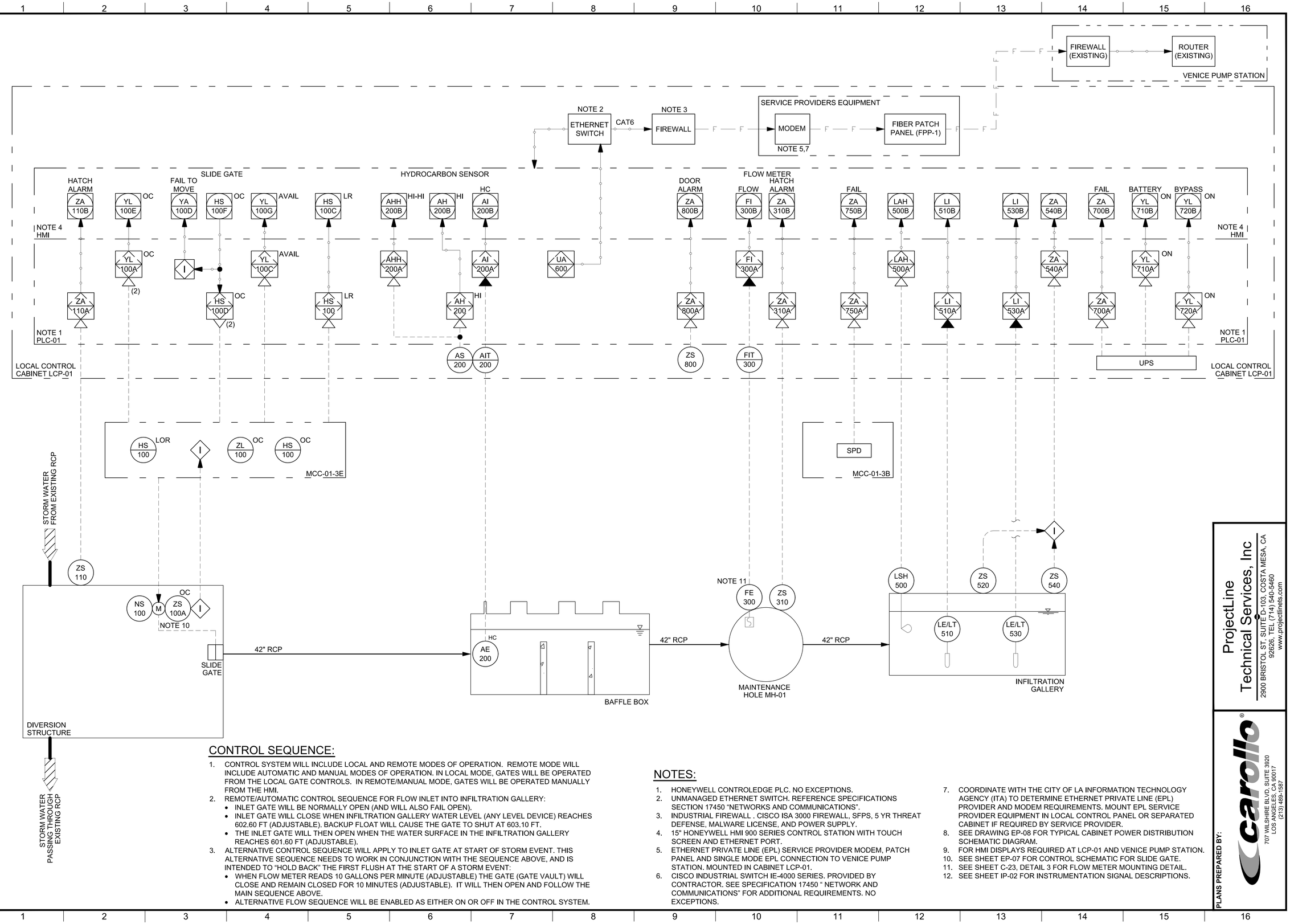

CONTROL SEQUENCE:

1. CONTROL SYSTEM WILL INCLUDE LOCAL AND REMOTE MODES OF OPERATION. REMOTE MODE WILL INCLUDE AUTOMATIC AND MANUAL MODES OF OPERATION. IN LOCAL MODE, GATES WILL BE OPERATED FROM THE LOCAL GATE CONTROLS. IN REMOTE/MANUAL MODE, GATES WILL BE OPERATED MANUALLY FROM THE HMI.
2. REMOTE/AUTOMATIC CONTROL SEQUENCE FOR FLOW INLET INTO INFILTRATION GALLERY:
   - INLET GATE WILL BE NORMALLY OPEN (AND WILL ALSO FAIL OPEN).
   - INLET GATE WILL CLOSE WHEN INFILTRATION GALLERY WATER LEVEL (ANY LEVEL DEVICE) REACHES 602.60 FT (ADJUSTABLE). BACKUP FLOAT WILL CAUSE THE GATE TO SHUT AT 603.10 FT.
   - THE INLET GATE WILL THEN OPEN WHEN THE WATER SURFACE IN THE INFILTRATION GALLERY REACHES 601.60 FT (ADJUSTABLE).
3. ALTERNATIVE CONTROL SEQUENCE WILL APPLY TO INLET GATE AT START OF STORM EVENT. THIS ALTERNATIVE SEQUENCE NEEDS TO WORK IN CONJUNCTION WITH THE SEQUENCE ABOVE, AND IS INTENDED TO "HOLD BACK" THE FIRST FLUSH AT THE START OF A STORM EVENT:
   - WHEN FLOW METER READS 10 GALLONS PER MINUTE (ADJUSTABLE) THE GATE (GATE VAULT) WILL CLOSE AND REMAIN CLOSED FOR 10 MINUTES (ADJUSTABLE). IT WILL THEN OPEN AND FOLLOW THE MAIN SEQUENCE ABOVE.
   - ALTERNATIVE FLOW SEQUENCE WILL BE ENABLED AS EITHER ON OR OFF IN THE CONTROL SYSTEM.

NOTES:

1. HONEYWELL CONTROLEDGE PLC. NO EXCEPTIONS.
2. UNMANAGED ETHERNET SWITCH. REFERENCE SPECIFICATIONS SECTION 17450 "NETWORKS AND COMMUNICATIONS".
3. INDUSTRIAL FIREWALL . CISCO ISA 3000 FIREWALL, SFPS, 5 YR THREAT DEFENSE, MALWARE LICENSE, AND POWER SUPPLY.
4. 15" HONEYWELL HMI 900 SERIES CONTROL STATION WITH TOUCH SCREEN AND ETHERNET PORT.
5. ETHERNET PRIVATE LINE (EPL) SERVICE PROVIDER MODEM, PATCH PANEL AND SINGLE MODE EPL CONNECTION TO VENICE PUMP STATION. MOUNTED IN CABINET LCP-01.
6. CISCO INDUSTRIAL SWITCH IE-4000 SERIES. PROVIDED BY CONTRACTOR. SEE SPECIFICATION 17450 " NETWORK AND COMMUNICATIONS" FOR ADDITIONAL REQUIREMENTS. NO EXCEPTIONS.
7. COORDINATE WITH THE CITY OF LA INFORMATION TECHNOLOGY AGENCY (ITA) TO DETERMINE ETHERNET PRIVATE LINE (EPL) PROVIDER AND MODEM REQUIREMENTS. MOUNT EPL SERVICE PROVIDER EQUIPMENT IN LOCAL CONTROL PANEL OR SEPARATED CABINET IF REQUIRED BY SERVICE PROVIDER.
8. SEE DRAWING EP-08 FOR TYPICAL CABINET POWER DISTRIBUTION SCHEMATIC DIAGRAM.
9. FOR HMI DISPLAYS REQUIRED AT LCP-01 AND VENICE PUMP STATION.
10. SEE SHEET EP-07 FOR CONTROL SCHEMATIC FOR SLIDE GATE.
11. SEE SHEET C-23, DETAIL 3 FOR FLOW METER MOUNTING DETAIL.
12. SEE SHEET IP-02 FOR INSTRUMENTATION SIGNAL DESCRIPTIONS.

REVISION DATES (DESIGN STAGE ONLY)

PLANS PREPARED BY:
carollo
707 WILSHIRE BLVD, SUITE 3920
LOS ANGELES, CA 90017
(213) 489-1587

ProjectLine
Technical Services, Inc
2900 BRISTOL ST, SUITE D-103, COSTA MESA, CA 92626, TEL (714) 540-5460
www.projectlinets.com

CITY OF LOS ANGELES DEPARTMENT OF PUBLIC WORKS
BUREAU OF ENGINEERING

ENGINEERING
CITY OF LOS ANGELES

REGISTERED PROFESSIONAL ENGINEER
ROBERT D. GETTER
No. E 21884
Exp. 06-30-25
ELECTRICAL
STATE OF CALIFORNIA

THIS PLAN WAS ELECTRONICALLY • SIGNED AND STAMPED

VERTICAL CONTROL: VERTICAL CONTROL
HORIZONTAL CONTROL: HORIZONTAL CONTROL

SHEET TITLE: INFILTRATION GALLERY - P&ID

PROJECT: VALLEY VILLAGE PARK STORM WATER CAPTURE PROJECT

ADDRESS: VALLEY VILLAGE PARK
5000 Westpark Dr, North Hollywood, CA 91601

NO.	REVISIONS	DATE	BY
		YY/MM/DD	
		YY/MM/DD	
		YY/MM/DD	
		YY/MM/DD	

CITY ENGINEER: TED ALLEN, P.E.

DESIGN GROUP	DATE
ENGINEER: PVT - MATT HUCKABY	YY/MM/DD
ARCHITECT: N/A	YY/MM/DD
DESIGNED BY: PVT - JUSTIN CHIN	YY/MM/DD
DRAWN BY: PVT - JUSTIN CHIN	YY/MM/DD
CHECKED BY: PVT - ROBERT GETTER	YY/MM/DD
APPROVED BY: PVT - MIKO AVAZIAN	YY/MM/DD

CIP NO. SCP0009

INDEX NO.

WORK ORDER EW40085F

SHEET NAME IP-01

SHEET 46 OF 80 SHEETS

LEVEL SWITCH - FLOAT

INSTRUMENT TAG	DESCRIPTION/ LOCATION	DWG NO.	SERVICE	TYPE	HEIGHT	CONTACT OPEN ON	REMARKS
LSH-500A	FLOAT SWITCH/ INFILTRATION GALLERY	IP-01	STORM WATER	FLOAT	EL. 603.10 FT	INCREASING LEVEL	

LEVEL TRANSMITTER SCHEDULE

INSTRUMENT TAG	DESCRIPTION/ LOCATION	DWG NO.	SERVICE	TYPE	INSTRUMENT RANGE	CALIBRATED RANGE	REMARKS
LE/LT-510	LEVEL ELEMENT/ LEVEL TRANSMITTER INFILTRATION GALLERY	IP-01	STORM WATER	SUBMERSIBLE PRESSURE	0' TO 15'	0' TO 10'	MANUFACTURER CABLE
LE/LT-530	LEVEL ELEMENT/ LEVEL TRANSMITTER INFILTRATION GALLERY	IP-01	STORM WATER	SUBMERSIBLE PRESSURE	0' TO 15'	0' TO 10'	MANUFACTURER CABLE

PROXIMITY SWITCH

INSTRUMENT TAG	DESCRIPTION/ LOCATION	DWG NO.	SERVICE	TYPE	SENSOR RANGE	REMARK
ZS-110	PROXIMITY SWITCH/ DIVERSION STRUCTURE	IP-01	HATCH OPEN/ CLOSED	PROXIMITY SENSOR	0 TO 1"	2 WIRE, 24 VDC
ZS-310	PROXIMITY SWITCH/ MAINTENANCE HOLE MH-01	IP-01	HATCH OPEN/ CLOSED	PROXIMITY SENSOR	0 TO 1"	2 WIRE, 24 VDC
ZS-520, ZS-540	PROXIMITY SWITCH/ INFILTRATION GALLERY	IP-01	HATCH OPEN/ CLOSED	PROXIMITY SENSOR	0 TO 1"	2 WIRE, 24 VDC
ZS-800	PROXIMITY SWITCH/ INTRUSION ALARM AT LCP-01	IP-01	LCP-01 DOOR OPEN/ CLOSED	PROXIMITY SENSOR	0 TO 1"	2 WIRE, 24 VDC

PLC INPUT/ OUTPUT LIST

INSTRUMENT TAG	P&ID DRAWING NO.	SERVICE DESCRIPTION	IO TYPE	LOCATION
DISCRETE INPUTS				
ZA-110A	IP-01	DIVERSION STRUCTURE - INTRUSION ALARM	DI	DIVERSION STRUCTURE
YL-100A	IP-01	SLIDE GATE OPEN STATUS LIGHT	DI	DIVERSION STRUCTURE
YL-100B	IP-01	SLIDE GATE CLOSED STATUS LIGHT	DI	DIVERSION STRUCTURE
YL-100C	IP-01	SLIDE GATE AVAILABLE MODE	DI	DIVERSION STRUCTURE
AHH-200A	IP-01	HYDROCARBON - HI HI ALARM	DI	BAFFLE BOX
AH-200A	IP-01	HYDROCARBON - HI ALARM	DI	BAFFLE BOX
ZA-310A	IP-01	MAINTENANCE HOLE INTRUSION ALARM	DI	MAINTENANCE HOLE
LAH-500A	IP-01	FLOAT SWITCH ALARM	DI	INFILTRATION GALLERY
ZA-540A	IP-01	GALLERY INTRUSION ALARM	DI	INFILTRATION GALLERY
ZA-700A	IP-01	UPS FAIL ALARM	DI	LOCAL CONTROL PANEL
YL-710A	IP-01	UPS BATTERY ON	DI	LOCAL CONTROL PANEL
YL-720A	IP-01	UPS BYPASS ON	DI	LOCAL CONTROL PANEL
ZA-750A	IP-01	SWITCHBOARD SB-1 - SPD FAIL ALARM	DI	SWITCHBOARD SB-1
ZA-800A	IP-01	LCP-01 INTRUSION ALARM	DI	LCP-01
DISCRETE OUTPUTS				
HS-100D	IP-01	SLIDE GATE OPEN COMMAND	DO	DIVERSION STRUCTURE
HS-100E	IP-01	SLIDE GATE CLOSED COMMAND	DO	DIVERSION STRUCTURE
ANALOG INPUTS				
AI-200A	IP-01	HYDROCARBON - CONCENTRATION LEVEL	AI	BAFFLE BOX
FI-300A	IP-01	FLOW INDICATOR	AI	MAINTENANCE HOLE
LI-510A	IP-01	LEVEL INDICATOR	AI	INFILTRATION GALLERY
LI-530A	IP-01	LEVEL INDICATOR	AI	INFILTRATION GALLERY

HYDROCARBON SCHEDULE

INSTRUMENT TAG	DESCRIP-TION/ LOCATION	DWG NO.	SERVICE	TYPE	INSTRUMENT RANGE	CALIBRATED RANGE	REMARKS
AE-200	HYDROCARBON ELEMENT/ BAFFLE BOX	IP-01	STORM WATER	GENERAL PURPOSE	0-100%	0-100%	MANUFACTURER'S SPECIFIED CABLE
AIT-200	HYDROCARBON TRANSMITTER/ LOCAL CONTROL PANEL (LCP-01)	IP-01	STORM WATER	GENERAL PURPOSE	0-100%	0-100%	MANUFACTURER CABLE

FLOW METER

INSTRUMENT TAG	DESCRIPTION/ LOCATION	DWG NO.	SERVICE	TYPE	SENSOR HEIGHT	INSTRUMENT RANGE (GPM)	CALIBRATED SCALE (GPM)
FE-300	FLOW ELEMENT/ INFILTRATION GALLERY	IP-01	STORM WATER	DOPPLER RADAR VELOCITY AND ULTRASONIC	6" ABOVE TOP OF THE PIPE	-	-
FIT-300	FLOW TRANSMITTER/ PLC CABINET	IP-01	STORM WATER	DOPPLER RADAR VELOCITY AND ULTRASONIC	-	0-25000 GPM	0-25000 GPM

THE CITY OF LOS ANGELES OR ITS OFFICERS OR AGENTS SHALL NOT BE RESPONSIBLE FOR THE ACCURACY OR COMPLETENESS OF ELECTRONIC COPIES OF THIS PLAN SHEET.

REVISION DATES (DESIGN STAGE ONLY)

ProjectLine Technical Services, Inc
2900 BRISTOL ST, SUITE D-103, COSTA MESA, CA 92626, TEL (714) 540-5460
www.projectlinets.com

PLANS PREPARED BY:
carollo
707 WILSHIRE BLVD, SUITE 3920
LOS ANGELES, CA 90017
(213) 489-1587

CITY OF LOS ANGELES DEPARTMENT OF PUBLIC WORKS
BUREAU OF ENGINEERING

THIS PLAN WAS ELECTRONICALLY • SIGNED AND STAMPED

ENGINEERING
CITY OF LOS ANGELES

REGISTERED PROFESSIONAL ENGINEER
ROBERT D. GETTER
No. E 21884
Exp. 06-30-25
ELECTRICAL
STATE OF CALIFORNIA

VERTICAL CONTROL:
HORIZONTAL CONTROL:

SHEET TITLE: INSTRUMENT SCHEDULE AND I/O LISTS

PROJECT: VALLEY VILLAGE PARK STORM WATER CAPTURE PROJECT

ADDRESS: VALLEY VILLAGE PARK
5000 Westpark Dr, North Hollywood, CA 91601

NO.	REVISIONS	DATE	BY
		YY/MM/DD	
		YY/MM/DD	
		YY/MM/DD	
		YY/MM/DD	

CIP NO.
SCP0009

INDEX NO.

CITY ENGINEER
TED ALLEN, P.E.
DATE

DESIGN GROUP		DATE
ENGINEER:	PVT - MATT HUCKABY	YY/MM/DD
ARCHITECT:	N/A	YY/MM/DD
DESIGNED BY:	PVT - JUSTIN CHIN	YY/MM/DD
DRAWN BY:	PVT - JUSTIN CHIN	YY/MM/DD
CHECKED BY:	PVT - ROBERT GETTER	YY/MM/DD
APPROVED BY:	PVT - MIKO ARVAZIAN	YY/MM/DD

WORK ORDER
EW40085F

SHEET NAME
IP-02
SHEET 47 OF 80 SHEETS

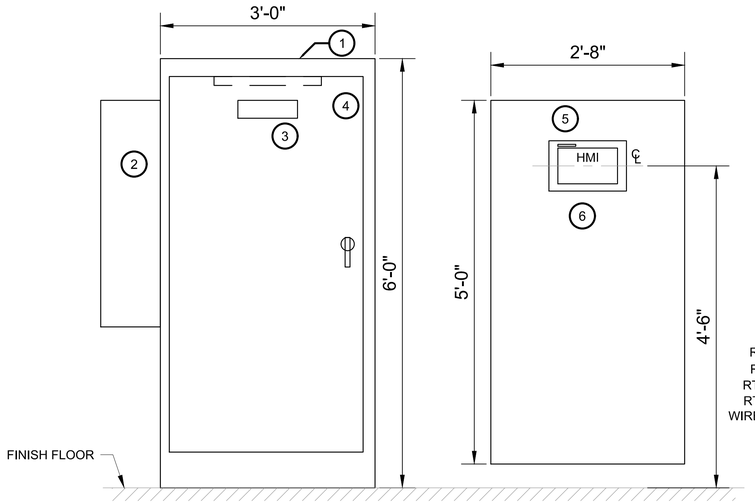

LOCAL CONTROL PANEL LCP-01 - ELEVATION

INNER DEADFRONT DOOR

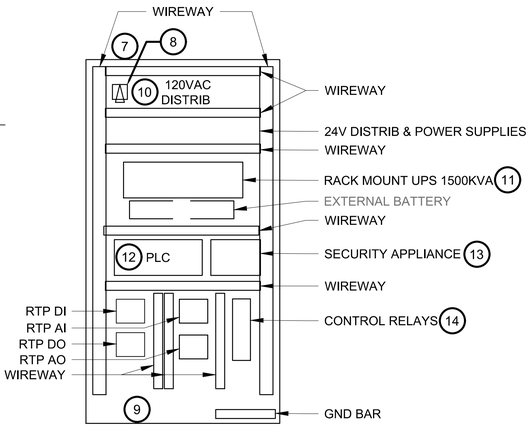

REAR PANEL

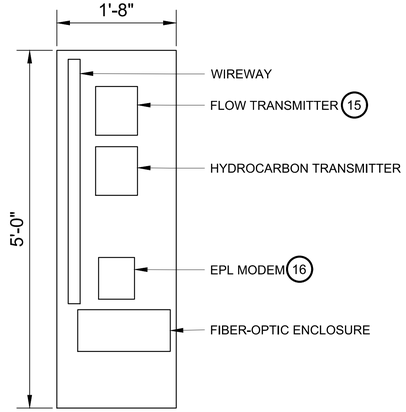

RIGHT SIDE PANEL

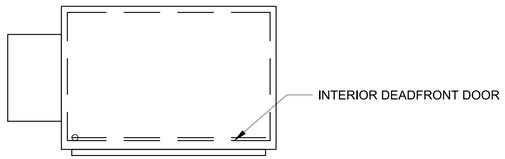

LOCAL CONTROL PANEL LCP-01 - PLAN

KEY NOTES:

ITEM	DESCRIPTION	REMARKS
1	NEMA 4X, 316 SS CABINET	72"(H) X 36"(W) X 24"(D). 3 POINT LATCHING
2	AIR CONDITIONER, OUTDOOR NEMA 4X	SIZE FOR MAXIMUM AMBIENT OF 110 DEG F
3	NAMEPLATE: LINE 1: " ELECTRICAL CONTROL". LINE 2: "WATER TREATMENT". LINE 3: "LCP-01".	ENGRAVED TEXT 3/8" HIGH, BLACK LETTERING ON WHITE
4	CABINET INTERNAL LED LIGHT AND CABINET INTRUSION SWITCH	WITH DOOR SWITCH
5	INNER DEADFRONT DOOR	STEEL. POWDER COATED WHITE
6	OPERATOR INTERFACE TERMINAL	HONEYWELL, 900 SERIES, 15" TOUCHSCREEN AND KEYPAD. ETHERNET PORT. 65 K COLOR DISPLAY
7	CABINET BACK PANEL	STEEL. POWDER COATED WHITE
8	CABINET 120VAC DISCONNECT	
9	GFCI RECEPTACLE	15 AMP WITH INDICATOR
10	120 VAC DISTRIBUTION	PROVIDE CIRCUIT BREAKERS FOR ALL SUB-CIRCUITS SEE DRWG EP-08.
11	RACK MOUNT UPS, 1500KVA MINIMUM.	SIZE TO MATCH LOAD WITH 60 MINUTE RUN TIME AT CALCULATED LOAD, EXCLUDING AIR CONDITIONER.
	EXTERNAL BATTERY IF REQUIRED.	
12	PROGRAMMABLE LOGIC CONTROLLER	HONEYWELL CONTROLEDGE PLC, NO EXCEPTIONS
		8 SLOT MAIN BASE MINIMUM, WITH CPU, COMMUNICATIONS AND I/O MODULES
13	INDUSTRIAL SECURITY APPLIANCE	CISCO 4000 SERIES.
14	REMOTE TERMINATION PANELS FOR I/O	HONEYWELL RTP MATCHING I/O MODULES PROVIDED
15	FLOW TRANSMITTER	AS REQUIRED
16	ETHERNET PRIVATE LINE (EPL) MODEM AND FIBER ENCLOSURE	PROVIDED BY EPL SERVICE PROVIDER. FIBER ENCLOSURE INCLUDES FIBER STORAGE AND SPLICE TRAYS.

THE CITY OF LOS ANGELES OR ITS OFFICERS OR AGENTS SHALL NOT BE RESPONSIBLE FOR THE ACCURACY OR COMPLETENESS OF ELECTRONIC COPIES OF THIS PLAN SHEET.

REVISION DATES (DESIGN STAGE ONLY)

PLANS PREPARED BY:
carollo
707 WILSHIRE BLVD, SUITE 3920
LOS ANGELES, CA 90017
(213) 489-1587

ProjectLine
Technical Services, Inc
2900 BRISTOL ST, SUITE D-103, COSTA MESA, CA
92626, TEL (714) 540-5460
www.projectlinets.com

CITY OF LOS ANGELES DEPARTMENT OF PUBLIC WORKS
BUREAU OF ENGINEERING

ENGINEERING
CITY OF LOS ANGELES

THIS PLAN WAS ELECTRONICALLY • SIGNED AND STAMPED

REGISTERED PROFESSIONAL ENGINEER
ROBERT D. GETTER
No. E 21884
Exp. 06-30-25
ELECTRICAL
STATE OF CALIFORNIA

VERTICAL CONTROL: VERTICAL CONTROL
HORIZONTAL CONTROL: HORIZONTAL CONTROL

SHEET TITLE: LOCAL CONTROL PANEL LAYOUT

PROJECT: VALLEY VILLAGE PARK STORM WATER CAPTURE PROJECT

ADDRESS: VALLEY VILLAGE PARK
5000 Westpark Dr, North Hollywood, CA 91601

NO.	REVISIONS	DATE	BY
		YY/MM/DD	
		YY/MM/DD	
		YY/MM/DD	
		YY/MM/DD	

CIP NO.
SCP0009

INDEX NO.

CITY ENGINEER: TED ALLEN, P.E. DATE YY/MM/DD

DESIGN GROUP		DATE
ENGINEER:	PVT - MATT HUCKABY	YY/MM/DD
ARCHITECT:	N/A	YY/MM/DD
DESIGNED BY:	PVT - JUSTIN CHIN	YY/MM/DD
DRAWN BY:	PVT - JUSTIN CHIN	YY/MM/DD
CHECKED BY:	PVT - ROBERT GETTER	YY/MM/DD
APPROVED BY:	PVT - MIKO AIVAZIAN	YY/MM/DD

WORK ORDER
EW40085F

SHEET NAME
IP-03
SHEET 48 OF 80 SHEETS

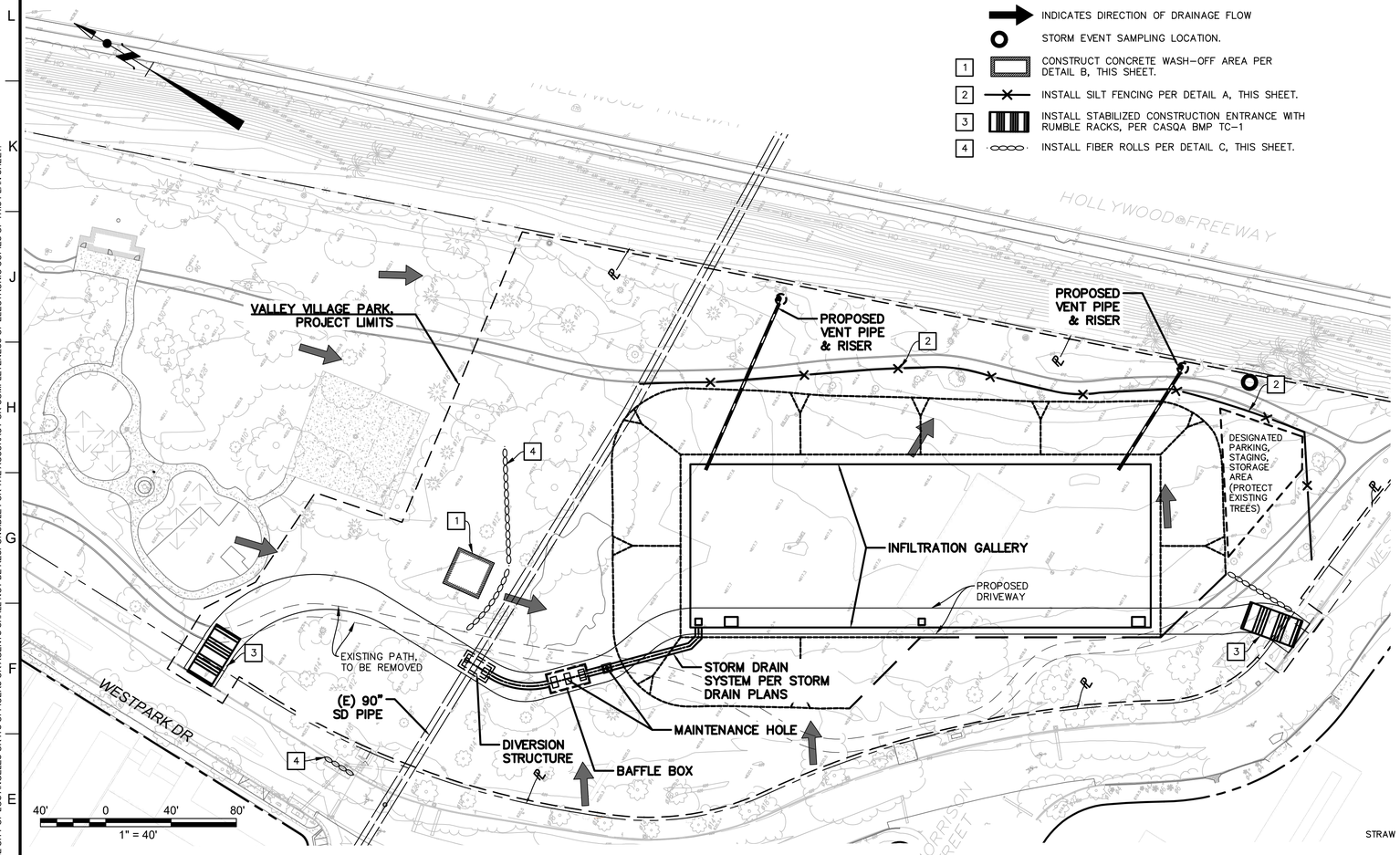

LEGEND

- INDICATES DIRECTION OF DRAINAGE FLOW
- STORM EVENT SAMPLING LOCATION.
- 1 — CONSTRUCT CONCRETE WASH-OFF AREA PER DETAIL B, THIS SHEET.
- 2 — INSTALL SILT FENCING PER DETAIL A, THIS SHEET.
- 3 — INSTALL STABILIZED CONSTRUCTION ENTRANCE WITH RUMBLE RACKS, PER CASQA BMP TC-1
- 4 — INSTALL FIBER ROLLS PER DETAIL C, THIS SHEET.

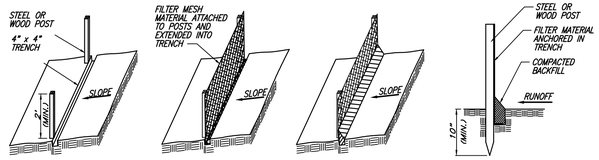

1 – SET POSTS & EXCAVATE TRENCH | 2 – INSTALL FILTER FABRIC | 3 – BACKFILL TRENCH | 4 – CROSS SECTION OF INSTALLED FILTER FABIC

SILT FENCE

NOT TO SCALE — A/1

CONSTRUCTION SPECIFICATIONS:

1. THE HEIGHT OF A SILT FENCE SHALL NOT EXCEED 36 INCHES. STORAGE HEIGHT AND PONDING HEIGHT SHALL NEVER EXCEED 18 INCHES.
2. THE FENCE LINE SHALL FOLLOW THE CONTOUR AS CLOSELY AS POSSIBLE. IF POSSIBLE, THE FILTER FABRIC SHALL BE CUT FROM A CONTINUOUS ROLL TO AVOID THE USE OF JOINTS.
3. JOINTS, WHEN NECESSARY, SHALL BE SPLICED ONLY AT A SUPPORT POST, WITH A MINIMUM 6 INCH OVERLAP AND BOTH ENDS SECURELY FASTENED TO THE POST.
4. POSTS SHALL BE SPACED A MAXIMUM OF 10 FEET APART AND DRIVEN SECURELY INTO THE GROUND (MINIMUM OF 12 INCHES). WHEN EXTRA-STRENGTH FABRIC IS USED WITHOUT THE WIRE SUPPORT FENCE, POST SPACING SHALL NOT EXCEED 6 FEET.
5. TURN THE ENDS OF THE FENCE UPHILL.
6. A TRENCH SHALL BE EXCAVATED APPROXIMATELY 4 INCHES WIDE AND 6 INCHES DEEP ALONG THE LINE OF POSTS AND UPSLOPE FROM THE BARRIER.
7. WHEN STANDARD-STRENGTH FILTER FABRIC IS USED, A WIRE MESH SUPPORT FENCE SHALL BE FASTENED SECURELY TO THE UPSLOPE SIDE OF THE POSTS USING HEAVY DUTY WIRE STAPLES AT LEAST 1INCH LONG, TIE WIRES OR HOG RINGS. THE WIRE SHALL EXTEND INTO THE TRENCH A MINIMUM OF 2 INCHES AND SHALL NOT EXTEND MORE THAN 36 INCHES ABOVE THE ORIGINAL GROUND SURFACE.
8. THE STANDARD-STRENGTH FILTER FABRIC SHALL BE STAPLED OR WIRED TO THE FENCE, AND 6 INCHES OF THE FABRIC SHALL EXTEND INTO THE TRENCH. THE FABRIC SHALL NOT EXTEND MORE THAN 36 INCHES ABOVE THE ORIGINAL GROUND SURFACE. FILTER FABRIC SHALL NOT BE STAPLED TO EXISTING TREES.
9. WHEN EXTRA-STRENGTH FILTER FABRIC AND CLOSER POST SPACING ARE USED, THE WIRE MESH SUPPORT FENCE MAY BE ELIMINATED. IN SUCH A CASE, THE FILTER FABRIC IS STAPLED OR WIRED DIRECTLY TO THE POSTS.
10. THE TRENCH SHALL BE BACKFILLED AND THE SOIL COMPACTED OVER THE TOE OF THE FILTER FABRIC.
11. SILT FENCES PLACED AT THE TOE OF A SLOPE SHALL BE SET AT LEAST 6 FEET FROM THE TOE IN ORDER TO INCREASE PONDING VOLUME.
12. SILT FENCES SHALL BE REMOVED WHEN THEY HAVE SERVED THEIR USEFUL PURPOSE, BUT NOT BEFORE THE UPSLOPE AREA HAS BEEN PERMANENTLY STABILIZED AND ANY SEDIMENT STORED BEHIND THE SILT FENCE HAS BEEN REMOVED.

INSPECTION AND MAINTENANCE:

1. SILT FENCES AND FILTER BARRIERS SHALL BE INSPECTED WEEKLY AFTER EACH SIGNIFICANT STORM (1 INCH IN 24 HOUR). ANY REQUIRED REPAIRS SHALL BE MADE IMMEDIATELY.
2. SEDIMENT SHOULD BE REMOVED WHEN IT REACHES 1/3 HEIGHT OF THE FENCE OR 9 INCHES MAXIMUM.
3. THE REMOVED SEDIMENT SHALL CONFORM WITH THE EXISTING GRADE AND BE VEGETATED OR OTHERWISE STABILIZED.

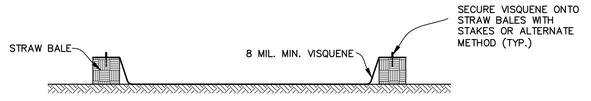

CONCRETE WASH-OFF AREA

NOT TO SCALE — B/1

NOTES:

1. ALL CONCRETE TRUCKS AND FINISHING TOOLS SHALL BE WASHED AT THE WASH OFF AREA.
2. ALL CONCRETE WASTE COLLECTED IN WASH OFF AREA SHALL BE RECYCLED OR APPROPRIATELY DISPOSED OF OFF-SITE.
3. LOCATION AND SIZE OF WASH-OFF AREA MAY BE ADJUSTED TO ACCOMMODATE SITE CONDITIONS.

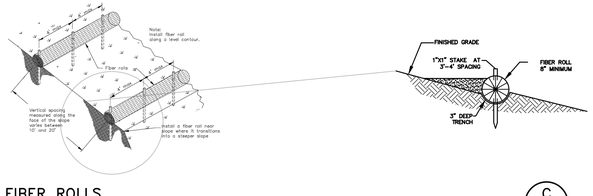

FIBER ROLLS

NOT TO SCALE — C/1

CONSTRUCTION SPECFICATIONS:

1. FIBER ROLLS SHALL BE SPACED WITH NO GREATER THAN 20 FOOT INTERVALS FOR 4:1 (H:V) SLOPE AT LEVEL CONTOURS, OR 10 FOOT INTERVALS FOR SLOPE OF 2:1 (H:V) AT LEVEL CONTOURS.
2. TURN THE ENDS OF THE FIBER ROLLS UPHILL.
3. DIG 8 INCH WIDE TRENCHES AT 3 INCH DEPTH ACROSS THE SLOPE ON THE CONTOUR. INSTALL FIBER ROLLS AND STAKE EVERY 4 FEET PER MANUFACTURER'S RECOMMENDATION. WHEN TRENCHING AND STAKING NOT POSSIBLE, WEIGHT FIBER ROLL WITH SANDBAG EVERY 4 FEET.

EROSION AND SEDIMENT CONTROL NOTES

1. IN ADDITION TO THESE NOTES, THE CONTRACTOR WILL BE RESPONSIBLE FOR ALL EROSION CONTROL REQUIREMENTS SPECIFIED BY THE CITY/COUNTY OF LOS ANGELES, THE PROJECT STORMWATER POLLUTION PREVENTION PLAN (SWPPP), AND THE PROJECT EROSION AND SEDIMENT CONTROL PLAN (ESCP).
2. IT IS THE CONTRACTOR'S RESPONSIBILITY TO ADD OR ADJUST EROSION CONTROL DEVICES AS NECESSARY COMPARED TO THE APPROVED EROSION CONTROL PLAN IN ORDER TO PREVENT EROSION/SEDIMENT FROM LEAVING THE SITE.
3. THE CONTRACTOR SHALL ENSURE ALL PROTECTION MEASURES ARE IN PLACE AT ALL TIMES THROUGHOUT THE YEAR.
4. THE SWPPP REQUIREMENTS SHALL BE IMPLEMENTED PRIOR TO THE COMMENCEMENT OF GRADING AND THROUGHOUT THE YEAR. THE ESCP/SWMP REQUIREMENTS SHALL BE IMPLEMENTED BETWEEN NOVEMBER 1ST AND APRIL 15TH OF EACH YEAR, EXCEPT POLLUTION CONTROL MEASURES SHALL BE IMPLEMENTED YEAR ROUND.
5. THE CONTRACTOR SHALL ADJUST THE LIMITS OF THE PROTECTION MEASURES AS HIS WORK PROGRESSES.
6. THE CONTRACTOR SHALL ADJUST THE LIMITS OF THE PROTECTION MEASURES SHOULD THEY BE INADEQUATE TO CONTROL RUNOFF OF SILT LADEN WATER.
7. THE CONTRACTOR SHALL REMOVE SILT FROM ALL STORM DRAIN APPURTENANCES AND EROSION CONTROL DEVICES AFTER EACH RAIN.
8. THE PROTECTION MEASURES MAY BE TEMPORARILY MOVED OUT OF THE CONTRACTOR'S WAY TO FACILITATE CONSTRUCTION, PROVIDED THEY ARE REINSTALLED PRIOR TO THE NEXT RAIN STORM.
9. THE CONTRACTOR SHALL ADVISE HIS CREW OF THE INTENT OF THE PROTECTION MEASURES PRIOR TO THE START OF THE RAINY SEASON. THE CREW IS ENCOURAGED TO MONITOR THE EFFECTIVENESS OF THE SYSTEM AND ALERT THE CONTRACTOR OF ANY FAILURES OR PROBLEMS AND ADJUST THE EROSION CONTROL DEVICES AS NECESSARY.
10. STAGING, REFUELING OF EQUIPMENT, CONCRETE WASHOUT AND STORAGE OF MATERIALS SHALL BE INSPECTED FREQUENTLY TO ENSURE NO SPILLED HAZARDOUS MATERIALS CONTAMINATE THE EXISTING GROUND OR PAVEMENT. SHOULD THIS OCCUR, THE SPILL SHALL BE CLEANED UP IMMEDIATELY PER COUNTY OF LOS ANGELES STANDARDS. THE DESIGNATED AREAS SHALL CONTAIN SPILLS, FACILITATE CLEAN-UP AND PROPER DISPOSAL AND PREVENT CONTAMINATION FROM DISCHARGING TO THE STORM DRAINS, STREET, DRAINAGE DITCHES, CREEKS, OR WETLANDS. THE AREAS SHALL BE NO LARGER THAN 50 X 50 FOOT UNLESS OTHERWISE APPROVED BYLEAD AGENCY AND SHALL BE LOCATED AT LEAST 100 FEET FROM ANY STORM DRAIN, WATERBODY OR SENSITIVE BIOLOGICAL RESOURCES.
11. ONCE A GRADING AREA IS COMPLETED, THE DISTURBED AREAS SHALL BE PROTECTED FROM BEING ERODED BY WIND OR WATER EROSION BY APPLICATION OF EROSION CONTROL DEVICES AND METHODS SPECIFIED BY THESE PLANS.
12. THE CONTRACTOR SHALL PREVENT WATER CONTAMINATION DURING CONSTRUCTION BY IMPLEMENTING THE FOLLOWING CONSTRUCTION SITE MEASURES:
    - A. ALL ENTRANCES/EXITS TO THE CONSTRUCTION SITE SHALL BE STABILIZED USING METHODS DESIGNED TO REDUCE TRANSPORT OF SEDIMENT OFF SITE. STABILIZING MEASURES MAY INCLUDE BUT ARE NOT LIMITED TO USE OF GRAVEL PADS, STEEL RUMBLE PLATES, TEMPORARY PAVING, ETC. ANY SEDIMENT OR OTHER MATERIALS TRACKED OFF SITE SHALL BE REMOVED THE SAME DAY AS THEY ARE TRACKED USING DRY CLEANING METHODS. ENTRANCES/EXITS SHALL BE MAINTAINED UNTIL GRADED AREAS HAVE BEEN STABILIZED BY STRUCTURES, LONG-TERM EROSION CONTROL MEASURES OR LANDSCAPING.
    - B. APPLY CONCRETE, ASPHALT, AND SEAL COAT ONLY DURING DRY WEATHER.
    - C. STORE, HANDLE AND DISPOSE OF CONSTRUCTION MATERIALS AND WASTE SUCH AS PAINT, MORTAR, CONCRETE SLURRY, FUELS, ETC. IN A MANNER WHICH MINIMIZES THE POTENTIAL FOR STORM WATER CONTAMINATION.
13. ALL OPEN EXCAVATIONS SHALL BE PROTECTED FROM INCLEMENT WEATHER, INCLUDING AREAS ABOVE AND AT THE TOE OF THE EXCAVATION. THIS IS REQUIRED TO KEEP THE EXCAVATIONS FROM BECOMING SATURATED. SATURATION OF THE EXCAVATION MAY RESULT IN A RELAXATION OF THE SOILS WHICH MAY RESULT IN FAILURES. WATER/RUNOFF SHALL BE DIVERTED AWAY FROM THE EXCAVATION AND NOT BE ALLOWED TO FLOW OVER THE EXCAVATION IN A CONCENTRATED MANNER.
14. ALL HILLSIDE EXCAVATIONS SHALL BE PROTECTED DURING INCLEMENT WEATHER AND SHALL EXTEND BEYOND THE EDGES OF THE EXCAVATIONS IN ALL DIRECTIONS. PLASTIC SHEETING ALONG WITH STAKES, ROPES, AND SANDBAGS SHALL BE USED TO PROVIDE PROTECTION OF THE EXCAVATIONS. SLOPES AROUND AN OPEN EXCAVATION SHALL BE TRIMMED TO SLOPE AWAY FROM THE OPEN EXCAVATION SO THAT WATER/RUNOFF WILL NOT DRAIN INTO THE EXCAVATION. AFTER THE INCLEMENT WEATHER HAS CEASED, THE EXCAVATIONS SHALL BE REVIEWED BY THE PROJECT GEOTECHNICAL ENGINEER AND GEOLOGIST FOR SAFETY PRIOR TO RECOMMENCEMENT OF WORK.
15. NO WATER SHALL BE ALLOWED TO POND ADJACENT TO OR FLOW INTO OPEN TRENCHES. ALL OPEN TRENCHES SHALL BE COVERED WITH PLASTIC SHEETING THAT IS ANCHORED WITH SANDBAGS. AREAS AROUND THE TRENCHES SHALL BE SLOPED AWAY FROM THE TRENCHES TO PREVENT WATER RUNOFF FROM FLOWING INTO OR PONDING ADJACENT TO THE TRENCHES. AFTER THE INCLEMENT WEATHER HAS CEASED, THE EXCAVATIONS SHALL BE REVIEWED BY THE PROJECT GEOTECHNICAL ENGINEER AND GEOLOGIST FOR SAFETY PRIOR TO RECOMMENCEMENT OF WORK. FOUNDATION EXCAVATIONS THAT REMAIN OPEN DURING INCLEMENT WEATHER SHALL BE REVIEWED BY THE PROJECT GEOTECHNICAL ENGINEER AND GEOLOGIST PRIOR TO THE PLACEMENT OF STEEL AND CONCRETE TO ENSURE THAT PROPER EMBEDMENT AND CONTACT WITH THE BARING MATERIAL HAVE BEEN MAINTAINED.
16. ALL PILE/CAISSON EXCAVATIONS SHALL BE REVIEWED AND POURED PRIOR TO THE ONSET OF INCLEMENT WEATHER. IT IS NOT RECOMMENDED THAT ANY PILE/CAISSON EXCAVATIONS REMAIN OPEN THROUGH ANY INCLEMENT WEATHER. HOWEVER, IF IT IS NECESSARY TO LEAVE PILE/CAISSON EXCAVATIONS OPEN DURING INCLEMENT WEATHER, ALL WATER AND RUNOFF SHALL BE DIVERTED AWAY FROM AND PREVENTED FROM ENTERING THE PILE/CAISSON EXCAVATIONS. PILE/CAISSON EXCAVATIONS THAT REMAIN OPEN DURING INCLEMENT WEATHER SHALL BE REVIEWED BY THE PROJECT GEOTECHNICAL ENGINEER AND GEOLOGIST PRIOR TO THE PLACEMENT OF STEEL AND CONCRETE TO ENSURE THAT PROPER EMBEDMENT HAS BEEN MAINTAINED. THE BASE OF ALL END/BEARING CAISSONS SHALL BE RE-CLEANED TO ENSURE CONTACT WITH THE PROPER BEARING MATERIAL.
17. DURING THE INCLEMENT TIME OF THE YEAR, OR DURING PERIODS PRIOR TO THE ONSET OF RAIN, ALL FILL THAT HAS BEEN SPREAD AND IS AWAITING COMPACTION SHALL BE COMPACTED BEFORE STOPPING WORK FOR THE DAY OR BEFORE STOPPING WORK BECAUSE OF INCLEMENT WEATHER. THESE FILLS, ONCE COMPACTED, SHALL HAVE THE SURFACE SLOPED TO DRAIN TO ONE AREA WHERE WATER MAY BE REMOVED.
18. ALL STOCK-PILED FILL MATERIALS SHALL BE COVERED WITH PLASTIC SHEETING. THIS ACTION WILL REDUCE THE POTENTIAL FOR THE MOISTURE CONTENT OF THE FILL FROM BECOMING TOO HIGH FOR COMPACTION. IF THE FILL STOCKPILE IS NOT COVERED DURING INCLEMENT WEATHER, THEN AERATING THE FILL TO REDUCE THE MOISTURE CONTENT WOULD BE REQUIRED BY THE GEOTECHNICAL ENGINEER. THIS ACTION IS GENERALLY VERY TIME CONSUMING AND MAY RESULT IN CONSTRUCTION DELAYS. WORK MAY RECOMMENCE, AFTER THE RAIN EVENT, ONCE THE SITE HAS BEEN REVIEWED BY THE PROJECT GEOTECHNICAL ENGINEER.

THE CITY OF LOS ANGELES OR ITS OFFICERS OR AGENTS SHALL NOT BE RESPONSIBLE FOR THE ACCURACY OR COMPLETENESS OF ELECTRONIC COPIES OF THIS PLAN SHEET.

REVISION DATES (DESIGN STAGE ONLY)

Stantec
200 East Carrillo Street, Suite 101
Santa Barbara CA
www.stantec.com

PLANS PREPARED BY:
carollo
707 WILSHIRE BLVD, SUITE 3920
LOS ANGELES, CA 90017
(213) 489-1587

ENGINEERING
CITY OF LOS ANGELES

PETER A. SILVIA — PROFESSIONAL ENGINEER — NO 70435 — REGISTERED — STATE OF CALIFORNIA — CIVIL

THIS PLAN WAS ELECTRONICALLY SIGNED AND STAMPED

BUREAU OF ENGINEERING
CITY OF LOS ANGELES
DEPARTMENT OF PUBLIC WORKS

NO.	REVISIONS	DATE	BY
		YY/MM/DD	
		YY/MM/DD	
		YY/MM/DD	
		YY/MM/DD	

CIP NO. SCP0009

INDEX NO.

SHEET TITLE: SEDIMENTATION CONTROL PLAN
PROJECT: VALLEY VILLAGE PARK STORM WATER CAPTURE PROJECT
ADDRESS: VALLEY VILLAGE PARK, 5000 Westpark Dr, North Hollywood, CA 91601

CITY ENGINEER	DATE
TED ALLEN, P.E.	YY/MM/DD
DESIGN GROUP	
ENGINEER: PVT - MATT HUCKABY	YY/MM/DD
ARCHITECT: XXX	YY/MM/DD
DESIGNED BY: PETE SILVIA, P.E., QSD	YY/MM/DD
DRAWN BY: MATTHEW HENDREN, E.I.T.	YY/MM/DD
CHECKED BY:	YY/MM/DD
APPROVED BY: PVT - MIKO AVAZIAN	YY/MM/DD

VERTICAL CONTROL: VERTICAL CONTROL
HORIZONTAL CONTROL: HORIZONTAL CONTROL

WORK ORDER EW40085F

SHEET NAME EC-01

SHEET 49 OF 80 SHEETS

ABBREVIATIONS

&	AND
@	AT
#	NUMBER
%	PERCENT
A.C.	ASPHALTIC CONCRETE
AD	AREA DRAIN
ADJ.	ADJACENT
AM	APICAL MERISTEM
ARCH.	ARCHITECTURE
ASTM	AMERICAN SOCIETY OF TESTING & MATERIALS
BC	BOTTOM OF CURB
BCR	BEGIN CURB RADIUS
BLDG.	BUILDING
BS	BOTTOM OF STEP
BTH	BROWN TRUNK HEIGHT
BW	BOTTOM OF WALL
C.I.P.	CAST IN PLACE
C.J.	CONSTRUCTION JOINT
CL	CENTER LINE
CLR	CLEAR
CMB	CRUSHED MISCELLANEOUS BASE
CMU	CONCRETE MASONRY UNIT
CONC.	CONCRETE
CONT.	CONTINUOUS
CORP.	CORPORATION
d	PENNY (NAIL SIZE)
D.G.	DECOMPOSED GRANITE
D.I.	DRAIN INLET
D,DIA.	DIAMETER
DWGS.	DRAWINGS
(E)	EXISTING
EA.	EACH
E.J.	EXPANSION JOINT
EX.	EXISTING
ETC.	ETCETERA
E.W.	EACH WAY
F.D.C.	FIRE DEPARTMENT CONNECTIONS
FFE	FINISH FLOOR ELEVATION
FF	FINISH FLOOR
FG	FINISH GRADE
FIN.	FINISH
FS	FINISH SURFACE
FTG.	FOOTING
GALV.	GALVANIZED
H.B.	HEADEBOARD
H,HT.	HEIGHT
HOR.	HORIZONTAL, HORIZONTALLY
HP	HIGH POINT
L	LENGTH
LB.	POUND
L.F.	LINEAR FEET
L.O.W.	LIMIT OF WORK
LP	LOW POINT
MAX.	MAXIMUM
M.E.P.	MECHANICAL, ELECTRICAL, PLUMBING
MIN.	MINIMUM
(N)	NEW
NAT.	NATURAL
N.I.C.	NOT IN CONTRACT
N.T.S.	NOT TO SCALE
O.C.	ON CENTER
O.D.	OUTSIDE DIAMETER
OF/CI	OWNER FURNISHED/CONTRACTOR INSTALLED
P.A., PA	PLANTING AREA
P.O.B.	POINT OF BEGINNING
PP	POWER POLE
PL	PROPERTY LINE
PT	PRESSURE TREATED
PVC	POLY VINYL CHLORIDE
R.	RISER
R, RAD.	RADIUS
R.C.B.	ROOT CONTROL BARRIER
REINF.	REINFORCED
REP.	REPRESENTATIVE
R.O.W.	RIGHT-OF-WAY
S.C.	SAWCUT JOINT
SCH.	SCHEDULE
SF	SQUARE FEET
SIM.	SIMILAR
S.J.	SCORE JOINT
S.L.	SCORELINE
SQ.	SQUARE
SS	STAINLESS STEEL
STD.	STANDARD
T.	TREAD
T.B.D.	TO BE DETERMINED
TC	TOP OF CURB
TF	TOP OF FOOTING
TG	TOP OF GRATE
TW	TOP OF WALL
TYP.	TYPICAL
VERT.	VERTICAL, VERTICALLY
V.I.F.	VERIFY IN FIELD
W	WIDTH
W/	WITH
WL	WATER LEVEL
W.W.M.	WELDED WIRE MESH

SYMBOLS

PROPERTY LINE (PL)

RIGHT-OF-WAY

LIMIT OF WORK LINE

MATCHLINE (MATCHLINE REFER TO LXXX)

CENTER LINE (CL)

SECTION

ELEVATION

DETAIL

ALIGN

POINT OF BEGINNING/ ORIGIN POINT OF LAYOUT

DETAIL SECTION

KEYNOTE (A-101)

CALLOUT

GENERAL NOTES

1. INSTALL ALL IMPROVEMENTS IN ACCORDANCE WITH THE PLANS AND SPECIFICATIONS.
2. REVIEW THESE PLANS AND NOTES COMPLETELY. ANY DISCREPANCIES SHALL BE BROUGHT TO THE ATTENTION OF THE PROJECT MANAGER IMMEDIATELY UPON DISCOVERY.
3. IT IS THE RESPONSIBILITY OF THE SUB-CONTRACTORS TO FAMILIARIZE THEMSELVES WITH ALL GRADE DIFFERENCES, LOCATION OF WALLS, UTILITIES, SEWERS, WATER LINES, ETC. COORDINATE WORK WITH OTHER SUB-CONTRACTORS FOR THE LOCATION AND INSTALLATION OF PIPE SLEEVES UNDER PAVING, ELECTRICAL CONNECTIONS, WATER HOOK-UPS, ETC.
4. ALL REQUIREMENTS OF THE UNIFORM BUILDING CODE AS MODIFIED AND ADOPTED BY THE CITY OF LOS ANGELES SHALL APPLY TO THE WORK SPECIFIED HEREIN UNLESS OTHERWISE MODIFIED BY THESE DOCUMENTS.
5. BEFORE COMMENCING ANY WORK, OBTAIN AN UNDERGROUND SERVICE I.D. BY CALLING DIG-ALERT AT 1-800-422-4133 TWO (2) WORKING DAYS PRIOR TO ANY EXCAVATION.
6. SUBMIT REQUESTS FOR MEETINGS, OBSERVATIONS, AND APPROVALS BY THE PROJECT MANAGER TWO (2) WORKING DAYS PRIOR TO THE DATE AND TIME PROPOSED.
7. OBTAIN CITY OF LOS ANGELES INSPECTOR'S AND PROJECT MANAGER'S REVIEW AND APPROVAL OF WORK IN PROGRESS AT VARIOUS TIMES DURING LANDSCAPE CONSTRUCTION. THE FOLLOWING REVIEWS/MEETINGS ARE MANDATORY. PROVIDE TWO (2) WORKING DAYS NOTICE FOR EACH REQUESTED VISIT. SEE IRRIGATION AND LANDSCAPE PLANTING SPECIFICATIONS.
   - *MAIN LINE PRESSURE TEST AND TRENCH DEPTHS PRIOR TO BACKFILL OF TRENCHES
   - *COVERAGE TEST UPON COMPLETION OF SPRINKLER INSTALLATION
   - *SOIL PREPARATION
   - *FINISH GRADE REVIEW IN PLANTING AREAS
   - *PLANT MATERIAL LOCATION REVIEW
   - *PLANT MATERIAL APPEARANCE AND QUALITY REVIEW
   - *FINAL WALK THROUGH (AT COMPLETION OF PLANTING INSTALLATION)
   - *FINAL WALK THROUGH (AT COMPLETION OF MAINTENANCE PERIOD)

DIRECT ANY QUESTIONS REGARDING THESE PLANS TO : PROJECT MANAGER AND OR CONSTRUCTION MANAGER VIA A FORMAL CORRESPONDENCE, RFI, ETC.

STORMWATER MITIGATION
LOW IMAPCT DEVELOPMENT (LID)
APPROVED WITH CONDITIONS

This set of plans and specifications must be at the jobsite during construction

Stormwater Observation Report (SOR) is required prior to issuance of Certificate of Occupancy or final sign off.

Total Pages 48

Digitally Signed By: S. Garcia Date: 12/12/2023
Department of Public Works - Bureau of Sanitation
Watershed Protection Division

SHEET INDEX

LEGEND

SHEET NOT ISSUED	
ISSUED FOR INFORMATION AND COORDINATION	●
SHEET DELETED	∅
SHEET SCOPE COMPLETED PREVIOUSLY	□

		50% SUBMITTAL	90% SUBMITTAL	100% SUBMITTAL
L-001	GENERAL NOTES AND SHEET INDEX	●	●	●
L-002	OVERALL REFERENCE PLAN	●	●	●
L-100A	TREE PROTECTION NOTES AND SCHEDULE	●	●	●
L-100B	TREE PROTECTION NOTES			●
L-101	TREE PROTECTION PLAN - SHEET 1	●	●	●
L-102	TREE PROTECTION PLAN - SHEET 2	●	●	●
L-103	TREE PROTECTION PLAN - SHEET 3	●	●	●
L-200	CONSTRUCTION NOTES AND SCHEDULE	●	●	●
L-201	CONSTRUCTION PLAN - SHEET 1	●	●	●
L-202	CONSTRUCTION PLAN - SHEET 2	●	●	●
L-203	CONSTRUCTION PLAN - SHEET 3	●	●	●
L-501	CONSTRUCTION DETAILS - SHEET 1	●	●	●
L-502	CONSTRUCTION DETAILS - SHEET 2	●	●	●
L-503	CONSTRUCTION DETAILS - SHEET 3		●	●
L-600A	IRRIGATION NOTES AND CALCULATIONS	●	●	●
L-600B	IRRIGATION NOTES	●	●	●
L-600C	IRRIGATION SCHEDULE	●	●	●
L-600D	IRRIGATION BOOSTER PUMP NOTES			●
L-600E	IRRIGATION AS-BUILTS		●	●
L-601	IRRIGATION PLAN - SHEET 1	●	●	●
L-602	IRRIGATION PLAN - SHEET 2	●	●	●
L-603	IRRIGATION PLAN - SHEET 3	●	●	●
L-604	IRRIGATION DETAILS - SHEET 1	●	●	●
L-605	IRRIGATION DETAILS - SHEET 2	●	●	●
L-606	IRRIGATION DETAILS - SHEET 3		●	●
L-700	PLANTING NOTES AND SCHEDULE	●	●	●
L-701	PLANTING PLAN - SHEET 1	●	●	●
L-702	PLANTING PLAN - SHEET 2	●	●	●
L-703	PLANTING PLAN - SHEET 3	●	●	●
L-704	PLANTING DETAILS	●	●	●

DIAL BEFORE YOU DIG
1-800-422-4133
DIGALERT
PLAY IT SAFE. DIAL BEFORE YOU DIG!
AT LEAST TWO WORKING DAYS PRIOR TO EXCAVATING
SERVING NINE SOUTHERN CALIFORNIA COUNTIES

PLANS PREPARED BY:
STUDIO-MLA
251 South Mission Road
Los Angeles, California 90033
T: 213.894.3844 studio-mla.com

CITY OF LOS ANGELES DEPARTMENT OF PUBLIC WORKS
BUREAU OF ENGINEERING

ENGINEERING
CITY OF LOS ANGELES

THIS PLAN WAS ELECTRONICALLY
• SIGNED AND STAMPED

LICENSED LANDSCAPE ARCHITECT
JAN DYER
5623
11-30-24
12/6/2023
STATE OF CALIFORNIA

VERTICAL CONTROL:
HORIZONTAL CONTROL:

SHEET TITLE: GENERAL NOTES AND SHEET INDEX
PROJECT: VALLEY VILLAGE PARK STORM WATER CAPTURE PROJECT
ADDRESS: VALLEY VILLAGE PARK
5000 Westpark Dr, North Hollywood, CA 91601

CITY ENGINEER: TED ALLEN, P.E.

DESIGN GROUP		DATE
ENGINEER:	MATT LYSNE	YY/MM/DD
ARCHITECT:	MATT LYSNE	YY/MM/DD
DESIGNED BY:	CARMEN GODINEZ	YY/MM/DD
DRAWN BY:	CARMEN GODINEZ	YY/MM/DD
CHECKED BY:	ALEX SAN DIEGO	YY/MM/DD
APPROVED BY:	MATT LYSNE	YY/MM/DD

NO.	REVISIONS	DATE	BY
		YY/MM/DD	
		YY/MM/DD	
		YY/MM/DD	
		YY/MM/DD	

CIP NO. SCP0009

INDEX NO.

WORK ORDER EW40085F

SHEET NAME L-001

SHEET 50 OF 80 SHEETS

REVISION DATES (DESIGN STAGE ONLY)

THE CITY OF LOS ANGELES OR ITS OFFICERS OR AGENTS SHALL NOT BE RESPONSIBLE FOR THE ACCURACY OR COMPLETENESS OF ELECTRONIC COPIES OF THIS PLAN SHEET.

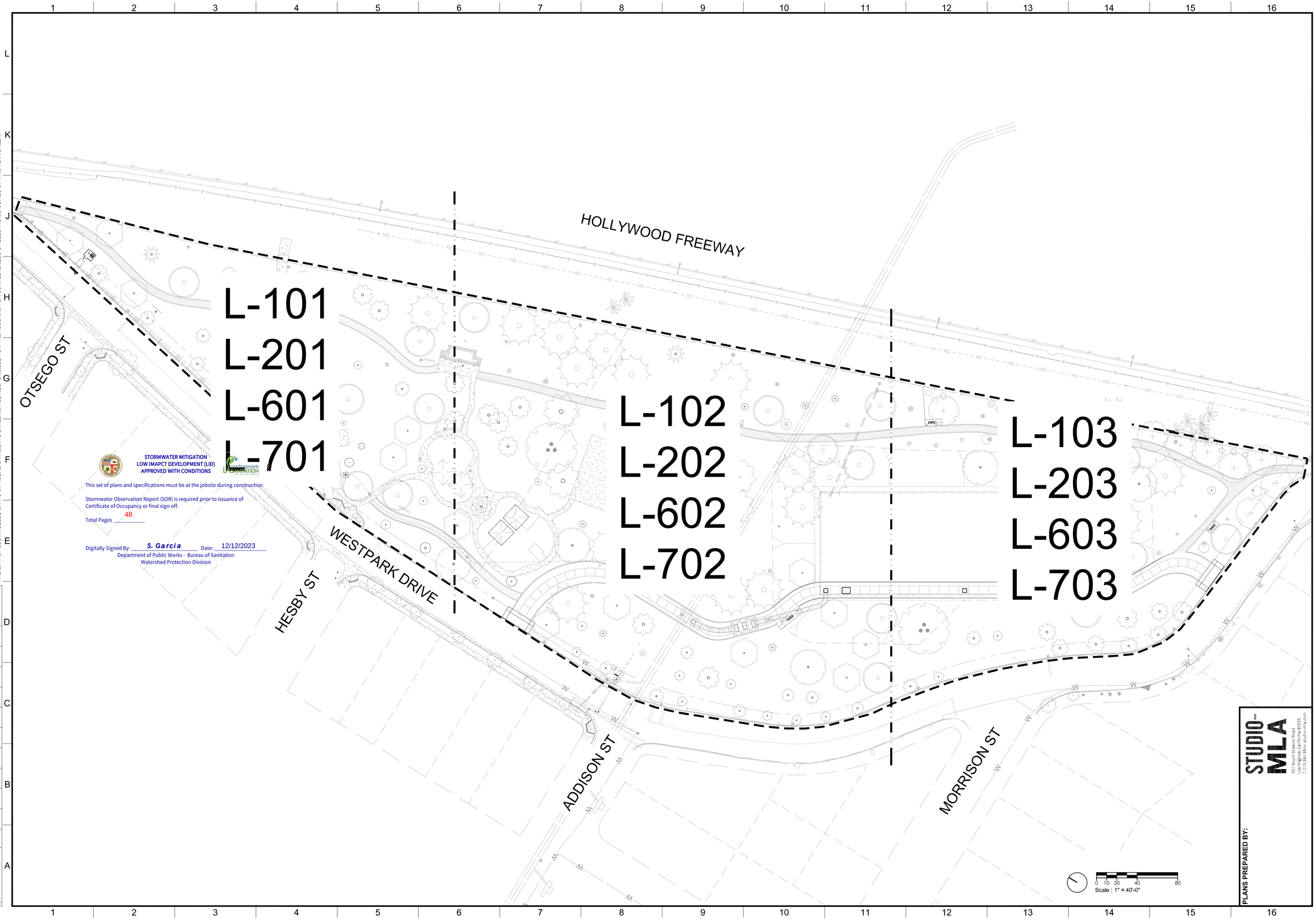

STORMWATER MITIGATION
LOW IMAPCT DEVELOPMENT (LID)
APPROVED WITH CONDITIONS

This set of plans and specifications must be at the jobsite during construction

Stormwater Observation Report (SOR) is required prior to issuance of Certificate of Occupancy or final sign off.

Total Pages 48

Digitally Signed By: S. Garcia Date: 12/12/2023
Department of Public Works - Bureau of Sanitation
Watershed Protection Division

THE CITY OF LOS ANGELES OR ITS OFFICERS OR AGENTS SHALL NOT BE RESPONSIBLE FOR THE ACCURACY OR COMPLETENESS OF ELECTRONIC COPIES OF THIS PLAN SHEET.

REVISION DATES (DESIGN STAGE ONLY)

ENGINEERING
CITY OF LOS ANGELES

THIS PLAN WAS ELECTRONICALLY • SIGNED AND STAMPED •

LICENSED LANDSCAPE ARCHITECT
JAN DYER
5623
11-30-24
12/6/2023
STATE OF CALIFORNIA

BUREAU OF ENGINEERING

VERTICAL CONTROL:
HORIZONTAL CONTROL:

SHEET TITLE: OVERALL REFERENCE PLAN

PROJECT: VALLEY VILLAGE PARK STORM WATER CAPTURE PROJECT

ADDRESS: VALLEY VILLAGE PARK
5000 Westpark Dr, North Hollywood, CA 91601

DEPARTMENT OF PUBLIC WORKS

NO.	REVISIONS	DATE	BY
		YY/MM/DD	
		YY/MM/DD	
		YY/MM/DD	
		YY/MM/DD	

CIP NO. SCP0009

INDEX NO.

CITY OF LOS ANGELES

CITY ENGINEER: TED ALLEN, P.E.

DESIGN GROUP		DATE
ENGINEER:		YY/MM/DD
ARCHITECT:	MATT LYSNE	YY/MM/DD
DESIGNED BY:	CARMEN GODINEZ	YY/MM/DD
DRAWN BY:	CARMEN GODINEZ	YY/MM/DD
CHECKED BY:	ALEX SAN DIEGO	YY/MM/DD
APPROVED BY:	MATT LYSNE	YY/MM/DD

PLANS PREPARED BY:
STUDIO-MLA
251 South Mission Road
Los Angeles, CA 90033
T: 213 384-3844 studio-mla.com

WORK ORDER
EW40085F

SHEET NAME
L-002

SHEET 51 OF 80 SHEETS

SHEET VERSION 4.0.1 FILE PATH: P:\TOS 2020-PARKS\CAD\X-LA\TOS2019_VALLEY_COV.DWG PLOT DATE: 12/6/2023 11:56 AM SAVED: 2/8/2022 2:08 PM SAVED BY:CARMEN

TREE INVENTORY

FID	SPP	DBH	COND	TREE PROTECTION
2	Cedrus deodara	14	Good 61-80%	Protect in Place
3	Cedrus deodara	12	Good 61-80%	Protect in Place
4	Cedrus deodara	19	Fair 41-60%	Protect in Place
5	Jacaranda mimosifolia	15	Fair 41-60%	Protect in Place
8	Cedrus deodara	18	Dead 0%	To be Removed
10	Eucalyptus camaldulensis	28	Poor 21-40%	To be Removed per RAP comments made on 7/27/21
12	Albizia julibrissin	4	Good 61-80%	Protect in Place
13	Cedrus deodara	15	Critical 1-20%	To be Removed per RAP comments made on 7/27/21
14	Cedrus deodara	22	Fair 41-60%	To be Removed per RAP comments made on 7/27/21
16	Eucalyptus camaldulensis	26	Fair 41-60%	Protect in Place
17	Cedrus deodara	24	Fair 41-60%	Protect in Place
18	Cedrus deodara	19	Poor 21-40%	Protect in Place
20	Cedrus deodara	19	Fair 41-60%	Protect in Place
22	Cedrus deodara	25	Good 61-80%	Protect in Place
25	Platanus x hispanica	19	Fair 41-60%	Protect in Place
26	Platanus x hispanica	2	Fair 41-60%	Protect in Place
28	Platanus x hispanica	19	Fair 41-60%	Protect in Place
31	Platanus x hispanica	15	Poor 21-40%	Protect in Place
32	Platanus x hispanica	17	Fair 41-60%	Protect in Place
33	Platanus x hispanica	19	Poor 21-40%	Protect in Place
35	Platanus x hispanica	28	Fair 41-60%	Protect in Place
36	Platanus x hispanica	23	Poor 21-40%	Protect in Place
38	Platanus x hispanica	15	Good 61-80%	Protect in Place
39	Platanus x hispanica	18	Fair 41-60%	Protect in Place
40	Jacaranda mimosifolia	21	Fair 41-60%	Protect in Place
41	Jacaranda mimosifolia	27	Fair 41-60%	Protect in Place
42	Albizia julibrissin	3	Good 61-80%	Protect in Place
43	Platanus x hispanica	30	Fair 41-60%	Protect in Place
44	Platanus x hispanica	14	Fair 41-60%	Protect in Place
45	Platanus x hispanica	15	Fair 41-60%	Protect in Place
46	Platanus x hispanica	16	Fair 41-60%	Protect in Place
47	Platanus x hispanica	16	Fair 41-60%	Protect in Place
48	Platanus x hispanica	16	Fair 41-60%	Protect in Place
49	Platanus x hispanica	16	Fair 41-60%	Protect in Place
50	Platanus x hispanica	15	Fair 41-60%	Protect in Place
51	Platanus x hispanica	15	Fair 41-60%	Protect in Place
52	Platanus x hispanica	18	Fair 41-60%	Protect in Place
53	Platanus x hispanica	15	Fair 41-60%	Protect in Place
54	Platanus x hispanica	12	Poor 21-40%	Protect in Place
55	Platanus x hispanica	15	Fair 41-60%	Protect in Place
56	Platanus x hispanica	10	Fair 41-60%	To be Removed
57	Platanus x hispanica	16	Fair 41-60%	To be Removed
58	Platanus x hispanica	14	Fair 41-60%	Protect in Place
59	Araucaria heterophylla	11	Good 61-80%	Protect in Place
60	Platanus x hispanica	30	Good 61-80%	Protect in Place
61	Pinus halepensis	11	Fair 41-60%	To be Removed
62	Pinus halepensis	11	Good 61-80%	Protect in Place
65	Platanus x hispanica	18	Fair 41-60%	Protect in Place
66	Platanus x hispanica	15	Fair 41-60%	Protect in Place
67	Platanus x hispanica	19	Fair 41-60%	Protect in Place
68	Platanus x hispanica	21	Fair 41-60%	Protect in Place
69	Platanus x hispanica	21	Fair 41-60%	Protect in Place
70	Platanus x hispanica	21	Fair 41-60%	Protect in Place
71	Platanus x hispanica	21	Good 61-80%	Protect in Place
72	Platanus x hispanica	18	Fair 41-60%	Protect in Place
73	Platanus x hispanica	21	Fair 41-60%	Protect in Place
74	Platanus x hispanica	25	Fair 41-60%	Protect in Place
78	Eucalyptus camaldulensis	37	Fair 41-60%	Protect in Place
79	Eucalyptus camaldulensis	48	Poor 21-40%	Protect in Place
80	Jacaranda mimosifolia	6	Good 61-80%	Protect in Place
81	Platanus racemosa	4	Good 61-80%	Protect in Place
82	Jacaranda mimosifolia	4	Good 61-80%	Protect in Place
84	Jacaranda mimosifolia	10	Fair 41-60%	Protect in Place
85	Gleditsia triacanthos	1	Fair 41-60%	Protect in Place
86	Jacaranda mimosifolia	23	Fair 41-60%	Protect in Place
88	Melaleuca quinquenervia	11	Good 61-80%	Protect in Place
89	Eucalyptus camaldulensis	31	Fair 41-60%	Protect in Place
90	Eucalyptus camaldulensis	24	Fair 41-60%	Protect in Place
91	Eucalyptus camaldulensis	24	Poor 21-40%	Protect in Place
92	Eucalyptus camaldulensis	28	Fair 41-60%	Protect in Place
93	Eucalyptus camaldulensis	25	Fair 41-60%	Protect in Place
94	Eucalyptus camaldulensis	25	Fair 41-60%	Protect in Place
96	Melaleuca quinquenervia	9	Fair 41-60%	Protect in Place
97	Eucalyptus camaldulensis	39	Fair 41-60%	Protect in Place
98	Eucalyptus spp.	36	Fair 41-60%	Protect in Place
99	Platanus racemosa	32	Fair 41-60%	Protect in Place
100	Chionanthus retusus	13	Fair 41-60%	Protect in Place
104	Melaleuca quinquenervia	13	Good 61-80%	Protect in Place
105	Calocedrus decurrens	12	Fair 41-60%	To be Removed
107	Melaleuca quinquenervia	5	Dead 0%	To be Removed
109	Cedrus deodara	6	Good 61-80%	Protect in Place
110	Cedrus deodara	10	Good 61-80%	Protect in Place
111	Pinus halepensis	11	Good 61-80%	Protect in Place
112	Eucalyptus camaldulensis	27	Fair 41-60%	Protect in Place
113	Pinus canariensis	11	Good 61-80%	Protect in Place
114	Cedrus deodara	12	Good 61-80%	Protect in Place
115	Tipuana tipu	12	Fair 41-60%	Protect in Place
116	Chionanthus retusus	3	Fair 41-60%	Protect in Place
117	Pinus canariensis	15	Good 61-80%	Protect in Place
118	Fraxinus oxycarpa	3	Good 61-80%	Protect in Place
120	Eucalyptus camaldulensis	41	Fair 41-60%	Protect in Place
121	Eucalyptus camaldulensis	41	Fair 41-60%	Protect in Place
122	Albizia julibrissin	3	Good 61-80%	Protect in Place
123	Tipuana tipu	11	Fair 41-60%	Protect in Place
124	Tipuana tipu	9	Fair 41-60%	Protect in Place
129	Liquidambar styraciflua	21	Fair 41-60%	To be Removed
133	Gleditsia triacanthos	3	Good 61-80%	To be Removed
134	Gleditsia triacanthos	5	Fair 41-60%	To be Removed
135	Gleditsia triacanthos	4	Good 61-80%	To be Removed
136	Zelkova serrata	3	Good 61-80%	Protect in Place
137	Zelkova serrata	2	Good 61-80%	Protect in Place
138	Zelkova serrata	2	Good 61-80%	Protect in Place
139	Calocedrus decurrens	7	Fair 41-60%	Protect in Place
140	Tipuana tipu	8	Good 61-80%	To be Removed
141	Pinus torreyana	12	Good 61-80%	To be Removed
142	Cedrus deodara	6	Poor 21-40%	To be Removed
143	Pinus canariensis	12	Fair 41-60%	To be Removed
144	Cedrus deodara	17	Good 61-80%	To be Removed
145	Pinus torreyana	11	Fair 41-60%	To be Removed
147	Pinus canariensis	12	Good 61-80%	To be Removed
148	Pinus torreyana	15	Good 61-80%	To be Removed
150	Cedrus deodara	13	Fair 41-60%	Protect in Place
151	Gleditsia triacanthos	4	Good 61-80%	Protect in Place
152	Gleditsia triacanthos	3	Good 61-80%	Protect in Place
153	Albizia julibrissin	4	Fair 41-60%	Protect in Place
154	Gleditsia triacanthos	4	Good 61-80%	To be Removed
155	Acer x freemanii	26	Critical 1-20%	To be Removed
156	Gleditsia triacanthos	3	Fair 41-60%	To be Removed
158	Pinus torreyana	10	Good 61-80%	To be Removed
159	Pinus torreyana	12	Good 61-80%	To be Removed
160	Tipuana tipu	10	Fair 41-60%	To be Removed
161	Tipuana tipu	10	Poor 21-40%	To be Removed
162	Tipuana tipu	15	Fair 41-60%	Protect in Place
163	Tipuana tipu	16	Fair 41-60%	Protect in Place
164	Tipuana tipu	10	Fair 41-60%	To be Removed
166	Platanus x hispanica	17	Fair 41-60%	To be Removed
167	Pinus thunbergiana	4	Fair 41-60%	Protect in Place
168	Gleditsia triacanthos	3	Good 61-80%	Protect in Place
169	Pinus pinea	10	Good 61-80%	Protect in Place
170	Pinus halepensis	10	Fair 41-60%	Protect in Place
171	Gleditsia triacanthos	5	Good 61-80%	Protect in Place
172	Pinus canariensis	9	Good 61-80%	Protect in Place
173	Sequoia sempervirens	26	Dead 0%	To be Removed
174	Pinus canariensis	7	Fair 41-60%	Protect in Place
182	Tipuana tipu	11	Good 61-80%	Protect in Place
183	Platanus x hispanica	20	Fair 41-60%	Protect in Place
184	Platanus x hispanica	16	Fair 41-60%	Protect in Place
185	Eucalyptus camaldulensis	28	Fair 41-60%	Protect in Place
188	Handroanthus heptaphyllum	1	Good 61-80%	Protect in Place
189	Handroanthus heptaphyllum	2	Good 61-80%	Protect in Place
190	Handroanthus heptaphyllum	3	Fair 41-60%	Protect in Place
191	Handroanthus heptaphyllum	2	Good 61-80%	To be Removed
192	Handroanthus heptaphyllum	1	Good 61-80%	To be Removed
193	Handroanthus heptaphyllum	1	Good 61-80%	To be Removed
194	Handroanthus heptaphyllum	1	Good 61-80%	To be Removed
195	Pinus torreyana	2	Fair 41-60%	Protect in Place
196	Pinus torreyana	1	Good 61-80%	To be Removed
197	Pinus torreyana	1	Good 61-80%	To be Removed
198	Pinus canariensis	9	Good 61-80%	Protect in Place
199	Pinus halepensis	8	Fair 41-60%	Protect in Place
200	Tipuana tipu	15	Fair 41-60%	Protect in Place
201	Pinus halepensis	12	Good 61-80%	To be Removed
202	Platanus x hispanica	10	Fair 41-60%	Protect in Place
203	Eucalyptus camaldulensis	29	Fair 41-60%	Protect in Place

Trees to be removed	38
Sum of DBH of trees removed (does not include "dead" or "critical" trees)	320

TREES TO BE REMOVED: 38
SUM OF DBH (DIAMETER AT BREAST HEIGHT) OF TREES REMOVED: 320
REPLACEMENT TREES NEEDED (48" BOX MINIMUM): 80
REPLACEMENT TREES PROPOSED (48" BOX MINIMUM): 80

SEE PLANTING SHEETS L-700 THRU L-703 FOR TREE REPLACEMENT SIZE AND SPECIES.

TREES MARKED "DEAD" OR "CRITICAL" NOT INCLUDED IN TREE REPLACEMENT MITIGATION.

*TREE #8, 10, 13 AND 14 WERE IDENTIFIED AS "DEAD" ON SITE BY RAP.

TREE PROTECTION SCHEDULE

	DEMOLITION	
SYMBOL	DESCRIPTION	REMARKS
X D-101	EXISTING TREE TO BE REMOVED	DEMOLISH EXISTING TREE
D-102	EXISTING TREE TO REMAIN	SEE TREE PROTECTION SPECIFICATIONS SHEET L-100A

	DEMOLITION	
SYMBOL	DESCRIPTION	REMARKS
D-103	DEMO AREA FOR PAVING IMPROVEMENTS	SALVAGE & REPLACE AT LEAST 24" OF THE EXISTING TOP SOIL IN GALLERY EXCAVATION AREA.
D-104	DEMO AREA FOR TURF REPLACEMENT	SEE TURF AREA NOTES, SHEET L-100B
D-105	TREE PROTECTION FENCE & GATE	SEE DETAIL 1/L-100A
	TREE PROTECTION ZONE	SEE TREE PROTECTION REQUIREMENTS, SHEET L-100A

TREE PROTECTION SPECIFICATIONS

1.01 TREE PROTECTION

I. ALL TREES THAT OCCUR WITHIN THE AREA OF WORK, AS SHOWN ON THE PLANS, AND NOT SPECIFICALLY DESIGNATED FOR REMOVAL, SHALL BE PROTECTED BY THE FOLLOWING MEANS:

A. DETERMINING THE TREE PROTECTION ZONE (TPZ) - THE RADIUS (NOT THE DIAMETER) OF THE TPZ, MEASURED FROM THE OUTSIDE OF THE TREE TRUNK, SHALL BE CALCULATED BY RECREATION AND PARKS (RAP) FORESTRY ACCORDING TO THE FOLLOWING:

1. SINGLE TRUNK TREES - MULTIPLY THE TRUNK DIAMETER IN INCHES, MEASURED 4.5' ABOVE GRADE, BY 1.5 FEET.
2. MULTI TRUNK TREES - MULTIPLY THE SUM OF THE DIAMETERS OF ALL TRUNKS IN INCHES, MEASURED 4.5' ABOVE GRADE, BY 1.5 FEET.
3. PALM TREES - 5' FROM THE BASE OF THE TRUNK.

B. ONCE DETERMINED, THE TPZ IS TO BE CLEARLY SHOWN ON ALL PLANS, INCLUDING CONCEPT PLANS, FOR DISCUSSION PURPOSES, INCLUDING AT THE RAP CAPITAL IMPROVEMENTS MEETINGS.

C. BEYOND THE TPZ, THE CONTRACTOR SHALL ALSO BE RESPONSIBLE FOR PROTECTING ALL TREES WITHIN THE BOUNDARIES OF THE CONSTRUCTION ZONE, INCLUDING VEHICULAR ACCESS AREAS LEADING TO THE CONSTRUCTION ZONE, LAY DOWN AREAS, AND ANY OTHER AREAS IMPACTED BY CONSTRUCTION ACTIVITIES. ANY DAMAGE TO TREES IN THESE AREAS SHALL ALSO BE SUBJECT TO THE SAME MONETARY OR REPLACEMENT REQUIREMENTS SPECIFIED IN SECTION II BELOW. ANY NECESSARY ROOT CUTTING IN THIS AREA MUST BE CONFIRMED WITH EITHER THE RAP OR OTHER APPROVED ARBORIST. SEE ALSO THE GENERAL CONDITIONS FOR ANY DAMAGE DONE BY THE CONTRACTOR TO LANDSCAPING OR OTHER PARK AMENITIES THAT FALL OUTSIDE THE BOUNDARIES OF THE CONSTRUCTION ZONE.

D. WITHIN THE BOUNDARIES OF THE CONSTRUCTION ZONE (INCLUDING THE TPZ), THE CONTRACTOR SHALL BE RESPONSIBLE FOR MITIGATING CONSTRUCTION-RELATED DUST ACCUMULATION ON ALL TREES BY SPRAYING THE TRUNKS, LIMBS, AND FOLIAGE WITH WATER TO A MAXIMUM HEIGHT OF 30 FEET DURING THE MONTHS OF APRIL THROUGH NOVEMBER, AT MONTHLY INTERVALS.

E. WITHIN THE TPZ, THE CONTRACTOR SHALL ADHERE TO THE FOLLOWING REQUIREMENTS, INCLUDING, BUT NOT LIMITED TO:

1. NO STOCKPILING OR STORAGE OF ANY MATERIAL, DEBRIS, OR SOIL.
2. NO STORAGE OF ANY CONSTRUCTION EQUIPMENT.
3. NO VEHICULAR ACCESS.
4. NO CUTTING OF ROOTS.
5. NO DISTURBANCE OF SOIL OR GRADE CHANGES.
6. NO OBJECTS OF ANY KIND TO BE ATTACHED TO TREE TRUNKS.

F. THE CONTRACTOR SHALL INSTALL A 5' HIGH TEMPORARY CHAIN LINK FENCE WITH ONE PEDESTRIAN ACCESS GATE ALONG THE BOUNDARY OF THE TPZ. SEE 5' HIGH TREE PROTECTION FENCE DETAIL AT THE END OF THE DOCUMENT.

G. THE CONTRACTOR SHALL PROVIDE ONE SIGN PER EACH 20 LINEAL FT. OF FENCE BORDERING THE TPZ INDICATING THAT FENCING SHALL NOT BE REMOVED. SEE SIGN DETAIL THAT IS INCLUDED AS PART OF THE TEMPORARY CHAIN LINK DETAIL.

H. NO WORK IS PERMITTED WITHIN THE TPZ WITHOUT THE APPROVAL OF EACH OF THE FOLLOWING: 1) THE PROJECT LANDSCAPE ARCHITECT, 2) THE PROJECT MANAGER, AND 3) RAP FORESTRY STAFF. ANY WORK AUTHORIZED WITHIN THE TPZ MUST BE DONE IN ACCORDANCE WITH THE RECOMMENDATIONS OF A RAP ARBORIST AND UNDER THE SUPERVISION OF A MONITORING ARBORIST. A MONITORING ARBORIST MUST BE: 1) AN ISA CERTIFIED ARBORIST OR A REGISTERED CONSULTING ARBORIST, WITH VERIFIABLE EXPERIENCE IN PROTECTING TREES DURING CONSTRUCTION; 2) APPROVED BY RAP FORESTRY. THE MONITORING ARBORIST SHALL BE HIRED AND PAID BY THE CONTRACTOR.

I. IN TPZ AREAS WHERE EXCAVATION HAS BEEN APPROVED, SPECIAL METHODS MAY BE REQUIRED BY RAP FORESTRY TO AVOID DAMAGE TO TREE ROOTS TO REMAIN OUTSIDE OF THE EXCAVATED AREA, INCLUDING HAND TRENCHING TO IDENTIFY AND SAFELY CUT AFFECTED ROOTS BEFORE MACHINE EXCAVATION IS PERFORMED.

J. IRRIGATION TO ALL TREES NOT SPECIFICALLY DESIGNATED FOR REMOVAL SHALL BE KEPT IN OPERATION FOR THE DURATION OF THE PROJECT. CONTRACTOR SHALL BE RESPONSIBLE FOR HAND WATERING ALL IMPACTED TREES IF NECESSITATED BY TEMPORARY SHUTDOWNS TO EXISTING IRRIGATION SYSTEMS. TREES ARE TO BE IRRIGATED DEEPLY AND INFREQUENTLY SO THAT SOIL MOISTURE IS DETECTABLE AT A MINIMUM DEPTH OF 18" USING A SOIL PROBE.

K. UPON JOB COMPLETION, CONTRACTOR SHALL REMOVE ALL ITEMS INSTALLED TO PROTECT TREES DURING THE CONSTRUCTION PROCESS.

L. ANY OF THE FOLLOWING SOUTHERN CALIFORNIA NATIVE TREE SPECIES FALL UNDER ORDINANCE NO.177404 OF THE LOS ANGELES MUNICIPAL CODE:

1. OAKS, INCLUDING VALLEY OAK (QUERCUS LOBATA), CALIFORNIA LIVE OAK (QUERCUS AGRIFOLIA), OR ANY OTHER TREE OF THE OAK GENUS INDIGENOUS TO CALIFORNIA BUT EXCLUDING SCRUB OAK (QUERCUS DUMOSA);
2. SOUTHERN CALIFORNIA BLACK WALNUT (JUGLANS CALIFORNICA VAR. CALIFORNICA);
3. WESTERN SYCAMORE (PLATANUS RACEMOSA);
4. CALIFORNIA BAY (UMBELLULARIA CALIFORNICA).

CONTRACTOR SHALL COMPLY WITH THE REQUIREMENTS OF THE ORDINANCE FOUND AT: HTTP://CITYPLANNING.LACITY.ORG/CODE_STUDIES/OTHER/PROTECTEDTREEORD.PDF.

II. CONSEQUENCES OF VIOLATING THE TREE PROTECTION SPECIFICATIONS:

A. ANY FAILURE BY THE CONTRACTOR TO ADHERE TO THE REQUIREMENTS SPECIFIED WITHIN THESE SPECIFICATIONS WILL RESULT IN THE SUSPENSION OF ALL CONSTRUCTION ACTIVITIES, TO BE DONE AT THE CONTRACTOR'S EXPENSE. THE CONTRACTOR SHALL BE RESPONSIBLE FOR PAYMENT FOR OR REPLACEMENT OF ANY TREES DAMAGED THROUGH NON-COMPLIANCE WITH THESE SPECIFICATIONS.THE CHOICE OF WHETHER THE DAMAGED TREES ARE REPLACED OR PAID FOR WILL BE DETERMINED BY RAP FORESTRY.

1. MONETARY VALUATIONS FOR DAMAGED TREES WILL BE DETERMINED BY RAP FORESTRY.
2. HOW RAP DETERMINES THE QUANTITY, SPECIES, AND LOCATION OF REPLACEMENT TREES:
   A) MEASURING THE DIAMETER OF THE TREE(S) BEING REPLACED:
      1) FOR SINGLE TRUNK TREES, THE DIAMETER (DBH) IS MEASURED 4.5' ABOVE THE GROUND.
      2) FOR MULTI-TRUNK TREES, THE DBH OF EACH OF THE MULTIPLE TRUNKS IS MEASURED 4.5' ABOVE THE GROUND, THEN ALL ARE SUMMED TO ARRIVE AT A SINGLE DIAMETER VALUE.
   B)THE RATIO OF THE SUM OF CALIPERS (AS DEFINED BY RAP NURSERY SPECIFICATIONS) OF NEW TREES PLANTED VS. THE SUM OF THE DIAMETERS OF EXISTING TREES REMOVED SHALL BE AT LEAST 1:1. THE SPECIFIC NUMBER OF REPLACEMENT TREES WILL BE DETERMINED BY RAP FORESTRY STAFF AND THE PROJECT LANDSCAPE ARCHITECT.
   C) IF THE REPLACEMENT RATIO CANNOT BE ACHIEVED WITHIN THE PROJECT BOUNDARIES, THEN ONE OF THE FOLLOWING SHALL APPLY:
      1)DELIVER THE TREES TO RAP FORESTRY.
      2)DELIVER THE TREES TO THE NEAREST RAP SERVICE YARD.
      3)PLANT THE TREES BEYOND THE PROJECT ON AN APPROVED, AREA-WIDE BASIS.
   D) RAP FORESTRY STAFF AND THE PROJECT LANDSCAPE ARCHITECT SHALL DETERMINE THE REPLACEMENT TREE SPECIES/PLANTING LOCATION AND SHALL ALSO ENSURE THE HEALTH/QUALITY OF THE TREES.

FENCING MATERIALS

1. POSTS: O.D., LINE POSTS 2-3/8 IN. O.D. POST SPACING TO BE 10'-0" MAX. POSTS TO BE DRIVEN 2' BELOW RELATIVE GRADE.
2. FABRIC: 9 GAUGE, 2 IN. MESH, KNUCKLE TOP AND BOTTOM, PLACE ON OUTER SIDE OF POST.
3. TIE WIRES: 11 GAUGE AT 12" O.C.
4. POST TOPS MALLEABLE IRON OR PRESSED STEEL.
5. 24"x18" SIGN. ATTACH WITH TIE WIRES. SIGN TO BE PROVIDED BY RAP. SIGN TO BE WHT LETTERS RED. SIGN TO BE 20 MILS THICK
6. HINGES: INDUSTRIAL BULLDOG HINGE (180 SWING) 2 HINGES PER GATE, ONE TOP AND ONE BOTTOM.
7. GATE FRAME: SIDES, 2-3/8" DIA
8. LOCKABLE CAST ALUMINUM FORK LATCH POST TOPS MALLEABLE IRON OR PRESSED STEEL.

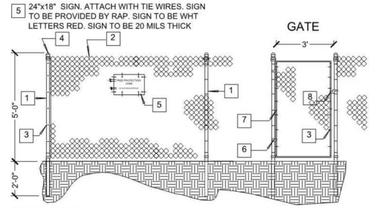

ELEVATION

NOTES:
1. CHAIN LINK FENCE MATERIALS SHALL CONFORM TO THE CHAIN LINK FENCE AND MISCELLANEOUS METAL CONSTRUCTION SECTION OF THE NOTICE TO CONTRACTORS.
2. THE BOTTOM OF THE FABRIC SHALL BE POSITIONED ONE INCH ABOVE FINISH GRADE.
3. PROVIDE FOR ONE 3' WIDE GATE PER ENCLOSURE.
4. ALL FENCING TO HAVE A STANDARD GALVINIZED FINISH

GRIDNO	5' HIGH TREE PROTECTION FENCE	
N.T.S.	REFINFO	RP DETAIL 500.1

1 TREE PROTECTION FENCE
1" = 1'-0" P-VA1-311210-01

STORMWATER MITIGATION
LOW IMAPCT DEVELOPMENT (LID)
APPROVED WITH CONDITIONS

This set of plans and specifications must be at the jobsite during construction

Stormwater Observation Report (SOR) is required prior to issuance of Certificate of Occupancy or final sign off.

Total Pages 48

Digitally Signed By: S. Garcia Date: 12/12/2023
Department of Public Works - Bureau of Sanitation
Watershed Protection Division

PLANS PREPARED BY:
STUDIO-MLA
251 South Mission Road
Los Angeles, California 90033
T: 213.384.3844 studio-mla.com

CITY OF LOS ANGELES DEPARTMENT OF PUBLIC WORKS
BUREAU OF ENGINEERING
ENGINEERING
CITY OF LOS ANGELES

THIS PLAN WAS ELECTRONICALLY • SIGNED AND STAMPED •

LICENSED LANDSCAPE ARCHITECT
JAN DYER
5623
11-30-24
12/6/2023
STATE OF CALIFORNIA

VERTICAL CONTROL:
HORIZONTAL CONTROL:
SHEET TITLE: TREE PROTECTION NOTES AND SCHEDULE
PROJECT: VALLEY VILLAGE PARK STORM WATER CAPTURE PROJECT
ADDRESS: VALLEY VILLAGE PARK 5000 Westpark Dr, North Hollywood, CA 91601

NO.	REVISIONS	DATE	BY
		YY/MM/DD	

INDEX NO.

CITY ENGINEER
TED ALLEN, P.E.
DATE YY/MM/DD

DESIGN GROUP		
ENGINEER:	MATT LYSNE	YY/MM/DD
ARCHITECT:		YY/MM/DD
DESIGNED BY:	CARMEN GODINEZ	YY/MM/DD
DRAWN BY:	CARMEN GODINEZ	YY/MM/DD
CHECKED BY:	ALEX SAN DIEGO	YY/MM/DD
APPROVED BY:	MATT LYSNE	YY/MM/DD

CIP NO. SCP0009

WORK ORDER EW40085F

SHEET NAME L-100A
SHEET 52 OF 80 SHEETS

REVISION DATES (DESIGN STAGE ONLY)

THE CITY OF LOS ANGELES OR ITS OFFICERS OR AGENTS SHALL NOT BE RESPONSIBLE FOR THE ACCURACY OR COMPLETENESS OF ELECTRONIC COPIES OF THIS PLAN SHEET.

TURF PROTECTION AND REPAIR

THE CONSTRUCTION SHALL CONSIST OF TWO PRIMARY STAGES:

STAGE 1: CIVIL CONSTRUCTION OF ALL THE STORMWATER RELATED ELEMENTS AND THE SITE IMPROVEMENTS SHOWN INSIDE THE PRIMARY L.O.W. (I.E. CONSTRUCTION FENCING).

A. DURING THIS STAGE, ALL EXISTING TURF AND LANDSCAPING TO REMAIN OUTSIDE THE PRIMARY CONSTRUCTION AREA (I.E. CONSTRUCTION FENCING) SHALL REMAIN ACCESSIBLE TO THE PUBLIC AND WILL BE MAINTAINED BY THE PARKS DEPARTMENT STAFF. DURING THIS PERIOD THE CONTRACTOR SHALL NOT INTERRUPT THE EXISTING IRRIGATION WATER SUPPLY TO THESE AREAS AND SHALL ASSURE THE EXISTING CONTROL SYSTEM REMAINS IN OPERATION. ANY DISRUPTION TO IRRIGATION IN THESE AREAS THAT CAUSES DAMAGE TO THE EXISTING TURF HEALTH OR COVERAGE WILL BE REPAIRED AT THE CONTRACTOR'S EXPENSE BY OVERSEEDING WITH A SEED MIX OF SIMILAR COMPOSITION AS THE TURF TO BE REPAIRED/REPLACED, AND FERTILIZED WITH A BALANCED LONG-RELEASE TURF FERTILIZER.

B. THE NEW IRRIGATION AND PLANTING WORK INSIDE THE PRIMARY WORK AREA MAY BE INCLUDED IN THIS STAGE AT THE CONTRACTOR'S DISCRETION.

C. INSIDE THE PRIMARY L.O.W., AREAS OF EXISTING TURF TO BE RETAINED DURING CONSTRUCTION SHALL BE IRRIGATED AND MAINTAINED BY THE CONTRACTOR AS NEEDED. AFTER THE COMPLETION OF PRIMARY CONSTRUCTION, ANY EXISTING TURF AREAS WHICH ARE DEAD OR DAMAGED BY CONSTRUCTION ACTIVITY (INCLUDING ANY AREAS USED FOR PARKING, STORAGE, LAYDOWN, IRRIGATION TRENCHING, ETC.) MUST BE REPLACED WITH THE SOD SPECIFIED AFTER THE AREA HAS BEEN DE-COMPACTED TO THE SATISFACTION OF THE ENGINEER AND AMENDED PER THE LANDSCAPE PLANTING SPECIFICATIONS. ANY AREAS OF EXISTING TURF REMAINING WITH BARE AREAS LARGER THAN 12" X 12" SHALL BE REPAIRED BY OVERSEEDING. DEAD OR BARE AREAS LARGER THAN 36" X 36" SHALL BE REPAIRED WITH SOD. AT COMPLETION OF THE MAINTENANCE AND ESTABLISHMENT PERIOD (SEE LANDSCAPE PLANTING SPECIFICATIONS), A FULL, HEALTHY AND CONTINUOUS COVER OF TURF IS EXPECTED.

D. ALL TURF AREAS DAMAGED OR REMOVED BY CONSTRUCTION ACTIVITY SHALL BE DE-COMPACTED (IF OUTSIDE OF EXCAVATION LIMITS) AND AMENDED PER THE LANDSCAPE PLANTING SPECIFICATIONS, THEN PLANTED WITH SOD AS SPECIFIED IN THE PLANTING LEGEND.

STAGE 2: DURING THIS STAGE (AFTER SUBSTANTIAL COMPLETION OF STAGE 1), ADDITIONAL SITE AND IRRIGATION IMPROVEMENTS OUTSIDE THE PRIMARY L.O.W. (SEE IRRIGATION PLANS) SHALL BE COMPLETED IN THE REMAINDER OF THE PARK AREA AS INDICATED ON THE PLANS. ANY AREAS OF EXISTING TURF DAMAGED BY CONSTRUCTION OR IRRIGATION TRENCHING SHALL BE REPAIRED AT THE CONTRACTOR'S EXPENSE BY OVERSEEDING WITH A SEED MIX OF SIMILAR COMPOSITION AS THE TURF TO BE REPLACED, AND FERTILIZED WITH A BALANCED LONG-RELEASE TURF FERTILIZER.

TREE DEMOLITION NOTES

1. CONTRACTOR TO TAG TREES DESIGNATED FOR DEMO PER PLAN AND REVIEW WITH LANDSCAPE ARCHITECT AND CONSTRUCTION MANAGER PRIOR TO EXECUTION.
2. TREE SIZE NOTED IS APPROXIMATE, VERIFY ACTUAL TREE AND PALM HEIGHTS IN FIELD.

DEMOLITION NOTES

1. LOCATE ALL UTILITIES PRIOR TO COMMENCING DEMOLITION WORK. CALL DIG-ALERT (800) 422-4133 A MINIMUM OF TWO (2) WORKING DAYS BEFORE PROJECTED START OF DEMOLITION.

2. DRAWING IS DIAGRAMMATIC - VERIFY ALL EXISTING CONDITIONS, QUANTITIES AND LOCATIONS ON SITE. A SITE VISIT IS REQUIRED BEFORE BIDDING DEMOLITION.

3. EXECUTE WORK AS TO PROTECT ADJACENT PROPERTY, BUILDINGS, PLANT MATERIAL, ETC.

4. PROTECT AND MAINTAIN EXISTING ACTIVE UTILITIES THROUGHOUT THE DEMOLITION PERIOD. ANY UTILITY WHICH IS DAMAGED OR BROKEN SHALL BE REPAIRED AT NO COST TO THE OWNER.

5. CONTRACTOR SHALL REPAIR AT THEIR OWN EXPENSE ANY PROPERTY DAMAGE RESULTING FROM CARELESS DEMOLITION.

6. MAINTAIN A NEAT AND ORDERLY WORK AREA. REMOVE ALL DEBRIS PROMPTLY FROM JOB SITE. CONTRACTOR IS RESPONSIBLE FOR ALL REMOVAL AND DISPOSAL FEES.

7. PRIOR TO PLANT REMOVAL, WALK SITE WITH LANDSCAPE ARCHITECT AND/OR RAP MAINTENANCE, FORESTRY & PLANNING STAFF TO VERIFY PLANTS WHICH ARE TO BE SAVED AND/OR RELOCATED AND THOSE SCHEDULED FOR DISPOSAL.

8. AREAS WHERE EXISTING LAWN IS TO BE REPLACED ARE TO BE TREATED WITH A PRE-EMERGENT WEED KILLER (EPTAM / RONSTAR) PRIOR TO REMOVAL OF OLD LAWN. FOLLOW MANUFACTURER'S INSTRUCTIONS CAREFULLY. WATER AND WAIT A MINIMUM OF THREE (3) WEEKS TO ASSURE A "GOOD KILL".

9. WHERE EXISTING ASPHALT IS REMOVED FOR PLANTING, CONSULT A HORTICULTURAL SUITABILITY REPORT AND RECOMMENDATIONS RE EXISTING SOIL THAT IS TO BE REMOVED TO A DEPTH OF 12" AND REPLACED WITH GOOD QUALITY TOP SOIL.

10. DO NOT REMOVE ANY ITEM IF IT IS NOT SPECIFICALLY CALLED OUT FOR DEMOLITION ON THE PLAN. CONTACT VIA AN RFI CONSTRUCTION MANAGER AND LANDSCAPE ARCHITECT IF THERE ARE QUESTIONS.

STORMWATER MITIGATION
LOW IMAPCT DEVELOPMENT (LID)
APPROVED WITH CONDITIONS

This set of plans and specifications must be at the jobsite during construction

Stormwater Observation Report (SOR) is required prior to issuance of Certificate of Occupancy or final sign off.

Total Pages 48

Digitally Signed By: S. Garcia Date: 12/12/2023
Department of Public Works - Bureau of Sanitation
Watershed Protection Division

PLANS PREPARED BY:
STUDIO-MLA
251 South Mission Road
Los Angeles, California 90033
T: 213 384-3844 studio-mla.com

CITY OF LOS ANGELES DEPARTMENT OF PUBLIC WORKS
BUREAU OF ENGINEERING

ENGINEERING
CITY OF LOS ANGELES

LICENSED LANDSCAPE ARCHITECT
JAN DYER
5623
11-30-24
12/6/2023
STATE OF CALIFORNIA

THIS PLAN WAS ELECTRONICALLY SIGNED AND STAMPED

VERTICAL CONTROL:
HORIZONTAL CONTROL:
SHEET TITLE: TREE PROTECTION NOTES
PROJECT: VALLEY VILLAGE PARK STORM WATER CAPTURE PROJECT
ADDRESS: VALLEY VILLAGE PARK 5000 Westpark Dr, North Hollywood, CA 91601

NO.	REVISIONS	DATE	BY
		YY/MM/DD	
		YY/MM/DD	
		YY/MM/DD	
		YY/MM/DD	

CIP NO. SCP0009

INDEX NO.

CITY ENGINEER
TED ALLEN, P.E.
DATE YY/MM/DD

DESIGN GROUP		DATE
ENGINEER:	MATT LYSNE	YY/MM/DD
ARCHITECT:	MATT LYSNE	YY/MM/DD
DESIGNED BY:	CARMEN GODINEZ	YY/MM/DD
DRAWN BY:	CARMEN GODINEZ	YY/MM/DD
CHECKED BY:	ALEX SAN DIEGO	YY/MM/DD
APPROVED BY:	MATT LYSNE	YY/MM/DD

WORK ORDER
EW40085F

SHEET NAME
L-100B
SHEET 53 OF 80 SHEETS

REVISION DATES (DESIGN STAGE ONLY)

THE CITY OF LOS ANGELES OR ITS OFFICERS OR AGENTS SHALL NOT BE RESPONSIBLE FOR THE ACCURACY OR COMPLETENESS OF ELECTRONIC COPIES OF THIS PLAN SHEET.

THE CITY OF LOS ANGELES OR IT'S OFFICERS OR AGENTS SHALL NOT BE RESPONSIBLE FOR THE ACCURACY OR COMPLETENESS OF ELECTRONIC COPIES OF THIS PLAN SHEET.

HOLLYWOOD FREEWAY

PROTECT IRRIGATION SYSTEM TO REMAIN, TYP.

D-105

D-104

TYP D-102

EXISTING TREE TRUNK, TYP,

EXISTING TREE CANOPY, TYP,

EXISTING TURF TO REMAIN, TYP.

D-103

EXISTING D.G. PATHWAY & FLUSH CURB TO REMAIN, TYP.

EXISTING CONCRETE SIDEWALK TO REMAIN, TYP.

EXISTING TURF TO REMAIN, TYP.

EXISTING TURF TO REMAIN, TYP.

EXISTING TURF TO REMAIN, TYP.

D-102 TYP.

OTSEGO STREET

WESTPARK DRIVE

HESBY ST

MATCH LINE - SEE SHEET L-102

TREE PROTECTION SCHEDULE		
	DEMOLITION	
SYMBOL	DESCRIPTION	REMARKS
D-101	EXISTING TREE TO BE REMOVED	DEMOLISH EXISTING TREE
D-102	EXISTING TREE TO REMAIN	SEE TREE PROTECTION SPECIFICATIONS SHEET L-100A
	DEMOLITION	
SYMBOL	DESCRIPTION	REMARKS
D-103	DEMO AREA FOR PAVING IMPROVEMENTS	SALVAGE & REPLACE AT LEAST 24" OF THE EXISTING TOP SOIL IN GALLERY EXCAVATION AREA.
D-104	DEMO AREA FOR TURF REPLACEMENT	SEE TURF AREA NOTES, SHEET L-100B
D-105	TREE PROTECTION FENCE & GATE	SEE DETAIL 1/L-100A
	TREE PROTECTION ZONE	SEE TREE PROTECTION REQUIREMENTS, SHEET L-100A

NOTE:
SEE CIVIL PLANS FOR IRRIGATION DEMOLITION NOTES.

STORMWATER MITIGATION
LOW IMAPCT DEVELOPMENT (LID)
APPROVED WITH CONDITIONS

This set of plans and specifications must be at the jobsite during construction

Stormwater Observation Report (SOR) is required prior to issuance of Certificate of Occupancy or final sign off.

Total Pages 48

Digitally Signed By: S. Garcia Date: 12/12/2023
Department of Public Works - Bureau of Sanitation
Watershed Protection Division

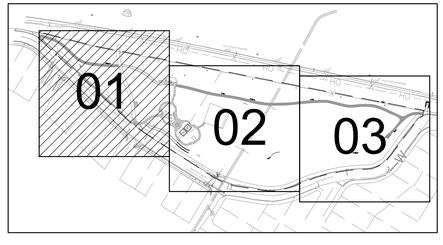

KEY MAP

Scale : 1" = 20'-0"

PLANS PREPARED BY:
STUDIO-MLA
251 South Mission Road
Los Angeles, California 90033
T (213) 384-3844 studio-mla.com

CITY OF LOS ANGELES DEPARTMENT OF PUBLIC WORKS
BUREAU OF ENGINEERING

ENGINEERING
CITY OF LOS ANGELES

LICENSED LANDSCAPE ARCHITECT
JAN DYER
5623
11-30-24
12/6/2023
STATE OF CALIFORNIA

THIS PLAN WAS ELECTRONICALLY • SIGNED AND STAMPED

VERTICAL CONTROL: VERTICAL CONTROL
HORIZONTAL CONTROL: HORIZONTAL CONTROL

SHEET TITLE: TREE PROTECTION PLAN - SHEET 1
PROJECT: VALLEY VILLAGE PARK STORM WATER CAPTURE PROJECT
ADDRESS: VALLEY VILLAGE PARK
5000 Westpark Dr, North Hollywood, CA 91601

NO.	REVISIONS	DATE	BY
		YY/MM/DD	
		YY/MM/DD	
		YY/MM/DD	
		YY/MM/DD	

CIP NO.
SCP0009

INDEX NO.

CITY ENGINEER: TED ALLEN, P.E. DATE YY/MM/DD

DESIGN GROUP		
ENGINEER:	MATT LYSNE	YY/MM/DD
ARCHITECT:	MATT LYSNE	YY/MM/DD
DESIGNED BY:	CARMEN GODINEZ	YY/MM/DD
DRAWN BY:	CARMEN GODINEZ	YY/MM/DD
CHECKED BY:	ALEX SAN DIEGO	YY/MM/DD
APPROVED BY:	MATT LYSNE	YY/MM/DD

WORK ORDER
EW40085F

SHEET NAME
L-101
SHEET 54 OF 80 SHEETS

REVISION DATES (DESIGN STAGE ONLY)

EXISTING TREE TRUNK, TYP.
EXISTING TREE CANOPY, TYP.
CAREFULLY DEMO TURF UNDERSTORY FOR TREES WITHIN PROTECTION FENCING
EXISTING TURF TO REMAIN, TYP.
EXISTING D.G. PATHWAY & FLUSH CURB TO REMAIN, TYP.
EXISTING CONCRETE SIDEWALK TO REMAIN, TYP.
EXISTING TURF TO REMAIN, TYP.
EXISTING TURF TO REMAIN, TYP.
EXISTING TURF TO REMAIN, TYP.
REMOVE EXISTING UNDERSTORY PLANTINGS, WEEDS, CONSTRUCTION DEBRIS WITHIN LIMITS OF WORK, TYP.
SEE CIVIL PLANS FOR HARDSCAPE DEMOLITION
ALL APPROVED WORK INSIDE THE TPZ TO FOLLOW THE REQUIREMENTS FOR HAND TRENCHING AND ARBORIST MONITORING. SEE TREE PROTECTION SPECIFICATIONS, L-100A
WESTPARK DRIVE
MATCH LINE - SEE SHEET L-101
MATCH LINE - SEE SHEET L-103
D-101
D-102 TYP.
D-103
D-104
D-105

STORMWATER MITIGATION
LOW IMPACT DEVELOPMENT (LID)
APPROVED WITH CONDITIONS

This set of plans and specifications must be at the jobsite during construction

Stormwater Observation Report (SOR) is required prior to issuance of Certificate of Occupancy or final sign off.

Total Pages 48

Digitally Signed By: S. Garcia Date: 12/12/2023
Department of Public Works · Bureau of Sanitation
Watershed Protection Division

TREE PROTECTION SCHEDULE

	DEMOLITION	
SYMBOL	DESCRIPTION	REMARKS
D-101	EXISTING TREE TO BE REMOVED	DEMOLISH EXISTING TREE
D-102	EXISTING TREE TO REMAIN	SEE TREE PROTECTION SPECIFICATIONS SHEET L-100A

	DEMOLITION	
SYMBOL	DESCRIPTION	REMARKS
D-103	DEMO AREA FOR PAVING IMPROVEMENTS	SALVAGE & REPLACE AT LEAST 24" OF THE EXISTING TOP SOIL IN GALLERY EXCAVATION AREA.
D-104	DEMO AREA FOR TURF REPLACEMENT	SEE TURF AREA NOTES, SHEET L-100B
D-105	TREE PROTECTION FENCE & GATE	SEE DETAIL 1/L-100A
	TREE PROTECTION ZONE	SEE TREE PROTECTION REQUIREMENTS, SHEET L-100A

NOTE:
SEE CIVIL PLANS FOR IRRIGATION DEMOLITION NOTES.

KEY MAP

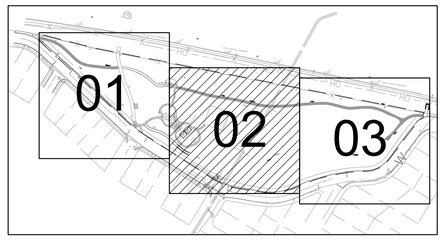

Scale : 1" = 20'-0"

PLANS PREPARED BY:
STUDIO-MLA
251 South Mission Road
Los Angeles, California 90033
T: 213 384-3844 studio-mla.com

CITY OF LOS ANGELES DEPARTMENT OF PUBLIC WORKS
BUREAU OF ENGINEERING

ENGINEERING
CITY OF LOS ANGELES

LICENSED LANDSCAPE ARCHITECT
JAN DYER
5623
11-30-24
12/6/2023
STATE OF CALIFORNIA

THIS PLAN WAS ELECTRONICALLY • SIGNED AND STAMPED

VERTICAL CONTROL:
HORIZONTAL CONTROL:
SHEET TITLE: TREE PROTECTION PLAN - SHEET 2
PROJECT: VALLEY VILLAGE PARK STORM WATER CAPTURE PROJECT
ADDRESS: VALLEY VILLAGE PARK
5000 Westpark Dr, North Hollywood, CA 91601

NO.	REVISIONS	DATE	BY
		YY/MM/DD	
		YY/MM/DD	
		YY/MM/DD	
		YY/MM/DD	

CIP NO. SCP0009

INDEX NO.

CITY ENGINEER
DESIGN GROUP
TED ALLEN, P.E.

		DATE
ENGINEER:	MATT LYSNE	YY/MM/DD
ARCHITECT:	MATT LYSNE	YY/MM/DD
DESIGNED BY:	CARMEN GODINEZ	YY/MM/DD
DRAWN BY:	CARMEN GODINEZ	YY/MM/DD
CHECKED BY:	ALEX SAN DIEGO	YY/MM/DD
APPROVED BY:	MATT LYSNE	YY/MM/DD

WORK ORDER
EW40085F

SHEET NAME
L-102
SHEET 55 OF 80 SHEETS

THE CITY OF LOS ANGELES OR ITS OFFICERS OR AGENTS SHALL NOT BE RESPONSIBLE FOR THE ACCURACY OR COMPLETENESS OF ELECTRONIC COPIES OF THIS PLAN SHEET.

REVISION DATES (DESIGN STAGE ONLY)

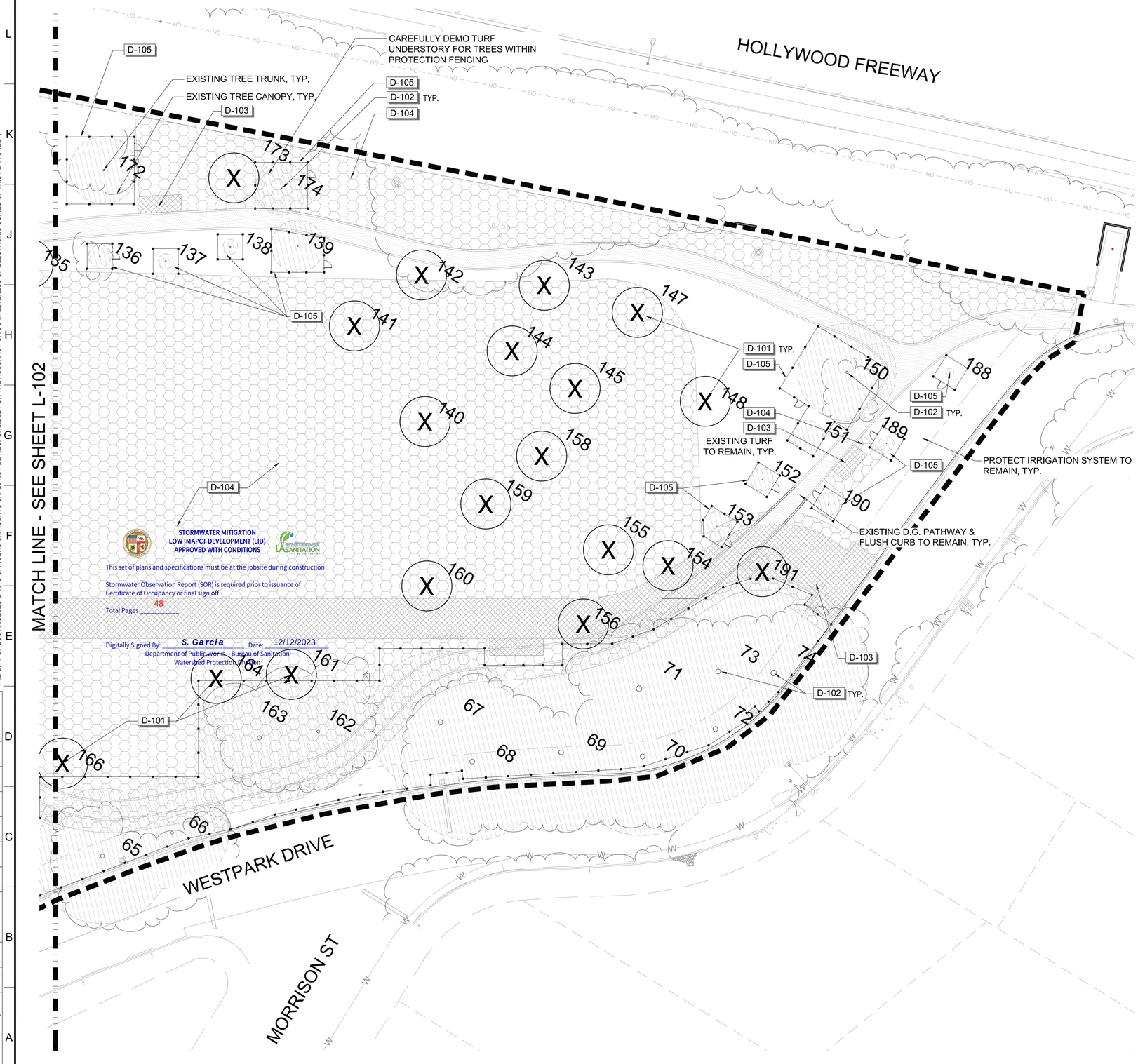

STORMWATER MITIGATION
LOW IMAPCT DEVELOPMENT (LID)
APPROVED WITH CONDITIONS

This set of plans and specifications must be at the jobsite during construction

Stormwater Observation Report (SOR) is required prior to issuance of Certificate of Occupancy or final sign off.

Total Pages 48

Digitally Signed By: S. Garcia Date: 12/12/2023
Department of Public Works - Bureau of Sanitation
Watershed Protection Division

TREE PROTECTION SCHEDULE

SYMBOL	DESCRIPTION	REMARKS
	DEMOLITION	
D-101	EXISTING TREE TO BE REMOVED	DEMOLISH EXISTING TREE
D-102	EXISTING TREE TO REMAIN	SEE TREE PROTECTION SPECIFICATIONS SHEET L-100A

SYMBOL	DESCRIPTION	REMARKS
	DEMOLITION	
D-103	DEMO AREA FOR PAVING IMPROVEMENTS	SALVAGE & REPLACE AT LEAST 24" OF THE EXISTING TOP SOIL IN GALLERY EXCAVATION AREA.
D-104	DEMO AREA FOR TURF REPLACEMENT	SEE TURF AREA NOTES, SHEET L-100B
D-105	TREE PROTECTION FENCE & GATE	SEE DETAIL 1/L-100A
	TREE PROTECTION ZONE	SEE TREE PROTECTION REQUIREMENTS, SHEET L-100A

NOTE:
SEE CIVIL PLANS FOR IRRIGATION DEMOLITION NOTES.

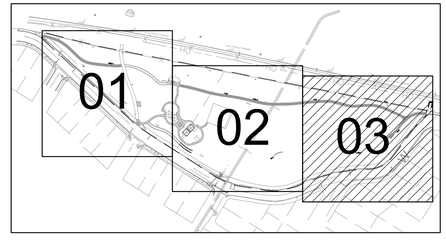

KEY MAP

Scale : 1" = 20'-0"

PLANS PREPARED BY:
STUDIO-MLA
251 South Mission Road
Los Angeles, California 90033
T: 213 384-3844 studio-mla.com

THE CITY OF LOS ANGELES OR ITS OFFICERS OR AGENTS SHALL NOT BE RESPONSIBLE FOR THE ACCURACY OR COMPLETENESS OF ELECTRONIC COPIES OF THIS PLAN SHEET.

REVISION DATES (DESIGN STAGE ONLY)

ENGINEERING
CITY OF LOS ANGELES

LICENSED LANDSCAPE ARCHITECT
JAN DYER
5623
11-30-24
12/6/2023
STATE OF CALIFORNIA

THIS PLAN WAS ELECTRONICALLY SIGNED AND STAMPED

BUREAU OF ENGINEERING

VERTICAL CONTROL: VERTICAL CONTROL
HORIZONTAL CONTROL: HORIZONTAL CONTROL

SHEET TITLE: TREE PROTECTION PLAN - SHEET 3

PROJECT: VALLEY VILLAGE PARK STORM WATER CAPTURE PROJECT

ADDRESS: VALLEY VILLAGE PARK
5000 Westpark Dr, North Hollywood, CA 91601

CIP NO. SCP0009

INDEX NO.

NO.	REVISIONS	DATE	BY
		YY/MM/DD	
		YY/MM/DD	
		YY/MM/DD	
		YY/MM/DD	

CITY OF LOS ANGELES DEPARTMENT OF PUBLIC WORKS

TED ALLEN, P.E.

	DESIGN GROUP	CITY ENGINEER	DATE
ENGINEER:			YY/MM/DD
ARCHITECT:	MATT LYSNE		YY/MM/DD
DESIGNED BY:	CARMEN GODINEZ		YY/MM/DD
DRAWN BY:	CARMEN GODINEZ		YY/MM/DD
CHECKED BY:	ALEX SAN DIEGO		YY/MM/DD
APPROVED BY:	MATT LYSNE		YY/MM/DD

WORK ORDER
EW40085F

SHEET NAME
L-103

SHEET 56 OF 80 SHEETS

SHEET VERSION 4.0.1 FILE PATH: P:\TOS 2020-PARKS\CAD\X-LA\TOS2019_VALLEY_DEM.DWG PLOT DATE: 12/6/2023 11:58 AM SAVED: 2/17/2022 3:07 PM SAVED BY:ALEX

LANDSCAPE CONSTRUCTION NOTES

1. DRAWING IS DIAGRAMMATIC. VERIFY ALL CONDITIONS AND LOCATIONS ON SITE PRIOR TO THE START OF CONSTRUCTION. NOTIFY PROJECT MANAGER IMMEDIATELY IF ANY ERRORS OR DISCREPANCIES ARE FOUND, BEFORE PROCEEDING WITH ANY WORK.
2. DO NOT SCALE DRAWINGS. USE DIMENSIONS AS INDICATED ON PLAN.
3. DO NOT WILLFULLY PROCEED WITH CONSTRUCTION WHEN IT IS OBVIOUS THAT OBSTRUCTIONS AND/OR GRADE DIFFERENCES EXIST THAT MAY NOT HAVE BEEN APPARENT DURING DESIGN. OBTAIN DIRECTION FROM PROJECT MANAGER BEFORE PROCEEDING WITH CONSTRUCTION IN SUCH CASES.
4. THE LOCATION OF ALL SERVICE RUNS, SUCH AS WATER SUPPLY, ELECTRICAL (OVERHEAD AND UNDERGROUND), TELEPHONE, SANITARY SEWER, ETC. SHOULD BE ASCERTAINED BEFORE WORK IS STARTED. WHERE THEY WILL BE AFFECTED BY EXCAVATION OR WHERE MACHINES MAY BE WORKING NEARBY, THEY SHOULD BE CAREFULLY SEALED, PROTECTED, OR DIVERTED. NOTIFY PROJECT MANAGER OF ANY CONFLICT WITH PROPOSED IMPROVEMENTS.
5. COORDINATE ALL UTILITY RUNS AND INSTALLATIONS (EXISTING AND NEW) PRIOR TO PAVING INSTALLATION. VERIFY ALL SLEEVES AND ELECTRIC SOURCES FOR IRRIGATION CLOCK AND LIGHTING WITH PROPER SUB-CONTRACTORS.
6. OBTAIN INSPECTION AND APPROVAL OF ALL FORMS PRIOR TO PLACING CONCRETE PER PROJECT MANAGER AND COORDINATE WITH BCA INSPECTOR.
7. TRANSITIONS FROM EXISTING PAVING TO NEW PAVING SHALL BE FLUSH.
8. REFER TO CIVIL PLANS, SPECIFICATIONS AND GENERAL NOTES FOR ADDITIONAL INFORMATION REGARDING THE CONSTRUCTION OF THIS PROJECT.
9. CONSTRUCT ALL WALLS, PAVING, DRAIN LINES, SLEEVING, ETC. PER PLAN AND DETAILS.
10. INSTALL EXPANSION JOINTS PER DETAIL WHERE INDICATED. INSTALL CONTROL JOINTS PER DETAIL WHERE INDICATED AT MAX. 12'-0". ZIP JOINTS WILL NOT BE ALLOWED. INSTALL EJ'S AND CCJ'S AT 90° TO THE EDGE OF CONCRETE PAVING. SEE PLAN FOR ADDITIONAL INFORMATION AND LOCATIONS. SEE DETAIL SHEET L-502.
11. SUBGRADE PREPARATION SHALL BE PER THE APPROVED SOILS REPORT.
12. CLEAN UP AND REMOVE ALL DEBRIS FROM SITE PRIOR TO REQUESTING FINAL APPROVAL. GRADE ALL AREAS WITHIN .5 INCH OF FINISH GRADES. NOTE AREAS OF ADDITIONAL GRADING SHOWN.
13. LAYOUT OF ALL PATHS, WALKS, AND SITE ELEMENTS SHALL BE APPROVED BY THE PROJECT MANAGER OR HIS DESIGNEE PRIOR TO INSTALLATION. SEE CIVIL PLANS FOR LAYOUT INFORMATION.

CONSTRUCTION SCHEDULE

	EDGING						
SYMBOL	DESCRIPTION	DETAIL	MATERIAL	FINISH	COLOR	MANUFACTURER	REMARKS
E-101	C.I.P CONCRETE MOW STRIP	3/L-502	C.I.P. CONCRETE	BROOM	NATURAL GRAY	-	8" WIDE BY 8" DEEP MIN.
	FENCE						
SYMBOL	DESCRIPTION	DETAIL	MATERIAL	FINISH	COLOR	MANUFACTURER	REMARKS
F-101	ELECTRICAL PANEL ENCLOSURE WITH TOP COVER	1/L-502	CHAIN LINK MESH	VINYL COATING	BLACK	-	SEE SPECIFICATIONS
F-102	BOOSTER PUMP ENCLOSURE WITH TOP COVER	5/L-503	CHAIN LINK MESH	VINYL COATING	BLACK	-	SEE SPECIFICATIONS. INSTALL BOOSTER PUMP PER MANUFACTURER`S RECOMMENDATIONS
	PAVING						
SYMBOL	DESCRIPTION	DETAIL	MATERIAL	FINISH	COLOR	MANUFACTURER	REMARKS
P-101	C.I.P. CONCRETE PAVING	5/L-502	INTEGRAL COLOR C.I.P. CONCRETE	TOPCAST 25	OMAHA TAN	DAVIS COLORS	JOINTING PER PLANS
P-102	GRASS SURFACE PAVERS	4/L-503	PRECAST CONCRETE	PER MANUFACTURER	NATURAL GRAY	GRASSCRETE #GC2 OR APPROVED EQUAL	INSTALL PER MANUFACTURER`S GUIDELINES
P-103	STABILIZED DECOMPOSED GRANITE	6/L-502	STABILIZED DECOMPOSED GRANITE	COMPACTED IN PLACE	GOLD. VERIFY WITH SAMPLE	GAIL MATERIALS	WITH ORGANIC-LOCK STABILIZER, MIXED BY SUPPLIER
P-104	GRASSCRETE WITH DECOMPOSED GRANITE	6/L-501	PRECAST CONCRETE WITH DECOMPOSED GRANITE	PER MANUFACTURER	NATURAL GRAY (CONCRETE), GOLD (DG)	GRASSCRETE #GC2 OR APPROVED EQUAL, GAIL MATERIALS	
	SITE FURNISHING						
SYMBOL	DESCRIPTION	DETAIL	MODEL/MATERIAL	FINISH	COLOR	MANUFACTURER	REMARKS
S-101	DRINKING FOUNTAIN	1/L-503	GYQ85-IAP-RAP-PF	POWDERCOAT PER MANUFACTURER	TEXTURED FAIRWAY GREEN EG-27	MURDOCK	INCLUDES IN-GROUND ANCHOR PLATE AND PET FOUNTAIN OPTIONS
S-102	LITTER RECEPTACLE	3/L-503	#RE3D-55	PER MANUFACTURER	EVERGREEN 39/50060	KEYSTONE RIDGE DESIGNS	INSTALL PER MANUFACTURER RECOMMENDATIONS. WITH SIDE ACCESS DOOR W/ LOCKING TABS, SURFACE MOUNT, FLAT LID, NO LINER
S-103	STEEL BENCH - TYPE I	4/L-502	SCARBOROUGH BENCH	POWDERCOAT PER MANUFACTURER	IVY	LANDSCAPE FORMS	BACKED 72" WITH CENTER ARM, SURFACE MOUNT
S-104	STEEL BENCH - TYPE II	4/L-502	SCARBOROUGH BENCH	POWDERCOAT PER MANUFACTURER	IVY	LANDSCAPE FORMS	BACKED 24", SURFACE MOUNTED
S-105	EDUCATIONAL SIGNAGE	2/L-503	CANTILEVER PEDESTAL	POWDERCOAT PER MANUFACTURER	GREEN TEXTURE	FOSSIL INDUSTRIES OR APPROVED EQUAL	INSTALL PER MANUFACTURER RECOMMENDATIONS. FINAL SIGNAGE DETAILS WILL BE PROVIDED BY THE PROJECT MANAGER.

STORMWATER MITIGATION
LOW IMAPCT DEVELOPMENT (LID)
APPROVED WITH CONDITIONS

This set of plans and specifications must be at the jobsite during construction

Stormwater Observation Report (SOR) is required prior to issuance of Certificate of Occupancy or final sign off.

Total Pages 48

Digitally Signed By: S. Garcia Date: 12/12/2023
Department of Public Works - Bureau of Sanitation
Watershed Protection Division

PLANS PREPARED BY:
STUDIO-MLA
251 South Mission Road
Los Angeles, California 90033
T: (213) 384-3844 studio-mla.com

THIS PLAN WAS ELECTRONICALLY SIGNED AND STAMPED

LICENSED LANDSCAPE ARCHITECT
JAN DYER
5623
11-30-24
12/6/2023
STATE OF CALIFORNIA

ENGINEERING
CITY OF LOS ANGELES

BUREAU OF ENGINEERING
VERTICAL CONTROL:
HORIZONTAL CONTROL:
SHEET TITLE: CONSTRUCTION NOTES AND SCHEDULE
PROJECT: VALLEY VILLAGE PARK STORM WATER CAPTURE PROJECT
ADDRESS: VALLEY VILLAGE PARK 5000 Westpark Dr, North Hollywood, CA 91601

CITY OF LOS ANGELES DEPARTMENT OF PUBLIC WORKS
CITY ENGINEER: TED ALLEN, P.E. DATE YY/MM/DD

	DESIGN GROUP	DATE
ENGINEER:		YY/MM/DD
ARCHITECT:	MATT LYSNE	YY/MM/DD
DESIGNED BY:	CARMEN GODINEZ	YY/MM/DD
DRAWN BY:	CARMEN GODINEZ	YY/MM/DD
CHECKED BY:	ALEX SAN DIEGO	YY/MM/DD
APPROVED BY:	MATT LYSNE	YY/MM/DD

NO.	REVISIONS	BY	DATE
			YY/MM/DD
			YY/MM/DD
			YY/MM/DD

CIP NO. SCP0009

INDEX NO.

WORK ORDER EW40085F

SHEET NAME L-200

SHEET 57 OF 80 SHEETS

REVISION DATES (DESIGN STAGE ONLY)

THE CITY OF LOS ANGELES OR IT'S OFFICERS OR AGENTS SHALL NOT BE RESPONSIBLE FOR THE ACCURACY OR COMPLETENESS OF ELECTRONIC COPIES OF THIS PLAN SHEET.

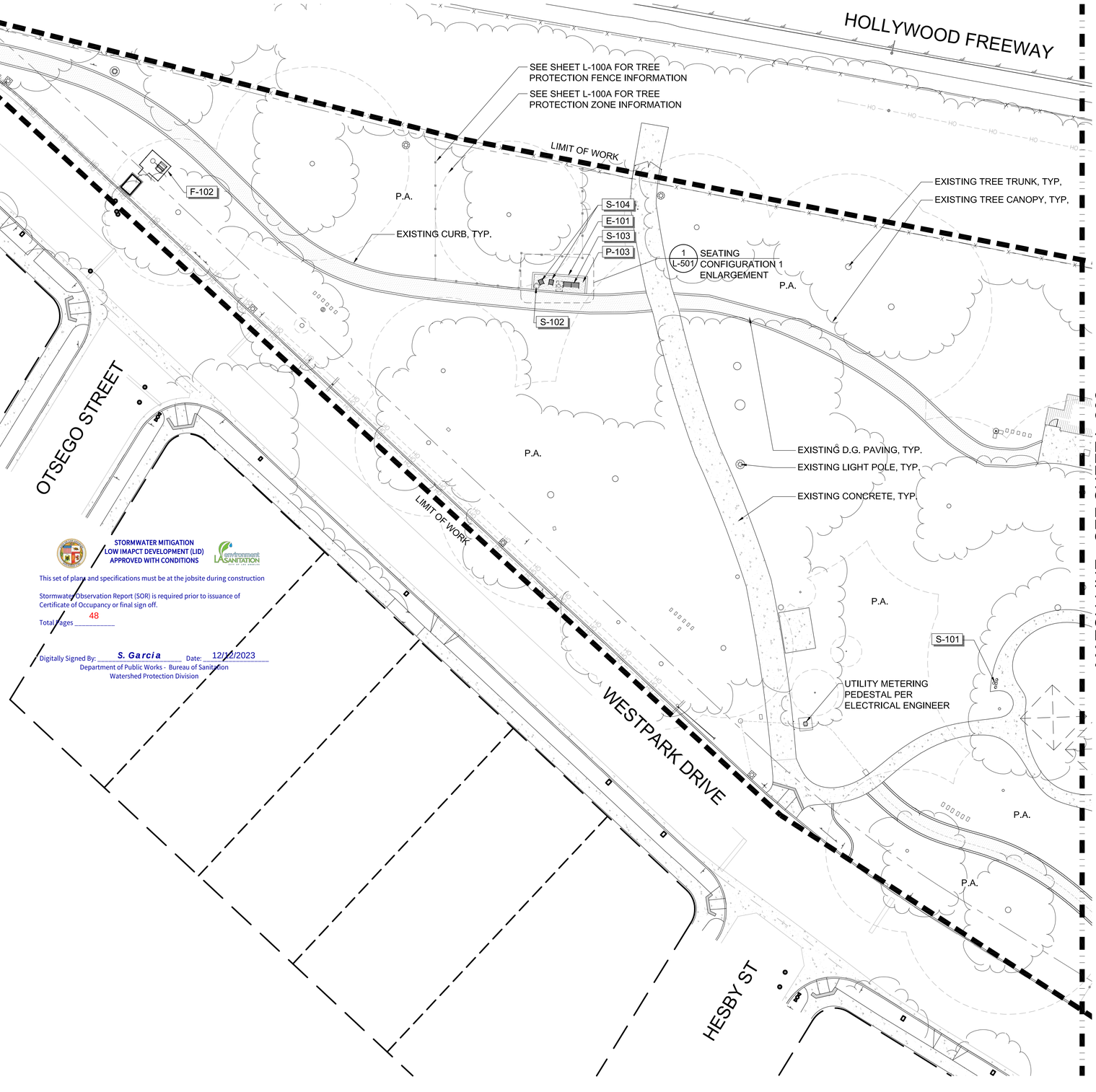

STORMWATER MITIGATION
LOW IMAPCT DEVELOPMENT (LID)
APPROVED WITH CONDITIONS

This set of plans and specifications must be at the jobsite during construction

Stormwater Observation Report (SOR) is required prior to issuance of Certificate of Occupancy or final sign off.

Total Pages 48

Digitally Signed By: S. Garcia Date: 12/7/2023
Department of Public Works - Bureau of Sanitation
Watershed Protection Division

CONSTRUCTION SCHEDULE

	EDGING
SYMBOL	DESCRIPTION
E-101	C.I.P CONCRETE MOW STRIP
	FENCE
SYMBOL	DESCRIPTION
F-101	ELECTRICAL PANEL ENCLOSURE WITH TOP COVER
F-102	BOOSTER PUMP ENCLOSURE WITH TOP COVER
	PAVING
SYMBOL	DESCRIPTION
P-101	C.I.P. CONCRETE PAVING
P-102	GRASS SURFACE PAVERS
P-103	STABILIZED DECOMPOSED GRANITE
P-104	GRASSCRETE WITH DECOMPOSED GRANITE
	SITE FURNISHING
SYMBOL	DESCRIPTION
S-101	DRINKING FOUNTAIN
S-102	LITTER RECEPTACLE
S-103	STEEL BENCH - TYPE I
S-104	STEEL BENCH - TYPE II
S-105	EDUCATIONAL SIGNAGE

NOTE:
SEE L-200 FOR COMPLETE CONSTRUCTION SCHEDULE

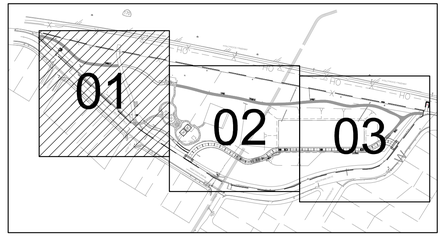

KEY MAP

Scale : 1" = 20'-0"

PLANS PREPARED BY:
STUDIO-MLA
251 South Mission Road
Los Angeles, California 90033
T (213) 381-3844 studio-mla.com

CITY OF LOS ANGELES DEPARTMENT OF PUBLIC WORKS
BUREAU OF ENGINEERING
THIS PLAN WAS ELECTRONICALLY • SIGNED AND STAMPED

ENGINEERING
CITY OF LOS ANGELES

LICENSED LANDSCAPE ARCHITECT
JAN DYER
5623
11-30-24
12/6/2023
STATE OF CALIFORNIA

VERTICAL CONTROL:
HORIZONTAL CONTROL:

SHEET TITLE: CONSTRUCTION PLAN - SHEET 1
PROJECT: VALLEY VILLAGE PARK STORM WATER CAPTURE PROJECT
ADDRESS: VALLEY VILLAGE PARK
5000 Westpark Dr, North Hollywood, CA 91601

NO.	REVISIONS	DATE	BY
		YY/MM/DD	
		YY/MM/DD	
		YY/MM/DD	
		YY/MM/DD	

CIP NO. SCP0009

INDEX NO.

CITY ENGINEER
TED ALLEN, P.E.

DESIGN GROUP	DATE
ENGINEER:	YY/MM/DD
ARCHITECT: MATT LYSNE	YY/MM/DD
DESIGNED BY: CARMEN GODINEZ	YY/MM/DD
DRAWN BY: CARMEN GODINEZ	YY/MM/DD
CHECKED BY: ALEX SAN DIEGO	YY/MM/DD
APPROVED BY: MATT LYSNE	YY/MM/DD

WORK ORDER
EW40085F

SHEET NAME
L-201

SHEET 58 OF 80 SHEETS

THE CITY OF LOS ANGELES OR IT'S OFFICERS OR AGENTS SHALL NOT BE RESPONSIBLE FOR THE ACCURACY OR COMPLETENESS OF ELECTRONIC COPIES OF THIS PLAN SHEET.

REVISION DATES (DESIGN STAGE ONLY)

SHEET VERSION 4.0.1 FILE PATH: P:\TOS 2020-PARKS\CAD\X-LA\TOS2019_VALLEY_CON.DWG PLOT DATE: 12/6/2023 12:00 PM SAVED: 3/10/2022 3:31 PM SAVED BY:ALEX

THE CITY OF LOS ANGELES OR ITS OFFICERS OR AGENTS SHALL NOT BE RESPONSIBLE FOR THE ACCURACY OR COMPLETENESS OF ELECTRONIC COPIES OF THIS PLAN SHEET.

REVISION DATES (DESIGN STAGE ONLY)

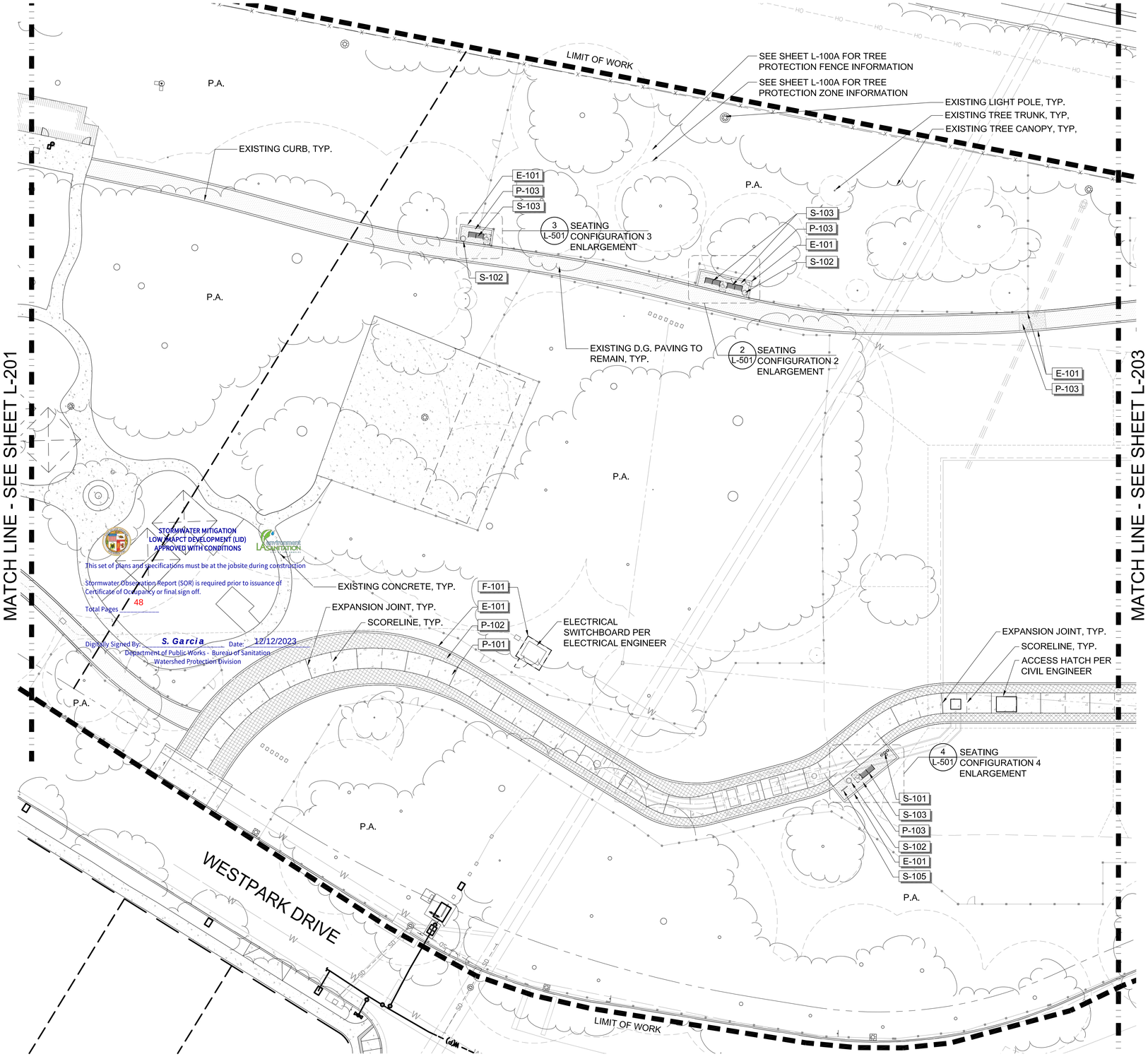

CONSTRUCTION SCHEDULE

	EDGING
SYMBOL	DESCRIPTION
E-101	C.I.P CONCRETE MOW STRIP

	FENCE
SYMBOL	DESCRIPTION
F-101	ELECTRICAL PANEL ENCLOSURE WITH TOP COVER
F-102	BOOSTER PUMP ENCLOSURE WITH TOP COVER

	PAVING
SYMBOL	DESCRIPTION
P-101	C.I.P. CONCRETE PAVING
P-102	GRASS SURFACE PAVERS
P-103	STABILIZED DECOMPOSED GRANITE
P-104	GRASSCRETE WITH DECOMPOSED GRANITE

	SITE FURNISHING
SYMBOL	DESCRIPTION
S-101	DRINKING FOUNTAIN
S-102	LITTER RECEPTACLE
S-103	STEEL BENCH - TYPE I
S-104	STEEL BENCH - TYPE II
S-105	EDUCATIONAL SIGNAGE

NOTE:
SEE L-200 FOR COMPLETE CONSTRUCTION SCHEDULE

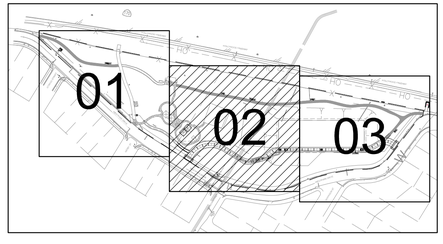

KEY MAP

Scale : 1" = 20'-0"

PLANS PREPARED BY:

STUDIO-MLA
251 South Mission Road
Los Angeles, California 90033
T: 213.384.3844 studio-mla.com

CITY OF LOS ANGELES DEPARTMENT OF PUBLIC WORKS
BUREAU OF ENGINEERING
THIS PLAN WAS ELECTRONICALLY • SIGNED AND STAMPED

ENGINEERING
CITY OF LOS ANGELES

LICENSED LANDSCAPE ARCHITECT
JAN DYER
5623
11-30-24
12/6/2023
STATE OF CALIFORNIA

VERTICAL CONTROL:
HORIZONTAL CONTROL:

SHEET TITLE: CONSTRUCTION PLAN - SHEET 2
PROJECT: VALLEY VILLAGE PARK STORM WATER CAPTURE PROJECT
ADDRESS: VALLEY VILLAGE PARK
5000 Westpark Dr, North Hollywood, CA 91601

NO.	REVISIONS	DATE	BY
		YY/MM/DD	
		YY/MM/DD	
		YY/MM/DD	
		YY/MM/DD	

CIP NO. SCP0009

INDEX NO.

CITY ENGINEER

DESIGN GROUP	DATE
TED ALLEN, P.E.	YY/MM/DD
ENGINEER: MATT LYSNE	YY/MM/DD
ARCHITECT: MATT LYSNE	YY/MM/DD
DESIGNED BY: CARMEN GODINEZ	YY/MM/DD
DRAWN BY: CARMEN GODINEZ	YY/MM/DD
CHECKED BY: ALEX SAN DIEGO	YY/MM/DD
APPROVED BY: MATT LYSNE	YY/MM/DD

WORK ORDER
EW40085F

SHEET NAME
L-202

SHEET 59 OF 80 SHEETS

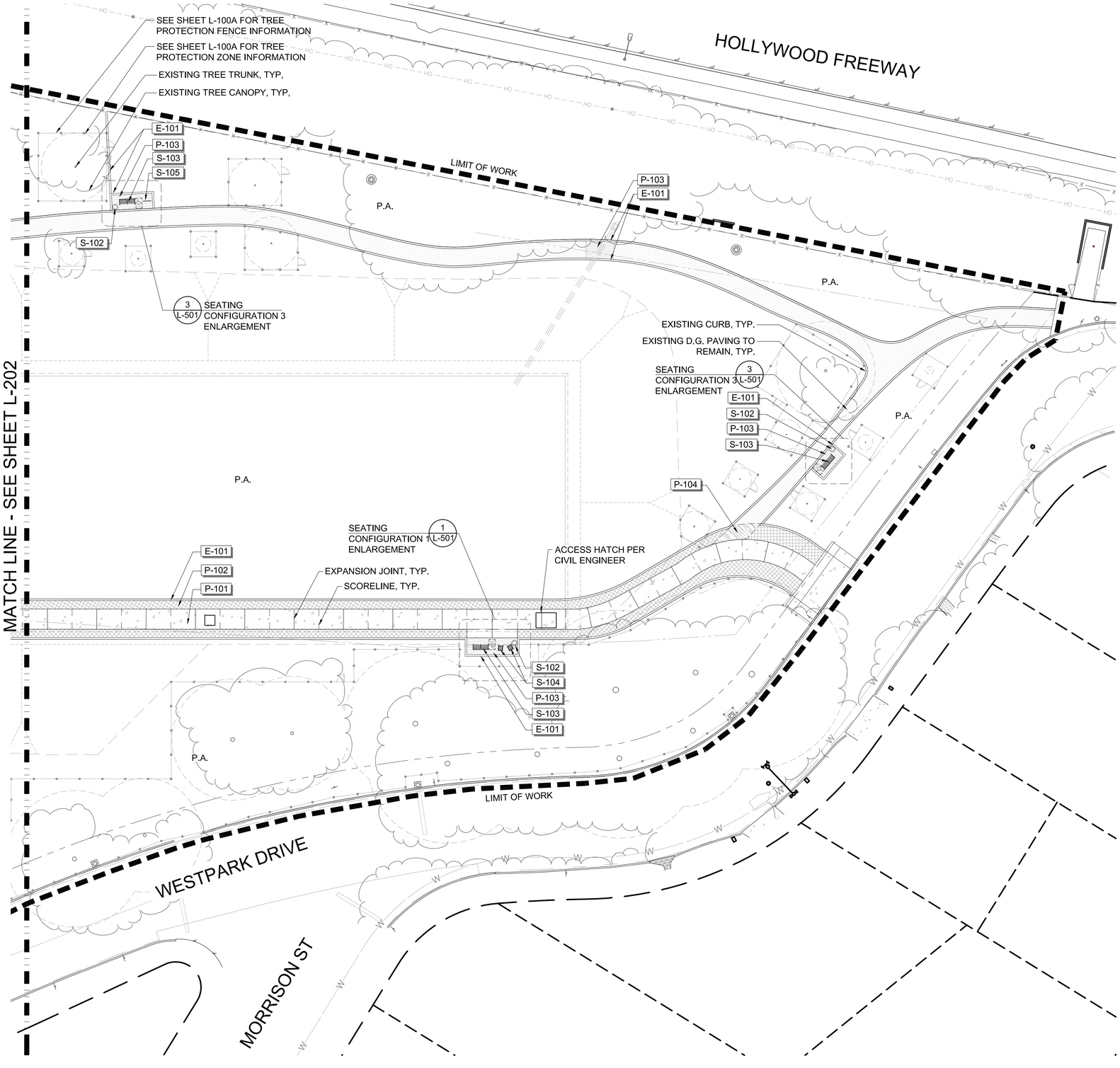

CONSTRUCTION SCHEDULE

	EDGING
SYMBOL	DESCRIPTION
E-101	C.I.P CONCRETE MOW STRIP
	FENCE
SYMBOL	DESCRIPTION
F-101	ELECTRICAL PANEL ENCLOSURE WITH TOP COVER
F-102	BOOSTER PUMP ENCLOSURE WITH TOP COVER
	PAVING
SYMBOL	DESCRIPTION
P-101	C.I.P. CONCRETE PAVING
P-102	GRASS SURFACE PAVERS
P-103	STABILIZED DECOMPOSED GRANITE
P-104	GRASSCRETE WITH DECOMPOSED GRANITE
	SITE FURNISHING
SYMBOL	DESCRIPTION
S-101	DRINKING FOUNTAIN
S-102	LITTER RECEPTACLE
S-103	STEEL BENCH - TYPE I
S-104	STEEL BENCH - TYPE II
S-105	EDUCATIONAL SIGNAGE

NOTE:
SEE L-200 FOR COMPLETE CONSTRUCTION SCHEDULE

STORMWATER MITIGATION
LOW IMAPCT DEVELOPMENT (LID)
APPROVED WITH CONDITIONS

This set of plans and specifications must be at the jobsite during construction

Stormwater Observation Report (SOR) is required prior to issuance of Certificate of Occupancy or final sign off.

Total Pages 48

Digitally Signed By: *S. Garcia* Date: 12/12/2023
Department of Public Works - Bureau of Sanitation
Watershed Protection Division

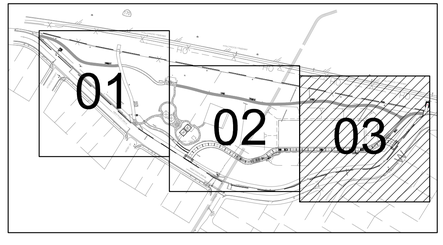

KEY MAP

0 10 20 40
Scale : 1" = 20'-0"

PLANS PREPARED BY:
STUDIO-MLA
251 South Mission Road
Los Angeles, California 90033
T (213) 384-3844 studio-mla.com

CITY OF LOS ANGELES DEPARTMENT OF PUBLIC WORKS
BUREAU OF ENGINEERING
THIS PLAN WAS ELECTRONICALLY • SIGNED AND STAMPED

ENGINEERING
CITY OF LOS ANGELES

LICENSED LANDSCAPE ARCHITECT
JAN DYER
5623
11-30-24
12/6/2023
STATE OF CALIFORNIA

VERTICAL CONTROL:
HORIZONTAL CONTROL:

SHEET TITLE: CONSTRUCTION PLAN - SHEET 3
PROJECT: VALLEY VILLAGE PARK STORM WATER CAPTURE PROJECT
ADDRESS: VALLEY VILLAGE PARK
5000 Westpark Dr, North Hollywood, CA 91601

NO.	REVISIONS	DATE	BY
		YY/MM/DD	
		YY/MM/DD	
		YY/MM/DD	
		YY/MM/DD	

CIP NO. SCP0009

INDEX NO.

CITY ENGINEER: TED ALLEN, P.E.

DESIGN GROUP	DATE
ENGINEER:	YY/MM/DD
ARCHITECT: MATT LYSNE	YY/MM/DD
DESIGNED BY: CARMEN GODINEZ	YY/MM/DD
DRAWN BY: CARMEN GODINEZ	YY/MM/DD
CHECKED BY: ALEX SAN DIEGO	YY/MM/DD
APPROVED BY: MATT LYSNE	YY/MM/DD

WORK ORDER
EW40085F

SHEET NAME
L-203
SHEET 60 OF 80 SHEETS

THE CITY OF LOS ANGELES OR IT'S OFFICERS OR AGENTS SHALL NOT BE RESPONSIBLE FOR THE ACCURACY OR COMPLETENESS OF ELECTRONIC COPIES OF THIS PLAN SHEET.

REVISION DATES (DESIGN STAGE ONLY)

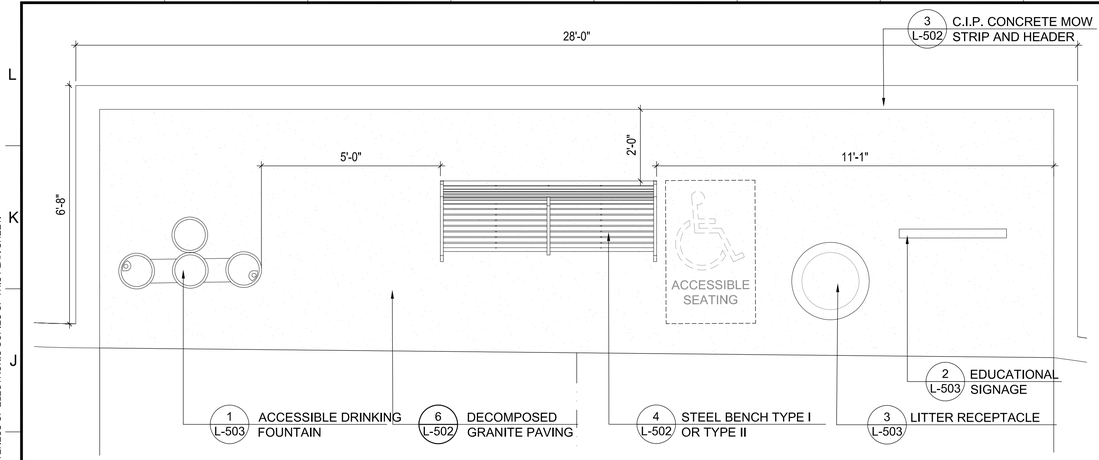

PLAN

4 SEATING CONFIGURATION 4 ENLARGEMENT

1/2" = 1'-0"

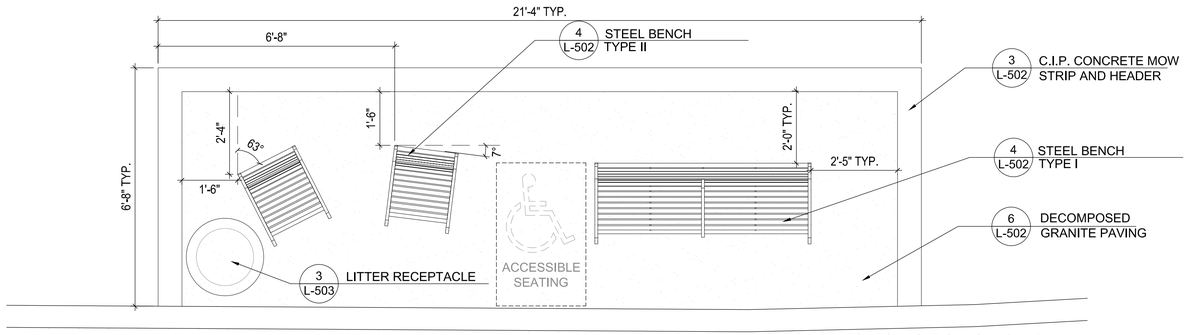

PLAN

1 SEATING CONFIGURATION 1 ENLARGEMENT

1/2" = 1'-0"

PLAN

5 MAINTENANCE PATH ENLARGEMENT

1/4" = 1'-0"

PLAN

2 SEATING CONFIGURATION 2 ENLARGEMENT

1/2" = 1'-0"

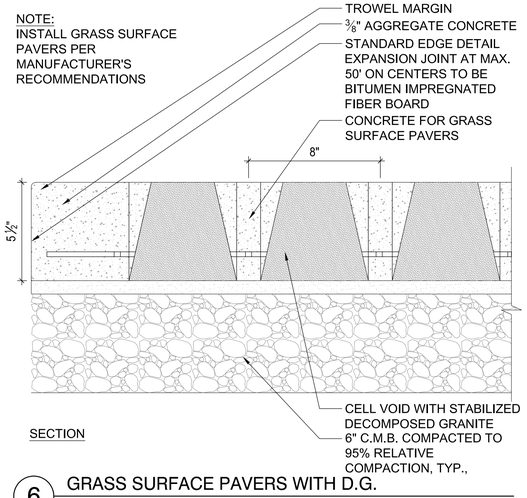

SECTION

6 GRASS SURFACE PAVERS WITH D.G.

3" = 1'-0"

P-VA1-321516-02

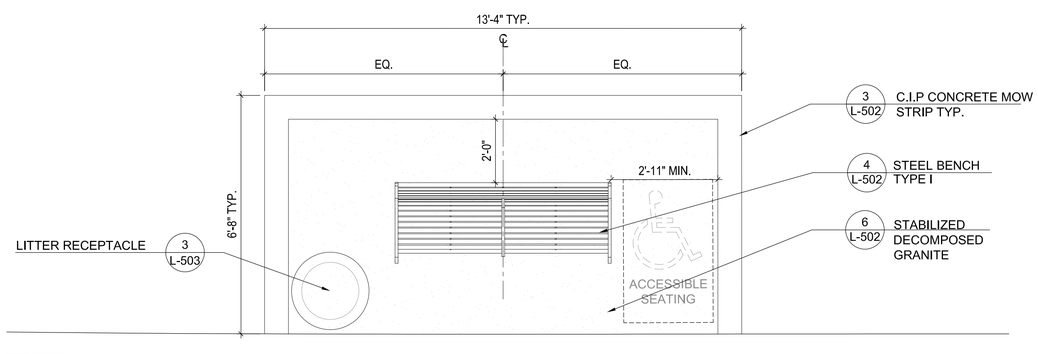

PLAN

3 SEATING CONFIGURATION 3 ENLARGEMENT

1/2" = 1'-0"

STORMWATER MITIGATION
LOW IMAPCT DEVELOPMENT (LID)
APPROVED WITH CONDITIONS

This set of plans and specifications must be at the jobsite during construction

Stormwater Observation Report (SOR) is required prior to issuance of Certificate of Occupancy or final sign off.

Total Pages 48

Digitally Signed By: S. Garcia Date: 12/12/2023
Department of Public Works - Bureau of Sanitation
Watershed Protection Division

THE CITY OF LOS ANGELES OR ITS OFFICERS OR AGENTS SHALL NOT BE RESPONSIBLE FOR THE ACCURACY OR COMPLETENESS OF ELECTRONIC COPIES OF THIS PLAN SHEET.

REVISION DATES (DESIGN STAGE ONLY)

ENGINEERING
CITY OF LOS ANGELES

LICENSED LANDSCAPE ARCHITECT
JAN DYER
5623
11-30-24
12/6/2023
STATE OF CALIFORNIA

THIS PLAN WAS ELECTRONICALLY • SIGNED AND STAMPED

BUREAU OF ENGINEERING

VERTICAL CONTROL:
HORIZONTAL CONTROL:

SHEET TITLE: CONSTRUCTION DETAILS - SHEET 1

PROJECT: VALLEY VILLAGE PARK STORM WATER CAPTURE PROJECT

ADDRESS: VALLEY VILLAGE PARK
5000 Westpark Dr, North Hollywood, CA 91601

NO.	REVISIONS	BY	DATE
			YY/MM/DD
			YY/MM/DD
			YY/MM/DD
			YY/MM/DD

CIP NO. SCP0009

INDEX NO.

CITY OF LOS ANGELES DEPARTMENT OF PUBLIC WORKS

CITY ENGINEER: TED ALLEN, P.E. DATE

DESIGN GROUP		DATE
ENGINEER:		YY/MM/DD
ARCHITECT:	MATT LYSNE	YY/MM/DD
DESIGNED BY:	CARMEN GODINEZ	YY/MM/DD
DRAWN BY:	CARMEN GODINEZ	YY/MM/DD
CHECKED BY:	ALEX SAN DIEGO	YY/MM/DD
APPROVED BY:	MATT LYSNE	YY/MM/DD

PLANS PREPARED BY:

STUDIO-MLA
2515 South Mission Road
Los Angeles, California 90023
T: 213-384-3844 studio-mla.com

WORK ORDER
EW40085F

SHEET NAME
L-501

SHEET 61 OF 80 SHEETS

SHEET VERSION 4.0.1 FILE PATH: P:\TOS 2020-PARKS\CAD\X-LA\TOS2019_VALLEY_DET.DWG PLOT DATE: 12/6/2023 12:12 PM SAVED: 4/19/2022 11:40 AM SAVED BY:ALEX

STORMWATER MITIGATION
LOW IMAPCT DEVELOPMENT (LID)
APPROVED WITH CONDITIONS

This set of plans and specifications must be at the jobsite during construction

Stormwater Observation Report (SOR) is required prior to issuance of Certificate of Occupancy or final sign off.

Total Pages 48

Digitally Signed By: S. Garcia Date: 12/12/2023
Department of Public Works - Bureau of Sanitation
Watershed Protection Division

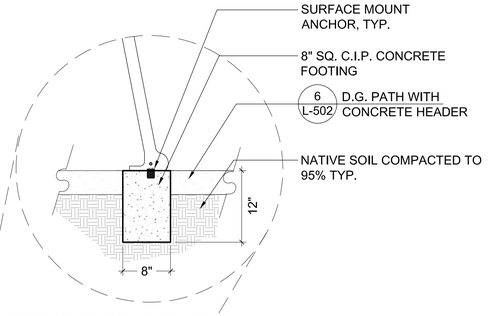

ANCHOR ENLARGEMENT AT DG

NOTES:
1. INSTALL PER MANUFACTURER'S RECOMMENDATIONS
2. SET BENCH LEVEL
3. OPTIONAL ARMRESTS PER RAP

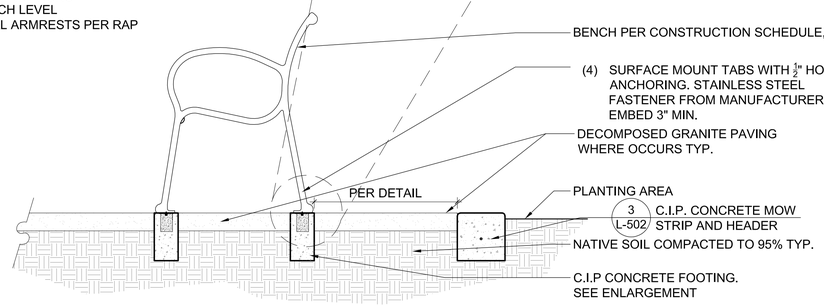

SECTION

4 STEEL BENCH TYPE I OR TYPE II

1" = 1'-0" P-VA1-32

VINYL COATED CHAIN LINK FABRIC PER THE SPECIFICATIONS. ALL FENCE MATERIALS SHALL BE AS INDICATED HEREON AND PAINTED PER SPECIFICATIONS TO MATCH FABRIC COLOR. THE COLOR SHALL BE BLACK.

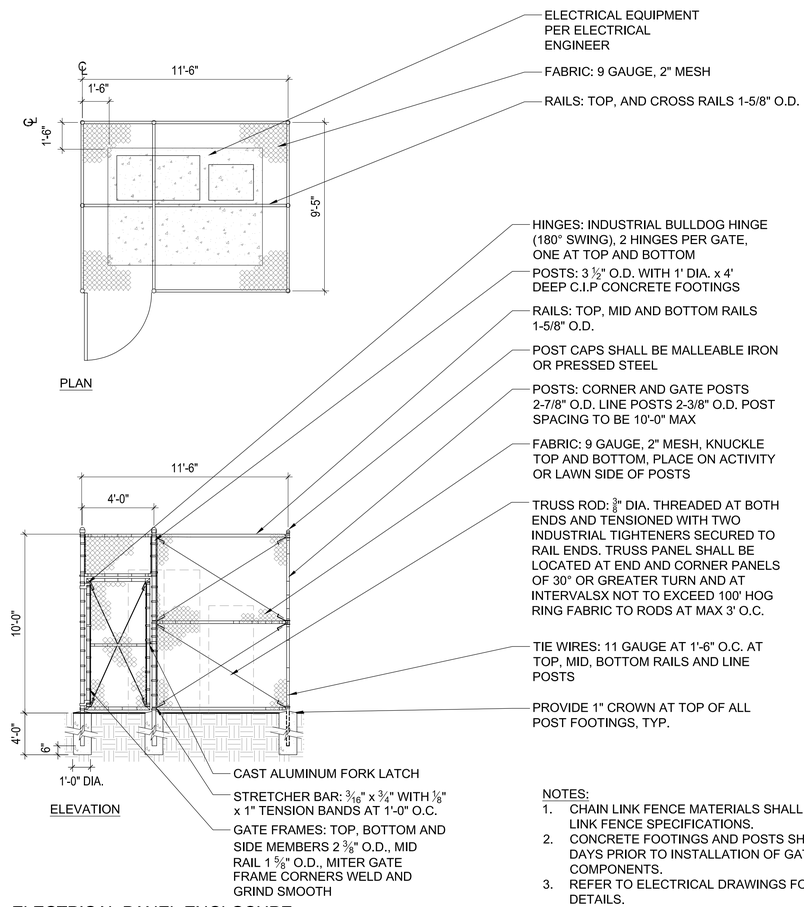

NOTES:
1. CHAIN LINK FENCE MATERIALS SHALL CONFORM TO THE CHAIN LINK FENCE SPECIFICATIONS.
2. CONCRETE FOOTINGS AND POSTS SHALL BE SET FOR SEVEN DAYS PRIOR TO INSTALLATION OF GATES AND FRAMING COMPONENTS.
3. REFER TO ELECTRICAL DRAWINGS FOR FENCE GROUNDING DETAILS.

1 ELECTRICAL PANEL ENCLOSURE

1/4" = 1'-0" P-VA1-323113-01

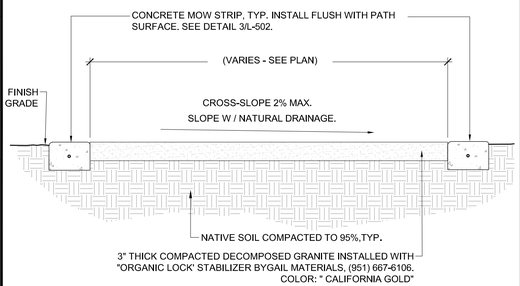

TYPICAL PATH SECTION

NOTES:

1. ALL D.G. PATHS SHALL NOT EXCEED A RUNNING SLOPE GREATER THAN 3%. SEE GRADING PLAN

2. DECOMPOSED GRANITE MATERIAL SHALL BE PRE-MIXED WITH STABILIZER (AMOUNT/RATIO PER MANUFACTURER'S RECOMMENDATION) BY SUPPLIER PRIOR TO PLACEMENT TO ENSURE THOROUGH AND EVEN DISTRIBUTION THROUGHOUT MIXTURE. SEE LANDSCAPE CONSTRUCTION NOTES.

6 D.G. PATH WITH CONCRETE HEADER

NTS RP DETAIL L3820

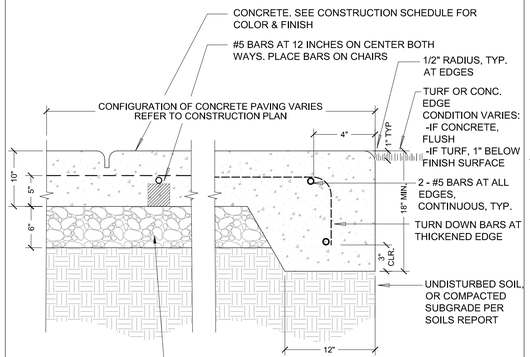

NOTES:
1. PROVIDE TOOLED SCORE LINES, ½" DEEP, AT LOCATIONS SHOWN ON CONSTRUCTION PLAN.
2. EXPANSION JOINTS SHALL BE CONSTRUCTED PER DETAIL AT LOCATIONS SHOWN ON PLAN.
3. PROVIDE ISOLATION JOINT PER DETAIL AGAINST PREVIOUSLY CONSTRUCTED FIXED ELEMENTS.
4. END OF POUR JOINTS - SEE LANDSCAPE CONSTRUCTION NOTES.
5. DRIVEWAY CONCRETE PAVEMENT SHALL BE 4,000 PSI STRUCTURAL CONCRETE PER SPECIFICATION SECTION 03300.

5 C.I.P. CONCRETE PAVING, THICKENED EDGE

NTS BOE VERSION 01/23/18 RWF RP DETAIL 3010

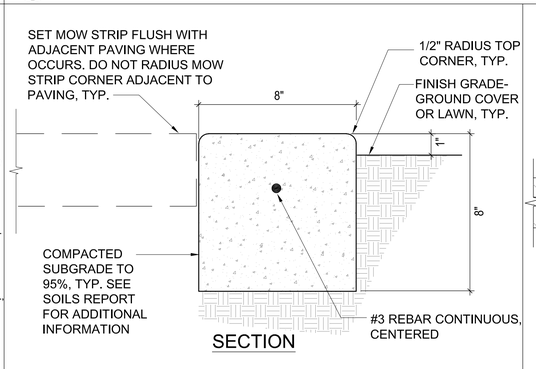

SECTION

NOTES:
1. SCORE MOW STRIP AT 10' O.C. MAX. AND AT ALL CHANGES IN DIRECTION SIMILAR TO CONCRETE PAVING DETAIL.
2. WHEN MOW STRIP IS INSTALLED ADJACENT TO EXISTING A.C. PAVING, THE EXISTING A.C. PAVING SHALL BE SAW-CUT 12" FROM THE EDGE OF THE MOW STRIP AND NEW ASPHALT CONCRETE PLACED AFTER MOW STRIP IS IN PLACE.

3 C.I.P. CONCRETE MOW STRIP AND HEADER

NTS BOE VERSION Feb/08 - RF, SD RP DETAIL L3200

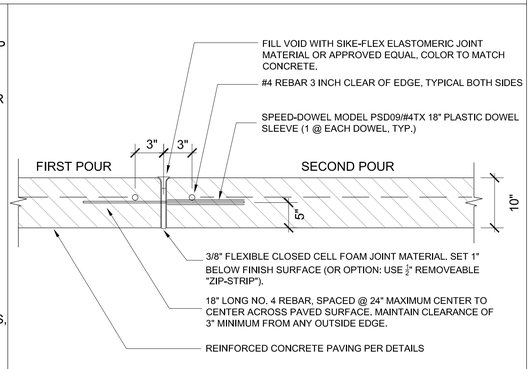

SECTION

NOTE:
1. MAINTAIN LINE AND GRADE AT EXPANSION JOINTS.
2. EXPANSION JOINT SHALL BE PLACE AT MAX. SPACING OF EVERY 20' UNLESS OTHERWISE SPECIFIED ON THE CONSTRUCTION PLAN.

2 DOWELED EXPANSION JOINT

NTS RP DETAIL L3070

PLANS PREPARED BY:

STUDIO-MLA
251 South Mission Road
Los Angeles, California 90033
T: 213.384.3844 studio-mla.com

CITY OF LOS ANGELES DEPARTMENT OF PUBLIC WORKS BUREAU OF ENGINEERING

ENGINEERING
CITY OF LOS ANGELES

THIS PLAN WAS ELECTRONICALLY • SIGNED AND STAMPED •

LICENSED LANDSCAPE ARCHITECT
JAN DYER
5623
11-30-24
12/6/2023
STATE OF CALIFORNIA

SHEET TITLE: CONSTRUCTION DETAILS - SHEET 2
PROJECT: VALLEY VILLAGE PARK STORM WATER CAPTURE PROJECT
ADDRESS: VALLEY VILLAGE PARK 5000 Westpark Dr, North Hollywood, CA 91601

VERTICAL CONTROL: VERTICAL CONTROL
HORIZONTAL CONTROL: HORIZONTAL CONTROL

NO.	REVISIONS	DATE	BY
		YY/MM/DD	
		YY/MM/DD	
		YY/MM/DD	
		YY/MM/DD	
		YY/MM/DD	

CIP NO. SCP0009

INDEX NO.

CITY ENGINEER	DESIGN GROUP	DATE
TED ALLEN, P.E.	ENGINEER:	YY/MM/DD
	ARCHITECT: MATT LYSNE	YY/MM/DD
	DESIGNED BY: CARMEN GODINEZ	YY/MM/DD
	DRAWN BY: CARMEN GODINEZ	YY/MM/DD
	CHECKED BY: ALEX SAN DIEGO	YY/MM/DD
	APPROVED BY: MATT LYSNE	YY/MM/DD

WORK ORDER EW40085F

SHEET NAME L-502

SHEET 62 OF 80 SHEETS

REVISION DATES (DESIGN STAGE ONLY)

THE CITY OF LOS ANGELES OR ITS OFFICERS OR AGENTS SHALL NOT BE RESPONSIBLE FOR THE ACCURACY OR COMPLETENESS OF ELECTRONIC COPIES OF THIS PLAN SHEET.

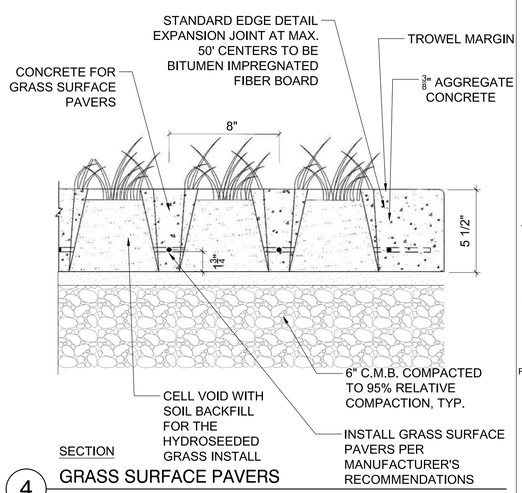

SECTION

4 GRASS SURFACE PAVERS

1" = 1" P-VA1-09

NOTES:

1. CHAIN LINK FENCE MATERIALS SHALL CONFORM TO THE CHAIN LINK FENCE SPECIFICATIONS.
2. CONCRETE FOOTINGS AND POSTS SHALL BE SET FOR SEVEN DAYS PRIOR TO INSTALLATION OF GATES AND FRAMING COMPONENTS.
3. INSTALL BOOSTER PUMP PER MANUFACTURER'S RECOMMENDATIONS.
4. ☒ VINYL COATED CHAIN LINK FABRIC PER SPECIFICATIONS. ALL FENCE MATERIALS SHALL BE AS INDICATED HEREON AND PAINTED PER SPECIFICATIONS TO MATCH FABRIC COLOR. THE COLOR SHALL BE BLACK.

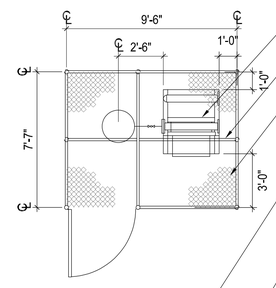

PLAN

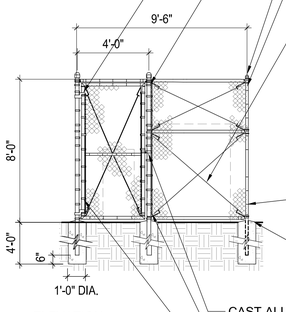

ELEVATION

- BOOSTER PUMP PER MANUFACTURER
- RAILS: TOP, AND CROSS RAILS 1-5/8" O.D.
- FABRIC: 9 GAUGE, 2" MESH, KNUCKLE TOP AND BOTTOM, PLACE ON ACTIVITY OR LAWN SIDE OF POSTS
- HINGES: INDUSTRIAL BULLDOG HINGE (180° SWING), 2 HINGES PER GATE, ONE AT TOP AND BOTTOM
- POSTS: 3 ½" O.D. WITH 1' DIA. x 4' DEEP CIP CONCRETE FOOTINGS
- POST CAPS SHALL BE MALLEABLE IRON OR PRESSED STEEL
- POSTS: CORNER AND GATE POSTS 2-7/8" O.D. LINE POSTS 2-3/8" O.D. POST SPACING TO BE 10'-0" MAX
- TRUSS ROD: ⅜" DIA. THREADED AT BOTH ENDS AND TENSIONED WITH TWO INDUSTRIAL TIGHTENERS SECURED TO RAIL ENDS. TRUSS PANEL SHALL BE LOCATED AT END AND CORNER PANELS OF 30° OR GREATER TURN AND AT INTERVALSX NOT TO EXCEED 100' HOG RING FABRIC TO RODS AT MAX 3' O.C.
- TIE WIRES: 11 GAUGE AT 1'-6" O.C. AT TOP, MID, BOTTOM RAILS AND LINE POSTS
- PROVIDE 1" CROWN AT TOP OF ALL POST FOOTINGS, TYP.
- CAST ALUMINUM FORK LATCH
- STRETCHER BAR: 7/16" x ¾" WITH ⅛" x 1" TENSION BANDS AT 1'-0" O.C.
- GATE FRAMES: TOP, BOTTOM AND SIDE MEMBERS 2 ⅜" O.D., MID RAIL 1 ⅝" O.D., MITER GATE FRAME CORNERS WELD AND GRIND SMOOTH

5 BOOSTER PUMP ENCLOSURE

1/4" = 1'-0" P-VA1-323113-02

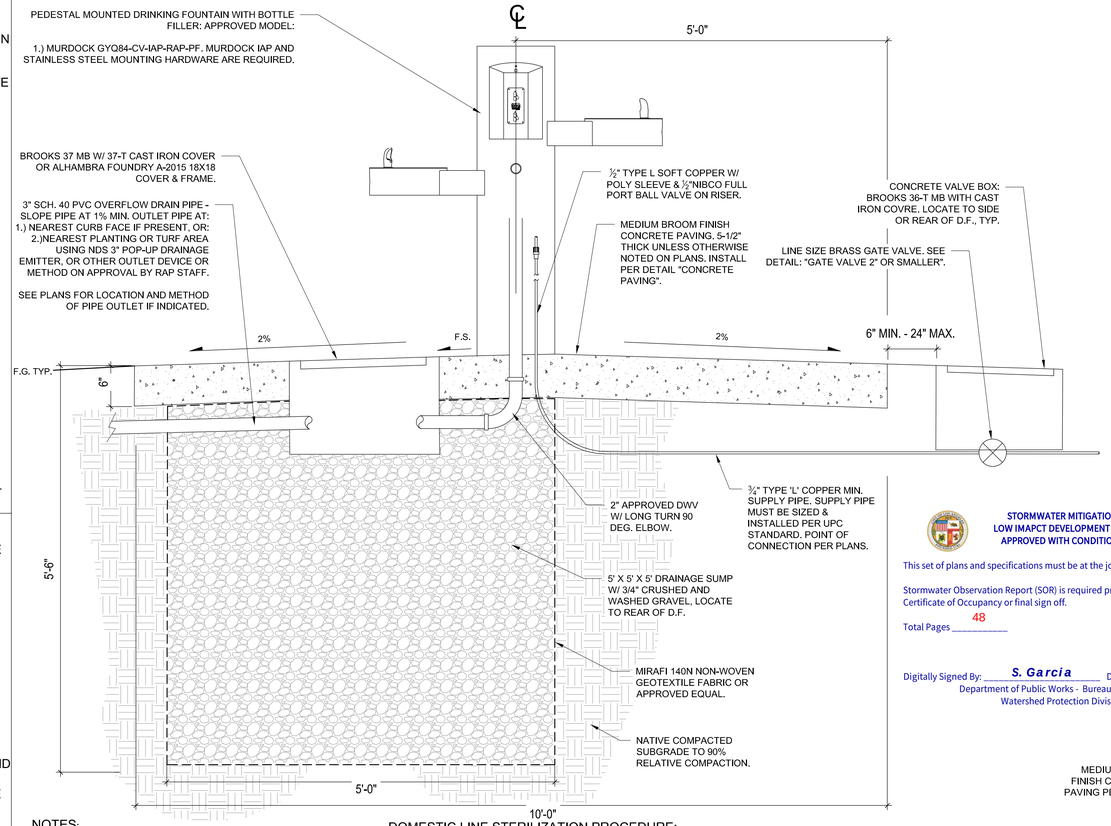

NOTES:

1.) INSTALL PER DETAIL. REFER TO MANUFACTURER'S INSTRUCTION FOR PLUMBING AND MOUNTING DRINKING FOUNTAIN UNIT.

2.) CONTRACTOR SHALL SUBMIT LOCATION FOR SUMP AND OVERFLOW DRAINAGE LAYOUT FOR APPROVAL BY PROJECT MANAGER PRIOR TO BEGINNING EXCAVATION.

DOMESTIC LINE STERILIZATION PROCEDURE:

1.) FLUSH DOMESTIC WATER LINES COMPLETELY.
2.) USING A PROPORTIONING PUMP, INJECT SODIUM HYPOCHLORITE LIQUID DISINFECTANT INTO THE DOMESTIC LINE THROUGH A ¾" SERVICE COCK AT A POINT AS CLOSE TO THE WATER METER AS POSSIBLE.
3.) OPEN BUBBLERS ON ALL D.F. UNITS INSTALLED TO DISTRIBUTE DISINFECTANT THROUGHOUT THE DOMESTIC LINE SYSTEM.
4.) VERIFY BY TESTING THAT A MINIMUM CONCENTRATION OF 50 PPM OF DISINFECTANT IS ACHIEVED AT EACH D.F. UNIT.
5.) DISINFECTANT SHALL REMAIN IN THE SYSTEM FOR 24 HOURS MINIMUM.
6.) AT THE END OF THE 24 HOUR PERIOD, THE RESIDUAL LEVEL OF DISINFECTANT SHALL NOT BE LESS THAN 10 PPM.
7.) ALL LINES SHALL BE FLUSHED THOROUGHLY AFTER DISINFECTION IS COMPLETED.
8.) A WATER SAMPLE AT EACH D.F. UNIT SHALL BE TESTED BY AN APPROVED TESTING LABORATORY. REQUIRED RESULTS ARE:
- COLIFORM-AEROGENES ORGANISMS: NEGATIVE
- TOTAL BACTERIA PLATE COUNT: LESS THAN 100 PER CUBIC CENTIMETER
- WATER POTABILITY: SAFE TO USE

IF THE REQUIRED RESULTS ARE NOT MET, STERILIZATION PROCESS LISTED ABOVE SHALL BE REPEATED UNTIL THE REQUIRED TEST RESULTS ARE MET.

1 ACCESSIBLE DRINKING FOUNTAIN

NTS BOE VERSION Feb'22 RP DETAIL L1732



SECTION

3 LITTER RECEPTACLE

N.T.S P-VA1-12

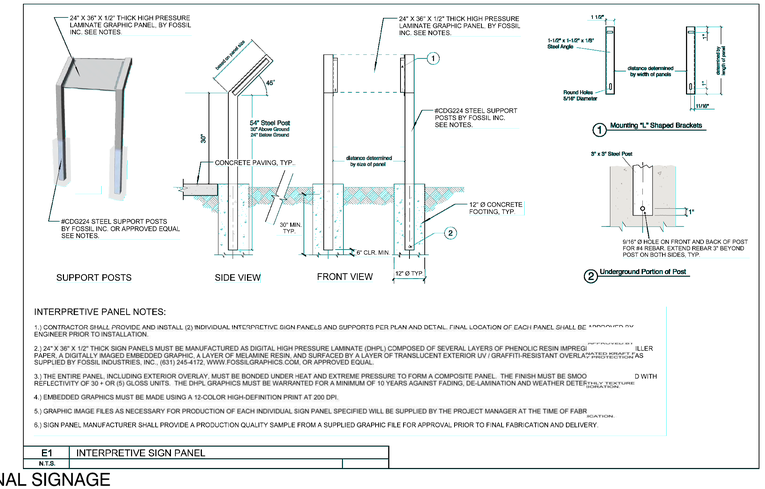

INTERPRETIVE PANEL NOTES:

1.) CONTRACTOR SHALL PROVIDE AND INSTALL (2) INDIVIDUAL INTERPRETIVE SIGN PANELS AND SUPPORTS PER PLAN AND DETAIL. FINAL LOCATION OF EACH PANEL SHALL BE APPROVED BY ENGINEER PRIOR TO INSTALLATION.

2.) 24"X 36" X 1/2" THICK SIGN PANELS MUST BE MANUFACTURED AS DIGITAL HIGH PRESSURE LAMINATE (DHPL) COMPOSED OF SEVERAL LAYERS OF PHENOLIC RESIN IMPREGNATED KRAFT PAPER, A DIGITALLY IMAGED EMBEDDED GRAPHIC, A LAYER OF MELAMINE RESIN, AND SURFACED BY A LAYER OF TRANSLUCENT EXTERIOR UV / GRAFFITI-RESISTANT OVERLAY WITH TEXTURED KRAFT PAPER AS SUPPLIED BY FOSSIL INDUSTRIES, INC., (631) 245-4172, WWW.FOSSILGRAPHICS.COM, OR APPROVED EQUAL.

3.) THE ENTIRE PANEL, INCLUDING EXTERIOR OVERLAY, MUST BE BONDED UNDER HEAT AND EXTREME PRESSURE TO FORM A COMPOSITE PANEL. THE FINISH MUST BE SMOOTH WITH REFLECTIVITY OF 30 + OR (5) GLOSS UNITS. THE DHPL GRAPHICS MUST BE WARRANTED FOR A MINIMUM OF 10 YEARS AGAINST FADING, DE-LAMINATION AND WEATHER DETERIORATION.

4.) EMBEDDED GRAPHICS MUST BE MADE USING A 12-COLOR HIGH-DEFINITION PRINT AT 200 DPI.

5.) GRAPHIC IMAGE FILES AS NECESSARY FOR PRODUCTION OF EACH INDIVIDUAL SIGN PANEL SPECIFIED WILL BE SUPPLIED BY THE PROJECT MANAGER AT THE TIME OF FABRICATION.

6.) SIGN PANEL MANUFACTURER SHALL PROVIDE A PRODUCTION QUALITY SAMPLE FROM A SUPPLIED GRAPHIC FILE FOR APPROVAL PRIOR TO FINAL FABRICATION AND DELIVERY.

E1 | INTERPRETIVE SIGN PANEL
N.T.S.

2 EDUCATIONAL SIGNAGE

NTS P-VA1-324123-01

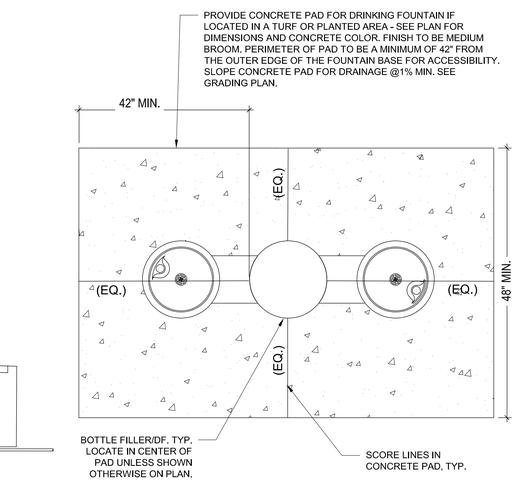

STORMWATER MITIGATION
LOW IMAPCT DEVELOPMENT (LID)
APPROVED WITH CONDITIONS

This set of plans and specifications must be at the jobsite during construction

Stormwater Observation Report (SOR) is required prior to issuance of Certificate of Occupancy or final sign off.

Total Pages 48

Digitally Signed By: S. Garcia Date: 12/12/2023
Department of Public Works - Bureau of Sanitation
Watershed Protection Division

PLAN VIEW - LAYOUT
NOT TO SCALE

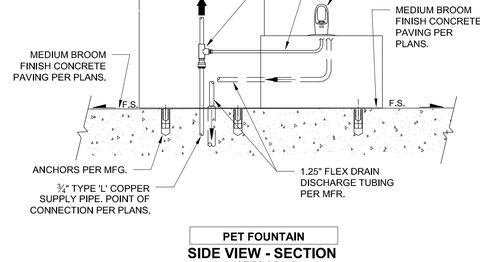

PET FOUNTAIN
SIDE VIEW - SECTION
NOT TO SCALE

PLANS PREPARED BY:
STUDIO-MLA
251 South Mission Road
Los Angeles, California 90033
T (213) 384-3844 studio-mla.com

CITY OF LOS ANGELES DEPARTMENT OF PUBLIC WORKS BUREAU OF ENGINEERING

ENGINEERING CITY OF LOS ANGELES

THIS PLAN WAS ELECTRONICALLY • SIGNED AND STAMPED

LICENSED LANDSCAPE ARCHITECT JAN DYER 5623 11-30-24 12/6/2023 STATE OF CALIFORNIA

VERTICAL CONTROL: HORIZONTAL CONTROL:
SHEET TITLE: CONSTRUCTION DETAILS - SHEET 3
PROJECT: VALLEY VILLAGE PARK STORM WATER CAPTURE PROJECT
ADDRESS: VALLEY VILLAGE PARK 5000 Westpark Dr, North Hollywood, CA 91601

CITY ENGINEER: TED ALLEN, P.E. DATE

DESIGN GROUP		DATE
ENGINEER:	MATT LYSNE	YY/MM/DD
ARCHITECT:	MATT LYSNE	YY/MM/DD
DESIGNED BY:	CARMEN GODINEZ	YY/MM/DD
DRAWN BY:	CARMEN GODINEZ	YY/MM/DD
CHECKED BY:	ALEX SAN DIEGO	YY/MM/DD
APPROVED BY:	MATT LYSNE	YY/MM/DD

NO.	REVISIONS	BY	DATE
			YY/MM/DD
			YY/MM/DD
			YY/MM/DD

CIP NO. SCP0009

INDEX NO.

WORK ORDER EW40085F

SHEET NAME L-503

SHEET 63 OF 80 SHEETS

REVISION DATES (DESIGN STAGE ONLY)

THE CITY OF LOS ANGELES OR IT'S OFFICERS OR AGENTS SHALL NOT BE RESPONSIBLE FOR THE ACCURACY OR COMPLETENESS OF ELECTRONIC COPIES OF THIS PLAN SHEET.

IRRIGATION NOTES

1. THIS DESIGN IS DIAGRAMMATIC. ALL PIPING, VALVES, ETC. SHOWN WITHIN PAVED AREAS ARE FOR DESIGN CLARIFICATION ONLY. INSTALL ALL COMPONENTS IN PLANTING AREAS WHEREVER POSSIBLE.
2. ALL SPRINKLER HEADS ARE TO HAVE TRIPLE SWING JOINTS (EXCEPT WHERE NOTED ON PLANS).
3. NO SUBSTITUTIONS OF SMALLER PIPE SIZES SHALL BE PERMITTED, BUT SUBSTITUTIONS OF LARGER SIZES MAY BE APPROVED.
4. ALL DAMAGED AND REJECTED PIPE SHALL BE REMOVED FROM THE SITE AT THE TIME OF THE SAID REJECTION.
5. CONTROLLER LOCATION SHOWN IS DIAGRAMMATIC. OBTAIN FINAL LOCATION APPROVAL FROM THE PROJECT MANAGER PRIOR TO INSTALLATION.
6. 120VAC ELECTRICAL POWER SOURCE AT CONTROLLER LOCATION IS NOT A PART OF THE IRRIGATION SYSTEM. COORDINATE POWER REQUIREMENTS WITH GENERAL CONTRACTOR AND PROJECT MANAGER. P.O.C. AT EXISTING IRRIGATION CONTROLLER. REMOVE EXISTING CONTROLLERS AND REPLACE WITH NEW PER PLANS.
7. BEFORE COMMENCING ANY WORK, OBTAIN AN UNDERGROUND SERVICE ALERT I.D. NUMBER BY CALLING 1-800-422-4133. ALLOW TWO (2) WORKING DAYS AFTER THE I.D. NUMBER IS OBTAINED AND BEFORE THE EXCAVATION WORK IS STARTED SO THAT UTILITY OWNERS CAN BE NOTIFIED.
8. ALL SPRINKLER HEADS SHALL BE SET PERPENDICULAR TO FINISH GRADE UNLESS OTHERWISE SPECIFIED.
9. FLUSH AND ADJUST ALL SPRINKLER HEADS AND VALVES FOR OPTIMUM COVERAGE WITH MINIMAL OVER SPRAY ONTO WALKS, STREETS, ETC. IN NEW CONSTRUCTION AREA ONLY.
10. IT IS THE RESPONSIBILITY OF THE IRRIGATION CONTRACTOR TO BE FAMILIAR WITH THE EXISTING SITE CONDITIONS, UTILITIES, GRADE DIFFERENCES, LOCATION OF WALLS, ETC. THE IRRIGATION CONTRACTOR SHALL REPAIR OR REPLACE ALL ITEMS DAMAGED BY HIS WORK. HE SHALL COORDINATE HIS WORK WITH OTHER CONTRACTORS FOR THE LOCATION AND INSTALLATION OF PIPE SLEEVES AND LATERALS UNDER ROADWAYS AND PAVING, ETC.
11. THE SPRINKLER SYSTEM DESIGN IS BASED ON A MINIMUM OPERATING PRESSURE OF 84 P.S.I. AND A MAXIMUM FLOW DEMAND OF 63,5 G.P.M. THE CONTRACTOR SHALL VERIFY WATER PRESSURES PRIOR TO CONSTRUCTION. REPORT ANY DIFFERENCE BETWEEN WATER PRESSURE INDICATED ON THE DRAWINGS AND THE ACTUAL PRESSURE READING AT THE IRRIGATION POINT OF CONNECTION TO THE ARCHITECT.
12. DO NOT WILLFULLY INSTALL THE SPRINKLER SYSTEM AS SHOWN ON THE DRAWINGS WHEN IT IS OBVIOUS IN THE FIELD THAT THERE ARE UNKNOWN OBSTRUCTIONS OR GRADE DIFFERENCES IN THE AREA. DIMENSIONS EXIST THAT MIGHT NOT HAVE BEEN CONSIDERED IN THE ENGINEERING. SUCH OBSTRUCTIONS OR DIFFERENCES SHOULD BE BROUGHT TO THE ATTENTION OF THE ARCHITECT. IN THE EVENT THAT THIS NOTIFICATION IS NOT GIVEN, THE CONTRACTOR SHALL ASSUME FULL RESPONSIBILITY FOR ALL NECESSARY REVISIONS.
13. ALL SPRINKLER EQUIPMENT NOT OTHERWISE DETAILED OR SPECIFIED SHALL BE INSTALLED AS PER MANUFACTURER'S RECOMMENDATIONS AND SPECIFICATIONS.
14. THE INTENT OF THE DESIGN IS TO PROVIDE 100% COVERAGE TO ALL PLANTING AREAS. AS PART OF THE SCOPE OF WORK, THE CONTRACTOR WILL PROVIDE ANY ADDITIONAL HEADS, SPECIAL NOZZLES, OR PATTERNS TO ACHIEVE PROPER COVERAGE WITH A MINIMUM OF OVER SPRAY AT NO ADDITIONAL COST TO THE OWNER.
15. INSTALLATION OF CONTROL WIRES AND CONDUIT SHALL FOLLOW MAINLINE ROUTING.
16. PROVIDE SLEEVES FOR ALL NEW PIPE AND CONDUIT BENEATH PAVING.SEE DETAILS AND SPECIFICATIONS.
17. LOCATE VALVE CHART IN CONTROLLER - REDUCE AND ENCASE IN PLASTIC (AS BUILT). SEE IRRIGATION SPECIFICATIONS.
18. REFER TO IRRIGATION SYSTEM SPECIFICATIONS FOR ADDITIONAL INFORMATION REGARDING THIS SECTION OF WORK INCLUDING REQUIRED INSPECTIONS AND APPROVALS.

IRRIGATION DEMOLITION NOTES (IN NEW CONSTRUCTION AREAS ONLY)

1. REMOVE ALL BRASS GATE VALVES, RCV'S AND QUICK COUPLERS AND TURN OVER TO RECREATION AND PARK STAFF FOR SPARE PARTS.
2. REMOVE ALL EXISTING IRRIGATION HEADS AND PLASTIC VALVE BOXED IN GOOD CONDITION AND TURN OVER TO RECREATION AND PARK STAFF FOR SPARE PARTS.
3. DISPOSE OF ALL OTHER SURFACE COMPONENTS NOT REQUESTED BY RECREATION AND PARK STAFF FOR SALVAGE. ALL OTHER BELOW-GROUND COMPONENTS SHALL BE ABANDONED IN PLACE IF NOT REMOVED DURING GALLERY EXCAVATION.

DIAL BEFORE YOU DIG
1-800-422-4133
DIGALERT
PLAY IT SAFE. DIAL BEFORE YOU DIG!
AT LEAST TWO WORKING DAYS PRIOR TO EXCAVATING
SERVING NINE SOUTHERN CALIFORNIA COUNTIES

GREEN BUILDING CODE NOTES

PROJECT ADDRESS: 5000 WESTPARK DRIVE NORTH HOLLYWOOD, CA 91601

TOTAL LANDSCAPE AREA: 81,384 S.F.

WATER SUPPLY: RECYCLED WATER

WATER PURVEYOR: LOS ANGELES DEPARTMENT OF WATER AND POWER

WATER PRESSURE: HIGH-102 PSI, LOW-78 PSI (POTABLE WATER)
HIGH-94 PSI, LOW-51 PSI (RECYCLED WATER)

IRRIGATION CONTROLLER AND IRRIGATION POINT OF CONNECTION IS NEW CONSTRUCTION.

FOR PROJECTS THAT INCLUDE LANDSCAPE WORK, FORM GRN 12 SHALL BE COMPLETED PRIOR TO FINAL INSPECTION APPROVAL.

SOILS TEST: REFER TO GEOTECHNICAL REPORT AS PART OF THE ARCHITECTURAL PLAN CHECK SUBMITTAL. AN AGRICULTURAL SUITABILITY REPORT WILL BE FURNISHED TO THE PLANNING DEPARTMENT BY THE CONTRACTOR AS PART OF THE DEFERRED SUBMITTAL PACKAGE.

CERTIFICATION: I AGREE TO COMPLY WITH THE REQUIREMENTS OF THE WATER EFFICIENT LANDSCAPE ORDINANCE AND SUBMIT A COMPLETE LANDSCAPE DOCUMENTATION PACKAGE. I HAVE COMPLIED WITH THE CRITERIA OF THE ORDINANCE AND APPLIED THEM FOR THE EFFICIENT USE OF THE WATER IN LANDSCAPE DESIGN PLANS

A DIAGRAM OF THE IRRIGATION PLAN SHOWING HYDROZONES SHALL BE KEPT WITH THE IRRIGATION CONTROLLER FOR SUBSEQUENT MANAGEMENT PURPOSES.

A CERTIFICATE OF COMPLETION SHALL BE FILLED OUT AND CERTIFIED BY EITHER THE DESIGNER OF THE LANDSCAPE PLANS, IRRIGATION PLANS, OR THE LICENSED LANDSCAPE CONTRACTOR FOR THE PROJECT.

AN IRRIGATION AUDIT REPORT SHALL BE COMPLETED AT THE TIME OF FINAL INSPECTION.

RECIRCULATING WATER SYSTEMS SHALL BE USED FOR WATER FEATURES.

A MINIMUM 3" LAYER OF MULCH SHALL BE APPLIED ON ALL EXPOSED SOIL SURFACES OF PLANTING AREAS EXCEPT FOR TURF AREAS, CREEPING OR ROOTING GROUNDCOVERS, OR DIRECT SEEDING APPLICATIONS WHERE MULCH IS CONTRAINDICATED.

FOR SOILS LESS THAN 6% ORGANIC MATTER IN THE TOP 6 INCHES OF SOIL, COMPOST AT A RATE OF A MINIMUM OF FOUR CUBIC YARDS PER 1,000 SQUARE FEET OF PERMEABLE AREA SHALL BE INCORPORATED TO A DEPTH OF SIX INCHES INTO THE SOIL.

PRESSURE REGULATING DEVICES ARE REQUIRED IF WATER PRESSURE IS BELOW OR EXCEEDS THE RECOMMENDED PRESSURE OF THE SPECIFIED IRRIGATION DEVICES.

CHECK VALVES OR ANTI-DRAIN VALVES ARE REQUIRED ON ALL SPRINKLER HEADS WHERE LOW POINT DRAINAGE COULD OCCUR.

WATER BUDGET CALCULATIONS

Landscape Area (LA)	
Regular	0.00
Special	83034.00
TOTAL	83,034.00

Reference Evapotranspiration (ETo)	
Reference Site	Eto
San Fernando	52

Conversion Factor (to Gallons/SF)
0.62

Evapotranspiration Adjustment Factor (ETAF)
0.45

Estimated Applied Water Use (EAWU):

REGULAR LANDSCAPE AREAS

Hydrozone No.	Hydrozone Description	Hydrozone Area (FT^2)	Plant Factor (PF)	Irrigation Method	Irrigation Efficiency (IE)	ETAF (PF/IE)	(ETAF x Area)	Estimated Total Water Use (Gallons) (ETWU)
0	0	0	0.2		0.81	0.25	0.00	0.00
	Total Area	**0**			**TOTALS**	**0**	**0.00**	**0.00**

SPECIAL LANDSCAPE AREAS - IRRIGATED BY RECYCLED WATER

Hydrozone No.	Hydrozone Description	Hydrozone Area (FT^2)	Plant Factor (PF)	Irrigation Method	Irrigation Efficiency (IE)	ETAF (PF/IE)	(ETAF x Area)	Estimated Total Water Use (ETWU)
H-1	Trees	1,650				1.00	1,650.00	53,196.00
H-2	Hydroseed/Native	8,015				1.00	8,015.00	258,403.60
H-3	Turf	73,369				1.00	73,369.00	2,365,416.56
	Total Area	**83,034**			**TOTALS**	**83,034**	**83,034.00**	**2,677,016.16**

ETAF Calculations	
Regular Landscape Areas	
Average ETAF	**#DIV/0!**
All Landscape Areas	
Sitewide ETAF	**1.00**

ESTIMATED TOTAL WATER USE (ETWU)	**0**	**GALLONS**
MAXIMUM ALLOW WATER ALLOWANCE (MAWA)	**1,472,359**	**GALLONS**

CRITICAL ANALYSIS

Generated: 2022-01-31 14:29

P.O.C. NUMBER: 01
Water Source Information: Existing recycled water meter

FLOW AVAILABLE
Point of Connection Size: 3"
Flow Available 253.02 GPM

PRESSURE AVAILABLE
Static Pressure at POC: 51.00 PSI
Booster Pump pressure provided: 40.00 psi
Pressure Available: 91.00 psi

DESIGN ANALYSIS
Maximum Station Flow: 63.5 GPM
Flow Available at POC: 253.02 GPM
Residual Flow Available: 189.52 GPM

Critical Station: 45
Design Pressure: 60 PSI
Friction Loss: 2.1 PSI
Fittings Loss: 0.21 PSI
Elevation Loss: 0 PSI
Loss through Valve: 2.45 PSI
Pressure Req, at Critical Station: 64.76 PSI
Loss for Fittings: 1.53 PSI
Loss for Main Line: 15.32 PSI
Loss for POC to Valve Elevation: 0 PSI
Loss for Backflow: 0 PSI
Loss for Master Valve: 2.38 PSI
Critical Station Pressure at POC: 83.99 PSI
Pressure Available: 91 PSI
Residual Pressure Available: 7.01 PSI

IRRIGATION LAYOUT NOTE:

1. THE LAYOUT FOR THE NEW IRRIGATION CONSTRUCTION SHOWN ON THESE PLANS IS FOR BIDDING PURPOSES ONLY.
2. FINAL LAYOUT OF ALL NEW IRRIGATION HEADS SHALL BE CONDUCTED IN THE FIELD USING THE SPACING LISTED PER LEGEND AND USING THE LOCATION OF EXISTING ADJACENT HEADS TO REMAIN SO AS TO ACHIEVE STANDARD HEAD-TO-HEAD COVERAGE AND DISTRIBUTION UNIFORMITY.
3. ALL LAYOUT SHALL BE SUBJECT TO THE REVIEW AND APPROVAL BY CITY ENGINEER AND RAP STAFF.
4. CONTRACTOR SHALL BE REQUIRED TO INSTALL ALL REQUIRED NEW MAINLINE, VALVES, HEADS, LATERAL LINE, AND 2-WIRE DECODERS REQUIRED TO ACHIEVE FULL COVERAGE.
5. LARGE TURF AREA ZONES SHALL NOT EXCEED 4 HEADS PER VALVE. CONVENTIONAL SPRAY OR STREAM BUBBLER ZONES SHALL NOT EXCEED 15 POP-UP HEADS PER VALVE.
6. ROTATING STREAM NOZZLES OR DRIPLINE SYSTEMS SHALL NOT BE USED WITHOUT AUTHORIZATION FROM THE DEPARTMENT OF RECREATION & PARKS.

STORMWATER MITIGATION
LOW IMPACT DEVELOPMENT (LID)
APPROVED WITH CONDITIONS
Stormwater Observation Report (SOR) is required prior to issuance of Certificate of Occupancy or finalization.
Digitally Signed by
Date:
Department of Public Works · Bureau of Sanitation
LA Sanitation and Environment

ENGINEERING
CITY OF LOS ANGELES

LICENSED LANDSCAPE ARCHITECT
JAN DYER
5623
11-30-24
12/6/2023
STATE OF CALIFORNIA

THIS PLAN WAS ELECTRONICALLY SIGNED AND STAMPED

BUREAU OF ENGINEERING

VERTICAL CONTROL:
HORIZONTAL CONTROL:

SHEET TITLE: IRRIGATION NOTES AND CALCULATIONS
PROJECT: VALLEY VILLAGE PARK STORM WATER CAPTURE PROJECT
ADDRESS: VALLEY VILLAGE PARK
5000 Westpark Dr, North Hollywood, CA 91601

NO.	REVISIONS	DATE	BY
		YY/MM/DD	
		YY/MM/DD	
		YY/MM/DD	
		YY/MM/DD	

CIP NO. SCP0009

INDEX NO.

CITY OF LOS ANGELES DEPARTMENT OF PUBLIC WORKS

CITY ENGINEER: DATE:
TED ALLEN, P.E.

DESIGN GROUP		DATE
ENGINEER:	MATT LYSNE	YY/MM/DD
ARCHITECT:	MATT LYSNE	YY/MM/DD
DESIGNED BY:	CARMEN GODINEZ	YY/MM/DD
DRAWN BY:	CARMEN GODINEZ	YY/MM/DD
CHECKED BY:	ALEX SAN DIEGO	YY/MM/DD
APPROVED BY:	MATT LYSNE	YY/MM/DD

PLANS PREPARED BY:
STUDIO-MLA
251 South Mission Road
Los Angeles, CA 90033
T: 213 384-3844 studio-mla.com

WORK ORDER
EW40085F

SHEET NAME
L-600A
SHEET 64 OF 80 SHEETS

REVISION DATES (DESIGN STAGE ONLY)

THE CITY OF LOS ANGELES OR ITS OFFICERS OR AGENTS SHALL NOT BE RESPONSIBLE FOR THE ACCURACY OR COMPLETENESS OF ELECTRONIC COPIES OF THIS PLAN SHEET.

RECYCLED / RECLAIMED WASTEWATER GUIDELINES

LOS ANGELES COUNTY ♦ DEPARTMENT OF PUBLIC HEALTH
ENVIRONMENTAL HEALTH

CROSS CONNECTIONS AND WATER POLLUTION CONTROL PROGRAM
5050 COMMERCE DRIVE, BALDWIN PARK, CA 91706-1423
TEL (626) 430-5290 FAX (626) 813-3025

REVISED 09/22/09

GUIDELINES FOR PIPELINE CONSTRUCTION AND INSTALLATION -
FOR THE SAFE USE OF RECYCLED / RECLAIMED WASTEWATER

PURPOSE: AS A RESULT OF INCREASING AVAILABILITY OF RECYCLED / RECLAIMED WASTEWATER AND AN INCREASED NEED FOR THE TRANSMISSION AND USE THEREOF, THE DEPARTMENT OF PUBLIC HEALTH – ENVIRONMENTAL HEALTH (THE DEPARTMENT) HAS FOUND IT NECESSARY TO ESTABLISH THE FOLLOWING REGULATIONS FOR PIPELINE CONSTRUCTION AND INSTALLATION AS WELL AS FOR THE SAFE USE OF RECYCLED / RECLAIMED WASTEWATER. THESE REGULATIONS ARE INTENDED TO PROTECT PUBLIC HEALTH BY ENSURING THE SAFETY OF OUR DOMESTIC POTABLE WATER SUPPLIES.

BACKGROUND: A RECENT INCREASE IN THE NUMBER OF INQUIRIES AND INTEREST DISPLAYED REGARDING THE USE OF RECYCLED / RECLAIMED WATER, IN THE ONGOING EFFORTS TO CONSERVE WATER, HAVE NECESSITATED THE NEED TO ESTABLISH DEFINITIONS, STANDARDS AND REGULATION FOR THE UNIFORM REVIEW AND APPROVAL OF RECYCLED / RECLAIMED WASTEWATER. RECYCLED / RECLAIMED WATER MAY BE USED FOR SURFACE IRRIGATION OF THE FOLLOWING: FOOD CROPS; PARKS AND PLAYGROUNDS; SCHOOL YARDS; RESIDENTIAL LANDSCAPING; AND UNRESTRICTED ACCESS GOLF COURSES.

DEFINITIONS:

GRAY WATER MEANS UNTREATED WASTEWATER THAT HAS NOT COME INTO CONTACT WITH TOILET WASTE, KITCHEN SINK WASTE, DISHWASHER WASTE OR SIMILARLY CONTAMINATED SOURCES. GRAY WATER INCLUDES WATER FROM BATHTUBS, SHOWERS, BATHROOM WASH BASINS, CLOTHES-WASHERS AND LAUNDRY TUBS.

NON-POTABLE WATER MEANS WATER WHICH IS UNFIT FOR HUMAN OR ANIMAL CONSUMPTION DUE TO CONTAMINANTS THAT EXCEED THE CURRENT PERMISSIBLE MAXIMUM CONTAMINANT LEVEL (MCL) IN DRINKING WATER.

POTABLE WATER MEANS WATER WHICH IS FIT FOR CONSUMPTION BY HUMANS AND OTHER ANIMALS. THE U.S. ENVIRONMENTAL PROTECTION AGENCY (EPA) IDENTIFIES CONTAMINANTS THAT MAY ADVERSELY AFFECT PUBLIC HEALTH AND OCCUR IN DRINKING WATER WITH A FREQUENCY AND AT LEVELS THAT POSE A THREAT TO PUBLIC HEALTH. THE EPA ESTABLISHES (MCLS) FOR BOTH BIOLOGICAL AND CHEMICAL CONTAMINANTS PERMISSIBLE IN DRINKING WATER. THESE MCLS BECOME ENFORCEABLE STANDARDS THAT DETERMINE THE POTABILITY OF WATER.

RECYCLED / RECLAIMED WATER MEANS NON-POTABLE WATER THAT MEETS OR AS A RESULT OF TREATMENT, MEETS FEDERAL REQUIREMENTS FOR ITS INTENDED USES. THE LEVEL OF TREATMENT AND
QUALITY OF THE RECLAIMED / RECYCLED WATER SHALL BE APPROVED BY THE AUTHORITY HAVING JURISDICTION. RECLAIMED / RECYCLED WATER SYSTEMS SHALL HAVE NO CONNECTION TO ANY POTABLE WATER SYSTEM, WITH OR WITHOUT MECHANICAL BACKFLOW PREVENTION DEVICES.

RECYCLED / RECLAIMED WASTEWATER SYSTEMS SHALL BE
CONSTRUCTED IN COMPLIANCE WITH APPLICABLE POTABLE
WATER SYSTEM CONSTRUCTION STANDARDS AS WELL AS THOSE
SPECIFIED IN "THE PURPLE BOOK", CALIFORNIA HEALTH LAWS
RELATED TO RECYCLED WATER, (CALIFORNIA HEALTH AND
SAFETY CODE, WATER CODE, TITLES 22 AND 17 OF THE
CALIFORNIA CODE OF REGULATIONS) AND THE LOS ANGELES
COUNTY CODE (LACC), TITLE 28 – PLUMBING, APPENDIX J.

PRELIMINARY REQUIREMENTS

- PLANS AND SPECIFICATIONS FOR RECYCLED / RECLAIMED WASTEWATER DISTRIBUTION SYSTEMS, AS WELL AS THE USE AND OPERATION OF SUCH SYSTEMS SHALL BE SUBMITTED TO THE DEPARTMENT FOR REVIEW AND APPROVAL PRIOR TO CONSTRUCTION OR IMPLEMENTATION.

- PRIOR TO COMMENCING CONSTRUCTION, THE CONTRACTOR SHALL CONTACT THE DEPARTMENT TO SCHEDULE AN INSPECTION OF THE PROPOSED ON-SITE RECYCLED / RECLAIMED AND POTABLE WATER WORK.

- NO PIPING FOR POTABLE OR RECYCLED / RECLAIMED WATER IN CONJUNCTION WITH A SPECIFIED PROJECT SHALL BE INSTALLED PRIOR TO PLAN CHECK APPROVAL AND PRELIMINARY INSPECTION.

- UPON COMPLETION OF CONSTRUCTION, NO EXCAVATION OR OPEN TRENCH MAY BE BACKFILLED WITHOUT FIRST SECURING THE DEPARTMENT APPROVAL. ANY AREAS BACKFILLED WITHOUT PRIOR APPROVAL WILL BE REQUIRED TO BE EXPOSED AND CORRECTED AS NECESSARY.

- ONLY A DEPARTMENT APPROVED TEMPORARY WATER CONNECTION, TO A POTABLE WATER SUPPLY VIA A DEDICATED, APPROVED, REDUCED-PRESSURE-PRINCIPLE BACKFLOW PREVENTION DEVICE SHALL BE PERMITTED TO BE UTILIZED FOR THE PURPOSE OF FLUSHING, PRESSURE TESTING, CONSTRUCTION, LANDSCAPE USE OR THE FINAL CROSS-CONNECTION TESTING.

SEPARATION REQUIREMENTS

THE MAXIMUM ATTAINABLE SEPARATION OF RECYCLED / RECLAIMED WASTEWATER LINES AND POTABLE WATER LINES SHALL BE ENFORCED IN ORDER TO MINIMIZE POTENTIAL RISKS ASSOCIATED WITH PIPELINE BREAKS RESULTING IN INFILTRATION OF WASTEWATER FROM LEAKING WASTEWATER LINES INTO DOMESTIC WATER LINES, OR ACCIDENTAL CROSS-CONNECTIONS BETWEEN RECYCLED WASTEWATER AND POTABLE WATER SYSTEMS.







PARALLEL CONSTRUCTION: A HORIZONTAL SEPARATION OF AT LEAST TEN FEET (10') SHALL BE REQUIRED BETWEEN PRESSURIZED, BURIED, RECYCLED / RECLAIMED AND POTABLE WATER PIPING (ALL DISTANCE TO BE MEASURED FROM PIPELINE OUTSIDE DIAMETER).

- CROSS-OVER CONSTRUCTION: BURIED POTABLE WATER PIPES CROSSING OVER PRESSURIZED RECYCLED / RECLAIMED WATER PIPES SHALL BE LAID NOT LESS THAN TWELVE INCHES (12") ABOVE THE RECLAIMED WATER PIPES. RECLAIMED WATER PIPES LAID IN THE SAME TRENCH OR CROSSING-OVER BUILDING SEWER OR DRAINAGE PIPING SHALL BE INSTALLED IN COMPLIANCE WITH THE LACC – TITLE 28, PLUMBING, SECTIONS 609.0 AND 720.0.

- UNUSED OR ABANDONED POTABLE WATER LINES: THESE LINES ARE TO BE SEVERED AS CLOSE TO WATER MAINS AS PRACTICAL, CAPPED, AND A TEN FOOT (10') SECTION OF ABANDONED LINE
REMOVED AND CEMENTED UNDER DIRECT SUPERVISION BY THE DEPARTMENT.

- EXISTING ON-SITE PIPING: MAXIMUM SEPARATION OF RECYCLED / RECLAIMED WASTEWATER LINES AND POTABLE WATER LINES SHALL BE MAINTAINED UPON SYSTEM ADDITIONS OR MODIFICATION.

PIPELINE MATERIALS AND IDENTIFICATION

ALL RECYCLED / RECLAIMED WATER PIPE MATERIALS, VALVES AND FITTINGS SHALL CONFORMS TO THE REQUIREMENTS OF THE LACC – TITLE 28, PLUMBING, SECTIONS 604.0, 605.0 AND 606.0.

ALL RECYCLED / RECLAIMED WASTEWATER LINES (PRESSURE / NON-PRESSURE), VALVE BOXES, HYDRANTS AND APPURTENANCES SHALL BE IDENTIFIED TO CLEARLY DISTINGUISH BETWEEN RECYCLED / RECLAIMED WASTEWATER, NON-POTABLE AND POTABLE WATER SYSTEMS (AS SPECIFIED IN LACC – TITLE 28, PLUMBING, APPENDIX J).

- RECYCLED / RECLAIMED WASTEWATER: ALL BURIED, RECYCLED, WASTEWATER SYSTEMS (PRESSURE / NON-PRESSURE) SHALL UTILIZE PURPLE PIPE WITH BLACK UPPERCASE LETTERING "CAUTION: RECYCLED WATER – DO NOT DRINK" PRINTED ON OPPOSITE SIDES OF THE PIPE. FOR LIMITED APPLICATION, THE USE OF CONTINUOUS LETTERING ON THREE INCH (3") MINIMUM WIDTH PURPLE TAPE WITH ONE INCH BLACK OR WHITE CONTRASTING UPPERCASE LETTERING "CAUTION RECYCLED WATER – DO NOT DRINK" PERMANENTLY AFFIXED AT INTERVALS NOT TO EXCEED FIVE FEET, ATOP ALL HORIZONTAL PIPING, LATERALS AND MAINS. IDENTIFICATION TAPE SHALL EXTEND TO ALL VALVE BOXES AND / OR VAULTS, EXPOSED PIPING, HYDRANTS AND QUICK COUPLERS. ALL VALVES, EXCEPT FIXTURE SUPPLY CONTROL VALVES SHALL BE EQUIPPED WITH A LOCKING FEATURE. ALL MECHANICAL EQUIPMENT THAT IS APPURTENANT TO THE RECYCLED / RECLAIMED WATER SYSTEM SHALL BE PAINTED PURPLE.

- POTABLE WATER: ALL POTABLE WATER LINES SHALL BE INSTALLED IN ACCORDANCE WITH THE UNIFORM PLUMBING CODE AND ALL OTHER APPLICABLE POTABLE WATER SYSTEM CONSTRUCTION STANDARDS. ALL BURIED POTABLE WATER LINES SHALL BE CLEARLY IDENTIFIED BY CONTINUOUS LETTERING ON THREE INCH (3") MINIMUM WIDTH BLUE TAPE WITH ONE INCH (1") WHITE LETTERING BEARING THE REPEATED WORDING "POTABLE WATER" PERMANENTLY AFFIXED AT TEN FOOT INTERVALS ATOP ALL HORIZONTAL PIPING, LATERALS AND MAINS. IDENTIFICATION TAPE SHALL EXTEND TO ALL VALVE BOXES AND / OR VAULTS, EXPOSED PIPING AND HYDRANTS. IDENTIFICATION TAPE IS NOT NECESSARY FOR EXTRUDED COLORED PVC WITH CONTINUOUS WORDING "POTABLE WATER" PRINTED IN CONTRASTING LETTERING ON OPPOSITE SIDES OF THE PIPE.

- NON-POTABLE WATER: ALL NON-POTABLE IRRIGATION / INDUSTRIAL WATER LINES (PRESSURE / NON-PRESSURE) SHALL BE IDENTIFIED BY CONTINUOUS LETTERING ON THREE INCH (3") MINIMUM WIDTH TAPE WITH ONE INCH (1") CONTRASTING LETTERING BEARING THE CONTINUOUS UPPERCASE LETTERING "NON-POTABLE WATER – DO NOT DRINK" PERMANENTLY AFFIXED AT TEN FOOT (10') INTERVALS ATOP ALL HORIZONTAL PIPING, LATERALS AND MAINS. IDENTIFICATION TAPE SHALL EXTEND TO ALL VALVE BOXES AND / OR VAULTS, EXPOSED PIPING, HYDRANTS AND QUICK COUPLERS. EXPOSED PIPING, VALVE BOXES, VAULTS, CONTROL VALVES, QUICK COUPLING VALVES, OUTLETS AND RELATED APPURTENANCES SHALL BE COLOR-CODED AND LABELED / TAGGED TO DIFFERENTIATE BETWEEN RECYCLED / RECLAIMED WASTEWATER, POTABLE WATER AND NON-POTABLE WATER SYSTEMS. TAGS IDENTIFYING RECYCLED / RECLAIMED WATER SHALL HAVE THE APPROPRIATE IDENTIFICATION ON BOTH SIDES (WORDING ON ONE SIDE AND SYMBOL ON THE OPPOSITE SIDE).

THE SAFE USE OF RECYCLED / RECLAIMED WATER
PROTECTS POTABLE WATER

- DETERIORATED OR INADEQUATELY-PROTECTED WELL WATER CASINGS SHALL BE REPAIRED OR REPLACED TO PROTECT AQUIFERS AGAINST CONTAMINATION FROM RECYCLED / RECLAIMED WASTEWATER SYSTEMS.

- AN ON-SITE WATER SUPERVISOR SHALL BE APPOINTED, HAVING THE RESPONSIBILITY OF OVERSIGHT FOR THE PROTECTION OF THE POTABLE WATER SYSTEM (PROVIDED FOR UNDER TITLE 17, SECTION 7586, AND CALIFORNIA CODE OF REGULATIONS). THE NAME AND POSITION OF THE ON-SITE WATER SUPERVISOR SHALL BE REPORTED TO THE WATER PURVEYOR AND TO THE DEPARTMENT. THIS POSITION WILL BE RESPONSIBLE FOR THE INSTALLATION, OPERATION AND MAINTENANCE OF THE RECYCLED / RECLAIMED WASTEWATER AND POTABLE WATER SYSTEMS; AUTHORIZATION OF ANY PIPING CHANGES OR ADDITIONS TO EITHER THE POTABLE OR RECYCLED SYSTEMS; PREVENTION OF POTENTIAL HAZARDS; IMPLEMENTATION OF THE REGULATIONS; AND COORDINATION WITH THE CROSS-CONNECTION PROGRAM OF THE WATER PURVEYOR AND OF THIS DEPARTMENT.

- HOSE BIBBS SHALL NOT BE PERMITTED IN ANY AREAS OF PUBLIC ACCESS TO RECYCLED / RECLAIMED WASTEWATER SYSTEMS, TO PREVENT UNAUTHORIZED USE OF RECYCLED WASTEWATER. QUICK-COUPLERS ARE PERMITTED IN LIEU OF HOSE-BIBB OUTLETS BUT SHALL ONLY BE CONNECTED TO RECYCLED / RECLAIMED WASTEWATER LINES. HOSE BIBS MAY BE PERMITTED IN AREAS THAT ARE NOT ACCESSIBLE TO THE PUBLIC, PROVIDED THEY ARE PROPERLY IDENTIFIED WITH PERMANENTLY AFFIXED TAGS, LABELS, OR PLATES WITH UPPERCASE LETTERING "RECYCLED WATER – DO NOT DRINK" IN ENGLISH.

- THE USE OF RECYCLED / RECLAIMED WASTEWATER FOR IRRIGATION PURPOSES SHALL MINIMIZE EXPOSURE OF THE WASTEWATER SPRAY TO DRINKING FOUNTAINS AND PICNIC TABLES THROUGH SELECTIVE LOCATION OF EQUIPMENT AND BY APPROPRIATE IRRIGATION SYSTEM DESIGN. ADDITIONALLY, THE FOLLOWING MEASURES SHOULD BE TAKEN: RECYCLED WASTEWATER SPRAYING SHALL BE DONE DURING HOURS OF LEAST PUBLIC EXPOSURE; ANY AREA WHERE RECYCLED WASTEWATER IS RELEASED, USED OR IMPOUNDED SHOULD BE POSTED, INFORMING THE PUBLIC THAT RECYCLED WATER IS BEING USED; AND IRRIGATION PRACTICES UTILIZING RECYCLED WATER SHALL BE CONTROLLED TO PREVENT SURFACE RUNOFF.

BACKFLOW PROTECTION

- THERE SHALL BE NO INTERCONNECTION BETWEEN A POTABLE WATER SYSTEM AND A RECYCLED / RECLAIMED WATER SYSTEM WITHIN THE USER'S PREMISES.

- A DYE OR PRESSURE TEST SHALL BE UTILIZED TO CONFIRM THE PHYSICAL SEPARATION OF A RECYCLED WASTEWATER SYSTEM AND A POTABLE WATER SYSTEM. TESTING SHALL BE PERFORMED IN CONJUNCTION WITH THE WATER PURVEYOR AND THIS DEPARTMENT AND CONDUCTED BEFORE THE INTRODUCTION OF RECYCLED WASTEWATER.

- AN APPROVED BACKFLOW PREVENTION DEVICE SHALL BE INSTALLED AT THE POTABLE WATER SERVICE CONNECTION.

- IN A RECYCLED / RECLAIMED WASTEWATER DISTRIBUTION SYSTEM, A BACKFLOW PREVENTION DEVICE MAY BE REQUIRED AT THE RECYCLED WASTEWATER METER OR AT SPECIFIC ON-SITE LOCATIONS WHERE SAID USE COULD DEGRADE THE QUALITY OF THE RECYCLED WASTEWATER
supply.

STORMWATER MITIGATION
LOW IMAPCT DEVELOPMENT (LID)
APPROVED WITH CONDITIONS

This set of plans and specifications must be at the jobsite during construction

Stormwater Observation Report (SOR) is required prior to issuance of Certificate of Occupancy or final sign off.

Total Pages 48

Digitally Signed By: S. Garcia Date: 12/12/2023
Department of Public Works - Bureau of Sanitation
Watershed Protection Division

PLANS PREPARED BY:
STUDIO-MLA
251 South Mission Road
Los Angeles, California 90033
T (213) 384-3844 studio-mla.com

CITY OF LOS ANGELES DEPARTMENT OF PUBLIC WORKS
BUREAU OF ENGINEERING

CITY ENGINEER: TED ALLEN, P.E.

DESIGN GROUP	DATE
ENGINEER:	YY/MM/DD
ARCHITECT: MATT LYSNE	YY/MM/DD
DESIGNED BY: CARMEN GODINEZ	YY/MM/DD
DRAWN BY: CARMEN GODINEZ	YY/MM/DD
CHECKED BY: ALEX SAN DIEGO	YY/MM/DD
APPROVED BY: MATT LYSNE	YY/MM/DD

NO.	REVISIONS	DATE	BY
		YY/MM/DD	
		YY/MM/DD	
		YY/MM/DD	
		YY/MM/DD	

VERTICAL CONTROL:
HORIZONTAL CONTROL:

SHEET TITLE: IRRIGATION NOTES
PROJECT: VALLEY VILLAGE PARK STORM WATER CAPTURE PROJECT
ADDRESS: VALLEY VILLAGE PARK
5000 Westpark Dr, North Hollywood, CA 91601

CIP NO. SCP0009

INDEX NO.

WORK ORDER
EW40085F

SHEET NAME
L-600B
SHEET 65 OF 80 SHEETS

ENGINEERING
CITY OF LOS ANGELES

LICENSED LANDSCAPE ARCHITECT
JAN DYER
5623
11-30-24
12/6/2023
STATE OF CALIFORNIA

THIS PLAN WAS ELECTRONICALLY SIGNED AND STAMPED

THE CITY OF LOS ANGELES OR IT'S OFFICERS OR AGENTS SHALL NOT BE RESPONSIBLE FOR THE ACCURACY OR COMPLETENESS OF ELECTRONIC COPIES OF THIS PLAN SHEET.

REVISION DATES
(DESIGN STAGE ONLY)

COUNTY OF LOS ANGELES • DEPARTMENT OF PUBLIC HEALTH
ENVIRONMENTAL HEALTH
ENVIRONMENTAL PROTECTION BRANCH
CROSS CONNECTIONS PROGRAM
5050 COMMERCE DR, BALDWIN PARK, CA 91706
PHONE: (626) 430-5290
WWW.PUBLICHEALTH.LACOUNTY.GOV/EH

OFFICIAL PLAN REVIEW REPORT

DATE	01/25/2022	EHS	ERIC WOOD
PLAN CHECK NUMBER	SR0273105		
PROGRAM ELEMENT	5310 - CC - RECYCLED WATER NEW SUBMTL INDOOR		
OWNER / REQUESTER	CITY OF LOS ANGELES, DEPARTMENT OF PUBLIC WORKS, MATTHEW HUCKABY - CAROLLO ENGIN		
DBA	VALLEY VILLAGE PARK STORMWATER CAPTURE PROJECT		
ADDRESS	5000 WESTPARK DR, NORTH HOLLYWOOD, CA 91601		

INITIAL PLAN REVIEW STATUS: APPROVED

ATTENTION: CITY OF LOS ANGELES, DPW
BRYAN.POWELL@LACITY.ORG

SUBMITTED BY: MATHEW HUCKABY (CAROLLO ENGINEERS)
MHUCKABY@CAROLLO.COM

PLANS SUBMITTED: G-01, G-02, G-03, C-10, L002, L600A, L600B, L600C, L600D, L600E, L601, L602, L603, L604, L605, L606

THIS APPROVAL IS FOR RECYCLED WATER USE FOR OUTDOOR IRRIGATION ONLY.

CONTACT LADWP FOR PLAN SUBMITTAL FOR THIS PROJECT AND FOR THEIR REQUIREMENTS REGARDING METER SERVICE PROTECTION.

IF YOU HAVE ANY QUESTIONS REGARDING THIS REPORT, PLEASE CONTACT:

ERIC WOOD, EHS III

LACDPH

EWOOD@PH.LACOUNTY.GOV

CC: D.DIEP, RWQCB
K.CHENG, RWQCB
J.LIM, RWQCB
S.WEBB, RWQCB
B.LIANG, RWQCB
C.GUEL, LADWP
J.LOCKETT, LADWP
FILE

Help us serve you better by completing a short survey. Visit our website at http://publichealth.lacounty.gov/eh/about/customer-service.htm

Eric Wood
EHS Signature

OFFICIAL PLAN REVIEW REPORT

DATE	01/25/2022	EHS	ERIC WOOD
PLAN CHECK NUMBER	SR0273105		
PROGRAM ELEMENT	5310 - CC - RECYCLED WATER NEW SUBMTL INDOOR		
OWNER / REQUESTER	CITY OF LOS ANGELES, DEPARTMENT OF PUBLIC WORKS, MATTHEW HUCKABY - CAROLLO ENGIN		
DBA	VALLEY VILLAGE PARK STORMWATER CAPTURE PROJECT		
ADDRESS	5000 WESTPARK DR, NORTH HOLLYWOOD, CA 91601		

COMMENTS

A WATER USE SURVEY SHALL BE CONDUCTED ON-SITE BY THIS DEPARTMENT PRIOR/DURING THE REQUIRED CROSS CONNECTION SHUTDOWN.
AN APPROVED TEMPORARY POTABLE MAKE-UP SUPPLY LINE SHALL BE INSTALLED ON THE IRRIGATION SYSTEM PROTECTED BY AN APPROVED RP BACKFLOW PREVENTER ASSEMBLY. THE RECYCLED WATER SOURCE SHALL NOT BE CONNECTED AT ANY TIME UNTIL FINAL APPROVAL IS GIVEN BY A REPRESENTATIVE FROM THIS DEPARTMENT.

ADDITIONAL REQUIREMENTS

1. Obtain all necessary permit and approval from:
   - the local building and safety / building department or Authority Having Jurisdiction i.e. Division of State Architecture
   - the local water district / water department
   (2016 California Plumbing Code: Chapter 16A, Section 1615 A.0 and 1616A.0) (Title 17 Code of Regulations, Section 7603.C)

2. Any modification or unauthorized changes to this approval in design or during construction will deem this approval void and could warrant suspension of construction until plans are re-submitted, with completed plan review application and fee, to this Department for review and approval prior to the commencement of construction. In addition, this approval does not blanket regulatory or policy issues revealed during construction. (2016 California Plumbing Code: Chapter 16, Sections 1601.1, 1601.2, 1601.3, 1601.4, 1601.5, 1601.6 and 1602.2)

3. All waterlines shall be identified with continuous marking tape, affixed directly to the pipe, and secured every five feet with the wording: "POTABLE WATER" - blue or green tape with white letterings; "RECYCLED WATER, DO NOT DRINK" - purple colored manufactured pipe, approved sleeving, or purple colored tape (Pantone color #512) with black uppercase lettering; "CAUTION: NONPOTABLE WATER, DO NOT DRINK" - yellow tape with black uppercase letterings and "CAUTION: FIRE WATER" - red tape with white uppercase letterings for all fire supply lines. (2016 California Plumbing Code: Chapter 6, Section 601.3, 601.3.2 and Chapter 16A, Section 1617 A.2)

4. All water valves shall be labeled, with approved identification tags, distinguishing between: "POTABLE WATER"; "NON-POTABLE WATER, DO NOT DRINK"; "RECYCLED WATER, DO NOT DRINK"; same criteria as above, # 3.

5. Provide a temporary domestic water connection via a reduced pressure principle backflow assembly, for construction use, flushing, and testing. After a successful cross connection test is conducted and said project is approved, a ten foot (10) section of pipe connecting the irrigation system to the potable water shall be removed once approval to use recycled water is permitted. Said section of pipeline shall be removed prior to the recycled water tie-in. (2016 California Plumbing Code: Chapter 16A, Section 1618A.0)

6. Whenever possible, a ten (10) foot horizontal and a minimum of one (1) foot vertical separation shall be maintained between recycled and potable water lines, with potable water lines at a higher elevation.

7. Contact this Department, local water district or department and/or building department for a pre-construction meeting(s), inspection of all newly installed underground water pipelines before backfilling, the required cross connection test, and the final recycled water tie-in.

Help us serve you better by completing a short survey. Visit our website at http://publichealth.lacounty.gov/eh/about/customer-service.htm

Eric Wood
EHS Signature

OFFICIAL PLAN REVIEW REPORT

DATE	01/25/2022	EHS	ERIC WOOD
PLAN CHECK NUMBER	SR0273105		
PROGRAM ELEMENT	5310 - CC - RECYCLED WATER NEW SUBMTL INDOOR		
OWNER / REQUESTER	CITY OF LOS ANGELES, DEPARTMENT OF PUBLIC WORKS, MATTHEW HUCKABY - CAROLLO ENGIN		
DBA	VALLEY VILLAGE PARK STORMWATER CAPTURE PROJECT		
ADDRESS	5000 WESTPARK DR, NORTH HOLLYWOOD, CA 91601		

8. No physical connection shall be made or allowed to exist between any recycled water system and any separate system conveying potable water. (2009 Title 22 Code of Regulation, Sec. 60310 (h)) (2016 California Plumbing Code: Chapter 16A, Section 1613A)

9. All use areas where recycled water is used, accessible to the public, and in areas such as: entrances, public gathering areas, bus stops, and designated eating areas, shall be post with permanent notification signs, visible to the public, bearing the words "RECYCLED WATER - DO NOT DRINK". Each sign shall include an international do not drink symbol. (2009 Title 22 Code of Regulation, Section 60310(g))

10. Backflow prevention devices installed at the service connections and internally shall be tested upon installation and the results forwarded to either the Water Department or Health Department depending where the backflow prevention device is installed, i.e. meter or internal protection. Non-testable backflow prevention devices are exempted.

11. Contact this Program at 626 430 5290 for representative(s) from this office to schedule for a pre-construction meeting, inspection of all water conveyance pipelines installed during construction, for water systems identification and separation, prior to back-filling, and for a required cross connection test. Inspection shall be done by this Program in conjunction with the local building and water department. (2009 Title 22 Coce of Regulation, Section 60316 and 2016 California Plumbing Code: Chapter 16A, Section 1620A.0(B)(2))

12. It is the responsibility of the project owner and / or its representative to distribute this plan review conditional approval letter to all parties concern.

13. Additional Fee for service(s) - "The current fee applies to plan review process and two (2) requested site inspections. Additional inspection charges, if necessary, will base on an hourly rate of the current 2015-2016 fee schedule. (Los Angeles County Title 8, Section 08.04.728)

14. Provide contact information on the "on site water supervisor" having the responsibility for the maintenance of the project. The water supervisor shall be responsible for operation, and maintenance of the recycled water supply and potable water systems. The water supervisor shall also prevent potential hazards, implement recycled water guidelines and coordinate future inspections with the cross connection control program of the both the city's water purveyor and this Department.

15. Contact pipe marking / identification supplier immediately for availability of the required various pipeline marking tape and tags to avoid unnecessary construction delays. Provide continuous tape samples.

DISCLOSURES

It is Improper and Illegal for any County officer, employee or Inspector to solicit bribes, gifts or gratuities in connection with performing their official duties. Improper solicitations include requests for anything of value such as cash, discounts, free services, paid travel or entertainment, or tangible items such as food or beverages. Any attempt by a County employee to solicit bribes, gifts or gratuities for any reason should be reported immediately to either the County manager responsible for supervising the employee or the Fraud Hotline at (800) 544-6861 or www.lacountyfraud.org. YOU MAY REMAIN ANONYMOUS.

Help us serve you better by completing a short survey. Visit our website at http://publichealth.lacounty.gov/eh/about/customer-service.htm

Eric Wood
EHS Signature

IRRIGATION CONTROLLER NOTES

CONTRACTOR SHALL PURCHASE AND INSTALL THE FOLLOWING CONTROLLER AS NOTED BELOW:

CONTROLLER MANUFACTURER:	RAIN MASTER
CONTROLLER MODEL:	EGP-TW, EGP-iCENTRAL, EGP-ISVC5Y CONTROLLER
WIRE TYPE:	TWO-WIRE
ASSEMBLY TYPE:	TOP MOUNT ENCLOSURE
SERVICE:	ICENTRAL CELLULAR - 5 YEARS

RMPM-REMOTE TRANSMITTER AND RECEIVER KIT
TWO-WIRE JACKET COLOR: BLUE
INCLUDE SURGE PROTECTION AND GROUNDING
CONTROLLER TO HAVE ENCLOSURE MOUNTED RAIN SENSOR.
THE IRRIGATION CONTRACTOR SHALL MAKE FINAL ELECTRICAL CONNECTION TO CONTROLLER PER LOCAL ELECTRICAL CODE.

RECYCLED WATER CONVERSION AREAS EQUIPMENT

1. PROVIDE NEW 2-WIRE CABLE IN CONDUIT TO EACH EX. RCV REPLACED TO NEW 2-WIRE CONTROLLER LOCATION.
2. REPLACE EXISTING VALVES WITH NEW TORO 22O SERIES BRASS VALVE WITH EFFLUENT WATER SOLENOID AND WARNING TAG, AND NEW RECYCLED WATER VALVE BOX.
3. REPLACE ALL EXISTING HEADS WITH NEW RECYCLED WATER COMPATIBLE HEADS TO MATCH EXISTING. USE TORO T5 OR T7 HEADS AS NEEDED FOR REQUIRED RADIUS. DO NOT MIX T5 AND T7 ON SAME VALVE. CONTRACTOR TO PROVIDE SUBMITTAL FOR THE 1:1 HEAD REPLACEMENT HEADS FOR RAP APPROVAL.

IRRIGATION SCHEDULE OVERALL

SYMBOL	MANUFACTURER/MODEL/DESCRIPTION	PSI			DETAIL
Q T H TT TQ F 5-H-PC	TORO 570Z-6P-PRX-COM-E 5 SERIES TURF SPRAY, 6" POP-UP WITH BUILT IN-RISER PRESSURE REGULATOR, AND X-FLOW WATER SHUT-OFF DEVICE. ALSO INCLUDES THE ZERO FLUSH WIPER SEAL. 1/2" FEMALE-THREADED INLET. WITH CHECK VALVE, AND EFFLUENT PURPLE CAP FOR NON-POTABLE WATER USE.	30			8/L-604
Q T H TT TQ F 8-H-PC	TORO 570Z-6P-PRX-COM-E 8 SERIES TURF SPRAY, 6" POP-UP WITH BUILT IN-RISER PRESSURE REGULATOR, AND X-FLOW WATER SHUT-OFF DEVICE. ALSO INCLUDES THE ZERO FLUSH WIPER SEAL. 1/2" FEMALE-THREADED INLET. WITH CHECK VALVE, AND EFFLUENT PURPLE CAP FOR NON-POTABLE WATER USE.	30			8/L-604
Q T H TT TQ F 10-H-PC	TORO 570Z-6P-PRX-COM-E 10 SERIES TURF SPRAY, 6" POP-UP WITH BUILT IN-RISER PRESSURE REGULATOR, AND X-FLOW WATER SHUT-OFF DEVICE. ALSO INCLUDES THE ZERO FLUSH WIPER SEAL. 1/2" FEMALE-THREADED INLET. WITH CHECK VALVE, AND EFFLUENT PURPLE CAP FOR NON-POTABLE WATER USE.	30			8/L-604
Q T H TT TQ F 12-H-PC	TORO 570Z-6P-PRX-COM-E 12 SERIES TURF SPRAY, 6" POP-UP WITH BUILT IN-RISER PRESSURE REGULATOR, AND X-FLOW WATER SHUT-OFF DEVICE. ALSO INCLUDES THE ZERO FLUSH WIPER SEAL. 1/2" FEMALE-THREADED INLET. WITH CHECK VALVE, AND EFFLUENT PURPLE CAP FOR NON-POTABLE WATER USE.	30			8/L-604
Q T H TT TQ F 15-H-PC	TORO 570Z-6P-PRX-COM-E 15 SERIES TURF SPRAY, 6" POP-UP WITH BUILT IN-RISER PRESSURE REGULATOR, AND X-FLOW WATER SHUT-OFF DEVICE. ALSO INCLUDES THE ZERO FLUSH WIPER SEAL. 1/2" FEMALE-THREADED INLET. WITH CHECK VALVE, AND EFFLUENT PURPLE CAP FOR NON-POTABLE WATER USE.	30			8/L-604
2SST 4EST 4CST 4SST 4S-SST 8SST	TORO 570Z-6P-PRX-COM-E TURF STRIP SPRAY TURF SPRAY, 6" POP-UP WITH BUILT IN-RISER PRESSURE REGULATOR, AND X-FLOW WATER SHUT-OFF DEVICE. ALSO INCLUDES THE ZERO FLUSH WIPER SEAL. 1/2" FEMALE-THREADED INLET. WITH CHECK VALVE, AND EFFLUENT PURPLE CAP FOR NON-POTABLE WATER USE.	30			8/L-604
Q T H TT TQ F	TORO 570Z-12P-PRX-COM-E 8 SERIES SHRUB SPRAY, 12" POP-UP WITH BUILT IN-RISER PRESSURE REGULATOR, AND X-FLOW WATER SHUT-OFF DEVICE. ALSO INCLUDES THE ZERO FLUSH WIPER SEAL. 1/2" FEMALE-THREADED INLET. WITH CHECK VALVE, AND EFFLUENT PURPLE CAP FOR NON-POTABLE WATER USE.	30			8/L-604
Q T H TT TQ F	TORO 570Z-12P-PRX-COM-E 10 SERIES SHRUB SPRAY, 12" POP-UP WITH BUILT IN-RISER PRESSURE REGULATOR, AND X-FLOW WATER SHUT-OFF DEVICE. ALSO INCLUDES THE ZERO FLUSH WIPER SEAL. 1/2" FEMALE-THREADED INLET. WITH CHECK VALVE, AND EFFLUENT PURPLE CAP FOR NON-POTABLE WATER USE.	30			8/L-604
Q T H TT TQ F	TORO 570Z-12P-PRX-COM-E 12 SERIES SHRUB SPRAY, 12" POP-UP WITH BUILT IN-RISER PRESSURE REGULATOR, AND X-FLOW WATER SHUT-OFF DEVICE. ALSO INCLUDES THE ZERO FLUSH WIPER SEAL. 1/2" FEMALE-THREADED INLET. WITH CHECK VALVE, AND EFFLUENT PURPLE CAP FOR NON-POTABLE WATER USE.	30			8/L-604
Q T H TT TQ F	TORO 570Z-12P-PRX-COM-E 15 SERIES SHRUB SPRAY, 12" POP-UP WITH BUILT IN-RISER PRESSURE REGULATOR, AND X-FLOW WATER SHUT-OFF DEVICE. ALSO INCLUDES THE ZERO FLUSH WIPER SEAL. 1/2" FEMALE-THREADED INLET. WITH CHECK VALVE, AND EFFLUENT PURPLE CAP FOR NON-POTABLE WATER USE.	30			8/L-604
2SST 4EST 4CST 4SST 4S-SST 8SST	TORO 570Z-12P-PRX-COM-E SHRUB STRIP SPRAY SHRUB SPRAY, 12" POP-UP WITH BUILT IN-RISER PRESSURE REGULATOR, AND X-FLOW WATER SHUT-OFF DEVICE. ALSO INCLUDES THE ZERO FLUSH WIPER SEAL. 1/2" FEMALE-THREADED INLET. WITH CHECK VALVE, AND EFFLUENT PURPLE CAP FOR NON-POTABLE WATER USE.	30			8/L-604
1401 1402 1404 1408	RAIN BIRD RWS-B-C-P-SOCK 1401 ROOT WATERING SYSTEM WITH 4.0" DIAMETER X 36.0" LONG WITH LOCKING GRATE, SEMI-RIGID MESH TUBE. CHECK VALVE, PURPLE GRATE, AND SAND SOCK. RAIN BIRD BUBBLER OPTION AS INDICATED: 1401 0.25 GPM, 1402 0.5 GPM, 1404 1.0 GPM, 1408 2.0 GPM.	50			6/L-604

SYMBOL	MANUFACTURER/MODEL/DESCRIPTION	PSI	GPM	RADIUS	DETAIL
3.0	TORO T5PSSE-RS TURF ROTOR, 6" POP-UP, STANDARD NOZZLES, STAINLESS STEEL RISER. ADJUSTABLE ARC PATTERNS 40-360, 25'-50' RADIUS (7,6M TO 15,2M). WITH CHECK VALVE, AND EFFLUENT PURPLE CAP FOR NON-POTABLE WATER USE.	45	3.05	36'	7/L-604
5.0	TORO T5PSSE-RS TURF ROTOR, 6" POP-UP, STANDARD NOZZLES, STAINLESS STEEL RISER. ADJUSTABLE ARC PATTERNS 40-360, 25'-50' RADIUS (7,6M TO 15,2M). WITH CHECK VALVE, AND EFFLUENT PURPLE CAP FOR NON-POTABLE WATER USE.	45	5.10	39'	7/L-604
07	TORO T7PSS-02-E 7.0 TURF SPORTS ROTOR, 5" POP-UP, ADJUSTABLE ARC FROM 45-360, VANDAL AND ABUSE RESISTANCE. WITH CHECK VALVE AND RUGGED DURABILITY FEATURES. 1" INLET SIZE, NPT. STAINLESS STEEL RISER. EFFLUENT PURPLE CAP FOR NON-POTABLE WATER USE. NOZZLE FLOW 6.6-30.6 GPM	60	8.10	43'	7/L-604
12	TORO T7PSS-02-E 12.0 TURF SPORTS ROTOR, 5" POP-UP, ADJUSTABLE ARC FROM 45-360, VANDAL AND ABUSE RESISTANCE. WITH CHECK VALVE AND RUGGED DURABILITY FEATURES. 1" INLET SIZE, NPT. STAINLESS STEEL RISER. EFFLUENT PURPLE CAP FOR NON-POTABLE WATER USE. NOZZLE FLOW 6.6-30.6 GPM	60	12.7	48'	7/L-604

IRRIGATION SCHEDULE OVERALL

SYMBOL	MANUFACTURER/MODEL/DESCRIPTION				DETAIL
	TORO 220-27-0 BRASS 1", 1-1/4", 1-1/2", 2", 2-1/2", AND 3" ELECTRIC REMOTE CONTROL VALVE. WITH SPIKE GUARD SOLENOID AND EZ-REG PRESSURE REGULATOR. 1"-2" HAVE IN-LINE GLOBE BODY STYLE, AND 2-1/2" - 3" ARE ANGLE VALVE BODY STYLES. FOR TORO T5 ZONES, SET PR TO 45 PSI, TYP.				5/L-604
	TORO 100-ATLVC ONE-PIECE 1" QUICK COUPLER VALVE WITH ACME THREAD AND LAVENDER EFFLUENT LOCKING VINYL COVER FOR NON-POTABLE WATER USE. INCLUDE TWO (2) 100-AK KEYS WITH 075-MHS HOSE SWIVEL PER CONTROLLER.				9/L-604
	HARCO GASKET X MALE SWIVEL, 06 RISER IRON, STAINLESS STEEL, BRONZE SHUT OFF VALVE. LATERAL ISOLATION AVAILABLE IN 2", 2.5", AND 3". WITH 6" RISER. GASKET X MALE SWIVEL. EPDM SEAL.				6/L-605
	NIBCO P-619-RW 3" ISOLATION VALVE. RESILIENT WEDGE NON-RISING STEM FLOW CONTROL WITH IPS PUSH-ON ENDS.				4/L-604
MV	BUCKNER-SUPERIOR 3100-RW 3" NORMALLY OPEN BRASS MASTER VALVE. PURPLE CROSS HANDLE FOR RECLAIMED WATER USE.				2/L-604
C	RAIN MASTER EGP-TW, EGP-ICENTRAL, EGP-ISVC5Y CONTROLLER 2-WIRE STAINLESS PEDESTAL MOUNT CONTROLLER.INSTALL IN ENCLOSURE PER DETAIL. PROVIDE RAINMASTER TW DECODERS AT EACH MANIFOLD AS REQUIRED TO SERVICE ALL RCV`S. PROVIDE 2-WIRE CABLE IN CONDUIT AS REQUIRED TO CONNECT ALL DECODERS. SEE SPECIFICATIONS AND DETAILS, TYP.				10/L-604
RS	HUNTER MINI-CLIK-C RAIN SENSOR, WITH 1/2" FEMALE THREAD AT BOTTOM FOR CONDUIT INSTALLATION, MOUNT AS NOTED				7/L-605
FS	TORO TFS 200 FLOW SENSOR. INSTALL PER DETAIL. WIRE DIRECTLY TO CONTROLLER USING RAINMASTER SEN-CAB-14 SENSOR CABLE IN SC8 80 PVC CONDUIT. CONNECT TO CONTROLLER PER MANUFACTURER`S INSTRUCTIONS.				2/L-604
PU	BOOSTER PUMP JDL-2E (70-40-VS-RT). SEE SHEET L-600D FOR SPECIFICATIONS				
RW 1"	POINT OF CONNECTION 3" EXISTING RECYCLED WATER METER				
	IRRIGATION LATERAL LINE: PVC SCHEDULE 40-NP NEW				3/L-605
	IRRIGATION MAINLINE: PVC SCHEDULE 80-NP NEW 3" NEW. 3" CL. 200 PVC GASKETED NP PIPE WITH RESTRAINED FITTINGS PER DETAIL.				3/L-605
	IRRIGATION MAINLINE: EXISTING MAINLINE TO REMAIN IN PLACE, TYP. PROVIDE NON-POTABLE WATER TAPE WHERE EXPOSED. VERIFY SIZE AND LOCATION IN FIELD.				3/L-605
	PIPE SLEEVE: PVC SCHEDULE 40 2X PIPE OR CONDUIT DIAMETER				3/L-605

VALVE CALLOUT
#• VALVE NUMBER
#• VALVE FLOW
#" • VALVE SIZE

STORMWATER MITIGATION LOW IMAPCT DEVELOPMENT (LID) APPROVED WITH CONDITIONS

This set of plans and specifications must be at the jobsite during construction

Stormwater Observation Report (SOR) is required prior to issuance of Certificate of Occupancy or final sign off.

Total Pages 48

Digitally Signed By: S. Garcia Date: 12/12/2023
Department of Public Works - Bureau of Sanitation
Watershed Protection Division

PLANS PREPARED BY:
STUDIO-MLA
261 South Mission Road
Los Angeles, CA 90033
T: (213) 384-3844 studio-mla.com

CITY OF LOS ANGELES DEPARTMENT OF PUBLIC WORKS
BUREAU OF ENGINEERING
THIS PLAN WAS ELECTRONICALLY • SIGNED AND STAMPED

ENGINEERING
CITY OF LOS ANGELES

LICENSED LANDSCAPE ARCHITECT
JAN DYER
5623
11-30-24
12/6/2023
STATE OF CALIFORNIA

VERTICAL CONTROL:
HORIZONTAL CONTROL:
SHEET TITLE: IRRIGATION SCHEDULE AND NOTES
PROJECT: VALLEY VILLAGE PARK STORM WATER CAPTURE PROJECT
ADDRESS: VALLEY VILLAGE PARK 5000 Westpark Dr, North Hollywood, CA 91601

NO.	REVISIONS	DATE	BY
		YY/MM/DD	DD
		YY/MM/DD	DD
		YY/MM/DD	DD
		YY/MM/DD	DD

CIP NO. SCP0009
INDEX NO.

CITY ENGINEER
TED ALLEN, P.E.
DATE YY/MM/DD

DESIGN GROUP		DATE
ENGINEER:	MATT LYSNE	YY/MM/DD
ARCHITECT:		YY/MM/DD
DESIGNED BY:	CARMEN GODINEZ	YY/MM/DD
DRAWN BY:	CARMEN GODINEZ	YY/MM/DD
CHECKED BY:	ALEX SAN DIEGO	YY/MM/DD
APPROVED BY:	MATT LYSNE	YY/MM/DD

WORK ORDER EW40085F

SHEET NAME L-600C
SHEET 66 OF 80 SHEETS

REVISION DATES (DESIGN STAGE ONLY)

THE CITY OF LOS ANGELES OR ITS OFFICERS OR AGENTS SHALL NOT BE RESPONSIBLE FOR THE ACCURACY OR COMPLETENESS OF ELECTRONIC COPIES OF THIS PLAN SHEET.

DUPLEX DOMESTIC WATER BOOSTER SYSTEMS:
MULTI W SYSTEMS MODEL No. JDL-2E (70-40-VS-RT)

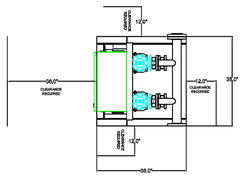

KEY

1. PRESSURE REDUCING VALVE W/CHECK (TYPICAL FOR 2)
2. BUTTERFLY VALVE (TYPICAL FOR 4)
3. 3" 150 ANSI FLANGE (TYPICAL FOR 2)
4. NOT USED
5. 3" TYPE "304L" STAINLESS STEEL SUCTION HEADER
6. 3" TYPE "304L" STAINLESS STEEL DISCHARGE HEADER
7. 2½" LIQUID FILLED PRESSURE GAUGES (TYPICAL FOR 2)
8. U.L. LISTED 508A DUPLEX CONTROL PANEL
9. U.L. LISTED 508A 3 HP VFD'S (TYP. FOR 2, MOUNTED INSIDE)
10. ASTM A36 STRUCTURE BASE

U.L. LISTED (QCZJ) PACKAGED PUMPING SYSTEM 3KJR

CITY OF LOS ANGELES RESEARCH REPORT No. 5610

PUMP SCHEDULE

PUMP No.	MANUFACTURER	MODEL No.	GPM	HEAD	HP	RPM	VOLTS	PHASE	REMARKS
BP 1	JDL PUMPS	JE2-A-160A-5HP	70	40#	5	VARIABLE	460	3	3" TYPE 304L STAINLESS STEEL SUCTION & DISCHARGE HEADERS
BP 2	JDL PUMPS	JE2-A-160A-5HP	70	40#	5	VARIABLE	460	3	
T 1	ELBI	WTL-300							80 GALLONS ASME HYDRO-PUENMATIC TANK 150# WSP

MULTI W SYSTEMS, INC.

DRAWN BY: CAD FILE: RR VALLEY VILLAGE PARK
DATE: 02/02/2022
DESCRIPTION: DUPLEX VARIABLE SPEED BOOSTER SYSTEM
PROJECT: VALLEY VILLAGE PARK
LOS ANGELES, CALIFORNIA

THIS DRAWING, ALL SPECIFICATIONS, TECHNICAL DATA AND WIRING SCHEMATICS ARE THE PROPERTY OF MULTI W SYSTEMS AND ARE NOT TO BE REPRODUCED BY ANY MEANS WITHOUT THE WRITTEN AUTHORIZATION FROM MULTI W SYSTEMS.

DUPLEX DOMESTIC WATER BOOSTER SYSTEMS:
MULTI W SYSTEMS MODEL No. JDL-2E (70-40-VS-RT)

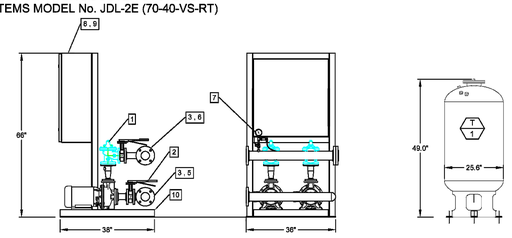

1. PRESSURE REDUCING VALVE W/CHECK (TYPICAL FOR 2)
2. BUTTERFLY VALVE (TYPICAL FOR 4)
3. 3" 150 ANSI FLANGE (TYPICAL FOR 2)
4. NOT USED
5. 3" TYPE "304L" STAINLESS STEEL SUCTION HEADER
6. 3" TYPE "304L" STAINLESS STEEL DISCHARGE HEADER
7. 2½" LIQUID FILLED PRESSURE GAUGES (TYPICAL FOR 2)
8. U.L. LISTED 508A DUPLEX CONTROL PANEL
9. U.L. LISTED 508A 3 HP VFD'S (TYP. FOR 2, MOUNTED INSIDE)
10. ASTM A36 STRUCTURE BASE

U.L. LISTED (QCZJ) PACKAGED PUMPING SYSTEM 3KJR

CITY OF LOS ANGELES RESEARCH REPORT No. 5610

PUMP SCHEDULE

PUMP No.	MANUFACTURER	MODEL No.	GPM	HEAD	HP	RPM	VOLTS	PHASE	REMARKS
BP 1	JDL PUMPS	JE2-A-160A-5HP	70	40#	5	VARIABLE	460	3	3" TYPE 304L STAINLESS STEEL SUCTION & DISCHARGE HEADERS
BP 2	JDL PUMPS	JE2-A-160A-5HP	70	40#	5	VARIABLE	460	3	
T 1	ELBI	WTL-300							80 GALLONS ASME HYDRO-PUENMATIC TANK 150# WSP

MULTI W SYSTEMS, INC.

DRAWN BY: CAD FILE: RR VALLEY VILLAGE PARK
DATE: 02/02/2022
DESCRIPTION: DUPLEX VARIABLE SPEED BOOSTER SYSTEM
PROJECT: VALLEY VILLAGE PARK
LOS ANGELES, CALIFORNIA

THIS DRAWING, ALL SPECIFICATIONS, TECHNICAL DATA AND WIRING SCHEMATICS ARE THE PROPERTY OF MULTI W SYSTEMS AND ARE NOT TO BE REPRODUCED BY ANY MEANS WITHOUT THE WRITTEN AUTHORIZATION FROM MULTI W SYSTEMS.

STORMWATER MITIGATION
LOW IMAPCT DEVELOPMENT (LID)
APPROVED WITH CONDITIONS

This set of plans and specifications must be at the jobsite during construction

Stormwater Observation Report (SOR) is required prior to issuance of Certificate of Occupancy or final sign off.

Total Pages 48

Digitally Signed By: S. Garcia Date: 12/12/2023
Department of Public Works - Bureau of Sanitation
Watershed Protection Division

JOB NAME: Valley Village Park
LOCATION: Los Angeles, CA
CONSULTING ENGINEER: Studio-MLA

SPECIFICATION FOR NSF-61 DOMESTIC WATER BOOSTER PUMP SYSTEM

PART 1 - GENERAL

1.1 SUMMARY

Furnish and install a JDL System Model No. JDL-2E (70-40-VS-RT) variable speed, variable flow factory assembled water booster system as manufactured by Multi W Systems, Inc. The unit shall be rated for a system capacity of 70 GPM, with a system pressure of 40 PSIG, including a minimum suction pressure of N/A PSI and a maximum suction pressure of N/A PSI.

The complete Packaged Booster Pumping System, including pumps, motors, control equipment, tank, valves fittings and manifolds must be NSF/ANSI 61 Annex G (AB1953) Certified, and U.L. Listed. In addition to the system, the control panel assembly must be separately listed under UL 508A (Industrial Control Panels).

1.2 FACTORY ASSEMBLY

The Packaged Booster Pumping System shall be factory assembled on a steel skid including pumps, motors, valves, 3" Type 304L Stainless Steel suction and discharge manifolds, and all interconnecting piping, wiring and controls. Provide isolation valves on the suction and discharge of each pump. The valves shall be full-port valves or wafer style butterfly valves. Provide (2) two 2-1/2" ASME grade A gauges for indication of suction and system discharge pressure. The skid and panel stand shall be factory finished in high quality enamel paint. All system piping and components shall be left un-painted for serviceability and inspection by the Administration Having Jurisdiction (AHJ) over the installation of this equipment.

Individual pumps, motors, pressure regulating or check valves may be serviced with the booster system in operation and all components shall be suitable for potable water and the maximum working pressure in the system.

Manifolds, branch tubing and fittings shall not have ledges, shoulders or protrusions capable of retarding or obstructing the flow of the piping and shall be in compliance with all state and local plumbing codes.

- U.L. 508A Label
- Single point power connection
- Through door individual pump disconnect with safety interlock to prevent door from being opened while in ON position.
- Fused 120 VAC control voltage transformer
- Suction and system pressure transducers
  - All wetted parts are to be stainless steel
  - 4-20 mA signal with a minimum accuracy of ± 1%.
  - NEMA 4X IP66
  - Pressure transducer shall be mounted on the suction and discharge headers and factory wired to the control panel.
- Programmable Logic Controller with a total 36 I/O providing pump control sequence.
- Operator interface shall consist of a 4.3" color touch screen HMI displaying system information and system set points input including alarm logs with RTC function.
- Individual pump H.O.A. selector switch shall be mounted on enclosure door to provide pump operation selection.
- Lead-lag selection shall be accomplished via the HMI on system with three pumps or above. Duplex system shall have an individual selector switch mounted on the door.
- Alarm settings shall consist of low suction, low system and high system pressure w/ automatic reset and protection for the pump system.
- Alarm silencing switch shall be mounted on the enclosure to provide a means of silencing an alarm.
- Pump alternation shall be completed in a 24-hour time span allowing equal wear on the pumps.
- Pump run time shall be provided and displayed on the HMI.
- Door mounted indication LED light shall be provided to provide pump run and alarm indication.
- General alarm relay shall provide a dry contact for customer remote monitoring.
- All items shall be factory mounted and wired.

2.7 VARIABLE FREQUENCY DRIVES (VFD)

Provide and mount inside the control panel enclosure with the number of variable frequency drives corresponding the the number of pumps in the system. Variable frequency drives shall be sized for the maximum amp draw though out the programmed sequence of pump operation. Each drive shall have individual disconnects and short circuit protection. Drives will be configured and factory wired to provide the following operating features:

- Drive shall provide a limited number of automatic resets for fault conditions.
- When in auto function, the drive shall received signal from the PLC for speed reference.
- Self-diagnostic feature with alarm/fault log.

1.3 QUALIFICATIONS

- The manufacturer shall have a minimum of ten years in manufacturing and application experience.
- Upon request from the engineer, the pump station manufacturer shall demonstrate proof of financial responsibility with respect to performance and delivery date.
- Upon request from the engineer, the pump station manufacturer shall provide proof or evidence of facilities, equipment and skills required to produce the equipment specified herein.

1.4 SUBMITTALS

Submittals shall be in accordance with requirements of the general specification. All submittals must include the following:

- Complete shop drawings and control panel description.
- Provide written certification that manufacturer's packaged booster pump system is NSF/ANSI-61 certified for potable drinking water by a third party ANSI certifier.
- Provide written certification that manufacturer's production facility is NSF/ANSI-61 certified for potable drinking water by a third party ANSI certifier.
- Provide written certification of the manufacturer's listing with Underwriters Laboratories as an approved manufacturer of U.L. 508A control panels.
- Provide written certification that the manufacturer is listed by Underwriters Laboratories as an approved manufacturer of factory assembled pumping systems.

PART 2 - PRODUCTS

2.1 PUMPS

System shall include 3" end-suction stainless steel centrifugal pumps with ANSI flanged connections. The pump suction/discharge chamber, impeller, shaft sleeve, casing cover, key, and any wetted part of the pump shall be constructed of 304L Stainless Steel. Motor bracket shall be constructed of cast iron material. Mechanical seal shall be of Type 21 construction with Carbon/Ceramic/Viton Material mounted with stainless steel components. Pump shall have a centerline suction and discharge. The pump motor shall be NEMA JM, TC, or TSC face design mounted directly to the pump.

Pump No. 1 shall be: JDL Pump Model No. JE2-A-160A-5HP, rated 70 GPM at 40 PSI TDH.
Pump No. 2 shall be: JDL Pump Model No. JE2-A-160A-5HP, rated 70 GPM at 40 PSI TDH.
Pump No. 3 shall be: JDL Pump Model No. N/A, rated N/A GPM at N/A PSI TDH.
Pump No. 4 shall be: JDL Pump Model No. N/A, rated N/A GPM at N/A PSI TDH.

2.8 FLOW METER (*OPTIONAL*)

Provide a stainless steel, insertion type calorimetric measuring flow meter with 4-20 mA output. Flow meter must allow field calibration.

2.9 PUMP SEQUENCE OF OPERATION

- Without flow meter

  The lead pump shall run continuously to maintain system pressure and will be controlled automatically by means of the pressure transducer and programmable logic controller. If the lead pump is unable to maintain system pressure, the lag pump(s) will be called on after a time delay and will operate in parallel with the lead pump in accordance with the PLC program. When one pump can handle the system demand, the PLC program will shut down the lag pump(s) after a time delay. The lead pump will shut down after a time delay once the system set point has been reached and no-flow condition has been reached by the the amp draw of the pump.

- With flow meter

  System with a flow meter shall have the lead pump run continuously to maintain system pressure and will be controlled automatically by means of the pressure transducer, flow meter and programmable logic controller. If the lead pump is unable to maintain system pressure, the lag pump(s) will be called on after a time delay and will operate in parallel with the lead pump in accordance with the PLC program. When one pump can handle the system demand, the PLC program will shut down the lag pump(s) after a time delay once the system set point has been reached and no-flow condition has been reached by the signals from the flow meter.

PART 3 - EXECUTION

3.1 FACTORY FABRICATION

Provide each system as a complete packaged system on an open structural steel mounting frame piped, mounted and wired. Pump skid shall be factory primed and painted with high quality enamel paint. All system piping and components shall be left un-painted for serviceability and inspection by the Administration Having Jurisdiction (AHJ) over the installation of this equipment.

Individual pumps, motors, pressure regulating or check valves may be serviced with the booster system in operation and all components shall be suitable for potable water and the maximum working pressure and temperature in the system.

2.2 MOTORS

Motors shall be 460 Volt, 3 Phase, 60 Hz (Totally Enclosed, Fan Cooled) and manufactured in accordance with NEMA standards. Pump No. 1 shall be 5 HP, 3600 RPM, Pump No. 2 shall be 5 HP, 3600 RPM, Pump No. 3 shall be N/A HP, N/A RPM, and Pump No. 4 shall be N/A HP, N/A RPM. Motors shall be selected so that they do not exceed name plate HP rating throughout the programmed sequence of pump operation. Integrated motor with variable frequency drives not acceptable.

2.3 HYDRO-PNEUMATIC TANK:

Provide an ASME hydro-pneumatic tank with a carbon steel shell and a replaceable F.D.A. approved heavy duty bladder to separate the air and water. No water shall come in contact with the metal walls of the tank. Features shall include an air fill valve and bottom system connection suitable for 100% draw down.

The tank shall be remote mounted to the system requiring one field connection and the tank feed line shall be connected on the systems side of the booster package system. (Applies to RT model)

The tank shall be attached mounted to the system with factory connection and the tank feed line shall be connected on the systems side of the booster package system. (Applies to AT model)

2.4 VALVES

Isolation valves shall be NSF-61 certified lug style butterfly valve(s) with lever operator(s) or NSF-61 certified full-port ball valve(s) with lever operator(s). Check valves shall be NSF-61 certified wafer style non-slam silent check valve(s) on the discharge of each pump. Thermal relief valves shall be installed on the discharge of each pumps before the check valves to prevent pump from overheating. Thermal relief valves shall be mechanically activated, electrical thermal relief valves not acceptable.

2.5 GAUGES

Provide (2) two 2-1/2" ASME grade A, glycerin filled pressure gauges for indication of suction and system discharge pressure. Pressure gauges shall provide full range indication for the pump system.

2.6 POWER AND CONTROLS

Provide a U.L. Listed 508A industrial control panel with NEMA 4 enclosure consisting of the following requirements:

3.2 FACTORY TESTING

After factory assembly, the packaged pump system shall be hydro-statically tested as well as undergo a complete electrical and hydraulic test from 0 to 100% design flow at the factory. All controls, pump sequencing, devices, alarms and instrumentation shall be tested and calibrated for proper operation during factory testing.

3.3 WARRANTY

The booster pump system shall be warranted in writing against defects in materials or workmanship under normal use and service for a period of one year after date of initial start up or 18 months from the date of shipment from the factory whichever occurs first.

3.4 SITE COMMISSIONING AND TRAINING

The factory authorized local representative shall provide (4) hours of startup and field operation training.

ENGINEERING
CITY OF LOS ANGELES

LICENSED LANDSCAPE ARCHITECT
JAN DYER
5623
11-30-24
12/6/2023
STATE OF CALIFORNIA

THIS PLAN WAS ELECTRONICALLY SIGNED AND STAMPED

BUREAU OF ENGINEERING

VERTICAL CONTROL:
HORIZONTAL CONTROL:

SHEET TITLE: IRRIGATION BOOSTER PUMP NOTES

PROJECT: VALLEY VILLAGE PARK STORM WATER CAPTURE PROJECT

ADDRESS: VALLEY VILLAGE PARK
5000 Westpark Dr, North Hollywood, CA 91601

CITY OF LOS ANGELES DEPARTMENT OF PUBLIC WORKS

NO.	REVISIONS	DATE	BY
		YY/MM/DD	
		YY/MM/DD	
		YY/MM/DD	
		YY/MM/DD	

INDEX NO.

CITY ENGINEER
DATE YY/MM/DD

DESIGN GROUP

ENGINEER: TED ALLEN, P.E.
ARCHITECT: MATT LYSNE
DESIGNED BY: CARMEN GODINEZ
DRAWN BY: CARMEN GODINEZ
CHECKED BY: ALEX SAN DIEGO
APPROVED BY: MATT LYSNE

CIP NO. SCP0009

WORK ORDER EW40085F

SHEET NAME L-600D

SHEET 67 OF 80 SHEETS

PLANS PREPARED BY:
STUDIO-MLA
251 South Mission Road
Los Angeles, California 90033
T: 213.384.3844 studio-mla.com

THE CITY OF LOS ANGELES OR ITS OFFICERS OR AGENTS SHALL NOT BE RESPONSIBLE FOR THE ACCURACY OR COMPLETENESS OF ELECTRONIC COPIES OF THIS PLAN SHEET.

REVISION DATES (DESIGN STAGE ONLY)

SHEET VERSION 4.0.1 FILE PATH: P:\TOS 2020-PARKS\CAD\X-LA\TOS2019_VALLEY_IRR.DWG PLOT DATE: 12/6/2023 12:03 PM SAVED: 1/21/2023 8:47 AM SAVED BY:ALEX

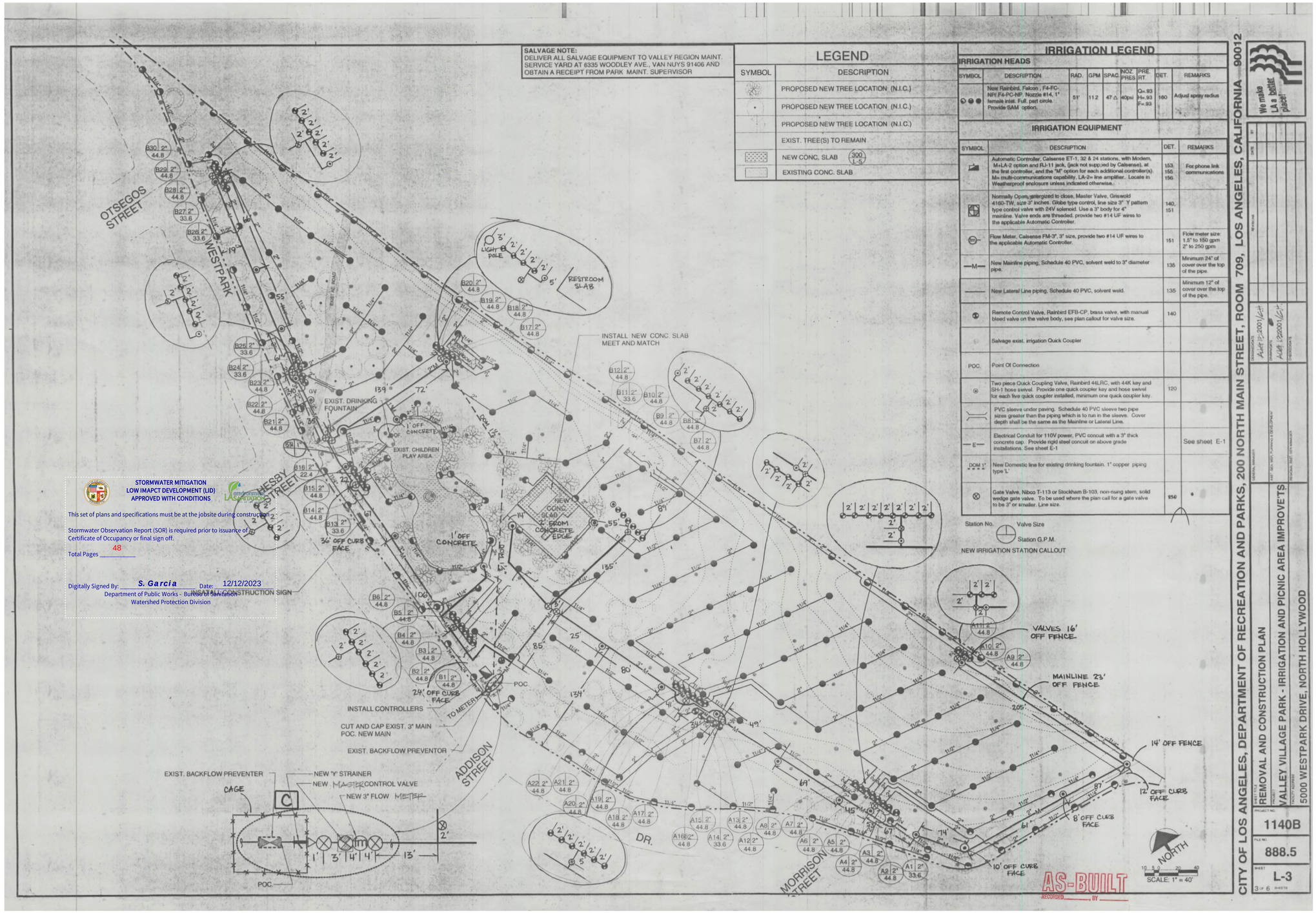

THE CITY OF LOS ANGELES OR IT'S OFFICERS OR AGENTS SHALL NOT BE RESPONSIBLE FOR THE ACCURACY OR COMPLETENESS OF ELECTRONIC COPIES OF THIS PLAN SHEET.

REVISION DATES (DESIGN STAGE ONLY)

PLANS PREPARED BY:
STUDIO-MLA
251 South Mission Road
Los Angeles, California 90033
T: 213.384.3844 studio-mla.com

CITY OF LOS ANGELES DEPARTMENT OF PUBLIC WORKS
BUREAU OF ENGINEERING
THIS PLAN WAS ELECTRONICALLY • SIGNED AND STAMPED

CITY ENGINEER: TED ALLEN, P.E.
DESIGN GROUP

		DATE
ENGINEER:	MATT LYSNE	YY/MM/DD
ARCHITECT:	MATT LYSNE	YY/MM/DD
DESIGNED BY:	CARMEN GODINEZ	YY/MM/DD
DRAWN BY:	CARMEN GODINEZ	YY/MM/DD
CHECKED BY:	ALEX SAN DIEGO	YY/MM/DD
APPROVED BY:	MATT LYSNE	YY/MM/DD

NO.	REVISIONS	BY	DATE
			YY/MM/DD
			YY/MM/DD
			YY/MM/DD
			YY/MM/DD

VERTICAL CONTROL: VERTICAL CONTROL
HORIZONTAL CONTROL: HORIZONTAL CONTROL

SHEET TITLE: IRRIGATION AS-BUILTS
PROJECT: VALLEY VILLAGE PARK STORM WATER CAPTURE PROJECT
ADDRESS: VALLEY VILLAGE PARK 5000 Westpark Dr, North Hollywood, CA 91601

ENGINEERING
CITY OF LOS ANGELES

LICENSED LANDSCAPE ARCHITECT
JAN DYER
5623
11-30-24
12/6/2023
STATE OF CALIFORNIA

CIP NO. SCP0009
INDEX NO.

WORK ORDER EW40085F
SHEET NAME L-600E
SHEET 68 OF 80 SHEETS

SHEET VERSION 4.0.1 FILE PATH: P:\TOS 2020-PARKS\CAD\X-LA\TOS2019_VALLEY_IRR.DWG PLOT DATE: 12/6/2023 12:05 PM SAVED: 1/21/2023 8:47 AM SAVED BY:ALEX

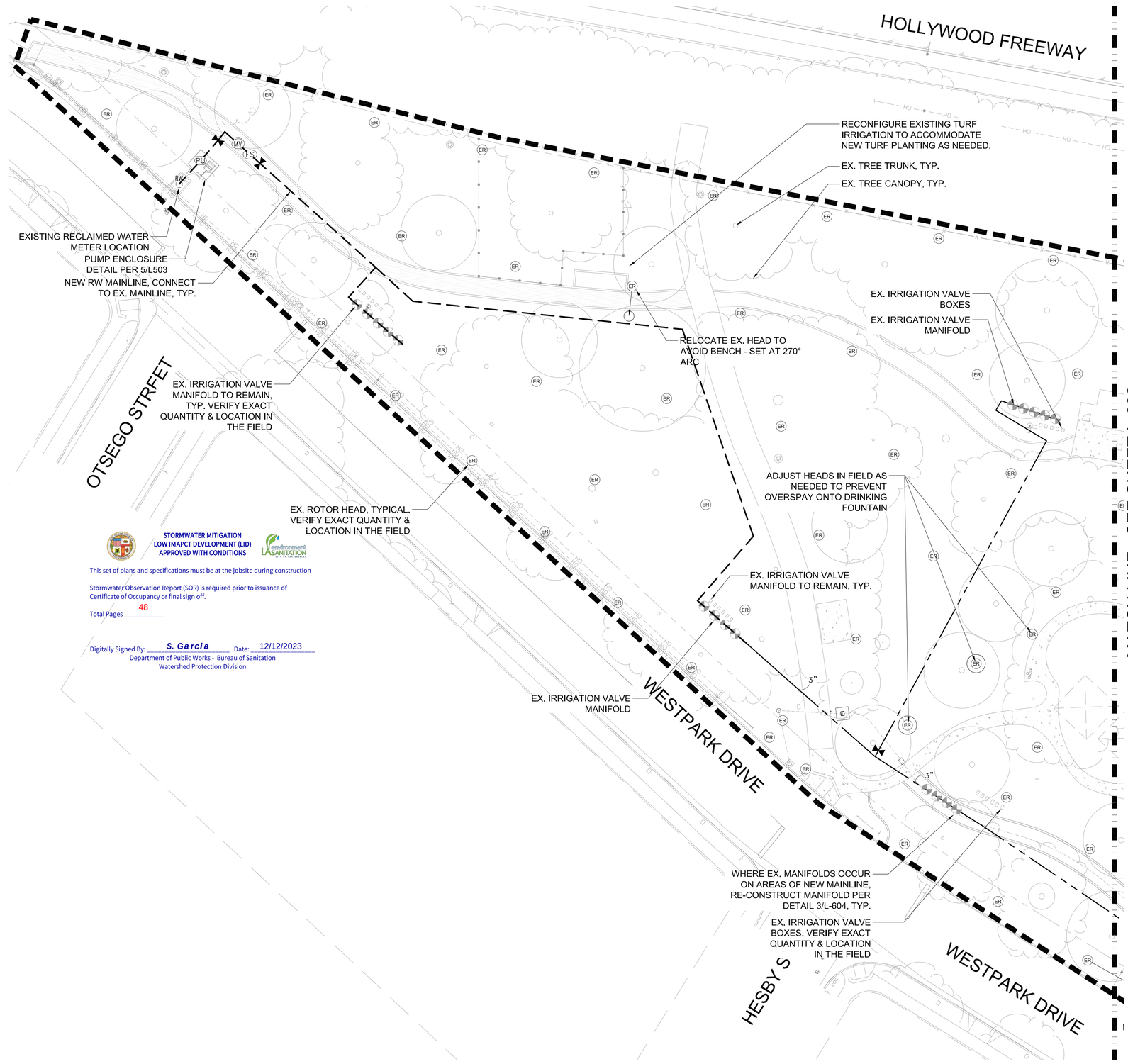

STORMWATER MITIGATION
LOW IMAPCT DEVELOPMENT (LID)
APPROVED WITH CONDITIONS

This set of plans and specifications must be at the jobsite during construction

Stormwater Observation Report (SOR) is required prior to issuance of Certificate of Occupancy or final sign off.

Total Pages 48

Digitally Signed By: S. Garcia Date: 12/12/2023
Department of Public Works - Bureau of Sanitation
Watershed Protection Division

IRRIGATION SCHEDULE L-601

SYMBOL	MANUFACTURER/MODEL	DETAIL
	NIBCO P-619-RW ISOLATION VALVE	4/L-604
MV	BUCKNER-SUPERIOR 3100-RW 3" MASTER VALVE	2/L-604
FS	TORO TFS FLOW SENSOR	2/L-604
PU	BOOSTER PUMP	
RW	POINT OF CONNECTION 3"	
	IRRIGATION MAINLINE: PVC SCHEDULE 80-NP NEW 3"	3/L-605
	IRRIGATION MAINLINE: EXISTING MAINLINE TO REMAIN IN PLACE, TYP.	3/L-605

VALVE CALLOUT
#• VALVE NUMBER
#• VALVE FLOW
#" VALVE SIZE

SEE L-600C FOR COMPLETE IRRIGATION SCHEDULE.

IRRIGATION LAYOUT NOTE:

1. THE LAYOUT FOR THE NEW IRRIGATION CONSTRUCTION SHOWN ON THEE PLANS IS FOR BIDDING PURPOSES ONLY.
2. FINAL LAYOUT OF ALL NEW IRRIGATION HEADS SHALL BE CONDUCTED IN THE FIELD USING THE SPACING LISTED PER LEGEND AND USING THE LOCATION OF EXISTING ADJACENT HEADS TO REMAIN SO AS TO ACHIEVE STANDARD HEAD-TO-HEAD COVERAGE AND DISTRIBUTION UNIFORMITY.
3. ALL LAYOUT SHALL BE SUBJECT TO THE REVIEW AND APPROVAL BY CITY ENGINEER AND RAP STAFF.
4. CONTRACTOR SHALL BE REQUIRED TO INSTALL ALL REQUIRED NEW MAINLINE, VALVES, HEADS, LATERAL LINE, AND 2-WIRE DECODERS REQUIRED TO ACHIEVE FULL COVERAGE.
5. LARGE TURF AREA ZONES SHALL NOT EXCEED 4 HEADS PER VALVE. CONVENTIONAL SPRAY ZONES SHALL NOT EXCEED 15 POP-UP HEADS PER VALVE.
6. LOCATION OF TREE PLANTING AND ASSOCIATED IRRIGATION HEADS MAY BE MODIFIED BY THE CITY AT TIME OF LAYOUT AT NO ADDITIONAL COST TO THE CITY. MAXIMUM CHANGE IN LOCATION SHALL BE LESS THAN 50'.

IRRIGATION TRENCHING NOTES:

1. SEE TREE PROTECTION SPECIFICATIONS SHEET L-100A FOR TRENCHING IN THE TREE PROTECTION ZONES.
2. SPECIAL TRENCHING METHODS MAY BE REQUIRED INSIDE TREE PROTECTION ZONES INCLUDING HAND TRENCHING AT THE DISCRETION OF RAP FORESTRY AND/OR CONTRACTORS' MONITORING ARBORIST.

RECYCLED WATER CONVERSION AREAS EQUIPMENT

1. PROVIDE NEW 2-WIRE CABLE IN CONDUIT TO EACH EX. RCV REPLACED TO NEW 2-WIRE CONTROLLER LOCATION.
2. REPLACE EXISTING VALVES WITH NEW TORO 22O SERIES BRASS VALVE WITH EFFLUENT WATER SOLENOID AND WARNING TAG, AND NEW RECYCLED WATER VALVE BOX.
3. REPLACE ALL EXISTING HEADS WITH NEW RECYCLED WATER COMPATIBLE HEADS TO MATCH EXISTING. USE TORO T5 OR T7 HEADS AS NEEDED FOR REQUIRED RADIUS. DO NOT MIX T5 AND T7 ON SAME VALVE. CONTRACTOR TO PROVIDE SUBMITTAL FOR THE 1:1 HEAD REPLACEMENT HEADS FOR RAP APPROVAL.

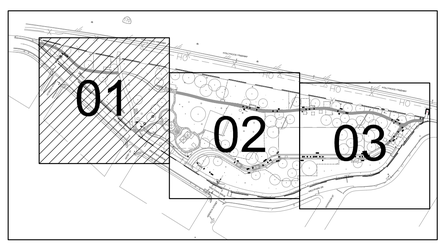

KEY MAP

0 10 20 40
Scale : 1" = 20'-0"

PLANS PREPARED BY:
STUDIO-MLA
251 South Mission Road
Los Angeles, California 90033
T: 213.384.3844 studio-mla.com

CITY OF LOS ANGELES DEPARTMENT OF PUBLIC WORKS
BUREAU OF ENGINEERING
THIS PLAN WAS ELECTRONICALLY • SIGNED AND STAMPED

ENGINEERING
CITY OF LOS ANGELES

LICENSED LANDSCAPE ARCHITECT
JAN DYER
5623
11-30-24
12/6/2023
STATE OF CALIFORNIA

VERTICAL CONTROL:
HORIZONTAL CONTROL:
SHEET TITLE: IRRIGATION PLAN - SHEET 1
PROJECT: VALLEY VILLAGE PARK STORM WATER CAPTURE PROJECT
ADDRESS: VALLEY VILLAGE PARK 5000 Westpark Dr, North Hollywood, CA 91601

NO.	REVISIONS	DATE	BY
		YY/MM/DD	
		YY/MM/DD	
		YY/MM/DD	
		YY/MM/DD	

CIP NO. SCP0009

INDEX NO.

CITY ENGINEER
TED ALLEN, P.E.

DESIGN GROUP	DATE
ENGINEER:	YY/MM/DD
ARCHITECT: MATT LYSNE	YY/MM/DD
DESIGNED BY: CARMEN GODINEZ	YY/MM/DD
DRAWN BY: CARMEN GODINEZ	YY/MM/DD
CHECKED BY: ALEX SAN DIEGO	YY/MM/DD
APPROVED BY: MATT LYSNE	YY/MM/DD

WORK ORDER
EW40085F

SHEET NAME
L-601

SHEET 69 OF 80 SHEETS

REVISION DATES (DESIGN STAGE ONLY)

THE CITY OF LOS ANGELES OR ITS OFFICERS OR AGENTS SHALL NOT BE RESPONSIBLE FOR THE ACCURACY OR COMPLETENESS OF ELECTRONIC COPIES OF THIS PLAN SHEET.

EX. TREE CANOPY, TYP.

EX. TREE TRUNK, TYP.

EX. ROTOR HEAD, TYP. VERIFY EXACT QUANTITY & LOCATION IN THE FIELD

EX. IRRIGATION VALVE MANIFOLD TO REMAIN, TYP. VERIFY EXACT QUANTITY & LOCATION IN THE FIELD. VERIFY THAT ALL EXISTING HEADS DESIGNATED TO REMAIN THAT ARE OPERATED FROM THIS MANIFOLD REMAIN IN OPERATION AFTER COMPLETION OF WORK. IF REQUIRED, CUT AND CAP ANY LATERAL LINES TO ABANDONED HEADS THAT ARE STILL IN OPERATION AND REMOVE & CAP ANY RCV'S THAT ARE NO LONGER IN SERVICE.

LATERAL LINE & SLEEVE REPLACEMENT DUE TO CONSTRUCTION, RE-CONNECT TO EX. IRRIGATION ZONES. VERIFY EXACT LOCATION IN THE FIELD

CONTRACTOR TO SUPPLY ELECTRICAL SERVICE TO CONTROLLER PEDESTAL

CUT & CAP EX. IRRIGATION CONNECTION

REPLACE MAINLINE & SLEEVE IF AFFECTED BY CONSTRUCTION. VERIFY IN FIELD.

EX. MAINLINE

REPLACE MAINLINE & SLEEVE IF AFFECTED BY CONSTRUCTION. VERIFY IN FIELD.

EX. IRRIGATION VALVE BOXES.

EX. IRRIGATION VALVE MANIFOLD TO REMAIN, TYP.

NEW RW MAINLINE

CUT & CAP EX. IRRIGATION CONNECTION

NEW VALVE MANIFOLD LOCATION, TYP.

WESTPARK DRIVE

MATCH LINE - SEE SHEET L-601

MATCH LINE - SEE SHEET L-603

STORMWATER MITIGATION LOW IMAPCT DEVELOPMENT (LID) APPROVED WITH CONDITIONS

This set of plans and specifications must be at the jobsite during construction

Stormwater Mitigation (SWM) Inspection prior to issuance of Certificate of Occupancy or final permit

Total Pages 49

Digitally Signed By: S. Garcia Date: 12/12/2023

Department of Public Works - Bureau of Sanitation

Watershed Protection Division

THE CITY OF LOS ANGELES OR ITS OFFICERS OR AGENTS SHALL NOT BE RESPONSIBLE FOR THE ACCURACY OR COMPLETENESS OF ELECTRONIC COPIES OF THIS PLAN SHEET.

REVISION DATES (DESIGN STAGE ONLY)

IRRIGATION SCHEDULE L602

SYMBOL	MANUFACTURER/MODEL	PSI	GPM	RADIUS	DETAIL
Q T H TT TQ F	TORO 570Z-6P-PRX-COM-E 10 SERIES	30			8/L-604
2SST 4EST 4CST 4SST 4S-SST 9SST	TORO 570Z-6P-PRX-COM-E TURF STRIP SPRAY	30			8/L-604
1401 1402 1404 1408	RAIN BIRD RWS-B-C-P-SOCK 1401	50			6/L-604
SYMBOL	MANUFACTURER/MODEL	PSI	GPM	RADIUS	DETAIL
3.0	TORO T5PSSE-RS	45	3.05	36'	7/L-604
5.0	TORO T5PSSE-RS	45	5.10	39'	7/L-604
07	TORO T7PSS-02-E 7.0	60	8.10	43'	7/L-604
12	TORO T7PSS-02-E 12.0	60	12.7	48'	7/L-604
SYMBOL	MANUFACTURER/MODEL				DETAIL
	TORO 220-27-0 REMOTE CONTROL VALVE				5/L-604
	TORO 100-ATLVC NON-POTABLE QC VALVE				9/L-604
	HARCO GASKET X MALE SWIVEL, 06 RISER MANIFOLD GATE VALVE				6/L-605
	NIBCO P-619-RW ISOLATION VALVE				4/L-604
C	RAIN MASTER 2-WIRE CONTROLLER				10/L-604
RS	HUNTER MINI-CLIK-C RAIN SWITCH				7/L-605
	IRRIGATION LATERAL LINE: PVC SCHEDULE 40-NP				3/L-605
	IRRIGATION MAINLINE: PVC SCHEDULE 80-NP NEW 3"				3/L-605
	IRRIGATION MAINLINE: EXISTING MAINLINE TO REMAIN IN PLACE, TYP.				3/L-605
	PIPE SLEEVE: PVC SCHEDULE 40				3/L-605

VALVE CALLOUT
#• VALVE NUMBER
#• VALVE FLOW
#" VALVE SIZE

SEE L-600C FOR COMPLETE IRRIG. SCHEDULE, RECYCLED WATER CONVERSION EQUIPMENT NOTE, AND L-600A FOR LAYOUT NOTE.

IRRIGATION TRENCHING NOTES:

1. SEE TREE PROTECTION SPECIFICATIONS SHEET L-100A FOR TRENCHING IN THE TREE PROTECTION ZONES.
2. SPECIAL TRENCHING METHODS MAY BE REQUIRED INSIDE TREE PROTECTION ZONES INCLUDING HAND TRENCHING AT THE DISCRETION OF RAP FORESTRY AND/OR CONTRACTORS' MONITORING ARBORIST.

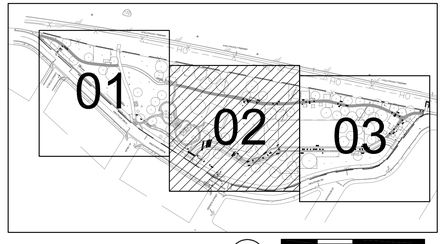

KEY MAP

Scale : 1" = 20'-0"

PLANS PREPARED BY:

STUDIO-MLA
251 South Mission Road
Los Angeles, CA 90033
T: 213-894-3844 studio-mla.com

CITY OF LOS ANGELES DEPARTMENT OF PUBLIC WORKS BUREAU OF ENGINEERING

THIS PLAN WAS ELECTRONICALLY • SIGNED AND STAMPED

ENGINEERING CITY OF LOS ANGELES

LICENSED LANDSCAPE ARCHITECT JAN DYER 5623 11-30-24 12/6/2023 STATE OF CALIFORNIA

VERTICAL CONTROL: VERTICAL CONTROL
HORIZONTAL CONTROL: HORIZONTAL CONTROL

SHEET TITLE: IRRIGATION PLAN - SHEET 2

PROJECT: VALLEY VILLAGE PARK STORM WATER CAPTURE PROJECT

ADDRESS: VALLEY VILLAGE PARK 5000 Westpark Dr, North Hollywood, CA 91601

NO.	REVISIONS	DATE	BY
		YY/MM/DD	
		YY/MM/DD	
		YY/MM/DD	
		YY/MM/DD	

CIP NO. SCP0009

INDEX NO.

CITY ENGINEER	DATE
TED ALLEN, P.E.	YY/MM/DD
DESIGN GROUP	
ENGINEER: MATT LYSNE	YY/MM/DD
ARCHITECT:	
DESIGNED BY: CARMEN GODINEZ	YY/MM/DD
DRAWN BY: CARMEN GODINEZ	YY/MM/DD
CHECKED BY: ALEX SAN DIEGO	YY/MM/DD
APPROVED BY: MATT LYSNE	YY/MM/DD

WORK ORDER EW40085F

SHEET NAME L-602

SHEET 70 OF 80 SHEETS

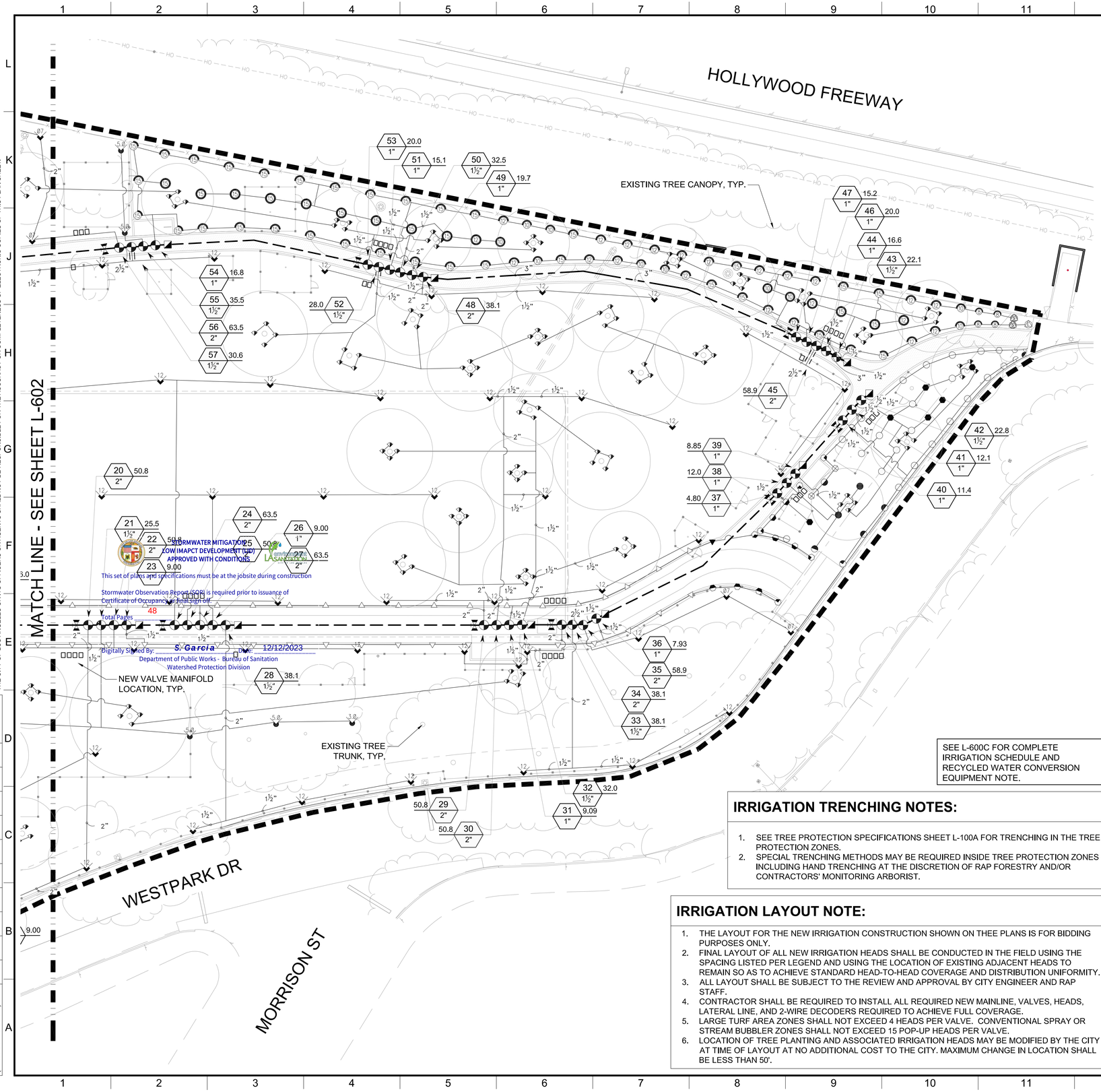

IRRIGATION SCHEDULE L-603

SYMBOL	MANUFACTURER/MODEL	PSI			DETAIL
Q T H TT TQ F	TORO 570Z-6P-PRX-COM-E 5 SERIES	30			8/L-604
Q T H TT TQ F	TORO 570Z-6P-PRX-COM-E 8 SERIES	30			8/L-604
Q T H TT TQ F	TORO 570Z-6P-PRX-COM-E 10 SERIES	30			8/L-604
Q T H TT TQ F	TORO 570Z-6P-PRX-COM-E 12 SERIES	30			8/L-604
Q T H TT TQ F	TORO 570Z-6P-PRX-COM-E 15 SERIES	30			8/L-604
2SST 4EST 4CST 4SST 4S-SST 9SST	TORO 570Z-6P-PRX-COM-E TURF STRIP SPRAY	30			8/L-604
Q T H TT TQ F	TORO 570Z-12P-PRX-COM-E 8 SERIES	30			8/L-604
Q T H TT TQ F	TORO 570Z-12P-PRX-COM-E 10 SERIES	30			8/L-604
Q T H TT TQ F	TORO 570Z-12P-PRX-COM-E 12 SERIES	30			8/L-604
Q T H TT TQ F	TORO 570Z-12P-PRX-COM-E 15 SERIES	30			8/L-604
2SST 4EST 4CST 4SST 4S-SST 9SST	TORO 570Z-12P-PRX-COM-E SHRUB STRIP SPRAY	30			8/L-604
1401 1402 1404 1406	RAIN BIRD RWS-B-C-P-SOCK 1401	50			6/L-604
SYMBOL	MANUFACTURER/MODEL	PSI	GPM	RADIUS	DETAIL
3.0	TORO T5PSSE-RS	45	3.05	36'	7/L-604
5.0	TORO T5PSSE-RS	45	5.10	39'	7/L-604
.07	TORO T7PSS-02-E 7.0	60	8.10	43'	7/L-604
12	TORO T7PSS-02-E 12.0	60	12.7	48'	7/L-604
SYMBOL	MANUFACTURER/MODEL				DETAIL
	TORO 220-27-0 REMOTE CONTROL VALVE				5/L-604
	TORO 100-ATLVC NON-POTABLE QC VALVE				9/L-604
	HARCO GASKET X MALE SWIVEL, 06 RISER MANIFOLD GATE VALVE				6/L-605
	IRRIGATION LATERAL LINE: PVC SCHEDULE 40-NP				3/L-605
	IRRIGATION MAINLINE: PVC SCHEDULE 80-NP NEW 3"				3/L-605
	IRRIGATION MAINLINE: EXISTING MAINLINE TO REMAIN IN PLACE, TYP.				3/L-605
	PIPE SLEEVE: PVC SCHEDULE 40				3/L-605

VALVE CALLOUT
#• VALVE NUMBER
#• VALVE FLOW
#" • VALVE SIZE

SEE L-600C FOR COMPLETE IRRIGATION SCHEDULE AND RECYCLED WATER CONVERSION EQUIPMENT NOTE.

IRRIGATION TRENCHING NOTES:

1. SEE TREE PROTECTION SPECIFICATIONS SHEET L-100A FOR TRENCHING IN THE TREE PROTECTION ZONES.
2. SPECIAL TRENCHING METHODS MAY BE REQUIRED INSIDE TREE PROTECTION ZONES INCLUDING HAND TRENCHING AT THE DISCRETION OF RAP FORESTRY AND/OR CONTRACTORS' MONITORING ARBORIST.

IRRIGATION LAYOUT NOTE:

1. THE LAYOUT FOR THE NEW IRRIGATION CONSTRUCTION SHOWN ON THEE PLANS IS FOR BIDDING PURPOSES ONLY.
2. FINAL LAYOUT OF ALL NEW IRRIGATION HEADS SHALL BE CONDUCTED IN THE FIELD USING THE SPACING LISTED PER LEGEND AND USING THE LOCATION OF EXISTING ADJACENT HEADS TO REMAIN SO AS TO ACHIEVE STANDARD HEAD-TO-HEAD COVERAGE AND DISTRIBUTION UNIFORMITY.
3. ALL LAYOUT SHALL BE SUBJECT TO THE REVIEW AND APPROVAL BY CITY ENGINEER AND RAP STAFF.
4. CONTRACTOR SHALL BE REQUIRED TO INSTALL ALL REQUIRED NEW MAINLINE, VALVES, HEADS, LATERAL LINE, AND 2-WIRE DECODERS REQUIRED TO ACHIEVE FULL COVERAGE.
5. LARGE TURF AREA ZONES SHALL NOT EXCEED 4 HEADS PER VALVE. CONVENTIONAL SPRAY OR STREAM BUBBLER ZONES SHALL NOT EXCEED 15 POP-UP HEADS PER VALVE.
6. LOCATION OF TREE PLANTING AND ASSOCIATED IRRIGATION HEADS MAY BE MODIFIED BY THE CITY AT TIME OF LAYOUT AT NO ADDITIONAL COST TO THE CITY. MAXIMUM CHANGE IN LOCATION SHALL BE LESS THAN 50'.

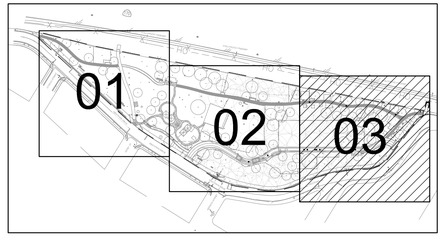

KEY MAP

0 10 20 40
Scale : 1" = 20'-0"

PLANS PREPARED BY:
STUDIO-MLA
251 South Mission Road
Los Angeles, California 90033
T: 213 344-3844 studio-mla.com

ENGINEERING
CITY OF LOS ANGELES

LICENSED LANDSCAPE ARCHITECT
JAN DYER
5623
11-30-24
12/6/2023
STATE OF CALIFORNIA

THIS PLAN WAS ELECTRONICALLY
• SIGNED AND STAMPED

CITY OF LOS ANGELES DEPARTMENT OF PUBLIC WORKS BUREAU OF ENGINEERING

VERTICAL CONTROL:
HORIZONTAL CONTROL:
SHEET TITLE: IRRIGATION PLAN - SHEET 3
PROJECT: VALLEY VILLAGE PARK STORM WATER CAPTURE PROJECT
ADDRESS: VALLEY VILLAGE PARK 5000 Westpark Dr, North Hollywood, CA 91601

NO.	REVISIONS	DATE	BY
		YY/MM/DD	
		YY/MM/DD	
		YY/MM/DD	
		YY/MM/DD	

CIP NO. SCP0009

INDEX NO.

CITY ENGINEER
TED ALLEN, P.E.

DESIGN GROUP	DATE
ENGINEER:	YY/MM/DD
ARCHITECT: MATT LYSNE	YY/MM/DD
DESIGNED BY: CARMEN GODINEZ	YY/MM/DD
DRAWN BY: CARMEN GODINEZ	YY/MM/DD
CHECKED BY: ALEX SAN DIEGO	YY/MM/DD
APPROVED BY: MATT LYSNE	YY/MM/DD

WORK ORDER
EW40085F

SHEET NAME
L-603
SHEET 71 OF 80 SHEETS

THE CITY OF LOS ANGELES OR ITS OFFICERS OR AGENTS SHALL NOT BE RESPONSIBLE FOR THE ACCURACY OR COMPLETENESS OF ELECTRONIC COPIES OF THIS PLAN SHEET.

REVISION DATES (DESIGN STAGE ONLY)

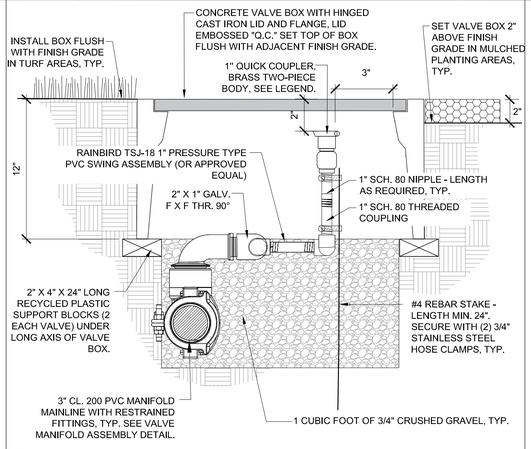

NOTES:
1) SEE RELATED DETAIL FOR MANIFOLD PIPE & FITTINGS.

VERSION 05/16/17 RWF/gm

9 QUICK COUPLING VALVE INSTALLATION DETAIL

NTS | RP DETAIL L1201

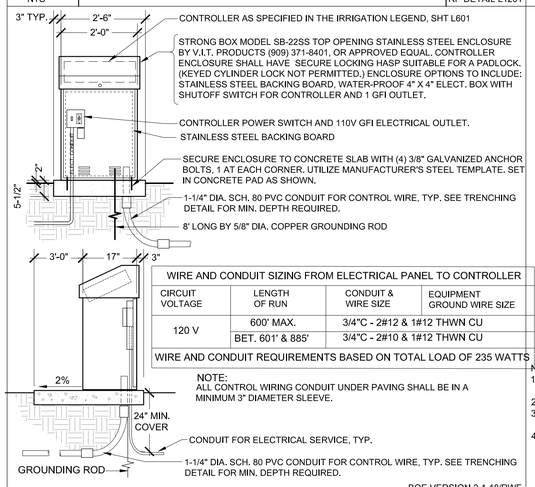

WIRE AND CONDUIT SIZING FROM ELECTRICAL PANEL TO CONTROLLER			
CIRCUIT VOLTAGE	LENGTH OF RUN	CONDUIT & WIRE SIZE	EQUIPMENT GROUND WIRE SIZE
120 V	600' MAX.	3/4"C - 2#12 & 1#12 THWN CU	
	BET. 601' & 885'	3/4"C - 2#10 & 1#12 THWN CU	
WIRE AND CONDUIT REQUIREMENTS BASED ON TOTAL LOAD OF 235 WATTS			

NOTE:
ALL CONTROL WIRING CONDUIT UNDER PAVING SHALL BE IN A MINIMUM 3" DIAMETER SLEEVE.

BOE VERSION 2-1-18/RWF

10 CONTROLLER AND ENCLOSURE

NTS | BOE VERSION JAN/07 | RP DETAIL 1472

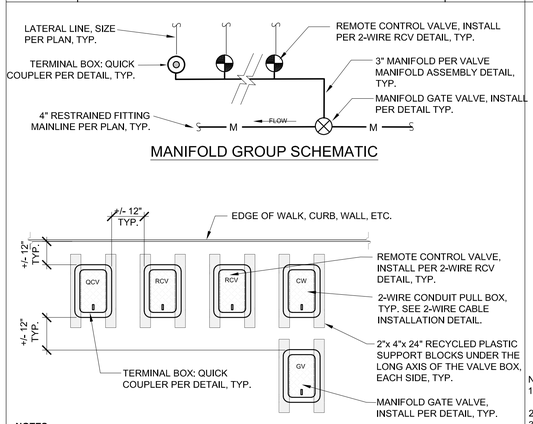

MANIFOLD GROUP SCHEMATIC

NOTES:
1. ALL VALVES SHALL BE INSTALLED IN A MANIFOLD GROUP SIMILAR TO THAT SHOWN IN ABOVE SCHEMATIC. SEE PLANS FOR NUMBER OF RCV/QCV FOR EACH MANIFOLD, TYP.
2. ALL BOXES SHALL BE SQUARE TO ONE ANOTHER AND TO THE EDGES OF ADJACENT FIXED OBJECTS WHERE PRESENT.

11 VALVE BOX PLACEMENT

NTS | BOE VERSION FEB/18 | RP DETAIL 1410

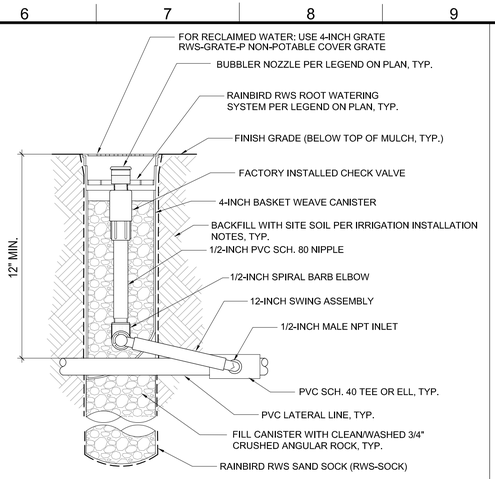

NOTE: ALWAYS LOCATE RWS CANISTERS WITHIN 12" OR LESS FROM EDGE OF TREE ROOTBALL.

6 ROOT WATERING SYSTEM BUBBLER ASSEMBLY

NTS | BOE VERSION Sep/07 - RF | RP DETAIL L1660

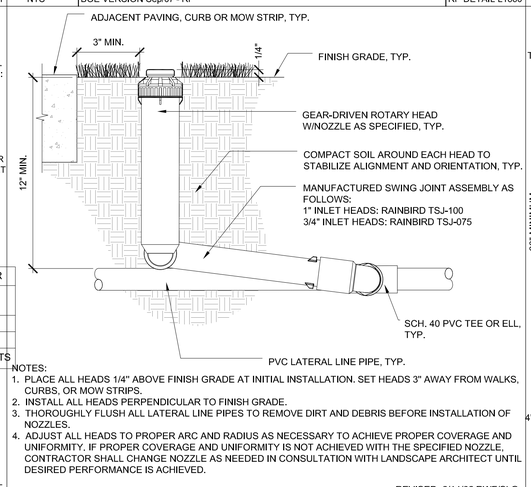

NOTES:
1. PLACE ALL HEADS 1/4" ABOVE FINISH GRADE AT INITIAL INSTALLATION. SET HEADS 3" AWAY FROM WALKS, CURBS, OR MOW STRIPS.
2. INSTALL ALL HEADS PERPENDICULAR TO FINISH GRADE.
3. THOROUGHLY FLUSH ALL LATERAL LINE PIPES TO REMOVE DIRT AND DEBRIS BEFORE INSTALLATION OF NOZZLES.
4. ADJUST ALL HEADS TO PROPER ARC AND RADIUS AS NECESSARY TO ACHIEVE PROPER COVERAGE AND UNIFORMITY. IF PROPER COVERAGE AND UNIFORMITY IS NOT ACHIEVED WITH THE SPECIFIED NOZZLE, CONTRACTOR SHALL CHANGE NOZZLE AS NEEDED IN CONSULTATION WITH LANDSCAPE ARCHITECT UNTIL DESIRED PERFORMANCE IS ACHIEVED.

REVISED: 6/14/06 RWF/SLG

7 GEAR-DRIVEN ROTOR HEAD INSTALLATION

NTS | RP DETAIL 162

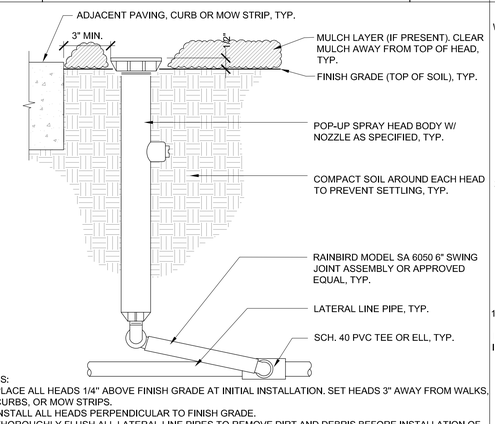

NOTES:
1. PLACE ALL HEADS 1/4" ABOVE FINISH GRADE AT INITIAL INSTALLATION. SET HEADS 3" AWAY FROM WALKS, CURBS, OR MOW STRIPS.
2. INSTALL ALL HEADS PERPENDICULAR TO FINISH GRADE.
3. THOROUGHLY FLUSH ALL LATERAL LINE PIPES TO REMOVE DIRT AND DEBRIS BEFORE INSTALLATION OF NOZZLES.
4. ADJUST ALL HEADS TO PROPER ARC AND RADIUS AS NECESSARY TO ACHIEVE PROPER COVERAGE AND UNIFORMITY. IF PROPER COVERAGE AND UNIFORMITY IS NOT ACHIEVED WITH THE SPECIFIED NOZZLE, CONTRACTOR SHALL CHANGE NOZZLE AS NEEDED UNTIL DESIRED PERFORMANCE IS ACHIEVED.

8 POP-UP SPRAY HEAD INSTALLATION

NTS | REVISED: 06/09/20 RWF | RP DETAIL 1622

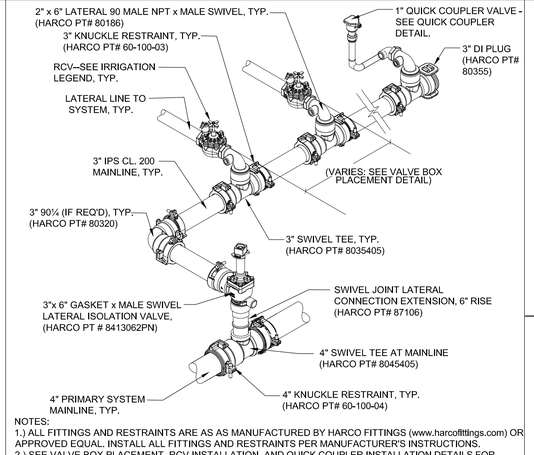

NOTES:
1.) ALL FITTINGS AND RESTRAINTS ARE AS AS MANUFACTURED BY HARCO FITTINGS (www.harcofittings.com) OR APPROVED EQUAL. INSTALL ALL FITTINGS AND RESTRAINTS PER MANUFACTURER'S INSTRUCTIONS.
2.) SEE VALVE BOX PLACEMENT, RCV INSTALLATION, AND QUICK COUPLER INSTALLATION DETAILS FOR ADDITIONAL INFORMATION.

3 VALVE MANIFOLD ASSEMBLY

NTS | BOE VERSION 02/16/18 RWF | RP DETAIL 135

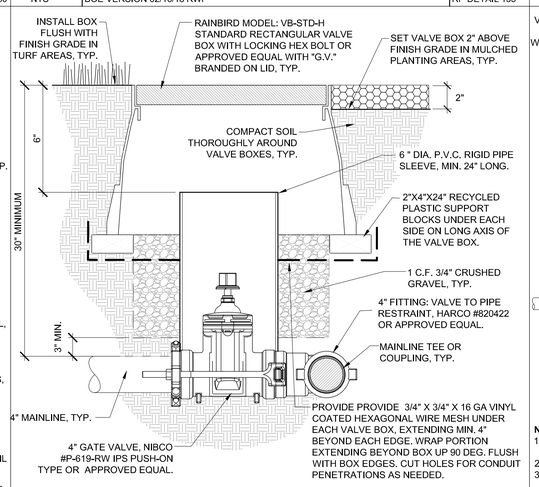

4 4" MAINLINE ISOLATION VALVE

NTS | BOE VERSION May/17 - RF/gm | RP DETAIL L1101

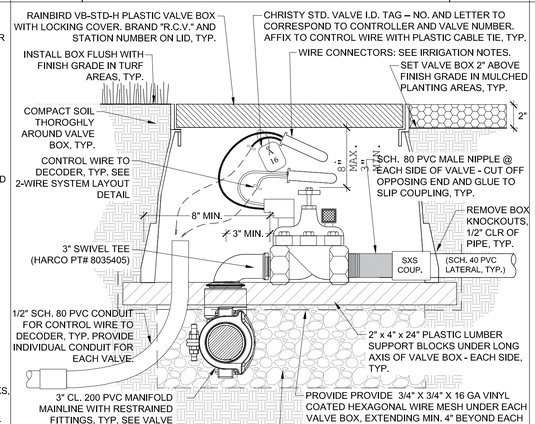

1/14/20 RWF

NOTES:
1. SEE APPLICABLE DETAILS FOR 2-WIRE DECODER AND CABLE INSTALLATION

5 RCV INSTALLATION DETAIL, 2-WIRE SYSTEM

NTS | RP DETAIL 1402

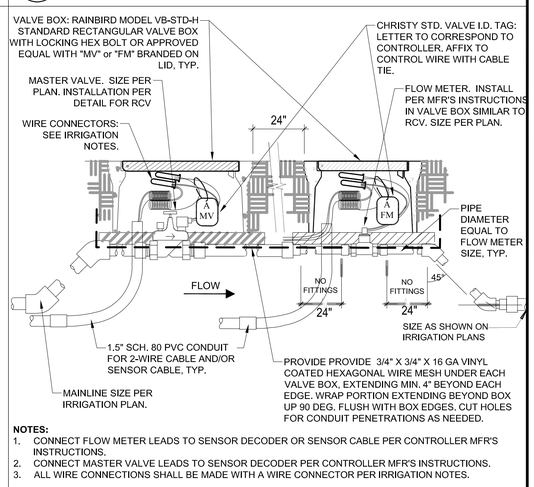

NOTES:
1. CONNECT FLOW METER LEADS TO SENSOR DECODER OR SENSOR CABLE PER CONTROLLER MFR'S INSTRUCTIONS.
2. CONNECT MASTER VALVE LEADS TO SENSOR DECODER PER CONTROLLER MFR'S INSTRUCTIONS.
3. ALL WIRE CONNECTIONS SHALL BE MADE WITH A WIRE CONNECTOR PER IRRIGATION NOTES.

2 FLOW METER AND MASTER VALVE, 2-WIRE SYSTEM

NTS | RP DETAIL L1512

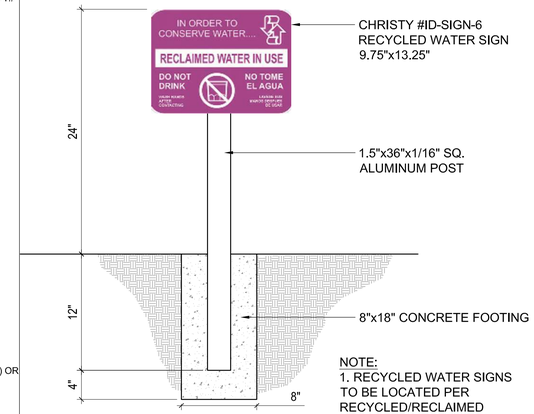

NOTE:
1. RECYCLED WATER SIGNS TO BE LOCATED PER RECYCLED/RECLAIMED WASTEWATER GUIDELINES.

1 RECYCLED WATER SIGN

NTS | P-VA1-30

STORMWATER MITIGATION
LOW IMAPCT DEVELOPMENT (LID)
APPROVED WITH CONDITIONS

This set of plans and specifications must be at the jobsite during construction

Stormwater Observation Report (SOR) is required prior to issuance of Certificate of Occupancy or final sign off.

Total Pages 48

Digitally Signed By: S. Garcia Date: 12/12/2023
Department of Public Works - Bureau of Sanitation
Watershed Protection Division

PLANS PREPARED BY:
STUDIO-MLA
251 South Mission Road
Los Angeles, CA 90033
T:213.384.3844 studio-mla.com

CITY OF LOS ANGELES DEPARTMENT OF PUBLIC WORKS
BUREAU OF ENGINEERING

ENGINEERING
CITY OF LOS ANGELES

LICENSED LANDSCAPE ARCHITECT
JAN DYER
5623
11-30-24
12/6/2023
STATE OF CALIFORNIA

THIS PLAN WAS ELECTRONICALLY SIGNED AND STAMPED

VERTICAL CONTROL:
HORIZONTAL CONTROL:
SHEET TITLE: IRRIGATION DETAILS - SHEET 1
PROJECT: VALLEY VILLAGE PARK STORM WATER CAPTURE PROJECT
ADDRESS: VALLEY VILLAGE PARK 5000 Westpark Dr, North Hollywood, CA 91601

NO.	REVISIONS	DATE	BY

CITY ENGINEER: TED ALLEN, P.E. DATE: YY/MM/DD

DESIGN GROUP

ENGINEER:	MATT LYSNE	YY/MM/DD
ARCHITECT:		YY/MM/DD
DESIGNED BY:	CARMEN GODINEZ	YY/MM/DD
DRAWN BY:	CARMEN GODINEZ	YY/MM/DD
CHECKED BY:	ALEX SAN DIEGO	YY/MM/DD
APPROVED BY:	MATT LYSNE	YY/MM/DD

CIP NO. SCP0009

INDEX NO.

WORK ORDER EW40085F

SHEET NAME L-604

SHEET 72 OF 80 SHEETS

REVISION DATES (DESIGN STAGE ONLY)

THE CITY OF LOS ANGELES OR ITS OFFICERS OR AGENTS SHALL NOT BE RESPONSIBLE FOR THE ACCURACY OR COMPLETENESS OF ELECTRONIC COPIES OF THIS PLAN SHEET.

SHEET VERSION 4.0.1 FILE PATH: P:\TOS 2020-PARKS\CAD\X-LA\TOS2019_VALLEY_IRR.DWG PLOT DATE: 12/6/2023 12:05 PM SAVED: 1/21/2023 8:47 AM SAVED BY:ALEX

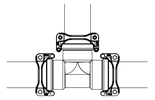

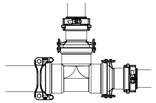

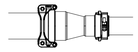

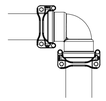

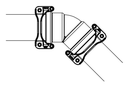

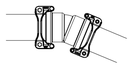

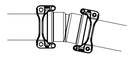

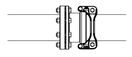

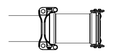

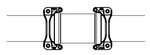

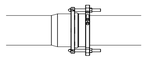

NOTE: ADDITIONAL PIPE & FITTING CONFIGURATIONS MAY BE NECESSARY TO COMPLETE WORK SHOWN ON PLANS DUE TO UNFORSEEN SITE CONDITIONS. CONSULT MANUFACTURER FOR ADDITIONAL INFORMATION. USE #60-100-03 KNUCKLE RESTRAINT ON FITTINGS WHERE DESIGNATED.

MAINLINE PIPE FITTINGS:

1.) DUCTILE IRON FITTINGS WILL BE REQUIRED FOR ALL MAINLINE FITTINGS (CONSTANT PRESSURE) FOR 3" OR LARGER PIPE UNDER THE FOLLOWING CONDITIONS:

A. AS SHOWN ON OTHER DETAILS INCLUDED WITHIN IN THESE PLANS AND SPECIFICATIONS.

B. AT ALL DIRECTIONAL FITTINGS SUCH AS TEES, ELBOWS, ETC., AND REDUCERS, ADAPTERS AND COUPLINGS AS NOTED OR DETAILED.

2.) DUCTILE IRON FITTINGS SHALL BE A "PUSH-ON" TYPE FOR IPS SIZED PVC PIPE BY HARCO FITTINGS (www.harcofittings.com) OR APPROVED EQUAL.

3.) ALL GASKETED PVC PIPE JOINTS WITHIN 25' OF DUCTILE IRON DIRECTIONAL FITTINGS SHALL BE RESTRAINED USING PIPE TO PIPE RESTRAINTS SHOWN. FOR END CAPS AND TERMINAL GATE VALVES, ALL GASKETED PVC PIPE JOINTS WITHIN 40' SHALL BE RESTRAINED USING PIPE TO PIPE RESTRAINT SHOWN. REFER TO MANUFACTURERS FITTING RESTRAINT GUIDE FOR ADDITIONAL INFORMATION.

4.) ALL BOLTS ON FITTING RESTRAINTS SHALL BE TIGHTENED USING A TORQUE WRENCH ONLY FOLLOWING THE MANUFACTURER'S SPECIFICATIONS. THE CONTRACTOR SHALL BE PREPARED TO VERIFY THE TORQUE OF THE BOLTS WITH A TORQUE WRENCH IN THE PRESENCE OF THE BCA INSPECTOR AND SHALL HAVE A TORQUE WRENCH AVAILABLE ON SITE UNTIL JOB ACCEPTANCE.

5.) GLUED JOINTS SHALL NOT BE USED IN ANY MAINLINE PVC FITTINGS OR PIPE 3" OR LARGER IN DIAMETER UNLESS SPECIFICALLY DENOTED ON PLANS OR DETAILS INCLUDED IN THIS DRAWING SET.

6.) THRUST BLOCKS SHALL ONLY BE USED FOR MAINLINE FITTINGS WHERE SPECIFICALLY DESIGNATED IN PLANS OR DETAILS.

4 RESTRAINED FITTINGS FOR 3" MAINLINE

NTS | BOE VERSION 02/14/18 RF | RP DETAIL L1313

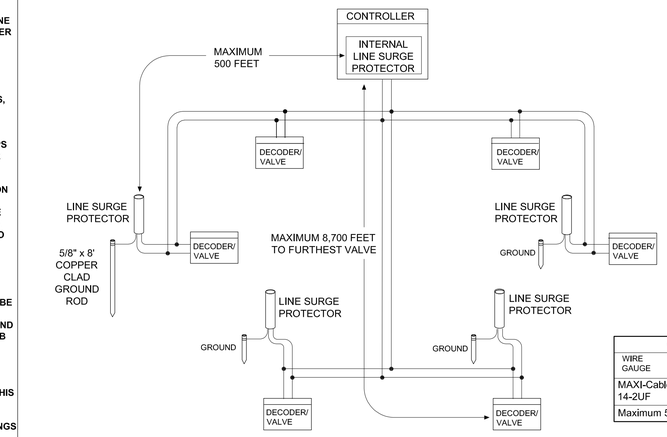

NOTES:

1. ALL TWO-WIRE COMPONENTS (WIRE, DECODERS, SURGE PROTECTORS, ETC.) SHALL BE PROVIDED BY RAINBIRD, 800-724-6247.
2. SEE DETAIL RELATED DETAILS FOR WIRING AND GROUNDING CONNECTIONS.

WIRE CONFIGURATION

WIRE GAUGE	Total WireLength (feet)	Max Distance from Decoder to Solenoid
MAXI-Cable 14-2UF	8,700	456
Maximum 500 feet between line surge protectors		

1 2-WIRE SYSTEM LAYOUT

NTS | B.O.E. 02/16/18 | RP DETAIL L1372

RECYCLED WATER MAINLINE BELOW POTABLE MAINLINE

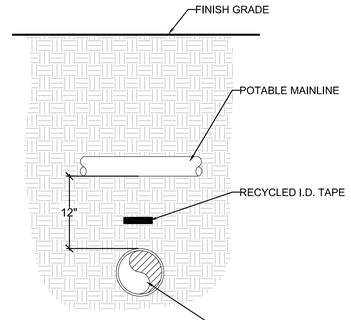

NOTES:

1. SEPARATION BETWEEN POTABLE AND RECYCLED MAINLINE SHALL MEET THE LATEST REQUIREMENTS OF CDPH REGULATORY CRITERIA FOR THE SEPARATION OF WATER MAINS AND NON-POTABLE PIPELINES. CURRENTLY 4' HORIZONTAL AND 1' VERTICAL IS REQUIRED.
2. THE MINIMUM CLEARANCE BETWEEN THE POTABLE AND RECYCLED PIPELINE IS 4". SLEEVING OF THE RECYCLED MAIN IS REQUIRED FOR SEPARATION LESS THAN 12".
3. SLEEVING SHALL EXTEND TEN (10) FEET EACH SIDE FROM THE CENTERLINE OF THE POTABLE LINE. FOR A TOTAL LENGTH OF TWENTY (20) FEET. THE SLEEVE SHALL BE PURPLE PCV CL 200 AND TWICE THE DIAMETER OF THE RECYCLED MAINLINE.

RECYCLED WATER MAINLINE ABOVE POTABLE MAINLINE

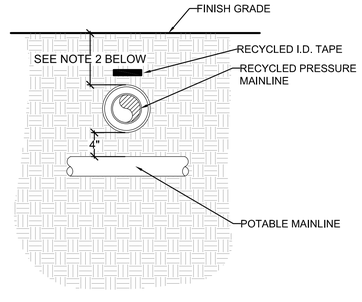

NOTES:

1. SEPARATION BETWEEN POTABLE AND RECYCLED MAINLINE SHALL MEET THE LATEST REQUIREMENTS OF CDPH REGULATORY CRITERIA FOR THE SEPARATION OF WATER MAINS AND NON-POTABLE PIPELINES. CURRENTLY 4' HORIZONTAL AND 1' VERTICAL IS REQUIRED.
2. THE MINIMUM COVER ABOVE THE MAINLINE SHALL BE PER EMWD STANDARD SPEC AND MET AT ALL TIMES.
3. SLEEVING SHALL EXTEND TEN (10) FEET EACH SIDE FROM THE CENTERLINE OF THE POTABLE LINE. FOR A TOTAL LENGTH OF TWENTY (20) FEET. THE SLEEVE SHALL BE PURPLE PCV CL 200 AND TWICE THE DIAMETER OF THE RECYCLED MAINLINE.

5 RECYCLED / POTABLE PIPE CROSSING

1" = 1'-0" | P-VA1-26

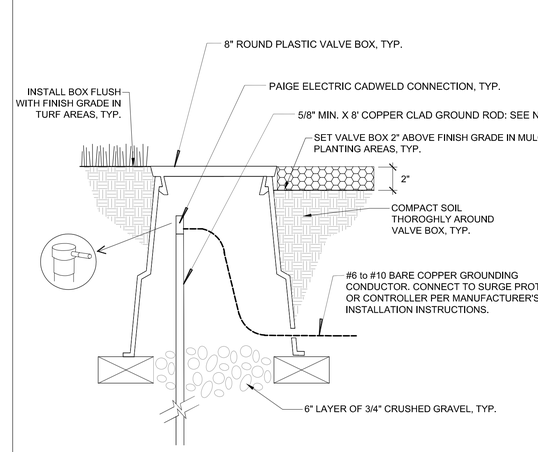

TWO-WIRE SYSTEM GROUNDING REQUIREMENTS:

SURGE PROTECTION USING PROPER GROUNDING RODS AND RAINBIRD LINE SURGE PROTECTION, LSP-1 (WHERE IT IS NOT ALREADY BUILT INTO THE DECODER) IS REQUIRED FOR PROTECTION AGAINST SURGE DAMAGE DUE TO LIGHTNING OR OTHER ELECTRICAL SURGE EVENTS. CONFORMANCE TO THIS SURGE SUPPRESSION SPECIFICATION IS NECESSARY TO RETAIN WARRANTY PROTECTION UNDER RAINBIRD WARRANTY TERMS.

THE INSTALLATION SHALL CONFORM TO MANUFACTURER'S INSTRUCTIONS, AND MUST MEET OR EXCEED THE AMERICAN SOCIETY OF IRRIGATION CONSULTANTS (ASIC) EARTH GROUNDING GUIDELINE 100-2002.
HTTP://WWW.ASIC.ORG/UPLOADS/ASSETS/011007_121320_ASIC_GROUNDING_GUIDELINES.DOC

GROUND RODS AS REFERRED TO IN THIS SPECIFICATION SHALL CONFORM TO THE FOLLOWING STANDARDS:

1.) ALL GROUNDING RODS SHALL BE BARE COPPER OF 5/8" DIAMETER OR GREATER, AND 8' LENGTH OR GREATER.
2.) A MEASURED RESISTANCE READING OF LESS THAN 10 OHMS IS NECESSARY AT EACH LSP-1 (OR DECODER WHERE SURGE PROTECTION IS BUILT INTO THE DECODER). ASIC SPEC: SECTION 7.0 - MEASURING RESISTANCE, ITEM A.

GROUND RODS SHALL BE LOCATED AT A MINIMUM DISTANCE TO ASSURE THAT THE TWO-WIRE PATH IS OUTSIDE OF THE ELECTRODE SPHERE OF INFLUENCE FOR THE GROUNDING ROD: THE GROUND ROD MUST BE CONNECTED AT LEAST 8' AWAY FROM THE TWO-WIRE PATH, AT A RIGHT ANGLE TO THE TWO-WIRE PATH.

UNDER NO CIRCUMSTANCES SHOULD A GROUND ROD BE INSTALLED IN OR UNDER A VALVE BOX, METER BOX OR ELECTRICAL BOX.

CONNECTIONS TO GROUNDING RODS
ALL CONNECTIONS TO GROUND RODS SHALL CONFORM TO ASIC EARTH GROUNDING GUIDELINE 100-2002, AND SHALL CONSIST OF EITHER A CADWELD TYPE OR SCREW CLAMP TYPE OF CONNECTION. CADWELD OR EQUIVALENT CONNECTIONS ARE PREFERRED.

ANY WIRE EXTENSIONS REQUIRED TO CONNECT FROM A GROUND ROD TO A SURGE PROTECTOR OR ENCLOSURE GROUND LUG SHALL BE BARE COPPER, AND SHALL NOT HAVE ANY SHARP BENDS OR KINKS. WIRE EXTENSIONS CONNECTED TO SURGE PROTECTORS SHALL USE A CADWELD TYPE OR SCREW CLAMP TYPE CONNECTION WHERE THE BARE COPPER GROUND WIRE MEETS THE GREEN GROUNDING WIRE FROM THE SURGE PROTECTOR.

2 2-WIRE SYSTEM GROUNDING ROD

1" = 1" | P-VA1-29

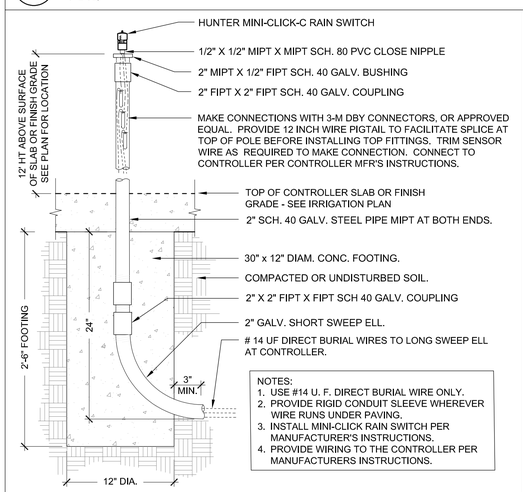

7 POLE MOUNTED RAIN SWITCH

NTS | BOE VERSION DEC/21 | RP DETAIL L1460

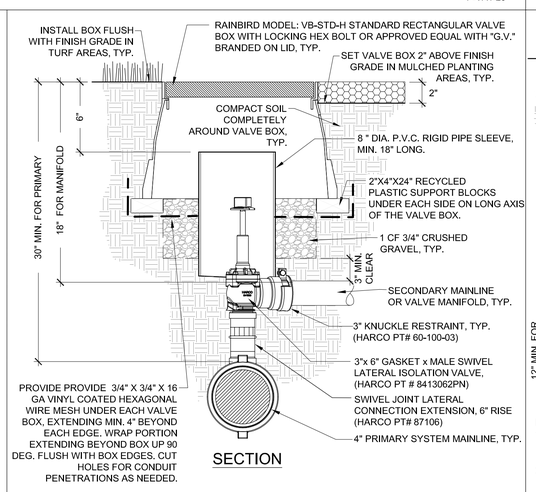

6 MANIFOLD GATE VALVE, 3" AND LARGER MAINLINE

NTS | BOE VERSION 02/14/18 RF | RP DETAIL L1102

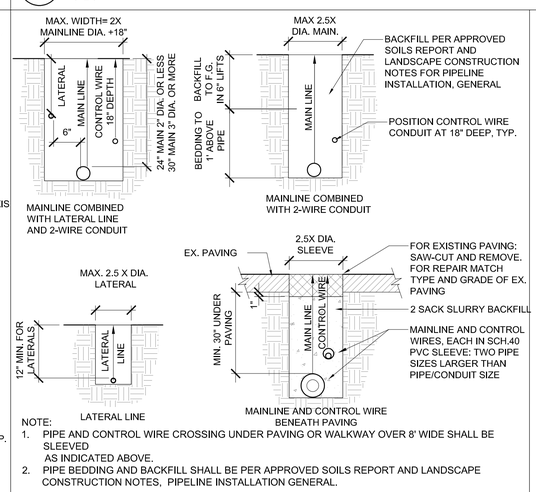

NOTE:
1. PIPE AND CONTROL WIRE CROSSING UNDER PAVING OR WALKWAY OVER 8' WIDE SHALL BE SLEEVED AS INDICATED ABOVE.
2. PIPE BEDDING AND BACKFILL SHALL BE PER APPROVED SOILS REPORT AND LANDSCAPE CONSTRUCTION NOTES, PIPELINE INSTALLATION GENERAL.

3 IRRIGATION TRENCHING DETAIL - 2 WIRE

NTS | BOE VERSION 02/08/18 | RP DETAIL 1350

STORMWATER MITIGATION
LOW IMAPCT DEVELOPMENT (LID)
APPROVED WITH CONDITIONS

This set of plans and specifications must be at the jobsite during construction

Stormwater Observation Report (SOR) is required prior to issuance of Certificate of Occupancy or final sign off.

Total Pages 48

Digitally Signed By: *S. Garcia* Date: 12/12/2023
Department of Public Works - Bureau of Sanitation
Watershed Protection Division

PLANS PREPARED BY:
STUDIO-MLA
251 South Mission Road
Los Angeles, CA 90033
T: 213.384.3844 studio-mla.com

CITY OF LOS ANGELES DEPARTMENT OF PUBLIC WORKS
BUREAU OF ENGINEERING

CITY ENGINEER	DATE
TED ALLEN, P.E.	YY/MM/DD

DESIGN GROUP	
ENGINEER:	MATT LYSNE
ARCHITECT:	MATT LYSNE
DESIGNED BY:	CARMEN GODINEZ
DRAWN BY:	CARMEN GODINEZ
CHECKED BY:	ALEX SAN DIEGO
APPROVED BY:	MATT LYSNE

NO.	REVISIONS	BY	DATE
			YY/MM/DD
			YY/MM/DD
			YY/MM/DD
			YY/MM/DD
			YY/MM/DD

INDEX NO.

CIP NO. SCP0009

WORK ORDER EW40085F

SHEET NAME L-605

SHEET 73 OF 80 SHEETS

SHEET TITLE: IRRIGATION DETAILS - SHEET 2

PROJECT: VALLEY VILLAGE PARK STORM WATER CAPTURE PROJECT

ADDRESS: VALLEY VILLAGE PARK
5000 Westpark Dr, North Hollywood, CA 91601

VERTICAL CONTROL:
HORIZONTAL CONTROL:

ENGINEERING
CITY OF LOS ANGELES

LICENSED LANDSCAPE ARCHITECT
JAN DYER
5623
11-30-24
12/6/2023
STATE OF CALIFORNIA

THIS PLAN WAS ELECTRONICALLY SIGNED AND STAMPED

REVISION DATES (DESIGN STAGE ONLY)

THE CITY OF LOS ANGELES OR ITS OFFICERS OR AGENTS SHALL NOT BE RESPONSIBLE FOR THE ACCURACY OR COMPLETENESS OF ELECTRONIC COPIES OF THIS PLAN SHEET.

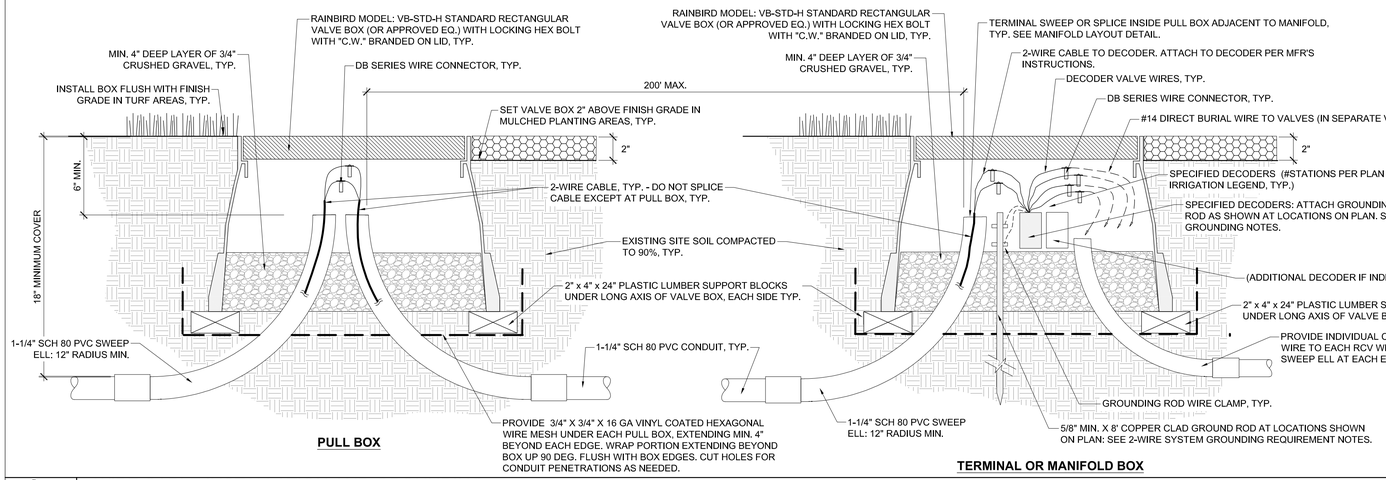

NOTES:

1. ALL CONDUIT AND FITTINGS SHALL BE SCHEDULE 80 PVC. CHANGES IN DIRECTION OF CONDUIT PATH SHALL NOT EXCEED 360 DEG. FOR EACH SECTION BETWEEN PULL BOXES.
2. MAXIMUM DISTANCE BETWEEN PULL BOXES SHALL BE 200 FEET.
3. MAXIMUM LENGTH OF SECONDARY WIRE PATH (14 AWG) FROM FIELD DECODER TO SOLENOID IS 450 FEET.
4. PROVIDE A COIL OF MIN. 24" OF 2-WIRE CABLE AT EACH SPLICE OR DECODER CONNECTION POINT.

TWO-WIRE SYSTEM GROUNDING REQUIREMENTS:

SURGE PROTECTION USING PROPER GROUNDING RODS IS REQUIRED FOR PROTECTION AGAINST SURGE DAMAGE DUE TO LIGHTNING OR OTHER ELECTRICAL SURGE EVENTS. CONFORMANCE TO THIS SURGE SUPPRESSION SPECIFICATION IS NECESSARY TO RETAIN WARRANTY PROTECTION UNDER MANUFACTURER'S WARRANTY TERMS.

THE INSTALLATION SHALL CONFORM TO MANUFACTURER'S INSTRUCTIONS, AND MUST MEET OR EXCEED THE AMERICAN SOCIETY OF IRRIGATION CONSULTANTS (ASIC) EARTH GROUNDING GUIDELINE 100-2002. HTTP://WWW.ASIC.ORG/UPLOADS/ASSETS/011007_121320_ASIC_GROUNDING_GUIDELINES.DOC

GROUND RODS AS REFERRED TO IN THIS SPECIFICATION SHALL CONFORM TO THE FOLLOWING STANDARDS:

1.) ALL GROUNDING RODS SHALL BE BARE COPPER OF 5/8" DIAMETER OR GREATER, AND 8' LENGTH OR GREATER.

2.) A MEASURED RESISTANCE READING OF NO MORE THAN 10 OHMS IS NECESSARY AT EACH LIGHTNING ARRESTOR. ASIC SPEC: SECTION 7.0 - MEASURING RESISTANCE, ITEM A.

GROUND RODS SHALL BE LOCATED AT A MINIMUM DISTANCE TO ASSURE THAT THE TWO-WIRE PATH IS OUTSIDE OF THE ELECTRODE SPHERE OF INFLUENCE FOR THE GROUNDING ROD: THE GROUND ROD MUST BE CONNECTED AT LEAST 8' AWAY FROM THE TWO-WIRE PATH, AT A RIGHT ANGLE TO THE TWO-WIRE PATH.

UNDER NO CIRCUMSTANCES SHOULD A GROUND ROD BE INSTALLED IN OR UNDER A VALVE BOX, METER BOX OR ELECTRICAL BOX.

CONNECTIONS TO GROUNDING RODS:
ALL CONNECTIONS TO GROUND RODS SHALL CONFORM TO ASIC EARTH GROUNDING GUIDELINE 100-2002, AND SHALL CONSIST OF A SCREW CLAMP TYPE OF CONNECTION.

ANY WIRE EXTENSIONS REQUIRED TO CONNECT FROM A GROUND ROD TO A LIGHTNING ARRESTOR OR ENCLOSURE GROUND LUG SHALL BE BARE COPPER, AND SHALL NOT HAVE ANY SHARP BENDS OR KINKS. WIRE EXTENSIONS CONNECTED TO LIGHTNING ARRESTORS SHALL USE A CADWELD TYPE OR SCREW CLAMP TYPE CONNECTION WHERE THE BARE COPPER GROUND WIRE MEETS THE GREEN GROUNDING WIRE FROM THE LIGHTNING ARRESTOR.

2 2-WIRE CABLE INSTALLATION AND GROUNDING

NTS

RP DETAIL L1430

STORMWATER MITIGATION
LOW IMAPCT DEVELOPMENT (LID)
APPROVED WITH CONDITIONS

This set of plans and specifications must be at the jobsite during construction

Stormwater Observation Report (SOR) is required prior to issuance of Certificate of Occupancy or final sign off.

Total Pages 48

Digitally Signed By: S. Garcia Date: 12/12/2023
Department of Public Works - Bureau of Sanitation
Watershed Protection Division

PLANS PREPARED BY:
STUDIO-MLA
251 South Mission Road
Los Angeles, California 90033
T (213) 384-3844 studio-mla.com

CITY OF LOS ANGELES DEPARTMENT OF PUBLIC WORKS
BUREAU OF ENGINEERING

ENGINEERING
CITY OF LOS ANGELES

LICENSED LANDSCAPE ARCHITECT
JAN DYER
5623
11-30-24
12/6/2023
STATE OF CALIFORNIA

THIS PLAN WAS ELECTRONICALLY SIGNED AND STAMPED

VERTICAL CONTROL:
HORIZONTAL CONTROL:

SHEET TITLE: IRRIGATION DETAILS - SHEET 3
PROJECT: VALLEY VILLAGE PARK STORM WATER CAPTURE PROJECT
ADDRESS: VALLEY VILLAGE PARK
5000 Westpark Dr, North Hollywood, CA 91601

NO.	REVISIONS	DATE	BY
		YY/MM/DD	
		YY/MM/DD	
		YY/MM/DD	
		YY/MM/DD	

CITY ENGINEER: TED ALLEN, P.E. DATE YY/MM/DD

	DESIGN GROUP	DATE
ENGINEER:		YY/MM/DD
ARCHITECT:	MATT LYSNE	YY/MM/DD
DESIGNED BY:	CARMEN GODINEZ	YY/MM/DD
DRAWN BY:	CARMEN GODINEZ	YY/MM/DD
CHECKED BY:	ALEX SAN DIEGO	YY/MM/DD
APPROVED BY:	MATT LYSNE	YY/MM/DD

CIP NO. SCP0009

INDEX NO.

WORK ORDER EW40085F

SHEET NAME L-606

SHEET 74 OF 80 SHEETS

THE CITY OF LOS ANGELES OR IT'S OFFICERS OR AGENTS SHALL NOT BE RESPONSIBLE FOR THE ACCURACY OR COMPLETENESS OF ELECTRONIC COPIES OF THIS PLAN SHEET.

REVISION DATES (DESIGN STAGE ONLY)

PLANTING NOTES

1. DRAWING IS DIAGRAMMATIC. VERIFY ALL LOCATIONS AND CONDITIONS ON SITE. COUNT ALL PLANT MATERIAL BEFORE BIDDING. THE NUMBER OF SYMBOLS INDICATED ON THE PLANS SHALL PREVAIL IN THE CASE OF ANY DISCREPANCY WITH PLANTING LEGEND.

2. INSPECT ALL EXISTING CONDITIONS ON SITE AND LOCATE ALL EXISTING UTILITIES BEFORE CONSTRUCTION BEGINS. ALL TREE STAKING LOCATIONS TO BE APPROVED BY PROJECT MANAGER PRIOR TO ANY DIGGING. FINAL TREE PLANTING LOCATIONS MAY BE ADJUSTED AT THE TIME OF STAKING AT NO ADDITIONAL COST TO THE CITY.

3. NOTE ADDITIONAL REMARKS ON SPECIFIC PLANTS IN PLANT LIST.

4. ALL EXISTING PLANT MATERIAL TO REMAIN EXCEPT WHERE DESIGNATED ON PLAN. SEE TURF PROTECTION AND REPAIR NOTES, SHEET L-100B.

5. ALL PLANTED AREAS SHALL RECEIVE THE FOLLOWING AMENDMENTS PER 1,000 SQ. FT. OF SURFACE AREA. ROTO-TILL AMENDMENTS TO A DEPTH OF 12"
   *50 LBS. GRO-POWER PLUS FERTILIZER
   *4 CY ORGANIC COMPOST, 15 LBS. AGRICULTURAL GYPSUM

6. PLANT HOLE TO BE TWICE AS WIDE AS THE PLANT ROOT BALL. BACKFILL SHALL BE 100% AMENDED CLASS "C" TOPSOIL. PROVIDE GRO-POWER PLANT TABLETS AT THE FOLLOWING RATES:

15 GAL	10
BOXED TREES	10 PER INCH OF TRUNK DIAMETER, WITH A MIN. OF 20 TABLETS PER TREE

   PLACE RECOMMENDED TABLETS BETWEEN THE BOTTOM AND THE TOP OF THE ROOT BALL BUT NO HIGHER THAN 1/3 OF THE WAY UP TO THE TOP OF THE ROOT BALL. SPACE TABLETS EQUALLY AROUND THE PERIMETER OF THE ROOT BALL APPROXIMATELY 2" FROM THE ROOT TIPS. SEE PLANTING DETAIL 2 SHEET L-704.

7. SEE LANDSCAPE PLANTING SPECIFICATIONS FOR ADDITIONAL REQUIREMENTS.

8. SEE SPECIFICATION SECTION 02900 FOR GENERAL SOIL PREPARATION INFORMATION. REFER TO 3.3 GRADING AND SITE PREPARATION FOR SOIL AMENDMENT INFORMATION.

PLANT SCHEDULE

TREES	CODE	BOTANICAL / COMMON NAME	CONT	WATER USE	DETAIL
	JAC MIM	JACARANDA MIMOSIFOLIA JACARANDA STANDARD, STAKE	48" BOX	MODERATE	2/L-704
	LOP CON	LOPHOSTEMON CONFERTUS BRISBANE BOX LOW BRANCHING FORM, STAKE	48" BOX	MODERATE	2/L-704
	PIN TOR	PINUS TORREYANA TORREY PINE LOW BRANCHING FORM, STAKE	48" BOX	LOW	2/L-704
	PIS RED	PISTACIA X `RED PUSH` PISTACHE STANDARD, STAKE	48" BOX	MODERATE	2/L-704
	QUE AGR	QUERCUS AGRIFOLIA COAST LIVE OAK NATURAL FORM, NO STAKING	48" BOX	VERY LOW	2/L-704
	QUE BUC	QUERCUS BUCKLEYI BUCKLEY OAK LOW BRANCHING FORM, STAKE	48" BOX	MODERATE	2/L-704
SHRUBS	CODE	BOTANICAL / COMMON NAME	CONT	WATER USE	DETAIL
	HET DAV	HETEROMELES ARBUTIFOLIA `DAVIS GOLD` TOYON	15 GAL	VERY LOW	1/L-704
	PRU ILI	PRUNUS ILICIFOLIA HOLLY LEAF CHERRY	15 GAL	VERY LOW	1/L-704
	RHU OVA	RHUS OVATA SUGAR BUSH	15 GAL	VERY LOW	1/L-704
GROUND COVERS	CODE	BOTANICAL / COMMON NAME	CONT	WATER USE	DETAIL
	HYD CUS	HYDROSEED MIX (CUSTOM MIX) CUSTOM MIX HYDROSEED SEE HYDROSEED SCHEDULE	HYDROSEED	MODERATE	
	MUL LAY	MULCH LAYER 4`` MULCH LAYER	-		
	TUR PLU	TURF SEED MIX (SPORTS TURF PRO MIX) SPORT TURF PRO MIX TURF AT GRASS SURFACE PAVERS. SEE HYDROSEED SCHEDULE	SEED	MODERATE	
	TUR SOD	TURF SOD SOD AG SOD "BALL PARK BLEND" OR APPROVED EQUAL	SOD	MODERATE	

HYDROSEED SCHEDULE

HYDROSEED MIX- CUSTOM MIX (AVAILABLE THRU: S&S SEEDS OR APPROVED EQUAL)

BOTANICAL NAME / COMMON NAME		BULK LBS/ACRE	MIN % PLS*
Agrostis pallens / San Diego Bent Grass		3.00 bulk lbs/acre	80
Deschampsia cespitosa / Tufted hairgrass		2.00 bulk lbs/acre	70
Elymus triticoides 'Rio' / Creeping wild rye	80%	4.00 bulk lbs/acre	70
Festuca rubra 'Molate' / Red fescue	20%	6.00 bulk lbs/acre	80
Festuca idahoensis / Idaho fescue		4.00 bulk lbs/acre	80
Achillea millefolium / White Yarrow		2.00 bulk lbs/acre	75
Coreopsis lanceolata / Lance-Leaf Coreopsis		1.00 bulk lbs/acre	75
Eschscholzia californica / California Poppy		2.00 bulk lbs/acre	83
Gaillardia pulchella / Indian Blanket		3.00 bulk lbs/acre	75
Linum lewisii / Blue Flax		3.00 bulk lbs/acre	80
Festuca occidentalis 'Mokelumne' / Native Mokelumne blue fescue		4.00 bulk lbs/acre	80

*MIN % PLS (PURE LIVE SEED) - SEED PURITY X GERMINATION RATE

HYDROSEED MIX- SPORTS TURF PRO MIX (AVAILABLE THRU: S&S SEEDS OR APPROVED EQUAL)

GRASS SEED	PERCENT BY WEIGHT
Fasttrack perennial ryegrass blend	
Oasis bermuda grass blend	

SEEDING RATE: 10-12 LBS / 1000 SQUARE FEET

STORMWATER MITIGATION
LOW IMAPCT DEVELOPMENT (LID)
APPROVED WITH CONDITIONS

This set of plans and specifications must be at the jobsite during construction

Stormwater Observation Report (SOR) is required prior to issuance of Certificate of Occupancy or final sign off.

Total Pages 48

Digitally Signed By: S. Garcia Date: 12/12/2023
Department of Public Works - Bureau of Sanitation
Watershed Protection Division

THE CITY OF LOS ANGELES OR IT'S OFFICERS OR AGENTS SHALL NOT BE RESPONSIBLE FOR THE ACCURACY OR COMPLETENESS OF ELECTRONIC COPIES OF THIS PLAN SHEET.

REVISION DATES (DESIGN STAGE ONLY)

ENGINEERING
CITY OF LOS ANGELES

LICENSED LANDSCAPE ARCHITECT
JAN DYER
5623
11-30-24
12/6/2023
STATE OF CALIFORNIA

THIS PLAN WAS ELECTRONICALLY SIGNED AND STAMPED

BUREAU OF ENGINEERING

VERTICAL CONTROL:
HORIZONTAL CONTROL:

SHEET TITLE: PLANTING NOTES AND SCHEDULE
PROJECT: VALLEY VILLAGE PARK STORM WATER CAPTURE PROJECT
ADDRESS: VALLEY VILLAGE PARK
5000 Westpark Dr, North Hollywood, CA 91601

NO.	REVISIONS	DATE	BY
		YY/MM/DD	
		YY/MM/DD	
		YY/MM/DD	
		YY/MM/DD	

CIP NO. SCP0009

INDEX NO.

CITY OF LOS ANGELES DEPARTMENT OF PUBLIC WORKS

CITY ENGINEER: TED ALLEN, P.E. DATE YY/MM/DD

DESIGN GROUP		DATE
ENGINEER:		YY/MM/DD
ARCHITECT:	MATT LYSNE	YY/MM/DD
DESIGNED BY:	CARMEN GODINEZ	YY/MM/DD
DRAWN BY:	CARMEN GODINEZ	YY/MM/DD
CHECKED BY:	ALEX SAN DIEGO	YY/MM/DD
APPROVED BY:	MATT LYSNE	YY/MM/DD

PLANS PREPARED BY:
STUDIO-MLA
251 South Mission Road
Los Angeles, California 90033
T: 213.384.4644 studio-mla.com

WORK ORDER
EW40085F

SHEET NAME
L-700
SHEET 75 OF 80 SHEETS

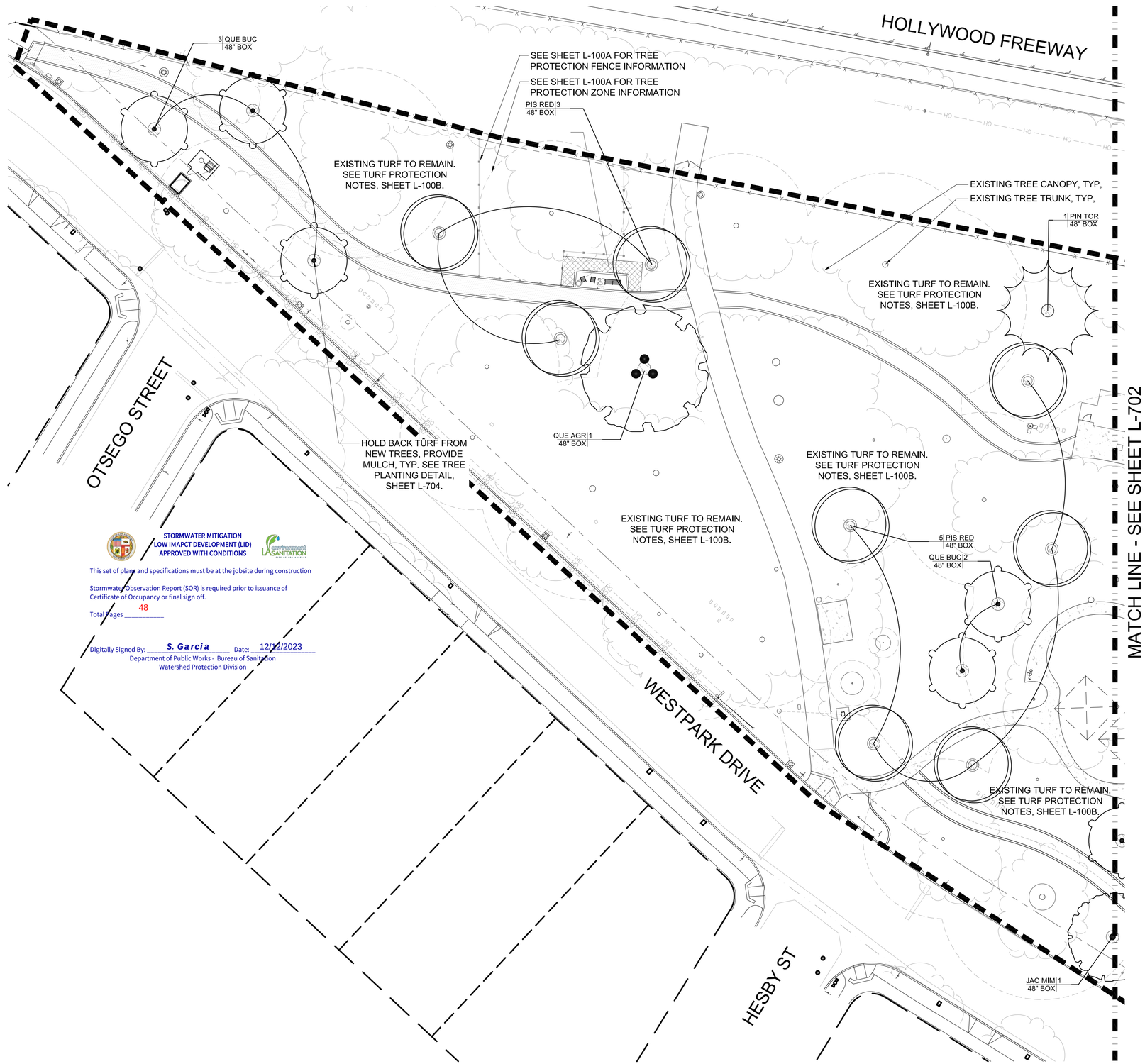

STORMWATER MITIGATION
LOW IMAPCT DEVELOPMENT (LID)
APPROVED WITH CONDITIONS

This set of plans and specifications must be at the jobsite during construction

Stormwater Observation Report (SOR) is required prior to issuance of Certificate of Occupancy or final sign off.

Total Pages 48

Digitally Signed By: S. Garcia Date: 12/7/2023
Department of Public Works - Bureau of Sanitation
Watershed Protection Division

PLANT SCHEDULE

TREES	CODE	BOTANICAL / COMMON NAME	CONT	WATER USE
	JAC MIM	JACARANDA MIMOSIFOLIA JACARANDA STANDARD, STAKE	48" BOX	MODERATE
	LOP CON	LOPHOSTEMON CONFERTUS BRISBANE BOX LOW BRANCHING FORM, STAKE	48" BOX	MODERATE
	PIN TOR	PINUS TORREYANA TORREY PINE LOW BRANCHING FORM, STAKE	48" BOX	LOW
	PIS RED	PISTACIA X `RED PUSH` PISTACHE STANDARD, STAKE	48" BOX	MODERATE
	QUE AGR	QUERCUS AGRIFOLIA COAST LIVE OAK NATURAL FORM, NO STAKING	48" BOX	VERY LOW
	QUE BUC	QUERCUS BUCKLEYI BUCKLEY OAK LOW BRANCHING FORM, STAKE	48" BOX	MODERATE
SHRUBS	CODE	BOTANICAL / COMMON NAME	CONT	WATER USE
	HET DAV	HETEROMELES ARBUTIFOLIA `DAVIS GOLD` TOYON	15 GAL	VERY LOW
	PRU ILI	PRUNUS ILICIFOLIA HOLLY LEAF CHERRY	15 GAL	VERY LOW
	RHU OVA	RHUS OVATA SUGAR BUSH	15 GAL	VERY LOW
GROUND COVERS	CODE	BOTANICAL / COMMON NAME	CONT	WATER USE
	HYD CUS	HYDROSEED MIX (CUSTOM MIX) CUSTOM MIX HYDROSEED SEE HYDROSEED SCHEDULE	HYDROSEED	MODERATE
	MUL LAY	MULCH LAYER 4`` MULCH LAYER	-	
	TUR PLU	TURF SEED MIX (SPORTS TURF PRO MIX) SPORT TURF PRO MIX TURF AT GRASS SURFACE PAVERS. SEE HYDROSEED SCHEDULE	SEED	MODERATE
	TUR SOD	TURF SOD SOD AG SOD "BALL PARK BLEND" OR APPROVED EQUAL	SOD	MODERATE

NOTE:

SEE L-700 FOR COMPLETE PLANT SCHEDULE

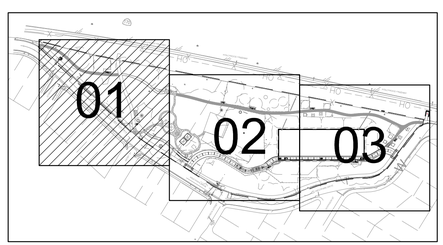

KEY MAP

0 10 20 40
Scale : 1" = 20'-0"

PLANS PREPARED BY:
STUDIO-MLA
251 South Mission Road
Los Angeles, California 90033
T: 213.384.3844 studio-mla.com

CITY OF LOS ANGELES DEPARTMENT OF PUBLIC WORKS
BUREAU OF ENGINEERING

ENGINEERING
CITY OF LOS ANGELES

LICENSED LANDSCAPE ARCHITECT
JAN DYER
5623
11-30-24
12/6/2023
STATE OF CALIFORNIA

THIS PLAN WAS ELECTRONICALLY SIGNED AND STAMPED

VERTICAL CONTROL:
HORIZONTAL CONTROL:

SHEET TITLE: PLANTING PLAN - SHEET 1
PROJECT: VALLEY VILLAGE PARK STORM WATER CAPTURE PROJECT
ADDRESS: VALLEY VILLAGE PARK
5000 Westpark Dr, North Hollywood, CA 91601

NO.	REVISIONS	BY	DATE
			YY/MM/DD
			YY/MM/DD
			YY/MM/DD
			YY/MM/DD

CIP NO. SCP0009

INDEX NO.

CITY ENGINEER: TED ALLEN, P.E. DATE YY/MM/DD

DESIGN GROUP		DATE
ENGINEER:	MATT LYSNE	YY/MM/DD
ARCHITECT:	MATT LYSNE	YY/MM/DD
DESIGNED BY:	CARMEN GODINEZ	YY/MM/DD
DRAWN BY:	CARMEN GODINEZ	YY/MM/DD
CHECKED BY:	ALEX SAN DIEGO	YY/MM/DD
APPROVED BY:	MATT LYSNE	YY/MM/DD

WORK ORDER
EW40085F

SHEET NAME
L-701
SHEET 76 OF 80 SHEETS

REVISION DATES (DESIGN STAGE ONLY)

THE CITY OF LOS ANGELES OR ITS OFFICERS OR AGENTS SHALL NOT BE RESPONSIBLE FOR THE ACCURACY OR COMPLETENESS OF ELECTRONIC COPIES OF THIS PLAN SHEET.

EXISTING TREE TRUNK, TYP,

EXISTING TREE CANOPY, TYP,

SEE SHEET L-100A FOR TREE PROTECTION FENCE INFORMATION

SEE SHEET L-100A FOR TREE PROTECTION ZONE INFORMATION

PIN TOR 6 48" BOX

1 PIS RED 48" BOX

EXISTING TURF TO REMAIN. SEE TURF PROTECTION NOTES, SHEET L-100B.

EXISTING TURF TO REMAIN. SEE TURF PROTECTION NOTES, SHEET L-100B.

1 QUE AGR 48" BOX

PIS RED 5 48" BOX

MATCH LINE - SEE SHEET L-701

MATCH LINE - SEE SHEET L-703

PIN TOR 1 48" BOX

1 JAC MIM 48" BOX

1 PIS RED 48" BOX

1 QUE BUC 48" BOX

PIN TOR 3 48" BOX

QUE BUC 5 48" BOX

STORMWATER MITIGATION
LOW IMPACT DEVELOPMENT (LID)
APPROVED WITH CONDITIONS

This set of plans and specifications must be at the jobsite during construction

Stormwater Observation Report (SOR) is required prior to issuance of Certificate of Occupancy or final sign off.

Total Pages 48

1 QUE BUC 48" BOX

Digitally Signed By: S. Garcia Date: 12/12/2023

Department of Public Works - Bureau of Sanitation
Watershed Protection Division

EXISTING TURF TO REMAIN. SEE TURF PROTECTION NOTES, SHEET L-100B.

2 PIN TOR 48" BOX

PIS RED 2 48" BOX

TUR SOD 127 sf SOD

TUR PLU 2,952 sf SEED

TUR SOD 17,449 sf SOD

1 PIN TOR 48" BOX

2 QUE BUC 48" BOX

WESTPARK DRIVE

EXISTING TURF TO REMAIN. SEE TURF PROTECTION NOTES, SHEET L-100B.

JAC MIM 1 48" BOX

HOLD BACK TURF FROM NEW TREES, PROVIDE MULCH, TYP. SEE TREE PLANTING DETAIL, SHEET L-704.

PLANT SCHEDULE

TREES	CODE	BOTANICAL / COMMON NAME	CONT	WATER USE
	JAC MIM	JACARANDA MIMOSIFOLIA JACARANDA STANDARD, STAKE	48" BOX	MODERATE
	LOP CON	LOPHOSTEMON CONFERTUS BRISBANE BOX LOW BRANCHING FORM, STAKE	48" BOX	MODERATE
	PIN TOR	PINUS TORREYANA TORREY PINE LOW BRANCHING FORM, STAKE	48" BOX	LOW
	PIS RED	PISTACIA X `RED PUSH` PISTACHE STANDARD, STAKE	48" BOX	MODERATE
	QUE AGR	QUERCUS AGRIFOLIA COAST LIVE OAK NATURAL FORM, NO STAKING	48" BOX	VERY LOW
	QUE BUC	QUERCUS BUCKLEYI BUCKLEY OAK LOW BRANCHING FORM, STAKE	48" BOX	MODERATE
SHRUBS	CODE	BOTANICAL / COMMON NAME	CONT	WATER USE
	HET DAV	HETEROMELES ARBUTIFOLIA `DAVIS GOLD` TOYON	15 GAL	VERY LOW
	PRU ILI	PRUNUS ILICIFOLIA HOLLY LEAF CHERRY	15 GAL	VERY LOW
	RHU OVA	RHUS OVATA SUGAR BUSH	15 GAL	VERY LOW
GROUND COVERS	CODE	BOTANICAL / COMMON NAME	CONT	WATER USE
	HYD CUS	HYDROSEED MIX (CUSTOM MIX) CUSTOM MIX HYDROSEED SEE HYDROSEED SCHEDULE	HYDROSEED	MODERATE
	MUL LAY	MULCH LAYER 4`` MULCH LAYER	-	
	TUR PLU	TURF SEED MIX (SPORTS TURF PRO MIX) SPORT TURF PRO MIX TURF AT GRASS SURFACE PAVERS. SEE HYDROSEED SCHEDULE	SEED	MODERATE
	TUR SOD	TURF SOD SOD AG SOD "BALL PARK BLEND" OR APPROVED EQUAL	SOD	MODERATE

NOTE:

SEE L-700 FOR COMPLETE PLANT SCHEDULE

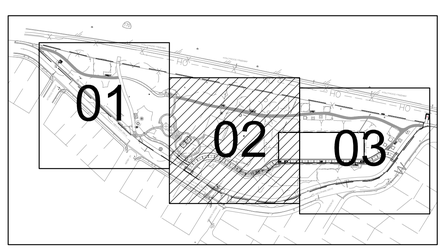

KEY MAP

Scale : 1" = 20'-0"

PLANS PREPARED BY:

STUDIO-MLA
251 South Mission Road
Los Angeles, California 90033
T: 213.384.3844 studio-mla.com

CITY OF LOS ANGELES DEPARTMENT OF PUBLIC WORKS BUREAU OF ENGINEERING

ENGINEERING
CITY OF LOS ANGELES

THIS PLAN WAS ELECTRONICALLY • SIGNED AND STAMPED •

LICENSED LANDSCAPE ARCHITECT
JAN DYER
5623
11-30-24
12/6/2023
STATE OF CALIFORNIA

VERTICAL CONTROL:
HORIZONTAL CONTROL:

SHEET TITLE: PLANTING PLAN - SHEET 2

PROJECT: VALLEY VILLAGE PARK STORM WATER CAPTURE PROJECT

ADDRESS: VALLEY VILLAGE PARK
5000 Westpark Dr, North Hollywood, CA 91601

NO.	REVISIONS	DATE	BY
		YY/MM/DD	
		YY/MM/DD	
		YY/MM/DD	
		YY/MM/DD	

CIP NO. SCP0009

INDEX NO.

CITY ENGINEER
TED ALLEN, P.E.

DESIGN GROUP

	DATE
ENGINEER:	YY/MM/DD
ARCHITECT: MATT LYSNE	YY/MM/DD
DESIGNED BY: CARMEN GODINEZ	YY/MM/DD
DRAWN BY: CARMEN GODINEZ	YY/MM/DD
CHECKED BY: ALEX SAN DIEGO	YY/MM/DD
APPROVED BY: MATT LYSNE	YY/MM/DD

WORK ORDER
EW40085F

SHEET NAME
L-702

SHEET 77 OF 80 SHEETS

THE CITY OF LOS ANGELES OR ITS OFFICERS OR AGENTS SHALL NOT BE RESPONSIBLE FOR THE ACCURACY OR COMPLETENESS OF ELECTRONIC COPIES OF THIS PLAN SHEET.

REVISION DATES (DESIGN STAGE ONLY)

SHEET VERSION 4.0.1 FILE PATH: P:\TOS 2020-PARKS\CAD\X-LA\TOS2019_VALLEY_PLA.DWG PLOT DATE: 12/6/2023 12:08 PM SAVED: 3/10/2022 4:01 PM SAVED BY:ALEX

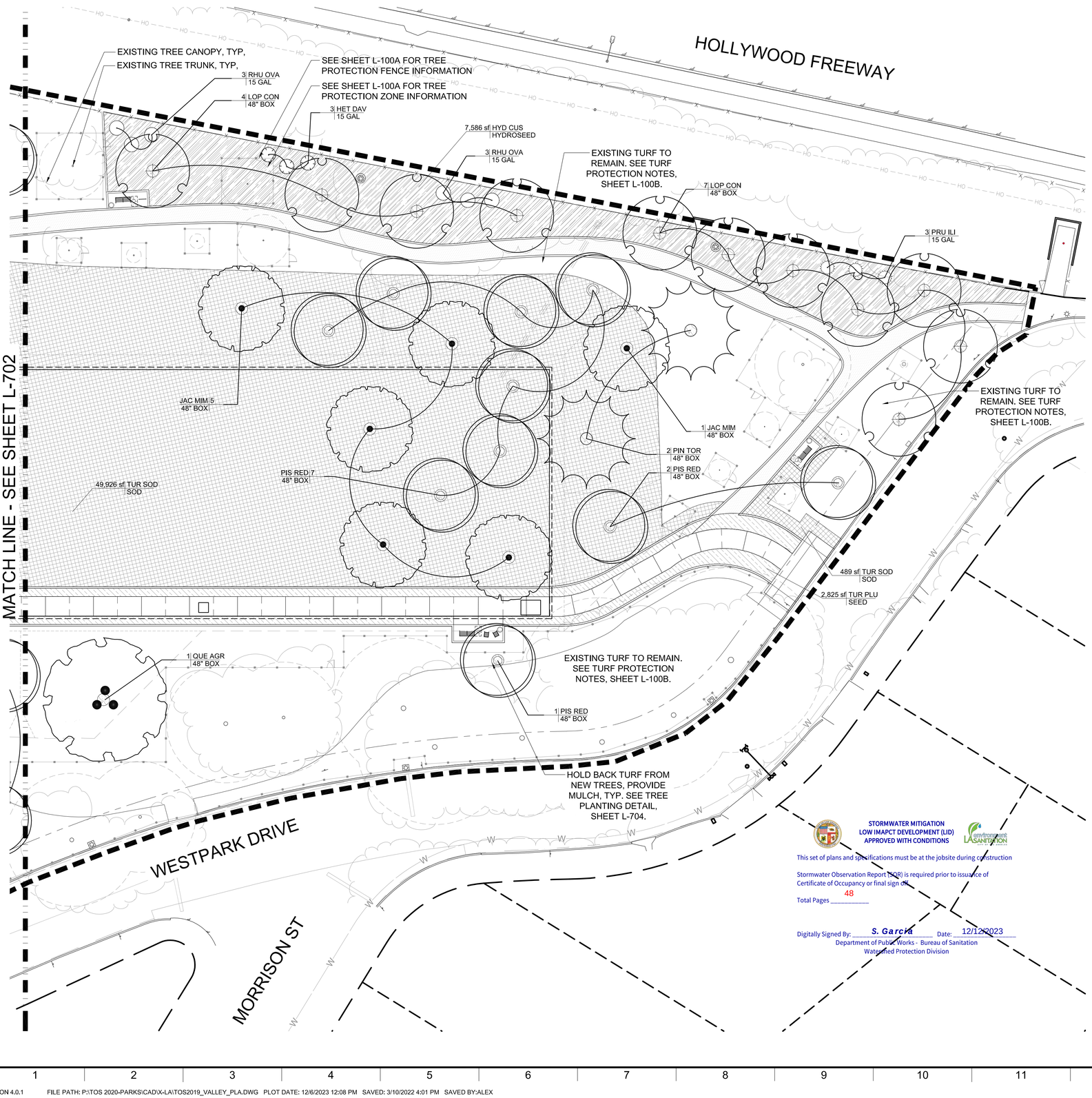

PLANT SCHEDULE

TREES	CODE	BOTANICAL / COMMON NAME	CONT	WATER USE
	JAC MIM	JACARANDA MIMOSIFOLIA JACARANDA STANDARD, STAKE	48" BOX	MODERATE
	LOP CON	LOPHOSTEMON CONFERTUS BRISBANE BOX LOW BRANCHING FORM, STAKE	48" BOX	MODERATE
	PIN TOR	PINUS TORREYANA TORREY PINE LOW BRANCHING FORM, STAKE	48" BOX	LOW
	PIS RED	PISTACIA X `RED PUSH` PISTACHE STANDARD, STAKE	48" BOX	MODERATE
	QUE AGR	QUERCUS AGRIFOLIA COAST LIVE OAK NATURAL FORM, NO STAKING	48" BOX	VERY LOW
	QUE BUC	QUERCUS BUCKLEYI BUCKLEY OAK LOW BRANCHING FORM, STAKE	48" BOX	MODERATE
SHRUBS	CODE	BOTANICAL / COMMON NAME	CONT	WATER USE
	HET DAV	HETEROMELES ARBUTIFOLIA `DAVIS GOLD` TOYON	15 GAL	VERY LOW
	PRU ILI	PRUNUS ILICIFOLIA HOLLY LEAF CHERRY	15 GAL	VERY LOW
	RHU OVA	RHUS OVATA SUGAR BUSH	15 GAL	VERY LOW
GROUND COVERS	CODE	BOTANICAL / COMMON NAME	CONT	WATER USE
	HYD CUS	HYDROSEED MIX (CUSTOM MIX) CUSTOM MIX HYDROSEED SEE HYDROSEED SCHEDULE	HYDROSEED	MODERATE
	MUL LAY	MULCH LAYER 4`` MULCH LAYER	-	
	TUR PLU	TURF SEED MIX (SPORTS TURF PRO MIX) SPORT TURF PRO MIX TURF AT GRASS SURFACE PAVERS. SEE HYDROSEED SCHEDULE	SEED	MODERATE
	TUR SOD	TURF SOD SOD AG SOD "BALL PARK BLEND" OR APPROVED EQUAL	SOD	MODERATE

NOTE:

SEE L-700 FOR COMPLETE PLANT SCHEDULE

STORMWATER MITIGATION
LOW IMAPCT DEVELOPMENT (LID)
APPROVED WITH CONDITIONS

This set of plans and specifications must be at the jobsite during construction

Stormwater Observation Report (SOR) is required prior to issuance of Certificate of Occupancy or final sign off

Total Pages 48

Digitally Signed By: S. Garcia Date: 12/12/2023
Department of Public Works - Bureau of Sanitation
Watershed Protection Division

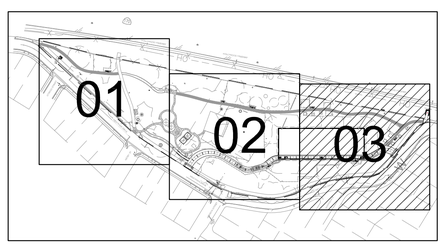

KEY MAP

0 10 20 40
Scale : 1" = 20'-0"

PLANS PREPARED BY:
STUDIO-MLA
251 South Mission Road
Los Angeles, CA 90033
T: 213.384.3844 studio-mla.com

ENGINEERING
CITY OF LOS ANGELES

LICENSED LANDSCAPE ARCHITECT
JAN DYER
5623
11-30-24
12/6/2023
STATE OF CALIFORNIA

THIS PLAN WAS ELECTRONICALLY • SIGNED AND STAMPED

BUREAU OF ENGINEERING

VERTICAL CONTROL:
HORIZONTAL CONTROL:

SHEET TITLE: PLANTING PLAN - SHEET 3

PROJECT: VALLEY VILLAGE PARK STORM WATER CAPTURE PROJECT

ADDRESS: VALLEY VILLAGE PARK
5000 Westpark Dr, North Hollywood, CA 91601

NO.	REVISIONS	DATE	BY
		YY/MM/DD	
		YY/MM/DD	
		YY/MM/DD	
		YY/MM/DD	

CIP NO. SCP0009

INDEX NO.

DEPARTMENT OF PUBLIC WORKS

CITY OF LOS ANGELES

CITY ENGINEER: TED ALLEN, P.E.

DESIGN GROUP	DATE
ENGINEER: MATT LYSNE	YY/MM/DD
ARCHITECT: MATT LYSNE	YY/MM/DD
DESIGNED BY: CARMEN GODINEZ	YY/MM/DD
DRAWN BY: CARMEN GODINEZ	YY/MM/DD
CHECKED BY: ALEX SAN DIEGO	YY/MM/DD
APPROVED BY: MATT LYSNE	YY/MM/DD

WORK ORDER
EW40085F

SHEET NAME
L-703

SHEET 78 OF 80 SHEETS

THE CITY OF LOS ANGELES OR ITS OFFICERS OR AGENTS SHALL NOT BE RESPONSIBLE FOR THE ACCURACY OR COMPLETENESS OF ELECTRONIC COPIES OF THIS PLAN SHEET.

REVISION DATES (DESIGN STAGE ONLY)

SHEET VERSION 4.0.1 FILE PATH: P:\TOS 2020-PARKS\CAD\X-LA\TOS2019_VALLEY_PLA.DWG PLOT DATE: 12/6/2023 12:08 PM SAVED: 3/10/2022 4:01 PM SAVED BY:ALEX

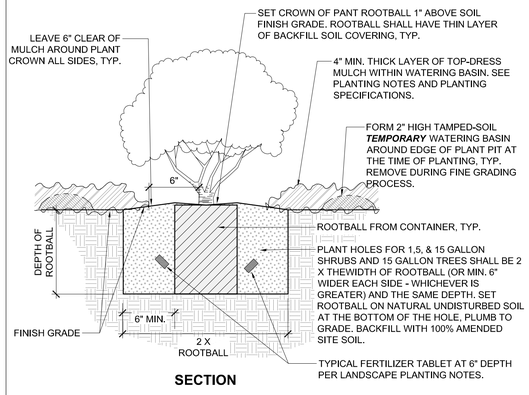

SECTION

NOTES:
1. PLANTING FINISH GRADE SHALL BE DEFINED AS TOP OF SOIL.
2. IN ALL CASES THE PLANT ROOTBALL SHALL BE COMPLETELY COVERED WITH BACKFILL SOIL - NO PORTION OF THE ROOTHBALL SHALL BE LEFT EXPOSED TO AIR OR SUNLIGHT ***BEFORE APPLICATION OF MULCH.***
3. DELETE FERTILIZER TABLETS FOR CERTAIN CALIF. NATIVE PLANTS - SEE PLANTING LEGEND.

1 SHRUB PLANTING

NTS | BOE VERSION OCT/19 | RP DETAIL L2030

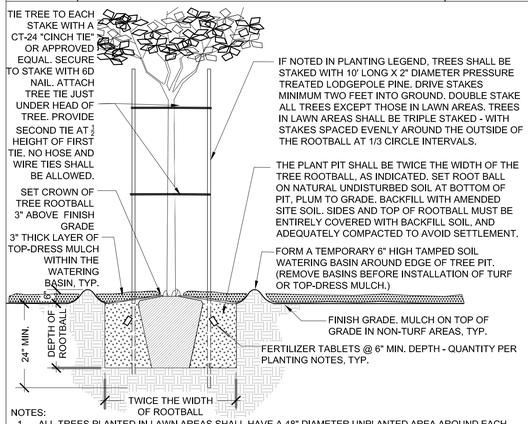

NOTES:
1. ALL TREES PLANTED IN LAWN AREAS SHALL HAVE A 48" DIAMETER UNPLANTED AREA AROUND EACH TREE TRUNK. INSTALL 4" TOP-DRESS MULCH INSIDE CIRCLE.
2. WHEN PLANTING TREES IN AREAS TO RECEIVE SOD, CONTRACTOR SHALL COMPENSATE FOR THE THICKNESS OF THE SOD AND SET TOP OF TREE ROOTBALL APPROPRIATELY TO AVOID A LOW AREA AND PONDING OF WATER.
3. TREES ON HYDROSEED AREA SHALL BE TRIPLE STAKED

2 TREE PLANTING AND STAKING

NTS | BOE VERSION DEC/19 | RP DETAIL L2000

NOTES:
1. INSTALL ROOT BARRIER AS PER MANUFACTURER'S RECOMMENDATIONS.
2. STRIP ROOT BARRIER TO BE INSTALLED WHEN TREES ARE WITHIN 5' OF CURB, SIDEWALK, LAKE EDGES, OR WALLS. BOX ROOT BARRIERS SHOULD NOT BE USED.

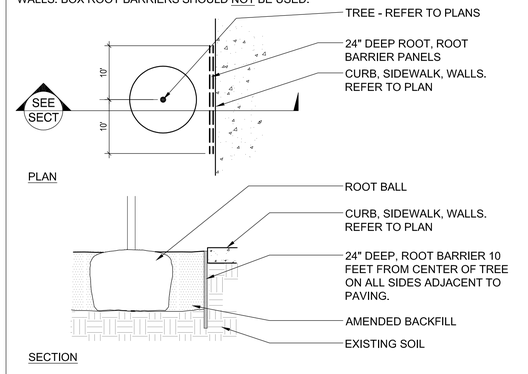

3 ROOT BARRIER

1" = 1'-0" | P-VA1-329420-01

PLANS PREPARED BY:

STUDIO-MLA
251 South Mission Road
Los Angeles, California 90033
T: 213.384.3844 studio-mla.com

STORMWATER MITIGATION
LOW IMAPCT DEVELOPMENT (LID)
APPROVED WITH CONDITIONS

This set of plans and specifications must be at the jobsite during construction

Stormwater Observation Report (SOR) is required prior to issuance of Certificate of Occupancy or final sign off.

Total Pages 48

Digitally Signed By: S. Garcia Date: 12/12/2023
Department of Public Works - Bureau of Sanitation
Watershed Protection Division

ENGINEERING
CITY OF LOS ANGELES

LICENSED LANDSCAPE ARCHITECT
JAN DYER
5623
11-30-24
12/6/2023
STATE OF CALIFORNIA

THIS PLAN WAS ELECTRONICALLY • SIGNED AND STAMPED

CITY OF LOS ANGELES DEPARTMENT OF PUBLIC WORKS
BUREAU OF ENGINEERING

VERTICAL CONTROL:
HORIZONTAL CONTROL:

SHEET TITLE: PLANTING DETAILS
PROJECT: VALLEY VILLAGE PARK STORM WATER CAPTURE PROJECT
ADDRESS: VALLEY VILLAGE PARK 5000 Westpark Dr, North Hollywood, CA 91601

NO.	REVISIONS	DATE	BY
		YY/MM/DD	
		YY/MM/DD	
		YY/MM/DD	
		YY/MM/DD	

CIP NO. SCP0009

INDEX NO.

CITY ENGINEER
TED ALLEN, P.E.

DESIGN GROUP	DATE
ENGINEER:	YY/MM/DD
ARCHITECT: MATT LYSNE	YY/MM/DD
DESIGNED BY: CARMEN GODINEZ	YY/MM/DD
DRAWN BY: CARMEN GODINEZ	YY/MM/DD
CHECKED BY: ALEX SAN DIEGO	YY/MM/DD
APPROVED BY: MATT LYSNE	YY/MM/DD

WORK ORDER
EW40085F

SHEET NAME
L-704

SHEET 79 OF 80 SHEETS

THE CITY OF LOS ANGELES OR ITS OFFICERS OR AGENTS SHALL NOT BE RESPONSIBLE FOR THE ACCURACY OR COMPLETENESS OF ELECTRONIC COPIES OF THIS PLAN SHEET.

REVISION DATES (DESIGN STAGE ONLY)

THE CITY OF LOS ANGELES OR ITS OFFICERS OR AGENTS SHALL NOT BE RESPONSIBLE FOR THE ACCURACY OR COMPLETENESS OF ELECTRONIC COPIES OF THIS PLAN SHEET.

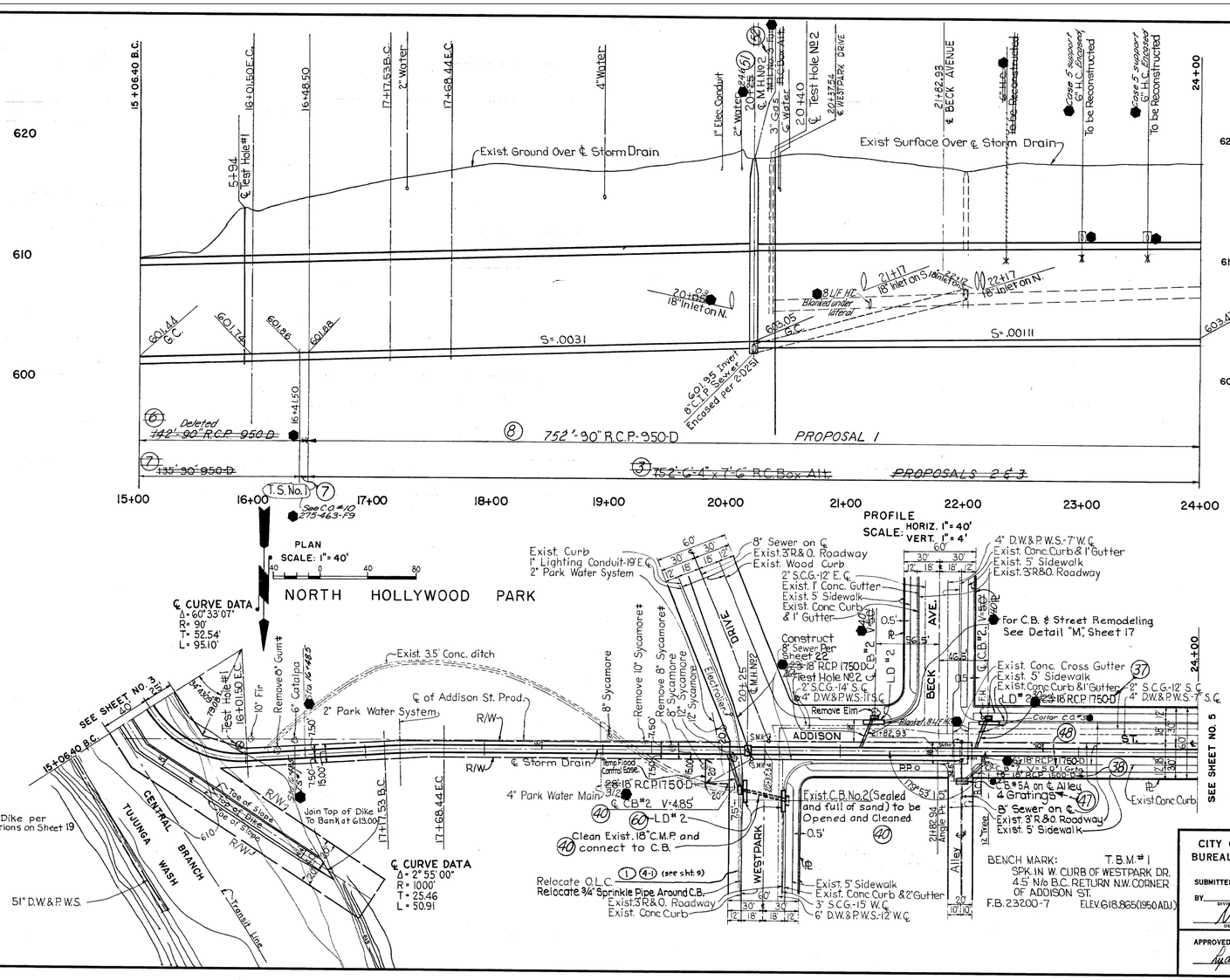

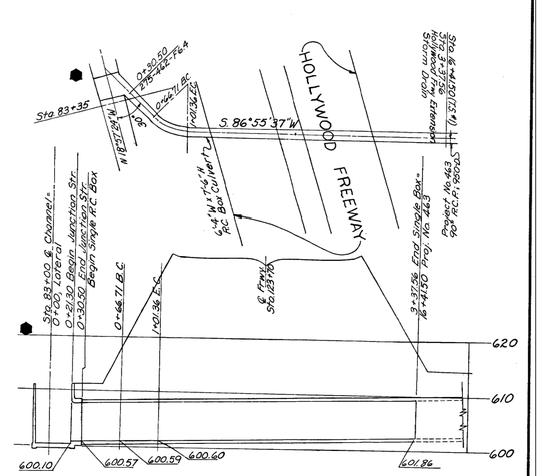

DETAIL OF HOLLYWOOD FREEWAY CHANNEL

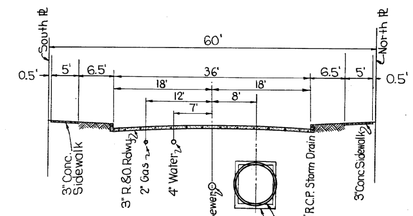

SECTION AT STA. 23+00
SCALE 1"=10'

C-4'x7'-6" R.C. Box Alternate

NOTE:
For Excavation Pay Lines See Sheet 24.

1958 STORM DRAIN BOND ISSUE

CITY OF LOS ANGELES
BUREAU OF ENGINEERING

SUBMITTED March 7 1960
BY R. B. Craig
DIVISION OF INVESTIGATION
APPROVED March 11 1960
Lyall J. Pardee
CITY ENGINEER

REVISIONS		
MARK	DATE	DESCRIPTION
●	6-27-62	"As Built"

DRAWN BY CITY OF L.A. — DESIGNED BY CITY OF L.A.
TRACED BY CITY OF L.A. — SUBMITTED BY R. B. R.
CHECKED BY — RECOMMENDED BY
DIVISION ENGINEER (DESIGN)

LOS ANGELES COUNTY FLOOD CONTROL DISTRICT
PROJECT NO. 463
HARTSOOK ST. STORM DRAIN
PLAN, PROFILE AND SECTION
REINFORCED CONCRETE PIPE
STA. 15+06.40 B.C. TO STA. 24+00

APPROVED BY
CHIEF ENGINEER
SCALE AS SHOWN — DATE APRIL 1960
NO. 275-463-D1.4
SHEET 4 OF 24

PLANS PREPARED BY:
carollo
707 WILSHIRE BLVD. SUITE 3920
LOS ANGELES, CA 90017
(213) 489-1587

CITY OF LOS ANGELES
DEPARTMENT OF PUBLIC WORKS
BUREAU OF ENGINEERING
THIS PLAN WAS ELECTRONICALLY SIGNED AND STAMPED

ENGINEERING
CITY OF LOS ANGELES

Digitally signed by Matthew B. Huckaby
Contact Info: Carollo Engineers, Inc.
Date: 2023.12.01 12:04:26 -08'00'

REGISTERED PROFESSIONAL ENGINEER
MATTHEW B. HUCKABY
No. 76961
CIVIL
STATE OF CALIFORNIA

VERTICAL CONTROL:
HORIZONTAL CONTROL:
SHEET TITLE: EXISITNG 90-IN RCP STORM DRAIN
PROJECT: VALLEY VILLAGE PARK STORM WATER CAPTURE PROJECT
ADDRESS: VALLEY VILLAGE PARK 5000 Westpark Dr, North Hollywood, CA 91601

NO.	REVISIONS	DATE	BY
		YY/MM/DD	
		YY/MM/DD	
		YY/MM/DD	
		YY/MM/DD	

CIP NO. SCP0009
INDEX NO.

CITY ENGINEER: TED ALLEN, P.E. — DATE YY/MM/DD

DESIGN GROUP	
ENGINEER:	PVT - MATT HUCKABY
ARCHITECT:	XXX
DESIGNED BY:	PVT - JERRY
DRAWN BY:	PVT - ATTILA SIMON
CHECKED BY:	PVT - RAPHAEL BUI
APPROVED BY:	PVT - MIKO AIVAZIAN

WORK ORDER EW40085F

SHEET NAME R-01
SHEET 80 OF 80 SHEETS

REVISION DATES (DESIGN STAGE ONLY)

BUREAU OF ENGINEERING

VALLEY VILLAGE PARK
STORMWATER CAPTURE PROJECT
WORK ORDER NO. EW40085F

GENERAL CONDITIONS
GENERAL REQUIREMENTS
TECHNICAL SPECIFICATIONS
APPENDICES

MARCH 2025

City of Los Angeles
California

Department of Public Works
Bureau of Engineering

TABLE OF CONTENTS

GENERAL CONDITIONS

DIVISION 00 – GENERAL CONDITIONS

00010 GENERAL CONDITIONS

GENERAL REQUIREMENTS

DIVISION 01 – GENERAL REQUIREMENTS

01100 SUMMARY

01022 ENVISION CHECKLIST
01111 ABBREVIATIONS AND REFERENCE STANDARDS
01112 DESCRIPTION OF WORK
01113 DIVISIONS OF TECHNICAL SECTIONS OF PROJECT MANUAL
01114 ISSUANCE OF DRAWINGS AND THE PROJECT MANUAL
01115 MANDATORY PROVISIONS
01116 ELECTRONIC DOCUMENT CONTROL
01120 INTERFACE / COORDINATION REQUIREMENTS
01140 CONTRACTOR'S USE OF THE PREMISES
01150 STORAGE OF MATERIALS AND EQUIPMENT

01200 PRICE AND PAYMENT PROCEDURES

01211 ALLOWANCE FOR EQUIPMENT SUBSTITUTIONS FOR COMPATIBILITY PURPOSES
01212 FIXED CASH ALLOWANCE ITEMS
01251 CHANGE ORDER REQUESTS
01253 DIFFERING SITE CONDITIONS
01254 CHANGE ORDERS
01255 PRICE REDUCTION FOR DEFECTIVE COST OR PRICING DATA
01270 MEASUREMENT OF QUANTITIES FOR UNIT PRICE WORK
01280 MEASUREMENT AND PAYMENT
01291 NOTICE TO WITHHOLD AND/OR STOP NOTICE
01292 PAYMENTS
01298 SCHEDULE OF VALUES / CONTRACT PRICE BREAKDOWN

01300 ADMINISTRATIVE REQUIREMENTS

01311 PRECONSTRUCTION SAFETY CONFERENCE
01312 PROJECT MEETINGS
01313 WORK BY CITY OR OTHERS
01321 CONTRACTOR'S CONSTRUCTION SCHEDULE AND REPORTS
01322 CONSTRUCTION PROGRESS PHOTOGRAPHY
01323 CONSTRUCTION STATUS REPORTS
01330 SHOP DRAWINGS / SUBMITTALS
01350 AUDIT AND ACCESS TO RECORDS
01351 ESCROW BID DOCUMENTS
01353 OPPORTUNITY TO PARTNER

01400 QUALITY REQUIREMENTS

01410 REGULATORY REQUIREMENTS
01411 CONFINED SPACE ENTRY
01420 UNITS OF MEASURE
01421 SYMBOLS
01430 MANUFACTURER'S FIELD SERVICES
01451 APPROVAL OF ELECTRICAL EQUIPMENT
01452 INSPECTION OF THE WORK
01453 SAMPLING, TESTING AND FABRICATION INSPECTION
01454 WEIGHING AND METERING EQUIPMENT
01455 CALIBRATION OF TESTING EQUIPMENT

01500 TEMPORARY FACILITIES AND CONTROLS

01561 ENVIRONMENTAL CONTROL
01562 ENVIRONMENTAL MITIGATION OR CONDITIONS
01563 POLLUTION CONTROL - SEWAGE SPILL PREVENTION AND RESPONSE REQUIREMENTS
01571 STORMWATER POLLUTION CONTROL MEASURES FOR CONSTRUCTION ACTIVITIES
01572 CONSTRUCTION AND DEMOLITION WASTE MANAGEMENT
01573 EXCAVATION SHORING, FORMS, AND FALSEWORK
01581 PROJECT SIGNS

01600 PRODUCT REQUIREMENTS

01601 BUY CLEAN CALIFORNIA ACT
01611 GUARANTY / WARRANTY
01630 SUBSTITUTIONS AND "OR EQUAL" SUBMITTAL

01700 EXECUTION REQUIREMENTS

01711 SITE INVESTIGATION
01712 SUBSURFACE DATA
01721 MOBILIZATION
01722 SURVEYING
01723 RIGHT OF WAY
01732 ADDITIONAL POTHOLING
01740 REMOVAL, CLEANUP, AND DEMOBILIZATION
01750 STARTUP ASSISTANCE
01770 PROJECT CLOSEOUT
01781 SPARE PARTS
01782 TECHNICAL MANUALS
01783 PROJECT RECORD DOCUMENTS

01800 FACILITY OPERATION

01810 FUNDAMENTAL COMMISSIONING REQUIREMENTS
01820 OPERATIONS AND MAINTENANCE TRAINING

TECHNICAL SPECIFICATIONS

DIVISION 02 – SITE WORK

02160 SOLDIER PILES
02210 SITE CLEARING AND DEMOLITION
02220 SITE DEMOLITION
02240 SHEETING, SHORING AND BRACING SYSTEMS
02310 EARTHWORK
02515 WATER PIPELINE TESTING AND DISINFECTION
02545 STORM DRAIN SYSTEM
02550 REINFORCED CONCRETE PIPE
02585 MAINTENANCE HOLE AND PRECAST VAULT CONSTRUCTION
02731 STABILIZED CRUSHED AGGREGATE PAVING
02732 GRASSCRETE™ POROUS PAVING
02810 IRRIGATION
02821 CHAIN LINK FENCING AND GATES
02870 SITE FURNISHINGS
02900 LANDSCAPE PLANTING
02939 PLANT PROTECTION AND PRUNING

DIVISION 03 – CONCRETE

03100 CONCRETE FORMWORK
03200 REINFORCEMENT STEEL
03250 CONCRETE ACCESSORIES
03290 JOINTS IN CONCRETE
03300 CAST-IN-PLACE CONCRETE
03301 CAST-IN-PLACE CONCRETE PAVING
03315 GROUT
03370 CONCRETE CURING
03400 PRECAST CONCRETE

DIVISION 05 – METALS

05500 METAL FABRICATIONS

DIVISION 06 – WOOD, PLASTICS, AND COMPOSITES

06100 EXTERIOR ROUGH CARPENTRY

DIVISION 07 – THERMAL AND MOISTURE PROTECTION

07900 JOINT SEALANTS

DIVISION 09 – FINISHES

09800 PROTECTIVE COATING
09860 ANTI-GRAFFITI COATING

DIVISION 10 – SPECIALTIES

10430 EXTERIOR SIGNAGE

DIVISION 11 – EQUIPMENT

11000 EQUIPMENT GENERAL PROVISIONS
11805 HYDRAULIC GATES AND VALVES, GENERAL
11815 SLIDE/STOP GATES

DIVISION 13 – SPECIAL CONSTRUCTION

13240 STORM WATER TREATMENT DEVICE
13330 UNDERGROUND INFILTRATION GALLERY
13447 ELECTRIC ACTUATORS

DIVISION 15 – MECHANICAL

15320 ELECTRICAL REQUIREMENTS FOR MECHANICAL EQUIPMENT
15440 DRINKING FOUNTAIN & BOTTLE FILLER
15610 PIPING, GENERAL
15615 VALVES AND GATES, GENERAL

DIVISION 16 – ELECTRICAL

16020 MUNICIPAL FACILITIES GENERAL ELECTRICAL REQUIREMENTS
16100 BASIC MATERIALS AND METHODS
16110 RACEWAYS
16160 CONDUCTORS
16170 CABINETS AND RACKS
16180 WIRING DEVICES
16190 ELECTRICAL IDENTIFICATION
16200 MOTOR CONTROL CENTERS
16210 SWITCHES, DISCONNECT AND SAFETY
16270 SERVICE AND DISTRIBUTION SWITCHBOARD
16280 SHORT CIRCUIT AND COORDINATION REPORT
16290 MUNICIPAL FACILITIES GROUNDING SYSTEMS
16320 TRANSFORMERS
16330 PANELBOARDS
16340 LOW VOLTAGE MOTOR CONTROL
16380 MUNICIPAL FACILITIES UNINTERRUPTIBLE POWER SYSTEM
16490 ELECTRIC MOTORS
16560 MUNICIPAL FACILITIES ELECTRICAL SYSTEMS COMMISSIONING
16570 MUNICIPAL FACILITIES ELECTRICAL TESTING REQUIREMENTS

DIVISION 17 – INSTRUMENTATION

17100 METERS, GENERAL
17240 AV FLOW METERS - FIELD MOUNTED
17400 PROCESS INSTRUMENTATION AND CONTROL
17450 SCADA, PLCS, NETWORK AND COMMUNICATIONS

ATTACHMENTS

ATTACHMENT 1	GEOTECHNICAL INVESTIGATION REPORT
ATTACHMENT 2	ENVISION SCORECARD
ATTACHMENT 3	STORMWATER POLLUTION PREVENTION PLAN
ATTACHMENT 4	UTILITY POTHOLE INFORMATION
ATTACHMENT 5	LABOE STANDARD PLANS
ATTACHMENT 6	SUMMARY OF UTILITY FIRST NOTICE REPLIES
ATTACHMENT 7	TRANSFER AGREEEMENT FOR SAFE CLEAN WATER PROGRAM

BUREAU OF ENGINEERING

VALLEY VILLAGE PARK
STORM WATER CAPTURE PROJECT
PROJECT NO. EW40085F

GENERAL CONDITIONS

MARCH 2025

City of Los Angeles
California

Department of Public Works
Bureau of Engineering

ENGINEERING
CITY OF LOS ANGELES

GENERAL CONDITIONS
TABLE OF CONTENTS

ARTICLE		Page
00100	DEFINITIONS (9/18/07)	3
00101 – 00199	NOT USED	8
00200	SCOPE (10/17/01)	8
00201	AUTHORITY OF THE BOARD, ENGINEER, AND INSPECTOR (5/2/02)	8
00202	INTENT OF CONTRACT DOCUMENTS (2/09/95)	8
00203	NOT USED (9/18/07)	9
00204	PLANS AND SPECIFICATIONS (9/18/07)	9
00205	PRECEDENCE OF CONTRACT DOCUMENTS (9/18/07)	9
00206	ACCURACY OF PLANS AND SPECIFICATIONS (12/6/01)	10
00207	EXAMINATION OF COVERED WORK (12/6/01)	10
00208	UNNOTICED DEFECTS (10/17/01)	10
00209	CODES AND REGULATIONS (10/17/01)	10
00210	LENGTH OF WORKDAY AND WORK WEEK (9/18/07)	11
00211	PAYMENT OF EMPLOYEES (12/6/01)	11
00212	CONVICT-MADE MATERIALS (12/6/01)	11
00213	SALES OR USE TAX / EXEMPTION FROM FEDERAL EXCISE TAX (10/17/01)	11
00214	NONDISCRIMINATION IN EMPLOYMENT (10/17/01)	12
00215	APPRENTICE UTILIZATION (4/12/95)	12
00216	LAWS AND REGULATIONS (9/18/07)	12
00217	PERMITS AND CONSTRUCTION EASEMENTS (9/18/07)	12
00218	PARTIES EXCLUDED FROM FEDERAL PROCUREMENT AND NON PROCUREMENT PROGRAMS (10/17/01)	13
00219	BUSINESS TAX REGISTRATION CERTIFICATES (11/21/01)	13
00220	CONTRACTOR PROPOSED ALTERNATES AND “OR EQUALS” (12/6/01)	13
00221	CONTRUCTION AND DEMOLITION WASTE MANAGEMENT (8/12/11)	14
00222 – 00299	NOT USED	14
00300	FINANCIAL LIABILITY (4/12/95)	14
00301	CONTRACTOR’S OBLIGATIONS (3/21/14)	14
00302	CONTRACTOR’S REPRESENTATIVE AT THE SITE (1/30/03)	15
00303	FAMILIARITY WITH PLANS AND SPECIFICATIONS (9/18/07)	16
00304	JOB CONDITIONS (9/18/07)	16
00305	JOB BULLETIN BOARD (11/27/01)	17
00306	RESPONSIBILITY FOR SITE (10/17/01)	17

00307 WORKMANSHIP AND MATERIALS (4/12/95) 17
00308 INJURY AND ILLNESS PREVENTION - SAFETY MEASURES (9/18/07) 17
00309 PROTECTION OF PERSONS AND PROPERTY AND RESTORATION OF EXISTING IMPROVEMENTS (9/18/07) 18
00310 NON-CONFORMING WORK (1/30/03) 21
00311 SUBCONTRACTORS AND SUB-SUBCONTRACTORS (10/28/14) 21
00312 RESPONSIBILITY OF CONTRACTOR TO ACT IN EMERGENCY (11/21/01) 26
00313 ASSIGNMENT (2/09/95) 26
00314 NOTIFICATION OF HAZARDOUS SUBSTANCES (10/17/01) 26
00315 INDEPENDENT CONTRACTOR (10/21/99) 27
00316 INDEMNIFICATION (10/17/01) 27
00317 INSURANCE (1/05/10) 28
00318 SERVICE OF NOTICE (2/09/94) 32
00319 AGENT TO ACCEPT SERVICE (10/21/99) 33
00320 – 00399 NOT USED 33
00400 TEMPORARY SUSPENSION OR DELAY OF WORK (9/18/07) 33
00401 UNAVOIDABLE DELAY (10/17/01) 34
00402 ARCHAEOLOGICAL AND PALEONTOLOGICAL DISCOVERIES (9/18/07) 34
00403 COORDINATION WITH OTHER CONTRACTS (1/30/03) 34
00404 TERMINATION OF CONTRACT BY CITY (CONTRACTOR NOT AT FAULT) (9/18/07) 35
00405 TERMINATION OF CONTRACT BY CITY (CONTRACTOR DEFAULT) (9/18/07) 37
00406 PARTIAL ACCEPTANCE (9/18/07) 38
00407 FINAL ACCEPTANCE (02/21/08) 39
00408 LIQUIDATED DAMAGES (9/18/07) 39
00409 – 00499 NOT USED 40
00500 CHANGES AND EXTRA WORK (9/18/07) 40
00501 DIFFERING SITE CONDITIONS (9/18/07) 41
00502 – 00599 NOT USED 41
00600 CLAIMS AND PROTESTS (9/18/07) 41
00601 COMMENCEMENT OF STATUTE OF LIMITATIONS (11/21/01) 44
00602 GOVERNING LAW (11/21/01) 44
00603 VENUE (2/09/95) 44
00604 NO WAIVER OF RIGHTS (4/12/95) 44
00605 ACCEPTANCE OF FINAL PAYMENT CONSTITUTES RELEASE (4/12/95) 44
00606 PATENTS AND COPYRIGHTS (10/17/01) 44
00607 PUBLIC RECORDS ACT (4/06/00) 45

00100 DEFINITIONS (9/18/07)

Unless otherwise stated, the words "directed, required, permitted, ordered, instructed, designated, considered necessary, prescribed, approved, acceptable, satisfactory," or words of like meaning, refer to actions, statements, judgments, conclusions, and decisions within the responsibility of the Engineer or the Inspector.

Addenda: Written documents issued during the Bidding Period which modify, supersede, or supplement the original Contract Documents.

Additions and Amendments to the Standard Specifications for Public Works Construction (SSPWC): Also known as the “Brownbook”. Previous editions of the document were titled Standard Plan S-610.

“as shown”, “as indicated”, or “as specified”: These words are understood to be followed by the phrase "in the Contract Documents."

Bid: The offer of the Bidder submitted on the prescribed forms setting forth the price(s) for the Work.

Bid Proposal: The notice that informs prospective Bidders of the opportunity to submit a Bid, bidding procedures and other requirements.

Bid Guaranty: The certified check or Bidder’s Surety Bond accompanying the Bid as a guaranty that the Bidder will enter into a contract with the Board for the performance of the Work.

Bidder: The person or persons, partnership, firm or corporation submitting a Bid or proposal for the Work defined in the Contract Documents.

Bidding Period: The time period allocated to the Bidder to enable preparation of a Bid.

Board: The Board of Public Works, of the City of Los Angeles.

Bond: Bid bond, performance and payment bond or other instrument of security.

“Brownbook”: City of Los Angeles, Department of Public Works, Additions and Amendments to the SSPWC.

Calendar day: All days beginning with the date specified in the Notice to Proceed, and ending with the date the City issues the Statement of Completion.

Change Order: A written order to the Contractor signed by the Engineer directing an addition, deletion or revision in the Work, or an adjustment in the Contract Price or time which is issued after the effective date of the Contract and effects less modification than is effected by a Supplemental Agreement. A Change Order may or may not also be signed by the Contractor.

County Sealer: The Director of Weights & Measures of the County of Los Angeles.

City: The City of Los Angeles, a municipal corporation.

Claim: A written demand or assertion by one of the parties seeking, as a matter of right, an interpretation of the Contract Documents, payment of money, extension of time or other relief. The party asserting the Claim must set forth the facts and circumstances for which the other party is responsible.

Code: Codes of the State of California as well as any other Federal or local law, statute, ordinance, rule or regulation.

Contract: The agreement between the City and the Contractor for the Work described in the Contract Documents.

Contract Documents: Includes, but is not limited to, the Notice Inviting Bids, Bid Proposal, Notice(s) to Bidders, Contractor's Bid, Performance bond, Payment bond, General and Supplementary Conditions, Special Provisions, General Requirements, Federal and State Requirements, Standard and Reference Specifications, Technical and Nontechnical Specifications, Geotechnical Baseline Report, Geotechnical Design Summary Report, Soil Reports and Subsurface Investigation Reports, Standard Plans, Plans, Summary of First Notice Replies, and Addenda, Plan Clarifications, Request for Information, Supplemental Agreements, Change Orders issued after Contract award and other documents designated by the Engineer.

Contract Price: The total amount of money for which the Contract is awarded.

Contract Unit Price: The amount stated in the Bid for a single unit of an item of Work.

Contractor: A person or persons, partnership, firm or corporation licensed by the State of California as a general contractor. The terms "Prime Contractor" and Contractor are synonymous.

Contractor's Representative: A representative of the Contractor present at the site to supervise, organize, coordinate and direct daily construction activities and who is authorized to receive and fulfill instructions from the Engineer or Inspector.

"days": Consecutive calendar days unless otherwise specifically stated.

Drawings: See Plans.

"easement": Permission to access or utilize property not owned by the City.

Engineer: The City Engineer, head of the Bureau of Engineering, or an authorized representative.

Equal: See "or equal".

Final Field Acceptance: Verification by the Final Inspector that all physical corrections required by the Final Inspection Correction List have been completed. This verification will be evidenced by issuance of a Statement of Completion, which will establish the date of the completion of the Work.

GBR: See Geotechnical Baseline Report.

GDR: See Geotechnical Data Report.

General Conditions: Instructions to the Contractor setting forth its responsibilities and the City's responsibilities for proper execution of the Work indicated herein.

General Requirements: Division 1 of the Specifications.

Geotechnical Baseline Report: This report establishing the baselines for geotechnical conditions anticipated to be encountered during underground and subsurface construction. This report establishes the basis for identification of changed site/ground conditions.

Geotechnical Data Report: This report contains factual information gathered during exploration and design. It may include logs of exploratory borings, laboratory test data, and geologic, seismic or environmental data.

“Greenbook”: Standard Specifications for Public Works Construction (SSPWC) published by Public Works Standards, Inc, latest edition.

“holiday”: In reference to days, the holidays and dates as observed by the City. A list of such holidays is available from the Board office.

Illegal Subcontractor Substitution: Anyone other than the Bid-listed or approved subcontractor(s) performing any portion of the Work designated to be performed by said subcontractor without prior approval of the Inspector.

“immediately notify”: The obligation to cause verbal notification of Engineer and Inspector of some condition or event as soon as possible upon discovery or knowledge of the condition or event and in all instances, no more than two (2) hours.

Inspector: The Inspector of Public Works, (Director of the Bureau of Contract Administration), or an authorized representative designated by the Bureau of Contract Administration.

“jobsite”: The area upon or in which the Contractor’s operations are carried on and such other areas adjacent thereto as may be designated as such by the Contract Documents.

“law”: Any Federal, State or local law, statute, ordinance, rule, regulation or Code.

“liquidated damages”: The amount the Contractor shall pay to the City, as determined by rates and amounts as fixed in the Contract Documents, due to the Contractor’s failure to complete the Work within the time specified.

“non-conforming work”: Unapproved construction, defective work or damaged materials that does not fully comply with the Contract Documents.

Notice of Award: The written notice by the City to the successful Bidder stating that upon compliance by the successful Bidder of required conditions, the City will execute the Contract.

Notice to Proceed: The written notice by the City to the successful Bidder stating that the Work or portions of the Work shall commence.

Notice to Withhold: The written notice by the City to the Contractor advising that certain payments shall be withheld due to unacceptable execution of the Work by the Contractor.

“or equal”: In reference to products, equipment, or materials proposed by the Contractor for use in the Work.

Partial Acceptance: Any portion of the Work that has been completed in accordance with the plans and specifications and has been accepted in writing by the Inspector ("Statement of Partial Completion" form).

“person”: Any individual, firm, association, partnership, corporation, trust, joint venture, or other legal entity.

Plans: The drawings, profiles, cross sections, shop drawings, and supplemental drawings, or reproductions thereof, issued or approved by the Engineer, which show the location, character, dimensions or details of the Work.

Private Contract: Work subject to City inspection, control, and approval, involving private funds, not administered by the City.

Project: The Work and/or construction operations executed through the performance of this Contract.

Project Manual: See Contract Documents.

Protest: See Claim.

Reference Specifications: Those bulletins, standards, rules, methods of analysis or test, codes, and specifications of other agencies, engineering societies, or industrial associations referred to in the Contract Documents. These refer to the edition, including amendments in effect and published at the time of advertising the project, adopted by the Board, if applicable, unless specifically referred to by edition, volume, or date.

“right of entry”: Written permission from an owner of a facility or property to access the facility or property for a specific purpose.

Special Provisions: Any provision which supplements or modifies the Specifications.

Specifications: Written requirements describing the commercial, legal, technical and nontechnical aspects of the project. Specifications include but are not limited to Terms, Provisions, General Conditions, General Requirements, Technical Specifications, Equipment Schedules, and all revisions made to the specifications in Addenda, and Change Orders.

Standard Plans or “Std. Plan”: Details of standard structures, devices or instructions referred to on the Plans or in the Specifications by title or number.

State: The State of California.

Statement of Completion: A form issued by the Bureau of Contract Administration following Final Inspection and upon completion of all physical corrections required by the Final Inspection Correction List. This shall signify the acceptance of all field work and establish the date of completion of the Work.

Statement of Partial Completion: A form issued by the Bureau of Contract Administration following Partial Final Inspection and upon completion of all physical corrections required by the Partial Final Inspection Correction List. This shall signify the acceptance of a specific portion, or portions, of the Work to be so utilized or otherwise placed into service.

Subcontractor: Any individual, firm, or corporation, other than an employee of the Contractor, having a direct contract with the Contractor or with any other subcontractor for the performance of the Work. A Subcontractor is a contractor who is licensed pursuant to California Business and Professions Code, Section 7000 et. seq. A Subcontractor does not have any direct contract with the City related to the project.

Subcontractor Substitution: Anyone other than the Bid-listed or approved subcontractor(s), including the Contractor, performing any portion of the Work designated to be performed by said subcontractor.

Sub-subcontractor: A "Sub-Subcontractor" is a Subcontractor, within the definition of that term, who has a contract with a Subcontractor and has no Contract with the City related to the project.

Supervision: With reference to supervision by the Engineer, the performance of obligations, and the exercise of rights, specifically imposed upon and granted to the City in becoming a party to the Contract. Except as specifically stated herein, supervision by the City shall not mean active and direct superintendence of details of the Work.

Supplemental Agreement: A written amendment of the Contract Documents, signed by the Contractor and City.

Supplier: An individual, organization, or firm who may not be required for the purposes of the Work to be licensed pursuant to California Business and Professions Code as a contractor, or subcontractor, within the meanings of those terms as defined herein above, who provides equipment and/or materials for the Work, to the Contractor, a Subcontractor, or a Sub-Subcontractor, including that fabricated to a special design, but who does not perform labor at the site except for labor or labor supervision required by some manufacturers as part of their equipment installation for warranty or other purposes. The term "supplier" also includes fabricator, manufacturer, or vendor.

Surety: Any individual, firm or corporation bound with and for the Contractor for the acceptable performance, execution and completion of the Work, and for the satisfaction of all obligations incurred.

Unauthorized Subcontractor Substitution: Any reduction, increase, or other change to any Subcontractor dollar amount without written approval by the Inspector.

Unavoidable Delay: Delay arising from causes beyond the control and without the fault or negligence of the Contractor and its Subcontractors at all tiers, and solely due to acts of God, acts of government in its sovereign capacity, riots, insurrections, wars, fires, floods, earthquakes, tidal waves, epidemics, quarantine restrictions, industry-wide strikes, freight embargoes, or unusually severe weather.

Work: Includes all material, labor, utility services, tools, expendable equipment, and all appliances, machinery, transportation, appurtenances and specified services necessary to perform and complete the Contract; and such additional items not specifically indicated or described that can be reasonably inferred as belonging to the item described or indicated and as required by good practice to provide a complete and operable satisfactory system or structure. As used herein, "provide" shall be understood to mean "furnish and install, complete in place."

Workday: All days beginning with the date specified in the Notice to Proceed, and ending with the date the City issues the Statement of Completion, except for the following days:

A) Saturday,

B) Sunday,

C) any day designated as a holiday by the City,

D) any day designated as a holiday in a Master Labor Agreement binding the Contractor,

E) any day the Contractor is prevented from working for cause as established by "Unavoidable Delay" of these General Conditions; and

F) any day the Contractor is prevented from working during the first five (5) hours of the workday with at least sixty percent (60%) of the normal Work force for cause as established by "Unavoidable Delay" of these General Conditions.

Worksite: See "jobsite."

00101 – 00199 NOT USED

00200 SCOPE (10/17/01)

The work to be performed under this Contract shall consist of furnishing all tools, equipment, materials, supplies and manufactured articles, all transportation, services, including fuel, power and water, and essential communications, and the performance of all labor, Work, required calculations testing, inspections or operations, or operations required for the fulfillment of the Contract, in strict accordance with the specifications, schedules, and Plans, all of which are made a part hereof, and including such detail sketches as may be furnished by the Engineer from time to time during the construction in explanation of said Plans. The Work shall be complete and all material, and services incidentals, quality or not specifically called for quality and conditions noted, in the Specifications, or not shown on the Plans, which may be necessary for complete and proper construction to carry out the Contract in good faith and a satisfactory manner shall be performed, furnished, and installed by the Contractor at no increase in cost to the City.

00201 AUTHORITY OF THE BOARD, ENGINEER, AND INSPECTOR (5/2/02)

The Board has the final authority in all matters affecting the Work. The Contractor shall promptly comply with instructions from the Engineer or the Inspector.

The Engineer is authorized to require performance of the Work consistent with the meaning of the Plans and the Contract Documents. On all questions related to the interpretation of Plans or Specifications, the decision of the Engineer is final and binding. As authorized by the Board, the Engineer may issue Change Orders to increase, decrease or modify the scope of work.

The Inspector is authorized to enforce compliance with the Contract Documents, to determine the acceptability, quality and quantity of materials and workmanship, administer requirements with respect to subcontracts, and to prepare and process progress payment estimates. Unless otherwise ordered by the Board, the Inspector's determination of satisfactory performance is a condition precedent to payment under this Contract. For such matters, the decision of the Inspector is final and binding. In the event of a dispute between the Contractor and the Inspector, the latter is authorized to reject materials or suspend the Work until any questions at issue can be referred to and decided by the Board or, in engineering matters, by the Engineer.

The Inspector is authorized to sample and test all materials to be incorporated into the Work. The Inspector may delegate this authority to sample materials and perform tests to the Department of General Services, Standards Division, or other approved agencies.

The Engineer may delegate street lighting matters to the Director of the Bureau of Street Lighting.

00202 INTENT OF CONTRACT DOCUMENTS (2/09/95)

The Contract Documents are complementary, and what is called for by one part shall be as binding as if called for by all. The intent of the Documents is to include all Work consistent therewith and reasonably inferable therefrom as being necessary for completion of the contract. Materials or Work described in words that indicate the proper execution and a well known technical or trade designation shall be held to refer to such recognized standards.

It is understood and agreed that the written terms and provisions of the Contract Documents represent the entire and integrated agreement between the parties hereto and supersede all prior negotiations, representations, or agreements, either written or oral. The Contract Documents shall not be construed to create any contractual relationship of any kind between the Engineer (or the Inspector) and the Contractor.

00203 NOT USED (9/18/07)

00204 PLANS AND SPECIFICATIONS (9/18/07)

As shown on the Plans or described in the Specifications, each element of the Work must be furnished complete, finished and functional. Whether shown or not, include all materials and ancillary equipment necessary to provide a complete installation. The Plans, Specifications and other Contract Documents are intended to be complementary and cooperative to describe and provide for a complete project. Anything in the Specifications and not on the Plans, or on the Plans and not in the Specifications, shall be as though shown or mentioned in both. Details shown for an item of Work are typical and shall apply to similar items of Work.

Do not deviate from the Plans and Specifications without written authorization from the Engineer.

The Engineer does not warrant the accuracy of scaled dimensions. Dimensions indicated by figures or numerals shall govern. Larger scale drawings shall take precedence over smaller scale drawings. Detailed drawings will take precedence over general drawings.

The Engineer may furnish additional details pertaining to the Work and the same shall be considered part of the Contract.

References made to other specifications and codes refer to the edition including amendments in effect and published at the time of advertising the project, unless specifically referred to by edition, volume, or date as noted in the Contract Documents.

00205 PRECEDENCE OF CONTRACT DOCUMENTS (9/18/07)

In resolving inconsistencies or ambiguities among two (2) or more components of the Contract Documents, the more stringent requirements shall prevail. The secondary priority will be based upon the precedence of the documents. The precedence shall be:

1. Permits from other agencies as may be required by law.

2. Bid Proposal

3. General Conditions

4. General Requirements

5. Technical Specifications

6. Plans

7. Geotechnical Baseline Report

8. Geotechnical Data Report

9. Brownbook

10. Greenbook

11. Standard Plans

12. Reference Specifications

13. Reference Plans

Supplemental Agreements, Change Orders, Engineer's written interpretations and clarifications, and Addenda, will take precedence over all other components of the Contract Documents.

00206 ACCURACY OF PLANS AND SPECIFICATIONS (12/6/01)

Omissions from the Plans and Specifications shall not relieve the Contractor from the responsibility of furnishing, making, or installing all items required by law or usually furnished, made, or installed in a project of the scope and character indicated by the Plans and Specifications.

The Plans show conditions as they are supposed or believed by the Engineer to exist, but it is not intended or to be inferred that the conditions as shown thereon constitute a representation or warranty, expressed or implied, by the City or its officers, that such conditions are actually existent, nor shall the City, or any of its officers, be liable for any loss sustained by the Contractor as a result of any variance between conditions as shown on the Plans, and the actual conditions revealed during progress of the Work or otherwise, except as indicated in "Differing Site Conditions" of these General Conditions.

00207 EXAMINATION OF COVERED WORK (12/6/01)

If any Work is covered without inspection, approval or consent of the Inspector, an examination may be required by the Inspector. The cost for uncovering the work, inspection, testing required by the Inspector, remedial work and restoring the work is at the Contractor's expense.

00208 UNNOTICED DEFECTS (10/17/01)

The Contractor is responsible for ensuring that all Work complies with the Contract Documents. Upon discovery, all defective or noncompliant Work must be immediately repaired or replaced by the Contractor. Failure by the Engineer or the Inspector to condemn or reject non-conforming Work shall not constitute acceptance or implied acceptance of such Work.

00209 CODES AND REGULATIONS (10/17/01)

The Contractor shall perform the Work in accordance with all applicable regulations, laws, and ordinances, even though such requirements may not be specifically mentioned in the Specifications or shown on the Plans.

It is not the responsibility of the Contractor to ensure that the Contract Documents comply with applicable laws, statutes, codes and regulations. If the Contractor believes that any part of the Contract Documents does not comply, the Contractor shall promptly notify the Engineer in writing. Do not proceed with those affected Work items until the Engineer issues written instructions to the Contractor.

If the Contractor proceeds with those Work items without written instruction from the Engineer, the Contractor will bear the costs and impacts of any corrective work.

00210 LENGTH OF WORKDAY AND WORK WEEK (9/18/07)

Eight (8) hours of labor shall constitute a calendar day's work for employees of the Contractor under this Contract. Said employees shall be paid not less than the prevailing wage rate for the first eight (8) hours work of each day.

Unless noted elsewhere in the Contract documents, a working day shall be Monday through Friday, and work shall be between 7:00 a.m. and 4:00 p.m., unless otherwise approved by the Engineer or the Board or revised by City Ordinance.

When work in excess of eight (8) hours per day, or forty (40) hours during any one (1) week is performed, wages for all hours over eight (8) hours in any day or over forty (40) hours during any one (1) week shall be paid at the prevailing wage rate, as required by City, state and federal requirements.

00211 PAYMENT OF EMPLOYEES (12/6/01)

The Contractor and each Subcontractor shall pay each employee engaged in Work on the project under this Contract in compliance with the Federal and State wage provisions indicated on the appropriate page of the Bid Proposal (General Instruction and Information for Bidders), and “Length of Workday and Work Week” of these General Conditions.

The certified payroll and the Statement of Compliance shall be submitted to the Inspector by the Contractor and all Subcontractors performing Work on the project, regardless of dollar amount or type of contract.

If there is a difference between the Federal and State minimum wage rates for similar classifications of labor, the Contractor and its Subcontractors shall pay not less than the higher wage rate. When the Contractor intends to use a craft or classification not shown on the general prevailing wage determinations, it will be required to pay the wage rate of that craft or classification most closely related to it as shown in the general prevailing wage determinations. In case of disagreement between the Contractor and the City, the Inspector shall make the final determination as to the prevailing wages for the Work.

00212 CONVICT-MADE MATERIALS (12/6/01)

Unless otherwise noted, no materials manufactured or produced in a penal or correctional institution shall be incorporated in the project under this Contract.

00213 SALES OR USE TAX / EXEMPTION FROM FEDERAL EXCISE TAX (10/17/01)

Purchases of materials and equipment which will be incorporated or installed permanently in the Work, or which will be used in the operation of the Contractor or Subcontractors, and not incorporated in the Work, are not exempt from City of Los Angeles and California State Sales or Use Taxes as applicable.

Purchase of materials and equipment which will be incorporated or installed permanently in the Work are exempt from Federal excise tax in effect at the time of purchase, as applicable. Prices included in the Contract amount shall reflect such exemptions. A Federal Tax Exemption Certificate will be furnished by the City, on request, as acknowledgment that materials and equipment for which exemption is requested by the Contractor, is valid where provided for the exclusive use of the City. Lists of exempt articles provided by the Contractor and Subcontractor shall be submitted to the City by the Contractor. Purchases of materials and equipment which will be used in the operations of the Contractor or Subcontractors and not incorporated in the Work are not exempt from excise tax.

00214 NONDISCRIMINATION IN EMPLOYMENT (10/17/01)

The Contractor shall comply with all of the provisions of the Los Angeles Administrative Code, Mandatory Provision Pertaining to Nondiscrimination in Employment.

The Contractor shall submit Monthly Ethnic Composition of Work Force Reports to the Inspector indicating the number of employees in the various work categories and ethnic groups and gender on forms furnished by the City.

Nondiscrimination Clause: "The Contractor shall not discriminate during the performance of this Contract against any employee or applicant for employment because of employee's or applicant's race, religion, national origin, ancestry, sex, age, sexual orientation or physical handicap." The Contractor shall include the same Nondiscrimination Clause in all subcontracts awarded under this Contract.

If conflicts exist between these provisions and the Federal Rules and Regulations governing the same, the more stringent requirements shall prevail.

00215 APPRENTICE UTILIZATION (4/12/95)

Any Contract awarded hereunder will require the Contractor to comply with the provisions of the California Labor Code relating to apprentice employment and training; and will require the Contractor to assume full responsibility for compliance with said section with respect to all Apprenticing Occupations involved in the Project. (Compliance with said Apprentice Utilization provisions of the Labor Code is not required for Public Works contracts involving less than $30,000 or less than twenty (20) Working days in duration).

00216 LAWS AND REGULATIONS (9/18/07)

The Contractor shall observe and comply with all Federal, State, and local laws, ordinances, Codes, orders, and regulations which in any manner affect those engaged or employed on the Work, the materials used in the Work, or the conduct of the Work. If any discrepancy or inconsistency should be discovered in this Contract in relation to any such law, ordinance, Code, order, or regulation, the Contractor shall report the same in writing to the Engineer. The Contractor shall indemnify and hold harmless the City, and its officers, agents, and employees, against all claims or liability arising from violation of any such law, ordinance, Code, order, or regulation, whether by itself or by its employees or Subcontractors as stated in these Contract Documents. Any particular law or regulation specified or referred to elsewhere in these specifications shall not in any way limit the obligation of the Contractor to comply with all other provisions of Federal, State, and local laws and regulations.

00217 PERMITS AND CONSTRUCTION EASEMENTS (9/18/07)

The Contractor shall obtain and pay for all permits necessary for performance of the Work. Within thirty (30) calendar days after the Notice to Proceed, the Contractor shall obtain and pay all costs incurred and submit to the Engineer copies of all permits required for the construction and installation of all Work called for on this project.

When the Bid Proposal provides an allowance for “Permits”, only certain types of permits and certain permit fees are reimbursable. The reimbursable permit must be exclusively for permanent Work shown on the Plans and reimbursement will be limited to the actual permit fee shown on the permit’s receipt. The allowance for “Permits” cannot be used for any other costs such as those necessary to physically obtain the permit. The allowance for “Permits” also cannot be used for contractor-designed items, annual permits, temporary construction, or general permits that are useable for other projects. The Contractor will only be reimbursed for those permits that are included in the list below, unless otherwise specified:

1) Night Work, overload, grading, excavation, demolition, foundation, and building permits.

2) Electrical permits.

3) Mechanical permits.

4) Plumbing permits.

5) South Coast Air Quality Management District permits.

6) Fire sprinkler permit.

7) All Federal, State, County and City issued permits.

Rights of ways, easements, or rights of entry for the Work will be provided by the City. The Contractor shall make arrangements, pay for, and assume all responsibility for acquiring, using, and disposing of Work areas and facilities temporarily required which are necessary in addition to those provided by the City. The Contractor shall indemnify and hold the City harmless for all claims for damages caused by such actions.

00218 PARTIES EXCLUDED FROM FEDERAL PROCUREMENT AND NON PROCUREMENT PROGRAMS (10/17/01)

A list of individuals, firms and organizations which have been debarred, suspended or have voluntarily excluded themselves from Federal Procurement and Non Procurement Program is maintained by US General Services Administration. A copy can be obtained from Superintendent of Documents, US Government Printing Office, Washington, DC 20402, Tel: (202) 783-3238.

The City will not conduct business with an individual, firm or organization, and the Contractor shall not employ or otherwise utilize any Subcontractor, supplier or equipment vendor at any tier which is on the U.S. General Services Administration "List of Parties Excluded from Federal Procurement and Non Procurement Programs". The Contractor shall not utilize or otherwise employ any Subcontractors or suppliers on the list of nonresponsible bidders maintained by the City Bureau of Contract Administration.

00219 BUSINESS TAX REGISTRATION CERTIFICATES (11/21/01)

The Contractor represents that it has, or will obtain upon award, the Business Tax Registration Certificate(s) required by the Los Angeles City Business Tax Ordinance. The Contractor shall maintain, or obtain as necessary, all such Certificates required of it under said Ordinance and shall not cause or allow any such Certificate to be revoked or suspended.

The City requires all firms that have business activity within the City of Los Angeles to pay City business taxes.

Payments for goods or services will be withheld unless proof of tax compliance is provided to the City. All firms and individuals that do business with the City will be required to provide a Business Tax Registration Certificate number or an exemption number as proof of compliance with Los Angeles City business tax requirements in order to receive payment for goods or services.

The Tax and Permit Division of the City Office of Finance has the sole authority to determine whether a firm is covered by business tax requirements.

00220 CONTRACTOR PROPOSED ALTERNATES AND “OR EQUALS” (12/6/01)

Unless otherwise noted, the Contractor may propose products, equipment, or materials to be an "or equal" to those specified in the Contract. These proposals must be submitted within thirty (30) days after Notice to Proceed along with sufficient substantiating data for the Engineer to determine equivalence. The substantiating data must demonstrate equivalence in terms of function, performance, reliability, quality, and general configuration to the items specified in the Contract Documents. The Engineer will be the sole arbiter of equivalence. Proposals that are submitted late or with incomplete substantiation are "Not Equal" and subject to summary rejection.

Contractor-proposed "or equals" that are accepted by the Engineer shall be coordinated with other items of Work and incorporated into the Work without time extensions and at no additional cost to the City.

00221 CONTRUCTION AND DEMOLITION WASTE MANAGEMENT (8/12/11)

The Contractor shall divert all Construction and Demolition (C&D) waste generated from the project in accordance with the City's C&D Waste Recycling Ordinance. Los Angeles Municipal Code requires that all mixed C&D waste material generated within the City of Los Angeles be taken to a City Certified C&D Waste Processor. Further, mixed C&D waste can only be legally collected, removed, or transported by City of Los Angeles Permitted Solid Waste Haulers. If the Contractor plans on collecting, removing, or transporting its own waste, it must first apply for and obtain a Solid Waste Hauler Permit from the Solid Resources Citywide Recycling Division of the Bureau of Sanitation.

Failure to meet the C&D waste recycling requirements as detailed above will result in the assessment of penalties up to $5,000 per each load of C&D waste not taken to City Certified Processors. Further, collecting, removing or transporting C&D waste within the City without a valid Solid Waste Hauler Permit is a criminal misdemeanor subject to fines and/or imprisonment.

Other sections of the Specification may require specific recycling rates in addition to the Los Angeles Municipal Code requirements.

00222 – 00299 NOT USED

00300 FINANCIAL LIABILITY (4/12/95)

The City's liability under this Contract shall not exceed the City's appropriation to fund the Contract at the time of Contract award. However, if the City shall appropriate funds for any successive years, the City's maximum liability shall not exceed the extent of such appropriation, subject to the terms and conditions of this Contract.

00301 CONTRACTOR'S OBLIGATIONS (3/21/14)

Only competent workers shall be employed on the Work.

Any person employed who is found by the Engineer or the Inspector to be incompetent, disorderly or otherwise objectionable, or who fails or refuses to perform Work properly, acceptably and as directed shall be immediately removed from the Work by the Contractor and not be reemployed on the Work.

The Contractor, at its sole cost and expense, shall perform all labor and services and furnish all the materials, tools, and appliances, except as hereinafter otherwise definitely provided, necessary or proper for performing and completing the Work required, in the manner and within the time stipulated in these specifications. The Contractor shall furnish, erect, maintain, and remove the construction plant and such temporary works as may be required. If, at any time before the commencement or during the progress of the Work or any part of it, the Contractor's methods or appliances appear to the Engineer or the Inspector to be unsafe, inefficient, or inadequate for securing the safety of the workers, the quality of the Work required, or the rate of progress stipulated, the Engineer or the Inspector may order the Contractor to

increase their safety and efficiency or to improve their character, and the Contractor shall comply with such orders at its own expense. Neither the making of such demands by the Engineer nor the failure to make such demands shall relieve the Contractor of its obligation to secure the safe conduct of the Work, the quality of Work required, and the rate of progress stipulated in the Contract. The Contractor shall be fully responsible for the safety, efficiency, and adequacy of its plant, appliances, and methods, and for any damage which may result from their failure or their improper construction, maintenance, or operation.

All of the labor shall be performed and materials furnished pursuant to and in strict conformance with the Contract Documents, and in accordance with approved shop drawings. The Contractor shall complete the entire Work to the satisfaction of the Inspector and in accordance with the Specifications and Plans herein mentioned, at the prices fixed in the Contract.

Where articles or materials are especially manufactured or fabricated for delivery under these specifications, the Contractor shall at all times employ such workforce, plant, materials, and tools as will be sufficient to complete the performance of the Contract and every part thereof within the time limits stipulated herein. If the Contractor fails to employ sufficient workforce, plant, materials, tools, or to maintain adequate progress, the Engineer may require an increase in progress at any point or points or a modification of Plans and procedure in such a manner as to accelerate the Work. Failure to adequately staff the project shall be just cause for the City to terminate the Contract.

00302 CONTRACTOR'S REPRESENTATIVE AT THE SITE (1/30/03)

A technically qualified and English-speaking project representative shall be designated in writing as the Contractor's Representative at the job site, who shall supervise the Work and shall provide competent supervision of the Work until its completion. The Contractor's Representative shall be assigned full time and exclusively to this project. Alternate representatives with qualifications equal to or better than the previous representative may be designated. The Contractor's Representatives shall have at least five (5) years of verifiable experience as the person primarily responsible for supervision of the Work on projects of the same or similar size and nature as this project. Within five (5) days after the Notice of Award the Contractor shall provide a statement to the Engineer and the Inspector with the following:

1) Identification and resume, showing the qualifications and experience of the Contractor's Representative and the alternate appointed to act in the place of the Contractor's Representative.

2) References of not less than two (2) previous projects on which the Contractor's Representative and the alternate had supervisory responsibility on a project of a similar nature and at least one-half or more of the cost of this project. Such references shall include names, addresses, and telephone numbers of owner representatives who worked on the project as well as project information such as project type, size, location and duration.

The Engineer and the Inspector reserve the right to disapprove any candidate named as the Contractor's Representative or alternate who fails to meet the provisions set forth herein. The Engineer and the Inspector reserve the right to remove, without any right to work on the project, either the Contractor's Representative or alternate, who in the sole opinion of the Engineer or the Inspector, has demonstrated incompetence, lack of ability, or other unsuitability to perform supervision of the Work.

If the Contractor's Representative or alternate leave the employ of the Contractor, the Contractor will be required to replace the individual(s) and fulfill the requirements of this Article within fifteen (15) calendar days. In no event shall any Work proceed in the absence of an approved representative.

The Contractor's Representative or alternate shall have full authority to act on behalf of the Contractor, including, but not limited to final approval of Change Orders and Supplemental Agreements. All directions given by the Engineer or the Inspector to said representative or alternate shall be considered as having been given to the Contractor. Such instructions given by the Engineer or the Inspector to the Contractor's Representative or alternate will be confirmed in writing. All instructions and directions given by the

Engineer or the Inspector will be limited to matters properly falling within the Engineer's or the Inspector's authority as specified in "Authority of the Board, Engineer and Inspector" of these General Conditions.

The Contractor's Representative or alternate shall be present at the worksite at all times while Work is in progress. Failure to observe this requirement constitutes a suspension of the Work by the Contractor, until such time the Contractor's Representative or alternate is again present at the worksite. All Work performed while the Contractor's Representative or alternate is absent from the worksite is ineligible for payment. Work performed in violation of these provisions shall be removed and reconstructed, refabricated, or reinstalled under the required supervision. The Contractor is ineligible for time extensions or additional payment for costs or impact that directly or indirectly are caused by said suspension. Those ineligible costs and impacts include what the Contractor may incur for slowdown, delays, idled equipment, removals, reconstruction, refabricating, reinstalling and other. During such periods of noncompliance when the Contractor's Representative is not on site, written instructions issued by the Engineer or the Inspector to *any* employee of the Contractor is considered adequate notice to the Contractor.

Whenever the Work is defined as being suspended under the provisions of this Article, any such suspension in excess of ten (10) calendar days shall constitute just cause for the City to terminate the Contract under the provisions of "Termination of Contract by City (Contractor Default)" of these General Conditions.

00303 FAMILIARITY WITH PLANS AND SPECIFICATIONS (9/18/07)

It shall be the responsibility of the Contractor to be thoroughly familiar with all details of the Project, including the work of the Contractor's forces and all Subcontractors. The Contractor shall call the following to the attention of both the Engineer and the Inspector in writing within twenty-four (24) hours of discovery, before any Work is performed:

1) Errors and omissions in the Plans and Specifications, including, but not limited to, code violations, typographical errors and notational errors where ambiguity or inadequate description exists;

2) Work on the Plans or in the Specifications which, if so constructed, would result in a conflict or interference with other Work or the Work of other trades, including the location of fixtures and equipment;

3) Existing improvements visible at the job site, for which no existing disposition is made on the Plans or in the Specifications but which could reasonably be assumed to interfere with the satisfactory completion of the improvements contemplated by the Plans and Specifications.

Failure to notify shall constitute a waiver by the Contractor of any claim for delay or other damages occasioned by such defect. If the Contractor proceeds with the Work without instructions from the Engineer, the incorrect Work shall be removed and corrections made to comply with the Engineer's instructions, at no cost to the City.

00304 JOB CONDITIONS (9/18/07)

The Contractor shall determine the nature and types of work to be performed, ascertain all conditions affecting construction procedure and sequencing of Work operations in the execution of the Work, including condition of available roads and streets, or clearances, restrictions and other limitations affecting transportation and ingress and egress to the job site. This determination must be made during the Bidding Period with any costs and impact included within the Bid.

The Contractor shall observe any "Site Security" restrictions described in the General Requirements or the Plans.

Whenever the Work requires entry into an operating plant, occupied building, working facility or other secured location, observe the following unless otherwise noted:

1) No vehicles are allowed except delivery trucks and Contractor's identified vehicles and equipment.

2) It shall be the Contractor's sole responsibility to arrange and pay for offsite employee parking and to provide transportation from the parking area to the Work site.

3) The Contractor shall fully cooperate with all authorities on the job site and other contractors not related to the Work of this Contract who might be at the job site.

4) The Contractor shall fully comply with all regulations in force at the job site.

00305 JOB BULLETIN BOARD (11/27/01)

When a Field Office is required, the Contractor shall provide and mount a Job Bulletin Board at the field office in a location where it can be readily seen by all of the Contractor employees. The bulletin board shall be substantially built to a minimum size of 900 mm high x 1200 mm wide (3' x 4') shall be fitted with a framed safety glass door and lock. The glass on the outside shall be protected with a 12 mm x 12 mm (½" x ½") galvanized wire mesh screen permanently attached to the frame. The bulletin board shall be finished inside and outside with two (2) coats of an exterior paint.

00306 RESPONSIBILITY FOR SITE (10/17/01)

The Contractor is in full charge of and responsible for the job site and the Work. The "Interface/ Coordination Requirements" of the General Requirements describe interfaces with other contractors working on the job site. No other operations of any nature shall be performed except as specifically authorized in the Contract Documents or as authorized by the Engineer.

The Contractor shall exercise care not to damage improvements and adjacent land. The Contractor shall correct any damage caused within seventy-two (72) hours by restoring the land and improvements damaged to their original condition and shall indemnify and hold the City harmless for any such damage as specified in "Indemnification" of these General Conditions.

00307 WORKMANSHIP AND MATERIALS (4/12/95)

All materials, parts and equipment furnished by the Contractor for the Work shall be new, high grade and free from defects. Materials and work quality shall be subject to the Inspector's approval.

00308 INJURY AND ILLNESS PREVENTION - SAFETY MEASURES (9/18/07)

Safety is the responsibility of the Contractor. The Contractor shall observe and comply with the safety provisions of all applicable laws, building and construction Codes, safety and health regulations of the California Code of Regulations, and with applicable City Safety Policies.

Every employer (Prime Contractor and/or Subcontractor) employed on the Project shall establish, implement, and maintain an effective Injury and Illness Prevention Program in accordance with Section 3203 of the General Industry Safety Orders.

Each Contractor/Subcontractor shall make the applicable Injury and Illness Prevention Program specific for site conditions and type of Work to be performed on the Project.

Each prime Contractor and Subcontractor working on the Project shall make its Injury and Illness Prevention Program available to the Inspector and the Engineer prior to beginning any Work on the Project.

If a work procedure or site condition exists that violates the Contractor's/Subcontractor's Injury and Illness Prevention Program or any other safety standard, the Engineer or Inspector may order the Contractor to immediately comply with said safety provisions, and the Contractor shall comply with such orders at its own expense. If the Contractor fails to act promptly, the Engineer or Inspector is authorized to suspend the Work. Failure of the Engineer or the Inspector to make such demands shall not relieve the Contractor of its obligations to secure the safe conduct of the Work.

If a work procedure or site condition creates an immediate hazard to the health or safety of the public, City employees, property, or a licensee, the City may suspend all work on the project. Without prior notice, the City may also correct such hazardous conditions using other forces or contractors, at the Contractor's sole expense. Any delays or impacts arising on the Work as a result of such an emergency shall be at the sole expense of the Contractor with no time extension, additional reimbursement for extended overhead, or interest on monies due, allowed for the Contractor.

First aid facilities and supplies shall be kept and maintained by the Contractor at the site of the Work.

The Contractor shall cause all persons within the construction area to wear protective helmets. In addition, all employees of the Contractor and its Subcontractors shall be provided with, and required to use, personal protective and life saving equipment set forth in California Construction Safety Orders and the OSHA Safety and Health Standards for Construction.

The Contractor shall provide safety equipment, material, and assistance to City personnel to properly inspect all phases of the Work, including final inspection. Such equipment, material and assistance shall include, but not be limited to testing for the presence of explosive or toxic gases and oxygen deficiency in confined spaces, blowers, ventilators, first aid supplies and equipment, ladders, scaffolds, shoring, and personnel for standby assistance as required. Personal safety devices such as harnesses, lanyards, and self-contained breathing apparatus will be provided by the Bureau of Contract Administration, unless otherwise noted. When the Work requires specialized safety equipment, the Contractor shall provide new sets of such equipment, the training deemed necessary by the Inspector, and maintenance of such equipment. When asbestos is being removed, the requirements of the CCR, Title 8, Div. 1, Chapter 4, Subchapter 4, "Construction Safety Orders," and Subchapter 7, "General Industry Safety Orders," shall be implemented.

In cases involving exposure of City personnel to toxic/hazardous materials and/or elements, the City Personnel Department, Occupational Safety Office, shall have field review authority over the Contractor's operations.

For additional requirements, refer to "Safety and Preconstruction Safety Conference" of the General Requirements.

00309 PROTECTION OF PERSONS AND PROPERTY AND RESTORATION OF EXISTING IMPROVEMENTS (1/05/10)

The Contractor shall not destroy, remove, or otherwise disturb any existing survey monuments or reference points without authorization from the Engineer. No pavement breaking or excavation shall be started until all survey monuments or other reference points that will be disturbed by the construction operations have been properly referenced by the Engineer. It shall be the Contractor's responsibility to notify the Engineer and the Inspector of the time and location that Work will be done. Such notification shall be sufficiently in advance of construction so that there will be no delay due to waiting for survey points to be satisfactorily referenced for restoration. All survey monuments or reference points disturbed,

without authorization by the Engineer, shall be accurately restored by the City at the Contractor's sole expense after all street or roadway resurfacing has been completed.

Unless otherwise noted, all construction operations shall preserve existing drainage paths, vehicular and pedestrian access. The Contractor shall also regularly attend to dust, mud, trash, noise, debris, and etceteras, caused by their construction operations to prevent a public nuisance.

All paved areas including asphalt concrete berms cut or damaged as a result of construction shall be replaced with similar materials and of equal thickness to match the existing adjacent undisturbed areas, except where specific resurfacing requirements have been called for in the Contract Documents or in the requirements of the agency issuing the permit. All temporary and permanent pavement shall conform to the requirements of the affected pavement owner. All pavement which is subject to partial removal shall be neatly saw cut in straight lines.

In order to obtain a satisfactory junction with adjacent surfaces, the Contractor shall saw cut back and trim the edge so as to provide a clean, sound, vertical joint before permanent replacement of an excavated or damaged portion of pavement. Damaged edges of pavement along excavations and elsewhere shall be trimmed back by saw cutting in straight lines. All pavement restoration and other facilities restoration shall be constructed to finish grades compatible with adjacent undisturbed pavement.

Where sidewalks have been removed for purposes of construction, the Contractor shall place suitable temporary sidewalks, properly protected, promptly after backfilling and shall maintain them in satisfactory condition until the final restoration thereof has been made.

When existing planted areas are regraded, or removed and replaced because of the Contractor's operations, the soil in these areas shall be prepared and the area replanted-in-kind. All landscape materials shall conform to the requirements of the owner of the affected planted area.

All utilities encountered along the line of the Work shall be maintained continuously in service during all the operations under the Contract, unless other arrangements satisfactory to the Engineer are made. Utilities shall include, but not be limited to, all above or below-ground conduit, pipes, ducts, cables, and appurtenances associated with oil, gas, water, steam, irrigation, process, sewer, storm drain, wastewater, air, electrical, power, instrumentation, communication, telephone, cable, TV, and lighting systems, whether or not owned by the City.

The Contractor shall protect all existing utilities and improvements not designated for removal. Potholing for utilities and structures shown or addressed on the drawings shall be accomplished at the Contractor's expense. The Contractor shall determine the exact locations and depths of all utilities indicated on the Drawings. The Contractor shall make exploratory excavations of all utilities. The Contractor, in conformance with City Ordinance No. 150,478, shall pothole existing subsurface installations carrying unstable substances to determine their locations and elevations before commencing excavation. All such exploratory excavations shall be performed as soon as practicable after award of the Contract and in any event, a sufficient time in advance of construction to avoid possible delays to the Contractor's Work. When such exploratory excavations show the utility location as indicated on the Drawings to be in error, the Contractor shall so notify the Inspector and the Engineer. The Contractor should not rely upon plan designation of location of underground utilities. The number of exploratory excavations and extent of potholing required shall be that number which is sufficient to determine the alignment and grade of the utility. These costs are a part of the Bid.

Prior to any excavation in the vicinity of any existing underground facilities, the Contractor shall notify the Inspector and the Engineer, and the respective authorities representing the owners or agencies responsible for such facilities, not less than three (3) Workdays, nor more than five (5) Workdays, of their intention to begin excavation. The Contractor shall make arrangements for and provide access such that a representative of said owners or agencies may be present during such Work. If the proposed excavation is within 10 feet of a high priority subsurface installation, as defined by Section 4216 of the

California Government Code, the Contractor shall conduct an onsite meeting with the owner of the utility to determine actions or activities required to verify the location of the high priority subsurface installation before proceeding with any excavation activities.

Before commencing any excavation, the Contractor shall obtain an Underground Service Alert (USA) inquiry I.D. number. Two workdays, shall be allowed after the I.D. number is obtained and before the excavation work is started so that utility owners can be notified. If the utility owner is the City, a confirmation number indicating the City has been notified shall be obtained by USA and/or the Contractor from the appropriate City department. The I.D. number together with the date acquired shall be reported to the Inspector when calling for inspection. I.D. numbers will not be given more than ten (10) Workdays before starting excavation work.

Unless otherwise indicated on the Plans or Specifications, where the proper completion of the Work requires the temporary or permanent removal and/or relocation of an existing utility or other improvement, which is shown on the Plans, the Contractor shall, at its own expense, remove and, without unnecessary delay, temporarily replace or relocate such utility or improvement to a place and in a manner as directed by the Engineer, and the owner of the facility. In all cases of such temporary removal or relocation, restoration to former location shall be accomplished by the Contractor in a manner that will restore or replace the utility or improvement as nearly as possible to its former locations and to as good or better condition than found prior to removal. When utilities that are to be removed are encountered within the area of operations, the Contractor shall notify the Engineer not less than fifteen (15) days in advance for necessary measures to be taken to prevent interruption of service.

The Contractor shall notify the Engineer thirty (30) calendar days in advance of any proposed connection, and shall notify the Engineer and the Inspector twenty-four (24) hours prior to the actual connection, to any existing utility.

Any utility or improvement which is damaged by the Contractor shall be immediately repaired at the Contractor's expense, to a condition equal to, or better than, the condition it was in prior to such damage or temporary relocation. If the Contractor fails or refuses to promptly repair the utility or improvement, the City may perform the necessary Work at the Contractor's expense. The Contractor will also not be entitled to any time extension, additional reimbursement, extended overhead, or interest on monies due. The Contractor is not relieved of provisions of this Article even in the event such damage occurs after backfilling or is not discovered until after completion of backfilling.

All repairs to a damaged improvement shall be inspected and approved by the Inspector and an authorized representative of the improvement owner before being concealed by backfill or other Work. In case of damage, which in the opinion of the Engineer or the Inspector, threatens the safety of persons or property, the Contractor shall immediately make all repairs necessary for removal of the hazard. Should the Contractor fail to promptly take all necessary action, the City has the option to remove any hazard resulting from damages caused by the Contractor at the Contractor's expense without waiving any other rights the City may have. The Contractor will also not be entitled to any time extension, additional reimbursement, extended overhead, or interest on monies due.

In the event that the Contractor damages any existing utilities that are not shown on the Plans or the locations of which are not made known to the Contractor prior to excavation, the Contractor shall immediately notify the Inspector and take all measures necessary to prevent further damage. The Contractor shall then immediately make a written report to the Engineer and shall make repairs as directed by the Engineer.

Notwithstanding that an existing utility or substructure is not shown on the original Plans and Specifications, if the existence and location thereof was made known to the Contractor prior to excavation, the utility or substructure constitutes an existing known condition, and the Contractor is responsible for protecting the utility or substructure.

Damage to a utility known to the Contractor shall be repaired at the Contractor's expense.

00310 NON-CONFORMING WORK (1/30/03)

Except as set forth in this Article, all non-conforming Work and materials, in place or not, shall be removed immediately from the site or corrected to conform to all requirements of the Contract Documents, by the Contractor, at the sole expense of the Contractor.

If the Contractor fails to remove, replace or correct any non-conforming Work or materials within seventy-two (72) hours of discovery, the Inspector or the Engineer may cause such Work or materials to be removed and replaced. Such removal and replacement shall be at the sole expense of the Contractor with no entitlement to time extensions, additional reimbursement, extended overhead, or interest on monies due. In addition, all such cost shall be deducted from any amounts that are due or may become due to the Contractor.

Failure of the Inspector or the Engineer to notify the Contractor of any non-conforming Work shall not constitute acceptance of any non-conforming Work. The Contractor's obligation to remove, replace or correct any non-conforming Work, whenever discovered, shall continue to the end of the guaranty-warranty period provided for in "Guaranty-Warranty" of the General Requirements. The City reserves and retains all rights and remedies at law against the Contractor and their Surety for correction of any and all latent defects discovered after the guaranty-warranty period.

Any delays or impacts arising on the Work as a result of construction, fabrication or delivery of non-conforming work or materials shall be at the Contractor's sole expense, with no time extension, additional reimbursement for extended overhead, or interest on monies due allowed.

Examination of covered Work may be ordered by the Engineer or the Inspector for any reason. The Work shall be uncovered by the Contractor and if such Work is found to be in accordance with the Contract Documents, the City will issue a Change Order authorizing payment for the cost of examination and replacement. If such Work is found to be not in conformance with the Contract Documents, the Contractor shall correct the non-conforming Work and the cost of examination and correction of the non-conforming Work shall be borne solely by the Contractor.

Failure of the Contractor to comply with the requirements of this Article shall constitute default of the Contract by the Contractor and the City may terminate the Contract as provided for in Termination of Contract by City (Contractor Default).

00311 SUBCONTRACTORS AND SUB-SUBCONTRACTORS (10/28/14)

The Contractor shall perform on the site and with its own organization not less than fifty percent (50%) of the total Contract Price, unless a different percentage is designated in the Bid Proposal. Any items designated "specialty items" in the Bid Proposal may be performed by subcontract and the amount of all such "specialty items" may be deducted from the Contract Price before computing the amount of Work required to be performed by the Contractor with its own organization. The dollar value included in the percentage performed by the Contractor shall include the value of labor, materials and equipment to be incorporated or used in the Work and directly purchased by the Contractor and shall not include the value of Work, including labor, materials and equipment, incorporated or used in the Work, performed or provided by Subcontractors.

To be eligible for award of this Project, the Board requires Bidders to subcontract a minimum of its total Bid to qualified Subcontractors, as discussed in the "Mandatory Subcontracting Minimum (MSM) Requirements" of the Bid Proposal. Failure to list Subcontractors and the subcontracted dollar amounts on the applicable pages of the Bid Proposal to satisfy the MSM is cause for the Bid to be declared nonresponsive and rejected by the Board.

Bidders must list all Subcontractors in the Bid, regardless of the dollar amount of the work to be performed, if the Bidder wishes to have the Subcontract amount credited toward meeting both the MSM and MBE/WBE levels of participation of the Project. Subcontractors added to the project following acceptance of the Bid and award of the Project will not be credited toward meeting the required MSM and/or MBE/WBE levels of participation for this Project.

MSM credit will not be given to a joint venture partner listed as a Subcontractor by a joint venture.

Listed vendors and/or Suppliers will be limited to 60% of their listed dollar value toward achieving both the MSM and the anticipated MBE/WBE levels of participation for this Project, unless the vendor and/or Supplier manufactures or substantially alters the materials/supplies.

The designated percentage of the total Contract Price the Contractor is to perform may not be reduced below that level by the addition of Subcontractor's added after Award of the Project.

The Inspector, acting on behalf of the Board, will be responsible for approval of all Subcontractors, whether Bid-listed or not, and all Sub-subcontractors, at any level, employed on the Project.

Each Subcontractor who will perform Work or render services in an amount in excess of one-half of 1 percent of the Contractor's total Bid or $10,000.00, whichever is greater, must be listed in the original Bid.

Subletting or Subcontracting of any portion of the Work in excess of one-half of 1 percent of the Contractor's original total Bid or $10,000.00, whichever is greater, for which no Subcontractor was designated in the original Bid shall only be permitted in cases of public emergency or necessity, and then only after a finding reduced to writing as a public record of the Inspector setting forth the facts constituting the emergency or necessity.

If the Contractor fails to specify a Subcontractor, or if the Contractor specifies more than one Subcontractor for the same portion of Work to be performed under the Contract in excess of one-half of 1 percent of the Contractor's total original Bid or $10,000.00, whichever is greater, the Contractor agrees that it is fully qualified to perform that portion of Work itself, and that it shall perform that portion itself.

The Contractor shall set forth in its Bid the following: The name, location of the place of business, telephone number, California State Contractor's License Number and dollar amount of each Subcontractor who will perform Work, labor, service, supply specifically fabricated materials or equipment in an amount in excess of one-half of 1 percent of the Contractor's total Bid, or $10,000.00, whichever is greater.

The Contractor shall list only one Subcontractor for each portion of Work as defined by the Contractor in its Bid.

Acceptance by the Board of its Bid is dependent upon each Bid listed Subcontractor, and all subsequently approved additional Subcontractors, performing the dollar value of Work listed or approved. Any reduction, increase, or other change to any Subcontract amount without prior approval is considered an Unauthorized Subcontractor Substitution and is subject to a penalty of ten (10) percent of the Subcontract amount, whether Bid-listed or not. A Subcontract dollar value increased or reduced as the result of a Change Order issued by the Engineer to add or delete from the original scope of Work shall not be subject to a penalty for an Unauthorized Subcontract Substitution.

Acceptance by the Board of its Bid shall not entitle Subcontractors to recognition for any direct or contractual relationship with the City, nor shall it constitute approval of the use of any materials other than those specified.

The Contractor shall be responsible for all acts of all Subcontractors at all tiers. The Contractor shall coordinate all work performed by subcontractors in the interest of the City.

All Subcontractors, at all tiers, who will be working on the Project shall be approved in writing by the Inspector prior to beginning Work, regardless of the dollar amount of Work to be performed, and whether or not they were listed in the original Bid.

Requests for approval of all Subcontractors, or request for substitution of a Subcontractor, shall be made in writing to the Inspector, and said request shall contain the following information for each Subcontractor:

1) Project Name

2) Project Work Order Number

3) Subcontractor's Name

4) Subcontractor's Address

5) Subcontractor's Phone Number

6) Subcontractor's Status (WBE, MBE, OBE)

7) Subcontractor's State of California Contractor License Number

8) Subcontractor's City Business Tax Registration Certificate Number (BTRC)

9) Dollar amount of Subcontract work to be performed

10) Description of Subcontract work to be performed

Failure to provide any of the information listed will result in denial of approval until such time as the information is provided.

Failure to obtain approval of the Inspector prior to each Subcontractor, at any level, performing Work on the Project may result in suspension of Work by that Subcontractor, removal of Work performed by unapproved Subcontractors, assessment of penalties, and possible sanctions against the Contractor. Failure to obtain approval of any Subcontractor or Sub-subcontractor at any level is subject to a penalty of ten (10) percent of the total amount of work performed by said Subcontractor.

Additional Subcontractors may be added after the time of original Bid. The value of Work to be performed by additional Subcontractors may not be greater than one-half of 1 percent of the Contractor's original total Bid or ten thousand dollars ($10,000.00), whichever is greater, unless the Subcontractor will be performing Work added by Change Order causing changes or deviations from the original Contract.

The Contractor shall provide the dollar amount of Work to be performed in all requests for additional Subcontractors and/or Sub-subcontractors. Failure to specify a dollar amount of Work to be performed will result in denial of additional Subcontractors until such time as the amount is provided.

Failure of the Contractor to request and obtain approval for a reduction in either a Bid-listed Subcontract amount or the Subcontract amount of a Subcontract added after the original Bid shall result in a penalty of ten percent of the Subcontract amount.

A Contractor whose Bid is accepted may not:

1) Substitute any person as Subcontractor in place of a Subcontractor listed in the original Bid, except that the Inspector, acting on behalf of the Board, may consent to the substitution of another Subcontractor for one of the following situations:

A) When the Subcontractor listed in the original Bid or proposal after having had a reasonable opportunity to do so fails or refuses to execute a written contract, when that written contract, based upon the general terms, conditions, plans and specifications for the project involved or the terms of that Subcontractor's written bid, is presented to the subcontractor by the Contractor.

B) When the listed Subcontractor becomes bankrupt or insolvent.

C) When the listed Subcontractor fails or refuses to perform its subcontract.

D) When the listed Subcontractor fails or refuses to meet the bond requirements of the Contractor as set forth herein.

E) When the Contractor demonstrates to the Inspector's satisfaction that the name of the Subcontractor was listed as a result of an inadvertent clerical error.

F) When the listed Subcontractor is not licensed pursuant to the State of California Contractor's License Law.

G) When the listed Subcontractor refuses to obtain a City of Los Angeles Business Tax Receipt Certificate (BTRC).

H) When the Inspector concurs with the Contractor that the Work being performed by the listed Subcontractor is unsatisfactory and not in substantial accordance with the Contract Documents, or the listed Subcontractor is delaying or disrupting the progress of the work.

I) When the listed Subcontractor fails to submit an Affirmative Action Plan acceptable to the Inspector.

J) When the Board determines that a listed Subcontractor is not a responsible contractor.

2) Permit a Subcontract to be voluntarily assigned or transferred or allow it to be performed by anyone other than the original Subcontractor listed in the original Bid, without the consent of the Inspector.

3) Other than in the performance of Change Orders causing changes or deviations from the original Contract, sublet or Subcontract any portion of the Work in excess of one half of 1 percent of the Contractor's total Bid as to which its original Bid did not designate a Subcontractor.

4) Reduce the dollar amount of a Bid-listed Subcontract without the written approval of the Inspector.

A request for substitution of any Subcontractor, at any level, whether Bid-listed or not, must be made in writing to the Inspector and must include letter(s) of explanation as to the reason for the requested substitution.

It is considered a substitution if anyone other than the Bid-listed and/or approved Subcontractor(s), including the Contractor, performs any portion of the Work designated to be performed by said Subcontractor.

Failure to obtain approval for a Subcontractor substitution may result in rejection of the affected Work, a penalty of ten (10) percent of the total amount of the Subcontract, and possible sanctions by the City.

All substitutions of Subcontractors, whether MBE/WBE or not, shall be approved in writing by the Board prior to any Work being performed by the substituting Subcontractor.

The Contractor shall conduct a Good Faith Effort prior to approval of any requested Subcontractor substitution, regardless of the status (WBE/MBE/OBE/DBE) of the contractor being substituted for. For MBE/WBE/OBE Subcontractor substitution requests, the Contractor shall comply with the Good Faith Effort requirements of Part III (F) (2) of the Bid Proposal. The Good Faith Effort for any requested Subcontractor substitution must be reviewed and approved by the Special Research and Investigation Section of the General Services Division of the Bureau of Contract Administration, whether the Subcontractor was Bid listed or approved after the Award of the Project.

There shall be no decrease in dollar value of Work to be performed by Subcontractors approved as a substitute for a Bid-listed Subcontractor without a change in scope of the Work to be performed by the originally Bid-listed Subcontractor. Written evidence of a change of scope must be provided by the Engineer prior to approval of a change in dollar value of a Bid-listed Subcontractor.

Prior to approval of the Contractor's request for substitution, the Inspector shall give notice in writing to the Subcontractor affected by the Contractor's request to substitute and of the reasons for the request. The notice shall be served by certified or registered mail to the last known address of the Subcontractor. The listed Subcontractor who has been so notified shall have five (5) Workdays within which to submit written objections to the substitution. Failure to file these written objections within five (5) Workdays of notification shall constitute the listed Subcontractor's consent to the substitution. Notification by the Inspector may be made by phone in lieu of written notification via certified or registered mail if agreed to by the listed Subcontractor and followed by written request. Upon notification by phone, the listed Subcontractor may file written objections within five (5) days of notification.

If written objections are filed, the Inspector shall give notice of at least five (5) Workdays to the listed Subcontractor of a hearing on the Contractor's request for substitution.

The Contractor, as a condition to assert a claim of Inadvertent Clerical Error in the listing of a Subcontractor, shall within two Workdays after the time of the original Bid opening by the Board give written notice to the Inspector and copies of such notice to both the Subcontractor he claims to have listed in error and the intended Subcontractor who had bid to the Contractor prior to Bid opening.

Written notice of an Inadvertent Clerical Error shall be forwarded within two (2) days after the time of the original Bid opening by every Contractor claiming such an error. Failure to forward such notice within the time prescribed shall make any such subsequent claim of Inadvertent Clerical Error invalid.

Any listed Subcontractor who has been notified by the Contractor of an Inadvertent Clerical Error shall be allowed six (6) Workdays from the time of the Bid opening to submit to the Inspector and to the Contractor written objection to the Contractor's claim of Inadvertent Clerical Error. Failure of such listed Subcontractor to file such written notice within the six (6) Workdays shall constitute agreement that an advertent clerical error was made.

The Inspector shall, in the absence of compelling reasons to the contrary, consent to the requested substitution based on an Inadvertent Clerical Error if:

1) The Contractor, the Subcontractor listed in error, and the intended Subcontractor each submit an affidavit to the Inspector along any additional information as the parties may wish to submit that an Inadvertent Clerical Error was in fact made, provided that the affidavits from each of the three parties are filed within eight (8) Workdays from the time of the original Bid opening, or

2) If such affidavits are filed by both the Contractor and the intended Subcontractor within eight days of the original Bid opening but the Subcontractor whom the Contractor claims to have listed in

error does not submit within six (6) Workdays, to the Inspector and to the Contractor, written objection to the Contractor's claim of Inadvertent Clerical Error as provided in this article.

If such affidavits are filed by both the Contractor and the intended Subcontractor but the listed Subcontractor has, within six (6) Workdays from the time of the original Bid opening, submitted to the Inspector and to the Contractor written objection to the Contractor's claim of Inadvertent Clerical Error, the Inspector shall investigate the claims of all parties and schedule a public hearing before the Board to determine the validity of such claims. Any determination shall be based on the facts contained in the declarations submitted under penalty of perjury by all three parties and supported by testimony given to the Board. The Board may, on its motion or that of any other party, admit testimony of other Contractors, any Bid registries or depositories, or any other party in possession of facts, which may have a bearing on the decision of the Board. The findings of the Board shall be final.

The Contractor shall pay its Subcontractors, within seven (7) days of receipt of each progress payment, the respective amounts allowed the Contractor on account of the work performed by its Subcontractors, to the extent of each Subcontractor's interest therein. Payments to Subcontractors shall be made based on the payment estimate approved for payment by the Inspector.

The Contractor shall forward to the Inspector a monthly report indicating the date and amount of each payment made to its Subcontractors from the most recent progress payment. If the Contractor has a written agreement with any Subcontractor allowing for payment later than 7 days after receipt of each progress payment, the Contractor shall include the written agreement(s) in its monthly report.

00312 RESPONSIBILITY OF CONTRACTOR TO ACT IN EMERGENCY (11/21/01)

When an emergency arises creating an imminent hazard to persons or threatening the loss or damage to property, the Contractor shall take prudent action without instruction from the City. The Contractor shall immediately notify the Engineer and the Inspector of any emergency action taken. During such emergencies, if the Contractor fails to act, the Engineer or Inspector may instruct the Contractor to take action. Should the Contractor still fail to act, the Engineer or Inspector may respond to the emergency with other forces or contractors at the Contractor's sole expense. Claims for additional time, compensation or interest will be rejected if the Contractor's actions or inaction created the emergency. Similarly, any Claims will be offset by the amount that the Contractor's actions or inaction aggravated the emergency.

00313 ASSIGNMENT (2/09/95)

The Contractor shall not assign, transfer, convey or otherwise dispose of this Contract or any of the proceeds thereunder unless written consent of the City has been obtained. No right under this Contract or claim for any proceeds due or to become due hereunder shall be asserted against the City, or persons acting for the City, by reason of any so-called assignment, transfer or conveyance of this Contract or any part thereof unless such assignment, transfer or conveyance has been authorized by the written consent of the City. The instrument of assignment, transfer or conveyance shall contain a clause subordinating the claim of the assignee, transfer or conveyor to all prior liens for services rendered or materials supplied for the execution of the Work.

00314 NOTIFICATION OF HAZARDOUS SUBSTANCES (10/17/01)

The existing facilities or Jobsite may contain asbestos, PCBs, corrosives, carcinogens, or other hazardous materials. Should the Contractor or any of its Subcontractors, while performing Work on or in the vicinity of existing facilities, unexpectedly encounter any material identified in the California Code of Regulations, Title 8, as a hazardous material not shown on the Plans or addressed in the specifications, or have reason to believe that any other material encountered may be a hazard to human health and safety and/or the environment, the Contractor shall stop the Work, cordon off the affected area to secure

entry, and shall immediately notify the Inspector and the Engineer. Removal and disposal of the hazardous material not shown on the Plans or addressed in the specifications, if the Engineer deems it necessary, will be done by and at the expense of the City. The City will provide the Contractor, upon request, with copies of Material Safety Data Sheets (MSDS) covering hazardous materials identified by the Contractor that are encountered in existing facilities during the course of the Work and that are not removed by the City.

In the event that the Contractor is delayed in the completion of the Contract solely because of such hazardous materials or conditions not previously identified in the Contract Documents, the Contractor shall be entitled to an extension of time in accordance with "Unavoidable Delay" of these General Conditions.

For new construction Work and for all Contractor furnished supplies and equipment that may contain hazardous materials, the Contractor shall develop and implement a written Hazard Communication Program for its employees in accordance with the California Code of Regulations. The Contractor's basic written Hazard Communication Program shall be submitted to the Engineer and the Inspector prior to the start of Work at the site, and shall be revised and kept current as required by the continuing progress of the Work. The Contractor's Hazard Communication Program shall also include the MSDS for all hazardous materials the Contractor will be using at the facility. All provisions concerning MSDS for hazardous materials shall be met before the hazardous material is delivered to the site.

The Engineer shall be provided with three (3) copies and the Inspector with four (4) copies of the Contractor's written Hazard Communication Program, Contractor provided MSDS, and all revisions and modifications thereto.

The Contractor and Subcontractors shall comply with all State and Federal statutes and regulations on training, handling, storage, public notification, and disposal of hazardous materials and hazardous wastes. In the event that the Contractor or its Subcontractors spills or releases hazardous materials, the Contractor shall immediately notify the Inspector and the Engineer and any required agencies of the spill or release and the Contractor shall stop the Work, and cordon off the affected area to secure entry. Removal and disposal of the hazardous material, if the Engineer deems it necessary, will be done by the City at the Contractor's expense. Further, the Contractor shall notify the Engineer and the Inspector when hazardous materials are brought on-site and when hazardous materials and hazardous wastes are removed from the site. Hazardous Materials brought on site shall be accompanied by four (4) copies of MSDS, which shall be provided to the Inspector before such materials are unloaded.

00315 INDEPENDENT CONTRACTOR (10/21/99)

The Contractor represents that it is fully experienced and properly qualified to perform the class of Work required for the Contract and that it is properly licensed, equipped, organized and financed to perform the Work. The Contractor shall be an independent contractor. The Contractor is not an agent of the City in the performance of the Contract, and shall maintain complete control over its employees and its Subcontractors and Suppliers of any tier. Nothing contained in the Contract or any Subcontract awarded by the Contractor shall create any relationship between any Subcontractor and the City. The Contractor shall perform the Work in accordance with its own methods, in compliance with the terms of the Contract.

00316 INDEMNIFICATION (10/17/01)

Except for the active negligence or willful misconduct of the City, the Contractor undertakes and agrees to defend, indemnify and hold harmless, through legal counsel acceptable to the City, the City, and any and all of the City's Boards, Officers, Agents, Employees, Assigns, and Successors in Interest from and against all suits and causes of action, claims, losses, demands and expenses, including, but not limited to, attorney's fees and cost of litigation, damage or liability of any nature whatsoever, arising out of or related to the performance or nonperformance by Contractor or its Subcontractors, Sub-Subcontractors, or Suppliers, of any tier, of any portion of the construction of the Project, including but not limited to

Contractor's negligent acts, errors, omissions, breach of contract, breach of warranty (express or implied), or willful misconduct.

It is agreed that such defense and indemnity shall extend to the City's Architect/Engineer or other Design Consultant providing services under written agreement with the City covering any portion of the Project. Provided, however, that the Design Consultant shall be solely responsible for the enforcement of any request made by said Consultant for indemnification or defense by the Contractor. It is further provided that the City shall have no liability whatsoever for any failure of the Contractor to comply with any request from the consultant for indemnity or defense.

It is further agreed that the defense and indemnity obligations of the Contractor under this Article shall not extend to the liability of the Design Consultant or its agents, employees or subconsultants, arising as a result of such indemnitee's own active negligence, errors or omissions or from (1) the preparation or approval of maps, Plans, opinions, reports, surveys, change orders, designs or Specifications, or (2) the giving of or failure to give directions or instructions by the indemnitee provided that such giving or failure to give is the primary cause of the damage or injury.

00317 INSURANCE (1/05/10)

These provisions apply unless otherwise noted in the General Requirements.

A) GENERAL

During the term of this Contract and without limiting the Contractor's indemnification of the City, the Contractor shall provide and maintain at its own expense, insurance having the limits customarily carried and actually arranged by the Contractor but not less than the amounts and types listed on the Insurance Requirements Form in these Contract Documents, covering its operations hereunder subject to the following conditions as they may variously apply:

1) ADDITIONAL INSURED/ADDITIONAL INTEREST/LOSS PAYEE

The City, its Boards, Officers, Agents, and Employees shall be included as:

a) Additional Insureds in all required General Liability and Automobile Liability insurance.

b) Named Insureds in all required Owners and Contractors Protective Liability and Builder's Risk insurance policies.

c) Loss Payee As Its Interest May Appear in all required property, fidelity or Surety coverages.

2) INSURANCE APPROVAL

All insurance required hereunder shall conform to the City requirements established by Charter, ordinance or policy. Evidence of insurance shall be approved by the Office of the City Administrative Officer, Risk Management prior to commencement of any Work or tenancy under this Contract in accordance with the Los Angeles Administrative Code.

3) ALTERNATIVE PROGRAMS/SELF-INSURANCE

Alternative Risk Financing mechanisms such as Risk Retention Groups, Risk Purchasing Groups, off-shore carriers, captive insurance programs and self-insurance programs are subject to separate approval after the City has reviewed their financial statements.

4) ADMITTED CARRIER/LICENSED CALIFORNIA BROKER

All Insurance must be provided by an insurer admitted to do business in California or written through a California-licensed surplus lines broker or through an insurer otherwise acceptable to the City.

Non-admitted coverage must also contain a Service of Suit provision whereby the underwriters will submit as necessary to any court of competent jurisdiction in California and agree that all matters arising thereunder will be determined in accordance with the law and practice of such court. It must further give the name and address of the underwriter's agent for service of process located within California or must nominate the California Insurance Commissioner as such agent.

5) CONTRIBUTION NOT REQUIRED

The Contractor's insurance shall be primary and will not require contribution or shall be endorsed to effect these provisions.

6) CANCELLATION/REDUCTION IN COVERAGE NOTICE

With respect to the interest of the City, if an insurance company elects to cancel insurance before the stated expiration date, or declines to renew in the case of a continuous policy, or materially reduces the coverage period by changing the retroactive date (if any), or the extended discovery period (if any), or reduces the stated limits other than by impairment of an aggregate limit, or materially reduces the scope of coverage which affects the City's interest, the company will provide the City at least thirty (30) calendar days (ten (10) calendar days for non-payment of premium) prior written notice of such election. Notice will be addressed as follows: CAO-RISK MANAGEMENT, MAIL STOP 132, CITY HALL EAST 1240, 200 NORTH MAIN STREET, LOS ANGELES, CA 90012-4190.

7) ACCEPTABLE EVIDENCE

Electronic submission via Track4LA™, the City's online insurance compliance system (http://track4la.lacity.org), is the preferred method for submitting evidence of insurance. Track4LA™ can be used by insurance brokers and agents to submit Contractor insurance certificates directly to the City using the ACORD 25 Certificate of Liability Insurance in electronic format. Insurance Industry Certificates of Insurance other than the ACORD 25 may also be accepted. However **all** Certificates must provide a thirty (30 days' notice provision (ten (10) days for non-payment of premium) AND an Additional Insured Endorsement naming the City an additional insured completed by Contractor's insurance company or its designee. If the policy includes an automatic or blanket additional insured endorsement, the Insurance Certificate must state that the City is an automatic or blanket additional insured. An endorsement naming the City as an insured is required on all Builder's Risk policies. An endorsement naming the City as Loss Payee as its Interest may appear is required on all property, fidelity or Surety coverages.

Alternatively, the Contractor may submit a copy of the full insurance policy containing language which complies with subparagraphs 1) through 6) above.

Additional Insured Endorsements DO NOT apply to the following:

- Indication of compliance with statute, such as Workers' Compensation Law.
- Professional Liability insurance.

8) SEPARATION OF INSUREDS

Except with respect to the insurance company's limits of liability, each liability insurance policy shall apply separately to each insured against whom a claim or suit is brought. The inclusion of any person or organization as an insured shall not affect any right which such person or organization would have as a claimant if not so included.

9) RENEWAL

Once the insurance has been approved by City, evidence of renewal of an expiring policy may be submitted on a manually signed renewal endorsement or certificate form. If the policy or carrier has changed, however, new evidence as specified in paragraphs 1) through 8) above, must be submitted.

B) AGGREGATE LIMITS/REDUCTION IN COVERAGE

If any of the required insurance coverages contain annual aggregate limits, the Contractor must give the City written notice of any pending claim or lawsuit which will materially diminish the aggregate within thirty (30) days of knowledge of same. Further, the Contractor must take appropriate steps to restore the impaired aggregate limits or provide replacement insurance protection within thirty (30) days of knowledge of same. The City may, at its option, specify a minimum acceptable aggregate for each line of coverage required.

The Contractor shall not make any substantial reductions in scope of coverage (e.g., elimination of contractual liability or reduction of discovery period) which may affect the City's protection without the City's prior written consent.

C) MODIFICATION OF COVERAGE

The City reserves the right at any time during the term of this Contract to change the amounts and types of insurance required hereunder by giving the Contractor ninety (90) calendar days advance written notice of such change. If such change should result in substantial additional cost to the Contractor, the City agrees to negotiate additional compensation.

D) FAILURE TO PROCURE INSURANCE

The Contractor's failure to procure or maintain required insurance or a self-insurance program during the entire term of this Contract shall constitute a material breach of this Contract under which the City may immediately suspend or terminate this Contract or, at its discretion, procure or renew such insurance to protect the City's interests and pay any and all premiums in connection therewith, and recover all monies so paid from the Contractor.

E) UNDERLYING INSURANCE

The Contractor shall be responsible for requiring indemnification and insurance as it deems appropriate from its consultants, agents and Subcontractors, if any, to protect the Contractor's and the City's interests, and for ensuring that such persons comply with any applicable insurance statutes. The Contractor should seek professional advice in this regard.

F) WORKERS' COMPENSATION

By signing this Contract, the Contractor hereby certifies that it is aware of the provisions of Section 3700 et seq., of the Labor Code which require every employer to be insured against liability for Workers' Compensation or to undertake self-insurance in accordance with the

provisions of that Code, and that it will comply with such provisions at all such times as they may apply during the performance of the Work pursuant to this Contract.

A waiver of subrogation in favor of the City will be required when Work is performed on City premises under hazardous conditions. The Contractor's Workers' Compensation and Employer's Liability insurance shall be endorsed accordingly.

G) ALL RISK BUILDER'S RISK/INSTALLATION FLOATER

During the course of construction, the Contractor shall secure and maintain an All Risk Builder's Risk Insurance policy covering loss, damage or destruction of property, including materials in transit and stored on and off site, in an amount equal to the value of the construction and materials on hand.

An Installation Risk or "Floater" Policy, written to cover only specific types of equipment during construction, may be provided to cover damage to Work or high valued equipment or materials.

Coverage shall remain in force until the Work is completed and accepted by the City. Acceptable evidence of coverage shall be in the form of an endorsement to the policy which names the City as a Named Insured and as Loss Payee As Its Interest May Appear.

H) TYPICAL COVERAGES REQUIRED

The coverages required in A above shall be at least as broad as:

1) General Liability: Insurance Services Office Commercial General Liability coverage (Occurrence Form CG 00 01) with an edition date prior to 2004. Coverage shall include protection for the City as additional insured with regard to the completed operations hazard.

2) Automobile Liability: Insurance Services Office Form Number CA 00 01 covering Automobile Liability, code 1 (any auto).

3) Professional Liability: If applicable, errors and omissions liability appropriate to the consultant's profession, with a discovery period of not less than twelve (12) months after completion of Work or termination of Contract.

I) TYPICAL LIMITS OF LIABILITY

Unless otherwise specified in Form Gen. 146/IR, the Contractor shall maintain limits no less than:

1) General Liability: $1,000,000 per occurrence, $2,000,000 aggregate for bodily injury and property damage. A separate aggregate shall apply to completed operations.

2) Automobile Liability: $1,000,000 per accident for bodily injury and property damage.

3) Employer's Liability: $1,000,000 per accident for bodily injury or disease.

1) Professional Liability: $1,000,000 per claim.

K) CONTRACT BONDS

Before the execution of the Contract by the Board, the Bidder shall file with the Board Surety bonds satisfactory to the Board in the amounts and for purposes noted below. Bonds shall be duly executed by a responsible corporate Surety, authorized to issue such bonds in the State of

California and secured through an authorized agent with an office in California. Bonds shall be issued by a Surety who is listed in the latest revision of U.S. Department of Treasury Circular 570, is authorized to issue bonds in California, and whose bonding limitation shown in said circular is sufficient to provide Bonds in the amount required by the Contract. The Bidder shall pay all Bond premiums, costs, and incidentals. On Contracts estimated by the Engineer to be less than $2 million, Bonds may be obtained from an insurance company with a Certificate of Authority from the California Insurance Commissioner authorizing the company to write Surety insurance within the State of California.

Each Bond shall be signed by both the Bidder and the Surety, and the signature of the authorized agent of the Surety shall be notarized.

The Bidder shall provide two good and sufficient surety bonds. The "Payment Bond" (Material and Labor Bond) shall be for not less than one hundred percent (100%) of the Contract Price, to satisfy claims of material suppliers and of mechanics and laborers employed by it on the Work. The bond shall be maintained by the Contractor in full force and effect until the Work is accepted by the Board, and until all claims for materials and labor are paid, and shall otherwise comply with the California Civil Code.

The "Performance Bond" shall be for one hundred percent (100%) of the Contract Price to guaranty faithful performance of all Work, within the time period prescribed, in a manner satisfactory to the Board, and that all materials and Workmanship will be free from original or developed defects, and comply with requirements and guaranty specified in “Guaranty-Warranty” of the General Requirements.

Should any Surety at any time be unsatisfactory to the Board, notice will be given the Contractor to that effect. No further payments shall be deemed due or will be made under the Contract until a new Surety shall qualify and be accepted by the Board.

Changes in the Work, or extensions of time, made pursuant to the Contract, shall in no way release the Contractor or Surety from its obligations. Notice of such changes or extensions shall be waived by the Surety. In addition to the bonds detailed above, the Contractor shall provide a guarantee bond as detailed in “Guaranty-Warranty” of the General Requirements.

Assistance in obtaining the City-required bid, payment and performance surety bonds is available through the City of Los Angeles Bond Assistance Program at (213) 258-3000 or http://cao.lacity.org/risk/BondAssistanceProgram.pdf.

00318 SERVICE OF NOTICE (2/09/94)

The delivering of any notice, instruction, claim or protest, or other written communication, personally to the Contractor or the Contractor’s Representative or to the Engineer, the Inspector, or to the City Clerk of the City shall constitute service therefore upon the Contractor, the Engineer, the Inspector, or the City, respectively.

The depositing of a post-paid (Registered Mail) wrapper directed to the official address of the Contractor, the Engineer, the Inspector, or the City in any post office, of any notice, instruction, claim or protest, or written communication, shall be deemed sufficient service thereof upon the Contractor, the Engineer, the Inspector, or the City, respectively, and the date of said service shall be the day following the date of postmark.

The official address of the Contractor shall be the address given in the accepted Bid or such other address as the Contractor may subsequently designate in writing either to the Engineer or to the City. The official address of the Engineer, the Inspector, and the City will be supplied to the Contractor after the award.

00319 AGENT TO ACCEPT SERVICE (10/21/99)

The Contractor shall maintain within Los Angeles County a duly authorized agent as identified in the Article entitled Service of Notice to accept service of legal process on its behalf, and shall keep the City advised of such agent's name and address during the duration of the Contract and for three (3) years after the Final Payment, or as long as the Contractor has warranty obligations under the Article entitled "Guaranty-Warranty" of General Requirements, whichever period terminates later. In the event that no such duly authorized agent is on file with the City, the Contractor agrees that the Secretary of State of the State of California shall be the Contractor's agent for service of legal process.

00320 – 00399 NOT USED

00400 TEMPORARY SUSPENSION OR DELAY OF WORK (9/18/07)

If the Work of the Contract is suspended or delayed, the Contractor shall so notify the Engineer within twenty-four (24) hours after the start thereof. If the Contractor is entitled to reimbursement for such suspension or delay, as specified hereinafter, the Contractor shall submit a completely detailed statement of the costs thereof, to the Engineer, within twenty (20) calendar days after the termination thereof. Failure to submit such statement of costs or notification within the time specified shall be deemed a waiver of any claims for delay or damages or both by the Contractor.

If the Work of the Contract is suspended or delayed through no fault of the City, except as provided for in Unavoidable Delay of these General Conditions, all expenses and losses shall be borne by the Contractor with no time extension, additional reimbursement for extended overhead, or interest on monies due, allowed to the Contractor.

If the Work of the Contract is suspended or delayed by an act of the City, or by failure of the City to furnish required information, and the Contractor thereby incurs expenses or sustains losses which could not have been avoided by the judicious handling of forces and equipment, and if by a diligent prosecution of the Work the Contractor could not have completed the Work before such suspension, the Contractor will be paid such amount as the Engineer may find to be a fair and reasonable compensation for such part of the Contractor's actual loss. In no case shall any compensation be made to cover any loss other than actual cash paid for wages, rental of equipment, and materials used in protection of the Work, all of which must be supported by satisfactory written evidence. Such wages shall not include the wages or salary of any individual not necessary for protection of the Work. The Contractor shall not be entitled to any mark-up for overhead or profit on damages or for extended duration or for interest on monies due for work satisfactorily completed prior to the suspension or delay.

The Contractor shall maintain complete and accurate daily records of all costs due to delay, clearly distinguishing them from the costs of other portions of the Work, and shall submit a detailed written report of such costs to the Engineer and the Inspector within twenty (20) calendar days of incurring the delay. Failure to comply shall result in waiver by the Contractor to any claims for additional payment and schedule change. In addition, the Contractor shall submit evidence of any cause of delay specified herein if it has not already done so.

As soon as practicable, following receipt of such report and evidence, if required, the Engineer will determine the nature and extent of such costs and will, if the Engineer finds that payment is due, issue a Change Order therefor, subject to the provisions in "Change Orders" of the General Requirements. If the Engineer determines that payment is not due, the Contractor will be so advised in writing. Should the Contractor disagree with such finding, Contractor may submit a notice of protest to the Engineer as provided in Claims and Protests. The Contractor shall provide the Engineer with access to its daily cost records or certified copies thereof as requested. All such records shall be retained by the Contractor and open to inspection and audit by the City and the Engineer. Except for the additional compensation

provided hereinbefore, the Contractor shall have no claim for damage or compensation for any delay or hindrance whether or not contemplated by the Contract.

00401 UNAVOIDABLE DELAY (10/17/01)

Should the Contractor be obstructed or delayed in the completion of the Work from causes beyond its control and without its fault or negligence, and solely due to acts of God, acts of government in its sovereign capacity, riots, insurrections, wars, fires, floods, earthquakes, tidal waves, epidemics, quarantine restrictions, industry-wide strikes, freight embargoes, or unusually severe weather, it shall be entitled to a noncompensable extension of time.

The Contractor shall only be entitled to a noncompensable extension of time for Unavoidable delay in the Work which negatively impacts the critical path of the approved project schedule, and causes the Work of the project to extend beyond the approved Contract Completion date.

The Contractor shall be entitled to a noncompensable time extension only if it notifies the Engineer and the Inspector immediately at the time the Contractor is prevented from proceeding with the Work and follows with written notification of the causes of the delay within five (5) calendar days from the beginning of any delay. Also, the Contractor shall notify the Engineer and the Inspector immediately at the end of the delay and follow up with written notification of the cessation of delay within five (5) calendar days from the end of the delay.

Any claim for a time extension shall be made in writing within twenty (20) calendar days after the conclusion of the delay. The Engineer and the Inspector shall ascertain the facts and the extent of the delay and extend the time for completing the Work if, in their judgement, the findings of fact justify such an extension. The Engineer's decision shall be final and conclusive, subject only to appeal as provided by Claims and Protests.

00402 ARCHAEOLOGICAL AND PALEONTOLOGICAL DISCOVERIES (9/18/07)

If items of archaeological or paleontological interest are discovered, the Contractor shall immediately cease excavation in the area of discovery and shall not continue until ordered by the Engineer. When resumed, excavation operations within the area of discovery shall be as directed by the Engineer.

Such discoveries include antiquated dwelling sites, stone implements or other artifacts, animal bones, human bones, fossils and the like. The Contractor shall be entitled to an extension of time and compensation in accordance with the provisions of Temporary Suspension or Delay of Work.

00403 COORDINATION WITH OTHER CONTRACTS (1/30/03)

The Board may allow other work at the site by the City's own forces, utility owners or other direct contracts. If such other work to be performed was not noted in the Contract Documents, written notice thereof will be given to the Contractor prior to starting any such other work; and, if the Contractor believes that such performance will involve additional expense to the Contractor or requires additional time and the parties are unable to agree as the extent thereof, the Contractor may make a claim therefor as provided under Claims and Protests.

Paving of roadway areas shall be withheld until planned utility changes or installations have been made under City permits and until verifications of completion of all such changes or installations have been received by the Inspector. The Contractor is responsible for assuring that verifications are submitted by the utilities. Underground final inspection and acceptance of sewer and storm drain installations shall precede paving operations.

The Contractor shall afford each utility owner and other contractor who is a party to such a direct contract (or the City, if the City is performing the additional work with City employees) proper and safe access to

the site and a reasonable opportunity for the introduction and storage of materials and equipment and the execution of such work, and shall properly connect and coordinate the Work with theirs. The Contractor shall do all cutting, fitting and patching of the Work that may be required to make its several parts come together properly and integrate with such other work. The Contractor shall not endanger any work of others by cutting, excavating or otherwise altering their work and will only cut or alter their work with the written consent of the Engineer and the others whose work will be affected. The duties and responsibilities of the Contractor under this Article are for the benefit of such utility owners and other contractors to the extent that there are comparable provisions for the benefit of the Contractor in said direct contracts between the City and such utility owners and other contractors.

If any part of the Contractor's work depends upon proper execution or results of the work of any such other contractor or utility owner or the City, the Contractor shall inspect and promptly report to the Engineer in writing any delays, defects or deficiencies in such work that renders it unavailable or unsuitable for such proper execution and results. The Contractor's failure to do so will constitute an acceptance of the other Work as fit and proper for integration with the Contractor's Work. The exception is latent defects in the other work.

00404 TERMINATION OF CONTRACT BY CITY (CONTRACTOR NOT AT FAULT) (9/18/07)

The Contract may be terminated, in whole or in part, at any time, by the City, at its sole discretion, without cause and for the City's convenience. Such termination will be accomplished by delivery of a written "Notice of Termination" to the Contractor, specifying the extent to which performance of the Work under the Contract or portion of the Contract shall be terminated and the date upon which such termination shall become effective.

After receipt of a Notice of Termination, except as otherwise directed by the City, the Contractor shall:

1) Stop Work under the Contract on the date and to the extent specified in the Notice of Termination.

2) Notify the City in writing of all outstanding orders, Subcontracts and contracts entered into by Contractor for performance of the Work, including the (I) name and address of the vendor, supplier or Subcontractor; (ii) a copy of the complete contract, order or Subcontract; (iii) an accounting of the Work performed and compensation earned by the vendor, supplier or Subcontractor, and (iv) such other information as the City may request to assist it in determining whether to terminate or accept assignment of the order, Subcontract or contract.

3) Upon written notice by City, terminate all Subcontracts, orders and contracts, of any tier, related to the performance of the Work that the City determines shall be terminated and not assigned. Place no further orders or Subcontracts for Goods or services, except as may be necessary for completion of that portion of the Work that has not been assigned.

4) Place no further orders or Subcontracts for Goods or services, except as may be necessary for completion of that portion of the Work that has not been terminated.

5) Settle outstanding liabilities and Claims arising out of such termination of orders and Subcontracts, with the Acceptance of the City if required (which Acceptance shall be final for the purposes of this Article).

6) Assign to the City in the manner, at the times, and to the extent directed by the City all of the rights, titles, and interests of the Contractor under such orders, contracts and Subcontracts so terminated.

7) Transfer title and deliver to the City in the manner, at the times and to the extent directed by it, the fabricated or unfabricated parts, Work in process, completed Work, supplies, and other

Goods procured as a part of, or acquired in connection with the performance of the Work terminated; and completed or partially completed plans, drawings, information and other items that would have been required (per the Specifications) to be furnished to the City if the Contract had been completed.

8) Use its best efforts to sell the property of the types referred to above in the manner, at the times, to the extent, and at the price(s) directed or authorized by the City, providing that the:

   A) Contractor is not required to extend credit to any purchaser;

   B) Contractor may acquire any such property under the prescribed conditions; and/or proceeds of any such transfer or disposition are applied or otherwise credited to reduce payments made by the City to the Contractor under the Contract.

9) Take any action that may be necessary, or that the City may direct, for the protection and preservation of the property related to the Contract that is in the possession of the Contractor and in which the City has or may acquire an interest.

10) Complete performance of that portion of the Work that has not been terminated by the Notice of Termination, as applicable and in accordance with the Contract.

After receipt of a Notice of Termination for the City's convenience, the Contractor shall submit its termination Claim to the City requesting payment of such sums as are permitted under the terms of this Article, in the form and with the certification(s) prescribed by the City for Claims and Protests. Such Claim shall be submitted promptly but in no event later than thirty (30) days from the effective date of termination, unless one or more extensions are granted in writing by the City upon written request by the Contractor during such six-month period or authorized extension thereof. However, the City may receive and act upon any termination Claim at any time after the thirty (30) days period or any extension thereof, if it determines that the facts justify such action. Upon failure of the Contractor to submit its termination Claim within the time specified, the City will determine the amount due the Contractor, if any, on the basis of information available, and will pay the Contractor the amount so determined. Such determination shall be final and binding and payment shall be in full settlement for the Work performed under the Contract.

Subject to the provisions of this Article, the Contractor and the City may agree upon the total or partial amount to be paid to the Contractor by reason of the total or partial termination pursuant to this Article. The agreed upon amount shall under no circumstances include any sum for lost profits on the terminated portion of the Work or for consequential damages, of any kind. If agreement is reached, the Contract will be amended by Modification accordingly and the Contractor will be paid the agreed upon amount.

In the event of failure of the Contractor and the City to agree on the total amount to be paid the Contractor by reason of the termination of Work pursuant to this Article, the City will pay the Contractor the amounts determined by the City as follows, exclusive of any amounts agreed upon in accordance with the preceding Paragraph:

The Contractor’s actual cost for the Work properly performed by the Contractor as of the date of termination, including a 5% allowance for profit on such costs; plus, the reasonable cost of preserving and protecting property; plus, other reasonable costs incidental to the termination of the Work under the Contract, including expense incurred to determine the amounts due; provided however, that the maximum payable or paid for any portion of the completed Work shall not exceed the values listed in the corresponding bid item of Schedule of Values.

The total sum to be payable or paid to the Contractor, exclusive of the settlement amounts described in the Paragraph immediately above, shall not exceed the total Contract Price less the:

1) Payments made previously by the City for the Work; plus

2) A prorated portion of the total Contract Price for the terminated portion of the Work as determined by the Engineer.

Except for normal spoilage and to the extent that the City will have otherwise expressly assumed the risk of loss, the fair value (as determined by the City) of property that is destroyed, lost, stolen, or damaged (so as to become undeliverable to the City or other buyer as described above) shall be excluded from the amounts paid to the Contractor.

In arriving at the amount due the Contractor under this Article, a deduction shall be made for the following:

1) Any claim that the City may have against the Contractor in connection with the Contract; and

2) The agreed upon price for and/or proceeds from the sale of goods or other items acquired or sold by the Contractor that have not been otherwise recovered by or credited to the City.

Under such terms and conditions as it may prescribe and at its sole discretion, the City may make partial payments against costs incurred by the Contractor in connection with terminated portion of the Contract whenever the City decides that the aggregate of such payments is within the amount to which the Contractor is entitled hereunder. If the total of such payments is in excess of the amount finally agreed upon or determined to be due under this Article, such excess shall be payable by the Contractor to the City upon demand together with interest at a rate equal to that set forth in California Code of Civil Procedure, Section 685.010.

Under no circumstances shall the Contractor be entitled to anticipatory or unearned profits or consequential damages as a result of a termination of partial termination under this Article, or for any other termination by the City. The payment to the Contractor determined in accordance with this Article shall constitute the exclusive remedy of the Contractor for termination hereunder.

Anything contained in the Contract to the contrary notwithstanding, a termination under this Article shall not waive any right or claim to damages that the City may have; the City may pursue any course of action that it may have by law or under the Contract; and shall not relieve Contractor of its warranty obligations with respect to any Work performed prior to such termination.

If the termination hereunder is only for a part of the Work, the Contract Price shall be reduced by the amount of the Contract Price applicable to the portion of the Work which is terminated, including overhead and profit, on the basis of one or more of the following:

1) Unit prices stated in the Contract or agreed upon by the City and the Contractor.

2) A lump sum determined by the Engineer, based on the estimate costs including overhead and profit of the terminated portions of the Work.

00405 TERMINATION OF CONTRACT BY CITY (CONTRACTOR DEFAULT) (9/18/07)

In the event of conduct by the Contractor which is determined by the Engineer or the Inspector to constitute default, the City may either suspend the Work under the provisions of Temporary Suspension or Delay of Work of these General Conditions or, upon ten (10) calendar days' written notice to the Contractor, terminate the Contract as provided herein. Default by the Contractor shall occur whenever it shall declare bankruptcy; become insolvent or assign its assets for the benefit of its creditors; fail to provide materials, equipment, or workmanship meeting the requirements of the Specifications; disregard or violate provisions of the Contract Documents or the Engineer’s or the Inspector’s instructions; cause a material breach of the Contract; fail to prosecute the Work according to the approved progress schedule; or fail to provide a qualified representative, competent workers or Subcontractors. Upon request, the

Contractor will be provided a hearing by the Board to contest the recommendation of the Engineer or the Inspector as to default by the Contractor.

In the event the Contract is terminated pursuant to this Article, the City may take possession of the Work and of all materials, tools, equipment, and property of the Contractor, which have been provided in connection with the Work, and may complete the Work by whatever method or means the City may select. The unpaid balance of the Contract cost for completing the Contract Work shall be used to complete the Work in accordance with the Contract Documents. If cost of completing the Work exceeds the unpaid balance, the Contractor shall pay the excess amount to the City. If such cost is less than the unpaid balance, the Contractor shall not have claim to the difference except to such extent as may be necessary, in the opinion of the Engineer, to reimburse the Contractor or the Contractor's sureties for any unpaid expense properly incurred for materials, tools, equipment, property, and labor devoted to the prosecution of the Work, or which the City shall have received the benefit. In computing such expenses, as it relates to equipment and property, the salvage value at completion of Work shall be deducted from the salvage value at the time the Contract was terminated, and the difference shall be considered as an expense. If after termination for failure of the Contractor to fulfill contractual obligations (Contractor Default), it is determined by a Court of competent jurisdiction that the Contractor had not failed to fulfill contractual obligations, the termination shall be deemed to have been for the convenience of the City. In such an event, adjustment of the Contract Price shall be made as provided in Termination of Contract by City (Contractor Not at Fault)".

00406 PARTIAL ACCEPTANCE (9/18/07)

The City shall have the right to utilize or place into service any item of equipment or other usable portion of the Work prior to completion of the entire project. The Engineer will notify the Contractor in writing identifying the specific portion or portions of the Work to be so utilized or otherwise placed into service. Following inspection by the Bureau of Contract Administration's Final Inspector and completion of a Partial Final Inspection Correction List, a "Statement of Partial Completion" will be issued.

It shall be understood by the Contractor that until a "Statement of Partial Completion" is issued, all responsibility for care and maintenance of all items or portions of the Work to be placed in use shall be borne by the Contractor. Upon issuance of a "Statement of Partial Completion", the City will accept responsibility for the protection and maintenance of all such items or portions of the Work described in the written notice, and it is further understood that the manufacturer's warranties of any affected equipment will commence not later than the date for commencement of the warranties indicated on the "Statement of Partial Completion". However, the Contractor shall retain full responsibility for satisfactory operation of the total project and the Contractor's guarantee period shall commence only after the issuance of the Statement of Completion. Such guarantee of total systems operation shall include that portion or portions of work covered by the "Statement of Partial Completion".

The issuance of a "Statement of Partial Completion" for any part of the Work shall not relieve the Contractor of its obligation to promptly remedy any omissions and latent or unnoticed defects in the Work covered by the "Statement of Partial Completion". The City shall have the right to restrict the Contractor's use of the occupied portion of the Work but shall allow the Contractor reasonable access to complete or correct items required by the Contract Documents.

The City may, if the Work is progressing satisfactorily, release part of the retention on portions of the Work for which a "Statement of Partial Completion" has been issued, provided that the following conditions have been met:

1) Partial Final Inspection corrections have been completed to the satisfaction of the Inspector on the portions of work to be utilized or placed into service;

2) The Contractor submits a written request to the Inspector for release of retention which includes a verifiable valuation of the identified portions of the Work covered by the "Statement of Partial Completion";

3) Impacted Subcontractors, major suppliers and the Contractor's Surety all agree in writing to release of retention;

4) There are no Stop Notices on file with the Board against the Contractor involving any portion of the affected Work; and

5) Both the Engineer and Inspector agree that a portion of the retention should be released for the affected Work.

00407 FINAL ACCEPTANCE (02/21/08)

When all work has been completed to the satisfaction of the Inspector, the Inspector shall request in writing a Full Final Inspection be performed by the Final Inspector. The Full Final Inspection conducted by the Final Inspector may include the Contractor and the Engineer. A Final Inspection Correction List will be provided to the Contractor and the Engineer upon completion of the Final Inspection. All corrections listed on the Final Inspection Correction List shall be completed within thirty (30) days of issuance of the Final Inspection Correction List. Failure to complete all corrections within thirty (30) days of issuance of the Final Inspection Correction List shall result in the Final Inspection being performed again.

The date of completion of the Project shall be the date of Final Field Acceptance of the Project when all physical corrections have been completed. The Final Inspector will issue the Statement of Completion indicating the date of Final Field Acceptance of the Project.

If there are no physical corrections to be completed following the Full Final Inspection, the Final Inspector will issue the Statement of Completion indicating the date of Final Field Acceptance of the Project.

Final Field Acceptance of the Project shall establish the following:

1) Start date of the Contractor's material and workmanship Guaranty-Warranty for the total Project.

2) Start date of any equipment or material warranties which had not previously been started.

3) Date the City assumes responsibility for maintenance, security, and safety of the Project.

Upon issuance of the Statement of Completion by the Final Inspector and completion of all administrative requirements of the contract, the Inspector of Public Works and City Engineer shall prepare a Joint Report which contains the recommendation of the Inspector of Public Works that the Board accept the Project. The Board will formally accept the project based on the information contained in the Joint Report.

00408 LIQUIDATED DAMAGES (9/18/07)

Time is of the essence in completing the Work required by the Contract. If the Contractor fails or refuses to complete the Work or any part thereof within the time fixed by the terms of the Contract, or any approved extension thereof, the actual damage to the City due to the delay will be difficult or impossible to determine. In lieu thereof, the Contractor shall pay to the City, as fixed and agreed, liquidated damages for each day of delay in completion, the sum or sums as set forth in the Contract Documents. The Contractor shall be liable for the amount thereof. The City reserves the right, however, to terminate the

Contractor's completion of the Work, charging against the Contractor and its sureties any excess cost occasioned the City thereby, together with liquidated damages accruing until such time as the City may reasonably complete the Work.

Permitting the Contractor to continue and complete the Work, or any portion thereof, after the time fixed herein for completion, or after the expiration of any extensions of said time, shall in no way operate as a waiver on the part of the City of any of its rights under the Contract.

00409 – 00499 NOT USED

00500 CHANGES AND EXTRA WORK (9/18/07)

The Engineer may, at any time, without notice to the Sureties, by written order designated or indicated to be a Change Order, order performance of extra work or make any change, addition or deletion in the Work, including but not limited to changes in the Specifications including Plans and designs; in the time, method or manner of performance of the Work; in the City furnished facilities, equipment, materials, services, or site; or directing acceleration in the performance of the Work.

Upon receipt of such Change Order, the Contractor shall promptly proceed with the Work covered thereby, which shall be performed in accordance with the provisions of the Contract Documents except as otherwise specifically provided.

In the event that Contractor receives any written order or direction by the Engineer or Inspector that is not so designated or indicated to be a Change Order, but which Contractor believes to constitute an extra, change, addition or deletion in the Work, then Contractor shall, prior to performance of any Work related thereto, give written notice to the Engineer and Inspector confirming Contractor's belief that such order or direction is believed to be a Change Order within one (1) working day of Contractor's receipt of such order or direction. Compensation for the extra, change, addition, or deletion in the Work will be in accordance with the provisions of "Change Orders" of the General Requirements.

Contractor conclusively waives any right to additional compensation, costs, expenses, damages or extension of time associated with an extra, change, addition or deletion to the Work that is performed by Contractor without either (i) a written order signed by the Engineer designated or indicated to be a Change Order and any change, addition or deletion, or (ii) a written notice issued by Contractor in accordance with the provisions of this Article.

During the progress of the Work, it may be necessary for the Engineer to issue written field orders in the form of an Emergency Change Order. Upon receipt, The Contractor shall immediately proceed with the Engineer's written directive to the limits described in Authority of the Board, Engineer, and Inspector.

Except as provided in this Article, no other order, statement, or conduct of the Engineer or Inspector shall be treated as a change under this Article or shall entitle the Contractor to an adjustment in the Contract Price or Contract Completion Date.

Except for claims based on defective Specifications, no Claim for any change under this Article shall be allowed for any costs incurred more than twenty (20) calendar days before the Contractor gives written notice as required. Except as otherwise provided in the Contract Documents, in the case of defective specifications for which the Engineer is responsible, the adjustment shall include any increased cost the Contractor reasonably incurred in attempting to comply with those defective specifications.

If the Contractor intends to assert a Claim for an adjustment in the Contract Price under this Article, it must, within twenty (20) calendar days after receipt of a written Change Order or the furnishing of a written confirmation notice as hereinbefore specified, submit a written statement to the Engineer setting forth the general nature and monetary extent of such claim and all factual grounds therefor, including

documented actual costs. The Contractor may include the statement of claim in the written notice as hereinbefore specified. Failure to comply with the twenty (20) calendar day notice requirement shall be deemed a waiver of Claims by the Contractor.

No adjustment shall be made under this Article for any suspension, delay, interruption, change or any other cause, to the extent that an adjustment is provided for or excluded under any other provision of the Contract.

Recovery of compensation, costs, expenses or damages resulting from delay, disruption, hindrance, or interference in the performance of the Work (including without limitation interruption of schedules, extended, excess or extraordinary field overhead and indirect overhead costs, loss of productivity and the impact, ripple or cumulative effect on other Work), shall not be permitted, and all rights thereto are conclusively waived by Contractor.

No Claim by the Contractor shall be allowed if the Claim is made after final payment under this Contract.

00501 DIFFERING SITE CONDITIONS (9/18/07)

Upon discovery and before further disturbance of any differing site conditions, the Contractor shall immediately notify the Inspector and the Engineer, followed by a written notice to the Engineer within twenty-four (24) hours of subsurface or latent physical conditions at the site differing materially from those indicated in the Contract Documents; or unknown physical conditions at the site, of an unusual nature, differing materially from those ordinarily encountered and generally recognized as inherent in the Work of the character provided for in this Contract; or materially differing from that represented in the Contract Documents which the Contractor believes may be hazardous waste (as defined in the California Health and Safety Code and is required to be removed to a Class I, Class II or Class III disposal site in accordance with provisions of existing law).

The Engineer will promptly investigate the conditions. If the Engineer finds that conditions materially differ and will cause an increase or decrease in the Contractor's cost or the time required to perform any part of the Work, the Engineer will adjust the Contract by Change Order.

If the Contractor disagrees with the Engineer's determination the Contractor may request an adjustment to the Contract Price or Contract Completion Date. Within twenty (20) calendar days after it first discovered, or should have discovered in the exercise of diligence and extreme care, the existence of such Differing Site Condition, submit a written statement setting forth a detailed cost breakdown described in "Change Orders" of the General Requirements. The statement must include the Contractor's basis and calculation of the costs saved or incurred, detailed information demonstrating the effect on the Contractor's schedule of performance (in the same manner as required by the Contract Documents for requesting an extension of time), identification of the Escrow Bid Documents that formed the basis of the Contractor's Bid to perform the Work affected by such conditions, and a complete and detailed explanation of the factual basis for the request.

Failure by the Contractor to strictly comply with the requirements of this Article concerning the timing and content of any notice of Differing Site Conditions or of any request for adjustment in Contract Price or Contract Completion Date based on Differing Site Conditions shall be deemed a waiver of any Claim by the Contractor for increase in the Contract Price or extension of the Contract Completion Date by reason of such conditions.

No Claim by the Contractor for an adjustment hereunder shall be allowed if asserted after final payment under this Contract.

00502 – 00599 NOT USED

00600 CLAIMS AND PROTESTS (9/18/07)

A Claim that involves an extra, change, addition or deletion to the Work as set forth in Changes and Extra Work shall arise upon issuance of a final decision of the Engineer denying, in whole or in part, a request for adjustment in the Contract Price or Contract Completion Date; provided however, that failure to comply with the requirements of the articles for Changes and Extra Work or Differing Site Conditions shall be conclusively deemed to constitute grounds to deny such Claim.

A Claim that does not involve an extra, change, addition or deletion to the Work may be asserted only if the Contractor shall immediately and prior to performing the Work affected thereby give written notice to the Engineer and the Inspector of such circumstances and of Contractor's intention to file a Claim based thereon. Unless otherwise directed by the Engineer, the Contractor shall proceed without delay to perform the Work and to conform to any order, instruction, or decision of the Engineer with respect thereto.

The Contractor shall, within twenty (20) calendar days after it first knew, or in the exercise of diligence and extreme care should have known, of the circumstances giving rise to the Claim, file a written Claim with the Engineer, stating in detail all objections, grounds and reasons therefor. The Contractor shall, upon instruction by the Engineer or the Inspector, provide, within ten (10) days or such other time as agreed to between the Engineer, and the Contractor, any and all documents, records or other materials identified by the Engineer or the Inspector as necessary for the resolution of the Contractor's Claim.

Claims seeking time extensions shall be accompanied by such documentation as is required by "Contractor's Construction Schedule and Reports" of the General Requirements. Claims seeking recovery of compensation or adjustments to the Contract Price, whether or not based on extras, changes, additions or deletions to the Work, shall be in the form of Change Order Cost Quotations prepared in accordance with and subject to all of the requirements of "Change Orders" of the General Requirements, including without limitation the prohibition on use of "total cost" and "modified total cost" methodologies.

Contractor waives all rights to assert any claims or seek any relief in the form of extensions of time or recovery of additional compensation, costs, expenses, damages from the City that are not presented as a Claim in the manner specified and within the time stated herein. Contractor further hereby agrees that in the interest of avoiding the additional expense and potential inequity of piecemeal resolution of Claims, all decisions by Engineer shall be final and binding not only as to all matters asserted in the Claim, but also as to all matters (including without limitation all rights to extensions of time and recovery of extra compensation, costs, expenses and damages) not asserted in the Claim that were known to Contractor, or that could have been reasonably discovered by Contractor in the exercise of diligence and extreme care, at the time of submission of the Claim and that are in any way related to the subject matter of the Claim. All orders, instructions and decisions of the Engineer or the Inspector will be limited to matters properly falling within their respective authority as specified in Authority of the Board, Engineer and Inspector.

The Contractor will be informed of the Engineer's or the Inspector's decision within thirty (30) days after the Contractor last submits data pertinent to the Claim previously mentioned. In the case of a Claim that involves an extra, change, addition or deletion to the Work as set forth in Changes and Extra Work, if the Contractor accepts the decision of the Engineer or Inspector, then the Contractor and City shall enter into a Change Order adjusting the Contract Price and Contract Completion Date in accordance with such decision. In case a Claim does not involve an extra, change, addition or deletion to the Work as set forth in Changes and Extra Work and the Contractor accepts the decision of the Engineer or Inspector, then the Contractor and City shall enter into a Change Order setting forth the terms of the decision and, if appropriate, its effect on the Contract Price or Contract Completion Date. If the Contractor does not accept the decision of the Engineer or Inspector, it is recommended that further appeal of the Engineer's decision be conducted in accordance with the Issue Resolution Ladder, as defined in "Opportunity to Partner" of the General Requirements. If the dispute cannot be settled, the Contractor must elevate the appeal to the Dispute Review Board (if provided for under the terms of the General Requirements) or to the Board of Public Works (if the Contract Documents do not provide for a Dispute Resolution Board) in

writing within twenty (20) calendar days after receipt of the Engineer's decision. The Board shall afford the Contractor an opportunity to be heard and to offer evidence in support of its appeal. All determinations of the Board with respect to Claims shall be final and binding.

In all matters concerning the validity, interpretation, performance, effect or otherwise of the Contract, the Federal regulations (if and to the extent expressly incorporated by reference in the Contract Documents), the laws of the State of California, and the Charter of the City of Los Angeles shall govern and be applicable. Pending final disposition of a Claim, the Contractor shall proceed diligently with the performance of the Contract and in accordance with the previously mentioned decision.

Any Claim, including without limitation any Claim filed on behalf of or having its source in a claim by Subcontractor, Sub-Subcontractor, or Supplier, at any tier, which the Contractor chooses to make to the City, shall be accompanied by the certification language set forth below signed by a responsible managing officer of the Contractor's organization, who has the authority to sign Subcontracts or Purchase Orders on behalf of the Contractor, and who has personally investigated and confirmed the truth and accuracy of the matters set forth in such certification. Submission of certification in accordance herewith is a condition precedent to the City's consideration of or decision on the Claim and to the filing and maintenance of any legal action or proceeding to enforce or recover monies under such Claim. Failure to submit such a certification along with the Claim shall result in the Claim being returned to the Contractor without any decision, and shall waive the Contractor's right to pursue the Claim either on its own behalf or on behalf of such Subcontractor or Supplier.

I hereby certify under penalty of perjury that I am a managing officer of _____(Contractor's name) and that I have reviewed the Claim presented herewith on Contractor's behalf and/or on behalf of (Subcontractor's/Supplier's name(s)) and that the following statements are true and correct:

1) The facts alleged in or that form the basis for the Claim are true and accurate; and,

2) Contractor does not know of any facts or circumstances, not alleged in the Claim, that by reason of their not being alleged render any fact or statement alleged in the Claim materially misleading; and,

3) Contractor has, with respect to any request for money or damages alleged in or that forms the basis for the Claim, reviewed the job cost records (including those maintained by Contractor and by any Subcontractor or Supplier, of any tier, that is asserting all or any portion of the Claim) and confirmed with mathematical certainty that the losses or damages suffered by Contractor and /or such Subcontractor or Supplier were in fact suffered in the amounts and for the reasons alleged in the Claim; and,

4) Contractor has, with respect to any request for extension of time or claim of delay, disruption, hindrance or interference alleged in or that forms the basis for the Claim, reviewed the job schedules (including those maintained by Contractor and by any Subcontractor or Supplier, of any tier, that is asserting all or any portion of the Claim) and confirmed on an event-by-event basis that the delays or disruption suffered by Contractor and /or such Subcontractor or Supplier were in fact experienced for the durations, in the manner, and with the consequent effects on the time and/or sequence of performance of the Work, as alleged in the Claim; and,

5) Contractor has not received payment from City for, nor has Contractor previously released City from, any portion of the Claim.

Signature: _____

Name: _____

Title: _____

Company: _____

Date: _____

No Claim by the Contractor shall be allowed if made after final payment under this Contract.

00601 COMMENCEMENT OF STATUTE OF LIMITATIONS (11/21/01)

Any applicable statute of limitations shall commence to run and any alleged cause of action by the Contractor against the City arising out of or related to the Project shall be deemed to have accrued in any and all events no later than 30 days after Contractor's submittal of its last application for progress payment of Contract or Change Order Work satisfactorily performed.

00602 GOVERNING LAW (11/21/01)

The terms and conditions of this Contract shall be construed and interpreted under, and all respective rights and duties shall be governed by, the laws of the State of California. Wherever applicable each provision of these Contract Documents shall be interpreted in such a manner as to be effective and valid under applicable law, but if any provision of these Contract Documents shall be prohibited by or invalid under applicable law, such provision shall be ineffective to the extent of such prohibition or invalidity, without invalidating the remainder of such provision or the remaining provisions of these Contract Documents.

Unless otherwise provided in this Contract, all claims, counterclaims, disputes and other matters in question between the City and the Contractor arising out of or relating to this Contract or the breach of it will be decided by a Court of competent jurisdiction. It is understood that this Contract is executed and to be performed within the City and County of Los Angeles.

00603 VENUE (2/09/95)

This Contract will be executed and performed within the City and County of Los Angeles, California.

00604 NO WAIVER OF RIGHTS (4/12/95)

Neither the inspection by the City, nor any order by the City for payment of money, nor any payment for or acceptance of the whole or any part of the Work by the City, nor any extension of time, nor any possession taken by the City, shall operate as a waiver of any provision of this Contract, or any power herein reserved to the City, or any right to damages herein provided, nor shall any waiver of any breach in this Contract be held to be a waiver of any other or subsequent breach.

00605 ACCEPTANCE OF FINAL PAYMENT CONSTITUTES RELEASE (4/12/95)

The acceptance by the Contractor of final payment shall release the City, the Engineer, the Inspector, their officers, agents, representatives, or employees, as representatives of the City, from all claims and all liability to the Contractor for all things done or furnished in connection with the Work and every act of the City relating to or arising out of the Work.

00606 PATENTS AND COPYRIGHTS (10/17/01)

The Contractor shall include in its Bid the patent fees or royalties on any patented article or process which may be furnished or used in the Work. The Contractor shall indemnify and hold the City harmless from any legal action that may be brought for infringement of patents. The Contractor's attention is directed to "Notice of Patents, Data, and Copyright Regulations" of the Federal Labor Standards.

The Contractor shall bear all costs arising from the use of patented goods and /or processes used on and/or incorporated into the Work. When use of these goods and/or processes is judged to be an infringement and their use is banned, the Contractor, at its own expense, shall, with concurrence of the Engineer, do one of the following:

1) Secure for the City the right to continue using goods and/or processes by suspension of the injunction or by procuring a license(s);

2) Replace said goods and/or processes with non-infringing goods and /or processes;

3) Modify said goods and/or processes so that they become non-infringing; or

4) Remove said goods and/or processes and refund the sum paid therefor without prejudice to any other rights of the City.

The preceding shall not apply to any goods manufactured to the detailed design of the City contained in the Contract Documents.

00607 PUBLIC RECORDS ACT (4/06/00)

All records, documents, Plans, specifications and all other information relating to the conduct of the City's business, including information submitted by the Contractor, shall become the exclusive property of the City and except as provided by law shall be deemed public records. Said information shall be subject to the provisions of the California Public Records Act (Government Code Sections 6250 et seq.).

Under no circumstances will the City be responsible or liable to the Contractor, submitter or any other party for the disclosure of any records or information submitted to the City, regardless of whether such records or information are labeled "Trade Secret", "Confidential", or "Proprietary" (or words to similar effect) and regardless of whether the disclosure is required by law or a court order or occurs through inadvertence, mistake, or negligence on the part of the City or its officers, employees, and/or contractors.

The City will not advise as to the nature or content of documents entitled to protection from disclosure under the California Public Records Act", including interpretations of the Act or the definition of "Trade Secret". The submitting party shall be solely responsible for all determinations made under the Act, and where appropriate for clearly and prominently marking each and every page or sheet of information with "Trade Secret", "Confidential", or "Proprietary". Each submitting party is advised to contact its own legal counsel concerning the California Public Records Act and its applicability to the submitting party's own circumstances.

In the event of litigation concerning the disclosure of any information submitted by the submitting party, the City's sole involvement will be as a stakeholder, retaining the information until otherwise ordered by a court. The submitting party, at its sole expense and risk, shall be responsible for any and all fees and costs for prosecuting or defending any action concerning the information, and shall indemnify and hold the City harmless from all costs and expenses including attorneys' fees, in connection with such action.

END OF SECTION

BUREAU OF ENGINEERING

VALLEY VILLAGE PARK
STORM WATER CAPTURE PROJECT
PROJECT NO. EW40085F

GENERAL REQUIREMENTS

MARCH 2025

City of Los Angeles
California

Department of Public Works
Bureau of Engineering

ENGINEERING
CITY OF LOS ANGELES

TABLE OF CONTENTS
DIVISION 01 – GENERAL REQUIREMENTS

01100 SUMMARY

01022 ENVISION PROCEDURES
01111 ABBREVIATIONS AND REFERENCE STANDARDS
01112 DESCRIPTION OF WORK
01113 DIVISIONS OF TECHNICAL SECTIONS OF PROJECT MANUAL
01114 ISSUANCE OF DRAWINGS AND THE PROJECT MANUAL
01115 MANDATORY PROVISIONS
01116 ELECTRONIC DOCUMENT CONTROL
01120 INTERFACE / COORDINATION REQUIREMENTS
01140 CONTRACTOR'S USE OF THE PREMISES
01150 STORAGE OF MATERIALS AND EQUIPMENT

01200 PRICE AND PAYMENT PROCEDURES

01211 ALLOWANCE FOR EQUIPMENT SUBSTITUTIONS FOR COMPATIBILITY PURPOSES
01212 FIXED CASH ALLOWANCE ITEMS
01251 CHANGE ORDER REQUESTS
01253 DIFFERING SITE CONDITIONS
01254 CHANGE ORDERS
01255 PRICE REDUCTION FOR DEFECTIVE COST OR PRICING DATA
01270 MEASUREMENT OF QUANTITIES FOR UNIT PRICE WORK
01280 MEASUREMENT AND PAYMENT
01291 NOTICE TO WITHHOLD AND/OR STOP NOTICE
01292 PAYMENTS
01298 SCHEDULE OF VALUES / CONTRACT PRICE BREAKDOWN

01300 ADMINISTRATIVE REQUIREMENTS

01311 PRECONSTRUCTION SAFETY CONFERENCE
01312 PROJECT MEETINGS
01313 WORK BY CITY OR OTHERS
01321 CONTRACTOR'S CONSTRUCTION SCHEDULE AND REPORTS
01322 CONSTRUCTION PROGRESS PHOTOGRAPHY
01323 CONSTRUCTION STATUS REPORTS
01330 SHOP DRAWINGS / SUBMITTALS
01350 AUDIT AND ACCESS TO RECORDS
01351 ESCROW BID DOCUMENTS
01353 OPPORTUNITY TO PARTNER

01400 QUALITY REQUIREMENTS

01410 REGULATORY REQUIREMENTS
01411 CONFINED SPACE ENTRY
01420 UNITS OF MEASURE
01421 SYMBOLS
01430 MANUFACTURER'S FIELD SERVICES
01451 APPROVAL OF ELECTRICAL EQUIPMENT
01452 INSPECTION OF THE WORK
01453 SAMPLING, TESTING AND FABRICATION INSPECTION
01454 WEIGHING AND METERING EQUIPMENT
01455 CALIBRATION OF TESTING EQUIPMENT

01500 TEMPORARY FACILITIES AND CONTROLS

01561 ENVIRONMENTAL CONTROL
01562 ENVIRONMENTAL MITIGATION OR CONDITIONS
01563 POLLUTION CONTROL - SEWAGE SPILL PREVENTION AND RESPONSE REQUIREMENTS
01571 STORMWATER POLLUTION CONTROL MEASURES FOR CONSTRUCTION ACTIVITIES
01572 CONSTRUCTION AND DEMOLITION WASTE MANAGEMENT
01573 EXCAVATION SHORING, FORMS, AND FALSEWORK
01581 PROJECT SIGNS

01600 PRODUCT REQUIREMENTS

01601 BUY CLEAN CALIFORNIA ACT
01611 GUARANTY / WARRANTY
01630 SUBSTITUTIONS AND "OR EQUAL" SUBMITTAL

01700 EXECUTION REQUIREMENTS

01711 SITE INVESTIGATION
01712 SUBSURFACE DATA
01721 MOBILIZATION
01722 SURVEYING
01723 RIGHT OF WAY
01732 ADDITIONAL POTHOLING
01740 REMOVAL, CLEANUP, AND DEMOBILIZATION
01750 STARTUP ASSISTANCE
01770 PROJECT CLOSEOUT
01781 SPARE PARTS
01782 TECHNICAL MANUALS
01783 PROJECT RECORD DOCUMENTS

01800 FACILITY OPERATION

01810 FUNDAMENTAL COMMISSIONING REQUIREMENTS
01820 OPERATIONS AND MAINTENANCE TRAINING

SECTION 01022
ENVISION PROCEDURES

PART ONE - GENERAL

1.1 SUMMARY

A. The contents of this specification section apply to the full Valley Village Park Storm Water Capture Project (herein referred to as "the Project") (CIP No.: SCP0009).

B. Project procedures for compliance, documentation, and certification of the Project under Envision Sustainable Infrastructure Framework (herein referred to as "Envision") Version 3 from the Institute for Sustainable Infrastructure.

C. Envision Sustainable Infrastructure Rating System Overview:

1. Envision is a framework designed for assessing sustainability, resiliency, and equity in civil infrastructure. It provides industry-wide sustainability metrics for infrastructure to help assess and measure the extent of the Project's contributions to sustainability across social, economic, and environmental indicators. These indicators are divided into Envision Credits, each having multiple Levels of Achievement representing potential performance criteria, where Envision Points are earned for satisfying each Envision Criteria.

2. The Envision Award Level is based on the number of Envision Points achieved divided by the number of applicable Envision Points, with the Project's Envision Score shown as a percentage. Envision Award Levels can be designated as Verified (minimum 20 percent Envision Score), Silver (minimum 30 percent Envision Score), Gold (minimum 40 percent Envision Score), or Platinum (minimum 50 percent Envision Score).

3. Envision Version 3 framework includes 64 sustainability and resilience indicators, called Envision Credits, and are organized in five categories: Quality of Life (QL), Leadership (LD), Resource Allocation (RA), Natural World (NW), and Climate and Resilience (CR). The 64 Envision Credits have a maximum value of 1,000 Envision Points. Additional information about Envision can be found at: https://sustainableinfrastructure.org/envision/use-envision/

D. The goal for the Project is to achieve a Verified Envision Rating.

1.2 RELATED SPECIFICATIONS

A. Section 01330 – Shop Drawings/Submittals

B. Section 01561 – Environmental Control

C. Section 01562 – Environmental Mitigation or Conditions

D. Section 01572 – Construction and Demolition Waste Management

E. Section 01630 – Substitutions and "Or Equal" Submittal

F. Attachment 2 of the Project Specifications – Envision Scorecard

1.3 RELATED DOCUMENTS

A. Institute for Sustainable Infrastructure, Envision Sustainable Infrastructure Framework, Version 3 (2018)

B. Institute for Sustainable Infrastructure online documentation and reference website, https://sustainableinfrastructure.org/

1.4 DEFINITIONS

A. Envision Award Level: Refers to the cumulative project performance recognized by the Envision Verifier and awarded to the Project as either Verified (minimum 20 percent Envision Score), Silver (minimum 30 percent Envision Score), Gold (minimum 40 percent Envision Score), or Platinum (minimum 50 percent Envision Score).

B. Envision Certification: Refers to the achievement of an Envision Award Level, in which the ISI formally recognizes the Project for their sustainable achievements, issuing an award letter via email to the Sustainability Lead, and providing a certificate of Envision Certification for the Project. Only the ISI can designate a project as Envision Certified.

C. Envision Credit: Refers to the 64 sustainability indicators under the Envision Framework.

D. Envision Criteria: Refers to the evaluation metrics within each Envision Credit to validate that a Level of Achievement has been met. Envision Criteria are denoted in the Envision guidance manual as A, B, C, etc. To satisfy these Envision Criteria, project teams submit supporting documentation such as reports, material tracking, meeting minutes, etc. that demonstrate performance towards more sustainable infrastructure.

E. Envision Points: Refers to the point value assigned by the Institute for Sustainable Infrastructure for each Level of Achievement that add up to a total number of Envision Points, determining the Project's Envision Award Level.

F. Envision Score: Refers to the percentage of Envision Points achieved against the total number of applicable Envision Points. The percentage Envision Score is the basis for the Project’s Envision Award Level.

G. Envision Scorecard: Refers to the targeted Envision Credit thresholds and corresponding Levels of Achievement. Note that the Envision Scorecard is subject to change throughout Project development and construction, and will be updated as necessary.

H. Level of Achievement (LOA): Refers to the five performance levels available under each Envision Credit i.e., Improved (lowest), Enhanced, Superior, Conserving, and Restorative (highest). Levels of Achievement are awarded if a project meets the corresponding Envision Criteria.

I. Institute for Sustainable Infrastructure (ISI): Refers to the agency that oversees the implementation and independent certification of a project’s performance against the Envision Framework. Supporting documentation is submitted to the ISI for review and to confirm a project’s performance level.

J. Sustainability Coordinator: The individual designated by the Contractor to ensure that all Envision Credit requirements relating to the construction site are met and that all related documentation is submitted to the Sustainability Lead. This person will be responsible for

ensuring all parameters for sustainable methods and materials, including waste management a procedures, are followed. This person will also be responsible for tracking materials related to Envision Credits, and compiling and organizing supporting documentation for the Envision submittal.

K. Sustainability Lead: The individual designated by the Engineer to oversee and track all Envision Credit requirements for the Project, to assemble all related documentation received from the Sustainability Coordinator and members of the Engineer for the final Envision package for submittal to the ISI.

1.5 ABBREVIATIONS AND ACRONYMS

A.	CR	Climate and Resilience
B.	ENV SP	Envision Sustainability Professional
C.	ISI	Institute for Sustainable Infrastructure
D.	LD	Leadership
E.	LOA	Level of Achievement
F.	NW	Natural World
G.	QL	Quality of Life
H.	RA	Resource Allocation

1.6 PERFORMANCE REQUIREMENTS

A. General: To ensure sustainability performance is met for the project, the Contractor will be required to meet a minimum Level of Achievement for Envision Credits.

B. Minimum Level of Achievement: Following the Notice of Award, the Contractor is contractually required to meet the minimum Level of Achievement criteria and provide all required documentation as described in the Section 3.3 Envision Compliance Requirements of this document. No additional payment will be made for meeting the Minimum Level of Achievement for the Envision compliance requirements.

C. No single manufacturer, supplier, fabricator, or subcontractor can fulfill the total requirements for Envision for the Project. Envision Certification requires the cooperation and diligence of all Project participants for a successful application and acceptance for Envision Certification.

D. Product selection shall meet the targets and limits described in the attached Envision Scorecard and related specifications. If there are any discrepancies in information, the Envision Version 3 information prevails.

E. Trade contractors will notify Sustainability Lead through Sustainability Coordinator of any discrepancies before approving any changes.

F. Compliance with requirements needed to obtain Envision Credits will be used as one criterion to evaluate requests for substitutions.

1.7 ENVISION ADMINISTRATIVE REQUIREMENTS

A. The Owner, with the Engineer, has established sustainability goals for the Project's design and construction. The Project has an anticipated Envision Award Level of Verified which requires achieving a minimum of 20 percent of applicable Envision Points. Additional Envision Points will be targeted as a buffer.

B. Refer to the Envision Scorecard, attached as Attachment 2 of the Project Specifications – Envision Scorecard. The Project Envision Scorecard outlines targeted Envision Credit thresholds and corresponding Levels of Achievement.

1. Note that the Envision Scorecard is subject to change throughout Project development and construction, and will be updated as necessary. Updates will be communicated by the Sustainability Lead to the Sustainability Coordinator, and the Sustainability Coordinator will ensure all subcontractors and other related parties are also immediately aware of the updates.

2. Only the ISI can certify a project with an Envision Award Level. All estimated Envision performance outlined in the Envision Scorecard is a projection.

C. The Contractor shall respond to questions and requests from the Engineer and the ISI regarding Envision Credits that are the responsibility of the Contractor, that depend on product selection or product qualities, or that depend on Contractor’s procedures until the ISI has made its determination on the Project's Envision Certification application.

D. The Contractor, trade contractors, suppliers, and manufacturers shall be required to participate to realize the specified Envision requirements and sustainability goals for the construction of the Project. They shall be fully aware of all required laws and available strategies to achieve the designated Envision Credits including:

1. QL 1.3 Improve Construction Safety

2. QL 1.6 Minimize Construction Impacts

3. LD 1.1 Provide Effective Leadership and Commitment

4. RA 1.4 Reduce Construction Waste

5. NW 3.4 Control Invasive Species

1.8 ORIENTATION PROCEDURES

A. The Contractor shall designate one of the on-site personnel as the Sustainability Coordinator. The Sustainability Coordinator shall be a qualified Envision Sustainability Professional (ENV SP) in active standing with the Institute for Sustainable Infrastructure and with demonstrated experience in applying the Envision Framework. Responsibilities of the Sustainability Coordinator include:

1. Liaise with the Engineer’s Sustainability Lead on credit interpretations and requirements;

2. Provide updates to the Engineer’s Sustainability Lead on the project’s sustainability-related progress at key intervals;

3. Provide rationale and documentation to support the Envision Certification process as it relates to the compliance requirements described in this section; and,

4. Ensure the sustainability performance is met in accordance with the Envision Scorecard found in Attachment 2 of the Project Specifications – Envision Scorecard.

B. At least two (2) weeks prior to the start of construction, an Envision Coordination Meeting will be held to provide an opportunity for key members of the Engineer and Contractor to plan implementation strategies to achieve the Project sustainability goals and attain Envision Certification. The Contractor's Project Manager and Sustainability Coordinator will play a key role in this meeting, and in ensuring that the construction site is managed for efficient and effective compliance with Envision.

C. Within two (2) weeks after the initial Envision Coordination Meeting, the Contractor's Sustainability Coordinator will meet with the Sustainability Lead to establish documentation and site management procedures for Envision compliance. The Sustainability Coordinator will be in ongoing communication with the Sustainability Lead throughout the construction process.

D. The Contractor's Sustainability Coordinator will orient all on-site personnel to relevant Envision requirements and ensure awareness of, and compliance with, Section 3.3 Envision Compliance Requirements.

E. The Contractor shall distribute copies of the Envision Scorecard and make available a copy of the Envision: Sustainable Infrastructure Framework Guidance Manual, Third Edition, to the Job-Site Foreman and each Subcontractor.

F. The Sustainability Coordinator and the Contractor’s Project Manager shall attend quarterly sustainability meetings, which will be scheduled and chaired by the Sustainability Lead, throughout the Project’s construction. During these meetings, the Sustainability Coordinator shall demonstrate progress towards meeting the Envision Credits assigned to the Contractor, and shall have the opportunity to discuss Envision Criteria with the Sustainability Lead.

G. The Sustainability Coordinator will also coordinate the discussion of Envision at the following meetings:

1. Pre-construction meeting

2. Pre-installation meetings

3. Regularly scheduled job-site meetings

4. Special client meetings

PART TWO – PRODUCTS (NOT USED)

PART THREE – EXECUTION

3.1 SUBMITTALS

H. Following Contractor Submittals Procedures as specified in Section 01330 Shop Drawings/Submittals the Contractor shall submit all Envision Compliance Submittals as detailed below, including the following:

1. Construction safety records and documentation, see Part 3, Section, 3.3, A below;

2. Construction Management Plan, see Part 3, Section, 3.3, B & F below;

3. Waste Management Plan and reduction calculations, refer to Section 01572 Construction and Demolition Waste Management and Part 3, Section, 3.3, D below.

3.2 SUBMITTALS SCHEDULE

A. Submit within 30 days of date established for the Notice to Proceed:

1. Construction safety records and documentation

2. Construction Management Plan

3. Waste Management Plan

B. Throughout construction (from Notice to Proceed to Substantial Completion):

1. Monthly Envision Status Reports: On a monthly basis concurrent with each Application for Payment, compile and submit Envision submittal documents. Provide a project-to-date summary (based on the previous months data) comparing actual construction and purchasing activities.

C. Submit 60 days before request for Substantial Completion:

1. All remaining documentation outlined in Section 3.3 Envision Compliance Requirements.

2. Waste reduction calculations and supporting Envision compliance documentation;

3.3 ENVISION COMPLIANCE REQUIREMENTS

A. Improve Construction Safety

1. Envision Credit QL 1.3 Improve Construction Safety

2. Minimum Level of Achievement: Enhanced (5 points)

3. Minimum Contractor Requirements:

a. The Contractor will make strong commitments to monitoring and implementing health and safety in writing. The information which shall be submitted to demonstrate this are:

1) a proactive safety rewards program to support outstanding safety performance.

2) program requirements to ensure that their subcontractors maintain a high level of safety per the contract.

3) senior managers are engaged in the project safety program and conduct safety observations and inspections as part of their standard duties.

4) commitments that safety is a core concern.

b. The Contractor provides reliable feedback mechanisms to identify risks, conduct hazard analyses, and communicate hazards to personnel. The information which shall be submitted to demonstrate achievement of this commitment are:

1) proactive investigative process that focuses on root cause and corrective actions vs. disciplinary actions and financial penalties.

2) proactive injury management system that supports efficient, effective and timely treatment of their employees injured on the job site.

3) incident review process that involves all levels of management to validate corrective measures to minimize future injuries and incidents on the job site.

4) “lessons learned” reports that allow other contractors and projects the opportunity to review the fact-finding of an incident and implement processes and procedures to minimize similar incidents on the job site.

c. The Contractor will provide safety and security training for personnel. The documentation which shall be submitted to demonstrate achievement of this commitment are:

1) safety and/or security competency training programs, either online or in person, for field personnel, including type of training

provided and how they specifically target health and safety. Training may include task-specific safety training or general awareness training.

2) minimum training requirements for health and safety programs such as occupational safety and health, first aid, CPR, emergency response, active shooter training, or equivalent.

B. Minimize Construction Impacts

1. Envision QL1.6 Minimize Construction Impacts

2. Minimum Level of Achievement: Superior (4 points)

3. Minimum Contractor Requirements:

a. The Contractor shall develop a Construction Management Plan to address construction impacts. The plan is to be informed by stakeholder feedback.

b. Efforts identified by the Contractor to mitigate the impacts of construction should be in alignment with the requirements of Section 01562 – Environmental Mitigations or Conditions.

c. The Construction Management Plan will address the construction impact associated with noise and/or vibration and outline the expected sources of significant noise and/or vibration, how the effects of those sources will be minimized, how noise and/or vibration will be monitored, and what corrective actions will be taken if specified levels are exceeded.

d. The Construction Management Plan will address the construction impact associated with safety and wayfinding for pedestrians and vehicles during construction.

e. The Construction Management Plan will address the construction impact associated with maintaining access to public space and amenities during construction. Documentation should be provided to demonstrate the following strategies have been considered:

1) Limit disruption and maintain access to public space and amenities during construction within the boundaries of safety

2) Limit interruption of service

3) Limit restrictions to public space and amenities

f. Documentation outlining feedback mechanisms in place for receiving and responding to public and stakeholder concerns during construction.

g. Documentation of programs to monitor and inform impacted stakeholders on project performance in addressing construction impacts.

C. Provide Effective Leadership and Collaboration

1. Envision LD 1.1 Provide Effective Leadership and Commitment

2. Minimum Level of Achievement: Superior (12 points)

3. Minimum Contractor Requirements:

a. The Owner and the Engineer have committed to improving the environmental, social, and economic sustainability of the Project. The Contractor will be committing to improving the environmental, social, and economic sustainability of the Project.

b. Progress towards achieving the Project's sustainability goals and pursuit of Envision verification will be periodically reviewed during construction. The Owner and the Engineer will be responsible for coordinating and documenting the sustainability update meetings. The Contractor is required to attend and contribute to the sustainability update meetings that will be held on a quarterly basis during construction.

D. Reduce Construction Waste

1. Envision RA 1.4 Reduce Construction Waste

2. Minimum Level of Achievement: Enhanced (7 points)

3. Minimum Contractor Requirements:

a. At least 50% of nonhazardous waste (excluding plants, soils, rocks, and water) shall be recycled, reused, or salvaged.

b. The Contractor shall develop a construction Waste Management Plan and document that it was implemented as per Section 01572 Construction and Demolition Waste Management.

c. The Contractor shall provide calculations of the of total waste reduction measures and percentage of materials diverted to recycling, salvage, or reuse. The percentage of diverted waste should be calculated as the ratio of material diverted from landfills against the total waste generated during construction. Calculations may be done by weight or volume but must remain consistent throughout. Waste deemed hazardous should not be included in the total waste calculations and should be disposed of according to local, state, and federal law.

E. Control Invasive Species

1. Envision NW 3.4 Control Invasive Species

2. Minimum Level of Achievement: Improved (1 point)

3. Minimum Contractor Requirements:

a. The Contractor will outline in the Construction Management Plan best practices to avoid the unintentional introduction of invasive species to the site through the use of equipment or materials.

3.4 NON-COMPLIANCE

A. Failure to provide products or methods of construction contributing towards Envision Credits will result in the Owner achieving a Envision Certification less than that specified, or no Envision Certification at all; the Owner reserves the right to seek compensation where failure to achieve Envision Certification is a result of direct neglect or misrepresentation of any material or construction method.

B. Should the Contractor be unable to meet the commitments established within this document, a non-compliance report shall be submitted by the Contractor to the Owner and Engineer for review. If accepted, the Contractor will not be subject any penalties or damages resulting from non-compliance with the previously established commitments. Non-compliance reports will not be accepted if there is not sufficient evidence provided proving the Contractor made all efforts to meet the Project's Envision commitments.

C. Non-compliance reports shall include a narrative detailing:

1. Explanation of deficiency in meeting Envision commitments;

2. Explanation of active attempts and serious overtures made to meet the Project's Envision commitments;

3. Supporting documentation from suppliers or additional sources providing proof of infeasibility in meeting Envision commitments (if applicable).

(END OF SECTION)

SECTION 01111
ABBREVIATIONS AND REFERENCE STANDARDS

1.1 ABBREVIATIONS

A. The abbreviations herein, together with others in general use, are applicable to this Project Manual, Contract Drawings, and other Contract Documents.

All abbreviations and symbols used on Contract Drawings for structural steel construction shall conform to those given by the "Manual of Steel Construction" published by the American Institute of Steel Construction, Inc.

B. Common Usage: Whenever the following abbreviations are used, they shall have the meanings indicated:

ABAN	Abandon
ABAND	Abandoned
ABUT	Abutment
ABS	Acrylonitrile – butadiene – styrene
AC	Asphalt concrete
ACP	Asbestos cement pipe
ACWS	Asphalt concrete wearing surface
ADA	Americans with Disabilities Act
AGB	Alley grating basin
AL	Allowance
ALT	Alternate
AMER STD	American Standard
AQMD	Air Quality Management District
ARHM	Asphalt-rubber hot-mix
ATSAC	Automated Traffic Surveillance and Control System
AT&T	Local and long-distance telephone company (formerly SBC and Pacific Bell)
AWG	American Wire Gage (nonferrous wire)
BAGR	Bridge approach guard railing
BB	Beginning of Bridge
BC	Beginning of curve
BCR	Beginning of curb return
BDRY	Boundary
BF	Bottom of footing
BM	Benchmark
BMP	Best Management Practice
BPW	Board of Public Works
BSJ	Bell and spigot joint
BSL	Bureau of Street Lighting
BVC	Beginning of vertical curve
B/W	Back of wall
C/C	Center to center
CAB	Crushed aggregate base
CAC	California Administrative Code
CAP	Corrugated aluminum pipe
CASQA	California Storm Water Quality Association
CB	Catch Basin
Cb	Curb

CBP	Catch Basin Connection Pipe
CBR	California Bearing Ratio
CCR	California Code of Regulations
CCTV	Closed Circuit TV
CF	Curb face or Cubic foot
C&G	Curb and gutter
CGB	Curbside grating basin
CFR	Code of Federal Regulations
CIDH	Cast-in-drilled-hole
CIP	Cast iron pipe or Cast-in-place
CIPP	Cast-in place pipe
CL	Clearance, center line
CLF	Chain link fence
CLSM	Controlled Low Strength Material
CMB	Crushed miscellaneous base
CMC	Cement mortar-coated
CML	Cement mortar-lined
CMP	Corrugated Metal Pipe
CO	Cleanout (sewer)
COL	Column
CONC	Concrete
CONN	Connection
CONST	Construct, Construction
COORD	Coordinate
CQC	Contractor Quality Control
CSP	Corrugated steel pipe
CTB	Cement treated base
CV	Check valve
CY	Cubic yard
D	Load of pipe
dB	Decibels
DBE	Disadvantaged Business Enterprise
DBL	Double
DF	Douglas fir
DFT	Dry Film Thickness
DIA	Diameter
DIP	Ductile iron pipe
DL	Dead load
DMBB	Double metal beam barrier
DT	Drain Tile
DWG	Drawing
DWPPS	Los Angeles Department of Water & Power, Power System
DWPWS	Los Angeles Department of Water & Power, Water System
DWY	Driveway
DWY APR	Driveway approach
EA	Each
EB	End of bridge
EC	End of curve
ECR	End of curb return
EF	Each face
EG	Edge of gutter
EGL	Energy grade line
El	Elevation
ELC	Electrolier lighting conduit
ELT	Extra long ton

ENGR	Engineer, Engineering
EP	Edge of pavement
EPA	Environmental Protection Agency
ESA	Environmentally Sensitive Area
ESAL	Equivalent Single Axle Load
ESRP	Emergency Spill Response Plan
ESMT	Easement
ETB	Emulsion-treated base
EVC	End of vertical curb
EXC	Excavation
EXP JT	Expansion joint
EXST	Existing
F	Fahrenheit
F&C	Frame and cover
F&I	Furnish and install
FAB	Fabricate
FAS	Flashing arrow sign
FD	Floor drain
FDN	Foundation
FED SPEC	Federal Specification
FG	Finished grade
FH	Fire hydrant
FL	Flow line
FRP	Fiberglass reinforced plastic
FRPM	Fiberglass reinforced plastic mortar
FS	Finished surface
FTA	Fully traffic actuated
FT-LB	Foot-pound
FTG	Footing
FW	Face of wall
GA	Gauge
GALV	Galvanized
GC	Grade change
GCASP	State General Construction Activity Stormwater Permit
GIP	Galvanized iron pipe
GL	Ground line or grade line
GM	Gas meter
GP	Guy pole
GR	Grade
GRTG	Grating
GSP	Galvanized steel pipe
GTE	General Telephone Company
H	High or height
HB	Hose bib
HC	House connection
HDPE	High density polyethylene
HDWL	Headwall
HGL	Hydraulic grade line
HORIZ	Horizontal
HP	Horsepower
HPG	High pressure gas
HPS	High pressure sodium (Light)
HS	High strength
HYDR	Hydraulic

ID	Inside diameter
INCL	Including
INSP	Inspection
INV	Invert
IP	Iron pipe
IPW	Inspector of Public Works
JC	Junction chamber
JCT	Junction
JS	Junction structure
JT	Joint
L	Length
LAAC	Los Angeles Administrative Code
LAB	Laboratory
LADBS	Los Angeles Department of Building and Safety
LADGS	Los Angeles Department of General Services
LADOT	Los Angeles Department of Transportation
LACDPW	Los Angeles County Department of Public Works
LAMC	Los Angeles Municipal Code
LARWQCB	Los Angeles Regional Water Quality Control Board
LAT	Lateral
LB	Pound
LD	Local depression
LF	Linear foot
LH	Lamp hole
LL	Live load
LOL	Layout line
LONG	Longitudinal
LP	Lamp post
LPS	Low pressure sodium (Light)
LS	Lump sum
LTS	Lime treated soil
MA	Mast Arm
MAINT	Maintenance
MAX	Maximum
MB	Metal beam
MBB	Metal beam barrier
MBGR	Metal beam guard railing
MBE	Minority Business Enterprise
MCR	Middle of curb return
MEAS	Measure
MED	Median
MH	Manhole, maintenance hole
MIL SPEC	Military Specification
MISC	Miscellaneous
MOD	Modified, modify
MON	Monument
MSM	Mandatory subcontracting minimum
MTA	Metropolitan Transportation Authority (of LA County)
MTH	Month
MTL	Material
MULT	Multiple
MUTCD	Manual on Uniform Traffic Control Devices
MVL	Mercury vapor light
MWD	Metropolitan Water district

NOI	Notice of Intent
NPDES	National Pollutant Discharge Elimination System
NRCP	Nonreinforced concrete pipe
OBE	Other Business Enterprise
OBS	Obsolete
OC	On center
OD	Outside diameter
OE	Outer edge
OH	Overhead
OPP	Opposite
ORIG	Original
OSA	Office of the State Architect
OSHA	Occupational Safety and Health Administration (Dept. Of Labor)
PACBELL	Pacific Bell (Pacific Telesis Group)
PAV	Pressure Aging Vessel
PB	Pull box
PC	Point of curvature
PCC	Portland cement concrete or Point of compound curvature
PCVC	Point of compound vertical curve
PE	Polyethylene
PG	Performance Graded
PI	Point of intersection
PL	Property line
PMB	Processed miscellaneous base
POC	Point on curve
POT	Point on tangent
PP	Power pole
PRC	Point of revere curve
PRVC	Point of reverse vertical curve
PSI	Pounds per square inch
PT	Point of tangency
PVC	Polyvinyl chloride
PVMT	Pavement
PVT R/W	Private right-of-way
Q	Rate of flow in cubic feet per second
QA	Quality Assurance
QC	Quality Control
QUAD	Quadrangle, Quadrant
R	Radius
R&O	Rock and oil
R/W	Right-of-way
RA	Recycling agent
RAC	Recycled asphalt concrete
RAP	Reclaimed asphalt pavement
RBAC	Rubberized asphalt concrete
RC	Reinforced concrete
RCB	Reinforced concrete box
RCC	Rail Construction Corporation
RCE	Registered civil engineer
RCP	Reinforced concrete pipe
RCV	Remote control valve
REAS	Rubberized Emulsion-Aggregate Slurry
REF	Reference
REINF	Reinforced or reinforcement
RES	Reservoir

RGE	Registered geotechnical engineer
RR	Railroad
RSE	Registered structural engineer
RTE	Registered traffic engineer
RTFO	Rolling Thin Film Oven
S	Slope
SCAQMD	South Coast Air Quality Management District
SCCP	Steel cylinder concrete pipe
SCG	Southern California Gas Company
SCHED	Schedule
SCRRA	Southern California Regional Rail Authority
SD	Storm drain
SDR	Standard thermoplastic pipe dimension ratio (ratio of pipe O.D. to minimum wall thickness)
SE	Sand Equivalent
SEC	Section
SF	Square foot
SI	International System of Units (Metric)
SOCB	Side opening catch basin
SPEC	Specifications
SPPWC	Standard Plans for Public Works Construction
SR	Standard ratio
SRJ	Steel ring joint (for RCP)
SS	Sanitary sewer
SSB	Select sub-base
SSPWC	Standard Specifications for Public Works Construction
ST HWY	State highway
STA	Station
STD	Standard
STR	Straight
STR GR	Straight grade
STRUC	Structural/Structure
SW	Sidewalk
SWD	Sidewalk drain
SWMP	Storm Water Management Plan
SWPPP	Storm Water Pollution Prevention Plan
SWRCB	State (of California) Water Resources Control Board
SY	Square yard
TAN	Tangent
TC	Top of curb
TCP	Traffic control plan
TEL	Telephone
TF or T/F	Top of footing
TH	Test hole
TOPO	Topography
TR	Tract
TRANS	Transition
TS	Traffic signal or transition structure
TSC	Traffic signal conduit
TSS	Traffic signal standard
TW	Top of wall
TYP	Typical
USA	Underground Service Alert

V	Volt
VAR	Varies, Variable
VB	Valve box
VC	vertical curve
VCP	Vitrified clay pipe
VECP	Value Engineering Change Proposal
VERT	Vertical
VOL	Volume
VT	Variable thickness
W	Wider or width
WATCH	Work Area Traffic Control Handbook
WBE	Women Business Enterprise
WDID	Waste Discharge Identification Number
WI	Wrought iron
WM	Water meter
WPCP	Water Pollution Control Plan
WPJ	Weakened plane joint
WUT	Western Union Telegraph
WWECP	Wet Weather Erosion Control Plan
XCONN	Cross connection
XSEC	Cross section

C. Institutions: Wherever the following abbreviations are used they shall have the meanings indicated:

AASHTO	American Association of State Highway and Transportation Officials
ACI	American Concrete Institute
ACRI	Air Conditioning and Refrigeration Institute
ADA	Americans with Disabilities Act
AGA	American Gas Association
AGMA	American Gear Manufacturers' Association
AI	Asphalt Institute
AISC	American Institute of Steel Construction
AISI	American Iron & Steel Institute
AITC	American Institute of Timber Construction
AAMA	American Architectural Manufacturer’s Association
AMCA	Air Movement and Control Association
ANSI	American National Standards Institute
APA	American Plywood Association
API	American Petroleum Institute
APWA	American Public Works Association
AQMD	Air Quality Management District
AREA	American Railway Engineering Association
ASCE	American Society of Civil Engineers
ASHRAE	American Society of Heating, Refrigerating, and Air Conditioning Engineers
ASME	American Society of Mechanical Engineers
ASQC	American Society for Quality Control
ASTM	American Society for Testing and Materials
AWPA	American Wood Preservers Association
AWPI	American Wood Preservers Institute
AWS	American Welding Society
AWWA	American Water Works Association
BHMA	Building Hardware Manufacturer’s Association

CAC	California Administrative Code
CAL/ABL	State of California/Architectural Barriers Laws
CAL/OSHA	State of California/Occupational Safety and Health Administration
CALTRANS	California Department of Transportation
CASQA	California Stormwater Quality Association
CBM	Certified Ballast Manufacturers
CITY	City of Los Angeles
CRSI	Concrete Reinforcing Steel Institute
CSI	Construction Specifications Institute
EIA/TIA	Electronic Industries Association
EPA	Environmental Protection Agency
ETL	Department of Building & Safety Electrical Test Laboratory
FCI	Fluid Control Institute, Inc.
FIA	Factory Insurance Association
FM	Factory Mutual Association
FS	Federal Specifications
GA	Gypsum Association
GRI	Geosynthetic Research Institute
ICBO	International Conference of Building Officials
ICEA	Insulated Cable Engineers Association
IEEE	Institute of Electrical and Electronics Engineers
ISA	Instrument Society of America
LA	City of Los Angeles
LABC	City of Los Angeles Building Code
LAMC	City of Los Angeles Municipal Code
NAAMM	National Architectural Association of Metal Manufacturers
NEC	National Electrical Code
NECA	National Electrical Contractors Association
NEMA	National Electrical Manufacturers Association
NFC	National Fire Code
NFPA	National Fire Protection Association
NWMA	National Wood Manufacturer’s Association
NWWDA	National Wood Window and Door Association
NOAA	National Oceanic and Atmospheric Administration (Dept. of Commerce)
OSA	Office of the State Architect
OSHA	Occupational Safety and Health Administration (Dept. of Labor)
PCA	Portland Cement Association
RA	Rule of General Application – Department & Safety
RCSC	Research Council on Structural Connections of the Engineering Foundation
SAMA	Scientific Apparatus Manufacturer's Association
SDI	Steel Deck Institute
SMACNA	Sheet Metal and Air Conditioning Contractor’s National Association
SSPC	Steel Structures Painting Council
SSPWC	Standard Specifications for Public Works Construction
SWRCB	State Water Resources Control Board
UBC	Uniform Building Code, International Conference of Building Officials
UL	Underwriters Laboratories, Inc.
USGS	United States Geological Survey
VERIZON	Verizon Communications (Formerly General Telephone & Electronics

WATCH	Work Area Traffic Control Handbook
WCLIB	West Coast Lumber Inspection Bureau
WCRSI	Western Concrete Reinforcing Steel Institute
WIC	Woodwork Institute of California
WRI	Wire Reinforcement Institute
WWPA	Western Wood Products Association

1.2 REFERENCE STANDARDS

A. Applicable Publications: Whenever in these Specifications / Project Manual references are made to published specifications, codes, standards, or other requirements, it shall be understood that wherever no date is specified, only the latest specifications, standards, or requirements of the respective issuing agencies which have been published as of the date that the Work is advertised for bids shall apply; except to the extent that said standards or requirements may be in conflict with applicable laws, ordinances or governing codes. No requirements set forth herein or shown on the Drawings shall be waived because of any provision of, or omission from, said standards or requirements.

B. Specialists' Assignments: In certain instances, specification text requires (or implies) that specific work is to be assigned to specialists or expert entities, who must be engaged for the performance of that work. Such assignments shall be recognized as special requirements over which the CONTRACTOR has no choice or option. These requirements shall not be interpreted so as to conflict with the enforcement of building codes and similar regulations governing the Work; also they are not intended to interfere with local union jurisdiction settlements and similar conventions. Such assignments are intended to establish which party or entity involved in a specific unit of work is recognized as "expert" for the indicated construction processes or operations. Nevertheless, the final responsibility for fulfillment of the entire set of contract requirements remains with the CONTRACTOR.

C. Codes and Safety Standards: Without limiting the generality of other requirements of the Specifications, all work specified herein shall conform to or exceed the applicable requirements of the following Codes and Safety Standards.

1. Applicable Codes:

- City of Los Angeles Building Code
- City of Los Angeles Mechanical Code
- City of Los Angeles Plumbing Code
- City of Los Angeles Fire Code
- City of Los Angeles Electrical Code

References herein to "Building Code" shall mean City of Los Angeles Building Code. Similarly references to "Mechanical Code," "Plumbing Code," "Fire Code," and "Electric Code" shall mean City of Los Angeles Mechanical Code, City of Los Angeles Plumbing Code, City of Los Angeles Fire Code, and City of Los Angeles Electric Code respectively.

2. Applicable Safety Standards:

- OSHA Regulations for Construction
- OSHA Standard
- Cal-OSHA

References herein to "OSHA Regulations for Construction" shall mean Title 29, Part 1926, Construction Safety and Health Regulations, Code of Federal Regulations (OSHA), including all changes and amendments thereto.

References herein to "OSHA Standards" shall mean Title 29, Part 1910, Occupational Safety and Health Standards, Code of Federal Regulations (OSHA), including all changes and amendments thereto.

References herein to "Cal-OSHA" shall mean State of California, Department of Industrial Relations, as amended to date, and all changes and amendments there to which are effective as of the date of construction.

The latest edition of the codes as approved and adopted for use by the CITY as of the date of award shall apply to the Work herein, including all addenda, modifications, amendments, or other lawful changes thereto.

D. Standard Specifications: References in the Contract Documents to "Standard Specifications" shall mean the Standard Specifications for Public Works Construction, including all current supplements, addenda, and revisions thereof.

E. Standard Plans: References herein to "Standard Plans" shall mean the Standard Plans issued by the City of Los Angeles which drawings are hereby incorporated in and made a part of these Contract Documents, and copies of which are available for a fee.

F. Conflict between Codes, Safety Standards, Reference Standards, Drawings and other Contract Documents: In case of conflict between codes, reference standards, drawings and other Contract Documents, the most stringent requirements shall govern. All conflicts shall be brought to the attention of the ENGINEER for clarification and directions prior to ordering or providing any materials or labor. The CONTRACTOR shall bid for the most stringent requirements.

(END OF SECTION)

SECTION 01112
DESCRIPTION OF WORK

1.1 SUMMARY

A. As part of the City's Stormwater Capture Parks Program, the Valley Village Park Project is a water quality improvement project located at the City's Valley Village Park (5000 Westpark Drive, North Hollywood, CA) in the upper Tujunga Wash Watershed within the San Fernando Valley Groundwater Basin, north of the SR 170 and US 101 freeway interchange in the Valley Village neighborhood of the City of Los Angeles. The park is bordered by Westpark Drive to the west and SR 170 to the east. The objective of the project include the following:

- Recharge the groundwater basin.
- Alleviate localized flooding in the area.
- Improve water quality of stormwater runoff.
- Achieve peak flow attenuation at downstream water bodies (e.g., Los Angeles River).

The project will divert, treat, and infiltrate stormwater flows via subterranean diversion structure, debris separating baffle box system, and infiltration galleries. Additional improvements to park amenities will also be implemented as part of the Project.

B. The work to be done under this Contract includes the furnishing of project management, labor, materials, tools and equipment for the construction of the Valley Village Park Storm Water Capture Project for the City of Los Angeles, all in accordance with the Contract Documents, including the GENERAL CONDITIONS, DIVISION 1 - GENERAL REQUIREMENTS and other Sections of the Project Manual.

1.2 GENERAL SCOPE OF WORK

A. Work In This Contract: Work in this Contract includes all labor, materials and equipment necessary for construction of Valley Village Park Storm Water Capture Project as noted on the Contract Drawings and in the Project Manual and all other Contract Documents including the GENERAL CONDITIONS and GENERAL REQUIREMENTS.

B. Work Not In This Contract: "Work not in this Contract," "Work by others," and "Work by others but arranged and paid for by CONTRACTOR" are listed as follows:

1. All work or equipment indicated on the Contract Drawings or in this Project Manual as "Not in Contract" or "N.I.C." or anything which implied exclusion from the Contract in any manner.

2. All work or equipment indicated on the Contract Drawings or in this project as “work by others,” and “work by others, but arranged and paid for by CONTRACTOR.” The CONTRACTOR shall provide all necessary coordination, arrangement, and scheduling in accordance with General Conditions and other Sections of this Project Manual. CONTRACTOR shall appropriately pay for all charges, fees and costs specified to be paid for by the CONTRACTOR.

3. Department of Water and Power shall furnish and install electric service conductors from street utility line to new transformers or switchboards, and electric meters; in accordance with Division 16. CONTRACTOR shall make all necessary arrangement and pay for all fees and charges.

C. Related Work:

1. Documents affecting work of this Contract include, but are not limited to, the GENERAL CONDITIONS, DIVISION 1 - GENERAL REQUIREMENTS, and other Sections of the Project Manual.

1.3 PROJECT IDENTIFICATION

A. General:

1. The Project Name is Valley Village Park Storm Water Capture Project**,** located at 5000 Westpark Drive, North Hollywood, CA 91601.

2. Contract Documents have been prepared by Carollo Engineers; 707 Wilshire Boulevard. Suite 3920, Los Angeles, CA 90017.

3. Project Manual and Contract Drawings are dated August 26, 2022.

B. The extent of Contracted Work is indicated on the Contract Drawings and in the following Sections of the Project Manual.

1. Division 1 - General Requirements
2. Division 2 - Sitework
3. Division 3 - Concrete
4. Division 4 - Masonry - not used
5. Division 5 - Metals
6. Division 6 - Wood and Plastics
7. Division 7 - Thermal and Moisture Protection
8. Division 8 - Standard Steel Doors and Frames, etc. - not used
9. Division 9 - Finishes
10. Division 10 - Specialties
11. Division 11 - Equipment
12. Division 12 - Furnishings - not used
13. Division 13 - Special Construction
14. Division 14 - Conveying Systems - not used
15. Division 15 - Mechanical
16. Division 16 - Electrical
17. Division 17 - Instrumentation and Control

C. In addition to provisions noted in Section 01112 - DESCRIPTION OF WORK in Division 1 GENERAL REQUIREMENTS, the following listed drawings of Plan No. **[ ]** are, but not limited to, a part of the Contract Documents:

Drawing Index

General:

- G-01 Cover Sheet
- G-02 Notice to Contractor
- G-03 Sheet Index, Legend and Abbreviations
- G-04 Boring Logs
- G-05 Overall Construction Sequence Plan

Civil:

- C-01 Existing Conditions Plan - 1
- C-02 Existing Conditions Plan - 2
- C-03 Demolitions Plan - 1
- C-04 Demolitions Plan - 2
- C-05 Horizontal Control Plan - 1
- C-06 Horizontal Control Plan - 2
- C-07 Horizontal Control Data
- C-08 Grading and Drainage Plan - 1
- C-09 Grading and Drainage Plan - 2
- C-10 Infiltration Galleries and Storm Drain Plan
- C-11 Storm Drain Plan and Profile
- C-12 Grading Sections
- C-13 Civil Details - 1
- C-14 Civil Details - 2
- C-15 Civil Details - 3
- C-16 Civil Details - 4

Structural:

- S-01 Structural General Notes
- S-02 Diversion Structure Plans
- S-03 Diversion Structure Sections
- S-04 Structural Details - 1
- S-05 Structural Details - 2
- S-06 Structural Details - 3

Mechanical:

- M-01 Mechanical General Notes and Schedule
- M-02 Mechanical Plan and Section View
- M-03 Mechanical Details

Electrical:

- EG-01 Electrical General Notes
- EG-02 Electrical Symbols
- ES-01 Electrical Single Line Diagram
- ES-02 Electrical Site Plan
- EP-01 Service Pedestal, Switchboard SB-1 and PLC Cabinet Plan and Elevation
- EP-02 Electrical Power and Instrumentation Plan
- EP-03 Electrical Grounding Details
- EP-04 Electrical Sections and Details
- EP-05 Electrical Control Schematic Diagram

EP-06 Typical Power Distribution Schematic Diagram
EP-07 Electrical Irrigation Power Plan
EP-08 LADWP Proposed Concrete Pad Details

Instrumentation:

IG-01 Instrumentation Legend and Symbols 1 of 2
IG-02 Instrumentation Legend and Symbols 2 of 2
IP-01 Infiltration Basin P&ID
IP-02 Instrumentation Schedule and I/O Lists
IP-03 PLC Cabinet Layout and Instrument Schedule

Stormwater Sedimentation Control Plans:

EC-01 Erosion and Sedimentation Control Plan

Landscaping:

L-001 General Notes and Sheet Index
L-002 Overall Reference Plan
L-100A Tree Protection Notes and Schedule
L-100B Tree Protection Notes
L-101 Tree Protection Plan - Sheet 1
L-102 Tree Protection Plan - Sheet 2
L-103 Tree Protection Plan - Sheet 3
L-200 Construction Notes and Schedule
L-201 Construction Plan - Sheet 1
L-202 Construction Plan - Sheet 2
L-203 Construction Plan - Sheet 3
L-501 Construction Details - Sheet 1
L-502 Construction Details - Sheet 2
L-503 Construction Details - Sheet 3
L-600A Irrigation Notes and Calculations
L-600B Irrigation Notes
L-600C Irrigation Schedule
L-600D Irrigation Booster Pump Notes
L-600E Irrigation As-Builts
L-601 Irrigation Plan - Sheet 1
L-602 Irrigation Plan - Sheet 2
L-603 Irrigation Plan - Sheet 3
L-604 Irrigation Details - Sheet 1
L-605 Irrigation Details - Sheet 2
L-606 Irrigation Details - Sheet 3
L-700 Planting Notes & Schedule
L-701 Planting Plan - Sheet 1
L-702 Planting Plan - Sheet 2
L-703 Planting Plan - Sheet 3
L-704 Planting Details
R-01 Existing 90-In RCP Storm Drain

1.4 SUMMARY OF REFERENCES

A. Contracted Work can be summarized by references to the Contract General Conditions, Sections in the Project Manual, Contract Drawings, Addenda, Notice to Bidders and Modifications to the Contract Documents.

B. It is recognized that the Contracted Work may also be unavoidably affected or influenced by other governing codes and Regulations, natural phenomenon, including weather conditions and other forces outside the Contract Documents.

1.5 SUPPLEMENTAL INFORMATION

The following supplemental information is provided for use by the CONTRACTOR:

A. Soils Engineering Investigation (Attachment No. 1).

B. Envision Checklist (Attachment No. 2).

C. Stormwater Pollution Prevention Plan (Attachment No. 3).

D. Utility Pothole Information (Attachment No. 4).

E. LABOE Standard Plans (Attachment No. 5).

F. Summary of Utility First Notice Replies (Attachment No. 6).

1.6 GROUND BREAKING CEREMONY

The Ground Breaking Ceremony for this project may be requested and may occur before the Notice-to-Proceed is issued. The CONTRACTOR shall include in the contract cost and verify with the ENGINEER the ceremony schedule after the award of the contract. The CONTRACTOR shall prepare, after the award of the contract, all submittals for the construction sign and secure all necessary approvals. The CONTRACTOR shall provide necessary coordination for the Ground Breaking Ceremony, occurring before or during the construction at no additional cost to the CITY.

1.7 COMPLETION OF WORK

A. Construction shall be completed in 490 calendar days starting once Notice to Proceed is received from the City. If construction exceeds 490 calendar days, liquidated damages will be assessed.

B. Liquidated damages will be $4,000 per day.

PART TWO - PRODUCTS (NOT APPLICABLE)

PART THREE - EXECUTION

3.1 **ADMINISTRATION OF CONSTRUCTION**

All work of this Contract will be administered by the Consulting Engineer or Architect. References to “ENGINEER” or to "City Engineer" shall be considered as meaning "Consulting Engineer or Architect" where those references concern any phase of

Construction Administration. Other references to "ENGINEER" which concern the legal and financial aspects of the Contract including provisions for time for commencing and completing Contracted Work, suspensions of Contract, payments, etc. shall be understood as meaning the “City Engineer.”

(END OF SECTION)

SECTION 01113
DIVISIONS OF TECHNICAL SECTIONS OF PROJECT MANUAL

1.1 THE REQUIREMENT

A. The Technical Section of the Project Manual, including the General Conditions and General Requirements, are arranged into the Construction Specifications Institute (C.S.I.) sixteen (16) Divisions - Section format with an additional Division 17 for Instrumentation and Controls. Each "Section" constitutes a unit of work and related "Sections" are grouped under broad generic headings called Divisions.

B. The organization of the Technical Sections of the Project Manual into Division, Sections, and articles shall not control or limit the CONTRACTOR in dividing the work among Subcontractors, a Sub-subcontractor, or to establish the extent of work to be performed by any trade. The CONTRACTOR shall be solely responsible for all subcontract arrangements of work regardless of the Project Manual organization.

(END OF SECTION)

SECTION 01114
ISSUANCE OF DRAWINGS AND THE PROJECT MANUAL

1.1 THE REQUIREMENT

A. Unless otherwise provided in the Contract Documents, the ENGINEER will furnish to the CONTRACTOR three (3) sets and one (1) CD containing each of the Drawings, Project Manual and, where applicable, Geotechnical Data Report (GDR) without charge. Additional sets desired by the CONTRACTOR or Subcontractors will be furnished upon request, but at the CONTRACTOR'S expense.

B. All Drawings, Specifications, Special Provisions, and copies thereof are the property of the CITY. They are not to be used on other work. All necessary bid documents will be available to prospective bidders via the City of Los Angeles Regional Alliance Marketplace for Procurement (www.rampla.org/s/).

(END OF SECTION)

SECTION 01115
MANDATORY PROVISIONS

1.1 THE REQUIREMENT

A. Any mention in the Divisions of this Project Manual which follow the General Requirements or indication on drawings of articles, materials, operations, or methods requires that the CONTRACTOR provide each item mentioned or indicated, of quality or subject to qualifications noted; perform according to conditions stated, each operation the same prescribed; and provide therefore all necessary labor, equipment, and incidentals, even though such mention of articles, materials, operations, methods, quality, qualifications, or conditions is not expressed in complete sentences.

(END OF SECTION)

SECTION 01116
ELECTRONIC DOCUMENT CONTROL

A. The CONTRACTOR shall be responsible for the installation of its own computer system and scanner. In addition, the CONTRACTOR shall be responsible for the procurement of an Internet Service Provider (ISP) with a high-speed broadband internet connection for its own use, as well as the ENGINEER's/INSPECTOR's use at the site offices to access the document control system.

B. At the request of the ENGINEER, the CONTRACTOR must provide a hard copy of approved submittals to the INSPECTOR, at no additional cost to the CITY.

(END OF SECTION)

SECTION 01120

INTERFACE / COORDINATION REQUIREMENTS

1.1 THE REQUIREMENT

A. Traffic and Access

1. The CONTRACTOR'S operations shall cause no unnecessary inconvenience. The access rights of the public shall be considered at all times. Unless otherwise authorized, traffic shall be permitted to pass through the Work, or an approved detour shall be provided.

2. Safe and adequate pedestrian and vehicular access shall be provided and maintained to: residences; fire hydrants; commercial and industrial establishments; churches, schools and parking lots; service stations and motels; hospitals; police and fire stations; and establishments of similar nature. Access to these facilities shall be continuous and unobstructed unless otherwise approved by the ENGINEER.

3. The CONTRACTOR shall provide and install steel plates to bridge any excavation in the public right-of-way. Such bridging shall be in accordance with the provisions of the latest edition of the Work Area Traffic Control Handbook (WATCH), and in addition, shall have a nonskid surface with coefficient of friction of 0.35 per California Test 342 for all steel plates within the traveled roadway of streets and alleys. When required by the INSPECTOR, the CONTRACTOR shall certify in writing to the INSPECTOR that steel plates to be used in the Work meet the required static coefficient of friction. Also, when required by the INSPECTOR, the CONTRACTOR shall have steel plates to be used in the Work tested in accordance with the above standards for the verification of required static coefficients of friction. Testing shall be done by an independent laboratory approved by the INSPECTOR. The CONTRACTOR shall pay for any costs associated with the testing of steel plates.

4. At least ten (10) days before the start of construction, the CONTRACTOR is required to notify, in writing, abutting property occupants of the proposed construction start date. A copy of said written notification shall be provided to the INSPECTOR.

5. The CONTRACTOR shall notify the MTA Special Events Desk at **(213) 922-4632, (213) 922-4692 (Fax)** at least forty-eight (48) hours before any work that will affect normal bus operations. If no answer, call MTA Dispatch at any time, (213)-922-4634.

6. Safe and adequate pedestrian zones and public transportation stops, as well as pedestrian crossings of the Work at intervals not exceeding 90m (300 feet), shall be maintained unless otherwise approved by the ENGINEER. If required by the construction, the CONTRACTOR may close only one crosswalk at a time at intersections having four crosswalks. If construction requires closure of two or more crosswalks at an intersection, the CONTRACTOR shall obtain LADOT approval before implementation of the closure. LADOT approval is required prior to

closing of any crosswalk at intersections having fewer than four crosswalks.

7. Vehicular access to residential driveways shall be maintained to the property line except when necessary construction precludes such access for reasonable periods of time. If backfill has been completed to the extent that safe access may be provided, and the street is opened to local traffic, the CONTRACTOR shall immediately clear the street and driveways and provide the maintained access.

8. The CONTRACTOR shall cooperate with the various parties involved in the delivery of mail and the collection and removal of trash and garbage to maintain existing schedules for these services.

9. Grading operations, roadway excavation and fill construction shall be conducted by the CONTRACTOR in a manner to provide a reasonably satisfactory surface for traffic. When rough grading is completed, the roadbed surface shall be brought to a smooth, even condition satisfactory for traffic.

10. Work shall be performed in only one-half of the roadway at one time. One-half of the roadway shall be kept open and unobstructed until the opposite side is ready for use by traffic. The CONTRACTOR shall phase the removal operations so as to maintain the specified traffic lanes on the existing pavement until sufficient new pavement is constructed to accommodate the traffic requirements. If one-half of a street is only being improved, a smooth, even surface and a condition satisfactory for traffic shall be maintained on the other one-half.

11. Where no pavement exists in a roadway, and traffic is to be maintained through the Worksite, the CONTRACTOR shall conduct its operations in a manner to provide a smooth, even surface satisfactory for traffic, reasonably free of mud and dirt.

12. The CONTRACTOR shall include in its Bid all costs for the above requirements.

B. Street Closures, Detours, Barricades

1. The CONTRACTOR shall comply with all applicable State, County and CITY requirements for closure of streets. The CONTRACTOR shall provide barriers, guards, lights, signs, temporary bridges, flagpersons, and watchpersons. The CONTRACTOR shall be responsible for compliance with additional public safety requirements that may arise. The CONTRACTOR shall furnish and install signs and warning devices and promptly remove them upon completion of the Work.

2. The CONTRACTOR shall obtain and pay for all permits for closure of streets, alleys or sidewalks, as required by the Bureau of Street Services **(800) 996-2489** and LADOT **(213) 972-4990.**

3. At least forty-eight (48) hours in advance of closing, partially closing, or reopening any street, alley, or other public thoroughfare, the CONTRACTOR shall notify the Police, Fire, Traffic, and Engineering

Departments, and comply with their requirements. Deviations must first be approved in writing by the ENGINEER.

4. When specified on the Plans or permit, the CONTRACTOR shall install advance construction notice signs per Standard Plan S-791, not less than seven (7) days before the start of construction. The CONTRACTOR shall maintain the signs for the duration of construction, removing them only after completion of the work. All costs incurred in furnishing, installing, maintaining and removing the signs shall be included in the CONTRACTOR'S Bid.

5. The CONTRACTOR shall secure approval, in advance, from authorities concerned with the use of temporary bridges proposed by the CONTRACTOR for public use. Temporary bridges shall be clearly posted as to load limit, with signs and posting conforming to current requirements covering "signs" as set forth in the California Manual of Uniform Traffic Control Devices (MUTCD). (The California MUTCD is available on the internet a https://dot.ca.gov/programs/traffic-operations/camutcd/camutcd-rev4 . This manual shall also apply to street closures, barricades, detours, lights, and other safety devices that may be required.

6. The CONTRACTOR shall comply with the requirements of the latest adopted edition of the "Work Area Traffic Control Handbook", obtainable from Building News, Inc., 10801 National Blvd., Los Angeles, CA 90064, (800) 873-6397 or the LADOT Worksite Traffic Control Plan (S-488.0) available from LADOT, 100 S. Main Street, 9th Floor, Los Angeles, CA 90012.

7. A street with local traffic crossing a street in which Work is being performed may be closed to traffic, providing the adjacent cross streets are kept open. The CONTRACTOR shall notify the Police and Fire Departments whenever such a street is to be closed to traffic. A similar notification shall then be made at the time the street is again opened to traffic. If the closing is to be of short duration or different sections of the street are to be closed at different times, the notification to the Police and Fire Departments shall be on a day-by-day basis, giving information regarding the conditions expected to prevail on the next working day. The CONTRACTOR shall notify the INSPECTOR which streets are to be closed, duration of closures, and person(s) and telephone numbers contacted in the Fire and Police Department.

8. All signs, including offsite detour signs, lights, or devices installed by the CONTRACTOR shall conform to the California Manual of Uniform Traffic Control Devices (MUTCD), and be approved by LADOT before use. Offsite detour signs shall be installed, maintained, and removed by the CONTRACTOR. “No Parking” signs shall be posted and removed only by LADOT upon request from the CONTRACTOR. LADOT will charge and collect its actual cost for each temporary sign installed and for each sign replaced during the authorized period. To be enforceable, temporary “No Parking” signs shall be installed by LADOT twenty-four (24) hours before the time when needed. Their removal by LADOT shall take place as the Work progresses to restore parking spaces. See Section 01313 - WORK BY CITY OR OTHERS of the GENERAL REQUIREMENTS.

9. The CONTRACTOR shall include in its Bid all costs for the above requirements.

C. Work Performed Within an Operating Facility

1. The CONTRACTOR will be performing work within a City park facility. Under these conditions, precautions will be necessary to ensure that no damage occurs to this existing facility, including but not limited to piping, utilities, roads, and structures that are to remain in operation and including those to be modified or replaced.

2. The park facility not impacted by the construction area, must be kept in continuous operation throughout the construction period. No interruption will be permitted which adversely affects the service provided. The CONTRACTOR shall provide temporary facilities and make temporary modifications as necessary to keep the existing facilities in continuous operation during the construction period. Any temporary facilities, materials, equipment and labor required to achieve this objective shall be included in the CONTRACTOR’S Bid. At the completion of work, all such temporary facilities, materials, and equipment remaining shall be removed from the site.

3. Vehicular and pedestrian traffic adjacent to the laydown area and/or within the jobsite must be maintained. If an existing street in the CONTRACTOR’S Work area is to be demolished or obstructed, the CONTRACTOR shall be responsible for providing access through or around the affected area, including signs, barricades, and lights, as approved by the ENGINEER and any local agencies having jurisdiction over any public access areas. The CONTRACTOR shall follow WATCH standards and the California Manual of Uniform Traffic Control Devices (MUTCD), for all traffic, including a minimum traffic lane of ten (10) feet for vehicles and four (4) feet for pedestrians. (The California MUTCD is available on the internet at http://www.dot.ca.gov/hq/traffops/signtech/mutcdsupp/ ca_mutcd.htm).

4. The CONTRACTOR shall not park any vehicles (including concrete, hauling and delivery trucks) in any facility street at any time unless approved by the ENGINEER. Access must be maintained at all times for emergencies, sampling, equipment operations, maintenance, and like items.

5. Before altering any vehicular or pedestrian access, the CONTRACTOR shall notify the ENGINEER thirty (30) calendar days in advance on forms provided by the ENGINEER. The CONTRACTOR shall then request the alteration on forms provided by the ENGINEER. Requests shall include reasons for the alteration, times, boundary limits, special safety measures, proposed traffic rerouting with widths of such route, and a map detailing the above. Such requests shall be submitted to the ENGINEER not less than fifteen (15) calendar days before the requested date of the access alteration. If any of the information changes, an additional fifteen (15) calendar days may be required after the changes are brought to the attention of the ENGINEER. Approval when granted will always be conditional. Final approval of the request, including date and time, will be given three (3) calendar days in advance. The CITY retains the right to ticket and impound vehicles blocking traffic.

(END OF SECTION)

SECTION 01140
CONTRACTOR'S USE OF THE PREMISES

1.1 THE REQUIREMENT

A. General

1. This Section applies to all situations in which the CONTRACTOR or his representatives, including but not necessarily limited to, suppliers, Subcontractors, employees and field engineers, who enter upon the CITY'S property.

2. CONTRACTOR shall commence the Contract Work and provide security and protection to existing facility and job site within 5 days from the issuance of Notice-To-Proceed letter, unless noted otherwise.

B. Access to the Job-site

1. As instructed by the ENGINEER, the CONTRACTOR shall restrict CONTRACTOR'S employees to the immediate Work areas on the job-site and in no way go beyond the Work limits noted on the Contract Drawings or as otherwise directed by the ENGINEER.

C. City Occupation of the Premises

The CITY will not occupy the existing premises (structures) during construction operations, except as indicated in the GENERAL REQUIREMENTS Section 01313 – WORK BY CITY OR OTHERS, and in Section 00406 – PARTIAL ACCEPTANCE of the GENERAL CONDITIONS.

D. Parking

1. No parking of CONTRACTOR'S vehicles will be allowed on the job-site except for the purposes of unloading and/or loading as directed by the ENGINEER. CONTRACTOR shall not use new paved areas for loading or unloading. All traffic controls in the Work area shall conform to the Work area Traffic Control Handbook (WATCH), latest edition, and the California Manual of Uniform Traffic Control Devices (MUTCD). (The California MUTCD is available on the internet at https://dot.ca.gov/programs/safety-programs/camutcd).

2. CONTRACTOR'S employees are advised to park on adjacent CITY streets and shall observe CITY parking restrictions posted on such streets.

3. CONTRACTOR shall obtain and pay for a "Street Use Permit" in order to park his vehicles, equipment and CONTRACTOR'S Field Office at Street Division, Bureau of Street Services, [1149 S. Broadway, Suite 400, (800) 996-2489]. Such "Street Use" shall be fenced off from street traffic as required. Upon completion of Contracted Work, such street area shall be left in a clean and safe condition ready for use by the public. Wherever CONTRACTOR and CONTRACTOR'S employees' vehicles are located on the street or "Street Use" area or on the job-site, all such vehicles shall be kept locked at all times.

E. Security

1. Restrict the access of all persons entering upon the CITY'S property in connection with the Contracted Work to the Access Route and to the actual site of the work.

2. In addition to the responsibilities specified in other Sections of these GENERAL REQUIREMENTS, and the GENERAL CONDITIONS, the CONTRACTOR shall be responsible for the security of all its construction equipment, materials, tools, facilities, and vehicles (personal, private, or contractual) while performing the work of this Contract. This requirement shall be effective twenty-four (24) hours per day for the duration of the Contract.

3. CONTRACTOR shall furnish and maintain approved type site security protection between the Work areas and other areas. All such site security protection shall remain for the duration of this Contract.

4. CONTRACTOR shall furnish and maintain adequate site security protection, as directed by the ENGINEER, INSPECTOR or other authorities having jurisdiction, at no additional cost to the CITY.

F. Protections

1. Required: Where necessary for the safety of the public and the protection of the adjacent street improvements and adjacent properties, provide and maintain adequate protection, fences and gates and barricades to separate Work areas from areas outside the job-site limits**.** Such protections shall comply with provisions of Section 01120 – INTERFACE / COORDINATION REQUIREMENTS and Section 01721 – MOBILIZATION of the GENERAL REQUIREMENTS and shall remain in place during extent of this Contract or as otherwise directed by the INSPECTOR.

2. CONTRACTOR shall provide protections, barricades, signs, etc., as necessary so that persons will be protected from the Work areas where trenching and excavations occur for foundation, underground utilities, underground fuel storage tanks etc. on the job-site. Upon completion of such work operations, such protections shall be removed.

3. All equipment, material, soil, debris and any heavy loaded object shall not be stockpiled in adjacent area to create any surcharging to the trench or excavation.

G. Repair of Damages

1. Required: Repair or replace any damage to existing facilities and equipment located inside or outside the building under CONTRACTOR'S protection.

2. Methods: Repair or replace damaged work with new materials as necessary to restore the damaged areas or surfaces to a condition equal to and matching such conditions existing prior to damage or start of Work of this Contract, to the full satisfaction of the ENGINEER, and at no

added cost to the CITY. Submit repair method for approval as required by the ENGINEER.

3. Matching or Existing Work:

   a. Finish of all existing wood, plaster, masonry and/or concrete work indicated on the Drawings to be altered, repaired or patched to match and be flush with adjoining surfaces, subject to the approval of the ENGINEER.

   b. Finish of all new masonry and/or concrete work (to adjoin remaining work) to match and be flush with adjoining surfaces, unless otherwise noted on the Drawings, subject to the approval of the ENGINEER.

H. Interruption of Services

1. CONTRACTOR shall make all provisions to accomplish Contracted Work without undue interference with the CITY operations of the existing facilities on the job-site premises. Any necessary interruptions to existing elevator, plumbing, mechanical and/or electrical facilities shall be done only after 48 hours advance consultation with the ENGINEER and at such time and duration as instructed by the ENGINEER. Provide an uninterruptive power source if necessary to ensure that there is no power interruption. CONTRACTOR shall verify existing loading and any possible load increase during construction prior to ordering. Any required new circuit or repair of existing circuit in the CITY'S occupied area to maintain continuous operation shall be done by CONTRACTOR at no additional cost to the CITY.

I. Non-interference With Others

1. CONTRACTOR shall confine Contracted Work operations to the immediate boundaries of the job-site and shall execute work operations in a manner to minimize interference with CITY operations and/or work operations of other CONTRACTORS working on the premises; as directed by the ENGINEER.

2. CONTRACTOR shall provide and maintain adjacent pedestrian and vehicular accesses in accordance with Work area Traffic Control Handbook (W.A.T.C.H.), latest edition, and the California Manual of Uniform Traffic Control Devices (MUTCD).

3. CONTRACTOR shall obtain approval of ENGINEER and local authorities having jurisdiction such as Department of Transportation, Police Department, Bureau of Street Services, etc. prior to any street, alley or sidewalk closure.

J. Underground Service Alert

1. Before commencing any excavation, the CONTRACTOR shall obtain an underground service alert inquiry I.D. Number by calling 1 (800) 422-4133. Two (2) working days shall be allowed after the I.D. Number is obtained and before the excavation work starts so that utility owners can be notified. The I.D. Number must be reported to the Bureau of Contract

Administration when calling for inspection. I.D. Numbers will not be given more than ten (10) calendar days prior to starting excavation work.

K. Job Safety

1. CONTRACTOR shall observe all safety rules and regulations of the Los Angeles City Building Code and CAL/OSHA as applicable to the safety of the CONTRACTOR, CONTRACTOR'S personnel and CITY employees during Contracted Work operations and especially during asbestos removal operations.

END OF SECTION

SECTION 01150
STORAGE OF MATERIALS AND EQUIPMENT

1.1 THE REQUIREMENT

A. All materials and equipment shall be stored and protected in accordance with the manufacturer's instructions, with seals and labels intact and legible. Store sensitive products in weatherproof, climate controlled enclosures. Where indoor storage is required, the equipment shall be stored inside a completely enclosed building, with the temperature controlled between 60 degrees Fahrenheit and 100 degrees Fahrenheit (60°F – 100°F) and a maximum relative humidity of ninety percent (90%) noncondensing.

B. For exterior storage of material or equipment, the materials or equipment shall be placed on sloped supports above ground. Material or equipment subject to deterioration shall be covered with an impervious covering. Where necessary ventilation and heating shall be provided to avoid condensation. Materials shall not be stored within the tree protection zones shown on plans.

C. The CONTRACTOR shall exercise all measures necessary to ensure preservation of the quality, quantity, and fitness of the materials or equipment and shall perform the manufacturer's recommended maintenance of the material or equipment.

D. The CONTRACTOR shall inspect the material and equipment, and submit a written monthly report to the INSPECTOR listing all the equipment stored, the results of their inspection, and the maintenance performed.

E. The materials and equipment shall not show signs of pitting, rust, decay or other deleterious effects of storage when incorporated into the work.

F. Pumps, motors, electrical equipment, and other equipment with anti-friction or sleeve bearings shall be stored in weather tight structures maintained at a temperature above sixty degrees Fahrenheit (60°F). Electrical equipment, controls, and insulation shall be protected against moisture and water damage. All space heaters furnished in electrical equipment shall be immediately energized and operated continuously until the equipment is placed into service.

G. The CONTRACTOR shall grant the INSPECTOR and ENGINEER access to the storage facility at any time and assist the INSPECTOR and ENGINEER in conducting a full view, piece by piece, inventory of all such material or equipment.

H. The CONTRACTOR shall absorb any and all cost incurred to store, protect, and maintain the materials and equipment without modification to the Contract amount.

I. For CITY furnished equipment delivered to the site, the CONTRACTOR shall take all necessary measures to protect the equipment from damage due to the CONTRACTOR's activities. The CONTRACTOR shall also ensure that all measures required by the CITY's vendor to preserve and protect their equipment are maintained and are not disturbed including, but not limited to, providing for the continuous operation of space heaters furnished in electrical equipment.

(END OF SECTION)

SECTION 01211
ALLOWANCE FOR EQUIPMENT SUBSTITUTIONS FOR COMPATIBILITY PURPOSES

1.1 THE REQUIREMENT

A. An allowance for equipment upgrade purposes has been established in the Proposal for this Contract. In the event that the CITY determines that items of equipment proposed for use by the CONTRACTOR do not meet the needs of the CITY, and the CITY directs the CONTRACTOR to substitute other pieces of equipment, then this allowance may be used. The substitution of equipment must be directed by the CITY in writing and must specifically be identified as substitutions due to compatibility of equipment. In this event, and provided that the CONTRACTOR can clearly document an increase in cost, then such cost increase may be paid for from this allowance through the issuance of an Allowance Order; provided that there is a specific written approval of the CITY. Any monies paid from this allowance shall not result in the need to issue a Change Order. It is agreed that this allowance shall only be used to pay for direct cost differences in the cost of equipment. If the CITY rejects a piece of equipment proposed for use by the CONTRACTOR because the equipment, in the sole judgment of the ENGINEER, does not meet the requirements of the Contract Documents, the CONTRACTOR shall not have any claim against this allowance. This bid item is an allowance and is subject to an upward or downward adjustment by a Change Order, at the end of the project, to reflect the actual costs expended. Such adjustment is not subject to markup (overhead, profit, bonds, insurance, etc.).

(END OF SECTION)

SECTION 01212
FIXED CASH ALLOWANCE ITEMS

1.1 THE REQUIREMENT

A. A fixed cash allowance has been allocated to each of the following items of the Bid Breakdown (see Bid Proposal). Requirements for each Fixed Cash Allowance Item are specified in the GENERAL REQUIREMENTS (GR) section referenced below. Overhead and Profit, at the rates listed below, shall be added to the actual invoiced amount.

Bid Item No.	Description	Overhead and Profit
2.	Allowance for Engineer's and Inspector's Field Office Supplies (GR Section 01212)	5%
3.	Allowance for Differing Site Conditions (GR Section 01253)	Per Sec. 01254
4.	Allowance for Payment for Permits (GR Section 01292)	0%
5.	Allowance for Opportunity to Partner (GR Section 01353)	0%
6.	Allowance for Startup Assistance (GR Section 01750)	Per Sec. 01750
7.	Allowance for Distributed Control System (Honeywell) (GR Section 17450)	0%
8.	Allowance for Community Impacts Mitigation (GR1562) (GR Section 01561 and 1562)	5%

B. If these items are not executed, or are only partially executed, or the allowance for any item is not expended or partially expended, then a deductive Change Order shall be issued for the amount that is not expended. If, however, these items are over expended (with ENGINEER'S prior approval), then an appropriate Change Order shall be executed in accordance with the provisions of the GENERAL REQUIREMENTS Section 01254 –- CHANGE ORDERS, except for Overhead and Profit wherein the above listed rates shall apply.

C. The ENGINEER'S AND INSPECTOR'S field office supply allowance is to be used at the ENGINEER'S and/or INSPECTOR'S discretion to purchase office supplies and/or office equipment, perform repairs to field offices or equipment owned or leased by the City, pay field office utility bills, purchase reference documents, etc. The items covered by this allowance are in addition to those required to be furnished by the CONTRACTOR under GR Section 01721 - Mobilization. The CONTRACTOR shall be reimbursed the actual invoice amount plus the markup allowed by Section A, above.

(END OF SECTION)

SECTION 01251
CHANGE ORDER REQUESTS

1.1 THE REQUIREMENT

A. All quotations for preliminary change orders for extras, changes, additions, or deletions to the Work as described in CHANGES AND EXTRA WORK of the GENERAL CONDITIONS shall be submitted to the ENGINEER, in writing, on the Change Order Cost Quotation Form provided by the ENGINEER, and in conformance with the requirements of CHANGE ORDERS of the GENERAL REQUIREMENTS (See Attachment 01251-A1). The quotation shall be firm for a period of not less than sixty (60) calendar days from the date of receipt of the quotation by the ENGINEER. The CONTRACTOR shall submit its written cost quotation and Time Impact Analysis not later than fifteen (15) days after being requested to provide such quotation, unless the ENGINEER allows more time. Delays in submitting quotations beyond the fifteen (15) days set forth herein, which cause a delay in the issuance of a Change Order or a delay to the completion date of the project, shall not be cause for a claim or a time extension under the Contract.

B. The ENGINEER'S request for quotation on a preliminary change shall not be considered authorization to proceed with the changed work prior to the issuance of a final Lump Sum or Time & Material Change Order, unless directed otherwise, in writing, by the ENGINEER, nor shall such request constitute justification for a delay to the existing Work or a time extension under the Contract.

(END OF SECTION)

(SEE ATTACHMENT)

ATTACHMENT TO SECTION 01251

Attachments to General Requirements Section 01251 consists of one (1) document, as follows:

ATTACHMENT NUMBER	TITLE OF ATTACHMENT	NUMBER OF PAGES IN THIS ATTACHMENT
01251-A1	Change Order Cost Summary Form	1

Change Order Cost Summary Form

		Direct Labor	Direct Materials	Direct Equipment		Totals
(1):	Lump Sum Work by Prime Contractor	$	$	$		
(2):	"T&M" Work by Prime Contractor	$	$	$		
(3):	Subtotal - Direct Work (Prime Contractor)	$	$	$		
(4):	All Lump Sum Work by subcontractors (any tier)	$	$	$		
(5):	All "T&M" Work by subcontractors (any tier)	$	$	$		
(6):	Subtotal - Direct Work (all subcontractors)	$	$	$		$
					Add each of the three columns across and enter to the right.	
(3)+(6)=(7):	Total - Direct Costs	$	$	$		$
(8):	Markup	(20% of direct labor) $	(15% of direct mat'l) $	(15% of direct equip) $		$
(9):	Prime Contractor Markup for subcontractors				5% of line (6) direct sub work	$
(10):	Bonds & Insurance				1% of line (7) all direct work	$
(11):	Additional amount (if any) permitted by Contract					$
(12):	**GRAND TOTAL**				Add sums of lines) (7), (8), (9), (10) and (11)	$

SECTION 01253
DIFFERING SITE CONDITIONS

1.1 THE REQUIREMENT

A. During the course of construction, the CONTRACTOR may encounter existing utilities, structures, etc. that are not shown on the contract drawings or are not specified and which may interfere with or may impact construction activities. In the event of this occurrence, the ENGINEER may direct the CONTRACTOR to proceed with necessary exploratory or corrective work to alleviate the situation. The cost for such directed work shall be paid for under the bid item DIFFERING SITE CONDITIONS of the SCHEDULE OF WORK AND PRICES. Costs shall be calculated in accordance with Section 01254 - CHANGE ORDERS, subsection TIME AND MATERIALS WORK, of the GENERAL REQUIREMENTS.

B. If the total cost of the Work directed under the DIFFERING SITE CONDITIONS clause is different from the amount set forth in the SCHEDULE OF WORK AND PRICES, the Contract Price shall be adjusted by a Change Order. The adjustment shall be the difference between the total actual cost and the amount included in the Bid, as either an additional amount due the CONTRACTOR or as a credit to the CITY, as appropriate.

(END OF SECTION)

SECTION 01254
CHANGE ORDERS

1.1 The Requirement

Payment to the Contractor, or credit to the City, for any change, addition, deletion or extra to the Work, or settlement of any Claim, covered by any Change Order, shall be determined by the methods set forth herein. The Engineer may change the Plans and Specifications, character of the Work, or quantity of Work provided the total net dollar value of all such changes, taking into consideration both additive and deductive changes, does not exceed twenty-five percent (25%) of the original Contract Price. (The total net dollar value requires that additive and deductive changes offset each other, and only after the total net dollar value of the changes exceeds 25% of the original Contract Price, will a Supplemental Agreement be required). Should it become necessary to exceed this limitation, the change shall be by written Supplemental Agreement between the Contractor and the City, which shall be executed by a Change Order.

Unless otherwise stipulated, “Unit Prices” and “Stipulated Prices” include all costs necessary to furnish, install and complete the Work. The “Unit Prices” and “Stipulated Prices” include all direct costs for labor, equipment and materials, all insurance and bond costs, all field and office supervisors and assistants, all onsite project administration, security costs, the cost of small tools and consumables, incidental job burdens, and all general home office expenses and no separate allowance will be made therefor. Assistants to field and office supervisors include all clerical, stenographic, and general office help. Incidental job burdens include, but is not limited to, office equipment and supplies, temporary toilets, telephone, utilities, safety equipment, warning devices, personal protective equipment, and conformance to OSHA requirements. Project administration includes, but is not limited to, review and coordination, estimating, engineering, scheduling, and expediting relative to Change Orders, and updating and furnishing Record Drawings to incorporate changes, schedule update, supervision not applied solely to the Work of the Change Order, home office salaries and expenses, and City of Los Angeles Business Tax.

A. Unit Prices

Unit prices stipulated in the Schedule of Work and Prices (Bid) or itemized in the approved Schedule of Values shall be utilized, where they are applicable and determined reasonable by the Engineer. In the event that the Change Order results in a change in the Bid quantity of more than twenty-five percent (25%), either increase or decrease, then either the Engineer or the Contractor may request a review of the unit price to determine if a new unit price shall be mutually determined by negotiation. Any new unit price mutually determined under this Subsection shall only apply to the units in excess of one hundred twenty five percent (125%) of the Bid quantity for overruns. In case of underruns, the new mutually determined unit price shall only apply to the units up to seventy-five percent (75%) of the Bid quantity. When the final quantity is less than 75% of the Bid quantity, the total payment for that item shall not be more than 75% of the Bid quantity times the Bid unit price.

At the City’s option, payment for Unit Price Work in excess of 125% of the Bid quantity, or less than 75% of the Bid quantity, will be made on a Time and Materials basis as provided in Subsection C if a new unit price cannot be agreed upon.

Renegotiated unit prices or unit prices for new items added to the Contract by Change Order shall be determined in accordance with Subsections B through G. Whether stipulated in the Bid, itemized in the approved Schedule of Values or renegotiated, the unit prices used for payment constitute the total adjustment with no further costs owed for overhead, impact, profit, delay or impact to unchanged portions of the Contract, or any

other reason. The unit price shall be full and final compensation as described in Subsection D.

The cost proposals for renegotiated unit prices shall be presented in accordance with the provisions of Subsections B through G. Should any Bid Item be deleted in its entirety, the amount bid for that Bid Item shall be subtracted from the total Contract amount. The Contractor shall be paid only for the actual cost incurred prior to the notification of such deletion for that Bid Item.

B. Lump Sum

The Engineer may initiate a change in the Work by issuing a Preliminary Change Order (PCO). A PCO will include a detailed description of the proposed additions, deletions, or revisions with supplementary sketches or revised Contract Drawings and/or Specifications, and will request from the Contractor a lump sum cost quotation and time impact analysis for the proposed Change Order Work. The Contractor shall submit its PCO cost quotation and time impact analysis, if applicable, to the City within 14 calendar days after receipt of a PCO. The Contractor shall summarize the total cost and furnish a breakdown of the proposed lump sum costs satisfactory to the Engineer in accordance with Subsections B through G. Such lump sum costs shall be full and final compensation as described in Subsection D. The Contractor's quotation shall conform to the requirements of Section 01251- Change Order Requests and be submitted in the Change Order Cost Summary Form provided (see Attachment 01251-A1). The Change Order Cost Summary Form cannot be used to nullify or supersede any specification or contractual provision.

If the method or amount of payment cannot be agreed upon prior to performing the Change Order Work, the Engineer may issue a Unilateral Change Order in the amount determined reasonable by the Engineer for the Change Order Work and direct the Contractor to proceed immediately. The Engineer also has the option to issue a Time and Materials Change Order directing the Change Order Work be performed on a time and materials basis with the Contractor providing all labor, equipment, and materials necessary to complete the Change Order Work in a satisfactory manner and within a reasonable period of time. Estimates for lump sum quotations and accounting for Time and Materials Work shall be limited to direct expenditures necessitated specifically by the subject Change Order Work, and shall be segregated as follows:

1. Labor: The cost of labor shall include all employees of the Contractor or Subcontractor(s), up to and including working foremen, who are used in the actual and direct performance of the Change Order Work. Employees identified as superintendents or non-working foremen shall not be charged as labor on the Change Order Work. The labor rates used to price the Change Order Work shall be those listed on the Bureau of Engineering's website at http://eng.lacity.org/contractors/. The Change Order Labor Rates include State of California Prevailing Wages, Fringe Benefits (health & welfare, pension, vacation, training and other payments) as established by negotiated labor agreements, Payroll Taxes (FICA, Federal and State unemployment taxes) as established by law, and Insurance costs (Worker's Compensation and General Liability Insurance, but shall not include Automobile Liability Insurance, Umbrella or any other insurance costs). No other subcomponents of labor costs shall be considered, unless approved in writing by the Engineer.

   The Change Order Labor Rates are calculated using the most current published prevailing wage and fringe benefits determination, applicable to the Los Angeles County and the particular labor classification, from the State of California Director

of Industrial Relations. To the Total Base Hourly Wage Rate (Column D), will be added Payroll Taxes at 8.65% (Column E), and Worker's Compensation & General Liability Insurance at 13% (Column F) of the base wages (Columns A+B), respectively.

Copies of the prevailing wage and fringe benefit determinations are available on the internet at http://www.dir.ca.gov/OPRL/PWD/. Payment to a craft of classification not shown on the prevailing wage rate determinations shall comply with the rate of the craft or classification most closely related to it.

The Engineer may approve a higher markup for insurance by review of current invoice(s) of insurance premium, as prepared by insurance companies for the Contractor or its Subcontractors at all tiers, to be submitted by the Contractor within ten (10) working days after issuance of the Notice to Proceed.

Except when provided otherwise by specific labor agreements, the overtime compensation will be at 1.5 times for more than 8 hours per day and Saturday work (Column H) and 2 times for Sunday and Holiday work (Column I).

The labor cost is not allowed to be increased by using labor classifications with paygrades higher than necessary to accomplish the Change Order Work. Owners, business partners, stock holders, corporate officers, next of kin, relatives and other stake holders of the contracting company (whose classifications are directly chargeable to the project) may be chargeable to the Change Order Work, provided that these personnel/workers perform direct labor in accordance with their classification and have the approval of the Inspector. The rates shall not exceed the prevailing wage rate for the classification they are performing. Foreman/General Foreman classification shall include a premium not exceeding the allowable premium in the Master Labor Agreement over the highest prevailing wage he is supervising. All labor classifications considered for the work shall be presented to the City, via a submittal, for review and approval before change order work is performed.

Reimbursement at the computed Change Order Labor Rates is subject to verification by certified payroll.

2. Materials: The cost of materials used in performing the Change Order Work will be the direct cost, including sales tax and freight, to the purchaser, whether Contractor, Subcontractor or other forces, from the supplier thereof, except as follows:

   a. Cash or trade discounts available to the purchaser shall be credited to the City notwithstanding the fact that such discounts may not have been taken by the Contractor.

   b. For materials secured by other than a direct purchase and direct billing to the purchaser, the cost shall be deemed to be the price paid to the actual supplier as determined by the Engineer. Supplier markup, except for actual costs incurred in the handling of such materials, will not be allowed.

   c. Payment for materials from sources owned wholly or in part by the purchaser shall not exceed the price paid by the purchaser for similar materials from said sources on contract items or the current wholesale price for such materials delivered to the Jobsite, whichever price is lower.

d. If, in the opinion of the Engineer, the cost of materials is excessive, or the Contractor does not furnish satisfactory evidence of the cost of such materials, then the cost shall be deemed to be the lowest current wholesale price for the quantity concerned, delivered to the Jobsite less cash or trade discount. The City reserves the right to furnish materials for the Work and no claim shall be made by the Contractor for costs and profit on such materials.

e. For the purposes of this Section, a "Supplier" is defined as any person or persons, firm or business, who supplies materials of construction and/or permanent equipment, but who does not perform any portion of the Work of the Contract on site, for the Contractor, except that labor or labor supervision which may be required by some manufacturers as part of their equipment installation for warranty or other purposes.

3. Equipment: The cost of equipment shall include ownership, lease or rental costs, as well as operating costs, for individual equipment units whose replacement value is in excess of $1,000. Transportation and set up costs shall be included, but only if the equipment is imported to the worksite solely to perform work on the Changed/ Extra Work described in the Change Order and the Contractor can demonstrate that the changed work cannot or could not be performed economically with equipment already at the site. Equipment costs shall be determined in accordance with the requirements set forth in Subsection G.

4. Small tools, equipment, consumables and incidental costs: No separate payment will be made for the use of small tools or equipment with a replacement value of $1,000 or less. This applies to tools and equipment owned by the Contractor or its Subcontractors, at any tier. Also, no separate payment will be made for fuel, lubricants, tool or equipment repairs, tool or equipment maintenance, consumables, drinking water, sanitary facilities or other incidentals. These costs are already included as a part of Markup.

5. Subcontractor Costs, including their overhead and profit, provided that such costs are direct costs to the Contractor for performing the Change Order Work as set forth in Subsections B through G.

C. Time and Materials Work

The costs of all Changed/Extra Work submitted under the Time and Materials (T&M) method shall be formulated in accordance with the provisions of Subsections B through I.

Unless otherwise stipulated on the Change Order, the “Not-to-Exceed” amount for all T&M Change Orders is $25,000. The Contractor is responsible for tracking costs and for notifying the Engineer in writing when costs approach 50% and 75% of the “Not-to-Exceed” amount. In addition, if the Changed/Extra Work cannot be completed within the “Not-to-Exceed” limit, the Contractor shall notify the Engineer in writing, and in a timely manner, that the limit requires an increase. The City will only reimburse eligible costs up to the “Not-to-Exceed” amount.

The Contractor shall notify the Inspector at the beginning of each day when T&M Change Order Work is being performed. The Contractor shall notify the Inspector of the T&M Change Order Work being performed and describe the personnel involved, whether by Contractor forces or by its Subcontractors, at any tier. Failure to notify the Inspector prior

to the start of T&M Change Order Work serves as the Contractor's waiver to claim for compensation on that day.

For each day work is performed on the T&M Change Order, the Contractor shall submit a "Daily Report of Time and Material Work" to the Inspector. The "Daily Report" consists of Bureau of Contract Administration Form BCA-165 for labor supplied, and Form BCA-166 for equipment and materials supplied. The Inspector will only consider Forms that are properly completed as described below.

1. Separate forms must be used for labor and for equipment/materials.

2. Labor, equipment, material or expenditures that are not included on Bureau of Contract Administration Forms BCA-165 and/or BCA-166 are ineligible for payment. There will be no exceptions to this requirement. It is the responsibility of the Contractor to include any and all items of labor, equipment, or material for which it requests compensation for each day's work completed.

3. Information required on the Labor form shall include name of personnel, personnel classification, and only the number of hours worked on T&M Change Order Work for the day being reported. Since the overhead allowance already includes all necessary supervision, any hours for additional supervision or non-working foremen are ineligible for additional payment. The premium pay for a general foreman is eligible for payment only if the general foreman is a working foreman and a general foreman was required by a Union Labor Agreement or otherwise approved by the Inspector. The general foreman rate is eligible for payment only during the time that a general foreman was required for the T&M Change Order Work.

4. Information required on the Equipment/Material form shall include Contractor-owned equipment and/or tools, and rented equipment or tools for which compensation is requested. Information shall include the type of equipment, size of equipment, equipment identification number, appurtenances, and only the number of hours worked on the T&M Change Order Work.

5. The only allowable materials are materials delivered to the job site and/or incorporated only into the T&M Change Order Work. The allowable materials shall be listed on the Equipment/Material form for the day that they are delivered to the job site and/or incorporated into the T&M Change Order Work.

6. Delivery ticket(s) and/or bill(s) of lading for rental equipment and/or tools delivered to the site and/or material incorporated into the T&M Change Order Work for the day being reported must be attached with the T&M sheet for that day. No payment will be allowed for materials and/or rented equipment unless receipt(s) or bill(s) of lading is attached. If the request for payment is not substantiated by original vendor/supplier invoices, acceptable copies of original invoices, or other documentation acceptable to the Inspector, the City may establish the cost of the item(s) at the lowest possible wholesale price or rental rate applicable while the T&M Change Order Work was being performed.

7. Failure to submit the required "Daily Report of Time and Material Work" by the close of the next working day shall waive all rights for that day unless otherwise approved by the Inspector. Any T&M Change Order Work that cannot be substantiated by a "Daily Report", approved and signed by the Inspector, is ineligible for payment.

8. The Contractor is responsible for preparing the “Daily Report” for the T&M Change Order Work performed by its Subcontractors and submitting the forms to the Inspector on time.

9. The Contractor must have each “Daily Report” verified by the Inspector. After the “Daily Report” is approved by the Inspector, both the Contractor and Inspector sign the report. The original “Daily Report” is retained by the Inspector with a copy provided to the Contractor.

10. When the “Daily Report” is signed by the Inspector and the Contractor, it is binding on the Contractor and its Subcontractors.

11. When agreed to by the Inspector, the Contractor may submit a supplemental “Daily Report” for labor, materials, or equipment for which the Contractor requests compensation, but failed to list on the original daily report.

    a. These supplemental forms shall be marked “SUPPLEMENTAL”.

    b. Unless otherwise approved by the Inspector, the supplemental forms may only be submitted for approval up to two (2) working days following the date when the work was performed.

No payment will be allowed for labor, materials, or equipment included on T&M sheets not signed by the Contractor and the Inspector. Payment will not be allowed for labor, materials, or equipment included on T&M sheets signed by anyone other than the Inspector or the Inspector’s immediate supervisor.

D. General

It is the intent of the City to settle all Change Orders full and final at the time the Change Order is issued. Therefore, the following paragraph will be incorporated, in writing, on all Change Orders:

> “The compensation (time and cost) set forth in a Change Order comprises the total compensation due the Contractor, all Subcontractors, and all Suppliers, for the Work or change defined in the Change Order, including impact on unchanged work. By signing the Change Order, the Contractor acknowledges and agrees on behalf of himself, all Subcontractors, and all Suppliers, that the stipulated compensation includes payment for all work contained in the Change Order, plus all payment for the interruption of schedules, extended field overhead costs, delay, and all impact, ripple effect or cumulative impact on all other work under this Contract. The signing of the Change Order indicates that the Change Order constitutes full mutual accord and satisfaction for the change, and that the time and/or cost under the Change Order constitutes the total equitable adjustment owed the Contractor, all Subcontractors, and all Suppliers as a result of the change. The Contractor, on behalf of himself, all subcontractors, and all Suppliers, agrees to waive all rights, without exception or reservation of any kind whatsoever, to file any further claim related to this Change Order. No further claim or request for equitable adjustment of any type for any reasonably foreseeable cause shall arise out of or as a result of this Change Order or the impact of this Change Order on the remainder of the Work under this Contract.”

Costs which shall not be paid in Change Orders under this Contract include, but are not limited to, interest costs of any type; claim preparation or filing costs; legal expenses; the costs of preparing or reviewing proposed Change Orders or Change Order proposals;

lost revenue; lost profits; lost income or earnings; rescheduling costs; costs of idled equipment when such equipment is not at the site or has not yet been employed on the Work; lost earnings or interest on unpaid retainage; claims consulting costs; and the costs of corporate officer or staff visiting the site; any compensation due to the fluctuation of foreign currency conversion or exchange rates; loss of other business; changes in taxes or increased tax rates of any kind or any costs identified as unallowable under the provisions of the Federal Acquisition Regulations.

Extensions of time shall be based solely upon the effect of delays to the Work as a whole. Extensions of time shall not be granted for delays to the Work, unless the Contractor can clearly demonstrate, through analysis of the current updated schedule, that the delay to the Work as a whole arose or will arise from causes other than normal weather, beyond the control and without fault or negligence of the Contractor, or any Subcontractor, at any tier, and that such delays will, in fact, delay the progress of the Work as a whole. The Contractor shall not be entitled to a time extension unless it submits a Time Impact Analysis which is a calculation of the extent of the delay to the end date of the Work and which shows that the Work will be extended beyond the current Contract completion date. A Time Impact Analysis is a scheduling procedure which utilizes the networking techniques (fragnets) and a written analysis of the facts associated with the alleged delay to demonstrate the effect of the alleged delay on the critical path of the schedule. A "fragnet" is defined as a sequence of new activities and/or activity revisions that are proposed to be added to the existing current updated schedule to demonstrate (mathematically and graphically) the influence of the alleged delay on the end date of the Work and shall be the sole method for incorporating delays and impacts into the schedule. The objective of a Time Impact Analysis is to pinpoint, isolate, and quantify all time impact associated with a specific issue and determine its time relationship to current or future delays. Time extensions shall not be allowed for delays to parts of the Work that are not on the critical path of the currently approved monthly updated project schedule. Time extensions shall not be granted, nor delay damages of any kind whatsoever paid to the Contractor, until all available float, slack, or contingency time on the project is used and the end date of the Work is moved beyond the current, adjusted Contract completion date.

The cost summary, cost breakdowns and requests for cost reimbursement submitted by the Contractor (for delay, disruption, hindrance and interference associated with the changes, additions, deletions or extras) shall be itemized in a manner that, with mathematical certainty and without reliance upon probabilities or inferences, segregates the direct, actual reimbursable costs associated with each individual, change, addition, deletion, extra and (on an event-by-event basis) each individual delay or disruption event. Such cost summaries, breakdowns or requests shall not be based, in whole or in part, upon any methodology (such as “total cost” or “modified total cost” methodologies) that purports to calculate the Contractor’s additional costs of performance of the extra, change, addition or deletion (including without limitation the additional costs of delay, disruption or other impact) based on the difference between Contractor’s total actual Project or line item costs (with or without fee) and its original bid estimate for the Project or any original bid estimate line item. In connection with the foregoing, Contractor represents and warrants that it has the ability to generate and maintain complete and accurate cost accounting records that will reflect (i) the actual costs incurred or saved for each individual item of Extra Work, change, addition, deletion (including without limitation any costs of associated delay, disruption, interference, hindrance and the cumulative impact of each extra, change, addition, deletion on other parts of the Work); and, (ii) on an event-by-event basis, the effect of each delay or disruption that forms the basis of each request for extension of time, regardless of their scope, number, complexity, cumulative effect, or time of issuance or occurrence.

Except as provided in “Temporary Suspension or Delay of Work” of the General Conditions, Contractor shall have no right to recovery of any compensation, costs, expenses or damages resulting from delay, disruption, interference, or hindrance in the performance of the Work (including without limitation interruption of schedules, excess or extraordinary extended field and indirect overhead costs, loss of productivity and the impact, ripple or cumulative effect on other Work).

Contractor waives any claim or rights and remedies based on abandonment, quantum merit, rescission or other similar legal theory by reason of any of the following circumstances, which the Contractor acknowledges and agrees are within the reasonable contemplation of the parties: (i) changes, additions, deletions and extras to the Work after execution of the Contract and issued from time to time throughout the period of construction, regardless of their scope, number, cumulative value, or complexity, to correct errors, omissions, conflicts, and ambiguities in the Contract Documents, or to implement discretionary changes to the scope of Work requested by the City; (ii) the issuance and performance of changes, additions, deletions and extras in a manner that is not in sequence with the as-built or as-planned progress of the Work; (iii) changes due to Differing Site Conditions; (iv) suspensions of the Work or parts thereof, or limitations on access to portions or all of the Work, for the convenience of City or in the interests of the Project; (v) delay or disruption to the Work due to failure of the City, Engineer or Inspector to timely perform any contractual obligation.

E. Markups – Overhead and Profit

1. In addition to the direct expenditures specified for labor, materials and equipment in Subsection B, a fixed markup percentage will be paid for all overhead and profit, including: All insurance costs other than specifically mentioned in this Section, all field and office supervisors and assistants, all onsite project administration, security costs, the cost of small tools and consumables, incidental job burdens, and all general home office expenses and no separate allowance will be made therefor. Assistants to field and office supervisors include all clerical, stenographic, and general office help. Incidental job burdens include, but is not limited to, office equipment and supplies, temporary toilets, telephone, utilities, safety equipment, warning devices, personal protective equipment, and conformance to OSHA requirements. Project administration includes, but is not limited to, review and coordination, estimating, engineering, scheduling, and expediting relative to Change Orders, and updating and furnishing Record Drawings to incorporate changes, schedule update, supervision not applied solely to the Work of the Change Order, home office salaries and expenses, and City of Los Angeles Business Tax. The following maximum markup percentages shall be applied to the total amount of direct expenditures of the Contractor and Subcontractors, as noted in the Change Order Cost Summary Form.

Table A

Changed/Extra Work – Direct Costs	Markup Percentage
Contractor Direct Labor	20%
Contractor Direct Materials, Equipment, Other Items	15%
Subcontractor (of any tier) Direct Labor	20%
Subcontractor (of any tier) Direct Materials, Equipment, Other Items	15%
Contractor Administrative Fee for Subcontractor’s (of any tier) Direct Labor, Materials, Equipment, Retail Rental Equipment, Other Items	5%

2. Bonds and Insurance

An additional allowance of one percent (1%) of all direct costs (less markup) is allowed.

3. Add/ Deduct Changes

The overhead rates determined above shall be applied to all additive Change Orders, except those utilizing as-bid Unit Prices or Stipulated prices listed in the Bid Proposal.

Any change in the Work involving both extras and credits shall show a net total cost, including subcontracts. Allowances for overhead and profit to the net total cost, as specified herein above, shall be applied if the net total cost is an extra; overhead and profit allowances shall not be applied if the net total cost is a credit. When the credit is due to a reduction in unit price quantity, the Contractor shall not be entitled to retain the markups in E.1 above for the reduced quantity. The estimated cost of deductions shall be based on labor and material prices on the date the Contract was signed.

F. City Furnished Materials, Equipment and Services

The Engineer reserves the right to furnish materials, equipment and services deemed expedient for use on the Change Order Work. The Contractor shall have no claim for profit or overhead on the cost of such materials, equipment and services.

G. Equipment Costs

The rates for rental or leased equipment shall not exceed the rates listed in the Rental Rate Blue Book (the Blue Book) published by Primedia Information, Inc., San Jose, California, as adjusted to the regional area of the Work under this Contract. For T&M Change Orders, the rates are established by the actual paid invoice(s) that comply with the requirements of Subsections G.1 and G.3. Owned equipment costs shall not exceed the rates established by Subsection G.2. The most recent published edition in effect at the commencement of actual equipment use on Change Order Work shall be used.

The rates paid for any rented or leased equipment or tools shall include, oil, lubrication, supplies, small tools, necessary attachments, repairs and maintenance of any kind, depreciation, storage, insurance, profit and all incidental costs associated with the operation of the equipment or tools.

It is the responsibility of the Contractor to include any appurtenances added to equipment which would increase the basic rate for said equipment (i.e., hoe-ram, oversize bucket, etc.) as established in the acceptable rental rate guide. All equipment and/ or tools shall be acceptable to the Inspector, in good working condition, suitable for the purpose for which it is to be used, and necessary to complete the Change Order Work. Payment will be based on the manner in which the equipment was actually powered, operated and modified per the equipment manufacturer’s recommendations.

1. Rented or Leased Equipment

For equipment rented or leased (including lease with purchase option) in arm's length transactions from outside vendors, the Contractor shall be paid the actual invoiced, rented or leased rates provided that the invoiced lease or rental rates do not exceed the rates set forth in Blue Book. Arm's length rental or lease

transactions are those in which the firm involved in rental or lease of such equipment is not associated with, owned by, have common management, directorship, facilities, or stockholders with the firm renting the equipment. Submittal by a Contractor of a retail rental or leased invoice from the lessor will be prima facie proof of compliance with the above. However, such invoices are not conclusive proof; if questioned, the burden of proof remains with the Contractor. In no event shall the leased equipment rate billed to the City be at rates exceeding those prescribed in the following table:

Actual Usage (Change Order & Contract Work Combined)	Payment Category
Less than 8 hours	Hourly Rate
8 or more hours but less than 7 days	Daily Rate
7 or more days but less than 30 days	Weekly Rate
30 calendar days or more	Monthly Rate

a. When in Use:

Actual equipment use time documented by the Inspector shall be the basis that the equipment was utilized on the changed work and paid for under the T&M Change Order. In addition to the lease or rental rate, equipment-operating costs shall not exceed the estimated hourly operating rate as set forth in the Blue Book. The hours of operation shall be based upon actual equipment usage on the T&M Change Order Work as recorded by the Inspector. For multiple shift work sequences, the allowable equipment rate shall not exceed fifty percent (50%) of the base rate, for second or third shifts.

b. When Idle:

Idle equipment is equipment on site and necessary to perform the T&M Change Order Work, but periodically not in actual use due solely to the impact of the changed work. Equipment operating costs due to idle time, documented by the Inspector, shall be paid at the rate determined in "G" (1) above. The "ESTIMATED OPERATING COST $/HR" will not be paid when the equipment is idle. Idle time shall include a reasonable time allowance to and from the project site. Payment for equipment necessary to be on the site to complete the Work, but not in actual use due solely to the impact of the T&M Change Order Work, shall be paid per Caltrans Standard Specifications Section 8-1.07C, provided that its presence and necessity on the site has been documented by the Inspector, and further provided that the equipment was idled solely by actions of the City.

Payment for equipment or tools shall be limited to hours actually used on the T&M Change Order Work if the equipment or tool is already on site for Work under the original Contract. No "standby" time will be paid for equipment already on site for Work under the original Contract. Mark Up for retail rental equipment will be per Table A in Section E.1.

If equipment or tools are used intermittently and, when not in use, could be returned to the rental source at less expense than holding it at the work site, it shall be returned, unless the Contractor elects to keep it at the work site at no expense to the City.

2. Owned and Other Equipment

Equipment rates for owned equipment or equipment provided in other than arm's length transactions shall not exceed the total hourly costs as set forth in the Caltrans "Labor Surcharge and Equipment Rental Rates" effective at the time the T&M Change Order Work is performed. (The Caltrans equipment rental rates are available on the internet at http://www.dot.ca.gov/hq/construc/equipmnt.html.) If the equipment is not listed in Caltrans, then the Owned Rental Rate in Equipment Watch shall be used. When using Equipment Watch, the hourly rate for any period less than 7 days shall be the weekly rate divided by 40, plus the Operating Cost. Except as noted herein below, this equipment hourly rate plus the estimated operating cost per hour from Equipment Watch will be paid for each hour the equipment actually performs the T&M Change Order Work. Daily records listing the equipment units and their respective operators, identification code, and actual usage on the T&M Change Order Work, as certified at the end of each work day (or work shift if the Work is being performed in multiple work shift sequence) by the Inspector shall be the record upon which actual equipment use shall be based. For multiple shift work sequences, the Caltrans overtime factor shall be applied. When using the Blue Book, one-half the Non-Operating Cost will be deducted for second and third shifts. The Non-Operating Costs are the Blue Book monthly or weekly/40 rates, as applicable. It is agreed that this rate shall represent payment in full for all the Contractor's and Subcontractor's direct costs.

a. When Idle:

Payment for equipment necessary to be on the site to complete the Work, but not in actual use due solely to the impact of the changed work, shall be paid per Caltrans Standard Specifications Section 8-1.07C, provided that its presence and necessity on the site has been documented by the Inspector, and further provided that the equipment was idled solely by actions of the City. (When using the Blue Book the payment for idle time shall not exceed fifty percent (50%) of the Non-Operating Cost.) Idle equipment time will only be paid as a function of delays specifically directed or caused by the City's actions. In no event shall the idle time claimed in a day for a particular piece of equipment exceed the normal work schedule established for the project - usually eight (8) hours per day or forty (40) hours per week, and excluding Saturdays, Sundays, and holidays. For multiple shift work sequence, the allowable idle equipment rate shall not be allowed, for second or third shifts. It is agreed that this rate shall represent payment in full for all the Contractor's and Subcontractor's direct costs.

3. Equipment Haulage and Set-up Costs

Documented and actual equipment haulage and set-up costs shall be paid for, if applicable as set forth in Subsection B.3.

4. Other Equipment Cost Guides

In the event that an owned piece of equipment used on a Change Order is not listed in Caltrans or Blue Book, costs may be derived from the Associated General Contractor's of America Equipment Ownership Guide, the Associated Equipment Dealers Guide, or the Equipment Rate Guide published by the U.S.

Army Corps of Engineers as adjusted appropriately for the type of work and use and the regional area of the Work under this Contract.

H. Records

At any time should the Contractor deviate substantially from the schedule, method and sequence of operation, equipment, cost or pricing data furnished by the Contractor and agreed to by the City in connection with the Change Order or should the City determine that any price negotiated in connection with the Change Order is defective due to such deviation or the fault of the Contractor, the City reserves the right to reduce the Change Order cost and reissue the Change Order at the amount in which the City determines to be the actual costs to complete the Change Order Work.

Whenever any material or process is indicated or specified by patent or a proprietary name, or by name of a manufacturer in the Change Order, such direction shall not relieve the Contractor's responsibility or obligation to perform Work in accordance with the Contract requirements. The Contractor shall be solely responsible for, and have control over construction means, methods, techniques, sequences and procedures, coordination of all portions of the Contract and Change Order Work.

The Contractor shall on a weekly basis submit an approximate accounting of the amount expended on the T&M Change Order Work to date and an estimate of the Impact to the time of performance of the Contract Work.

I. Partial Payments for Time and Materials Change Order Work.

Progress payments for T&M Change Order Work shall only be made if the anticipated cost of the changed work is in excess of $100,000 and/or the time to perform the changed work will exceed two (2) months duration. To receive payments for T&M Change Order Work, the Contractor shall submit to the Engineer an invoice of the daily reports which were verified by the Inspector, with details and documents, verifying the Contractor's and Subcontractor's actual costs incurred for the T&M Change Order Work as set forth in Subsections B through H. Costs shall be submitted within thirty (30) calendar days after the T&M Change Order Work has been satisfactorily completed unless an extension of time for submittal is authorized in writing by the Inspector.

J. Field Office Overhead - Rate Per Day:

Subject to the provisions of this Subsection and "Temporary Suspension or Delay of Work" of General Conditions, for each day of approved time extension due solely to extras, changes, and additions to the Work, Contractor shall be entitled to compensation for additional Daily Field Office Overhead as set forth herein. As a further condition to the Contractor's right to such additional compensation, the Contractor shall submit a detailed listing of the Daily Field Office Overhead cost components which are time related. The individual cost components shall represent costs which have been or will be incurred or increased as a sole or direct result of the time extension. This listing may include, but is not limited to, onsite project management, supervision, engineering, and clerical salaries; onsite office utilities and rent; onsite company vehicles and their operating expenses; site maintenance and security expenses. Daily Field Office Overhead costs which are unaffected by the increased time or time extension in the Change Order shall not be allowable costs of the Daily Field Office Overhead rates. These cost components include, but are not limited to, acquisition and installation of plant, stationary equipment, temporary construction facilities, utilities and office furnishings (unless such items are rented or leased); the preparation of the site including clearing, grubbing, grading, and fencing; and mobilization and demobilization expenses. The listing of the Daily Field

Office Overhead cost components described above must be based on the Contractor's actual Field Office Overhead costs. This listing must be submitted with the first Change Order proposal that includes a time extension request per Subsection D. If the Contractor's time related Daily Field Office Overhead cost changes for subsequent compensable delays, then the Contractor shall submit a new Daily Field Office Overhead rate based on the Contractor's time related Daily Field Office Overhead costs at the time of the subsequent delay. If change order work is performed during a compensable delay, any Daily Field Office Overhead costs paid by that change order shall be deducted from the compensation owed for additional Daily Field Office Overhead during the same time period.

The Daily Field Office Overhead rate shall be multiplied by the number of days the Contract is to be extended in the Change Order, and shall then be added to the agreed upon costs of the Change Order. No markup for overhead costs and no profit allowance shall be allowed on the Extended Daily Field Office Overhead cost component of the Change Order. The derivation of an extended home office overhead rate and its application to Contract time extensions shall not be allowed.

The information submitted above shall be submitted in sufficient detail to allow review and shall be prepared in accordance with generally accepted accounting principles and applicable portions of the Federal Acquisition Regulations. The Engineer shall have the right to have an audit of the Contractor's costs performed, at the Contractor's sole expense, if the costs submitted are considered by the Engineer to be excessive, questionable, or unsupported. The overhead rates determined above shall be applied to all additive Change Orders, except those utilizing original as-bid unit prices under Subsection A.

END OF SECTION

SECTION 01255
PRICE REDUCTION FOR DEFECTIVE COST OR PRICING DATA

1.1 THE REQUIREMENT

A. If the ENGINEER determines that any price, including profit or fee, negotiated in connection with any Change Order under this Contract, or any cost reimbursable under this Contract, was increased because:

1. the CONTRACTOR furnished cost or pricing data which was not accurate, complete, and current as certified in the CONTRACTOR'S Certificate of Current Cost or Pricing Data;

2. a Subcontractor or prospective Subcontractor furnished cost or pricing data was submitted in support of a subcontract cost estimate furnished by the CONTRACTOR but which was not accurate, complete, and/or current as of the date certified in the CONTRACTOR'S Certificate of Current Cost or Pricing Data; or,

3. the CONTRACTOR or a Subcontractor or prospective Subcontractor, at any tier, furnished any data not within subsection 1.1A(1) or 1.1A(2), above, which was not accurate as submitted;

then the price shall be reduced accordingly, and the Contract shall be modified in writing as may be necessary to reflect such reduction. However, any reduction in the Contract price due to defective subcontract data of a perspective Subcontractor, when the subcontract was not subsequently awarded to such Subcontractor, will be limited to the amount (plus applicable overhead and profit allowances) by which the actual subcontract or actual cost to the CONTRACTOR if there was no subcontract, was less than the prospective subcontract cost estimate submitted by the CONTRACTOR; provided that the actual subcontract price was not affected by defective cost or pricing data.

B. The following certification from the CONTRACTOR is required to be provided on all Change Order quotations or requests for equitable adjustment in excess of ten-thousand dollars ($10,000).

CERTIFICATION OF CURRENT COST
AND PRICING DATA

This is to certify that, to the best of my knowledge and belief, cost or pricing data submitted in writing, or specifically identified in writing if actual submission of the data is impracticable, to the CITY in support of CONTRACTOR is to insert appropriate identification such as Change Order quotation, proposal quotation, price adjustment, etc. are accurate, complete, and current as of CONTRACTOR to insert date**.**

CONTRACT NO.: _____
PROPOSED CHANGE ORDER NO.: _____
FIRM: _____
NAME: _____
TITLE: _____
DATE: _____
SIGNATURE: _____

(END OF SECTION)

SECTION 01270
MEASUREMENT OF QUANTITIES FOR UNIT PRICE WORK

1.1 THE REQUIREMENT

A. General

1. Unless otherwise specified, quantities of work shall be determined from measurements or dimensions in horizontal planes. However, linear quantities of pipe, piling, fencing and timber shall be considered as being the true length measured along longitudinal axis.

2. Unless otherwise provided in Specifications, volumetric quantities shall be the product of the mean area of vertical or horizontal sections and the intervening horizontal or vertical dimension. The planimeter shall be considered an instrument of precision adapted to measurement of all areas.

B. Methods of Measurement

1. Materials and items of Work which are to be paid for on basis of measurement shall be measured in accordance with methods stipulated in the particular sections involved.

C. Certified Weights

1. When payment is to be made on the basis of weight, the weighing shall be done on certified platform scales or, when approved by the ENGINEER, on a completely automated weighing and recording system. The CONTRACTOR shall furnish the ENGINEER with duplicate licensed weighmaster's certificates showing actual net weights. The CITY will accept the certificates as evidence of weights delivered.

D. Units of Measurement

1. Measurements shall be in accordance with Section 01420 – UNITS OF MEASURE of the GENERAL REQUIREMENTS. A metric ton or "tonne" is equal to 1,000 kilograms and the unit of liquid measure is a Liter (in U.S. Standard Measures, a pound is an avoirdupois pound; a ton is 2,000 pounds avoirdupois; and the unit of liquid measure is a gallon).

(END OF SECTION)

SECTION 01280
MEASUREMENT AND PAYMENT

PART 1 - GENERAL

1.01 PAYMENT

A. Upon Contract award, the accepted Schedule of Work and Prices shall become the Payment Schedule. Payment for Work under the Contract shall be made at the unit prices listed in the Payment Schedule. For lump sum bid items, payment shall be made in accordance with Section 01298.

B. Payment for the measured quantities of Work performed shall be considered full compensation for all of the CONTRACTOR's costs associated with the performance of the Work. These costs comprise direct labor, materials, tools, equipment, transportation, supplies, incidentals, and subcontract Work; and indirect costs such as field and home office overhead, consulting and design services, establishment, operation and removal of general plant, taxes, insurance, permits, bond, profit, and contingencies for the performance of all Work specified.

C. The costs for conforming to the requirements for measuring quantities shall be considered included in the fixed, unit, or lump-sum prices paid for the quantities being measured, and no additional compensation will be made therefore.

D. Except for items subject to the Variation in Quantities clause, the unit prices listed in the Payment Schedule shall be applicable for calculating the amount payable under each item of the Schedule. Estimated quantities indicated in the Payment Schedule are for bidding purposes only. Payment will be determined by actual measured quantities of the Work installed/performed as verified by the INSPECTOR.

E. Work specified or shown on the drawings for which the Payment Schedule does not provide a separate lump sum or unit price is considered incidental and is not separately paid. The cost for such Work is compensated in the prices bid for other Work items and no additional compensation shall be allowed.

1.02 MEASUREMENT OF QUANTITIES

A. Measure quantities in accordance with standard industry practice and as specified herein. The CITY will verify measurements. Measure quantities to the nearest whole number of units. Round down fractional units less than one-half; round up fractional units one-half or greater.

1. Measure sewer debris volumes by weight as described herein.

2. Measure areas in two mutually perpendicular axes in the plane of the surface being measured.

3. Measure linear quantities along the longitudinal centerline of the item, except as otherwise specified.

B. Measurement of a lump sum item shall be for the entire item, unit of Work, structure, or combination thereof, as listed or indicated in the Payment Schedule, except as otherwise specified. Progress payments for lump sum items in the Payment Schedule shall be made in accordance with Section 01298.

C. Determine quantities of Work performed for payment purposes and submit them to the INSPECTOR for approval. Assist the INSPECTOR in the taking of measurements by providing equipment, workers, and survey crews as required to verify quantities in accordance with the provisions for measurement specified herein.

1.03 REJECTED, EXCESS, AND WASTED MATERIALS

A. The following shall not be measured for payment:

1. Quantities of material wasted or otherwise disposed.

2. Rejected loads of material, including material rejected after it has been placed for failure to comply with specified requirements.

3. Material remaining on the transporting vehicle or in the pipeline.

4. Muck material not removed from designated location.

5. Material placed outside specified or indicated lines or limits.

6. Material not incorporated into the Work.

7. Material remaining on hand after completion of the Work.

B. No payment will be made for loading, hauling, and disposing of rejected material.

1.04 PAYMENT SCHEDULE

A. **BID ITEM 1: General Mobilization** (Lump Sum)

1. The amount payable under this item is fixed at the bid price. This bid price is for costs of work in advance of construction operations. This Bid Item is not included and attributable directly to any other specific Bid Items. For progress payments, the amount payable under this item shall be determined in accordance with Section 01292.

2. The Work shall include:

a. The movement of personnel, equipment, supplies and incidentals to the project sites.

b. Temporary laydown area and obtaining all permits and clearance requirements to secure and utilize the laydown area

c. The establishment of field offices, parking, utilities and other facilities at the Work Area Sites for the CITY and the CONTRACTOR, as specified in Section 01721.

d. Applying for permits (if applicable) and coordinating work with other agencies such as USACE, LADOT, AQMD, LADBS, LADWP, SCG and other utility companies and public agencies.

Work, such as handling homeless encampment within and/or adjacent to work site & community outreach regarding disruption to the Los Angeles River Bike Path and Recreational Parks at pit locations and bypass locations must be performed and

resolved during mobilization. This work shall be, but is not limited to, installation 12 feet chain link and gates per S-691 around the pit(s) and/or at field office locations.

Tonya Durrell
(213) 978-0333 (office)
(213) 798-6085 (cell)
Tonya.Durrel@lacity.org

In addition, contact LA – Homeless Services Authority at (213) 225-6581 to handle any homeless issues

CONTRACTOR shall comply with all instructions and requirements of the PAO and the Mayor's office regarding homeless encampment issues. In addition, the CONTRACTOR shall comply with all instructions and requirements by the PAO, LADOT, LA County, and Mayor's office regarding any construction/bypass activities. All the costs related and associated with these issues shall be included in the Bid Item 1 "Mobilization".

B. **BID ITEMS 2 through 9: Allowance Items**

1. Allowance items have been established in the Bid Schedule to compensate the CONTRACTOR for the cost of performing such items as the CITY may require for the construction of the Work, but for which it is impracticable to ascertain the scope prior to bid. If the total cost compensable under each allowance item differs from the amount set forth in the SCHEDULE OF WORK AND PRICES, the Contract Price shall be adjusted by a Change Order for the difference between the total actual costs and the allowance amount as an additional amount due the CONTRACTOR or a credit to the CITY, as appropriate.

2. Reimbursement for all allowance items shall be as determined by GR-Section 01212.

3. The allowance items are as follows:

a. **Bid Item 2: Allowance for Engineer's and Inspector's Field Office Supplies:**

Reimbursement for CONTRACTOR's expenses for furnishing, installing, and maintaining field office facilities for CITY construction management staff beyond specified requirements in the Section 01721 of these GENERAL REQUIREMENTS. As determined by the Section 01212 of these GENERAL REQUIREMENTS.

b. **Bid Item 3: Allowance for Differing Site Conditions:**

This allowance will compensate the CONTRACTOR the additional expenses and measures taken to address and to mitigate Differing Site Condition(s) as defined and approved by the CITY per conditions set forth in Section 01253 of the specification in addition to abandoning and/or relocation of site utilities encountered during construction but not shown on the current project plans as directed by the CITY or the ENGINEER.

This allowance will compensate the CONTRACTOR in the event of an omission of an existing utility in the contract, or if an existing utility needs to be relocated due to its location in the field differing significantly from that shown in the contract drawings, and in the opinion of the ENGINEER that the utility relocation is necessary to avoid impacting the Work. If actual utilities are within 2 feet off location shown on the drawings (centerline to centerline), there will be no compensation provided under this bid item. This allowance shall not compensate the CONTRACTOR to relocate

existing utilities shown on the contract drawings proposed or specified for relocation by others.

c. **Bid Item 4: Allowance for Payment for Permits:**

Reimbursement for CONTRACTOR's expenses for permits fees without compensation for any mark-ups. The CONTRACTOR shall include in the Bid the amount stipulated under PERMITS in the SCHEDULE OF WORK AND PRICES in the Bid Proposal as ana allowance for the costs of all required permits.

Costs shall be limited to the actual fees paid to the agencies and will be reimbursed based on original receipts only. No overhead, profit, or mark-ups shall be added to the cost of the permits. The CONTRACTOR shall deliver to the ENGINEER with each permit the original receipt. After all permits have been obtained and delivered, the actual costs of all permits shall be reviewed by the CONTRACTOR and the ENGINEER.

d. **Bid Item 5: Allowance for Opportunity to Partner:**

Reimbursement of 100 percent of the expenses for partnering, as determined by Section 0153 of these GENERAL REQUIREMENTS. There shall be no mark-ups for overhead or profit.

e. **Bid Item 6: Allowance for Startup Assistance:**

This allowance will compensate the CONTRACTOR for startup assistance, as determined by Section 01750 of these GENERAL REQUIREMENTS.

f. **Bid Item 7: Allowance for Disturbed Control System Integration by Honeywell**

This allowance will compensate the CONTRACTOR for Distributed Control System Integration by Honeywell, as determined by Section 17450.

g. **Bid Item 8: Allowance for Community Impacts Mitigation**

This allowance bid item shall be used solely to reimburse any/all CONTRACTOR's costs associated with performance of extra work related to community relations at the direction of the ENGINEER.

(1) Compensation for noise, vibration and other mitigation measures beyond the requirements indicated and specified in Sections 01561 and 01562 of these GENERAL REQUIREMENTS.

This allowance shall not compensate CONTRACTOR for costs associated with applying for or complying with requirements established because of any CONTRACTOR request for nighttime work hours beyond the allowable working hours. This allowance shall not compensate CONTRACTOR for any means or methods or required change to its means or methods to comply with Sections 01561 and 01562 of the GENERAL REQUIREMENTS.

(2) Construction Mitigation Fund: As part of CITY's Public Outreach Program, a Construction Mitigation Fund has been established which can include, but is not limited to, the following types of mitigation efforts by the CONTRACTOR to assist nearby residents or businesses, as approved by the City of Los Angeles Department of Public Works Public Affairs Office staff:

(a) Purchasing car washing certificates, house cleaning/window washing certificates for residents near construction to mitigate for dust from the project site.

(b) Coordinating with local businesses and property owners to allow access to their businesses/properties during construction.

(c) Producing and posting signs or banners for nearby businesses to inform customers that they are open during construction or to direct customers to an alternate access point.

(d) Producing and placing an advertisement in the local newspaper to announce that the businesses near the construction are open during construction and/or to announce that the construction has finished, and the businesses are open

C. **Bid Item 9: Demolition and Relocation**

Lump sum amount for all demolition and relocation work included in the Contract Documents.

D. **Bid Item 10: Stormwater Pollution Prevention Plan (SWPPP)**

Lump sum amount for implementing the Stormwater Pollution Prevention Plam (SWPPP) included in the Contract Documents, as determined by Section 01571.

E. **Bid Item 11: Earthwork**

Lump sum amount for all earthwork included in the Contract Documents.

F. **Bid Item 12: Underground Infrastructure**

Lump sum amount for all work involving the construction of the storm drain system, underground infiltration galleries, pretreatment unit (baffle box), diversion structure and associated appurtenances, and storm drain piping included in the Contract Documents.

G. **Bid Item 13: Landscape and Irrigation**

Lump sum amount for all landscape (including trees, shrubs, and hydroseed planting soil preparation, gravel, and boulders) and irrigation work in the Contract Documents.

H. **Bid Item 14: Maintenance Access Road (Concrete Road, Pavers, and Driveways)**

Lump Sum amount for work involving construction of concrete road, pavers, and driveways included in the Contract Documents.

I. **Bid Item 15: Enhanced Pavements and Decomposed Granite Surfacing**

Lump sum amount for all work involving the construction of the enhanced pavement (including grass surface pavers) and decomposed granite surfaces (including concrete edging) in the Contract Documents.

J. **Bid Item 16: Site Furnishings**

Lump sum amount for all work involving the construction and installation of site furnishings (i.e., benches, drinking fountains, trash/recycling receptacles, bollards, and educational signage) included in the Contract Documents.

K. **Bid Item 17: Electrical Service and Components**

Lump sum amount for all electrical work included in the Contract Documents.

L. **Bid Items 18: Instrumentation**

Lump sum amount for all instrumentation work included in the Contract Documents.

(END OF SECTION)

SECTION 01291
NOTICE TO WITHHOLD AND/OR STOP NOTICE

1.1 THE REQUIREMENT

A. When a "Notice to Withhold" or "Stop Notice" is served upon the CITY, or the Board, pursuant to the lien statutes of the State of California, to withhold sufficient funds from payments to the CONTRACTOR in support of a claim resulting from default by the CONTRACTOR in payment for labor or materials used in prosecution of the Contract, the CITY shall withhold from payment due the CONTRACTOR an amount of money equal to the amount of the claim stated in the "Notice to Withhold" or "Stop Notice," and an additional amount equal to twenty-five percent (25%) of the amount of said claim, to defray the costs of litigation in the event of court action on the claim, for a total withholding of one and one quarter (1-1/4) times the stated amount of the claim. At the discretion of the CITY, the CITY may allow the CONTRACTOR to file with the CITY the bond referred to in the Civil Code of the State of California after which said monies will not be withheld on account of such "Notice to Withhold" or "Stop Notice."

B. In the event the Contract is terminated for CONTRACTOR default, any funds due the CONTRACTOR and retained by the CITY in accordance with SECTION 01292 -PAYMENTS of these GENERAL REQUIREMENTS, shall become the property of the CITY to the extent necessary to repay to the CITY any excess in the Contract Price above the cost of the Work completed at the time of termination. After issuance of Notice To Discontinue Work, no further payments will be made to the CONTRACTOR for the Work covered by the notice until completion of work and final settlement has been made.

(END OF SECTION)

SECTION 01292
PAYMENTS

1.1 PAYMENT FOR MOBILIZATION

A. Payment for mobilization shall be limited to those items of work described in MOBILIZATION of these GENERAL REQUIREMENTS. Whether Mobilization is included as a Contract Bid Item in the Bid Proposal Form or specified as part of the lump sum in the Contract Documents, the amount shall include full compensation for furnishing the labor, materials, tools, equipment and incidentals for all of the Work involved in mobilization in advance of construction operations. The CONTRACTOR shall submit to the ENGINEER for approval the Contract Price Breakdown with the amount established for mobilization.

B. The CONTRACTOR shall submit to the INSPECTOR for approval a breakdown of the amount established for mobilization. Total payment (100%) for obtaining insurance and bonds will be made upon proof of payment for those items. The payment for all other items of mobilization will be made when those items of mobilization have been completed and as specified below:

1. When the monthly partial payment estimate of the amount earned, not including the amount earned for mobilization, is five percent (5%) or more of the original Contract amount, the total amount earned for mobilization may be up to fifty percent (50%) of the Contract item price for mobilization. This amount will be included in the said estimate for payment.

2. When the monthly partial payment estimate of the amount earned, not including the amount earned for mobilization, is ten percent (10%) or more of the original Contract amount, the total amount earned for mobilization may be up to seventy-five (75%) of the Contract item price for mobilization. This amount will be included in the said estimate for payment.

3. When the monthly partial payment estimate of the amount earned, not including the amount earned for mobilization, is twenty percent (20%) or more of the original Contract amount, the total amount earned for mobilization may be up to ninety-five percent (95%) of the Contract item price for mobilization. This amount will be included in the said estimate for payment.

4. When the monthly partial payment estimate of the amount earned, not including the amount earned for mobilization, is fifty percent (50%) or more of the original Contract amount, the total amount earned for mobilization may be up to one hundred percent (100%) of the Contract item price for mobilization. This amount will be included in the said estimate for payment.

C. The adjustment provisions in CHANGE ORDERS of these GENERAL REQUIREMENTS, and the retention of funds provisions in this Section, shall not apply to the Contract lump sum item for Mobilization.

D. When other Contract items are adjusted as provided in CHANGE ORDERS of these GENERAL REQUIREMENTS, if the costs applicable to such item of work include mobilization costs, such mobilization costs will be deemed to have been recovered by the CONTRACTOR by the payments made for mobilization and will be excluded from consideration in determining compensation under said Article.

E. When the Contract does not include a Contract pay item for mobilization as specified above, full compensation for any necessary mobilization required shall be considered as included in the prices paid for the various Contract items of work involved and no additional compensation will be allowed.

1.2 PAYMENT FOR PERMITS

A. The Contractor shall obtain and pay for all permits necessary for performance of the Work in accordance with the provisions of PERMITS AND CONSTRUCTION EASEMENTS of the GENERAL CONDITIONS. If the Bid Proposal provides an allowance for Permits, the CONTRACTOR shall include in the Bid the amount stipulated under PERMITS in the SCHEDULE OF WORK AND PRICES in the Bid Proposal as an allowance for the costs of all required permits. Costs shall be limited to the actual fees paid to the agencies and will be reimbursed based on original receipts only and no overhead or profit shall be added to the cost of the permits. The CONTRACTOR shall deliver to the ENGINEER with each permit the original receipt. After all permits have been obtained and delivered, the actual costs of all permits shall be reviewed by the CONTRACTOR and the ENGINEER. If the total costs differ from the amount set forth in the SCHEDULE OF WORK AND PRICES, the Contract Price shall be adjusted by a Change Order for the difference between the total actual costs and the amount included in the Bid, as an additional amount due the CONTRACTOR or a credit to the CITY, as appropriate.

1.3 MONTHLY PROGRESS PAYMENTS

A. General

1. The quantities listed in the Bid schedule will not govern final payment. Payment to the CONTRACTOR will be made only for actual quantities of Contract items constructed in accordance with the Plans and Specifications. Upon completion of construction, if the actual quantities show either an increase or decrease from the quantities given in the Bid schedule, the Contract Unit Prices will prevail subject to the provisions of CHANGE ORDERS of these GENERAL REQUIREMENTS.

2. The unit and/or lump sum prices to be paid shall be full compensation for the items of work and all appurtenant work, including furnishing all materials, labor, equipment, tools, and incidentals.

3. Payment will not be made for materials wasted or disposed of in a manner not called for under the Contract. This includes rejected material not unloaded from vehicles, material rejected after it has been placed, and material placed outside of the Plan lines. No compensation will be allowed for disposing of rejected or excess material.

4. Payment for work performed or materials furnished under an Assessment Act Contract will be made as provided in particular proceedings or legislative act under which such Contract was awarded.

5. Whenever any portion of the Work is performed by the CITY at the CONTRACTOR'S request, the cost thereof shall be charged against the CONTRACTOR, and may be deducted from any amount due or becoming due from the CITY.

6. Whenever immediate action is required to prevent injury, death, or property damage, and precautions which are the CONTRACTOR'S responsibility have not been taken and are not reasonably expected to be taken, the CITY may, after reasonable attempt to notify the CONTRACTOR, cause such precautions to be taken and shall charge the cost thereof against the CONTRACTOR, or may deduct such cost from any amount due or becoming due from the CITY. CITY action or inaction under such circumstances shall not be construed as relieving the CONTRACTOR or its Surety from liability.

7. Guarantee periods shall not be affected by any payment, but shall commence on the date equipment or material is placed into service at the direction of the CITY. In the event such items are not placed into service, prior to partial or final completion of the project, the guarantee period will commence on the date of completion.

8. If the Contract comprises two or more major units of work readily separable and divisible, and for which separate prices are stipulated in the Contract, the CONTRACTOR may make separate requests for progress payment on each such unit, and the CITY will make such progress payments, statement of completion, acceptance, retention, and final payment in accordance with the procedure specified above for the entire Contract.

9. The making of any payment to the CONTRACTOR under this Contract shall not relieve the CONTRACTOR of any obligations hereunder. The CONTRACTOR is obligated to complete the Contract in its entirety and to deliver to the CITY such acceptably completed work, finished product or structure as is specified in the Contract, at the time or times specified. Until this Contract is fully performed by the CONTRACTOR, and the Work, product, or structure produced thereby is accepted by the CITY, the CONTRACTOR shall also be obligated to repair, replace, restore, or rebuild any fully or partially completed work or structure, or any materials or equipment required to be provided under the Contract which may be damaged, lost, stolen, or otherwise injured in any way. This particular obligation of the CONTRACTOR, with respect to any major unit of the type mentioned in this Section, will terminate upon the completion by the CONTRACTOR and acceptance by the CITY of such major unit.

B. Monthly Request for Payment

1. Unless otherwise prescribed by law, three (3) working days prior to the last work day of each month, or other such date mutually agreed upon by the CONTRACTOR and the INSPECTOR, the CONTRACTOR shall prepare and submit to the INSPECTOR, an estimate of the cumulative amount and value of acceptable Work performed by the CONTRACTOR at the Jobsite up to that date. The value of the completed Work shall be based on the approved Schedule of Values in accordance with the provisions of SCHEDULE OF VALUES/CONTRACT PRICE BREAKDOWN of these GENERAL REQUIREMENTS. Said amount

shall also include the value of all acceptable materials and equipment for the Contract that have been delivered and suitably stored but not yet used in the Work, subject to the requirements of this Section.

2. The CONTRACTOR will be required to make all monthly requests for payment on the CITY'S Contract Payment Request Form. CONTRACTOR shall submit Contract Payment Request Form with the approved Payment Request estimate of work to the INSPECTOR. That form requires that the CONTRACTOR certify, under penalty of perjury, to the following:

   a. No workers were required or permitted to work more than eight (8) hours in any one calendar day, except in cases of emergency, and except as provided by law.

   b. Not less than the prevailing rates of wages, as set forth in the Contract for this Work, have been paid all laborers, workers, and mechanics employed to perform this Work.

   c. There were no substitutions of Subcontractors, no assignment or transferences of Subcontractors or Sub-Subcontractors, except as approved by the Board of Public Works.

   d. All of the provisions of Los Angeles Administrative Code, Section 10.8, pertaining to non-discrimination in employment have been complied with.

C. Payments for undelivered equipment, specifically manufactured equipment to be incorporated into the Work, excluding "off the shelf" or catalog items, will be made when all of the following conditions exist:

   1. The equipment must be specifically designated in the Technical Specifications for partial payment prior to delivery,

   2. The equipment to be specifically manufactured for the Project could neither be readily utilized on, nor diverted to, another job; and,

   3. A fabrication period of more than six (6) months is anticipated.

D. On lump-sum Contracts the INSPECTOR'S estimate of the monthly payment due the CONTRACTOR is an estimate of work acceptably completed and will not be required to be made by strict measurement.

E. Upon verification and approval by the INSPECTOR, the progress payment estimate shall be forwarded to the Payment Section of the Bureau of Contract Administration for processing.

F. Payment to the CONTRACTOR shall be made within 30 days after an undisputed and properly submitted payment request is received from the CONTRACTOR by the Bureau of Contract Administration Payment Section.

G. The CITY shall retain a portion of the amount otherwise due to the CONTRACTOR, as follows:

1. Retention of five percent (5%) will be held on the original Contract value on each approved payment claim until the amount paid of the original Contract equals fifty percent (50%). The INSPECTOR may then, at its sole discretion, discontinue further retention on the original Contract value for all subsequently approved payment claims.

2. At any time during the course of the Contract, the INSPECTOR may, at its sole discretion, reinstate the five percent (5%) retention.

3. In the event the Contract is terminated for CONTRACTOR default, any funds due the CONTRACTOR and retained by the CITY in accordance with these provisions, shall become the property of the CITY to the extent necessary to repay to the CITY any excess in the Contract Price above the cost of the Work completed at the time of termination. After issuance of Notice To Discontinue Work, no further payments will be made to the CONTRACTOR for the Work covered by the notice until completion of work and final settlement has been made.

H. Additional deductions will be made from each monthly payment request for amounts due the CITY as follows:

1. Equipment or materials furnished by the CITY.

2. Services rendered to the CONTRACTOR by the CITY.

3. Amounts due the CITY for liquidated damages under the terms of the Contract.

4. Amounts required to be deducted by federal, state, or local governmental authority or other provisions of these Contract Documents.

I. From the balance thus determined will be deducted the amount of all previous payments, and the remainder shall constitute the monthly payment due the CONTRACTOR.

J. The monthly payments may be withheld or reduced, for the following reasons:

1. If the CONTRACTOR is not diligently or efficiently complying with the express intent of the Contract;

2. If there are unresolved Notices of Non-Compliance;

3. If Technical Manuals are not submitted;

4. If Record Drawings are not kept up-to-date;

5. If progress photographs are not submitted;

6. If construction schedules are not submitted in accordance with these General Requirements; or

7. If the Solid Waste Diversion and Disposal Report is not submitted with progress payment estimate.

8. Failure of the CONTRACTOR to maintain insurance as required by the CONTRACT.

9. Upon written request of the ENGINEER.

K. The CONTRACTOR shall promptly submit the following in response to requests by the INSPECTOR:

1. All information and records necessary to determine the cost of the Work for purposes of estimating monthly payment.

2. All itemized statements, in a form satisfactory to the INSPECTOR, of the actual cost of all acceptable materials delivered by the CONTRACTOR to the site.

L. The making of any payment to the CONTRACTOR shall not relieve the CONTRACTOR from Contractual obligations. These payments shall not be construed as the transfer of ownership of any equipment or materials to the CITY.

M. Responsibility of ownership shall remain with the CONTRACTOR who shall be obligated to store, protect, repair, replace, rebuild or otherwise restore any fully or partially completed work or structure for which payment has been made. The CONTRACTOR shall replace any materials or equipment required to be provided under the Contract which may be damaged, lost, stolen, or otherwise degraded in any way prior to acceptance of the Work under the Contract.

N. Escrow Account for Retention Payments

1. Under Section 22300 of the Public Contract Code, the CONTRACTOR has the option to deposit securities with an Escrow Agent as a substitute for the CITY withholding the required five percent (5%) retention from progress payments to ensure performance of any contract entered into between the CITY and the CONTRACTOR. Provided adequate value of securities is on deposit with the Escrow Agent, retention payments are then made directly to the CONTRACTOR by the CITY. As an option, Section 22300 also permits the CONTRACTOR to have retention payments made directly to the Escrow Agent, with no requirement for the CONTRACTOR to deposit securities with the Escrow Agent. If the CONTRACTOR requests neither of the above alternatives, the retention funds will be retained by the CITY and invested by the City Treasurer, in which case, interest earned will accrue to the benefit of the CITY.

2. Under the terms of the Escrow agreement, the CONTRACTOR has the option to arrange to deposit securities up front for up to the full five percent (5%) of the total amount of the Contract (Option “A”), or to have the CITY make payments directly to the Escrow Agent for the amount the CITY withholds for the required retentions with no requirement for the CONTRACTOR to deposit securities in advance (Option “B”). These arrangements are set forth in the Escrow Agreement.

3. At the CONTRACTOR'S request, the Bureau of Accounting will provide the necessary paperwork to establish the Escrow Account. For information contact:

Ester Paras; Senior Accountant II
Ester.paras@lacity.org
(213) 978 -0927

1.4 PAYMENT FOR MATERIALS OR EQUIPMENT DELIVERED AND STORED ON THE JOBSITE

A. Materials and/or equipment are eligible for partial payment when delivered and stored at the Worksite as follows:

1. Each individual piece of the material or equipment must be valued at $5,000 minimum.

2. The materials and equipment are intended for permanent installation.

3. The materials or equipment are specifically delineated in the Contract, specially manufactured for this project and not readily useable on other projects.

4. The CONTRACTOR shall store the materials and equipment as required in STORAGE OF MATERIALS AND EQUIPMENT in these GENERAL REQUIREMENTS.

5. Living, perishable, degradable or standard stocked items are ineligible.

B. The partial payment is limited to the lesser of 1) Ninety-five percent (95%) of the invoice cost, or 2) The bid item amount less an estimate by the City for installation.

C. The CONTRACTOR shall include cost-loaded scheduling activities for items of material and equipment that the CONTRACTOR intends to request "Partial Payment for Materials or Equipment Delivered and Stored on the Job Site".

D. The CONTRACTOR shall provide all documentation necessary to establish the cost of such materials and equipment for the "Schedule of Values".

E. Prior to start of Work, the CONTRACTOR shall provide the INSPECTOR with a list of all materials or equipment proposed to receive partial payment under the provisions of this Article, along with its supplier, fabricator or manufacturer.

F. Change orders and/or time extensions will not be issued for any costs or impacts related to compliance with this section, including documentation, special handling, or special storage.

1.5 PAYMENT FOR MATERIALS OR EQUIPMENT STORED OFF THE JOBSITE

A. Partial payment for materials or equipment stored off the Jobsite shall be subject to the following conditions:

1. Payment will not be made for any materials or equipment unless each individual piece of the material or equipment becomes a permanent part of the Work and has a value of more than $5,000.

2. The materials and/or equipment are required by the Specifications, and are specifically manufactured for the Project and could not readily be utilized or diverted to another job.

3. No payment will be made for living or perishable plant material, or for degradable materials such as rock, sand, cement, or for reinforcing steel, miscellaneous piping, off the shelf and catalog items, or similar items, until they are incorporated into the Work.

4. Payment for the materials or equipment stored shall not exceed sixty percent (60%) of the invoice cost of the materials or equipment. Percent of the invoice paid shall be at the discretion of the CITY. The amount paid shall not exceed the total amount of the Bid item less an amount estimated for installation.

B. The CONTRACTOR shall include cost loaded activities for the materials and equipment, for which payment will be requested, in the Schedule of Values. The CONTRACTOR shall provide all documentation necessary to establish the cost of the materials or equipment.

C. All suppliers, fabricators, or manufacturers who intend to furnish materials or equipment to the CITY must file a notice with the CITY in accordance with the State of California lien laws.

D. Each supplier, fabricator or manufacturer shall file a list, with the INSPECTOR, indicating the materials or equipment to be furnished to the Project. They shall also provide a notarized declaration from their company indicating the employees authorized to sign an unconditional release for the company. The persons signing the declaration and the unconditional release shall be identified by name and title.

E. Each request for payment shall include a notarized Unconditional Release that conforms to the California Civil Code for no less than 60% of the invoice cost of the materials or equipment. The release shall be signed by an authorized employee identified in the corporate declaration. The request shall include the suppliers invoice for the materials or equipment.

F. The CONTRACTOR shall store the materials and equipment as required in STORAGE OF MATERIALS AND EQUIPMENT of these GENERAL REQUIREMENTS, in a bonded warehouse or facility approved by the INSPECTOR. The storage site shall be located within fifty (50) miles of the geographic limits of the CITY. The materials and equipment shall be physically segregated from all other materials or equipment within the facility and shall be identified as being the "PROPERTY OF THE CITY OF LOS ANGELES". The CONTRACTOR shall exercise all measures necessary to ensure preservation of the quality, quantity, and fitness of such materials or equipment and shall perform

the manufacturers' recommended maintenance of the materials or equipment. The CONTRACTOR shall inspect the materials and equipment, and submit a monthly written report to the INSPECTOR listing all the equipment stored, results of their inspection, and the maintenance performed.

G. The CONTRACTOR shall grant the INSPECTOR and the ENGINEER access to the storage facility at any time and assist the INSPECTOR and the ENGINEER in conducting a full view, piece by piece, inventory of all such material or equipment.

H. The CONTRACTOR shall provide all additional insurance necessary to insure the materials or equipment against loss of damage. The insurance provided shall be provided as stated in INSURANCE of the GENERAL CONDITIONS. The insurance shall cover the material or equipment, while stored at the approved site, while in transit to the Jobsite, while being off-loaded at the site and until the material or equipment is incorporated into the Work and the CONTRACT is accepted by the BOARD.

I. The CONTRACTOR shall be responsible for any damage to, defects therein, mis-fabrication thereof, or loss of the materials or equipment.

J. The CONTRACTOR shall be responsible for any resulting project delays or consequential damages as if the CONTRACTOR were the owner of the material or equipment until it is incorporated in the Work and accepted by the CITY.

K. The CONTRACTOR shall absorb any and all cost incurred to meet the requirements of this article without modification in the Contract amount.

L. The CONTRACTOR shall present the storage arrangements in writing and sign a Security Agreement, which shall be submitted to the INSPECTOR for approval by the City Attorney. This agreement shall set forth the terms of ownership, storage and insurance necessary to insure the material or equipment against damage or loss.

1.6 FINAL PAYMENT

A. Final Payment of all monies owed the CONTRACTOR shall be made within 60 days of the date of Final Field Acceptance by the Final Inspector after deducting all prior payments and all amounts to be withheld under the provisions of the Contract, including the following items:

1. Liquidated damages, as applicable;

2. "Disputed Funds" including, but not limited to, the following:

a. Penalty and/or restitution for failure of the CONTRACTOR to pay prevailing wages as required by the contract.

b. Penalty for failure of the CONTRACTOR to receive approval of all Subcontractor(s) prior to said Subcontractor working on the project.

c. Penalty for failure of the contractor to receive approval for Subcontractor substitution(s).

d. Penalty for failure of the contractor to receive approval for a reduction in the dollar amount paid a bid-listed and/or approved Subcontractor;

3. Lien claims or Stop Notices filed on behalf of suppliers, Subcontractors, and labor performed in connection with the project; except, that upon submittal of a Stop Notice Release Bond issued by an approved Surety Company executed in favor of the CONTRACTOR, the CITY will release such portion of the retained funds to said CONTRACTOR that is being held solely to cover Stop Notice Claims.

B. No claim of the CONTRACTOR under this Article shall be allowed unless the CONTRACTOR has given the required written notice. Nor shall a claim by the CONTRACTOR for an equitable adjustment hereunder be allowed if asserted after final payment under this Contract.

C. The acceptance by the CONTRACTOR of final payment and retention shall release the CITY, its officers, agents, representatives or employees, as representatives of the CITY, from all claims and all liability to the CONTRACTOR for all matter in connection with the Work and all acts of the CITY relating to or arising out of the Work.

(END OF SECTION)

SECTION 01298
SCHEDULE OF VALUES / CONTRACT PRICE BREAKDOWN

1.1 THE REQUIREMENT

A. The Schedule of Values shall be used as a basis for determining progress payments on a lump sum contract or any designated lump sum bid item. The Schedule of Values shall be a schedule of cost loaded construction activities equal, in total, to the lump sum bid and shall be in such form and sufficient detail to correctly represent a reasonable apportionment of the lump sum. Prior to submitting an invoice for payment, the CONTRACTOR shall have submitted a detailed Schedule of Values and obtained approval from the INSPECTOR.

B. Each lump sum bid item on the Schedule of Work and Prices, as set forth in the Bid must be broken down separately. The breakdown of each lump sum bid item must cover the cost of construction required by the Drawings and Project Manual for that item. The sum of the values for the construction activities, within a bid item, must equal the total bid amount for that item. The breakdown shall include subcontract amounts which shall not deviate from the amounts submitted in the Bid Proposal. The CONTRACTOR shall provide certification from the Subcontractors certifying the subcontract amounts.

C. Each activity in the Schedule of Values shall delineate one construction activity. For example, the placement of concrete between construction joints, the construction of an electrical duct bank or pipeline between points A & B. The costing for each activity should include all costs for the labor and materials or equipment required to complete the activity. For example, concrete construction activities should include all costs for the forming, placing of reinforcement, placing concrete and curing. The cost for pipeline construction activities should include materials, equipment and installation including pipeline supports or thrust blocks. The excavation and backfill for a pipeline or structure may be separate activities. The Contract Price breakdown shall include the itemized costs for the plant establishment and any maintenance services to be performed before the final project acceptance is made. No non-construction activity shall be cost loaded.

D. The CONTRACTOR shall use cost loaded construction activities from the Construction Schedule as a Schedule of Values. Each construction activity shall be encoded to its bid item and a sort provided for each bid item totaling the cost loaded amount. The total of the Cost Loaded amounts for each bid item shall equal the amount bid for that item. The total of the Schedule of Values shall equal the current Contract value at all times. At any time during the progress of the Work of the Contract the INSPECTOR reserves the right to review the cost loading of the Schedules of Values and direct necessary revisions. When requested by the INSPECTOR, the CONTRACTOR shall provide all information necessary to substantiate the cost loading.

(END OF SECTION)

SECTION 01311
PRE-CONSTRUCTION SAFETY CONFERENCE

1.1 THE REQUIREMENT

A. The CONTRACTOR's Project Manager, Project Engineer, Safety Coordinator and Superintendent(s) shall attend a Pre-Construction Safety Conference conducted by the INSPECTOR and the ENGINEER. The CONTRACTOR will be informed of the date, time, and location of the Pre-Construction Safety Conference by the ENGINEER. The Pre-Construction Safety Conference shall take place within twenty-one (21) calendar days after Notice of Award and prior to the start of any Work at the site. The CONTRACTOR shall select additional personnel from its field staff, vendors, suppliers, and manufacturers, and from every Subcontractor, at any tier, to attend the Pre-Construction Safety Conference.

B. The CONTRACTOR shall provide to the ENGINEER and the INSPECTOR, at the Pre-Construction Safety Conference, the following documents:

1. Injury and Illness Prevention Program (IIPP) which shall address site specific concerns and shall also Include the following, as a minimum:

a. Occupational Injury and Illness Investigation and Reporting System, including a system for providing all injury reports to the INSPECTOR and the ENGINEER.

b. Safety Inspection System.

c. Hazard Communication Program.

d. Methods of identifying hazards including a procedure for notifying the INSPECTOR and the ENGINEER when a hazard is identified.

e. Training Documentation System.

f. Safety Communication and Remediation Procedures.

g. Making the CONTRACTOR's employees and all Subcontractors and supplier personnel aware of the biological health hazards due to working at a wastewater treatment or a pumping plant. As a minimum, this subject shall be a topic for the CONTRACTOR's weekly safety meetings at least once each quarter.

h. Other specific safety activities which pertain to the Work.

2. During periods of Pandemic/Epidemic of infectious diseases, as declared by the local and/or State health officials, the Contractor may be required to modify his/her attendance to the Pre-Construction Safety Conference and all other meetings by teleconference.

a. Following the guidelines from local and/or State health officials, the Contractor shall modify the IIPP to include these additional requirements:
   i. Personal Protective Equipment (PPE) for all workers.
   ii. Social distancing.
   iii. Hygiene maintenance.
   iv. Quarantine of infected workers and those who have come in contact.
   v. Testing requirements as prescribed by the State/Local health officials.
   vi. Any other requirements as prescribed by State/Local health officials as they become available.

b. Additionally, the Contractor shall follow these guidelines as required for construction inspection:
   i. Los Angeles Department of Building and Safety Announcement No. 5 “Covid-19 Safety Guidance for Construction Sites”.
   ii. Bureau of Contract Administration Job Memorandum “Covid-19 Safety Guidelines for Construction Sites”.

3. Identification of person(s) responsible for safety of this site, who will be assigned to the site during the performance of the work, for the CONTRACTOR and all Subcontractors at any tier.

4. Emergency Action and Fire Prevention Plan.

5. Hazardous Materials Procurement, Storage, Handling, Waste Control and Disposal Procedures.
   a. The CONTRACTOR’s Lock Out/Tag Out, Confined Space Entry, Hazardous Materials/Waste Control and all other site specific safety programs shall meet or exceed the Bureau of Sanitation’s standards for this site. These standards are available to the CONTRACTOR upon request from the ENGINEER.’

6. It shall be the CONTRACTOR’s responsibility to assure that all field forces know and obey all safety and emergency procedures to be maintained at the job site. The CONTRACTOR shall further assure that a supervisor is present at all times during any field work who is knowledgeable of and responsible for the enforcement of the CONTRACTOR’s required safety procedures.

END OF SECTION

SECTION 01312
PROJECT MEETINGS

PART ONE - GENERAL

1.1 DESCRIPTION

A. Work Included:

1. Required to enable orderly review during pre-installation conference and progress of Contracted Work, and to provide for systematic discussion of installation problems and other construction problems arisen, the ENGINEER will conduct project meetings throughout the construction period. Conform to the Pre-Construction Scheduling Conference and Project Schedule Review Meeting provisions in Section 01321 - CONTRACTOR'S CONSTRUCTION SCHEDULE AND REPORTS of the GENERAL REQUIREMENTS.

B. Related Work:

1. Documents affecting work of this Section include, but are not necessarily limited to, GENERAL CONDITIONS, DIVISION 1 - GENERAL REQUIREMENTS

2. The CONTRACTOR'S relations with his Subcontractors and materials suppliers, and discussions relative thereto, are the CONTRACTOR'S responsibility and normally are not part of project meetings content.

3. Pretesting Procedural Conference in Section 01453 - SAMPLING, TESTING AND FABRICATION INSPECTION of the GENERAL REQUIREMENTS.

4. CONTRACTOR'S CONSTRUCTION SCHEDULE AND REPORTS in Section 01321 of the GENERAL REQUIREMENTS.

1.2 SUBMITTALS

A. Conform to provisions of Section 01330 - SHOP DRAWINGS / SUBMITTALS of GENERAL REQUIREMENTS.

B. Agenda Items:

1. To the maximum extent practicable, advise the ENGINEER at least twenty-four (24) hours in advance of project meetings regarding items to be added to the agenda or requesting the cancellation of any Meeting.

C. Minutes:

1. The ENGINEER will compile minutes of each project meeting and will furnish one copy to the CONTRACTOR, INSPECTOR, CONSULTANT and all other involved parties.

2. Recipients of copies may make and distribute such other copies as they wish.

3. Special denotation mutually agreed by all parties shall be used in Meeting Minutes to identify old and new business, to distinguished new discussion/statement made in subsequent meeting from previous meetings, or any revision to any part of the minutes.

1.3 QUALITY ASSURANCE

A. For those persons designated by the CONTRACTOR to attend and participate in project meetings, provide required authority to commit the CONTRACTOR to solutions agreed upon in the project meetings. Refer to provisions indicated in Section 00302 - CONTRACTOR'S REPRESENTATIVE AT THE SITE of the GENERAL CONDITIONS.

PART TWO - PRODUCTS (NOT APPLICABLE)

PART THREE - EXECUTION

3.1 MEETING SCHEDULE

A. Except as noted below for Preconstruction Meeting, project meetings will be held weekly or as otherwise directed by the ENGINEER.

B. Coordinate as necessary to establish mutually acceptable schedule for additional meetings.

3.2 MEETING LOCATION

A. The ENGINEER will establish the meeting location. To the maximum extent practicable, meetings will be held in CONTRACTOR'S job office at the Jobsite.

3.3 PRECONSTRUCTION MEETING

A. Preconstruction Meeting will be scheduled to be held within fifteen (15) working days after the City has issued the Notice to Proceed.

1. Provide attendance by authorized representatives of the CONTRACTOR and major Subcontractors.

2. The ENGINEER will advise other interested parties.

B. Minimum Agenda: Data will be distributed and discussed on at least the following items.

1. Organizational arrangement of CONTRACTOR'S forces and personnel, and those of the subcontractors, and materials suppliers.

2. Organizational arrangement of the CITY'S forces and personnel, such as the Project Manager, Consultant, CITY'S Scheduler, CITY'S Abatement Consultant, Soil Engineer, CITY'S Surveyor, INSPECTOR and other authorized representatives.

3. Channels and procedures for communication.

4. Construction schedule, including sequence of critical work.

5. Contract Documents, including distribution of required copies of original Documents and revisions.

6. Processing of Shop Drawings and other data submitted to the ENGINEER for review.

7. Processing of Bulletin, addenda, field decisions, Requests for Information and Change Orders.

8. Rules and regulations governing performance of the Work.

9. Procedures for site security, Project quality control, housekeeping, and related matters.

10. It is the responsibility of the CONTRACTOR for Job Site Safety & First Aid, however, it shall be on the agenda.

11. Emergency Information: The name, addresses, telephone and fax numbers of the CONTRACTOR, and Subcontractors, or their representatives, shall be filed with the ENGINEER prior to start of Contracted Work.

3.4 PROJECT MEETINGS

A. Attendance:

1. To the maximum extent practicable, the Project Superintendent and other representatives who have full knowledge of the project and full authority to act for the CONTRACTOR shall represent the CONTRACTOR at Project Meetings throughout the progress of the Work. All representatives must conform to the provisions indicated in Section 00302 - CONTRACTOR'S REPRESENTATIVE AT THE SITE of the GENERAL CONDITIONS.

2. Subcontractors, materials suppliers, and others may be invited to attend these Project Meetings in which their aspect of the Work is involved.

3. CONTRACTOR may not cancel or be absent from any meeting without advanced approval from the ENGINEER. The CONTRACTOR must submit a written request with reason to the ENGINEER twenty-four (24) hours before the scheduled meeting. If approved, the CONTRACTOR shall notify all parties of the cancellation.

B. Minimum Agenda:

1. Review, revise as necessary, and approve minutes of previous meeting.

2. Review progress of the Work since last meeting. Review actual starts and finish dates of activities.

3. Review status (total complete and outstanding) of submittal for approval, Request-for-Information and Change Orders.

4. Identify old and new problems, which impede planned progress**,** identify responsible party for the follow-up actions. Mutually agree to a common solution and date of correction.

5. Develop corrective measures and procedures to regain lost time on the planned schedule.

6. Review Weekly Progress Reports including the forecasts as required in Section 01321 - CONTRACTOR'S CONSTRUCTION SCHEDULE AND REPORTS of the GENERAL REQUIREMENTS**.**

7. Status of Record drawings and the Record Project Manual.

8. Jobsite Walk-Through. Record all discussion and follow-up actions.

9. Any Jobsite health and/or accident or safety issues.

C. Revisions to Minutes:

1. Unless published minutes are challenged in writing prior to the next regularly scheduled progress meeting, they will be accepted as properly stating the activities and decisions of the meeting.

2. Persons challenging published minutes shall reproduce and distribute copies of the challenge to all indicated recipients of the particular set of minutes.

3. Challenge to minutes shall be settled as priority portion of "old business" at the next regularly scheduled meeting.

3.5 SITE MEETINGS

A. Required when necessary to enable orderly review and discussion of site conditions and problems requiring solution during the progress of the contracted work. Notify the ENGINEER of the need for additional site meetings as early as possible to resolve the problem without any impact to the Project Schedule.

B. Provide necessary labor, tools, and equipment such as shoring, scaffolding, ladder, etc. to gain access to the site.

C. CONTRACTOR or CONTRACTOR'S authorized representative shall be present at all times.

D. All discussion and follow-up actions shall be recorded by ENGINEER and the minutes shall be distributed at the next meeting or at earliest time.

(END OF SECTION)

SECTION 01313
WORK BY CITY OR OTHERS

1.1 THE REQUIREMENT

A. The CONTRACTOR shall be responsible for ascertaining the nature and extent of any simultaneous, collateral and essential work by others. The CITY, its employees and contractors, and others, shall have the right to operate within or adjacent to the worksite to perform such work.

B. The CITY, the CONTRACTOR, their employees, Subcontractors and others, shall coordinate their operations and cooperate to hold interference to a minimum.

C. The CONTRACTOR shall include in its Bid and schedule all costs and time involved as a result of coordinating its work with others. The CONTRACTOR shall not be entitled to additional compensation from the CITY for damages resulting from such simultaneous, collateral and essential work. The CONTRACTOR'S coordinating efforts shall include redeployment of his work forces to other parts of the Work.

D. Should the CONTRACTOR be delayed by the CITY, and such delay could not reasonably have been foreseen and prevented by the CONTRACTOR, the ENGINEER will determine the extent of the delay, the effect of the delay on the project as a whole, and any commensurate extension of time.

E. The CONTRACTOR is required to notify affected CITY offices of Work to be done as specified in the following table:

Item	Office of LADOT to be notified	Cost to be borne by	Required Notice (working days)
Work on signal – controlled intersection	Traffic Signal Inspector: Central Area: (213) 485-1071 Western Area: (213) 485-6834 Valley Area: (818) 779-9433 ATSAC Project Engineer: (213) 972-8664	Contractor	3
Traffic Signal and Interconnect damage	Signal Superintendent: Daytime: (213) 473-8465 After Hours: (818) 374-4823		Immediate
Parking meter damage	Parking Meter Supervisor: (213) 473-0644		
Parking meter removal and replacement	Parking Meter Planning Supervisor: (213) 473-0644	City**	5
Material and labor by LADOT	For Scheduling of: Sign/Striping: (213) 485-9331 Signal: (213) 485-6818		
Traffic Sign removal, relocation and replacement	Appropriate District Transportation Engineer*: Central District: (213) 972-4990 East Valley District: (818) 374-4688 Hollywood District: (323) 957-6843 West Valley District: (818) 774-4306 Western District (310) 575-8138 Southern District: (310) 732-4599		10
Parking restrictions, changes relating to temporary striping			
Final traffic striping and pavement marking		Contractor	5
Temporary Traffic Control Plan			30
Temporary striping installation mark out			2
Offsite Detour Signs			5
Placement of temporary “No Parking” signs	Special Traffic Control Section: (213) 485-2298		4

***** For B-Permit projects, notify citywide investigations (213) 972-8687.

******On B-Permit projects, the costs shall be charged to the permittee as required by Section 62.110 of the Los Angeles Municipal Code.

(END OF SECTION)

SECTION 01313
WORK BY CITY OR OTHERS

1.1 THE REQUIREMENT

A. The CONTRACTOR shall be responsible for ascertaining the nature and extent of any simultaneous, collateral and essential work by others. The CITY, its employees and contractors, and others, shall have the right to operate within or adjacent to the worksite to perform such work.

B. The CITY, the CONTRACTOR, their employees, Subcontractors and others, shall coordinate their operations and cooperate to hold interference to a minimum.

C. The CONTRACTOR shall include in its Bid and schedule all costs and time involved as a result of coordinating its work with others. The CONTRACTOR shall not be entitled to additional compensation from the CITY for damages resulting from such simultaneous, collateral and essential work. The CONTRACTOR'S coordinating efforts shall include redeployment of his work forces to other parts of the Work.

D. Should the CONTRACTOR be delayed by the CITY, and such delay could not reasonably have been foreseen and prevented by the CONTRACTOR, the ENGINEER will determine the extent of the delay, the effect of the delay on the project as a whole, and any commensurate extension of time.

E. The CONTRACTOR is required to notify affected CITY offices of Work to be done as specified in the following table:

Item	Office of LADOT to be notified	Cost to be borne by	Required Notice (working days)
Work on signal – controlled intersection	Traffic Signal Inspector: Central Area: (213) 485-1071 Western Area: (213) 485-6834 Valley Area: (818) 779-9433 ATSAC Project Engineer: (213) 972-8664	Contractor	3
Traffic Signal and Interconnect damage	Signal Superintendent: Daytime: (213) 473-8465 After Hours: (818) 374-4823		Immediate
Parking meter damage	Parking Meter Supervisor: (213) 473-0644		
Parking meter removal and replacement	Parking Meter Planning Supervisor: (213) 473-0644	City**	5
Material and labor by LADOT	For Scheduling of: Sign/Striping: (213) 485-9331 Signal: (213) 485-6818		
Traffic Sign removal, relocation and replacement	Appropriate District Transportation Engineer*: Central District: (213) 972-4990 East Valley District: (818) 374-4688 Hollywood District: (323) 957-6843 West Valley District: (818) 774-4306 Western District (310) 575-8138 Southern District: (310) 732-4599		10
Parking restrictions, changes relating to temporary striping			
Final traffic striping and pavement marking		Contractor	5
Temporary Traffic Control Plan			30
Temporary striping installation mark out			2
Offsite Detour Signs			5
Placement of temporary “No Parking” signs	Special Traffic Control Section: (213) 485-2298		4

***** For B-Permit projects, notify citywide investigations (213) 972-8687.

******On B-Permit projects, the costs shall be charged to the permittee as required by Section 62.110 of the Los Angeles Municipal Code.

(END OF SECTION)

SECTION 01321
CONTRACTOR'S CONSTRUCTION SCHEDULE AND REPORTS

1.1 THE REQUIREMENT

A. Progress of the Work

1. It is expressly understood and agreed that the time of beginning, the rate of progress, and the time of completion of the Work are of the essence of this Contract. The Work shall be executed with such progress as required to prevent any delay to other CONTRACTORS that may be working on other contracts at the site, the Contract milestones, and the general completion of the Contract.

B. CONTRACTOR'S Construction Scheduler

1. The CONTRACTOR shall continuously employ or retain the services of a Construction Scheduler. The Construction Scheduler shall have at least three (3) years of verifiable experience as the person primarily responsible for preparing and maintaining detailed project schedules on projects of the same or similar size and nature as this project. The Construction Scheduler is required to attend all meetings pertaining to scheduling and progress of the Work. If the Construction Scheduler leaves employment of the CONTRACTOR, the CONTRACTOR must fulfill the requirements of B.2 a and b within thirty (30) days.

2. Within five (5) calendar days after the Notice of Award the CONTRACTOR shall provide a statement to the ENGINEER with the following:

a. Identification, qualifications, and experience of the CONTRACTOR'S Construction Scheduler and all other members of the CONTRACTOR'S scheduling staff.

b. References of not less than two (2) previous projects on which the CONTRACTOR'S Construction Scheduler has utilized CPM scheduling.

(As used in this Section, "days" mean consecutive calendar days unless otherwise noted.)

The ENGINEER and the INSPECTOR reserve the right to disapprove any scheduling candidate or scheduling system proposed for the project. The ENGINEER and the INSPECTOR reserve the right to remove, without rights to work on the project, any member of the CONTRACTOR'S scheduling staff, that is, in the ENGINEER'S or INSPECTOR'S opinion, incompetent in scheduling.

C. General

1. Schedule Methodology

The scheduling method to be used shall be a Critical Path Method schedule in the form of an activity on node Precedence Diagram Network (PDN) with capabilities of identifying the critical path. The principles and definitions of the terms used herein shall be as set forth in the Associated

General CONTRACTOR'S publication "CPM in Construction", latest edition. To the extent there are any conflicts between the Associated General CONTRACTOR'S publication and the Specifications, the Specifications shall govern.

2. Work Breakdown Structure

   a. The CONTRACTOR shall submit to the ENGINEER for approval, at the Preconstruction Scheduling Conference, the following:

      (1) A Work breakdown structure.

      (2) The associated alphanumeric coding structure to implement the Work breakdown structure.

      (3) The activity identification system for labeling all Work activities.

3. The first code field shall designate the bid item. The second code field shall identify the type of activity. (Types of activities shall be defined as "submittal", "review/approval", "procurement/fabrication", "delivery", and "construction/installation" or "Change Order".) The third code field shall identify which Specification section the activity shall be paid under. The fourth code field shall identify who is responsible to perform the activity (i.e., CONTRACTOR, Subcontractor(s), Supplier, etc.). The fifth code field shall identify the area being worked in or the facility, if appropriate. The sixth code field shall identify the construction phase or project element (if phasing of Work or project elements are identified in the Contract.) All Change Orders and Notices of Non-Compliance shall be included as separate code fields.

4. Scheduling System

   The CONTRACTOR shall use Primavera P6 (latest edition) and a hardware system commensurate with the size of the program. This shall be referred to as the Scheduling System. The Scheduling System shall be capable of handling, processing, printing, and plotting data to satisfy all requirements of this Section.

D. Preconstruction Scheduling Conference

1. The ENGINEER will schedule and conduct a Preconstruction Scheduling Conference with the CONTRACTOR'S Project Manager and Construction Scheduler within seven (7) calendar days after Notice of Award, to commence development of the required Schedule. At this meeting, the requirements of this Section, as they apply to the Contract, will be reviewed with the CONTRACTOR. The CONTRACTOR shall be prepared to review and discuss its methodology for developing the Schedule, its proposed sequence of operations, and cost, manpower, and equipment loading methodology.

   The Contractor shall include the effects of adverse weather in the Schedule in terms of working days (wds). The number of wds, Monday through Friday, excluding any day designated as a holiday by the City or in a Master Labor Agreement binding the Contractor, of normal adverse

weather per month is as follows: January-3 wds, February-2 wds, March-3 wds, April-1 wd, October-1 wd, November-2 wds, December-2 wds. Unusually severe weather (see GC 00401 – Unavoidable Delay) is defined as the number of working days over what is normal adverse weather, as defined in the previous sentence. For partial months, the aforementioned numbers shall be prorated and rounded to the nearest whole number. There shall be no extension of time for adverse weather unless the Contractor is prevented from working during the first five (5) hours of a workday with at least sixty percent (60%) of the normal work force on more days per month than listed above. Even if there is unusually severe weather, a non-compensable extension of time will not be granted unless the other conditions required by GC 00401 are met, including negative impact to the critical path and delay beyond the current Contract Completion Date.

E. CONTRACTOR'S Construction Schedule

1. Fifteen (15) calendar days after the Preconstruction Scheduling Conference, the CONTRACTOR shall provide to the ENGINEER an update on the progress in the development of the Contractor's Construction Schedule (the Schedule). The CONTRACTOR shall submit to the ENGINEER the Schedule within thirty (30) calendar days after the Preconstruction Scheduling Conference.

2. The Schedule shall show the sequence and interdependence of activities required for complete performance of the Work, beginning with the date of the Notice to Proceed and concluding with the Contract Completion Date based on the completion time (calendar days) allowed in the Contract.

3. Pursuant to the float sharing requirements of the Contract, the use of float suppression techniques such as preferential sequencing, special lead/lag logic restraints, extended activity times, or imposed dates shall be cause for rejection of the Schedule and any revisions or updates. The use of float time disclosed or implied by the use of alternative float suppression techniques shall be shared as directed by the ENGINEER.

4. If the CONTRACTOR submits a Baseline Schedule showing completion of the Work more than thirty (30) calendar days in advance of the Contract Completion Date, the CONTRACTOR agrees that the ENGINEER may, at no cost to the CITY, decrease the Contract duration by issuance of a Change Order which will change the appropriate Milestone Date(s) and the Contract Completion Date to the completion date reflected on the Schedule. Any approved Schedule, revision, or update having an early completion date shall show the time between the early completion date and the current Contract Completion Date as "project float".

5. The ENGINEER will review and make comments on the Schedule. Meetings will be held between the ENGINEER, the CONTRACTOR, and all Subcontractors and Suppliers whom the CONTRACTOR may desire to invite or whom the ENGINEER may request be present.

6. Comments made by the ENGINEER on the Schedule, during review, will not relieve the CONTRACTOR from compliance with requirements of the

Contract Documents. To the extent that there are any conflicts between the approved Schedule and the requirements of the Contract Documents, the Contract Documents shall govern.

7. If requested by the ENGINEER at any time during the project, the CONTRACTOR shall provide highly detailed, a short-term schedule for specific crucial items (work-around, start-up, etc.).

F. Network Details

1. The Schedule shall include time-scaled network diagrams, based on calendar days, as well as computer tabulations. It shall be constructed to show the order in which the CONTRACTOR proposes to carry out the Work, to indicate restrictions of access and to show availability of Work areas, and availability and use of manpower, materials and equipment. The CONTRACTOR shall utilize the Schedule in planning, scheduling, coordinating, and performing the Work under the Contract (including all activities of Subcontractors, equipment vendors, and Suppliers). The CONTRACTOR will provide the ENGINEER with written confirmation of the concurrence of all major trade Subcontractors and Suppliers with the Schedule. (The term "major Subcontractors and Suppliers" as used in this Section, shall include any Subcontractor or Supplier with five (5) percent or more of the value of the Contract.) The logic shall be determined by which activity must be completed before a successor can start; maximum concurrent work; and manpower or equipment constraints which prevent concurrent work.

2. The Schedule shall provide the ENGINEER with a tool to monitor and follow the progress of all phases of the Work. The Schedule submitted to the ENGINEER shall comply with all limits imposed by the scope of Work, with all contractually specified intermediate milestone and completion dates, and with all constraints, restraints or sequences included in the Contract. The degree of detail shall include factors to the satisfaction of the ENGINEER, including, but not limited to:

   a. Physical breakdown of the project.

   b. Contract milestones and completion dates, substantial completion dates, constraints, restraints, sequences of Work shown in the Contract, the planned substantial completion date, and the final completion date.

   c. Type of Work to be performed, the sequences, and the labor trades involved.

   d. All purchases, submittals, submittal reviews, manufacturing, tests, delivery, and installation activities for all major materials and equipment, and a separate list of all major material items or items of equipment for which the CONTRACTOR intends to seek payment prior to installation.

   e. Deliveries of CITY furnished equipment and/or materials in accordance with the dates or schedule windows of such items set forth in the Contract or furnished by the ENGINEER, or items to be salvaged and delivered to the CITY.

f. Preparation, submittal and approval of Shop and/or Working Drawings and material samples showing a Twenty-one (21) minimum time specified for the ENGINEER'S review of normal or routine submittals and a forty five (45) day review time for all major submittals, so identified in the technical specifications, and the same time frame shall be allowed for at least one (1) resubmittal on all major submittals so identified in the Contract Documents.

g. Approvals required by regulatory agencies or other third parties notifications to utility companies, and request of services.

h. Plans for all subcontract Work, concrete placement sequence, structural steel, plumbing, heat, ventilation, air conditioning, electrical, etc.

i. Assignment of responsibility for performing specific activities, notifications to utility companies and request of services.

j. Access to and availability of Work areas including all anticipated plant shutdowns, if applicable.

k. Identification of interfaces and dependencies with preceding, concurrent and follow-on CONTRACTORS and utilities as shown on the Plans or called out in the Specifications.

l. Resource loading for cost, manpower, material, and equipment.

m. Actual tests by the CONTRACTOR and the CITY, submission of test reports, and approval of test results.

n. All start up, testing, training, and assistance required under the Contract.

o. Planning for phased or total takeover by the CITY.

p. Punchlist and final cleanup.

q. Identification of any manpower, material, or equipment restrictions, as well as any activity requiring unusual shift work, such as two shifts, six (6) day weeks, specified overtime, or work at times other than regular days or hours, shall be clearly identified in the Schedule.

3. The activities included in the Schedule shall be analyzed in detail to determine activity durations in units of project working days. Durations shall be based on the labor, equipment, and materials required to perform each activity on a normal Workday basis. No on-site activity shall have a duration over fifteen (15) working days except non-construction activities such as submittals, submittal reviews, procurement and delivery of materials or equipment, and concrete curing. Only on-site construction activities will be shown in their resource loaded state to reflect cost, manpower, materials and equipment except for those activities specifically identified under 1.1F.2d of this Section. The

manpower and equipment, by item designation, shall be shown for each construction activity for the network on a tabular listing, and in information furnished in accordance with O and P of this Section.

4. Critical or near critical paths resulting from the use of manpower or equipment restraints shall be kept to a minimum. Near critical paths shall be defined as those paths having fifteen (15) working days or less of total float at the time of initial submission. Restraints related to resource loading must be identified as “For resource loading only”.

5. The estimated cost to perform each work activity shall be noted for each activity in the network on a tabular listing. The sum of the costs assigned to all activities shall equal the Contract value. No activity costs shall be assigned to submittals or submittal reviews. The accepted cost loaded Project Schedule shall constitute the Schedule of Values in accordance with the SCHEDULE OF VALUES / CONTRACT PRICE BREAKDOWN of these GENERAL REQUIREMENTS, from which monthly progress payments will be made in accordance with the provisions of PARTIAL PAYMENTS in these GENERAL REQUIREMENTS. Acceptance of the Cost Loaded Schedule by the CITY does not relieve the CONTRACTOR’S responsibility to submit any cost information or data as requested by the ENGINEER for verification of cost.

6. The network diagram shall be prepared on (E) size sheets (28 inches by 40 inches), shall have a title block in the lower right-hand corner, and a timeline on each page. Exceptions to the size of the network sheets and the use of computer graphics to generate the networks shall be subject to the approval of the ENGINEER.

7. All networks shall be drafted time scaled to show a continuous flow of information from left to right. The primary path(s) of criticality shall be clearly and graphically identified on the network(s).

G. Schedule Reports

1. The Schedule submitted to the ENGINEER shall include the time scaled network diagram. Network diagrams shall be based on early start and early finish dates of activities shown. The network diagrams submitted to the ENGINEER shall also be accompanied by a computer-generated mathematical analysis for each activity included in the Schedule. Such mathematical analysis shall be submitted to the ENGINEER and shall include at a minimum, the following:

   a. A list of all activities sorted by Activity I.D. Number with predecessor and successor activity numbers and descriptions.

   b. Activity number and description.

   c. Activity code(s).

   d. Schedule and actual/remaining duration for each activity.

   e. Earliest start date (by calendar date).

   f. Earliest finish date (by calendar date).

g. Actual start date (by calendar date).

h. Actual finish date (by calendar date).

i. Latest start date (by calendar date).

j. Latest finish date (by calendar date).

k. Float in workdays.

l. Monetary value and cost-to-date of each activity.

m. Percentage of activity complete and remaining duration for incomplete activities.

n. Cumulative value of Work completed based on the CONTRACTOR'S reported portion of activities complete and accepted.

o. Imposed constraints.

2. The following printed computer outputs shall be required as part of the Schedule submittal and each revision or update thereafter as a condition precedent to receipt of progress payments:

   a. Activity listing sorted by I.D. number showing predecessor and successor activities in numerical order, with original and remaining duration, early start, early completion, late start, late completion and total float.

   b. A sublisting of materials and equipment sorted by Specification Section number. The sublisting of materials and equipment shall include the following activities: preparation of Shop Drawings, submittal to the ENGINEER, review by the ENGINEER, and fabrication, testing, and/or delivery of material and equipment which shall be interfaced with the earliest start date that the material or equipment is to be installed on the project.

   c. Activity sort(s) by organizational responsibility, including submittals to the ENGINEER for all major items or material and equipment, the number of shifts, crew sizes of each craft and construction equipment to accomplish the activity;

3. Outputs 1 and 2, above, shall show all activities, including restraints, for the duration of the project.

4. The CONTRACTOR shall also prepare and submit a time-scaled Master Bar Chart Summary Schedule on a single sheet that shows the total project in approximately 25-100 activities, as agreed to by the CONTRACTOR and the ENGINEER. This schedule will accurately summarize the current Project Schedule and shall have common events for correlating the two levels of schedule indenture. All Contract milestones shall be shown. The Master Summary Schedule shall be updated monthly.

H. Approval Of The Baseline Schedule

1. The Schedule network diagram and computer tabulations, the Cash Flow Projection, and the Manpower and Equipment Requirements Forecast shall be submitted to the ENGINEER for approval on e2020:

   a. The Network Diagram and Master Bar Chart Summary Schedule.

   b. Computer tabulations, Predecessor/Successor Report.

   c. Manpower Requirements.

   d. Cash Flow Projection.

   e. All required reports specified in F and G of this Section.

   f. Written confirmation of concurrence of all major trade Subcontractors and Suppliers.

2. Approval Process:

   a. The ENGINEER shall approve or disapprove, in writing, the CONTRACTOR'S submission within twenty-one (21) calendar days after receipt of all required information. The Schedule, once approved, becomes the Baseline Schedule which shall be used for monitoring and evaluating all facets of Contract performance including, but not limited to, progress, changes, and delays.

   b. The CONTRACTOR, the CONTRACTOR'S Construction Scheduler, and those major trade Subcontractors and Suppliers, as required by the ENGINEER, shall be required to participate in all meetings necessary to reach mutual agreement and approval of the Baseline Schedule, the Manpower Requirements Forecast, and the Cash Flow Projection.

   c. The CONTRACTOR shall revise the Baseline Schedule, as required by the ENGINEER, to reflect project construction. If any of the required submissions are returned to the CONTRACTOR for corrections or revisions, they shall be resubmitted along with a new CD and a hard copy listing of each change (Claim Digger report) for approval within seven (7) calendar days after receipt. Resubmittals shall be as required in H.1 and H.2 of this Section. Review and response by the ENGINEER shall be given within seven (7) calendar days after receipt of each new submission.

   d. Should the Baseline Schedule, submitted for approval, show variances from the requirements of the Contract, the CONTRACTOR shall make specific mention of such variations in the letter of transmittal, in order that, if accepted, proper adjustments to the Baseline Schedule can be made. Otherwise, the CONTRACTOR will not be relieved of the responsibility for executing the Work in strict accordance with the requirements of the Contract Documents.

e. Submittal and approval of the Baseline Schedule, the Manpower Requirements Forecast, the Cash Flow Projection, major trade Subcontractor and Supplier confirmation in writing, or CD(s), within the time prescribed, or revisions thereof within the required time, is a condition precedent to the issuance and payment of progress payments.

f. Failure of the CONTRACTOR to submit the Baseline Schedule, or any required resubmittals, in a timely, accurate manner and in accordance with the requirements of this Section will result in costs to the CITY which are difficult if not impossible to determine; therefore, the CONTRACTOR shall pay the CITY liquidated damages in the amount of $1,000 per calendar day, for every work day the schedule submittal, revision, or resubmittal is late. This amount shall be subtracted from any monies due and shall be forfeited by the CONTRACTOR.

I. Revisions To Approved Baseline Schedule

1. The CONTRACTOR shall execute the Work in accordance with the approved Baseline Schedule. Out of sequence construction, defined as a change in the Baseline Schedule, requires prior approval of the ENGINEER as defined below.

2. Upon approval of a Time Impact Analysis the change shall be reflected in the next schedule submittal by the CONTRACTOR.

3. No change (except for resubmittals) to the approved Baseline Schedule shall be made without the prior written approval of the ENGINEER. If the CONTRACTOR desires to make a change to the approved Baseline Schedule, the CONTRACTOR shall request permission from the ENGINEER in writing, stating the reasons for the change as well as the specifics, such as revisions to activities, logic, durations, etc. The ENGINEER will provide a response within five (5) calendar days. Actual status and/or forecast dates for revised submittals shall be added without prior acceptance by the ENGINEER. They are still subject to review by the ENGINEER.

4. If the ENGINEER considers a change to the Baseline Schedule to be of a major nature, the ENGINEER may require the CONTRACTOR to revise and submit for acceptance all of the affected portion(s) of the Baseline Schedule including an analysis to show the effect on the entire project. The proposed revision and analysis shall be submitted to the ENGINEER within fifteen (15) calendar days after the ENGINEER notifies the CONTRACTOR the revision is of a major nature. A change will be considered to be of a major nature if the time estimated for an activity or sequence of activities is varied from the original plan to the degree that there is reasonable doubt that the Contract completion date will be met, or if the change impacts the Work of other CONTRACTORS at the Jobsite. Changes to activities having adequate float shall be considered as minor changes, except that an accumulation of minor changes may be considered a major change when such changes affect the Contract completion date. (Activities having adequate float are activities which are not critical after the change is made.).

5. Only upon approval of a change by the ENGINEER shall it be reflected in the next Schedule update submitted by the CONTRACTOR.

J. Updates To Approved Baseline Schedule and Progress Payments

1. Monthly Updates:

a. All updated or revised Schedules shall be submitted in the same detail as the original submittal, unless modified in writing by the ENGINEER. Written confirmation of the major trade Subcontractors and Suppliers shall be required quarterly.

b. The initial Schedule update shall be submitted within fourteen (14) calendar days after approval of the Baseline Schedule. The Schedule update shall be cost loaded. Subsequent Schedule updates shall be submitted at the beginning of each month thereafter for the duration of the Contract. The data date shall be the first working day of the month unless otherwise directed by the ENGINEER. The Schedule and computer tabulations shall be reviewed by the CONTRACTOR'S Construction Scheduler at a joint update meeting with the ENGINEER and the INSPECTOR.

2. Monthly Schedule Updates:

a. The CONTRACTOR shall submit the Monthly Schedule Update to the ENGINEER each month, on a date assigned by the ENGINEER. The proposed Monthly Schedule Update prepared by the CONTRACTOR shall include all information available as of the cutoff date established by the ENGINEER. A detailed list of all proposed schedule changes (logic, duration, status, additions, and deletions) shall be submitted with the update (Claim Digger report). Prior to the monthly update review meeting, the CONTRACTOR shall obtain from his Subcontractors, Suppliers, and staff the necessary information as required to reflect progress to date. A proposed Monthly Schedule Update containing the information set forth below shall be available for review at the meeting.

(1) For activities started and/or completed during the previous period: Actual start and actual completion dates, and number of shifts used to accomplish the activity.

(2) For activities begun but not yet complete to date: Remaining duration of the Work, estimated percent complete, and estimated completion date. The schedule shall be calculated using remaining durations and progress override.

(3) For activities not yet started: Estimated start dates, revised duration's, and estimated completion dates, as necessary.

(4) For authorized Change Orders, including Emergency Change Orders, Time and Material Change Orders, and Unilateral Change Orders: Revised and original activities, number of shifts, crew sizes by craft, construction equipment required, cost, and durations, and status of all outstanding Notices of Non-Compliance, where required.

(5) The monthly update of the Network Diagram shall be for the whole project. The previous month's activities shall be reported as they actually took place and designated as complete, if actually completed, on the network diagram update.

(6) The electronic file of the submitted Network Diagrams and the related reports shall constitute a clear record of progress of the Work from Notice to Proceed to final completion.

(7) The monthly submittal to the ENGINEER shall be accompanied by the Schedule Narrative Report. The Schedule Narrative Report shall describe the physical progress during the report period, Plans for continuing the Work during the forthcoming report period, actions planned to correct any negative float predictions, and an explanation of potential delays and/or problems and their estimated impact on performance and the overall project completion date. In addition, alternatives for possible schedule recovery to mitigate any potential delay and/or cost increases shall be included for consideration by the ENGINEER The report shall follow the outline set forth below:

CONTRACTOR'S Schedule Narrative Report Outline:

a) CONTRACTOR'S Transmittal Letter.

b) Description of problem areas.

c) Current and anticipated delays:
   1) -Cause of the delay.
   2) -Corrective action and schedule adjustments to correct the delay.
   3) -Impact of the delay on other activities, milestones, and completion dates.

d) Changes in construction sequences.

e) Pending items and status thereof:
   1) -Permits.
   2) -Change Orders.
   3) -Time extensions.
   4) -Non-Compliance Notices.

f) Contract Completion Date(s) status:
   1) Ahead of schedule and number of working days.
   2) Behind schedule and number of working days.

g) Other project or scheduling concerns including any plant shutdowns, duration of each shutdown, and analysis of any Work to be performed during the shutdown period.

h) Include reviewed and updated Network Diagram and Reports.

i) Include revised Cost Loading and Cash Flow Information of this Section.

j) Include substantial revisions to manpower and equipment requirements

(8) The CONTRACTOR shall provide to the ENGINEER, the Network Diagram, the Predecessor/Successor Report sorted by activity number, the list of all changes made to the previously approved Schedule, and the Schedule Narrative Report. The data required to provide all other scheduling reports called for in of this Section shall be provided on e2020.

3. The CONTRACTOR'S Construction Scheduler and representatives from major Subcontractors and Suppliers (as requested by the ENGINEER shall attend the monthly update meetings with the above data prepared in advance for each meeting to provide, as of the end of the updating period, a complete and accurate report of the current procurement schedule (in accordance with the requirements of CONSTRUCTION STATUS REPORTS of the GENERAL REQUIREMENTS), construction progress, and a depiction of how the CONTRACTOR plans to continue the Work of the project to meet all Contract Completion Dates. All network changes and status dates agreed to during each update meeting shall be considered as acceptable by all parties unless written notice of exception is given by an objecting party within five (5) calendar days after the update meeting. For major network changes that cannot be agreed to during an update meeting, the CONTRACTOR shall submit, in writing, such revisions for the ENGINEER'S approval prior to inserting such changes into the network. Submissions may be in the form of marked-up networks, fragnets, or schedule abstracts provided they are submitted with a letter of transmittal. The submission and approval procedures for this information shall follow the same timetable described in H.2 of this Section.

4. Predicated on the results of the ENGINEER'S review of Monthly Schedule Update submittals and accompanying reports, the CONTRACTOR may be required to revise the Monthly Schedule Update. Conditions under which a revision will be made are as follows:

a. When a delay in the completion of any Work item or sequence of Work items results in an indicated extension of the project completion or interim milestone dates detailed herein by thirty (30) calendar days.

b. When delays in submittals or deliveries or Work stoppages are encountered which make replanning, rescheduling, or resequencing of the Work necessary.

c. When the schedule does not represent the actual execution and progress of the project.

5. Required revisions of the Monthly Schedule Update are due within five (5) calendar days of notice by the ENGINEER that a revision is required. All revisions and additions to the Schedule are subject to the review of the ENGINEER. No changes (except resubmittal cycles) are to be implemented in the Schedule by the CONTRACTOR without the prior approval of the ENGINEER. When the Monthly Schedule Update or its required revision is approved by the ENGINEER, it then becomes the Current Schedule Update. The Current Schedule Update will be used for the period from which it is approved until its successor is submitted and approved.

6. The Schedule Narrative Report, the updated Project Schedule (networks, and computer computations), the Cash Flow Projection, the updated network diagram, and one (1) copy of the updated CD reflecting the status of the project agreed to at the updating meeting, shall be submitted to the ENGINEER within five (5) calendar days after each updating meeting.

7. The update report shall show the activities or portions of activities completed during the reporting period and their total value as the basis for the CONTRACTOR'S request for partial payment. Payments made pursuant to PARTIAL PAYMENTS of these GENERAL REQUIREMENTS will be based on the total value of such activities completed or partially completed after verification by the INSPECTOR. The report shall state the percentage of the Work actually complete as of the report date. If the project is behind schedule, progress along other paths with negative float shall also be reported.

8. Failure of the CONTRACTOR to submit the Monthly Schedule Updates in a timely, accurate manner and in accordance with the requirements of this Section will result in costs to the CITY which are difficult, if not impossible to determine; therefore, the CONTRACTOR shall pay the CITY liquidated damages in the amount of $1,000 per calendar day for every work day the submittal is late or not in full compliance with the requirements of this Section. This amount shall be deducted from any monies due, and forfeited by the CONTRACTOR. In addition to the liquidated damages, if the CONTRACTOR fails to submit any of the Monthly Schedule Update deliverables, or to meet any of the other updating requirements, progress payments will be withheld until such time as the required update information is submitted.

K. Weekly Progress Reports

1. Once each week, on a day established by the ENGINEER, the CONTRACTOR shall submit:

   a. A progress schedule listing the activities completed and in progress for the previous week and the activities scheduled for the succeeding two (2) weeks. The activity designations shall be consistent with the activity designations in the Current Schedule Update. A bar chart shall be used to display the information in pictorial form. The appropriate schedule activity number shall be listed for each bar.

L. Cost Loading and Cash Flow

1. With the initial Baseline Schedule submittal, each Monthly Schedule Update, and each revision, the CONTRACTOR shall also submit a schedule of cost loading and cash flow to the ENGINEER. There shall be a strict correlation between the sum of individual activity costs and the total values indicated for bid items. That is, each individual activity within the Schedule shall employ a code, which in summary, attaches its cost, if any, to the appropriate bid items. The sum of activity costs within a specific code shall equal the cost of its corresponding bid items and approved Change Orders.

2. Expected payment requests for each month shall be included with proposed updates. The cash flow shall show the net payment requests for each month. The cumulative payment requests to date shall also be shown after deducting retainage and any other monies withheld. The cash flow shall be shown in tabular format and in graphic format.

3. The CONTRACTOR, at the Preconstruction Scheduling Conference, shall explain in detail the procedure to be used to develop the Schedule activity cost loading and cash flow. This procedure is subject to the review and approval of the ENGINEER and the INSPECTOR. Receipt and approval of the Schedule Cost Loading and Cash Flow Summary is a condition precedent to the making of any payments under the Contract. Therefore, failure to submit an acceptable schedule cost loading and cash flow summary shall be cause for withholding any progress payments due or that may become due under this Contract, until such time as an acceptable cost loading and cash flow summary is received.

4. In accordance with the updating procedures, when an activity is deemed substantially complete by the ENGINEER, then such activity will no longer be treated as an activity affecting the critical path or successor activities on the project. The cost of correction of any punchlist items associated with substantially completed activities will be covered by amounts deemed by the ENGINEER and the INSPECTOR to be adequate to cover such costs.

M. Responsibility For Completion

1. Whenever it becomes apparent from the current Monthly Shedule Update that phasing, milestone, constraint, restraint, or Contract Completion

Date will not be met, the CONTRACTOR shall submit a plan to recover the delay using some or all of the following remedial actions;

a. Increase construction manpower in such quantities and crafts as necessary to eliminate the backlog of work and meet the current Contract Completion Date.

b. Increase the number of working hours per shift, shifts per working day, working days per week, the amount of construction equipment, or any combination thereof to eliminate the backlog of Work.

c. Reschedule the Work in conformance with the Specification requirements.

2. Prior to implementing any of the above actions, the CONTRACTOR shall notify the ENGINEER and obtain approval from the ENGINEER. If such actions are approved, the Schedule revisions shall be incorporated by the CONTRACTOR into the Network Diagram before the next Monthly Schedule Update is due.

3. Under no circumstances will the addition of equipment or construction forces, increasing the Working hours or any other method, manner, or procedure to return to the contractually required Contract Completion Date be considered justification for a Change Order or be treated as acceleration where the need for a recovery schedule has been caused by the CONTRACTOR and/or its Subcontractors or Suppliers, at any tier.

4. The ENGINEER may elect to withhold progress payments until the CONTRACTOR'S progress indicates that the milestone date(s) and/or the Contract Completion Date will be met.

N. Schedule Time Extensions

1. When Change Orders or delays are experienced by the CONTRACTOR and a time extension is requested, the CONTRACTOR shall submit to the ENGINEER, a written Time Impact Analysis illustrating the influence of all changes or all delays on the current Contract Completion Date. The Time Impact Analysis shall be based on an As-Built Schedule Analysis approach. The As-Built Schedule that will be created will incorporate all Actual Start and Finish dates, actual durations of activities, and actual sequences of construction. This Time Impact Analysis shall incorporate all delays (including CITY, CONTRACTOR, and Third-Party delays without exception) in the time frame they occurred with actual logic ties. The As-Built Schedule data shall be obtained from the most recent accepted Baseline Schedule or Monthly Schedule Update as of the time the Preliminary Change Order, Emergency Change Order, Unilateral Change Order, or Allowance Order was issued to the CONTRACTOR. The As-Built Schedule shall be created as an early start schedule. The As-Built Schedule shall use the original activity durations for all incomplete work and the actual logic driving all activities. All requests for time extensions shall be based upon an analysis of this As-Built Schedule. The critical path will be established, and all CITY caused delays on the critical path will be identified. The time extension will be based solely upon the cumulative duration of all CITY and Third Party

caused delays (as set forth in UNAVOIDABLE DELAY of the GENERAL CONDITIONS) which are on the critical path. Any time extensions to the project Interim Milestone Dates shall be non-compensable time extensions only.

2. Time extensions will be granted only to the extent that equitable time adjustments for the activity or activities affected exceed the total or remaining float along the critical path of activities at the time of actual delay, or at the time the Preliminary Change Order, the Emergency Change Order, the Unilateral Change Order, or the Allowance Order was issued to the CONTRACTOR. Float or slack time is not for the exclusive use or benefit of the ENGINEER or the CONTRACTOR but is an expiring resource available to all parties as needed to meet Contract milestones and the Contract Completion Date. Time extensions shall not be granted nor delay damages paid until;

    a. A delay occurs which is beyond the control and without the fault or negligence of the CONTRACTOR and its Subcontractors or Suppliers, at any tier; and

    b. Which extends actual performance of the Work beyond the applicable current Contract Completion Date and the most recent date predicted for completion of the project on the approved Monthly Schedule Update, current as of the time of the delay or as of the time of issuance of the Preliminary Change Order, the Emergency Change Order, the Unilateral Change Order, or the Allowance Order was issued to the CONTRACTOR.

3. Each Time Impact Analysis shall be submitted in triplicate, within fifteen (15) calendar days after a delay occurs, or issuance of the Preliminary Change Order, Emergency Change Order, Time and Materials Change Order, or Unilateral Change Order. If the CONTRACTOR does not submit a Time Impact Analysis for a specific Change Order or delay within the specified period of time, the CONTRACTOR shall be deemed to have irrevocably waived any rights to additional time and cost.

4. Since float time within the Schedule is jointly owned, it is acknowledged and agreed by the CONTRACTOR that CITY caused delays on the project may be offset by CITY caused time savings (including, but not limited to: critical path submittals returned in less time than allowed for in the Contract, approval of substitution requests which result in a savings of time along the critical path for the CONTRACTOR, etc.). In such an event the CONTRACTOR shall not be entitled to receive an extension of time or delay damages until all CITY caused time savings are exceeded, and the Contract Completion Date is also exceeded.

5. Approval or rejection of each Time Impact Analysis by the ENGINEER shall be made within fifteen (15) calendar days after receipt of each Time Impact Analysis, unless subsequent meetings and negotiations are necessary. Upon approval, a copy of a Time Impact Analysis signed by the ENGINEER shall be returned to the CONTRACTOR for incorporation into the next Monthly Schedule Update.

6. Upon mutual agreement by both parties, fragnets illustrating the influence of Change Orders and delays shall be incorporated into the Schedule during the first update after agreement is reached.

7. In the event the CONTRACTOR does not agree with the decision of the ENGINEER regarding the impact of a change or delay, it shall be resolved in accordance with CLAIMS AND PROTESTS of the GENERAL CONDITIONS.

O. Manpower

The CONTRACTOR shall submit with the initial Baseline Schedule a histogram depicting total project manpower for its own forces and for each of its Subcontractors for each month. The histogram shall be based upon and shall be in substantive agreement with the number of shifts and crew sizes in the Schedule and shall be updated monthly and submitted with the Monthly progress report. The update shall show actual manpower for each month during the construction period to date and required manpower for both base scope and Change Order Work each month, necessary to complete all remaining activities to insure timely project completion.

P. Construction Equipment

1. The CONTRACTOR shall submit with the initial Baseline Schedule a tabular report listing each major piece of construction equipment for itself and each of its Subcontractors for each month. This major equipment is the equipment that is or will be used at the Worksite. Each major piece of the CONTRACTOR'S and the Subcontractor's equipment shall be separately described, identified, and numbered in the report. The tabular report shall be based upon and in substantive agreement with the number of shifts and crew sizes by craft in the Schedule and shall be updated monthly and submitted with the monthly progress report. The update shall show actual construction equipment for each month during the construction period to date and the required construction equipment for each month necessary to complete all remaining activities including the Change Order Work, on the early finish date.

Q. Submittal Of "As-Built" Schedule

1. As a condition precedent to any release of retention, the last update to the Schedule submitted shall be identified by the CONTRACTOR as the "As-Built Schedule". The "As-Built Schedule" shall reflect the exact manner in which the project was actually constructed (including start and completion dates, activities, sequences, and logic) and shall be signed and certified by the CONTRACTOR'S Project Manager and Construction Scheduler as being a true reflection of the way in which the project was actually constructed.

END OF SECTION

SECTION 01322
CONSTRUCTION PROGRESS PHOTOGRAPHY

PART ONE - GENERAL

1.1 SUMMARY

A. Required**:** Provide photographs taken at the Jobsite at the specified stages of Contracted Work in accordance with provisions of this Section.

1. Take three views of work area or other feature as directed by the ENGINEER at thirty (30) day intervals during the period of Contracted Work.

2. Take first photographs just before CONTRACTOR starts any work operations at the Jobsite.

3. Take final photographs when all Contracted Work has been completed, regardless of time interval since previous photographs were taken. These photographs shall be suitable for use in City presentations and publications.

B. Related Work:

1. Documents affecting work of this Section include, but are not necessarily limited to, GENERAL CONDITIONS, DIVISION 1 - GENERAL REQUIREMENTS and other Sections of the Project Manual.

1.2 SUBMITTALS

A. Comply with pertinent provisions of Section 01330 **–** SHOP DRAWINGS / SUBMITTALS of the GENERAL REQUIREMENTS.

B. Except as otherwise directed by the ENGINEER, submit three color prints of each view.

1.3 QUALITY ASSURANCE

A. Secure the services of a full-time professional photographer who is skilled and experienced in construction photography and whose work samples are acceptable to the ENGINEER.

B. Do not replace the photographer without the ENGINEER'S written approval.

C. Do not permit prints to be issued for any other purpose without specific written approval from the ENGINEER.

D. Photographs and prints to be of professional quality; clear, in focus, with high resolution and sharpness, and with minimum distortion. Prints to be with contrast, detail and finish for acceptable reproduction by half-tone cut.

PART TWO - PRODUCTS

2.1 CONSTRUCTION PHOTOGRAPHS

A. Provide Color Prints at a minimum of 5 megapixels.

B. Upon upload to project e2020 website, identify the following:

1. Job name and address

2. Location from which photographed

3. Date of photograph

4. Photographer's name and address, and photograph number.

PART THREE - EXECUTION

3.1 CONSTRUCTION PHOTOGRAPHY

A. View Locations: As directed by the ENGINEER**.** Location(s) to provide diversified overall view of the Work from a position that is expected to remain accessible throughout progress of the Contracted Work for added photography.

Continue to take photographs at same view position of the Works to show continuous progress of the Works until the Works are completed or as directed by the ENGINEER.

B. Notifications: Notify the ENGINEER seven (7) days in advance of proposed day of photography.

C. Weather Conditions: When inclement weather is anticipated, consult with the ENGINEER to determine acceptable alternate arrangements.

D. Timing of Photography: To the maximum extent practicable, take photographs at the same time of day throughout progress of the Contracted Work. Timing shall be approved by the ENGINEER.

E. On Contract Drawing: Photographer to identify each photograph location or by such other means as acceptable to the ENGINEER, to enable future photographs to be taken from the same location and position.

F. Change of Locations: When so directed by the ENGINEER because of construction, change one or more of the locations inside or outside of the building(s).

(END OF SECTION)

SECTION 01323
CONSTRUCTION STATUS REPORTS

1.1 THE REQUIREMENT

A. Weekly Status Report

During the construction phase of the Work, the CONTRACTOR shall submit weekly written status reports to the ENGINEER and the INSPECTOR. The report shall contain a record of inspections and tests, not performed by CITY forces, for all Work accomplished subsequent to the previous report and shall include the following information:

1. Type of work under way during the time frame of the report (e.g., earthwork, concrete work, structural steel erection, equipment manufacturing, component installation).

2. Inspections and tests, and location of inspections and tests that were made.

3. Results of inspections.

4. Reports of tests performed, including those specified, with the results of the tests, and acceptance criteria, including failures and remedial action to be taken. Test results, including all computations, shall be attached to the report form. Where test results cannot be completed by the time the report is submitted, a notation shall be made that the test was performed, including the approximate expected date that test results will be reported.

5. Report of any nonconforming items/activities. Nonconformance report forms designed solely for this purpose shall be utilized.

6. Results of inspections of material and equipment done upon their arrival at the Jobsite and prior to their incorporation into the Work. This includes, but is not limited to, compliance with approved submittals, damage, and proper storage requirements.

7. Offsite quality control activities.

8. Instructions received from the ENGINEER or INSPECTOR.

9. In all cases, the report must be verified and signed by the CONTRACTOR'S representative. The verification is to contain the statement that all supplies and materials incorporated in the Work are in compliance with the terms of the Contract except where noted.

B. Monthly Procurement and Delivery Status Report

1. The CONTRACTOR shall prepare and submit to the INSPECTOR and the ENGINEER a comprehensive Monthly Procurement and Delivery Status Report covering the procurement and delivery of equipment and materials to the Jobsite. This report shall outline the purchasing status of all material, equipment and contracts. The purchasing status report shall include the following information:

   a. Specification, purchase order, and Contract number;

   b. Submittal Number;

   c. Item or service description;

   d. Required job site date; and

   e. Project Delivery Date.

   In addition, this report shall contain a three (3) month "Look Ahead Projection" of all factory tests, shipments to be inspected, or any other supplier activity which the CONTRACTOR, the ENGINEER, or the INSPECTOR, has the right to witness and accept. The report shall detail arrangements which are planned for meeting the witnessing and acceptance requirements, and for recording tests passed.

2. The CONTRACTOR shall obtain a submittal schedule for technical data, Shop Drawings, material and test certificates, O&M manuals, spare parts lists, and other submittals, from each supplier. This schedule shall be monitored and updated on a monthly basis and shall be submitted to the INSPECTOR and the ENGINEER with the Monthly Procurement and Delivery Status Report.

C. Miscellaneous Submittals

Required: CONTRACTOR shall prepare a Daily Construction Report recording the following information concerning events at the job-site and submit duplicate copies to the Consultant or ENGINEER at weekly intervals:

1. List of Subcontractors and Sub-Subcontractors at the site**,** types of works and job location.

2. Approximate count of CONTRACTOR’S personnel at the site**,** name, type of work and job location.

3. Construction equipment at the site.

4. High and low temperatures, general weather conditions.

5. Accidents and unusual events.

6. Meetings and significant decisions.

7. Stoppages, delays, shortages, losses.

8. Meter readings and similar recordings.

9. Emergency procedures.

10. Inspection, Orders and requests of governing authorities, type of work.

11. Change Orders received, implemented.

12. Services connected, disconnected.

13. Notice of Non-Compliance, Notice-To-Correct, and Job-Memorandum received.

14. Equipment or system tests and start-ups.

15. Preparation of Record Drawings and Project Manual.

16. Equipment or material delivered to site.

17. Partial completions, occupancies

18. Substantial completions authorized.

(END OF SECTION)

SECTION 01330
SHOP DRAWINGS / SUBMITTALS

1.1 THE REQUIREMENT

A. The CONTRACTOR shall prepare, approve, sign and submit to the ENGINEER any and all Shop Drawings, Manufacturers' Project Data, Job References, Certificates, Wiring Diagrams, Operation and Maintenance Manuals and Samples required by the Contract Documents on “e2020” (the City’s web-based construction management application.)

NOTE: All references in the Technical Sections under "Shop Drawings" or “Submittal” to the words "approval of" shall mean "reviewed by".

B. The CONTRACTOR, by preparing, reviewing, approving and submitting the Shop Drawings, Manufacturers' Product Data, Job References, Certifications, Wiring Diagrams, Operation and Maintenance Manuals and Samples, represents that the CONTRACTOR has determined and verified all materials, field measurements and filed construction criteria related thereto, and has checked and coordinated the information contained within such submittals with the requirements of the Work, the Project and the Contract Documents.

C. The CONTRACTOR shall inform the ENGINEER, in writing, of any and all deviations and/or questions regarding the Contract Documents, and shall properly identify these areas of concern in the transmittal of the Shop Drawings, Manufacturers' Product Data, Job References, Certification, Wiring Diagram and Samples for proper written disposition respectively by the ENGINEER. The CONTRACTOR shall provide Shop Drawings in accordance with Specification Section 01116 of the General Requirements.

D. Transmittal sheets for all Shop Drawings, Manufacturers' Product Data, Wiring Diagrams, Job References, Certifications, Operation and Maintenance Manuals and Samples shall be uploaded in e2020 in accordance with Specification Section 01116 of the General Requirements.

E. The CONTRACTOR is not relieved of the responsibility for any deviation from the requirements of the Contract Documents, by virtue of CONTRACTOR’S approval and submittal of the Shop Drawings, Manufacturers' Product Data, Wiring Diagrams, Operation and Maintenance Manuals and Samples to the ENGINEER. All deviations and/or interpretations of the Contract Documents must be approved in writing by the ENGINEER.

F. The review of the Shop Drawings, Manufacturers' Product Data, Job References, Certifications, Wiring Diagrams, Operation and Maintenance Manuals; and Samples by the ENGINEER does not relieve the CONTRACTOR of its responsibility from any requirements of the Contract Document, or any errors or omissions in such submittals, or for any failure to perform the requirements and intent of Contract Documents.

G. The Shop Drawings shall include such fabrication, erection, and setting drawings; manufacturer's standard drawings or catalog cuts, performance and test data; Job References, Certifications, wiring and control diagrams; schedules; samples; and descriptive data pertaining to material, machinery and methods of construction as may be necessary to carry out the intent of contract Drawings and Project Manual and shall not relieve the CONTRACTOR from the responsibility for proper fitting and construction of the Work, nor from furnishing materials and Work required by the Contract, which may or may not be indicated on the Shop Drawings.

The CONTRACTOR shall perform no portion of the Work requiring submittal and review of Shop Drawings, Product Data, Job References, Certifications**,** samples, etc. until such submittals have been reviewed by the ENGINEER.

H. Shop Drawings shall show in detail the size, sections and dimensions of all the members, the arrangement and construction of all connections and joints and other pertinent details; also, all holes, straps and other fittings required by other CONTRACTORS for attaching their work. When required, by the ENGINEER or by Standard Practice of the CONTRACTOR, engineering computations shall be submitted for the record. The CONTRACTOR shall be responsible to coordinate with other trades, collect all necessary data or information for preparation of shop Drawings and deliver approved copies of Shop Drawings to all others whose work is dependent thereon.

I. At all times, the CONTRACTOR shall maintain at the site of the project, a complete file of Shop Drawings and Manufacturers' Data of its own and all Subcontractors. All Shop Drawings and Manufacturers' Data shall be reviewed and by the CONTRACTOR.

J. Submittals shall be made within the times specified in the various Divisions, of the Project Manual. If time is not specified, they shall be made within a period which will cause no delay in the work. The CONTRACTOR shall allow twenty-one (21) calendar days on the project construction schedule for each item submitted for the review by the ENGINEER.

K. In the event the ENGINEER finds the submittal to be incomplete, it will be returned to the CONTRACTOR for required revised drawings. The CONTRACTOR will revise the drawings and resubmit as directed on original submittals. Any delay resulting from the need for resubmittals shall be the CONTRACTOR'S responsibility.

L. In the event, the Contract Documents are prepared by a Consultant Architect or ENGINEER, the pertinent requirements of this Section will be effective, except as follows or as otherwise modified in the Divisions that follow:

1. All references in the Contract Documents to the Consultant shall mean the Consultant Architect or Consultant Engineer

2. Submittals shall be uploaded in e2020 in accordance with Specification Section 01116 of the General Requirements.

3. If submittal is found to be incomplete and revised drawings are required, CONTRACTOR will be notified by the ENGINEER.

4. When Shop Drawings are required in accordance with the Contract, due to “substitutions” or for "or equal" determination or review as indicated hereinbefore, after final check, said drawings, reviewed and signed by Consultant shall be forwarded to the ENGINEER, Bureau of Engineering for final review and distribution electronically, through e2020.

5. Unless otherwise specified for Operation and Maintenance Manuals, four (4) copies are required and all copies should be delivered to the Consultant Architect for review. After reviewed and signed by the Consultant, scan and electronically upload in e2020 for final review. Once approved by the ENGINEER on e2020, four (4) copies shall be forwarded to the ENGINEER for distribution to the CITY maintenance staff. The CONTRACTOR will receive a transmittal of acceptance of Operation and Maintenance Manual Submittal.

M. In the event the Contract Documents are prepared by CITY personnel, four (4) copies of each Operation and Maintenance Manuals, shall be sent to the ENGINEER by the CONTRACTOR for review and final distribution. Distribution requirements described in Items K(4) and K(5) hereinbefore remain effective.

N. CONTRACTOR’S Coordination:

1. The ENGINEER will return and will not review unrelated submittals.

2. The CONTRACTOR may be required to provide drawings, setting diagrams and similar information necessary for proper coordination of Contracted Work. Such data shall remain between the CONTRACTOR and CONTRACTOR’S Subcontractor and will not be reviewed by the Consultant or ENGINEER unless specifically called for in the Contract Documents.

3. Consultant or ENGINEER will not review any required Structural Shop Drawings, Structural Calculations, etc., not prepared or signed by a State of California licensed ENGINEER.

4. The ENGINEER will return and will not review any submittal requiring coordination with other submittals until such other submittals or required information are received by the ENGINEER.

O. CONTRACTOR’S Submittals: CONTRACTOR’S submittals required for performance of Contracted Work shall be electronically submitted in e2020 construction subsections 8.1 through 8.22, and shall include, but are not limited to, the following:

1. Contract Price (Cost Breakdown)

2. Construction Schedule and Notification to ENGINEER of completion of each milestone or percentage increment of the Work as required.

3. Submittal Schedule

4. Daily Construction Reports

5. Shop Drawings and Structural Calculations

6. Manufacturer's Data and Specifications

7. Samples

8. Templates

9. Certificate of Compliance

10. Construction Photographs

11. Substitutions

12. Record Drawings and Record Project Manual

13. Operation & Maintenance Manuals

14. Stock Materials, Spare parts, tools

15. Material Testing Results

16. Daily Statements of cost-plus percentage Change Order

17. Survey grade sheets

18. Copies of Notice-To-Correction or Notice of Non-Compliance from governing authorities.

19. Maintenance Logs and Maintenance Schedule.

P. Administrative Submittals include, but are not limited to the following:

1. Permits

2. Request for Payments

3. Performance and Payment Bonds

4. Insurance Certificates

5. List of Subcontractors and proof of qualifications

6. Hazardous Communication Program.

7. Certified weekly payroll records.

8. Ethnic Composition of Work Force Report.

9. Third Party Testing Agency

Q. CONTRACTOR shall conform to the provisions of the Contract Document and may be specifically directed by the Consultant or ENGINEER.

1. Preparation and processing of submittals shall be coordinated with Contracted Work operations, which includes fabrication, purchasing and delivery of work items so as not to delay Contracted Work operations.

2. In each Submittal, mark every applicable material, product, equipment, manufacturer's data, product information, color samples, rating or values, part and model numbers, etc. by red color circle. Each of the submittal items must be clearly distinguishable from other unrelated or similar items listed in the Manufacturer's Catalog or Technical Specifications, Manuals, etc.

R. Coordination and Submittals:

1. Carefully review and coordinate all aspects of each item being submitted.

2. Carefully review contract drawings and technical sections, verify all work as laid out or indicated meeting the applicable codes and standards.

3. Ensure ample time for reviewing and processing of the submittals by the CITY or other authorized agencies, delays resulting from improper and untimely submittals shall be the responsibility of the CONTRACTOR.

4. Verify that all such submittal items conform to the Project Manual requirements noted in the Technical Sections.

5. Verify all site conditions and provide all required dimensions and measurements in Shop Drawings.

6. Where necessary, review the CITY'S comments, make changes and resubmit to local governing agencies for approval. Upload the approved plans or drawings for review on e2020 and furnish copies of said drawings at the ENGINEER'S request.

S. CONTRACTOR shall affix to each submittal, the CONTRACTOR'S electronic signature certifying that required coordination has been performed and include on an attached label for processing and recording action taken, noting the following:

1. Name and address of the Subcontractor(s)

2. Name and address of the Supplier

3. Name and address of the Manufacturer

4. Reference to Specification Section Number and Title

5. Reference to Drawing Sheet Number and detail(s)

6. Priority Number and expected return date.

T. CONTRACTOR shall verify on e2020 that the CONTRACTOR has met the following CITY requirements:

1. Conformance in all respect to the Contract Document requirements.

2. Has reviewed and coordinated all aspects of each submitted item relative to manufacturer's product data, Specifications, etc.

3. Has verified with site conditions and all dimensions.

4. That all questions and/or comments prepared by the Consultant or ENGINEER have been reviewed and answered.

5. CONTRACTOR is not relieved from responsibilities for errors, omissions and any deviation in the required submittals as revealed resulting from the CITY'S or Consultant's review of such submittals.

6. In each Section of the Project Manual, all required lists of material, product or equipment; manufacturer's data; and etc., shall be appropriately grouped and submitted to the CITY for review as one submittal. Piece meal submittals will not be accepted.

   Any submittal with outstanding product data, manufacturer's specification or any required information shall deem to be incomplete and subject for rejection without any review. Subsequent submittal shall be considered as second submission.

7. Exception:
   For Division 16 - ELECTRICAL, CONTRACTOR may submit all required list of material, product or equipment, manufacturer's data, wiring diagram, product information and etc., from various Sections in one submittal.

8. All Shop Drawings shall be provided with dimensions and measurements verified at the site as stated hereinbefore. If the CONTRACTOR decides to submit the dimensions and measurements at a later time, the CONTRACTOR must state the reason, for the ENGINEER'S approval, why the dimensions and measurements cannot be taken. If approval is granted, the CONTRACTOR shall re-submit the approved submittal with the final dimensions and measurements after the Works are completed. The CONTRACTOR is not relieved from the responsibilities of error and omission, or any problem that may arise during the fabrication or installation.

9. It is considered reasonable that the CONTRACTOR shall make a complete and acceptable submittal to the ENGINEER or Consultant by the second submission of a submittal item. The CITY reserves the right to withhold moneys due to the CONTRACTOR to cover additional costs of the ENGINEER or Consultant's review beyond the second submittal. On the third submittal by CONTRACTOR, the CONTRACTOR will be charged $150 per hour of CITY'S or Consultant's review time and no additional Contract time shall be allowed.

U. Comply with pertinent provisions of the GENERAL CONDITIONS and GENERAL REQUIREMENTS as applicable**,** but not limited**,** to the following:

1. Record Drawings, Record Project Manual, Record Product Data, Record Sample and Record Submittals.

2. Operation and Maintenance Manuals.

3. Manufacturer's Reference Data.

4. Qualification of CONTRACTOR.

5. Certification of Warranty and Guarantee.

6. Manufacturer's Recommended Installation Procedures.
7. Materials List of items proposed to be provided as specified in the Technical Sections of the Project Manual.

8. Samples, illustrating assembly details, workmanship, fabrication techniques, connections, color selection to be submitted as specified in the Technical Sections of the Project Manual.

9. Regarding Concrete Work, submit Portland Cement Mill Certificates, Concrete Mix and Curing Designs, Load Tickets and Product Data.

10. Regarding shop-Inspected fabricated items, submit Shop INSPECTOR Tag, copy of the billing of lading, delivery receipt for materials or equipment.

V. The CONTRACTOR shall comply with all submittal requirements in the Contract Documents. For convenience, a checklist of submittals required in all the Technical Sections is included, but is not necessarily limited to the following:

SECTION OF PROJECT MANUAL	SUBMITTAL
02160 – SOLDIER PILES	• Shoring Plan
02210 – CLEARING, GRUBBING, AND STRIPPING	• Schedule of clearing, grubbing, and erosion control measures
02240 – SHEETING, SHORING AND BRACING SYSTEMS	• Design and Calculations • Shop Drawings • Quality Control • Permits • Certification Form • Shoring Monitoring Data • Notification

SECTION OF PROJECT MANUAL	SUBMITTAL
02310 – EARTHWORK	• Shop Drawings • Sources of Imported Materials • Method of Backfilling and Compaction • Dewatering Plans • California General Construction Activity Stormwater Permit • Waste Discharge Identification • SWPPP • Competent Person • Trench/Excavation Certification Form • Test Reports • Samples and Product Data • Submittal Schedule
02545 – STORM DRAIN SYSTEM	• Product Data • Shop Drawings • Testing Data and Reports
02550 – REINFORCED CONCRETE PIPE	• Product Data • Shop Drawings
02585 – MAINTENANCE HOLE AND PRECAST VAULT CONSTRUCTION	• Shop Drawings
02731 – STABILIZED CRUSHED AGGREGATE PAVING	• Shop Drawings • Testing Data and Reports
02810 – IRRIGATION SYSTEM	• Shop Drawings
02821 – CHAIN LINK FENCING AND GATES	• Product Data • Shop Drawings
02870 – SITE FURNISHINGS	• Product Data • Samples
02900 – LANDSCAPING	• Product Data • Shop Drawings • Herbicide/Pesticide Application Program • Detailed Layout of Plants • Certification by a Licensed Horticulturist or Qualified Plant Pathologist
02939 – PLANT PROTECTION AND PRUNING	• Pruning Materials • Fencing Materials • Maintenance Plan

SECTION OF PROJECT MANUAL	SUBMITTAL
03100 – CONCRETE FORMWORK	• Falsework Calculations and Drawings
03200 – REINFORCEMENT STEEL	• Shop Drawings and Details • LADBS Research Report Approval • Manufacturer's Literature • Certified Test Reports • Mill Test Reports • Written Welding Procedure • Environmental Product Declaration
03250 – CONCRETE ACCESSORIES	• Shop Drawings • Mill Certificates and Certified Compliance • Catalog Cuts • Manufacturer's Recommendations
03290 – JOINTS IN CONCRETE	• Qualification Samples • Certified Test Reports • Shipping Certification • Placement Shop Drawings
03300 – CAST-IN-PLACE-CONCRETE	• Product Data • Samples • Laboratory Test Reports • Portland Cement Mill Certificates • Concrete Mix and Curing Design • Certified Delivery Tickets • Certificate of Compliance from Supplier
03301 – CAST-IN-PLACE CONCRETE PAVING	• Product Data • Samples • Laboratory Test Reports • Portland Cement Mill Certificates • Concrete Mix and Curing Design • Certified Delivery Tickets • Certificate of Compliance from Supplier • Environmental Product Declaration

SECTION OF PROJECT MANUAL	SUBMITTAL
03315 – GROUT	• Certified Test Results • Manufacturer's Literature
03400 – PRECAST CONCRETE	• Shop Drawings • Mix Proportions • Test Reports • Certificates of Compliance • Manufacturer's Qualifications
05500 – METAL FABRICATIONS	• Materials List • Shop Drawings • Samples • Templates • Manufacturer's Specifications and Other Data • Manufacturer's Recommended Installation Procedures • Certificates
07900 – JOINT SEALANTS	• Shop Drawings
09800 – PROTECTIVE COATING	• Samples • Coating Materials List • Paint Manufacturer's Information • Certificates
09860 – ANTI-GRAFFITI COATING	• Materials List • Manufacturer's Specifications • Manufacturer's Recommended Installation Procedures
10430 – EXTERIOR SIGNAGE	• Product Data • Shop Drawings • Samples
11805 – HYDRAULIC GATES AND VALVES, GENERAL	• Shop Drawings • Certification • Operations and Maintenance Manual
11815 – SLIDE/STOP GATES	• Shop Drawings
13240 – STORMWATER TREATMENT DEVICES	• Product Data • Materials List • Manufacturer's Specifications • Manufacturer's Recommended Installation Procedures • Shop Drawings • Concrete Mix Design

SECTION OF PROJECT MANUAL	SUBMITTAL
13330 – UNDERGROUND INFILTRATION GALLERY	• Product Data • Materials List • Manufacturer's Specifications • Manufacturer's Recommended Installation Procedures • Shop Drawings • Concrete Mix Design
13447 – ELECTRIC ACTUATORS	• Product Data • Shop Drawings
15440 – DRINKING FOUNTAIN AND BOTTLE FILLER	• Product Data • Shop Drawings
15610 – PIPING, GENERAL	• Shop Drawings
15615 – VALVES AND GATES, GENERAL	• Shop Drawings
16020 – MUNICIPAL FACILITIES GENERAL ELECTRICAL REQUIREMENTS	• Schedule of Submittals • Shop Drawings • Complete Catalog Information (Construction Ratings, Insulation Systems, Manufacturer's Certifications, Specifications) • Equipment Floor Plans • Materials List • Test Reports • Maintenance Service and Operating Manuals • Terminology • Modifications of Contract Drawings • Record Drawings • Operations and Maintenance Manuals
16110 – RACEWAYS	• Catalog Cuts, Bulletins, or Brochures • Manufacturer's Certified Test Reports

SECTION OF PROJECT MANUAL	SUBMITTAL
16160 – CONDUCTORS	• Catalog Cuts and Other Brochures • Manufacturer's Certified Test Records and Factory Test Procedures • Manufacturer's Recommended Splicing, Testing, and Installation Practices • Field Testing, Certified Test Reports, and Splicing Personnel Qualifications
16170 – CABINETS AND ENCLOSURES	• Thermal Calculations • Sizing Calculations
16180 –WIRING DEVICES	• Product Data • Maintenance Data
16200 – MOTOR CONTROL CENTERS	• Product Data • Maintenance Data
16210 – SWITCHES, DISCONNECT AND SAFETY	• Product Data • Maintenance Data
16270 – SERVICE AND DISTRIBUTION SWITCHBOARD	• Product Data • Maintenance Data
16280 – SHORT CIRCUIT AND COORDINATION REPORT	• Power System Analysis • Harmonic Current, Voltage and Line Notching Test Results • Submittals for Solid State Motor Protective Devices • Final Settings of Protective Device • Changes to the Protection Scheme or Equipment Selection
16290 – MUNICIPAL FACILITIES GROUND SYSTEM	• Product Data • Field Tests and Observation Reports
16320 – TRANSFORMERS	• Product Data • Maintenance Data
16330 – PANELBOARDS	• Product Data • Maintenance Data

SECTION OF PROJECT MANUAL	SUBMITTAL
16340 – LOW VOLTAGE MOTOR CONTROL	• Product Data • Maintenance Data
16380 – MUNICIPAL FACILITIES UNINTERRUPTIBLE POWER SYSTEM	• Product Data • Maintenance Data
16490 – ELECTRIC MOTORS	• Product Data • Maintenance Data
17240 – AV FLOW METERS	• Product Data • Maintenance Data

W. CONTRACTOR shall submit requests for changes in products, materials, equipment and methods of construction required by the Contract Documents, and all submittals shall conform to the provisions of Section 01630 - SUBSTITUTIONS AND "OR EQUAL" SUBMITTAL of the GENERAL REQUIREMENTS of the Project Manual immediately after the issuance of Notice-To-Proceed.

1. All substitution requests shall be made by the CONTRACTOR and shall imply the CONTRACTOR'S approval of such substitutions.

X. The Following Are Not Considered As Substitutions:

1. Substitutions requested by Bidders during the bidding period or prior to award of contract will not be considered or accepted.

2. Revisions to Contract Documents requested by the ENGINEER or the Consultant.

3. Specified options of products and construction methods included in Contract Documents.

4. The CONTRACTOR'S determination of and compliance with governing regulations and orders issued by governing authorities.

Y. CONTRACTOR shall perform no portion of the Contracted Work requiring submittal and review of Shop Drawings, Product Data, Samples, etc. until such submittals have been reviewed by the Consultant or ENGINEER. All work not shown on Shop Drawings or not conforming to Contract shall be removed without additional cost to the CITY.

Z. CONTRACTOR shall be responsible for procurement and installation of equipment or material without deviation upon receipt of the reviewed submittal from the ENGINEER or Consultant bearing the designation of ""A" No Exception Taken". Be responsible for the coordination with other trade, proper fitting and construction of the work, furnishing other material and work required which may not be indicated on the Contract Drawings or Submittals. All submittals shall be reviewed by the CITY for general design or compliance. CONTRACTOR will be responsible for deviation from the drawings or Project Manual, and for errors or omissions of any sort in the Submittals.

AA. CONTRACTOR shall review and attend to all "Note Markings" and/or "Comments Attached" as noted by the ENGINEER or the Consultant on the Submittal. Make corrections or modifications to equipment or material as required.

AB. CONTRACTOR shall omit any article disapproved or noted "Reject" by the ENGINEER, or any article not conforming to the contract, or not of proper quality or grade and provide suitable articles, in lieu thereof in conforming with the Contract.

AC. CONTRACTOR shall resubmit all submittals with corrections as noted by the ENGINEER or the Consultant or as required in timely manner without delay or impact to the contract.

(END OF SECTION)

SECTION 01350
AUDIT AND ACCESS TO RECORDS

1.1 THE REQUIREMENT

A. The CONTRACTOR shall maintain books, records, estimates, communications, payroll documents and other evidence directly pertinent to performance of Work under this Contract in accordance with generally accepted accounting principles and practices consistently applied for a period of no less than four (4) years from the date of the Project acceptance by the Board of Public Works. The CONTRACTOR shall also maintain the financial information and data used by the CONTRACTOR in the preparation or support of any cost submissions required for this Contract, or any Modifications or claims, and a copy of the cost summary submitted to the CITY. The CITY authorized representatives shall have access, at all times during normal business hours, to such books, records, documents and other evidence for the purpose of inspection, audit and copying. The CONTRACTOR will provide proper facilities for such access and inspection.

B. The CONTRACTOR agrees to make A through G of this Article applicable to this Contract and all Modifications or claims affecting the Contract price. The CONTRACTOR agrees to include A through G of this Article in all his contracts and all tier subcontracts in excess of $10,000, and to make A through G of this Article applicable to all Modifications and claims related to project performance.

C. Audits conducted under this Article shall be in accordance with generally accepted auditing standards and established procedures and guidelines of the reviewing or audit agency.

D. The CONTRACTOR agrees to the disclosure of all information and reports resulting from access to records under A and B of this Article, to the CITY and affected agencies.

E. Records under A and B of this Article shall be maintained and made available during performance of Work under this Contract within the time period specified in A of the Article.. In addition, those records which relate to any portion of this Contract, to any Modification, to any dispute, to litigation, to the settlement of claims arising out of such performance, or to costs or items to which an audit exception has been taken, shall be maintained and made available within the time period specified in A of the Article.

F. This right of access Article applies to financial records pertaining to this Contract and all Contract Modifications. In addition, this right of access applies to all records pertaining to all contracts, contract modifications, and contract amendments:

1. To the extent the records pertain directly to Contract performance;

2. If there is any indication that fraud, gross abuse or corrupt practices may be involved; or

3. If the Contract is terminated for default or for convenience.

G. Access to records is not limited to the required retention periods. The authorized representatives designated in A of this Article shall have access to records at any reasonable time for as long as the records are maintained.

H. Provided that CITY has made demand for access or audit, pursuant to this Section, CONTRACTOR'S compliance with provisions A through G of this Section shall be a condition precedent to maintenance of any legal action or proceeding by the CONTRACTOR against the CITY and to CONTRACTOR'S right to Progress or Final Payment. Without limitation to the foregoing, or to any other provisions for withholding set forth in the Contract Documents, CITY shall have the right, in its sole discretion and in addition to any right of withholding of retention, to further withhold from any payment to CONTRACTOR a sum of up to ten percent (10%) of the total amount set forth in CONTRACTOR'S current, unpaid Application(s) for Payment, until CONTRACTOR has complied with any outstanding and unsatisfied request by CITY for audits under this Section. Upon CONTRACTOR'S compliance with this Section, any monies withheld pursuant to this Paragraph solely due to CONTRACTOR'S failure to permit an audit requested by CITY shall be released to CONTRACTOR.

I. CONTRACTOR hereby consents and agrees that any failure by CONTRACTOR to provide access to records as provided in A through G of this Section shall be specifically enforceable by issuance of a preliminary and/or permanent mandatory injunction by a court of competent jurisdiction based on affidavits submitted to such court, without the necessity of oral testimony, to compel CONTRACTOR to permit access and inspection of the records or to require delivery of the records to CITY for inspection.

(END OF SECTION)

SECTION 01351
ESCROW BID DOCUMENTS

1.1 THE REQUIREMENT

A. Scope

1. This Article requires that the three (3) low bidders submit, within the specified time after receipt of bids, one (1) copy of all documentary information including, but not limited to, electronic files generated in preparation of bid prices for this project. This material is hereinafter referred to as "Escrow Bid Documents". The Escrow Bid Documents of the CONTRACTOR will be held in escrow for the duration of the Contract.

2. The successful Bidder agrees, as a condition of the award of the Contract, that the Escrow Bid Documents constitute all of the information used in preparation of the Bid, and that no other bid preparation information shall be considered in resolving disputes or claims. The successful bidder also agrees that nothing in the Escrow Bid Documents shall change or modify the terms or conditions of the Contract Documents.

B. Ownership

1. The Escrow Bid Documents are, and shall always remain, the property of the CONTRACTOR, subject to joint review by the CITY and the CONTRACTOR as provided herein. The Escrow Bid Documents are proprietary and secret information belonging to the CONTRACTOR and exempt from the Federal Freedom of Information Act, California Public Records Act, and the Los Angeles CITY Freedom of Information Act.

2. The CITY stipulates and expressly acknowledges that the Escrow Bid Documents, as defined herein, constitute trade secrets. This acknowledgment is based on the CITY'S express understanding that the information contained in the Escrow Bid Documents is not known outside the Bidder's business, is known only to a limited extent and only to a limited number of employees of the Bidder, is safeguarded while in the Bidder's possession, is extremely valuable to the Bidder and could be extremely valuable to the Bidder's competitors by virtue of it reflecting the Bidder's contemplated techniques of construction. The CITY acknowledges that the Bidder expended substantial sums of money in developing the information included in the Escrow Bid Documents and further acknowledges that it would be difficult for a competitor to replicate the information contained therein. The CITY further acknowledges that the Escrow Bid Documents and the information contained therein are made available to the CITY only because such action is an express prerequisite to award of the Contract. The CITY acknowledges that the Escrow Bid Documents include a compilation of information used in the Bidder's business, intended to give the Bidder an opportunity to obtain an advantage over competitors who do not know of or use the contents of the documentation. The CITY further agrees to safeguard the Escrow Bid Documents, and all information contained therein, against disclosure to the fullest extent permitted by law.

C. Purpose

1. The purpose of the Escrow Bid Documents procedure is intended to create a spirit of cooperation in an atmosphere of honesty and candor between the CITY and the CONTRACTOR.

2. Escrow Bid Documents will be used to assist in the negotiation of price adjustments and Change Orders and in the settlement of disputes and claims. They will not be used for pre-award evaluation of the CONTRACTOR'S anticipated methods of construction or to assess the CONTRACTOR'S qualifications for performing the WORK.

D. Format and Contents

1. Bidders may submit Escrow Bid documents in their usual cost estimation format; a standard format is not required. It is not the intention of this Article to cause the Bidder extra work during the preparation of the Bid, but to ensure that the Escrow Bid Documents will be adequate to enable complete understanding and proper interpretation for their intended use. The Escrow Bid Documents shall be in English.

2. It is required that the Escrow Bid Documents clearly itemize the estimated costs of performing the WORK of each Bid item contained in the Bid schedule. Bid items should be separated into sub-items as required to present a complete and detailed cost estimate and allow a detailed cost review. The Escrow Bid Documents shall include all quantity takeoffs, crew, equipment, calculations of rates of production and progress, copies of quotations from Subcontractors and Suppliers, and memoranda, narratives, add/deduct sheets, and all other information used by the Bidder to arrive at the prices contained in the Bid. Estimated costs should be broken down into the Bidder's usual estimate categories such as direct labor, repair labor, equipment ownership and operation, expendable materials, permanent materials, and subcontract cost, as appropriate. Plant and equipment and indirect costs should be detailed in the Bidder's usual format. The CONTRACTOR'S reallocation of indirect costs, contingencies, markup and other items to each bid item shall be identified.

3. All estimates for items of Work that are based in whole or in part upon any baseline statements or information in the Geotechnical Baseline Report (GBR), shall clearly reference the baseline statements used. CONTRACTOR shall have no right to an adjustment in the Contract Price or the Contract Completion Date (due to Differing Site Conditions of the General Conditions) unless such baseline statements have been clearly identified in the Escrow Bid Documents.

4. All cost shall be identified. For bid items amounting to less than $10,000, estimated units costs are acceptable without a detailed cost estimate, provided that labor, equipment, materials, and subcontracts, as applicable, are included and provided that indirect costs, contingencies, and markups, as applicable, are allocated. Bid documents provided by the CITY need not be included in the Escrow Bid Documents unless needed to comply with the following requirements.

E. Submittal

1. The Escrow Bid Documents shall be submitted to the Board of Public Works Office, by the three (3) low Bidders, in sealed containers, within forty-eight (48) hours after the time for receipt of Bids. The containers shall be clearly marked on the outside with the Bidder's name, date of submittal, project name and the words "Escrow Bid Documents".

2. The Escrow Bid Documents shall be accompanied with the certification (a sample is included), signed by an individual authorized by the Bidder to execute Bids, stating that the material in the Escrow Bid Documents constitutes all the documentary information used in preparation of the Bid and that the Bidder has personally examined the contents of the Escrow Bid Documents container and has found that the documents in the container are complete.

BID DOCUMENTATION CERTIFICATION

THE UNDERSIGNED HEREBY CERTIFIES THAT THE BID DOCUMENTATION CONTAINED HEREIN CONSTITUTES ALL OF THE INFORMATION USED IN PREPARATION OF THE BID AND THAT I HAVE PERSONALLY EXAMINED THESE CONTENTS AND HAVE FOUND THAT THIS BID DOCUMENTATION IS COMPLETE.

SIGNATURE: _____

NAME: _____

TITLE: _____

FIRM: _____

DATE: _____

3. Within 14 Calendar days following the receipt of bids, the Escrow Bid Documents of the apparent successful Bidder will be examined, organized and inventoried by representatives of the CITY, together with members of the CONTRACTOR'S staff who are knowledgeable of how the Bid was prepared. This examination is to ensure that the Escrow Bid Documents are legible and complete. It will not constitute approval of proposed construction methods, estimating assumptions, or interpretations of Contract Documents. Examination will not alter any condition or term of the Contract.

4. If all the documentation required in Section D, "Format and Contents", has not been included in the original submittal, additional documentation shall be submitted, at the CITY'S sole discretion, within twenty four (24) hours after the original inventory and examination of the Escrow Bid Documents and prior to award of the Contract. The detailed breakdown of estimated costs shall be reconciled and revised, if appropriate, by agreement between the CONTRACTOR and the CITY before making the award. If the Contract is not awarded to the apparent successful Bidder, the Escrow Bid Documents of the Bidder next to be considered for award shall be processed as described above.

5. Submission of complete Escrow Bid Documents is an essential element of the Bidder's responsiveness and a prerequisite to a Contract award. Failure to provide the necessary Escrow Bid Documents within the forty-eight (48) hour time limit, may render the Bid non-responsive. Escrow Bid Documents of the unsuccessful Bidders will be returned following award of the Contract.

6. If any Bidder's Bid is based on subcontracting any part of the WORK, each Subcontractor, whose total subcontract price exceeds five percent (5%) of the total Contract price bid by the Bidder, shall provide separate Escrow Bid Documents to be included with those of the Bidder. Such documents shall be opened and examined in the same manner and at the same time as the examination described above for the apparent successful Bidder.

7. If the CONTRACTOR wishes to subcontract any portion of the WORK after award, the CITY retains the right to require the CONTRACTOR to submit Escrow Bid Documents from the Subcontractor before the subcontract is approved.

F. Storage

1. The Escrow Bid Documents will be placed in lockable container, with provisions for the Contractor and the City to provide separate locks, for the life of the Contract, and stored in a mutually agreeable location at or near the jobsite. The cost of storage will be paid by the CITY.

G. Examination

1. The Escrow Bid Documents shall be examined by both the CITY and the CONTRACTOR, at any time deemed necessary by either the CITY or the CONTRACTOR, to assist in the negotiation of price adjustments and Change Orders or the settlement of disputes and claims.

2. Examination of the Escrow Bid Documents is subject to the following conditions:

   a. As trade secrets, the Escrow Bid Documents are proprietary and confidential.

   b. The CITY and the CONTRACTOR shall each designate, in writing to the other party and within ten (10) days after execution of the Contract, representatives who are authorized to examine the Escrow Bid Documents, with the exception of the initial reviewers as specified in section 1.1.E.3 above. No other person shall have access to the Escrow Bid Documents.

   c. Access to the Escrow Bid Documents may take place only in the presence of duly designated representatives of both the CITY and the CONTRACTOR.

3. The Escrow Bid Documents at all times remain the property of the CONTRACTOR and the CITY will take all reasonable steps necessary to protect confidentiality.

H. Final Disposition

1. The Escrow Bid Documents will be returned to the CONTRACTOR at such time as the following conditions have been satisfied.

   a. The Contract has been completed.

   b. Final payment has been issued by the CITY.

   c. All litigation has been completed, and a written agreement has been executed between the CITY and the CONTRACTOR that no further litigation will be made.

   d. The Board of Public Works has accepted the project.

2. The Escrow Bid Documents will be sealed and promptly returned to the CONTRACTOR by the party in charge of the Escrow Bid Documents. Reproduction of any portion of the Escrow Bid Documents will not be permitted at any time without the written permission of the CONTRACTOR.

(END OF SECTION)

SECTION 01353
OPPORTUNITY TO PARTNER

1.1 THE REQUIREMENT

A. The successful bidder will have the opportunity to enter into a cooperative partnership agreement with the CITY for the contract. Participation in Partnering is highly encouraged. Partnering will create a framework for conflict resolution, improved communications, reduced litigation, and cost containment. During the partnering session, all parties will participate in developing an Issue Resolution Ladder, which will help establish and communicate the chain of command in each organization (See Attachment 01353–A1). Each level of the organization is expected to work cooperatively to resolve issues. However, if issues cannot be resolved in a timely manner or are beyond the authority granted that level, each party understands that the issue must be elevated to the next level.

B. The objective of this Partnering agreement would be effective completion of the Work on time and to achieve a standard of quality that would be a source of pride to both the CITY and the CONTRACTOR. Partnering is intended only to establish an environment of cooperation between the parties and will not affect the terms of this contract.

C. At least four (4) training sessions are recommended to initiate the partnership agreement. The cost of this training, excluding staff labor charges, will be paid from a fixed cash allowance that has been allocated as the bid item Opportunity to Partner in the SCHEDULE OF WORK AND PRICES. No Overhead and Profit shall be added to the cost of the training. If the total cost of the partnering training differs from the amount set forth in the SCHEDULE OF WORK AND PRICES, the Contract Price shall be adjusted by a Change Order for the difference between the total actual cost and the amount included in the Bid, as an additional amount due the CONTRACTOR or a credit to the CITY, as appropriate.

(END OF SECTION)

(SEE ATTACHMENT)

ATTACHMENT TO SECTION 01353

Attachments to General Requirements Section 01353 consists of one (1) document, as follows:

ATTACHMENT NUMBER	TITLE OF ATTACHMENT	NUMBER OF PAGES IN THIS ATTACHMENT
01353-A1	Issue Resolution Ladder – Line Management Form	1

City of Los Angeles, Department of Public Works
Bureaus of Engineering and Contract Administration

Contractor: **{name}**

Project Title: **{title}**

Issue Resolution Ladder – Line Management

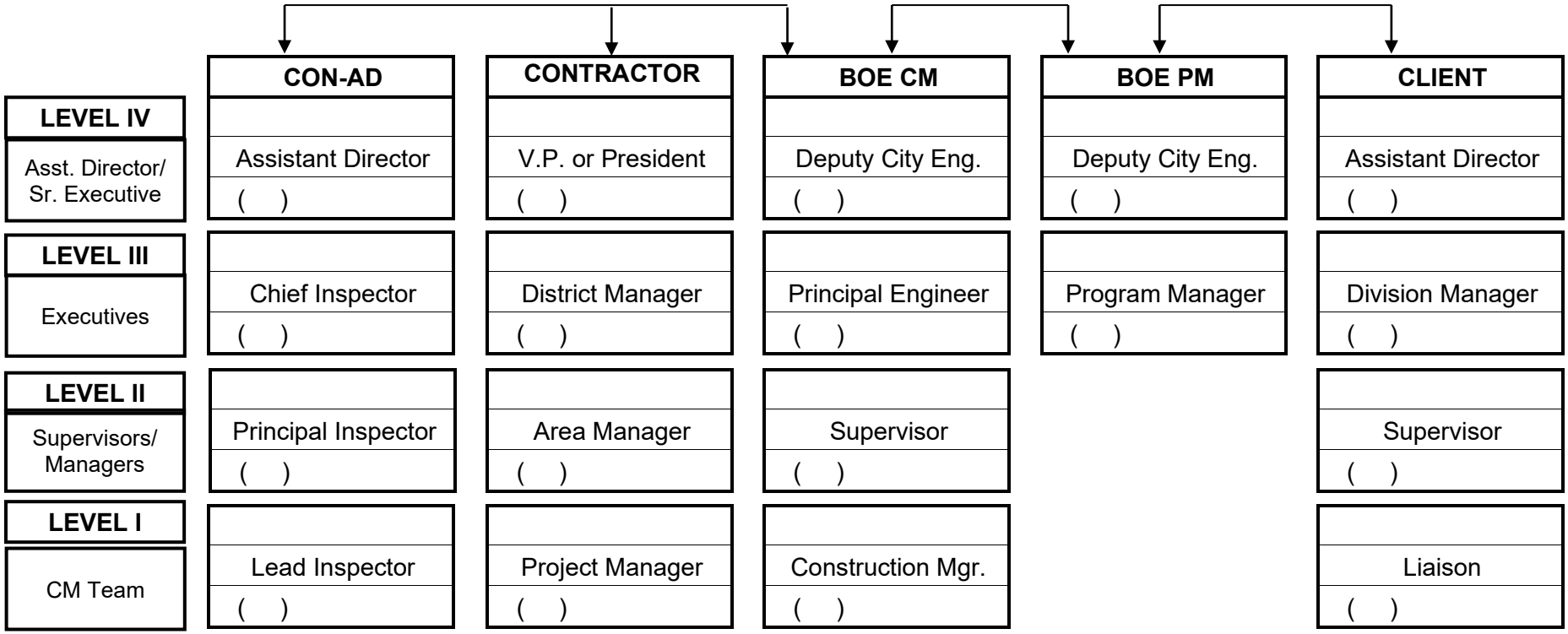

SECTION 01410
REGULATORY REQUIREMENTS

PART ONE - GENERAL

1.1 SUMMARY OF WORK

A. Building Codes and Regulations:

1. The CONTRACTOR shall perform the Contracted Work in accordance with the requirements of the latest edition of the Los Angeles City Building Codes and Amendments and all other regulations, laws, and ordinances, even though such requirements are not specifically mentioned in the Project Manual or shown on the Contract Drawings.

2. When the Work required by the Drawings and Project Manual are in conflict with any such law or ordinance, the CONTRACTOR shall notify the ENGINEER. The CONTRACTOR shall comply with the more stringent requirements, unless notified by the ENGINEER and the CONTRACTOR shall not proceed with the Work until the ENGINEER has so ordered.

3. This Section specifies procedural and administrative requirements for compliance with governing regulations, codes, and standards imposed upon the Contracted Work. These requirements include obtaining permits, licenses, inspections, releases, and similar documentation, as well as payments, statements, and similar requirements associated with the regulations, codes, and standards.

B. Related Documents:

1. Contract Documents: Work of this Section shall comply with all the Contract Documents, including General Conditions and Supplementary Conditions and other Sections, DIVISION 1 - GENERAL REQUIREMENTS.

1.2 CODES AND REGULATIONS

A. The design and construction of this Project have been selected and depicted on the Contract Documents in compliance with all applicable codes, which govern the various work, materials, devices, equipment, systems, and procedures in effect at the time the Project is issued to bid by the Board of Public Works. These include, but are not limited to, the following:

1. CITY of Los Angeles Building Code and Amendments, latest edition.

2. Los Angeles CITY "Standard Specifications for Public Works Construction", (The Green Book).

3. CAC Title 24.

4. California Building Code (CBC).

5. CAL/OSHA (Occupational and Safety Code).

6. California State Architectural Barrier's Law (CAL/ABL).

7. California State Fire Marshall requirements.

8. California Electrical, Plumbing and Mechanical Codes.

9. Los Angeles CITY Fire Code.

10. State Energy Standards Title 24.

11. Americans with Disabilities Act (ADA).

12. Los Angeles CITY Electrical, Plumbing and Mechanical Codes and Amendments, latest editions.

13. Los Angeles CITY Elevator Code, C.A.C. 3041 and Barclay's California Code of Regulation (Sub-article E620)

14. Los Angeles CITY Municipal Code, latest edition.

15. Uniform Building Code (UBC).

16. All other Codes and Regulations that may be noted in the Technical Sections of the Project Manual.

B. The procedure followed by the ENGINEER has been to contact governing authorities, where necessary, to obtain information needed for the purpose of preparing Contract Documents, recognizing that such information may or may not be of significance in relation to the CONTRACTOR'S responsibilities for performing the Work. Direct contact, by the CONTRACTOR, with such governing authorities can be made for necessary information and decisions that have a bearing on the performance of the Work, if necessary.

C. CONTRACTOR shall be familiar with all codes, regulations and all necessary procedures to obtain and pay for all permits, arrange all inspections, and secure necessary releases or sign-offs, which are prerequisite to any utility service connection work.

D. When conflict or violation of law or codes are found during any inspection by the governing agencies, the CONTRACTOR shall request such allegation of code conflict or violation, or Request of Correction to be on a written form from the governing agencies. The CONTRACTOR shall furnish the ENGINEER and the INSPECTOR each a duplicate copy of such written notice for review.

PART TWO - PRODUCTS (NOT APPLICABLE)

PART THREE - EXECUTION

3.1 PERMIT INFORMATION

A. CONTRACTOR shall contact the ENGINEER to obtain the proper CITY **(**owner**)** information to be used in the manifest or notification prior to start of any abatement work.

B. All information used by the CONTRACTOR including the CITY'S (Owner's) and CITY authorized representative's names, addresses and telephone numbers shall be consistent with the information shown on the building permit and plan-check applications obtained by the CITY.

(END OF SECTION)

SECTION 01411
CONFINED SPACE ENTRY

1.1 THE REQUIREMENT

A. Confined Space Entry Program

1. The CONTRACTOR shall be responsible for implementing, administering and maintaining a confined space entry program (CSEP) in accordance with Sections 5156, 5157 and 5158, Title 8, CCR.

2. Prior to starting the Work, the CONTRACTOR shall prepare and submit its comprehensive CSEP to the ENGINEER. The CSEP shall address all potential physical and environmental hazards and contain procedure for safe entry into confined spaces, including, but not limited to, the following:

a. Training of personnel

b. Purging and cleaning the space of materials and residue

c. Potential isolation and control of energy and material inflow

d. Controlled access to the space

e. Atmospheric testing of the space

f. Ventilation of the space

g. Special hazards consideration

h. Personal protective equipment

i. Rescue plan provisions.

3. The CONTRACTOR'S submittal shall include the names of its personnel, including Subcontractor personnel, assigned to the project, who will have CSEP responsibilities, their CSEP training, and their specific assignment and responsibility in carrying out the CSEP.

B. Permit-Required Confined Spaces

1. Entry into permit-required confined spaces, as defined in Section 5157, Title 8, CCR, may be required as a part of the Work. All maintenance holes, tanks, vaults, pipelines, excavations, or other enclosed or partially enclosed spaces shall be considered permit-required confined spaces until the pre-entry procedures demonstrate otherwise. The CONTRACTOR shall implement a permit space program prior to performing any Work in a permit-required confined space. A copy of the permit shall be available at all times for review by CONTRACTOR and CITY personnel at the Worksite.

C. Payment

1. Payment for implementing, administering, and providing all equipment and personnel to perform the CSEP shall be included in the bid items for which the CSEP is required.

(END OF SECTION)

SECTION 01420
UNITS OF MEASURE

1.1 THE REQUIREMENT

A. General

1. The International System of Units, also referred to as SI or the metric system, is the principal measurement system in these specifications and shall be used for construction, unless otherwise stated in the Contract documents. U.S. Standard Measures, also called U.S. Customary System, are included in parenthesis. SI units and U.S. Standard Measures in parenthesis may or may not be exactly equivalent. If U.S. Standard Measures are specified for us in the contract documents, then all values used for construction shall be U.S. Standard Measures shown in parenthesis. However, certain material specifications and test requirements contained herein use SI units specifically and conversions to U.S. Standard Measure have not been included in these circumstances. When U.S. Standard Measures are not included in parenthesis, then the SI units shall control.

2. Reference is also made to ASTM E 380 for definitions of various units of the SI system and a more extensive set of conversion factors.

B. Units of Measure and Their Abbreviations (abbreviations noted within parentheses):

U.S. Customary Unit (Abbreviations)	Equal to	SI Unit (Abbreviations)
1 mil (= 0.001 in)	=	25.4 micrometer (µm)
1 inch (in)	=	25.4 millimeter (mm)
1 inch (in)	=	2.54 centimeter (cm)
1 foot (ft)	=	0.3048 meter (m)
1 yard (yd)	=	0.9144 meter (m)
1 mile (mi)	=	1.6093 kilometer (km)
1 square foot (ft^2)	=	0.0929 square meter (m^2)
1 square yard (yd^2)	=	0.8361 square meter (m^2)
1 cubic foot (ft^3)	=	0.0283 cubic meter (m^3)
1 cubic yard (yd^3)	=	0.7646 cubic meter (m^3)
1 acre	=	0.4047 hectare (ha)
1 U.S. gallon (gal)	=	3.7854 Liter (L)
1 fluid ounce (fl. oz.)	=	29.5735 milliliter (mL)
1 pound mass (lb) (avoirdupois)	=	0.4536 kilogram (kg)
1 ounce mass (oz)	=	0.0283495 kilogram (kg)
1 Ton (= 2,000 lb avoirdupois)	=	0.9072 Tonne (= 1,000 kg)
1 Poise	=	0.1 pascal · second (Pa · s)
1 centistoke (cs)	=	1 square millimeters per second (mm^2/s)
1 pound force (lbf)	=	4.4482 Newton (N)
1 pound per square inch (psi)	=	6.8948 Kilopascal (kPa)
1 pound force per foot (lbf/ft)	=	1.4594 Newton per meter (N/m)
1 foot-pound force (ft-lbf)	=	1.3558 Joules (J)
1 foot-pound force per second (ft-lbf/s)	=	1.3558 Watt (W)
1 part per million (ppm)	=	1 milligram/liter (mg/L)

C. Temperature Units and Their Abbreviations (abbreviations noted within parentheses):

Degree Fahrenheit (Abbreviation: °F)	**Degree Celsius (Abbreviation: °C)**
°F = (1.8 x °C) + 32	°C = (°F – 32)/1.8

D. SI Units Commonly Used in Both Systems and their Abbreviations (abbreviations noted within parentheses):

1 Ampere (A)
1 Volt (V)
1 Candela (cd)
1 Lumen (lm)
1 second (s)

E. Common Metric Prefixes and Their Abbreviations (abbreviations noted within parentheses):

kilo (k)	10^{3}
centi (c)	10^{-2}
milli (m)	10^{-3}
micro (µ)	10^{-6}
nano (n)	10^{-9}
pico (p)	10^{-12}

(END OF SECTION)

SECTION 01421
SYMBOLS

1.1 THE REQUIREMENT

A. The symbols as shown shall mean:

Symbol	Definition
Δ	Delta, the central angle or angle between tangents
∠	Angle
%	Percent
'	Feet or minutes
"	Inches or seconds
#	Number
/	Per or (between words)
°	Degree
℄	Property line
℄	Centerline
℄	Survey line or station line

(END OF SECTION)

SECTION 01430
MANUFACTURER'S FIELD SERVICES

1.1 THE REQUIREMENT

A. Prior to the startup of the facility, an experienced, competent, and authorized representative of the manufacturer of each item of equipment incorporated into the Work, for which field services are indicated in specified equipment sections, shall visit the site of the Work and inspect, check, adjust if necessary, and approve the equipment installation. In each case, the representative shall revisit the Jobsite as often as necessary until all trouble is corrected and the equipment installation and operation are satisfactory in the opinion of the ENGINEER. Each manufacturer's representative shall furnish to the ENGINEER and the INSPECTOR a written report certifying that the equipment has been properly installed, and lubricated; is in accurate alignment; is free from any undue stress imposed by connecting piping or anchor bolts; and has been operated under full load conditions and that it operated satisfactorily. All costs for these services shall be included in the CONTRACTOR'S Bid.

(END OF SECTION)

SECTION 01451
APPROVAL OF ELECTRICAL EQUIPMENT

1.1 THE REQUIREMENT

A. All electrical equipment, control panels and cabinets, components, devices, etc. shall be listed by the Underwriters Laboratories (UL) or approved by a testing laboratory recognized by the CITY or approved by the CITY'S Department of Building and Safety Electrical Testing Lab (ETL). All costs incurred for obtaining these approvals shall be borne by the CONTRACTOR.

B. The CONTRACTOR shall contact the ETL (Telephone 213-485-2376) for cost, schedule, list of the latest approved recognized laboratories and other additional information.

C. Shop Drawings submitted by the CONTRACTOR for all electrical equipment and products shall have prior approval of one of the laboratories stated above, or the drawings will be rejected. No electrical equipment or materials shall be delivered to the Jobsite without UL listing, or a CITY recognized laboratory approval, or ETL approval. Shop Drawings approved by the ENGINEER shall in no way invalidate the requirements set forth in paragraph A.

D. UL listing of individual components or devices installed in control panels and cabinets shall not be construed as UL listing or approval of the assembled control panel or cabinet. The CONTRACTOR shall be solely responsible for determining the approval process time necessary for obtaining the approval of these items such that the project schedule can be maintained. The CONTRACTOR shall submit to the ENGINEER for information a detailed schedule, listing all such items requiring approval, the proposed dates of their submittal, the anticipated approval process time, and the expected date of delivery of these items.

E. The CONTRACTOR shall complete the Procedures and Sign Off Log for all Electrical Intertie with the Plant Form Attachment 01451-A. It shall include all the supporting documents required by the form and shall be signed and dated.

(END OF SECTION)

(SEE ATTACHMENT)

ATTACHMENTS TO SECTION 01451

Attachments to General Requirements Section 01451 consists of one (1) document, as follows:

ATTACHMENT NUMBER	TITLE OF ATTACHMENT	NUMBER OF PAGES IN THIS ATTACHMENT
01451-A1	Electrical Summary Data Form	1

ELECTRICAL SUMMARY
DATA FORM

EQUIPMENT ITEM: _____

EQUIPMENT COST: _____

EQUIPMENT SUPPLIER: _____

COMPONENT INFORMATION: NAMEPLATE DATE **MANUFACTURER:**	
CITY IDENTIFICATION NUMBER:	**EQUIPMENT SERIAL NUMBER:**
EQUIPMENT MODEL DESIGNATION:	**TYPE:**
FRAME SIZE:	**INTERRUPTING RATINGS:**
POWER (KV/KVA):	**PRIMARY VOLTAGE:**
SECONDARY VOLTAGE:	**AMPERAGE:**
PHASE: **HERTZ:**	**INPUT:**
OUTPUT:	**DEGREES C RISE:**
PERCENT IMPEDANCE:	**FUSE SIZE/QUALITIES:**
PHASE: **HERTZ:**	**SERVICE FACTOR**
COMMENTS:	

SECTION 01452
INSPECTION OF THE WORK

1.1 THE REQUIREMENT

A. Whenever the CONTRACTOR intends to carry on the Work of this Contract on a Saturday, Sunday, or holiday, or more than eight (8) hours a day on Monday through Friday, or any variation in the time of the workday as set forth in the GENERAL CONDITIONS, length of the workday and work week, notification shall be given to the INSPECTOR and the ENGINEER of such intention at least forty-eight (48) hours in advance so that inspection may be arranged. No Work shall be allowed during these times without the approval of the INSPECTOR and no demolition will be permitted on Saturdays, Sundays, or holidays without the prior approval of the Board. All CITY inspection required by the CONTRACTOR on holidays, weekends and overtime for the sole convenience of the CONTRACTOR shall be accomplished at the sole expense of the CONTRACTOR by issuance of a deductive Change Order.

B. The Work shall be conducted under the general observation of the ENGINEER and shall be subject to inspection by the INSPECTOR to ensure compliance with the requirements of the Contract Documents. Such inspection may include mill, plant, shop or field inspection, as required. The INSPECTOR shall be permitted access to all parts of the Work, including plants where materials or equipment are manufactured or fabricated. All materials and articles furnished by the CONTRACTOR shall be subject to inspection and no materials or articles shall be used in the Work until they have been inspected and accepted by the INSPECTOR.

C. No Work shall be backfilled, buried, cast in concrete, hidden or otherwise covered until it has been inspected by the INSPECTOR, and other Agencies for which a permit is required. Whenever the CONTRACTOR is ready to backfill, bury, cast in concrete, hide, or otherwise cover any Work under the Contract, the CONTRACTOR shall notify the INSPECTOR not less than forty-eight (48) hours in advance to request inspection before beginning any such Work of covering. Failure of the CONTRACTOR to notify the INSPECTOR at least forty-eight (48) hours in advance of any such inspections shall be cause for the INSPECTOR to require a sufficient delay in the progress of Work to allow time for such inspections and any remedial or corrective work required, and all costs of such delays, including its effect upon other portions of the work, shall be borne by the CONTRACTOR. Any Work so covered in the absence of inspection shall be subject to uncovering at the sole expense of the CONTRACTOR. Where uninspected Work cannot be uncovered, such as in concrete cast over reinforcing steel, all such Work shall be subject to demolition, removal, and reconstruction under proper inspection, and no additional payment will be allowed therefor.

D. The presence of the ENGINEER or the INSPECTOR shall not relieve the CONTRACTOR of the responsibility for the proper execution of the Work in accordance with all requirements of the Contract Documents. Compliance is a duty of the CONTRACTOR, and said duty shall not be avoided by any act or omission on the part of the ENGINEER or the INSPECTOR. If the CONTRACTOR fails to replace any defective or damaged Work or material after reasonable notice, the ENGINEER may withhold progress payment for the Work or material, reserve the right to notify the CONTRACTOR'S Bond and Insurance

Companies, and/or may cause such Work or materials to be replaced. The replacement shall be deducted from the amount to be paid to the CONTRACTOR, otherwise the CONTRACTOR shall pay the CITY if there remains insufficient or no amount to be paid by the CITY to the CONTRACTOR.

E. The INSPECTOR shall have the right, at all times and places, to reject any articles or materials to be furnished hereunder which, in any respect, fail to meet the requirements of these specifications, regardless of whether the defect in such articles or materials are detected at the point of manufacture or after completion of the Work at the site. If the ENGINEER or the INSPECTOR, through an oversight or otherwise, has not rejected materials or work which is defective or which is contrary to the specifications, such material, no matter in what stage or condition of manufacture, delivery, or erection, may be rejected by the INSPECTOR upon discovery. The CONTRACTOR shall promptly remove rejected articles or materials from the site of the Work after notification of rejection. All costs of removal and replacement of rejected articles or materials as specified herein shall be borne by the CONTRACTOR.

F. At the completion of Work, after completion of all corrections, a final inspection will be made by the INSPECTOR, the ENGINEER, and the CONTRACTOR, as applicable. The INSPECTOR will provide a Final Inspection Correction List itemizing all work necessary to complete the Project satisfactorily.

G. When the correction work is found to be in compliance with the Contract Documents, the construction Work will be considered complete and the Contract time will stop. The CONTRACTOR shall proceed with the maintenance work if required by the Contract. If the correction work is found to be non-compliant with the Contract Documents, the Contract time shall be continued to be assessed until the correction is satisfactorily made and accepted by the CITY.

(END OF SECTION)

SECTION 01453
SAMPLING, TESTING AND FABRICATION INSPECTION

1.1 THE REQUIREMENT

A. General

1. All materials and fabricated articles furnished by the CONTRACTOR shall be subject to inspection and testing and no materials or fabricated articles shall be incorporated into the Work until they have been inspected and accepted by the INSPECTOR. The CONTRACTOR shall ensure that all items requiring shop inspection are inspected at their source by the INSPECTOR or by an independent inspection or testing laboratory (IITL) that has been approved by the INSPECTOR.

2. Fabrication shall be subject to inspection by the INSPECTOR, to ensure strict compliance with the requirements of the Contract Documents. Such inspection shall include mill, plant, shop or field inspection, as required. The INSPECTOR shall be permitted access to all parts of the Work, including plants where materials or equipment are manufactured or fabricated. When a third party INSPECTOR is approved, monthly meetings may be scheduled with the INSPECTOR at the manufacturing facility to review the progress of the Work and the inspection activities. The INSPECTOR will determine the number of trips based on the manufacturing schedule for the material or fabricated article(s). The CONTRACTOR shall include in the Bid all costs associated with these inspections, except for the costs for CITY personnel as set forth herein which shall be reimbursed under the Bid Item ALLOWANCE FOR CITY INSPECTION, if provided in the SCHEDULE OF WORK AND PRICES.

3. All fabricated items shall be fabricated from Shop Drawings, which have been submitted to the ENGINEER and approved in accordance with SUBMITTALS of the GENERAL REQUIREMENTS. Shop inspection shall be provided on all materials and/or equipment so designated on the CONTRACTOR'S approved Shop Drawings or Contract Documents. The CONTRACTOR shall provide approved Shop Drawings and the corresponding Contract Specification to the INSPECTOR or IITL for use in the inspection and testing of the items to be fabricated.

4. Any item requiring inspection that is delivered to the job site without having been inspected and approved by the Bureau of Contract Administration or an approved third party inspection agency will be rejected by the Project Inspector. The BCA Materials Control Group will not perform any inspection at the job site. It is the Prime CONTRACTOR'S responsibility to ensure that all items requiring shop inspection are inspected at their source by the BCA Materials Control Group, or by an inspection or testing laboratory that has been approved by the BCA Materials Control Group. The City shall be held harmless for any delays resulting from the CONTRACTOR'S or fabricator's failure to obtain the required inspections.

5. Prior to any fabrication, there shall be a Prefabrication Meeting either at the fabricator's location or via telephonic conference. A representative of

the CITY and the IITL, if retained, the Prime CONTRACTOR, the fabricator's plant superintendent and the fabricator's quality control person, shall be present at the Prefabrication Meeting. The items to be discussed are the required inspections, tests and reports, based on the approved Shop Drawings and the corresponding Contract Specifications. The IITL shall take minutes of the pre-fabrication meeting and distribute the same to the individuals in attendance. The IITL shall submit an inspection plan to the INSPECTOR for approval two (2) weeks prior to the Prefabrication Meeting. The CONTRACTOR is directed to notify the INSPECTOR and the ENGINEER three (3) weeks in advance of the date and time of the Prefabrication Meeting. The CONTRACTOR shall include in the Bid all costs associated with these meetings except for the costs for CITY personnel as set forth herein which shall be reimbursed under the Bid Item ALLOWANCE FOR CITY INSPECTION, if provided in the SCHEDULE OF WORK AND PRICES.

6. If a Bid Item ALLOWANCE FOR CITY INSPECTION has been included in the SCHEDULE OF WORK AND PRICES in the Bid Proposal, this allowance shall only be used to reimburse the CONTRACTOR for the cost of CITY inspection and travel requirements, as set forth herein, and shall not be used for any portion of the costs of the CONTRACTOR'S independent third party INSPECTOR or inspection laboratory. Reimbursement of approved expenses shall be made on the basis of original invoices and are not subject to markup for overhead and profit. If at the end of the Project, the total costs differ from the amount set forth in the SCHEDULE OF WORK AND PRICES, the Contract Price shall be adjusted by a Change Order for the difference between the total actual costs and the amount included in the Bid, as an additional amount due the CONTRACTOR or a credit to the CITY, as appropriate.

7. The CONTRACTOR shall coordinate all sampling, testing and fabrication inspections with the INSPECTOR and is responsible for maintaining the inspection schedules. Subject to the terms contained herein, costs for CITY personnel travel will be paid from the Bid item ALLOWANCE FOR CITY INSPECTION. In the event that the scheduled inspection is postponed or delayed by the CONTRACTOR, through no fault of the CITY, and CITY personnel are required to extend their travel duration resulting in additional travel costs, these increased costs, including per diem travel allowances, shall be borne by the CONTRACTOR and are not eligible for payment from the Bid item ALLOWANCE FOR CITY INSPECTION.

8. In addition to the approval of the Bureau of Contract Administration, approval may be required from the Department of Building and Safety, Materials Control Section, for certification of both the manufacturer of structural items/materials and/or the testing laboratory/inspection company. For certification information, contact:

Senior Building Inspector
Materials Control section
Dept. of Building and Safety
Telephone: (213) 482-0388

B. Samples And Test Specimens

1. Samples and test specimens required under these Specifications shall be furnished, prepared for testing, and delivered, at no cost to the CITY, in ample time for the completion of the necessary tests and analysis before said article or materials are to be used. The time and location of the delivery shall be designated by the INSPECTOR.

2. In addition to any other inspection or quality assurance provisions that may be specified, the ENGINEER or the INSPECTOR shall have the right to independently select, test, and analyze, at the expense of the CITY, additional test specimens of any or all of the materials to be used. Whenever any portion of the Work fails to meet the requirements of the Specifications, as shown by the results of independent testing or investigation, all costs of such independent inspection and investigation, and all costs of removal, correction, and reconstruction or repair of any such Work, shall be borne solely by the CONTRACTOR.

3. The INSPECTOR may allow the manufacturer, fabricator, supplier, or Subcontractor to provide the results of tests from samples taken at the mill, factory, or warehouse. The INSPECTOR will accept the test reports provided that the following conditions are met:

   a. The Testing Agency was approved by the INSPECTOR prior to performing the tests, and that all necessary certifications were valid at the time the tests were performed.

   b. The tests were performed in conformity with the Specifications for the specified materials or items.

   c. The reports are made in the form of an affidavit specified hereinafter.

4. Whenever the approved independent testing laboratory or INSPECTOR takes samples of materials other than at the site, the deliveries to the site of materials represented by such samples shall be identified as specified for the specific material. The results of such tests shall be reported to the INSPECTOR in the form of affidavits attested to by the testing agency. Such affidavits shall furnish the following information with respect to the material sampled:

   a. Manufacturer's name and brand.

   b. Place of sampling.

   c. Sufficient information to identify the lot, group, bin, or silo from which the samples were taken.

   d. Amount of material in the lot sampled.

e. Statement that the material has passed the requirements.

f. Notarized signature and title of the person making the affidavit and the date of execution of the affidavit.

C. Shop Inspection And Testing

1. Shop Inspection and/or Material Sampling and Testing are the sole jurisdiction and responsibility of the Inspector of Public Works through the Bureau of Contract Administration's Materials Control Group. Shop Inspection and/or Material Sampling and Testing cannot be approved, waived, or otherwise altered by any other City Department, Bureau, Division, or individual. Shop Inspection required by this section is in addition to any inspections required by applicable building codes.

2. The CONTRACTOR is responsible for coordinating shop inspection with the INSPECTOR. The CONTRACTOR is to estimate the time required for Shop testing of the fabricated article(s) or equipment, and so inform the INSPECTOR. The Contractor is responsible for contacting the Bureau of Contract Administration, Materials Control Group, regarding scheduling for all Shop Inspection and/or Material Sampling and Testing. Please contact the Materials Control Supervisor at (213) 847-2442.

3. A final inspection by the INSPECTOR may be required prior to shipment. No fabricator or CONTRACTOR shall deliver fabricated materials to the project site without the approval of the BCA Materials Control Group.

4. Where the CONTRACTOR is specifically required by the Technical Specifications to demonstrate performance of major equipment prior to delivery, a testing procedure must be developed by the manufacturer and approved by the ENGINEER prior to scheduling the shop performance testing. Both the INSPECTOR and the ENGINEER are required to witness the performance testing. The ENGINEER will evaluate performance-testing data and notify the INSPECTOR whether the equipment meets the performance requirements of the Contract. The INSPECTOR will be responsible for releasing the equipment for delivery to the Jobsite. This procedure will also apply to field performance testing required as a condition precedent to acceptance of the equipment as described under the PARTIAL ACCEPTANCE and FINAL ACCEPTANCE provision of the Contract.

5. Inspection at Locations Within Thirty (30) Miles from CITY

a. When the CONTRACTOR intends to purchase materials, fabricated products, or manufactured equipment from sources located within thirty (30) miles (48 km) of the geographical limits of the CITY, the CONTRACTOR shall notify the INSPECTOR at least 24 hours prior to the scheduled date of tests at all stages of manufacture to allow for arrangements specified herein.

b. Except as otherwise provided in these Specifications, performance of the required sampling and tests will be under the direction of the INSPECTOR, from samples provided by the

CONTRACTOR, and the cost of performing the test(s) will be borne by the CITY, except for the costs of any retests which show unsatisfactory results which shall be borne by the CONTRACTOR.

6. Inspection at Locations More Than Thirty (30) Miles From the CITY

a. When the CONTRACTOR intends to purchase materials, fabricated products, or equipment from sources located more than thirty (30) miles (48 km) outside the geographical limits of the CITY, an IITL approved by the INSPECTOR, shall be engaged by the CONTRACTOR, at the CONTRACTOR'S sole expense, to inspect the materials, equipment and/or process, unless the City elects to perform the inspection with BCA Materials Control Personnel,. Approval of the IITL shall be obtained from the BCA Materials Control Group before producing any material or equipment. The IITL shall judge the materials and fabricated articles by the requirements of the Plans and Specifications and approved submittals. The IITL shall be accountable to the BCA Materials Control Group and shall provide written records of all inspections performed to the Group in a format approved by that Group. No equipment or material shall be shipped nor shall any processing, fabrication and/or treatment of such equipment or materials be done without the required inspection and approval by IITL. Approval by IITL shall not relieve the CONTRACTOR of its responsibility to comply with the Contract requirements. The City retains the right to perform inspection or testing at any remote site with City personnel. If the City exercises this right, the contractor will be required to pay for all costs associated with this inspection and testing, except the Inspectors' wages, unless reimbursement is provided under the bid item ALLOWANCE FOR CITY INSPECTION as listed in the SCHEDULE OF WORK AND PRICES.

b. The CITY retains the right to perform inspection or testing at such remote sites with CITY personnel in lieu of a third party inspector. In the event the CITY exercises this right, the CONTRACTOR shall administer travel arrangements as specified herein Paragraph C.10, CITY PERSONNEL TRAVEL REQUIREMENTS.

7. Inspection Outside Continental United States

a. Requirements and procedures for inspection and testing of materials, fabrication of products and equipment from sources outside the continental United States shall be the same (including the requirement for an accredited inspection agency and/or testing laboratory pre-qualified by the CITY Department of Building and Safety and approved by the INSPECTOR) as provided in the Paragraph C.7 SHOP INSPECTION & TESTING of this Section. In addition to the requirements of Paragraph C.10, City Personnel Travel Requirements, of this Section, the CONTRACTOR shall provide the following, the cost of which shall be reimbursed out of the ALLOWANCE FOR CITY

INSPECTION item, if provided in the SCHEDULE OF WORK AND PRICES.

(1) A minimum of five (5) calendar days hotel accommodation shall be required for each shop inspection visit made by the INSPECTOR.

(2) A minimum advance notice of ten (10) working days shall be required for all hold points (mandatory) inspection.

(3) The approximate rates for allowances given as a guideline in Paragraph C.10, City Personnel Travel Requirements, of this Section, shall be adjusted to match the rates in the foreign locality for similar types of facilities and amenities.

8. Third Party Inspection Requirements

a. The proposed third party inspection and/or testing company must gain approval by the INSPECTOR after award. This approval shall be obtained before producing any material or manufacturing any product or equipment. The approved inspection and/or testing agency shall not sublet or assign its work to any other agency.

b. The approved third party inspection and/or testing agency shall take direction from, and be responsible to, the INSPECTOR.

c. The CONTRACTOR shall also comply with requirements regarding the Prefabrication Meeting as contained herein.

d. The Work and activities of the third party inspection and/or testing agency shall be monitored by the INSPECTOR during monthly meetings to ensure compliance with the Contract Documents.

9. Third Party Testing and Inspection Laboratory Approval Procedures

a. The INSPECTOR will approve third party inspection and/or testing agencies/laboratories. The City of Los Angeles has a contract only with the Prime CONTRACTOR. The City of Los Angeles has no Third Party agreement with any subcontractor, plant, manufacturer, or fabricator. All are considered employees of the Prime CONTRACTOR and the Prime CONTRACTOR shall be responsible for their work. The Supervisor of the Materials Control Group of the Bureau of Contract Administration acts on behalf of the INSPECTOR of Public Works Therefore, all requests for the approval of a third party inspection or testing company shall be from the Prime CONTRACTOR, typewritten on the Prime CONTRACTOR'S letterhead, addressed to the Supervisor of the BCA Materials Control Group (213) 847-2442 as follows:

Bureau of Contract Administration
General Services Division
Materials Control Group
1149 S. Broadway, Suite 300
Los Angeles, CA 90015

One (1) duplicate copy of the request shall be sent to the ENGINEER.

b. The letter requesting approval of a third party test lab or private inspection company shall contain all of the following information:

PROJECT DATA

(1) Complete title of the project.
(2) The project work order number.
(3) The approved submittal number(s) and a brief description of the item(s) to be inspected tested with their Specification Division and Section number.

PROPOSED INSPECTION

(1) Names of two (2) proposed testing laboratories or inspection companies.
(2) Addresses and telephone numbers of the proposed test labs/inspection companies.
(3) Contact person at the proposed test labs/ inspection companies.
(4) Description and history of the proposed test laboratories/inspection companies.
(5) Resumes of at least two (2) or more inspectors (primary and alternate) who will perform the physical inspections.
(6) Samples of all inspection reporting documents utilized by the provider and a written description of the reporting methodology.

FABRICATOR DATA

(1) Company name, address, and telephone number of the actual production site for each fabricator.
(2) Contact person at each fabricator.
(3) Fabrication schedule.

c. The INSPECTOR will notify the CONTRACTOR by letter if the testing laboratory/inspection agency has been approved.

d. The Materials Control Group may order modifications of the inspection reporting procedure utilized by the provider prior to approval.

10. CITY Personnel Travel Requirements

a. The CONTRACTOR shall administer the travel and furnish the following services for CITY personnel who are attending Prefabrication Meetings and performing inspection services.

(1) Purchase airline tickets (Coach Class only).

(2) Make hotel reservations and prepay for the planned number of nights. (Three Star or American Automobile Association (AAA) Three Star approved.)

(3) Make rental car reservations and prepay for the planned number of days if the manufacturer's or fabricator's facility is greater than one (1) mile from the departing and arrival airport or hotel.

(4) The estimated per diem travel allowance will be at least fifty U.S. dollars ($50.00) per day for meals, en route expenses, and other miscellaneous expenses. CITY personnel will submit an expense statement to the CITY for approval of actual expenses incurred.

(5) For CITY paid advances, the CONTRACTOR shall reimburse the CITY for these actual expenses by deductive Change Order to be deducted from the Bid item, ALLOWANCE FOR CITY INSPECTION.

(6) When requested by the ENGINEER or the INSPECTOR, the CONTRACTOR shall provide an advance check, for the estimated costs of all travel allowance costs, to the ENGINEER or the INSPECTOR, no later than forty eight (48) hours prior to the departure time. Failure to provide all accommodations described herein in such a manner to adequately facilitate the travel activity will cause the inspection visit to be canceled, and any costs or delays owing to such rescheduling shall be borne by the contractor.

b. As the basis for cost reimbursement under SCHEDULE OF WORK AND PRICES of the Bid Proposal, the CONTRACTOR shall submit receipts or invoices for payment to the ENGINEER with a cover letter referencing the following:

(1) INSPECTOR’S or ENGINEER’S name.

(2) Project title.

(3) Project Work Order Number.

(4) CONTRACTOR'S:

(a) Name

(b) Address

(c) Telephone Number.

(d) CONTRACTOR'S contact person and telephone number(s)

(5) Reference Technical Specification and submittal number.

(6) Purpose of inspection.

(7) Address and location of inspection:

(8) Country

(9) State

(10) City.

(11) Date(s) of inspection.

(12) Description of items enclosed as set forth herein

11. Shop Inspected Equipment/Materials:

a. Without waiving any specific requirement of the Contract Documents, the following items of equipment and/or material are examples of, but not limited to those items that are subject to shop inspection as noted herein below.

Equipment/ Materials	**Spec. Sect.**	**Insp. Req'd**	**Product Identification**	**See Notes**
Aluminum Fabrication	05500	YES	Inspector Witness – Yellow Tag	G.N.1
Anodizing	09800	YES	Yellow Tag	G.N.18
Base Material	02310	NO	Standards Div. Approves Source	
Castings	05500	YES	Stamped **"LA City Approved"**	G.N.4
Coatings	Div. 9/05500	YES	Insp. Witness & meas. thickness	G.N.18
Concrete	03300	YES	Batch Plant Insp. Report # 1101	G.N.8

Equipment/ Materials	Spec. Sect.	Insp. Req'd	Product Identification	See Notes
Concrete – mix Designs	03300	YES	Batch Plant Insp. Report # 1101	G.N.8
Concrete – Precast	03400	YES	Stamped **"LA City Approved"**	G.N.9
Concrete – Prestressed	03400	YES	Yellow Tag or Stamped	G.N.9
Concrete Vaults	02585	YES	Stamped "**LA City Approved**"	G.N.11
Catch Basins	02545	YES	Yellow tag for bulb Angle & Grating	G.N.11
Electrical - Controls	17400	YES		G.N.24
Electrical Motors	16490	YES	Yellow Tag	G.N.20
Electrical Units	Div 16	YES	Yellow Tag	G.N.25
Electrical Wiring	16160	YES	Inspector Witness	G.N.24
Frames – Metal	05500	YES	Yellow Tag	G.N.6
Forgings	Div. 5	YES	Stamped **"LA City Approved"**	G.N.4
Galvanizing	Div. 5	YES	Inspector Witness – Yellow Tag	G.N.18
Gaskets	07900	YES	Yellow Tag	G.N.11
Linings – Pipe	09800	YES	Inspector Witness – Yellow Tag	G.N.18
Motors	16490	YES	Yellow Tag	G.N.20
M.H. – Frames/Covers Cast Iron	02585	YES	Stamped "LA" on Cover & Frame	G.N.4
M.H. – Frames/Covers Steel	02585	YES	Stamped "LA" on Inner-Cover only	G.N.4
M.H. –Precast w/Epoxy Coating	02585	YES	Stamped "LA" or Yellow Tag	
Electrical Panels	16330	YES	Yellow Tag	G.N.22
Electrical Transformers	16320	YES	Yellow Tag	G.N.22
M.H. –Shafts/Grade Rings	02585	YES	Stamped "LA" or Yellow Tag	G.N.11
Mechanical Equipment	Div. 15	YES	Yellow Tag	G.N.20
Misc. Metal Fabrication	05500	YES	Yellow Tag	G.N.1

Equipment/ Materials	Spec. Sect.	Insp. Req'd	Product Identification	See Notes
Pipe – Reinf. Concrete	2550	YES	**LA City Approved** stamp w/ a 3-digit # if approved and a 5-digit # if not approved	G.N.11
Pipe - Steel	Div 15	YES	Yellow Tag	G.N.15
Pipe Welding	15610	YES		G.N.15
Plastic Liner Plate	09800	YES		G.N.29 (a)
Pullbox – Street Light & Traffic Signal.		YES	Stamped "LA City Approved" on the inside of the box	
PVC Liner	09800	YES		G.N.29 (a)
Rebar	03200	YES	Yellow Tag	G.N.3
Sandblasted Steel Items	Div. 5	YES		
Slide Gates	11815	YES	Yellow Tag	G.N.21
Steel – Stainless	05500	YES		G.N.1
Tree Well – Cast Iron		YES	Stamped **"LA"** or Yellow Tag	
Tree Well – Architectural		YES	Stamped **"LA"** or Yellow Tag	
Tree Well – Per Std. Plans		NO		
Vessels	Div. 13	YES	Yellow Tag	G.N.7
Vaults	02585	YES	Stamped **"LA"** or Yellow Tag	G.N.11
Valves	Div. 15	YES	Yellow Tag	G.N.20
Welding	Div. 5	YES	Inspector Witness – Yellow Tag	G.N.1

NOTES:

1. Fabrication of ferrous materials, which may include welding, high strength bolting or non-destructive testing shall be shop inspected.

2. Bolting with ASTM A-325 bolts, ASTM A-490 bolts or other alternate fasteners shall require shop inspection. Bolting with ASTM A-307 bolts does not require shop inspection.

3. Reinforcing steel is normally sampled at the Jobsite, but for expediency, the sampling will be performed at the point of fabrication by the CITY'S Standards Division.

4. All forging and castings made at the foundry shall be shop inspected, approved and stamped prior to delivery to the Jobsite.

5. Steel stairways and handrails (ferrous) require shop inspection for welding and specified coatings.

6. Metal door and frame fabrication requires shop inspection.

7. Pressure vessels, tanks, boilers and related equipment do require inspection of fabrication, welding, and testing.

8. Concrete, asphalt concrete and mix designs are inspected at the batch plant. These products are shop inspected for conformance to Specifications and verification by the INSPECTOR.

9. Both pre-cast and pre-stressed concrete are subject to shop inspection and approval before delivery to the Jobsite.

10. Street lighting standards of either steel, aluminum or concrete are required to be shop inspected.

11. Reinforced concrete vaults catch basins, and reinforced pipe are required to be shop inspected. (See Note 9.) Maintenance hole shafts and grade rings without reinforcement or linings do not require shop inspection. Gaskets used for reinforced concrete pipe require testing.

12. FGRC and FGRG (Fiberglass Reinforced Concrete and Fiberglass Reinforced Gypsum) should be manufactured in an approved shop and be shop inspected.

13. Mortar, grout and gypsum shall be inspected at the batch plant, unless the products are mixed at the Jobsite from approved packages under the inspection of the INSPECTOR.

14. Concrete Masonry Units (CMU) shall be inspected and sampled at the Jobsite.

15. Lining and coating of ductile iron pipe and fiberglass pipe, as well as welded supports, are subject to shop inspection. Vitrified Clay Pipe (VCP) is exempt, as are non-welded pipe supports which can be classified as standard or catalog items. The CITY'S Standards Division will provide the inspection and testing for VCP.

16. Shop inspection is not required for lumber, unless it is treated lumber. Glue-laminated products do not require shop inspection. Each "Glue Lam" shall come with an individual Certificate of Compliance.

17. Millwork and wood products are not required to be shop inspected, unless the Specifications call for equivalency or inspection by the Woodworking Institute of California (W.I.C.).

18. Specified coatings including, but not limited to, anodizing, bitumen, epoxy, galvanizing, polyvinylidene fluoride, and pipe linings and coatings shall be shop inspected.

19. Conveying equipment, such as elevators, escalators, or conveyors are exempt from shop inspection. However, the structural framework of the escalators, hoists, cranes and lifts do require inspection.
20. Mechanical equipment, such as compressors, pumps, motors and valves, require shop inspection for fabrication, tests of windings, and any specified coating. Pumps, valves and motors may be exempt if they are standard or catalog items.

21. Fabrications of sluice gates and slide gates are subject to shop inspection for fabrication, welding and coating.

22. Transformers rated at 600 volts and higher, transformers rated at 100 KVA and higher, generators, switchgear motor drives and complex wired panel boards require shop inspection.

23. Lighting fixtures and lamps are considered standard or catalog items and are exempt from shop inspection.

24. Electrical wiring and testing, performed in the shop, requires inspection to verify conformance with applicable Specifications.

25. Shop tests specified in the Specifications including, but not limited to, voltage, grounding, loads, performance, installation, temperature, or noise levels will require shop inspection.

26. HVAC (heating, ventilation and air conditioning) are subject to shop inspection for fabrication and welding. Each component will be evaluated for possible inspection.

27. Sheet metal ductwork is not shop inspected. Flexible ductwork is considered a standard or catalog item and no shop inspection is required. Ductwork made of aluminum, stainless steel, or fiberglass will require shop inspection.

28. Storefronts and wall systems are shop inspected. Fixed windows are standard items and have no need of inspection.

29. Plastic pipe, such as ABS or PVC does not require shop inspection. The pipe will be inspected and sampled for testing at the Jobsite. (a) Extruded plastic liner plate and PVC Liner will require shop inspection.

30. Fiberglass products, because of the resins and the fiber reinforcement, do require shop inspection.

31. Elastomeric bearing pads shall be tested according to Caltrans Standard Specification Section 51-1.12H. Sampling will be done by the INSPECTOR.

(END OF SECTION)

SECTION 01454
WEIGHING AND METERING EQUIPMENT

1.1 THE REQUIREMENT

A. It is the CONTRACTOR'S responsibility to ensure that all scales and metering equipment used for proportioning materials shall be inspected for accuracy and certified within the past twelve (12) months by the State of California Bureau of Weights and Measures, by the County Director or Sealer of Weights and Measures, or by a scale mechanic registered with or licensed by the County.

B. The accuracy of the work of a scale service agency, except as stated herein, shall meet the standards of the California Business and Professions Code and the California Code of Regulations pertaining to weighing devices. A certificate of compliance shall be presented, prior to operation, to the ENGINEER for approval and shall be renewed whenever required by the ENGINEER at no cost to the CITY.

C. All scales shall be arranged so they may be read easily from the operator's platform or area. They shall indicate the true net weight without the application of any factor. The figures of the scales shall be clearly legible. Scales shall be accurate to within one percent (1%) when tested with the plant shut down. Weighing equipment shall be so insulated against vibration or moving of other operating equipment in the plant area that the error in weighing with the entire plant running will not exceed two percent (2%) for any setting nor one-and-one-half percent (1.5%) for any batch.

(END OF SECTION)

SECTION 01455
CALIBRATION OF TESTING EQUIPMENT

1.1 THE REQUIREMENT

A. It is the CONTRACTOR'S responsibility to ensure that testing equipment such as, but not limited to, pressure gages, metering devices, hydraulic systems, force (load) measuring instruments, and strain-measuring devices shall be calibrated by a testing agency acceptable to the ENGINEER at intervals not to exceed twelve (12) months and following repairs, modification, or relocation of the equipment. Calibration certificates shall be provided when requested by the ENGINEER.

(END OF SECTION)

SECTION 01561
ENVIRONMENTAL CONTROL

1.1 THE REQUIREMENT

A. Explosives for Blasting

1. The use of explosives for blasting purposes on the work shall not be permitted.

B. Fugitive Dust and Smoke Control

1. The CONTRACTOR shall furnish all labor, equipment, and means required and shall carry out effective measures wherever and as often as necessary to prevent its operation from producing dust in amounts damaging to property, cultivated vegetation, or domestic animals, or causing a nuisance as defined by the ENGINEER. The CONTRACTOR shall be responsible for any damage resulting from any dust originating from its operations. The dust abatement measures shall be continued until the CONTRACTOR is relieved of further responsibility by the ENGINEER. No separate payment shall be allowed for dust abatement measures and all costs thereof shall be included in the CONTRACTOR's Bid. The use of water resulting in mud on streets, sidewalks, driveways, shall not be permitted as a substitute for sweeping or other methods of dust control.

2. The CONTRACTOR shall not discharge smoke, dust, or any other air contaminants into the atmosphere in such quantity as will violate the regulations of any legally constituted authority.

3. The CONTRACTOR shall comply with the requirements of Title 8, California Code of Regulations, concerning handling of asbestos dust.

C. Rubbish Control

1. Through all phases of construction, including suspension of Work and until final acceptance of the Project, the CONTRACTOR shall keep the Worksite and other areas used by it in a neat and clean condition, and free from any accumulation of rubbish and debris. The CONTRACTOR shall dispose of all rubbish and waste materials of any nature occurring at the Worksite and shall establish regular intervals of collection and disposal of such materials and waste. The CONTRACTOR shall also keep its haul roads free from dirt, rubbish, and unnecessary obstructions resulting from its operations. Care shall be taken to prevent spillage on haul routes. Any such spillage shall be removed immediately and the area cleaned by the CONTRACTOR. Equipment and material storage shall be confined to areas approved by the ENGINEER. Disposal of all rubbish and surplus materials shall be off the site of construction, at the CONTRACTOR's expense, all in accordance with local codes and ordinances governing locations and methods of disposal, and in conformance with all applicable safety laws, and the requirements of the OSHA Safety and Health Standards for Construction. All cleanup cost shall be included in the CONTRACTOR's Bid.

D. Sanitation

1. Fixed or portable chemical toilets shall be provided for the use of the CONTRACTOR's employees. These accommodations shall be maintained in a neat and sanitary condition. Toilets at construction sites shall conform to the requirements of Title 8, California Code of Regulations.

2. Wastewater conveyance and disposal shall not be interrupted. Should the CONTRACTOR disrupt existing sewer facilities, sewage shall be conveyed in closed conduits and disposed of in a sanitary sewer system. Sewage shall not be permitted to flow in trenches or be covered by backfill.

3. The CONTRACTOR shall establish a regular schedule for collection of all sanitary and organic waste. All wastes and refuse from sanitary facilities provided by the CONTRACTOR or organic material wastes from any other source related to the CONTRACTOR's operations shall be disposed of away from the site in a manner satisfactory to the INSPECTOR and in accordance with all laws and regulations pertaining thereto. Disposal of all such wastes shall be at the CONTRACTOR's expense.

E. Chemicals

1. The following paragraph does not relieve the CONTRACTOR from its responsibility for obtaining prior approval from the ENGINEER for chemical usage when otherwise required.

2. The CONTRACTOR shall provide four (4) copies of the MSDS to the INSPECTOR for all chemicals used during project construction or furnished for project operation, prior to bringing them on site, whether defoliant, soil sterilant, herbicide, pesticide, disinfectant, polymer, reactant, or of other classification, which shall show approval of either the U.S. Environmental Protection Agency or the U.S. Department of Agriculture. Use of all such chemicals and disposal of residues shall be in strict accordance with the printed instructions of the manufacturer and with all other applicable laws and regulations.

F. Lead paint notification

1. The CONTRACTOR is hereby notified that the facility under this Contract may contain Lead (Pb), Chromium (Cr) and Molybdenum (Mo).

2. If any paints containing Lead or Chromium are to be physically disturbed or made airborne during the progress of the Work by activities such as abrasive blasting, welding, cutting or torch burning, the CONTRACTOR shall provide appropriate worker protection in accordance with OSHA Lead in Construction Standard and in any other applicable regulations.

3. All paint which is removed or disturbed during the progress of the Work or any demolition debris which contains these paints, either of which contains in excess of 5 ppm (mg/l) Lead or Hexavalent Chromium when tested in accordance with the Waste Extraction Test (WET) method of the California Code of Regulations, Title 22, shall be disposed of as

hazardous waste. The CONTRACTOR shall be responsible for such disposal in accordance with all applicable laws and regulations.

G. Hazardous Waste

1. Hazardous waste generated by the CONTRACTOR at the site shall be disposed of in accordance with NOTIFICATION OF HAZARDOUS SUBSTANCES of the General Conditions.

H. Odor Control

1. The CONTRACTOR shall furnish all labor, materials, and equipment required and shall carry out effective measures whenever and as often as necessary to prevent the discharge of a nuisance odor from its operation into the atmosphere in such quantity as will violate the regulations of any legally constituted authority. During construction, the CONTRACTOR shall notify the ENGINEER and the INSPECTOR at least forty-eight (48) hours in advance when potential odor-causing activities are scheduled for construction.

I. Drainage Control

1. The CONTRACTOR shall maintain drainage within and through the Work areas. Earth dams will not be permitted in paved areas. Temporary dams of sandbags, asphaltic concrete, or other acceptable material will be permitted when necessary. Such dams shall be removed from the site as soon as their use is no longer necessary.

J. Graffiti Control

1. Throughout all phases of Work, including suspension of work, and until final acceptance, the CONTRACTOR shall keep all equipment, field offices, storage facilities and other facilities free of graffiti. Graffiti shall be painted over, masked or cleaned off within twenty-four (24) hours after notification by the INSPECTOR.

K. Vermin Control

1. At the time of acceptance, structures entirely constructed under the Contract shall be free of rodents, insects, vermin, and pests. Necessary extermination work shall be arranged and paid for by the CONTRACTOR as part of the work within the contract time, and shall be performed by a licensed exterminator in accordance with requirements of governing authorities. The CONTRACTOR shall be liable for injury to persons or property and responsible for the elimination of offensive odors resulting from extermination operations.

(END OF SECTION)

SECTION 01562
ENVIRONMENTAL MITIGATION OR CONDITIONS

1.1 THE REQUIREMENT

A. The CONTRACTOR shall mitigate the adverse environmental impacts associated with the Work of the Contract. The CONTRACTOR shall indemnify and hold harmless the CITY from any and all fines, penalties or damages incurred by the CITY for violation of any environmental mitigation measures or permit caused by the CONTRACTOR's failure to comply with environmental Mitigation Measures (MM) and/or Best Management Practices (BMPs) of this Article. The measures that the CONTRACTOR shall take to mitigate environmental impacts include, but are not limited to the following:

1. Implement a Fugitive Dust and Erosion Control Plan (FDECP) that meets or exceeds SCAQMD requirements and the CITY'S FDECP for this site.

2. Comply with the General Construction Activity Storm Water Permit and the Storm Water Pollution Prevention Plan for this site.

3. Comply with the requirements of NOTIFICATION OF HAZARDOUS SUBSTANCES of the General Conditions.

4. Comply with all MM and BMPs contained in the Initial Study/Mitigated Negative Declaration (IS/MND). Note specific requirements for Valley Village Park are section NOI-2 of the MMRP.

5. Protect sensitive habitats and species through the use of fencing, to prohibit construction personnel access to adjacent habitat areas, and with dust control measures of the FDECP.

6. Comply with the following emission control measures to minimize construction activity emissions, at no additional cost to the CITY:

   a. Stop construction activities during Stage II smog alerts which will be announced to the CONTRACTOR by the ENGINEER;

   b. Reduce construction equipment emissions by shutting off all equipment not in actual use;

   c. Reduce construction-related traffic congestion;

   d. Provide rideshare incentives for construction personnel;

   e. Tune and maintain construction equipment properly;

   f. Use low-sulfur/low nitrogen fuel for construction equipment, if available;

   g. Provide transit incentives for construction personnel;

   h. Configure construction parking to minimize traffic interference;

   i. Minimize obstruction of through-traffic lanes;

j. Provide a flagperson to facilitate traffic flow and prevent traffic congestion;

k. Schedule operations affecting roadways for off-peak traffic hours.

l. The Contractor shall notify the LABOE Project Inspector and Construction Manager twenty-one (21) calendar days in advance of any vegetation disturbance or ground-disturbing activities during the avian season, February 1st to September 1st.

7. Comply with the Mitigation Monitoring Program (see Section 5 of "Draft Final Mitigated Negative Declaration Stormwater Capture Parks Program.") Mitigation measures and best management practices include, but are not limited to, the following:

a. AQ-1:

(1) The program shall use off-road diesel-powered construction equipment that meets or exceeds the CARB and USEPA Tier 4 off road emissions standards for equipment rated at 50 horsepower or greater and not identified under (2) or (3) below. Such equipment will be outfitted with Best Available Control Technology (BACT) devices, including CARB-certified Level 3 Diesel Particulate Filter or equivalent. These requirements shall be included in applicable bid documents and successful contractor(s) must demonstrate the ability to supply each equipment.

(2) All dumpers/tenders, used on site shall either be certified Tier 3 with a CARB-certified Level 3 Diesel Particulate Filter or equivalent; certified Tier 4 with a CARB-certified Level 3 Diesel Particulate Filter or equivalent or equivalent, or alternatively fueled (e.g., gasoline, electric, CNG).

(3) At the minimum, the following equipment shall be electric: air compressors, cement and mortar mixers, concrete saws, forklifts, pumps. Diesel generators shall be placed with electricity from the grid either permanent or temporary, or replaced with alternative (non-diesel) fuels.

(4) Equipment requirements identified under (1), (2), and (3) above all be included in applicable bid documents and successful contractor(s) must demonstrate the ability to supply such equipment. A copy of each unit's certified tier specification or model year specification and CARB or SCAQMD operating permit (if applicable) shall be available upon request at time of mobilization of each applicable unit of equipment.

(5) During the site clearing and preparation, grading and excavation, and soil filling, revegetation, and park

improvement phases, watering must be conducted a minimum of 4 times per day during dry weather.

(6) The fleet shall be composed of a mix of 2014 or newer trucks. The contractor shall provide documentation as specified by LABOE Project Inspector and/or Construction Manager specifying the year/make/model of the trucks. The city shall ensure that on-road haul trucks including delivery and those conveying excavated material do not exceed the following daily truck limits:

The daily truck limit for this project shall not exceed 27 trucks per day.

(a) If the procurement of 2014 or newer trucks is unfeasible, the contractor shall provide a statement specifying why it is unfeasible. If the procurement of 2014 or newer trucks is unfeasible, the contractor may use older trucks, but the daily truck limits are the following:

The daily truck limit for this project shall not exceed 20 trucks per day.

b. BIO-1: Special-Status Wildlife Species. Construction activities at any of the nine project sites could result in impacts to the Cooper's Hawk (*Accipiter cooperii*), a California Species of Special Concern, where mature trees are present. Similarly, construction activities may also impact other nesting bird species that may nest in a variety of vegetation as well as man-made structures. Construction activities should occur outside of the avian nesting season. If the avian nesting season cannot be avoided and construction or vegetation removal occurs from February 1 to September 1, the City shall implement the following to avoid and minimize impacts to nesting birds and raptors:

(a) During the avian breeding season, a qualified biologist shall conduct a preconstruction avian nesting survey no more than 7 days prior to vegetation disturbance or ground-disturbing activities. If construction begins in the non-breeding season and proceeds continuously into the avian nesting season, no surveys are required. However, if there is a break of 7 days or more in construction activities during the nesting season, a new nesting bird survey shall be conducted before construction begins again.

(b) The preconstruction survey shall cover all reasonably potential nesting locations on and within 100 feet of the construction areas. A 300-foot radius shall be surveyed in areas containing suitable habitat for nesting raptors, such as trees and utility poles.

(c) If an active nest is found during the preconstruction avian nesting survey, a qualified biologist shall designate a suitable buffer for all passerine birds and raptor species. The nest site area shall not be disturbed until the nest becomes inactive, the young have fledged, the young are no longer being fed by the parents, the young have left the area, and the young will no longer be impacted by the Program. Buffer areas may be increased upon recommendation of a qualified biologist if any endangered, threatened, California Fully Protected, or California Species of Special Concern are identified during the preconstruction surveys.

(d) If the nest(s) are found in an area where ground disturbance is scheduled to occur, the City or its contractor shall avoid the area by delaying aground disturbance in the area until a qualified biologist has determined that the birds have fledged and are no longer reliant upon the nest or parental care for survival.

(e) Prior to removal of trees in any parks, the City shall retain a qualified bat specialist to conduct bat surveys to confirm whether bats are using the trees as roosting sites. The surveys should encompass a minimum buffer area of 100 feet around the parks. The results of the surveys will be provided to CDFW. In the event that bat roots are identified, an additional bat species survey will be conducted using acoustic survey techniques necessary to confirm the species of bat using the area. If the species survey concludes that sensitive bat species are present, the City shall consult with CDFW pursuant to the California Fish and Game Code section 2081. Removal of special status bats would not be conducted without prior approval from CDFW.

c. CUL-2: Prior to the start of ground-disturbing activities, the City shall retain a qualified archaeologist meeting the Secretary of the Interior's Professional Qualifications Standards for archaeology (U.S. Department of the Interior, 2008) to carry out the following cultural resources mitigation measures.

d. CUL-3: Prior to start of ground-disturbing activities, the qualified archaeologist shall prepare a cultural resources sensitivity training. All construction personnel shall receive sensitivity training prior to beginning work onsite. Construction personnel should be informed of the types of archaeological resources that may be encountered, and of the proper procedures to be enacted om the event of an inadvertent discovery of archaeological resources or human remains. The City should

ensure that construction personnel are made available for and attend the training and retain documentation demonstrating attendance.

e. CUL-4: Prior to the start of any project-related ground-disturbing activities, LADWP will provide a qualified archaeologist shall prepare a Cultural Resources Monitoring Plan (CRMP) in consultation with Tribes that requested consultation under AB52. Native American monitoring, which shall include all ground-disturbing activities The CRMP shall include monitoring protocols to be carried out during Program-related construction. The CRMP shall stipulate that Native American monitors associated with any of the Tribes that have been consulted with under AB52 be retained to monitor Program-related ground disturbance stipulated in the CRMP.

f. CUL-5: In the event of the unanticipated discovery of archaeological materials, paleontological materials, and/or human remains during the Program implementation, all work shall immediately cease in the area (within approximately 100 feet) of the discovery until it can be evaluated by the qualified archaeologist. Construction shall not resume until the qualified archaeologist has conferred with the City and the Native American monitors on the significance of the resource.

   If it is determined that the discovered archaeological resource constitutes a significant resource, avoidance and preservation in place is the preferred manner of mitigation. Preservation in place may be accomplished by, but is not limited to, avoidance, incorporating the resource into open space, capping, or deeding the site into a permanent conservation easement. In event that preservation in place is demonstrated to be infeasible and data recovery through excavation is the only feasible mitigation available, a Cultural Resources Treatment Plan shall be prepared and implemented by the qualified archaeologist in consultation with the City and Native American monitors that provides for adequate recovery of the scientifically consequential information contained in the archaeological resource. The City shall consult the appropriate Native American representatives in determining treatment and disposition for prehistoric or Native American resources for prehistoric or Native American resources to ensure cultural values ascribed to the resource beyond those that are scientifically important are considered.

g. GEO-1: In the event that the depth to groundwater rises to less than 50 feet bgs as measured in nearby wells, the stormwater infiltration process shall be stopped and the stormwater routed to the surface storm drain system until groundwater depths decrease to below 50 bgs.

h. GEO-3: Prior to start of any ground-disturbing activities, the Qualified Paleontologist shall contribute to any construction worker cultural resources sensitivity WEAP training (Worker Environmental Awareness Program), a program that educates project managers and workers about regulatory compliance and

responsibilities for conserving environmental resources, materials outlined in Mitigation Measure CUL-2, either in person or via a training module provided to the Qualified Archaeologist. This training shall include information on what types of paleontological resources could be encountered during excavations, what to do in case an unanticipated discovery is made by a worker, and laws protecting paleontological resources. All construction personnel shall be informed of the possibility of encountering fossils and instructed to immediately inform the construction foreman or supervisor if any fossils are unexpectedly unearthed in an area where a paleontological monitor is not present. The Contractor shall ensure that construction personnel are made available for and attend the training and retain documentation demonstrating attendance. Such documentation shall be made available to the City, whenever requested.

i. NOI-1: For construction activities adjacent to noise-sensitive receptors (e.g., residences and schools), the contractor shall ensure that all construction equipment, fixed or mobile, are equipped with properly operating and maintained noise shielding and muffing devices consistent with manufactures' standards. The contractor shall use muffler systems (e.g., absorptive mufflers) that provide a minimum reduction of 5 dBA compared to the same equipment without installed muffler system, reducing maximum construction noise levels. The contractor shall keep documentation on-site demonstrating that the equipment has been maintained in accordance with the manufacturers' specifications. The contactor shall also keep documentation on-site verifying compliance with this measure.

j. NOI-2: For construction activities adjacent to noise-sensitive receptors (e.g., residences and schools), where physically and technically feasible, the contractor shall provide an 8-foot-tall to 20-foot-tall temporary fence or other barrier placed between the project construction area and the sensitive receptor with a performance standard of achieving a 15 dBA noise level reduction at the sensitive receptor. The temporary fence or barrier shall be used during peak noise-generating construction phases when the use of heavy equipment is prevalent. A noise barrier is not required if it would pose a safety risk or unreasonably prevent access to the construction area as deemed by the on-site construction manager, such as in areas that have limited equipment maneuvering space or access.

k. NOI-3: Limit engine idling of construction equipment (e.g., haul trucks, loaders) to a minimum of 200 feet from any boundary of the nearest sensitive receptors.

l. NOI-4: Prior to commencement of construction activities, the City shall notify in writing adjacent residents, schools and businesses near the various park project sites, of proposed construction activities and the tentative schedule.

The notices shall also provide a contact person and hotline where local residents, schools, or business owners can call during active construction with questions or comments. The City shall respond to inquiries regarding construction noise and vibration. Notices and construction signs will include a website address which will be updated quarterly and will include Program-related information.

m. TR-1: For parks where construction would occur outside of park facilities or that may impact roadways surrounding park areas, a CTMP shall be developed by the City or its contractor and approved by LADOT prior to the start of construction. The CTMP may include, but is not limited to the following:

(1) Work area traffic control plans for all in-street construction sites to the satisfaction of LADOT, appropriate prior to the start of any construction work. The plans shall include such elements as the location of any lane closures, restricted hours during which lane closures would not be allowed, local traffic detours, protective devices and traffic controls (such as pavement markings, barricades, cones, flagmen, lights, warning beacons, temporary traffic signals, turning movement restrictions, warning signs), access to abutting properties, and provisions to maintain emergency access through construction work areas.

(2) The dates and locations where in-street and off-street construction activities are planned.

(3) If any street segments will be limited to one-way traffic, prepare detour plans over parallel routes.

(4) Require signage indicated alternative routes when construction will occur.

(5) Identify and consolidate staging areas for equipment and materials, as feasible.

(6) Consolidate truck trips, such that multiple worksites can be served, as feasible.

(7) Promote carpooling among workers.

(8) Contact emergency service providers in the project vicinity to notify of the location, hours, and duration of in-street construction. Provide advance notice of any lane closures and changes to local access and identify alternative routes where appropriate.

B. Comply with the more stringent requirements of the current CITY or local noise ordinances, which may include:

1. Construction of noise barriers;

2. Use of low-noise-generating construction equipment;

3. Maintenance of mufflers and ancillary noise abatement equipment;

4. Use of vibration pile drivers and other techniques that result in less noise than impact pile drivers;

5. Scheduling high noise producing activities during periods that are least sensitive;

6. Routing construction related truck traffic away from noise-sensitive areas;

7. Reducing construction vehicle speeds.

C. The CONTRACTOR, a minimum of thirty (30) days prior to beginning work on each new major activity, shall submit a written plan to the ENGINEER, for approval, detailing how the environmental impacts for the activity shall be mitigated in accordance with the Mitigation Monitoring and Reporting Program. The plan shall include, at a minimum:

1. Anticipated site conditions;

2. Equipment to be utilized;

3. Means and methods of construction.

4. Impacts likely to occur;

5. Mitigation methods to be employed.

6. Best Management Practices to be employed.

END OF SECTION

(SEE ATTACHMENT)

ATTACHMENTS TO SECTION 01562

Attachments to General Requirements Section 001562 consists of one (1) document, as follows:

ATTACHMENT NUMBER	TITLE OF ATTACHMENT	NUMBER OF PAGES IN THIS ATTACHMENT
01562-A1	Internal Roles and Responsibilities for the Mitigation Monitoring and Reporting Program	6

LADWP Stormwater Capture Parks Program

INTERNAL ROLES AND RESPONSIBILITIES FOR THE MITIGATION MONITORING AND REPORTING PROGRAM

November 2024

Mitigation Measure	Name of the Site	Phase of Construction (Design, Construction, Operation)	Need Monitoring during Construction	Responsibility: DWP, DWP Contractor, BOE-Engineering, BOE-EMG, BOE-Contractor	Implementation Method (Monitoring, Specification and Plans) Report	Implementation Record (Report filed with DWP, BOE-EMG, and any responsible regulatory agencies, Specifications and Plans)	Enforcement Responsibility (BOE-PE, BOE-PM, CONTRACTOR, DWP-Mitigation Monitor, PW-CON-AD).
Air Quality							
AQ-1: Construction of the Program shall incorporate the following conditions:							
a. For all Program sites: The Program shall use off-road diesel-powered construction equipment that meets or exceeds the CARB and USEPA Tier 4 off-road emissions standards for equipment rated at 50 horsepower or greater and not identified under b or c. below. Such equipment will be outfitted with Best Available Control Technology (BACT) devices, including a CARB-certified Level 3 Diesel Particulate Filter or equivalent. These requirements shall be included in applicable bid documents and successful contractor(s) must demonstrate the ability to supply such equipment.	All Sites	Construction	Yes	BOE Contractor	Specifications Pre-construction verification submitted to BOE with annual recertification	BOE CARB AQMD USEPA	BOE Contractor
b. All dumpers/tenders used on-site shall either be certified Tier 3 with a CARB-certified Level 3 Diesel Particulate Filter or equivalent; certified Tier 4 with a CARB-certified Level 3 Diesel Particulate Filter or equivalent, or alternatively fueled (e.g., gasoline, electric, CNG).	All Sites	Construction	Yes	BOE Contractor	Specifications Pre-construction verification submitted to BOE with annual recertification	BOE CARB	BOE Contractor
c. At a minimum, the following equipment shall be electric: air compressors, cement and mortar mixers, concrete saws, forklifts, pumps. Diesel generators shall be replaced with electricity from the grid either permanent or temporary, or replaced with alternative (non-diesel) fuels.	All Sites	Construction	Yes	BOE Contractor	Specifications Pre-construction verification submitted to BOE with annual recertification	BOE CARB AQMD	BOE Contractor
d. Equipment requirements identified under a, b, and c above shall be included in applicable bid documents and successful contractor(s) must demonstrate the ability to supply such equipment. A copy of each unit's certified tier specification or model year specification and CARB or SCAQMD operating permit (if applicable) shall be available upon request at the time of mobilization of each applicable unit of equipment.	All Sites	Construction	Yes	BOE Contractor	Specifications	BOE	Contractor
e. During the site clearing and preparation, grading and excavation, and soil filling, revegetation, and park improvement phases, watering must be conducted a minimum of 4 times per day during dry weather.	All Sites	Construction	Yes	BOE Contractor	Specifications Monitoring Reporting	AQMD, SWRCB, RWQCB	Contractor
f. For Valley Plaza Park North only 2 dozers are allowed to operate on any portion of the site at one time.	Valley Plaza Park North	Construction	Yes	BOE Contractor	Specifications	BOE	Contractor
g. The City shall ensure:							
i. On-road haul trucks including delivery and those conveying excavated material do not exceed the following daily truck limits:	All Sites	Construction	Yes	BOE Contractor	Specifications	BOE	Contractor
1. 185 trucks when 2 parks are concurrently under construction;							
2. 180 trucks when 3 parks are currently under construction;							
3. 170 trucks when 4 parks are concurrently under construction;							
4. 160 trucks when 5 parks are concurrently under construction;							
5. 150 trucks when 6 parks are concurrently under construction;							
6. 140 trucks when 7 parks are concurrently under construction. Or;							
ii. If the fleet is composed of a mix of 2014 or newer trucks, the City shall ensure that on-road haul trucks including delivery and those conveying excavated material do not exceed the following daily truck limits:	All Sites	Construction	Yes	BOE Contractor	Specifications	BOE	Contractor
1. 240 trucks when 2 parks are concurrently under construction;							
2. 230 trucks when 3 parks are concurrently under construction;							
3. 220 trucks when 4 parks are concurrently under construction;							
4. 210 trucks when 5 parks are concurrently under construction;							
5. 200 trucks when 6 parks are concurrently under construction;							
6. 190 trucks when 7 parks are concurrently under construction.							

Biological Resources							
BIO-1: Special-Status Wildlife Species. Construction activities at any of the nine park project sites could result in impacts to the Cooper's hawk (*Accipiter cooperii*), a California Species of Special Concern, where mature trees are present. Similarly, construction activities may also impact other nesting bird species that may nest in a variety of vegetation as well as man-made structures. Construction activities should occur outside of the avian nesting season. If the avian nesting season cannot be avoided and construction or vegetation removal occurs from February 1 to September 1, the City shall implement the following to avoid and minimize impacts to nesting birds and raptors: During the avian breeding season, a qualified biologist shall conduct a preconstruction avian nesting survey no more than 7 days prior to vegetation disturbance or ground-disturbing activities. If construction begins in the non-breeding season and proceeds continuously into the avian nesting season, no surveys are required. However, if there is a break of 7 days or more in construction activities during the nesting season, a new nesting bird survey shall be conducted before construction begins again. The preconstruction survey shall cover all reasonably potential nesting locations on and within 100 feet of the construction areas. A 300-foot radius shall be surveyed in areas containing suitable habitat for nesting raptors, such as trees and utility poles. If an active nest is found during the preconstruction avian nesting survey, a qualified biologist shall designate a suitable buffer for all passerine birds and raptor species. The nest site area shall not be disturbed until the nest becomes inactive, the young have fledged, the young are no longer being fed by the parents, the young have left the area, and the young will no longer be impacted by the Program. Buffer areas may be increased upon recommendation of a qualified biologist if any endangered, threatened, California Fully Protected, or California Species of Special Concern are identified during preconstruction surveys. If the nest(s) are found in an area where ground disturbance is scheduled to occur, the City or its contractor shall avoid the area by delaying ground disturbance in the area until a qualified biologist has determined that the birds have fledged and are no longer reliant upon the nest or parental care for survival. Prior to removal of trees in any of the parks, the City shall retain a qualified bat specialist to conduct bat surveys to confirm whether bats are using the trees as roosting sites. The surveys should encompass a minimum buffer area of 100 feet around the parks. The results of the surveys will be provided to CDFW. In the event that bat roosts are identified, an additional bat species survey will be conducted using acoustic survey techniques necessary to confirm the species of bat using the area. If the species survey concludes that sensitive bat species are present, the City shall consult with CDFW pursuant to the California Fish and Game Code section 2081. Removal of special status bats would not be conducted without prior approval from CDFW.	All Sites	Pre-construction and Construction	Yes	DWP/DWP Contractor	Specifications Surveys and Monitoring Report	Report to be filed with DWP Environmental Planning and Assessment Group and shared with BOE	DWP – Environmental Planning and Assessment Group
Cultural Resources							
CUL-1: In the event Program designs are further refined and individual park project components change to encroach more closely than 50 feet to the North Hollywood Branch Library (P-19-167303), the pool house and maintenance building associated with North Hollywood Park, the clubhouse associated with the David M. Gonzales Recreation Center, and/or the 170 Freeway Pedestrian Overpass, the City shall retain a qualified architectural historian meeting the Secretary of the Interior's Standards for Architectural History to review design plans for conformance with the Secretary of the Interior's Standards for the Treatment of Historic Properties (Standards). Should potential Program redesign not conform to the Standards, the City shall work with the qualified architectural historian to mitigate impacts to these resources. Should Program redesign place Program components within 50 feet of these resources, the qualified architectural historian shall also assess potential construction-related impacts resulting from ground-borne vibration. Should ground-borne vibrations have the potential to impact the historical resources, the City and the qualified architectural historian shall develop a plan to monitor ground-borne vibration during construction to ensure it does not exceed thresholds that could damage, or otherwise alter the historical resources.	North Hollywood Park David M. Gonzales, Valley Plaza Park North	Design/Pre-Construction	TBD	DWP/DWP Contractor	Design review by qualified architectural historian and monitoring, if required.	Report to be filed with DWP Environmental Planning and Assessment Group and shared with BOE	DWP – Environmental Planning and Assessment Group
CUL-2: Prior to the start of ground-disturbing activities, the City shall retain a qualified archaeologist meeting the Secretary of the Interior's Professional Qualifications Standards for archaeology (U.S. Department of the Interior, 2008) to carry out the following cultural resources mitigation measures.	All sites	Design/Pre-Construction	NA	DWP/DWP Contractor	Retention of qualified archaeologist	BOE	DWP – Environmental Planning and Assessment Group
CUL-3: Prior to start of ground-disturbing activities, the qualified archaeologist shall prepare a cultural resources sensitivity training module to be used as part of the City's Worker Environmental Awareness Program (WEAP) training. All construction personnel shall receive sensitivity training prior to beginning work onsite. Construction personnel should be informed of the types of archaeological resources that may be encountered, and of the proper procedures to be enacted in the event of an inadvertent discovery of archaeological resources or human remains. The City should ensure that construction personnel are made available for and attend the training and retain documentation demonstrating attendance.	All sites	Pre-construction	NA	DWP/DWP Contractor	Pre-construction WEAP training	Training materials/handouts Training records sent to BOE	DWP – Environmental Planning and Assessment Group

CUL-4: Prior to the start of any project-related ground-disturbing activities, the qualified archaeologist shall prepare a Cultural Resources Monitoring Plan (CRMP) in consultation with Tribes that requested consultation under AB52. The CRMP shall stipulate the location and timing of archaeological and Native American monitoring, which shall include all ground-disturbing activities in each of the nine parks that exceed the depths of undocumented fill as documented by geotechnical testing. The qualified archaeologist shall review engineering plans for each of the nine parks to determine where ground-disturbing activities will exceed the depths of undocumented fill at each park to determine the timing and locations of monitoring to be included in the CRMP. The CRMP shall include monitoring protocols to be carried out during Program-related construction. The CRMP shall stipulate that Native American monitors associated with any of the Tribes that have been consulted with under AB52 be retained to monitor Program-related ground disturbance stipulated in the CRMP.	All sites	Design/Pre-construction/ Construction	Yes	DWP/DWP Contractor	Cultural Resources Monitoring Plan/Monitoring	Report to be filed with DWP Environmental Planning and Assessment Group and shared with BOE	DWP – Environmental Planning and Assessment Group
CUL-5: In the event of the unanticipated discovery of archaeological materials during Program implementation, all work shall immediately cease in the area (within approximately 100 feet) of the discovery until it can be evaluated by the qualified archaeologist. Construction shall not resume until the qualified archaeologist has conferred with the City and the Native American monitors on the significance of the resource. If it is determined that the discovered archaeological resource constitutes a significant resource, avoidance and preservation in place is the preferred manner of mitigation. Preservation in place may be accomplished by, but is not limited to, avoidance, incorporating the resource into open space, capping, or deeding the site into a permanent conservation easement. In the event that preservation in place is demonstrated to be infeasible and data recovery through excavation is the only feasible mitigation available, a Cultural Resources Treatment Plan shall be prepared and implemented by the qualified archaeologist in consultation with the City and Native American monitors that provides for the adequate recovery of the scientifically consequential information contained in the archaeological resource. The City shall consult the appropriate Native American representatives in determining treatment and disposition for prehistoric or Native American resources to ensure cultural values ascribed to the resource beyond those that are scientifically important are considered.	All Sites	Construction	Yes	DWP/DWP Contractor	Monitoring/Treatment Plan	Report to be filed with DWP Environmental Planning and Assessment Group and shared with BOE	DWP – Environmental Planning and Assessment Group
CUL-6: If human remains are encountered, all work shall halt in the vicinity (within 100 feet) of the find and the Los Angeles County Coroner shall be contacted in accordance with PRC Section 5097.98 and Health and Safety Code Section 7050.5. If the County Coroner determines that the remains are Native American, the NAHC will be notified in accordance with Health and Safety Code Section 7050.5, subdivision ©, and PRC Section 5097.98 (as amended by Assembly Bill 2641). The NAHC will designate a Most Likely Descendent (MLD) for the remains per PRC Section 5097.98. Until the landowner has conferred with the MLD, the City shall ensure that the immediate vicinity where the discovery occurred is not disturbed by further activity, is adequately protected according to generally accepted cultural or archaeological standards or practices, and that further activities take into account the possibility of multiple burials.	All Sites	Construction	Yes	DWP/DWP Contractor	Monitoring/ Notification	Report to be filed with DWP Environmental Planning and Assessment Group and shared with BOE	DWP – Environmental Planning and Assessment Group
Geology and Soils							
GEO-1: The City shall implement the recommendations provided in the geotechnical investigations for each of the park project sites. In the event that the depth to groundwater rises to less than 50 feet bgs as measured in nearby wells, the stormwater infiltration process shall be stopped and the stormwater routed to the surface storm drain system until groundwater depths decrease to below 50 bgs.	All Sites	Design, Construction, Operations	Yes	BOE Contractor (construction phase) DWP	DWP monitoring	DWP and shared with BOE and contractor	DWP shared with Contractor during construction and RAP during operations
GEO-2: Prior to the start of construction activities, the City shall retain a Qualified Paleontologist that meets the standards of the Society of Vertebrate Paleontology (2010) to carry out all mitigation measures related to paleontological resources.	All Sites	Design/Pre-Construction	Yes	DWP/DWP Contractor	Retention of qualified Paleontologist	DWP Contracted Archeologist BOE	DWP – Environmental Planning and Assessment Group Contractor
GEO-3: Prior to start of any ground-disturbing activities, the Qualified Paleontologist shall contribute to any construction worker cultural resources sensitivity WEAP training materials outlined in Mitigation Measure CUL-2, either in person or via a training module provided to the Qualified Archaeologist. This training shall include information on what types of paleontological resources could be encountered during excavations, what to do in case an unanticipated discovery is made by a worker, and laws protecting paleontological resources. All construction personnel shall be informed of the possibility of encountering fossils and instructed to immediately inform the construction foreman or supervisor if any fossils are unexpectedly unearthed in an area where a paleontological monitor is not present. The City shall ensure that construction personnel are made available for and attend the training and retain documentation demonstrating attendance.	All Sites	Pre-construction	Yes	DWP/DWP Contractor	Pre-construction WEAP Training	Training materials/handouts Records provided to BOE	DWP – Environmental Planning and Assessment Group

GEO-4: The Qualified Paleontologist shall supervise a paleontological monitor meeting the Society for Vertebrate Paleontology standards (2010) who shall be present during all excavations exceeding 15 feet. Monitoring shall consist of visually inspecting fresh exposures of rock for larger fossil remains and, where appropriate, collecting wet or dry screened sediment samples of promising horizons for smaller fossil remains. Monitoring can be reduced to part-time inspections or ceased entirely if determined adequate by the Qualified Paleontologist in consultation with the City. Monitoring activities shall be documented in a Paleontological Resources Monitoring Report to be prepared by the Qualified Paleontologist at the completion of construction and shall be provided to the City and filed with the Natural History Museum of Los Angeles County within 6 months of Program completion.	All Sites	Construction	Yes	DWP/DWP Contractor	Monitoring	Report to be filed with DWP Environmental Planning and Assessment Group and shared with BOE	DWP – Environmental Planning and Assessment Group
GEO-5: If a unique geologic feature or paleontological resource is discovered during construction, the paleontological monitor shall be empowered to temporarily divert or redirect grading and excavation activities in the area of the exposed fossil to facilitate evaluation of the discovery. An appropriate buffer area shall be established by the Qualified Paleontologist around the find where construction activities shall not be allowed to continue. Work shall be allowed to continue outside of the buffer area. At the Qualified Paleontologist's discretion and to reduce any construction delay, the grading and excavation contractor shall assist in removing rock samples for initial processing and evaluation of the find. All significant fossils shall be collected by the paleontological monitor and/or the Qualified Paleontologist. Collected fossils shall be prepared to the point of identification and catalogued before they are submitted to their final repository. Any fossils collected shall be curated at a public, non-profit institution with a research interest in the materials, such as the Los Angeles County Natural History Museum, if such an institution agrees to accept the fossils. If no institution accepts the fossil collection, they shall be donated to a local school in the area for educational purposes. Accompanying notes, maps, and photographs shall also be filed at the repository and/or school.	All Sites	Construction	Yes	DWP/DWP Contractor	Monitoring/Treatment Plan	Report to be filed with DWP Environmental Planning and Assessment Group and shared with BOE	DWP – Environmental Planning and Assessment Group
Hazards and Hazardous Materials							
HAZ-1: The City or its construction contractor shall ensure that fueling of vehicles or storage of fuel or other chemicals would occur at the furthest extent possible from an existing school site.	David M. Gonzales	Construction	No	BOE Contractor	Specifications	BOE	Contractor
HAZ-2: For all schools located adjacent to a proposed work area, the City shall coordinate school safety routes, which should include, but not be limited to:	David M. Gonzales	Construction	Yes	BOE Contractor	Specifications	BOE	BOE Contractor
Maintaining in place all crosswalks along the safe routes to and from the school (for Pacoima Charter School these would include Norris Avenue, Van Nuys Boulevard, Pierce Street, and Herrick Avenue).							
Designating a safe location for school buses and parents to drop off and pick up students.							
Designating a safe parking area for parents to wait for/pick up school children.							
Maintaining sidewalks open to pedestrian traffic during construction.							
Additional safety measures must be adopted during construction to protect the students and the public, including k-railing, secured fencing with screen, clear signing, temporary striping, and a flagger for trucks entering and existing the construction zone. Flaggers should also be considered at crosswalks while students are present.							
Close coordination with the impacted school and the Los Angeles Unified School District for input on the school safety route design and frequent communication during construction.							
Extensive outreach program for the school and the community describing safety measures and construction schedules.							
Restrict construction times to avoid before and after school timeframes while children may be walking to and from school, and while school is in session, as feasible.							
HAZ-3: The City and its contractor shall conduct further investigation of the nature and extent of landfill materials and contaminated soil at the Strathern Park North site, under the oversight of the City of Los Angeles Local Enforcement Agency (LEA). Undocumented waste shall be delineated and sampled for chemicals of concern related to waste materials. The project shall avoid construction within the delineated waste mass, as feasible. If avoidance of the waste mass is not feasible, the City shall submit a work plan to the LEA that documents the results of the waste delineation, details the specifics of the construction project and how it relates to the onsite waste, describes the procedures for dealing with the waste, and outlines the environmental monitoring procedures that would be implemented during construction. Upon approval of the work plan, the City and its contractor shall remove the landfill materials and any soil with chemical concentrations above regulatory action levels to the satisfaction of the LEA and properly dispose of it at a permitted facility. An as-built report shall be submitted to the LEA after completion of the project.	Strathern Park North	Design and Construction Post construction closure report	Yes	BOE Contractor BOE Engineering	Specifications	LADBS LEA BOE	LADBS BOE Contractor

Noise							
NOI-1: For construction activities adjacent to noise-sensitive receptors (e.g., residences and schools), the contractor shall ensure that all construction equipment, fixed or mobile, are equipped with properly operating and maintained noise shielding and muffling devices, consistent with manufacturers' standards. The contractor shall use muffler systems (e.g., absorptive mufflers) that provide a minimum reduction of 5 dBA compared to the same equipment without an installed muffler system, reducing maximum construction noise levels. The contractor shall keep documentation on-site demonstrating that the equipment has been maintained in accordance with the manufacturers' specifications. The contractor shall also keep documentation on-site verifying compliance with this measure.	All sites	Construction	Yes	BOE Contractor	Specifications	BOE Contractor	Contractor
NOI-2: For construction activities adjacent to noise-sensitive receptors (e.g., residences and schools), where physically and technically feasible, the contractor shall provide an 8-foot-tall to 20-foot-tall temporary fence or other barrier placed between the project construction area and the sensitive receptor with a performance standard of achieving a 15 dBA noise level reduction at the sensitive receptors. The temporary fence or barrier shall be used during peak noise-generating construction phases when the use of heavy equipment is prevalent. A noise barrier is not required if it would pose a safety risk or unreasonably prevent access to the construction area as deemed by the on-site construction manager, such as in areas that have limited equipment maneuvering space or access.	Applies portions of Fernangeles, Strathern, Valley Plaza South, and Valley Village which may be within 25' of residences.	Construction	Yes	BOE Contractor	Specifications	BOE Contractor	Contractor
NOI-3: Limit engine idling of construction equipment (e.g., haul trucks, loaders) to a minimum of 200 feet from any boundary of the nearest sensitive receptors.	All sites	Construction	Yes	BOE Contractor	Specifications	BOE	Contractor
NOI-4: Prior to commencement of construction activities, the City shall notify in writing adjacent residents, schools and businesses near the various park project sites, of proposed construction activities and the tentative schedule. The notices shall also provide a contact person and hotline where local residents, schools, or business owners can call during active construction with questions or comments. The City shall respond to inquiries regarding construction noise and vibration. Notices and construction signs will include a website address which will be updated quarterly and will include Program-related information.	All sites	Construction	Yes	BOE Contractor	Specifications	BOE	Contractor
NOI-5: The operation of construction equipment that generates high levels of vibration, such as large bulldozers and loaded trucks, shall be prohibited within 45 feet of the property lines of existing residential and school uses adjacent to the various park project sites. Instead, rubber-tired equipment not exceeding 247 horsepower shall be used in these areas during construction within 45 feet from the sensitive receptor locations.	All sites, especially David M. Gonzalez and North Hollywood	Construction	Yes	BOE Contractor	Specifications	BOE	Contractor
Transportation							
TR-1: For parks where construction would occur outside of park facilities or that may impact roadways surrounding park areas, a CTMP shall be developed by the City or its contractor and approved by LADOT prior to the start of construction. The CTMP may include, but is not limited to the following:	All Sites	Design and Construction	Yes	BOE Contractor	Approved Traffic Control Plans or WATCH Manual	LADOT Contractor BOE-EMG	Contractor
Work area traffic control plans for all in-street construction sites to the satisfaction of LADOT, as appropriate prior to the start of any construction work. The plans shall include such elements as the location of any lane closures, restricted hours during which lane closures would not be allowed, local traffic detours, protective devices and traffic controls (such as pavement markings, barricades, cones, flagmen, lights, warning beacons, temporary traffic signals, turning movement restrictions, warning signs), access to abutting properties, and provisions to maintain emergency access through construction work areas.							
The dates and locations where in-street and off-street construction activities are planned.							
If any street segments will be limited to one-way traffic, prepare detour plans over parallel routes.							
Require signage indicated alternative routes where construction will occur.							
Identify and consolidate staging areas for equipment and materials, as feasible.							
Consolidate truck trips, such that multiple worksites can be served, as feasible.							
Promote carpooling among workers.							
Contact emergency service providers in the project vicinity to notify of the location, hours, and duration of in-street construction. Provide advance notice of any lane closures and changes to local access and identity alternative routes where appropriate.							

SECTION 01563
POLLUTION CONTROL - SEWAGE SPILL PREVENTION AND RESPONSE REQUIREMENTS

1.1 THE REQUIREMENT

A. General

1. The CONTRACTOR shall observe and comply with the CITY's policy of "ZERO SANITARY SEWER OVERFLOWS".

2. The CONTRACTOR shall be in full charge and be responsible for the Jobsite, the construction Work of this Contract, and subject to the directions of the ENGINEER or the INSPECTOR.

3. The CONTRACTOR shall observe and comply with all Federal, State, and local laws, ordinances, codes, orders, and regulations which in any manner affect the conduct of the work, specifically as it relates to sewage spills.

4. The CONTRACTOR shall be fully responsible for preventing sewage spillage, containing any sewage spillage, recovery and legal disposal of any spilled sewage, any and all fines, penalties, claims and liability arising from negligently causing a sewage spillage and any violation of any law, ordinance, code, order, or regulation as a result of the spillage.

5. The CONTRACTOR shall exercise care not to damage existing public and private improvements, interrupt existing services and/or facility operations which may cause a sewage spill. Any reasonably anticipated utility and/or improvement which is damaged by the CONTRACTOR shall be immediately repaired at the CONTRACTOR's expense. In the event that the CONTRACTOR damages an existing utility, interrupts an existing service which causes a sewage spill, the CONTRACTOR shall immediately notify the CITY representatives. The CONTRACTOR shall request and obtain from the ENGINEER an emergency roster of the designated CITY representatives with their respective telephone numbers, pager numbers, and cellular phone numbers. The CONTRACTOR shall take all measures necessary to prevent further damage or service interruption, and to control, contain and clean up the resultant impacts of the damage, service interruption and any resulting sewage spill(s) as mentioned in Section 1.1.A. 6, below.

6. Prior to the start of construction, the CONTRACTOR shall develop and submit to the ENGINEER, for review and approval, a written Spill Response Plan. The Spill Response Plan shall be developed to respond to any construction related sewage spill. This shall include, but is not limited to:

   a. The CONTRACTOR shall identify all nearby waterways, channels, catch basins and entrances to underground existing storm drains and furnishing all of the necessary materials, supplies, tools equipment, labor and other services.

b. The CONTRACTOR shall make arrangements for an emergency response unit comprised of emergency response equipment and trained personnel to be immediately dispatched to the Jobsite in the event of a sewage spill(s).

c. The CONTRACTOR shall develop and include an emergency notification procedure, which includes an emergency response roster with telephone numbers and arrangements for backup personnel and equipment and an emergency notification roster of the design CITY representatives. The CONTRACTOR shall designate a primary and secondary representative and include their respective phone numbers, pager numbers, and cellular phone numbers. The CONTRACTOR's representatives shall be accessible and available at all times to respond immediately to any construction related emergency.

7. If called for in the Plans and/or Specifications, or if sewer bypass is needed to construct the Project, the CONTRACTOR shall continuously monitor the flow levels downstream and upstream of the construction location to detect and possible failure that may cause a sewage backup and spill. The CONTRACTOR shall include the means and methods of monitoring the flow in their Spill Response Plan.

a. In case of sewage spill, the CONTRACTOR shall act immediately without instructions from the CITY, to control the spill and take all appropriate steps to contain it in accordance with their Spill Response Plan. The CONTRACTOR shall immediately notify the CITY representatives of the spill and all actions taken. The CONTRACTOR shall, within three (3) working days from the occurrence of the spill, submit to the ENGINEER a written confirmation describing the following information related to the spill: the location on a current Thomas Bros. guide map; the nature and volume; the date and time; the duration; the cause; the type of remedial and/or preventive action taken; and the water body impacted and results of any necessary monitoring. Requests for additional compensation for the handling of the spill shall be submitted to the ENGINEER as a construction claim. The CONTRACTOR shall assure the validity, accuracy, and correctness of the claim under penalty of perjury. The ENGINEER may institute further corrective actions, as deemed necessary, to fully comply with existing law, ordinance, code, order or regulation. The CONTRACTOR shall be responsible for all costs incurred for the corrective actions.

b. It shall be the CONTRACTOR's responsibility to assure that all field forces, including Subcontractors, know and obey all safety and emergency procedures, including the Spill Response Plan, to be maintained and followed at the Jobsite.

B. Sewer Bypass

1. The CONTRACTOR shall provide temporary means to maintain and handle the sewage flow in the existing system as required to complete the necessary construction.

2. The CONTRACTOR shall prepare and submit a detailed bypass plan to the ENGINEER for approval of the ENGINEER and the facility OWNER before the bypass is installed.

3. The CONTRACTOR shall size the bypass system to handle the peak flow of the system. The CONTRACTOR shall include a one-hundred percent (100%) backup in the bypass system. The CONTRACTOR shall utilize the backup system to mitigate any additional wet weather flows, perform the necessary maintenance and repairs on the bypass system, and exercise and ensure the operability of the backup system. Each pump, including the backup pumps, shall be a complete unit with its own suction and discharging pumping. The CONTRACTOR shall operate the backup bypass system for a minimum of twenty-five percent (25%) of the time on a weekly basis. The backup bypass system shall be fully installed and operational.

4. Prior to the full operation of the bypass system, the CONTRACTOR shall demonstrate, to the satisfaction of the ENGINEER and INSPECTOR, that both the primary and backup bypass systems are fully functional and adequate, and shall certify the same, in writing, to the ENGINEER in a manner acceptable to the ENGINEER.

5. The CONTRACTOR shall provide one dedicated fuel tank for every single pump/generator, if fuel/generator driven pumps are used. The CONTRACTOR shall provide a fuel level indictor outside each fuel tank. The CONTRACTOR shall continuously (while in use) monitor the fuel level in the tanks and ensure that the fuel level does not drop below a level equivalent to two (2) hours of continuous bypass system operation. The CONTRACTOR shall take the necessary measures to ensure the fuel supply is protected against contamination. This includes, but is not limited to, fuel line water traps, fuel line filters, and protecting fuel stores from precipitation.

6. The CONTRACTOR shall provide an emergency standby power generator, if electric power driven pumps are used.

7. The CONTRACTOR shall continuously (while in use) monitor the operation of the bypass system and all impacted facilities. The CONTRACTOR shall submit, as part of their bypass plan, their monitoring procedure and frequency. The CONTRACTOR shall maintain a log of the monitoring in a manner acceptable to the ENGINEER and INSPECTOR.

8. The CONTRACTOR shall continuously monitor the flow levels downstream and upstream of the bypass to detect any possible failure that may cause a sewage backup and/or spill. The CONTRACTOR shall include the means and methods of monitoring the flow in their Spill Response Plan.

9. The CONTRACTOR shall routinely inspect and maintain the bypass system, including the backup system. The CONTRACTOR shall submit as part of their bypass plans their maintenance procedures and frequency. The CONTRACTOR shall maintain a log of all pertinent inspection, maintenance and repair records in a manner acceptable to the ENGINEER and INSPECTOR.

10. All costs associated with sewer bypass requirements listed above (Sections B-1 through 9) shall be included in the Bid Item “Sewer bypass system”.

C. Additional Insurance Requirements

1. The CONTRACTOR shall obtain and maintain an additional insurance coverage for Pollution Liability with limits and requirements set forth in Part III of the Proposal for Federal Funded projects, or Part IV of the Proposal for City funded projects. The limits and requirements for Pollution Liability shall be in an amount sufficient to cover potential losses from sudden and accidental pollution. All costs associated with the requirements for “Sewage Spill Prevention and Response Requirements”, including additional insurance, shall be included in the prices bid for other related bid items. However, CONTRACTORS will be required to submit, with their bid, a cost breakdown for the items required by the “Sewage Spill Prevention and Response Requirements”.

(END OF SECTION)

SECTION 01571
STORMWATER POLLUTION CONTROL
MEASURES FOR CONSTRUCTION ACTIVITIES

1.1 THE REQUIREMENT

A. General

1. The Contractor shall exercise every reasonable precaution to protect channels, storm drains, and bodies of water from pollution.

2. Conduct and schedule operations to minimize or avoid muddying and silting channels, drains, and waters.

3. As required, obtain permits for erosion and water pollution control from the appropriate jurisdictional agency before starting Work. All costs for work required for compliance with this Section shall be included within the Bid Prices.

.

4. Provide any necessary water pollution control devices to prevent, control, and abate water pollution, and implement good housekeeping pollution control measures to reduce the discharge of pollutants from work sites to the maximum extent practicable. These water pollution control devices include drains, gutters, slope protection blankets and retention basins and shall be constructed concurrently with other Work at the earliest practicable time.

5. Exercise care in preserving vegetation and protecting property, to avoid disturbing areas beyond the limits of the Work. Promptly repair any damage caused by Contractor operations.

6. Comply with the specific requirements based on acreage of disturbed soil.

7. Penalties: Failure to comply with this Section may result in significant fines and possible imprisonment. The RWQCB or other prosecuting authority may assess fines of up to $32,500 per day for each violation. Should the City be fined or penalized as a result of the Contractor failing to comply with this Section, the Contractor shall reimburse the City for any and all fines, penalties and related costs.

8. Notification and Report: If pollution occurs in the work area for any reason or when the Contractor becomes aware of any violation of this Section, correct the problem and immediately notify the Inspector. In addition, submit a written report to the Engineer within seven (7) calendar days describing the incident and the corrective actions taken. If either the Inspector or Engineer is first to observe pollution or a violation, the Contractor shall also explain in the written report why the Work was inadequately monitored.

9. The provisions of this Section describe minimum compliance and do not preclude other more stringent stormwater pollution control measures that may be required in the Contract.

10. The LADWP, as the responsible party, will file the NOI with the RWQCB.

B. Definition

1. Construction Activity: Includes clearing, grading, excavation, stockpiling, and reconstruction of existing facilities involving removal and replacement. Construction activity does not include routine maintenance such as, maintenance of original line and grade, hydraulic capacity, or original purpose of the facility. If construction activity is part of a larger common plan of development, the amount of disturbed soil is the total land area of disturbed soil that results under the common plan.

C. Projects Having Less Than One Acre of Disturbed Soil

Projects with construction activity that will result in less than one acre of disturbed soil, the Contractor shall comply with the following minimum water quality protection requirements:

1. Retain eroded sediments and other pollutants on-site and do not allow transportation from the site by sheet flow, swales, area drains, natural drainage, or wind. Control slope and channel erosion by implementing an effective combination of best management practices (BMPs). Such BMPs include scheduling grading during non-rainy seasons, planting and maintaining vegetation on slopes and covering erosion-susceptible slopes.

2. Protect stockpiles of earth and other construction-related materials from being transported from the site by wind or water.

3. Properly store and handle fuels, oils, solvents, and other toxic materials to not contaminate the soil or surface waters, enter the groundwater, or be placed where they may enter a live stream, channel, drain, or other water conveyance facility. Protect all approved toxic storage containers from weather. Clean spills immediately and properly dispose of cleanup materials. Spills shall not be washed into live streams, channels, drains, or other water conveyance facilities.

4. Do not wash excess or waste concrete into the public way or any drainage system. Retain concrete wastes on-site until they can be appropriately disposed of or recycled.

5. Deposit trash and construction-related solid wastes in covered receptacles to prevent contamination of rainwater and dispersal by wind.

6. Do not allow sediments and other materials to be tracked from the site by vehicle traffic. Stabilize construction entrance roadways to inhibit sediments from being deposited onto public ways. Immediately sweep up accidental depositions. Do not allow depositions to be washed away by rain or by any other means.

7. Contain non-stormwater runoff from equipment or vehicle washing and any other activity at the work site.

8. At completion of the Work, clear the worksite of debris and restore to a condition at least equal to or better than prior to construction.

9. When construction activity with grading is likely to occur during the rainy season (October 1 through April 15), prepare a Wet Weather Erosion Control Plan (WWECP) per LAMC Section 61.02. The WWECP must be submitted to the Engineer for approval within thirty (30) calendar days after Notice to Proceed.

Guidance on preparing the WWECP can be found in "Development Best Management Practices Handbook - Part A, Construction Activities", adopted by the Board and as authorized by LAMC Section 64.72. The handbook can be viewed at or obtained at cost at Bureau of Engineering public counters.

10. When working in live streams, these are additional water pollution control requirements.

11. Erect barriers sufficient to prevent muddying or polluting streams.

12. Prior to removing materials from a flowing stream, use a stream bypass or other equivalent means to keep the flow in the stream free of the mud or silt from the removal operations.

13. Avoid transporting materials across live streams. If not possible, the transportation operation must be designed to prevent materials from falling into the stream and cannot muddy the stream.

14. Equipment may not be operated in a live stream or channel unless the Contractor can demonstrate to the Engineer's satisfaction that no other practical alternatives exist. The equipment must be designed to prevent materials from falling into the stream and cannot muddy the stream.

15. Do not allow fresh portland cement or fresh portland cement concrete to enter the water flowing in streams, channels or drains.

16. Do not allow material derived from the Work to be deposited in a live stream, channel or drain.

D. Projects Having One Acre or More of Disturbed Soil

Projects (including Linear Underground Projects) with construction activity that will result in one acre or more of disturbed soil, or less than one acre but part of a larger common plan of development, the Contractor shall comply with the requirements included in Section 1.1.C above, and the following requirements:

1. The Contractor shall comply with General Permit 2009-0009-DWQ for Discharges of Storm Water Associated with Construction Activities (General Permit). A copy of the General Permit may be downloaded from the California State Water Resources Control Board (SWRCB) website using the following link: https://www.waterboards.ca.gov/water_issues/programs/stormwater/construction.html

2. The Contractor shall provide a Qualified Storm Water Pollution Prevention Plan (SWPPP) Developer (QSD) to prepare all Permit Registration Documents (PRDs), as defined in the General Permit. All PRDs must be uploaded to the SWRCB's General Permit web application called the Storm Water Multiple Application Report Tracking System (SMARTS) prior to commencement of construction activities. The SMARTS website link is: http://smarts.waterboards.ca.gov/smarts/faces/SwSmartsLogin.jsp. The PRDs include the Notice of Intent, Risk Assessment, Post-Construction Calculations, Site Map, SWPPP, and the first annual fee. The annual fee for this project is estimated to be $600.00.

The Contractor must submit the prepared SWPPP to the City for review and approval prior to uploading it to the SMARTS system. Upon City approval, the SWPPP shall be uploaded by the Contractor and certified by the City's Legally Responsible Person (LRP). At that time, the actual fee invoice will be provided by the City to the Contractor and the Contractor will submit payment to the State for the first annual fee. The Contractor is also responsible for all subsequent annual fees for this project.

3. This project has been determined to be a Risk Level [1, 2, or 3] [NTS: Project Manager shall complete the Risk Level analysis as per the General Permit and insert the proper risk level]. The Contractor shall comply with all visual monitoring, effluent water quality sampling, reporting, and record keeping requirements associated with this Risk Level, in accordance with the General Permit. For projects with Risk Level 2 or Risk Level 3, the Contractor must prepare and implement a Rain Event Action Plan, as described in the General Permit.

4. The Contractor shall provide a Qualified SWPPP Practitioner (QSP) to implement all SWPPP requirements at the project site and monitor the effectiveness of the SWPPP, in accordance with the General Permit.

5. The Contractor shall prepare the Annual Report required by the General Permit and submit it to the City for review and approval by August 1st of each year. The City's LRP will certify the Annual Report.

6. The Contractor shall provide and submit all reports and data necessary to complete the Notice of Termination at the Completion of the Work, in accordance with the General Permit.

(END OF SECTION)

SECTION 01572
CONSTRUCTION AND DEMOLITION WASTE MANAGEMENT

1.1 The Requirement

A. The Construction and Demolition Waste Management (CMDW) Specification includes procedures for ensuring optimal diversion of construction and demolition waste generated by the project, and documentation procedures for tracking waste generation and diversion.
B. Each construction and/or demolition project shall reuse or recycle a minimum of 75% of the inert debris and 50% of the remaining construction and demolition debris generated by the project.
C. The project shall promote the City's sustainable building efforts by creating a resource-efficient and environmentally sensitive project and maintaining optimum control of the construction and demolition waste generated during the project.
D. The project shall use products with post-consumer recycled content to the greatest extent feasible. Refer to the California Integrated Waste Management Board's website for information about recycled content construction products.

1.2 Abbreviations

A. CalMAX: California Materials Exchange
B. C&D: Construction and Demolition
C. CCR: California Code of Regulations
D. CDRG: Construction and Demolition Recycling Guide
E. CIWMB: California Integrated Waste Management Board
F. LEA: Local Enforcement Agency
G. SWDD: Solid Waste Diversion and Disposal
H. WMP: Waste Management Plan

1.3 Definitions

A. "Certified Mixed Debris Processing Facility": A solid waste processing facility that accepts loads of mixed debris for the purpose of recovering re-usable and recyclable materials and disposing of the non-recyclable residual material. A Certified Mixed Debris Processing Facility has been certified by the City of Los Angeles to have a facility specific recycling rate for C&D waste and/or another facility specific recycling rate for municipal solid waste. See CDRG Section VII G for information on the current list of certified processors.
B. "Class III landfill": A landfill that accepts non-hazardous solid waste such as household, commercial, and industrial solid waste. A Class III landfill must have a CIWMB solid waste facilities permit and is regulated by the LEA.
C. "Construction and Demolition Recycling Guide": a publication by the Bureau of Sanitation's Solid Resources Citywide Recycling Division available at https://www.lacitysan.org/san/faces/home/portal/s-lsh-wwd/s-lsh-wwd-s/s-lsh-wwd-s-r/s-lsh-wwd-s-r-cdr?_adf.ctrl-state=1c96z0ucsc_5&_afrLoop=11601439069213214#!, or Solid Resources Citywide Recycling Division, 1149 S. Broadway, 10th Floor, Los Angeles, CA 90015, (213) 485-2260; FAX (213) 485-3671.
D. "C&D Debris": Solid waste and recyclable materials that result directly from construction, remodeling, repair, demolition, or deconstruction of buildings and other structures, do not contain hazardous waste (as defined in CCR Title 22, Section 66621.3, *et seq.*), and contain no more than one percent (1%) putrescible wastes by volume, calculated on a monthly basis. C&D debris

includes, but is not limited to: asphalt, concrete, Portland cement, brick, lumber, wallboard, roofing material, ceramic tile, pipe, glass, carpet and associated packaging.

E. "Deconstruction": The process of taking apart a structure with the primary goal of preserving the value of all useful building materials, so that they may be reused or recycled.

F. "Disposal": Acceptance of solid waste at a legally operating facility for the purpose of landfilling.

G. "Diversion": Activities that result in reducing the amount of waste disposed at a landfill. This can include source reduction activities, composting, recycling, and reuse.

H. "Inert Backfill Site": A location, other than inert fill or other disposal facility, to which inert waste is taken for the purpose of filling an excavation, shoring, or another soils engineering operation.

I. "Inert Fill": A facility that can legally accept inert waste such as asphalt and concrete exclusively for the purpose of disposal.

J. "Inert Debris/Inert Waste": Solid waste and recyclable materials that are source separated or separated for reuse, do not contain hazardous waste (as defined in CCR, Title 22, section 66261.3 et. seq.) or soluble pollutants at concentrations in excess of applicable water quality objectives, and do not contain significant quantities of decomposable waste. Inert debris may not contain more than 1% putrescible wastes by volume calculated on a monthly basis. Gravel, rock, soil, sand and similar materials, whether processed or not, that have never been used in connection with any structure, development, or other human purpose are not inert debris.

K. "Mixed Debris": Material that includes commingled recyclable and non-recyclable construction and demolition debris.

L. "Mixed Debris Processing Facility": A solid waste processing facility that accepts loads of mixed debris for the purpose of recovering re-usable and recyclable materials and disposing of the non-recyclable residual materials. See also Certified Mixed Debris Processing Facility.

M. "Permitted Waste Hauler": A company that possesses a valid and current permit from the City of Los Angeles to collect and transport solid waste from individuals or businesses in the City of Los Angeles.

N. "Recycling": The process of sorting, cleaning, treating and reconstituting materials for the purpose of using the altered form in the manufacture of a new product. Recycling does not include burning, incinerating, or thermally destroying solid waste.

   1. On-site Recycling Materials that are sorted and processed for use in an altered form in the project, (e.g. concrete is crushed for use as base for a parking lot on the site)
   2. Off-site Recycling Source-separated materials hauled to another location and used in an altered form in the manufacture of a new product.

O. "Recycling Facility": An operation that can legally accept materials for the purpose of processing the materials into an altered form for the manufacture of a new product. Depending on the types of materials accepted and operating procedures, a recycling facility may or may not be required to have a Solid Waste Facilities permit from the CIWMB or be regulated by the LEA.

P. "Reuse": Materials that are recovered for use in the same form. This includes materials that are reused on-site or off-site.

Q. "Salvage": Materials recovered for reuse or sale or donation to a third party.

R. "Source Reduction": Any action causing a net reduction in the generation of solid waste. Source reduction includes, but is not limited to, reducing the use of nonrecyclable materials, replacing disposable materials and products with reusable materials and products, reducing packaging, and reducing the amount of yard waste generated.

S. “Source-Separated Materials (Construction and Demolition Debris)”: Material that is sorted at the site of generation by individual material type for the purpose of reuse or recycling, i.e., loads of concrete that are source-separated for delivery to a base course recycling facility to be crushed into road base material. Note: The Contractor may be able to save money on collection fees for source-separated material. Source-separated material is not subject to the City’s 10% AB939 fee.

T. “Solid Waste”: shall mean waste that the CIWMB has deemed acceptable for disposal at a Class III Landfill and shall not include source-separated material.

U. “Transfer Station”: A facility that can legally accept solid waste for the purpose of temporarily storing the materials for re-loading onto other trucks and transporting them to a landfill for disposal, or recovering some materials for reuse or recycling. Transfer stations must be permitted by the CIWMB and regulated by the LEA.

1.4 DIVERSION REQUIREMENTS

A. The construction and demolition project shall reuse or recycle a minimum of 75% of the inert debris and 50% of the remaining construction and demolition debris generated by the project.

1.5 SUBMITTALS

A. Waste Management Plan (WMP): The Contractor shall conduct a site assessment and estimate the types and quantities of materials, under the project, that are anticipated for on-site or off-site processing, recycling, reuse, or disposal. See CDRG Section VII G, for a partial list of facilities that accept these materials for recycling.

1. After the contract is awarded and prior to the commencement of the project, the City project manager will schedule and attend a meeting with the Contractor to discuss the Contractor’s proposed WMP. This plan shall be submitted to allow the City and the Contractor an opportunity to develop a mutual understanding regarding the recycling and reuse requirements and programs.
2. Not more than 20 working days after the meeting, and before the commencement of the project, the Contractor shall prepare and submit to the City project manager a written WMP, Attachment A. The plan shall show a minimum 75% recycling for inert debris expected from the project and 50% recycling for the remaining C&D debris expected from the project. The Contractor shall submit the plan in the format provided herein as Attachment A, Parts I and II. Instructions for filling out the form are in Attachment A, ‘Instruction Sheet’. Work shall not begin until the project Engineer approves the WMP for the project.
3. If the Contractor expects a circumstance that the Contractor believes make it infeasible to comply with the Diversion Requirement, the Contractor may submit a written request for an exemption at the time the WMP is submitted. If the exemption request is not approved by the Engineer, the Contractor shall revise and resubmit a WMP.
4. If the City determines that it is infeasible for the Contractor to meet the Diversion Requirement due to unique circumstances, the City shall determine the maximum feasible diversion rate for each material and shall indicate this rate on the WMP submitted by the Contractor. The City shall return a copy of the WMP to the Contractor marked "Approved for Infeasible Exemption". The Contractor will be required to meet the maximum feasible diversion rates as approved by the City. If the Contractor fails to meet the revised rates the Contractor will be subject to the stipulated penalties. Exempt projects are required to keep and submit

all documentation for the project. This includes receipts, the WMP, SWDD Reports, and all supporting documentation as required herein.

5. The City's approval of the Contractor's WMP will not otherwise relieve the Contractor of responsibility for adequate and continuing control of pollutants and other environmental protection measures.

B. Solid Waste Diversion and Disposal Report (SWDD Report): With each submittal of the Contractor's application for progress payment, the Contractor shall prepare and submit to the inspector a written SWDD Report quantifying all material generated in the project which was either disposed, or diverted from disposal through reuse or recycling during the time period covered by the SWDD Report and progress payment. Part III of each SWDD Report is a cumulative history of the diversion and disposal for the project. The Contractor shall submit the report in the format provided herein as shown in Attachment B. Failure to submit the report and the supporting documentation shall render the application for progress payment incomplete and delay payment until the proper documentation is submitted. The supporting documentation includes manifests, weight tickets, receipts, reports, invoices, and other supporting documents specifically identifying the projects, the recyclables and solid waste generated by the project, and where the material was sent. Instructions for filling out the forms are in Attachment B, 'Instruction Sheet'. The final SWDD Report shall cover the complete time period of the project and shall contain, in Part III, a list of the total waste disposed and/or diverted for each reporting period. The final SWDD and supporting documentation must be submitted within 30 days of the end of the project.

C. Substitutions: Should the Contractor desire to use materials, equipment, or products that meet the requirements of these specifications but are more environmentally responsive, the Contractor shall submit these substitutions in accordance with "Substitutions and "Or Equal" Submittals" of the General Requirements.

1.6 PENALTY

A. If the diversion requirement has not been met, a per ton penalty will be applied to the disposed material over that allowed in the approved WMP.

B. The penalty will be calculated as follows: Tons over that allowed in the approved WMP times the per-ton penalty in effect at the time the contract was awarded. The penalty may not exceed the total payment retention for the project.

C. The penalty is $100 per ton.

D. The recommended penalty will be determined by the Bureau of Contract Administration and shall be considered by the Board of Public Works at the time of the project closeout.

E. The Contractor who has been assessed a penalty may submit a written request for a hearing. Upon receipt of the written request the awarding authority shall set the matter for hearing and notify the Contractor.

1.7 REUSE, SALVAGE, AND RECYCLING OPTIONS

A. Construction projects shall make use of as many reuse and salvage options as is feasible. One option is the California Materials Exchange (CalMAX), a free program sponsored by the CIWMB. The most recent issues of CDRG Section VII G, contains contact information for non-profit organizations, salvage facilities and other reuse organizations.

B. Recycling shall include both on-site and off-site recycling of source-separated materials, as well as mixed debris recycling efforts.

C. On-site recycling program shall produce a quality product to meet the specifications identified in the contract documents, subject to approval. The

Contractor shall estimate the amount of material to be used in the project and include a program for off-site recycling of any excess material that cannot be used in the project.

D. The Contractor shall develop and implement a program to include source separation of solid waste, to the greatest extent feasible, of the following types:
   1. Asphalt
   2. Concrete, concrete block, slump stone (decorative concrete block)
   3. Rock
   4. Wood (lumber)
   5. Green material (i.e. tree trimmings)
   6. Other materials, as appropriate, such as red clay brick, building fixtures, architectural details, dry wall, carpet, carpet padding, and corrugated cardboard

E. Mixed Debris Recycling: The Contractor should develop and implement a program to transport loads of commingled construction and demolition materials that cannot be feasibly source separated to a mixed debris recycling facility. A list of these facilities and their recycling rates is in the most recent issue of CDRG Section VII G.

F. Certified Processors: These facilities have facility recycling rates, established by the City of Los Angeles for each mixed debris waste stream. Mixed construction and demolition debris taken to these facilities are considered to have been recycled at the rate of the certified processing facility. For example, 100 tons of material taken to a facility with a recycling rate of 60% gives the project credit for 60 tons of recycling. A list of these facilities and their recycling rates is in the most recent issue of CDRG Section VII G.

G. Recycling, Reuse, Mixed Waste Processing and Salvage Facilities: The CDRG is incorporated herein by reference and contains information about processing, recycling, reuse and salvage facilities.

H. Revenue: Revenue or savings obtained from recycled, reused, or salvaged materials shall accrue to the Contractor unless otherwise noted in the Contract Documents. Note: The Contractor may be able to save money on collection fees for source-separated material. Source-separated material is not subject to the City's 10% AB939 fee. Permitted waste haulers that take mixed C&D debris to certified processors may be eligible for a rebate on part of the AB 939 fee.

I. AB 939 Fee: The AB 939 fee is assessed on all solid waste hauled within the City of Los Angeles in accordance with Section 66.32 of the Los Angeles Municipal Code.
   1. All solid waste haulers hauling material from City of Los Angeles locations must be permitted in accordance with Section 66.32 of the Los Angeles Municipal Code.
   2. Source-separated material is not assessed this fee.
   3. Permitted solid waste haulers may apply for a rebate for the recycled portion of the mixed waste taken to certified mixed debris processing facilities.

1.8 HAULING AND DISPOSAL OPERATIONS

A. Hauling: The Contractor is responsible for arranging the collection and hauling of C&D debris by a waste hauler that is permitted by the City of Los Angeles in accordance with Section 66.32 of the Los Angeles Municipal Code.

B. Recycling And Processing Facilities: The Contractor shall be responsible for transporting C&D debris to recycling or processing facilities. The Contractor shall be familiar with the requirements for acceptance of C&D materials at the recycling and processing facilities before the material is delivered. The most recent issue of CDRG Section VII G, includes a partial list of these facilities. Always call facilities in advance.

C. Disposal Facilities: The Contractor shall be responsible for transporting C&D debris that cannot be delivered to a recycling or processing facility, to a transfer station or disposal facility that can legally accept the materials for the purpose of disposal.

D. Site Disposal: The Contractor may not burn, bury, or otherwise dispose of solid waste on the project job-site.

(END OF SECTION)

(SEE ATTACHED)

Attachment A

WASTE MANAGEMENT PLAN (Part I-Inert Materials)

Project Title:	W. O. Number:	Date Submitted:
Name & Title of Responsible Person:	Signature:	

Methods

1) Hand-wrecking to recover salvageable materials to be used on - site
2) Hand-wrecking to recover salvageable materials to be taken off - site
3) Other (please describe)
4) Hauling inerts to an engineered fill
5) On-site concrete and asphalt crushing for use on - site
6) On-site concrete and asphalt crushing for use off - site
7) Source separating materials and hauling to recyclers

Material	Facility and Location	Method	Tons Diverted	Tons Disposed
RECYCLING/REUSE				
Asphalt				
Concrete				
Brick				
Other (Describe)				
Other (Describe)				
DISPOSAL				
Mixed inerts				
Other (Describe)				
Other (Describe)				
Other (Describe)				
CERTIFIED PROCESSING**				
Mixed inerts				
Mixed inerts				
Mixed inerts				
Mixed inerts				
DIVERSION AND DISPOSAL TOTALS =				

$$\text{Recycling} = \frac{\text{Total diversion}}{\text{Total diversion} + \text{Total disposed}} \times 100 = \text{Percent}$$

$$\text{Percent Recycling} = \frac{\qquad\qquad}{+} \times 100 =$$

**Recycling tonnages for debris taken to a certified processor = total tonnage taken to facility X recycling rate. Remaining tonnage counts as disposal. Example: 200 tons taken to a certified processor with a recycling rate of 0.63 (63%) yields 126 tons of diversion and 74 tons of disposal.

Attachment A

WASTE MANAGEMENT PLAN (Part II-All Other Materials)

W. O. No.:	Index No.:	Date Submitted:

Contractors Name:

Street address:

City, State, Zip:

Phone: Fax: Email:

Methods

1) Hand - wrecking to recover salvageable materials to be used on - site
2) Other (please describe)
3) Hand - wrecking to recover salvageable materials to be taken off - site
4) Source separating materials and hauling to recyclers

Material	Facility and Location	Method	Tons Diverted	Tons Disposed
RECYCLING/REUSE				
Glass				
Wood / Greenwaste				
Metal				
Cardboard				
Other (Describe)				
Other (Describe)				
DISPOSAL				
Mixed Waste				
Other (Describe)				
Other (Describe)				
CERTIFIED PROCESSING**				
Mixed Waste				
Mixed Waste				
Mixed Waste				
Mixed Waste				
DIVERSION AND DISPOSAL TOTALS =				

$$\text{Percent Recycling} = \frac{\text{Total diverted}}{\text{Total diverted} + \text{Total disposed}} \times 100$$

$$\text{Percent Recycling} = \frac{\qquad}{+} \times 100 =$$

**Recycling tonnages for debris taken to a certified processor = total tonnage taken to facility X recycling rate. Remaining tonnage counts as disposal. Example: 200 tons taken to a certified processor with a recycling rate of 0.63 (63%) yields 126 tons of diversion and 74 tons of disposal.

Attachment A - INSTRUCTION SHEET

1. **Please print very clearly or type.**
2. Attachment A includes**:** **Part I-**Inert Materials and **Part II-**Metal, Wood, and Other Material
3. The information required includes but is not limited to, the following:
   a. Contractor and project identification information
   b. Methods to be used for recycling, reusing, salvaging and disposing of materials. The method number should be chosen from the list at the top of Part I and Part II.
   c. Estimated quantities of **all** materials listed, in tons;
4. **Calculating recycling and disposal for mixed material taken to a certified processor: the total tons to be taken to certified processor times the recycling rate = amount to be recycled. Total to be taken to facility minus amount to be recycled = amount for disposal.
5. **Sample**

Project Title: Big St. Overcrossing	W. O. Number: 12341-0230709	Date Submitted: 09/09/99

Contractors Name: Acme Construction
Street address: 33333 Some St.
City, State, Zip: Anytown Ca. 90000
Phone: 213-555-5555 Fax: 213-555-1111 Email:

Methods

1) Hand - wrecking to recover salvageable materials to be used on - site
2) Hand - wrecking to recover salvageable materials to be taken off - site
3) Other (please describe)
4) Source separating materials and hauling to recyclers
5) Hauling inerts to an engineered fill

Material	Facility and Location	Method	Tons Diverted	Tons Disposed
	RECYCLING/REUSE			
Asphalt	BBB Crushing	4	200	
Concrete	BBB Crushing	4	55	
Brick	Joe's Salvage	2	6	
Other(Describe) Clean Gravel	The Best Landscaping	4	600	
	DISPOSAL			
Mixed waste	Joe's Landfill			1,000
Other				
	CERTIFIED PROCESSING**			
Mixed waste	Ben's Processing (Recycling Rate .81 or 81%)		8,100	1,900
Mixed waste				
	DIVERSION AND DISPOSAL TOTALS =		8,961	2,900

$$\text{Percent Recycling} = \frac{\text{Total diverted}}{\text{Total diverted} + \text{Total disposed}} \times 100 =$$

$$\text{Percent Recycling} = \frac{8{,}961}{8{,}961 + 2{,}900} \times 100 = 75.5\ \%$$

Attachment B

CITY OF LOS ANGELES/DEPARTMENT OF PUBLIC WORKS

SOLID WASTE DIVERSION AND DISPOSAL REPORT
PART I OF III - INERT WASTE MATERIAL

Project Title:	W. O. Number:	Date Submitted:	Progress Payment #
Company Name:		Daytime Phone Number:	
Index Number:		Department:	
Period Covered In This Report: From:		To:	

Material	Facility and Location	Tons diverted	Tons Disposed
RECYCLING/REUSE			
Asphalt			
Concrete			
Brick			
Other (Describe)			
Other (Describe)			
DISPOSAL			
Mixed inerts			
Other (Describe)			
Other (Describe)			
Other (Describe)			
CERTIFIED PROCESSING**			
Mixed inerts			
Mixed inerts			
Mixed inerts			
Mixed inerts			
=	**DIVERSION AND DISPOSAL TOTALS ***		

*Copy the Diversion and Disposal Totals to Part III Cumulative Project Recycling Report. Each Report needs to have the totals from every previous Disposal And Diversion Report listed on it, as well as the totals from this report.

**Recycling tonnages for debris taken to a certified processor = total tonnage taken to facility X recycling rate. Remaining tonnage counts as disposal. Example: 200 tons taken to a certified processor with a recycling rate of 0.63 (63%) yields 126 tons of diversion and 74 tons of disposal.

Attachment B

SOLID WASTE DIVERSION AND DISPOSAL REPORT
PART II OF III - ALL OTHER WASTE MATERIAL

W. O. Number:	Date Submitted:

Material	Facility and Location	Tons Recycled	Tons Disposed
RECYCLING/REUSE			
Metal			
Wood / Lumber			
Greenwaste / Landscaping			
Glass			
Cardboard			
Other (Describe)			
Other (Describe)			
DISPOSAL			
Mixed waste			
Other (Describe)			
Other (Describe)			
Other (Describe)			
CERTIFIED PROCESSING**			
Mixed waste			
Mixed waste			
Mixed waste			
Mixed waste			
=	**DIVERSION AND DISPOSAL TOTALS***		

*Copy the Diversion and Disposal Totals to Part III Cumulative Project Recycling Report. Each Report needs to have the totals from every previous Disposal And Diversion Report listed on it, as well as the totals from this report.

**Recycling tonnages for debris taken to a certified processor = total tonnage taken to facility X recycling rate. Remaining tonnage counts as disposal. Example: 200 tons taken to a certified processor with a recycling rate of 0.63 (63%) yields 126 tons of diversion and 74 tons of disposal.

Attachment B

INERT SOLID WASTE DIVERSION AND DISPOSAL REPORT
PART III OF III - PROJECT CUMULATIVE TOTAL

W. O. Number:				Date Submitted:			
Period Beginning	Period Ending	*Period Disposal	Cumulative Project **D**isposal	*Period Diversion	Cumulative Project Diversion, **R**	Cumulative Waste **G**enerated **D** + **R**	Cumulative Recycling % (**R/G**)100
INERT WASTE MATERIAL CUMULATIVE PROJECT HISTORY							
ALL OTHER WASTE MATERIAL CUMULATIVE PROJECT HISTORY							
Name & title of person responsible for the information in this form:					Signature:		

*From appropriate Part I or II during each period.

Each Attachment B Part III Report needs to have the Diversion and Disposal Totals from every previous Disposal And Diversion Report listed in it, as well as the totals from this report.

ATTACHMENT B - INSTRUCTION SHEET

Contractor may contact the Solid Resources Citywide Recycling Division of the Bureau of Sanitation at (213) 485-2260 for information about recycling construction and demolition materials.

Reporting Disposal and Diversion of Solid Waste. With each submittal of Contractor's application for progress payment, the Contractor shall prepare and submit to the inspector a written Solid Waste Diversion and Disposal Report quantifying all material generated in the project that was either disposed in landfills or diverted from disposal through recycling or reuse. Submit the report in the format provided as Attachment B. The report contains three sections. All three sections must be submitted each time. As indicated on the Solid Waste Diversion and Disposal Report:

PART I

1. Report disposal, reuse, or recycling in tons. Indicate zero (0) if there is no quantity to report for a type of material.

2. Indicate all locations to which materials are delivered for reuse, recycling, or disposal. These locations can include:

    a. Source Separated Recycling Facilities
    b. Mixed Debris Recycling Facilities
    c. Class III Landfills
    d. Inert Backfill Sites
    e. Salvage yards
    f. Transfer Stations

3. The Solid Waste Diversion and Disposal Report must be accompanied by: legible copies of weigh tickets, receipts, or invoices that specifically identify the project generating the material. Said documents must be from recyclers and/or disposal site operators that can legally accept the materials.

4. Indicate the Project title; City Work Order Number; Progress Payment Number; Item Number, the City Department for which the work in being done; the name of the company completing the ‘Solid Waste Diversion and Disposal Report’ and compiling supporting documentation; the printed name, title signature, and daytime phone number of the person responsible for the information on the form; the beginning and ending dates of the period covered; and the date that the ‘Solid Waste Diversion and Disposal Report’ is completed.

5. If materials are taken to a facility for which weigh tickets, receipts, or invoices are not available, Contractor shall provide documentation *on company letterhead* identifying the address to which materials were taken, name of owner/operator, type of materials, tons disposed, and the specific project generating the materials.

6. If materials are used on site, Contractor shall provide documentation *on company letterhead* identifying the type and tons of materials being reused or recycled on site and the specific project generating the materials.

SECTION 01573
EXCAVATION SHORING, FORMS, AND FALSEWORK

1.1 THE REQUIREMENT

A. The CONTRACTOR shall have at the Worksite, copies or suitable extracts of: Construction Safety Orders, Tunnel Safety Orders and General Industry Safety Orders issued by the State Division of Industrial Safety. The CONTRACTOR shall comply with provisions of these and all other applicable laws, ordinances, and regulations.

B. Before excavating any trench 1.5m (5 feet) or more in depth, the CONTRACTOR shall submit a detailed plan to the CITY showing the design of shoring, bracing, sloping, or other revisions to be made for the Workers' protection from the hazard of caving ground during the excavation of such trench. The plan and calculations shall be prepared by a California registered Civil or Structural ENGINEER. No excavation shall start until the ENGINEER has accepted the plan and the CONTRACTOR has obtained a permit from the State Division of Industrial Safety. A copy of the permit shall be submitted to the ENGINEER and INSPECTOR.

C. Whenever work under the Contract involves trench excavation five (5) feet or more in depth, or any kind of shoring, the CONTRACTOR shall design and prepare plans for the required shoring, bracing, and sloping. The shoring plans and calculations shall also be submitted to the City of Los Angeles Department of Building and Safety to obtain required plan check and permit, in advance of excavation to ensure workers' protection from the hazard of caving ground during the excavation and to support adjacent private property with zero lateral and vertical deflection of the shoring system. All costs therefore shall be included in the price named in the Contract for completion of the Work as set forth in the Contract Documents.

D. Nothing in this Section shall be deemed to allow the use of a shoring, sloping, or other protective system less effective than that required by the CAL/OSHA Construction Safety Orders.

E. Nothing in this Article shall be construed to impose liability on the CITY, ENGINEER, INSPECTOR, or any of their officers, agents, representatives, or employees.

F. The CONTRACTOR shall secure approval, in advance, from authorities concerned for the use of any bridges proposed by it for public use. Temporary bridges shall be clearly posted as to load limit and speed limits, with signs and posting conforming to current requirements set forth in the Traffic Manual published by the California Department of Transportation, covering "signs". This manual shall also apply to the street closures, barricades, detours, lights, and other safety devices required.

G. The INSPECTOR will provide a competent person trench/excavation certification form to the CONTRACTOR. It shall be completely filled out before any worker has access to trench or excavation and returned to the INSPECTOR before the end of the first working day. The CONTRACTOR shall certify by this form the name of the competent person administering the Work, the soil classification, and the type of excavation protective system provided and/or installed.

H. The CONTRACTOR shall completely fence all excavations to provided protection against anyone falling into the excavation and to the satisfaction of the INSPECTOR. The fencing shall be in place at all times except when workers are present and actual construction operations are in progress.

I. The CONTRACTOR shall comply fully with the requirements of the CAL/OSHA Construction Safety Orders, regarding the design of forms, false work, and shoring for concrete placement, and the inspection of same prior to placement of concrete. Where the Construction Safety Orders requires the services of a Civil or Structural Engineer registered in the State of California to approve design calculations and Working Drawings of the false work or shoring system, to inspect such system prior to placement of concrete, the CONTRACTOR shall employ such engineer for these purposes, and all costs therefore shall be included in the price named in the Contract for completion of the Work as set forth in the Contract Documents.

J. No Work under this Section shall start until the ENGINEER has accepted the plans and the CONTRACTOR has obtained all permits required and furnished a copy to the ENGINEER and the INSPECTOR.

K. Contractor shall limit the maximum deflection on the shoring design to 1/2 inch.

1.2 THE REQUIREMENT

A. The CONTRACTOR shall have at the Worksite, copies or suitable extracts of: Construction Safety Orders, Tunnel Safety Orders and General Industry Safety Orders issued by the State Division of Industrial Safety. The CONTRACTOR shall comply with provisions of these and all other applicable laws, ordinances, and regulations.

B. Before excavating any trench 1.5m (5 feet) or more in depth, the CONTRACTOR shall submit a detailed plan to the CITY showing the design of shoring, bracing, sloping, or other revisions to be made for the Workers' protection from the hazard of caving ground during the excavation of such trench. The plan and calculations shall be prepared by a California registered Civil or Structural ENGINEER. No excavation shall start until the ENGINEER has accepted the plan and the CONTRACTOR has obtained a permit from the State Division of Industrial Safety. A copy of the permit shall be submitted to the ENGINEER.

C. The INSPECTOR will provide a competent person trench/excavation certification form to the CONTRACTOR. It shall be completely filled out before any worker has access to trench or excavation and returned to the INSPECTOR before the end of the first working day. The CONTRACTOR shall certify by this form the name of the competent person administering the Work, the soil classification, and the type of excavation protective system provided and/or installed.

D. The CONTRACTOR shall completely fence all excavations to provided protection against anyone falling into the excavation and to the satisfaction of the INSPECTOR. The fencing shall be in place at all times except when workers are present and actual construction operations are in progress.

E. The fencing material shall be chain link fabric or welded wire fabric (6x6-W9xW9 minimum) and 1.5 m (5 feet) high, constructed according to one of the following:

1. Tensioned fencing material and have top and bottom tension wires securely fastened to driven steel posts or other equally rigid elements at a maximum spacing of 3.6m (12 feet); or

2. Untensioned fencing materials securely fastened to extended trench shoring elements at a maximum spacing of 2.4m (8 feet) and fastened to continuous top and bottom rails constructed of nominal 50mm x 100mm (2 in x 4 in) lumber or equally rigid material. Framed panels with suitable supporting elements fastened together to form a continuous fence may also be used.

F. Payment for performing all Work necessary to provide safety measures shall be included in the prices bid for other items of work except where separate bid items for excavation safety are provided, or required by law.

(END OF SECTION)

SECTION 01581
PROJECT SIGNS

1.1 THE REQUIREMENT

A. The names, addresses and specialties of CONTRACTORS, Subcontractors, architects, or engineers may be displayed on removable signs. The size and location shall be subject to the ENGINEER'S approval. Commercial advertising matter shall not be attached to or painted on the surfaces of buildings, fences, canopies, or barricades.

B. TIME and INFORMATION type construction notice signs (2 each) per Standard Plan S-791-1 are required. The Inspector will determine appropriate location(s). The time for the TIME sign and the telephone number for the INFORMATION sign will be furnished by the ENGINEER at the time of construction.

C. Two each TYPE IV CREDIT signs per Standard Plan S-792-0 are required. The INSPECTOR will determine the appropriate location(s). The information for the sign will be furnished by the ENGINEER at the time of construction.

D. One single sign for California Proposition 1 and County Safe Clean Water program is required. The sign shall consist of the Proposition 1 and California Water Boards and County Safe Clean Water Program logos, to be furnished by the CONTRACTOR. The CONTRACTOR shall submit a shop drawing of the sign and logo(s) for approval. The sign shall be at least 4' tall by 8' wide, mounted on two 4'x4' posts. The INSPECTOR will determine the appropriate location(s).

(END OF SECTION)

SECTION 01601
BUY CLEAN CALIFORNIA ACT

1.1 THE REQUIREMENT

A. For projects with bid due dates on or after 7/1/2021 that include eligible materials, CONTRACTOR shall provide current facility specific Environmental Product Declarations (EPDs) of eligible materials **and** meet the State of California maximum limits for Global Warming Potential (GWP) as listed by the State's Department of General Services after project award. Additional information regarding GWP limits may be found at the following website: https://www.dgs.ca.gov/PD/Resources/Page-Content/Procurement-Division-Resources-List-Folder/Buy-Clean-California-Act

B. Eligible Materials:
   1. Steel: This includes structural steel (hot-rolled sections, hollow structural sections, and plates) and carbon steel reinforcement used in concrete or masonry.
   2. Flat glass
   3. Mineral wool board insulation

C. A submitted facility-specific Environmental Product Declaration (EPD) must be a current Type III as defined by the International Organization for Standardization (ISO) Standard 14025 and has been 3rd Party verified following applicable Product Category Rules (PCRs). Credentials of 3rd Party showing them to be subject matter experts must be provided by the CONTRACTOR upon request. Minimum stage of coverage for EPDs shall consist of the production life cycle (i.e., product stage) or "cradle to gate". PCR shall be as identified by California Department of General Services for the Buy Clean California Act (BCCA).

D. The EPDs shall be submitted with each eligible material submittal for the product(s) under the technical specification sections for approval by the ENGINEER. Depending on the number of facilities, and product types, more than one (1) eligible material submittal may be required. Once approved, the CONTRACTOR must also provide a copy of the approved EPDs with the payment request to the INSPECTOR. Where a submittal is conditionally approved, pending submission of required EPD, the applicable restrictions as noted below shall apply.

E. Restrictions:
   1. For projects with bid due dates on or after 7/1/2021, the CONTRACTOR shall not install any eligible materials or incorporate into the work in any way until the required facility specific EPDs have been provided and approved, unless otherwise agreed upon by the ENGINEER. Payment for specific eligible material will be withheld until the EPDs for these materials are approved by the ENGINEER and submitted along with the progress payment requests.
   2. The CONTRACTOR may be assessed liquidated damages for failure to complete the project within the time fixed by the terms of the contract resulting from Contractor delays associated with submission and approval of the required EPDs.

F. Optional Eligible Materials:

The following materials are being considered for addition to future Eligible Materials list by the City of Los Angeles. As such, Article E above does not apply to these materials at this time. Furthermore, when using one of the Optional Eligible Materials listed in this Article F below, the CONTRACTOR may submit either facility specific EPDs as noted on Article C above or an industry average EPD. The Optional Eligible Materials are as follows:

1. Concrete (i.e., corresponding mix designs).

(END OF SECTION)

SECTION 01611
GUARANTY / WARRANTY

1.1 THE REQUIREMENT

A. The CONTRACTOR shall and does hereby warrant and guaranty that all work executed under this Contract will be free from defects of materials and workmanship for a period of one (1) year from the date of Final Field Acceptance of the project as evidenced by the issuance of a “Statement of Completion” by the Inspector, except for certain specific items of Work, materials and equipment requiring a guaranty or warranty for a greater period of time as may be required elsewhere in the Contract Documents. In the event, however, that portions of the Work are sufficiently complete to allow use or occupancy by the CITY in the manner and for the purposes intended prior to final completion and acceptance of the project, the guarantee period will commence on the date shown on the “Statement of Partial Completion.”

B. The CONTRACTOR hereby agrees to indemnify and save harmless the CITY, and their officers, agents and employees against and from all claims and liability arising from damage and injury due to said defects. The CONTRACTOR shall repair or replace, at no cost to the CITY, any and all such defective Work and all other Work damaged thereby, which becomes defective during the term of the above-mentioned guaranties and warranties.

C. Within thirty (30) calendar days prior to completion of all Work, the CONTRACTOR shall submit to the CITY original copies of all manufacturers’ product guaranties and warranties covering all supplied and installed equipment and, where applicable, systems.

D. In addition to the requirements of INSURANCE, Contract Bonds, of the GENERAL CONDITIONS, it shall be understood that the Surety for the faithful performance bond, submitted in conformance with the terms of the Contract for this project, is liable on its bond for all obligations of the CONTRACTOR including guaranty provisions. The “Performance Bond” shall remain in effect until the end of the guarantee period.

E. The CONTRACTOR shall, within twenty-four (24) hours of notice from the ENGINEER of any Work not in accordance with the requirements of the Contract, or any defects in the Work, commence and prosecute with due diligence all work necessary to fulfill the terms of this Section and to complete the Work within a period of time as approved by the ENGINEER. The CONTRACTOR shall notify the ENGINEER of the repair schedule before commencing the repairs and notify the ENGINEER to arrange for inspection. The CONTRACTOR shall submit a written report of the defect and methods of correction. In the event of failure by the CONTRACTOR and/or its Surety to respond to the notice or to complete the Work required by this Section within the time specified, the CITY shall proceed to have such Work done at the CONTRACTOR's expense. The CONTRACTOR or its Surety shall promptly reimburse the CITY all direct and indirect cost associated with performing this Work.

F. Repairs, replacements or changes made under the requirements of this Section shall be warranted for the specified guarantee period, but no less than one year, beginning on the date of acceptance of the repairs, replacements or changes.

(END OF SECTION)

SECTION 01630
SUBSTITUTIONS AND "OR EQUAL" SUBMITTAL

1.1 THE REQUIREMENT

A. The CONTRACTOR may supply any of the materials specified or offer an equivalent. The ENGINEER shall determine whether the material offered is equivalent to that specified. The CONTRACTOR shall make all "Or Equal" submittals within thirty (30) calendar days after issuance of Notice to Proceed. Any request or submittal received after the specified period will be considered as NOT EQUAL to that so specified and will be processed as a substitution described hereinafter.

B. Whenever any particular material, process, or equipment is indicated by patent, proprietary or brand name, or by name of manufacturer, such wording is used for the purpose of facilitating its description and shall be deemed to be followed by the words ‘or equal.’ A listing of materials is not intended to be comprehensive, or in order of preference. The CONTRACTOR may offer any material, process, or equipment considered to be equivalent to that indicated. The substantiation of offers shall be submitted as provided in the Contract Documents.

C. The CONTRACTOR shall, at its expense, furnish data concerning items offered by it as equivalent to those specified. The CONTRACTOR shall have the material tested as required by the ENGINEER to determine that the quality, strength, physical, chemical, or other characteristics, including durability, finish, efficiency, dimensions, service, and suitability are such that the items will fulfill its intended function.

D. Test methods shall be subject to the approval of the ENGINEER. Test results shall be reported promptly to the ENGINEER, who will evaluate the results and determine if the substituted items are equivalent. The ENGINEER’S findings shall be final. Installation and use of substituted items shall not be made until approved by the ENGINEER.

E. All manufacturers' data submitted to the ENGINEER for review and acceptance shall clearly identify each proposed substitute with the corresponding Contract Drawing detail and Specification Section. If the ENGINEER decides to accept for use in the Project a material, process or article which is not the equal of that specified, substitution shall be made in the manner described in CHANGES AND EXTRA WORK of the GENERAL CONDITIONS, with a credit to the CITY for the difference in value.

F. The ENGINEER shall determine whether the material offered is equivalent to that specified. Any revision to structures, piping, mechanical, electrical, instrumentation, or any other work made necessary by such substitution must be approved by the ENGINEER, and the entire cost both direct and indirect of these revisions shall be borne by the CONTRACTOR.

G. Any materials, process, or article may be requested as a substitution by the CONTRACTOR, in lieu of that specified, under the following conditions:

1. Requests must be submitted in writing and in the manner described in SHOP DRAWINGS / SUBMITTALS of these GENERAL REQUIREMENTS.

2. Requests must be submitted thirty (30) calendar days prior to starting the work, as established by the ENGINEER, so as not to cause any delay in completion of the Project. No other request will be considered after expiration of the period specified, except that in exceptional cases where it is determined to be in the best interest of the CITY, as approved by the ENGINEER.

3. The CONTRACTOR agrees to pay for all Engineering and design services, if required, to make all changes and adjustments in material and work of all trades directly or indirectly affected by the substitute, to the satisfaction of the ENGINEER, at no cost to the CITY.

4. All requests for substitution shall be made through the CONTRACTOR. Submissions by the CONTRACTOR shall imply the CONTRACTOR'S approval of such substitution.

5. No requests for substitutions will be considered during the bidding period.

6. The CONTRACTOR shall furnish adequate data with each request for approval of a substitute to enable the ENGINEER to evaluate the proposed substitution.

7. If a substitute offered by the CONTRACTOR is not found to be equal to the specified material, then CONTRACTOR shall furnish and install the specified material.

8. The specified Contract completion time shall not be affected by any circumstance developing from the provisions of this Section.

(END OF SECTION)

SECTION 01711
SITE INVESTIGATION

1.1 THE REQUIREMENT

A. CONTRACTOR shall investigate the Jobsite prior to Bid and during construction to ascertain all conditions affecting necessary procedures and sequencing of the Work operations in the execution of the Contracted Work in accordance with the requirements shown, herein and elsewhere.

1. CONTRACTOR shall report to the ENGINEER, prior to the Bid, any adverse condition(s), which would affect the proper execution of the Contracted Work and shall not proceed until instructed by the ENGINEER. Except as provided in GENERAL REQUIREMENTS Section 01253 – DIFFERING SITE CONDITION, failure to report any such conditions shall constitute acceptance of all site conditions, and any required removal, repair, or replacement caused by unsuitable conditions shall be performed by the CONTRACTOR at its sole cost and expense.

2. Start of Contracted Work at the Jobsite shall imply CONTRACTOR'S acceptance of job conditions.

B. Work Determination: CONTRACTOR shall satisfy itself regarding job/site conditions, the nature and types of work to be performed and shall be responsible for the determination of all classes of work to be accomplished at the Jobsite or at the manufacturer's plant.

C. Allotted Working Space: CONTRACTOR shall limit work operations to the "working site" or "Jobsite" or "Worksite," and areas immediately adjacent thereto, as shown on the Contract Drawings, specified or authorized by the CITY ENGINEER.

1.2 UTILITY LOCATION

A. Unless specified otherwise, prior to commencing any excavation or other work, it is the CONTRACTOR'S responsibilities to verify and/or determine the location and the depth of underground main distribution conduits, such as, but not limited to, water, gas, sewer, storm water, electric power, oil, telephone or cable television, in the area which is known, or reasonably should be known, to contain such subsurface installations. CONTRACTOR shall search known substructure records, contact and verify with the utility companies, and pothole existing subsurface installation to determine their locations and elevation, at no additional cost to the CITY as part of the Contracted Work and requirements of the Los Angeles City Ordinance No. 150,478.

B. Coordination

1. The CONTRACTOR is advised that the Drawings usually depict the location of substructures as they existed when the project was designed. Present-day information may indicate that new facilities may have been added, or are going to be added, or that some of those substructures are now, or will be, relocated, abandoned, removed, lowered, raised, blanketed, encased, enlarged, protected, or altered in some other way. The CONTRACTOR shall carefully examine the proposed construction

site prior to Bid and during construction for any evidence of recent surfacing of excavations, or the possible conflict with surface or aerial installations, and the latest substructure maps, and bid accordingly. If further information or clarification is desired, CONTRACTOR is urged to immediately contact the following:

a. The appropriate utility companies;

b. The appropriate District Office of the Bureau of Engineering; and/or

c. City of Los Angeles, Utility Coordination Section of the Project Award and Control Division
1149 S. Broadway, Suite 140,
Los Angeles, CA 90015
(213) 847-0624.

2. Review and verify with the information indicated on the Contract Drawings, the Summary of First Notice Replies (see Attachment No. 6) and the information provided in the GENERAL REQUIREMENTS Section 01112 - DESCRIPTION OF WORK.

1.3 Utility Protection

A. The CONTRACTOR shall not interrupt the service function or disturb the support of any utility without authority from the owner or order from the CITY. All valves, switches, vaults, and meters shall be maintained readily accessible for emergency shutoff.

B. Where protection is required to ensure support of utilities located as shown on the Plans or in accordance with Subsection 1.2 – Utility Location, above, the CONTRACTOR shall, unless otherwise provided, furnish and place the necessary protection at its expense.

C. Upon learning of the existence and location of any utility omitted from or shown incorrectly on the Plans, the CONTRACTOR shall immediately notify the ENGINEER in writing. When authorized by the ENGINEER, support or protection of the utility will be paid for as provided in SECTION 01254 – CHANGE ORDERS of the GENERAL REQUIREMENTS.

D. The CONTRACTOR shall immediately notify the ENGINEER and the utility owner if any utility is disturbed or damaged. The CONTRACTOR shall bear the costs of repair or replacement of any utility damaged if located as noted above, in Subsection 1.2 – Utility Location.

E. When placing concrete around or contiguous to any non-metallic utility installation, the CONTRACTOR shall, at its expense:

1. Furnish and install a 50 mm (2 inch) cushion of expansion joint material or other similar resilient material; or

2. Provide a sleeve or other opening which will result in a 50 mm (2 inch) minimum-clear annular space between the concrete and the utility; or

3. Provide other acceptable means to prevent embedment in or bonding to the concrete.

1.4 Utility Removal

A. Unless otherwise specified, the CONTRACTOR shall remove all interfering portions of utilities shown on the Plans or indicated in the Bid documents as “abandoned” or “to be abandoned in place”. Before starting removal operations, the CONTRACTOR shall ascertain from the CITY whether the abandonment is complete, and the costs involved in the removal and disposal shall be included in the Bid for the items of work necessitating such removals.

1.5 Utility Relocation

A. When feasible, the owners responsible for utilities within the area affected by the Work will complete their necessary installations, relocations, repairs, or replacements before commencement of work by the CONTRACTOR. When the Plans or Specifications indicate that a utility installation is to be relocated, altered, or constructed by others, the CITY will conduct all negotiations with the owners and work will be done at no cost to the CONTRACTOR, except as provided in SSPWC Section 301-1.6. Utilities which are relocated in order to avoid interference shall be protected in their position and the cost of such protection shall be included in the Bid for the items of Work necessitating such relocation.

B. After award of the Contract, portions of utilities which are found to interfere with the Work will be relocated, altered or reconstructed by the owners, or the ENGINEER may order changes to the Work to avoid interference. Such changes will be paid for in accordance with SECTION 01254 – CHANGE ORDERS of the GENERAL REQUIREMENTS. However, for interfering City owned utilities identified on the Plans including but not limited to sewers, storm-drains, traffic signal or streetlight conduits and appurtenances, their restoration, alteration, or reconstruction shall be performed by the CONTRACTOR and the associated cost shall be included in the CONTRACTOR’s bid.

C. When the Plans or Specifications provide for the CONTRACTOR to alter, relocate, or reconstruct a utility, all costs for such work shall be included in the Bid for the items of work necessitating such work. Temporary or permanent relocation or alteration of utilities requested by the CONTRACTOR for its convenience shall be its responsibility and it shall make all arrangements and bear all costs.

D. The utility owner will relocate service connections as necessary within the limits of the Work or within temporary construction or slope easements. When directed by the ENGINEER, the CONTRACTOR shall arrange for the relocation of service connections as necessary between the meter and property line, or between a meter and the limits of temporary construction or slope easements. The relocation of such service connections will be paid for in accordance with the provisions of SECTION 01254 – CHANGE ORDERS of the GENERAL REQUIREMENTS. Payment will include the restoration of all existing improvements which may be affected thereby. The CONTRACTOR may agree with the owner of any utility to disconnect and reconnect interfering service connections. The CITY will not be involved in any such agreement.

1.6 Utility Delays

A. The CONTRACTOR shall notify the ENGINEER of its construction schedule insofar as it affects the protection, removal, or relocation of utilities. Said notification shall be included as part of the construction schedule required in SECTION 01321 - CONTRACTOR'S CONSTRUCTION SCHEDULE AND REPORTS OF THE GENERAL REQUIREMENTS. The CONTRACTOR shall notify ENGINEER in writing of any subsequent changes in the construction schedule which will affect the time available for protection, removal, or relocation of utilities.

B. The CONTRACTOR will not be entitled to damages or additional payment for delays attributable to the utility relocations or alterations if correctly located, noted, and completed in accordance with 1.2 Utility Location, above.

C. The CONTRACTOR may be given an extension of time for unforeseen delays attributable to the unreasonably protracted interference by utilities in performing Work correctly shown on the Plans

D. The CITY will assume responsibility for the timely removal, relocation, or protection of existing main or trunkline utility facilities within the area affected by the Work if such utilities are not identified in the Contract Documents. The CONTRACTOR will not be assessed liquidated damages for any delay caused by failure of CITY to provide for the timely removal, relocation, or protection of such existing facilities.

E. If the CONTRACTOR sustains loss due to delays attributable to interferences, relocations, or alterations not covered by Subsection 1.2 - Utility Location, above, which could not have been avoided by the judicious handling of forces, equipment, or plant, there shall be paid to the CONTRACTOR such amounts as the ENGINEER may find to be fair and reasonable compensation for such part of the CONTRACTOR'S actual loss as was unavoidable and the CONTRACTOR may be granted an extension of time.

F. Payment to the CONTRACTOR for actual loss due to a protracted utility delay shall be calculated based on wage increases, price increases of material and equipment, additional insurance costs and actual direct costs of maintaining the Worksite incurred because of the utility delay.

1.7 Utility Cooperation.

A. When necessary, the CONTRACTOR shall so conduct its operations as to permit access to the Worksite and provide time for utility work to be accomplished during the progress of the Work.

(END OF SECTION)

SECTION 01712
SUBSURFACE DATA

1.1 THE REQUIREMENT

A. All soil and test hole data, water table elevation, and soil analyses shown on the Drawings or included in the Specifications / Project Manual apply only at the location of the test holes and to the depth indicated. Test reports for test holes, which have been drilled, are available for inspection at the office of the ENGINEER, or contained in the Geotechnical Report for the project. Any additional subsurface exploration shall be done by the CONTRACTOR at their own expense. The indicated elevation of the water table is that level at the date the test hole data was obtained. It is the CONTRACTOR'S responsibility to determine and allow for the elevation of groundwater at the date of Project construction. A difference in elevation between the ground water shown in soil boring logs and groundwater actually encountered during construction will not be considered as a basis for extra work.

B. Refer to Attachment 1 for the geotechnical report, limited site investigation, and Ground Penetrating Radar (GPR) FINDINGS. In addition, the CONTRACTOR shall use the State Water Resources Control Board's Geo Tracker for subsurface data.
http://geotracker.waterboards.ca.gov/

(END OF SECTION)

SECTION 01721
MOBILIZATION

1.1 THE REQUIREMENT

A. General

Whether Mobilization is included as a Contract Bid Item in the Bid Proposal Form or specified as part of the lump sum in the Contract Documents, the cost of labor, equipment, materials and incidentals for doing all the work in mobilization (in advance of construction operations and not directly attributable to any specific bid item) shall be included in the Contract Price Breakdown and progress payment estimate. If there is no mobilization bid item the CONTRACTOR shall submit to the INSPECTOR for approval the Contract Price Breakdown with the amount established for mobilization.

Mobilization shall include, but not be limited to, the following items, all as required for the proper performance and completion of the Work:

1. Obtaining all permits, licenses, insurance, and bonds. Providing copies to the ENGINEER.

2. Moving onto the Jobsite all of CONTRACTOR'S plant and equipment as required.

3. Erecting temporary buildings and other construction facilities.

4. Installing temporary construction power and wiring.

5. Establishing fire protection system for its temporary facilities.

6. Developing construction water supply.

7. Providing field office trailers for the CONTRACTOR, complete with all specified equipment, furnishings and utility services.

8. Providing sanitary facilities or connecting to onsite sanitary facilities as specified.

9. Providing for potable water facilities as specified. This includes a means by which all on site CONTRACTOR, Subcontractor or supplier personnel can wash their hands with soap.

10. Arranging for, and erection of, CONTRACTOR'S work and storage yards and sheds.

11. Submitting all required Subcontractor insurance certificates and bonds.

12. Posting all CAL/OSHA required notices and establishment of safety programs.

13. Having the CONTRACTOR'S representative at the Jobsite full time.

14. Furnishing of Construction Schedule, Contract Price Breakdown and Submittal Schedule.

15. Erecting all temporary fencing including removal and disposal of existing temporary fencing.

16. Erecting CONTRACTOR signs. The names, addresses, and specialties of CONTRACTORS, subcontractors, engineers or architects may be displayed on removable signs. The size and location shall be subject to the ENGINEER'S approval. Commercial advertising matter shall not be attached to or painted on the surfaces of buildings, fences, canopies or barricades.

17. Installing Building Credit signs and Advance Construction Notice signs. The Building Credit sign shall be submitted to the ENGINEER for approval prior to installation. Refer to GENERAL REQUIREMENTS Section 01581 – Project Signs, for additional requirements.

18. Providing an air-conditioned meeting room with a conference table, a minimum of 10 chairs and utilities for construction meetings within the CONTRACTOR'S field office.

19. Furnishing and set-up of field office(s) for the ENGINEER and INSPECTOR. If it is necessary to relocate the INSPECTOR'S job office to a new facility or relocation during the course of the Contract provide the required labor and equipment. The new facility shall be properly equipped and conform to the requirements shown in Subsection B.2, Field Offices herein. The CONTRACTOR shall obtain the ENGINEER'S approval of the new location thirty (30) days in advance.

B. Field Offices For The Inspector And The Engineer

1. Unless specified otherwise, the CONTRACTOR shall, at no cost to the CITY, furnish, install, maintain, and remove all temporary light, telephone, power and water (including piping, wiring, lamps and other equipment necessary for the field offices).

2. The CONTRACTOR shall furnish the ENGINEER and the INSPECTOR, for the duration of the Contract, [and through the STARTUP ASSISTANCE period,] at no additional cost to the CITY, a furnished field office with janitorial services and maintenance agreements for all equipment provided under this Section. This office shall have a minimum floor space of [#] square feet, at least [#] door(s), and window area of not less than [#] square feet. All exterior doors and windows shall be provided with screens. All exterior doors shall be provided with door handles with double deadbolt locks and the CONTRACTOR shall provide the INSPECTOR [#] keys as requested by the INSPECTOR. This field office shall be furnished as follows:

   a. Two plan table(s), two standard 5-foot double pedestal desk with a drawer suitable for holding files, two chairs, two drafting stool, one plan rack, two - 4 drawer filing cabinet suitable to hold legal or letter size hanging file folders, two storage cabinet with a minimum of 4 adjustable shelves.

b. Heating and air conditioning of sufficient capacity shall be provided at no expense to the CITY to adequately control the temperature at all times.

c. Bottled drinking water shall be provided within the office. Sanitary facilities shall be provided directly adjoining the office for the sole use of the ENGINEER and the INSPECTOR. Sanitary facilities shall include a toilet and wash basin with hot and cold running water.

d. Extended area, non-coin operated telephone service shall be provided within the office area. The installation shall include two individual telephone lines, two cordless telephones, one answering machines (one for each staff line), one facsimile machine for each Section.

e. Two cellular phones units and the services of an established commercial cellular phone service with minimum of 400 free minutes per month.

f. One console type, dry, indirect electrophotographic process network-capable copier/printer/scanner capable of 60 letter size copies per minute. Copier shall be able to copy 11" X 17" ledger size paper and be able to reduce to 65% and enlarge to 154%. Copier shall have a sorter/finisher with a staple cartridge and have additional cassettes for letter, legal, ledger-size paper. The copier's primary paper supply shall be 8.5" X 11" size. The copier shall be installed new or like new in good working order and the CONTRACTOR shall maintain the unit in operating condition throughout the life of the Project.

g. One Color inkjet all-in-one machine capable of printing, copying, and scanning up to 11” X 17”. Printing shall be a minimum of 35 pages per minute in black and 28 pages per minute in color. Resolution shall be a minimum of 6000 x 1200 dpi. A 50-sheet document feeder shall be included. All toner cartridges shall be provided by the contractor for the duration of the project.

h. Four Duplex convenience outlets for electrical power.

i. Two Outdoor lighting fixture with 300-Watt bulb to effectively light the area around the office facility.

j. Two Maintenance and service agreements for all office equipment during the contract period.

k. The CONTRACTOR shall provide janitorial services daily for the field offices for the duration of the Contract Work.

l. Any computer equipment or software furnished under this section or under an Allowance for City Field Offices shall be the property of the City at the end of the project.

m. The CONTRACTOR shall provide a high-speed internet connection for the duration of the Contract and through the start-up assistance period.

C. Temporary Construction Utilities

1. Construction Water:

a. The CONTRACTOR is responsible for providing potable water to the job-site for construction activities. The CONTRACTOR shall meter water usage and pay for the cost of water consumption. The CONTRACTOR shall make arrangements with the servicing water utility company. A backflow preventer shall be provided as per the Plumbing Code.

2. Construction Power:

a. The CONTRACTOR shall provide all electrical power required in performance of the Work and shall pay all installation charges and monthly bills in connection therewith. The CONTRACTOR shall provide and maintain all temporary and permanent power. The CONTRACTOR shall pay for all permits. All temporary connections for electricity shall be subject to approval of the ENGINEER and the power company representative and shall be removed in like manner at the CONTRACTOR'S expense prior to final acceptance of the Work.

3. Telephones:

a. The CONTRACTOR shall provide and maintain at all times during the progress of the Work, at its own expense, not less than three (3) telephones in good working order, at its own field construction office. Each such telephone shall be connected to an established exchange for toll service and with all other telephones utilized by the CONTRACTOR.

4. Temporary Ventilation:

a. The CONTRACTOR shall provide adequate means to furnish temporary ventilation within Work areas at CONTRACTOR'S own expense and conforming to applicable requirements and standards of Federal, State, County and the 2014 Los Angeles CITY Building Codes and Amendments.

D. Contractor's Temporary Storage Facilities

1. The CONTRACTOR shall provide an adequate temporary shed on the site in a location designated by the ENGINEER for the safe storage of material and equipment. The shed shall be weathertight with a wood floor above grade. The shed shall be removed upon completion of the Work, or when so ordered by the ENGINEER.

E. Sanitary Facilities

1. The CONTRACTOR shall provide adequate sanitary conveniences of an approved type for the use of persons employed on the Work, and properly secluded from public observation, shall be provided and maintained by the CONTRACTOR in such a manner and at such points as shall be required or approved by the INSPECTOR. These conveniences shall be maintained at all times without nuisances and their use shall be strictly enforced. Upon completion of the Contracted Work, they shall be removed from the premises, leaving the premises clean and free from a nuisance.

F. Job Bulletin Board

1. The CONTRACTOR shall provide and mount on the CONTRACTOR'S Field Office, where it can be readily seen by the CONTRACTOR'S employees, a substantially built 3-feet high x 4-feet wide bulletin board, with a framed glass door protected on the outside with a 2-inch x 2-inch galvanized mesh and lock.

G. Protection Enclosures

1. Precautions shall be exercised by the CONTRACTOR at all times for the protection of persons and property.

2. CONTRACTOR shall furnish (or cause to be furnished) and maintain for the duration of Contracted Work, all scaffolds, covers, tarpaulins, canopies, warning signs, steps, bridges and other temporary construction and other protective devices as required by the INSPECTOR and the Local and State Rules, Ordinances and/or Regulations necessary for protection of public and private property and public safety.

3. Such enclosures shall be of reasonably good appearance and shall be maintained free of signs, posters, writing, markings and any other thing which would detract from a reasonably good appearance.

H. Temporary Fencing and Gates

1. Provide and maintain for the duration of the Contracted Work temporary chain link fencing of design and type needed to prevent entry onto the Jobsite and exterior Work area by the public. Chain link fencing shall have green privacy screen.

2. Construction shall conform to the 2014 Los Angeles City Building Codes and Amendments where adjacent to any public way.

I. Plan Box

1. CONTRACTOR shall provide a plan box to store a full set of contract drawings and the project manual for the duration of the project. The box shall be of the appropriate size to contain the contract drawings and the project manual, and shall be temporary, weather tight, and include a cover, lock, and proper identification.

J. Construction Sign

1. Design: As indicated on the Contract Drawings.

2. Materials:

   a. Posts: 4-inch x 6-inch redwood, C.R.A. Foundation grade.

   b. Frame: Douglas fir solid stock, W.C.L.B., and Better, V.G. Finish.

   c. Metal Panel: No. 22 gauge sheet steel.

   d. CITY Seal: Provided by ENGINEER.

3. Fabrication:

   a. Securely attach frame to posts with adequate fasteners.

   b. Miter and nail frames, conceal fastenings and set nails.

   c. Secure a sheet metal panel to frame with wood stops as indicated on the Contract Drawings.

4. Installation:

   a. Set posts into natural ground; location as directed by the ENGINEER or where indicated on the Contract Drawings.

5. Removal:

   a. Upon completion of Contracted Work or when directed by the ENGINEER.

6. Modifications:

   a. During the course of the Contract, the CONTRACTOR may be required to make changes to lettering, as directed by the ENGINEER, up to forty (40) letters regardless of the letter size, without additional cost to the CITY.

   b. Repair and recoat the modified area in a manner that will eliminate the evidence of the changes.

K. Permits

1. The CONTRACTOR shall be responsible for obtaining and paying for all permits, licenses and fees in a timely manner, in accordance with Section 00217 of the General Conditions. The CONTRACTOR shall be aware of the expiration date of all building permits, plan checks and/or extensions when the ENGINEER turns over such documents to the CONTRACTOR for construction use. If the CONTRACTOR does not obtain the permits in a timely manner, the CONTRACTOR shall be responsible for the delay, and the additional cost incurred as a result of

the delay, in obtaining and paying for the permits or licenses (such as costs to re-plan check, plan modification due to code changes, etc).

2. The CONTRACTOR shall be familiar with all aspects of the Project. For the Project which requires a haul route hearing and haul route bonding as part of the Grading Permit approval process, CONTRACTOR shall prepare and secure the Grading Permit as soon as the construction contract is awarded in order to mitigate any possible delays due to the haul route hearing, The haul route map preparations shall be as required by the Los Angeles CITY Department of Building and Safety, Grading Division, and Section 02220 – EARTHWORK of the Project Manual.

3. The CONTRACTOR shall obtain and pay for the following:

   a. Grading Permit

   b. Bleachers and Shade Structure Permit

   c. Storm Drain Connection Permit

   d. Electrical Permit

   e. Sign Permit

   f. Sidewalk/Driveway – "A" Permit

   g. Los Angeles County Department of Public Health Permit

   h. Plumbing Permit

   i. Demolition

   j. Los Angeles County Flood Control District

   k. Shoring Permit

   l. California general Construction Activity Stormwater Permit and Wet Weather Erosion Control Plan (WWECP) Stormwater Pollution Prevention Plant (SWPPP) for stormwater pollution control measures for construction activities.

   m. Los Angeles Regional Water Control Board for Installation of oil and water separator.

L. Utility Services Connections

1. Within five (5) days after the Notice-to-Proceed, notify the serving utilities that the Project is under construction and furnish them dates on which the services will be required. Furnish the ENGINEER a duplicate copy of all service requests.

2. Should any major changes to the Work indicated be necessary to complete the utility installation, notify the ENGINEER in writing at once

and cease all the Work affected until approval for the required modifications has been obtained from the ENGINEER.

3. Water Service Connections: Make all arrangements with the proper authorities for the domestic water service. The CONTRACTOR will pay for all fees and charges. Construction water is to be separately arranged and paid for by the CONTRACTOR. The CONTRACTOR shall contact Los Angeles Department of Water and Power at (213) 367-2130 for new water service or 1 (800) 499-8840.

4. Power Service Connections: Make all arrangements with the proper authorities for the new power service connections and testing of electrical equipment and control and removal of existing power service connections as part of the contract. See Electrical (E Sheets) for Power for construction and testing equipment to be separately arranged and paid for by the CONTRACTOR. The CONTRACTOR shall contact the Los Angeles Department of Water and Power at 1 (800) 499-8840.

5. After all utility services are completed, all street improvements shall be repaired.

6. If the CONTRACTOR is delayed during the inspections by local authorized agencies or work by utility companies, the CONTRACTOR shall be entitled to a non-compensable time extension and shall have no claim for any other compensation for such delay.

END OF SECTION

(SEE ATTACHMENT)

ATTACHMENTS TO SECTION 01721

Attachments to General Requirements Section 01721 consists of one (1) document, as follows:

ATTACHMENT NUMBER	TITLE OF ATTACHMENT	NUMBER OF PAGES IN THIS ATTACHMENT
01721-A1	Construction Water Supply Schematic	1

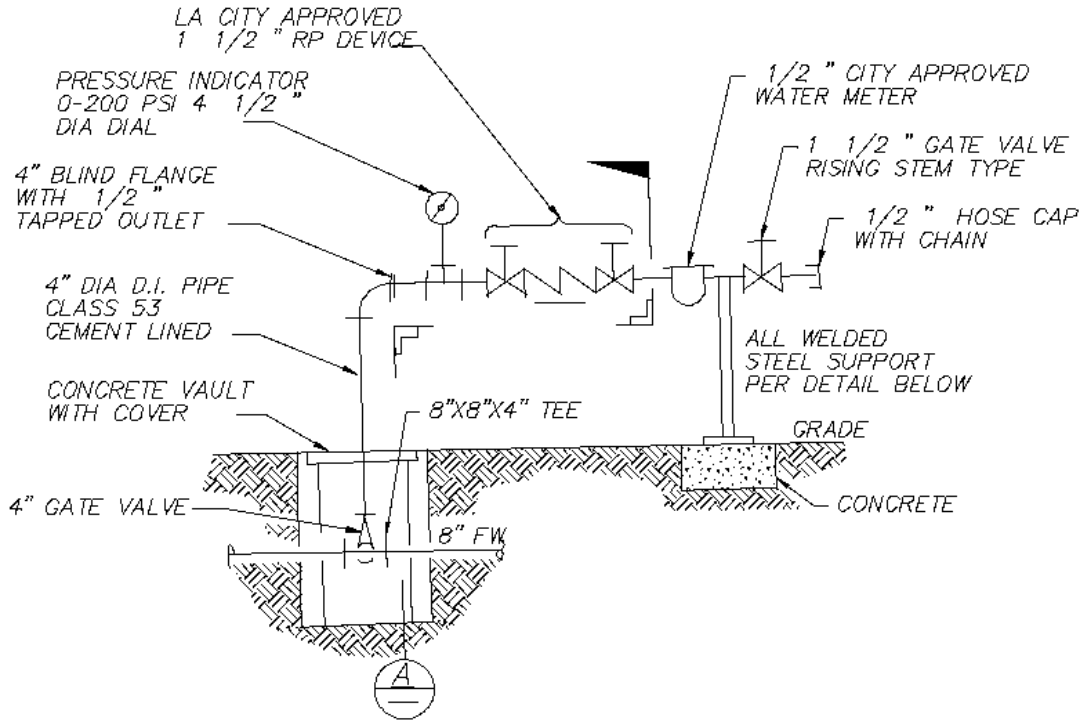

CONSTRUCTION WATER SUPPLY DETAIL

NTS

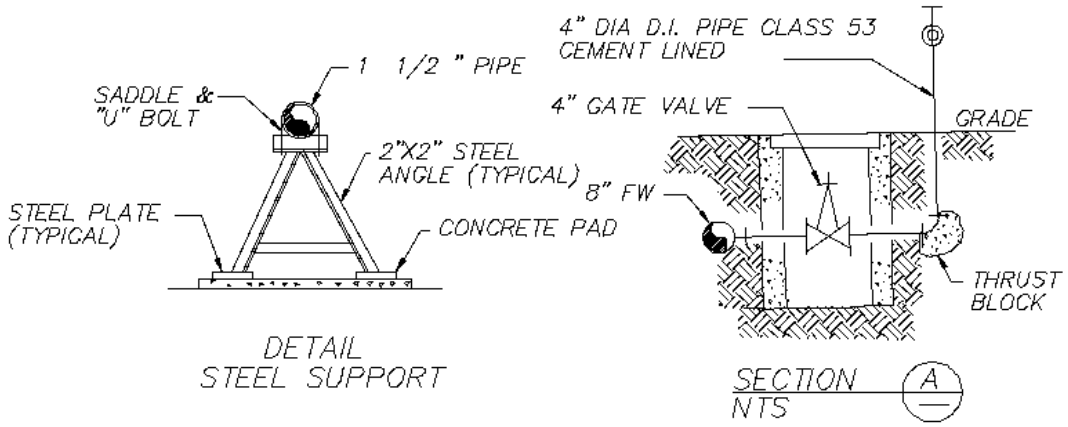

DETAIL
STEEL SUPPORT

SECTION A

NTS

CONSTRUCTION WATER SUPPLY SCHEMATICS

NTS

SECTION 01722
SURVEYING

1.1 THE REQUIREMENT

A. Permanent Survey Control Network Markers

The CITY Surveyor will establish horizontal and vertical control by recovering or reestablishing city centerline control monuments and identifying city benchmarks. The CONTRACTOR shall be responsible to protect all preconstruction control network reference points. In the case, where the monuments are to be removed or damaged by the CONTRACTOR, the CONTRACTOR shall notify the ENGINEER / CITY Surveyor in writing seven (7) calendar days before starting the Work. There will be a charge to the CONTRACTOR for replacing monuments and benchmarks that disturbed by the CONTRACTOR prior to the CITY Surveyor establishing adequate reference points.

The CONTRACTOR shall furnish all additional surveying necessary for the project and shall protect the CITY monuments from damage for the duration or the Project. The CONTRACTOR will be back charged for any CONTRACTOR damaged or destroyed survey control that has to be replaced by the CITY. For pipeline or street projects there shall be control points with coordinates at a maximum ¼ mile spacing. For all projects, at least two elevation benchmarks shall be provided. For projects greater than ½ mile in length, the elevation benchmarks shall be no more than ½ mile apart.

The CONTRACTOR shall complete a survey request form at least seven (7) full working days in advance by contacting the appropriate District Survey Office in the list below. Additional lead time will facilitate service. The form shall state exactly what and when the services are needed. A copy of the request can be faxed to the appropriate District Survey Office and a copy sent to the Engineer.

Central District Survey Office **(213) 473-0608**
555 Ramirez St, Space 250 ~~**Fax (213) 482-7175**~~
Los Angeles, CA 90012
Email Address: Eng.surdivisionwr@lacity.org

B. Layout of Contracted Work:

1. The CONTRACTOR shall be responsible for the surveys required to layout the Work and for the accuracy of all survey work for construction. The CONTRACTOR shall include the cost of all such survey work in their Bid. The CONTRACTOR shall have all construction surveying performed by a 'Licensed land Surveyor' or a 'Civil Engineer; registered by the state of California to perform such work. The ENGINEER reserves the right to verify all survey work done by the CONTRACTOR.

C. Construction Surveying Services

1. Construction Surveys shall conform to Chapter J 600 of the Bureau of Engineering Survey Manual, Part J. This manual may be purchased through the Bureau of Engineering Public Reference Center.

2. The CONTRACTOR shall provide all reference stakes and form checks necessary for construction and inspection of improvements. All construction staking shall be documented in survey field notes. This

staking may include but is not limited to: removals, joins, rough grade, slope, utilities, storm drains, sewers, curbs, walks, paving, wall and building stakes; and any other staking necessary for construction and inspection.

D. Reference or Grade Stakes

1. A reference or grade stake shall be set for each grade change or angle point shown on the plan, standard plan, and shop drawing, in addition to the normal staking interval.

E. Form Checks

1. Forms shall be checked when durable points may be disturbed, removed, or are impractical to be used to verify the design location. The measured location shall be recorded in the survey field notes. All variations from the plan location shall be brought to the attention of the ENGINEER.

F. Staking Intervals And Offset Stake Lines

1. All staking intervals shall be in accordance with the Survey Manual, Figures J 615.224A&Am, J 615.225A, and J615.225Am. Stake lines shall be set at an offset distance from the improvement to ensure proper grade, station, and alignment.

G. Utility Stakes

1. The CONTRACTOR shall provide stakes for all utilities, public or private, that require location or relocation, unless otherwise stated.

H. Additional Survey Work

1. The CONTRACTOR may be required to furnish additional survey work, such as profiles, restakes, Change Orders, etc., at the request of the ENGINEER or the INSPECTOR.

I. I. Accuracy

1. The CONTRACTOR shall use appropriate surveying methods to obtain the following standards: For fixed works (i.e. cast-in-place concrete; asphalt pavement, pipes and drains; and other items determined by the ENGINEER) the following survey standards shall be used. The absolute horizontal accuracy, in relationship to the Engineer's control, shall be such that the semimajor axis of its 95% error ellipse is ±0.015 foot or less. The absolute vertical accuracy, in relationship to the Engineer's control, shall be such that its standard deviation is ±0.015 foot or less. The relative horizontal accuracy of survey points within the Project shall be such that the semimajor axis of its 95% error ellipse is ±0.015 foot or less. The relative vertical accuracy of survey points within the Project shall be such that its standard deviation is ±0.015 foot or less.

2. For excavation purposes, the following survey standards shall be used. The absolute horizontal accuracy, in relationship to the Engineer's control, shall be such that the semimajor axis of its 95% error ellipse is ±0.1 foot or less. The absolute vertical accuracy, in relationship to the Engineer's control, shall be such that its standard deviation is ±0.1 foot

or less. The relative horizontal accuracy of survey points within the Project shall be such that semimajor axis of the 95% error ellipse is ±0.1 foot or less. The relative vertical accuracy of survey points within the Project shall be such that its standard deviation is ±0.1 foot or less.

J. Survey/Inspector

1. The CONTRACTOR shall provide to the INSPECTOR those measurements and control points necessary to determine the location and conformance to the plan, line, and grade of the improvements necessary for inspection purposes.

K. Survey/Engineer

1. The CONTRACTOR shall provide to the ENGINEER those measurements necessary for the expedient completion of the Project.

L. Survey Plan of Operations

1. Prior to construction, the CONTRACTOR shall submit to the ENGINEER for approval a survey plan describing methods and instrumentation to be used on the Project. The survey plan must be approved prior to any construction.

M. Survey Notes

1. The CONTRACTOR shall supply and keep notes on CITY standard format note sheets in conformance with Chapter J 600 of the Bureau of Engineering Survey Manual, Part J. The ENGINEER may request copies of, and otherwise review, survey notes at any time during the construction phase of the Project. Upon completion of the Project, the original survey notes shall become the property of the CITY and shall be delivered to the ENGINEER

(END OF SECTION)

SECTION 01723
RIGHT OF WAY

1.1 THE REQUIREMENT

A. The CONTRACTOR shall not allow its employees to use private property for any reason, or to use water or electricity from such property without written permission from the owner. The CONTRACTOR shall provide evidence of such permission, in writing, to the ENGINEER, before entering upon such lands.

(END OF SECTION)

SECTION 01732
ADDITIONAL POTHOLING

1.1 THE REQUIREMENT

A. The CONTRACTOR shall conduct exploratory excavations by potholing to verify or to discover the actual locations and the size of existing underground utilities and improvements. The CONTRACTOR shall take care not to damage existing facilities during potholing operations. Any utility or existing facility (including those located by Underground Service Alert - USA) within 3 feet of any trench or excavation shall be potholed prior to starting the contract work in the vicinity. Potholing shall be done in each given area where excavation work is to occur at least fourteen (14) calendar days in advance of any excavation or construction in that area, to avoid possible delay in the progress of the Work.

B. Potholing shall consist of excavations at the locations of utilities or other underground facilities indicated on the Drawings, located by USA, or as directed by the ENGINEER. All costs of potholing operations for the utilities indicated on the Drawings shall be included in the CONTRACTOR'S Bid.

C. If an allowance for Additional Potholing has been established and included in the SCHEDULE OF WORK AND PRICES, this allowance shall only be used to reimburse the CONTRACTOR for potholing utilities not shown or otherwise referenced on the drawings, or as directed by the ENGINEER. If the total cost of the Work directed under the Additional Potholing allowance differ from the amount set forth in the SCHEDULE OF WORK AND PRICES, the Contract Price shall be adjusted by a Change Order. The adjustment shall be the difference between the total actual costs and the amount included in the Bid, as an additional amount due to the CONTRACTOR or a credit to the CITY, as appropriate.

D. In addition to the potholes indicated on the Drawings, or directed by the ENGINEER, the CONTRACTOR shall pothole all utilities deemed necessary at no additional cost to the CITY.

E. Potholing operations shall conform to all applicable requirements of INJURY AND ILLNESS PREVENTION - SAFETY MEASURES of the GENERAL CONDITIONS, as to sidewall slopes, sheeting and shoring, and all other excavation and trenching provisions specified herein.

F. Potholing operations shall be conducted in accordance with the requirements of PROTECTION OF PERSONS AND PROPERTY AND RESTORATION OF EXISTING IMPROVEMENTS of the GENERAL CONDITIONS, in order to ensure that the existing facilities will remain in operation with minimum interruptions. Attention is specifically directed to the limitations on street closures, altering of vehicular and pedestrian access in accordance with INTERFACE / COORDINATION REQUIREMENTS of these GENERAL REQUIREMENTS. Potholes shall be identified and protected in accordance with the City of LA Brown Book, the California Manual on Uniform Traffic Control Devices (MUTCD) and Work Area Traffic Control Handbook (WATCH) Standards.

G. The CONTRACTOR'S proposed method of potholing and schedule for potholing shall be submitted to the ENGINEER for approval, at least thirty (30) days prior to the commencement of operation. Any utilities damaged during potholing shall be

immediately reported to the ENGINEER and INSPECTOR and repairs made immediately in accordance with the requirements of PROTECTION OF PERSONS AND PROPERTY AND RESTORATION OF EXISTING IMPROVEMENTS of the GENERAL CONDITIONS.

H. A complete log of all potholes shall be kept by the CONTRACTOR, showing specific locations and dimensions of trenches. The log shall be verified by the INSPECTOR prior to the backfilling of the potholes. The verified log will be submitted to the ENGINEER and the INSPECTOR within two (2) working days after completion of potholing in each area. Payment for potholing utilities not shown or otherwise referenced on the drawings, or as directed by the ENGINEER will not be made unless these potholes are listed on the verified log.

I. The CONTRACTOR shall record the coordinates, elevations and dimensions of all utilities and improvements verified or discovered by potholing. The records shall be submitted to the ENGINEER within two (2) working days after the completion of potholing in each area. The records shall also include dates of the potholing operations and any additional discovered information or pertinent data.

J. Upon completion of potholing in each area, and after verification of the logs by the INSPECTOR, potholes shall be immediately backfilled and compacted in accordance with the specifications, or restored as directed by the ENGINEER.

(END OF SECTION)

SECTION 01740
REMOVAL, CLEANUP, AND DEMOBILIZATION

1.1 THE REQUIREMENT

A. Upon completion of the Contracted Work, the CONTRACTOR shall remove all of its tools, materials and other articles from the property of the CITY. Should the CONTRACTOR fail to take prompt action to this end, the CITY, at its option and without waiver of such other rights as it may have, upon thirty (30) calendar days notice, may treat such items as abandoned property. The CONTRACTOR shall also sweep all floors broom clean, clean all exterior and interior surfaces and windows and remove all rubbish and debris resulting from the Contracted Work and shall maintain the Jobsite in a clean, orderly and safe condition at all times until completion of the physical Work and written Notice of Partial Acceptance. Failure to comply with this requirement shall be grounds for the CITY to assess clean-up costs in the amount of five percent (5%) of the mobilization cost.

(END OF SECTION)

SECTION 01750
STARTUP ASSISTANCE

1.1 THE REQUIREMENT

A. To satisfy the requirements of the ENGINEER during the startup of the facility, the CONTRACTOR may be required to provide STARTUP ASSISTANCE. Startup assistance shall commence immediately after a Statement Of Partial Completion or a Statement Of Completion is issued as specified in PARTIAL ACCEPTANCE and FINAL ACCEPTANCE of the GENERAL CONDITIONS and shall continue for a period of three (3) months. Such services shall include the services of craft personnel supplied by the CONTRACTOR to satisfy the requirements of the ENGINEER during Startup. Such services shall be available for at least one (1) eight (8) hour shift per day until startup activities are concluded, and may also include the availability of said craft personnel on a twenty-four (24) hour on-call basis.

B. Such startup assistance shall include such modifications to the Work as deemed necessary by the ENGINEER to provide a complete and functional facility.

C. Commencing on the first day of startup assistance, and upon written notice by the ENGINEER, the CONTRACTOR shall provide the INSPECTOR with daily labor timesheets, material invoices, and rented equipment invoices required for startup assistance activities.

D. Direct costs of startup assistance activities shall be in strict accordance with the Cost Reimbursement (Time and Materials) portions of the GENERAL REQUIREMENTS Section 01254, CHANGE ORDERS. However, Part 1.1.E, MARKUPS – OVERHEAD AND PROFIT, shall not be applicable to the direct costs of startup assistance. Instead, provisions for overhead and profit applied to the direct costs of startup assistance are included below:

DIRECT COST PERFORMED IN ONE MONTH	% OVERHEAD[2] AND PROFIT WHEN PRIME CONTRACTOR PERFORMS WORK	% OVERHEAD[2] & PROFIT PAID TO PRIME CONTRACTOR FOR WORK DONE BY ITS SUBCONTRACTORS[1]
Under $20,000	24%	11%
$20,000 - $50,000	22%	9%
$50,000 - $100,000	20%	7%
Over $100,000	18%	5%

[1] Subcontractors will mark up[2] their direct costs for startup assistance in accordance with the SSPWC available at the time of the Bid. Subcontractors at all tiers shall not be paid overhead and profit on their Subcontractor's work.

[2] Overhead for CONTRACTOR or Subcontractor shall consist of the following, but is not limited to:

1. Home office overhead expenses

2. All insurance requirements

3. Other needed insurance

4. Field office overhead including, but not limited to:

   a. Bookkeeping, accounting, estimating (whether done at the field or home office);

   b. Photocopying and/or office automation (whether done at the field or home office);

   c. Salaried superintendent or any other person with superintendent duties during the course of the Work;

   d. Any salaried staff and/or temporary office services;

   e. Trailers, electricity, water, telephone, etc.;

   f. Vehicles assigned to any salaried staff and/or temporary office services;

   g. Small tools and consumables. Small tools are defined as any equipment or tool, which has a replacement value of $1,000 or less;

   h. Travel of home office or field office staff, including transportation and expenses.

E. All items included in overhead shall not be billed as direct costs. The derivation of an extended overhead (field and/or office) rate and its application to contract time extensions shall not be applicable to startup assistance activities for this Contract. The duration of startup assistance will not be considered in the determination of the completion date for liquidated damages. That date will be determined by the completion of other work. Likewise, the duration of startup assistance will not be the basis in whole or in part for any claims for delay or extended overhead.

F. Each month the amount billed by the CONTRACTOR for startup assistance will be deducted from the amount stipulated in the SCHEDULE OF WORK AND PRICES of Bid Proposal. In the event that the stipulated amount is exhausted, the CITY will continue to approve payment via Change Orders. The cost of these Change Orders will be calculated in the manner described hereinbefore in this Article. In the event that the stipulated amount is not exhausted when the startup activities are concluded, the balance of the stipulated amount will not be due the CONTRACTOR and a deductive Change Order will be issued for the remaining balance.

(END OF SECTION)

SECTION 01770
PROJECT CLOSEOUT

1.1 THE REQUIREMENT

A. Closeout Timetable

The CONTRACTOR shall establish dates for equipment testing and acceptance periods (as required under the Contract). Such dates shall be established not less than seven (7) calendar days prior to beginning any of the foregoing items, to allow the CITY, the ENGINEER, and their authorized representatives sufficient time to schedule attendance at such activities.

B. Final Submittals

The CONTRACTOR, prior to requesting Final Payment, shall obtain and submit the following items to the ENGINEER.

1. Written guarantees, where required.

2. Technical manuals and instructions.

3. Keying schedule.

4. Maintenance stock items; spare parts; special tools.

5. Completed record drawings.

6. Certificates of inspection and acceptance by local governing agencies having jurisdiction.

7. Los Angeles Department of Building and Safety (LADBS) Plan Check Set and LADBS Building Card following LADBS final inspection approval, as applicable.

8. Releases from all parties who are entitled to claims against the subject Project, property, or improvement pursuant to the provisions of law.

C. Final Cleanup

1. The CONTRACTOR shall perform all tasks specified in REMOVAL, CLEANUP, AND DEMOBILIZATION of the GENERAL REQUIREMENTS.

D. Maintenance And Guarantee

1. The CONTRACTOR shall make all repairs and replacements promptly upon receipt of written order from the ENGINEER. If the CONTRACTOR fails to make such repairs or replacements promptly, the ENGINEER reserves the right to do the work and the CONTRACTOR and his surety shall be liable to the CITY for the cost thereof.

2. Replacement of earth fill or backfill, where it has settled below the required finish elevations, shall be considered as a part of such required repair work, and any repair or resurfacing constructed by the CONTRACTOR which becomes necessary by reason of such settlement shall likewise be considered as a part of such required repair work.

E. Bond

1. The CONTRACTOR shall provide a bond to guarantee performance of the provisions contained in NON-CONFORMING WORK and INSURANCE (Paragraph K) of the GENERAL CONDITIONS, GUARANTY / WARRANTY of these GENERAL REQUIREMENTS, and Paragraph 1.1 D of this Section.

(END OF SECTION)

SECTION 01781
SPARE PARTS

1.1 THE REQUIREMENT

A. General

1. The Spare Parts supplier must be the manufacturer or a factory authorized representative of the manufacturer. The manufacturer will be responsible for any default of the representative that is not corrected by the representative in a timely and efficient manner. This responsibility includes replacing incorrect or defective parts, trouble shooting, and correcting problems that are traceable to the manufacturer's parts. The supplier shall provide, along with the Spare Parts List, a formal letter of certification from the manufacturer that the supplier is an authorized representative of the manufacturer.

2. The supplier shall be a stocking facility of the manufacturer of the proposed parts, or the manufacturer must maintain a stocking facility of these parts on the West Coast, or the supplier can guarantee delivery of spare parts within seventy-two (72) hours.

3. Spare Parts should be supplied in the manufacturer's original packaging and shall be new and unused. A statement shall be included to clearly indicate that the Spare Parts are new and unused.

4. The Spare Parts list shall be in addition to any other lists required under any other sections of these Specifications. This list shall include but is not limited to the following:

a. Current prices including delivery to the Jobsite.

b. Original Equipment Manufacturer (OEM) part numbers, which identify interchangeability.

c. Make and type of equipment as well as Model number.

d. Size.

e. Supplier's address and telephone number.

f. Letter of certification from the manufacturer.

g. Materials.

h. Special tools.

i. Estimated delivery lead times.

j. Warranty: State terms of warranty of spare parts offered.

k. Cross-sectional, exploded view or assembly-type drawing with part numbers.

l. Manufacturer’s price list catalog.

m. Applicable trade discount (for budget purposes).

5. Delivery of all required Spare Parts shall be a condition precedent to receipt of Partial Completion or a Statement of Completion.

6. The CONTRACTOR shall be responsible for proper storage and protection of the Spare Parts until delivered to the CITY.

7. To ensure proper tracking of the Spare Parts the CONTRACTOR shall fill out and submit required information, on the forms provided by the ENGINEER, to the INSPECTOR with the delivery of Spare Parts. The CONTRACTOR'S cost of preparing and submitting the Spare Parts List(s), procuring, and inspection of the Spare Parts shall be included in the CONTRACTOR'S lump sum bid, and therefore, no overhead or profit shall be added to the cost of the Spare Parts.

B. Required Spare Parts

1. The Required Spare Parts lists shall be included with the equipment submittal to the ENGINEER.

2. The CONTRACTOR shall include in the Bid the cost of providing the Required Spare Parts described under individual equipment Specifications.

C. Recommended Spare Parts

1. The CONTRACTOR shall submit with each equipment submittal a list from the manufacturer of the Recommended Spare Parts adequate to ensure two (2) continuous years of normal operation after expiration of the equipment warranty. The cost of preparing and submitting the Spare Parts List(s) shall be included in the CONTRACTOR'S lump sum bid.

2. The Recommended Spare Parts List(s) shall include items requiring replacement under the following conditions:

a. Wear, corrosion, or erosion during normal operation.

b. Failure which causes a shutdown of equipment or systems.

c. Damage or breakage during routine maintenance or inspections of equipment.

d. Custom or specially fabricated parts, and

e. Long lead items.

3. If an allowance for RECOMMENDED SPARE PARTS has been included as a bid item in the SCHEDULE OF WORK AND PRICES in Vol. 1 of the Proposal, the CONTRACTOR shall procure such Recommended Spare Parts as directed by the ENGINEER. The ENGINEER will compile, from the CONTRACTOR’S submittal, a list identifying which recommended Spare Parts are approved for purchase. The CITY will pay, from the

RECOMMENDED SPARE PARTS allowance, the vendor-invoiced prices plus delivery cost only, without markup for overhead or profit. If the total cost differs from the amount set forth in the SCHEDULE OF WORK AND PRICES, the Contract Price shall be adjusted by a Change Order for the difference as an additional amount due the CONTRACTOR, or a credit to the CITY, as appropriate.

4. Approval of the individual equipment submittal does not constitute authorization to procure the Recommended Spare Parts.

D. Prices charged to the CITY are based on a percentage discount from the manufacturer's published price list(s) shall not be subject to change for a period of sixty (60) calendar days after bid opening. If prices on the price list(s) are raised, the CITY reserves the right to accept the raise or to cancel such items from the contract. The CITY is to be given benefit of any decline in prices immediately upon the manufacturer's effective date of such decline. Changes in price list(s) shall be effective on the date of the manufacturer's effective date of change. Increase in prices shall not be retroactive.

(END OF SECTION)

SECTION 01782
TECHNICAL MANUALS

1.1 THE REQUIREMENT

A. Definitions:

1. Connective Wiring Diagrams: Connective Wiring Diagrams are electrical diagrams that show how an equipment or instrumentation item is to be connected to the Plant or equipment system electrical power system or instrumentation system.

2. Internal Wiring Diagrams: Internal Wiring Diagrams are electrical diagrams that show how an equipment or instrumentation item is internally electrically connected.

3. Maintenance Summary Forms: The Maintenance Summary Forms are a series of forms including the Equipment Maintenance Summary Form (MSF), Mechanical Component MSF, Electrical Component MSF, Instrumentation Component MSF, and Valve Gate Component MSF. These forms are used to summarize the identification, nameplate data, maintenance requirements, recommended lubricants, and recommended spare parts for the various equipment and instrumentation. (See Attachments 01782-A1 through 01782-A4.)]

B. Technical Manuals:

1. Unless otherwise specified, Technical Manuals shall, as a minimum, include the following:

a. Table of Contents.

b. Itemized list of all data provided.

c. Consistent tabulation or indexing method within each technical manual and when compiling technical manual into the final Operations & Maintenance (O&M) Manual.

d. Manufacturer, supplier, spare parts and servicing location information including name, address, phone number of the manufacturer and local representative.

e. Approved Shop Drawing Submittal information applicable to O&M, including operating curves, manufacturer's recommended tolerances and clearances, and approved fabrication drawings.

f. Recommended installation, adjustment, start-up, calibration and troubleshooting procedures.

g. Lubrication recommendation and yearly quantity requirements.

h. Recommended step-by-step procedures for all modes of operation including start-up, operation, shutdown, load changes, and emergency shutdown. Manufacturer's literature shall be included.

i. Complete internal and connection wiring diagrams. Circuit diagrams and schematics shall be down to component level.

j. Recommended preventive maintenance and maintenance procedures, including lubrication and calibration schedules.

k. Complete parts list, by generic title and identification number, with exploded views and schematics of each assembly.

l. Complete programming procedures and ladder logic documentation for all computer controlled, programmable logic controllers and automated equipment.

m. Electrical, instrumentation, control system and piping schematics.

n. Recommended spare parts list and list of special tools and equipment required for O&M.

o. Disassembly, overhaul, reassembly, realignment and testing instructions.

p. Complete equipment O&M Manuals.

q. All contents of the technical manual shall be suitable for compilation into a standard size, three-ring binder.

r. Approved isometric drawings of piping systems

C. Additional requirements are contained in individual Divisions of the Technical Specifications i.e. Division 16: ELECTRICAL, Division 17: INSTRUMENTATION AND CONTROL, etc. The CONTRACTOR shall be responsible for reviewing all said reference requirements and including them in the Bid price. In the event of a conflict, the requirements of the individual Technical Specifications shall prevail. Repetition of requirements in two or more specification references shall not be cause for CONTRACTOR claim of conflict.

D. The CONTRACTOR shall submit two (2) copies of all Technical Manuals to the ENGINEER for review at least sixty (60) calendar days prior to the use of any new equipment. The ENGINEER will review and return one (1) copies of each submittal within [thirty (30)] calendar days following their receipt by the ENGINEER. The CONTRACTOR shall make all revisions and additions and resubmit to the ENGINEER two (2) copies of the corrected Technical Manuals prior to seventy-five percent (75%) completion of the Contract Amount.

E. The ENGINEER will review the corrected Technical Manuals within twenty-one (21) calendar days following their receipt by the ENGINEER. The CONTRACTOR shall then compile all of the corrected Technical Manuals into a single O&M Manual, which shall be arranged according to a Table of Contents, provided by the ENGINEER.

F. The CONTRACTOR shall furnish to the ENGINEER **[four (4)]** hard copies and one (1) electronic, searchable Portable Document Format (PDF) copy of the final O&M Manual. Each hard copy manual shall consist of one or more volumes,

each of which shall be bound, in a standard size, three-ring, loose-leaf, vinyl plastic hard cover binder, suitable for bookshelf storage. Binder ring size shall not exceed two-and-one-half inches (2.5 inches). All reprints shall be done on margin-reinforced papers. The searchable PDF copy shall be an exact duplicate of the hard copy of the final O&M Manual and be submitted on media approved by the ENGINEER. All submittal materials shall be in English. The final O&M Manual shall be submitted to the ENGINEER prior to eighty-five percent (85%) completion of the Contract Amount as measured by Monthly Progress Payments. Submittal of the Technical Manuals, the Corrected Technical Manuals and/or the O&M Manuals within the specified time frame, as detailed above, shall be a condition precedent to the making of the monthly payments.

G. If TECHNICAL MANUALS have been stipulated as a separate bid item in the SCHEDULE OF WORK AND PRICES in the Bid Proposal, the CONTRACTOR shall be entitled to receive Progress Payments upon submittal and approval of the Technical Manuals. This bid item is not an allowance but is a fixed amount and the CONTRACTOR is not entitled to receive additional compensation for technical manuals. The CONTRACTOR shall be entitled to receive fifty percent (50%) of the bid breakdown amount upon approval of all required draft Technical Manuals by the ENGINEER. Partial submittal of the required Technical Manuals shall not entitle the CONTRACTOR to any payment of this amount. The CONTRACTOR is entitled to receive one-hundred percent (100%) of the bid breakdown amount at the time the ENGINEER gives full approval to all Technical Manuals. Partial approval, or approval of some of the Technical Manuals, shall not entitle the CONTRACTOR to any payment. Failure to list TECHNICAL MANUALS as a separate bid item in the SCHEDULE OF WORK AND PRICES does not relieve the CONTRACTOR from preparing the Technical Manuals and including all associated costs in the Bid.

END OF SECTION

(SEE ATTACHMENTS)

ATTACHMENTS TO SECTION 01782

Attachments to General Requirements Section 01782 consists of four (4) documents, as follows:

ATTACHMENT NUMBER	TITLE OF ATTACHMENT	NUMBER OF PAGES IN THIS ATTACHMENT
01782-A1	Equipment Summary Data Forms Information Sheet	1
01782-A2	Equipment Summary Data Form	1
01782-A3	Information Sheet for Equipment Maintenance Summary Form	1
01782-A4	Typical Maintenance Summary Form	1

EQUIPMENT SUMMARY DATA FORMS
INFORMATION SHEET

Equipment Summary Data Forms are intended to provide the Maintenance Department with sufficient information to catalogue newly purchased equipment items installed at the facility. This information is used for inventory purposes as well as for equipment performance tracking purposes. Each item of equipment installed at the facility must be documented on one of three Forms; Electrical Summary Data Form, Equipment (Mechanical, HVAC, etc.) Summary Data Form, and/or Pump Summary Data Form. Examples of each form are attached. Additional requirements regarding submittal format, quantities, etc, are found elsewhere in this Specification.

1. Equipment item (included industry-accepted nomenclature).

2. CITY Equipment Identification Number (EMPAC)

3. Manufacturer
Address Phone/Fax Numbers

4. Supplier (if different than (3)
Address Phone/Fax Numbers

5. Equipment Serial Number(s)

6. Equipment Model Number

7. Size

8. Capacity

9. Rated Output

10. Drive Motor Data (as appropriate).

In addition, information specific to the item described shall be provided as indicated on the example Forms.

EQUIPMENT SUMMARY
DATA FORM

EQUIPMENT ITEM: _____

EQUIPMENT COST: _____

EQUIPMENT SUPPLIER: _____

COMPONENT INFORMATION: **NAMEPLATE DATE:** **MANUFACTURER:**	
CITY IDENTIFICAITON NUMBER:	**EQUIPMENT SERIAL NUMBER:**
EQUIPMENT MODEL DESIGNAITON:	**TYPE:**
SIZE:	**RATED OUTPUT:**
CAPACITY:	**SERVICE:**
COMPONENT INFORMATION: DRIVE MOTOR DATA **MANUFACTURER:**	
SERIAL NO.:	**HORSEPOWER:**
MODEL:	**FRAME:**
TYPE:	**VOLTAGE:**
DUTY (Pumps Only):	**SEAL TYPE (Pumps Only):**
ENCLOSURE:	**AMPERAGE:**
PHASE: **HERTZ:**	**SERVICE FACTOR:**
LUBRICATION REQUIREMENTS: MOTOR	
COMMENTS:	

INFORMATION SHEET FOR
EQUIPMENT MAINTENANCE SUMMARY FORMS

Equipment Maintenance Summary forms are intended to provide the Maintenance Division with information sufficient to properly diagnose (troubleshoot, repair, check-out, and return an item of equipment to service. Standard information contained in each Form shall be as follows:

In addition, Maintenance information required to troubleshoot, repair, and return electrical/electronic equipment to service (including set point, derivatives, etc.) Shall be included as required. The Maintenance Summary Form attached in intended to serve as a (minimum) guide to the information required per item of equipment. Additional requirements regarding submittal format, quantities, etc. are found elsewhere in this Specification.

1. **Equipment Item (include industry-accepted nomenclature)**

2. **CITY Equipment Identification Number (EMPAC)**

3. **Manufacturer**
   Address Phone/Fax Numbers

4. **Equipment Serial Number(s)**

5. **Weight of Individual Components (over 100 pounds)**

6. **Nameplate Date (including voltage, horsepower, lubrication requirements, speed, etc.)**

7. **Manufacturer's Local Representative**
   Address Phone/Fax Numbers

8. **Maintenance Operation(s) Required. Listing shall include (1) Maintenance Operation to be performed. (2) frequency of said Maintenance Operation based on actual service conditions of installed equipment (i.e., type of duty, environmental factors). Reference shall be made to the appropriate section of the manufacturer's technical literature.**

9. **Lubricant List. List shall include a primary and two secondary manufacturer-approved lubricants.**

10. **Spare Parts required for a minimum of one (1) year of equipment operation based on anticipated actual service conditions. Also to be included in the name, address, and phone number of the recommended source of spare parts if different than (7) above.**

ATTACHMENT ____
Typical Maintenance Summary Form

NOTE: SUPPLEMENTARY INFORMATION, AS APPROPRIATE, SHALL BE INCLUDED

1. EQUIPMENT ITEM: _____

2. CITY EQUIPMENT IDENTIFICATION NUMBER (EMPAC): _____

3. MANUFACTURER:_____
   ADDRESS:_____
   TELEPHONE NO.:_____ FAX NO.:_____

4. EQUIPMENT SERIAL/IDENTIFICATION NUMBERS: _____

5. WEIGHT OF INDIVIDUAL COMPONENTS (OVER 100 POUNDS):_____

6. NAMEPLATE DATA:_____

7. MANUFACTURER'S LOCAL REPRESENTATIVE:_____
   ADDRESS:_____
   TELEPHONE NO.: _____
   FAX NO.:_____

8. MAINTENANCE OPERATION(S) REQUIRED: (attach separate sheet if required).

OPERATION	FREQUENCY	COMMENTS

9. LUBRICANT LIST. Provide Reference symbol used in items recommended.

SHELL	STANDARD OIL	GULF	ARCO	EQUAL

10. RECOMMENDED SPARE PARTS LISTS FOR MINIMUM OF ONE (1) YEAR UNINTERRUPTED SERVICE. (Attach separate sheet if required).

ITEM	PART NO.	QUANTITY REQUIRED (per unit)	UNIT COST	COMMENTS

SECTION 01783
PROJECT RECORD DOCUMENTS

1.1 THE REQUIREMENT

A. Project Record Documents comprised of Record Drawings (As-Built, full size Project Plans) and Record Project Manual that are developed during construction to delineate the actual in-place constructed conditions shall be provided by the CONTRACTOR to the ENGINEER. Requirements for Record Drawings and Record Project Manual as specified elsewhere, shall supplement the requirements specified herein.

B. Record Drawings and Record Project Manual shall include all changes in the As-Bid Plans including those issued as Change Orders, Plan Clarifications, Addenda, Notice to Bidders, responses to Requests for Information, Jobsite Memos, and any additional details needed for the construction of the Project, but not shown on the As-Bid Plans. Any substructures encountered while excavating that are left in place shall be located by survey to the satisfaction of the ENGINEER shown, identified and recorded on the Record Drawings. All substructures including, but not limited to, concrete structures, electrical conduit and duct banks, drains and sanitary sewer pipelines, process piping, water lines, and similar substructures, whose installed location differs from that shown on the As-Bid Plans, shall be precisely located by survey to the satisfaction of the ENGINEER shown, identified and recorded on the Record Drawings before backfilling.

C. The CONTRACTOR shall prepare Record Drawings and Record Project Manual. The Record Drawings and Record Project Manual, shall be kept by the CONTRACTOR, and updated during construction.

D. Where the Plans are diagrammatic or lacking precise details, the CONTRACTOR shall produce dimensioned full size sheets as the Record Drawings. Installations outside of structures shall be located by coordinates and elevations. Where substructures are encased in concrete, the outside dimensions of the encasement shall also be given.

E. In the case of those Drawings which depict the detail requirements for equipment to be assembled and wired in the factory, the Record Drawings shall be updated by indicating those portions which are superseded by final Shop Drawings and by including appropriate reference information describing the Shop Drawings by manufacturer, drawing and revision numbers.

F. Record Documents, particularly the Record Drawings and Record Project Manual, shall include a copy of all changes including those issued as Change Orders, Plan Clarifications, Addenda, Notice to Bidders, responses to Requests for Information (RFIs), Jobsite Memos, and any additional details needed for the construction of the Project, but not shown on the Contract Drawings or included in the Project Manual. When possible, attach these copies to the back of the corresponding full size plan sheet or attached stacked to front of sheet.

G. Record Drawings shall be produced and submitted in two (2) different formats as listed below for review and approval by the ENGINEER:

1. Marked Record Drawings: These Record Drawings shall be As-Bid Plans marked with red ink on one (1) set of full size prints. Record Drawings in red marking format shall be available for the ENGINEER'S review at all times during construction.

2. Computer Aided Drafting (CAD) Record Drawings: These Record Drawings shall be produced in electronic CAD format based on the software and version used to prepare the As-Bid Plans. Identify AutoCAD and/or Micro station software(s) and version(s) used for each drawing discipline. All additions to As-Bid Plans shall employ drafting standards which are consistent with those used in the As-Bid Plans and per the City of Los Angeles CAD Standards found at the following link: http://eng2.lacity.org/techdocs/CADSTDS/cad_details.htm. Production of Record Drawings in CAD format shall start no later than at 75% of work completion.

   a. CAD Record Drawings shall be fully revised versions of the As-Bid Plans. Simply marked and clouded CAD Drawings are not acceptable.

   b. Each revised item shall be noted with an upside down numbered triangle, and the triangle's source shall be described in the sheet border.

   c. For bidding purposes the CONTRACTOR shall assume specify number of anticipated new sheets additional new highly detailed sheets will need to be created to accommodate changes.

   d. CONTRACTOR's CAD technician preparing the CAD Record Drawings shall have minimum ten (10) years of experience and proficient in preparing Micro Station and AutoCAD drawings.

   e. The CONTRACTOR shall submit the CAD Record Drawings on a DVD or Flash Drive.

3. The CONTRACTOR and their CAD technician(s) shall arrange meetings with each of the City's project designers for all disciplines involved, to discuss and plan for the first CAD Record Drawing submittal. Meeting shall be scheduled 45 days prior to when the submittal is first due.

4. The ENGINEER will review and approve the Marked and CAD Record Drawings prior to submittal of all Monthly Payment Requests. If, in the opinion of the ENGINEER, the Record Drawings are not current, approval of the Monthly Payment may be withheld until the Record Drawings are made current. In addition, the CONTRACTOR shall submit a signed certification with each Monthly Payment Request stating that Record Drawings are complete and accurate as of the date of the payment request.

5. If Structural Plans are prepared as part of this project, the CONTRACTOR shall provide final Marked Record Drawings for review and approval. The drawings shall be provided in pdf or Bluebeam format.

6. At the Completion of the Work and after Final Inspection, the CONTRACTOR shall submit to the ENGINEER, the final CAD Record Drawings and the Marked Record Drawings for review and approval. Any retained funds shall only be released upon the ENGINEER approval of the final CAD and Marked Record Drawings. The CONTRACTOR shall certify to the completeness and accuracy of the Record Drawings.

H. Record Project Manual shall be prepared in Microsoft Office Word format (latest version). The CONTRACTOR shall submit a signed certification with each Monthly Payment Request stating that the Record Project Manual is complete and accurate as of the date of the payment request. The CONTRACTOR shall submit to the ENGINEER, the Record Project Manual for review and approval. Any retained funds shall only be released upon the ENGINEER approval of the Record Project Manual.

I. An approved set of As-Bid Plans stamped by the City of Los Angeles Department of Building and Safety (LADBS) Plan Check Division must be kept on site for inspection by the City of Los Angeles Building and Safety Inspector. This set of stamped As-Bid Plans is a part of the Contract Documents and is to be protected as such. The stamped set is not to be marked on or used as filed construction Drawings or Record Drawings.

(END OF SECTION)

SECTION 01810
FUNDAMENTAL COMMISSIONING REQUIREMENTS

PART 1 - GENERAL

1.1 DESCRIPTION

A. This section includes administrative and procedural requirements as well as a detailed description of the commissioning process. This section supplements other Division 1 Commissioning Sections and applies to Sections in Divisions 15 and 16 that specify testing of components and systems.

B. Basic Commissioning is intended to achieve the following objectives:

1. Verify that applicable equipment and systems are installed according to the manufacturer's recommendations and to industry accepted minimum standards and that they receive adequate operational checkout by installation contractors.

2. Verify and document proper performance of equipment and systems.

3. Verify that Operations and Maintenance (O&M) data is complete.

4. Verify that the City's operating and maintenance personnel are trained in accordance with the specifications.

C. Related Work:

1. 01330 Shop Drawings / Submittals

2. 01770 Project Closeout

3. 02545 Storm Drain System

4. 13330 Underground Infiltration Gallery

5. 15610 Piping General

6. 16100 Basic Materials and Methods

7. 16560 Municipal Facilities Electrical Systems Commissioning

8. 16570 Municipal Facilities Electrical Testing Requirements

1.2 SUBMITTALS

A. Provide submittal documentation relative to commissioning as described in Section 01330 Shop Drawings/Submittals.

B. Contractor to submit the names of three independent Los Angeles City Fire Department certified testers to the Engineer. The Engineer will select one of the submitted testers to schedule and perform Regulation No. 4 testing.

1.3 DEFINITIONS

A. Commissioning Process: A systematic process which verifies that the building systems perform interactively according to the Design Intent Document. The commissioning process coordinates system documentation, equipment startup, control system calibration, testing and balancing, performance testing and training.

B. Commissioning Authority (CA): An entity contracted by the City that plans, schedules, and coordinates the Commissioning Team to implement the Commissioning Process.

C. Commissioning Plan: A document that provides the structure, schedule, and coordination for the commissioning process.

D. Design Intent Document: A written document that details functional requirements of the Project including expectations of how the Project will be used and operated. The Design Intent Document includes design goals, measurable performance criteria, success criteria, and supporting information.

E. Functional Test (FT): A documented test of the dynamic functioning and operation of equipment and systems with the goal of verifying that the Design Intent is met. Test requirements are included in these specifications. Test procedures are developed and results documented by the Commissioning Authority. Test procedures are completed by the Contractor.

F. Prefunctional Checklist (PC): A written checklist that includes checks and tests prerequisite to the equipment's Functional Test. Draft checklists are included in the specifications. The Commissioning Authority assists the Contractor in finalizing the checklists. The Checklists are completed by the Contractor and verified by the Commissioning Authority.

1.4 COORDINATION

Items listed below require the Contractor to coordinate between the sub-contractors, INSPECTOR, GSD building maintenance representative, and the Commissioning Authority. Details regarding each item are given elsewhere in this Section and/or other commissioning sections of the specifications.

A. Pre-Commissioning Meeting: Conducted by the City's Project Manager during which the CA reviews the commissioning process with the commissioning team members.

B. Coordination Meetings: Attend meetings throughout construction, scheduled by the ENGINEER, to plan, coordinate, schedule future activities, and resolve problems.

C. Start-up Plans: Work with the CA to develop startup plans and startup documentation formats, including prefunctional checklists.

D. Equipment Start-up: Utilize start-up plans to coordinate equipment start-up, manufacturers' testing, and other required testing to minimize duplication of work.

E. Testing, Adjusting, and Balancing: Coordinate testing, adjusting, and balancing with the Commissioning Authority so that the CA can witness the processes.

F. Functional Testing: Coordinate functional testing with the Commissioning Authority so that they can witness testing.

G. Training: Coordinate training of owner's staff with Commissioning Authority so that the CA can verify that training is conducted per commissioning requirements.

1.5 SYSTEMS TO BE COMMISSIONED

A. The following systems will be commissioned in this project.

1. Irrigation System and Controls

a. Irrigation System.

2. Electrical Systems

a. Lighting System and Controls: Including sweep or scheduled lighting controls (weekday, weekend, and holiday schedules); lighting occupancy sensors, photo sensors and controllers (indoors and outdoors).

b. Instrumentation and Control Systems including Flowmeters, level sensors, intrusion alarms and other related equipment)

c. Automatic Transfer Switches.

3. Pre-Treatment Devices

4. Underground Infiltration Galleries

5. Slide Gates

6. Uninterrupted Power Supply

7. SCADA Systems

PART 2 - PRODUCTS

2.1 TEST EQUIPMENT

A. Provide all testing equipment required by the Commissioning Process except data logging equipment. Data logging equipment is provided by the CA.

B. Provide any special equipment, tools, and instruments that are only available from the equipment supplier, which are specific to the equipment, and which are required for testing.

PART 3 - EXECUTION

3.1 MEETINGS

A. Commissioning Pre-Construction Meeting: Within 60 days of commencement of construction, the ENGINEER will schedule a commissioning pre-construction meeting with the commissioning team in attendance. Commissioning Authority shall distribute

meeting minutes to commissioning team. Attendance is mandatory for the following team members:

1. Commissioning Authority
2. Contractor's Site Supervisor
3. Contractor's Project Scheduling personnel
4. Mechanical sub-contractor
5. Electrical sub-contractor
6. Air Balance sub-contractor
7. GSD Building Maintenance Division representative
8. INSPECTOR

B. Miscellaneous Meetings. The ENGINEER will schedule other meetings, generally in conjunction with regularly scheduled site meetings as construction progresses. Meetings will cover coordination, deficiency resolution, and planning issues with particular subcontractors.

3.2 START-UP AND PREFUNCTIONAL CHECKLISTS

A. Perform a full pre-functional checkout of each piece of equipment. The pre-functional testing for a given system must be successfully completed prior to formal functional testing.

B. Equipment shall not be "temporarily" started (for heating and cooling) until the Start-Up Plan is completed.

C. The Contractor shall prepare start-up plans for equipment to be commissioned. Subcontractors responsible for pre-functional checklists and startup will be identified at the pre-commissioning meeting. Submit start-up plans to the Engineer for review and approval; start-up plans shall consist of, but not be limited to:

1. The manufacturer's standard written start-up procedures copied from the installation manuals, with check boxes by each procedure and a signature block at the end.
2. Field checkout sheets normally used by the sub-contractor.
3. Forms normally issued by the sub-contractor to document tests required in the specifications.
4. Final pre-functional checklists (drafts are included in the specifications). The checklists for mechanical systems include sensor and actuator calibration.
5. Schedule that includes equipment installation, contractor start-up, manufacturer start-up, and other tests required by the specifications. Schedule shall state when documents in the start-up plan will be completed.

D. At least 90 days prior to the start of commissioning, the Contractor shall submit a commissioning package for the equipment to be commissioned. This package shall include the following information:

1. Equipment manufacturer's operating & maintenance instructions.

2. Equipment manufacturer's installation and start-up manual.

3. Start-up plans as required in this section.

3.3 REQUIREMENTS FOR FUNCTIONAL TESTING

A. Complete the following prior to functional testing:

1. Arrange for commissioning observations to be performed by the Commissioning Authority, and GSD Building Maintenance Division representative.

2. Complete and approve the Start-up Plan.

3. Correct deficiencies identified during start-up.

4. Record pretest set points.

3.4 FUNCTIONAL TESTING

A. Perform functional testing after the testing requirements listed in Paragraph 3.3 are completed.

B. Perform functional testing under the observation of the commissioning authority who will record the results of the functional test procedures.

C. Perform all specified tests according to approved testing procedures.

1. Verify and test performance using actual conditions whenever possible.

2. Simulate conditions by imposing an artificial load when it is not practical to test under actual conditions and when written approval for simulated conditions is received from Commissioning Authority. Before simulating conditions, calibrate testing instruments. Set and document simulated conditions and methods of simulation. After test, return settings to normal operating conditions.

3. Alter set points when simulating conditions is not practical and when written approval to do so is received from Commissioning Authority.

4. Overwrite sensor values with a signal generator when actual or simulated conditions and altering set points are not practical. Do not use the sensor to act as the signal generator to simulate conditions or overwrite values.

D. The Commissioning Authority will review and approve functional testing results. Deficiencies found during testing shall be corrected by the Contractor and retested. Where there is a dispute over a deficiency, the ENGINEER shall be the final authority.

E. Problem Solving: The CA will recommend solutions to problems found, however, the burden of responsibility to solve, correct and retest problems is with the contractor and the design team.

3.5 COST OF RETESTING

A. Costs for retesting beyond one retest will be the responsibility of the Contractor, if the ENGINEER determines that the contractor is responsible for the deficiency. These costs shall include charges for the CA's time, Engineer and Inspector.

B. For a deficiency identified during functional testing but not included in the approved Start-up Plan: The CA will direct the retesting of the equipment once the deficiencies are corrected.

C. Retesting will not be considered a reason for a claim of delay or for a time extension by the contractor.

3.6 DEFERRED TESTING

A. Unforeseen Deferred Tests: Checks or tests not completed due to the building structure, required occupancy condition, or other condition may be delayed upon approval of the ENGINEER. These tests will be conducted in the same manner as the seasonal tests as soon as possible.

B. Seasonal Testing: Complete seasonal testing (tests delayed until weather conditions are closer to the system's design conditions) during the warranty period, as part of this contract. The CA will coordinate this activity. Tests shall be executed, documented and deficiencies corrected by the appropriate Subs, with facilities staff and the CA witnessing. The Contractor shall make adjustments to the Operations and Maintenance Data, as necessary.

3.7 WRITTEN WORK PRODUCTS

A. The commissioning process generates a number of written work products described in the Specifications. A summary of the written products follows. Where the product is developed by the subcontractors, the contractor shall be responsible for their production.

Product	Developed By
1. Design Intent Document	A/E
2. Commissioning Plan	CA
3. Commissioning schedules	CA, contractor and Subcontractors
4. Equipment & commissioning submittals	Subcontractors
5. Draft prefunctional checklists	CA with specifications
6. Startup Plan	Subcontractors
7. Completed Startup Plan	Subcontractors
8. Issues log (deficiencies)	CA
9. Deficiency reports	CA
10. Blank functional test forms	CA
11. Completed functional test forms	CA
12. O&M manuals	Subcontractors
13. Overall training plan	CA and Subcontractors
14. Specific training agendas	Subcontractors
15. Commissioning report	CA
17. Commissioning meeting minutes	CA or A/E consultants
18. Warranty Documents	Subcontractor

(END OF SECTION)

SECTION 01820
OPERATIONS AND MAINTENANCE TRAINING

1.1 THE REQUIREMENT

A. General

1. This section covers the development and implementation of training programs that will identify skills and knowledge necessary to safely and efficiently operate and maintain the Project Facilities.

2. The CONTRACTOR shall furnish all tools, equipment, materials, and supplies, and shall perform all functions and services required to complete the Work as specified herein. With the exception of safety and overview training, training shall be divided into separate categories for operations training and maintenance training with maintenance training further broken down to specific crafts.

3. The training requirements specified in other Sections of the Specifications shall be in addition to those specified in this Section.

4. No actual operations training of a piece of equipment will be permitted until the equipment is properly installed and is operational.

5. Operations training shall be a prerequisite to the beneficial use of the facility or any portion thereof and be completed a minimum of one week prior to the beneficial use of the Project Facilities. Maintenance training shall occur after and within thirty (30) days of the beneficial use of the facility.

B. Related Work Specified Elsewhere

1. LIQUIDATED DAMAGES of the GENERAL CONDITIONS.

2. SUBMITTALS of the GENERAL REQUIREMENTS.

3. CONTRACTOR'S CONSTRUCTION SCHEDULE AND REPORTS of the GENERAL REQUIREMENTS.

4. DIVISIONS 11, 16, and 17 as applicable.

C. Training Scope

1. Manufacturer/Vendor Training

a. Manufacturer supplied (VENDOR) equipment training for all major plant equipment and subsystems shall be provided for the Operations and Maintenance groups as outlined in this section. The VENDOR training shall be provided by qualified instructors of the equipment manufacturers, i.e.: equipment field startup technician or their representative, as approved by the ENGINEER and may include both on and off-site training venues. Generally, manufacturer sales representatives will not be acceptable.

b. Classroom training shall be structured to develop a basic understanding of the design, function and capabilities of the equipment and the interrelationship with the process. In addition, routine operational and preventive maintenance, safety considerations, responses to abnormalities and startup, shutdown and troubleshooting will be covered.

c. Field training shall be scheduled to commence immediately following the classroom training and shall stress hands-on, performance based application of the classroom training. Equipment shall be started and relevant systems and components shall be demonstrated.

2. Process Overview, Operations and Safety Training

a. Process overview and safety training for the Operations group, if deemed necessary, will be prepared and conducted by the CITY utilizing approved material supplied by the equipment vendors. In the event the CITY is unable to provide the process training, the CONTRACTOR shall enter into an agreement with a training specialist approved by the ENGINEER. Any and all work performed by the training specialist will be paid as stated in Paragraph I, “Fixed Cash Allowance,” herein. The CONTRACTOR shall submit invoices for payment from the training specialist, which have been previously approved by the ENGINEER and paid by the CONTRACTOR.

3. General

a. Training Material: Sections of the manufacturers O&M manuals, selected by the CITY for the installed equipment, shall be used as classroom training material. The CONTRACTOR shall then reproduce the selected text for each piece of plant equipment and compile the training material to be used in the classroom by the manufacturer’s field technician.

b. Training schedule: The CONTRACTOR shall provide an operation and maintenance training schedule to be conducted immediately following vendor equipment startup of the equipment. All training shall be scheduled for Tuesday through Thursday only.

D. Training Requirements

1. The technical position titles of trainees for the Operational and Maintenance groups are listed below:

a. Maintenance Group

(1) Electricians

(2) Instrument Technicians

2. Major equipment and plant subsystems for the various crafts which require training include, but are not limited to the following:

    a. Instrumentation and Controls (I&C)

        (1) Distributed Control Systems (DCS)

        (2) Programmable Logic Controllers (PLC)

        (3) Local Control Panels (LCP)

        (4) Loop Descriptions and Drawings

        (5) Instrument Installation and Calibration

    b. Electrical Systems:

        (1) Transformers and Substations

        (2) Wiring Diagrams/Schematics

        (3) Lighting and Power Panels

E. Operation Training

1. The VENDOR shall conduct one course as described herein for the General Operations Group. Each course shall consist of both classroom and field training as specified herein.

F. Maintenance Training

1. The maintenance training shall include the function, adjustment, repair, and replacement of all components related to the trainee's trade. Emphasis shall be placed on those areas listed in item number 3, below. Safety aspects shall also be stressed.

2. The field training shall stress hands-on instruction.

3. The training shall include, but not be limited to, the following:

    a. Preventive and corrective maintenance procedures, including replacement of parts; lubrication quantities, types, frequencies, and application points; and an estimate of time to perform such procedures.

    b. Special tools, techniques, or procedures required for either preventive or corrective maintenance of equipment, or its auxiliary or support systems.

    c. Procedures to perform adjustments required for alignment, wear and calibration for all preventive and corrective maintenance, and an estimate of time required to perform such procedures.

    d. Assembly and disassembly procedures, including parts lists required for appropriate preventive and/or corrective

maintenance. Models, "exploded" views, and/or audiovisual materials shall be used for this training. These materials shall be turned over to the ENGINEER upon completion of training. Hands-on field training shall be provided, subject to the approval of the ENGINEER.

e. Maintenance, overhauls, troubleshooting of equipment, and auxiliary or support systems.

G. Execution

1. The training specified herein shall be provided at the Project site.

2. The CITY reserves the right to videotape any and all training materials and presentations, except for proprietary material, and retain all rights for usage of such recorded material to train CITY personnel.

H. Evaluation

1. All training sessions will be monitored and approved by the ENGINEER. Any session or portion thereof deemed unsatisfactory, based on evaluation of the training, shall be repeated by the manufacturer or manufacturer's representative at no additional cost to the CITY.

2. When deemed appropriate by the ENGINEER, field instruction to CITY personnel designated to receive training may be acceptable as a training session. The instruction shall be provided by a field service technician qualified to perform corrective or preventive maintenance, troubleshooting, or related field services.

I. Submittals

1. The CONTRACTOR shall submit training packages for the ENGINEER'S review and approval. The training submittal shall be tied into the CONTRACTOR'S overall submittal process.

2. The CONTRACTOR shall provide the training submittals in the following order for review and approval by the ENGINEER.

a. First draft sixty (60) days prior to proposed instruction date.

b. Final draft thirty (30) days prior to proposed instruction date.

3. The "first draft" of the training material shall, as a minimum, contain the following:

a. Instructional text that details the specific topics of training for the system. These topics are detailed previously in the training submittal. All text must be complete. Incomplete sections, paragraphs, etc., shall not be acceptable.

b. Clean legible photocopies of all overhead transparencies to be used in the delivery of the lesson plan.

c. Slides, videos (Digital Media), and any other type of visual training aid that will be used in conjunction with the training plan.

d. Reference materials as detailed in the lesson plan (e.g., handout, manufacturer catalogues, brochures, and pamphlets). All material shall be reviewed by the ENGINEER to determine applicability and functionality. Reference materials that do not pass this review shall be modified and resubmitted within two weeks for approval.

e. No actual classroom or field training shall be scheduled unless this material is approved.

f. The CONTRACTOR shall not proceed to the "final draft" stage of training material until the ENGINEER has approved the "first draft".

4. With the final draft of the training material, the CONTRACTOR shall submit a Training Agenda that provides the following information:

a. Company name, address, and telephone number(s) for the vendor.

b. Name and telephone number(s) of the vendor training representative.

c. Duration of class (total hours).

d. Breakdown of class and duration in hours of each training activity.

e. Target audience (e.g., operators, maintenance personnel, etc).

f. Audiovisual requirements (i.e., slide projector, television, VCR, overhead projector, etc.).

5. After the CONTRACTOR has received approval of the "final draft" of the training material and the training agenda from the ENGINEER, only then can the actual training be scheduled. CONTRACTOR shall submit his proposed training schedule to the ENGINEER for approval. The proposed training schedule shall be submitted a minimum of sixty (60) calendar days prior to the start of the training. If the proposed training schedule is approved, then it becomes the final training schedule.

6. Any compensation that is paid to CITY personnel as a result of class cancellations of classes that begin more than thirty (30) minutes after the scheduled start time shall be reimbursed to the CITY by the CONTRACTOR. An exception is when a class is canceled or delayed due to actions by the CITY. The ENGINEER, or his/her representative, will monitor the starting times of scheduled classes.

7. The review of the training material does not constitute its approval unless specifically stated so. The training material submittal shall contain, but not be limited to, the following:

    a. Sufficient background information on each instructor for various sessions shall be provided to allow evaluation of the proposed instructor's qualifications and his capability of training the specific discipline.

    b. At the completion of the training, the CONTRACTOR shall forward to the ENGINEER three (3) complete sets of training materials and support material for each defined training category. This forwarding of materials is to take place at a closeout meeting between the CONTRACTOR and the ENGINEER.

8. Failure to submit training schedule or changes made to the final training schedule, that are not due to actions by the CITY, shall subject the CONTRACTOR to liquidated damages. Liquidated damages shall be assessed at the rate of $500 per day should the CONTRACTOR fail to meet the schedule's submittal requirements.

(END OF SECTION)

BUREAU OF ENGINEERING

VALLEY VILLAGE PARK
STORM WATER CAPTURE PROJECT
PROJECT NO. EW40085F

TECHNICAL SPECIFICATIONS

MARCH 2025

City of Los Angeles
California

Department of Public Works
Bureau of Engineering

ENGINEERING
CITY OF LOS ANGELES

TABLE OF CONTENTS
TECHNICAL SPECIFICATIONS

DIVISION 02-SITE WORK

02160	Soldier Piles
02210	Site Clearing and Demolition
02220	Site Demolition
02240	Sheeting Shoring and Bracing Systems
02310	Earthwork
2515	Water Pipeline Testing and Disinfection
02545	Storm Drain System
02550	Reinforced Concrete Pipe
02585	Maintenance Manhole and Precast Vault Construction
02731	Stabilized Crushed Aggregate Paving
02732	Grasscrete Porous Paving
02810	Irrigation
02821	Chain Link Fencing and Gates
02870	Site Furnishings
02900	Landscape Planting
02939	Plant Protection and Pruning

DIVISION 03 – CONCRETE

03100	Concrete Formwork
03200	Reinforcement Steel
03250	Concrete Accessories
03290	Joints In Concrete
03300	Cast-In-Place Concrete
03301	Cast-In-Place Concrete Paving
03315	Grout
03370	Concrete Curing
03400	Precast Concrete

DIVISION 05 – METALS

05500	Metal Fabrications

DIVISION 06 – WOOD AND PLASTICS

06100	Exterior Rough Carpentry

DIVISION 07 - THERMAL AND MOISTURE PROTECTION

07900	Joint Sealant

DIVISION 09 - FINISHES

09800	Protective Coatings
09860	Anti-Graffiti Coating

DIVISION 10 - SPECIALTIES

10430	Exterior Signage

DIVISION 11 – EQUIPMENT

11000	Equipment General Provisions
11805	Hydraulic Gates and Valves, General
11815	Slide/Stop Gates

DIVISION 13 - SPECIAL CONSTRUCTION

13240	Stormwater Treatment Device

13330 Underground Infiltration Gallery
13447 Electric Actuators

DIVISION 15 – MECHANICAL/PLUMBING
15320 Electrical Requirements for Mechanical Equipment
15440 Drinking Fountain & Bottle Filler
15610 Piping, General
15615 Valves and Gates, General

DIVISION 16 - ELECTRICAL
16020 Municipal Facilities General Electrical Requirements
16100 Basic Materials and Methods
16110 Raceways
16160 Conductors
16170 Cabinets and Racks
16180 Wiring Devices
16190 Electrical Identification
16200 Motor Control Centers
16210 Switches, Disconnect and Safety
16270 Service and Distribution Switchboard
16280 Short Circuit and Coordination Report
16290 Municipal Facilities Grounding Systems
16320 Transformers
16330 Panelboards
16340 Low Voltage Motor Control
16380 Municipal Facilities Uninterruptible Power System
16490 Electric Motors
16560 Municipal Facilities Electrical Systems Commissioning
16570 Municipal Facilities Electrical Testing Requirements

DIVISION 17 - INSTRUMENTATION
17100 Meters, General
17240 AV Flow Meters – Field Mounted
17400 Process Instrumentation and Control
17450 SCADA, PLCS, Network and Communications

END OF SECTION

SECTION 02160

SOLDIER PILES

PART 1 - GENERAL

1.1 RELATED DOCUMENTS

A. Drawings and general provisions of the Contract, including General and Supplementary Conditions and Division 01 Specification Sections, apply to this Section.

1.2 SUMMARY

A. Section includes steel H piles and installation of soldier pile shoring. Shoring system shall prevent lateral and vertical ground movements which will cause damage to adjacent buildings, structures, pavements, utilities and other improvements.

Contractor shall make his own assessment of existing conditions including adjacent properties, the possible effects of his work and construction methods, and shall provide shoring installation methods that will assure safety to the public, adjacent properties, and the completed work.

1.3 UNIT PRICES

A. Contract Sum: Base Contract Sum on number and dimensions of piles indicated from tip to cutoff, plus not less than 12 inches of overlength for cutting piles at cutoff elevations.

B. Work of this Section is affected as follows:

1. Additional payment for pile lengths in excess of that indicated, and credit for pile lengths less than that indicated, is calculated at unit prices stated in the Contract, based on net addition or deduction to total pile length as determined by Architect and measured to nearest 12 inches.

    a. Additional payment for splices required to extend pile lengths in excess of that indicated is calculated at unit prices stated in the Contract.

2. Additional payment for number of piles in excess of that indicated, and credit for number of piles less than that indicated, is calculated at unit prices stated in the Contract.

3. Unit prices include labor, materials, tools, equipment, and incidentals for furnishing, driving, cutting off, capping, and disposing of cutoffs.

4. Test piles that become part of permanent foundation system are considered as an integral part of the Work.

5. No payment is made for rejected piles, including piles driven out of tolerance, defective piles, or piles damaged during handling or driving.

1.4 REFERENCES

A. Except as modified by this specification, construction of soldier pile shoring and retaining walls shall comply with the current edition of the California Construction Safety Orders and 2011 Trenching and Shoring Manual, by State of California Department of Transportation (Caltrans).

B. Geotechnical report by Ninyo & Moore, Project No. 211307001, dated August 12, 2020.

C. ASTM A-36 - Specification for Structural Steel

D. ASTM A-53 - Specification for Pipe, Steel, Black and Hot-Dipped, Zinc-Coated Welded and Seamless

E. ASTM A-572 - Specification for High-Strength Low-Alloy Columbium-Vanadium Steels of Structural Quality

F. ASTM A-615 - Specification for Deformed and Plain Billet-Steel Bars for Concrete Reinforcement

G. ASTM A-992 - Specification for Steel for Structural Shapes for Use in Building Framing

H. ASTM C-33 - Specification for Concrete Aggregate

I. ASTM C-150 - Specification for Portland Cement

J. ASTM D-1248 - Specification for Polyethylene Plastics Molding and Extrusion Materials

K. ASTM D-3350 - Specification for Polyethylene Plastics Pipe and Fittings Materials

L. ASTM D-4101 - Specification for Propylene Plastics Injection and Extrusion Materials

M. ANSI/AWS D1.1 - Structural Welding Code – Steel

1.5 PREINSTALLATION MEETINGS

A. Preinstallation Conference: Conduct conference at Project site.

1.6 ACTION SUBMITTALS

A. Product Data: For each type of product.

B. Shop Drawings: For steel H piles. Show fabrication and installation details for piles, including details of driving points, splices, and pile caps.

1. Indicate welds by standard AWS symbols, distinguishing between shop and field welds, and show size, length, and type of each weld.

2. Include arrangement of static pile reaction frame, test and anchor piles, equipment, and instrumentation. Submit structural analysis data signed and sealed by the qualified professional engineer responsible for their preparation.

1.7 INFORMATIONAL SUBMITTALS

A. Qualification Data: For Installer, professional engineer and testing agency.

B. Welding certificates.

C. Mill Test Reports: For steel H piles, signed by manufacturer.

D. Pile-Driving Equipment Data: Include type, make, and rated energy range; weight of striking part of hammer; weight of drive cap; and, type, size, and properties of hammer cushion.

E. Static Pile Test Reports: Submit within three days of completing each test.

F. Pile-Driving Records: Submit within three days of driving each pile.

G. Certified Piles Survey: Submit within seven days of pile driving completion.

H. Field quality-control reports.

I. Preconstruction Photographs: Photographs or video of existing conditions of adjacent construction. Submit before the Work begins.

1.8 QUALITY ASSURANCE

A. The construction of the soldier pile shoring system shall be the responsibility of Contractor.

B. During installation of the shoring, the Owner's Engineer and Geotechnical Engineer will visit the Site to observe the Work and to verify the compatibility of the Work with design assumptions. The Engineer and Geotechnical Engineer shall prepare a status report for each visit to the Site. This status report shall contain certification that the Work is in concurrence with design assumptions. If deficiencies are observed, these will be noted and the corrective action outlined in the report. A corrective action status report shall be prepared by the Contractor. The above outlined procedures shall be repeated until the corrective action status report confirms that all deficiencies have adequately been corrected.

C. Installer Qualifications: An authorized representative who is trained and approved by manufacturer.

1. Installer's responsibility includes engaging a qualified professional engineer to prepare pile-driving records.

D. Testing Agency Qualifications: Qualified according to ASTM E 329 for testing indicated and accredited by IAS or ILAC Mutual Recognition Arrangement as complying with ISO/IEC 17025.

E. Welding Qualifications: Qualify procedures and personnel according to AWS D1.1/D1.1M, "Structural Welding Code - Steel."

1.9 CORROSION PROTECTION

A. Corrosion protection shall be determined by whether ground conditions are non-aggressive or aggressive if the PH is 5.5 or less.

1. The soil contains a chloride concentration of 500 ppm or greater.

2. The soil has a minimal resistivity of 1000 ohm-centimeters or less.

3. The soil contains sulfate concentration of 2000 ppm or greater

1.10 PRECONSTRUCTION TESTING

A. General: Static pile tests are used to verify driving criteria and pile lengths and to confirm allowable load of piles.

1. Furnish test piles 60 inches longer than production piles.

2. Determination of actual length of piles is based on results of static pile tests.

B. Pile Tests: Arrange and perform the following pile tests:

1. Lateral Load Test: ASTM D 3966.

C. Equip each test pile with two telltale rods, according to ASTM D 1143/D 1143M, for measuring deformation during load test.

D. Provide pile reaction frame, anchor piles, equipment, and instrumentation with enough reaction capacity to perform tests. Notify Architect at least 48 hours in advance of performing tests. On completion of testing, remove testing structure, anchor piles, equipment, and instrumentation.

1. Allow a minimum of seven days to elapse after driving test piles before starting pile testing.

2. Number of Test Piles: One pile.

E. Drive test piles at locations indicated to the minimum penetration or driving resistance indicated. Use test piles identical to those required for Project, and drive with appropriate pile-driving equipment operating at rated driving energy to be used in driving permanent piles.

F. Piles shall be driven to the depth as shown on project plans. If refusal is obtained prior to specified depth, the Engineer shall be notified. Test Pile-Driving Records: Prepare driving records for each test pile, compiled and attested to by a qualified

professional engineer. Include same data as required for driving records of permanent piles.

G. Test piles that comply with requirements, including location tolerances, may be used on Project.

1.11 DELIVERY, STORAGE, AND HANDLING

A. Deliver piles to Project site in such quantities and at such times to ensure continuity of installation. Handle and store piles at Project site to prevent buckling or physical damage.

1. Painted Piles: Protect finish and touch up paint damage before driving piles.

1.12 FIELD CONDITIONS

A. Protect structures, underground utilities, existing powerlines, and other construction from damage caused by pile driving.

B. Site Information: A geotechnical report has been prepared for this Project and is referenced elsewhere in the Project Manual for information only.

C. Preconstruction Photographs: Inventory and record the condition of adjacent structures, underground utilities, and other construction. Document conditions that might be misconstrued as damage caused by pile driving. Comply with Section 01322, "Construction Progress Photography".

PART 2 - PRODUCTS

2.1 STRUCTURAL STEEL

A. All structural steel (H-Piles) shall conform to ASTM A-572, Grade 50 or ASTMA-992.

B. All miscellaneous steel shall conform to ASTM A-36, ASTM A-572, Grade 50 or ASTM A-992.

C. All pipe and pipe sleeves shall conform to ASTM A-53, Grade B.

D. Provide bitumastic coating for full length of soldier beams.

2.2 WELDING

A. All welds shall be electric arc using E70XX electrodes or continuous wire feed.

B. All structural steel welding shall conform to ANSI/AWS D1.1:2002.

C. All welders shall be certified.

D. Provide continuous inspection by a certified inspector for all field welds.

2.3 SLURRY FOR SOLDIER PILES

A. Cement shall be ASTM C-150 Type II or V.

B. Aggregates shall be natural sand conforming to ASTM C-33.

C. Slurry shall contain 1-1/2 sacks of cement per cubic yard of sand.

2.4 CONCRETE FOR SOLDIER PILES, FACING WALL

A. Concrete for soldier piles shall be as specified below. Concrete for soldier pile retaining wall cap, facing, and grade beam shall be in accordance with Section 03300, "Cast-in-Place Concrete".

B. Minimum compressive strength of concrete shall be 4,000 psi at 28 days with a maximum water-cement ratio of 0.50.

C. Cement shall be ASTM C-150 Type II or V.

D. No calcium chloride or other additive shall be used unless specifically approved by the Shoring Engineer.

E. Provide continuous inspection by an approved Deputy Inspector.

F. The concrete mix design shall be reviewed and approved by the Engineer prior to use.

G. The concrete mix design(s) shall be prepared, stamped and signed by a Civil Engineer registered in the State of California.

2.5 TIMBER

A. Wood lagging shall be 4x rough sawn Douglas-Fir No. 2.

B. Wood lagging shall be CCA pressure treated with a minimum retention of preservative of 0.4 pcf and approved for use in ground contact.

2.6 HEADED STUDS

A. Headed studs shall be of size and spacing as shown on the Drawings.

B. The face of soldier beam flange shall be wire-brush cleaned per SSPC-SP-2 or SP-3 and free of any coating.

C. Any stud with weld showing less than a full circle shall be replaced or repaired in accordance with AWS Standard.

D. Continuous inspection is required for all field applied welds.

2.7 BITUMASTIC COATING

A. Protective coating shall be Carboline Bitumastic 300M Coat Tar Epoxy Protective Coating.

B. Coating shall be 16-mils minimum thickness applied to soldier beams as specified.

C. Carboline Bitumastic 300M shall be available at job site for touch-ups to cover areas where welding, nick or scratches have occurred.

D. Continuous inspection is required for application of the Bitumastic coating.

2.8 PILE ACCESSORIES

A. Driving Points: Manufacturer's standard one-piece driving point, fabricated from steel castings as follows to provide full bearing of web and flange of pile tip:

1. Carbon-Steel Castings: ASTM A 27/A 27M, Grade 65-35, heat treated or Grade N1.

2. High-Strength Steel Castings: ASTM A 148/A 148M, Grade 80-40 or Grade 90-60.

B. Splice Unit: Manufacturer's standard splice unit, fabricated from two connected steel plates, of same material as steel H pile or material of equal strength, shaped to encase web and part of each flange.

2.9 FABRICATION

A. Fabricate and assemble piles in shop to greatest extent possible.

B. Pile-Length Markings: Mark each pile with horizontal lines at 12-inch intervals; label the distance from pile tip at 60-inch intervals. Maintain markings on piles until driven.

C. Fabricate full-length piles to eliminate splicing during driving, with ends square.

D. Fabricate full-length piles by splicing lengths of steel H pile together. Accurately mill meeting ends of piles and bevel for welding. Maintain axial alignment of pile lengths. Maintain structural properties of pile across splice.

1. Splice Units: Notch web of pile, fit splice unit into position, and weld according to manufacturer's written instructions and AWS D1.1/D1.1M for procedures, appearance and quality of welds, and methods used in correcting welding work.

2. Continuously Welded Splices: Splice piles by continuously welding according to AWS D1.1/D1.1M for procedures, appearance and quality of welds, and methods used in correcting welding work.

3. Splice piles during fabrication or field installation.

E. Fit and weld driving points to tip of pile according to manufacturer's written instructions and AWS D1.1/D1.1M for procedures, appearance and quality of welds, and methods used in correcting welding work.

PART 3 -- EXECUTION

3.1 EXAMINATION

A. Site Conditions: Do not start pile-driving operations until earthwork fills have been completed or excavations have reached an elevation of 6 to 12 inches above bottom of footing or pilecap.

3.2 DRIVING EQUIPMENT

A. Pile Hammer: Air-, steam-, hydraulic-, or diesel-powered type capable of consistently delivering adequate peak-force duration and magnitude to develop the ultimate capacity required for type and size of pile driven and character of subsurface material anticipated.

B. Vibratory Hammer is not allowed.

C. Hammer Cushions and Driving Caps: Between hammer and top of pile, provide hammer cushion and steel driving cap as recommended by hammer manufacturer and as required to drive pile without damage.

D. Leads: Use fixed, semifixed, or hanging-type pile-driver leads that hold the full length of pile firmly in position and in axial alignment with hammer.

3.3 DRIVING PILES

A. General: Continuously drive piles to elevations or penetration resistance indicated or established by static load testing of piles. Establish and maintain axial alignment of leads and piles before and during driving.

B. Predrilling: Provide pre-excavated holes where indicated, to depths indicated. Drill holes with a diameter less than the largest cross-section dimension of pile.

1. Firmly seat pile in predrilled hole by driving with reduced energy before starting final driving.

C. Heaved Piles: Redrive heaved piles to tip elevation at least as deep as original tip elevation with a driving resistance at least as great as original driving resistance.

D. Driving Tolerances: Drive piles without exceeding the following tolerances, measured at pile heads:

1. Location: 1 inches from location indicated after initial driving, and 1 inches after pile driving is completed.

2. Plumb: Maintain 1 inch in 48 inches from vertical, or a maximum of 4 inches, measured when pile is aboveground in leads.

E. Withdraw damaged or defective piles and piles that exceed driving tolerances, and install new piles within driving tolerances.

1. Fill holes left by withdrawn piles using cohesionless soil material such as gravel, broken stone, and gravel-sand mixtures. Place and compact in lifts not exceeding 72 inches.

2. Fill holes left by withdrawn piles as directed by Architect.

F. Abandon and cut off rejected piles as directed by Architect. Leave rejected piles in place, and install new piles in locations as directed by Architect.

G. Cut off tops of driven piles square with pile axis and at elevations indicated.

H. Pile-Driving Records: Maintain accurate driving records for each pile, compiled and attested to by a qualified professional engineer. Include the following data:

1. Project name and number.

2. Name of Contractor.

3. Pile location in pile group and designation of pile group.

4. Sequence of driving in pile group.

5. Pile dimensions.

6. Ground elevation.

7. Elevation of tips after driving.

8. Final tip and cutoff elevations of piles after driving pile group.

9. Records of redriving.

10. Elevation of splices.

11. Type, make, model, and rated energy of hammer.

12. Weight and stroke of hammer.

13. Type of pile-driving cap used.

14. Cushion material and thickness.

15. Actual stroke and blow rate of hammer.

16. Pile-driving start and finish times, and total driving time.

17. Time, pile-tip elevation, and reason for interruptions.

18. Number of blows for every 12 inches of penetration, and number of blows per 1 inch for the last 6 inches of driving.

19. Pile deviations from location and plumb.

20. Preboring, jetting, or special procedures used.

21. Unusual occurrences during pile driving.

I. Certified Piles Survey: Engage a land surveyor and professional engineer to prepare a piles survey showing final location of piles in relation to the property survey and existing benchmarks.

1. Notify Architect when deviations from locations exceed allowable tolerances.

3.4 FIELD QUALITY CONTROL

A. Special Inspections: Owner will engage a qualified special inspector for items specified in the Los Angeles Building Code, Chapter 17.

B. Testing Agency: Owner will engage a qualified testing agency to perform tests and inspections.

C. Tests and Inspections:

1. Dynamic Pile Testing: High-strain dynamic monitoring shall be performed and reported according to ASTM D 4945 during initial driving and during restriking on five single piles.

2. Weld Testing: In addition to visual inspection, welds shall be tested and inspected according to AWS D1.1/D1.1M and inspection procedures listed below, at testing agency's option. Correct deficiencies in Work that test reports and inspections indicate do not comply with the Contract Documents.

a. Liquid Penetrant Inspection: ASTM E 165.

b. Magnetic Particle Inspection: ASTM E 709; performed on root pass and on finished weld. Cracks or zones of incomplete fusion or penetration are not accepted.

c. Radiographic Inspection: ASTM E 94, minimum quality level "2-2T."

d. Ultrasonic Inspection: ASTM E 164.

D. Steel H piles will be considered defective if they do not pass tests and inspections.

E. Prepare test and inspection reports.

F. Contractor shall document all existing damage to adjacent facilities and submit the information to the Owner prior to performing any excavation. Documentation shall include a written description, diagrams, measurements, photographs, and video.

G. Soldier Pile survey monitoring shall be conducted on a periodic basis by a surveyor employed by the Owner.

H. Control points, initial soldier pile offsets and weekly monitoring shall be performed by a California State licensed surveyor.

I. Initial and periodic readings shall be submitted to General Contractor, Engineer and Soils Engineer.

J. Monitoring readings shall be submitted within one week (5 working days) after they are conducted. Additional readings shall be obtained when requested.

K. Control points shall be established outside the area of influence of the shoring system to ensure the accuracy of the monitoring readings.

L. If any horizontal or vertical movement of the soldier beams reaches one inch, the Soils Engineer and Engineer shall evaluate such movements and recommend corrective measures, if necessary, before excavation continues.

M. If the magnitude of any horizontal or vertical movement of soldier beams reaches two inches, supplemental shoring shall be devised to eliminate all further movement and the Engineer shall approve the supplemental shoring before excavation continues.

(END OF SECTION)

SECTION 02210
SITE CLEARING AND DEMOLITION

PART 1 - GENERAL

1.1 DESCRIPTION

Perform all site clearing and demolition on the job site as indicated on the Contract Drawings.

A. Demolition shall include the removal and disposal of all constructed site features designated on the Contract Drawings for removal, including all below-ground components such as footings, etc.

B. Site clearing shall consist of removing all vegetation such as trees, roots, stumps, shrubs, brush, limbs; and stone, boulders, wood and other vegetative growth from the ground surface. Clearing shall also include the removal and disposal of trash piles, rubbish, debris, etc.

C. CONTRACTOR shall furnish all tools, equipment materials and supplies and shall perform all labor to complete the work associated with removal of all designated natural and artificial material from the areas of work as indicated in the contract documents.

PART 2 - PRODUCTS

2.1 MATERIALS

A. Provide materials not specifically described but required for completion of the work of this section as selected by the CONTRACTOR subject to the approval of the ENGINEER.

PART 3 - EXECUTION

3.1 SITE CONDITIONS

A. Examine the job site and conditions under which work of this section will be performed. Correct conditions detrimental to timely and proper site-clearing operations, as directed by the ENGINEER. Do not proceed until such detrimental conditions have been corrected.

3.2 PROTECTION

A. Protect existing trees and shrubs indicated to remain in the Contract Drawings per tree protection requirements in sheets L000A.

1. Prior to commencement of site clearing work, all Tree Protection fencing shall be installed and approved by the ENGINEER.

3.3 SITE CLEARING AND GRUBBING

A. General:

1. For drawing clarity, not all trees, shrubs, brush, grass, weeds, or exact amount of trash or debris are shown on the drawings. CONTRACTOR shall carefully study

the Contract Drawings and visit the job site and verify the extent of the work to be done prior to bidding.

2. 48 hours prior to commencement of clearing, grubbing and stripping operations, the CONTRACTOR shall request a site meeting to include the BCA inspector, PROJECT MANAGER, project ENGINEER and other CITY staff as designated by the PROJECT MANAGER to review and clearly mark all existing vegetation to remain, and to mark the extents of any required tree protection fencing.

B. Site clearing operations

1. Remove all surface vegetation indicated on the Contract Drawings for removal. Remove all roots, and stumps and other undesirable materials to a depth of at least (2) feet below existing ground surface.

2. Remove all concrete and masonry debris, including footings.

3. Remove all existing rubbish and debris or material resulting from work operations of this section as soon as possible and dispose of properly per general requirements.

4. Where active utility lines need to be capped or plugged, perform such work in accordance with requirements of the utility company or government agency having jurisdiction and conform to relevant provisions of the general requirements.

5. Existing utility services to remaining structures are to be maintained at all times.

3.4 STRIPPING

A. Stripping shall include the removal and disposal of all surface organic sod, grass and grass roots, topsoil and other objectionable material remaining after clearing and grubbing from the areas designated in the Contract Drawings. The depth of stripping shall be as shown on the drawings and/or specified herein.

B. Prior to beginning any excavation or fill, strip the existing topsoil to a depth of 12” or as sufficient to remove all organic material, and stockpile for future use. In general, topsoil shall be removed where structures are to be built, trenches dug, and roads, parking lots, walks, and similar improvements constructed within the areas presently covered with topsoil.

3.5 TOPSOIL

A. If on site topsoil is specified for reuse, stockpile topsoil in an area clear of new construction or where directed by the ENGINEER or the CONSTRUCTION MANAGER.

B. Maintain topsoil stockpiles in a manner which will not obstruct the natural flow of drainage.

1. Maintain the stockpiled topsoil free from debris and trash.

2. Keep the stockpiled topsoil moist to prevent drying out and creating a dusts source.

3. Place and compact topsoil backfill in the planting areas where designated on Contract Drawings. See section landscape planting for amendment requirements.

3.6 REMOVAL AND DISPOSAL OF CLEARING AND GRUBBING DEBRIS

A. General: all undesirable materials removed during site clearing and demolition shall be disposed of per general requirements. No accumulation of flammable material shall remain inside the limit of work.

3.7 STORAGE OF MATERIALS AT THE JOB-SITE

A. Storage of removed materials is not permitted beyond brief accumulation awaiting pick up by removal trucks. Delays in the removal of site-clearing materials from the job site shall be subject to the approval of the CONSTRUCTION MANAGER or the BCA inspector.

(END OF SECTION)

SECTION 02220

SITE DEMOLITION

PART 1 -- GENERAL

1.01 DESCRIPTION OF WORK

A. This Section covers all wrecking and demolition, together with the removal and disposal of items.

B. Related Work Specified Elsewhere:

1. Refer to Division 0, GENERAL CONDITIONS and Division 1, GENERAL REQUIREMENTS.

2. Clearing and grubbing is specified in Section 02210, "Clearing and Grubbing".

3. Excavating and filling for the site is specified in Section 02310, "Earthwork", except as herein specified.

1.02 QUALITY ASSURANCE

A. Requirements of Regulatory Agencies:

1. Traffic:

a. Obstruction. Do not close, obstruct, or store material or equipment in streets, sidewalks, alleys or passageways without a permit in accordance with all local ordinances, regulations and codes.

1.03 JOB CONDITIONS

A. Protection:

1. General Requirements. Protect persons and property in accordance with the GENERAL CONDITIONS. Remove all temporary construction upon completion of the Project.

a. Temporary Barricade Fence. On all sides of the property except where existing buildings are on the property line or where a sidewalk shed is specified, erect an 8 foot (2.44 m) high fence built solid for its entire length and height, except for such openings as doors, necessary for the proper prosecution of the Work.

b. Temporary protective fence. Before beginning any excavation or construction Work at the site, erect a temporary protective fence around the excavation and immediately adjacent to the building. Erect a 4 foot (1.22 m) high fluorescent orange temporary protective fence secured to posts not more than 8 feet (2.44 m) on center.

2. Existing structures and property. Take precautions to guard against movement or settlement of adjacent buildings or structures. Provide and place bracing or shoring as necessary or proper in connection therewith.

Be responsible for safety and support of such buildings and structures. Be liable for any movement or settlement, any damage or injury caused thereby or resulting therefrom. If at any time safety of any adjacent buildings or structures appears to be endangered, cease operation, take precautions to support such buildings or structures and notify the Architect. Resume operations only after permission has been granted. If the Architect considers additional bracing or shoring necessary to safeguard, or prevent movement or settlement, install such bracing or shoring upon Architect's order. If the Contractor fails to comply promptly with such order, such bracing and shoring may be placed by the Owner at the Contractor's expense.

PART 2 -- PRODUCTS (NOT USED)

PART 3 -- EXECUTION

3.01 INSPECTION

A. Condition of Premises:

1. Accept the premises as found and clear the site as specified. The Owner assumes no responsibility for condition of buildings on site at time of proposal or continuation of conditions thereafter. Assume risk regarding damage or loss, whether by reason of fire, theft, or other casualty or happening to specified buildings.

3.02 PREPARATION

A. Utilities:

1. Prior to disconnecting, removing, plugging or abandoning existing utilities serving the buildings being removed, notify all utility corporations, companies, individuals or local authorities concerned with the Work.

3.03 INSTALLATION/APPLICATION/PERFORMANCE/ERECTION

A. Performance:

1. Wrecking and Demolition.

a. Buildings and Other Items. Wreck, demolish, dismantle and completely remove all buildings, items, and obstructions as shown on the drawings or called out in these specifications. Remove any existing rubbish, trash and junk and leave the site clear of such materials. Remove all foundations completely. Remove all basement and cellar floors and other concrete slabs.

(1) Dust Retention. In demolishing masonry walls, etc., keep work wet down thoroughly to prevent dust and dirt from rising. Provide necessary water, waterlines and connections for this purpose.

(2) Pneumatic Tools. Work with pneumatic or vibratory tools will generally be permitted, however on certain areas the Architect may direct that only hand tools be used.

b. Walks and Drives. Where indicated on the drawings, remove pavement, curbs and sidewalks to full depth, take care to avoid damage to adjacent remaining pavement or sidewalks. Make cuts in such a manner that a clean vertical joint remains.

c. Utilities. Disconnect electrical service and/or cut off and cap gas, water and sewer services at the mains on the property or in the street as required by the responsible utility company, or local authority or relocate as shown on the drawings. Remove and cut off and plug or cap all utilities within the existing building areas, except those designated to remain. The Contractor shall coordinate the removal Work with the relocation and/or new Work being performed by all contractors.

d. Removal. Unless otherwise noted or specified to be relocated or stored, all materials removed become the property of the Contractor and are to be removed completely away from the site by him. Do not store or permit debris to accumulate on the Site. If the Contractor fails to remove excess debris promptly, the Owner reserves the right to cause same to be removed at Contractor's expense.

3.04 FIELD QUALITY CONTROL

A. Workmanship:

1. Demolition Work. Execute in an orderly and careful manner with due consideration for neighbors and the public. Execute the Work to insure adjacent properties and the public against damages incurred by falling debris or other causes.

2. Masonry. Demolish in small sections and brace and shore where necessary to avoid collapse of the structure.

3. Burning of Materials. Burn no materials or debris on the premises.

4. Dust control. Constantly sprinkle all rubbish and debris to lay down the dust.

B. Traffic:

1. Interference. Conduct operations with minimum interference with roads, streets, driveways, alleys, sidewalks and other facilities.

3.05 ADJUSTMENT AND CLEANING

A. Temporary Structures. Remove all temporary structures when they are no longer required.

B. Repair:

1. Clean up, repair, or replace at no cost to the Owner, all property damaged by reason of required Work, including restoring all disturbed areas, surfaced and unsurfaced, to their original condition on completion of the

Work. All patchwork shall match existing and be performed in a neat and workmanlike manner by craftsmen skilled in the trade involved. Painted surfaces shall be painted to match the adjacent areas. In newly graded areas take every precaution and temporary measures necessary, such as temporary seeding, to prevent damage from erosion of freshly graded areas. Where any settlement or washing may occur prior to acceptance of the work, repair and re-establish grades to the required elevations and slopes at no additional cost to the Owner. This applies to damage to the newly graded areas within the construction limits and damage to adjacent properties by eroded material.

(**END OF SECTION)**

SECTION 02240
SHEETING, SHORING AND BRACING SYSTEMS

PART 1 – GENERAL

1.1 SUMMARY

The Contractor shall provide shoring at open excavations and elsewhere where greater than 5-feet in depth, or as needed to ensure a stable excavation at less than 5 feet depth. Shoring shall be furnished, placed, maintained and removed by the Contractor, as needed to protect workers, materials, other properties and the public.

1.2 SYSTEM DESCRIPTION

A. General:

1. Shoring systems are not fully detailed on the Drawings, which are diagrammatic and show design intent of finished profiles, shapes and forms.

2. Specifications are of the performance type and include the minimum requirements of the excavation support system without limiting the Contractor to methods of achieving such performance.

B. Survey of existing conditions:

1. Employ California licensed surveyor or civil engineer to make a survey of existing adjacent structures and improvements.

   a. Establish precise elevations at fixed points to act as benchmarks.

   b. Clearly identify benchmarks and record existing elevations.

2. Photograph conditions encountered to highlight defects in existing construction. Notify the Engineer and registered owners of adjacent properties in writing when the survey is to be made and photographs taken so they may have representatives present.

   a. Have those representatives present sign the survey and photographs as witnesses.
   b. Upon completion of this work, make a similar examination of the properties originally surveyed, giving similar notice to all interested parties so they may be present during the final examination of the properties. Send a record of the original and final examinations to all concerned parties.

C. Design Requirements:

1. Shoring: Design shoring in accordance with all applicable codes, and in accordance with the specific requirements shown on the Contract Drawings and specified in the Soil Report. All wood components of the shoring system shall be constructed of pressure treated wood in conformance with the code requirements.

2. Loading: Design and construct shoring to withstand all soil and hydrostatic loading that might occur during the various stages of construction and for any surcharging loading caused by equipment loads, loads from material or soil stockpiles, and earthquake-induced loads.

   a. Determine the soil, surcharge, and hydrostatic loading, but in no case shall the loading be less than the earth and minimum equipment surcharge pressures.

   b. Determine the proper load distributions caused by such activities and assure that those conditions are not exceeded in the field during construction.

   c. Design the shoring for lateral earth and water pressures and surcharge loads that could result from construction methods and dewatering activities.

   d. Consider the intermediate stages during sequence of excavation and backfilling, including placement and removal of the lateral support elements, in the shoring design.

3. Allowable deflection: Maximum deflection of any portion of the shoring system is 0.5 inch. The maximum allowable deflection, where there are no structures, utilities, pr other improvements that may be impacted to 1 inch with the approval of the Engineer.

4. Existing pipes or structures shall not be used to support any portion of the open excavation unless approved by the Engineer in writing.

5 The design of shoring shall conform to accepted engineering practice in this field. Approval of the Contractor's plans and methods of construction by the Engineer or the authorized agencies does not relieve the Contractor of his responsibility for the adequacy of the shoring system.

D. Performance Criteria:

1. The Contractor shall be solely responsible for and bear the sole burden of cost for any and all damages resulting from improper shoring or failure to shore.

2. The safety of workers, the protection of adjacent structures, property and utilities, and the installation of adequate supports for all excavations shall be the sole responsibility of the Contractor.

3. The design, planning, installation, and removal of all shoring shall be accomplished in such a manner as to maintain stability of the required excavation, or trench section, and to prevent any movement of soil that may cause damage to adjacent structures and utilities, damage or delay the work, or endanger life and health.

1.3 RELATED WORK SPECIFIED ELSEWHERE

A. Section 01562 Environmental Mitigation

B. Section 02310 Earthwork

C. Section 03300 Cast-in-Place Concrete

D. Division 15 Mechanical

E. Division 16 Electrical

1.4 CONTRACTOR SUBMITTALS

A. Comply with pertinent provisions of Section 01330 - SUBMITTALS of DIVISION 1 - GENERAL REQUIREMENTS.

B. Design and Calculations: The Contractor shall design and prepare shoring drawings and make calculations of materials used structurally in excavations, footings and foundation in accordance with the code requirements.

C. Shop Drawings: After submitting drawings for shoring to the Engineer for review, the Contractor shall incorporate all comments or corrections in the drawings, and submit to the authorized governing agencies for approval, at least three (3) weeks prior to commencement of work. After the approval is obtained, the Contractor shall submit seven (7) duplicate copies of the approved drawings to the Engineer. No excavations shall start until all the reviews and approval of the shoring design, which includes the following minimum items, have been obtained from the authorized agencies, or the Engineer:

1. Design assumptions, analysis calculations, and information on Contractor's proposed method of installation and removal of all shoring.

2. The maximum design load to be carried by the various members of the support system.

3. Detailed excavation support drawings, showing all pertinent dimensions, spacing, and relationships among the components of the shoring, as well as construction sequence and scheduling. Drawings shall show adjacent existing improvements including utilities within a lateral distance equal to the depth of excavation.

4. The method of bracing and preloading, if any.

5. Detailed utility and structure support drawings, where necessary.

6. The full excavation depth and depth(s) below the main excavation to which the support system will be installed.

7. Detailed sequence of construction and loads for various stages of bracing installation and removal.

8. Detailed drawings and descriptions of the method to be used by the Contractor to monitor shoring movements.

9. Types of construction equipment intended to be used in this Project.

10. Method of removing the soil from the trench or excavation.

11. Backfill materials and method of backfill and compaction.

12. Dewatering Plans.

D. Quality Control Submittals:

1. Design Data: All the design and calculations and shop drawings shall be sealed and signed by a Civil or Structural Engineer licensed in the State of California and experienced in the design of earth retaining structures. The professional engineer shall be obtained and paid for by the Contractor.

E. Permits:

1. Submit in accordance with provisions in Section 01112 – DESCRIPTION OF WORK in DIVISION 1 - GENERAL REQUIREMENTS and other Sections of the Project Manual.

2. The Contractor shall submit shoring drawings and calculations to the Los Angeles City Department of Building and Safety and obtain and pay for the required permit(s).

3. Obtain permit(s) as required by Title 8, Division 1-DEPT. OF INDUSTRIAL RELATIONS, Chapter 4 –DIVISION OF INDUSTRIAL SAFETY of the California Code Of Regulation, and pursuant to Subsection 5-7.2.1 - SAFETY ORDERS of SSPWC, prior to excavating to the depth of 5-feet or greater. A duplicate copy of the permit shall be submitted to the Engineer for review prior to the start of excavation.

F. Certification Form: Contractor shall completely fill out a Competent Person Trench/Excavation Certification Form provided by Inspector of Bureau of Contract Administration prior to any worker access to trench or excavations, and return it to the Inspector. Contractor shall certify by this form: the name of the competent person administering the work, the soil classification, and the type of excavation protective system provided/installed.

G. Shoring Monitoring Data: As Specified herein.

H. Notification: As required by Section 33301.2 of the Los Angeles City Building Code, before commencing the excavation which is not in excess of 12 feet below the grade, the Contractor shall notify in writing the owners of the adjoining buildings no less than 10 days before such excavation is to be made and that the adjoining buildings should be protected.

1.5 QUALITY ASSURANCE

A. Use adequate numbers of skilled workers who are thoroughly trained and experienced in the necessary crafts and who are completely familiar with the specified requirements and the methods needed for proper performance of the work of this Section.

B. Employ a qualified registered engineer having at least five (5) year experience to design the shoring system and to inspect and report on the quality of its construction.

C. Comply with pertinent requirements of governmental agencies having jurisdiction.

D. Coordinate the shoring design and construction with:

1. Soil Investigation Report prepared for this Work;

2. Utilities established in the site.

E. Regulatory Requirements:

1. Conform to provisions of Section 01410 - REGULATORY REQUIREMENTS in the GENERAL REQUIREMENTS.

2. Comply with applicable requirements, including but not limited to, those shown on the Contract Drawings; latest adopted version of the Los Angeles City Building Code, Section 1802 – QUALITY AND DESIGN and Section 3301 – EXCAVATION AND FILLS; State of California, Code of Regulations, Title 8 – INDUSTRIAL RELATIONS, Division 1- DEPARTMENT OF INDUSTRIAL RELATIONS, Chapter 4 – DIVISION OF INDUSTRIAL SAFETY, Subchapter 4 – CONSTRUCTION SAFETY ORDERS, Section 1539, 1540, and 1541.

1.6 PROTECTIONS

A. Protect adjacent existing improvements against damage by the Contractor's operations. Protect all excavation so that the soil of adjoining property will not cave in or settle. Repair or replace damaged items to the full satisfaction of the Engineer, at no extra cost to the City.

B. Shore, crib or lag excavations and earthbanks, as necessary, to prevent caving in, erosion or gullying of the sides.

C. Divert or pump water out of all excavations and trenches until all installation work and backfilling are completed and inspected.

1.7 INSPECTIONS

A. Excavation of existing fills, reworking of natural soils and compaction of all required fills will be inspected and tested by the City of Los Angeles Building and Safety Inspector and the Soils Engineer who will be responsible to the Engineer and will be paid for by the City.

B. Place all such backfill under the full supervision of the Soils Engineer.

PART 2 – PRODUCTS (NOT USED)

PART 3 -- EXECUTION

3.1 SURFACE CONDITIONS

A. Examine the areas and conditions under which the work of this Section will be performed. Correct conditions detrimental to timely and proper completion of the work. Do not proceed until detrimental conditions are corrected.

B. Existing Utilities: Contract Drawings show major utilities, but all utilities may not

be shown. The Contractor will obtain all as-built records of existing utilities from local government authorities or Utility Companies and field check locations of utilities with representatives of the Utility Company. Protect from damage and provide utility trench support to any sewer, storm drain, water, gas, electric or other pipelines or conduits uncovered during work.

1. Excavate by hand or other excavation methods acceptable to the utility owner.

2. If existing utilities interfere with Contractor's proposed method of support, any required modification to the shoring system or relocation of interfering utilities shall be performed at no additional cost to the City.

5. Contact Underground Service Alert, (800) 422-4133, and obtain underground service alert inquiry I.D. Number 48 hours prior to digging. Report the I.D. Number to the Bureau of Contract Administration when calling for inspection.

C. Provisions for Contingencies:

1. Provide a contingency plan or alternative procedures to be implemented, if unfavorable performance is evidenced from the shoring monitoring program.

a. Keep on hand the necessary materials and equipment to implement the contingency plan.

2. If support elements project beyond the vertical projection of the right-of-way shown on the Contract Drawings onto adjoining property, the Contractor shall obtain permission of the adjoining property owner in writing. The Contractor shall bear the cost required to obtain such permission.

3. Subsurface Conditions: Evaluate subsurface conditions as excavation occurs.

4. Differing Conditions: Notify the Engineer of differing conditions that could affect the shoring design assumptions.

5. Acceptance: Proceeding with work means acceptance of existing conditions.

6. Notifications: The Contractor shall make all the necessary notifications to the adjacent properties, as described herein.

3.2 PREPARATION

A. Protection:

1. Protect or repair utilities damaged by operations of this Section.

2. Protect adjacent structures and property from damage and disfiguration.

B. Dewatering:

1. Where applicable, no excavation shall commence until the Contractor has demonstrated to the satisfaction of the Engineer that the groundwater has been lowered to the required level and that the soils inside the excavation are in the dewatered condition that was assumed in the Contractor's shoring design and submittal.

3.3 INSTALLATION

A. All trench and excavation openings shall be illuminated and fenced or barricaded during nights, weekends, and other times, as necessary, and meet CAL/OSHA safety requirements.

B. All shoring shall be installed to the lines and elevations shown on the Contractor's review working drawings. No component of the shoring system shall infringe on the minimum dimensions of any permanent structure shown in the Contract Drawings.

C. The excavation shall be staged as shown in the Construction Drawings or on required work documents and in such a manner as to provide a stable system of support at all times.

D. Should the shoring system utilize steel H-beams, piles, or other similar vertical supports, driving of said vertical supports will not be permitted in proximity of existing structures or sensitive utilities, except for the last 4-feet. The vertical supports shall be placed in holes drilled to a depth of 4-feet above the proposed bottom of the pile, except where this procedure is impracticable. The vertical support may then be driven to the required depth, not to exceed 4-feet. During the drilling and driving operations, the Contractor shall take care to avoid damage to utilities.

At locations where the drilling of such holes is impracticable despite reasonable mitigation methods because of the existence of obstructions or rocks, running sand, or other adverse condition, and provided said impracticability is demonstrated to the satisfaction of the Engineer by actual drilling operations by the Contractor, the Engineer may, upon request of the Contractor, approve the use of means other than drilling for the purpose of placing the vertical support. Such other means, however, must be of a nature which will accomplish, as nearly as possible, the purpose of the drilling, namely, the prevention of damage to existing surface or subsurface improvements, both public and private.

3.4 MONITORING

A. Employ a California-licensed surveyor or civil engineer to design, construct and maintain an on-going monitoring system of the horizontal and vertical deflections of the excavation support systems and the settlement of the adjacent ground and structures.

1. Regularly resurvey benchmarks specified during installation of excavation support systems.

2. Monitor excavation support and protection systems daily during excavation progress and for as long as the excavation remains open.

3. Regularly survey adjacent ground and structures to verify that no settlement is occurring or has occurred as a result of the construction activities.

4. Maintain an accurate log of surveyed elevations and positions for comparison with original elevations and positions. Maintain accuracy within 1/100 of a foot and keep records in a readily understandable form, such as a tabular form of both the net and total deflections (both horizontal and vertical) of each soldier pile.

B. Submit a copy of all the daily readings to the Engineer at the end of each week. Notify the Inspector or the Engineer immediately of any excessive movements or deflection.

1. If changes in elevations or positions occur or if cracks, sags, or other damage is evident in adjacent construction, promptly notify the Engineer and immediately take steps to remedy the situation.

2. Horizontal and lateral deflections into the excavation at any location on the shoring shall be limited to a maximum of 0.5 inch. If at any time this deflection exceeds 0.5 inch, immediate corrective measures shall be taken by the Contractor to prevent any further deflections.

3. The Contractor shall stop the excavation work until corrective measures have been taken and the deflections have been reduced to acceptable limits as specified.

3.5 REMOVAL OF SHORING

A. Shoring shall be designed to be gradually removed as necessary to allow backfill to be placed and compacted. All voids existing behind the shoring which remains in place shall be backfilled with structural concrete**,** as specified in Section 02310 - EARTHWORK.

B. Shoring shall be removed as backfilling progresses. Removal shall be conducted in such a manner so as to avoid any damage to adjacent facilities or to other members of the shoring system. Impact loading or in members of the shoring system will not be allowed. All wood forms, loose or casual wood and debris shall be removed. Areas that cannot be accessed or achieve adequate compaction shall be backfilled with structural backfill at no additional cost to the City.

C. During backfilling, temporary support elements shall not be removed until alternative support is available, such as substituted struts, backfill, or ability of the support system to act as a cantilever without detrimental deflection.

D. Portions of shoring used to support excavations for installation of sanitary sewer and storm drain facilities shall be removed or the pipe bedding and side support shall be recompacted to the satisfaction of the Engineer.

END OF SECTION

SECTION 02310
EARTHWORK

PART ONE - GENERAL

1.1 SUMMARY

A. Provided and execute earthwork **as indicated on the Contract Drawings or** in the Project Manual including, but not limited to the following:

1. General excavating and trenching for various trades.

2. General exterior grading and cutting.

3. General excavating for site improvements.

4. Select base materials for under concrete slab and under paving.

5. Filling and Backfilling.

6. Structure excavation, unclassified fill and borrow excavation defined in Section 300 – EARTHWORK of the "Standard Specifications for Public Works Construction (SSPWC)".

B. RELATED WORK SPECIFIED ELSEWHERE

1. Documents affecting the work of this Section include, but are not necessarily limited to the GENERAL CONDITIONS, SUPPLEMENTARY CONDITIONS, DIVISION 1 - GENERAL REQUIREMENTS and other applicable Sections of the Project Manual.

2. Section 01022, Environmental Procedures.

3. Section 01562, Environmental Mitigation.

4. Section 02210, Clearing, Grubbing, and Stripping.

5. Section 02240, Sheeting, Shoring, and Bracing Systems.

6. Section 02545, Storm Drain System.

7. Section 13330, Underground Infiltration Galleries.

8. Division 3, Concrete Work.

9. Division 15, Plumbing Work.

10. Division 16, Electrical Work.

1.2 QUALITY ASSURANCE

A. Labor: Use adequate numbers of skilled laborers who are thoroughly trained and experienced in the necessary crafts and who are completely familiar with specified requirements and the methods needed for proper performance of the Work of this Section.

B. Equipment: Use equipment adequate in size, capacity, and numbers to accomplish the work of this Section in a timely manner.

C. Codes and Standards: Perform excavation work in compliance with applicable ordinance of governing authorities having jurisdiction including, but not limited to, the 2022 or latest edition L. A. City Building Code and applicable Amendments; Division 1-DEPARTMENT OF INDUSTRIAL RELATIONS of Title 8 of the California Code of Regulations; Section 300 - EARTHWORK of SSPWC, as amended by the Brownbook.

1. In addition to complying with Codes and Standards having jurisdiction, comply with directions of the Soil Engineer.

D. The Contractor shall provide necessary measures for storm water pollution control and water quality protection. The Contractor shall meet the standards of good housekeeping at all times.

E. Testing and Inspection Services**:** The City will engage a qualified soil testing and inspection service for quality control testing during earthwork operations. Testing shall be performed in accordance with the soil investigation reports and testing standards, the instructions of the Soil Engineer and the applicable Sections of General Conditions.

F. Soil Engineer: The City will retain the services of a Soil Engineer for the purpose of soil investigations and testing, all the necessary inspections and observations, and certifications.

G. Survey: The Contractor shall employ the services of a California licensed surveyor for the purposes of survey control, layout, grade and cross-sections required to control work. Survey work shall conform to Section 01722-SURVEYING.

1.3 SUBMITTALS

Conform to provisions of Section 01330 of DIVISION 1 - GENERAL REQUIREMENTS.

A. Shop Drawing of the Shoring System in Section 02240, " Sheeting, shoring, and Bracing Systems."

B. Sources of imported materials.

C. Method of Back-Filling and Compaction.

D. Dewatering Plans.

E. California General Construction Activity Stormwater Permit, Waste Discharge Identification Number, Wet Weather Erosion Control Plan or Stormwater Pollution Prevention Plan.

F. Competent Person Trench/Excavation Certification Form in Section 02240 – "Sheeting, shoring, and Bracing Systems."

G. Test Reports-Excavating: Contractor shall submit the following reports directly to the Los Angeles City Department of Building & Safety, prepared by the Soil Engineer and the testing service, with a copy to the Engineer.

1. Test reports on borrow material.

2. Verification of each footing subgrade.

3. Field density test reports.

4. One optimum moisture-maximum density curve for each type of soil encountered.

5. Other test reports as required by the Soil Engineer and the local cognizant agency.

1.4 PERMITS

A. Required: In addition to the requirements specified herein, and in applicable Section 01112 – DESCRIPTION OF WORK of DIVISION 1 - GENERAL REQUIREMENTS of the Project Manual.

B. The Contractor shall perform all work in accordance with the permit requirements of the Los Angeles City Department of Building and Safety, including obtaining the grading permit, hauling permit and bond, and making the notification to the adjacent property owners; no additional compensation will be allowed therefore.

C. The Contractor shall furnish to the Engineer a duplicate copy of the OSHA excavation permit, and all other required permits prior to the start of the excavation work.

D. The Contractor shall obtain and pay for the Bureau of Engineering's Shoring (Lateral Support) Permit.

E. The Contractor shall obtain and pay for the California State Regional Water Quality Control Board (LARWQCB) Construction Water Discharge Permit.

F. The Contractor shall obtain and pay for Calif General Construction Activity Stormwater Permit. The Contractor shall obtain Waste Discharge Identification Number after submitting [Wet Weather Erosion Control Plan (WWECP) pursuant to Section 61.02 and 64.72 of L.A.M.C. Stormwater Pollution Prevention Plan (SWPPP) pursuant to Section 91.106 of L.A.M.C. to the Los Angeles City Dept. Building and Safety for reviews.

G. The Contractor shall make all necessary notifications, obtain and pay for required permits and file manifests with the South Coast Air Quality Management District (SCAQMD).

1.5 JOB CONDITIONS

A. Required Work Coordination: The Contractor shall fully coordinate the work operations of this Section with that of other trades involved and with the Engineer to assure proper sequence of work, limitations, methods and time of work so as to minimize or avoid interference with the existing utilities as well as performance of work by the other Contractors. Contractor shall include minimum two weeks in its Construction Schedule to allow the Soil Engineer to prepare final Soil Report to be submitted to the Los Angeles City Department of Building and Safety Grading Division for final approval if the Soil Engineer is obtained by the City. The Contractor shall coordinate and arrange for all the inspections with the local authorized agencies and the Bureau of Contract Administration.

B. Trench Safety: Attention is directed to the provisions of Section 6705 of the Labor Code and Section 02240 – “Sheeting, Shoring, and Bracing Systems” of the Project Manual concerning trench excavation safety plans.

C. Air Pollution Control: The Contractor shall comply with all air pollution control rules, regulations, ordinances and statutes which apply to work performed pursuant to the Contract, including any air pollution control rules, regulations, ordinances and statutes, specified in Section 1107 of the Government Code.

D. Use of Pesticides: The Contractor shall comply with all rules and regulations of the Department of Food and Agriculture, the Department of Health, the Department of Industrial Relations and all other agencies which govern the use of pesticides required in the performance of the Work on the Contract.

1. Pesticides shall include, but shall not be limited to herbicides, insecticides, fungicides, rodenticides, germicides, menatocides, bactericides, inhibitors, fumigants, defoliants, soil sterilants, and repellents.

2. Any substance or mixture of substances intended for preventing, repelling, mitigating or destroying weeds, insects, diseases, rodents, or nematodes and any substance of mixture for substances intended for use as a plant regulator, defoliant shall be considered as a pesticide.

E. Sound Control Requirements: The Contractor shall comply with all local sound control and noise level rules, regulations and ordinances which apply to any work performed pursuant to the Contract.

Each combustion engine, used for any purpose on the job or related to the job, shall be equipped with a muffler of a type recommended by the manufacturer. No internal combustion engine shall be operated on the project without said muffler.

F. Use of Explosives: The use of explosives is not permitted.

1.6 PROTECTIONS

A. General: Comply with provisions of Section 00309 - PROTECTION OF PERSONS AND PROPERTY AND RESTORATION OF EXISTING IMPROVEMENTS in GENERAL CONDITIONS. Protect and guard all excavations against damage to life, limb and property as prescribed by Los Angeles City Department of Building and Safety.

B. Protections of Persons and Property: Provide and install signs, lights and barricades at danger points on and off the job-site to guard against accidents, etc.

1. Barricade open excavations occurring as part of this work and post with warning lights.

2. Operate and maintain warning lights as recommended by authorities having jurisdiction.

3. Protect structures, utilities, sidewalks, pavements and other facilities from damage caused by settlement, lateral movement, undermining, washout and other hazards created by earthwork operations.

4. Perform excavation within drip-line of large trees to remain by hand, and protect the root system from drainage or dry out to the greatest extent possible. Maintain moist condition for root system and cover exposed roots with burlap. Paint root cuts of 1" diameter and larger with emulsified asphalt tree paint.

C. Existing Improvements (including trees and shrubs Indicated to Remain): Protect against damage resulting from Contractor's operations. Repair or replace damaged items to the full satisfaction of the City at no added cost to the City.

D. Shoring, Cribbing and Lagging: Required of excavations and earth banks as necessary to prevent caving in, erosion or gullying of sides. Conform to applicable provisions in Section 02240 – "Sheeting of the Project Manual.

1. Design and calculations of shoring, etc. shall be in accordance with requirements of with the latest Los Angeles City Building Code, Section 2811 and Safety Orders of State of California, Division of Industrial Safety, Title 8, Subchapter 4, Article 6, Sections 1540 and 1541.

2. Upon completion of the project or when no longer needed or otherwise directed by the authority having jurisdiction, remove all such shoring from the jobsite.

E. Existing Utilities: Utilities shown on the drawings are shown pursuant to a search of available records and are shown as a matter of information and not as a matter of fact. Conforming with Section 01112 - SUMMARY OF THE WORK, Section 01140 – CONTRACTOR'S USE OF THE PREMISES and other Sections of the Project Manual, the Contractor shall locate existing underground utilities in areas of work. If utilities are to remain in place, provide adequate means of support and protection during earthwork operations.

1. Should uncharted or incorrectly charted piping or other utilities be encountered during excavation, consult City immediately for directions. Cooperate with City and utility companies in keeping respective services and facilities in operation. Repair damaged utilities to the satisfaction of the utility company.

2. Do not interrupt existing utilities serving facilities occupied and used by City and others, during occupied hours, except when permitted in writing by the Engineer and then only after acceptable temporary utility services have been provided.

3. Provide a minimum of 48-hour notice to the Engineer, and receive written notice to proceed before interrupting any utility. Obtain clearance and notify all utility companies in the area and contact Underground Service Alert by calling (800) 422-4133. Deliver utility clearance ticket number to the Engineer prior to the start of any work.

4. Demolish and completely remove from site existing underground utilities indicated to be removed. Coordinate with utility companies for shut-off of service if lines are active.

1.7 INSPECTION

A. Required: All excavations and trenches shall be inspected by the Los Angeles

City Building and Safety Inspector, and the Soil Engineer before filling, backfilling and/or other subsequent work is placed therein.

1. Earthwork backfill for structures shall comply with requirements of Section 300-3.5 - STRUCTURAL BACKFILL of SSPWC and/or requirements in the Project Manual.

1.8 SOILS INFORMATION

Soil Report No. 211307001, dated August 12, 2020 is a part of Project Manual. Contractor shall comply with all Soil Report recommendations specified and other instruction directed by the Engineer. In case of conflicts between other parts of the Project Manual and the Soils Report, the most restrictive condition shall govern unless otherwise approved by the Soil Engineer. Soil Report is provided in Section 01112 – DESCRIPTION OF WORK of the Project Manual.

1.9 MATERIAL HANDLING

A. Delivery: All materials, tools, equipment, etc. to be delivered to the jobsite, in such a manner that it is coordinated with progress of work of this Section.

B. Material Storage: Stockpile satisfactory excavated materials where directed, until required for backfill or dispose of in accordance with Section 300-2.6 - SURPLUS MATERIALS of SSPWC. Place, grade and shape stockpiles for proper drainage.

1. Locate and retain soil materials away from edge of excavations. Do not store within drip line of trees indicated to remain.

2. Dispose of excess soil material and waste materials as herein specified.

PART TWO – PRODUCTS

2.1 SOIL MATERIALS

A. Suitable Excavated Material: Suitable materials from excavations for use in fill and embankments shall be free from shale, sod, large clods or hard lumps of earth, roots, trash or other debris; that has a liquid limit of less than 30 and a plasticity index of less than 9; and is readily compatible to specified density. No rock, cobbles or broken concrete exceeding 3 inches in maximum dimension shall be placed in compacted fill without the specified approval of the Engineer. No rock, cobbles or broken concrete exceeding 1 inch in maximum dimension shall be placed in compacted fill of a utility trench.

B. Fill Material: Furnish imported earth material as necessary; if specified in the contract requirements or if the amount of suitable earth materials obtained from the job-site excavations is not sufficient to properly construct the required fill, subject to the approval of the Engineer or the Soil Engineer prior to use.

1. Obtain imported fill material from a source approved by the Engineer or Soil Engineer prior to importing to the jobsite.

2. Imported fill material shall be free of foreign materials, vegetable growths, sod, rocks, expansive soils and all debris.

3. Lime for Treatment of Imported Fill Material: As hereafter specified in accordance with Section 301-5 - LIME-TREATED SOIL of SSPWC.

4. Where fill material exhibits a wide variation in consistency, the Engineer may require blending to stabilize and upgrade the material as directed by the Engineer.

5. In landscape (planting area), fill shall not be saline or contain anything that would prevent normal plant growth: See LANDSCAPING, Section 02900 of the Project Manual for verification of required or approved fill material.

C. Base Material: "Untreated Uncrushed Aggregate Base", 3/4-inch maximum size aggregate as specified in Section 200-2 - UNTREATED BASE MATERIALS of SSPWC.

D Pipe Bedding and Trench Backfill Material:

1. Use approved, clean earth materials previously removed from jobsite excavations as above specified free from clay, rock, or gravel larger than 1-inch for utility trenches, subject to the Soil Engineer's approval prior to use.

2. For storm drainpipe, use approved washed sand with a sand equivalent value of 30 or more and extend 6 inches below and 12 inches above said pipe, the balance of backfill to be approved clean earth materials.

3. For water pipe or pipe rise**,** use approved washed sand with a sand equivalent value of 30 or more and extend 6 inches below and 12 inches above said pipe, the balance of backfill to be approved clean earth materials.

4. For underground infiltration galleries, use approved ¾" angular stone and place minimum of 6 inches below infiltration galleries. Material should be raked free of voids, lumps, debris, and sharp objects.

5. For electrical conduits, use approved washed sand with a sand equivalent value of 30 or more and extend 6 inches below and 12 inches above said conduits, the balance of backfill to be approved clean earth materials. For utility service connection, provide bedding and backfill material in accordance with utility company's instructions.

6. For the landscape irrigation piping, use approved washed sand with a sand equivalent value of 30 or more and extend 6 inches below and 12 inches above said pipe, the balance of backfill to be an approved clean earth materials.

7. Conforming to applicable Sections of the Project Manual for the pipe bedding widths and depths.

E. Soil Cement: Use soil-cement to form a dense, uniform mass conforming to the lines, grades and cross sections [shown on the Contract Drawings. The soil cement shall be mixed, placed and compacted at least 95% of the relative compaction, in accordance with Section 301-3 of SSPWC and the instructions of the Soil Engineer.

F. Structural Backfill: The structural backfill shall have a sand equivalent of not less than 20 in accordance with Section 300-3.5 - STRUCTURAL BACKFILL and Section 300-4.5 - PLACING MATERIALS FOR FILLS of SSPWC, and placed and compacted to 90% of relative compaction.

G. Slurry Backfill: Slurry backfill shall be 60 E 0.7 (Class 100-E-100) and placed in accordance with Section 306-1.3.1 - BACKFILL AND DENSIFICATIONS of SSPWC.

H. Drainage Fill Material: Clean [gravel] conforming to ASTM C33 - SPECIFICATION FOR CONCRETE AGGREGATES, graded as follows:

Sieve Size	**%Passing Sieve**
1 ½ inch	**90 to 100%**
3/4 inch	**45 to 60%**
#4	**35 to 50%**
#16	**20 to 40%**
#50	**5 to 20%**
#100	**0 to 5%]**

2.2 WEED KILLER/SOIL STERILANT

Provide a dry, free-flowing, dust-free chemical compound, soluble in water, capable of inhibiting growth of vegetation, and approved for use on this Work by governmental agencies having jurisdiction.

A. Tinted for visual identification, shall be as follow:

1. United States Borax Corp. “Polyborchlorate” or equal.

2. Pacific Coast Borax Co. “Polyborchlorate”.

3. Amspray Corp. “Pavex”.

6. Elanco “Spike 801".

2.3 TOPSOIL

A. Where required by and shown on the Landscape Drawings or otherwise required, provide topsoil consisting of friable, fertile soil of loamy character, containing an amount of organic matter normal to the region, capable of sustaining healthy plant life, and reasonably free from subsoil, roots, heavy or stiff clay, stones larger than 2 inches in greatest dimension, noxious weeds, sticks, brush, litter, and other deleterious matter.

B. Obtain topsoil from sources within the project limits, provide imported topsoil from approved sources within 50 miles outside the project limits, or from both sources.

2.4 OTHER MATERIALS

Provide other materials, not specifically described but required for a complete and proper installation, as selected by the Contractor subject to the approval of the Engineer.

2.5 TERMITE CONTROL MATERIAL

Solution of water emulsifiable concentrate; 1% solution of chlordane or 0.8 of 1% solution

of Lindane or 0.5 of 1% solution of Dieldrin. Add a compatible pigment (red or green) for obvious contrast with untreated soil.

2.6 IMPERMEABLE PLASTIC LINER **(NOT USED)**

PART THREE - EXECUTION

3.1 SURFACE CONDITIONS

Examine the areas and conditions under which the Work of this Section will be performed. Correct conditions detrimental to timely and proper completion of the Work. Do not proceed until detrimental conditions are corrected.

3.2 WATER QUALITY PROTECTION

A. Eroded sediments and other pollutants must be retained on site and may not be transported from the site via sheet flow, swales, area drains, natural drainage, or wind.

B. Stockpiles of earth and other construction-related materials must be protected from being transported from the site by wind or water.

C. Fuels, oils, solvents, and other toxic materials must be stored in accordance with their listing and are not to contaminate the soil ~~n~~or the surface waters. All approved toxic storage containers are to be protected from the weather. Spills must be cleaned up immediately and disposed of in a proper manner. Spills may not be washed into the drainage system.

D. Excess or waste concrete may not be washed into the public right-of-way or any drainage system. Provisions shall be made to retain concrete waste on-site until they can be appropriately disposed of or recycled.

E. Trash and construction-related solid waste must be deposited into a covered receptacle to prevent contamination of rainwater and dispersal by wind.

F. Sediments and other materials may not be tracked from the site by vehicle traffic. The construction entrance roadways must be stabilized so as to inhibit sediments from being deposited into the public right-of-way. Accidental deposits must be swept up immediately and may not be washed down by rain or by any other means.

G. Comply with requirements shown in Wet Weather Erosion Control Plan (WWECP).

3.3 SITE PREPARATION

A. Remove the existing soil including fill material, debris, roots and foreign materials to a dept of sufficient to remove all organic material. Removal shall be done in accordance with Section 02210 – “Site Clearing and Grubbing” of the Project Manual.

B. Topsoil from the stripings shall be stockpiled and may be used for the finished site grading, subject to approval of the ENGINEER. Excess topsoil will be placed in the waste disposal areas designated by the ENGINEER.

C. Subgrades: Scarify for recompaction to a depth of 8-inches, bring to optimum

moisture content and then recompact to at least 95% maximum density for subgrade as per ASTM D1557 - TESTED METHOD FOR LABORATORY COMPACTION CHARACTERISTICS OF SOIL USING MODIFIED EFFORT (56,000 FT - LBF/FT^3.). Prepare subgrade in accordance with Section 301-1 - SUBGRADE PREPARATION of SSPWC.

D. Holes and trenches existing on the jobsite or resulting from Contractor's operations shall be filled with clean existing or imported earth materials (free of large clods and stone).

Unless indicated otherwise, construct fill in accordance with Section 300-4.5 - PLACING MATERIALS FOR FILLS of SSPWC in 8-inch layers and each layer compacted to 95% relative compaction and finished to elevations necessary to require cutting by fine grading. Inspection by Los Angeles City Building and Safety Inspector and the Soil Engineer are required prior to filling. Obtain minimum one compaction test for each layer or volume specified by Code.

E. Grading: To elevations of existing adjoining street surfaces, private property and surfaces immediately adjacent to the job-site limits indicated on the Contract Drawings; make all grades in a straight line from any point to any other perimeter point.

F. Dewatering:

1. Remove all water, including rain water, encountered during trench and sub-structure work to an approved location by pumps, drains, and other approved methods.

2. Keep excavations and site construction area free from water.

G. Dust Control: Use means necessary to prevent dust becoming a nuisance to the public, to neighbors, and to other work being performed on or near the job-site.

H. Moisture Control: Where subgrade or layer of soil material must be moisture conditioned before compaction, uniformly apply water to surface of subgrade, or layer of soil material. Apply water in manner to prevent free water appearing on surface during or subsequent to compaction operations.

1. Remove and replace, or scarify and air dry, soil material that is too wet to permit compaction to specified density.

2. Soil material that has been removed because it is too wet to permit compaction may be stockpiled or spread and allowed to dry. Assist drying by discing, harrowing, or pulverizing until moisture content is reduced to a satisfactory value.

I. Rework: Any previously compacted or tested subgrade and fill material, which are affected or disturbed, in the opinion of the Soil Engineer, by the inclemency of the weather such as rains, floods, earthquake or others shall be reworked, retested and re-inspected at no additional cost to the City.

J. Approval of Subgrade**:** By the Soil Engineer and the Los Angeles City Building and Safety Inspector prior to placing any fill.

3.4 GRUBBING AND GRADING

A. Grubbing shall be performed in accordance with SSPWC Section 300-1.

B. Rough: Leave cut and fill sufficiently high to require cutting by fine grading.

C. Fine: To elevations required to ensure proper drainage or finished elevations indicated on drawings; finish elevations for planting areas as specified in landscape plans.

D. Subgrade Preparation: Required for all areas, other than filled or backfill areas, over which moisture barrier material, slabs, walks or pavement will be placed; in accordance with provision specified herein and Section 301-1 - SUBGRADE PREPARATION of SSPWC.

E. Inspection Required: Prior to placing base material, concrete or other materials.

F. Grading for Demolition Jobs: To specified elevations or elevations of existing sidewalks, adjacent property lines or surfaces immediately adjacent to the sites. Make all grades straight-line from any point to any other perimeter point.

G. Grading for New Asphalt Concrete Paving:

1. Rough: Cut and fill to be left sufficiently high to require cutting by fine grading and preparation of the surface for placement of the required select base material to thickness noted on the Contract Drawings or matching that of adjacent existing select base materials.

2. Fine: To exact elevations necessary for required new paving and paving repairs.

3. Testing and Inspection Required: Prior to placing of select base and asphalt paving materials.

3.5 EXCAVATING

A. General:

1. Excavation consists of the removal and disposal of materials necessary to establish required grade elevations and certified compacted fill for new construction pursuant to Section 300-2 UNCLASSIFIED EXCAVATION of SSPWC.

2. Excavated materials suitable for use as fill and/or backfill to be stockpiled where directed by the Engineer.

3. Non-approved and excess excavated materials to be legally removed and disposed of from the jobsite.

4. Shoring, Bracing and Bulkheading of Trenches: All to be provided, installed and maintained where required to support trenches, See Subsection 1.6 of this Section. Conform to the requirements prescribed by the Los Angeles City Department of Building and Safety, CAL/OSHA, Section 02240 – “Sheeting, Shoring, and Bracing Systems” and other Sections of the Project Manual.

5. Access to Trenches: Conform to Section 306-1.1.4 - ACCESS TO TRENCHES of SSPWC. Provide safe and suitable ladders, which project 2 feet above the top of the trench. It shall be provided for all trenches over 4 feet in depth. A minimum one ladder shall be provided for each 50 feet of open trench or fraction thereof and be so located that the workers in the trench need not move more than 25 feet to a ladder.

6. Encountered Existing Underground Piping or Conduits: Immediately stop the trench operations at the point of encounter, notify the Engineer of such condition and submit support drawings to the Engineer for approval. The support drawings shall be in conformance with the Los Angeles City Bureau of Engineering Standard Plans S-253, SUPPORTS FOR STORM DRAIN AND SEWER PIPES ACROSS TRENCHES, latest edition; CAL/OSHA and the utility company's requirements.

B. For Substructure Concrete:

1. When Earth Banks are Stable: To net sizes of concrete, except as otherwise specified or indicated on the Contract Drawings.

2. When Earth Banks are not Stable: Sufficiently wider than concrete to allow for forms and inspection thereof.

3. Where Rock Occurs: Surface to be leveled to a clean, even hard surface.

4. Depth: As indicated on Contract Drawings.

5. Excessive Width and Depth: Where excavation is made wider and deeper than required, fill with concrete specified in Section 03300 "Cast-In-Place Concrete" of the Project Manual, at Contractor's expense.

6. Inspection Required: After excavation and before placing concrete and before backfilling, the exposed soil or subgrade will be carefully inspected by the City of Los Angeles Building and Safety Inspector and the Soil Engineer to verify removal of additional unsuitable soil.

7. Protections and Shorings: See Subsection 1.6 of this Section.

8. Excavation for Grade Beams: Omit forms when sides will stand to a cut face, make such excavation 1-inch wider on each side.

9. When excavating adjacent to existing remaining structures, do so in a sequence as required and approved by the Engineer to avoid displacement or damage to the existing adjacent structure.

C. For Site Improvements:

1. Masonry Yard Walls: As necessary for required footing and setting of forms for concrete work, to depth indicated.

2. For Planter Curbs: To exact curb limit, without excessive removal of adjacent paving or subgrade for new paving.

3. Planter Areas: Remove existing sub-soils as necessary to receive topsoil fill as specified in landscape plans.

4. For Bollards, Light Posts, Signs: To dimensions and depths noted on the Contract Documents for foundations.

6. For Concrete and Asphaltic Site Improvements such as concrete and/or asphalt pavements, concrete walkways, driveways aprons, concrete curb and gutter: Excavate to exact limits of such work without excessive removal of existing subgrade. Scarify and compact top 8 inches of subgrade and compact at 95% relative density.

D. For Walls (including wall footings): Width not less than 18-in. from face of wall and sufficient for necessary forms, cribbing, bracing, inspection, and application for watering on walls, where required.

E. Conduit and Piping: Conforming to the requirements as specified on the drawings, Los Angeles City Plumbing Code, SSPWC and other sections of the Project Manual. Any piping with 8 feet or less cover or backfill, Case 1 Bedding Installations of Los Angeles City Bureau of Engineering Standard Plan S-251, latest edition, shall be used for all piping laying unless otherwise specified on the drawings or noted.

1. Depth and Width of Trench For Storm Drainage Piping: To depth necessary for installation of piping and construction of catch basin in accordance with requirements of Section 02545 - STORM DRAIN SYSTEM, PLUMBING Section in Division 15 of the Project Manual and as noted on the Contract Drawings. Provide minimum 12 inches side clearance from side of the piping. Make the sides vertical and the bottoms smooth, firm, level or uniformly sloped as required, slope to not exceed a downward slope of two horizontal to one vertical in a manner to prevent formation of water pockets in the pipe. For backfill or earth cover exceeded 8 feet, refer to Los Angeles City Bureau of Engineering Standard Plan S-251, latest edition, for maximum allowable trench width and bedding material. Unless specified otherwise, provide minimum 2 inches washed sand bedding below the pipe barrel.

2. Depth and Width of Trench for Plumbing Piping: As necessary for complete installations of the piping, fixtures and controls; provide minimum 12 inches side clearance from side of the piping; make the sides vertical and bottoms smooth, firm, level or slopes, as required by the code for proper drainage. Final elevations shown on Contract Drawings shall mean the invented pipe elevations. Pipe thickness and bedding thickness shall be used in determining trench depths. Conform to the requirements as specified in the Los Angeles City Plumbing Code and in Division 15 of the Project Manual. For backfill or earth cover exceeded 8 feet, refer to Los Angeles City Bureau of Engineering Standard Plan S-251, latest edition, for maximum allowable trench width and bedding material. Unless specified otherwise, provide minimum 4 inches washed sand bedding below the pipe barrel.

   If final elevation is not shown on contract drawings, place all piping to a depth no less than 24 inches.

3. Depth and Width of Trench for Electrical Conduit and Pull Box: As necessary for complete installation of the electrical conduits and pull box, unless specified otherwise, provide minimum 7-1/2 inches side clearance from the side of the conduit and pull box and 2 inches sand bedding in

accordance with the Contract Drawings and requirements of the Utility Company.

Conduit shall be placed to a depth of not less than 24 inches and 36 inches under the driveway.

4. Depth and Width of Trench for Landscape Irrigation Piping: As necessary for complete installations of the piping fixtures and controls; provide a minimum of 7-1/2 inches side clearance from the side of the piping and 4 inches washed sand bedding. Depth of piping shall be conformance with Section 02810 – IRRIGATION SYSTEMS of the Project Manual. All trenches for electrical conduit and wiring shall be in accordance with requirements listed hereinbefore.

F. Corrections: Required of all unauthorized excavations made below indicated depths, as recommended by the Soil Engineer at no added cost to the City.

3.6 FILLING

A. General: Construct in accordance with Section 300-4- UNCLASSIFIED FILL of SSPWC and place in layers not exceeding 8-inches thickness, compacted to a relative compaction of not less than 95**%** when tested in accordance with Section 211-2 - COMPACTION TESTS of SSPWC, except that fill in planting areas may be compacted to **90%** relative compaction.

B. In Planting Areas and Tree Wells: If flooding method is specified for fill material, place saturated fill (exclusive of topsoil fill) prior to construction of adjacent improvements to minimize settlement as follows:

1. Planting Areas and Holes: Cultivate and soak the specified backfill mix for a minimum of two days using a common lawn soaker.

2. Tree Wells: Excavate a sump approximately 3-feet square by 3-feet deep and flood each sump for about 3 days.

C. Fill all holes on the existing jobsite or resulting from site-clearing or demolition operations.

D. Topsoil Fill: Specified in Section 02900 – “Landscape Planting” of the Project Manual.

E. Inspection Required: Prior to placement of fill materials. See Subsection 1.7A of this Section.

F. Concrete and Asphalt Site Improvements Walkways: Compact top 8 inches of existing subgrade and each 8" layer of backfill or fill material at 95% relative density.

3.7 BACKFILLING

A. Prior to Backfilling: Remove debris, trash and form materials from excavations.

B. Inspection Required: Prior to backfilling operations.

C. Placement of Backfill: In layers not exceeding 8-inches thickness, moisten to optimum moisture content and tamp until required 95% relative compaction is

secured and finish to suitable elevations to provide for anticipated settlement and shrinkage.

D. For Underground Infiltration Galleries: Backfill not to be placed until infiltration galleries have been tested and inspected, and the Fire Department and the Inspector have completed their inspections. Backfill to be placed evenly around the perimeter and on the top of the infiltration galleries at a minimum of 12-inch lifts. Backfill shall be per manufactures recommendations.

E. Pipe Bedding And Backfill Over Underground Piping And Conduit: Place bedding and backfill material in conformance with provisions specified Subsection 2.1 (D) herein and in Section 02545 – "Storm Drain System", Division 15 – "Plumbing" and Division 16 – "Electrical" of the Project Manual. Do not place backfill materials until the Inspector has inspected and approved the pipe installation. The bedding shall be compacted and shaped to form a firm base for the pipe and conduit. The initial backfill shall be placed in two lifts. The first lift shall be to the spring line of the pipe or conduit. The initial backfill shall be lightly compacted by light tamping. The balance of backfill shall be placed in accordance with Subsection 3.8 (C) herein.

F. For Parking Lot or Demolition Jobs: Use clean material previously removed from excavations or use imported materials as hereinbefore specified subject to approval by the Inspector or Engineer.

G. For Backfill Against Basement Walls: Do not place until such walls have gained sufficient strength to resist backfill loads and backside of such walls have been properly waterproofed without prior approval of the Inspector. Bring backfill up to finish grade or to subgrade for paving as indicated on the drawings.

H. In Planting Areas Holes and Tree Wells: After planting, cultivate and soak the specified backfill mix for a minimum of two days using a common lawn soaker if specified.

I. For Voids Left by the Removal of Sheeting, Piles and Similar Shoring Supports: Immediately backfill with structural backfill of clean sand which shall be jetted into place to ensure a dense and complete filling of the voids.

J. Slurry Backfill: In areas where specified and/or around the utilities, vaults or other structures where the Soil Engineer determines that it is not practical to attain the required compaction by the mechanical methods or water densification, provide a trench slurry backfill 60-E0.7 (Class 100-E-100).

3.8 SELECT BASE

A. Place in accordance with Section 301-2 - UNTREATED BASE of SSPWC and "Soil Report" recommendations.

B. Locations: Place select base beneath concrete and asphalt concrete yard paving, beneath concrete driveway aprons and concrete gutters in yard areas and elsewhere to thickness noted on the Contract Drawings.

C. Thickness: At least 4 inches under yard concrete paving, at least 4-inches under yard asphalt concrete paving, or as otherwise indicated on the Contract Drawings.

NOTE: Place to thickness matching that of original thickness of select

base under existing removed concrete or asphalt concrete paving and make ready to receive paving repair materials. Aggregate base shall be compacted to 95% relative density in accordance with Section 301-2 - UNTREATED BASE of SSPWC.

3.9 SOIL STERILIZATION

Apply specified soil sterilization material to areas to receive select base materials and all exterior area including concrete and asphalt paving, concrete walkway, concrete curb and gutter, by methods recommended by the manufacturer. Certify in writing that the material has been applied.

3.10 DISPOSAL OF EXCESS AND WASTE MATERIALS

A. Removal from City's Property: Remove waste materials, including unacceptable excavated material, trash and debris, and dispose of it off City's property in a legal manner and to conform with the requirements shown in Section 01572 – CONSTRUCTION AND DEMOLITION WASTE MANAGEMENT of Division 1 - General Requirements.

B. Provide written consent of the owner of the property upon which the surplus material is to be deposited, pursuant to Section 01572 – CONSTRUCTION AND DEMOLITION WASTE MANAGEMENT specified above and Section 300-26 - SURPLUS MATERIAL of SSPWC.

END OF SECTION

SECTION 02515

WATER PIPELINE TESTING AND DISINFECTION

PART 1 -- GENERAL

1.1 THE REQUIREMENT

A. The CONTRACTOR shall furnish all tools, equipment, materials, and supplies and shall perform all labor required to complete the work as indicated in the Contract Documents.

B. This Section covers flushing and testing of all pipelines and appurtenant piping and disinfection of all pipelines and appurtenant piping for water, complete, including conveyance of test water from CITY-designated source to point of use and all disposal thereof, in accordance with the requirements of the Contract Documents.

1.2 RELATED WORK SPECIFIED ELSEWHERE

A. Division 15: MECHANICAL

1.3 REFERENCE SPECIFICATIONS, CODES AND STANDARDS

A. Comply with the applicable reference specifications as specified in the GENERAL REQUIREMENTS.

B. Comply with the current provisions of the following Codes and Standards.

ANSI/AWWA B300	Hypochlorites.
ANSI/AWWA B301	Liquid Chlorine.
ANSI/AWWA C651	Disinfecting Water Mains.

C. Comply with the Los Angeles City Plumbing Code.

1.4 CONTRACTOR SUBMITTALS

A. Submittals shall be made in accordance with the GENERAL REQUIREMENTS.

B. The following submittals and specific information shall be provided.

1. A testing schedule, including proposed plans for water conveyance, control, disposal, and disinfection, shall be submitted in writing for approval a minimum of 48 hours before testing is to start.

1.5 QUALITY ASSURANCE

A. Comply with the applicable Reference Specifications of the GENERAL REQUIREMENTS.

PART 2 -- PRODUCTS

2.1 MATERIALS REQUIREMENTS

A. All test equipment, chemicals for disinfection, temporary valves, bulkheads, or other water control equipment and materials shall be determined and furnished by the CONTRACTOR subject to the ENGINEER's approval. No materials shall be used which would be injurious to the construction or its future function.

B. Chlorine for disinfection shall be in the form of liquid chlorine, sodium hypochlorite solution, or calcium hypochlorite granules or tablets.

C. Liquid chlorine shall be in accordance with the requirements of ANSI/AWWA B301. Liquid chlorine shall be used only:

1. In combination with appropriate gas flow chlorinators and ejectors;

2. Under the direct supervision of a certified testing laboratory;

3. When appropriate safety practices are observed.

D. Sodium hypochlorite and calcium hypochlorite shall be in accordance with the requirements of ANSI/AWWA B300.

PART 3 -- EXECUTION

3.1 GENERAL

A. Unless otherwise provided herein, water for testing and disinfecting water pipelines will be furnished by the CITY; however, the CONTRACTOR shall make all necessary provisions for conveying the water from the CITY-designated source to the points of use.

B. All pressure pipelines shall be tested. Disinfection shall be accomplished by chlorination. All chlorinating and testing operations shall be performed by a certified laboratory in the presence of the INSPECTOR.

C. Disinfection operations shall be scheduled by the CONTRACTOR as late as possible during the contract time period so as to assure the maximum degree of sterility of the facilities at the time the WORK is accepted by the ENGINEER and the INSPECTOR. Bacteriological testing shall be performed by a certified testing laboratory approved by the ENGINEER and at the expense of the CONTRACTOR. Results of the bacteriological testing shall be satisfactory with the Los Angeles County Department of Health Services or other appropriate regulatory agency.

3.2 HYDROSTATIC TESTING OF PIPELINES

A. Prior to hydrostatic testing, all pipelines shall be flushed or blown out as appropriate. The CONTRACTOR shall test all pipelines either in sections or as a unit. No section of the pipeline shall be tested until all field-placed concrete or mortar has attained an age of 14 days. The test shall be made by closing valves when available, or by placing temporary bulkheads in the pipe and filling the line slowly with water. The CONTRACTOR shall be responsible for ascertaining that all test bulkheads are suitably restrained to resist the thrust of the test pressure without damage to, or movement of, the adjacent pipe. Care shall be taken to see that all air vents are open during filling.

B. The pipeline shall be filled at a rate which will not cause any surges or exceed the rate at which the air can be released through the air valves at a reasonable velocity and all the air within the pipeline shall be properly purged. After the pipeline or section thereof has been filled, it shall be allowed to stand under a slight pressure for at least 24 hours to allow the concrete or mortar lining, as applicable, to absorb what water it will and to allow the escape of air from any air pockets. During this period, bulkheads, valves, and connections shall be examined for leaks. If leaks are found, corrective measures satisfactory to the ENGINEER shall be taken.

C. The hydrostatic test shall consist of holding the test pressure on the pipeline for a continuous period of 4 hours. The test pressure for pipelines shall be 133 percent of the pipe pressure class shown or specified, measured at the lowest point of the pipeline section being tested. Potable water piping shall be tested at a minimum pressure of 200 psi. The test pressure for yard piping shall be as shown or specified on the Piping Schedule, measured at the lowest point of the pipeline section being tested. No pressure test will be required for a reservoir overflow line. All visible leaks shall be repaired in a manner acceptable to the ENGINEER.

D. The maximum allowable leakage for pipelines shall be 10 U.S. gallons per inch of diameter per mile of pipe per 24 hours for pipe with 40-ft or greater joint lengths and with rubber-gasketed joints, and 20 U.S. gallons per inch of diameter per mile of pipe per 24 hours for pipe with 20 feet or less joint lengths and with rubber-gasketed joints. The maximum leakage for yard piping shall be as shown on the Piping Schedule. Pipe with welded joints shall have no leakage. In the case of pipelines that fail to pass the prescribed leakage test, the CONTRACTOR shall determine the cause of the leakage, shall take corrective measures necessary to repair the leaks, and shall again test the pipelines.

3.3 DISINFECTING PIPELINES

A. General: All water pipelines except those appurtenant to hydraulic structures shall be disinfected in accordance with the requirements of ANSI/AWWA C651 disinfection of water mains using the Continuous-Feed Method as modified herein.

B. Chlorination: A chlorine-water mixture shall be uniformly introduced into the pipeline by means of a solution-feed chlorinating device. The chlorine solution shall be introduced at one end of the pipeline through a tap in such a manner that as the pipeline is filled with water, the dosage applied to the water entering the pipe shall be approximately 50 mg/l. Care shall be taken to prevent the strong chlorine solution in the line being disinfected from flowing back into the line supplying the water.

C. Retention Period: Chlorinated water shall be retained in the pipeline long enough to destroy all non-spore-forming bacteria. This period shall be at least 24 hours. After the chlorine-treated water has been retained for the required time, the free chlorine residual at the pipeline extremities and at other representative points shall be at least 25 mg/l.

D. Chlorinating Valves: During the process of chlorinating the pipelines, all valves and other appurtenances shall be operated while the pipeline is filled with the heavily chlorinated water.

E. Final Flushing: After the applicable retention period, the heavily chlorinated water shall be flushed from the pipeline until chlorine measurements show that the concentration in the water leaving the pipeline is no higher than that generally prevailing in the system or is acceptable for domestic use. If there is any question that the chlorinated discharge will cause damage to the environment, a reducing agent shall be applied to the water to neutralize thoroughly the chlorine residual remaining in the water.

F. Bacteriological Testing: After final flushing and before the pipeline is placed in service, a sample~~,~~ or samples shall be collected from the end of the line, and shall be tested for bacteriological quality in accordance with the requirements of the Los Angeles County Department of Health Services or other appropriate regulatory agency. For this purpose, the pipe shall be re-filled with fresh potable water and left for a period of 24 hours before any sample is collected. Should the initial disinfection treatment fail to produce satisfactory bacteriological test results, the disinfection procedure shall be repeated until acceptable results are obtained.

3.4 CONNECTIONS TO EXISTING SYSTEM

A. Where connections are to be made to an existing potable water system, the interior surfaces of all pipe and fittings used in making the connections shall be swabbed or sprayed with a one percent hypochlorite solution before they are installed. Thorough flushing shall be started as soon as the connection is completed and shall be continued until discolored water is eliminated.

(**END OF SECTION)**

SECTION 02545

STORM DRAIN SYSTEM

PART 1 -- GENERAL

1.1 DESCRIPTION

A. Furnish all labor, materials and equipment necessary to provide "on-site" Storm Drain System as shown on the Contract Drawing and specified herein, including:

1. Maintenance Holes
2. Connection to storm drain main line
3. Diversion Structure
4. Baffle Box (Pretreatment Unit)
5. Junction Structure

B. Repair and construct paving and bases after installation of Storm Drain System.

C. Related Sections:

1. Documents affecting work of this Section include, but are not necessarily limited to the GENERAL CONDITIONS, SUPPLEMENTARY CONDITIONS and DIVISION 1 - GENERAL REQUIREMENTS and applicable section of the Project Manual.
2. Section 02220, Site Demolition.
3. Section 02240, Sheeting, Shoring and Bracing Systems.
4. Section 02310, Earthwork.
5. Section 03300, Concrete Work.
6. Section 13240, Stormwater Treatment Device.
7. Section 13330, Underground Infiltration Gallery.
8. Division 15, Plumbing.

1.2 QUALITY ASSURANCE

A. Bonded Contractor: For connection to City’s Storm Drain System including any catch basin or structure, Contractor specializing in the Storm Drain System connection work of this section shall be preapproved, bonded, and certified by Los Angeles City Bureau of Engineering. Submit certificates verifying Contractor’s qualifications prior to start of work.

B. Labor: Use adequate numbers of skilled laborers who are thoroughly trained and experienced in the necessary crafts and who are completely familiar with the specified requirements and the methods needed for proper performance of the work of this Section.

C. Codes and Regulations: Conform to the applicable 2014 Los Angeles City Building Code and Amendments, Los Angeles City Bureau of Engineering Standard Plans, and the Standard Specifications for Public Works Construction (SSPWC), latest edition.

1.3 SUBMITTALS

A. Comply with applicable provisions in the Section 01330, "Shop Drawings/Submittals" of DIVISION 1 - GENERAL REQUIREMENTS of the Project Manual.

B. Product Data: Within 35 calendar days after the Contractor has received the City's "Notice to Proceed", submit:

1. Materials list of items proposed to be provided under this Section and other related Sections;

2. Manufacturer's Specifications and other data needed to prove compliance with the specified requirements;

3. Manufacturer's recommended installation procedures which, when approved by the City Engineer or the Consultant, will become the basis for accepting or rejecting actual installation procedures used on the Work.

C. Contractor’s proof of qualification.

D. Shop Drawings:

1. Shoring Drawings.

a. The baffle box unit will require a long lead time for shop drawing review and shop inspection. It is recommended that the Contractor submit the shop drawings as early as possible to prevent delays.

2. Submit complete shop fabrication drawings of all concrete, steel and Ductile Iron pipe, pipe specials and joint details. Contractor shall also submit a schedule of pipe marks accompanied by a plan showing the field location of each mark.

E. Testing Data and Reports.

1.4 DELIVERY, STORAGE AND HANDLING

A. Deliver material and products with certified delivery tickets to the jobsite where directed by the City Engineer or the Consultant.

B. Store materials on the job located where directed by the City Engineer or the Consultant and not interfering with work operations of this Section.

C. Handle materials safely in a manner avoiding damage prior to and during installation and not damaging work of other trades.

1.5 PROTECTION

A. Required:

Furnish, erect and maintain barriers, lights and signs as necessary to protect the public, Contractor's and City's personnel and work under this Contract in accordance with Work Area Traffic Control Handbook until such time for backfilling of trenches and subsequent Contracted Site and "Street Work" operations.

1.6 PERMIT

A. Required:

1. Street Repair A Permit for the installation of storm drainpipes in public right-of-ways.

1.7 INSPECTION

A. Required:

1. All work outside the property lines regarding storm drain line connections to the street storm drain or gutters through sidewalk and curbs or as called for on the Contract Drawings, by the Storm Drain Connection Inspector of the Bureau of Contract Administration. Contractor shall make necessary arrangement in accordance with the permit requirements.

2. All work inside the property lines regarding storm drain lines shall be inspected by the Los Angeles City Department of Building and Safety.

3. Test pipes shall be selected from the lot and tested in accordance with the requirements specified in SSPWC, but not necessarily limited to. At the place of manufacture, the City Engineer or Inspector will indicate tentative acceptance of the pipe for delivery by marking with the Agency stamp. Final acceptance will be made only when the project has been completed.

B. Notification: Contractor shall notify all local governing agencies and arrange for required inspection.

1.8 COORDINATION

A. Required: All on-site storm drain work shall be fully coordinated with other Contracted Work operations as per approved work scheduled.

PART 2 -- PRODUCTS

2.1 PIPE MATERIAL (As applicable)

A. Reinforced Concrete Pipe: Cast Pipe wall Spun Pipe Wall or Machine-Made type, As per Section 207-2 - REINFORCED CONCRETE PIPE of the Standard Specifications for Public Works Construction (SSPWC), sizes as indicated on the Contract Drawings.

2.2 CONCRETE MATERIALS

A. Required for Catch Basins: Concrete having a compressive strength of 3250 psi at 28 days as per Section 303 of the SSPWC and in Section 03300, "Cast-in-Place Concrete" of the Project Manual.

2.3 CATCH BASIN GRATE AND FRAME

A. Alhambra Foundry Ltd., Alhambra California, No. A-2442 (Rectangular Trench Grate with Steel Angle Frame), sizes as indicated on the Construction Drawings, or equal.

2.4 CURB DRAIN PIPE

A. Rectangular in shape conforming to Los Angeles City Bureau of Engineering Standard Plan S-503, latest edition. Material shall be Alhambra Foundry Rectangular Cast Iron Pipes and adaptors, Part A-470 (Rectangular Cast Iron Pipe and Adaptors) and A-480 (Cast Iron Pipe Adaptors, round to rectangular pipe).

2.5 MISCELLANEOUS MATERIALS (As Applicable)

A. Miscellaneous Metals**:** See Section 05500, "Metal Fabrications" of the Project Manual.

B. Grout: See Section 03300, "Cast-in-Place Concrete" of the Project Manual.

C. Mortar: Comply with requirements of ASTM C270 - SPECIFICATION FOR MORTAR FOR UNIT MASONRY, Type "M" except the maximum placement time shall be one hour. No mortar shall be used which has begun to set; retempering not permitted.

D. Pipe Bedding and Backfill Materials: See Sub-Section 3.3 hereinafter, Section 02310, "Earthwork" of SSPWC and other Sections of the Project Manual.

1. Sand shall be graded as follow:

Sieve size	Percentage Passing Sieves
3/8 inch	100%
No. 4	60-100%
No. 8	65 - 90%
No. 16	45 - 70%
No. 30	25 - 45%
No. 50	10 - 20%
No. 100	2 - 8%
No. 200	0 - 4%
No. 220	0 - 3%

2. Concrete shall be in accordance with the Los Angeles City Bureau of Engineering Standard Plan S-251, latest edition.

E. Filter Insert: Provide filter inserts designed to capture sediment, debris, trash, and oils/grease from first flush flows. FloGard+Plus by KriStar Enterprises, Inc., DrainPac by United Storm Water Inc., or approved equal.

2.6 BAFFLE BOX

A. General

1. Baffle box shall be constructed of rectangular pre-cast concrete components and design to remove oil and sediment from stormwater.

2. Baffle box must be designed with a bypass weir such that flows in excess of the maximum treatment flow rate are routed around the treatment gallery and not allowed to contact the area of sediment storage in order to prevent scour and re-suspension of captured sediment.

3. One City of Los Angeles storm drain message marker or placard shall be placed on each unit. Consult with the City for specific requirements for placard types and methods of application.

4. Baffle box shall be manufactured by Bio Clean Environmental Services, Oldcastle Infrastructure, Suntree Technologies Inc., or approved equal by the ENGINEER.

B. Materials:

1. Slabs and risers shall be Portland Cement Concrete and shall conform to ASTM C 478 with a minimum compressive strength of 4,000 psi.

2. Internal components shall be constructed of Stainless Steel and/or Fiberglass.

3. Access manhole shall be constructed of Cast Iron and shall bear the words “Storm Drain”.

C. Performance

1. Refer to Section 13240 for General Performance Criteria.

PART 3 -- EXECUTION

3.1 SURFACE CONDITIONS

Examine the areas and conditions under which work of this Section will be performed. Correct conditions detrimental to timely and proper completions of the Work. Do not proceed until detrimental conditions are corrected as directed by the City Engineer or the Consultant.

3.2 EXCAVATING AND TRENCHING

A. General:

1. Conform to the requirements as specified on the drawings, Los Angeles City Plumbing Code, Standard Specifications for Public Works Construction and other sections of the Project Manual. Case 1 Bedding installation of Los Angeles City Bureau of Engineering Standard Plan S-251, latest edition shall be used for all piping laying. Any piping with 8 feet or more cover or backfill, trench width shall not exceed the maximum allowable trench width as shown in Standard Plan S-251.

2. Excavate trenches to provide for a minimum 4-inch thickness of bedding sand below bottom of pipe couplings. There shall be a minimum side clearance of 6 inches on each side.

B. Provide excavation and trenches for storm drain piping systems, concrete catch basins indicated on the Contract Drawings in accordance with applicable requirements specified in Section 02310, "Earthwork".

3.3 STORM DRAIN SYSTEM CONSTRUCTION

A. General: In strict accordance with pipe manufacturers recommendations and the Los Angeles City Plumbing Code and the SSPWC.

B. Installation of Pipe: In accordance with Sec. 306-1.2 INSTALLATION OF PIPE of the SSPWS on unyielding bedding foundations with uniform bearing under full length of pipe barrels; walking on or disturbing pipe in any manner after joints have been made, not permitted; at close of each day's work or whenever work is stopped for any reason, protect ends of pipe with temporary tight fitting closures. Slope as per Contract Drawings.

C. Seal all wall and flooring penetrations and sleeves with applicable fire stopping or sealant material. Obtain inspection prior to wall closure or trench backfill.

D. Bedding:

1. Provide for a minimum 6-inch thickness of bedding sand below bottom of pipe barrels; any over-excavations may require concrete pipe bedding and to be filled with slurry backfill or structural backfill in accordance with Standard Plan S-251, latest edition, at Contractor's expense; bedding sand to be tamped and compacted and accurately graded and shaped to support bottom quadrant of pipe, with coupling holes dug prior to placement of pipe.

2. Backfill: Provide sand backfill to an elevation of 12 inches over the top of the pipe and floor in accordance with Section 306-1.3.3 – WATER DENSIFIED BACKFILL. Use clean earth material for remainder of backfill to required finish grade and compact for yard paving.

E. Pipe Juncture With Concrete Structures: Set pipe ends as necessary for casting-in-place or grouting-in-place after construction of such structures. Junctures with existing storm drain channels to be in accordance with the standards and specifications of the Los Angeles County Flood Control District.

F. Fill Joints: (Other than wedge-lock type) with mortar troweled smooth on inside of pipe; keep mortar joints damp until backfill is placed.

G. Pipe Juncture With Concrete Structures: Set pipe ends as necessary for casting-in-place or grouting-in-place after construction of such structures.

H. Pipe Joints of Corrugated Pipe: Field jointing shall conform to provisions of Section 306-1.2.7 - FIELD JOINTING OF CORRUGATED METAL PIPE of the SSPWC. Provide prefabricated turns and bends on change in direction, joints to meet job needs.

3.4 CONCRETE STRUCTURES

A. General: Catch basins, gutters, manhole interceptors, etc. as indicated on the Contract Drawings.

B. Materials:

1. Concrete: As specified in Sections 03300, "Cast-in-Place Concrete".

2. Grates, Frames and Covers: As hereinbefore specified.

3. Miscellaneous Metals: As specified in Section 05500, "Metal Fabrications".

C. Construction: As indicated on the Drawings and specified in Section 03300, "Cast-in-Place Concrete".

D. Catch Basins: Section 303-1- CONCRETE STRUCTURE and 303-1.4.4(b) - STANDARD CATCH BASIN of the SSPWC as applicable. Forms to be of 1-inch minimum thick plywood; remove forms minimum 24-hours after concrete pour; top surface of catch basins to conform to drawing details or paving grades and as directed by the City Engineer or the Consultant; steel trowel finish and lightly brushed with bristle brush all exposed surfaces; gratings and frames to be set flush and level with top surface of basin or as otherwise indicated on the Contract Drawings.

E. Maintenance Holes: Construct at location and to elevations indicated on the Contract Drawings, in accordance with details and materials noted thereon; set precast concrete segments with full mortar joints troweled smooth on interior of manhole; set cover frames in full mortar bed and accurately to meet paving grades.

3.5 BACKFILL

A. As specified in "Sand and Backfill" subsections of Sections 02310, "Earthwork" and provisions herein, including approval, place approved washed sand 12-inches above top of pipe and the balance of backfill shall be approved clean earth material free from rock or large clods larger than 1-inch in size. If excavated material is unsuitable or rejected; Contractor shall provide approved imported materials as necessary to complete the work.

B. No backfill material shall be deposited against the concrete structure until the concrete has developed not less than the specified 28 day compressive strength.

3.6 STREET WORK

A. Required: All work outside the property lines extending under the sidewalks and discharging into gutter through the curb shall comply with applicable Sections of the SSPWC and as directed by the City Engineer. Complete all such work and obtain inspection prior to start of any concrete paving, curb and gutter, and sidewalk.

B. Repair all street paving and bases in accordance with the scopes indicated on the contract drawings, and in Section 02310, "Earthwork" of the Project Manual.

3.7 TESTING (As Applicable)

A. Required: Provide personnel and equipment necessary, and perform tests required to demonstrate that the work of this Section has been completed in accordance with the specified requirements.

B. Hydrostatic Test on Watertight Joints:

1. Make a hydrostatic test on each watertight joint. Test one sample of each type watertight joint used. If one sample fails because of faulty workmanship, test an additional joint.

2. Demonstrate that joints in reinforced and unreinforced concrete pipe comply with ASTM C443 - SPECIFICATION FOR JOINTS FOR CIRCULAR CONCRETE SEWER AND CULVERT PIPE, USING RUBBER GASKETS.

3. Comply with ASTM C425 - SPECIFICATION FOR COMPRESSION JOINTS FOR VITRIFIED CLAY PIPE AND FITTINGS for tests of joints in clay pipe.

4. Make tests in concrete pipe and clay pipe at an internal hydrostatic pressure of 10 psi for 24-hours.

5. Replace or repair joints found to be faulty. Repeat the test and repair cycle until joints are demonstrated to meet the specified requirements.

(END OF SECTION)

SECTION 02550

REINFORCED CONCRETE PIPE

PART 1 -- GENERAL

1.1 THE REQUIREMENT

A. The CONTRACTOR shall furnish all tools, equipment, materials, and supplies and shall perform all labor required to complete the work as indicated in the Contract Documents.

B. This Section covers lined reinforced concrete pipe intended to be used for the construction of sewers, and related structures.

1.2 RELATED WORK SPECIFIED ELSEWHERE

A. Section 02310, Earthwork.

B. Section 02585, Maintenance Hole and Precast Vault Construction.

C. Section 03300, Cast-in-Place Concrete.

1.3 REFERENCE SPECIFICATIONS, CODES, AND STANDARDS

A. Comply with the applicable reference specifications as specified in the GENERAL REQUIREMENTS.

B. Comply with the reference specifications of Los Angeles Building Code Standards and Los Angeles Plumbing Code.

C. Comply with the current provisions of the following Codes and Standards.

1. Commercial Standards:

ASTM C76	Specification for Reinforced Concrete Culvert, Storm Drain, and Sewer Pipe.
ASTM C596	Test Method for Drying Shrinkage of Mortar Containing Portland Cement.
ASTM D 412	Test method for tensile strength and elongation.
ASTM D 2240	Test method for indentation hardness.

2. Standard Specifications SSPWC Sections 207-3, 210-2, and 311-1.

1.4 CONTRACTOR SUBMITTALS

A. Shop drawing submittals shall be made in accordance with the GENERAL REQUIREMENTS and SSPWC Section 2-5.3.2.

1.5 QUALITY ASSURANCE

A. Comply with SSPWC Sections: 207 and 208; and Los Angeles City Building Codes Standards and Los Angeles Plumbing Code.

PART 2 -- PRODUCTS

2.1 GENERAL

A. Except as modified herein, reinforced concrete pipe shall conform to the requirements of ASTM Designation C 76 for Class IV, Wall B, and Type II cement. Unless otherwise specified, pipe shall have tongue and groove joints designed to be self-centering and to leave a recess on the inside of the pipe for pointing with mortar after jointing. Pipe shall be designed for an internal pressure of 10 psi, and an external load of 2000-D.

B. The size, type, and D-load of the concrete pipe to be furnished shall be as shown on the Drawings, as specified under the bid item of work for the project, or as stated above.

C. When pipe joints of the reinforced concrete collar type or of rubber-gasketed type are specified or indicated on the Drawings, joint details shall be submitted to the ENGINEER for acceptance before commencing pipe manufacture.

2.2 MATERIALS

A. Except when otherwise permitted by the ENGINEER, no materials shall be used in manufacturing of the pipe other than water, Portland cement, mineral aggregates and steel conforming to ASTM C76, with the following exceptions:

1. All cement to be used or furnished shall be Type II low alkali Portland cement conforming to ASTM C 150 or Type IP (MS) Portland-pozzolan cement conforming to ASTM C 595, unless otherwise specified. Either cement shall conform to the low alkali requirements of Table IA of ASTM C 150. Type IP (MS) cement shall contain no more than 20 percent pozzolan, which shall be interground with the clinker.

2. Aggregates shall be nonreactive when tested in accordance with ASTM C 289 and evaluated in accordance with Appendix A-1 of ASTM C 33. Aggregates found to be potentially reactive may be used only upon written acceptance of the ENGINEER.

B. All pipe manufactured under the provisions of this Specification shall contain a minimum of 560 lb of cement per cubic yard of concrete unless mix designs with a lower cement content meet the requirements of this Specification and approved by the ENGINEER prior to use.

C. Cement Mortar: Cement mortar shall consist of a mixture of Portland cement, sand, and water. Cement and sand shall first be combined in the proper proportions, and then thoroughly mixed with the required amount of water. Cement mortar shall be proportioned by loose volume in the proportion of 1 part cement to 2 parts sand. The quantity of water to be used in the preparation of mortar shall be only that required to produce a mixture sufficiently workable for the purpose intended. Mortar shall be used as soon as possible after mixing and shall show no visible signs of setting prior to use. Retempering of mortar will not be permitted. Cement, sand, and water for cement mortar shall conform to Section 03300, "Cast-in-Place Concrete".

D. Admixtures: No admixtures shall be used in mortar unless otherwise specified or accepted by the ENGINEER.

E. Quick Setting Grout: Quick setting grout shall be high strength, non-staining grout accepted by the ENGINEER prior to use. It shall reach an initial set within 90 minutes at 70 degrees F and shall reach minimum compressive strength of 2,500 psi within 24 hours.

Shrinkage shall be less than 0.1 percent when tested, using the test procedures of ASTM C 596. The grout shall be mixed, handled, and placed in accordance with the manufacturer's written instructions.

F. Gaskets for Concrete Pipe: Unless otherwise specified, gaskets shall be manufactured from a synthetic elastomer conforming to SSPWC Section 208-3.

PART 3 -- EXECUTION

3.1 INSTALLATION OF REINFORCED CONCRETE PIPE

A. Pipe shall be laid to plan line and grade, with uniform bearing under the full length of the barrel of the pipe. Pipe shall be installed in accordance with SSPWC Section 306 1.2 as modified by Standard Plan S-251. Suitable excavation shall be made to receive the socket or collar, which shall not bear upon the subgrade or bedding. Any pipe which is not in true alignment or shows any undue settlement after laying shall be taken up and relaid at the CONTRACTOR's expense. Pipe shall be laid up-grade with the socket or collar ends of the pipe upgrade unless otherwise authorized by the ENGINEER. Concrete pipe with elliptical reinforcement shall be laid with the minor axis of the reinforcement cage in a vertical position.

3.2 FIELD JOINTING OF LINED REINFORCED CONCRETE PIPE

A. Field jointing shall be in conformance with SSPWC Section 306 -1.2.4.

(END OF SECTION)

SECTION 02585

MAINTENANCE HOLE AND PRECAST VAULT CONSTRUCTION

PART 1 -- GENERAL

1.1 THE REQUIREMENT

A. The CONTRACTOR shall furnish all tools, equipment, materials, and supplies and shall perform all labor required to complete the work as indicated on the Drawings and specified herein.

B. This Section covers the work necessary for the construction of maintenance holes and precast vaults. General maintenance hole and vault details are as shown on the Drawings.

1.2 RELATED WORK SPECIFIED ELSEWHERE

A. Section 01330, Shop Drawings/Submittals.

B. Section 01453, Sampling, Testing, and Fabrication Inspection.

C. Section 02310, Earthwork.

D. Section 03300, Cast-in-Place Concrete.

1.3 REFERENCE SPECIFICATIONS, CODES AND STANDARDS

A. Comply with the applicable reference specifications as specified in the GENERAL REQUIREMENTS.

B. Comply with the current provisions of the following Codes and Standards.

1. Commercial Standards:

ASTM A 48	Specification for Gray Iron Castings.
ASTM C 14	Standard Specification for Nonreinforced Concrete Sewer, Storm Drain, and Culvert Pipe.
ASTM C 150	Specification for Portland Cement.
ASTM C 387	Standard Specification for Packaged, Dry, Combined Materials for Concrete and High Strength Mortar.
ASTM C 478	Standard Specifications for Circular Precast Reinforced Concrete Manhole Sections.

2. AASHTO LRFD with version and modifications per Caltrans's latest Addendum.

3. Standard Specifications: SSPWC Section 206 -3 Gray Iron Casting.

1.4 CONTRACTOR SUBMITTALS

A. Submittals shall be made in accordance with the GENERAL REQUIREMENTS.

B. Shop Drawings: The CONTRACTOR shall furnish complete shop drawings for all precast maintenance hole sections, cast iron frames and covers, and appurtenances for review by the ENGINEER in accordance with SUBMITTALS of the GENERAL REQUIREMENTS. This shall include;

1. Concrete mix design and structural calculations of non-standard elements, signed and sealed by a California Registered Civil or Structural Engineer.

2. Joint details of all precast sections, and jointing between cast-in-place and precast segments.

3. Method of weathertightness, and watertight joints, when groundwater is within five (5) feet from the lowest joint, and associated test reports

4. Joint materials and products including mortars, o-rings, gaskets, etc.

5. Lifting anchor and all other anchor information.

6. Details, products, and appurtenances for all lateral connections, and particular locations.

C. Non-Preapproved Products: For products which are not listed on the online approved products list (http://boe.lacity.org/apm/menu.cfm), the Contractor shall secure the services of a precaster to design, and fabricate the required precast reinforced concrete products, including the preparation of all associated plans, calculations, and documentation of associated appurtenances such as joints, gaskets, sealants, protective liners Type I, etc., to the full satisfaction of the ENGINEER. Calculations and plans shall be signed and sealed by a California registered Civil and/or Structural Engineer. Joints, gaskets, and sealants shall be tested to meet the requirements of the Contract. Non-approved maintenance hole products will not be considered unless there are none listed in the online approved products list.

1.5 DESIGN CRITERIA

A. Design of precast structures and maintenance holes shall conform to S-601-3, including cumulative supplements, and ASTM C478, including AASHTO LRFD with version and modifications per Caltrans' latest addendum.

1.6. QUALITY ASSURANCE

A. Fabrication: Contractor shall coordinate with the Bureau of Contract Administration Materials Control Inspection for required inspection prior to fabrication. See Section 01453, "Sampling, Testing and Fabrication Inspection" for detail requirements.

B. Field Inspection: All work is subject to inspection including excavation, placement, backfill, and finishing. The CONTRACTOR shall demonstrate that all maintenance holes and precast vault segments have been properly installed, level, with tight joints, at the correct elevations and orientations, and that the backfilling has been carried out in accordance with the Contract Documents. Coordinate with Inspector prior to start of work.

PART 2 -- PRODUCTS

2.1 GENERAL

A. Products used shall be pre-approved products, up to date and in good standing, as listed in the online approved products list (http://boe.lacity.org/apm/menu.cfm), including maintenance holes and frame and covers. Where no acceptable pre-approved product exists, the CONTRACTOR shall retain the services of a precaster to design and fabricate a project specific structure. Plant approval shall be required.

2.2 GRANULAR BASE

A. Granular base shall conform to Section 02310, "Earthwork."

2.3 CONCRETE

A. Ready-mixed, conforming to ASTM C 94, Alternate B.

B. Mix design shall conform to SSPWC.

C. The concrete class for maintenance hole bases shall be 660-CW-4000, or 560-B-3250.

D. The concrete class for maintenance holes and precast structures shall be by strength, with a minimum compressive strength of 4,000 psi.

2.4 FORMS

A. Exterior exposed surfaces shall be plywood. Others shall be matched boards, plywood, or other approved material. Provide forms on all vertical surfaces. Trench walls, large rock, or earth will not be approved as form material.

2.5 REINFORCING STEEL

A. For maintenance holes, conform to ASTM A 615, Grade 40, or greater.

B. For precast vaults or structures, conform to ASTM A615 Grade 60, deformed bar.

C. All bars intended to be welded shall conform to ASTM A706 and AWS D1.4.

2.6 PRECAST MAINTENANCE HOLE SECTIONS

A. Precast maintenance hole sections shall be minimum 48 inches in diameter, conforming to Standard Plan S-387, S-142, S-150 and to ASTM C 478. Minimum wall thickness shall be 5 inches for reinforced sections and 5-1/2 inches for unreinforced sections. Provide eccentric cones for all maintenance holes. Cones shall have same wall thickness and reinforcement as maintenance hole section. Top and bottom of all sections shall be parallel. Maintenance hole steps shall be cast in the Precast Sections by the manufacturer of the maintenance hole sections.

B. Joints shall be tongue-and-groove Keylock confined O-ring or gasketed joint with rubber gaskets conforming to ASTM C 443. The CONTRACTOR's attention is directed to specification for MORTAR hereinafter.

C. Prior to the delivery of any size of precast maintenance hole section on the jobsite, yard tests will be conducted at the point of manufacture. The precast sections to be tested will

be selected at random from the stockpiled material which is to be supplied for the job. All test specimens will be mat tested, and shall meet the permeability test requirements of ASTM C 14.

2.7 PRECAST BASE SECTIONS AND BASES

A. At the option of the CONTRACTOR, precast base sections or maintenance hole bases may be used provided all details of construction are approved by the ENGINEER. Base sections shall have the base slab integral with sidewalls. Base slab shall be constructed in accordance with Standard Plan S-140. Tie reinforcing steel to wall steel.

2.8 MAINTENANCE HOLE EXTENSIONS

A. Concrete grade rings for extensions shall be a maximum of 6 inches high and shall be approved by The INSPECTOR before installation.

B. In general, maintenance hole extensions will be used on all maintenance holes in roads or streets or in other locations where a subsequent change in existing grade may be likely. Extensions will be limited to a minimum of 12 inches and a maximum height of 2 feet 6 inches. Finish grade for maintenance hole covers shall conform to finished ground or street surface level, unless otherwise directed by the ENGINEER.

2.9 MORTAR

A. Standard premixed mortar conforming to ASTM C 387 or proportion 1 part Portland cement to 2 parts clean, well-graded sand which will pass a 1/8-inch screen. Admixtures may be used not exceeding the following percentages of weight of cement: Hydrated lime, 10 percent; diatomaceous earth or other inert materials, 5 percent. Consistency of mortar shall be such that it will readily adhere to the pipe when using the standard tongue-and-groove type joint. If the Keylock type joint is used, the consistency shall be such that excess mortar shall be forced out of the groove and support is not provided for the next precast manhole section to be placed. Mortar mixed for longer than 30 minutes shall not be used.

2.10 PREFORMED SEALANTS

A. Preformed sealants may be used in lieu of mortar type joints and shall be Kent-Seal No. 2 manufactured by Hamilton Kent Manufacturing Company, Kent, OH; Ram-Nek, manufactured by K. T. Snyder Company, Inc., Houston, TX; or equal, meeting all requirements of Federal Specification SS-S-00210.

2.11 PIPE STUBOUTS FOR FUTURE SEWER CONNECTIONS

A. Pipe stubouts shall be the same type as approved for use in lateral, main, or trunk sewer construction. Strength classifications shall be the same class as in adjacent trenches. Where there are two different classes of pipe at a maintenance hole, the higher strength pipe will govern strength classification. Rubber gasketed watertight plugs shall be furnished with each stubout adequately braced against all hydrostatic or air test pressures.

2.12 PRECAST CONCRETE VAULT

A. The precast concrete vault shall be precast with a 28-day, 4,000 psi minimum compressive strength concrete and designed for AASHTO H-20 loading. Minimum dimensions are shown on the Drawings. Provide openings for pipes and grating as shown on the Drawings.

2.13 MAINTENANCE HOLE FRAMES AND COVERS

A. Cast iron of size and shape detailed on the Drawings. Covers shall have the letter “S” or “D” fitted tight in a 3-inch diameter circle in the center of the cover. Frame and cover shall conform to applicable City of Los Angeles Standard Plans. Test per S-601. Frames shall have a minimum clear opening of 30 inches.

B. Non-preapproved products shall conform to Standard Plan S-601 and the following requirements. The more stringent shall apply: Castings shall be tough, close-grained gray iron, sound, smooth, clean, free from blisters, blowholes, shrinkage, cold shuts, and all defects, and shall conform to ASTM A 48, Class 35B. Plane or grind bearing surfaces to ensure flat, true surfaces. Covers shall be true and seat within ring at all points.

C. Maintenance hole covers shall be solid, with no pick or through holes, or hatches must include a mosquito exclusion insert by Contech, or approved equal.

PART 3 -- EXECUTION

3.1 EXCAVATION AND BACKFILL

A. Conform to applicable portions of Section 02310, “Earthwork”. Backfill around maintenance holes shall be of the highest quality of trench backfill immediately adjacent, as shown on the Drawings.

3.2 GRANULAR BASE

A. Remove water from the excavation. Place a minimum of 6 - inches of granular base and thoroughly compact with a mechanical or power vibrating tamper to a minimum of 90 percent relative compaction.

3.3 CONCRETE BASE

A. Construct concrete base in conformance with the details shown on the Drawings. Vibrate to densify the concrete and screed so that the first precast maintenance hole section to be placed has a level, uniform bearing for the full circumference.

B. Deposit sufficient mortar on base to assure watertight seal between base and maintenance hole wall or place the first precast section of maintenance hole in concrete base before concrete has set, if preferred. First section shall be properly located and plumb.

C. If material in bottom of trench is unsuitable for maintenance hole, excavate below the flow line as directed by ENGINEER, and backfill to required grade with granular base per geotechnical recommendations.

3.4 PLACING PRECAST MAINTENANCE HOLE SECTIONS

A. Clean ends of sections of foreign materials. Thoroughly wet joint with water prior to placing mortar. Place mortar on groove of lower section. Set next section in place. Fill joint completely with mortar of the proper consistency. Trowel interior and exterior surfaces smooth on standard tongue-and-groove joints. Wipe or otherwise clean the excess mortar from the inside of the Keylock joint.

B. When a Keylock joint is used, it is the intent that the void between the tongue-and-groove be completely filled with mortar, and that the interior and exterior end faces of the section to be placed seat fully on the previously placed section.

C. Prevent mortar from drying out and cure by applying an approved curing compound or comparable approved method. Chip out and replace all cracked or defective mortar. Completed maintenance holes shall be rigid and watertight.

3.5 PREFORMED PLASTIC GASKETS

A. Carefully inspect precast maintenance hole sections to be joined. Sections with chips or cracks in the tongue shall not be used. Preformed plastic gaskets shall be installed in strict conformance with the manufacturer's recommendations. Only pipe primer furnished by the gasket manufacturer will be approved.

3.6 MAINTENANCE HOLE INVERT

A. Construct maintenance hole inverts in conformance with details shown on the Drawings, and with smooth transitions to ensure an unobstructed flow through maintenance hole. Remove all sharp edges or rough sections which tend to obstruct flow. Where a full section of pipe is laid through a maintenance hole, break out the top section as indicated and cover exposed edge of pipe completely with mortar. Trowel all mortar surfaces smooth.

B. For benches of maintenance holes greater than 48 inches in diameter, line the surface and make it non-skid per SSPWC 311-1.7.

3.7 FLEXIBLE JOINTS

A. Provide joints in all pipe not more than 1.5 feet from maintenance hole walls. Lay pipes entering maintenance holes on firmly compacted granular base. Granular base shall be as specified hereinbefore.

B. Where the last joint of the line laid up to the maintenance hole is more than 1.5 feet from the maintenance hole base, a 6-inch concrete encasement shall be constructed around the entire pipe from the maintenance hole base to within 1.5 feet of the pipe joint. The pipe encasement shall be constructed monolithically with the maintenance hole base. Pipes laid out of the maintenance hole shall be shortened to ensure the first joint is no more than 1.5 feet from the maintenance hole base.

3.8 PIPE STUBOUTS FOR FUTURE SEWER CONNECTIONS

A. Install stubouts in maintenance holes for future sewer connections as shown or as required by the ENGINEER. Maximum length shall be 1.5 feet outside the maintenance hole wall. Grout pipes in precast walls or maintenance hole base to provide watertight seal around pipes. Construct invert channels in accordance with details shown on the Drawings. Provide compacted granular base as specified hereinbefore to undisturbed earth under all stubouts.

B. Install semi-permanent plugs at the end of stubouts with gasket joints similar to sewer pipe being used. Plugs shall be capable of withstanding all internal or external pressures without leakage. All plugs to be braced to prevent blowoffs.

3.9 MAINTENANCE HOLE EXTENSIONS

A. Install extensions in conformance with the details shown on the Drawings, and to height determined by the ENGINEER. Lay grade rings in mortar with sides plumb and tops level. Seal joints with mortar as specified for maintenance hole sections. Extensions shall be watertight.

3.10 MAINTENANCE HOLE FRAMES AND COVERS

A. Install frames and covers on top of maintenance holes to positively prevent all infiltration of surface or groundwater into maintenance holes. Frames shall be set in a bed of mortar with the mortar carried over the flange of the ring as shown in the Maintenance Hole Details on the Drawings. Set frames so that tops of covers are flush with surface of adjoining pavement or ground surface, unless otherwise shown or directed.

3.11 SPECIAL MAINTENANCE HOLES

A. Construct special maintenance holes in conformance with applicable parts of these Specifications and as shown on the Drawings. Maintenance holes shall be in general conformance to S-381.

3.12 PRECAST CONCRETE VAULT

A. Install precast concrete vault at the locations shown on the Drawings. Provide necessary excavation and backfill as specified herein.

3.13 HYDROSTATIC TESTING

A. When, in the ENGINEER's opinion, the groundwater table is too low to permit visual detection of leaks, project maintenance holes shall be hydrostatically tested. The test shall consist of plugging of all inlets and outlets and filling the maintenance hole with water to a height determined by the ENGINEER. Leakage in each maintenance hole shall not exceed 0.1 gallon per hour per foot of head above the invert. A maintenance hole may be filled 24 hours prior to time of testing, if desired, to permit normal absorption into the pipe walls to take place. Repair all maintenance holes that do not meet the leakage test, or are unsatisfactory from visual inspection, to confirm to the requirements herein.

(END OF SECTION)

SECTION 02731

STABILIZED CRUSHED AGGREGATE PAVING

PART 1: GENERAL

1.1 SECTION INCLUDES

A. This section includes the supply and installation of stabilized crushed aggregate paving, otherwise referred to as stabilized "Decomposed Granite" or "D.G." paving, as indicated in the Contract Documents, including:

1. Base course
2. Crushed aggregate paving
3. Organic binder for crushed aggregate

1.2 SUBMITTALS

A. The CONTRACTOR shall make all required materials submittals in accordance with the General Requirements.

B. The CONTRACTOR shall make substitution submittals in accordance with the General Requirements.

C. CONTRACTOR shall submit following in accordance with material submittal procedures:

1. Manufacturer’s product data sheet.
2. Physical sample of infield surface material (1-quart minimum).

1.3 MOCK-UP

A. All work and materials are subject to inspection and approval by the Bureau of Contract Administration (BCA) Inspector and the ENGINEER. Any work done without proper inspection will be subject to rejection per Section 2-11 of the Standard Specifications for Public Works Construction. The CONTRACTOR shall notify the Bureau of Contract Administration (BCA) Inspector and PROJECT MANAGER three (3) days prior to requested inspection of the following for approvals:

1. Approval of sub-grade preparation by BCA Inspector of ENGINEER prior to installation of paving material.
2. Upon completion, CONTRACTOR shall request inspection and approval of installation by ENGINEER.

B. Mock-Up: CONTRACTOR shall install 20 square feet minimum of stabilized crushed aggregate paving mix including subgrade preparation, at a location approved by the ENGINEER.

1. ENGINEER shall review and approve mock-up before proceeding with rest of stabilized crushed aggregate paving.

2. Approved mock-up may remain as part of completed Work, subject to approval by ENGINEER.

1.4 DELIVERY AND HANDLING

A. Material shall be delivered to the site pre-mixed by supplier. CONTRACTOR shall protect the stabilized crushed aggregate paving mix from contamination.

1.5 SEQUENCING

A. Do not install work specified in this section prior to approval of sub-grade preparation per Section 31 00 00 - EARTHWORK.

B. Do not install stabilized crushed aggregate surfacing when base material is wet or saturated to field capacity.

C. CONTRACTOR shall coordinate work specified in this Section with work specified in other Sections to minimize disturbance of, and operation of heavy equipment over, installed stabilized crushed aggregate paving.

PART 2: PRODUCTS

2.1 MATERIALS

A. Crushed aggregate material:

1. Crushed aggregate material shall consist of sound, angular, durable particles.

2. Material gradation shall be in accordance with ASTM C136 as listed below:

Sieve	sieve size (mm)	percent passing by weight
# 1/2"	12.7	100%
# 3/8"	9.51	90-100%
# 4	4.76	50-100%
# 30	0.595	25-55%
# 100	0.149	10-25%
# 200	0.074	5-18%

3. Aggregate color shall be "gold" per approved submittal from Gail Materials, (951) 667-6106, www.gailmaterials.net, or approved equal.

A. Organic binder: Shall be Organic-Lock™ self-healing organic binder by Gail Materials, Corona, CA 92883; (951) 667-6106; www.gailmaterials.net. Mix rate of

organic-lock™ binder and shall be determined by Gail Materials subject to selected material as well as the intended application.

1. Crushed Aggregate Material with Organic-Lock™ binder ***shall be pre-wetted*** using a pug mill by the supplier immediately prior to delivery to the jobsite.

PART 3: EXECUTION

3.1 PREPARATION OF SUBGRADE

A. Examine grading and subsoil conditions. Do not proceed until conditions are acceptable.

B. Excavate to depth required so that resulting finished grade is per Contract Drawings.

C. Prepare sub-grade per Section 02310, "Earthwork".

3.2 BASE COURSE

A. Place base course material over subgrade to depths and dimensions shown on drawings in maximum (6") lifts compacted to 95% modified proctor density.

3.3 PRE-BLENDED ORGANIC-LOCK™ AGGREGATE SURFACING

A. Install organic-lock™ aggregate paving to the compacted depth as specified.

B. Pre-wetted Organic-Lock aggregate paving shall be installed in one lift for applications of 4" depth or less. For areas of compacted depths of 6-inches or greater shall be installed in 3-inch compacted lifts.

C. Depending on weather conditions, the time required to allow the material to set-up before it can be compacted varies. Generally, this time period is between 6 and 48 hours. The top layer should be firm and not sticky. Compaction can begin when you can walk on the material without significantly sinking in and material does not feel muddy. If material sticks to the roller during compaction, allow the material to further dry. Do not allow the material to completely dry out.

D. Make 4-6 passes using a double or single static drum roller, or equivalent. *Do not use a vibratory compactor or vibratory setting on the compactor*. The CONTRACTOR shall select and provide the proper size roller for the application.

E. After final compaction, the surface shall be true to elevation and shall not vary by more than one-quarter inch (1/4") tested with a straight edge at any location on the surfaces. Surfaces can either be crowed at a minimum of 2% and/or installed with a cross slope of minimum 1%.

3.4 ADJUST AND CLEAN

A. All paved areas or adjacent surface shall be brushed clean and excess materials shall be removed from the work site and disposed of in an approved dump location.

3.5 PROTECTION OF WORK

A. Do not allow traffic on stabilized crushed aggregate paving after placement until compacted stabilized crushed aggregate paving has fully cured. This time may vary depending on weather conditions.

B. CONTRACTOR shall protect stabilized crushed aggregate paving surface from damage until project completion. Repair damaged areas to match specified requirements.

3.6 REPAIR

A. To repair, excavate damaged area to a depth of 2” minimum, and scarify exposed stabilized crushed aggregate paving. Apply replacement material to the excavated area and compact. Thoroughly water the material and allow the material to cure, but not completely dry out. Re-compact the material, ensuring that the final grade and crown are maintained. Do not use a vibratory compactor.

(END OF SECTION)

SECTION 02732

GRASSCRETE™ POROUS PAVING

PART 1 - GENERAL

1.1 SUMMARY

A. This Section includes materials, labor, apparatus, tools, equipment, temporary construction, transportation, and services necessary for and incidental to performing the proper completion of Work for *Grasscrete*™ Porous Paving, as shown on the Contract Drawings, and as specified herein this Section.

Work under this Section consists of, but is not necessarily limited to, furnishing and installing the following:

1. *Grasscrete*™ Porous Paving System, consisting of 60% concrete by volume, and 40% void area, not including widened edges and solid borders.
2. Paving under this Section shall be approved for use by the Fire Marshall having jurisdiction.
3. *Grasscrete*™ is a registered trademark with the U.S. Patent Office. The trademark is owned by Grass Concrete International, Ltd.
4. *Bomanite*® Corporation is licensed in the United States by Grass Concrete International, Ltd. to use its trademark.

B. Related Sections: The following Sections contain requirements that relate to this Section:
   1. Section 02810 – Irrigation Systems.
   2. Section 02900 – Landscape Planting.

1.2 DEFINITIONS AND APPLICABLE STANDARDS

A. References:
   1. ANSI – American National Standards Institute.
   2. ASTM – American Society for Testing and Materials.
   3. CBC – California Building Code.
   4. Standard Specifications – Standard Specifications of the State of California, Business and Transportation Agency, Department of Transportation, CALTRANS, latest edition.

B. Definitions:
   1. PSI – Pounds per Square Inch.
   2. Percent Compaction: Per ASTM D1557, percentage of the maximum in-place dry density of the same material, as determined by the Geotechnical Engineer.

1.3 SUBMITTALS

A. General: Submit each item in this Article in four (4) bound Submittal Booklets and provide four (4) sets of Material Samples for review by the Landscape Architect.

B. Submittal Booklets: Each Submittal Booklet under this Section shall be tabbed into specific sections, containing clearly identified (through yellow highlighter or other specific identification methods) and legible information on the following information indicated in this Article.

C. Product Data. Submit available Product Data and manufacturing sources for each type of material and product indicated herein this Article. Product data shall include source, Distributor, and Manufacturer's name, address, and telephone numbers. Submit the following:
   1. *Grasscrete*™ Porous Paving.

D. Manufacturer's Certificates: Certify base course and fill materials products meet or exceed specified requirements.

E. Field-Constructed Mock-ups: Not Used.

F. Qualification Data: Submit names for firms and persons specified in the "Quality Assurance and Control" Article to demonstrate their capabilities and experience on similar *Grasscrete*™ Porous Paving installations.

G. Submittals under this Article will be rejected and returned without the benefit of review by the Landscape Architect if they are difficult to read due to insufficient scale, poor image quality, or poor drafting quality; or if all of the required information is missing or not presented in the format as requested.

H. No Work under this Section shall proceed until all information indicated herein this Article have been reviewed, accepted, and approved by the Landscape Architect, in writing.

1.4 QUALITY ASSURANCE AND CONTROL

A. Installer Qualifications: Engage an experienced Installer who has completed *Grasscrete*™ Porous Paving similar in material, design, and extent to that indicated for Project that have resulted in construction with a record of successful in-service performance.
   1. Contractor: Installation Contractor for *Grasscrete*™ Porous Paving shall be licensed by the *Bomanite*® Corporation, P.O. Box 599, Madera, CA 93639-0599, phone# (559) 673-2411.

B. Single Source Responsibility: Obtain *Grasscrete*™ Porous Paving materials from a single manufacturer source for each product required.

C. Pre-installation Conference: Before installing Work as indicated herein this Section, conduct a Pre-Installation Conference at the Project Site to review requirements and design objectives, including a review of textures, colors, finishes, layouts, and other design intents of the Work.
   1. Notify participants in writing at least five (5) working days prior to Conference.
   2. Meeting minutes from the Conference shall be the responsibility of the Contractor, and shall be distributed to all parties in attendance for review and subsequent approval of the Conference discussion items.

1.5 DELIVERY, STORAGE, AND HANDLING

A. Deliver products and materials in a timely manner to ensure uninterrupted progress of the Work.

B. Protect *Grasscrete*™ Porous Paving and other materials during storage and construction against soilage or contamination from earth and other materials.

C. Deliver and unload materials at the Project Site in such a manner that no damage occurs to the products or materials.

D. Deliver perishable materials in original, unopened packaging. Protect from dampness.

1.6 PROJECT SITE CONDITIONS

A. Hot-Weather Requirements: Protect *Grasscrete*™ Porous Paving Work in hot weather by providing artificial shade, wind breaks and use cooled materials, as required.

B. Grade Control: Establish and maintain required lines and elevations.

C. Protect partially completed *Grasscrete*™ Porous Paving against weather damage when Work is not in progress.

D. Traffic Control: Maintain access for vehicular and pedestrian traffic as required for other construction activities. Access to the surrounding areas shall also be unobstructed and maintained at all times to allow for entry and exit of emergency vehicles.

E. Environmental Conditions: Do not proceed with installation of *Grasscrete*™ Porous Paving under the following conditions:
   1. When ambient and substrate temperature conditions are outside the limits permitted by the Manufacturer.
   2. When sub base material is wet due to rain, condensation, frost, or other causes.

1.7 SEQUENCE AND SCHEDULING

A. Acceptance: Do not install Work under this Section prior to acceptance of sub-grade preparation under another Section.

B. Coordination: Coordinate with other trades to insure the following:
   1. Irrigation Sleeving.

1.8 SUBSTITUTIONS

A. Product Options/Substitutions: There is no substitute or equal other than the material and process specified herein this Section.

PART 2 - PRODUCTS

2.1 MATERIALS

A. Concrete Mix: Concrete Mix for *Grasscrete*™ Porous Paving shall have a minimum compressive strength of 3,000 PSI in 28 days.
   1. Portland Cement: Conform to ASTM C 150, Type II.
   2. Aggregates: Conform to ASTM C33, and shall be graded as minus 3/8".
   3. Water: Fresh, clean and potable.
   4. Air entrainment: Meet 6.5% to 8.5%.
   5. Water reducing admixtures and/or super-plasticizers: Conform to ASTM C494.

B. Slab Design: *Grasscrete*™ Porous Paving slab shall have a minimum thickness of five inches (5”). Edges shall be solid concrete having a minimum width of eight inches (8”).

C. Reinforcement: *Grasscrete*™ Porous Paving shall be continuously reinforced with #3 (3/8”) Steel Reinforcement Bars.
   1. Reinforcement shall be chaired between two inches (2”) and three inches (3”) above the compacted subbase material

2.2 MISCELLANEOUS MATERIALS

A. Aggregate Base: Conform to California State Standard Specification Section, "Aggregate Bases", for Class 2 Aggregate Base, 1-1/2" maximum grading.

B. Amended Imported Topsoil Backfill: To be used as backfill in the cell voids (between the formed concrete) of *Grasscrete*™ Porous Paving: Refer to Section 02900 – Landscape Planting.

C. Turf Grass: Refer to Section 02900 – Landscape Planting.

D. Irrigation: Refer to Section 02810 – Irrigation System for heads, piping, wires, sleeves, etc. in this area.

PART 3 - EXECUTION

3.1 EXAMINATION

A. Examine areas indicated to receive *Grasscrete*™ Porous Paving, with Installer and Landscape Architect present, for compliance with requirements for area configuration, installation tolerances, and other conditions affecting installation performance. Do not proceed with installation of *Grasscrete*™ Porous Paving until unsatisfactory conditions have been corrected and accepted.

3.2 PREPARATION

A. Sub Grade: Sub-grade shall be leveled to a uniform plane 5-1/2 inches below the final grade of the finished slab.
   1. The sub-grade for *Grasscrete*™ Porous Paving shall be prepared for expected loading and drainage requirements.
   2. Sub-grade for vehicle traffic shall be in accordance with the recommendations of the Geotechnical Engineer.

3.3 INSTALLATION OF GRASSCRETE™ POROUS PAVING SYSTEM

A. General: Comply with Manufacturer's printed installation instructions applicable to products and applications indicated, except where more stringent requirements apply.

B. *Grasscrete*™ Porous Paving formers shall be placed on the compacted sub-grade.

C. Concrete shall be placed and leveled to the tops of the formers. The concrete surface shall have a heavy rough-broom finish.

D. *Grasscrete*™ Porous Paving formers shall be withdrawn after the concrete has hardened sufficiently.

E. Slab shall be cured with suitable curing membrane.

F. Do not use chemicals harmful to amended soil backfill or growth of turf grass.

3.4 JOINTS

A. Joints: Expansion joints shall be provided wherever a *Grasscrete*™ Porous Paving slab abuts to other concrete or structures. In traffic areas, steel dowels shall be used to transfer loads between adjacent slabs.

3.5 MISCELLANEOUS MATERIALS

A. Soil and Turf Grass Voids. Voids cast within the *Grasscrete*™ Porous Paving shall be filled with compacted Amended Imported Topsoil Backfill, per Section 02900 – Landscape Planting, and planted with Turf Grass, as specified in Section 02900 – Landscape Planting.

B. Irrigation: Provide installation of irrigation system components per Section 02810 – Irrigation Systems.

3.6 VEHICULAR TRAFFIC

A. Vehicular Traffic. No vehicular traffic of any kind shall be permitted on the *Grasscrete*™ Porous Paving slab until fourteen (14) days after placing of concrete, and only after Amended Imported Topsoil Backfill is placed in the voids. Thereafter, vehicles shall be permitted providing they do not exceed the weight capacity for which the slab is designed.

3.7 PROTECTION

A. Protect *Grasscrete*™ Porous Paving during and after curing period from contact with contaminating substances or from damage resulting from construction operations or other causes so that they are without deterioration or damage at time of Acceptance of Work.

B. If, despite such protection, damage or deterioration occurs, remove damaged material immediately and replace with acceptable material so

that installations with repaired areas are indistinguishable from original Work.

(END OF SECTION)

SECTION 02810

IRRIGATION

PART ONE – GENERAL

Website: http://eng2.lacity.org/brownbook/frame.cfm

1.1 DESCRIPTION

A. **Work Included**:

1. All labor, materials, equipment, appliances, fixtures and tests necessary for partial demolition of existing irrigation system and new operating irrigation system as indicated on the Contract Drawings.

B. **Related Work**:

1. Documents affecting work of this Section include, but are not necessarily limited to the GENERAL CONDITIONS, SUPPLEMENTARY CONDITIONS in DIVISION 1 - GENERAL REQUIREMENTS and other Sections of the Project Manual.

2. Site Clearing and Grubbing in Section 02210.

1.2 SUBMITTALS

A. The Contractor shall make all required materials submittals in accordance with Article 10 of the General Requirements. For all materials not approved upon the first submittal, Contractor is responsible to promptly resubmit for approval, necessary data concerning a substitution for a disapproved item or piece of equipment.

B. The Contractor shall make substitution submittals in accordance with Article 11 of the General Requirements.

C. Submit copies of the following:

1. Complete list of irrigation materials and miscellaneous hardware complete with descriptions and/or photographs and manufacturer's literature. Clearly mark or underline proposed items.

1.3 QUALITY ASSURANCE

A. **Codes and Regulations**: Contractor shall obtain and pay for all required permits. Deliver all permits and submit certifications of compliance to the BCA Inspector and the Project Manager.

1.4 GENERAL REQUIREMENTS

A. **Approvals by the Engineer**: Before commencement of irrigation installation, Contractor shall obtain:

1. All approvals on required submittals hereinafter specified.

2. Approval of all re-submittals requested by the City Engineer.

3. Contractor shall make a detailed staked layout on the work site of the

proposed trenching locations for all mainline, control wire conduit, and valve manifolds for approval by City Engineer prior to trenching.

4. Contractor shall make a detailed staked layout on the work site of the proposed head locations for approval by City Engineer prior to lateral line trenching.

B. **Required Inspections**: Notify the City Inspector at least 72 hours prior to time of required inspection.

1. **IRRIGATION MAINLINE PRESSURE TEST:** The pressure test shall take place under the direction of the BCA Inspector.

2. I**RRIGATION COVERAGE TEST:** After installation of heads and lateral lines etc., entire irrigation system shall be tested for coverage. Contractor shall notify the BCA Inspector, Project Manager, Landscape Architect and designated Recreation and Parks Regional maintenance staff three (3) days before the scheduled test.

C. **Existing Utilities and Plant Materials**: Protect utilities and/or plant materials not designated for removal or modification in place against damage resulting from work of this Contract. Perform any removal and/or modifications only on approval or instruction from the City Engineer or in accordance with applicable provisions noted or specified.

D. **Verification of Dimensions and Quantities**: Verify site conditions, contract drawings, all dimensions and quantities prior to the bid. Furnish the quantities as necessary to do the specified work. Notify the Project Manager of any discrepancies between the Contract Drawings and the site conditions prior to beginning work. Do not work in areas where such discrepancies occur until further instruction by the City Engineer.

E. **Record Drawings**: Comply with provisions of the General Requirements. Contractor shall accurately dimension the location and depths of all piping, valves, and control equipment as installed. Indicate with suitable colored ink on one set of prints of the Contract Drawings to produce a record of complete installations to be kept on the job and up-to-date at all times during construction. At the completion of the work and prior to Final Inspection, the Contractor shall copy his record "as installed" data, using red ink, onto a set of clean prints. The Contractor shall certify to the completeness and accuracy of the "as installed" information indicated on the prints with his signature, and deliver the signed prints to the Project Manager for review prior to the completion of the Plant Establishment Period.

Dimension from two permanent points of reference, building corners, sidewalk, or road intersections, the location of the following items:

1. Connection to existing water lines.
2. Connection to existing electrical power.
3. Gate valves.
4. Routing of all pressure lines. Indicate dimensional location at 100' intervals.
5. Irrigation control valves.
6. Routing of control wiring.
7. Quick coupling valves.
8. Controller.

9. Other related equipment as directed by the Architect.

10. Sleeve locations.

F. **Water and Power Services:** Upon award of contract, the Contractor shall contact the Department of Water and Power to arrange and pay for the installation of all required water and electrical meters and services. Service connections shall be as shown on the Contract Drawings or as designated by the utility company. Upon final acceptance of the project, the Contractor shall transfer billing to the City of Los Angeles, Department of Recreation and Parks as directed by the Project Manager.

H. **Guarantee**: In accordance with provisions of the GENERAL CONDITIONS, contractor shall guarantee the entire irrigation system against defects in materials and workmanship for a period of one year from the date of final acceptance of the Project.

1. The entire irrigation system shall be warranted to be free from defects in materials and workmanship, and installed in accordance with the irrigation plans, specifications and the SSPWC. The Contractor shall be required to repair or replace any defects in material or workmanship which may develop within one (1) calendar year from the date of acceptance, excepting ordinary wear and tear and unusual abuse or neglect. Further, the Contractor shall be required to make any necessary repairs within 48 hours of notification at no cost to the City. If the Contractor or his agent fail to make such repairs within the stipulated time, the City shall make such repairs or have repairs made by a third party and bill the Contractor for all expenses that accrue from making such repairs.

2. The City reserves the right to make temporary repairs as necessary to keep the irrigation system equipment in operating condition. The exercise of this right by the City will not relieve the Contractor of his responsibilities under the terms of the guarantee.

3. Contractor shall repair any settlement of backfilled trenches which may occur during a one year period after final acceptance by the City Engineer, to the City Engineer's satisfaction, without expense to the City, including the complete restoration of all damaged planting, paving, or other improvements of any kind.

1.5 DELIVERY, STORAGE AND HANDLING

A. **Delivery**: Deliver products to the job-site in their manufacturer's original containers, with labels intact and legible.

B. **Storage**: Store piping, materials, fitting, etc. at the job-site where directed by the City Engineer until such time for installation.

C. **Handling**: Promptly remove damaged materials and unsuitable items from the job-site and promptly replace with materials meeting the specified requirements, at no added cost to the City.

PART TWO - PRODUCTS

2.1 MATERIALS

A. **General**: Provide recently manufactured materials of the best grade of each respective kind.

B. **Pipe and Fittings**: The type of pipe material and fittings designated on the Contract Drawings, or as hereinafter specified shall be:

1. Steel Pipe: Galvanized standard weight Schedule 40 steel water pipe complying with ASTM A53 - SPECIFICATION FOR PIPE, STEEL, BLACK AND HOT-DIPPED, ZINC-COATED, WELDED AND SEAMLESS; jointed with galvanized, threaded, standard weight malleable iron fittings, and/or couplings.

2. Plastic Irrigation Pipe: High impact rigid polyvinyl chloride PVC 1220 (Type I, Grade 2), conforming to ASTM D1785 - SPECIFICATION FOR POLY (VINYL CHLORIDE) (PVC) PLASTIC PIPE, SCHEDULES 40 & 80 and CLASS 200. The minimum pressure rating to be not less than indicated therein for the schedule and size listed.

3. DOMESTIC WATER LINES FOR DRINKING FOUNTAINS: Install water piping in accordance with the latest edition of the Uniform Building Code and all local ordinances. Prior to allowing human consumption of water from newly installed drinking fountains the contractor shall perform domestic sterilization procedures as indicated in applicable details and provide testing results to document compliance with the standards indicated. New drinking fountains shall be turned off or otherwise made inoperable until this testing is successfully completed and approved.

    a. Domestic Cold Water Piping **ABOVE GRADE**: Piping shall be ASTM B88 Type “L” seamless hard drawn copper tubing with ANSI B 16.22 wrought copper fittings. Joints shall be made up with lead-free, nickel bearing alloy solder such as Harris Bridget.

    b. Domestic Cold Water Piping **BELOW GRADE**: Piping shall be ASTM B88 Type “K” seamless hard drawn copper tubing with ANSI B 16.22 wrought copper fittings. Joints shall be made up with lead-free, nickel bearing alloy solder such as Harris Bridget.

4. All Pipes: Shall be homogeneous throughout and free from cracks, holes, foreign materials, blisters, deleterious wrinkles, and dents.

5. Solvent-welded Schedule 40 PVC plastic pipe and fittings shall be used for pipe sizes up to and including 2½ inch for installation of irrigation pressure lines and lateral lines.

6. Class 200 PVC gasketed pipe with ductile iron fittings and restraints as detailed on Contract Drawings shall be used for continuously pressurized pipe of sizes of 3-inch up to and including 6-inch diameter.

7. Schedule 80 PVC plastic pipe and threaded fittings shall be used only when threaded joints are specified, or otherwise permitted by the City Engineer.

8. All piping shall be permanently marked with the following: Manufacturer's name or trademark, size, schedule, and type of pipe, working pressure at 73 degrees F. and National Sanitation Foundation (N.S.F.) approval.

9. Ductile iron fittings for restrained plastic pipe shall be manufactured of ductile iron, Grade 65-45-12 in accordance with ASTM A536. Fittings shall have deep bell push-on joints with gaskets meeting ASTM F477. All ductile iron fittings shall be manufactured by HARCO Fittings, or approved equal. http://www.harcofittings.com

   a. Valve to pipe restraints shall consist of ductile iron (ASTM A536) grip rings with machined serrations and ductile iron restraint rods. The ring that grips the pipe shall meet the requirements of UNI-B-13-94. The restraint rod nuts shall be made from low alloy steel to AWWA/ANSI C111/A21.11 or ductile iron to ASTM A536.

   b. Fitting to pipe restraints shall allow the full rating of the pipe on which it is used. Grip rings and restraint structures shall be made of ductile iron to ASTM A536. Grip ring serrations (gripping features) shall be fully machined or cast. Clamp bolts and nuts shall meet or exceed ASTM A307.

   c. Pipe to pipe restraints shall allow the full rating of the pipe on which it is used. Grip rings and bell rings shall be made of ductile iron to ASTM A536. Grip ring serrations (gripping features) shall be fully machined or cast. Restraint rod nuts shall be of low alloy steel to AWWA/ANSI C111/A21.11. Clamp bolts and nuts shall meet or exceed ASTM A307. Pipe to pipe restraint shall meet or exceed the full rating of the pipe on which it is used.

9. Gasket lubricant for push on fittings shall be non-toxic, odorless, tasteless and shall not support bacteria. Use 'Seal Lube", SK#87710 by IPS Weldon Corp. or equal.

C. Valves and Valve Boxes:

1. General: Provide valves of the type and capacity designated on the Contract Drawings and with the requirements specified herein. All valves shall be capable of continuous performance at a working pressure of 200 psi or less.

2. Gate Valves and mainline isolation Valves: ***in sizes 2.5-inch and smaller*** shall be bronze type, non-rising stem, solid wedge gate valve; NIBCO T-113-LF or approved equal.

3. Mainline isolation Valves: ***in sizes 3-inch and larger*** shall be NIBCO #P-619-RW IPS PVC push-on type resilient wedge cast iron gate valve with electrostatically applied fusion-bonded epoxy 8-20 mil. thick inside and outside, or approved equal.

4. Automatic Control Valves: Electrically operated, cast brass or bronze normally closed globe valve, capable of with manual flow control adjustment and manual operation capability, readily disassembled for servicing, slow opening and closing, and self-flushing. Reclaimed water compatible. Toro 220 series, or approved equal.

5. Quick-Coupling Valves: shall be 1" type with brass construction with an acme thread locking thermoplastic non-potable rubber cover. The Contractor shall provide one quick coupler key with hose swivel for each five quick couplers installed. Toro model 100-ATLVC or approved equal.

6. Valve Boxes shall be constructed of polypropylene or equivalent material for maximum durability, UV protection and corrosion resistance. The plastic body, excluding extensions, shall have pipe slots on each end and the plastic body shall have two (2) resting points for the lid to sit securely and flush. The plastic lid shall have molded diamond tread-pattern for skid resistance. Valve boxes shall have a lockable lid using a hex-bolt to secure the cover.

   For Remote Control Valves:
   The dimensions of the box shall be 14.5" L x 9.4" W, Model VB-STD-H by Rainbird, or approved equal. The lid shall be permanently heat-embossed with station number for each valve.

   For Quick Couplers and Gate Valves:
   The dimensions of the box shall be 13.75 inches bottom diameter and 10" top diameter. Model VB-10RND-H by Rainbird, or approved equal.

   Boxes are to be installed per the applicable details. The lid shall be permanently heat-embossed as follows (paint is not acceptable):

Gate Valve		GV
Remote Control Valve	RCV	
Quick Coupler Valve	QC	
Master Valve	MV	
Flow Meter		FM

E. **Irrigation Heads**:

1. Pop-up spray head: bodies shall have a 4”, 6” or 12” pop-up stroke. The body of the spray head shall be constructed of corrosion and UV-resistant, heavy-duty A.B.S. The spray head body shall have a factory-installed drain check valve capable of checking up to 10 feet in elevation change. The spray head body shall have a standard pressure-regulating device as an integral part of the pop-up riser maintaining a constant nozzle outlet pressure of 30 or 45 PSI with inlet pressures of up to 100 PSI. Nozzles shall be matched precipitation rate, fixed spray or multiple-stream, rotating type or other as noted on Contract Drawings. As manufactured by Toro Company or approved equal, models # 1804, 1806, 1812, or 1845.

2. Pop-up Gear Driven Rotor Head: The body of the rotor head shall be constructed of corrosion and UV-resistant, heavy-duty A.B.S. The rotor head body shall have a factory-installed drain check valve capable of checking up to 10 feet in elevation change. The full or part-circle rotor head shall be a single stream, water lubricated, gear drive type capable of both full circle and/or part circle operation in the same unit as noted on Contract Drawings. The rotor head shall have a screen attached to the drive housing to filter inlet water, protect the drive from clogging and simplify its removal for cleaning and flushing of the system. The rotor head body shall have a 1” (26/34) female (NPT or BSP) bottom inlet. The rotor head shall have a standard rubber cover which designates each adjustment opening from the top. Pop-up height as measured from the top of the cover to the centerline of the nozzle orifice shall be at least 5 inches. The rotor shall have a stainless steel covered nozzle turret and riser stem. As manufactured by the Toro Company or approved equal.

3. Root Watering System: The RWS assembly shall consist of a perforated polyethylene rigid mesh cylinder 18” long x 4” diameter or 10” long x 2” diameter with an integrated pressure compensating bubbler and optional

check valve. The assembly shall be preconfigured with swing joint assembly or spiral barbed fittings to enable the RWS to be directly connected to PVC or polyethylene lateral drip lines, and shall have a plastic locking grate cover. Manufactured by Rainbird Corporation, or approved equal.

4. SA Swing Joint Assemblies: The Swing Assemblies shall be used as a flexible swing joint assembly for 1/2" inlet sprinklers. The pipe shall be flexible black tubing constructed of linear low density polyethylene material with a wall thickness of 0.090" and an inside diameter of 0.490". The fittings shall be constructed of UV-resistant, thermoplastic material. The Swing Assembly shall have an operating pressure rating of 80 psi at 110° F. As manufactured by Rain Bird Corporation, Glendora, California or approved equal.

5. TSJ (PRS) Swing Joint Assemblies: The swing joints shall be used as a height adjustable connector between lateral lines and 3⁄4" or 1" sprinklers or quick coupler valves. The swing joint shall be molded from rigid PVC, Type 1, cell classification 12454-B, conforming to ASTM D1784, with a pressure rating of 315 psi at 73° F when tested in accordance with ASTM D3139, including 60 minutes at 790 psi, and short term exposure of 1000 psi without leakage. All NPT threads, sockets, and spigots shall be Schedule 80 per ASTM D2464 and D2467. All components shall be factory preassembled, available with 3⁄4" or 1" inlet/outlet and in lengths of 12" and 18". All rotating joints shall be modified stub ACME threads. All rotating joints shall have two EPDM rubber O-rings for positive sealing and thread protection.

   The pressure regulating system (PRS) shall consist of the outlet elbow of a Rain Bird Turf Swing Joint (TSJ). The TSJ-PRS shall allow pressure to increase uniformly within the rotor up to the preset regulation pressure before regulation occurs. Pressure regulation shall be provided to rotors with 3⁄4" and 1" inlets by means of a spring-loaded diaphragm attached to a flow tube. The regulator housing shall be constructed of high strength PVC. All metal components shall be made of stainless steel. The diaphragm shall be a fabric reinforced elastomer.

G. **Automatic Controller Unit**: The Controller shall be capable of fully automatic or manual operation with an interface to a two-wire path for decoder-based irrigation control. The controller shall provide flow sensing capability and management and a station capacity expandable to 200 stations. Controller shall include: automatic Et calculations and The ability to use any of four different Et sources as the basis for Et calculations; Cycle-and-Soak or conventional start times; Four independently controlled programs with 5 selectable start times for a total of 20 possible cycles per day or Cycle-and-Soak with unlimited start times; Flow sensing capability to monitor system flow and responds to high, low, unscheduled and no-flow conditions; Detection of valve wiring faults and automatic field wire detection enabling the controller to sense a short in the field wire and instantly turn off that station; Optional internet control via wireless cellular communication; manufactured by Rain Master Control Systems or approved equal.

1. The automatic controller shall be enclosed in a Heavy Duty Stainless Steel Top Entry Enclosure model SB-22SS by Strongbox or approved equal.

2. Valve decoders: shall be Rainmaster TW-D-1 Single valve AC decoder, TW-D-2 Dual valve AC decoder, TW-D-4 Quad valve AC decoder, TW-LA-1 Lightning arrestor (every 600 feet) as indicated in the Contract Drawings. Install and connect to 2-wire path per manufacturer's instructions and as

indicated in the Contract Drawings. All decoders must be manufactured by SAME manufacturer and compatible with the 2-wire controller system specified.

3. Sensor wire: provide per manufacturer's requirements, and install in conduit per below.

H. Control Wire:

1. Connection between the automatic controller and the valve decoders shall be made with polyethylene double-jacketed or UF-B UL PVC double-jacketed two-conductor solid core wire designed for direct burial with insulation 3/16 inch (.060") thick, high density, sunlight resistant incased in an outer jacket of Polyethylene or PVC conforming to ICEA S-GL-402 or NEMA WC5, having a minimum wall thickness of.045 inches. Two-wire Polyethylene 'twisted' cable and single strand 14 gauge PVC coated irrigation wire are not acceptable.

2. 2-WIRE Conductor SIZING**:** Standard wire lengths for straight line installation i.e. wire distance to the furthest device without any loop:

Wire Size(gauge)	#14	#12
Total loop Length	10,000'	14,800'
Distance to furthest valve	5,000'	7,400'

3. All 2-wire conductors shall be installed in a 1-1/4" diameter sch. 80 PVC conduit per details. Distance between pull boxes shall not exceed 200'.

4. Low voltage control wire conductors between the 2-wire decoders and the valves shall be U.L. approved direct burial Type U.F., 600 volt, No. 14 AWG solid copper. Use a different color wire for each valve in the manifold grouping.

I. Wire Connectors: Control wire connections shall be made with 3-M brand of DBY or DBR Direct Burial Splice kits, or approved equal. The splice kit shall consist of a one-piece malleable plastic bulb body with internal locking fingers, filled with re-enterable gel sealant and a Scotchlok Electrical Spring Connector. Materials shall be as follows:

1. Connector shall be a flame retardant PVC insulator with a steel spring and shell within. Connector shall be a non-crimping system
2. Tube material shall be clear see-through polypropylene.
3. Gel material shall be hixotropic calcium organic complex.
4. Wire sizes and numbers of wires per connector shall be as follows:

Connector:	Color:	No. and Size of Wires:
3M Model DBY	Yellow	Max. 4-12 gage UF wires
3M Model DBR	Red	Max. 3-14 gage UF wires

J. Concrete Thrust Blocks: Provide concrete thrust blocks per details where applicable for plastic pipes with 3" inch diameter or larger, and all backflow preventer assemblies. The portland cement concrete used for concrete thrust blocks shall be 470-B-2000 concrete.

PART THREE - EXECUTION

3.1 SURFACE CONDITIONS

Examine the area of work and conditions under which work of this Section will be performed. Correct any conditions detrimental to timely and proper completion of the work prior to commencing installation of irrigation equipment.

3.2 IRRIGATION SYSTEM INSTALLATION:

A. **General**:

1. The Irrigation system layout shown on the Contract Drawings shall be considered as diagrammatic. The Contractor shall make adjustments where necessary to conform to actual field conditions unless otherwise noted or as directed by the City Engineer at no additional cost to the City.

2. All piping shown on the Contract Drawings in paved areas but running parallel and adjacent to planted areas, is done for clarity only and is to be installed inside the planting area whenever possible.

3. Specimen trees (24-inch or larger size box) may be planted before installing the irrigation system upon written approval from the Project Manager. Contractor shall re-route irrigation lines conflicting with specimen plant locations to clear the root ball by twenty-four (24) inches minimum at no additional cost to the City. Watering of all specimen trees planted before completion of the irrigation system shall be the Contractor's responsibility.

4. Contractor shall make all required water and utility connections as shown on the Contract Drawings or as required by the utility company. Replace all sidewalks, curbs or paving removed or damaged by the installation of required utilities to the satisfaction of the BCA Inspector.

B. **Trench Excavating and Backfilling**: Size trenches and other excavations to accommodate the irrigation system components, conduits, pipe bedding material and other required elements indicated on Contract Drawings. Provide a minimum of 6" of side clearance on outside of the piping or conduit to assure proper installation and access for inspections.

1. See TREE PROTECTION REQUIREMENTS in the Landscape Planting Specifications for all trenching within the protected root zone of an existing tree.

2. Unless otherwise specified, the minimum depth of cover over pipelines and conduits shall be as follows:

   a. Control wire conduit - 30-inches (36-inches under roadways and parking lots).

   b. Other Control Wiring - Depth of mainline, or a minimum of 24-inches cover if without any mainline.

   c. Irrigation Mainline: 24-inches for piping 2" and smaller; 30-inches for piping 3" and larger.

   d. Lateral lines - 12-inches.

3. Make the bottom of trenches true to grade and free of protruding stones, roots or other matter which would prevent proper bedding of pipe or other facilities.

4. All trench backfill shall be performed in accordance with approved soils report. Pipe bedding shall be clean site soil, free of all rocks, debris, etc. over 1/2" diameter. Bed pipe in at least 4-inches of finely divided material to provide a firm, uniform bearing. Surround the pipe with additional finely divided material to at least 6-inches over the top of the pipe. Bedding shall be placed in 6-inch maximum lifts. Backfill shall be site soil placed above the bedding to finish grade. There shall be no rocks over 2" in greatest dimension or organic matter in the backfill. All bedding and backfill shall be properly moisture conditioned and compacted at each lift. All trenches shall have a minimum relative compaction of 90%. Compaction shall be tested by the City at locations to be determined by the Geotechnical Engineer.

5. Finished trenches shall be flush with adjacent finish grades. The Contractor shall be responsible for maintaining the trenches flush and smooth with adjacent surface grade until final acceptance of the project. After compaction has been approved, trenches in existing turf areas shall be re-planted per "Method A" lawn repair of the Landscape Planting Specifications, unless otherwise noted.

C. **Irrigation Pipeline Installation - General**: Execute trench excavating and backfilling, including the depth of cover over the pipeline, in accordance with requirements above.

1. Pipe layout as shown on irrigation plan is diagrammatic. Contractor shall route piping in planted areas in the most expedient manner consistent with the requirements set forth herein, including avoidance of tree roots.

2. When two or more pipelines are installed in the same trench, separate the pipelines by a minimum horizontal clear distance of 12-inches. Install piping such that each pipe, valve, or other component may be serviced or replaced without disturbing the others.

2. During installation of pipe, fittings, valves, and other components, prevent soil or foreign matter from entering the system. Temporarily cap or plug all open ends at completion of installation operations.

3. All changes in pipe size shall be made with reducer fittings. No close nipples or bushings shall be used.

4. Where irrigation piping crosses a vehicular roadway or other paving, sleeve all pipe and conduit inside a Schedule 40 PVC sleeve of a minimum of two pipe sizes larger than the piping to pass through it under the paving at the depth of the mainline or 30 inches minimum. All sleeves shall extend a minimum of 3 feet beyond the edges of paving.

5. Pipe or irrigation components of dissimilar metals shall be separated by an approved "Dielectric" coupling.

D. RECLAIMED WATER IRRIGATION PIPING AND PROCEDURES: All installation of non-potable and reclaimed water distribution lines shall be in accordance with The American Water Works Association, California–Nevada Section, “Guidelines for Distribution of Non-potable Water.”

1. Lateral lines 3" and smaller shall be schedule 40 P.V.C. and shall be colored at the time of manufacture in a purple color (Pantone 512) and marked “CAUTION: RECLAIMED WATER – DO NOT DRINK” at 5 feet on center.

2. All mainline piping shall be colored purple at the time of extrusion and be stenciled "CAUTION: RECLAIMED WATER - DO NOT DRINK" at 5 feet on center. In lieu of dying and stenciling the pipe, the contractor shall label the mainline piping with a continuous 3" wide, aluminum backed, purple (Pantone 512) tape installed at the top of the mainline piping. The tape shall be labeled "CAUTION: RECLAIMED WATER - DO NOT DRINK", with 1” high white letters. A 3" wide purple tape, not aluminum backed, may be used if the contractor provides a continuous no. 14 un-insulated copper tracer wire. Attach the warning tape and tracer wire to the pipe with adhesive tape at 5 feet on center. Mainline piping includes both pressurized lines for irrigation and lines delivering water to fire hydrants.

3. All valve boxes and vaults shall also be tagged on the interior of the box using purple plastic tags labeled “CAUTION: RECLAIMED WATER - DO NOT DRINK” on one side, and a distinguishable non-potable symbol on the reverse side, as manufactured by T. Christy Enterprises, 1-(800)-258-4583, or approved equal.

4. The contractor shall arrange for continuous inspection of piping by the Los Angeles County Health Department at (213) 881-4140, County of Los Angeles, Cross Connection Program, 2525 Corporate Place, Room 150, Monterey Park, Calif., 91754.

5. DOMESTIC PIPING IN CONJUNCTION WITH RECLAIMED WATER: Piping shall be solvent welded Schedule 40 P.V.C. with a continuous 3" wide aluminum backed, blue tape installed at the top of the pipe. The tape shall be labeled, "POTABLE WATER", with 1” high white letters. A 3" wide blue tape, not aluminum backed, may be used if the contractor provides a continuous #14 un-insulated copper tracer wire. Attach the tape and tracer wire to the pipe with adhesive tape at 5 feet on center.

6. All valve boxes and vaults shall also be tagged using blue plastic tags labeled “POTABLE WATER” on one side, and a distinguishable potable symbol on the reverse side, as manufactured by T. Christy Enterprises, 1 (800) 258-4583, or approved equal.

E. RECLAIMED WATER PIPELINE INSTALLATION – GENERAL

To comply with County Health requirements the contractor shall paint all reclaimed water, gate valve, quick coupler, flushing hydrant, air release, and remote control valve boxes and vaults on the inside and on the top of the cover with purple (Pantone 512) paint and stencil in Minimum 3/4" high white letters stating "CAUTION: RECLAIMED WATER – DO NOT DRINK". Paint all reclaimed water fire hydrants with a purple (Pantone 512) color paint and stencil "CAUTION: RECLAIMED WATER – DO NOT DRINK", in 3/4" white letters.

1. Paint all domestic valve boxes inside, and on the top of the cover with blue paint and stencil in minimum 3/4" white letters "POTABLE WATER".

2. No excavation or open trench may be backfilled without first securing Los Angeles County Health Department approval.

3. The Contractor shall expose all potable water lines where new irrigation pipe crosses old or new domestic lines.

4. Unused or abandoned water lines (domestic or other) are to be severed as close to the water mains as practicable, capped and a 10 foot section of abandoned line removed and cemented under County Health Department supervision.

5. Minimum pipe standards: Class 150 PVC, higher class pipe where necessary to comply with AWWA or equivalent standards.

6. Parallel construction: A minimum of 10 feet separation shall be maintained between the domestic and reclaimed water lines.

7. Cross-over construction:

    a. Cross-over construction: keep pipes as close to 90 degrees as possible, with one foot separation from the outside edges of the pipes, with potable pipe above reclaimed wherever possible. Center full pipe length over the crossing.

    b. Alternate cross-over construction: Either the potable or reclaimed water lines may be sleeved with the same class pipe for one full pipe length, (Minimum 10 feet) centered over the cross-over.

8. Potable and reclaimed water lines may not be laid in a common trench.

9. The contractor shall obtain and pay for a plumbing permit from the Los Angeles City Department of Building and Safety, for domestic piping only, reclaimed water is exempt.

10. Pipe bedding and backfill requirements shall be the same as for installation of potable water lines. See section “Pipeline Installation – General.”

D. **Steel Pipe**:

1. Square cut and ream pipe ends to full size with a long taper reamer.

2. Cut threads with clean sharp dies.

3. Make joints with a non-toxic, non-hardening joint compound applied to the male threads only.

4. Wrap steel pipe embedded in the ground with seamless 10 mil F.D.S. Safe-T-clad tape. Spiral wrap pipe with uniform laps. Apply the second layer of wrap in the reverse direction of the first layer of wrap.

5. Joints and any remaining unwrapped portion of the pipeline shall be similarly wrapped after pressure testing.

E. **Solvent Welded Plastic Pipeline**:

1. Join plastic pipe with slip type solvent welded fittings, threaded fittings as specified. Install steel pipe first when plastic pipe is joined to steel pipe.

2. Cut pipe square, externally chamfer approximately 10-15 degrees, and remove all burrs and fins.

3. Prior to the application of the P.V.C. solvent cement, prepare all surfaces to be solvent welded with tetrahydrofuran primer tinted purple. Make solvent welded joints in accordance with ASTM D2855 - PRACTICE FOR MAKING - SOLVENT - CEMENTED JOINTS WITH POLY (VINYL CHLORIDE) (PVC) PIPE AND FITTINGS. Use a solvent approved by the pipe manufacturer.

4. Install plastic pipe in accordance with ASTM D2774 - PRACTICE FOR UNDERGROUND INSTALLATION OF THERMOPLASTIC PRESSURE PIPING and the requirements herein. Exercise care in assembling a pipeline with solvent welded joints so that stress on previously made joints is avoided. Handling of the pipe following jointing, such as lowering the assembled pipeline into the trench, shall not occur prior to the set times specified by the manufacturer.

5. Apply solvent to pipe ends in such a manner that no material is deposited on the interior surface of the pipe or extruded into the interior of the pipe during jointing. Wipe off excess cement on the exterior of the joint immediately after assembly.

6. Make threaded pipe joints using Teflon tape or other approved jointing material. Do not use solvent with threaded joints. Protect pipe from tool damage during assembly. Use vises with padded jaws and strap wrenches for installation of fittings and nipples. Remove and replace any plastic pipe which has been nicked, scarred, or otherwise damaged.

7. Snake plastic pipe from side to side in the trench to allow 1-foot of expansion and contraction per 100 feet of straight run.

8. Do not expose the pipeline to water for 24 hours after the last solvent welded joint is made.

F. Bell and Spigot Gasketed Pipeline:

1. Join plastic pipe with “push-on” type gasketed fittings with mechanical restraints as detailed and specified.

2. Cut pipe square, externally chamfer approximately 10-15 degrees, and remove all burrs and fins. Remove and replace any plastic pipe which has been nicked, scarred, or otherwise damaged.

3. Align pipe sections straight. Clean all debris from the bell areas of the fitting and install gasket so that it is completely seated in the groove with no raised areas.

4. Apply lubricant to the installed gasket and to beveled end of the cut pipe or to the spigot end of the pipe or fitting. Align the pipe with fitting and push together by hand or with pry bars on the end of the fitting or with two pry bars using the lugs on the fitting. Insert until the reference line mark is even with edge of the fitting bell.

5. Install mechanical restraints per details and manufacturer's instructions.

6. Snake plastic pipe from side to side in the trench to allow 1-foot of expansion and contraction per 1000 feet of straight run.

G. Installation of Valves, Valve Boxes, and Special Equipment:

1. General: Install all valves and other equipment in strict accordance with the details, and make readily accessible for manual operation, maintenance or replacement.

2. Install isolation or gate valves of the same size as the pipeline in which they are installed, unless otherwise indicated.

3. Install all valves below ground housed in a covered valve box with a securable lid that will permit access for field servicing. Boxes shall be set flush with existing grade, including sloped areas, and all soil within 12 inches of the perimeter of the box shall be compacted per the trench repair section of this specification. Boxes are to be positioned per details.

4. Set valve boxes per applicable details and set valves at sufficient depth to provide clearance between the cover and valve handle or key when the valve is in the fully open position. Do not cover valve with pea gravel.

5. Install backflow preventers per applicable details with pipe supports and the accessories necessary to properly secure the assembly where required. Install backflow preventers per prevailing codes. All Backflow devices shall be certified by a licensed inspector as required by the County Health Department Test Instructions, Water Pollution Control Section after installation at the Contractor's expense.

6. No equipment shall be installed closer than 12 inches to any paved surface, unless separated from the paved surface by a wall, fence, curb, or similar barrier, or installed underground.

H. Irrigation Head Installation and Adjustment:

1. General: In accordance with the requirements of Subsection 3.2 of this Section, flush and pressure test all mains and flush lateral lines before installing irrigation heads.

2. Irrigation Head Placement and Spacing:

   a. Irrigation plans are designed, as a minimum standard, for head-to-head coverage on all spray heads. Head locations shall be determined by referencing the irrigation plan and using the head spacing listed in the irrigation head legend. Accuracy of final installation shall be within plus or minus 12 inches for all rotary heads having a throw of 30 feet or greater; within plus or minus 4 inches for all head types with a throw of under 30 feet. Do not exceed the maximum irrigation head spacing shown on the Contract Drawings.

   b. Prior to head installation, Contractor shall mark the proposed locations of all irrigation heads in the field for review and approval by the Engineer. Contractor shall make any adjustments to head locations requested by the Engineer at that time at no additional

expense to the City. Contractor shall provide minimum 48 hours notice prior to the requested time of inspection.

3. Head Installation:

   a. Do not exceed the maximum irrigation head spacing shown on the Contract Drawings.

   b. Install all irrigation heads 3-inches clear of adjacent walks, curbs, paving, headers, and similar improvements. Adjust all heads to flush with the final finish grade - adjusting for depth of sod in turf areas if needed.

   c. All soil within 12 inches of the perimeter of the head shall be compacted as indicated in applicable details.

   d. All irrigation heads shall be installed on swing joint assemblies as shown on details.

4. Irrigation Head Adjustment:

   a. When all irrigation heads are installed and the irrigation system is operating, adjust and balance each section or unit with all section control valves fully open to obtain uniform 100% head to head coverage.

   b. Adjust irrigation heads having adjustable pin nozzles, screws or orifices to provide optimum distribution of water over the coverage pattern. Without additional cost to the City, Contractor shall substitute larger or smaller nozzles in irrigation heads and/or add or omit sprinkler heads as necessary to obtain uniform coverage to meet MWELO requirements. Any requested modification shall not alter the total GPM to a degree to require a major revision of pipe sizing.

   c. At no time is the irrigation system to cause excessive overspray on adjacent paved areas, or cause any erosion to the site.

   d. Low Head Drainage: The Contractor shall install in-line drainage swing check valves where necessary to prevent low head drainage or as indicated on contract drawings.

I. Automatic Control System Installation:

1. General: Install a complete automatic irrigation 2-wire control system, including the automatic controller, automatic control valves, decoders and wiring, and all necessary accessories and utility service connections.

2. Install the automatic controller outside of the coverage pattern of the irrigation system at the location designated on the Contract Drawings. Verify location with City Engineer prior to installation.

3. Install a separate disconnect switch between the source of power and the controller inside the controller enclosure per details. Provide grounding per details and manufacturer's instructions.

4. Install all electrical service wiring per Electrical Code in galvanized steel electrical conduit from the service point to the controller. The minimum service wire shall be No. 12 AWG copper 600 volt, Type THW or THWN or larger, as required by the controller manufacturer. Locate splices only in specified pull boxes and make splices with a waterproof packaged kit approved for underground use. Set pull boxes to finish grade on a 12-inch deep layer of one (1) inch crushed rock.

5. All 2-wire control wire and sensor cable shall be installed in 1-1/4" SCH 80 PVC conduit per details, with a maximum run of 200' between pull boxes. Install conduit in the same trench as irrigation mainline per trenching detail where possible. Low voltage control wire conductors between the 2-wire decoders and the valves shall be installed in 1/2" SCH 80 PVC conduit per details.

6. Wire connectors shall be DBY or DBR as manufactured by 3M Corp. Control wires shall be stripped of 1/2 inch of insulation USING A WIRE-STRIPPING TOOL SPECIFICALLY MADE FOR THAT PURPOSE, inserted into the electrical spring connector, and the connector twisted in a clockwise direction until the wires are tight. Insert the completed splice into the gel-filled tube, and check visually to confirm that the wire nut has been pushed past the fingers and is seated in the bottom of the tube. Position wires in wire channels and close insulator cover. Make splices in control wire in accordance with the requirements for service wire. Leave at least 2-feet of coiled slack at each splice and point of connection inside of valve boxes.

7. Testing Electrical Components: Field tests shall be performed by the Contractor on all irrigation system conductors in accordance with the requirements specified herein prior to performing the functional tests. Where conductors are installed by trenching and backfilling, such tests shall be performed after at least six (6) inches of backfill material has been placed over the conductors and backfill material has been compacted.

    a. Prior to the start of the functional testing, the Contractor shall perform the following tests on all irrigation system electrical conductors in the presence of the BCA Inspector.

    b. Each circuit shall be tested for continuity and open circuits.

    c. Each circuit shall be tested for grounds.

    d. An insulation resistance test at 500-volts DC shall be made on each circuit between the circuit and the ground. The insulation resistance shall not be less than 10-megohms on all circuits.

    e. The functional test for all the electric automatic irrigation system(s) shall consists of a minimum of fifteen (15) working days of operation during which time the controller shall complete at least three (3) complete cycles automatically for each station. The lengths and frequencies of the cycles will be determined by the City's representative. If unsatisfactory performance of the system develops, the condition shall be correctedand the test repeated until fifteen (15) working days of continuous, satisfactory operation is obtained.

f. The functional test shall be satisfactorily completed prior to the start of the plant establishment period.

g. Repair to the irrigation system wiring shall be made within five (5) working days of a malfunction or damage to any portion of the system.

8. Contractor shall leave the control system in operating condition with an operational chart mounted within the controller cabinet upon completion of the work.

3.3 FLUSHING AND TESTING

A. After completion, and prior to the installation of any terminal fittings, thoroughly flush the entire pipeline system to remove dirt, scale, or other material. After flushing, conduct the following tests in the sequence listed below. Provide all equipment, materials, and labor necessary to perform the tests. Conduct all tests in the presence of the City Inspector.

1. The irrigation system mainlines shall be pressure tested for 24 hours at 125 psi with all control valves in place and closed. During the test, the Contractor shall provide pressure gauges downstream from the backflow device and upstream from the farthest remote control valve in the system. Air pressure testing of the irrigation system is acceptable if approved by the BCA inspector. Placement of control wires shall be verified before mainline trenches are backfilled after pressure test.

2. After installation, the irrigation lateral lines shall be thoroughly flushed in the presence of the BCA inspector. Each valve and lateral system shall be flushed commencing with the head closest to the valve and proceeding to the farthest head.

3. Irrigation Coverage Test: After installation of heads and lateral lines etc., entire irrigation system shall be tested for coverage. The BCA Inspector, Project Manager, Contractor and Recreation and Parks Regional maintenance staff shall be notified three (3) days before the scheduled test. Perform the coverage test for each zone after irrigation heads have been installed and demonstrated that each section or unit in the irrigation system is balanced to provide uniform and adequate coverage of the areas serviced. Correct deficiencies in the system in accordance with the requirements of Subsection 3.2(G)4.

4. Operational Test: Evaluate the performance of all components of the automatic control system for manual and automatic operation. During the maintenance period, and at least 15 days prior to final inspection, set the controller on automatic operation so that the system will operate satisfactorily during such period. Make all necessary repairs, replacements, and adjustments until all equipment, electrical work, controls, and instrumentation are functioning in accordance with the Contract Documents.

3.4 OPERATING MANUALS AND EQUIPMENT

A. Furnish the City with 2 bound copies of operating and maintenance manuals for all irrigation system equipment such as automatic controller, valves, heads, etc.

B. Explain in detail all irrigation equipment operations, watering schedule and maintenance procedures to the City personnel as directed by the Project Manager before completion of the project.

C. Provide the City with a reduced legible copy of the "As-Installed" Irrigation Plan hermetically sealed in a plastic cover to be affixed inside the controller cover.

3.5 RECORD DRAWINGS

Irrigation record drawings shall include the following: Dimension the following locations from two permanent points of reference (building corners, sidewalks, road intersections, etc.):

A. Connection to existing water lines.
B. Connection to existing electrical power.
C. Gate valves.
D. Mainline routing and/or directional turns (dimension maximum 100 feet along routing).
E. Remote control valves.
F. Air and pressure relief valves.
G. Master valves/flow sensors.
H. Control wire routing.
I. Quick coupling valves.
J. Lightning protection (rod, plate, etc.).
K. Pull boxes.
L. Irrigation controllers.
M. Backflow prevention units.

(END OF SECTION)

SECTION 02821

CHAIN LINK FENCING AND GATES

PART ONE - GENERAL

1.1 SUMMARY

A. All permanent chain link fencing, gates and appurtenances as indicated on the Contract Drawings and as specified herein, and as needed for complete and proper installation.

B. Related Work Sections:

1. Concrete Work in Section 03300.

1.2 QUALITY ASSURANCE

A. Labor: Use adequate number laborer's who are thoroughly trained and skilled in the fencing trade and who are completely familiar with the specified requirements and methods needed for the proper executions of the work of this Section.

B. Codes and Regulations: Perform all work in strict accordance with applicable Government Codes and Regulations, meeting all "Safety Standards" of CAL/OSHA, County and the current Los Angeles City-Building Code and applicable Amendments.

C. Qualification of Fabricators: Provide adequate number of fabricators who are thoroughly familiar with the specified requirements regarding fabrication of fencing fabrics, posts and gates.

D. Quality of All Materials and Accessories: All materials and accessories shall conform with the requirements of the Standard Specifications for Public Works Construction (SSPWC) and specified herein.

1.3 SUBMITTALS

A. General: Comply with applicable provisions the GENERAL REQUIREMENTS and other Sections of the Project Manual.

B. Product Data:

1. CONTRACTOR shall provide Shop drawings in sufficient detail to show layout of fence and gate, elevation details, fabrication, assembly, hardware, installation, anchorages and interface of work of this Section with work of adjacent trades.

2. Manufacturer's Specifications and other data needed to prove compliance with the specified requirements for chain link fabric, posts and rails.

3. Manufacturer's recommended installation procedures which when reviewed and approved by the ENGINEER, will become the basis for accepting or rejecting actual installation procedures used on the Work.

4. Vinyl coating and color for chain link fabric.

1.4 PRODUCT HANDLING

A. Protection: Protect fencing fabric, posts and gate assemblies before, during and after installation. Properly package and identify and note location of unassembled items (hardware, etc.) for protection against damage.

B. Delivery: Deliver all items to be built into concrete or masonry work in time, so as not to delay construction and installation operations.

PART TWO - PRODUCTS AND FABRICATION

2.1 MATERIALS

A. General: All materials for fencing, posts and gates and fasteners to be new and hot-dipped galvanized.

B. Galvanizing: Where noted on drawings or Specified herein, metal products shall be hot-dipped galvanized, and comply with requirements of Section 210-3 - GALVANIZING of SSPWC, except as modified herein.

C. Fabric:

1. Galvanized steel chain link fabric shall conform to ASTM A392 - SPECIFICATION FOR ZINC COATED STEEL CHAIN LINK FENCE FABRIC and A817 - SPECIFICATION FOR METALLIC - COAT STEEL WIRE FOR CHAIN LINK FENCE FABRIC. Fabric shall be 2-inch mesh of 9-gage steel wire (minimum 75,000 psi tensile strength) galvanized with 1.2 oz/ft^2 zinc, in single fabric width for the entire height. Top and bottom selvedges shall be knuckled.

   Vinyl coated galvanized steel fabric, when specified, shall conform to ASTM F 668, Class 2b, "fused and adhered", and meet the galvanizing requirements contained in this section, (206-6.3).

2. Fabric Tie: 11 gage galvanized steel used to fasten the fabric to posts, rails and gate frame.

D. Posts:

1. Schedule 40 Standard weight pipe conforming to ASTM F-1083 **-** SPECIFICATION FOR PIPE, STEEL, HOT-DIPPED ZINC - COATED (GALVANIZED) WELDED, FOR FENCE STRUCTURES.

2. Line Posts: 2 3/8-inch O.D. complete with malleable iron eye-top of suitable design to provide moisture-proof cap.

3. Terminal (End) and/or Corner Posts: 2 7/8-inch O.D. with malleable iron moisture-proof cap.

4. Gate Posts: 4-inch O.D. complete with malleable iron moisture-proof cap.

E. Top and Bottom Rails: 1-5/8 inch O.D. standard weight steel pipe complete with end caps and end clamps for attachment to posts.

F. Horizontal and Diagonal Bracing:

1. Horizontal Rails with Diagonal Bracing to all end sections: Intermediate horizontal rail, 1-5/8-inch O.D. standard weight steel pipe complete with end caps and clamps for attachment to posts.

2. Diagonal: 3/8-inch diameter steel truss rods complete with turn buckles and attachments to post.

G. Tension Wire: For fabric of 9-gage and heavier use 6-gage galvanized coiled spring steel wire.

H. Galvanizing Repair Material: Galvanized surfaces which have been damaged in transport or during installation shall be re-coated using the metalizing process or zinc oxide, zinc dust paint per Section 210-3.5 of the SSPWC.

I. Galvanized Steel Brace Bands, Tension Bands or Bars and Tension Rods: Brace bands shall be galvanized, minimum of 3/16 inch x 3/4-inch wide; tension bands or bars shall be 3/16 inch x 3/4-inch wide and tension rods shall be 3/8 inch diameter galvanized steel rod with galvanized turnbuckles or other suitable tightener or tightening devices.

2.2 GATE HARDWARE

A. Swinging Gate:

1. Hinges: Heavy-duty ball and socket, industrial service, offset type, minimum 3 inch in width.

2. Latch for Single Swing Gate: Heavy malleable iron, fork type with provisions for padlocking.

2.3 GATE CONSTRUCTION

A. Swinging Gate Frame Construction:

1. All welded, fabricated of 1-7/8 inch O.D., galvanized steel pipe; all welded joints ground smooth and coated with a galvanizing repair material; all in accordance with reviewed Shop Drawings.

2. Frame Bracing: Use galvanized steel truss rods with galvanized turn buckles as hereinbefore specified.

3. Fabric: Same as hereinbefore specified for fencing, placed on exterior side of gate frame, as indicated, in same manner as specified for fencing.

PART THREE - EXECUTION

3.1 SURFACE CONDITIONS

A. Examine the areas and conditions under which work of this Section will be performed. Correct conditions detrimental to timely and proper completion of the work. Do not proceed until detrimental conditions are corrected.

3.2 CHAIN LINK FENCE INSTALLATION

A. Post Setting: In concrete foundations per applicable detail/s; set plumb, at specified height and spacing, in straight alignment for uniform installation as indicated on the Drawings.

1. Excavating and Backfilling: Neatly and accurately excavate foundation holes for posts as indicated. Compact subgrade or any loose material. Solidly and firmly backfill around completed concrete foundations with excavated earth materials to finish grade or to proper elevation, as necessary for required paving as applicable.

2. Concrete Footings: Minimum 2500 psi concrete or as otherwise specified on drawings and conforming to the most recent edition of Los Angeles City Building Code and applicable Amendments. Finish top of footing smooth and even, sloped to shed water and with edges at finish grade of adjoining ground or adjusted for paved surfaces. Allow concrete to attain at least 75% of its 28-day strength before installation of fencing components.

C. Top Rail: Extend through post eye-top caps and attach ends to corner, gate, and/or terminal (end) posts.

D. Horizontal and Diagonal Bracing:

1. Horizontal Rail: Locate mid-height in fencing panels adjacent to gates, corner, and terminal (end) posts.

2. Diagonal Bracing: Extend from the joint of horizontal brace (with adjacent post) diagonally to the base of gate, corner, or terminal post.

E. Chain Link Fabric:

1. The fabric shall be installed so that the edge extends beyond the top rail and the bottom rail by 1 inch. The bottom of the fabric shall extend to within 1 inch maximum of the natural ground or final grade. High points of ground shall be excavated to clear the bottom of the fabric and depression shall be filled and compacted to within 2 inches of the bottom of fabric. Secure fabric to tension wire with galvanized clip rings or wire ties spaced not more than 18 inches apart.

2. Tightly stretch and secure to line posts, with adequate tie wires, space maximum 18-inches apart or as recommended by manufacturer.

3. Secure fabric to top rail, terminal (end) and gate posts by means of heavy, galvanized steel bands bolted to 1/4-inch x 3/4-inch tension bars passing vertically through full height of fabric 16 inches interval.

3.3 SWINGING GATE INSTALLATION

A. Properly hang or set gate(s) in plumb and level position for full opening without interference and adjust the hardware for smooth and trouble-free operation and inspect latching and locking hardware for proper alignment and function.

3.4 MISCELLANEOUS

A. Use U-shaped tie wires, conforming to diameter of pipe to which attached, clasping pipe and fabric firmly with ends twisted at least two full turns.

B. Bend ends of wire to minimize hazards to persons and clothing.

C. Fasteners:

1. Install galvanized nuts for tension band and hardware bolts on side of fence opposite fabric side.

2. Peen the ends of bolts to prevent removal of the nuts.

D. Repairs: Repair fencing coatings damaged in the shop or during field erection using a hot-applied repair compound applied in accordance with repair compound manufacturer's recommendations as approved by the City Engineer; at no added cost to the City.

E. Cleanup: Comply with provisions of the GENERAL REQUIREMENTS regarding removal from the jobsite; rubbish, all equipment, unused materials, temporary structures and/or facilities no longer required.

(END OF SECTION)

SECTION 02870

SITE FURNISHINGS

PART 1 - GENERAL

1.1 SECTIONS INCLUDED

A. Benches.

1.2 SUBMITTALS

A. Product Data: Submit manufacturer's product data, storage and handling requirements and recommendations, installation methods and available colors, styles, patterns and textures.

B. Shop Drawings: Submit manufacturer's shop drawings, including plans and elevations, indicating overall dimensions.

C. Samples: Submit manufacturer's samples of materials, finishes, and colors.

D. Warranty: Manufacturer's standard warranty.

1.3 QUALITY ASSURANCE

A. Manufacturer's Qualifications: Manufacturer regularly engaged in manufacture of site furnishings since 1969. Regulatory Requirements: Conform to applicable Los Angeles City Building Code and Amendments.

B. Product Support: Products are supported with complete engineering drawings and design patents.

C. Base Worth: An installed base of products worth in excess of one hundred million dollars.

D. Assets: Excess of twenty million dollars in assets.

E. Production: Orders are filled within a 40-day schedule.

F. Facility Operator: Welders and machine operators are certified.

1.4 DELIVERY, STORAGE, AND HANDLING

A. Delivery: Deliver materials to site in manufacturer's original, unopened containers and packaging, with labels clearly identifying product name and manufacturer. Comply with pertinent provisions of Section 01150 of the Project Manual.

B. Storage: Store materials in clean, dry area in accordance with manufacturer's instructions. Keep materials in manufacturer's original, unopened containers and packaging until installation.

C. Handling: Protect materials and finish during handling and installation to prevent damage.

1.5 WARRANTY

A. Warranty Information:

1. Products will be free from defects in material and/or workmanship for a period of three years from the date of invoice.

2. The warranty does not apply to damage resulting from accident, alteration, misuse, tampering, negligence, or abuse.

3. Landscape Forms, Inc. shall, at its option, repair, replace, or refund the purchase price of any items found defective upon inspection by an authorized Landscape Forms service representative.

4. Purchasers should be aware that normal use of these high quality products can result in superficial damage affecting the finish. Scratches, nicks, and dents are to be considered normal wear and tear, and are not the responsibility of the manufacturer.

PART 2 - PRODUCTS

2.1 MANUFACTURER

A. Landscape Forms, Inc., 7800 E. Michigan Ave, Kalamazoo, Michigan 49048. Phone: (800) 521-2546. Fax (269) 381-3455. Website www.landscapeforms.com E-mail: specify@landscapeforms.com

2.2 BENCHES

A. “Scarborough” Benches

B. Style:

1. Backed:

a. Depth. 28 inches.

b. Overall Height: 34 inches.

c. Arm Height: 28 inches.

C. Length:

1. 24 inches.

2. 72 inches.

D. Seat Pattern:

1. Strap.

E. Mounting:

1. Surface Mounted, see detail 4/L502.

F. Divider:

1. Center Arm Rest for 72” bench.

2.3 MATERIALS

A. Seat Patter:

1. Horizontal Strap: For exterior or interior applications, constructed of steel straps 1-1/2” x 0.188”.

B. Panel Supports:

1. Strap Supports: End frames are 1” x 1” solid steel, joined by 1-1/2” diameter, 0.120” wall thickness tubular steel. Seat panels are perimeter welded to the end frames.

2.4 ACCESSORIES

A. Anchor Bolts: Corrosion resistant, 3-inch by 3/8-inch stainless steel carriage bolts, washers and nuts recessed in anchor security caps in accordance with ASTM F593 and ASTM F594.

2.5 RECYCLED CONTENT

A. Scarborough benches are 100% recyclable

	Post-Consumer content	**Pre-Consumer content**
Scarborough weave bench	53%	20%
Scarborough strap bench	59%	31%

2.6 FABRICATION

A. Shop assembled benches.

2.7 FINISHES

A. Finish on Metal: Landscape Forms, Inc. “Pangard II”.

1. Primer: Rust inhibitor.
2. Topcoat: Thermosetting polyester powder coat. UV, chip, and flake resistant.
3. Test Results: “Pangard II”.
    a. Gloss, Garner 60 Degrees, ASTM D 523: Plus or minus 5.
    b. UV Resistance, Color and Gloss, ASTM G 155, Cycle 7: Delta E less than 2 at 2.0 mils and less than 20 percent loss.
    c. Cross-Hatch Adhesion, ASTM D 3359, Method B: 100 percent pass.
    d. Flexibility Test, Mandrel, ASTM D 522: 3 mm at 2 mils.
    e. Erichsen Cupping, ISO 1520: 8 mm.
    f. Impression Hardness, Buchholz, ISO 2815: 95.
    g. Impact Test, ASTM D 2794: 60 inches/pound at 2.5 mils
    h. Pencil Hardness, ASTM D 3363: 2H minimum.
    i. Corrosion Resistance, 1,500-Hour Test, ASTM B 117: Max. undercutting 1 mm.
    j. Humidity Resistance, 1,500-Hour Test, ASTM D 2247: Max. blisters 1 mm.

B. Color:

1. Ivy.

PART 3 - EXECUTION

3.1 EXAMINATION

A. Examine areas to receive benches. Correct conditions detrimental to timely and proper completion of the Work. Do not proceed until unsatisfactory conditions are corrected.

B. Notify Architect of conditions that would adversely affect installation or subsequent use.

C. Do not begin installation until unacceptable conditions are corrected.

3.2 INSTALLATION

A. Install benches in accordance with manufacturer's instructions at locations indicated on the Drawings.

B. Install benches level.

C. Anchor benches securely in place.

3.3 ADJUSTING AND CLEANING

A. Finish Damage: Repair minor damages to finish in accordance with manufacturer's instructions and as approved by Architect.

B. Component Damage: Remove and replace damaged components that cannot be successfully repaired as determined by Architect. The field welds, bolted connections, and abraded areas of the finish. Paint the bare areas with same material used for shop finishing.

C. Clean benches promptly after installation in accordance with manufacturer's instructions.

D. Do not use harsh cleaning materials or methods that could damage finish.

3.4 PROTECTION

A. Protect installed benches to ensure that, except for normal weathering, benches will be without damage or deterioration at time of Substantial Completion.

(END OF SECTION)

SECTION 02900

LANDSCAPE PLANTING

PART ONE - GENERAL

1.1 DESCRIPTION

A. Work Included:

1. All labor, materials, equipment, and tools necessary to provide and execute: soil preparation and amendments; planting of new trees, plants, shrubs, vines, and ground cover and sod; all required testing and inspections; maintenance and establishment of new landscape plantings as indicated on the Contract Drawings, specified herein and as needed for complete and proper installation and maintenance.

1.2 SUBMITTALS

A. The CONTRACTOR shall make all required materials submittals in accordance with the General Requirements.

B. The CONTRACTOR shall make substitution submittals in accordance with the General Requirements.

C. Submit copies of the following:

1. Complete list of landscape plant materials soil amendments, fertilizers, herbicides, and miscellaneous hardware complete with descriptions and/or photographs and manufacturer's literature. Clearly mark or underline proposed items.

1.3 QUALITY ASSURANCE

A. Codes and Regulations: CONTRACTOR to obtain and pay for all required permits. Deliver all permits and submit certifications of compliance to the CITY ENGINEER.

1.4 GENERAL REQUIREMENTS

A. Required Approvals by the ENGINEER: No work included in this Section shall be commenced until the following are completed and approved:

1. Any required agricultural suitability and fertility analysis or testing and weed/pest control prior to placing topsoil or soil amendments.

2. All work on irrigation system prior to start of landscape planting work.

3. All reviews on required submittals and re-submittals requested by the ENGINEER for materials included in this section.

B. Inspection: All work and materials are subject to inspection and approval by the Bureau of Contract Administration (BCA) Inspector and the PROJECT MANAGER. Any work done without proper inspection will be subject to rejection per Section 2-11 of the Standard Specifications for Public Works Construction. The CONTRACTOR shall notify

the Bureau of Contract Administration (BCA) Inspector and PROJECT MANAGER three (3) days prior to requested inspection of the following for approvals:

1. For all finish grades in planting areas following all weed/pest control, soil fertilizing and conditioning, prior to landscape container planting, and after rolling in turf areas.

2. Inspection of all plant materials under 24" box size shall be at the time of delivery to the job site. This inspection will be for compliance with the caliper, height and spread requirements if given on the plant legend and for the general health, structure and appearance of plants. The CONTRACTOR shall also stake all tree planting locations at this time for review and approval by the ENGINEER.

3. Tagging of 24" box or larger trees at the grower with city approved tags. This inspection will be for compliance with the caliper, height and spread requirements if given on the plant legend and general health, structure and appearance of plants. All trees shall be tagged by the ENGINEER or authorized representative.

4. All completed landscape planting and irrigation work for approval to begin the plant maintenance and plant establishment period.

C. Existing Plant Materials: Protect all existing plant materials, not designated for removal or modification, in place against damage resulting from work of this Contract. Perform any removal and/or trimming only on approval or instructions from the CITY ENGINEER or in accordance with applicable provisions noted or specified on the Contract Drawings. CONTRACTOR shall replace all damaged existing plant material with like type and size material. If an acceptable replacement is not available, CONTRACTOR shall pay damages to the CITY for the value of the damaged tree as assessed by the tree value formula in the ISA Guide for Establishing Value of Trees and Other Plants.

D. Tree Protection Requirements: See sheet L100A.

1.5 DELIVERY, STORAGE AND HANDLING

A. Delivery:

1. Delivery of plant material shall begin only when it is ready for plant installation and after the inspections are made and any required soil samples and tests have been reviewed by the PROJECT MANAGER. All materials furnished for the work shall be not less than the approved submittal. Upon delivery, CONTRACTOR shall tag one plant of each variety for identifying purposes.

2. Notify the ENGINEER of a scheduled delivery a minimum of 48 hours in advance so the plant materials may be inspected upon arrival at the jobsite. All plant material judged by the ENGINEER at the time of delivery as unacceptable shall be removed immediately from the jobsite by the CONTRACTOR. All trees not accompanied with the tags signed placed the ENGINEER or the authorized representative, or plants not correspondent with contract requirements shall be rejected and immediately removed from the job site.

3. Protect plants during delivery against damage to root balls or desiccation of leaves. Protect trees during transport by tying in the branches and covering all exposed branches.

4. Deliver fertilizer to the jobsite in the original and unopened containers bearing manufacturer's guarantee chemical analysis, name, trademark or trade name in conformance with Federal and Local law. In lieu of containers, fertilizer may be furnished in bulk and a certificate indicating the above information shall accompany each delivery.

B. Storage:

1. Store plants, trees, etc. at the jobsite where directed by the PROJECT MANAGER.

2. Keep fertilizer in dry storage away from contaminants. Loose fertilizers and soil amendments shall be kept covered with a tarp.

3. Store plants not installed on the day of arrival at the jobsite as follows:

a. Outside storage to be protected from wind.

b. Keep plants in containers in a moist condition until planted by watering with fine mist spray.

C. Handling: Transport and handle plants with care to ensure protection against injury.

PART TWO - PRODUCTS

2.1.1 MATERIALS

A. Topsoil: The type and thickness of topsoil shall be as shown on the plans. If not shown, the topsoil shall be the existing class "C" on-site topsoil and amended as indicated.

B. Fertilizers and Conditioning Materials: Comply with the applicable requirements of the State Agricultural Code. All fertilizing materials shall be packaged, first grade, commercial quality products identified by source, type of material, weight and manufacturer's guaranteed analysis. Fertilizing material shall not contain toxic ingredients or fillers in quantities harmful to human, animal, or plant life.

1. Agricultural Gypsum: Hydrated calcium sulfate product containing 23 percent calcium and 18 percent sulfur with a guaranteed analysis of 84 percent calcium sulfate.

2. General Purpose Fertilizer: Shall be Gro-Power Plus fertilizer, having a minimum analysis of 5-3-1 (N-P-K) derived from ammonium phosphate, urea, sulfate of potash, compost and sulfides and oxides of iron, manganese and zinc, with 1.00% Alkyl Naphthalene Sodium Sulfonate soil penetrant as manufactured by Gro-Power Inc., 5065 Telephone Avenue, Chino, CA 91710 (909) 393-3744, or an approved equal. https://www.gropower.com

3. Fertilizer Tablets**:** Fertilizer tablets shall be Tri-C Myco Tabs planting tablets, 1.7 gram 17-9-5 (N-P-K) as manufactured by TRi-C Organics Inc., (800) 590-3301, or an approved equal. https://www.tricorganics.com

4. Non-Selective Herbicide**:** Shall be Finale™, by BASF, or an approved equal. All herbicides, when required, shall be specified and applied by a licensed Pest Control Advisor in a manner consistent with the manufacturer's product labelling. Prior to application, CONTRACTOR shall submit proposed herbicide and a diagram showing the area of application for approval to the PROJECT MANAGER.

5. Pre-Emergent Herbicide**:** Shall be Specticle G Pre Emergent Granular Herbicide, by Bayer Environmental Sciences, or an approved equal applied at the rate of 2.3 lb./1000 sf. All pre-emergent herbicides, when required, shall be specified and applied by a licensed Pest Control Advisor per the manufacturer's recommendations.

6. Granular Humic Acid Soil Conditioner: Shall be LIVE EARTH HUMATE SOIL CONDITIONER or Tri-C Humate Plus or approved equal. Contact Todd Burns, Live Earth Products, Inc. (661) 978-7307 for availability, or TRi-C Organics Inc., (800) 590-3301 https://www.tricorganics.com, or an approved equal. Apply per manufacturer's instructions.

7. Soil Penetrant**:** Shall be "Ground Breaker" by Green As it Gets, Inc. or approved equal. Soil penetrant shall contain organic yucca and kelp extracts. Soil penetrant MAY NOT contain alcohol. Apply soil penetrant per manufacturer's instructions. Contact: Green As It Gets Inc., 300 Morning Drive, Bakersfield, CA 93306 Phone: 1-800-476-0034. https://www.greenasitgets.com

8. Organic Soil Amendment**:** "Type 1" organic soil amendment shall be a relatively dry and friable fine-textured organic composite that is well-composted and nitrogen stabilized, derived from composted greenwaste or processed wood products, and free of foreign matter including animal waste and any viable plant, tree or weed seed. 99% of material shall pass through a 1/2" screen. CONTRACTOR shall submit a sample of the organic soil amendment to the PROJECT MANAGER for approval prior to installation.

   All Organic Soil Amendment shall conform with the following criteria:

   a. The pH of the material shall be between 6 to 7.5.

   b. Salinity: material shall have a maximum saturation extract conductivity of 2.50 millisiemens per centimeter.

   c. Boron content of the saturated extract shall be less than 1.0 parts per million.

   d. Sludge-based or animal waste materials are not allowed.

   e. Carbon: Nitrogen ratio is less than 25:1.

   f. All compost shall be aerobic without malodorous presence of decomposition products.

   g. Maximum total permissible pollutant concentrations in amendment in parts per million on a dry weight basis:

Arsenic	20	Copper	150	Selenium	50
Cadmium	15	Lead	200	Silver	10
Chromium	300	Mercury	10	Vanadium	50
Cobalt	50	Molybdenum	60	Zinc	300
Nickel	100				

9. Top Dress Mulch**:** Shall be well-seasoned composted tree chip mulch, free all foreign matter including weed and tree seeds. Mulch chip size shall be minimum one (1) inch in diameter and not more than four (4) inches in diameter. Submit a sample of mulch and source to the PROJECT MANAGER for approval prior to application.

C. Plant Materials:

1. Availability & substitutions: No substitutions of plant species, type, cultivar, size etc. will be accepted without prior approval of PROJECT MANAGER. CONTRACTOR is expected to utilize all reasonable nursery resources in the Southern California region before determining if a specified material is unavailable. When plants of a specified kind or size are determined by PROJECT MANAGER to be not available, substitution may be made upon approval by the ENGINEER, in accordance with the General Conditions. CONTRACTOR shall provide information regarding his attempts to locate such material.

2. All Plants: The plant names shown or listed on the Contract Drawings shall conform to the "Sunset Western Garden Book," latest edition unless otherwise specified. In all cases, botanical names take precedence over common names. One plant of each variety shall be tagged for identifying purposes.

3. Quality: All plants shall have a growth habit normal to the species in accordance with U.S.A. Standards for Nursery Stocks, latest editions; shall be sound, healthy, vigorous and free from insect pests, plant disease, sun scalds, weeds, fresh bark abrasions, excessive abrasions or other objectionable disfigurements. Tree trunks shall have normal well-developed branch systems. All plant materials shall have vigorous and fibrous root system, not root bound and shall be free of kinked or girdling roots. The CONTRACTOR shall be responsible for the condition of all plants, planted or otherwise, until final acceptance by the CITY and termination of maintenance period

4. Sod: Shall be of the type designated on the planting plan, or an approved equal. Sod shall be delivered to the job site within 24 hours of being cut at the nursery, and COMPLETELY installed within 12 hours of delivery to the job site. The sod shall be machine cut to between 3/8" and 5/8" thick, not including top growth or thatch.

5. All plants shall be inspected and approved prior to planting as per provisions of Subsection 1.4(B) specified above

D. Tree Stakes:

1. Wood tree stakes 2-inches in diameter by 8-feet long, lodgepole grade, pressure-treated, capable of standing in the ground at least two years.

   a. All trees in non-turf areas as indicated on the Contract Drawings shall be ***double staked*** per detail.

   b. All trees in turf areas as indicated on the Contract Drawings shall be ***triple staked*** per detail.

G. Slope Stabilization and Erosion Control Material: Jute Mesh material shall be light weight, brown color, fire retardant, open weave construction and shall have a minimum 4-year longevity. Material shall handle maximum water flow of 8 feet per second.

PART THREE - EXECUTION

3.1 GENERAL

A. The Landscape work shall not be performed at any time when it may be subject to damage by climatic conditions.

B. The CONTRACTOR shall verify all dimensions shown on the Contract Documents and at the site.

C. In case of conflict between the plant schedule totals and total plant count of the contract documents, the CONTRACTOR shall provide the higher number of plants.

D. Delivery of material shall begin only when it is ready for the work and after the inspections are made and the required samples and tests have been reviewed by the ENGINEER. All materials furnished for the work shall be not less than the reviewed sample.

E. The CONTRACTOR shall provide temporary fencing, barricades, covering, or other protection to preserve existing landscaping items indicated to remain and to protect the adjacent properties and other structures from damages by the landscape and other contract work.

F. The CONTRACTOR shall abide by the Tree Preservation Guidelines, Section 1.4.D herein for all trees indicated to remain.

G. The CONTRACTOR shall remove and/or relocate landscape items such as trees, shrubs, grass, other vegetation, improvements, and obstructions as shown on Drawings or specified otherwise. All plant material to be removed shall be disposed of off the site in a legal and proper manner.

3.2 SURFACE CONDITIONS

A. Examine the areas and conditions under which work of this Section will be performed. Correct conditions detrimental to timely and proper completion of the work. Do not proceed until detrimental conditions are corrected.

3.3 GRADING AND SITE PREPARATION:

A. Rough Grading:

1. Earthwork and Topsoil Placement: Shall include excavation and backfilling for the irrigation system and the preparation for the spreading, densification, cultivation and raking of topsoil, including fertilization and conditioning.

B. Topsoil Preparation and Amendment:

1. After completion of ***all necessary trenching and backfill*** for electrical, irrigation, or drainage piping and conduit, bring planting areas to approximate finish grade, including construction of landscape mounds, before performing soil amendment. CONTRACTOR shall account for the amount of fertilizer and soil amendments to determine the appropriate grade.

2. Turf Areas and Hydroseed Areas**:** For all TURF planting areas ***outside of tree protection zones,*** Class "C" on-site ("native") topsoil shall be scarified and cultivated to a uniform, finely divided condition to a depth of 12 inches. Soil shall not be worked when it is so wet as to cause excessive compaction to cause the formation of large clods; or so dry as to create excessive dust. All soil amendments shall then be broadcast evenly at the rate as specified below (or per the recommendations of the approved agricultural suitability and fertility analysis if directed by the PROJECT MANAGER)**,** and then thoroughly and uniformly incorporated to the depth of 12 inches**.** Prior to planting, the top 3 inches of all planting areas (including slopes) shall be free of weeds, stones and other deleterious matter 1-inch diameter and larger.

    a. All turf planting areas shall receive the following soil amendments per 1,000 square feet:

        4 cubic yards, Type I organic soil amendment
        15 lbs. Agricultural Gypsum
        50 lbs. Gro-Power Plus fertilizer

    a. Topsoil shall be restored to a smooth finish grade after amendment process is complete and irrigated thoroughly to activate amendments and fertilizers.

2. For all planting areas ***inside of tree protection zones***, the Class "C" on-site ("native") topsoil shall be scarified to a depth of 1 inch, taking care not to damage surface roots.

    a. After scarification, apply “GROUND BREAKER” soil penetrant to all planting areas at a rate of 1 gallon per 1,000 square feet per manufacturer’s instructions.

    b. 12 hours minimum after applying soil penetrant, all planting areas shall receive the following soil amendment per 1,000 square feet:
        - 20 lb. GRANULAR HUMIC ACID SOIL CONDITIONER

    c. Soil amendment shall be evenly broadcast on the surface and uniformly cultivated into the top 1” of the soil and ***thoroughly irrigated*****.** Soil shall not be worked when it is so wet as to cause excessive compaction or to cause the formation of large clods; or so dry as to create excessive dust. Prior to planting, the top 3 inches of soil (including slopes) shall be free of weeds, stones and other deleterious matter 1-inch diameter and larger.

3. For individual tree and shrub planting outside of designated bulk soil amendment areas, backfill shall be 100% Class "C" on-site ("native") topsoil uniformly amended with GRANULAR HUMIC ACID SOIL CONDITIONER at the rate specified below:

    15 gallon: 1/2 cup (US) per plant
    24" box: 2 cups (US) per plant
    36" box: 6 cups (US) per plant
    48" box: 10 cups (US) per plant

4. Incorporation of all soil amendments shall be performed in the presence of the BCA Inspector, and at that time CONTRACTOR shall furnish the BCA Inspector with delivery tickets to verify the source, kind and quantities delivered and applied. Furnish PROJECT MANAGER duplicate copies of the material invoices as required in Subsection 1.2 (C).

B. Finish Grading:

1. Make finish grade smooth, uniform and free of abrupt grade changes and depressions to insure proper surface drainage.

2. Finish grade below adjacent paving, curbs or headers shall be 1.5 inches in shrub or ground cover areas and 3/4 inch in sodded lawn areas.

3. Water soil after spreading of fertilizer and/or soil conditioning materials and allow it to settle to provide a stable surface. After the soil has dried out to a workable condition, regrade, rake and smooth to the required grades and contours, eliminating any erosion scars. Finished surfaces shall be clean and suitable for planting.

4. Finish grading shall insure proper drainage of site. Surface drainage shall be away from all building foundations at a minimum of 2% or in accordance grades shown on Contract Drawings.

5. Turf Areas**:** Finish grading of turf areas shall take place after the soil has dried out to a workable condition following the soil preparation operations. The soil shall be remodeled and smoothed to the required grades and contours, then rolled in two directions at right angles with a water ballast roller weighing 200 to 300 pounds maximum. Any resulting irregularities in the grade after the initial rolling shall be re-raked, cut or filled, then re-rolled until the grade is free from irregularities. No trucks, tractors or other heavy objects shall be taken over the areas at any time. The final finish grade shall be smooth, uniform, without abrupt changes in grade, within one-tenth of a foot of the grades shown on the plan. No turf areas shall exceed 5:1 slope. Final grade must be approved by the CITY ENGINEER or BCA Inspector prior to seeding or sodding. (801-2.3).

3.4 WEED ABATEMENT

A. General: Unless specified otherwise, weed abatement shall apply to all planting areas. The abatement operation shall commence before planting but only after removals, grading, hardscape construction, installation of irrigation system, soil preparation, and fine grading of planting areas have been completed.

B. All herbicides for weed control shall be applied with a photosensitive dye which will produce a contrasting color when sprayed upon the ground. The dye shall be applied in a manner so as not to leave any stain upon finished surfaces.

C. The following precautions shall be observed in handling and applying herbicides:

1. Before applying, the CONTRACTOR shall read and understand all instructions provided by the manufacturer.

2. Herbicide product shall not be used when winds are gusty or in excess of 8 miles per hour, or when any other conditions exist which would result in drift.

3. DO NOT USE any combinations of pressure and nozzle type or adjustment that result in misting.

4. Do not apply during rain, or if rain is forecast within twelve hours. If rain occurs within a twelve-hour period after application, material must be reapplied after application area has sufficiently dried out.

5. CONTRACTOR shall observe extreme care not to allow spray to contact plant material designated to remain, or in adjacent areas. Use cardboard, plywood, or other appropriate material to shield plant materials outside of the treatment area from overspray.

6. Do not apply to bare ground.

B. Herbicide Application: Pesticides must be applied by a licensed Pest Control Applicator in accordance with the requirements of the California Food and Agricultural Code and specified herein. The CONTRACTOR shall abide by all laws and codes governing weed abatement operations including but not limited to CAL-OSHA requirements and The Healthy School Act of 2000 (AB2260). Prior to herbicide application CONTRACTOR shall:

1. Notify the PROJECT MANAGER a minimum of 72 hours in advance of each application of pesticide/herbicide and shall indicate the hours during which the application will occur. No applications shall be made on Saturdays, Sundays, or legal holidays, unless otherwise prior approval by the PROJECT MANAGER in writing.

2. Notify the Pest Management Supervisor of the RAP Forestry Division at (213) 485-4826. Do not add other products to any herbicide mix, including spreader, stickers, or surfactants, unless required by the label directions and approved by the RAP Pest Management Supervisor.

3. Prior to any approved pesticide applications at any RAP facility with a Recreation Center or Child Care Center, the CONTRACTOR is required to notify the Recreation Center Director a minimum of 72 hours in advance of each application.

4. Submit to the BCA Inspector and to RAP Forestry a “Pest Control Recommendation Form” prepared by a licensed Pest Control Advisor, and a provide completed and accurate SDS (Safety Data Sheet) to be kept at the site of application. The area of application shall be posted as such and barricaded for public safety and information (site construction fencing is deemed adequate for this purpose when present).

5. Any questions regarding pesticide application and procedures at Recreation and Parks facilities shall be directed to the PROJECT MANAGER/BCA Inspector and the RAP Forestry group, Vegetative Management at (213) 485-4826.

C. “Grow and Kill” method: The CONTRACTOR shall adhere to the following steps:

1. Clear and grub the surface of the designated planting area by mechanical means or by hand, removing all surface vegetation (excepting any trees, shrubs or turf designated to remain per plans and notes), rocks, debris, etc. Do not disturb the roots or compact soil around any existing vegetation to remain or within designated Tree Protection Zones, and do not remove any topsoil during clearing work.

2. “Grow Period”: Water all planting areas daily or as needed to keep soil evenly moist and promote weed germination and growth for a period of a minimum of ***three weeks***. If, in the opinion of the ENGINEER the “Grow Period” irrigation was insufficient to achieve adequate germination, the “Grow Period” may be extended in minimum 7-day intervals at no additional expense to the CITY.

3. “Kill Period”: At the conclusion of the grow period and approval by the ENGINEER, treat all emergent weeds within the planting area with approved herbicide per the

submitted and approved “Pest Control Recommendation Form” following the manufacturer’s instructions and labelling - *taking care to protect all trees, shrubs, turf etc. designated to remain*. If nutsedge (nutgrass) is determined to be present in any of the planting areas by the ENGINEER during the “Grow Period”, CONTRACTOR will be required to apply a separate selective herbicide manufactured specifically for the control of nutsedge at no additional cost to the CITY until nutsedge is completely eradicated.

4. After spraying, do not water or otherwise disturb treated areas for a minimum period of two (2) weeks.

5. After the two-week kill period, remove all dead vegetation. If any living plants are observed, the entire plant, including roots, shall be removed by hand, minimizing physical disturbance of the soil.

D. Herbicide Damage: New and/or existing plants which in the opinion of the ENGINEER have been damaged, disfigured, or stunted by the application of herbicide shall be replaced in kind (type, size, and age) by the CONTRACTOR at their expense.

E. Weed Suppression (Non-Herbicide Weed Removal: shall apply to all turf and planting areas. The suppression operation shall be commenced only after removals, grading, hardscape construction, installation of irrigation system, soil preparation, and fine grading of turf and planting areas have been completed. The CONTRACTOR shall thoroughly water all turf and planting areas for a minimum period of two weeks prior to commencing removal. CONTRACTOR shall completely remove from the site all unwanted vegetation and weeds ***including underground roots and stolons*** by hand or mechanical means. All removed vegetation shall be properly disposed of off-site. Watering and removal process shall be repeated again 2 weeks after completion of initial removal. CONTRACTOR shall maintain the entire work area weed-free on a weekly basis from completion of weed removal process until Final Acceptance.

3.5 PLANTING

A. **General:** All plant materials, including plants previously approved at the nursery, shall be inspected by the ENGINEER prior to planting. The CONTRACTOR shall be responsible for the condition of all plants, planted or otherwise, until final acceptance by the CITY and termination of maintenance and establishment period. CONTRACTOR shall be obligated to honor all requirements of warranty as indicated herein.

1. Perform planting with materials and equipment according to procedures favorable to the optimum growth of the plant. Do not plant during high wind conditions.

2. Except as noted for specimen planting, do not start planting operations until the completion of weed suppression and completion and acceptance of the irrigation system

3. Large boxed trees may be planted prior to hardscape installation or irrigation completion to facilitate construction and avoid damage to completed work with written approval from the PROJECT MANAGER. CONTRACTOR shall re-route irrigation lines in conflict with boxed tree locations to clear the root ball by 24” minimum at no additional cost to CITY.

B. Protection and Storage:

1. Keep all plant materials delivered to the jobsite in a healthy condition for planting. Do not crowd containers together in a manner that adversely affects plant foliage or growing conditions.

2. Do not allow plants to dry out or suffer physical damage from other construction activities. Protect from heavy winds.

C. Layout and Plant Locations:

1. Plant locations indicated on the Contract Drawings are approximate.

2. CONTRACTOR shall lay out each plant in its intended planting location as shown on the plan while the plant is still in the container and obtain approval of the layout from the ENGINEER ***prior to installation***.

3. Prior to planting, the CONTRACTOR may be directed to alter the layout of plants by direction of the ENGINEER, without additional compensation to the CONTRACTOR.

4. For "on center" plant spacing, locate the first row of plants in areas designated at one-half the specified spacing from the edge. Do not stretch the maximum specified spacing for each species as shown on the plans.

D. Container Plants Backfill Mix:

1. Unless specified otherwise or recommended by the approved agricultural suitability and fertility analysis and approved by the PROJECT MANAGER, container plants shall be backfilled with 100% amended site soil.

a. Each plant pit shall also receive Tri-C Myco Tabs 1.7 gram 17-9-5 (N-P-K) planting tablets as shown in the relevant planting details, and as follows:

Container Size	
1 gallon	= 2 tablet
5 gallon	= 8 tablets
15 gallon	= 10 tablets
Boxed Trees	= 10 tablets per inch of trunk diameter, with a minimum of 20 tablets per tree.

b. Some plant species may be designated not to receive any planting tablets. Refer to legend on Planting Plan.

E. Tree and Shrub Planting:

1. Prior to planting, irrigation system installation and soil amendment shall be completed and approved. Soil shall be thoroughly irrigated beforehand, and suitably moist for planting. ***Do not plant in dry soil***.

2. Make planting holes approximately square with vertical sides ***no greater than the depth of the plant container*** (or such depth as needed so that the root crown has the correct relationship to adjacent finished grade per the planting details) and approximately twice the width of the plant container or rootball and larger if necessary to permit handling and planting without injury to the root system. Lightly scarify native soil at the bottom of planting holes.

3. Do not plant plants with a broken or cracked rootball. Such plants shall be considered defective and rejected. Rejected plants shall be removed promptly from the job site.

4. Open and remove plant containers in such a manner that the plant roots are not injured. Do not pull plants out of the pot by the stalk.

5. Scarify native soil at the bottom of planting holes.

6. If soil is not adequately moist, apply water to planting hole and allow to drain. Set the plant approximately in the center of the planting hole and add backfill under rootball if needed to adjust the root crown to correct grade.

7. Backfill the balance of the planting hole with moist, amended site soil; firming the backfill by hand or with tools to assure all air pockets have been removed, and settlement will be minimized. After planting, all plants shall be plumb with the root crown at its natural depth with respect to finish grade.

8. Prune or remove any broken or damaged minor limbs. Any major damage to plant material shall be brought to the attention the ENGINEER for evaluation. Trees or shrubs with major broken limbs shall be considered defective and rejected. Rejected plants shall be removed promptly from the job site.

9. For any trees installed prior to completion of irrigation system: form a circular watering basin 6-inches high and slightly larger than the planting hole to accommodate temporary hand watering. Make the bottom of the basin level with surrounding finish grade. Watering basin berms shall be removed during fine grading process and before application of top-dress mulch.

10. Tree Edging: Where trees are planted in lawn area, a minimum 4-foot diameter circle around each tree shall be maintained free of lawn area to avoid the growth-reducing effects of lawn area on trees. Mulch shall be placed in the circle. This circle shall be kept clear of lawn area by the CONTRACTOR for the duration of the maintenance period.

11. Install vines per planting detail. Remove nursery stakes and affix all branches to walls or fences per notes and details on Contract Drawings.

F. Turf Planting: Soil amendment, irrigation installation, weed abatement, and fine grading shall be completed and approved before seeding or sod installation.

1. Sod Planting: The type of sod and the area to be sodded shall be in accordance with the Contract Drawings. Sod shall be machine cut to between 3/8” and 5/8” thick, not including top growth or thatch.

   a. Site shall be fine graded to the specified thickness of the sod below finish grades. Soil conditioning and fine grading shall be completed before sodding. No heavy equipment shall operate over the site after grading is completed.

   b. The site shall be moist but not wet when sod is laid. Sod shall be laid with closely fitted joints, and the ends of the strips shall be staggered forming a running bond pattern. Openings shall be plugged with sod or topsoil. Within 2 hours after installing sod and before rolling, the sod shall be lightly irrigated.

All seams and joints shall then be rolled with a 200-300 lb. water ballast roller until the sod is well bonded to the soil below.

c. The sodded areas shall then be watered thoroughly to penetrate the subsoil at least 8 inches. Watering shall be repeated as necessary to keep the sod moist until rooted into the subgrade. Sodded areas shall be protected against all traffic until the sod is well established.

2. Turf Repair: All trenches shall be fully compacted, and the grade brought flush with the adjacent undisturbed finish grade. This repair shall include areas of irrigation or other piping trenches, conduit trenches or where vehicles or equipment has damaged the existing turf. Turf repair shall be accomplished using “Method A” hand seeding; or existing sod shall be carefully cut, removed, and reused to re-sod trenches after backfilling and compaction. CONTRACTOR shall use seed/sod to match existing turf type in areas being repaired unless directed otherwise by the ENGINEER.

3.6 TREE STAKING AND GUYING

A. Tree Staking: See planting legend for what type of staking shall be used for each tree type, if any shall be used. Stake trees with 2” diameter x 10’ long lodgepole pine stakes as indicated on the Drawings and details.

1. After planting, all trees shall be re-staked promptly per details.

2. Remove any existing nursery stakes first before installing new lodgepole stakes.

3. All trees in turf areas shall be triple staked unless noted otherwise. Stakes shall be placed in a circular pattern around tree, evenly spaced 1/3 circle apart.

4. All trees in non-turf areas shall be double staked, unless noted otherwise. Align stakes with the direction of strongest seasonal winds.

5. DO NOT drive stakes into the rootball of any newly planted trees.

B. Guying: Guy any boxed trees indicated on planting legend. Install guying immediately after planting per detail.

3.7 MAINTENANCE AND PLANT ESTABLISHMENT

A. General Maintenance: Maintain all areas Inside of work on a continuous basis as they are completed ***during the progress of the work and during the plant establishment period***.

1. CONTRACTOR shall maintain the entire area of work until final acceptance of the Contract by the CITY. Maintenance activities shall include continuous operations of picking up trash, watering, weeding (including all broadleaf weeds in lawn areas), mowing, rolling, edging, fertilization, spraying & pest control of insects and rodents, reseeding & plant replacement (irrespective of cause), or any other operations necessary to provide normal healthy plant growth.

2. Any malfunctions of, or damage to the irrigation system due to workmanship or materials or as caused by the CONTRACTOR in the execution of his work shall be repaired by the CONTRACTOR within 24 hours at his own expense. The CONTRACTOR is responsible for keeping all plant material sufficiently watered during any irrigation failures.

B. Plant Establishment Period:

1. The Plant Establishment Period shall be for a minimum period of 90 days unless extended as described in this section. The Plant Establishment Period shall be started when all planting and irrigation related work has been completed in accordance with the contract documents and approved by the PROJECT MANAGER. CONTRACTOR shall request a review of completed work by the PROJECT MANAGER at the appropriate time to determine if the Plant Establishment period may begin. A field notification will be issued to the CONTRACTOR to establish the effective beginning date of the plant establishment period.

2. The designated plant establishment period is part of the total contract time. The plant establishment period will be extended at fourteen (14) day intervals if, at the end of the plant establishment period, the planting, irrigation and other improvements do not reflect the intent of the plans and specifications. All extensions of the plant establishment period shall be subject to the assessment of liquidated damages, (801-6).

3. All lawns shall be of the grass seed or sod specified and shall be free from all broadleaf weeds. The lawn shall not be allowed to grow higher than three (3) inches and shall be mowed to a 1½" - 2" inch height. The lawn shall be mowed at least weekly during the Plant Establishment Period. All lawn areas shall have 95 percent coverage with bare areas not exceeding three square inches at the end of the Plant Establishment Period. 60 days after commencement of Plant Establishment Period, CONTRACTOR shall apply a slow release 38-0-0 granular fertilizer at a rate of 15 pounds per 1000 sq. ft. to all lawn areas and irrigate immediately afterwards. The fertilizer shall be applied in the presence of the BCA Inspector.

4. All trees and shrubs shall be healthy and vigorous in appearance throughout the duration of the Plant Establishment Period. Upon notice from the PROJECT MANAGER, the CONTRACTOR shall replace within seven (7) days of such notice at his own expense, any and all plant materials and/or sod which, for any reason dies or is damaged while under the CONTRACTORS care, or does not meet or exceed the quality of appearance and growth condition at the time of planting. Replacement shall be made with the same plant species and varieties as indicated or specified for the original planting. All replacement plants are subject to the same inspection requirements set forth in these specification for the original plant installation.

5. During the plant establishment period, all damage caused by erosion shall be repaired by the CONTRACTOR at his own expense within three (3) working days.

6. Broken or vandalized tree stakes shall be repaired or replaced by the CONTRACTOR at his own expense within seven (7) days.

7. During the plant establishment period, the irrigation system shall be operated in the automatic mode, unless otherwise permitted by the ENGINEER. No hand watering or manual station operations should be performed without notifying the ENGINEER. CONTRACTOR shall be responsible for setting an appropriate watering schedule for all irrigation zones, such as to provide adequate watering for each plant type, but not so much as to create any wasteful or unhealthful growing conditions. CONTRACTOR shall be responsible for modifying the watering schedule as needed to accommodate changing weather conditions.

C. Final Inspection/Final Acceptance:

1. Upon completion of the plant establishment period, a final inspection for acceptance will be performed by the BCA Inspector and ENGINEER or authorized representative. The CONTRACTOR shall request for inspection at least three (3) working days prior to the anticipated date. For this inspection, the site must be thoroughly cleared of all debris and excess material removed. If work fails to pass final inspection, any subsequent inspection must be rescheduled as per above, and will be charged to the CONTRACTOR.

2. If the plant establishment period is satisfactorily completed ahead of other work included in the Contract, the plants establishment shall be extended and shall be the responsibility of the CONTRACTOR until all other work has been completed and accepted by the CITY.

3.8 GUARANTEE

A. General: All shrubs and ground covers shall be guaranteed for a period of ninety (90) days from the end of the Plant Establishment Period. All trees and shrubs 15-gallon size or larger shall be guaranteed for a period of one (1) year from the end of the Plant Establishment Period. CONTRACTOR shall provide a written guarantee for the above materials as a part of the final close out package.

B. Deficiencies: Should any deficiencies develop within the specified guarantee period, CONTRACTOR shall correct such deficiencies to the full satisfaction of the ENGINEER without added expense to the CITY. All replacement plants shall be subject to a new guarantee for a period as described herein above.

(**END OF SECTION)**

SECTION 02939

PLANT PROTECTION AND PRUNING

PART 1 GENERAL

1.1 DESCRIPTION OF WORK

A. Protect existing plant material specified on the drawings during the duration of the construction period in a healthful state, free from damage or harm as the result of any work performed.

1.2 JOB CONDITIONS

A. Prior to construction of any nature on the site, Contractor shall call for a site meeting with the General Manager. The purpose of the meeting shall be to establish the conditions of all existing plant material to be preserved upon receipt of the site by the Contractor. Failure to call for said meeting implies acceptance by the Contractor of plant material to be preserved in its existing condition.

B. An irrigation system and/or quick coupler valve will be fully operational so that plant material can be regularly watered.

C. Coordinate and cooperate with other work to enable the work to proceed as rapidly and efficiently as possible.

1.3 WORK INCLUDED

A. The work of this section includes all labor, materials, equipment, transportation and services necessary to complete the work in this section as shown on the drawings and as specified herein, including but not necessarily limited to, the following:

1. Protection and welfare of all existing plant material within the Contract Limits which is noted to remain, including trimming, cabling, and repair of such plant material as necessary and all labor, materials and equipment necessary.

2. Perform all pruning operations.

3. Submit plant material maintenance plan before commencing landscape work for review by the General Manager.

1.4 RELATED WORK

A. Clearing and Grubbing. Section 02210

B. Landscape Irrigation. Section 02810

C. Landscape. Section 02900

1.5 DEFINITIONS

A. “Injury” is defined, without limitation, as any bruising, scarring, tearing, or breaking of roots, branches, or trunk.

B. “Dripline” is defined as the outermost limits of the tree or shrub canopy.

C. “Certified Arborist” is a consulting arborist certified by the International Society of Arboriculture.

1.6 QUALITY ASSURANCE

A. Reference Standards:

1. International Society of Arboriculture (ISA) “Guide for Plant Appraisal” prepared by the Council of Tree and Landscape Appraisers (CTLA).

2. “Cabling, Bracing and Guying Standards for Shade Trees”, as published by the National Arborist Association (NAA), 174 TR 101, Bedford, New Hampshire.

B. Qualification of Workman:

1. Trimming and pruning of trees shall be performed only under the direction of a certified Arborist.

1.7 SUBMITTALS

A. Pruning materials

B. Fencing materials.

C. Maintenance plan.

1.8 GUARANTEE

A. During the Guarantee to Repair Period specified in the General Conditions the Contractor shall be liable for damages to all trees covered by the provisions of this Section. Compensation to the Owner shall be as outlined in Section 3.04.

B. Contractor will not be held responsible for damages due to vandalism or freak acts of nature during the guarantee period. Immediately report such conditions to the General Manager.

PART 2 PRODUCTS

2.1 FENCING MATERIALS

A. Fencing-11 gauge galvanized 6' high chain-link fence with galvanized steel posts at 10' o.c. minimum.

2.2 PRUNING MATERIALS

A. Pruning materials shall be in accordance with current horticultural practices.

B. Pruning sterilant shall be Physan 20 Fertilome Type A, or diluted bleach.

PART 3 EXECUTION

3.1 FENCING

A. Fencing-A continuous 6' high temporary chain-link fence will be erected around trees with a caliper of 4” or larger at the dripline, in order to prevent soil compaction, limb damage, or the accidental introduction of toxic materials into the root zone. Fence can be erected around groups of adjacent trees where possible. Otherwise, fence to be erected around individual tree.

B. The fence will be removed only at the end of construction, as approved by the General Manager.

3.2 PLANT MATERIAL PROTECTION

A. Provide protection for all plant materials designated to be retained. Contractor is responsible for replacing damaged plant life with approved equivalent.

B. New and existing plant materials shall not be allowed to deteriorate and shall be maintained in a healthy and vigorous condition during the course of construction and maintenance period.

C. During the course of construction the Contractor shall take all necessary precautions, as outlined herein, to protect existing plant materials to be preserved from injury and death. Protection shall be given to the roots, trunk, and foliage.

D. The Contractor shall conduct operations continually to completion, unless weather conditions are prohibitive.

E. Provide ample water supply of potable quality and sufficient quantity for all operations required under this Section.

F. Trees subject to the provisions of this Section, which have been injured, shall be repaired immediately by a certified Arborist. Repairs shall include removal of rough edges, sprung bark and severely injured branches as directed by the Arborist.

G. Necessary measures shall be taken to maintain healthy living conditions for existing plant materials to be preserved. Such measures shall include monthly washing of leaves for the removal of dust, regular irrigation, root feeding, etc.

H. Tree protection fencing shall be installed for the protection of existing trees to be preserved. No construction, demolition, or work of any nature will be allowed within the fenced area without prior written approval by the General Manager.

1. Approval by the General Manager for work within the fenced area shall not release the Contractor from any of the provisions specified herein for the protection of existing trees to be preserved.

2. During the course of construction of approved work within the fence area, no roots shall be cut without prior written approval by the General Manager.

I. During construction, the existing site surface drainage patterns shall not be altered within the area of the drip line of existing plant materials.

J. Contractor shall not alter the existing water table within the area of the drip line of existing plant materials.

K. Do not permit the following within the drip line of any existing tree or shrub to be preserved:

1. Storage or parking of automobiles or other vehicles.

2. Stockpiling of building materials, refuse or excavated materials.

3. Skinning or bruising of bark.

4. Use of trees as support posts, power poles, or signposts; anchorage for ropes, guy wires, or power lines; or other similar functions.

5. Dumping of poisonous materials on or around plant materials and roots. Such materials include but are not limited to paint, petroleum products, dirty water, or other deleterious materials.

6. Cutting roots by utility trenching, foundation digging; placement of curbs and trenches, and other miscellaneous excavation without prior written approval by the General Manager.

7. Damage to the trunk, limbs, or foliage caused by maneuvering vehicles or stacking material or equipment to close to the plant.

8. Compaction of the root area by movement of trucks or grading machines; storage of equipment, gravel, earth fill, or construction supplies; etc.

9. Excessive water or heat from equipment, utility line construction, or burning of trash under or near shrubs or trees.

10. Damage to root system from flooding, erosion, and excessive wetting and drying resulting from watering and other operations.

L. Excavation Around Trees

1. Excavation within the drip lines of trees shall be done only where absolutely necessary, under the direction of a Certified Arborist and with prior approval from the General Manager.

2. Where trenching for utilities is required within driplines, tunneling under and around roots shall be by hand digging. Main lateral roots and taproots shall not be cut. Smaller roots that interfere with installation of new work may be cut with prior approval from certified Arborist.

3. Where excavation of new construction is required within drip line of trees, hand excavation shall be employed to minimize damage to root system. Roots shall be relocated in backfill areas wherever possible. If large, main lateral roots are encountered, they shall be exposed beyond excavation limits as required to bend, and relocate without breaking. If encountered immediately adjacent to location of new construction and

relocation is not practical, roots shall be cut approximately 6 inches back from new construction under the direction of a certified Arborist.

4. Exposed roots shall not be allowed to dry out before permanent backfill is placed. Temporary earth cover shall be provided, or roots shall be packed with wet peat moss or four layers of wet, untreated burlap and temporarily supported and protected from damage until permanently relocated and covered with backfill. The cover over the roots shall be wetted to the point of runoff daily.

5. Branching structure shall be thinned in accordance with National Arborists Association “Pruning Standards and Principles” to balance loss of root system caused by damage or cutting of root system. Thinning shall not exceed 30 percent of existing branching structure.

3.3 TREE TRIMMING

A. A Certified Arborist, shall be engaged to direct removal of branches from trees if necessary to protect the health of the tree or if required to clear for construction.

B. In company with the General Manager, Owner and a certified Arborist, ascertain the limbs and roots which are to be trimmed. Clearly mark them to designate the approved point of cutting.

C. Dead and damaged trees that are determined by the Certified Arborist to be incapable of restoration to normal growth pattern shall be removed.

D. Cut evenly, using proper tools and skilled workmen, to achieve neat severance with the least possible damage to the tree.

E. In the case of root cuts, apply wet burlap or other protection, approved as noted herein, to prevent drying out, and maintain in a wet condition as long as necessary for temporary protection.

3.4 REPAIR COMPENSATION

A. Damage:

1. Damage to existing tree crowns or roots over 1” in diameter shall be immediately reported to the General Manager.

2. A Certified Arborist shall direct all repairs to trees. Repairs shall be made promptly after damage occurs to prevent progressive deterioration of damaged trees. Repairs shall be at the Contractor’s expense.

B. Irreparable Damage: Any tree to be protected which is irreparably damaged owing to the Contractor's negligence or failure to provide adequate protection shall be compensated for in accordance with the following schedule of values using the "tree caliper" method (greatest trunk diameter, measured 18 inches above the ground):

1. For trees with diameters up to and including 6 inches, compensation shall be the actual cost of replacement with item similar in species, size, and shape, including:

   a. Actual cost of item boxed out of the ground.

   b. Transportation or delivery of boxed item to site.

   c. Planting and staking.

   d. Maintenance, including watering, fertilizing, pruning, pest control, and other care to bring replacement to same general condition of original item.

2. For trunks up to:

   7".....$ 1,200
   8"..... 1,700
   9"..... 2,200
   10"..... 2,600
   11"..... 3,100
   12"..... 3,600
   13"..... 4,100
   14"..... 4,600
   15"..... 5,000
   16"..... 5,500
   17"..... 6,000
   18" and over, add for each caliper inch.... $600

3.5 MAINTENANCE

A. Plant material will be maintained throughout the duration of the construction period in a healthful manner. Plant material identified which requires special pruning, insect control, fertilization or other remedial health action will be treated during this period. Methods and rates of pesticide and fertilizer application will be reviewed by the General Manager prior to approval.

B. Watering: Plant materials will be watered on a regular basis, at a rate consistent with their particular requirements. Verification of the proposed watering schedule shall be reviewed by the General Manager prior to commencement of the maintenance.

1. The maintenance of the plant materials shall comply with standard horticultural practice for the correct watering, fertilizing, pruning and spraying of the specimen boxed trees.

2. The maintenance and quality of the plant materials shall be subject to monthly checks. The dates of these checks shall be outlined in the General Manager field notification relating to the establishment of the

plant maintenance period. Additional checks shall be scheduled as determined by the General Manager.

3. Contractor shall be responsible for performing periodic inspections of existing plant materials to be protected and relocated throughout the construction period, and submit written proposals to the General Manager for additional maintenance work as may be required to ensure the health and general well-being of the plant material. Contractor shall retain, at the direction of the General Manager additional specialists as may be required to perform this work.

C. Contractor shall keep plant material free from weeds and debris at all times.

3.6 FIELD QUALITY CONTROL

A. General: The Contractor guarantees the protection of all plant material included as part of this work, in a healthful manner during the duration of the construction period. Destruction of, or significant damage to, any or all of the plant materials to be protected, as determined by the General Manager, will result in compensation by the Contractor of 3-36" box trees, installed on the site, for each existing tree damaged.

(END OF SECTION)

SECTION 03100

CONCRETE FORMWORK

PART 1 -- GENERAL

1.1 THE REQUIREMENT

A. The CONTRACTOR shall furnish all materials for concrete formwork, bracing, shoring, and supports and shall design and construct all falsework and scaffolding, all in accordance with the provisions of the Contract Documents.

B. DEFINITIONS

1. Exposed Concrete: All concrete that is visible in the finished work, including concrete to be painted.

2. Unexposed Concrete: All other concrete that is concealed in the finished work, including plastered surfaces and attic and utility spaces.

1.2 RELATED WORK SPECIFIED ELSEWHERE

A. Section 02310, Earthwork.

B. Section 03200, Reinforcement Steel.

C. Section 03290, Joints in Concrete.

D. Section 03300, Cast-in-Place Concrete.

E. Section 03315, Grout.

F. Section 03370, Concrete Curing.

G. Section 07900, Joint Sealants.

1.3 REFERENCE SPECIFICATIONS, CODES, AND STANDARDS

A. Comply with the reference standards and Standard Specifications as specified in the GENERAL REQUIREMENTS.

B. Comply with the current provisions of the following Codes and Standards, as applicable:

1. Government Standards:

PS 1	U.S. Product Standard for Concrete Forms, Class I
PS 20	American Lumber Softwood Standard
CSS	Caltrans Standard Specifications

2. Commercial Standards:

ACI 347	Recommended Practice for Concrete Formwork
ACI 117	Standard Tolerances for Concrete Construction and Materials

1.4 CONTRACTOR SUBMITTALS

A. Submittals shall be made in accordance with the GENERAL REQUIREMENTS.

B. The following submittals and specific information shall be provided.

1. Falsework Calculations and Drawings: The CONTRACTOR shall comply with all the latest applicable Sections of the Division of Industrial Safety, Construction Safety Orders. In addition, formwork/falsework must be designed, fabricated, erected, supported, braced, and maintained so that it will be capable of supporting without failure all vertical and lateral loads that might be applied to the formwork. Drawings and plans, including all revisions for the jack layout, formwork (including shoring equipment), working decks, and scaffolds, must be available at the jobsite. All shoring equipment (including equipment used in reshoring operations) must be inspected prior to erection to determine that the equipment meets the requirements specified in the formwork drawings. Plans and Calculations shall be prepared and signed by a Civil Engineer, registered in the State of California. A copy of the falsework plan or shoring layout shall be available on the job site at all times. The Engineer who designed the falsework or vertical shoring shall personally inspect such work and provide a written certification that the work conforms to the design.

   Scaffolding Calculations and Drawings: Scaffolding shall be defined in accordance with and shall conform to the Construction Safety Orders of the Division of Industrial Safety. If scaffolding is constructed for this project over or adjacent to traffic, or suspended from the traveled way, the Contractor shall submit to the Engineer working drawings for scaffolding systems. The scaffolding manufacturer's name, address, and phone number shall be shown on the working drawings. The working drawings, details and calculations for the scaffolding shall be stamped and signed by an engineer who is registered as a Civil Engineer in the State of California. In addition, prior to submitting the working drawings to the Engineer, the working drawings shall be stamped and signed by an independent reviewer who is registered as a Civil Engineer in the State of California. The independent reviewer shall not be employed by the same entity preparing the working drawings.

2. The CONTRACTOR shall, in accordance with the requirements in GENERAL REQUIREMENTS file with the City detailed plans of the falsework and scaffolding proposed to be used. Such plans and calculations shall be in sufficient detail to indicate the general layout, pattern layout, dimensioned to precisely locate grooves, form panel jointing, and similar features. The submittal shall also include sizes of members, anticipated stresses, grade of materials to be used, and typical soil conditions.

   a. Form Release Compound

   b. Form Ties and Spreaders

   c. Installation Instructions

1.5 QUALITY ASSURANCE

A. Tolerances: The variation from established grade or lines shall not exceed 1/4-inch in 10 feet and there shall be no offsets or visible waviness in the finished surface. All other tolerances shall be within the tolerances specified in ACI 117, unless noted otherwise.

B. Laborers: Use adequate number of skilled laborers who are thoroughly trained and experienced in the necessary crafts and who are completely familiar with the specified requirements and the methods needed for proper performance of the work of this Section.

C. Prior to construction of formwork for concrete beams and slabs above grade, Contractor shall conduct a meeting at the site to determine and define all cambers required for the project. ENGINEER, Contractor and Contractor's formwork installer shall be in attendance at this meeting.

D. Engage a licensed surveyor to verify that work is within specified tolerances. Surveyor shall report in writing to the ENGINEER, with copy to Contractor, certifying work as acceptable or indicating deviations from allowable tolerances.

1.6 DELIVERY, STORAGE, AND HANDLING

A. Deliver materials for forms in timely manner to ensure uninterrupted progress.

B. Store materials by methods that prevent damage and permit ready access for inspection and identification.

PART 2 -- PRODUCTS

2.1 GENERAL

A. Except as otherwise expressly accepted by the ENGINEER, all lumber brought on the job site for use as forms, shoring, or bracing shall be new material. All forms shall be smooth surface forms and shall be of the following materials:

Steel panels, plywood or tongue and groove lumber

2.2 FORM AND FALSEWORK MATERIALS

A. Materials for concrete forms, formwork, and falsework shall conform to the following requirements:

1. Lumber shall be Douglas Fir or Southern Pine, construction grade or better, in conformance with U.S. Product Standard PS20.

2. Plywood for concrete formwork shall be new, waterproof, synthetic resin bonded, exterior type Douglas Fir or Southern Pine plywood manufactured especially for concrete formwork and shall conform to the requirements of PS 1 for Concrete Forms, Class I, and shall be edge sealed.

3. Form materials shall be metal, wood, plywood, or other material approved by the ENGINEER that will not adversely affect the concrete and will facilitate placement of concrete to the shape, form, line, and grade shown. Metal forms shall be an approved type that will accomplish such results.

Forms for exposed exterior concrete surfaces shall be American Plywood Association (APA) High Density Overlay (HDO) Plyform Class I Ext. 48 inches by 96 inches by 3/4 inch minimum thickness.

Forms for other concrete surfaces shall be American Plywood Association (APA) Douglas Fir B-B Plyform Class I Exterior PS 1, 3/4-inch minimum thickness.

4. Coated Form Plywood: For exposed painted concrete, plastic overlaid plywood of grade specified above, factory coated with a form coating and release agent equal to "Noxcrete".
5. Tube forms: Sonoco "Seamless Sonotubes", Alton Building Products "Sleek Seamless Standard Wall", or equal, type leaving no marks in concrete, 1-piece lengths for full required height.

B. Unless otherwise shown, exterior corners in exposed concrete members shall be provided with 3/4-inch chamfers. Re-entrant corners in concrete members shall not have fillets unless otherwise shown.

C. Forms and falsework to support the roof and elevated floor slabs shall be designed for the total dead load, and a minimum construction live load of 30 psf.

D. Forms proposed for use at bridges shall comply with Caltrans Standard Specification Section 51.

2.3 FORM TIES

A. Form ties with integral waterstops shall be provided with a plastic cone or other suitable means for forming a conical hole to insure that the form tie may be broken off back of the face of the concrete. The maximum diameter of removable cones for rod ties, or of other removable form-tie fasteners having a circular cross-section, shall not exceed 1-1/2-inches; and all such fasteners shall be such as to leave holes of regular shape for reaming.

B. Form ties for water-retaining structures shall have integral waterstops. Removable taper ties may be used except for water bearing structures, when approved by the ENGINEER. A preformed neoprene or polyurethane tapered plug sized to seat at the center of the wall shall be inserted in the hole left by the removal of the taper tie.

2.4 FORM RELEASE COMPOUND

A. Form release compound shall be non-staining clear coating free from oil, silicone, wax, and not grain-raising, Use "Nox-crete Form coating" by Nox Crete, "Formshield" by Euclid Chemical Company, "Burke Bio Release" by Edoco, or "Cast-Off" by Sonneborn, or an approved equal. Where form liners are used, provide form compound recommended by form liner manufacturer. However, regardless of product use, provide form compound that is VOC compliant for the area used.

2.5 EARTH FORMS

A. Unless otherwise indicated or required, concrete for footings and pile caps may be placed directly against vertical excavated surfaces, provided the material will stand without caving, that minimum reinforcing steel clearances are maintained, and suitable provisions are taken to prevent raveling of top edges or sloughing of loose material from walls of excavation. Sides of excavation shall be made with a neat cut and the width made as indicated. Concrete which is exposed to view on exterior shall be formed to maintained depth of 6 inches below finished grade.

PART 3 -- EXECUTION

3.1 GENERAL

A. Forms to confine the concrete and shape it to the required lines shall be used wherever necessary. The CONTRACTOR shall assume full responsibility for the adequate design of all

forms, and any forms which are unsafe or inadequate in any respect shall promptly be removed from the WORK and replaced at the CONTRACTOR's expense. A sufficient number of forms of each kind shall be provided to permit the required rate of progress to be maintained. The design and inspection of concrete forms, falsework, and shoring shall comply with applicable local, state and Federal regulations. Plumb and string lines shall be properly installed before concrete placement and shall be maintained during placement. Such lines shall be used by CONTRACTOR's personnel and by the INSPECTOR and shall be in sufficient number and properly installed. During concrete placement, the CONTRACTOR shall continually monitor plumb and string line form positions and immediately correct deficiencies.

B. Concrete forms shall conform to the shape, lines, and dimensions of members as called for on the Drawings, and shall be substantial, free from surface defects, and sufficiently tight to prevent leakage. Forms shall be properly braced or tied together to maintain their position and shape under a load of freshly-placed concrete. If adequate foundation for shores cannot be secured, trussed supports shall be provided.

C. Camber: Place suitable jacks, wedges, or similar means to induce camber and to correct settlement in forms before and during concrete placing. Camber shall be as determined in pre-installation meeting specified above. In general, formwork shall be capable of accommodating camber of 1/8 inch per 10 feet of span plus 1/4 inch.

3.2 FORM DESIGN

A. All forms shall be true in every respect to the required shape and size, shall conform to the established alignment and grade, and shall be of sufficient strength and rigidity to maintain their position and shape under the loads and operations incident to placing and vibrating the concrete. Suitable and effective means shall be provided on all forms for holding adjacent edges and ends of panels and sections tightly together and in accurate alignment so as to prevent the formation of ridges, fins, offsets, or similar surface defects in the finished concrete. Plywood, 3/4-inch and greater in thickness, may be fastened directly to studding if the studs are spaced close enough to prevent visible deflection marks in the concrete. The forms shall be tight so as to prevent the loss of water, cement and fines during placing and vibrating of the concrete. Specifically, the bottom of wall forms that rest on concrete footings or slabs shall be provided with a gasket to prevent loss of fines and paste during placement and vibration of concrete. Such gasket may be a 1- to 1-1/2-inch diameter polyethylene rod held in position to the underside of the wall form. Adequate clean-out holes shall be provided at the bottom of each lift of forms. The size, number, and location of such clean-outs shall be as acceptable to the INSPECTOR.

B. Actual form design shall conform to ACI 347.

C. For concrete mixes characterized as self-consolidating concrete, high performance concrete, or known to contain components that can potentially extend the plastic state of the concrete, the forms shall be designed to sustain the resulting hydrostatic pressure for the total pour height or pressure head for that day of pour, whichever is more. For such mixes, appropriate set-time tests shall be conducted in preparation of the mix design and this information made available to the form designer.

D. Forms proposed for use at bridges shall comply with Caltrans Standard Specification Section 51-1.

3.3 CONSTRUCTION

A. Vertical Surfaces: All vertical surfaces of concrete members shall be formed, except where placement of the concrete against the ground is shown. Not less than 1-inch of concrete shall be added to the thickness of the concrete member as shown where concrete is permitted to be placed against trimmed ground in lieu of forms. Such permission will be granted only for members of comparatively limited height and where the character of the ground is such that it can be trimmed to the required lines and will stand securely without caving or sloughing until the concrete has been placed.

B. Construction Joints: Concrete construction joints will not be permitted at locations other than those shown or specified, except as may be acceptable to the ENGINEER. When a second lift is placed on hardened concrete, special precautions shall be taken in the way of the number, location, and tightening of ties at the top of the old lift and bottom of the new to prevent any unsatisfactory effect whatsoever on the concrete. Pipe stubs and anchor bolts shall be set in the forms where required.

C. Provide for openings, offsets, keyways, recesses, moldings, reglets, chamfers, blocking, screeds, bulkheads, anchorages, inserts and other features as required. Fill form joints to produce smooth surfaces, intersections, and arrises. Use polymer foam or equivalent fillers at joints and where forms abut or overlap existing concrete to prevent leakage of mortar.

D. Set embedded piping and rough hardware in forms to be embedded in concrete in a manner so that the required strength of the structure will not be reduced.

E. Apply form release compound on formwork in accordance with manufacturer's instructions prior to placing of reinforcing steel, anchorages, and embedded items.

F. Construct forms suitable for removal without hammering or prying against and damaging the concrete.

G. Openings in Forms: Provide as required to facilitate cleaning and inspection. Close such openings immediately after cleaning and before placement of concrete. Provide air relief holes in formed top surfaces of concrete elements as required.

H. Form Ties:

1. Embedded Ties: Holes left by the removal of form tie cones shall be clean and rough before being filled with mortar as specified for "Finish of Concrete Surfaces" in Section 03300, "Cast-in-Place Concrete". Wire ties for holding forms will not be permitted. No form-tying device or part thereof, other than metal, shall be left embedded in the concrete. Ties shall not be removed in such manner as to leave a hole extending through the interior of the concrete members. The use of snap-ties which cause spalling of the concrete upon form stripping or tie removal will not be permitted. If steel panel forms are used, rubber grommets shall be provided where the ties pass through the form in order to prevent loss of cement paste. Where metal rods extending through the concrete are used to support or to strengthen forms, the rods shall remain embedded and shall terminate not less than 1-inch back from the formed face or faces of the concrete.

2. Removable Ties: Where taper ties are approved for use in non water bearing structures, the larger end of the taper tie shall be on the wet side of walls in water retaining structures. After the taper tie is removed, the hole shall be thoroughly cleaned and roughened for bond. A precast neoprene or polyurethane tapered plug shall be located at the wall centerline. The hole shall be completely filled with non-shrink grout

for water bearing and below-grade walls. The hole shall be completely filled with non-shrink or regular cement grout for above-grade walls which are dry on both sides. Exposed faces of walls shall have the outer 2-inches of the exposed face filled with a cement grout which shall match the color and texture of the surrounding wall surface.

I. Coordination:

1. Provide slots, openings, chases, recesses, grounds, nailers and screeds required by other trades and subsequent work.

2. Ensure that conduit, pipes, sleeves, anchors, hangers and ties are secured in forms before concrete is placed.

3.4 REUSE OF FORMS

A. Forms may be reused only if in good condition and only if acceptable to the INSPECTOR. Light sanding between uses will be required wherever necessary to obtain uniform surface texture on all exposed concrete surfaces. Exposed concrete surfaces are defined as surfaces which are permanently exposed to view. In the case of forms for the inside wall surfaces of water retaining structures, unused tie rod holes in forms shall be covered with metal caps or shall be filled by other methods acceptable to the INSPECTOR.

3.5 REMOVAL OF FORMS

A. Careful procedures for the removal of forms shall be strictly followed, and this work shall be done with care so as to avoid damage the concrete. No heavy loading on green concrete will be permitted. The period of time for formwork removal shall be in accordance with ACI 318, Chapter 6 and Section 303-1.4 of Standard Specifications and as follows:

1. Do not remove formwork until concrete has attained sufficient strength to support its own weight and all superimposed loads including construction loads and to permit form and falsework removal with complete safety.

2. In the case of concrete members subject to bending stresses, where the member relies upon forms for vertical support, forms shall remain in place until test cylinders attain a minimum comprehensive strength of 75 percent of the 28-day strength specified in Section 03300, "Cast-in-Place Concrete", provided, that no forms shall be disturbed or removed under individual panel or unit before the concrete in the adjacent panel or unit has attained 75 percent of the specified 28-day strength and has been in place for a minimum of 7 days.

3. Forms for roofs and elevated slabs shall remain in place a minimum of 10 days after concrete has been placed.

4. Forms for all vertical walls and columns shall remain in place at least 3 days after the concrete has been placed.

5. Formwork removal shall also be subject to the curing requirements of Section 03370 of these specifications and as authorized by the ENGINEER.

6. Reshore structural members as specified below because of design requirements or construction conditions to permit successive construction.

B. The time required to establish said strength shall be determined by the ENGINEER based on test cylinders made for this purpose from the concrete placed and in accordance with

ACI 318 and the curing requirements of Section 03300, "Cast in-Place Concrete". If the time so determined is more than the minimum time specified above, then that time shall be used as the minimum length of time. Forms for all parts of the WORK not specifically mentioned herein shall remain in place for periods of time as determined by the ENGINEER.

3.6 FORMWORK TOLERANCES

A. Deflection: Limit deflection of forming surfaces from concrete pressure to L/240.

B. Finish Lines: Position formwork to maintain hardened concrete finish lines within following permissible deviations.

1. Variation from Plumb:

a.	In 10 feet-0 inches	1/4 inches max.
b.	In any story or 20 feet-0 inches	3/8 inches max.
c.	In 40 feet-0 inches or more	3/4 inches max.

2. Variation from Level or Grades Indicated

a.	In 10 feet-0 inches	1/4 inches max.
b.	In any bay or 20 feet-0 inches maximum	3/8 inches
c.	In 40 feet-0 inches or more	3/4 inches max.

C. Building Lines: Variation of linear building lines from established position in plan and related position of columns, walls and partitions:

1.	In any bay or 10 feet-0 inches maximum	1/2 inch
2.	In 40 feet-0 inches or more	1 inch

D. Slab Openings: Variations in size and location of sleeves and slab openings shall not exceed 1/4-inch.

3.7 MAINTENANCE OF FORMS

A. Forms shall be maintained at all times in good condition, particularly as to size, shape, strength, rigidity, tightness, and smoothness of surface. Forms, when in place, shall conform to the established alignment and grades. Before concrete is placed, the forms shall be thoroughly cleaned. The form surfaces shall be treated with a nonstaining mineral oil or other lubricant acceptable to the ENGINEER. Any excess lubricant shall be satisfactorily removed before placing the concrete. Where field oiling of forms is required, the CONTRACTOR shall perform the oiling at least two weeks in advance of their use. Care shall be exercised to keep oil off the surfaces of steel reinforcement and other metal items to be embedded in concrete.

3.8 FALSEWORK

A. The CONTRACTOR shall be responsible for the design, engineering, construction, maintenance, and safety of all falsework, including staging, walkways, forms, ladders, and similar appurtenances, which shall equal or exceed the applicable requirements of the provisions of the OSHA Safety and Health Standards for Construction, the requirements of the Construction Safety Orders of the California Division of Industrial Safety, and the

requirements specified herein.

B. All falsework shall be designed and constructed to provide the necessary rigidity and to support the loads. Falsework for the support of a superstructure shall be designed to support the loads that would be imposed if the entire superstructure were placed at one time.

C. Falsework shall be placed upon a solid footing, safe against undermining, and protected from softening. When the falsework is supported on timber piles, the maximum calculated pile loading shall not exceed 20 tons. When falsework is supported on any portion of the structure which is already constructed, the load imposed by the falsework shall be spread, distributed, and braced in such a way as to avoid any possibility of damage to the structure.

D. Reshoring:

1. Minimum reshoring with falsework shall consist of not less than half the full required falsework added under the last placed floor over which full falsework is to be placed for the next floor above. Leave reshoring in place for at least 10 days after the floor above is placed, but in no case remove falsework until the next concrete placing has attained a compressive strength equal to 75 percent of that required for the 28 days age as determined by controlled test cylinders.

2. Maintain a form and falsework removal record.

E. Falsework proposed for use at bridges shall comply with Caltrans Standard Specification Section 51.

(**END OF SECTION)**

SECTION 03200

REINFORCEMENT STEEL

PART 1 -- GENERAL

1.1 THE REQUIREMENT

A. The CONTRACTOR shall furnish, fabricate, and place all concrete reinforcement steel, welded wire fabric, couplers, and concrete inserts for use in reinforced concrete and masonry construction and shall perform all appurtenant work, including all the wires, clips, supports, chairs, spacers, and other accessories, all in accordance with the Contract Documents.

1.2 RELATED WORK SPECIFIED ELSEWHERE

A. Section 03100, Concrete Formwork.

B. Section 03290, Joints in Concrete.

C. Section 03300, Cast-in-Place Concrete.

1.3 REFERENCE SPECIFICATIONS, CODES, AND STANDARDS

A. Comply with the reference standards of the GENERAL REQUIREMENTS.

B. Comply with the current provisions of the following Codes and Standards, as applicable:

1. Commercial Standards:

ACI 315	Details and Detailing of Concrete Reinforcement.
ACI 318	Building Code Requirements for Reinforced Concrete.
ACI 350	Code Requirements for Environmental Engineering Concrete Structures.
ACI 530	Building Code Requirements & Specifications for Masonry Structures.
WRI	Manual of Standard Practice for Welded Wire Fabric.
AWS D1.4	Structural Welding Code - Reinforcing Steel.
ASTM A 82	Specification for Steel Wire, Plain, for Concrete Reinforcement.
ASTM A 185	Specification for Welded Steel Wire Fabric For Concrete Reinforcement.
ASTM A 497	Welded Deformed Steel Wire Fabric for Concrete Reinforcement.
ASTM A 615	Specification for Deformed and Plain Billet-Steel Bars for Concrete Reinforcement.

ASTM A 706	Low-alloy Deformed Steel Bars for Concrete Reinforcement.
ASTM A 775	Specifications for Epoxy Coated Bar Reinforcement.
ASTM A 884	Specifications for Epoxy Coated Wire Reinforcement.
CRSI	Manual of Standard Practice.
CRSI	Recommended Practice for Placing Bar Supports, Specifications and Nomenclature.
CRSI	Recommended Practice for Placing Reinforcing Bars.

2. Government Standards:

CSS	Caltrans Standard Specifications.
GWP	Global Warming Potential (maximum acceptable carbon emission limits, established by the California Department of General Services).

1.4 CONTRACTOR SUBMITTALS

A. Submittals shall be made in accordance with the GENERAL REQUIREMENTS.

B. Buy Clean California Act.

1. For project specifications that include GR Section 1601, Buy Clean California Act, bidders shall submit current Environmental Product Declarations (EPDs) for each type of reinforcing steel material (A615, A706) from the originating mill used in the project as well as corresponding mill certifications. When material comes from different mills, an EPD and mill certification will be required for each mill from which the material has been obtained.

2. An EPD must conform to the following:

   a. Shall be facility-specific manufacturer/mill EPD.
   b. Be independently verified in accordance with ISO 14025 (Type III).
   c. Be developed according to the guidelines of the applicable Product Category Rule (PCR), as identified by the Department of General Services, State of California.
   d. Have a valid date that has not expired.
   e. Shall not exceed the Global Warming Potential (GWP) limit as required by GR Section 1601.
   f. EPD shall be submitted concurrently with the product's submittal for review and approval.
   g. Specified epoxy-coated or other specified coated reinforcing steel are exempt from having an associated EPD.

C. The following submittals and specific information shall be provided.

1. The CONTRACTOR shall furnish shop bending diagrams, placing lists, splice lengths and location, and drawings of all reinforcement steel prior to fabrication in accordance with GENERAL REQUIREMENTS.

2. Details of the concrete reinforcement steel and concrete inserts shall be submitted by the CONTRACTOR at the earliest possible date after receipt by the CONTRACTOR of the Notice to Proceed. Said details of reinforcement steel for fabrication and erection shall conform to ACI 315 and the requirements specified and shown. The shop bending diagrams shall show the actual lengths of bars, to the nearest inch measured to the intersection of the extensions (tangents for bars of circular cross section) of the outside surface. The shop drawings shall include bar placement diagrams which clearly indicate the dimensions of each bar splice.

3. Where mechanical couplers are required or permitted to splice reinforcement steel, the CONTRACTOR shall submit Los Angeles City Department of Building and Safety's Research Report approval and manufacturer's literature which contains instructions and recommendations for installation for each type of coupler used; certified test reports which verify the load capacity of each type and size of coupler used; and shop drawings which show the location of each coupler with details of how it is to be installed in the formwork.

4. If reinforcement steel is required or permitted to be spliced by welding at any location, the CONTRACTOR shall submit mill test reports which shall contain the information necessary for the determination of the carbon equivalent as specified in AWS D1.4. The CONTRACTOR shall submit a written welding procedure for each type of weld for each size of bar which is to be spliced by welding; merely a statement that AWS procedures will be followed is not acceptable.

1.5 QUALITY ASSURANCE

A. The CONTRACTOR shall make provisions for sampling reinforcing steel delivered to the job site in accordance with SSPWC Section 201-2.4.2. Costs of initial tests will be paid by the CITY. Additional tests due to material failing initial tests shall be paid by the CONTRACTOR.

B. If reinforcement steel is welded at any location, the CONTRACTOR shall submit certifications of procedure qualifications for each welding procedure used and certification of welder qualifications, for each welding procedure, and for each welder performing the work. Such certification and qualifications shall be as required by the Los Angeles Department of Building and Safety.

C. The CONTRACTOR shall provide samples of each type of weld used in the work in a quantity and of dimensions adequate for testing. At the discretion of the INSPECTOR, radiographic testing of direct butt welds will be performed. The CONTRACTOR shall provide assistance necessary to facilitate testing. The CONTRACTOR shall repair any weld which fails to meet the requirements of AWS D1.4. The costs of testing will be paid by the CITY; except, the costs of all tests which fail to meet specified requirements shall be paid by the CONTRACTOR.

D. The CONTRACTOR shall provide to the INSPECTOR written identification of reinforcement steel by manufacturer's heat number and mil certification, and the fabricator's release number and type from the point of fabrication to the place of final incorporation of the rebar into the work.

1.6 MARKING AND SHIPPING

A. Tag bundled bars with identification, and transport and store so as not to damage any material. Use metal tags indicating size, length and other marking shown on placement drawings. Maintain tags after bundles are broken.

PART 2 -- PRODUCTS

2.1 REINFORCEMENT STEEL

A. All reinforcement steel for all cast-in-place reinforced concrete construction shall conform to the following requirements:

1. Bar reinforcement shall conform to the requirements of ASTM A615, Grade 60 Billet Steel Reinforcement with supplementary requirement S-1, and ASTM A706 for rebars subject to welding, or as otherwise shown.

2. Bar reinforcement for wall boundary elements, special moment frames, or when subject to welding, shall conform to ASTM A706, unless noted otherwise.

3. Welded wire fabric reinforcement shall conform to the requirements of ASTM A185, or ASTM A497 and the details shown; provided, that welded wire fabric with longitudinal wire of W9.5 size wire shall be either furnished in flat sheets or in rolls with a core diameter of not less than 10 inches; and provided further, that welded wire fabric with longitudinal wires larger than W9.5 size shall be furnished in flat sheets only.

4. Spiral reinforcement may be cold-drawn steel wire conforming to the requirements of ASTM A82, when approved by the ENGINEER.

5. All reinforcements shall be shop fabricated. Bending of reinforcing in the field will not be allowed.

6. Epoxy coated reinforcing steel shall conform to the requirements of ASTM A775 and A884, and shall be used where indicated on the drawing.

7. Reinforcement with any of the following defects will not be acceptable and be immediately removed from the site:

   a. Bar lengths, depths, and/or bends exceeding the specified fabrication tolerances.
   b. Bends or kinks not shown on the Drawings
   c. Bars with reduced cross-section due to excessive rusting or other cause.

B. Accessories:

1. Accessories shall include all necessary chairs, slab bolsters, concrete blocks, tie wires, dips, supports, spacers, and other devices to position reinforcement during concrete placement. Slab bolsters shall have gray plastic-coated legs.

2. Concrete blocks (dobies), used to support and position reinforcement steel, shall have the same or higher compressive strength as specified for the concrete in which it is located. Where the concrete blocks are used on concrete surfaces exposed to view, the color and texture of the concrete blocks shall match that required for the finished surface. Wire ties shall be embedded in concrete block bar supports.

3. Use bar supports complying with CRSI recommendations, unless otherwise shown on the Contract Drawings.

4. Do not use wood, brick, or other non-complying material.

5. For slabs on grade, use supports with sand plates or horizontal runners where base material will not support chair legs.

6. For exposed-to-view completed concrete surfaces, where legs of supports are in contact with forms, provide supports with either hot-dip galvanized or plastic-protected legs. CONTRACTOR's selection subject to the ENGINEER's approval.

2.2 MECHANICAL COUPLERS

A. Mechanical couplers shall comply with the applicable Department of Building and Safety's Research Report. Location of the Mechanical Couplers shall be approved by the ENGINEER. The couplers shall develop a tensile strength which exceeds 125 percent of the yield strength of the reinforcement bars being spliced at each splice. CONTRACTOR to provide the required number of couplers and bars for testing in accordance with the Report.

B. Where the type of coupler used is composed of more than one component, all components required for a complete splice shall be supplied. This shall apply to all mechanical splices, including those splices intended for future connections.

C. The reinforcement steel and coupler used shall be compatible for obtaining the required strength of the connection. Clearance and coverage requirements shall be maintained at all times.

D. Couplers which are located at a joint face shall be a type which can be set either flush or recessed from the face as shown. The couplers shall be sealed during concrete placement to completely eliminate concrete or cement paste from entering. After the concrete is placed, couplers intended for future connections shall be plugged and sealed to prevent any contact with water or other corrosive materials. Threaded couplers shall be plugged with plastic plugs which have an O-ring seal.

E. Hot-forged sleeve-type couplers shall not be used.

2.3 WELDED SPLICES

A. Welded splices shall be provided where shown and where approved by the ENGINEER. All welded splices of reinforcement steel shall develop a tensile strength which exceeds 125 percent of the yield strength of the reinforcement bars which are connected. Provide two samples of each bar size for testing. When welding is to be done in the field, provide field prepared samples. Preparation shall be made by welder actually preparing the production run.

B. All materials required to conform the welded splices to the requirements of AWS D1.4 shall be provided.

C. All welding shall be performed by City of Los Angeles certified welders. All shop welding shall be performed at shops of a City of Los Angeles approved fabricator.

PART 3 -- EXECUTION

3.1 GENERAL

A. All reinforcement steel, welded wire fabric, couplers, and accessories shall be fabricated, and placed in accordance with the requirements of the City of Los Angeles Building Code, CRSI Recommended Practices and Manual, and WRI, and the supplementary requirements specified herein.

3.2 FABRICATION

A. General: Reinforcement steel shall be accurately formed to the dimensions and shapes shown, and the fabricating details shall be prepared in accordance with ACI 315 and ACI 318 or ACI 350 (as applicable), except as modified by the Drawings. Bars shall be bent cold.

B. The CONTRACTOR shall fabricate reinforcement bars for structures in accordance with bending diagrams, placing lists, and placing drawings. Said drawings, diagrams, and lists shall be prepared by the CONTRACTOR as specified under GENERAL REQUIREMENTS.

C. Fabricating Tolerances: Bars used for concrete reinforcement shall meet the following requirements for fabricating tolerances:

1. Sheared length: ± 1 inch

2. Depth of truss bars: + 0, - 1/2 inch

3. Stirrups, ties, and spirals: ± 1/2 inch

4. All other bends: ± 1 inch

3.3 PLACING

A. Placing: Reinforcement steel shall be accurately positioned as shown, and shall be supported and wired together to prevent displacement, using annealed iron wire ties or suitable clips at intersections. All reinforcement steel shall be supported using approved accessories and chairs which are strong and rigid enough to prevent any displacement of the reinforcement steel and shall comply with the applicable Department of Building and Safety's Research Report. Where concrete is to be placed on the ground, supporting concrete blocks (or dobies) shall be used, in sufficient numbers to support the bars without settlement, but in no case shall such support be continuous. All concrete blocks used to support reinforcement steel shall be tied to the steel with wire ties which are embedded in the blocks. Use care not to damage vapor barriers where they occur.

B. The portions of all accessories in contact with the formwork shall be made of concrete, plastic, or steel coated with a 1/8-inch minimum thickness of plastic which extends at least 1/2-inch from the concrete surface. Plastic shall be gray in color.

C. Tie wires shall be bent away from the forms in order to provide the specified concrete coverage.

D. Bars additional to those shown which may be found necessary or desirable by the CONTRACTOR for the purpose of securing reinforcement in position shall be provided by the CONTRACTOR at its own expense.

E. Placing Tolerances: Unless otherwise specified, reinforcement placing tolerances shall be within the limits specified in Section 7.5 of ACI 318 except where in conflict with the requirements of the City of Los Angeles Building Code.

F. Bars may be moved as necessary to avoid interference with other reinforcement steel, conduits, or embedded items. If bars are moved more than one bar diameter, or enough to exceed the above tolerances, the resulting arrangement of bars shall be reviewed and accepted by the ENGINEER.

G. Welded wire fabric reinforcement placed over horizontal forms shall be supported on slab bolsters having gray, plastic-coated standard type legs as specified in Paragraph B herein. Slab bolsters shall be spaced not less than 30 inches on centers, shall extend continuously across the entire width of the reinforcement mat, and shall support the reinforcement mat in the plane shown.

H. Welded wire fabric placed over the ground shall be supported on wired concrete blocks (dobies) spaced not more than 3 feet on centers in any direction. The construction practice of placing welded wire fabric on the ground and hooking into place in the freshly placed concrete shall not be used.

3.4 SPACING OF BARS

A. Spacing of reinforcement shall comply with ACI 318 requirements.

B. Spacing of bars on bridge structures shall conform to the requirements in CSS Section 52-1.

3.5 SPLICING

A. General: Reinforcement bar splices shall only be used at locations shown. When it is necessary to splice reinforcement at points other than where shown, the character of the splice and location shall be as acceptable to the ENGINEER.

B. Splices of Reinforcement: The length of lap for reinforcement bars, unless otherwise shown shall be in accordance with ACI 318, Section 12.15.1 for a class B splice. Stagger splices in horizontal wall bars at least 48 inches longitudinal in alternate bars and opposite faces.

C. Laps of welded wire fabric shall be in accordance with the ACI 318. Adjoining sheets shall be securely tied together with No. 14 tie wire, one tie for each 2 running feet. Wires shall be staggered and tied in such a manner that they cannot slip.

D. Splices in column spiral reinforcement, when necessary, shall be made by welding or by a lap of 1-1/2 turns.

E. Field welding of bars: In accordance with the approved submittal. Continuous inspection required.

F. Mechanical couplers: Install in accordance with the approved submittal.

G. Bending or Straightening: Reinforcement shall not be straightened or rebent in a manner which will injure the material. Bars with kinks or bends not shown shall not be used. All bars shall be bent cold, unless otherwise permitted by the ENGINEER. No bars partially embedded in concrete shall be field-bent except as shown or specifically permitted by the ENGINEER.

H. Splicing of reinforcement on bridge structures shall conform to CSS Section 52-1.

3.6 CLEANING AND PROTECTION

A. The surfaces of all reinforcement steel and other metalwork to be in contact with concrete shall be thoroughly cleaned of all dirt, grease, loose scale and rust, grout, mortar and other foreign substances immediately before the concrete is placed. Where there is delay in depositing concrete, reinforcement shall be reinspected and, if necessary recleaned. Bars with reduced cross-section due to excessive rusting or other cause will not be acceptable for use and shall be replaced by the CONTRACTOR at no additional cost to the CITY.

3.7 FIELD QUALITY CONTROL

A. Inspection: Secure inspection and acceptance from INSPECTOR before concrete is placed. Make arrangements in advance for geotechnical inspection of foundations, continuous inspection as required, and/or structural observation by the designated registered design professional prior to concrete placement.

(END OF SECTION)

SECTION 03250

CONCRETE ACCESSORIES

PART 1 -- GENERAL

1.1 THE REQUIREMENT

A. The CONTRACTOR shall furnish all tools, equipment, materials, and supplies to install all concrete accessories to complete the Work including cast-in-place anchor bolts (also known as anchor rods), epoxy grouted anchor bolts or dowels and, expansion or adhesive anchors, in accordance with the requirements of the Contract Documents.

1.2 RELATED WORK SPECIFIED ELSEWHERE

A. Section 03300, Cast-in-Place Concrete.

B. Section 03315, Grout.

1.3 REFERENCE SPECIFICATIONS, CODES, AND STANDARDS

A. Comply with the reference standards and Standard Specifications of the GENERAL REQUIREMENTS.

B. Comply with the current provisions of the following Codes and Standards, as applicable.

1. Commercial Standards:

AISC	Code of Standard Practice for Steel Buildings and Bridges
AISC	Specifications for the Design, Fabrication and Erection of Structural Steel for Buildings
ASTM A 36	Specifications for Carbon Structural Steel
ASTM A 153	Specifications for Zinc Coating (Hot Dip) on Iron and Steel Hardware
ASTM A 193	Specifications for Alloy-Steel and Stainless Steel Bolting Materials for High-Temperature Service
ASTM A 194	Specifications for Carbon and Alloy Steel Nuts for Bolts for High-Pressure and High-Temperature Service
ASTM A 307	Specifications for Carbon Steel Bolts and Studs, 60,000 PSI Tensile Strength
ASTM A 449	Specifications for Quenched and Tempered Steel Bolts and Studs
ASTM A 615	Specifications for Deformed and Plain Billet-Steel Bars for Concrete Reinforcement
ASTM B 633	Specifications for Electrodeposited Coatings of Zinc on Iron and Steel

ASTM B 695	Specifications for Coatings of Zinc Mechanically Deposited on Iron and Steel
ASTM F 436	Specifications for Hardened Steel Washers
ASTM F 1554	Standard Specification for Anchor Bolts, Steel, 36, 55, and 105-ksi Yield Strength

1.4 CONTRACTOR SUBMITTALS

A. Submittals shall be made in accordance with the GENERAL REQUIREMENTS.

B. The following submittals and specific information shall be provided.

1. High Strength Anchor Bolts: The CONTRACTOR shall provide mill certificates and certified compliance with ASTM F 1554; A 449 with F 436.

2. The CONTRACTOR shall submit shop drawings for all welded or fabricated items for use as anchors.

3. The CONTRACTOR shall submit catalog cuts and manufacturer's recommendations, with applicable City of Los Angeles Research Reports, for all expansion and adhesive anchors, and anti-seize thread lubricants.

PART 2 -- PRODUCTS

2.1 GENERAL

A. Anchor Size: Anchor size shall be as specified or shown on plans.

B. Anchor Material:

1. Water-containment or sanitary structures, immersion service, or exposed exterior locations: Stainless steel.

2. Other locations: Galvanized steel as permitted by the corresponding ASTM except as listed in the contract drawings.

C. Anchor Length: Sufficient to extend through the nut(s) and not more than 1/4 inch beyond the nut when exposed while meeting the required embedment as indicated on the contract drawings or as required by the associated Los Angeles Department of Building and Safety's Research Report.

2.2 ANCHOR GRADES

A. Anchor Bolts and Nuts:

1. High Strength: ASTM F 1554 Grade 105; A 449, galvanized. Provide with corresponding galvanized hardened washers.

2. Stainless steel: ASTM A 193 and A 194, Type 316N, Grade 8MN.

3. Unspecified: ASTM F 1554 Grade 36; A 36 or A 307, galvanized.

4. Galvanizing: Hot dipped as required per ASTM F 1554; 1.25 ounces per square foot per ASTM A153 or B633; When protected from the atmosphere, moisture and sewage gases, ASTM B695 is also acceptable.

5. Other Coatings: None; As specified in the contract drawings.

B. Flat Washers: Same material and finish as nut and bolt. For high strength bolts, use ASTM F1554; F436.

C. Anti-Seize Thread Lubricant for use with stainless steel anchors:

1. Jet-Lube "Nikal".
2. Never-Seez "Pure Nickel Special".
3. Permatex "Nickel Anti-Seize".
4. Or an approved equal.

D. Reinforcing Steel Dowels: ASTM A 615, Grade 60. Same diameter as spliced rebar, or #4 minimum.

E. Expansion and Adhesive Anchors: Use only anchor types and styles with Research Report approval by the Los Angeles Department of Building and Safety.

1. Simpson Strong-tie “Wedge All”
2. Hilti "Kwik-Bolt II"
3. Phillips "Red Head"
4. Or an approved equal.

PART 3 -- EXECUTION

3.1 PROJECT CONDITIONS

A. Examine the areas and conditions under which the work will be performed. Correct conditions detrimental to timely and proper completion of the Work. Do not proceed until detrimental conditions are corrected.

3.2 CAST-IN-PLACE ANCHOR BOLTS

A. Provide templates or other means to ensure accurate placement. Provide sufficient threads to allow for a nut to be placed on the concrete side of the template.

B. Anchor bolts shall be clean and free of all coatings which may impair bonding with concrete.

C. Provide two nuts and a washer with each anchor bolt. Provide an additional locknut when indicated on the Drawings.

D. High Strength Bolts: Install such that ASTM Grade markings are visible after casting into concrete.

3.3 EPOXY-GROUTED ANCHOR BOLTS OR DOWELS

A. Provide templates or other means to ensure accurate placement.

B. Anchor bolts or dowels shall be clean and free of all coatings which may impair bonding with epoxy.

C. Provide two nuts and a washer with each anchor bolt. Provide an additional locknut when indicated on the Drawings.

D. High Strength Bolts: Install such that ASTM Grade markings are visible after casting into concrete.

E. Do not disturb bolt or dowel until epoxy grout has cured and reached full strength.

3.4 EXPANSION AND ADHESIVE ANCHORS

A. Install per Los Angeles Department of Building and Safety Approved Research Report and manufacturer's recommendations, whichever is more restrictive. Provide nuts and washers of same material and finish as anchor body.

3.5 STAINLESS STEEL ANCHORS

A. After installation of stainless steel anchor bolts or expansion anchors, lubricate threads before fastening.

(END OF SECTION)

SECTION 03290

JOINTS IN CONCRETE

PART 1 -- GENERAL

1.1 THE REQUIREMENT

A. The CONTRACTOR shall construct all joints and bearing pads in concrete at the locations shown. Joints required in concrete structures are of various types and will be permitted only where shown, unless specifically accepted by the ENGINEER.

1.2 RELATED WORK SPECIFIED ELSEWHERE

A. Section 03100, Concrete Formwork.

B. Section 03200, Reinforcement Steel.

C. Section 03300, Cast-in-Place Concrete.

D. Section 07900, Joint Sealants.

1.3 REFERENCE SPECIFICATIONS, CODES, AND STANDARDS

A. Comply with the reference standards of the GENERAL REQUIREMENTS.

B. Comply with the current provisions of the following Codes and Standards, as applicable:

1. Federal Specifications:

TT-S-0227E(3)	Sealing Compound, elastomeric type, Multi-component for Caulking, Sealing, and Glazing Buildings and Other Structures).

2. U.S. Army Corps of Engineers Specifications:

CRD-C572	Corps of Engineers Specifications for Polyvinylchloride Waterstops.

3. Other Government Standards:

CSS	Caltrans Standard Specifications.

4. Commercial Standards:

ASTM C 920	Specification for Elastomeric Joint Sealants.
ASTM D 624	Test Method for Rubber Property -- Tear Resistance.
ASTM D 638	Test Method for Tensile Properties of Plastics.
ASTM D 746	Test Method for Brittleness Temperature of Plastics and Elastomers by Impact.

ASTM D 747	Test Method for Apparent Bending Modulus of Plastics by Means of a Cantilever Beam.
ASTM D 1751	Premolded Joint Filler
ASTM D 1752	Specification for Preformed Sponge Rubber and Cork Expansion Joint Fillers for Concrete Paving and Structural Construction.
ASTM D 2240	Test Method for Rubber Property -- Durometer Hardness.

1.4 TYPES OF JOINTS

A. Construction Joints: When fresh concrete is placed against a hardened concrete surface, the joint between the two pours is called a construction joint. Unless otherwise specified, all joints in water bearing members shall be provided with a waterstop and sealant groove of the shape specified and as shown on the plans.

B. Contraction Joints: Contraction joints are similar to construction joints except that the fresh concrete shall not bond to the hardened surface of the first pour, which shall be coated with a bond breaker. The slab reinforcement shall be stopped 4-1/2 inches from the joint, unless noted otherwise; which is provided with a sleeve-type dowel, to allow shrinkage of the concrete of the second pour. Waterstop and sealant groove shall also be provided.

C. Expansion Joints: To allow the concrete to expand freely, a space is provided between the two pours, the joint shall be formed as shown on the plans. This space is obtained by placing a filler joint material against the first pour, which acts as a form for the second pour. Unless otherwise specified, all expansion joints in water bearing members shall be provided with an approved type waterstop.

Premolded expansion joint material shall be installed with the edge at the indicated distance below or back from finished concrete surface, and shall have a slightly tapered, dressed, and oiled wood strip secured to or placed at the edge thereof during concrete placement, which shall later be removed to form space for sealing material. The space so formed shall be filled with a joint sealant material as specified in the Paragraph in Part 2 entitled "Joint Sealant." In order to keep the two elements in line the joint shall be provided with a sleeve-type dowel as shown.

D. Control Joints (Weakened Plane): The function of the control joint is to provide a weaker plane in the concrete, where shrinkage cracks will probably occur. A groove, of the shape and dimensions as shown on the plans, is formed or saw-cut in the concrete and shall be filled with a joint sealant material as specified in the Paragraph in Part 2 entitled "Joint Sealant."

E. All other Joints, bearing devices, and elastomeric bearing pads for bridge structures shall comply with CSS Section 51.

1.5 CONTRACTOR SUBMITTALS

A. Submittals shall be made in accordance with GENERAL REQUIREMENTS.

B. The following submittals and specific information shall be provided.

1. Waterstops: Prior to use of the material required under this contract, qualification samples shall be submitted. Such samples shall consist of extruded or molded sections of each size or shape to be used. The material sample shall be representative

of the material to be furnished under this contract. The balance of the material to be used under this contract shall not be produced until after the ENGINEER has reviewed and approved the qualification samples.

2. Joint Sealant: Prior to ordering the sealant material, the CONTRACTOR shall submit to the ENGINEER for review and approval, data to show compliance with the requirements of the Contract Documents. Certified test reports from the sealant manufacturer on the actual batch of material being supplied indicating compliance with the above requirements shall be furnished the ENGINEER before the sealant is used on the job.

3. Shipping Certification: The CONTRACTOR shall provide written certification from the manufacturer as an integral part of the shipping form, to show that all of the material shipped to this project meets or exceeds the physical property requirements of the Contract Documents. Supplier certificates are not acceptable.

4. The CONTRACTOR shall submit placement shop drawings showing the location and type of all joints for each structure.

1.6 QUALITY ASSURANCE

A. Waterstop manufacturer shall demonstrate five years (minimum) continuous, successful experience in production of waterstops.

B. Waterstop Inspection: It is required that all waterstop field joints shall be subject to inspection, and no such work shall be scheduled or started without having made prior arrangements with the INSPECTOR to provide for the required inspections. Not less than 24 hours notice shall be provided to the INSPECTOR for scheduling such inspections.

C. All field joints in waterstops shall be free of misalignment, bubbles, inadequate bond, porosity, cracks, offsets, and other defects which would reduce the potential resistance of the material to water pressure at any point. All defective joints shall be replaced with material which shall pass said inspection, and all faulty material shall be removed from the site and disposed of by the CONTRACTOR at its own expense.

D. The following waterstop defects represent a partial list of defects which shall be grounds for rejection:

1. Offsets at joints greater than 1/16-inch or 15 percent of material thickness, at any point, whichever is less.

2. Exterior crack at joint, due to incomplete bond, which is deeper than 1/16-inch or 15 percent of material thickness, at any point, whichever is less.

3. Any combination of offset or exterior crack which will result in a net reduction in the cross-section of the waterstop in excess of 1/16-inch or 15 percent of material thickness at any point, whichever is less.

4. Misalignment of joint which result in misalignment of the waterstop in excess of 1/2-inch in 10 feet.

5. Porosity in the welded joint as evidenced by visual inspection.

6. Bubbles or inadequate bonding.

E. Waterstop Samples: Prior to use of the waterstop material in the field, a sample of a fabricated metered cross and a tee constructed of each size or shape of material to be used shall be submitted to the ENGINEER for approval. These samples shall be fabricated so that the material and workmanship represent in all respects the fittings to be furnished under this contract. Field samples of fabricated fittings (crosses, tees, etc.) will be selected at random by the INSPECTOR for testing. When tested, they shall have a tensile strength across the joints equal to at least 600 psi.

F. Construction Joint Sealant: The CONTRACTOR shall prepare adhesion and cohesion test specimens as specified herein, at intervals of 5 working days while sealants are being installed.

G. The sealant material shall show no signs of adhesive or cohesive failure when tested in accordance with the following procedure in laboratory and field tests:

1. Sealant specimen shall be prepared between 2 concrete blocks (1-inch by 2-inch by 3-inch). Spacing between the blocks shall be 1/2-inch. Coated spacers (2-inch by 1-1/2-inch by 1/2-inch) shall be used to insure sealant cross-sections of 1/2-inch by 2 inches with a width of 1/2-inch.

2. Sealant shall be cast and cured according to manufacturer's recommendations except that curing period shall not exceed 24 hours.

3. Following curing period, the gap between blocks shall be widened to one inch. Spacers shall be used to maintain this gap for 24 hours prior to inspection for failure.

H. Store waterstops under tarps to protect from oil, dirt, and sunlight.

1.7 GUARANTEE

A. The CONTRACTOR shall provide a 5-year written guarantee of the entire sealant installation against faulty and/or incompatible materials and workmanship, together with a statement that it agrees to repair or replace, to the satisfaction of the CITY, at no additional cost to the CITY, any such defective areas which become evident within said 5-year guarantee period.

PART 2 -- PRODUCTS

2.1 PVC WATERSTOPS

A. General: Waterstops shall be extruded from an elastomeric polyvinyl chloride compound containing the plasticizers, resins, stabilizers, and other materials necessary to meet the requirements of these Specifications. No reclaimed or scrap material shall be used. The CONTRACTOR shall obtain from the waterstop manufacturer and shall furnish to the ENGINEER for review, current test reports and a written certification of the manufacturer that the material to be shipped to the job meets the physical requirements as outlined in the U.S. Army Corps of Engineers Specification CRD-C572 and those listed herein.

B. Flatstrip and Center-Bulb Waterstops: Flatstrip and center-bulb waterstops shall be as detailed and as manufactured by: Kirkhill Rubber Co., Brea, California; Greenstreak, St. Louis, MO, Water Seals, Inc., Chicago, Illinois; Progress Unlimited, Inc., New York, New York; or an approved equal; provided, that at no place shall the thickness of flat strip waterstops, including the center bulb type, be less than 3/8-inch.

C. Multi-Rib Waterstops: Multi-rib waterstops, where required, shall be as detailed and as manufactured by Water Seals, Inc., Chicago, Illinois; Progress Unlimited, Inc., New York,

New York; Greenstreak, St. Louis, MO, or an approved equal. Prefabricated joint fittings shall be used at all intersections of the ribbed-type waterstops.

D. Other Types of Waterstops: When other types of waterstops, not listed above are required and shown, they shall be subjected to the same requirements as those listed herein.

E. Waterstop Testing Requirements: When tested in accordance with the specified test standards, the waterstop material shall meet or exceed the following requirements:

Physical Property, Sheet Material	Value	ASTM Std.
Tensile Strength-min (psi)	1750	D638,TypeIV
Ultimate Elongation-min (percent)	350	D638,TypeIV
Low Temp Brittleness-max (degrees F)	-35	D 746
Stiffness in Flexure-min (psi)	400	D 747
Accelerated Extraction (CRD-C572)		
Tensile Strength-min (psi)	1500	D638,TypeIV
Ultimate Elongation-min (percent)	300	D638,TypeIV
Effect of Alkalies (CRD-C572)		
Change in Weight (percent)	+0.25/-0.10	------
Change in Durometer, Shore A	+5	D 2240
Finish Waterstop		
Tensile Strength-min (psi)	1400	D638,TypeIV
Ultimate Elongation-min (percent)	280	D638,TypeIV

F. Accessories

1. Provide factory made waterstop fabrications for all changes of direction, intersections, and transitions leaving only straight butt joint splices for the field.

2. Provide hog rings or grommets spaced at 12 inches on center along length of waterstop.

3. Provide Teflon coated thermostatically controlled waterstop splicing irons for field butt splices.

2.2 RUBBER WATERSTOPS

For bridge structures, neoprene waterstop requirements shall conform to CSS Section 51-1.

2.3 JOINT SEALANT

A. Joint sealant shall be polyurethane polymer designed for bonding to concrete which is continuously submerged in water.

B. Joint sealant material shall meet the following requirements:

Work Life	45 - 90 minutes
Time to Reach 20 Shore "A" Hardness (at 77 degrees F, 200 gr quantity)	24 hours, maximum
Ultimate Hardness	30 - 40 Shore "A"
Tensile Strength	250 psi, minimum
Ultimate Elongation	400 percent, minimum
Tear Resistance (Die C ASTM D 624)	75 pounds per inch of thickness, minimum
Color	Light Gray

For bridge structures, additional requirements of CSS Section 51 shall also apply.

C. All polyurethane sealants for waterstop joints in concrete shall conform to the following requirements:

1. Sealant shall be 2-part polyurethane with the physical properties of the cured sealant conforming to or exceeding the requirements of ASTM C 920 or Federal Specification TT-S-00227 E(3) for 2-part material, as applicable.

2. For vertical joints and overhead horizontal joints, only "non-sag" compounds shall be used; all such compounds shall conform to the requirements of ASTM C 920 Class B, or Federal Specification TT-S-0027 E(3), Type II.

3. For plane horizontal joints, the self-leveling compounds which meet the requirements of ASTM C920 Class A, or Federal Specification TT-S-0027 E(3), Type I shall be used. For joints subject to either pedestrian or vehicular traffic, a compound providing non-tracking characteristics, and having a Shore "A" hardness range of 25 to 35, shall be used.

4. Primer materials, if recommended by the sealant manufacturer, shall conform to the printed recommendations of the sealant manufacturer.

D. All sealants, wherever shown, or required hereunder shall be Rubbercalk 2101-I or 270 as manufactured by Products Research Company; GS 102 or GS 1102 as manufactured by General Sealants Corp; or an approved equal. For sanitary structures mastic/sealant material shall be Ram Nek Sealant by Henry Co.; Sika Flex 1A, Sikadur 51 NS by Sika Corp.

E. Sealants for non-waterstop joints in concrete shall conform to the requirements of Section 07900, "Joint Sealants". Mastic joint sealer shall be a material that does not contain evaporating solvents; that will tenaciously adhere to concrete surfaces; that will remain permanently resilient and pliable; that will not be affected by continuous presence of water and will not in any way contaminate potable water; and that will effectively seal the joints against moisture infiltration even when the joints are subject to movement due to expansion and contraction. The sealer shall be composed of special asphalts or similar materials blended with lubricating and plasticizing agents to form a tough, durable mastic substance containing no volatile oils or lubricants and shall be capable of meeting the test requirements set forth hereinafter, if testing is required by the ENGINEER.

2.4 PREFORMED JOINT FILLER

A. Preformed joint filler material shall be of the preformed non-extruding type joint filler constructed of cellular neoprene sponge rubber or polyurethane of firm texture. Bituminous fiber type will not be permitted. All non-extruding and resilient-type preformed expansion joint fillers shall conform to the requirements and tests set forth in ASTM D 1752 for Type I, except as otherwise specified herein.

B. Unless otherwise noted, preformed joint filler shall be a non-extruding, resilient, bituminous type conforming to the requirements of ASTM D 1751.

2.5 BACKING ROD

A. Backing rod shall be an extruded closed-cell, polyethylene foam rod. The material shall be compatible with the joint sealant material used and shall have a tensile strength of not less than 40 psi and a compression deflection of approximately 25 percent at 8 psi. The rod shall be 1/8-inch larger in diameter than the joint width except that a one-inch diameter rod shall be used for a 3/4-inch wide joint.

2.6 BOND BREAKER

A. Bond breaker shall be Super Bond Breaker as manufactured by Burke Company, San Mateo, California; Hunt Process 225-TU as manufactured by Hunt Process Co., Santa Fe Springs, California; Select Cure CRB as manufactured by Select Products Co., Upland, California; or an approved equal. It shall contain a fugitive dye so that areas of application will be readily distinguishable.

2.7 BEARING DEVICES AND ELASTOMERIC BEARING PADS

A. Bearing devices and elastomeric bearing pads shall comply with CSS Section 51.

2.8 HYDROPHILIC STRIP WATERSTOP

A. Pre-formed strips of flexible hydrophilic rubber designed to undergo controlled expansion when exposed to moisture:
   1. Strips manufactured to limit expansion in directions parallel to the plane of the joint, and to direct expansion against confining material perpendicular to that plane.

B. Provide normal or low-expansion pressure as scheduled and as indicated on the Drawings.

C. Manufacturers: One of the following or equal:
   1. Adeka Ultra Seal USA, MC-2010MN.
   2. Sika Corp., Hydrotite CJ1020-2K.

PART 3 -- EXECUTION

3.1 GENERAL

A. Unless otherwise shown, waterstops of the type specified herein shall be embedded in the concrete across joints as shown. All waterstops shall be fully continuous for the extent of the joint. Splices necessary to provide such continuity shall be accomplished in conformance to printed instructions of manufacturer of the waterstops. The CONTRACTOR shall take suitable precautions and means to support and protect the waterstops during the progress of the work and shall repair or replace at its own expense any waterstops damaged during the

progress of the work. All waterstops shall be stored so as to permit free circulation of air around the waterstop material.

B. When any waterstop is installed in the concrete on one side of a joint, while the other half or portion of the waterstop remains exposed to the atmosphere for more than 2 days, suitable precautions shall be taken to shade and protect the exposed waterstop from direct rays of the sun during the entire exposure and until the exposed portion of the waterstop is embedded in concrete.

3.2 SPLICES IN WATERSTOPS

A. Splices in waterstops shall be performed by heat sealing the adjacent waterstop sections in accordance with the manufacturer's printed recommendations and the following requirements:

1. The material is not be damaged by heat sealing.

2. The splices have a tensile strength of not less than 60 percent of the unspliced materials tensile strength.

3. The continuity of the waterstop ribs and of its tubular center axis be maintained.

B. Butt joints of the ends of two identical waterstop sections may be made while the material is in the forms.

C. All joints with waterstops involving more than 2 ends to be jointed together, and all joints which involve an angle cut, alignment change, or the joining of 2 dissimilar waterstop sections shall be prefabricated by the CONTRACTOR prior to placement in the forms, allowing not less than 24-inch-long strips of waterstop material beyond the joint. Upon being inspected and approved, such prefabricated waterstop joint assemblies shall be installed in the forms and the ends of the 24-inch strips shall be butt welded to the straight run portions of waterstop in place in the forms.

3.3 JOINT CONSTRUCTION

A. Setting Waterstops:

1. In order to eliminate faulty installation that may result in joint leakage, particular care shall be taken of the correct positioning of the waterstops during installation. Adequate provisions must be made to support the waterstops during the progress of the WORK and to insure the proper embedment in the concrete. The symmetrical halves of the waterstops shall be equally divided between the concrete pours at the joints. The center axis of the waterstops shall be coincident with the joint openings. Maximum density and imperviousness of the concrete shall be insured by thoroughly working it in the vicinity of all joints

2. In placing flat-strip waterstops in the forms, means shall be provided to prevent them from being folded over by the concrete as it is placed. Unless otherwise shown, all waterstops shall be held in place with light wire ties on 12-inch centers which shall be passed through the edge of the waterstop and tied to the curtain of reinforcing steel. Horizontal waterstops, with their flat face in a vertical plane, shall be held in place with continuous supports to which the top edge of the waterstop shall be tacked. In placing concrete around horizontal waterstops, with their flat face in a horizontal plane, concrete shall be worked under the waterstops by hand so as to avoid the formation of air and rock pockets.

3. Adequate means shall be provided for anchoring the waterstop in concrete. Waterstops shall be positioned so that they are equally embedded in the concrete on each side of the joint.

4. For bridge structures, waterstops shall conform to CSS Section 51-1.

B. Joint Location:

1. Construction joints, and other types of joints, shall be provided where shown. When not shown, construction joints shall be provided at 25-foot maximum spacing for all concrete construction, subject to the approval of the ENGINEER, unless noted otherwise. Where joints are shown spaced greater than 25 feet apart, additional joints shall be provided to maintain the 25-foot maximum spacing. The location of all joints, of any type, shall be submitted for acceptance by the ENGINEER.

C. Joint Preparation:

1. Special care shall be used in preparing concrete surfaces at joints where bonding between two sections of concrete is required. Unless otherwise shown, such bonding will be required at all horizontal joints in walls. Surfaces shall be prepared in accordance with the requirements of Section 03300, "Cast-in-Place Concrete." Except on horizontal wall construction joints, wall to slab joints or where otherwise shown or specified, at all joints where waterstops are required, the joint face of the first pour shall be coated with a bond breaker as specified herein.

D. Construction Joint Sealant:

1. Construction joints in water-bearing floor slabs, and elsewhere as shown, shall be provided with tapered grooves which will be filled with construction joint sealant. The material used for forming the tapered grooves shall be left in the grooves until just before the grooves are cleaned and filled with joint sealant. After removing the forms from the grooves, all laitance and fins shall be removed, and the grooves shall be sand-blasted. The grooves shall be allowed to become thoroughly dry, after which they shall be blown out; immediately thereafter, they shall be primed and filled with the construction joint sealant. The primer used shall be supplied by the same manufacturer supplying the sealant. No sealant will be permitted to be used without a primer. Care shall be used to completely fill the sealant grooves. Areas designated to receive a sealant filler shall be thoroughly cleaned, as outlined for the tapered grooves, prior to application of the sealant.

2. Sealant application shall be in accordance with the manufacturer's printed instructions. The surfaces of the groove for the sealant shall not be coated. Concrete next to waterstops shall be placed in accordance with the requirements of Section 03300, "Cast-in-Place Concrete".

3. The primer and sealant shall be placed strictly in accordance with the printed recommendations of the manufacturer, taking special care to properly mix the sealant prior to application. All sealant shall cure at least 7 days before the structure is filled with water.

4. All sealant shall be installed by a competent waterproofing specialty contractor who has a successful record of performance in similar installations. Before work is commenced, the crew doing the WORK shall be instructed as to the proper method of application by a representative of the sealant manufacturer.

5. Thorough, uniform mixing of 2-part, catalyst-cured materials is essential; special care shall be taken to properly mix the sealer before its application. Before any sealer is placed, the CONTRACTOR shall arrange to have the crew doing the WORK carefully instructed as to the proper method of mixing and application by a representative of the sealant manufacturer.

6. Any joint sealant which after the manufacturer's recommended curing time for the job conditions of the WORK hereunder, fails to fully and properly cure shall be completely removed; the groove shall be thoroughly sandblasted to remove all traces of the uncured or partially cured sealant and primer, and shall be re-sealed with the specified joint sealant. All costs of such removal, joint treatment, re-sealing, and appurtenant work shall be at the expense of the CONTRACTOR.

3.4 BEARING DEVICES AND ELASTOMERIC BEARING PADS

A. Bearing devices and elastomeric bearing pads shall comply with CSS Section 51.

(END OF SECTION)

SECTION 03300

CAST-IN-PLACE CONCRETE

PART 1 -- GENERAL

1.1 THE REQUIREMENT

A. The CONTRACTOR shall furnish all materials for concrete in accordance with the provisions of this Section and shall form, mix, place, cure, repair, finish, and do all other work as required to produce finished concrete, in accordance with the requirements of the Contract Documents.

B. The following types of concrete shall be covered in this Section:

1. Structural Concrete: Concrete to be used in all cases except where noted otherwise in the Contract Documents.

2. Sitework Concrete: Concrete to be used for curbs, gutters, sidewalks, pavements, fence and guard post embedment, and underground duct bank encasement unless otherwise shown.

3. Lean Concrete: Concrete to be used for thrust blocks, pipe trench cut-off blocks and cradles, where the preceding items are detailed on the Drawings as unreinforced. Concrete to be used as protective cover for dowels intended for future connection.

1.2 RELATED WORK SPECIFIED ELSEWHERE

A. Section 03100, Concrete Formwork.

B. Section 03200, Reinforcement Steel.

C. Section 03250, Concrete Accessories.

D. Section 03290, Joints in Concrete.

E. Section 03315, Grout.

F. Section 03370, Concrete Curing.

G. Section 07900, Joint Sealants.

1.3 REFERENCE SPECIFICATIONS, CODES, AND STANDARDS

A. Comply with the reference standards and the Standard Specifications of the GENERAL REQUIREMENTS.

B. Comply with the current provisions of the following Codes and Standards, as applicable.

1. Commercial Standards:

ACI 117	Specification for Tolerances for Concrete Construction and Materials
ACI 301	Specifications for Structural Concrete

ACI 305.1	Specification for Hot Weather Concreting
ACI 306.1	Standard Specification for Cold Weather Concreting
ACI 318	Building Code Requirements for Structural Concrete
ACI 347R	Guide to Formwork for Concrete
ACI 350	Code Requirements for Environmental Engineering Concrete Structures
ASTM C 31	Standard Practice for Making and Curing Concrete Test Specimens in the Field
ASTM C 33	Standard Specification for Concrete Aggregates
ASTM C 39	Standard Test Method for Compressive Strength of Cylindrical Concrete Specimens
ASTM C 40	Standard Test Method for Organic Impurities in Fine Aggregates for Concrete
ASTM C 42	Standard Test Method for Obtaining and Testing Drilled Cores and Sawed Beams of Concrete
ASTM C 88	Standard Test Method for Soundness of Aggregates by Use of Sodium Sulfate or Magnesium Sulfate
ASTM C 94	Standard Specification for Ready-Mixed Concrete
ASTM C 109	Standard Test Method for Compressive Strength of Hydraulic Cement Mortars (Using 2-in Cube Specimens)
ASTM C 117	Standard Test Method for Materials Finer than No. 200 Sieve in Mineral Aggregates by Washing
ASTM C 131	Standard Test Method for Resistance to Degradation of Small-Sized Coarse Aggregate by Abrasion and Impact in the Los Angeles Machine
ASTM C 136	Standard Test Method for Sieve Analysis of Fine and Coarse Aggregates
ASTM C 143	Standard Test Method for Slump of Hydraulic-Cement Concrete
ASTM C 150	Standard Specification for Portland Cement
ASTM C 157	Standard Test Method for Length Change of Hardened Hydraulic-Cement Mortar and Concrete
ASTM C 192	Standard Practice for Making and Curing Concrete Test Specimens in the Laboratory

ASTM C 260	Standard Specification for Air-Entraining Admixtures for Concrete
ASTM C 289	Standard Test Method for Potential Alkali-Silica Reactivity of Aggregates (Chemical Method)
ASTM C 311	Standard Test Methods for Sampling and Testing Fly Ash or Natural Pozzolans for Use in Portland-Cement Concrete
ASTM C 494	Standard Specification for Chemical Admixtures for Concrete
ASTM C 595	Standard Specification for Blended Hydraulic Cements
ASTM C 618	Standard Specification for Coal Fly Ash and Raw or Calcined Natural Pozzolan for Use in Concrete
ASTM C 989	Standard Specification for Slag Cement for Use in Concrete and Mortars
ASTM C 1116	Standard Specification for Fiber-Reinforced Concrete
ASTM C 1157	Standard Performance Specification for Hydraulic Cement
ASTM C 1240	Standard Specification for Silica Fume Used in Cementitious Mixtures
ASTM C 1550	Standard Test Method for Flexural Toughness of Fiber Reinforced Concrete (Using Centrally Loaded Round Panel)
ASTM C 1579	Standard Test Method for Evaluating Plastic Shrinkage Cracking of Restrained Fiber Reinforced Concrete (Using a Steel Form Insert)
ASTM C 1602	Standard Specification for Mixing Water Used in the Production of Hydraulic Cement Concrete
ASTM C 1603	Standard Test Method for Measurement of Solids in Water-Suggest you add as it relates to ASTM C1602
ASTM C 1609	Standard Test Method for Flexural Performance of Fiber-Reinforced Concrete (Using Beam With Third-Point Loading)
ASTM D 2419	Standard Test Method for Sand Equivalent Value of Soils and Fine Aggregate

2. Government Standards:

CSS	Caltrans Standard Specifications
GWP	Global Warming Potential (maximum acceptable carbon emission limits, established by the California Department of General Services)

1.4 CONTRACTOR SUBMITTALS

A. Submittals shall be made in accordance with GENERAL REQUIREMENTS.

B. The following submittals and specific information shall be provided.

1. Mix Designs: Prior to beginning the WORK, the CONTRACTOR shall submit to the ENGINEER, for review, and acceptance, preliminary concrete mix designs for each class and type of concrete specified herein. The mix designs shall be designed by an independent testing laboratory acceptable to the ENGINEER. All costs related to such mix design shall be borne by the CONTRACTOR.

   Each concrete mix submittal shall contain the following information, as applicable:

   a) Location and purpose of the mix.
   b) Slump on which the design is based.
   c) Total gallons of water per cubic yard, and the water/cementitious materials ratio (w/cm).
   d) Brand, type, composition and quantity of cement.
   e) Brand type, composition and quantity of fly ash, slag cement, silica fume.
   f) Specific Gravity, source and gradation of each aggregate.
   g) Ratio of fine to total aggregate per cubic yard.
   h) Weight (surface dry) of each aggregate per cubic yard.
   i) Brand, type, and ASTM designation, active chemical ingredients and quantity of each admixture.
   j) Copy of the Building and Safety Research Report Approval for each concrete admixture.
   k) Air content.
   l) Compressive strength based on 7-day and 28-day compression tests, including standard deviation calculations, corroborative data (if applicable), and required average comprehensive strength per ACI 318.
   m) Time of initial and final set.
   n) Certification stamp and signature by a Civil or Structural engineer registered in the State of California, experienced in concrete mix design.
   o) Certificate of Compliance for Cement.
   p) Concrete pour sequence.
   q) Buy Clean California Act
      1.) For project specifications that include GR Section 1601, Buy Clean California Act, bidders shall submit current Environmental Product Declarations (EPDs) for each concrete mix design, from the originating ready-mix plant used in the project. When material comes from different plants, an EPD will be required for each plant from which the material will be obtained.
      2.) An EPD must conform to the following:
         a) Shall be facility-specific manufacturer/plant EPD.
         b) Be independently verified in accordance with ISO 14025 (Type III).

c) Be developed according to the guidelines of the applicable Product Category Rule (PCR), as identified by the Department of General Services, State of California.
d) Have a valid date that has not expired.
e) Shall not exceed the Global Warming Potential (GWP) as required by GR Section 1601.

3.) EPD shall be submitted concurrently with each mix submittal for review and approval.

2. Certified Delivery Tickets: Where ready-mix concrete is used, the CONTRACTOR shall provide certified weighmaster delivery tickets at the time of delivery of each load of concrete. Each certificate shall show the public weighmaster's signature, and the total quantities, by weight of cement, sand, each class of aggregate, admixtures, and the amounts of water in the aggregate and added at the batching plant as well as the amount of water allowed to be added at the site for the specific design mix. Each certificate shall, in addition, state the mix number, total yield in cubic yards, and the time of day, to the nearest minute, corresponding to when the batch was dispatched, when it left the plant, when it arrived at the job, the time that unloading began, and the time that unloading was finished.

3. When a water reducing admixture is to be used, the CONTRACTOR shall furnish mix designs for concrete both with and without the admixture.

4. The CONTRACTOR shall furnish a Certificate of Compliance signed by the supplier identifying the type of fly ash and stating that the fly ash complies with ASTM C 618 and these Specifications, together with all supporting test data prior to the use of the fly ash the sample represents. The supporting data shall also contain test results confirming that the fly ash in combination with the cement and water to be used meets all strength requirements and is compatible with air-entraining agents and other admixtures.

5. The CONTRACTOR shall submit to the ENGINEER for review the design mix for fly ash concrete together with the design mix for Portland cement (non-fly ash) concrete as specified in this Section.

1.5 QUALITY ASSURANCE

A. Laborers: Use adequate number of skilled laborers who are thoroughly trained and experienced in the necessary crafts and completely familiar with the specified requirements and the methods needed for proper performance of the Work of this Section.

B. Compliance with Regulations: All materials shall comply with the current rules and regulations of the local air quality management district, with the rules regarding volatile organic compounds, and with FDA rules and regulations for dangerous substances in construction products.

C. Concrete Manufacturer: Furnish concrete from licensed commercial ready-mix concrete plants conforming to ASTM C94 and approved by City of Los Angeles Department of Building and Safety. Requirements herein govern when exceeding ASTM C94.

D. Continuous Inspection: Construct structural concrete exceeding 2,500 psi compressive strength under continuous inspection of DEPUTY INSPECTOR. Obtain inspection and approval of forms and reinforcing by CONTRACTOR’s Independent Testing/Inspection Laboratory three (3) working days before placing structural concrete in order to be verified by ENGINEER.

E. Tests on component materials and for compressive strength and shrinkage of concrete will be performed as specified herein. Test for determining slump will be in accordance with the requirements of ASTM C 143.

F. The cost of all laboratory tests on cement, aggregates, and concrete compressive strength, will be borne by the CITY. However, the CONTRACTOR shall be responsible for all other required tests, and shall be charged for the cost of any additional tests and investigation on work performed which does not meet the specifications.

G. Concrete for testing shall be supplied by the CONTRACTOR at no cost to the CITY, and the CONTRACTOR shall provide assistance and facilities to the INSPECTOR in obtaining samples, and disposal and cleanup of excess material.

H. Field Compression Tests:

1. Compression test specimens will be taken during construction from the first placement of each concrete mix used and at intervals thereafter as selected by the INSPECTOR to insure continued compliance with these specifications. Each set of test specimens will be a minimum of 4 cylinders.

2. Compression test specimens for concrete shall be made in accordance with ASTM C 31. Specimens shall be 6-inch diameter by 12-inch high cylinders.

3. Compression tests shall be performed in accordance with ASTM C 39. Two 6”x12” test cylinders will be tested at 7 days as necessary and two at 28 days. Any remaining cylinders will be held to verify test results, if needed.

I. Evaluation and acceptance of Compressive Strength Concrete shall be based on the following criteria:

1. Concrete shall be sampled and tested in accordance with the ASTM standards stated in Subsection 1.3.B.1.

2. Acceptance of concrete placed shall be based on 28-day compressive strength test results. A 28-day compressive strength test shall consist of the average compressive strength of two 6”x12” concrete test cylinders fabricated from a single load of fresh concrete except that, if a cylinder should show evidence of improper handling, molding, or testing, said cylinder shall be discarded and the compressive strength test shall then consist of the remaining cylinder.

3. Concrete compressive strength tests representing concrete poured-in-place, shall attain the 28-day compressive strength specified in the specifications or as shown on the plans.

4. In-place concrete represented by a compressive cylinder strength test failing to meet the specified 28-day compressive strength shall be removed from the work at no cost to the CITY. Also, the CONTRACTOR shall at its own expense make any corrective changes in the mix deemed necessary by the ENGINEER. The changes in the mix proportions or placement procedures shall be approved by the ENGINEER prior to the placement of any additional concrete subsequent to a failing compressive strength test.

5. As an alternative to the removal of concrete represented by a failed cylinder compressive strength test and subject to the approval of the ENGINEER, the concrete represented by the failed compressive strength cylinder test or tests may be cored in place. The corings shall be completed no later than 10 days from notification of failure

by the ENGINEER. The cores shall be taken by the CONTRACTOR in the presence of the INSPECTOR and tested at the CONTRACTOR's expense in accordance with ASTM C 42 by a certified laboratory acceptable to the INSPECTOR. The cores shall be 4 inch diameter (min.) unless otherwise directed by the ENGINEER. At least three cores shall be taken in each area represented by a failed 28-day concrete compressive strength cylinder test. Unless otherwise directed by the ENGINEER, the cores shall be tested wet following a 40-hour submergence. If each core tests at least 85 percent of the specified 28-day compressive strength or greater, the concrete represented may be accepted provided the CONTRACTOR accepts the payment provisions stated below. Concrete represented by failing core tests shall not be paid for and shall be removed by the CONTRACTOR from the work at no cost to the CITY.

6. Payment to the CONTRACTOR for concrete accepted by the ENGINEER based on core test results but represented by failing compressive cylinder test results shall be reduced as follows:

    a. When the result of a single compressive cylinder strength test is less than the specified 28-day compressive strength but 95 percent or more of the 28-day compressive strength, the CONTRACTOR shall pay the CITY $15 per cubic yard for each in-place cubic yard of concrete represented by the deficient compressive strength cylinder test as determined by the actual sampling interval; and.

    b. When the result of a single compressive strength cylinder test is less than 95 percent of the specified 28-day compressive strength but is acceptable based on core test results taken in accordance with Subsection 1.5.I.5, the CONTRACTOR shall pay the CITY $20 per cubic yard for each in-place cubic yard of concrete represented by the deficient compressive strength cylinder test as determined by the actual sampling interval.

J. Shrinkage Tests:

1. Drying shrinkage tests shall be provided by the CONTRACTOR for the trial batch specified in the Paragraph in Part 2 entitled "Trial Batch and Laboratory Tests," and during construction to insure continued compliance with these Specifications.

2. Drying shrinkage specimens shall be 4-inch by 4-inch by 11-inch prisms with an effective gage length of 10 inches, fabricated, cured, dried and measured in accordance with ASTM C 157 modified as follows: specimens shall be removed from molds at an age of 23 ±1 hours after trial batching, shall be placed immediately in water at 70 degrees Fahrenheit ±3 degrees Fahrenheit for at least 30 minutes, and shall be measured within 30 minutes thereafter to determine original length and then submerged in saturated lime water at 73 degrees Fahrenheit ±3 degrees Fahrenheit. Measurement to determine expansion expressed as a percentage of original length shall be made at age 7 days. This length at age 7 days shall be the base length for drying shrinkage calculations ("0" days drying age). Specimens then shall be stored immediately in a humidity control room maintained at 73 degrees Fahrenheit ±3 degrees Fahrenheit and 50 percent ±4 percent relative humidity for the remainder of the test. Measurements to determine shrinkage expressed as percentage of base length shall be made and reported separately for 7, 14, 21, and 28 days of drying after 7 days of moist curing.

3. The drying shrinkage deformation of each specimen shall be computed as the difference between the base length (at "0" days drying age) and the length after drying at each test age. The average drying shrinkage deformation of the specimens shall be

computed to the nearest 0.0001 at each test age. If the drying shrinkage of any specimen departs from the average of that test age by more than 0.0004-inch, the results obtained from that specimen shall be disregarded. Results of the shrinkage test shall be reported to the nearest 0.001 percent of shrinkage. Compression test specimens shall be taken in each case from the same concrete used for preparing drying shrinkage specimens. These tests shall be considered a part of the normal compression tests for the project. Allowable shrinkage limitations shall be as specified in Part 2, herein.

K. Construction Tolerances: The CONTRACTOR shall set and maintain concrete forms and perform finishing operations so as to ensure that the completed work is within the tolerances specified in Section 03100, “Concrete Formwork”. Surface defects and irregularities are defined as finishes and are to be distinguished from tolerances.

L. For each class of fly ash, all testing and sampling procedures shall conform with these Specifications and ASTM C 311, including the restriction that one sample weighing 4 pounds shall be taken from at least each 200 tons of fly ash supplied.

M. Separate storage facilities shall be provided for fly ash and other supplementary cementitious materials (SCM). All SCM shall be stored in such a manner as to permit ready access for the purpose of inspection and sampling and suitably protected against contamination or moisture. Should any SCM show evidence of contamination or moisture or be otherwise unsuitable, the INSPECTOR may reject it and require that it be removed from the site. Each SCM used in concrete for this project shall be from the same source.

PART 2 -- PRODUCTS

2.1 CONCRETE MATERIALS

A. Materials shall be delivered, stored, and handled so as to prevent damage by water or breakage. Only one brand of cement shall be used. Cement reclaimed from cleaning bags or leaking containers shall not be used. All cement shall be used in the sequence of receipt of shipments.

B. All materials furnished for the work shall comply with the requirements of ACI 301, as applicable. For bridge structures, materials for concrete shall conform to Section 90-2 to 90-4 of CSS.

C. Storage of materials shall conform to the requirements of ACI 301.

D. Materials for concrete shall conform to the Standard Specifications and the following requirements.

1. Concurrent with strength design criteria, concrete shall also be proportioned to provide the requisite durability to satisfy the exposure conditions imposed by either environment and/or service. Durability, in this context, refers to the ability of the concrete to resist deterioration from the environment or service in which it is placed. Concrete proportioned in accordance with ACI 318, or ACI 350 for sanitary structures, chapter 4, Durability Requirements, will meet this criteria.

2. Cementitious Materials:

    a. Portland Cement shall conform to ASTM C 150, Type II.
    b. Supplementary Cementitious Materials:
        i. Fly ash shall conform to ASTM C 618, Class F or C.

ii. Slag cement shall conform to ASTM C 989, Grade 100 or 120.
iii. Silica fume shall conform to ASTM C1240, and shall be MASTER BUILDER SOLUTIONS Corporation's MasterLife SF100, GCP Applied Technologies (formerly W. R. Grace) F10KD, or approved equal.
iv. Metakaolin shall conform to ASTM C618, Class N, and shall be MASTER BUILDER SOLUTIONS Kaolin's (part of MASTER BUILDER SOLUTIONS Corporation) MetaMax, GCP Applied Technologies (formerly W. R. Grace) HRMK 100, or approved equal.

3. Aggregates shall be obtained from pits acceptable to the INSPECTOR, shall be non-reactive, and shall conform to ASTM C 33. Lightweight sand for fine aggregate will not be permitted.

   a. When tested in accordance with ASTM C 289, the ratio of silica released to reduction in alkalinity shall not exceed 1.0.

   b. When tested in accordance with ASTM C 40, the fine aggregate shall produce a color in the supernatant liquid no darker than the reference standard color solution.

   c. When tested in accordance with ASTM C 131, the coarse aggregate shall show a loss not exceeding 42 percent after 500 revolutions, or 10.5 percent after 100 revolutions.

   d. When tested in accordance with ASTM C 88, the loss resulting after five cycles shall not exceed 10 percent for fine or coarse aggregate when using sodium sulfate.

   e. When tested in accordance with ASTM C 117, materials finer than No. 200 sieve shall not exceed 1% for gravel, and 1.5% for crushed aggregate.

   f. When tested in accordance with ASTM D 2419, the California sand equivalent values operating range shall not be below 71%.

4. Ready-mixed concrete shall conform to the requirements of ASTM C 94.

5. Water for mixing shall conform to the SSPWC, Section 201-1.2.3, "Water". The use of qualifying recycled water is encouraged.

6. Admixtures: The ENGINEER may require the use of admixtures or the CONTRACTOR may propose to use admixtures to control the set, effect water reduction, increase workability or enhance durability. In either case, the addition of an admixture shall be at the CONTRACTOR's expense. The use and continued use of an admixture shall be approved by the ENGINEER. Admixtures specified herein, other than calcium chloride, shall conform to the requirements of ASTM C 494 or other standards specified in this Section. The required quantity of cement shall be used in the mix regardless of whether or not an admixture is used. Admixtures shall contain no free chloride ions, be non-toxic after 30 days, and shall be compatible with and made by the same manufacturer as the air entraining admixture.

   These admixtures shall not be used in greater doses than those recommended by the manufacturer or permitted by the ENGINEER. The permitted dosage of the admixture shall not exceed that which will result in an increase in the drying shrinkage of the concrete in excess of 20 percent when used in precast or prestressed concrete, or 10 percent when used in any other structural concrete. The strength of concrete containing the admixture in the amount proposed shall, at the age of 48 hours and

longer be not less than that of similar concrete without the admixture. The admixture shall not adversely affect the specified air content, unless permitted by the ENGINEER.

a. Set controlling admixture shall be either with or without water-reducing properties. Where the air temperature at the time of placement is expected to be consistently over 80 degrees F, a set retarding admixture conforming to ASTM C 494, Type B or D, such as Sika Corporation's Plastiment, MASTER BUILDER SOLUTIONS Corporation's MasterSet R Series or MasterSet DELVO Series, GCP applied Technologies (formerly W. R. Grace), Recover or Daratard 17 or an approved equal shall be used. Where the air temperature at the time of placement is expected to be consistently under 40 degrees F, a set accelerating admixture conforming to ASTM C494 Type C or E, such as Sika Corporation's Plastocrete 161FL, MASTER BUILDER SOLUTIONS Corporation's MasterSet AC 534 or MasterSet FP 20, GCP applied Technologies (formerly W. R. Grace), Daraset 400 or Polarset or an approved equal shall be used.

b. Normal and mid-range water reducing admixtures shall conform to ASTM C 494, Type A, and shall be MASTER BUILDER SOLUTIONS Corporation's MasterPozzolith Series, MasterPolyheed series, GCP applied Technologies (formerly W. R. Grace), ADVA series, Zyla series, WRDA series or approved equal. The quantity of admixture used and the method of mixing shall be in accordance with the manufacturer's instructions and recommendations.

c. High range water reducer shall conform to ASTM C 494, Type F or G.

   If the high range water reducing admixture is added to the concrete at the batch plant, it shall be, ADVA series ADVA 190, ADVA 198, ADVA 140M as manufactured by GCP Applied Technologies (formerly W. R. Grace) MasterRheobuild 1000, MasterGlenium Series, or PS 1466 as manufactured by MASTER BUILDER SOLUTIONS Corporation; or an approved equal**.** High range water reducer shall be added to the concrete after all other ingredients have been mixed and initial slump has been verified.

   If the high range water reducer is added to the concrete at the job site, it shall be used in conjunction with a normal water reducer and shall be MasterPozzolith 700 or MasterPozzolith 322 and MasterGlenium 7500 or MasterGlenium 3030, as manufactured by MASTER BUILDER SOLUTIONS Corporation; ADVA series ADVA 190, ADVA 198, ADVA 140M and Zyla Series, Zyla 625 or WRDA series, WRDA 64 as manufactured by GCP Applied technologies (formerly W. R. Grace); or an approved equal. Concrete shall have a slump of 3 inches ± 1/2 inch prior to adding the high range water reducing admixture at the job site. Slump shall not exceed 9 inches for concrete after addition of high-range water-reducing admixture. The high range water reducing admixture shall be accurately measured and pressure injected into the mixer as a single dose by an experienced technician. A standby system shall be provided and tested prior to each day's operation of the job site system.

   Concrete shall be mixed at mixing speed for a minimum of 30 mixer revolutions after the addition of the high range water reducer.

d. Air-entraining admixture meeting the requirements of ASTM C 260, such as MASTER BUILDER SOLUTIONS Corporation's MasterAir Series or, GCP Applied Technologies (formerly W. R. Grace Daravair or Darex series**,** approved equal, shall be used. Sufficient air-entraining agent shall be used to provide a

total air content of 3 to 4 percent; provided that, when the mean daily temperature in the vicinity of the worksite falls below 40 degrees Fahrenheit for more than one day, the total air content provided shall be 5 to 6 percent. The CITY reserves the right, at any time, to sample and test the air-entraining agent received on the job by the CONTRACTOR. The air-entraining agent shall be added to the batch in a portion of the mixing water. The solution shall be batched by means of a mechanical batcher capable of accurate measurement.

e. Workability-retaining admixture shall conform to ASTM C 494, Type S, shall retain concrete workability without affecting time of setting or early age strength development, and shall be MASTER BUILDER SOLUTIONS Corporation's MasterSure Z60, GCP Applied Technologies (formerly W. R. Grace) ADVA XT2, or approved equal.

f. Corrosion-inhibiting admixture shall be a nominal 30 percent solution of calcium nitrite or an amine/ester-based organic corrosion-inhibiting admixture, and shall be MASTER BUILDER SOLUTIONS Corporation's MasterLife CI 30, MasterLife CI 222, GCP Applied Technologies (formerly W. R. Grace) DCI series**,** or approved equal.

g. Shrinkage-reducing admixture shall conform to ASTM C 494, Type S, and shall be MASTER BUILDER SOLUTIONS Corporation's MasterLife SRA 20, MasterLife CRA 007, GCP Applied Technologies (formerly W. R. Grace) Eclipse series, or approved equal.

h. Alkali-silica reaction inhibiting admixture shall conform to ASTM C 494, Type S, shall contain a nominal lithium nitrate content of 30 percent, and shall be MASTER BUILDER SOLUTIONS Corporation's MasterLife ASR 30, GCP Applied Technologies (formerly W. R. Grace) RASIR, or approved equal.

j. Calcium Chloride: Except as otherwise provided herein, calcium chloride will not be permitted to be used in concrete.

2.2 CURING MATERIALS

A. Materials for curing concrete shall conform to Section 03370, "Curing Concrete", Part 2.

2.3 NON-WATERSTOP JOINT MATERIALS

A. Materials for non-waterstop joints in concrete shall conform to Section 03290, "Joints In Concrete", Part 2.

2.4 MISCELLANEOUS MATERIALS

A. Floor sealer/hardener shall be a colorless, aqueous solution of zinc and/or magnesium fluorosilicate or of sodium silicate, and shall be as manufactured by MASTER BUILDER SOLUTIONS Corporation, W.R. Grace Co., or an approved equal. The solution shall be delivered ready for use in the manufacturer's original sealed containers. Each gallon of the fluorosilicate solution shall contain not less than 2 pounds of crystals.

B. Dampproofing agent shall be an asphalt emulsion, such as MasterSeal 610, MasterSeal 614 or MasterSeal 615 (formerly Hydrocide 600, Hydrocide 700 and Hydrocide 700B) by MASTER BUILDER SOLUTIONS Corporation, GCP Applied Technologies (formerly W. R. Grace) Darapel, Flintkote C-13-E Foundation Coating, or an approved equal.

C. Epoxy adhesives shall be per the following products for the applications specified:

a. For bonding freshly-mixed, plastic concrete to hardened concrete, Sikadur Hi-Mod Epoxy Adhesive, as manufactured by Sika Corporation; MasterEmaco ADH 326 (formerly Concresive Liquid LPL) as manufactured by MASTER BUILDER SOLUTIONS Corporation; or an approved equal.

b. For bonding hardened concrete or masonry to steel, MasterEmaco ADH 327RS (formerly Concresive Paste SPL), Colma-Dur Gel, Sikadur Hi-Mod Gel, or an approved equal.

D. Drypack: Field mixture of 1 part Portland cement to 2 parts fine aggregate mixed to a damp consistency such that a ball molded in the hands will stick together and hold its shape. At CONTRACTOR's option, the specified admixture may be added for increased workability at lower water/cement ratio. In lieu of field mixing, CONTRACTOR may use factory mixed drypack material, such as MASTER BUILDER SOLUTIONS Corporation “MasterFlow 100” or Euclid "Euco Dry Pack Grout", or an approved equal.

E. Expansion Joint Filler: Asphalt impregnated fiber or non-extruding foam type, conforming to ASTM D994 and D1751, or D1752.

F. Construction Joint Materials: “Key-Kold”, “Kwik-Joint” of profiles indicated, or an approved equal.

G. Bonding Agent: **“**Weld-Crete”, manufactured by Larsen Products Co. or ”MasterEmaco ADH” Series (formerly Concresive Series), as manufactured by MASTER BUILDER SOLUTIONS Corporation, or an approved equal.

2.5 CONCRETE DESIGN REQUIREMENTS

A. General: Concrete shall be composed of cement, SCM, admixtures, aggregates and water. These materials shall be of the qualities specified. The exact proportions in which these materials are to be used for different parts of the work will be determined during the trial batch. In general, the mix shall be designed to produce a concrete capable of being deposited so as to obtain maximum density and minimum shrinkage and, where deposited in forms, to have good consolidation properties and maximum smoothness of surface. Mix designs with more than 41 percent of sand of the total weight of fine and coarse aggregate shall not be used. The aggregate gradations shall be formulated to provide fresh concrete that will not promote rock pockets around reinforcing steel or embedded items. The proportions shall be changed whenever necessary or desirable to meet the required results at no additional cost to the CITY. All changes shall be subject to review by the ENGINEER.

B. W/cm and Compressive Strength: The minimum compressive strength and cement content of concrete shall be not less than that specified in the following tabulation.

Type of Work	Min. 28-Day Compressive Strength (psi)	Aggregate Gradation	Cement per cu yd (sacks)	Maxw/cm (by weight)
Structural Concrete *				
a. Storm Drain Structures:	4,000	C	7.0	0.45
b. Other Structures **:	3,250	C	6.0	0.54 **

Sitework concrete:	2,500	C	5.5	0.50
Lean concrete:	2,000	C	4.8	0.71

Note: One sack of cement equals 94 lb.
* Use “B” Aggregate gradation when placing conditions permit.
** For Slabs on grade, maximum w/cm shall be 0.45.

C Adjustments to Mix Design: The mixes used shall be changed whenever such change is necessary or desirable to secure the required strength, density, workability, and surface finish and the CONTRACTOR shall be entitled to no additional compensation because of such changes.

D. Fly ash/pozzolan may be used per requirements of the Standard Specifications, when approved by the ENGINEER as a partial cement replacement in concrete as follows:

a. Fly ash shall replace not more than 20 percent by weight of the Portland cement in the design mix. The design mix shall contain a minimum of 7 sacks of cement per cubic yard before the replacement is made.

b. Fly ash for hydraulic/liquid containing structures shall be Class F fly ash only. Fly ash for all other structures shall be Class C or F fly ash.

2.6 CONSISTENCY

The quantity of water entering into a batch of concrete shall be just sufficient, with a normal mixing period, to produce a concrete which can be worked properly into place without segregation, and which can be compacted by the vibratory methods herein specified to give the desired density, impermeability and smoothness of surface. Subject to the w/c ratio requirements of section 2.5, the quantity of water shall be changed as necessary, with variations in the nature or moisture content of the aggregates, to maintain uniform production of a desired consistency. The consistency of the concrete in successive batches shall be determined by slump tests in accordance with ASTM C 143. The slumps shall be as follows:

Part of Work	Slump (in)
With high range water reducer added	9-inches max
Other work	per Standard Specifications

2.7 TRIAL BATCH AND LABORATORY TESTS

A. Before placing any concrete, a Department of Building and Safety certified testing laboratory approved by the ENGINEER shall prepare, within 30 calendar days after the date of the Notice to Proceed, a trial batch of each concrete mix, based on the preliminary concrete mixes submitted by the CONTRACTOR. During the trial batch the aggregate proportions may be adjusted by the testing laboratory using the two coarse aggregate size ranges to obtain the required properties. If one size range produces an acceptable mix, a second size range need not be used. Such adjustments shall be considered refinements to the mix design and shall not be the basis for extra compensation to the CONTRACTOR. All concrete shall conform to the requirements of this Section, whether the aggregate proportions are from the CONTRACTOR's preliminary mix design, or whether the proportions have been adjusted during the trial batch process. The trial batch shall be prepared using the aggregates, cement and admixture proposed for the project. The trial batch materials shall be of a quantity such that the testing laboratory can obtain 3 drying shrinkage, and 10 compression test specimens from each batch. The cost of not more than 3 laboratory trial

batch tests for each specified concrete strength shall be borne by the CONTRACTOR. Any additional trial batch testing required shall be performed at the expense of the CONTRACTOR.

The trial batch procedure may be waived when test data of prior performance of the proposed mix design, performed by a Department of Building and Safety certified testing laboratory, is presented by the CONTRACTOR and approved by the ENGINEER.

The requirements of this section may be waived for concrete mixes specified by the Class per the Standard Specifications.

B. The determination of compressive strength will be made by testing 6-inch diameter by 12-inch high cylinders; made, cured and tested in accordance with ASTM C 192 and ASTM C 39. Five compression test cylinders shall be tested at 7 days and 5 at 28 days. The average compressive strength for the 5 cylinders tested at 28 days for any given trial batch shall not be less than the appropriate sections of ACI 318 of the specified compressive strength.

C. A sieve analysis of the combined aggregate for each trial batch shall be performed according to the requirements of ASTM C 136. Values shall be given for percent passing each sieve.

2.8 SHRINKAGE LIMITATION

A. The maximum concrete shrinkage for specimens cast in the laboratory from the trial batch, as measured at 21-day drying age or at 28-day drying age shall be 0.036 percent or 0.042 percent, respectively. The CONTRACTOR shall only use a mix design for construction that has first met the trial batch shrinkage requirements. Testing for shrinkage but be performed as one of the first items of work.

2.9 MEASUREMENT OF CEMENT AND AGGREGATE

The amount of cement and of each separate size of aggregate entering into each batch of concrete shall be determined by direct weighing equipment furnished by the CONTRACTOR and acceptable to the ENGINEER; provided that, where batches are so proportioned as to contain an integral number of conventional sacks of cement, and the cement is delivered at the mixer in the original unbroken sacks, the weight of the cement contained in each sack may be taken without weighing as 94 pounds.

2.10 MEASUREMENT OF WATER

The quantity of water entering the mixer shall be measured by a suitable water meter or other measuring device of a type acceptable to the ENGINEER and capable of measuring the water in variable amounts within a tolerance of one percent. The water feed control mechanism shall be capable of being locked in position so as to deliver constantly any specified amount of water to each batch of concrete, and the meter shall include a set-back register with a readily visible vertical face and double hands indicating in cubic feet and decimals thereof. A positive quick-acting valve shall be used for a cut-off in the water line to the mixer. The operating mechanism must be such that leakage will not occur when the valves are closed

2.11 READY-MIXED CONCRETE

A. At the CONTRACTOR's option, ready-mixed concrete may be used meeting the requirements as to materials, batching, mixing, transporting, and placing as specified herein and in accordance with ASTM C 94, including the following supplementary requirements.

B. Ready-mixed concrete shall be delivered to the site of the work, and discharge shall be completed within 90 minutes after the addition of the cement to the aggregates or before the drum has been revolved 250 revolutions, whichever is first. In hot weather, or under conditions contributing to quick stiffening of the concrete, the ready-mixed concrete shall be discharged before the temperature of the concrete exceeds 90 degrees F.

C. Truck mixers shall be equipped with electrically-actuated counters by which the number of revolutions of the drum or blades may be readily verified. The counter shall be of the re-settable, recording type, and shall be mounted in the driver's cab. The counters shall be actuated at the time of starting mixers at mixing speeds.

D. Each batch of concrete shall be mixed in a truck mixer for not less than 70 revolutions of the drum or blades at the rate of rotation designated by the manufacturer of equipment. Additional mixing, if any, shall be at the speed designated by the manufacturer of the equipment as agitating speed. All materials including mixing water shall be in the mixer drum before actuating the revolution counter for determining the number of revolution of mixing.

E. Truck mixers and their operation shall be such that the concrete throughout the mixed batch as discharged is within acceptable limits of uniformity with respect to consistency, mix, and grading. If slump tests taken at approximately the 1/4 and 3/4 points of the load during discharge give slumps differing by more than 2-inches when the specified slump is more than 3-inches, the mixer shall not be used on the work unless the causing condition is corrected and satisfactory performance is verified by additional slump tests. All mechanical details of the mixer, such as water measuring and discharge apparatus, condition of the blades, speed of rotation, general mechanical condition of the unit, and clearance of the drum, shall be checked before a further attempt to use the unit will be permitted.

F. Each batch of ready-mixed concrete delivered at the job site shall be accompanied by a certified weighmaster delivery ticket furnished to the INSPECTOR in accordance with the Paragraph in Part 1 entitled "Certified Delivery Tickets".

G. The use of non-agitating equipment for transporting ready-mixed concrete will not be permitted. Combination truck and trailer equipment for transporting ready-mixed concrete will not be permitted. The quality and quantity of materials used in ready-mixed concrete and in batch aggregates shall be subject to continuous inspection at the batching plant by the INSPECTOR.

H Mixing and Transporting of concrete for bridge structures shall comply with Section 90-6 of CSS.

2.12 COLOR

The color of concrete sidewalks and walking paths shall be as specified in Landscape Architecture plans.

2.13 CONCRETE BARRIER

Concrete barrier materials shall comply with Section 83-2.02 of CSS.

PART 3 -- EXECUTION

3.1 PROPORTIONING AND MIXING

A. Proportioning: Proportioning of the concrete mix shall conform to the requirements of Chapter 3 "Proportioning" of ACI 301; provided that the maximum slump for any concrete shall not exceed 4-inches except when the use of high range water reducer is permitted which increases the maximum slump to 8-inches. Proportioning for bridge structures shall comply with Section 90-5 of the CSS.

B. Mixing: Mixing of concrete shall conform to the requirements of Chapter 7 of said ACI 301 Specifications and SSPWC. Whichever is most stringent shall apply.

C. Slump: Maximum slumps shall be as specified herein in Section 2.6.

D. Retempering: Retempering of concrete or mortar which has partially hardened will not be permitted.

3.2 PREPARATION OF SURFACES FOR CONCRETING

A. General: Wet wood forms sufficiently to tighten up cracks. Wet other materials sufficiently to reduce adsorption and to help maintain concrete workability. Earth surfaces shall be thoroughly wetted by sprinkling, 24 hours prior to the placing of any concrete, and these surfaces shall be kept moist by frequent sprinkling up to the time of placing concrete thereon. The surface shall be free from standing water, mud, and debris at the time of placing concrete.

B. Vapor Barrier: Install under interior floor slabs on grade. Lap joints 6 inches in the direction of concrete spreading and tape seal. Seal the joints at walls and around penetrations with tape. Cover barrier with a 2 inch layer of clean damp sand.

C. Screeds: Set screeds at walls and maximum 8-foot centers between. Set to provide level floor. Check with an instrument level, transit, or laser during placing operation to maintain level floor.

D. Screeds Over Vapor Barrier: Use weighted pad or cradle type screeds and do not drive stakes through the vapor barrier. Check with an instrument level, transit, or laser.

E. Metal Floor Decking: Verify that decking joints are sealed and there are no openings or voids that will permit concrete leakage.

F. Expansion Joint Filler: Install where slabs abut buildings and elsewhere as indicated. Install full depth of concrete with top level with finished surface of concrete.

G. Joints in Concrete: Concrete surfaces upon or against which concrete is to be placed, where the placement of the old concrete has been stopped or interrupted so that, as determined by the ENGINEER, the new concrete cannot be incorporated integrally with that previously placed, are defined as construction joints. The surfaces of horizontal joints shall be given a compacted, roughened surface for good bond. Except where the Drawings call for joint surfaces to be coated, the joint surfaces shall be cleaned of all laitance, loose or defective concrete, and foreign material. Such cleaning shall be accomplished by sandblasting followed by thorough washing. All pools of water shall be removed from the surface of construction joints before the new concrete is placed.

H. After the surfaces have been prepared all approximately horizontal construction joints shall be covered with a layer of mortar approximately two-inch thick, or as shown on the plans. The mortar shall have the same proportions of cement and sand as the regular concrete mixture. The water-cement ratio of the mortar in place shall not exceed that of the concrete to be placed upon it, and the consistency of the mortar shall be suitable for placing and working in the manner hereinafter specified. The mortar shall be spread uniformly and shall be worked thoroughly into all irregularities of the surface. Wire brooms shall be used where possible to scrub the mortar into the surface. Concrete shall be placed immediately upon the fresh mortar. When casting deep walls (more than 6 feet high) over slabs or footings, in lieu of the two-inch thick mortar, a 6-inch lift of a rich pea gravel mix with the same water-cement ratio as the wall concrete shall be placed and spread uniformly. Wall concrete shall follow immediately and shall be placed upon the fresh pea gravel mix.

I. Embedded Items: No concrete shall be placed until all formwork, installation of parts to be embedded, reinforcement steel, and preparation of surfaces involved in the placing have been completed and ACCEPTED by the INSPECTOR at least 24 hours before placement of concrete. All surfaces of forms and embedded items that have become encrusted with dried grout from concrete previously placed shall be cleaned of all such grout before the surrounding or adjacent concrete is placed.

J. Conduits and Sleeves:

1. Locate so as not to reduce the strength of construction. Do not place pipes, except conduits in a slab of less than 3-1/2” thickness.

2. In supported concrete slabs, do not bury conduit having any outside diameter greater than 33% of the thickness of the slab. Increase slab thickness locally to meet this requirement.

3. Do not place conduit between the bottom of reinforcing steel and the bottom of supported slab.

4. In placing conduits at slabs on earth, place below the reinforcement, and encase in concrete by increasing thickness of the slab locally to at least 3” of concrete around the conduit on all sides.

K. All inserts or other embedded items shall conform to the requirements herein.

L. All reinforcement, anchor bolts, sleeves, inserts, and similar items shall be set and secured in the forms where shown or by shop drawings and shall be acceptable to the INSPECTOR before any concrete is placed. Accuracy of placement is the responsibility of the CONTRACTOR.

M. Where concrete is to be cast against old concrete, (greater than 60 days of age), the surface of the old concrete shall be thoroughly cleaned and roughened by sand-blasting, exposing the aggregate. In concrete shear-walls, suspended slabs and roof slabs, the interface surface at construction joints shall be roughened to a full amplitude of one quarter inch. The hardened surface shall be cleaned of all latent foreign material and washed clean, prior to the application of an epoxy bonding agent.

N. Concrete shall not be placed in any structure until all water entering the space to be filled with concrete has been properly cut off or has been diverted by pipes, or other means, and carried out of the forms, clear of the work. Concrete shall <u>not</u> be deposited underwater nor shall the CONTRACTOR allow still water to rise on any concrete until the concrete has attained its initial set. Water shall not be permitted to flow over the surface of any concrete in

such manner and at such velocity as will injure the surface finish of the concrete. Pumping or other necessary dewatering operations for removing ground water, if required, will be subject to the review of the ENGINEER.

O. Corrosion Protection: Pipe, conduit, dowels, and other ferrous items required to be embedded in concrete construction shall be so positioned and supported prior to placement of concrete that there will be a minimum of 2-inches clearance between said items and any part of the concrete reinforcement. Securing such items in position by wiring or welding them to the reinforcement will not be permitted.

P. Openings for pipes, inserts for pipe hangers and brackets, and the setting of anchors shall, where practicable, be provided for during the placing of concrete.

Q. Anchor bolts shall be accurately set, and shall be maintained in position by templates while being embedded in concrete.

R. Cleaning: The surfaces of all metalwork to be in contact with concrete shall be thoroughly cleaned of all dirt, grease, loose scale and rust, grout, mortar, and other foreign substances immediately before the concrete is placed.

3.3 HANDLING, TRANSPORTING, AND PLACING

A. General: Do not place concrete during rain or adverse weather conditions without means to prevent all damage. Conform to requirements specified hereinafter whenever concrete placement is required during cold or hot weather. Placing of concrete shall conform to the applicable requirements of ACI 301 and the requirements of this Section.

B. Non-Conforming Work or Materials: Concrete which upon or before placing is found not to conform to the requirements specified herein shall be rejected and immediately removed from the work. Concrete which is not placed in accordance with these Specifications, or which is of inferior quality, shall be removed and replaced by and at the expense of the CONTRACTOR.

C. Concrete shall not be placed except in the presence of duly authorized representative of the INSPECTOR. The CONTRACTOR shall notify the INSPECTOR in writing at least 48 hours in advance of placement of any concrete.

D. Placement in Wall Forms: Concrete shall not be dropped through reinforcement steel or into any deep form, whether reinforcement is present or not, causing separation of the coarse aggregate from the mortar on account of repeatedly hitting rods or the sides of the form as it falls, nor shall concrete be placed in any form in such a manner as to leave accumulation of mortar on the form surfaces above the placed concrete. In such cases, some means such as the use of hoppers and, if necessary, vertical ducts of canvas, rubber, or metal shall be used for placing concrete in the forms in a manner that it may reach the place of final deposit without separation. In no case shall the free fall of concrete exceed 4 feet below the ends of ducts, chutes, or buggies. Concrete shall be uniformly distributed during the process of depositing and in no case after depositing shall any portion be displaced in the forms more than 6 feet in horizontal direction. Concrete in forms shall be deposited in uniform horizontal layers not deeper than 2 feet; and care shall be taken to avoid inclined layers or inclined construction joints except where such are required for sloping members. Each layer shall be placed while the previous layer is still soft. The rate of placing concrete in forms shall not exceed 5 feet of vertical rise per hour.

E. Casting New Concrete Against Old: An approved epoxy adhesive bonding agent shall be applied to the old surfaces according to the manufacturer's written recommendations. This

provision shall not apply to joints where waterstop is installed, see Section 03290, "Joints in Concrete".

F. Conveyor Belts and Chutes: All ends of chutes, hopper gates, and all other points of concrete discharge throughout the CONTRACTOR'S conveying, hoisting and placing system shall be so designed and arranged that concrete passing from them will not fall separated into whatever receptacle immediately receives it. Conveyor belts, if used, shall be of a type acceptable to the ENGINEER. Chutes longer than 50 feet will not be permitted. Minimum slopes of chutes shall be such that concrete of the specified consistency will readily flow in them. If a conveyor belt is used, it shall be wiped clean by a device operated in such a manner that none of the mortar adhering to the belt will be wasted. All conveyor belts and chutes shall be covered. Sufficient illumination shall be provided in the interior of all forms so that the concrete at the places of deposit is visible from the deck or runway.

G. Placement in Slabs: Concrete placed in sloping slabs shall proceed uniformly from the bottom of the slab to the top, for the full width of the pour. As the work progresses, the concrete shall be vibrated and carefully worked around the slab reinforcement, and the surface of the slab shall be screeded in an up-slope direction.

H. Temperature of Concrete: The temperature of concrete when it is being placed shall be not more than 90 degrees Fahrenheit nor less than 40 degrees Fahrenheit in moderate weather, and not less than 50 degrees Fahrenheit in weather during which the mean daily temperature drops below 40 degrees F. Concrete ingredients shall not be heated to a temperature higher than that necessary to keep the temperature of the mixed concrete, as placed, from falling below the specified minimum temperature. If concrete is placed when the weather is such that the temperature of the concrete would exceed 90 degrees F, the CONTRACTOR shall employ effective means, such as precooling of aggregates and mixing water using ice or placing at night, as necessary to maintain the temperature of the concrete, as it is placed, below 90 degrees F. The CONTRACTOR shall be entitled to no additional compensation on account of the foregoing requirements.

I. Cold Weather Placement:

1. Earth foundations shall be free from frost or ice when concrete is placed upon or against them. Fly ash concrete shall not be placed when the air temperature falls below 50 degrees Fahrenheit.

2. Normal Concrete: When the temperature is below 40 degrees Fahrenheit, the temperature of the concrete placed in the forms shall be at least 60 degrees Fahrenheit. When the temperature is below 30 degrees Fahrenheit, the temperature of the concrete as mixed shall be 65 degrees Fahrenheit. In all cases, when the daily average temperature is below 40 degrees Fahrenheit, the concrete shall be kept at 55 degrees Fahrenheit for the 72 hours, and then allowed to drop uniformly to the air temperature over the next 24 hours. Concrete temperature shall be measured by placing a thermometer 2” below the top of the concrete being placed.

3. Air-entrained concrete shall be kept at the above temperature for 27 hours and above freezing for an additional 72 hours.

4. No calcium chloride shall be used to accelerate hardening of concrete. CONTRACTOR to certify that any additive used does not contain calcium chloride.

5. If low temperature accelerating admixture is proposed, adjust concrete mix as required and obtain approval of the ENGINEER.

6. All concrete materials, reinforcement, forming materials and ground with which concrete is to come in contact shall be free of frost.

7. The covering or other protection used in connection with the curing shall remain in place and intact for at least 24 hours.

8. The work shall be protected from the elements, flowing water, and defacements of any nature during the construction operations.

9. Conform to the provisions of ACI 306.1, except as modified herein.

J. Hot Weather Placement:

Conform to ACI 305.1 and the following requirements:

1. Take extra care to reduce the temperature of the concrete being placed, and to prevent rapid drying of newly placed concrete. When the outdoor ambient temperature is more than 90 degrees Fahrenheit, shade the fresh concrete as soon as possible after placing, use an evaporation reducer or fogging to minimize rapid drying. and start curing as soon as the surface of the fresh concrete is sufficiently hard to permit it without damage.

2. Concrete placement temperatures shall be controlled by the CONTRACTOR and shall not be limited to:

A. Shading and cooling the aggregate;

B. Avoiding use of hot cement;

C. Cooling mixing water by additions of ice;

D. Insulating water supply lines and tanks; and

E. Insulating mixer drums or cooling them with sprays or wet burlap.

K. Cast-in-place concrete shall be homogeneous throughout the structural element. The methods used to place shall prevent segregation. Placement of concrete for bridge structures shall conform to Section 51-1 of the CSS.

3.4 PUMPING OF CONCRETE

A. General: If the pumped concrete does not produce satisfactory end results, the CONTRACTOR shall discontinue the pumping operation and proceed with the placing of concrete using conventional methods.

B. Pumping Equipment: The pumping equipment must have 2 cylinders and be designed to operate with one cylinder only in case the other one is not functioning. In lieu of this requirement, the CONTRACTOR may have a standby pump on the site during pumping.

C. The minimum diameter of the hose (conduits) shall be 4-inches.

D. Pumping equipment and hoses (conduits) that are not functioning properly, shall be replaced.

E. Aluminum conduits for conveying the concrete will not be permitted.

F. Gradation of coarse aggregates shall conform to ASTM C 33 and shall be as close to the middle range as possible.

G. Gradation of fine aggregate shall conform to ASTM C 33, with 15 to 30 percent passing the number 50 screen and 5 to 10 percent passing the number 100 screen. The fineness modulus of sand used shall not be over 3.00.

H. Field Control: Concrete samples for slump per ASTM C 143 and test cylinders per ASTM C31 and ASTM C39.

3.5 ORDER OF PLACING CONCRETE

A. The order of placing concrete in all parts of the work shall be acceptable to the ENGINEER. In order to minimize the effects of shrinkage, the concrete shall be placed in units as bounded by construction joints shown. The placing of units shall be done by placing alternate units in a manner such that each unit placed shall have cured at least 7 days before the contiguous unit or units are placed, except that the corner sections of vertical walls shall not be placed until the 2 adjacent wall panels have cured at least 14 days.

B. The surface of the concrete shall be level whenever a run of concrete is stopped. To insure a level, straight joint on the exposed surface of walls, a wood strip at least 3/4-inch thick shall be tacked to the forms on these surfaces. The concrete shall be carried about 1/2-inch above the underside of the strip. About one hour after the concrete is placed, the strip shall be removed and any irregularities in the edge formed by the strip shall be leveled with a trowel and all laitance shall be removed.

3.6 TAMPING AND VIBRATING

A. As concrete is placed in the forms or in excavations, it shall be thoroughly settled and compacted, throughout the entire depth of the layer which is being consolidated, into a dense, homogeneous mass, filling all corners and angles, thoroughly embedding the reinforcement, eliminating rock pockets, and bringing only a slight excess of water to the exposed surface of concrete during placement. Vibrators shall be high speed power vibrators (8,000 to 10,000 rpm) of an immersion type in sufficient number and with (at least one) standby units as required.

B. Operation of Vibrators: Do not horizontally transport concrete in forms with vibrators nor allow vibrators to contact forms or reinforcing. Push vibrators vertically into the preceding layers that are still plastic and slowly withdraw, producing maximum obtainable density in concrete without creating voids or segregation. In no case disturb concrete that has partially set. Vibrate at intervals not exceeding two-thirds the effective visible vibration diameter of the submerged vibrator. Avoid excessive vibration that causes segregation. Use and type of vibrators shall conform to ACI 309 "Recommended Practice for Consolidation of Concrete".

C. Correction of Segregation: Before placing next layer of concrete, and at the top of last placement for vertical elements, remove concrete containing excess water or fine aggregate or showing deficiency of coarse aggregate and fill the space with compacted concrete of correct proportions.

D. Care shall be used in placing concrete around waterstops. The concrete shall be carefully worked by rodding and vibrating to make sure that all air and rock pockets have been eliminated. Where flat-strip type waterstops are placed horizontally, the concrete shall be worked under the waterstops by hand, making sure that all air and rock pockets have been eliminated. Concrete surrounding the waterstops shall be given additional vibration, over and

above that used for adjacent concrete placement to assure complete embedment of the waterstops in the concrete.

E. Concrete in walls shall be internally vibrated and at the same time rammed, stirred, or worked with suitable appliances, tamping bars, shovels, or forked tools until it completely fills the forms or excavations and closes snugly against all surfaces. Subsequent layers of concrete shall not be placed until the layers previously placed have been worked thoroughly as specified. Vibrators shall be provided in sufficient numbers, with standby units as required, to accomplish the results herein specified within 15 minutes after concrete of the prescribed consistency is placed in the forms. The vibrating head shall be kept from contact with the surfaces of the forms. Care shall be taken not to vibrate concrete excessively or to work it in any manner that causes segregation of its constituents.

3.7 FINISHING CONCRETE SURFACES

A. General: Surfaces shall be free from fins, bulges, ridges, offsets, honeycombing, or roughness of any kind, and shall present a finished, smooth, continuous hard surface. Allowable deviations from plumb or level and from the alignment, profiles, and dimensions shown are defined as tolerances and are specified in Part 1, herein. These tolerances are to be distinguished from irregularities in finish as described herein. Aluminum finishing tools shall not be used.

B. Formed Surfaces: Formed surfaces for all structures other than building structures and bridge decks, shall be finished per Section 303-1.9 of Standard Specifications. Concrete for bridge decks shall be finished per CSS Section 51-1.17. Concrete for building and retaining wall structures shall be finished per architectural finish as specified hereon, or as shown on Drawings.

C. Unformed Surfaces: After proper and adequate vibration and tamping, all unformed top surfaces of slabs, floors, walls, and curbs shall be brought to a uniform surface with suitable tools. The classes of finish specified for unformed concrete surfaces are designated and defined as follows:

2.c Finish U1 - Sufficient leveling and screeding to produce an even, uniform surface with surface irregularities not to exceed 3/8-inch. No further special finish is required.

3.c Finish U2 - After sufficient stiffening of the screeded concrete, surfaces shall be float finished with wood or metal floats or with a finishing machine using float blades. Excessive floating of surfaces while the concrete is plastic and dusting of dry cement and sand on the concrete surface to absorb excess moisture will not be permitted. Floating shall be the minimum necessary to produce a surface that is free from screed marks and is uniform in texture. Surface irregularities shall not exceed 1/4-inch. Joints and edges shall be tooled where shown or as determined by the ENGINEER.

4.c Finish U3 - After the floated surface (as specified for Finish U2) has hardened sufficiently to prevent excess of fine material from being drawn to the surface, steel troweling shall be performed with firm pressure such as will flatten the sandy texture of the floated surface and produce a dense, uniform surface free from blemishes, ripples, and trowel marks. The finish shall be smooth and free of all irregularities.

5.c Finish U4 - Steel trowel finish (as specified for Finish U3) without local depressions or high points. In addition, the surface shall be given a light hairbroom finish with brooming perpendicular to drainage unless otherwise shown. The resulting surface shall be rough enough to provide a nonskid finish.

D. Unformed surfaces shall be finished according to the following schedule:

UNFORMED SURFACE	Finish
Grade slabs and foundations to be covered with concrete or fill material	U1
Floors to be covered with grouted tile or topping grout	U2
Slabs which are water bearing with slopes 10 percent and less	U3
Sloping slabs which are water bearing with slopes greater than 10 percent	U4
Slabs not water bearing	U4
Slabs to be covered with built-up roofing	U2
Interior slabs and floors to receive architectural finish	U2

3.8 CURING AND DAMPPROOFING

Curing and Dampproofing shall conform to Section 03370**,** "Curing Concrete", Part 3.

3.9 PROTECTION

The CONTRACTOR shall protect all concrete against injury until final acceptance by the CITY. Fresh concrete shall be protected from damage due to rain, hail, sleet, or snow. The CONTRACTOR shall provide such protection while the concrete is still plastic and whenever such precipitation is imminent or occurring. Immediately following the first frost in the fall, the CONTRACTOR shall be prepared to protect all concrete against freezing. After the first frost, and until the mean daily temperature in the vicinity of the worksite falls below 40 degrees Fahrenheit for more than one day, the concrete shall be maintained at a temperature not lower than 50 degrees Fahrenheit for at least 72 hours after it is placed.

The CONTRACTOR shall protect all concrete against injury or damage from excessive heat, lack of moisture, overstress, or any other cause until final acceptance by the CITY. Particular care shall be taken to prevent the drying of concrete and to avoid roughening or otherwise damaging the surface. Any concrete found to be damaged, or which may have been originally defective, or which becomes defective at any time prior to the final acceptance of the completed work, or which departs from the established line or grade, or which, for any other reason, does not conform to the requirements of the Contract Documents, shall be satisfactorily repaired or removed and replaced with acceptable concrete at the CONTRACTOR'S expense.

3.10 TREATMENT OF SURFACE DEFECTS

A. As soon as forms are removed, all exposed surfaces shall be carefully examined and any irregularities shall be immediately rubbed or ground in a satisfactory manner in order to secure a smooth, uniform, and continuous surface. Plastering or coating of surfaces to be smoothed will not be permitted. No repairs shall be made until after inspection by the ENGINEER. In no case will extensive patching of honeycombed concrete be permitted. Concrete containing minor voids, holes, honeycombing, or similar depression defects shall be repaired as specified herein. Concrete containing extensive voids, holes, honeycombing, or similar depression defects, shall be completely removed and replaced. All repairs and replacements herein specified shall be promptly executed by the CONTRACTOR at its own expense.

B. Defective surfaces to be repaired shall be cut back from true line a minimum depth of 1/2-inch over the entire area. Feathered edges will not be permitted. Where chipping or cutting tools are not required in order to deepen the area properly, the surface shall be prepared for bonding by the removal of all laitance or soft material, and not less than 1/32-inch depth of the surface film from all hard portions, by means of an efficient sandblast. After cutting and sandblasting, the surface shall be wetted sufficiently in advance of shooting with shotcrete or with cement mortar so that while the repair material is being applied, the surfaces under repair will remain moist, but not so wet as to overcome the suction upon which a good bond depends. The material used for repair purposes shall consist of a mixture of one sack of cement to 3 cubic feet of sand. For exposed walls, the cement shall contain such a proportion of Atlas white Portland cement as is required to make the color of the patch match the color of the surrounding concrete.

C. Holes left by tie-rod cones shall be reamed so as to leave the surfaces of the holes clean and rough. These holes then shall be repaired in an approved manner with non-shrink grout. Holes left by form-tying devices having a rectangular cross-section, and other imperfections having a depth greater than their least surface dimension, shall not be reamed but shall be repaired in an approved manner with non-shrink grout.

D. All repairs shall be built up and shaped in such a manner that the completed work will conform to the requirements of this Section, as applicable, using approved methods which will not disturb the bond, cause sagging, or cause horizontal fractures. Surfaces of said repairs shall receive the same kind and amount of curing treatment as required for the concrete in the repaired section.

E. Prior to filling any structure with water, all cracks that may have developed shall be repaired to the satisfaction of the ENGINEER. This repair method shall be done on the water bearing face of members. Prior to backfilling, faces of members in contact with fill, which are not covered with a waterproofing membrane, shall also have cracks repaired as specified herein.

3.11 CONCRETE BARRIER

Concrete barrier construction shall comply with Section 83-2.02 of CSS.

(END OF SECTION)

SECTION 03301
CAST-IN-PLACE CONCRETE PAVING

PART 1 – GENERAL

1.1 SUMMARY

A. Section includes cast-in-place concrete, including formwork, reinforcement, concrete materials, mixture design, placement procedures, joints and finishes.

1.2 SUBMITTALS

A. Mix designs: submit to the ENGINEER for review and approval. Mix design shall be signed by a licensed California Structural or Civil Engineer. Indicate amounts of mixing water to be withheld for later addition at project site, if any.

B. Material information: for each of the following, as provided by manufacturers:

1. Admixtures.
2. Form release agents.
3. Steel reinforcement and accessories.
4. Joint filler products.

C. Load tickets: in addition to the CONTRACTOR's copy, deliver a legible copy of each load ticket from the producer to the BCA inspector. Load ticket shall state quantities of all material in each load and shall be signed by weigh master. The BCA inspector shall record on each copy, the slump and location where placed on the job. Maintain tickets at jobsite.

D. Material test reports: for the following, from a qualified testing agency:

1. Aggregates: include service record data indicating absence of deleterious expansion of concrete due to alkali aggregate reactivity.

1.3 QUALITY ASSURANCE

A. Installer qualifications: CONTRACTOR shall employ on the project an installer qualified as ACI-Certified Flatwork Technician and Finisher and a supervisor who is an ACI-certified Concrete Flatwork Technician.

B. Quality control: do not commence placement of concrete until mix designs have been reviewed and approved by the PROJECT MANAGER or ENGINEER, and until copies are at the jobsite.

C. Batch plant inspections: required for all structural concrete. Inspection shall be by a CITY BCA material control inspector. The CONTRACTOR shall notify the inspector at least 24 hours in advance of mixing time. The BCA materials inspector shall be present at the beginning of each day of batching and shall perform the following:

1. Check plant and equipment quality.
2. Check identity of materials.
3. Check aggregate grading, characteristics, and water content.
4. Verify mix designs being used.
5. Check proportioning and loading of concrete materials.
6. Issue certifications of quality and quantity of materials as batched.
7. After verification of above, return to the jobsite for placement inspection.

D. Continuous placement inspection: required for all structural concrete and to be performed by an LADBS certified deputy inspector approved by the PROJECT MANAGER. The BCA inspector shall perform the following procedures:

1. Verify condition and adequacy of forms and reinforcement placement.
2. Ensure that concrete is of required quality and consistency.
3. Ensure that all requirements and conditions of concrete placement are met.
4. Make slump tests and secure cylinders.
5. Provide written reports at regular intervals reporting concrete practices.

E. Mockups: provide approx. 4-foot by 4-foot mockups to adequately portray the specified finishes, reveals, formwork, joints, etc. For each concrete finish indicated on the plans and listed below for the ENGINEER's approval prior to commencing concrete work. CONTRACTOR shall continue to construct mock-ups until an approved mock-up for each specified finish is produced at no additional cost to the CITY. Acceptable mock-ups shall be made the job standard for each finish, and workmanship. Protect accepted mock-ups from damage until completion and acceptance of the work represented by the mock-ups. Remove mock-up panel(s) from the site at completion of the project, unless otherwise instructed by PROJECT MANAGER.

1. Specified finishes to be mocked up:

    a. Concrete paving: medium broom finish, unless otherwise noted.

1.4 DELIVERY, STORAGE, AND HANDLING

A. Steel reinforcement: deliver, store, and handle steel reinforcement to prevent bending and damage. Avoid damaging coatings on steel reinforcement.

1.5 FIELD CONDITIONS

A. Hot-weather placement: comply with ACI301 and as follows:

1. Maintain concrete temperature below 90 deg F at time of placement. Chilled mixing water or chopped ice may be used to control temperature, provided water equivalent of ice is calculated to total amount of mixing water.

2. Fog-spray forms, steel reinforcement, and subgrade just before placing concrete. Keep subgrade uniformly moist without standing water, soft spots, or dry areas.

PART 2 – PRODUCTS

2.1 STEEL REINFORCEMENT

A. Reinforcing bars: shall be ASTM A615/A615m, Grade 60, deformed.

B. Plain-steel wire: shall be ASTM A1064a/A1064m, as drawn.

2.2 REINFORCEMENT ACCESSORIES

A. Joint dowel bars: ASTM A615/A615m, Grade 60, plain-steel bars, cut true to length with ends square and free of burrs.

B. Bar supports: bolsters, chairs, spacers, and other devices for spacing, supporting, and fastening reinforcing bars and welded-wire reinforcement in place. Manufacturer bar supports from steel wire, plastic, or precast concrete and of greater compressive strength than concrete.

2.2 CONCRETE MATERIALS

A. Cementitious materials:

1. Portland Cement: all cement shall be Type II, low alkali Portland Cement conforming to ASTM C150 (201-1.2).

2. Fly ash: ASTM C618, class F.

B. Normal-weight aggregates: the aggregates for all concrete construction shall be fractured face aggregates obtained from a quarry that is certified non-reactive by an approved testing laboratory as approved by the Bureau of Contract Administration, (201-1.2.2). Unless otherwise noted.

1. Maximum coarse-aggregate size: 3/4-inch nominal.

C. Water: ASTM C94/C94m and potable.

2.3 CONCRETE MIXTURES

A. Concrete specified by class: placed concrete shall be Class 520-C-2500, maximum 4-inch slump unless otherwise noted on Contract Drawings. Pumped concrete shall be Class 560-E-2500, maximum 6-inch slump unless otherwise noted on Contract Drawings. A complete delivery receipt shall be required for each truckload of concrete delivered. The receipt shall be given to the BCA Inspector, (201-1.1.2).

1. Minimum compressive strength: 2,500 PSI at 28 days.

2. Slump limit: 4-inches, plus or minus 1-inch.

2.4 CONCRETE MIXING

A. Ready-mixed concrete: measure, batch, mix, and deliver concrete according to ASTM C94/C94m and ASTM C1116/C1116m and furnish batch ticket information to BCA inspector.

1. When air temperature is between 85 and 90 deg F, reduce mixing and delivery time from 1-1/2 hours to 75 minutes; when air temperature is above 90 deg F, reduce mixing and delivery time to 60 minutes.

2.5 CONCRETE JOINT MATERIALS

A. Expansion joint material: expansion joint material shall be min. 3/8-inch-thick closed-cell, polyethylene low resistance joint filler, by Celltex Ltd., or approved equal.

B. End of pour joints: end of pour joints shall be min. 3/8-inch-thick closed-cell, polyethylene low resistance joint filler, by Celltex Ltd., or approved equal.

C. Joint urethane sealant: expansion and isolation joint sealant material shall be a urethane elastomeric sealant for concrete pavement shall be Sikaflex®-1A By Sika Corporation, or an approved equal, (201-3). Color to match concrete.

PART 3 – EXECUTION

3.1 STEEL REINFORCEMENT INSTALLATION

A. General: comply with CRSI's "Manual of Standard Practice" for fabricating, placing, and supporting reinforcement.

B. Clean reinforcement of loose rust and mill scale, earth, ice, and other foreign materials that reduce bond to concrete.

C. Accurately position, support, and secure reinforcement against displacement. Locate and support reinforcement with bar supports to maintain minimum concrete cover. Do not tack weld crossing reinforcing bars.

D. Securely fasten steel reinforcement and wire ties against shifting during concrete placement. Set wire ties with ends directed into concrete, not toward exposed concrete surfaces.

3.2 JOINTS IN CONCRETE

A. General: construct joints true to line with faces perpendicular to surface plane of concrete.

B. Construction joints: install so strength and appearance of concrete are not impaired, at locations indicated or as approved by ENGINEER.

1. Place joints perpendicular to main reinforcement. Continue reinforcement across construction joints unless otherwise indicated.

2. Form keyed joints where indicated. Embed keys at least 1-1/2 inches into concrete.

3. Space vertical joints in walls as indicated. Locate joints beside piers integral with walls, near corners, and in concealed locations where possible

C. Contraction joints in slabs-on-grade: form weakened-plane contraction joints, sectioning concrete into areas as indicated. Construct contraction joints for a depth equal to at minimum **one-fourth** of the concrete thickness as follows:

1. Tooled joints: form contraction joints after initial floating by grooving and finishing each edge of joint to a radius of 1/8-inch. Repeat tooling of contraction joints after applying surface finishes. Eliminate tool marks on concrete surfaces.

2. Saw-cut joints: form contraction joints with power saws equipped with shatterproof abrasive or diamond-rimmed blades. Cut 1/8-inch-wide joints into concrete when cutting action does not tear, abrade, or otherwise damage surface and before concrete develops random contraction cracks.

D. Isolation joints in slabs-on-grade: after removing formwork, install joint-filler strips at slab junctions with vertical surfaces, such as column pedestals, foundation walls, grade beams, and other locations, as indicated.

1. Extend joint-filler strips full width and depth of joint, terminating not less than 1/2-inch or more than 1-inch below finished concrete surface where joint sealants are indicated.

E. Doweled expansion joints: shall be placed against previously constructed concrete structures or as indicated in the plans (303-5.4.2) and the applicable details. Install dowel bars and support assemblies at joints where indicated. Lubricate one-half of dowel length to prevent concrete bonding to one side of joint. Install per details.

3.3 CONCRETE PLACEMENT

A. Before placing concrete, verify that installation of formwork, reinforcement, and embedded items is complete and that required inspections are completed.

B. Deposit concrete continuously in such thickness that no new concrete is placed on concrete that has hardened enough to cause seams or planes of weakness. If a section cannot be placed continuously, provide construction joints as indicated.

1. Deposit concrete in horizontal layers of depth not to exceed formwork design pressures.

2. Maintain reinforcement in position on chairs during concrete placement.

3. Screed slab surfaces with a straight-edge and strike off to correct elevations.

4. Slope surfaces uniformly to drains where required, and as indicated on Contract Drawings.

3.4 FINISHING FLOORS AND SLABS

A. General: comply with ACI 302.1R recommendations for screeding, re-straightening, and finishing operations for concrete surfaces. Do not wet concrete surfaces.

B. Rotary float finish: consolidate surface with power-driven floats or by hand floating if area is small or inaccessible to power-driven floats. Re-straighten, cut down high spots, and fill low spots. Repeat float passes and re-straightening until surface is left with a uniform, smooth, granular texture. Apply rotary float finish only to surfaces indicated.

C. Broom finish: apply a broom finish to exterior concrete platforms, steps, ramps, and elsewhere as indicated.

1. Immediately after float finishing, slightly roughen the trafficked surface with fiber-bristle broom perpendicular to main traffic route. Match finish(es) in approved mock-up for each finish type.

3.5 MISCELLANEOUS CONCRETE ITEM INSTALLATION

A. Repairs and filling: fill in holes and openings left in concrete structures after work of other trades is in place unless otherwise indicated. Mix, place, and cure concrete, as specified, to blend with in-place construction. Provide other miscellaneous concrete filling indicated or required to complete the work.

B. Curbs: provide monolithic finish to interior curbs by stripping forms while concrete is still green and by steel-troweling surfaces to a hard, dense finish with corners, intersections, and terminations slightly rounded per details.

C. Equipment bases and foundations:

1. Verify locations, sizes, depths, and height above finish and of concrete bases with approved equipment provided and Contract Drawings.

2. Minimum compressive strength for bases and foundations shall be 4,500 PSI at 28 days unless otherwise noted. See structural plans and details.

3. Prior to pouring concrete, place and secure all anchorage devices. Use setting drawings, templates, diagrams, instructions, and directions furnished with items to be embedded. Install anchor bolts to elevations required for proper attachment to supported equipment.

3.6 CONCRETE PROTECTION AND CURING

A. General: protect freshly placed concrete from premature drying and excessive cold or hot temperatures. Comply with ACI 301 for hot-weather protection during curing. Cure formed concrete according to ACI 308.1.

B. Exposed un-formed surfaces: begin curing slabs, sidewalks, driveway approaches, walkways and other exposed surfaces immediately after finishing concrete.

3.7 JOINT SEALING

A. For expansion and isolation joints in concrete: remove dirt, debris, saw cuttings, curing compounds, etc. From joints; leave contact faces of joints clean and dry.

B. Install approved joint sealer according to manufacturer's written instructions and applicable details.

3.8 CONCRETE SURFACE REPAIRS

A. Defective concrete: repair and patch defective areas when directed by BCA Inspector. Remove and replace concrete that cannot be repaired and patched to ENGINEER's approval.

B. Repairing un-formed surfaces: test un-formed surfaces, such as floors and slabs, for finish and verify surface tolerances specified for each surface. Correct low and high areas. Test surfaces sloped to drain for trueness of slope and smoothness; use a sloped template.

1. Repair finished surfaces containing defects. Surface defects include spalls, pop-outs, honeycombs, rock pockets, crazing and cracks in excess of 0.01 inch wide or that penetrate to reinforcement or completely through unreinforced sections regardless of width, and other objectionable conditions.

2. Repair defective areas, except random cracks and single holes 1 inch or less in diameter, by cutting out to the nearest control joints and replacing with fresh concrete. Remove defective areas with clean, square cuts and expose steel

reinforcement with at least a 3/4-inch clearance all around. Dampen concrete surfaces in contact with patching concrete and apply bonding agent. Mix patching concrete of same materials and mixture as original concrete, except without coarse aggregate. Place, compact, and finish to blend with adjacent finished concrete. Cure in same manner as adjacent concrete.

3. Repair random cracks and single holes 1-inch or less in diameter with patching mortar. Groove top of cracks and cut out holes to sound concrete and clean off dust, dirt, and loose particles. Dampen cleaned concrete surfaces and apply bonding agent. Place patching mortar before bonding agent has dried. Compact patching mortar and finish to match adjacent concrete. Keep patched area continuously moist for at least 72 hours.

3.9 FIELD QUALITY CONTROL

A. Special inspections: engage a LADBS Deputy Special Inspector and qualified testing to perform field tests and inspections and prepare test reports when required by Codes or Contract Drawings.

B. Required inspections. BCA Inspector shall inspect the following prior to concrete placement:

1. Steel reinforcement placement.
2. Verification of use of required design mixture.
3. Concrete placement, including conveying and depositing.

C. Samples: BCA Inspector will select and take samples for testing during the course of the work as considered necessary. Cost of testing will be paid for by the CITY.

D. Rejected materials: CONTRACTOR shall remove off the site all concrete below specified strength.

E. Cost of removal and retesting: CONTRACTOR shall pay for full cost of removal of rejected concrete and its replacement with concrete if specified strength and retesting.

(END OF SECTION)

SECTION 03315

GROUT

PART 1 -- GENERAL

1.1 THE REQUIREMENT

A. The CONTRACTOR shall furnish all materials for grout in accordance with the provisions of this Section and shall form, mix, place, cure, repair, finish, and do all other work as required to produce finished grout, in accordance with the requirements of the Contract Documents.

B. All grouts shall be City of Los Angeles approved product. The CONTRACTOR shall submit a copy of the Los Angeles Research Report with submittals.

C. The following types of grout shall be covered in this Section:

1. Non-Shrink Grout: This type of grout is to be used wherever grout is shown in the Contract Documents, unless another type is specifically referenced.

2. Cement Grout.

3. Epoxy Grout.

1.2 RELATED WORK SPECIFIED ELSEWHERE

A. Section 03250, Concrete Accessories.

B. Section 03300, Cast-in-Place Concrete.

C. Section 03400, Precast Concrete.

1.3 REFERENCE SPECIFICATIONS, CODES, AND STANDARDS

C. Comply with the reference standards of the GENERAL REQUIREMENTS.

D. Comply with the current provisions of the following Codes and Standards, as applicable.

1. Commercial Standards:

CRD-C 621	Corps of Engineers Specification for Non-shrink Grout
ASTM C 109	Test Method for Compressive Strength of Hydraulic Cement Mortars (Using 2-in or 50-mm Cube Specimens)
ASTM C 531	Test Method for Linear Shrinkage and Coefficient of Thermal Expansion of Chemical- Resistant Mortars, Grouts, and Monolithic Surfacings
ASTM C 579	Test Methods for Compressive Strength of Chemical-Resistant Mortars and Monolithic Surfacings
ASTM C 827	Test Method for Early Volume Change of Cementitious Mixtures

ASTM C 1107	Standard Specification for Packaged dry hydraulic cement grout (non-shrink)
ASTM D 696	Test Method for Coefficient of Linear Thermal Expansion of Plastics

2. Other Government Standards:

CSS	Caltrans Standard Specifications.

1.4 CONTRACTOR SUBMITTALS

A. Submittals shall be made in accordance with GENERAL REQUIREMENTS.

B. The following submittals and specific information shall be provided.

1. The CONTRACTOR shall submit certified test results verifying the compressive strength, shrinkage, and expansion requirements specified herein; and manufacturer's literature containing instructions and recommendations on the mixing, handling, placement and appropriate uses for each type of non-shrink and epoxy grout used in the work.

1.5 QUALITY ASSURANCE

A. Field Tests:

1. Compression test specimens will be taken during construction from the first placement of each type of grout, and at intervals thereafter as selected by the ENGINEER to insure continued compliance with these specifications. The specimens will be made by the INSPECTOR.

2. Compression tests and fabrication of specimens for cement grout and non-shrink grout will be performed as specified in ASTM C 109 at intervals during construction as selected by the ENGINEER. A set of three specimens will be made for testing at 7 days, 28 days, and each additional time period as appropriate.

3. Compression tests and fabrication of specimens for epoxy grout will be performed as specified in ASTM C 579, Method B, at intervals during construction as selected by the ENGINEER. A set of three specimens will be made for testing at 7 days, and each earlier time period as appropriate.

4. All grout, already placed, which fails to meet the requirements of these specifications, is subject to removal and replacement at the cost of the CONTRACTOR.

5. The cost of all laboratory tests on grout will be borne by the CITY, but the CONTRACTOR shall assist the INSPECTOR in obtaining specimens for testing. However, the CONTRACTOR shall be charged for the cost of any additional tests and investigation on work performed which does not meet the specifications. The CONTRACTOR shall supply all materials necessary for fabricating and containing the test specimens.

B. Construction Tolerances: Construction tolerances shall be as specified in the Section 03300, "Cast-in-Place Concrete," except as modified herein and elsewhere in the Contract Documents.

C. The grout used in post-tensioned prestressing systems of bridge structures, shall comply with CSS Section 50-1.09.

PART 2 -- PRODUCTS

2.1 CEMENT GROUT

A. Cement Grout: Cement grout shall be composed of one part cement, three parts sand, and the minimum amount of water necessary for the mixture to flow under its own weight. Where needed to match the color of adjacent concrete, white Portland cement shall be blended with regular cement as needed. In addition, where needed, an approved admixture may be added to increase workability at a low water/cement ratio. The minimum compressive strength at 28 days shall be 4000 psi.

B. Cement grout materials shall be as specified in Section 03300, "Cast-in-Place Concrete".

2.2 PREPACKAGED GROUTS

A. Non-Shrink Grout:

1. Non-shrink grout shall be a prepackaged, inorganic, non-gas-liberating when tested in accordance with C1107, non-metallic, cement-based grout requiring only the addition of water. Manufacturer's instructions shall be printed on each bag or other container in which the materials are packaged. The specific formulation for each class of non-shrink grout specified herein shall be that recommended by the manufacturer for the particular application.

2. Class A non-shrink grouts shall have a minimum 28-day compressive strength of 5,000 psi; shall have no shrinkage (0.0 percent) and a maximum 4.0 percent expansion in the plastic state when tested in accordance with ASTM C 827; and shall have no shrinkage (0.0 percent) and a maximum of 0.2 percent expansion in the hardened state when tested in accordance with CRD C 621.

3. Class B non-shrink grouts shall have a minimum 28-day compressive strength of 5,000 psi and shall meet the requirements of CRD C 621.

4. Application:

a. Class A non-shrink grout shall be used for the repair of all holes and defects in concrete members which are water bearing or in contact with soil or other fill material, grouting under all equipment base plates, and at all locations where grout is specified in the contract documents; except, for those applications for Class B non-shrink grout and epoxy grout specified herein. Class A non-shrink grout may be used in place of Class B non-shrink grout for all applications.

b. Class B non-shrink grout shall be used for the repair of all holes and defects in concrete members which are not water-bearing and not in contact with soil or other fill material, grouting under all base plates for structural steel members, and grouting railing posts in place.

B. Epoxy Grout:

1. Epoxy grout shall be a pourable, non-shrink, 100 percent solids system. The epoxy grout system shall have three components: resin, hardener, and specially blended aggregate, all premeasured and prepackaged. The resin component shall not contain any non-reactive diluents. Resins containing butyl glycidyl ether (BGE) or other highly volatile and hazardous reactive diluents are not acceptable. Variation of component ratios is not permitted unless specifically recommended by the manufacturer. Manufacturer's instructions shall be printed on each container in which the materials are packaged.

2. The chemical formulation of the epoxy grout shall be that recommended by the manufacturer for the particular application.

3. The mixed epoxy grout system shall have a minimum working life of 45 minutes at 75 degrees F.

4. The epoxy grout shall develop a compressive strength of 5,000 psi in 24 hours and 10,000 psi in seven days when tested in accordance with ASTM C579, Method B. There shall be no shrinkage (0.0 percent) and a maximum 4.0 percent expansion when tested in accordance with ASTM C 827.

5. The epoxy grout shall exhibit a minimum effective bearing area of 95 percent. This shall be determined by a test consisting of filling a 2-inch diameter by 4-inch high metal cylinder mold covered with a glass plate coated with a release agent. A weight shall be placed on the glass plate. At 24 hours after casting, the weight and plate shall be removed and the area in plan of all voids measured. The surface of the grout shall be probed with a sharp instrument to locate all voids.

6. The peak exotherm of a 2-inch diameter by 4-inch high cylinder shall not exceed 95 degrees Fahrenheit when tested with 75 degree Fahrenheit material at laboratory temperature. The epoxy grout shall exhibit a maximum thermal coefficient of 30×10^{-6} inches/inch/degree Fahrenheit when tested according to ASTM C 531 or ASTM D 696.

7. The CONTRACTOR shall demonstrate the ability of the epoxy grout system to completely fill the size and depth of the intended hole, blockout, or area before the system is submitted for consideration by the ENGINEER.

8. Application: Epoxy grout shall be used to embed all anchor bolts and reinforcing steel required to be set in grout, and for all other applications required in the Contract Documents.

2.3 CURING MATERIALS

Curing materials shall be as specified in Section 03300, "Cast-in-Place Concrete" for cement grout and as recommended by the manufacturer of prepackaged grouts.

2.4 CONSISTENCY

The consistency of grouts shall be that necessary to completely fill the space to be grouted for the particular application. Dry pack consistency is such that the grout is plastic and moldable but will not flow. Where "dry pack" is called for in the Contract Documents, it shall mean a grout of that consistency; the type of grout to be used shall be as specified herein for the particular application.

2.5 MEASUREMENT OF INGREDIENTS

A. Measurements for cement grout shall be made accurately by volume using containers. Shovel measurement shall not be allowed.

B. Prepackaged grouts shall have ingredients measured by means recommended by the manufacturer.

C. Measurement of ingredients for grout used in prestressing systems of bridge structures shall conform to Section 50-1.09 of the CSS.

PART 3 -- EXECUTION

3.1 GENERAL

A. All surface preparation, curing, and protection of cement grout shall be as specified in Section 03300, "Cast-in-Place Concrete". The finish of the grout surface shall match that of the adjacent concrete.

B. The manufacturer of Class A non-shrink grout and epoxy grout shall provide on-site technical assistance upon request. All costs related to this requirement shall be borne by the CONTRACTOR.

C. All mixing, surface preparation, handling, placing, consolidation, and other means of execution for prepackaged grouts shall be done according to the instructions and recommendations of the manufacturer.

D. Application of grout used in prestressing systems of bridge structures shall conform to Section 50-1.09 of the CSS.

3.2 CONSOLIDATION

Grout shall be placed in such a manner, for the consistency necessary for each application, so as to assure that the space to be grouted is completely filled.

(END OF SECTION)

SECTION 03370

CONCRETE CURING

PART 1 -- GENERAL

1.1 THE REQUIREMENT

A. The Contractor shall furnish all tools, equipment, materials, and supplies and shall perform all labor required to complete the work as indicated on the Drawings and specified herein.

B. This section covers the work necessary for the concrete curing requirements.

1.2 RELATED WORK SPECIFIED ELSEWHERE

A. Section 03100, Concrete Formwork.

B. Section 03300, Cast-In-Place Concrete.

C. Section 03400, Precast Concrete.

1.3 REFERENCE SPECIFICATIONS, CODES AND STANDARDS

A. Comply with the reference standards and Standard Specifications of the GENERAL REQUIREMENTS.

B. Comply with the current provisions of the following Codes and Standards, as applicable.

1. Federal Specifications:

UU-B-790A (Int. Amd. 1) Building Paper, Vegetable Fiber (Kraft, Waterproofed, Waterproofed, water Repellant and Fire Resistant)

2. Commercial Standards:

ACI 308	Standard Practice for Curing Concrete
ASTM C 156	Test Method for Water Retention by Concrete Curing Materials
ASTM C 171	Specifications for Sheet Materials for Concrete Curing
ASTM C 309	Specifications for Liquid Membrane-Forming Compounds for Curing Concrete

3. Government Standards:

CSS	Caltrans Standard Specifications

1.4 CONTRACTOR SUBMITTALS

A. Submittals shall be made in accordance with the GENERAL REQUIREMENTS.

1.5 QUALITY ASSURANCE

A. Quality Control Data:

1. Curing Compound: Manufacturer's Certification of Compliance, to include statement that product meets ASTM C 309**,** additional permeability requirement, and coverage.

2. Retardant For Exposed Aggregate Finish on Formed Surface: Manufacturer's Certification of Compliance including statement that product is suitable for and will meet job requirements.

3. Curing method, procedures and method of application to be used shall be in compliance with the requirements as specified herein.

PART 2 -- PRODUCTS

2.1 CURING MATERIALS

A. Materials for curing concrete as specified herein shall conform to the Standard Specifications and the following requirements:

1. Polyethylene sheet for use as concrete curing blanket shall be white and conform to ASTM C171. The loss of moisture when determined in accordance with the requirements of ASTM C156 shall not exceed 0.055 grams per square centimeter of surface.

2. Polyethylene-coated waterproof paper sheeting for use as concrete curing blanket shall consist of white polyethylene sheeting free of visible defects, uniform in appearance, having a nominal thickness of 2 mils and permanently bonded to waterproof paper conforming to the requirements of Federal Specification UU-B-790A (Int. Amd. 1). The loss of moisture, when determined in accordance with the requirements of ASTM C 156, shall not exceed 0.055 gram per square centimeter of surface.

3. Polyethylene-coated burlap for use as concrete curing blanket shall conform to ASTM C171. The loss of moisture, when determined in accordance with the requirements of ASTM C156, shall not exceed 0.055 grams per square centimeter of surface.

4. Curing mats for use in Curing Method 6 as specified herein, shall be heavy shag rugs or carpets or cotton mats quilted at 4-inches on center. Curing mats shall weigh a minimum of 12 ounces per square yard when dry.

5. Evaporation retardant shall be a material such as Confilm as manufactured by Masterbuilders, Cleveland, OH; or an approved equal**.**

B. Curing Compound:

1. Curing compound shall consist of a liquid which, when applied to fresh concrete by means of a spray gun, will form an impervious membrane over the exposed surfaces of the concrete.

2. The membrane may be either asphaltic or paraffin derivatives to which other waterproofing materials may have been added. Concrete curing compounds shall be designated by type as follows:

   Type 1 – Clear or translucent without dye

   Type 1-D - Clear or translucent with red fugitive dye

   Type 2 - White pigmented

   Type 3 - Light gray pigmented

   Type 4 - Black pigmented

3. Provide curing compound meeting requirements of ASTM C 309, with additional requirement that permeability not exceed 0.039 gm/square cm/72 hours, when tested in accordance with ASTM C 156 standards.

4. Provide evaporation retardant where required to prevent rapid evaporation of water from fresh exposed concrete.

5. When pigmented curing compounds are used, at the time of use, the compound shall be thoroughly mixed, with the pigment uniformly dispensed throughout the mixture.

6. Unless otherwise specified, Type 1-D curing compound shall be used, except that Type 2 shall be used for the top surface of bridge decks.

2.2 FLOOR HARDENER (SURFACE-APPLIED)

A. Floor hardener shall be a colorless, aqueous solution of zinc and/or magnesium fluosilicate.

B. Each gallon of fluosilicate solution shall contain minimum of 2 pounds of crystals.

C. All hardeners shall be furnished by the CONTRACTOR and shall be delivered ready mixed in sealed original containers bearing the manufacturer's name and product identification.

PART 3 -- EXECUTION

3.1 CURING OF CONCRETE

A. The top surface of highway bridge decks shall be cured by both the curing compound method, and by the water method except that the curing compound shall be either Pigmented Curing Compound-Chlorinated Rubber Base Type (State Specification 8030-71D-04), or Pigmented Curing Compound Chlorinated Rubber Base white or Tinted (State Specification 8030-71D-05), or as directed by the Engineer.

3.2 CURING AND DAMPPROOFING METHODS

A. General: All concrete shall be cured for not less than 10 days after placing, in accordance with the methods specified herein for the different parts of the work and described in detail in the following paragraphs. Curing concrete for bridge structures shall comply with Section 90-7 of the CSS.

Surface to be Cured or Dampproofed (except bridge structures)	Method
Unstripped forms	1
Wall sections with forms removed	6
Construction joints between footings and walls, and between floor slab and columns	2
Encasement concrete and thrust blocks	3
All concrete surfaces not specifically provided for elsewhere in this Paragraph	4
Floor slabs on grade	5
Roof and slabs not on grade	6
Floor slabs to be covered with resilient flooring	8
Exterior buried surfaces of roof slabs and basement walls	7
All liquid and water retaining structures	2

Method 1: Wooden forms shall be wetted immediately after concrete has been placed and shall be kept wet with water until removed. If steel forms are used the exposed concrete surfaces shall be kept continuously wet until the forms are removed. If forms are removed within 10 days of placing the concrete, curing shall be continued in accordance with Method 6, herein.

Method 2: The surface shall be covered with burlap mats which shall be kept wet with water for the duration of the curing period, until the concrete in the walls has been placed. No curing compound shall be applied to surfaces cured under Method 2.

Method 3: The surface shall be covered with moist earth not less than 4 hours, nor more than 24 hours, after the concrete is placed. Earthwork operations that may damage the concrete shall not begin until at least 7 days after placement of concrete.

Method 4: The surface shall be sprayed with a liquid curing compound.

1 Curing compound shall be applied in 2 coats according to the manufacturer's printed instructions. The direction of application of the second coat shall be perpendicular to the first. The second coat shall be applied when the first coat is dry to touch, but not to exceed 4 hours. Each coat shall be applied at a rate not more than 200 square feet per gallon and in such a manner as to cover the surface with a uniform film which will seal thoroughly.

2 Where the curing compound method is used, care shall be exercised to avoid damage to the seal during the curing period. The CONTRACTOR shall maintain and monitor the curing compound membrane for a minimum of 10 days. Should the seal be damaged or broken before the expiration of this curing period, the break shall be repaired immediately by the application of additional curing compound over the damaged portion.

3 Wherever curing compound may have been applied by mistake to surfaces against which concrete subsequently is to be placed and to which it is to adhere, said compound shall be entirely removed by wet sandblasting just prior to the placing of new concrete.

4 Application of the curing compound to the concrete shall commence as soon as the finished surface of the concrete reaches a uniformly damp appearance with no free water on the surface. Curing compound shall also be applied no later than 2 hours after removal of forms from contact with formed surfaces or after the placement of concrete on the subgrade. At any point, the application rate shall be within 50 square feet per gallon of the nominal rate and the average application rate shall be within 25 square feet per gallon of the nominal rate specified when tested in accordance with California Test 535.

5 Repairs required to be made to formed surfaces shall be made within the said 2-hour period; provided, however, that any such repairs which cannot be made within the said 2-hour period shall be delayed until after the curing compound has been applied. When repairs are to be made to an area on which curing compound has been applied, the area involved shall first be wet-sandblasted to remove the curing compound, following which repairs shall be made as specified herein.

6 At the time of use, pigmented curing compounds shall be maintained in a thoroughly mixed condition. Containers of curing compound shall remain air-tight when not in use.

7 The CONTRACTOR shall apply curing compound in the presence of the INSPECTOR. Curing compound shall be applied to form a continuous and uniform membrane.

Method 5: Immediately after the concrete has been screeded, it shall be treated with a liquid evaporation retardant. The retardant shall be used again after each work operation as necessary to prevent drying shrinkage cracks.

1. Immediately after each square foot of the concrete has been finished, it shall be given a coat of curing compound in accordance with Method 4, herein. Not less than one hour nor more than 4 hours after the coat of curing compound has been applied, the surface shall be wetted with water delivered through a fog nozzle, and concrete-curing blankets shall be placed on the slabs. The curing blankets shall be polyethylene sheet, polyethylene-coated waterproof paper sheeting or polyethylene-coated burlap. The blankets shall be laid with the edges butted together and with the joints between strips sealed with 2-inch wide strips of sealing tape or with edges lapped not less than 3-inches and fastened together with a waterproof cement to form a continuous watertight joint.

2. The curing blankets shall be left in place during the 10-day curing period and shall not be removed until after concrete for adjacent work has been placed. Should the curing blankets become torn or otherwise ineffective, the CONTRACTOR shall replace damaged sections. During the first 3 days of the curing period, no traffic of any nature and no depositing, temporary or otherwise, of any materials shall be permitted on the curing blankets. During the remainder of the curing period, foot traffic and temporary depositing of materials that impose light pressure will be permitted only on top of plywood sheets 5/8-inch minimum thickness, laid over the curing blanket. The CONTRACTOR shall add water under the curing blanket as often as necessary to maintain damp concrete surfaces at all times.

Method 6: Concrete slabs shall be treated with an evaporation retardant as specified in Method 5. The concrete shall be kept continuously wet by the application of water for a minimum period of at least 10 consecutive days beginning immediately after the concrete has been placed or forms removed. Heavy curing mats shall be used as a curing medium to retain the moisture during the curing period. The curing medium shall be weighted or otherwise held in place to prevent being dislodged by wind or any other causes. Until the concrete surface is covered with the curing medium the entire surface shall be kept damp by applying water using nozzles that atomize the flow so that the surface is not marred or washed. The curing blankets and concrete shall be kept continuously wet by the use of sprinklers or other means both during and after normal working hours. Immediately after the application of water has terminated at the end of the curing period, the curing medium shall be removed and curing compound immediately applied in accordance with Method 4, herein. The CONTRACTOR shall dispose of excess water from the curing operation to avoid damage to the work.

Method 7:

1. Method 6 shall be used for curing.

2. Immediately after completion of curing the surface shall be sprayed with a dampproofing agent consisting of an asphalt emulsion. Application shall be in 2 coats. The first coat shall be diluted to 1/2 strength by the addition of water and shall be sprayed on so as to provide a maximum coverage rate of 100 square feet per gallon of dilute solution. The second coat shall consist of an application of the specified material, undiluted, and shall be sprayed on so as to provide a maximum coverage rate of 100 square feet per gallon. Dampproofing material shall be as specified herein.

3. As soon as the asphalt emulsion, applied as specified herein, has taken an initial set, the entire area thus coated shall be coated with whitewash. Any formula for mixing the whitewash may be used which produces a uniformly coated white surface and which so remains until placing of the backfill. Should the whitewash fail to remain on the surface until the backfill is placed, the CONTRACTOR shall apply additional whitewash.

Method 8: Floor slabs to be covered with resilient flooring shall be coated with an asphaltic membrane curing compound such as Hunt's Process Black, or an approved equal.

3.3 EVAPORATION RETARDANT APPLICATION PROTECTION

A. Spray onto surface of fresh concrete immediately after screeding to react with surface moisture.

B. Reapply after smoothing surface with a bull float to ensure continuous, compacted monomolecular layer until final finishing is completed.

C. After finishing, apply water curing as specified.

3.4 CURING AND PROTECTION IN COLD WEATHER

A. Concrete shall not be placed during cold weather where conditions would require procedures as specified in ACI 306.

B. The Engineer, at his option, may allow cold weather placement of concrete if an extended period of cold weather is anticipated.

C. Water curing of concrete may be reduced to 6 days during periods when the mean daily temperature in the vicinity of the worksite is less than 40 degrees F; provided that, during the prescribed period of water curing, when temperatures are such that concrete surfaces may freeze, water curing shall be temporarily discontinued.

D. Concrete cured by an application of curing compound will require no additional protection from freezing if the protection at 50 degrees F for 72 hours is obtained by means of approved insulation in contact with the forms or concrete surfaces; otherwise, the concrete shall be protected against freezing temperatures for 72 hours immediately following 72 hours protection at 50 degrees Fahrenheit. Concrete cured by water curing shall be protected against freezing temperatures for 3 days immediately following the 72 hours of protection at 50 degrees F.

E. Discontinuance of protection against freezing temperatures shall be such that the drop in temperature of any portion of the concrete will be gradual and will not exceed 40 degrees Fahrenheit in 24 hours. In the spring, when the mean daily temperature rises above 40 degrees Fahrenheit for more than 3 successive days, the specified 72-hour protection at a temperature not lower than 50 degrees Fahrenheit may be discontinued for as long as the mean daily temperature remains above 40 degrees Fahrenheit; provided, that the concrete shall be protected against freezing temperatures for not less than 48 hours after placement.

F. Where artificial heat is employed, special care shall be taken to prevent the concrete from drying. Use of unvented heaters will be permitted only when unformed surfaces of concrete adjacent to the heaters are protected for the first 24 hours from an excessive carbon dioxide atmosphere by application of curing compound; provided, that the use of curing compound for such surfaces is otherwise permitted by these Specifications.

3.5 CLEAR HARDENER APPLICATION (SURFACE APPLIED)

A. Before application, thoroughly cure floors to receive hardener for minimum 28 days, keep clean, unpainted, free from membrane curing compounds, and dry with all work above them completed.

B. Do not use curing compounds where floor hardeners are specified. Use water curing only.

C. Apply hardener evenly, using three coats, allowing 24 hours between coats as follows:

1. First Coat: 1/3 strength, second coat 1/2 strength, and third coat 2/3 strength, mix with water.

2. Apply each coat so as to remain wet on surface for 15 minutes.

3. Apply approved hardeners in accordance with manufacturer's instructions.

4. After final coat is completed and dry, remove surplus hardener from surface by scrubbing and mopping with water.

(END OF SECTION)

SECTION 03400

PRECAST CONCRETE

PART 1 -- GENERAL

1.1 THE REQUIREMENT

A. The CONTRACTOR shall furnish all tools, equipment, materials, and supplies and shall perform all labor required to complete the precast concrete work in accordance with the Contract Documents.

B. This Section covers the design, fabrication, delivery and installation of all plant precast concrete units, including connections, complete, in place, as shown and specified.

1.2 RELATED WORK SPECIFIED ELSEWHERE

A. Section 03315, Grout.

B. Section 07900, Joint Sealants.

1.3 REFERENCE SPECIFICATIONS, CODES AND STANDARDS

A. Comply with reference standards of the GENERAL REQUIREMENTS.

B. Comply with the current provisions of the following Codes and Standards, or as applicable:

1. Commercial Standards:

ACI 301	Specifications for Structural Concrete
ACI 304	Guide for Measuring, Mixing, Transporting and Placing Concrete
ACI 311	Guide for Concrete Plant Inspection and Testing of Ready-Mixed Concrete
ACI 315	Details and Detailing of Concrete Reinforcement
ACI 318	Building Code Requirements for Reinforced Concrete
ACI 347	Guide to Formwork for Concrete
AWS A5.4	Welding Rods and Electrodes
AWS D1.1	Welding and Cutting
AWS D1.4	Structural Welding Code – Reinforcing Steel
ASTM A 184	Specification for Fabricated Deformed Steel Bar Mats for Concrete Reinforcement
ASTM A 185	Specification for Steel Welded Wire, Fabric, Plain, for Concrete Reinforcement

ASTM A 193	Specification for Alloy-Steel and Stainless Steel Bolting Materials for High-Temperature Service
ASTM A 194	Specification for Carbon and Alloy Steel Nuts for Bolts for High-Pressure and High-Temperature Service
ASTM A 351	Specification for Steel Castings, Austenitic, for High-Temperature Service
ASTM A 497	Specification for Welded Deformed Steel Wire Fabric for Concrete Reinforcement
ASTM A 580	Specification for Stainless and Heat-Resisting Steel Wire
ASTM A 615	Specification for Deformed and Plain Billet-Steel Bars for Concrete Reinforcement
ASTM A 666	Specification for Austenitic Stainless Steel, Sheet, Strip, Plate, and Flat Bar for Structural Applications
ASTM A 775	Specifications for Epoxy-Coated Reinforcing Steel Bars
ASTM C 33	Specification for Concrete Aggregates
ASTM C 67	Method for Sampling and Testing Brick and Structural Clay Tile
ASTM C 127	Test Method for Specific Gravity and Absorption of Coarse Aggregate
ASTM C 128	Test Method for Specific Gravity and Absorption of Fine Aggregate
ASTM C 150	Specification for Portland Cement
ASTM C 173	Test Method for Air Content of Freshly Mixed Concrete by the Volumetric Method
ASTM C 204	Test Method for Fineness of Portland Cement by Air Permeability Apparatus
ASTM C 231	Test Method for Air Content of Freshly Mixed Concrete by the Pressure Method
ASTM C 260	Specification for Air-Entraining Admixtures for Concrete
ASTM C 311	Method for Sampling and Testing Fly Ash or Natural Pozzolans for Use as a Mineral Admixture in Portland Cement Concrete

ASTM C 494	Test Method for Shear Fatigue of Sandwich Core Materials
ASTM D 2240	Test Method for Rubber Property -- Durometer Hardness
AWS B2.1	Specification for Welding Procedure and Performance Qualification
AWS D1.4	Structural Welding Code - Reinforced Steel
PCI MNL-116	Manual for Quality Control for Plants and Production of Structural Precast Concrete Products
PCI MNL-117	Manual for Quality Control for Plants and Production of Architectural Precast Concrete Products
PCI MNL-121	Manual for Structural Design of Architectural Precast Concrete

2. Government Standards:

CSS	Caltrans Standard Specifications.

1.4 CONTRACTOR SUBMITTALS

A. Submittals shall be made in accordance with the GENERAL REQUIREMENTS.

B. Shop Drawings:

1. Shop drawings shall provide details in accordance with ACI 315 and ACI 318 including installation details.

2. Shop drawings, including design computations, shall be stamped and signed by a civil or structural engineer registered in the State of California and shall be approved by the ENGINEER.

3. Shop drawings shall indicate precast unit identification marks, location of units in the WORK, elevations, fabrication details, welding details, reinforcement, connections, dimensions, interface with adjacent members, and special handling instructions in sufficient detail to cover manufacture, handling, and erection. Shop drawings shall include erection drawings. Shop drawings shall also include design computations for above mentioned drawings.

4. Shop drawings shall be divided into complete separate submittals for each structure. Each complete submittal shall consist of a panel schedule and shop drawings.

   a. Panel Schedule: Showing all exterior elevations of the structure, including all precast concrete enclosure faces exposed to view, in its associated shop drawing submittal. Elevations at a minimum scale of 1/8 inches = 1 foot-0 inches shall be drawn, identifying the type and location of each panel by a number which corresponds to the panel number appearing on an associated shop drawing; this same number shall be permanently marked on the back of each panel as they are fabricated.

   b. Shop Drawings: Showing all elevations, dimensions, horizontal and vertical sections, openings, inserts, reinforcing, anchorage devices, pick-up points, details, design computations, and other requirements for each different type of panel to be incorporated into the portion of the project covered by the submittal. Drawings shall be 24 inches x 36 inches maximum.

C. Mix Proportions: Prior to commencing operations, including fabrications of the precast concrete for any mock-up, a statement shall be submitted giving the nominal maximum aggregate size and proportions of all ingredients that will be used in the manufacture of concrete. The statement shall include test results from an approved testing laboratory, with certification stamp and signature by a Civil or Structural Engineer registered in the State of California. No substitutions shall be made in materials used in the concrete mix without approval and additional tests to verify that the concrete properties are satisfactory. A copy shall be submitted of concrete mix with each set of samples.

D. Test Reports: Tests for compressive strength of concrete shall be performed by an approved independent commercial testing laboratory at no cost to the CITY. Copies of test reports including all test data and all test results shall be submitted for review and approval of the ENGINEER.

E. Certificates of Compliance: Certificates of compliance shall be submitted attesting that materials and products meet or exceed specified requirements.

F. Manufacturer's Qualifications: Prior to commencing operations, a statement shall be submitted giving the qualifications of the precast concrete Manufacturer, and evidence that the Manufacturer and plant are PCI certified.

1.5 QUALITY ASSURANCE

A. General Requirements: Design precast members under direct supervision of a professional structural engineer experienced in design of precast concrete units, registered in the State and conforming to requirements of PCI MNL-121 and to ACI 318.

   1. Precast Manufacturer and erectors shall be qualified in accordance with PCI MNL-117 and MNL-116.

   2. Welding shall be in accordance with AWS D1.1, AWS D12.1, AWS B2.1, and AWS A5.4.

3. Manufacture, Transportation and Installation: The Manufacturer shall specialize in providing precast products and services normally associated with precast concrete construction with high quality architectural finishes similar to that indicated on drawings, using procedures complying with PCI MNL-116 and MNL-117, and PCI plant certified for at least 5 years.

4. Use adequate number of skilled workers who are thoroughly trained and experienced in the necessary crafts and who are completely familiar with the specified requirements and methods needed for proper performance of the work of this Section.

1.6 DESIGN REQUIREMENTS

A. General: The precast concrete panel and connection designs shown hereon represent minimum precast construction requirements. The Manufacturer shall verify the panel and connection designs for all handling, erection, and service conditions, and shall provide any additional materials necessary to meet the design conditions.

B. Concrete Mix: The concrete mix shall be designed by the Manufacturer, with certification stamp and signature by a Civil or Structural Engineer registered in the State of California, and approved by the ENGINEER, using the materials and quantities specified to meet all of the requirements of this specification.

1. Proportioning of Concrete Mixes: Mixes shall be proportioned by weight except water and admixtures may be batched by volume if desired. Trial mixes and testing to meet requirements of the strengths of concrete specified is the CONTRACTOR's responsibility. Design mix shall contain similar materials as those proposed for use in the WORK.

2. Admixtures: Concrete shall contain an air entraining admixture in proportion so as to provide 4 percent plus or minus 1 percent total air in the concrete as determined by ASTM C 173 or C 231. Set retarding admixtures may be used provided cement content is not reduced. Water reducing admixtures may be used provided they are used in the mix design studies. High-range water reducers (superplasticizers) shall be used only where specifically called for in this Section, otherwise superplasticizers shall not be used without written approval from the ENGINEER. No admixture may contain chlorides, bromides, or fluorides.

3. Water: Clean, potable water. The CONTRACTOR shall provide tests to assure that no more than 200 parts per million total aggregated content of chlorides, bromides, and fluorides are present.

C. Formwork: Formwork shall be designed to withstand high-frequency vibration and to ensure finished units.

D. Pickup Points and Boxouts: Pickup points, boxouts, and inserts on panel faces and surfaces to be exposed are prohibited except as approved by the ENGINEER.

1.7 DELIVERY, STORAGE AND HANDLING

A. General: Deliver precast concrete units to the job-site in such quantities and at such times as to assure the continuity of construction. Precast members shall be handled to position consistent with their shape and design; they shall be lifted and supported from design incorporated support points and provided with strong backs and other devices as required. Lifting or handling equipment shall be capable of maintaining units during manufacture, storage, transportation, erection, and in position for fastening.

B. Blocking and supports, lateral restraints and protective materials during transport and storage shall be clean, nonstaining, without causing harm to exposed surfaces, including temporary support to prevent bowing and warping. Lateral restraints shall be provided to prevent undesirable horizontal movement. Edges and exposed faces of members shall be protected to prevent straining, chipping, or spalling of concrete.

C. Units shall be marked with date of production and final position in structure in location not visible after erection.

D. Precast units shall be stored off the ground in a manner to keep markings visible, and to prevent cracking, distortion, warping, staining or other physical damage, and they shall be protected from weather, marring, and overload.

E. Stainless Steel Hardware: Stainless steel hardware shall be transported, handled, stored, and protected in wood crates.

PART 2 -- PRODUCTS

2.1 CONCRETE MATERIALS

A. Cement: ASTM C 150, Type II, "low alkali," white color. "Low alkali" requirement may be waived if not reactive as defined in Appendix to ASTM C 33. Submit laboratory test reports.

B. Aggregate: ASTM C 33, 1/2-inch maximum coarse aggregate size fine aggregate ratio to total aggregate volume = 0.35 min, 0.55 max.

1. Water Absorption, Coarse Aggregate: ASTM C 127.

2. Water Absorption, Fine Aggregate: ASTM C 128.

C. Reinforcing Steel: ASTM A 615, Grade 60, deformed epoxy coated in accordance with ASTM A 775.

D. Welded Wire Fabric:

1. Plain: ASTM A 185, epoxy coated.

2. Deformed Steel: ASTM A 497, epoxy coated.

3. Fabricated Steel Bar or Rod Mats: ASTM A 184, epoxy coated.

E. Tie Wire: ASTM A 580, Type 316L, cold finished annealed, Huntington Alloy Co. "Monel", "Inconel", or an approved equal.

F. Air Entrainment Admixture: ASTM C 260.

G. Water Reducing or Retarding Admixtures: ASTM C 494, Type C, D, or F/G, with no chloride, bromide, and fluoride ingredients. Use Pozzolith 300-R manufactured by Master Builders, Plastiment manufactured by Sika Chemical Corp., or an approved equal.

H. Silica Fume Slurry Admixture: 45 to 50 percent silica fume, water, and superplasticizer as dispersant. Silica Fume: 85 percent amorphous silicon dioxide in accordance with ASTM C 311; loss on ignition shall not exceed 6 percent and moisture shall not exceed 3 percent in accordance with ASTM C 311. Surface area not less than 10,000 square meters per kilogram at bed porosity of 0.50 in accordance with ASTM C 204.

Reduce water in mix by 5.6 to 9.5 lbs for each gallon of slurry added to mix, as recommended by slurry Manufacturer used.

Add Los Angeles City approved slurry to concrete mix to achieve 7.5 percent dry silica fume by weight of cement. Mixing procedures as recommended by silica fume slurry manufacturer. Sika "Sikacrete 950"; W.R. Grace "Force 10,000" or approved equal. Submit applicable Los Angeles Research Report with shop drawing submittal.

I. Pigment: Pure mineral type, color-resistant to alkalis, nonfading. Color as required to produce finished concrete matching color and appearance of prebid sample and the 72-inch by 72-inch sample at the ENGINEER's field office.

2.2 SUPPORT DEVICES

Unless otherwise specified on the project plans, the following requirements shall apply:

A. Connecting and Support Devices: ASTM A 666, Type 316L stainless steel.

B. Bolts: ASTM A 193, Grade B8M (Type 316).

C. Nuts and Washers: ASTM A 194, Grade 8M (Type 316).

D. Weld Filler Metal for Stainless Steel: Stainless steel to stainless steel; AWS A5.4, Grade 316L filler metal; stainless steel to carbon steel, AWS A5.4, Grade 309 filler metal, 3/32-inch diameter.

E. Primer: Zinc-dust, zinc oxide primer in a phenolic resin spare varnish vehicle, TT-P-641 Type III (for galvanized surfaces).

2.3 ACCESSORIES

Unless otherwise specified on the project plans, the following requirements shall apply:

A. Plates, Angles, Anchors, studs, and other metal accessories exposed to view, moisture, or weather shall be hot-dipped galvanized steel.

B. Reglets: Plastic, shaped and flanged to remain in place once cast; tape closed to prevent concrete intrusion.

C. Bearing Pads: Neoprene, molded to size or cut from molded sheet, 70-80 Type A durometer, ASTM D 2240.

D. Sealant: Specified in Section 07900, "Joint Sealants."

E. Gaskets: ASTM C 509, preformed, firm, cellular, neoprene, sized to be under constant compression at the joints, and manufactured in lengths to minimize field splices.

2.4 FORMS AND MOLDS

A. Forms: Manufacturer's standard with smooth, hard, dense, and rigid casting surface; without bow, warpage, oil canning, or other imperfections. Comply with PCI MNL 117, Division V, Section 2, Article 5.2.1.

B. Form Release Agent: Manufacturer's standard, nonstaining, nonpetroleum based; compatible with concrete surface sealer.

C. Surface Sealer: Clear, flat, penetrating, nonyellowing, nonclouding solution; high concentration of organosilane in an aqueous alcoholic vehicle which is designed to provide water repellent concrete surfaces from which graffiti can be easily removed. Oil-type silicones, paraffins, waxes, vinyls, modified urethanes, or acrylics shall not be used. Sealant shall be tested by Manufacturer and proved compatible with surface sealer.

D. Molds: Fabricate using steel, concrete, fiberglass, reinforced plastic or wood.

a. Selection of materials for molds shall be at manufacturer's option, except that wood shall not be use without specific prior approval of the ENGINEER.

b. Cast elements in molds of rigid construction, accurate in detail with precise corners and arises, and designed to provide close control of dimensions, radii, and details as indicated on the Contract Drawings.

c. Prior to casting of precast elements, molds shall have surface joints, radii, and corners filled, ground, filed, straightened, or otherwise removed to provide finished concrete surface that is smooth and dense, free of honeycombing, air pockets, offsets, sinkages, or other irregularities.

d. Mold Release Agents: Synthetic resin or organic compound containing no wax, oil, silicates, or varnish, and compatible with specified coatings, sealants, fresh concrete, curing process, and adhesives.

e. Cast molds with release agents to facilitate removal of elements from molds.

2.5 MIX

Silica Fume Concrete: Minimum 5,000 psi (unless noted otherwise on the project plans), 28-day compressive strength; aggregate 3/8-inch max; water - 305 lbs per cu yd; cement - 750 lbs per cu yd; w/c ratio 0.40 max; slump range 3 inches to 5 inches with silica fume slurry; air entrainment 4 percent plus or minus 1 percent; 7.5 percent dry silica fume by weight of cement, provided through specified silica fume slurry; add superplasticizer to achieve desired working slump for precast concrete as may be required by silica fume slurry Manufacturer. Add colorant as required to achieve match with ENGINEER's sample. Moist cure by spray mist.

2.6 FABRICATION

A. General: Precast concrete units shall be fabricated by a licensed shop in accordance with ACI 318, PCI MNL-116 (structural features), PCI MNL-117 (nonstructural features, surface treatments, patching, and tolerances). Plant records and quality control program shall be maintained during production of precast units. Records and access to plant shall be available to the ENGINEER upon request.

Rigid molds shall be used, constructed to maintain precast unit uniform in shape, size, and finish, free from castings and dents, gouges, oil canning, or other irregularities that will adversely affect appearance or strength of units. Consistent quality shall be maintained during manufacture.

Equipment for handling epoxy-coated reinforcing bars shall have protected contact areas. Bundles of coated bars shall be lifted at multiple pickup points to prevent bar-to-bar abrasion from sags in the bundles. Coated bars or bundles of coated bars shall not be dropped or dragged. Coated bars shall be stored on protective cribbing. The maximum amount of damage shall not exceed 2 percent of the surface area of each bar.

Reinforcing steel, anchors, inserts, plates, angles, and other cast-in-place items shall be embedded as indicated on shop drawings. Reinforcement shall be fabricated and placed in conformance with ACI 318. No tack welding of or to reinforcement permitted. Welding when allowed shall conform to AWS D1.4 requirements. No carbon steel chairs, spacers, nails or tie wire shall be used in positioning reinforcing and embedments.

Adequate reinforcing steel shall be provided to control cracking. Maximum permissible crack width:

Surfaces exposed to weather:	0.005 inch.
Surfaces exposed to view but not weather:	0.01 inch

Connecting devices, plates, angles, items fit to steel framing members, inserts, bolts, and accessories shall be fabricated to permit initial placement and final attachment.

Anchors, inserts, lifting devices, and other accessories shall be placed and embedded in accordance with approved shop drawings, accurately positioned in their designed location and anchored to prevent dislocation during panel construction. Do not use powder actuated fasteners for surface attachment of accessory items except as specifically approved by the ENGINEER and specifically accepted by the precast unit manufacturer. Flashing reglets shall be placed and embedded continuous and straight, with lifting devices to permit removal after erection.

Units shall be moist cured with water mist to develop concrete quality and to minimize surface drying and appearance blemishes such as nonuniformity, staining, or surface cracking.

Precast units shall be removed from formwork using procedures conforming to PCI MNL-117. Minor patching in plant acceptable, providing structural adequacy and appearance of units are not impaired. Each precast unit shall be identified with corresponding code on erection drawings, in location not visible to finished work.

Repair of damaged epoxy coating, when required, shall be made with patching material conforming to ASTM A 775. Repair shall be in accordance with the material Manufacturer's recommendations.

B. Fabrication and Tooling of Stainless Steel Connections and Embedments: All tools used during fabrication shall be made of stainless steel. Use of carbon steel tools is prohibited.

Welding of stainless steel shall conform to AWS A5.4, AWS B2.1 and AWS D1.1, using tungsten inert gas procedures and 316L filler metal for stainless steel to stainless steel and 309 filler metal for stainless steel to carbon steel. Surfaces shall be sanded smooth (do not grind), and oxidized discoloration removed (blue heat tint). Threaded parts of stainless steel bolts shall be lubricated with graphite suspended in alcohol (Neo-Lube) every time that nut is run on or off the threads. No other lubricant is acceptable.

Erection slings, cables, blocking, hardware and restraints shall be nonmetallic or stainless steel. Cribbing or crating shall be wood.

2.7 FINISH OF PRECAST UNITS

A. Backs and Sides (Unexposed Edges): Smooth, dense, uniform surface free from blemishes. Defects in backs and sides (unexposed edges) shall be repaired as approved.

B. Faces: Appearance, color, and texture finish of all panels shall match appearance, color and texture of the approved sample panels constructed by the CONTRACTOR. Panels that do not match shall be rejected. Repairs will be acceptable only if structural adequacy and appearance of product are not impaired and the repair and surrounding area match the approved sample panels at the ENGINEER's field office.

Mechanical finishing of panels at precast plant shall be at essentially the same age (or strength) of concrete to assure finished appearance is uniform from panel to panel.

To reduce possibility of stains occurring during transportation and erection, sealer shall be applied at the plant as recommended by Manufacturer and the precaster and shall be guaranteed in writing that sealer will not alter or yellow the original precast concrete color in any way and that it is compatible with the joint sealants to be used on the project. Seal finish surfaces of precast units to be exposed in completed work as follows: apply a uniform coat of surface sealer in accordance with Manufacturer's written instructions. Apply sealer by method and in quantity required to provide coverage specified by sealer Manufacturer. Forty-eight hours after application of sealer, apply water to face of each panel in sufficient quantity to determine if full sealer coverage was achieved. Panels not fully sealed shall be resealed and retested. A second coat shall be applied at the jobsite after erection and cleanup in accordance with the Manufacturer's instructions.

PART 3 -- EXECUTION

3.1 INSTALLATION

A. Examination: The CONTRACTOR shall verify that the structure, anchors, devices, and openings are ready to receive work of this Section. Beginning of installation means acceptance of existing condition.

B. Preparation: The CONTRACTOR shall provide for erection procedures and induced loads, during erection, maintain temporary bracing in place until final support is provided, provide necessary hoisting equipment and safety and protective devices.

C. Erection: The units shall be erected in accordance with approved shop/erection drawings without damage to shape or finish or adjacent work. Damaged panels shall be replaced or

repaired. Unless otherwise shown, members shall be erected level and plumb within allowable tolerances.

The CONTRACTOR shall align and maintain uniform horizontal and vertical joints as erection progresses, provide approved shims and wedges as required, and when members required adjustment beyond design or tolerance criteria, discontinue affected work. Units shall be secured in place and field welds, scratches and otherwise damaged steel surfaces shall be touched up.

Field fabrication and erection of stainless steel shall conform to the procedures outlined in the paragraph entitled "Fabrication and Tooling of Stainless Steel Connectors and Embedments."

The vertical units shall be set dry, without grout, attaining joint dimension with lead or plastic shims and spacers.

Pickup points, boxouts, inserts, bearing surfaces, and open spaces at connections and joints shown shall be grouted with non-shrink grout system(s) recommended by the manufacturer of the precast units, in accordance with Section 03315, "Grout". The color and texture of concrete surfaces of adjacent areas shall be finished to match in the same plane. Provide forms or other acceptable method to retain the grout in place until it is sufficiently hard to support itself. Pack spaces with stiff grout material, tamping voids completely full. Place the grout in a manner to finish smooth, plumb, and level with adjacent concrete surfaces. Keep grouted surfaces damp for not less than 24-hours after grout has taken its initial set. Promptly remove grout material from exposed surfaces before its hardens.

D. Tolerances: In accordance with requirements of PCI MNL-117 unless otherwise indicated.

1. Variation from Plane of Location: 1/4-inch in 10 feet and 3/8-inch in 100 feet maximum, compensating not cumulative.

2. Offset from True Alignment between Two Connecting Members: 1/4-inch maximum.
3. Out of Square: 1/8-inch in 10 feet maximum, noncumulative.

4. Variation in Dimensions Indicated in Shop Drawings: Plus or minus 1/8-inch.

5. Misalignment of Anchors, Inserts, Openings: 1/8-inch, maximum.

6. Bowing or Warpage of Units: 1/700 of panel dimension.

7. Exposed Joint Dimension: 3/4-inch plus or minus 1/8-inch.

8. Location of Reglets: 1/4-inch from true position.

E. Joint Sealing: Specified in Section 07900, Joint Sealants.

3.2 CLEANING

A. Not sooner than 72 hours after joints are sealed, faces and other exposed surfaces of precast units shall be cleaned using a cleaning detergent recommended by the sealer manufacturer and water applied with a soft bristle brush, and thoroughly rinsed using clean water or other approved procedures.

B. Units shall be cleaned when temperature and humidity conditions are such that surfaces dry rapidly (e.g., 70 degrees F and rising, 50 percent Relative Humidity or less).

C. Discolorations which cannot be removed by these procedures shall be considered defective work, and repaired or replaced as directed by ENGINEER.

D. Just before final acceptance by the ENGINEER, clean precast units to remove dirt and stains.

3.3 PROTECTION

Adjacent surfaces shall be protected from damage during sealing and cleaning operations and against damage, disfiguration or discoloration from subsequent operations. Noncombustible shielding shall be used during welding operations.

(END OF SECTION)

SECTION 05500

METAL FABRICATIONS

PART 1 -- GENERAL

1.1 DESCRIPTION

A. Work Included: Provide and install all miscellaneous metal and metal fabrications in place, as indicated on the Contract Drawings and hereafter specified or needed for complete and proper installation, includes but not limited to the following:

1. Pipe brackets.

2. All formed and bent plate-14 gauge and heavier.

3. Bolts, rods, dowels, nuts, washers, anchors, brackets and other miscellaneous iron.

4. Steel guard rails.

5. Frames and gates for trench drains.

6. Access hatch frames and covers.

B. Related Work Sections:

1. Documents affecting work of this Section include, but are not necessarily limited to the GENERAL CONDITIONS, SUPPLEMENTARY CONDITIONS and Sections in GENERAL REQUIREMENTS of DIVISION 1 of these Specifications.

2. Division 3, Concrete Work.

3. Section 09800, Protective Coating.

4. Devices for support of mechanical and electrical materials in Divisions 15 and 16.

1.2 QUALITY ASSURANCE

A. Qualifications of Personnel: Use only adequate number of skilled workers who are thoroughly trained and experienced in the necessary crafts and are completely familiar with the necessary crafts and with the specified requirements and methods needed for proper performance of the work of this Section.

B. Welder's Qualifications: Currently qualified according to AWS D1-1.

C. Design: Fabricate and erect work in accordance with A.I.S.C.

D. Welding Operations: Perform shop and/or field welding required in connection with work of this Section in strict accordance with pertinent recommendations of the American Welding Society (AWS).

E. Project Conditions: Do not fabricate components which require fitting to structural elements or into finished spaces until dimensions are verified at the job-site.

F. Regulations: Comply with acceptable Uniform Building Code with the Los Angeles City 2014 Amendments.

G. Shop Inspections: Required

H. Fabricator Qualifications: Firm experienced in successfully producing metal fabrications similar to that indicated for this project with sufficient production capacity to produce work units without causing delay in the Contracted Work.

1.3 SUBMITTALS

A. General: Comply with pertinent provisions in the Section 01330, "Shop Drawings/Submittals" in Division 1 - GENERAL REQUIREMENTS of these Specifications.

B. Materials List: Submit list of proposed items to be provided under this Section.

C. Shop Drawings: Submit for all items proposed to be fabricated and installed under this Section. Identify each proposed item with corresponding Contract Drawing detail and Specification references.

D. Samples: Submit physical samples of specified materials for color or texture selection by the Consultant, when so requested.

E. Templates: Provide for anchor and bolt installation by other trades.

F. Manufacturers Specifications and Other Data: Provide as-needed to prove compliance with the specified requirements.

G. Manufacturer's Recommended Installation Procedures: When approved by the Consultant, will become the basis for accepting or rejecting actual installation procedures used on the Work.

H. Certificates: Submit certification that specified surface preparation and primer or galvanized coatings as specified have been applied to steel items and are in accordance with the Specifications.

I. Welder's certificates signed by the Contractor certifying that welders comply with requirements specified under "Quality Assurance" article.

1.4 PRODUCT HANDLING

A. General:

1. Fabricated metal items shall not be fabricated or delivered to the jobsite before required review of the Shop Drawings by the City Engineer or the Consultant and returned to the Contractor.

2. Store fabricated metal items above ground on platforms, skids or other approved supports in a weathertight and dry location until ready for installation.

B. Protection: Use all means necessary to protect the materials and manufactured items of this Section before, during and after installation and to protect the work and materials of all other trades.

C. Replacements: In the event of damage to work of this Section, immediately make all repairs and replacements necessary to the approval of the City Engineer or the Consultant and at no added cost to the City.

D. Materials to be Installed by Others:

1. Deliver anchor bolts and other anchorage devices to be embedded in concrete to the jobsite in time before start of concrete work operations.

2. Provide setting drawings, templates and other directions necessary for installation of anchor bolts and devices.

1.5 PERFORMANCE REQUIREMENTS

A. Thermal Movements: Allow for thermal movements from ambient and surface temperature changes acting on exterior metal fabrications by preventing bucking, opening of joints, overstressing of components, failure of connections, and other detrimental effects.

1. Temperature Change: 120 degrees F, ambient; 180 degrees F, material surfaces.

PART 2 -- PRODUCTS

2.1 MATERIALS AND COMPONENTS

A. General:

1. All material shall conform with the following requirements and shall be of new stock of the highest grade available, free from defects and imperfections, of recent manufacture and unused. Where two or more identical articles or pieces of equipment are required, they shall be of the same manufacture.

2. All metal surfaces shall be free from any defects which would impair the strength, durability, appearance, and shall be of the best commercial quality, for the purposes intended and adequate to withstand the strains and stresses to which they will be subject. Metals shall be protected from injury at the job, in transit, and until erected in place, inspected, and approved.

B. Miscellaneous Metals: (As Applicable)

1. Iron and Steel (General): Uniform Building Code with the Los Angeles City 2014 Amendments, Section 27.

2. Structural Steel: ASTM A36.

3. Steel Plates, Shapes and Bars: Mild or structural grade conforming to applicable ASTM A36 Specifications.

4. Steel Plates (Bent or Cold Formed): ASTM A283 Grade "C".

5. Gray Cast Iron: ASTM A48, Class 10 or as specified.

6. Malleable Iron Castings: ASTM A47.

7. Steel Tubing: AISI MT1010, electric welded, minimum 14-gage, shapes and size as indicated on the Contract Drawings.

8. Steel Pipe: ASTM A53, Grade A, Schedule 40 black finish or ASTM A120, galvanized when used on building exterior.

9. Steel Bars and Bar-size Shapes: ASTM A306 Grade 65 or ASTM A36.

10. Cold Finished Steel Bars: ASTM A108.

11. Galvanized Carbon Steel Sheets: ASTM A526 with G90 zinc coating in accordance with ASTM A525.

12. Aluminum Castings: 214 aluminum alloy.

13. Aluminum Extrusions: 6053 aluminum alloy temper to suit.

14. Stainless Steel: ASTM A 276, 18-8 alloy, type 304, No. 4 finish except as otherwise specified.

15. Diamond or checker Pattern Plate: U.S. multi-grip floor plate; U.S. Steel Corp. or equal.

C. Miscellaneous Related Materials: (As Applicable)

1. Welding Electrodes: Conform to AISC and ASTM A233 and the Code for Arc and Gas Welding in Building Construction, A.W.S. Publication D1.1 use E-70XX Series Electrodes.

2. Paint Primer (for uncoated ferrous metal): Rust-Oleum Corp. "X-60 Bare Metal Red Primer".

3. Hot-Dip Galvanizing: ASTM A-123 or as applicable after fabrication. See Section 210-3 of the "Standard Specifications".

4. Galvanizing Repair Material: "Galvalloy" by Metalloy Products Co., 1341 Sussex Lane, Newport Beach, California or equal 90 percent zinc rich cold process repair material.

5. Non-Shrink Grout: "Por-Rok" by Hallemite Mfg. Co. Cleveland, Ohio (Los Angeles, Phone (213) 583-4184).

6. Fasteners: Same material and finish of work to be fastened together; screws to be countersunk oval head type, unless otherwise indicated on theDrawings.

7. Mechanical Anchors: For securing miscellaneous metal items to concrete to be self-drilling concrete anchors, not less than 3/8-inch size, Phillips Redhead, or as otherwise indicated on the Drawings.

8. Bolts and Nuts: Low-carbon hexagon-head type, ASTM A-307, Grade "A" or "B". Lag bolts shall be square-head Type FS FF-B-561.

9. Miscellaneous: All items of miscellaneous metal indicated on drawings, including clip angles, ties, straps, anchors, bolts, angles, rods, and other appurtenances required by details or necessary for proper installations.

10. Dry Pack: A cement-sand mix of 1 part Portland cement to 2-1/2 parts sand by volume with necessary water added to provide for solid compaction.

11. Chains: 3/16-inch size, galvanized proof chain complete with suitable size harness snaps and two eyebolts, length to suit job conditions.

12. Gasket Material: Soft compressible neoprene rubber strip, thickness and width as indicated on the drawings.

13. Filler Material for Welding Aluminum: Type 53.

14. Concrete inserts:

    a. Threaded or wedge type galvanized ferrous castings of malleable iron complying with ASTM A27;

    b. Provide required bolts, shims, and washers, hot-dip galvanized in accordance with ASTM A153.

15. Brackets, Flanges and Anchors: Cast or formed metal of the same type material and finish as supported rails, unless otherwise indicated.

16. Welding Rods and Bare Electrodes: Select in accordance with AWS Specifications for the metal alloy to be welded.

17. Paints and coatings shall comply with the testing and product requirement of the California Department of Health Services' "Standard Practice for the Testing for Volatile Organic Emissions from Various Sources Using Small-Scale Environmental Chambers."

2.2 OTHER MATERIALS

Provide other materials, not specifically described but required for a complete and proper installation, as selected by the Contractor subject to the approval of the Consultant.

2.3 SHOP PAINT

A. Primer: Use "10-99 Tnemec Primer" or "Rustoleum Number 5769 Primer.

B. For Repair of Galvanizing: Use a high zinc-dust content paint complying with MIL-P-21035.

2.4 FABRICATION

A. Field Measurements: Secure all field measurements required for proper and adequate fabrication and installation of all work of this Section. Exact measurements are the responsibility of the Contractor.

B. Workmanship: (As Applicable)

1. Except as otherwise shown on the Contract Drawings or the approved Shop Drawings use materials of size, thickness, and type required to produce reasonable strength and durability in the work of this Section.

2. Fabricate with accurate angles and surfaces which are true to the required lines and levels, grinding exposed welds smooth and flush, forming exposed connections with hairline joints, and using concealed fasteners wherever possible. Do not fabricate components which require fitting to structural elements or into finished spaces until dimensions are verified at the job-site.

3. Prior to shop painting or priming, properly clean metal surfaces as required for the applied finish and for the proposed use of the item.

4. On surfaces inaccessible after assembly or erection, apply two coats of the specified primer. Change color of second coat to distinguish it from thefirst.

5. Work to dimensions shown or accepted on the Shop Drawings, using proven details of fabrication and support.

6. Conform to applicable provisions of the Uniform Building Code with the Los Angeles City 2014 Amendments, Chapter 27.

7. Form exposed work true to line and level, with accurate angles and surfaces and with straight sharp edges.

8. Ease the exposed edges to a radius of approximately 1/32-inch unless otherwise shown.

9. Form bent-metal corners to smallest radius possible without impairing the work.

10. Welding: Electric arc welding, Uniform Building Code with the Los Angeles City 2014 Amendments, Chapter 27.

11. Bolting: Bolts to be drawn tight and threads set to secure nuts.

12. Assembly: Assemble all items with parts in true alignment and accurately fitted, joints well made, adequately fastened with butts and sharp edges ground smooth.

13. Conceal all fastenings where practicable and make exposed joints hairline.

14. Nonferrous metal items shall comply with best practice of the trade. Form all sections true to detail and free from defects impairing appearance, strength, and durability.

15. Cut, reinforce, drill and tap miscellaneous metal work as indicated to receive finish hardware and similar items.

16. On surfaces inaccessible after assembly or erection, apply two (2) coats of the specified primer. Change color of second coat to distinguish it from the first coat.

C. Galvanizing: Provide a zinc coating for those items shown or specified to be galvanized as follows and as applicable:

1. ASTM A153 for galvanized iron or steel hardware.

2. ASTM A123 for galvanized rolled, pressed or forged steel shapes, plates, bars and strip 1/8-inch thick and heavier.

D. Field Galvanizing:

1. Required: For repair of protective coating of damaged galvanized surfaces resulting from welding or other construction operations in the shop or at the job-site at no added cost to the City.

2. Method: By "galvalloy" methods, in accordance with manufacturer's directions.

E. Shop Painting:

1. Required: On all uncoated ferrous metals; galvanized ferrous metal not to be shop coated.

2. Paint: Specified paint primer.

3. Painting: Full prime coating, completely covering the metal surfaces; at least 1 coat on all surfaces which will be accessible after fabrication and erection; at least 2 coats

on all surfaces which will be inaccessible after fabrication and erection.

4. Remove scale, rust and other deleterious materials before application of Shop Coating.

5. Clean off heavy rust and loose mill scale in accordance with SSPC-SP-2 or SSPC- SP-3 before coating.

6. Remove oil, grease and similar contaminants in accordance with SSPC-SP-1.

F. Carpenter's Iron Work: Furnish all bent or otherwise fabricated bolts, plates, anchors, hangers and other miscellaneous steel items not readily obtainable "OFF-THE-SHELF" and required for anchoring work to concrete, masonry and interior partitions. Fasteners shall be of the same material as the item being fastened. Items to be built into masonry or cast into concrete shall be delivered

to the job-site in time to avoid any delay of other trade operations. Anchor, for mechanical anchoring of items to concrete shall be self-drilling type and minimum 3/8-inch size.

G. Rough Hardware:

1. Furnish bent or otherwise custom fabricated bolts, plates, anchors, hangers, dowels, and other miscellaneous steel and iron shapes as required for framing and supporting woodwork, and for anchoring or securing woodwork to concrete or other structures. Straight bolts and other stock rough hardware items are specified in Division 6 sections.

2. Fabricate items to sizes, shapes, and dimensions required. Furnish malleable-iron washers for heads and nuts which bear on wood structural connections; elsewhere, furnish steel washers.

H. Access Hatches: Floor hatches shall be of aluminum and be H-20 rated, as shown. Hatches shall be double-swing, and shall be furnished with 2 stay bars designed to hold the cover, stay bar brackets designed to provide storage for the bars when the hatch is closed, 4 flush handles, joint gutter, and a moat-type edge drain complete with drain connection.

1. Hatches shall include fall prevention grating by Bilco, or approved equal.

2. Hatches shall be air-tight to prevent odors.

PART 3 -- EXECUTION

3.1 SURFACE CONDITIONS

Examine the areas and conditions under which work of this Section will be performed. Correct conditions detrimental to timely and proper completion of the work. Do not proceed until such detrimental conditions are corrected.

3.2 COORDINATION

Coordinate work of this Section as required with other trades to assure proper and adequate provisions in the work of those trades for interface with the work of this Section.

3.3 INSTALLATION

A. General: (As Applicable)

1. Set work accurately into position, plumb, level, true, and free fromrack.

2. Anchor firmly into position.

3. Where field welding is required, comply with AWS recommended procedures of manual-shielded metal-arc welding for appearance and quality of weld and for methods to be used in correcting welding work.

4. Grind exposed welds smooth, and touchup shop prime coats.

5. Do not cut, weld, or abrade surfaces which have been hot-dip galvanized after fabrication and which are intended for bolted or screwed field connections.

6. Dissimilar Materials: Where metals are in contact with plaster, concrete or other type metals, paint contact faces of the metal before installation, with a heavy bituminous coating:

B. Immediately After Erection: Clean the field welds, bolted connections, and abraded areas of shop priming. Paint the exposed areas with same material used for shop priming.

3.4 CLEAN-UP AND ADJUSTMENT

A. Clean-up:

1. During the progress of the work, keep the premises free from debris and waste resulting from work of this Section. Upon completion of this Section remove all surplus materials and debris from the job-site.

2. Immediately after erection, clean the field welds, bolted connections and abraded areas of shop priming. Paint the exposed areas with the same material used for the

shop priming.

B. Adjustments: Adjust all operating parts and/or assemblies as may be required to provide the necessary function and smooth operation.

(END OF SECTION)

SECTION 06100
EXTERIOR ROUGH CARPENTRY

PART 1 - GENERAL

1.1 SUMMARY

A. Section Includes:

1. Interpretive signage support framing.

PART 2 - PRODUCTS

2.1 LUMBER, GENERAL

A. Lumber: Comply with DOC PS 20 and with applicable rules of grading agencies indicated. If no grading agency is indicated, provide lumber that complies with the applicable rules of any rules- writing agency certified by ALSC's Board of Review. Provide lumber graded by an agency certified by ALSC's Board of Review to inspect and grade lumber under the rules indicated.

1. Factory mark each item with grade stamp of grading agency.

B. Certified Wood: Wood products shall be produced from wood obtained from forests certified by an FSC-accredited certification body to comply with FSC STD-01-001, "FSC Principles and Criteria for Forest Stewardship."

2.2 TIMBER

A. Maximum Moisture Content: 19 percent.

B. Timber Posts: Douglas fir-larch.

2.3 PRESERVATIVE TREATMENT

A. Pressure treat boards and dimension lumber with waterborne preservative according to AWPA C2.

2.4 FASTENERS

A. General: See Detail 3, Sheet ID-106.

PART 3 - EXECUTION

3.1 INSTALLATION

A. Set exterior rough carpentry to required levels and lines, with members plumb, true to line, cut, and fitted. Fit exterior rough carpentry to other construction; scribe and cope as needed for accurate fit.

B. Framing Standard: Comply with AF&PA's "Details for Conventional Wood Frame Construction" unless otherwise indicated.

C. Do not splice structural members between supports unless otherwise indicated.

D. Comply with AWPA M4 for applying field treatment to cut surfaces of preservative-treated lumber.

E. Securely attach exterior rough carpentry work to substrate by anchoring and fastening as shown in Detail 3, Sheet ID 106.

(END OF SECTION)

SECTION 07900

JOINT SEALANTS

PART 1 -- GENERAL

1.1 THE REQUIREMENT

A. The CONTRACTOR shall furnish all tools, equipment, materials, and supplies and shall perform all labor required to complete the work as indicated on the Drawings and specified herein.

B. This Section covers all joint sealant as specified herein and shown on Drawings.

1.2 RELATED WORK SPECIFIED ELSEWHERE

A. Section 03290, Joints in Concrete.

1.3 REFERENCE SPECIFICATIONS, CODES AND STANDARDS

A. Comply with the reference specifications of the GENERAL REQUIREMENTS.

B. Federal Specifications:

TT-S-001543A Sealing Compound, Silicone Rubber Base, (Calking, Sealing and Glazing in Building and Other Structures).

TT-S-00230C(2) Sealing Compound, Elastomeric Type, Single Component, (For Calking, Sealing, and Glazing in Buildings and Other Structures).

1.4 CONTRACTOR SUBMITTALS

A. Submittals shall be made in accordance with the GENERAL REQUIREMENTS.

B. The following submittals and specific information shall be provided.

1. Product Data: Surface preparation and installation instructions.

2. Samples: Material proposed for use showing color range available, and marked with the manufacturer's name and product identification.

3. Quality Control Submittals:

a. Applicator Qualification: Documentation showing minimum of 5 years experience installing sealants in projects of similar scope.

b. Certificates of Compliance: Proposed materials meet Specification requirements.

4. Contract Closeout Submittals: Guarantee.

1.5 QUALITY ASSURANCE (NOT USED)

1.6 PRODUCT HANDLING

A. Deliver sealants to the jobsite in sealed containers, each bearing manufacturer's name and product designation.

B. Store and protect sealant products from damage, deterioration, and contamination in accordance with manufacturer's written recommendations.

1.7 ENVIRONMENTAL CONDITIONS

A. Ambient Temperature: Between 40 and 80 degrees Fahrenheit (4 and 27 degrees Celsius) when sealant is applied.

1.8 GUARANTEE

A. Sealed Joints: Against adhesive and cohesive failure of sealant and for watertightness of sealed joints for a period of 5 years after date of final completion of sealants.

PART 2 -- PRODUCTS

2.1 MATERIALS

A. Like Items of Materials: End products of one manufacturer to achieve standardization for appearance, maintenance, and replacement.

B. CONTRACTOR Option: Immersible sealant may be substituted for nonimmersible sealant of the same material.

C. Characteristics:

1. Uniform, homogeneous.

2. Free from lumps, skins, and coarse particles when mixed.

3. Nonstaining, nonbleeding.

4. Hardness of 15 minimum and 50 maximum, measured by Method ASTM C 661.

2.2 SEALANT MATERIALS

A. Type 1 - Silicone, Nonsag, Not Immersible:

1. Silicone base, single-component, chemical curing; ASTM C 920, Type S, Grade NS, Class 25; Federal Specification TT-S-001543, nonsag type, Class A;

2. Capable of withstanding movement up to 50 percent of joint width.

3. Manufacturer: Dow Corning Corp. No. 790; General Electric Silpruf; Sonneborn Sonolastic Omniseal; or equal.

B. Type 2 - Multi-Part Polyurethane, Self-Leveling, Immersible:

1. Polyurethane base, multi-component, chemical curing; ASTM C 920, Type M, Grade P, Class 25 and Federal Specification TT-S-00227, self-leveling Type I, Class A.

2 Capable of being continuously immersed in water.

3. Manufacturer: Sonneborn Sonolastic Paving Joint Sealant; Pecora Corp. Urexspan NR-200; H. S. Peterson Co. Iso-Flex 880GB; Mameco International Vulkem 245; or equal.

C. Type 3 - Multi-Part Polyurethane, Nonsag, Immersible:

1. Polyurethane base, multi-component, chemical curing; ASTM C 920, Type M, Grade NS, Class 25 and Federal Specification TT-S-00227, nonsag Type II, Class A.

2. Capable of being continuously immersed in water.

3. Manufacturer: H. S. Peterson Co. Iso-Flex 881; Mameco International Vulkem 922; Product Research Corp. PRC 270; Sonneborn Sonolastic NP-II; or equal.

D. Type 4 - Multi-Part Polyurethane, Nonsag, Not Immersible:

1. Polyurethane base, multi-component, chemical curing; ASTM C 920, Type M, Grade NS, Class 25 and Federal Specification TT-S-00227, nonsag Type II, Class A.

2. Manufacturer: Sonneborn Sonolastic NP-II; Pecora Corp. Dynatrol II; Tremco Dymeric; H. S. Peterson Co. Isoflex 2000; Mameco International Vulkem 227; or equal.

E. Type 5 - One-Part Polyurethane, Immersible:

1. Polyurethane base, single-component, chemical curing; Federal Specification TT-S-00230, Type I or II, Class A.

2. Capable of being continuously immersed in water, withstand movement of up to 25 percent of joint width.

3. Manufacturer for Nonsag: Sonneborn Sonolastic NP-I; Sika Chemical Corp., Sikaflex-1a No. 430; Mameco International Vulkem 116; or equal.

4. Manufacturer for Self-Leveling: Sonneborn Sonolastic SL-1; Mameco International Vulkem 45; Sika Chemical Corp. Sikaflex 12SL; or equal.

F. Type 6 - One-Part Polyurethane, Not Immersible:

1. Polyurethane base, single-component, chemical curing; ASTM C 920, Type S, Grade NS, Class 25 and Federal Specification TT-S-00230, nonsag Type II, Class A.

2. Manufacturer: Pecora Corp. Dynatrol I; Tremco Dymonic; Sonneborn Sonolastic NP-I; or equal.

G. Type 7 - Multi-Part Polysulfide, Immersible:

1. Polysulfide base, two-component, chemical curing; ASTM C 920, Type M, Grade P or NS, Class 25 and Federal Specification TT-S-00227, Type I self-leveling, Type II nonsagging, Class A, uniform, homogeneous and free from lumps, skins, and coarse particles when mixed.

2. Capable of being continuously immersed in water.

3. Manufacturer: W. R. Meadows CM-60, two-part; Sonneborn Sonolastic Two; or equal.

H. Type 8 - One-Part Polysulfide, Nonsag, Not Immersible:

1. Polysulfide base, single-component, chemical curing; ASTM C 920, Type S, Grade NS, Class 12 1/2; Federal Specification TT-S-00230, Type II nonsag, Class A;

2. Capable of withstanding movement up to 20 percent of joint width.

3. Manufacturer: W. R. Meadows CM-60, one-part; Sika Chemical Corp. Sikaflex 440; Product Research Corp. PRC 7000; or equal.

I. Type 9 - One-Part Acrylic Terpolymer, Nonsag, Not Immersible:

1. Acrylic base, single-component, solvent curing; Federal Specification TT-S-00230, Type I nonsag, Class B.

2. Capable of withstanding movement up to 7.5 percent of joint width; Shore "A" hardness of 55 maximum.

3. Manufacturer: Pecora Chemical Corp. 60 + Unicrylic; Tremco Mono; or equal.

2.3 BACKUP MATERIAL

A. Nongassing, extruded, closed-cell round polyethylene foam rod, compatible with sealant used, and as recommended by sealant manufacturer.

B. Size: As shown or as recommended by sealant material manufacturer. Provide for joints greater than 3/16-inch wide.

C. Manufacturer: Haveg Industries Minicel; Dow Corning Ethafoam SB; Sonneborn Sonofoam; Hercules, Inc., HBR; or equal.

2.4 BOND BREAKER

A. Pressure Sensitive Tape: Recommended by sealant manufacturer to suit application.

2.5 JOINT CLEANER

A. Noncorrosive and nonstaining type, recommended by sealant manufacturer; compatible with joint forming materials.

2.6 PRIMER

A. Nonstaining type recommended by sealant manufacturer to suit application.

2.7 SEALANT COLOR

A. Unless specifically noted, match the color of the principal wall material adjoining the area of application.

2.8 TAPE SEALANT

A. Closed cell polyvinyl chloride (PVC) foam coated on both sides with a modified acrylic pressure-sensitive adhesive.

B. Color: Black.

C. Size: 3/4-inch width by length as required by thickness as recommended by manufacturer, for particular application.

D. Properties:

1. Tensile Strength (ASTM D 412, Die C): 80 psi.

2. Elongation (ASTM D 412, Die C): 125 percent.

3. Compression Set (ASTM D 1056): 30 percent max.

4. Compression Deflection (ASTM D 1056) at 25 Percent Deflection: 2.5 psi.

5. Low Temperature Flexibility, 5 Hours at -40 Degrees Fahrenheit: No cracking.

6. Heat Resistance/Maximum Shrinkage, 70 Hours at 212 Degrees Fahrenheit: 1.5 percent.

7. Staining (ASTM D 925) on Most Substrates: None.

8. Water Absorption by Weight at 30 Percent Compression: 24 percent.

9. Density per Cubic Foot (ASTM D 3574): 10 pounds.

10. Thermal Conductivity (k factor): 0.24.

2.9 PREFORMED SEALS

A. Preformed Compressible Joint Seals:

1. Widths Up to 5-Inches: Acme Highway Products Corp., Buffalo, NY, Acmaseal J-Series; Watson-Bowman Associates, Inc., Buffalo, NY, WA-Series; H. S. Peterson Co. Isoflex Neoprene Seal, LS-Series, Pontiac, MI; or equal.

2. Other Widths: Series or model recommended by seal manufacturer.

PART 3 -- EXECUTION

3.1 GENERAL

A. Use of more than one material for the same joint is not allowed unless approved by the sealant manufacturer.

B. Install joint sealants in accordance with ASTM C 962.

C. Horizontal and Sloping Joints of 1 Percent Maximum Slope: Use self-leveling (Grade P) joint sealant.

D. Steeper Sloped Joints, Vertical Joints, and Overhead Joints: Use nonsag (Grade NS) joint sealant.

E. Use joint sealant as required for the appropriate application and as follows:

Joint Size	Sealant Type
Less than 1-inch	1,2,3,4,5,6,7,8, or 9
Less than 2-inch	1,2,3,4, or 7
Over 2-inch	As per manufacturer's recommendation

3.2 PREPARATION

A. Verify that joint dimensions and physical and environmental conditions are acceptable to receive sealant.

B. All surfaces to be sealed shall be dry, sound, and free of dust, loose mortar, and other foreign materials.

1. Mask adjacent surfaces where necessary to maintain neat edge.

2. Starting of work will be construed as acceptance of all subsurfaces.

C. Verify that joint shaping materials and release tapes are compatible with sealant.

D. Examine joint dimensions and size materials to achieve required width/depth ratios.

3.3 INSTALLATION

A. Use joint filler to achieve required joint depths, to allow sealants to perform intended function.

1. Install backup material as recommended by sealant manufacturer.

2. Where possible, provide full length sections without splices; minimize number of splices.

B. Use bond breaker where recommended by sealant manufacturer.

C. Apply sealant within environmental conditions stated above.

1. Consult manufacturer when sealant cannot be applied within these temperature ranges.

D. Seal all joints around window, door and louver frames, expansion joints, and elsewhere as indicated.

E. Joint Sealant Materials: Follow manufacturer's recommendation and instructions, filling joint completely from bottom to top, without voids.

F. Joints: Tool slightly concave after sealant is installed.

1. When tooling white or light color sealant, use a water wet tool.

2. Finish joints free of air pockets, foreign embedded matter, ridges, and sags.

G. Tape Sealant: Locate where indicated and install in accordance with manufacturer's instructions.

3.4 PREFORMED SEALS

A. Prepare joint surfaces clean and dry, free from oil, rust, laitance, and other foreign material.

B. Construct joints straight and parallel to each other and at the proper width and depth.

C. Install within environmental conditions stated above.

D. Apply joint sealant manufacturer's approved primer and adhesive in accordance with manufacturer's instructions.

E. Install seal in accordance with manufacturer's instructions.

3.5 CLEANING

A. Clean surfaces next to the sealed joints of smears or other soiling resultant of sealing application.

B. Replace any damaged surfaces resulting from joint sealing or cleaning activities.

C. Clean up and dispose of all waste materials and debris resulting from this operation off the site.

3.6 JOINT SEALANT SCHEDULE

A. This schedule lists the sealant types acceptable for each joint location. Use as few different sealant types as possible to meet the requirements of this project.

Joint Location	Sealant Type(s)
1. Expansion/Contraction and control Joints at:	
Concrete Walls	1,3,4,5,6,7
Concrete Floor Slabs	2,5
Masonry Walls	1,3,4,5,6,7
2. Material Joints At:	
Metal Door & Louver Frames (Exterior)	1,5,6,8
Metal Door & Louver Frames (Interior)	1,5,6,8,9
Wall Penetrations (Exterior)	1,5,6,8
Wall Penetrations (Interior)	1,5,6,8
Floor Penetrations	5,6,7
Ceiling/Roof Penetrations	1,3,4,5,6,7
Sheet Metal Flashings	1,3,5,7
3. Other Joints:	
Threshold Sealant Bed	5
Immersed Concrete (Vertical and Sloped)	3,5
Immersed Concrete (Horizontal)	2,5
Openings Around Pipes, Conduits, and Ducts Through	
Fire-Rated Construction	11
Concrete Form Snap-Tie Holes	1,4,6

(END OF SECTION)

SECTION 09800
PROTECTIVE COATING

PART 1 -- GENERAL

1.1 THE REQUIREMENT

A. The Contractor shall furnish all tools, equipment, materials, and supplies and shall perform all labor required to complete the protective coating of all specified surfaces not specifically included under the requirements of Section [09905] "Architectural Paint Finishes," including all surface preparation, pretreatment, coating application, touch-up of factory-coated surfaces, protection of surfaces not to be coated, cleanup, and appurtenant work, all in accordance with the requirements of the Contract Documents.

B. The following surfaces shall not be protective coated hereunder unless shown or specified herein, or elsewhere in the Contract Documents.

1. Concrete.

2. Stainless steel.

3. Machined surfaces.

4. Grease fittings.

5. Glass.

6. Equipment nameplates.

7. Maintenance hole frames and covers.

8. Platform gratings, stair treads, door thresholds, and other walk surfaces.

C. The coating system schedules summarize the surfaces to be coated, the required surface preparation, and the coating systems to be applied. Coating notes on the drawings are used to show exceptions to the schedules, to show or extend the limits of coating systems, or to clarify or show details for application of the coating systems.

1.2 RELATED WORK SPECIFIED ELSEWHERE (Not Used)

1.3 REFERENCE SPECIFICATIONS, CODES AND STANDARDS

A. References herein to "SSPC Specifications" or "SSPC" shall mean the published standards of the Steel Structures Painting Council, 4400 Fifth Avenue, Pittsburgh, PA 15213.

B. References herein to "NACE" shall mean the published standards of the National Association of Corrosion Engineers, P.O. Box 986, Katy, TX 77450.

C. Comply with the reference specifications of the GENERAL REQUIREMENTS.

D. Comply with the current provisions of the following Codes and Standards.

1. Commercial Standards:

ANSI A13.	Scheme for Identification of Piping Systems.
ANSI/AWWA C105	Polyethylene Encasement for Ductile Iron Piping for Water and Other Liquids.

ANSI/AWWA C203	Coal-Tar Protective Coatings and Linings for Steel Water Pipelines - Enamel and Tape-Hot-Applied.
ANSI/AWWA D102	Painting Steel Water-Storage Tanks

2. Federal Specifications:

TT-P-28F	Paint, Aluminum, Heat Resisting (1200F)

1.4 CONTRACTOR SUBMITTALS

A. Submittals shall be made in accordance with the GENERAL REQUIREMENTS.

B. Samples: The Contractor shall submit samples of all paint, finishes, and other coating materials specified herein, in accordance with the GENERAL REQUIREMENTS. Paint or coating samples shall be submitted on 8-1/2-inch by 11-inch sheet metal. Each sample shall be completely coated over its entire surface with one protective coating material, type, and color.

C. Coating Materials List: The Contractor shall provide 8 copies of a coating materials list which indicates the manufacturer and the coating number, keyed to the coating systems herein, prior to or at the time of submittal of samples.

D. Paint Manufacturer's Information: For each paint system to be used the Contractor shall submit the following listed data at least 30 days prior to painting.

1. Paint manufacturer's data sheet for each product used, including statements on the suitability of the material for the intended use.

2. Paint manufacturer's instructions and recommendations on surface preparation and application.

3. Colors available for each product (where applicable).

4. Compatibility of shop and field applied coatings (where applicable).

5. Material safety data sheet for each product used.

6. Two sets of color samples to match each color selected by the Engineer from the manufacturer's standard color sheets. If custom mixed colors are required by this Section, the color samples shall be made using color formulations prepared to match the color samples furnished by the Engineer. The color formula shall be shown on the back of each color sample.

E. Manufacturer's Certification: For submerged and severe service coating systems, the Contractor shall require the paint manufacturer to certify to the following:

1. The manufacturer's representative has provided at least 6 hours of on-site instruction in the proper surface preparation, use, mixing, application, and curing of the coating systems.

2. The manufacturer's representative has personally observed the start of surface preparation, mixing, and application of the coating materials.

F. The Contractor shall submit all such certificates to the Engineer within 7 days of completion of each paint system.

G. Applicator's Certificate and Report: For submerged and severe service coating systems, the Contractor shall require the applicator of the protective paint coatings to certify to the following:

1. Immediately before painting, surfaces conformed to the specified preparation; they were in

the specified condition; and were clean, dry, and free of dust, rust, and mill scale.

2. Surface preparation and coating use, mixing, application, and curing were done in accordance with the current printed instructions and recommendations of the protective coating manufacturer, and these Specifications.

3. The products specified were used and a listing of the names of the products and their manufacturer.

4. The products were used within the shelf-life dates, stating the shelf-life dates of each container of each product used.

5. The specified dry film thickness of coatings are on the items.

6. The quantities of each product used with copies of paint manufacturer's invoice.

7. Compatible paints were used where shop or field applied coatings are applied over previously applied coatings.

8. The applicator's certificate shall list the dates and locations that the coating work was completed for the various surfaces coated, and shall also list the dry film thickness obtained for each coat. The Contractor shall submit said paint applicator's certificates to the Engineer within 7 days after completion of each paint system.

1.5 QUALITY ASSURANCE

A. General: The Contractor shall give the Engineer a minimum of 3 days advance notice of the start of any field surface preparation work of coating application work, and a minimum of 7 days advance notice of the start of any shop surface preparation work.

B. All such work shall be performed only in the presence of the Engineer, unless the Engineer has granted prior approval to perform such work in its absence.

C. Inspection by the Engineer, or the waiver of inspection of any particular portion of the work, shall not relieve the Contractor of its responsibility to perform the work in accordance with these Specifications.

D. Where protective coatings are to be performed by a subcontractor, said subcontractor must possess a valid state license as required for performance of the painting and coating work called for in this specification and must provide 5 references which show that the painting subcontractor has previous successful experience with the specified or comparable coating systems. Include the name, address, and the telephone number for the owner of each installation for which the painting subcontractor provided the protective coating.

E. Scaffolding shall be erected and moved to locations were requested by the Engineer to facilitate inspection. Additional illumination shall be provided to cover all areas to be inspected.

F. Inspection Devices: The Contractor shall furnish, until final acceptance of such coatings, inspection devices in good working condition for the detection of holidays and measurement of dry-film thicknesses of protective coatings. Dry-film thickness gages shall be made available for the Engineer's use at all times while coating is being done, until final acceptance of such coatings. The Contractor shall provide the services of a trained operator of the holiday detection devices until the final acceptance of such coatings. Holiday detection devices shall be operated only in the presence of the Engineer.

G. Holiday Testing: The Contractor shall holiday test all coated ferrous surfaces inside a steel reservoir, or other surfaces which will be submerged in water or other liquids, or surfaces which are enclosed in a vapor space in such structures and surfaces coated with any of the submerged and severe service coating systems. Areas which contain holidays shall be marked and repaired

or recoated in accordance with the coating manufacturer's printed instructions and then retested.

1. Coatings With Thickness Exceeding 20 Mils: For surfaces having a total dry film coating thickness exceeding 20 mils: pulse-type holiday detector such as Tinker & Rasor Model AP-W, D.E. Stearns Co. Model 14/20, or equal shall be used. The unit shall be adjusted to operate at the voltage required to cause a spark jump across an air gap equal to twice the specified coating thickness.

2. Coatings With Thickness of 20 Mils or Less: For surfaces having a total dry film coating thickness of 20 mils or less: Tinker & Rasor Model M1 non-destructive type holiday detector, K-D Bird Dog, or equal shall be used. The unit shall operate at less than 75 volts. For thicknesses between 10 and 20 mils, a non-sudsing type wetting agent, such as Kodak Photo-Flo, or equal, shall be added to the water prior to wetting the detector sponge.

H. Film Thickness Testing: On ferrous metals, the dry film coating thickness shall be measured in accordance with the SSPC "Paint Application Specification No. 2" using a magnetic-type dry film thickness gage such as Mikrotest model FM, Elcometer model 111/1EZ, or equal. Each coat shall be tested for the correct thickness. No measurements shall be made until at least 8 hours after application of the coating. On non-ferrous metals and other substrates, the coating thicknesses shall be measured at the time of application using a wet film gage.

I. Surface Preparation: Evaluation of blast cleaned surface preparation work will be based upon comparison of the blasted surfaces with the standard samples available from the NACE, using NACE standard TM-01-70.

1.6 MANUFACTURER REPRESENTATIVE

A. The Contractor shall require the protective coating manufacturer to furnish a qualified technical representative to visit the project site for technical support as specified in the paragraph entitled "Manufacturer's Certification", herein, and as may be necessary to resolve field problems attributable or associated with the manufacturer's products furnished under this Contract or the application thereof.

1.7 MAINTENANCE

A. Warranty Inspection: A warranty inspection may be conducted during the eleventh month following completion of all coating and painting work. The Contractor and a representative of the coating material manufacturer shall attend this inspection. All defective work shall be repaired in accordance with these specifications and to the satisfaction of the City. The City may, by written notice to the Contractor, reschedule the warranty inspection, or may cancel the warranty inspection altogether. If a warranty inspection is not held the Contractor is not relieved of its responsibilities under the Contract Documents.

PART 2 -- PRODUCTS

2.1 GENERAL

A. Definitions: The term "paint", "coatings", or "finishes" as used herein, shall include surface treatments, emulsions, enamels, paints, epoxy resins, and all other protective coatings, excepting galvanizing or anodizing, whether used as a pretreatment, primer, intermediate coat, or finish coat. The term "DFT" means minimum dry film thickness.

B. General: Coating materials shall be sealed in containers that plainly show the designated name, formula or specification number, batch number, color, date of manufacture, manufacturer's directions, and name of manufacturer, all of which shall be plainly legible at the time of use.

C. The Contractor shall use coating materials suitable for the intended use and recommended by their manufacturer for the intended service.

D. Compatibility: In any coating system only compatible materials from a single manufacturer shall be used in the work. Particular attention shall be directed to compatibility of primers and finish coats. If necessary, subject to the approval of the Engineer, a barrier coat shall be applied between existing prime coat and subsequent field coats to ensure compatibility.

E. Colors: All colors and shades of colors of all coats of paint shall be as selected or specified by the Engineer. Each coat shall be of a slightly different shade, to facilitate inspection of surface coverage of each coat. Finish colors shall be as selected from the manufacturer's standard color samples by the Engineer. Finish colors shall be custom mixed to match color samples furnished by the Engineer.

F. Protective Coating Materials: Products shall be standard products produced by recognized manufacturers who are regularly engaged in production of such materials for essentially identical service conditions. Where requested, the Contractor shall provide the Engineer with the names of not less than 10 successful applications of the proposed manufacturer's products demonstrating compliance with this specification requirement.

G. Substitute or "Or-Equal" Submittals: Unless otherwise specified, materials are from the catalogs of the companies listed herein. Materials by other manufacturers are acceptable provided that they are established as being compatible with and of equal quality to the coatings of the companies listed. The Contractor shall provide satisfactory documentation from the firm manufacturing the proposed substitute or "or-equal" material that said material meets the specified requirements and is equivalent or better than the listed materials in the following properties:

1. Quality
2. Durability
3. Resistance to abrasion and physical damage
4. Life expectancy
5. Ability to recoat in future
6. Solids content by volume
7. Dry film thickness per coat
8. Compatibility with other coatings
9. Suitability for the intended service
10. Resistance to chemical attack
11. Temperature limitations in service and during application
12. Type and quality of recommended undercoats and topcoats
13. Ease of application
14. Ease of repairing damaged areas
15. Stability of colors

H. The cost of all testing and analyzing of the proposed substitute materials that may be required by the Engineer shall be paid by the Contractor. If the proposed substitution requires changes in the contract work, the Contractor shall bear all such costs involved and the costs of allied trades affected by the substitution.

2.2 INDUSTRIAL COATING SYSTEMS

A. Material Sources: Each of the following manufacturers is capable of supplying many of the industrial coating materials specified herein. Where manufacturers and paint numbers are listed, it is to show the type and quality of coatings that are required. Proposed substitute materials must be shown to satisfy the material descriptions and to equal or exceed the properties of the listed materials as required in the paragraph entitled "Substitute or `Or-Equal' Submittals" herein.

1. Carboline Coatings Company

2. PPG Paints, Ameron

3. Sherwin Williams Company

4. Tnemec Company

B. System 1 – Not Used

C. System 2 - Not Used

D. System 3 – Not Used

E. System 4 – Not Used

F. System 5 – Not Used

G. System 6 - Inorganic Zinc, Water Based: Water based, self-curing, ethyl silicate shall be a two-component inorganic coating material that contains at least 85 percent of metallic zinc by weight in the dried film.

1. Prime coat and finish coat (one, Min DFT = 3 mils), [Dimetcote 21- 5/4 A], [Carbozinc 11 WB], [SW Zinc Clad XI], or equal.

2. Total system DFT = 3 mils.

H. System 7 – Acrylic Enamel: Single component, water based acrylic coating with a fungicide additive shall have a minimum solids content of 35 percent by volume. Prime coat shall be as recommended by manufacturer. The coating material shall be available in the ANSI safety colors.

1. Prime coat (Min DFT = 2 mils), as recommended by manufacturer.

2. Finish coats (2 or more, Min DFT = 6 mils), [Amercoat 2104], [Carboline 3359 MC], [SW Pro Industrial Acrylic], [Tnemec 1028 Enduratone], or equal.

3. Total system DFT = 8 mils.

I. System 8 - Not Used

J. System 9 - Not Used

K. System 10 – Acrylic Enamel, Concrete: High molecular weight acrylic coating material shall have a minimum solids content of 35 percent by volume. Prime coat shall be an acrylic filler and sealer for concrete surfaces.

1. Prime coat (Filler/sealer) (Min DFT = 12 mils), Tnemec 180 Tneme-Crete, Sanitile 100, SW Heavy Duty Block Filler, or equal.

2. Finish coats (2 or more, Min DFT = 4 mils), Tnemec 180 Tneme- Crete, Carbocrylic 3359

MC, SW Pro Industrial Acrylic (DFT = 6 mils) or equal.

L. System 11 - Aliphatic Polyurethane, Concrete: Two component aliphatic polyester polyurethane coating material shall provide superior color and gloss retention, resistance to splash from acid and alkaline chemicals, and resistance to chemical fumes and severe weathering, and with a minimum solids content of 58 percent by volume. Filler-sealer compound shall be a two-component epoxy material used to provide a smooth surface for the epoxy intermediate coat. The filler-surfacer is applied to the entire concrete surface and worked into the concrete surface with a wide blade putty knife or squeegee. The intermediate coat shall be a high-build polyamide epoxy coating with a minimum solids content of 70 percent by volume.

1. Prime coat (Filler-sealer), NU-Klad 114A, Carboguard 501. SW Steel Seam FT 910, Tnemec 215 Surfacing Epoxy, or equal.

2. Intermediate coat (Min DFT = 4 mils), Amerlock 400, Carboguard 60, Macropoxy 646-100, Tnemec L69 Epoxoline, or equal.

3. Finish coats (1 or more, Min DFT = 3 mils), Amershield, Carbothane 133 MC, SW Sherloxane 800, Tnemec 740 Everthane, or equal.

M. System 12 - Aliphatic Polyurethane, Fiberglass: Two-component aliphatic polyurethane coating material shall provide superior color and gloss retention, resistance to splash from acid and alkaline chemicals, and resistance to chemical fumes and severe weathering. A primer, tie coat, or mist coat shall be used as recommended by the manufacturer.

1. Prime coat (Tie coat) (Min DFT= 2 mils), Sanitile 120, SW Macropoxy 646-100, Tnemec P69 Epoxoline, or equal.

2. Finish coats (1 or more, Min DFT = 3 mils), Amershield, Carbothane 133 MC, SW Sherloxane 800, Tnemec 740 Everthane, or equal.

N. Max VOC levels per SCQAMD noted in Section 2.5

PART 3 -- EXECUTION

3.1 STORAGE, MIXING, AND THINNING OF MATERIALS

A. Manufacturer's Recommendations: Unless otherwise specified herein, the coating manufacturer's printed recommendations and instructions for thinning, mixing, handling, applying, and protecting its coating materials, for preparation of surfaces for coating, and for all other procedures relative to coating shall be strictly observed. The Contractor shall supply the Engineer with copies of each manufacturer's instructions in accordance with the GENERAL REQUIREMENTS.

B. All protective coating materials shall be used within the manufacturer's recommended shelf life.

C. Storage and Mixing: Coating materials shall be protected from exposure to cold weather, and shall be thoroughly stirred, strained, and kept at a uniform consistency during application. Coatings of different manufacturers shall not be mixed together.

3.2 PREPARATION FOR COATING

A. General: All surfaces to receive protective coatings shall be cleaned as specified herein prior to application of said coatings. The Contractor shall examine all surfaces to be coated and shall correct all surface defects before application of any coating material. All marred or abraded spots on shop-primed and on factory-finished surfaces shall receive touch-up restoration prior to any coating application.

B. Protection of Surfaces Not to be Coated: Surfaces which are not to receive protective coatings

shall be protected during surface preparation, cleaning, and coating operations.

C. All hardware, lighting fixtures, switch plates, machined surfaces, couplings, shafts, bearings, nameplates on machinery, and other surfaces not to be painted shall be removed, masked or otherwise protected. Drop cloths shall be provided to prevent coating materials from falling on or marring adjacent surfaces. The working parts of all mechanical and electrical equipment shall be protected from damage during surface preparation and coating operations. Openings in motors shall be masked to prevent entry of coating or other materials.

D. Care shall be exercised not to damage adjacent work during blast cleaning operations. Spray painting shall be conducted under carefully controlled conditions. The Contractor shall be fully responsible for and shall promptly repair any and all damage to adjacent work or adjoining property occurring from blast cleaning or coating operations.

E. Protection of Painted Surfaces: Cleaning and coating shall be so programmed that dust and other contaminants from the cleaning process will not fall on wet, newly coated surfaces.

3.3 SURFACE PREPARATION STANDARDS

A. The following referenced surface preparation specifications of the Steel Structures Painting Council shall form a part of this specification:

1. Solvent Cleaning (SSPC-SP1): Removal of oil, grease, dirt, soil, salts, and contaminants by cleaning with solvent, vapor, alkali, emulsion, or steam.

2. Hand Tool Cleaning (SSPC-SP2): Removal of loose rust, loose mill scale, and loose paint to degree specified, by hand chipping, scraping, sanding, and wire brushing.

3. Power Tool Cleaning (SSPC-SP3): Removal of loose rust, loose mill scale, and loose paint to degree specified by power tool chipping, descaling, sanding, wire brushing, and grinding.

4. White Metal Blast Cleaning (SSPC-SP5/NACE1): Removal of all visible rust, mill scale, paint, and foreign matter by blast cleaning by wheel or nozzle (dry or wet) using sand, grit, or shot.

5. Commercial Blast Cleaning (SSPC-SP6/NACE3): Blast cleaning until at least two-thirds of each element of surface area is free of all visible residues.

6. Brush-Off Blast Cleaning (SSPC-SP7/NACE4): Blast cleaning of all except tightly adhering residues of mill scale, rust, and coatings, exposing numerous evenly distributed flecks of underlying metal.

B. The other surface preparation standards shall be the most recent versions published by the SSPC and NACE.

3.4 METAL SURFACE PREPARATION (UNGALVANIZED)

A. The minimum abrasive blasting surface preparation shall be as specified in the coating system schedules included at the end of this Section. Where there is a conflict between these specifications and the coating manufacturer's printed recommendations for the intended service, the higher degree of cleaning shall apply.

B. Workmanship for metal surface preparation shall be in conformance with the current SSPC Standards and this Section. Blast cleaned surfaces shall match the standard samples available from the National Association of Corrosion Engineers, NACE Standard TM-01-70.

C. All oil, grease, welding fluxes and other surface contaminants shall be removed by solvent cleaning per SSPC-SP1 prior to blast cleaning.

D. All sharp edges shall be rounded or chamfered and all burrs, and surface defects and weld splatter shall be ground smooth prior to blast cleaning.

E. The type and size of abrasive shall be selected to produce a surface profile that meets the coating manufacturer's recommendation for the particular coating and service conditions.

F. The abrasive shall not be reused unless otherwise approved by the Engineer. For automated shop blasting systems, clean oil-free abrasives shall be maintained.

G. The Contractor shall comply with the applicable federal, state, and local air pollution control regulations for blast cleaning.

H. Compressed air for air blast cleaning shall be supplied at adequate pressure from well maintained compressors equipped with oil/moisture separators which remove at least 95 percent of the contaminants.

I. Surfaces shall be cleaned of all dust and residual particles of the cleaning operation by dry air blast cleaning, vacuuming or another approved method prior to painting.

J. Enclosed areas and other areas where dust settling is a problem shall be vacuum cleaned and wiped with a tack cloth.

K. Damaged or defective coating shall be removed by the specified blast cleaning to meet the clean surface requirements before recoating.

L. If the specified abrasive blast cleaning will damage adjacent work, the area to be cleaned is less than 100 square feet, and the coated surface will not be submerged in service, then SSPC-SP2, hand tool cleaning or SSPC-SP3, power tool cleaning, may be used.

M. Shop applied coatings of unknown composition shall be completely removed before the specified coatings are applied. Valves, castings, ductile or cast iron pipe, and fabricated pipe or equipment shall be examined for the presence of shop-applied temporary coatings. Temporary coatings shall be completely removed by solvent cleaning per SSPC-SP1 before the abrasive blast cleaning work has been started.

N. Shop primed equipment shall be solvent cleaned in the field before finish coats are applied.

O. Ferrous metal surfaces in severe or immersion service shall conform to the following.

1. Solvent Cleaning (SSPC-SP1) shall be performed over all surfaces prior to abrasive blast cleaning. : Removal of oil, grease, dirt, soil, salts, and contaminants by cleaning with solvent, vapor, alkali, emulsion, or steam as required.

2. All ferrous metal and non ferrous metal surfaces to be cleaned in accordance with SSPC-SP5/NACE 1. White Metal Blast Clean with a 3.0 mil minimum anchor profile.

3. Where the coating is specified to be terminated, the Contractor shall prepare and apply materials as outlined in coating manufacturer recommendations.

4. Where the coating is specified to be terminated at a metal embedment, the Contractor shall prepare and apply materials as outlined or as recommended by the manufacturer.

5. The Contractor shall notify the Engineer should jobsite conditions prevent the above operations and/or applications

3.5 SURFACE PREPARATION FOR GALVANIZED FERROUS METAL

A. Galvanized ferrous metal shall be alkaline cleaned per SSPC-SP1 to remove oil, grease, and other contaminants detrimental to adhesion of the protective coating system to be used.

B. Abrasive brush blasting or uniform scarification of cleaned surfaces is required. Perform surface preparation according to SSPC-SP16, Brush of Blast Cleaning of Coated and Uncoated Galvanized steel, Stainless Steel, and Non-Ferrous Metals.

C. Abrasive brush blasting is required for all non-ferrous metals in severe or immersion service.

D. Pretreatment coatings, white rust staining, passivation treatments such as chromating shall be completely removed. Perform successful test to confirm removal of passivating treatments according to SSPC-Sp16 prior to the application of any coatings.

3.6 SURFACE PREPARATION OF FERROUS SURFACES WITH EXISTING COATINGS

A. General: All grease, oil, heavy chalk, dirt, or other contaminants shall be removed by solvent or detergent cleaning prior to abrasive blast cleaning. The generic type of the existing coatings shall be determined by laboratory testing.

B. Abrasive Blast Cleaning: The Contractor shall provide the degree of cleaning specified in the coating system schedule for the entire surface to be coated. If the degree of cleaning is not specified in the schedule, deteriorated coatings shall be removed by abrasive blast cleaning to SSPC-SP6, Commercial Blast Cleaning. Areas of tightly adhering coatings shall be cleaned to SSPC-SP7, Brush-off Blast Cleaning, with the remaining thickness of existing coating not to exceed 3 mils.

C. Incompatible Coatings: If coatings to be applied are not compatible with existing coatings the Contractor shall apply intermediate coatings per the paint manufacturer's recommendation for the specified coating system or shall completely remove the existing coating prior to abrasive blast cleaning. A small trial application shall be conducted for compatibility prior to painting large areas.

D. Unknown Coatings: Coatings of unknown composition shall be completely removed prior to application of new coatings.

E. Water Abrasive or Wet Abrasive Blast Cleaning: Where specified or where job site conditions do not permit dry abrasive blasting for industrial coating systems due to dust or air pollution considerations, water abrasive blasting or wet abrasive blasting may be used. In both methods, paint-compatible corrosion inhibitors shall be used, and coating application shall begin as soon as the surfaces are dry. Water abrasive blasting shall be done using high pressure water with sand injection. In both methods, the equipment used shall be commercially produced equipment with a successful service record. Wet blasting methods shall not be used for submerged and severe service coating systems unless specified.

3.7 CONCRETE AND CONCRETE BLOCK MASONRY SURFACE PREPARATION

A. Surface preparation shall not begin until at least 30 days after the concrete or masonry has been placed.

B. All oil, grease, and form release and curing compounds shall be removed by detergent cleaning per SSPC-SP1 before abrasive blast cleaning.

C. Concrete, concrete block masonry surfaces and deteriorated concrete surfaces to be coated shall be abrasive blast cleaned to remove existing coatings, laitance, deteriorated concrete, and to roughen the surface equivalent to the surface of the No. 80 grit flint sandpaper.

D. If acid etching is required by the coating application instructions the treatment shall be made after abrasive blasting. After etching, rinse surfaces with water and test the pH. The pH shall be between neutral and 8.

E. Surfaces shall be clean and as recommended by the coating manufacturer before coating is

started.

F. Unless required for proper adhesion, surfaces shall be dry prior to coating. The presence of moisture shall be determined with a moisture detection device such as [Delmhorst Model DB], or equal.

G. Concrete, Concrete Masonry Unit surfaces in sever or immersion service shall conform to the following.

1. Remove all release agents, curing compounds, efflorescence, chalk, grease, and foreign material from the surface. Surfaces shall be decontaminated to remove all microorganisms, acid constituents, grease, oil, and other contaminants prior to commencement of surface preparation (Reference ASTM D4258, SSPC-SP13/NACE No. 6).

2. Verify that the pH of the cleaned and prepared concrete surfaces to be coated is within the range of to 9 to 11. Application of coating materials outside this range will not be permitted without written approval from the Engineer. ASTM D 4262 should be used to determine pH.

3. Allow new concrete to cure for a minimum of 28 days or shall be prepared and treated according to the coating manufacturer's recommendations.

4. Test concrete for moisture following the 28 day curing period in accordance with ASTM D4263 and/or F1869. Test results shall be reviewed by the coating manufacturer's technical representative to determine if any special treatments are required prior to the application of coating.

5. Concrete surfaces shall be prepared in accordance with SSPC-SP13/NACE No. 6, Severe Service, and shall produce a minimum surface profile of a CSP-5 as noted in ICRI Technical Guideline No. 310.2 and ASTM D4259, SSPC-SP13/NACE No. 6.

6. Fill all bug holes, honeycombs, cracks, and surface imperfections with surface fillers to the specified thickness in a uniform and consistent fashion. .

7. Where the coating is specified to be terminated, the contractor shall prepare and apply materials as outlined by the coating manufacturer. Detailed drawings shall provided for review with contractor submittals.

8. Repair of spalling, corroded concrete, exposed rebar shall be performed according to the specified process and manufacturer's recommendation.

3.8 PLASTIC, FIBERGLASS AND NONFERROUS METALS SURFACE PREPARATION

A. Plastic and fiberglass surfaces shall be sanded or brush off blast cleaned prior to solvent cleaning with a chemical compatible with the coating system primer.

B. Non-ferrous metal surfaces shall be solvent-cleaned SSPC-SP1 followed by sanding or brush-off blast cleaning SSPC-SP7/NACE4.

C. All surfaces shall be clean and dry prior to coating application.

3.9 ARCHITECTURAL CONCRETE BLOCK MASONRY SURFACE PREPARATION

A. The mortar surfaces shall be cured at least 14 days before surface preparation work is started.

B. Dust, dirt, grease, and other foreign matter shall be removed prior to abrasive blasting.

C. The masonry surfaces shall be prepared in accordance with the material manufacturer's printed instructions.

3.10 WORKMANSHIP

A. Skilled craftsmen and experienced supervision shall be used on all work.

B. Clean drop cloths shall be used. All damage to surfaces resulting from the work hereunder shall be cleaned, repaired, and refinished to their original condition.

C. All coatings shall be applied under dry and dust-free conditions. Coating shall be done in a workmanlike manner so as to produce an even film of uniform thickness. Edges, corners, crevices, and joints shall receive special attention to insure that they have been thoroughly cleaned and that they receive an adequate thickness of coating material. The finished surfaces shall be free from runs, drops, ridges, waves, laps, brush marks, and variations in color, texture, and finish. The hiding shall be so complete that the addition of another coat would not increase the hiding. Special attention shall be given to insure that edges, corners, crevices, welds, and similar areas receive a film thickness equivalent to adjacent areas, and installations shall be protected by the use of drop cloths or other approved precautionary measures.

3.11 SHOP COATING REQUIREMENTS

A. All items of equipment, or parts of equipment which are not submerged in service, shall be shop primed and then finish coated in the field after installation with the specified or approved color. The methods, materials, application equipment and all other details of shop painting shall comply with this section. If the shop primer requires top coating within a specified period of time, the equipment shall be finish coated in the shop and then touch-up painted after installation.

B. All items of equipment, or parts and surfaces of equipment which are submerged or inside an enclosed hydraulic structure when in service, with the exception of pumps and valves, shall have all surface preparation and coating work performed in the field.

C. The interior surfaces of steel reservoirs shall have all surface preparation and coating work performed in the field.

D. For certain pieces of equipment, it may be undesirable or impractical to apply finish coatings in the field. Such equipment may include engine generator sets, equipment such as electrical control panels, switchgear or main control boards, submerged parts of pumps, ferrous metal passages in valves, or other items where it is not possible to obtain the specified quality in the field. Such equipment shall be shop primed and finish coated and touched up in the field with the identical material after installation. The Contractor shall require the manufacturer of each such piece of equipment to certify as part of its shop drawings that the surface preparation is in accordance with these specifications. The coating material data sheet shall be submitted with the shop drawings for the equipment.

E. For certain small pieces of equipment, the manufacturer may have a standard coating system which is suitable for the intended service conditions. In such cases, the final determination of suitability will be made during review of the shop drawing submittals. Equipment of this type generally includes only indoor equipment such as instruments, small compressors, and chemical metering pumps.

F. Shop painted surfaces shall be protected during shipment and handling by suitable provisions including padding, blocking, and the use of canvas or nylon slings. Primed surfaces shall not be exposed to the weather for more than 6 months before top coated, or less time if recommended by the coating manufacturer.

G. Damage to shop-applied coatings shall be repaired in accordance with this Section and the coating manufacturers printed instructions.

H. The Contractor shall make certain that the shop primers and field topcoats are compatible and meet the requirements of this Section. Copies of applicable coating manufacturer's data sheets shall be submitted with equipment shop drawings.

3.12 APPLICATION OF COATINGS

A. The application of protective coatings to steel substrates shall be in accordance with "Paint Specification No. 1, (SSPC-A-1)", Steel Structures Painting Council.

B. Cleaned surfaces and all coats shall be inspected prior to each succeeding coat. The Contractor shall schedule such inspection with the Engineer in advance.

C. Blast cleaned ferrous metal surfaces shall be painted before any rusting or other deterioration of the surface occurs. Blast cleaning shall be limited to only those surfaces that can be coated in the same working day.

D. Coatings shall be applied in accordance with the manufacturer's instructions and recommendations, and this Section, whichever has the most stringent requirements.

E. Special attention shall be given to edges, angles, weld seams, flanges, nuts and bolts, and other places where insufficient film thicknesses are likely to be present. Use stripe painting for these areas.

F. Special attention shall be given to materials which will be joined so closely that proper surface preparation and application are not possible. Such contact surfaces shall be coated prior to assembly or installation.

G. Finish coats, including touch-up and damage repair coats shall be applied in a manner which will present a uniform texture and color matched appearance.

H. Coatings shall not be applied under the following conditions:

1. Temperature exceeding the manufacturer's recommended maximum and minimum allowable.

2. Dust or smoke laden atmosphere.

3. Damp or humid weather.

4. When the substrate or air temperature is less than 5 degrees F above dewpoint.

5. When air temperature is expected to drop below 40 degrees F or less than 5 degrees F above the dewpoint within 8 hours after application of coating.

I. Dewpoint shall be determined by use of a sling psychrometer in conjunction with U.S. Dept. of Commerce, Weather Bureau psychrometric tables.

J. Steel piping shall be abrasive blast cleaned and primed before installation.

K. The finish coat on all work shall be applied after all concrete, masonry, and equipment installation is complete and the work areas are clean and dust free.

3.13 CURING OF COATINGS

A. The Contractor shall provide curing conditions in accordance with the conditions recommended by the coating material manufacturer or by this Section, whichever is the highest requirement, prior to placing the completed coating system into service.

B. In the case of enclosed areas, forced air ventilation, using heated air if necessary, may be required until the coatings have fully cured.

C. Forced Air Ventilation of Steel Reservoirs and Enclosed Hydraulic Structures: Forced air

ventilation is required for the application and curing of coatings on the interior surfaces of steel reservoirs and enclosed hydraulic structures. During curing periods continuously exhaust air from a maintenance hole in the lowest shell ring, or in the case of an enclosed hydraulic structure, from the lowest level of the structure using portable ducting. After all interior coating operations have been completed provide a final curing period for a minimum of 10 days, during which the forced ventilation system shall operate continuously. For additional requirements, refer to the specific coating system being used in the paragraph entitled "Submerged and Severe Service Coating Systems" herein.

3.14 COATING SYSTEM SCHEDULES - FERROUS METALS

A. Coating System Schedule, Ferrous Metal - Not Galvanized:

	Item	Surface Prep.	System No.
[FM-1	All exposed surfaces indoors and outdoors, except those included below.	Commercial blast cleaning SSPC-SP6/NACE3	(7) acrylic enamel
FM-2	Surfaces in chlorination room, chlorine storage room.	Commercial blast cleaning SSPC-SP6/NACE3	(101) epoxy
FM-3	Surfaces of equipment and ferrous surfaces submerged or intermittently submerged in potable water or utility water, including all surfaces lower than 2-feet above high-water level and all surfaces inside enclosed hydraulic structures and vents (excluding shop-coated valves, couplings, pumps).	White metal blast cleaning SSPC-SP5/NACE1	(100) amine cured epoxy
FM-4	Surfaces of equipment and ferrous surfaces submerged or intermittently submerged in wastewater, including all surfaces lower than 2-feet above high-water level and all surfaces inside enclosed hydraulic structures (excluding shop-coated valves, couplings, pumps).	White metal blast cleaning SSPC-SP5/NACE1	(109) epoxy amine
FM-5	Surfaces exposed to high temperature (between 150- and 600-degrees F).	White metal blast cleaning SSPC-SP10/NACE1	(6) inorganic zinc,water-based
FM-6	Surfaces exposed to high temperature (between 600- and 1000-degrees F).	white metal blast cleaning SSPC-SP5/NACE1	(3) aluminum silicone resin
FM-7	Buried small steel pipe.	Removal of dirt, grease, oil	(200) PVC tape
FM-8	Buried pipe couplings, valves, and flanged joints (where piping is plastic).	Removal of dirt, grease, oil	(201) rich portland cement mortar

FM-9	Buried pipe couplings, valves, and flanged joints (where piping is not plastic, or tape-coated, or mortar-coated steel), including epoxy-coated surfaces.	As specified by reference specification	(205) polyethylene encasement
FM-10	Buried pipe couplings, valves, and flanged joints (where piping is mortar-coated steel or reinforced concrete), including epoxy-coated surfaces.	Removal of dirt, grease, oil	(206) cement-mortar coating
[FM-11	Ferrous surfaces in water passagaes of all valves 4-inch size and larger, exterior surfaces of submerged valves.	White metal blast cleaning SSPC-SP5/NACE1	(100) amine-cured epoxy
[FM-12	Where shown or specified, ferrous surfaces in water passages and submerged surfaces of all pumps which have discharge size of 4-inches or larger.	White metal blast cleaning SSPC-SP5/NACE1	(100) amine-cured epoxy
FM-13	Ferrous surfaces of sleeve-couplings	White metal blast cleaning SSPC-SP5/NACE1	(100) amine-cured epoxy
FM-14	All ferrous surfaces of sluice gates, flap gates, and shear gates, including wall thimbles.	White metal blast cleaning SSPC-SP5/NACE1	(106) fusion-bonded epoxy
FM-15	Buried surfaces that are not specified to be coated	White metal blast cleaning SSPC-SP5/NACE1	(103) coal tar epoxy
FM-16	Indoor sheet metal, flashings, exposed ducts.	Commercial blast cleaning SSPC-SP6/NACE3	(7) acrylic enamel
FM-17	Interior surfaces of all chemical tanks, except caustic soda tanks, including tank nozzles, manholes, nozzle necks, flange faces.	White metal blast cleaning SSPC-SP5/NACE1	(107) chemical-resistant sheet lining

B. Coating System Schedule, Ferrous Metal - Galvanized: Pretreatment coatings, barrier coatings, or washes shall be applied as recommended by the coating manufacturer. [All galvanized surfaces shall be coated] [All galvanized surfaces except for the following items shall be coated unless coating is required by other Sections: (1) Floor gratings and frames, (2) Handrails, (3) Stair treads, (4) Chain link fencing and appurtenances, (5) Specifier selected items].

	Item	Surface Prep.	System No.
FMG-1	All exposed surfaces indoors and outdoors, except those included below.	Galvanized Metal	(3) acrylic enamel]
FMG-1	All exposed surfaces indoors and outdoors, except those below.	Galvanized Metal	(4) aliphatic polyurethane
FMG-2	Surfaces in chlorinator room, chlorine storage room.	Galvanized Metal	(101) amine-cured epoxy
FMG-3	Buried small steel pipe.	Galvanized Metal	(200) PVC tape
FMG-4	Surfaces buried or submerged in wastewater.	Galvanized Metal	(109) epoxy-amine
FMG-5	Buried miscellaneous surfaces, couplings, valves, and flanged joints.	Galvanized Metal	(201) rich portland cement mortar
FMG-6	Indoor sheet metal flashings, exposed ducts.	Galvanized Metal	(3) acrylic enamel

C. Coating System Schedule, Steel Reservoir Interior: For steel reservoir exterior coating system, see "Coating System Schedule, Ferrous Metal-Not Galvanized". The interior surfaces of steel reservoirs shall have all surface preparation and coating work performed in the field.

	Item	Surface Prep.	System No.
SR-1	All interior surfaces beginning one foot above high-water level, including all plates, roof structural members, fittings, and vents.	White metal blast cleaning SSPC-SP5/NACE1	(105) Part A, inorganic zinc/epoxy
SR-2	Underside of column bases, floor under column bases before columns set in place, submerged contact surfaces that are not accessible after erection.	White metal blast cleaning SSPC-SP5/NACE1	(105) Part B, inorganic zinc/epoxy
SR-3	Interior surfaces exclusive of surfaces in SR-1 and SR-2 above, including overflow, drain and other piping out to the first valve or coupling.	White metal blast cleaning SSPC-SP5/NACE1	(105) Part B, inorganic zinc/ epoxy

D. Coating System Schedule, Steel Digester Floating Covers and Digester Gasholders:

	Item	Surface Prep.	System No.
SD-1	All ferrous surfaces submerged in water or sludge, including rim plate.	White metal blast cleaning SSPC-SP5/NACE1	(109) epoxy amine
SD-2	All ferrous surfaces exposed to digester gas.	White metal blast cleaning SSPC-SP5/NACE1	(109) epoxy amine
SD-3	All interior ferrous surfaces of gasholder shell, including top angle.	White metal blast cleaning SSPC-SP5/NACE1	(109) epoxy amine
SD-4	All ungalvanized interior surfaces inside digester roof, between and including the ceiling plate and the roof deck.	White metal blast cleaning SSPC-SP5/NACE1	(109) epoxy amine
SD-5	Exposed, outdoors.	Commercial blast cleaning SSPC-SP6/NACE3	(5) Zinc rich, aliphatic polyurethane

3.15 COATING SYSTEM SCHEDULE, NON-FERROUS METAL, PLASTIC, FIBERGLASS

A. Where isolated non-ferrous parts are associated with equipment or piping, the Contractor shall use the coating system for the adjacent connected surfaces. Do not coat handrails, gratings, frames or hatches. Only primers recommended by the coating manufacturer shall be used.

	Item	Surface Prep.	System No.
[NFM-1	All exposed surfaces, indoors and outdoors, except those included below.	Solvent cleaned SSPC-P1	(3) acrylic enamel]
[NFM-1	All exposed surfaces, indoors and outdoors, except those included below.	Solvent cleaned SSPC-P1	(4) aliphatic polyurethane]
NFM-2	Chlorination room, chlorine storage room.	Solvent cleaned SSPC-SP1	(101) amine-cured epoxy
NFM-3	Aluminum surfaces in contact with concrete, or with any other metal except galvanized ferrous metal.	Solvent cleaned SSPC-SP1	(208) aluminum metal isolation
NFM-4	Polyvinyl chloride plastic piping, indoors and outdoors, or in structures, not submerged.	Solvent cleaned SSPC-SP1	(7) acrylic enamel
NFM-5	Fiber glass surfaces.	Per Paragraph [3.8]	(12) aliphatic polyurethane fiberglass
NFM-6	Buried non-ferrous metal pipe.	Removal of dirt, grease, oil	(200) PVC tape

3.16 COATING SYSTEM SCHEDULE-CONCRETE

	Item	**Surface Prep.**	**System No.**
C-1	Exposed indoors and outdoors, as shown.	Per Paragraph 3.7	(10) acrylic, concrete
C-2	Submerged in wastewater including surfaces up to 2-feet above high water line and down to 2-feet below low water line and all surfaces in an enclosed structure, as shown.	Per Paragraph 3.7	New surface:(110) epoxy amine, concrete Existing surface: (102) epoxy mortar
C-3	Floor slab, exposure to chemicals, as shown.	Per Paragraph 3.7	(203) epoxy surfacing
C-4	Floor slab, non-slip surface, as shown.	Per Paragraph 3.7	(207) non-slip surfacing
C-5	Interior surfaces of sewer manholes, including sidewalls, bottom, and metal appurtenances, for manholes shown.	Per Paragraph 3.7	New surface:(110) epoxy amine, concrete Existing surface: (102) epoxy mortar
C-6	Walls, exposure to chemical splash, washdown, as shown.	Per Paragraph [3.7]	(11) aliphatic polyurethane, concrete

3.17 COATING SYSTEM SCHEDULE-CONCRETE BLOCK MASONRY

	Item	Surface Prep.	System No.
CBM-1	Exposed, indoors and outdoors, as shown.	Per Paragraph [3.9]	(10) acrylic, concrete
CBM-2	Submerged in wastewater, including all vertical masonry surfaces above waterline as shown.	Per Paragraph [3.9]	New surface:(110) epoxy amine, concrete Existing surface: (102) epoxy mortar
CBM-3	Exterior surfaces, above grade.	Per Paragraph [3.9]	(204) waterproofing

END OF SECTION

This page is intentionally left blank.

SECTION 10430

EXTERIOR SIGNAGE

PART 1 - GENERAL

1.1 SUMMARY

A. This Section includes the following:

1. Panel signs.

1.2 DEFINITIONS

A. ADA-ABA Accessibility Guidelines: U.S. Architectural & Transportation Barriers Compliance Board's "Americans with Disabilities Act (ADA) Accessibility Guidelines for Buildings and Facilities; Architectural Barriers Act (ABA) Accessibility Guidelines."

1.3 ACTION SUBMITTALS

A. Product Data: For each type of product indicated.

B. Shop Drawings: Show fabrication and installation details for signs.

1. Show sign mounting heights, locations of supplementary supports to be provided by others, and accessories.

2. Provide message list, typestyles, graphic elements, and layout for each sign.

C. Samples: For each sign type and for each color and texture required.

PART 2 - PRODUCTS

2.1 MATERIALS

A. Steel with Porcelain Enamel:

1. Porcelain enamel fused to a steel substrate at temperatures exceeding 1,400 degrees Fahrenheit.

2.2 PANEL SIGNS

A. Available Manufacturers: Subject to compliance with requirements, manufacturers offering products that may be incorporated into the Work include, but are not limited to, the following:

1. KVO Industries: http://www.kvoindustries.com/pe.html 1825 Empire Industrial Court, Suite A. Santa Rosa CA 95403. Phone: 707 573 6868, Toll Free: 800 657 6412.

B. Brackets: Fabricate brackets and fittings for bracket-mounted signs from extruded aluminum to suit panel sign construction and mounting conditions indicated. Factory

paint brackets in color matching background color of panel sign.

2.3 ACCESSORIES

A. Anchors and Inserts: Provide nonferrous-metal or hot-dip galvanized anchors and inserts for exterior installations and elsewhere as required for corrosion resistance. Use toothed steel or lead expansion-bolt devices for drilled-in-place anchors. Furnish inserts, as required, to be set into concrete or masonry work.

2.4 FABRICATION

A. General: Provide manufacturer's standard signs of configurations indicated.

1. Welded Connections: Comply with AWS standards for recommended practices in shop welding. Provide welds behind finished surfaces without distortion or discoloration of exposed side. Clean exposed welded surfaces of welding flux and dress exposed and contact surfaces.
2. Mill joints to tight, hairline fit. Form joints exposed to weather to exclude water penetration.
3. Conceal fasteners if possible; otherwise, locate fasteners where they will be inconspicuous.

PART 3 - EXECUTION

3.1 INSTALLATION

A. Locate signs and accessories where indicated, using mounting methods of types described and complying with manufacturer's written instructions.

1. Install signs level, plumb, and at heights indicated, with sign surfaces free of distortion and other defects in appearance.

2. Interior Wall Signs: Install signs on walls adjacent to latch side of door where applicable. Where not indicated or possible, such as double doors, install signs on nearest adjacent walls. Locate to allow approach within 3 inches of sign without encountering protruding objects or standing within swing of door.

B. Wall-Mounted Signs: Comply with sign manufacturer's written instructions except where more stringent requirements apply.

C. Bracket-Mounted Signs: Provide manufacturer's standard brackets, fittings, and hardware for mounting signs that project at right angles from walls and ceilings. Attach brackets and fittings securely to walls and ceilings with concealed fasteners and anchoring devices to comply with manufacturer's written instructions.

(END OF SECTION)

SECTION 11000

EQUIPMENT GENERAL PROVISIONS

PART 1 -- GENERAL

1.1 THE REQUIREMENT

A. The CONTRACTOR shall furnish all tools, supplies, materials, equipment, and all labor necessary for the furnishing, construction, installation, testing, and operation of all equipment and appurtenant work, complete and operable, all in accordance with the requirements of the Contract Documents.

B. The provisions of this Section shall apply, in general, to all equipment specified and where referred to, and they supplement the detailed equipment specifications. The detailed equipment specifications shall govern where this section conflicts with detailed sections.

1.2 RELATED WORK SPECIFIED ELSEWHERE

A. Divisions 2 and 15 Piping, Fittings, and Valves as applicable.

B. Section 05500 Metal Fabrications.

C. Section 09800 Protective Coating.

D. Section 15610 Piping, General.

E. Section 16340 Low Voltage Motor Control.

F. Section 16490 Electric Motors.

G. Division 17, Instrumentation and Control.

1.3 REFERENCE SPECIFICATIONS, CODES AND STANDARDS

A. Comply with the applicable reference specifications as specified in the GENERAL REQUIREMENTS.

B. Commercial Standards: All equipment, products, and their installation shall be in accordance with the following standards, as applicable, and as specified in each Section of these specifications:

1. American Society for Testing and Materials (ASTM).

2. American Public Health Association (APHA).

3. American National Standards Institute (ANSI).

4. American Society of Mechanical Engineers (ASME).

5. American Water Works Association (AWWA).

6. American Society of Heating, Refrigerating, and Air Conditioning Engineers (ASHRAE).

7. American Welding Society (AWS).

8. National Fire Protection Association (NFPA).

9. Federal Specifications (FS).

10. National Electrical Manufacturers Association (NEMA).

11. Rubber Manufacturers of America (RMA).

12. Manufacturer's published recommendations and specifications.

13. General Industry Safety Orders (Cal/OSHA).

C. The following standards in particular are referred to in this Section of the Specifications:

ANSI B16.1	Cast Iron Pipe Flanges and Flanged Fittings Class 25, 125, 250, and 800.
ANSI B16.5	Pipe Flanges and Flanged Fittings, Steel, Nickel Alloy, and Other Special Alloys.
ANSI B46.1	Surface Texture.
ANSI S12.6	Method for the Measurement of the Real-Ear Attenuation of Hearing Protections.
ANSI/ASME B1.20.1	General Purpose Pipe Threads (inch)
ANSI/ASME B31.1	Power Piping.
ANSI/AWWA D100	Welded Steel Tanks for Water Storage.
AWWA C206	Field Welding of Steel Water Pipe.
ASTM A 48	Specification for Gray Iron Castings.
ASTM A 108	Specification for Steel Bars, Carbon, Cold-Finished, Standard Quality.

1.4 CONTRACTOR SUBMITTALS

A. Submittals shall be made in accordance with the GENERAL REQUIREMENTS.

B. Shop Drawings: The CONTRACTOR shall furnish complete shop drawings for all equipment specified in the various Sections, together with all piping, valves, and controls for review by the ENGINEER in accordance with SUBMITTALS of the GENERAL REQUIREMENTS.

C. Tools: Where the equipment is manufactured to require special tools for maintenance other than those normally available commercially, the CONTRACTOR shall supply one complete set of special wrenches or other special tools necessary for the assembly, adjustment, and dismantling of the equipment. All tools shall be of best quality hardened steel forgings with bright, finished heads and with work faces dressed to fit nuts. The set

of tools shall be neatly mounted in a labeled tool box of suitable design provided with a hinged cover.

D. Spare Parts: The CONTRACTOR shall obtain and submit from the manufacturer a list of suggested spare parts for each piece of equipment according to the provisions of SPARE PARTS of the GENERAL REQUIREMENTS. After approval, CONTRACTOR shall furnish such spare parts suitably packaged, identified with the equipment number, and labeled. CONTRACTOR shall also furnish the name, address, and telephone number of the nearest distributor for each piece of equipment. All spare parts are intended for use by the CITY, only, after expiration of the guaranty period. Any spare parts which the ENGINEER permits the CONTRACTOR to use for startup activities shall be replaced by the CONTRACTOR prior to the CITY's acceptance of beneficial use of the equipment.

1. During the term of this Contract the CONTRACTOR shall notify the ENGINEER in writing about any manufacturer's modification of the approved spare parts, such as part number, interchangeability, model change or others. If the ENGINEER determines that the modified parts are no longer applicable to the supplied equipment, the CONTRACTOR at its expense shall provide applicable spare parts.

1.5 QUALITY ASSURANCE

A. Inspection, Startup, and Field Adjustment: The CONTRACTOR shall demonstrate that all equipment meets the specified performance requirements. CONTRACTOR shall provide the services of an experienced, competent, and authorized service representative of the manufacturer of each item of major equipment and shall visit the site of work to perform the following tasks.

1. Assist the CONTRACTOR in the installation of the equipment.

2. Inspect, check, adjust if necessary and approve the equipment installation.

3. Start-up and field-test the equipment for proper operation, efficiency, and capacity.

4. Perform necessary field adjustments during the test period until the equipment installation and operation are satisfactory to the ENGINEER.

5. Instruct the CITY's personnel in the operation and maintenance of the equipment. Instruction prior to system testing of the equipment shall include step-by-step troubleshooting procedures with all necessary equipment testing.

6. The vendor’s rep shall provide a letter certifying the installation with approved test results attached.

B. Costs: The costs of all inspection, startup, testing, adjustment, and instruction work performed by factory-trained representatives shall be borne by the CONTRACTOR. The CITY will pay for costs of power and water. When available, the CITY's operating personnel will provide assistance in the field testing.

C. Public Inspection: It shall be the responsibility of the CONTRACTOR to inform the local authorities, such as building and plumbing inspectors, fire marshal, Cal/OSHA inspectors, and others, to witness all required permits and issue certificates, and pay all fees.

D. Tolerance: Tolerances and clearances shall be as shown on the shop drawings and shall be closely adhered to. Machine work shall in all cases be of high-grade workmanship and finish, with due consideration to the special nature or function of the parts. Members

without milled ends and which are to be framed to other steel parts of the structure may have a variation in the detailed length of not greater than 1/16-inch for members 30 feet or less in length, and not greater than 1/8-inch for members over 30 feet in length.

E. Machine Finish: The type of finish shall be the most suitable for the application and shall be shown in micro-inches in accordance with ANSI B46.1. The following finishes shall be used:

1. Surface roughness not greater than 63 micro-inches shall be required for all surfaces in sliding contact.

2. Surface roughness not greater than 250 micro-inches shall be required for surfaces in contact where a tight joint is not required.

3. Rough finish not greater than 500 micro-inches shall be required for other machined surfaces.

4. Contact surfaces of shafts and stems which pass through stuffing boxes and contact surfaces of bearings shall be finished to not greater than 32 micro-inches.

F. All equipment and material furnished for the project shall be brand new and free of material and manufacturing defects.

G. Manufacturer's Experience: Unless otherwise directed by the ENGINEER, all equipment furnished shall have a record of at least 5 years of successful, trouble free operation in similar applications, from the same manufacturer.

PART 2 -- PRODUCTS

2.1 GENERAL REQUIREMENTS

A. Noise Level: When the equipment is in operation, no single piece of equipment shall exceed the Cal/OSHA noise level requirements for a one-hour exposure, or the City of Los Angeles Building and Safety requirements.

B. Personal Hearing Protection: Where specified, the CONTRACTOR shall supply, in their original unopened packaging, three pairs of high attenuation hearing protectors. The ear protectors shall be capable of meeting the requirements of ANSI S12.6 and shall produce a noise level reduction of 25 dBA at a frequency of 500 Hz. The hearing protectors shall have fluid filled ear cushions and an adjustable, padded headband. The protectors shall be stored in a weatherproof, labeled, steel cabinet, furnished by the CONTRACTOR and mounted in an approved location near the noise producing equipment.

C. For service factors of electric motors, see Section 16490, "Electric Motors." Where load classifications are not specified, best modern practice shall be used.

D. Welding: Unless otherwise specified or shown, all welding shall conform to the following:

1. Latest version of ANSI/AWWA D100.

2. Latest revision of AWWA C206.

3. All composite fabricated steel assemblies which are to be erected or installed inside a hydraulic structure, including any fixed or movable structural components

of mechanical equipment, shall have continuous seal welds to prevent entrance of air or moisture.

4. All welding shall be by the metal-arc method or gas-shielded arc method as described in the American Welding Society's "Welding Handbook" as supplemented by other pertinent standards of the AWS. Qualification of welders shall be in accordance with the AWS Standards governing same.

5. All welders shall be City of Los Angeles certified.

6. In assembly and during welding, the component parts shall be adequately clamped, supported, and restrained to minimize distortion and for control of dimensions. Weld reinforcement shall be specified by the AWS code. Upon completion of the welding, all weld splatter, flux, slag, and burrs left by attachments shall be removed. Welds shall be repaired to produce a workmanlike appearance, with uniform weld contours and dimensions. All sharp corners of material which are to be painted or coated shall be ground to a minimum of 1/32-inch on the flat.

E. Protective Coating: All equipment shall be painted or coated in accordance with Section 09800, "Protective Coating," unless otherwise approved by the ENGINEER. Non-ferrous metal and corrosion-resisting surfaces shall be coated with grease or lubricating oil. Coated surfaces shall be protected from abrasion or other damage during handling, testing, storing, assembly, and shipping.

F. Protection of Equipment: All equipment shall be boxed, crated, or otherwise protected from damage and moisture during shipment, handling, and storage. All equipment shall be protected from exposure to corrosive fumes and shall be kept thoroughly dry at all times. Pumps, motors, drives, electrical equipment, and other equipment having anti-friction or sleeve bearings shall be stored in weather tight storage facilities prior to installation. For extended storage periods, plastic equipment wrappers should be avoided, to prevent accumulation of condensate in gears and bearings. For extended storage a desiccant should be included with all equipment.

G. Identification of Equipment Items: Each item of equipment shipped shall have a legible identifying mark corresponding to the equipment number shown or specified for the particular item.

H. Vibration Level: All equipment subject to vibration shall be provided with restrained spring-type vibration isolators or pads per manufacturer's written recommendation.

I. Shop Fabrication: Shop fabrication shall be preformed in accordance with the Contract Documents and the CONTRACTOR approved shop drawings.

2.2 EQUIPMENT SUPPORTS

A. Equipment Supports: Unless otherwise shown, all equipment supports, anchors, and restrainers shall be adequately designed for static, dynamic, wind, and seismic loads. The design horizontal seismic force shall be greater of that noted in the general structural notes or as required by the governing building code, or 10 percent of gravity, whichever is greater.

B. Shop Drawings: Shop drawings shall be submitted to the ENGINEER for review in accordance with the requirements of the GENERAL REQUIREMENTS. Shop Drawings will be considered incomplete unless clear, concise calculations are presented showing

equipment anchorage forces and the capacitates of the anchorage elements provided by the CONTRACTOR.

2.3 FLANGES AND PIPE THREADS

A. All flanges on equipment and appurtenances provided under this Section shall conform to ANSI B16.1, Class 125; or B16.5, Class 150, unless otherwise shown. All pipe threads shall be in accordance with ASNI/ASME B1.20.1, and the requirements of Section 15610, "Piping, General."

2.4 COUPLINGS

A. Flexible couplings shall be provided between the driver and the driven equipment to accommodate slight angular misalignment, parallel misalignment, end load, and to cushion shock loads. Where required for vertical shafts, 3-piece spacer couplings or universal type couplings for extended shafts shall be installed. Selection of flexible coupling shall include service factor of driven equipment.

B. The CONTRACTOR shall have the equipment manufacturer select or recommend the size and type of coupling required to suit each specific application.

C. Taper-lock bushings may be used to provide for easy installation and removal on shafts of various diameters.

D. Where universal type couplings are shown, they shall be of the needle bearing type construction, equipped with commercial type grease fittings.

2.5 SHAFTING

A. General: All shafting shall be continuous between bearings and shall be sized to transmit the power required. Keyways shall be accurately cut parallel with shaft centerline. Unless otherwise specified and justified by calculation, shafting shall not be turned down at the ends to accommodate bearings or sprockets whose bore is less than the diameter of the shaft. All shafts shall rotate in the end bearings and shall be turned and polished, straight and true.

B. Materials: Shafting materials shall be appropriate for the type of service and torque transmitted. Environmental elements such as corrosive gases, moisture, and fluids shall be taken into consideration. Materials shall be as shown or specified unless furnished as part of an assembly.

1. Corrosion-resistant shafting shall be stainless steel or Monel, whichever is most suitable for the intended service.

C. Differential Settlement: Where differential settlement between the driver and the driven equipment may be expected, a shaft of sufficient length with 2 sets of universal type couplings shall be provided.

2.6 BEARINGS

A. General: Bearings shall conform to the standards of the Anti-Friction Bearing Manufacturers Association, Inc. (AFBMA).

B. To assure satisfactory bearing application, fitting practice, mounting, lubrication, sealing, static rating, housing strength, and other important factors shall be considered in bearing selection.

C. All lubricated-for-life bearings shall be factory-lubricated with the manufacturer's recommended grease to insure maximum bearing life and best performance.

D. Bearing Life: Except where otherwise specified or shown, all bearings shall have a minimum L-10 life expectancy of 5 years or 20,000 hours, whichever occurs first. Where so specified, bearings shall have a minimum rated L-10 life expectancy corresponding to the type of service, as follows:

Type of Service	Design Life (years)	B-10 Design Life (hours)
1. 8-hour shift	10	40,000
2. 16-hour shift	10	60,000
3. Continuous	10	100,000

E. Bearing housing shall be of cast iron or steel and bearing mounting arrangement shall be as specified or shown, or as recommended in the published standards of the manufacturer. Split-type housings may be used to facilitate installation, inspection, and disassembly.

F. Sleeve-type bearings shall have a Babbitt or bronze liner.

2.7 GEARS AND GEAR DRIVES

A. Unless otherwise specified, gears shall be of the helical or spiral-bevel type, designed and manufactured in accordance with AGMA Standards, with a gear teeth minimum service factor of 1.7, a minimum B-10 bearing life of 60,000 hours and a minimum efficiency of 94 percent. Worm gears shall not be used, unless specifically approved by the ENGINEER.

B. All gear speed reducers or increases shall be of the enclosed type, oil- or grease-lubricated and fully sealed, with a breather to allow air to escape but keep dust and dirt out. The casing shall be of cast iron or heavy-duty steel construction with lifting lugs and an inspection cover for each train. An oil level glass and an oil flow indicator shall be provided, arranged for easy reading.

C. Gears and gear drives as part of an equipment assembly shall be shipped fully assembled for field installation.

D. Gear design, manufacture and material selections shall be left to the discretion of the manufacturer, provided the above AGMA level of quality suitable for the application are met. Input and output shafts shall be adequately designed for the service and load requirements. Gears shall be computer-matched for minimum tolerance variation. The output shaft shall have 2 position seals to prevent oil leakage.

E. Oil level and drain location relative to the mounting arrangement shall be easily accessible. Oil coolers or heat exchangers with all required appurtenances shall be furnished when necessary.

2.8 DRIVE GUARDS

A. All power transmission, prime movers, machines, shaft extensions, and moving machine parts shall be guarded to conform with the Division of Industrial Safety General Industrial Safety Orders latest edition and the Cal/OSHA Safety and Health Standards (29CFR1910). The guards shall be constructed of minimum 10 gage expanded, flattened steel with smooth edges and corners, galvanized after fabrication and securely fastened. Where required for lubrication or maintenance, guards shall have hinged latched access doors.

2.9 INSULATING CONNECTIONS

A. General: Where dissimilar materials are connected, insulating bushings, unions, couplings, or flanges, as appropriate, shall be used in accordance with the requirements of the Section 15610, "Piping, General."

2.10 GASKETS AND PACKINGS

A. Gaskets shall be in accordance with the requirements of Section 15610, "Piping, General."

B. Packing around valve stems and reciprocating shaft shall be compressible material, compatible with the fluid being used. Chevron-type "V" packing shall be Garlock No. 432, John Crane "Everseal," or equal.

2.11 SAFETY REQUIREMENTS

A. Where work construction areas are located within a flammable or toxic gas environment, suitable gas detection, ventilating, and oxygen deficiency equipment shall be provided. Workers shall be equipped with approved breathing apparatus.

2.12 ANCHOR BOLTS

A. Equipment suppliers shall furnish calculations establishing the number, size, type, length, and embedment of anchor bolts required to mount the equipment safely in accordance with the Seismic characteristics proscribed by the specifications. The installing Contractor shall supply suitable anchor bolts for each item of equipment in accordance with the equipment Suppliers' recommendations, as approved by the Engineer. Bolting templates or setting drawings shall be delivered by the equipment Supplier to permit setting the anchor bolts when the structural concrete is placed by the installing Contractor. Two leveling nuts shall be used for each bolt. The anchor design calculations must be stamped by a California registered, professional civil or structural engineer.

B. Unless otherwise shown on the Drawings or specified, anchor bolts for items of equipment mounted on baseplates shall be long enough to permit 1-1/2 inches of grout beneath the baseplate and to provide adequate anchorage into structural concrete. Bolts shall extend with at least two threads over the nut after final alignment.

C. Unless otherwise specified or approved by the Engineer, anchor bolts, nuts, and washers shall be stainless steel.

2.13 LIFTING LUGS

A. Lifting Lugs: Equipment weighing over 80 pounds shall be provided with lifting lugs.

PART 3 -- EXECUTION

3.1 COUPLINGS

A. The CONTRACTOR shall have the equipment manufacturer select or recommend the size and type of coupling required to suit each specific application; installation shall be per equipment manufacturer's printed recommendations.

3.2 PIPE HANGERS, SUPPORTS, AND GUIDES

A. Hangers, supports, and guides shall be spaced in accordance with the specifications of each piece of equipment.

(END OF SECTION)

SECTION 11805

HYDRAULIC GATES AND VALVES, GENERAL

PART 1 -- GENERAL

1.1 THE REQUIREMENT

A. The CONTRACTOR shall furnish and install all tools, supplies, materials, equipment and labor necessary for the installation, testing, and placing into operation of all hydraulic gates and valves with appurtenances, complete and operable, in accordance with the requirements of the Contract Documents.

B. The provisions of this Section shall apply to all hydraulic gates and valves specified, except where otherwise specified in the Contract Documents.

C. The CONTRACTOR shall assign to a single manufacturer full responsibility for the furnishing and functional operation of the hydraulic gates and valves including operators and accessories. The designated single manufacturer, however, need not manufacture more than one part of the unit(s) but shall coordinate the design, assembly, testing, and erection of the unit(s) as specified herein.

1.2 RELATED WORK SPECIFIED ELSEWHERE

A. Section 09800, Protective Coating

1.3 REFERENCE SPECIFICATIONS, CODES, AND STANDARDS

A. Comply with the applicable reference specifications as specified in the GENERAL REQUIREMENTS.

B. Commercial Standards:

ANSI/AWWA C560	Cast Iron Slide Gates
ANSI/AWWA C561	Stainless Steel Slide Gates
ANSI/AWWA C562	Aluminum Slide Gates.
ANSI/AWWA C563	Composite Slide Gates
ASTM A 276	Specifications for Stainless and Heat-Resisting Steel Bars and Shapes.
ASTM B 21	Specification for Navel Brass Rod, Bar, and Shapes.
ASTM B 584	Specification for Copper Alloy Sand Castings for General Applications.

1.4 CONTRACTOR SUBMITTALS

A. Shop Drawings: Shop drawings of all hydraulic gates and valves shall be submitted to the ENGINEER in accordance with the GENERAL REQUIREMENTS.

B. Certification: The CONTRACTOR shall obtain written certification from the designated single manufacturer, addressed to the CITY, stating that the equipment will efficiently and thoroughly perform the required functions in accordance with these Specifications and as shown, and that the designated single manufacturer accepts the CONTRACTOR's assignment of full responsibility for coordination of all equipment, including operators and controls, and services required for proper installation and operation. The CONTRACTOR shall submit all such certificates to the ENGINEER.

C. O&M Manuals: Prior to start-up the CONTRACTOR shall furnish to the CITY complete operations and maintenance manuals in accordance with TECHNICAL MANUALS of the GENERAL REQUIREMENTS.

D. Tools: Special tools necessary for maintenance and repair of the hydraulic gates and valves shall be furnished as a part of the WORK hereunder; such tools shall be suitably stored in metal tool boxes, and identified with the equipment number by means of stainless steel or solid plastic name tags attached to the box.

E. Spare Parts: The CONTRACTOR shall obtain from the manufacturer a list of suggested spare parts of all items subject to wear, such as seals, packing, gaskets, nuts, bolts, washers, etc. He shall furnish all these parts suitably packaged and labelled in a box as described above for tools.

F. Maintenance: Printed instructions relating to proper maintenance, including lubrication, and parts lists indicating the various parts by name, number, and diagram where necessary, shall be furnished in duplicate with each unit or set of identical units. A recommended spare parts list shall be included.

G. Field Procedures: Instructions for field procedures for erection, adjustments, inspection, and testing shall be provided prior to installation of the gates and valves.

1.5 QUALITY ASSURANCE

A. Equipment Testing: The CONTRACTOR shall be responsible for the coordination of the tests of each hydraulic gate and valve with operators, in the presence of the manufacturer's factory service representative. Any excessive leaks shall be corrected and the equipment retested until found satisfactory.

1.6 MANUFACTURER'S SERVICE REPRESENTATIVE

A. Erection and Startup Assistance: Service and instruction assistance by the manufacturer's engineering representative for each gate and valve shall be provided by the CONTRACTOR during erection and startup.

B. Instruction of CITY's Personnel: The CONTRACTOR shall provide for the services of a factory service representative to instruct the CITY's personnel in the operation and maintenance of the equipment.

1.7 CLEANUP

A. After completion of the installation and testing, the CONTRACTOR shall remove all debris from the site, clean all the equipment and controls, and hand over his work in perfect operating condition.

1.8 GUARANTEES, WARRANTIES

A. After completion, the CONTRACTOR shall furnish to the CITY the manufacturer's written guarantees, that the hydraulic gates and valves will meet these specifications. The CONTRACTOR shall also furnish the manufacturer's warranties as published in its literature and as specified.

PART 2 -- PRODUCTS

2.1 GENERAL

A. All manufactured items provided under this Section shall be new, of current manufacture, and shall be the products of reputable manufacturers specializing in the manufacture of such products; such manufacturers shall have had previous experience in such manufacture and shall, upon request of the ENGINEER, furnish the names of not less than 5 successful installations of its equipment of comparable nature to that offered under this contract.

B. All combinations of manufactured equipment which are provided under these Specifications shall be entirely compatible, and the CONTRACTOR and the listed manufacturer shall be responsible for the compatible and successful operation of the various components of the units conforming to specified requirements. All necessary mountings and appurtenances shall be included.

2.2 MATERIALS

A. All materials employed in the manufacture and installation of the hydraulic gates, valves, and operators shall be suitable for the intended application; material not specifically called for shall be high-grade, standard commercial quality, free from all defects and imperfection that might affect the serviceability of the product for the purpose for which it is intended.

PART 3 -- EXECUTION

3.1 INSTALLATION

A. General: Hydraulic gates and valves shall be installed in accordance with procedures submitted with the CONTRACTOR approved shop drawings and as shown, unless otherwise acceptable to the ENGINEER.

B. Alignment: Equipment shall be field tested to verify proper alignment, operation as specified, and freedom from binding, scraping, or other defects. Equipment shall be secure in position and neat in appearance.

C. Lubricants: The installation work shall include furnishing the necessary oil and grease for initial operation.

3.2 PROTECTIVE COATING

A. All exposed materials, except corrosion-resistant metals which have not been shop coated, shall be field coated as specified in Section 09800, "Protective Coating." Shop coated items which suffered damage to the shop coating shall be touched up as specified in said Protective Coating Section.

(END OF SECTION)

SECTION 11815

SLIDE/STOP GATES

PART 1 -- GENERAL

1.1 THE REQUIREMENT

A. The CONTRACTOR shall furnish and install slide/stop gates in the sizes and locations shown, complete and operable, including manual and electric operators, bracing, frame, mountings, etc., as specified herein, in accordance with the requirements of the Contract Documents.

1.2 RELATED WORK SPECIFIED ELSEWHERE

A. Section 09800, Protective Coatings.

1.3 REFERENCE SPECIFICATIONS, CODES AND STANDARDS

A. Comply with the applicable reference specifications as specified in the GENERAL REQUIREMENTS.

B. The requirements of Section 11805 – Hydraulic Gates and Valves, General, apply to this section.

C. Comply with the current provisions of the following Codes and Standards.

AWWA C562	Aluminum Slide Gates
ASTM A193A	Specification for Alloy-Steel and Stainless Steel Bolting Materials for High-Temperature Service.
ASTM A194A	Specification for Carbon and Alloy Steel Nuts for Bolts for High Pressure and High-Temperature Service.
ASTM A276	Stainless Steel Bars and Shapes.
ASTM A380	Standard Practice for Cleaning, De-scaling and Passivation of Stainless Steel Parts, Equipment and Systems.
ASTM D2240	Test Method for Rubber Property-Durometer Hardness.
ASTM D4020	Ultra-High-Molecular-Weight Polyethylene Molding and Extrusion Materials

* When two or more of the above regulations are applicable, the more stringent requirement shall be met.

1.4 CONTRACTOR SUBMITTALS

A. Submittals shall be made in accordance with the GENERAL REQUIREMENTS.

B. Shop Drawings: The CONTRACTOR shall submit complete shop drawings of all gates, frames, slides, and operators, as well as design load calculations for deflection at the

maximum expected head, and calculations for the lifting force required to lift the gate with 40 pounds effort on the handwheel or crank.

1.5 QUALITY ASSURANCE

A. The leakage allowance for slide gates shall not exceed 0.1 gpm/ft of seating perimeter under the design seating or unseating head, to meet ANSI/AWWA C562.

PART 2 - PRODUCTS

2.1 GENERAL REQUIREMENTS

A. All gates shall be new and of current manufacture, and adequately braced to prevent warpage and bending under the intended use. Where designated, gates shall be furnished with electric operators provided by the gate manufacturer. All operators of a given type shall be furnished by the same manufacturer.

B. All gates shall be furnished with an electrically operated actuator with manual handwheel having a 2:1 gear ratio, as shown on the Drawings, and shall conform to ANSI/AWWA C562 and ANSI/AWWA C542, except as otherwise specified herein.

C. Operating Mechanism: Actuator shall be weatherproof, two-part with umbilical between control and motor actuator sections, for mounting as shown on the Drawings. The unit shall be designed so that a maximum of 40 pounds effort on the manual handwheel will operate the gate. Clockwise movement of the handwheel shall close the gate.

D. Coating: Each gate and all accessories shall be epoxy-coated as specified in Section 09800 Protective Coating. Care shall be exercised to protect all machined surfaces during sandblasting and coating.

1. Cleaning and Finishing stainless steel welded fabrication:

a. Cleaning of weld joints and weld joint areas both before and after welding, shall conform to ASTM A380. Use only stainless steel brushes or stainless steel wool.

b. Finishing: All weld areas following fabrication shall be pickled to remove all mill scale, weld inclusions, and color, and passivated in conformance to ASTM A380.

c. Contractor shall submit the cleaning and passivation procedure in compliance with the above requirements for ENGINEER’s review and approval.

E. Stems: Stems shall be of Type 316 stainless steel and shall be provided with Type 316 stainless steel adjustable bushed stem guides to ensure that the L/R ratio of the stem does not exceed 200.

2.2 ALUMINUM SLIDE GATES

A. Unless otherwise indicated, materials of construction shall be in accordance with AWWA C562 suitable for the service.

B. Construction: Aluminum slide gates shall be self-contained, or as shown, motor actuated with manual operation handwheel.

1. ASTM B209 aluminum slide, alloy 6061-T6 or alloy 5083-H321. ASTM B308 aluminum frame, alloy 6061-T6. Aluminum gates in liquids with a pH lower than 5, or higher than 9, shall be anodized.

2. Type 316 stainless steel operating stem and hardware.

3. ASTM D4020 UHMW polyethylene guides and seats.

4. Neoprene seals, “J” bulb type. Flat seals are not acceptable.

5. The gates shall have stiffeners, extruded aluminum frames with bearing bars of ultra-high molecular weight polymer.

C. Stem and operator shall be fully lubricated.

D. Provide stem cover, intermediate supports with steady bushings, wall thimble, and all other accessories required for installation.

E. Manufacturers:

1. Hydrogate.

2. Rodney Hunt Company.

3. Or equal.

PART 3 -- EXECUTION

3.1 INSTALLATION

A. Slide/stop gates shall be installed in strict accordance with the manufacturer's printed recommendations and the requirements herein. Operators shall be located to avoid interference with handrails and structural members.

B. All damage to surface coatings incurred during shipment and/or installation shall be repaired to the satisfaction of the ENGINEER prior to installation.

(END OF SECTION)

SECTION 13240

STORM WATER TREATMENT DEVICE

PART 1 GENERAL

1.01 SUMMARY

A. Section includes:

1. Storm Water Treatment Devices (SWTD) are used for filtration of stormwater runoff including dry weather flows. The SWTD is an inline pre-engineered hydrodynamic separation system composed of multiple sediment chambers, a screening system designed to capture and store solid debris such as foliage and litter in a dry state, and an oil skimmer to remove free floating hydrocarbons.

2. Furnish and install the SWTD with appurtenances necessary to complete Work as indicated on the plans.

3. Work Includes the following:

a. Concrete structure.

b. Internal components.

c. Risers, hatches, and/or manholes.

1.02 REFERENCE SPECIFICATIONS, CODES AND STANDARDS

A. Comply with the applicable reference specifications as specified in the GENERAL REQUIREMENTS.

B. Comply with the current provisions of the following Codes and Standards. When two or more of the below regulations are applicable, the more stringent requirement shall be met.

1. American Association of State Highway Transportation Officials (AASHTO):

a. AASHTO – Standard Specifications for Highway Bridges, 17th Edition – 2002.

b. AASHTO M198 – Standard Specification for Joints for Concrete Pipe, Manholes, and Precast Box Sections Using Preformed Flexible Joint Sealants.

2. American Concrete Institute (ACI):

a. ACI 318 – Building Code Requirements for Structural Concrete.

b. ACI 350 – Code Requirements for Environmental Engineering Concrete Structures.

c. ACI 350.3 – Seismic Design of Liquid-Containing Structures and Commentary.

3. American Society for Testing and Materials (ASTM):

   a. ASTM A615 – Standard Specification for Deformed & Plain Carbon-Steel Bars for Concrete Reinforcement.

   b. ASTM F716.07 – Standard Test Methods for Sorbent Performance of Absorbents.

   c. ASTM D3787 - Standard Test Method for Bursting Strength of Textiles-Constant-Rate-of-Traverse (CRT) Ball Burst Test.

1.03 QUALIFICATIONS

A. Qualified manufacturer of the SWTD shall be one that is regularly engaged in the engineering design and production of systems developed for the treatment of stormwater runoff for at least (10) years, and which have a history of successful production, acceptable to the City and Engineer.

1.04 WARRANTY

A. As specified in Section 01783, "Warranties and Bonds".

B. Special warranty:

   1. The Manufacturer shall guarantee the SWTD against all manufacturing defects in materials and workmanship for a period of (1) year from the date of delivery to the project site. The manufacturer shall be notified of repair or replacement issues in writing within the warranty period. The SWTD is limited to recommended application for which it was designed. A 10-year pro-rated warranty from the membrane material manufacturer.

1.05 CONTRACTOR SUBMITTALS

A. Submittals should be made in accordance with the General Requirements.

B. Product Data:

   1. Manufacturer’s Specifications and other data needed to prove compliance with the specified requirements in plans and these specifications;

   2. Manufacturer’s recommended installation procedures which, when approved by the City Engineer or the Consultant, will become the basis for accepting or rejecting actual installation procedures used on the Work.

C. Shop Drawings

   1. Submit signed and sealed shop drawings, including plans, elevations, sections, and details, indicating layout, dimensions, foundation, cover, and joints.

      a. System configuration with primary dimensions.

b. Interior components.

c. Accessory equipment.

2. Submit signed and sealed structural calculations, reinforcing drawings, and concrete mix design by a Structural Engineer registered in the State of California.

1.06 DELIVERY, STORAGE, AND HANDLING

A. Shipping – SWTD shall be shipped to the contractor's address or job site, and is the responsibility of the contractor to offload the unit(s) and place in the exact site of installation.

B. Storage and Handling– The contractor shall exercise care in the storage and handling of the SWTD and all components prior to and during installation. Any repair or replacement costs associated with events occurring after delivery is accepted and unloading has commenced shall be born by the contractor. The SWTD(s) and all components shall always be stored indoors and transported inside the original shipping container until the unit(s) are ready to be installed. The SWTD shall always be handled with care and lifted according to OSHA and NIOSA lifting recommendations and/or contractor's workplace safety professional recommendations.

PART 2 PRODUCTS

2.01 COMPONENTS

A. Manufacturers: The following or equal.

1. Bio Clean Environmental Services, Inc.

a. Model: DSBB-11-24-132.

B. General Performance Criteria

1. The Storm Water Treatment Device (SWTD) and all of its components shall be self-contained within a concrete structure constructed with a minimum 28 day compressive strength of 5,000 psi, with reinforcing per ASTM A 615, Grade 60, and supports a minimum H-20 loading as indicated by AASHTO. All seams and connection points shall be sealed water-tight with non-shrink grout in accordance with manufactures recommendations and project specifications.

2. Treatment flow capacity shall be a minimum of 36 cfs for 80 percent removal of material 250 microns and larger.

3. The SWTD shall be able to meet a minimum hydraulic flow capacity of 50 cfs.

4. Removal Efficiencies - The SWTD must be capable of capturing and retaining 100 percent of all trash or debris equal to or greater than 4.7 mm. The SWTD shall not release material during flow events greater than the design flow rate.

5. Storage Capacity - The SWTD must have multiple sediment removal chambers for storage of sediments and other non-floatable pollutants. The volume of each sediment removal chamber shall be called out on the submittal drawings. The SWTD must have an oil skimmer to capture hydrocarbons. The skimmer shall be equipped with storm booms. The storm boom must be capable of capturing up to 180 percent of its weight in oils and grease along with other emulsified and free floating hydrocarbons.

6. Pollution Separation - The SWTD must be equipped with a screening system capable of capturing and storing solid debris such as foliage and litter in a dry state above the static water line. The debris captured by the screening system must be stored a minimum of 3.5-inches above the static water line. The screening system must be located directly under the systems access hatch(s) to allow easy maintenance and removal of captured debris.

C. Screening System

1. Screen Frame shall be constructed of 100 percent stainless steel. All joints and seams are to be welded or fastened together with stainless steel hardware. All sides of screen frame shall be fixed. The top section of the screen frame shall have one of the following, open top, hinged top section, or a track guided sliding top section per drawings. The bottom section of the basket frame shall be a minimum of 3-inches above static.

2. Screens shall be manufactured of 100 percent louver expanded stainless steel grade 304. The screen shall be capable of capturing and retaining 100 percent of pollutants greater than or equal to 4.7 mm regardless of specific gravity for flows up to the device’s rated treatment capacity. Screens shall have openings that face opposite the flow of passing stormwater to provide continuous shielding and prevent clogging.

D. Oil Skimmer

1. The Oil Skimmer shall be mounted to the skimmer wall and located between the end of the screening system and the outlet pipe. Skimmer wall shall be constructed of concrete with a minimum 28 day compressive strength of 5,000 psi, with reinforcing per ASTM A 615, Grade 60.

2. Oil Skimmer Cage shall be constructed of stainless steel frame with flattened expanded stainless steel. Housing shall have a hinged top section. Oil Skimmer Cage shall be secured to the skimmer wall with aluminum or stainless steel hardware.

3. Media Filtration Boom shall be made up of granulated oil absorbing polymers that have been tested in accordance with section 11.2 of ASTM F 716.07 and held within a netting.

   a. Oil absorbing polymers must be proven to absorb 180 percent of its weight within a 300 second contact time, and at this absorption percentage the physical increase in the size of the granules is not more that 50 percent.

b. Netting shall be 100 percent polyester with a number 16 sieve size, and strength tested per ASTM D 3787.

c. Filter netting shall be 100 percent polyester with a number 16 sieve size, and strength tested per ASTM D 3787.

E. Sediment Chambers

1. Baffle Walls shall be constructed of concrete with a minimum 28 day compressive strength of 5,000 psi, with reinforcing per ASTM A 615, Grade 60.

2. Turbulence Deflectors shall be manufactured of 100 percent marine grade polyester resin and fiberglass strands or stainless steel and be mounted to the concrete baffles with stainless steel hardware. The turbulence deflectors should be sized to effectively eliminate scouring and re-suspension of previously captured sediments in the sediment removal chambers and creates a flow pattern that encourages suspended solids in influent flows to settle out and accumulate at the bottom of the SWTD.

a. The all fiberglass deflectors must be coated with a polyester gel coating with ultra violet inhibitors incorporated into the coating for maximum ultra violet protection.

b. Fiberglass must have a minimum thickness of 3/16-inches.

F. Access Hatches

1. Sizing and number of access hatches shall be as indicated on the drawings.

2. Access hatches shall have lift assist.

3. Access hatches shall include fall protection grating.

4. Access hatches shall have minimum H20 load rating.

PART 3 EXECUTION

3.01 INSTALLATION

A. The installation contractor shall install the SWTD in the position indicated on the Drawings.

B. The installation of the SWTD shall conform to all applicable national, state, state highway, municipal and local specifications.

C. The SWTD shall be installed in accordance with the manufacturer's drawings, instructions, and recommendations.

D. Contractor shall field verify all dimensions prior to fabrication.

E. The manufacturer shall provide the services of a qualified on-site installation supervisor to ensure proper installation of the SWTD.

F. The Contractor shall furnish all labor, equipment, materials and incidentals required to install the (SWTD) device(s) and appurtenances in accordance with the drawings and these specifications.

1. Grading and Excavation site shall be properly surveyed by a registered professional surveyor, and clearly marked with excavation limits and elevations. After site is marked it is the responsibility of the contractor to contact local utility companies and/or DigAlert to check for underground utilities. All grading permits shall be approved by governing agencies before commencement of grading and excavation. Soil conditions shall be tested in accordance with the governing agencies requirements. All earth removed shall be transported, disposed, stored, and handled per governing agencies standards. It is the responsibility of the contractor to install and maintain proper erosion control measures during grading and excavation operations.

2. Compaction – All soil shall be compacted per registered professional soils engineer's recommendations and per governing agencies standards, prior to installation of SWTD.

3. Backfill shall be placed according to a registered professional soils engineer's recommendations and per governing agencies standards, and with a minimum of 6 inches of gravel under all concrete structures.

4. Concrete Structures – After backfill has been inspected by the governing agency and approved the concrete structures shall be lifted and placed in proper position per plans.

3.02 INSPECTION

A. After installation, the contractor shall demonstrate that the SWTD has been properly installed at the correct location(s), elevations, and with appropriate components. All components associated with the SWTD and its installation shall be subject to inspection by the engineer at the place of installation. In addition, the contractor shall demonstrate that the SWTD has been installed per the manufacturer's specifications and recommendations.

(END OF SECTION)

SECTION 13330

UNDERGROUND INFILTRATION GALLERY

PART 1 -- GENERAL

1.1 THE REQUIREMENT

A. The CONTRACTOR shall furnish, install, and test the underground infiltration galleries, complete and operable including all labor, equipment, materials, tools, supplies, fittings, and appurtenances required and shall provide all supports, anchorage, hook-up, and backfilling required, in accordance with the requirements of the Contract Documents.

1.2 RELATED WORK SPECIFIED ELSEWHERE

A. Drawings and general provisions of the Contract, including General and Supplementary Conditions and Division 01 Specification Sections, apply to this Section.

B. Section 02310, Earthwork.

C. Section 02545, Storm Drain System.

D. Section 03300, Cast-in-Place Concrete.

E. Section 03400, Precast Concrete.

1.3 REFERENCE SPECIFICATIONS, CODES AND STANDARDS

A. Comply with the applicable reference specifications as specified in the GENERAL REQUIREMENTS.

B. Comply with the current provisions of the following Codes and Standards. When two or more of the below regulations are applicable, the more stringent requirement shall be met.

1. American Association of State Highway Transportation Officials (AASHTO):

a. AASHTO – Standard Specifications for Highway Bridges, 17th Edition – 2002.

b. AASHTO M105 – Standard Specifications for Gray Iron Castings.

c. AASHTO M198 – Standard Specification for Joints for Concrete Pipe, Manholes, and Precast Box Sections Using Preformed Flexible Joint Sealants.

d. AASHTO M288 – Standard Specification for Geosynthetic Specification for Highway Applications.

2. American Concrete Institute (ACI):

a. ACI 318 – Building Code Requirements for Structural Concrete.

b. ACI 350 – Code Requirements for Environmental Engineering Concrete Structures.

c. ACI 350.3 – Seismic Design of Liquid-Containing Structures and Commentary.

3. American Society for Testing and Materials (ASTM):

a. ASTM A48 – Standard Specification for Gray Iron Castings.

b. ASTM A615 – Standard Specification for Deformed & Plain Carbon-Steel Bars for Concrete Reinforcement.

c. ASTM A1064 – Standard Specification for Carbon-Steel Wire and Welded Wire Reinforcement, Plain and Deformed, for Concrete.

d. ASTM C33 – Standard Specification for Concrete Aggregates.

e. ASTM C150 – Standard Specification for Portland Cement.

f. ASTM C478 – Standard Specification for Circular Precast Reinforced Concrete Manhole Sections.

g. ASTM C595 – Standard Specification for Blended Hydraulic Cement.

h. ASTM C857 – Standard Practice for Minimum Structural Design Loading for Underground Precast Concrete Utility Structures.

i. ASTM C858 – Standard Specification for Underground Precast Concrete Utility Structures.

j. ASTM C877 – Standard Specification for External Sealing Bands for Concrete Pipe, Manholes, and Precast Box Sections.

k. ASTM C891 – Standard Practice for Installation of Underground Precast Concrete Utility Structures.

l. ASTM C913 – Standard Specification for Precast Concrete Water and Wastewater Structures.

m. ASTM C923 – Standard Specification for Resilient Connectors Between Reinforced Concrete Manhole Structures, Pipes, and Laterals.

n. ASTM C990 – Standard Specification for Joints for Concrete Pipe, Manholes, and Precast Box Sections Using Preformed Flexible Joint Sealants.

o. ASTM C1107 – Packaged Dry, Hydraulic Cement Grout (Non-Shrink).

p. ASTM C1478 – Standard Specification for Storm Drain Resilient Connectors Between Reinforced Concrete Storm Sewer Structures, Pipes, and Laterals.

q. ASTM C1675 – Standard Specification for Installation of Precast Reinforced Concrete Monolithic Box Sections for Culverts, Storm Drains, and Sewers.

r. ASTM D448 – Standard Classification for Sizes of Aggregate for Road and

Bridge Construction.

s. ASTM D698 – Test Methods for Laboratory Compaction Characteristics of Soil Using Standard Effort.

t. ASTM D545 – Standard Test Method for Preformed Expansion Joint Fillers for Concrete Construction (Nonextruding Resilient Types).

u. ASTM D1751 – Standard Specification for Preformed Expansion Joint Filler for Concrete Paving and Structural Construction (Nonextruding and Resilient Bituminous Types).

v. ASTM D2487 – Standard Practice for Classification of Soils for Engineering Purposes (Unified Soil Classification System).

w. ASTM D5992 – Standard Guide for Dynamic Testing of Vulcanized Rubber and Rubber-Like Materials Using Vibratory Methods.

x. ASTM D7957 – Standard Specification for Solid Round Glass Fiber Reinforced Polymer Bars for Concrete Reinforcement.

y. ASTM D8139 – Standard Specification for Semi-Rigid, Closed-Cell Polypropylene Foam, Preformed Expansion Joint Fillers for Concrete Pacing and Structural Construction.

z. ASTM E1745 – Standard Specification for Plastic Water Vapor Retarders Used in Contact with Soil or Granular Fill Under Concrete Slabs.

aa. ASTM F2510 – Standard Specification for Resilient Connectors Between Reinforced Concrete Manhole Structures and Corrugated Dual- and Triple-Wall Polyethylene and Polypropylene Pipes.

1.4 DESIGN REQUIREMENTS

A. Precast Concrete Modular Stormwater Detention: ASTM C 858.

B. Minimum Structural Design Loading: ASTM C 857

1. Total Cover:

a. Minimum: 12 feet.

b. Maximum: 14 feet.

2. Concrete units shall be designed for AASHTO HS-20 wheel load with impact Loading.

3. Interior Water Load shall be determined using the following:

a. A minimum of 62.4 pcf water density at the maximum water storage depth as indicated on the Plans.

4. Maximum Soil Bearing Pressure:

a. 4,000 psf.

5. Foundation:

    a. Reinforced concrete foundation per manufacturer's submittal drawings.

    b. Stone foundation underneath concrete foundation shall be 6 inches of 3/4-inch crushed angular stone with no fines compacted such that it is firm and unyielding.

6. Vertical and lateral soil pressures shall be determined using:

    a. Groundwater: Below systems invert.

    b. Geotechnical Evaluation Report prepared by Ninyo & Moore dated August 12, 2020 attached to Attachment 1 to these specifications.

7. Structural precast concrete, modular, buried, stormwater storage units shall be designed in accordance with ACI 350, ACI 350.3, and ACI 318 latest addition and the details listed herein;

    a. Wall thickness, and top slab thickness of the stormwater storage units shall conform to ACI 350 and ACI 318 and shall be no less than the minimum thickness necessary to sustain HS20 loading requirements as determined by a Licensed Professional Engineer.

    b. Wall thickness, top slab thickness and bottom slab thickness of the stormwater storage system shall be no less than the minimum thickness necessary to sustain the expected soil loading based on the required burial depths for the Project as determined by a Licensed Professional Engineer.

    c. Wet mix concrete or self-consolidating concrete (SCC) with a water/cement ratio of no greater than 0.40 shall be utilized for all precast and any field cast elements. Dry cast concrete shall not be allowed in order to maintain dimensional tolerances and to ensure adequate consolidation around heavy reinforcement.

    d. The interior assembled floor of the stormwater storage system shall be flat to within 1/2 inch and shall not slope greater than 1 percent.

    e. All vertical load bearing elements shall contain transverse reinforcement per ACI 350 and ACI 318 to provide confinement and ensure that spalling of the shell concrete does not result in a loss of axial load strength.

    f. Access shall be provided for manned entry into the system. The access point(s) for ingress and egress shall be located in the system in such a manner that a point of egress shall be visible at all times by entry personnel from any location within the system. Access locations and sizes shall be as shown on plans.

    g. The stormwater storage system shall be designed with no internal ledges, steps, slopes, walls, or other form of blockage between any interior space and at least one egress opening that may encumber access or retrieval of personnel or equipment.

    h. Areas within the stormwater storage system with ingress and egress

restrictions resulting in a 30 percent reduction in size of the standard interior height and/or width of the system and any step-over that is 3-inches in size or larger shall be considered separate compartments of the system and should be minimized. Each separate compartment shall require unique surface level ingress and egress points for safe access and exit from the system as well as to provide adequate air supply during manned entry.

C. Quality Assurance:

1. The precast concrete, modular, buried, stormwater storage units shall be manufactured at a precast concrete facility certified by the NPCA.

2. The materials, methods and completed concrete, subsurface, stormwater storage system(s) shall be subject to inspection by the Engineer. Acceptance or rejection of the system shall be based on the Specifications contained in this Section.

D. Warranty Period:

1. Material supplier shall provide a minimum 5-year materials warranty that includes all the infiltration gallery components.

1.5 CONTRACTOR SUBMITTALS

A. Submittals should be made in accordance with the General Requirements.

B. Product Data: Within 35 days after the Contractor has received the City's "Notice to Proceed", submit:

1. Materials list of items proposed to be provided under this Section and other related Sections;

2. Manufacturer's Specifications and other data needed to prove compliance with the specified requirements in plans and these specifications;

3. Manufacturer's recommended installation procedures which, when approved by the City Engineer or the Consultant, will become the basis for accepting or rejecting actual installation procedures used on the Work.

C. Shop Drawings:

1. Submit signed and sealed shop drawings, including plans, elevations, sections, and details, indicating layout, dimensions, foundation, cover, and joints.

a. Detail fabrication and installation of structural precast concrete units including joint interface at member ends and to each adjoining members.

b. Indicate locations, plan views, elevations, dimensions, shapes, and cross sections of each unit, openings, support conditions and types of reinforcement, including special reinforcement.

c. Detail loose and cast-in hardware, lifting and erection inserts, connections, and interface surfaces.

d. Indicate location and details of joint treatment.

2. Submit signed and sealed structural calculations by a Structural Engineer registered in the State of California.

3. Submit signed and sealed reinforcing drawings by a Structural Engineer registered in the State of California.

4. Concrete Mix Design signed and sealed by a Structural Engineer registered in the State of California.

5. Indicate size and location of all access openings, inlet and outlet pipe openings, vents, and level sensors and other equipment openings.

6. Indicate sealing of joints.

D. Water Storage Sizing

1. Include supporting data to confirm the stormwater storage system is sized with sufficient water storage capacity per the Plans. Minimum capacity shall be not less than 7.1 ac-feet.

1.6 DELIVERY, STORAGE, AND HANDLING

A. Delivery of Accessories: Deliver to site in manufacturer's original, unopened containers and packaging, with labels clearly identifying product name and manufacturer.

B. Deliver all precast concrete members in such quantities and at such times to assure compliance with the agreed upon Project schedule and setting sequence to ensure continuity of installation.

C. Transport and handle members in a manner to avoid excessive stresses that could cause cracking or other damage.

D. Store members with adequate dunnage and bracing, and protect units to prevent contact with soil, staining, and to control cracking, distortion, warping or other physical damage.

E. Store members with dunnage across the full width of each bearing point unless otherwise Specified or shown on the Shop Drawings.

F. Place stored members so identification marks are clearly visible and units can be inspected.

G. Place dunnage of even thickness between each member.

H. Members may be stacked according to the manufacturer's recommendation.

I. Lift and support members only at designated points indicated on the Shop Drawings. Do not drag, slide or push members.

J. Accessories:

1. Accessory components shall be delivered in the manufacturer's original, unopened packaging and/or containers with labels that clearly identify the make, model and manufacturer.

2. Accessory components shall be stored in a clean, dry area out of direct sunlight.

PART 2 -- PRODUCTS

2.1 UNDERGROUND STORMWATER INFILTRATION GALLERIES

A. Infiltration Gallery Construction: Stormwater infiltration galleries shall be constructed from reinforced, high-strength concrete to meet the manufacturer's requirements.

1. The infiltration galleries shall be capable of withstanding loads and load factors set in the AASHTO LRFD Bridge Design Specifications, Section 3. When installed, the infiltration galleries shall withstand surface H-20 axle loads and soil covers indicated in 1.4.B of this specification.

2. Infiltration Gallery Dimensions: The dimension of the infiltration galleries shall be as indicated on the Drawings

3. Infiltration Gallery Capacity: The infiltration galleries shall have a minimum void space of 95 percent, a minimum footprint of 0.65 acres, minimum storage depth of 11 feet with an additional 3 foot of freeboard, and a minimum storage volume of 7.1 acre-feet more or less laid out as indicated on the construction drawings. The interior height of the infiltration galleries shall be 14 feet maximum.

4. Infiltration Gallery Access Hatches: The infiltration galleries shall have 8 foot by 6 foot double leaf access hatches as shown on plans. If the gallery supplier is unable to provide such openings, the units that hold the access openings shall be designed as cast-in-place concrete. The Contractor shall submit design calculations and shop drawings signed and stamped by a California Registered Structural Engineer.

5. Concrete Design:

   a. Minimum Compressive Strength: 6,000 psi at 28 days

   b. Cement shall be Type II/V Portland cement conforming to ASTM C 150.

   c. Aggregate shall conform to ASTM C33, except that the requirement for gradation shall not apply.

   d. Reinforcement shall consist of steel bar conforming to ASTM A615, Grade 60/80, glass fiber reinforced polymer bars conforming to ASTM D7957, or mesh conforming to ASTM A1064, Grade 60/80.

   e. All sections shall be cured by an approved method. Sections shall not be shipped until the concrete has attained full design strength as determined by an American Concrete Institute Certified Laboratory Technician – Level 2 but in no case shall the compressive strength be less than 2,000 psi.

   f. Pipe openings shall be sized to accept pipes of the specified size(s) and material(s), and shall be sealed by the Contractor with hydraulic cement grout conforming to ASTM C1107 or sealed by use of a Resilient Connector conforming to ASTM C923, C1478, or F2510.

g. Access risers and any necessary associated grade adjustments shall conform to ASTM A478 for round access risers and ASTM C857, C858, or C913 for square/rectangular access risers and shall provide for an access opening with a minimum dimension of 48-inches.

h. Castings for manhole frames and covers shall be in accordance with ASTM A48, CL.30B and AASHTO M105. The access cover/s shall be designed for HS20-44 traffic loading and shall provide a minimum of 30-inch clear opening.

i. Cover for Reinforcing Bars: ACI 318.

j. Spacer for use between concrete members shall be a 1/2 Inch thick by 4 inches wide closed- cell polypropylene foam conforming to ASTM D8139, ASTM D1751, and ASTM D545.

k. Joint sealer to span between concrete member roofs shall be a polyolefin backed exterior joint wrap conforming to ASTM C877.

B. Infiltration Gallery Accessories: The following accessories are required to be provided with each infiltration gallery:

1. Cleanouts/Access openings: Size and locations as indicated on Drawings

2. Sedimentation Basin/Baffling System: To be located at the inlet side of Infiltration Gallery per Drawings.

C. Bedding, Backfill and Final Fill:

1. Bedding Material: The bedding material for the precast concrete, modular, buried, stormwater storage system shall be a clean, washed, poorly graded, free-draining, angular faced, crushed aggregate conforming to ASTM D448, classification size No. 6 or No. 67. The bedding material shall be a minimum of 6-inches deep and shall extend beyond the footprint of the stormwater storage system by a sufficient distance to ensure working room to properly and safely compact bedding and backfill materials but at no times shall the distance be less than 18-inches.

2. Backfill Material: Backfill material for the precast concrete, modular, buried, stormwater storage system shall be a clean, washed, poorly graded, free-draining, angular faced, crushed aggregate conforming to ASTM D448, classification size No. 6 or No. 67.

3. Final Fill: The final fill material shall conform to ASTM D2487 any classification except OL, CH, MH, OH, and PT provided the material can be adequately compacted with no adverse effects to the stormwater storage system.

D. Refer to Section 02310 – EARTHWORK for subgrade, bedding, and backfill requirements.

E. Manufacturers:

1. Precon Products
240 West Los Angeles Avenue
Simi Valley, California 93065
Phone: (800) 882-3399

Email: info@pre-conproducts.com
Website: www.preconproducts.com
Contact: David Zarraonandia (805) 527-0841 (Simi Valley, CA)

2. StormTrap, LLC;
2495 West Bungalow Road
Morris, Illinois 60450
Phone: (815) 941-4663
Fax: (815) 416-1100
www.stormtrap.com
Contact: Charlie Carter (760) 212-5628 (Oceanside, CA)

3. Oldcastle Precast, Storm Capture;
2020 Goetz Road
Perris, CA 92570
Phone: (909) 428-3700
www.stormcapture.com
Contact: Gwen Madrid (323) 430-3138 (Los Angeles, CA)

4. Bio Clean Environmental
5796 Armada Drive, Suite 250
Carlsbad, CA 92008
Phone: (855) 566-3938
www.biocleanenvironmental.com
Contact: Michael Frasco (310) 595-4583 (Los Angeles, CA)

5. Jensen Precast
14221 San Bernardino Avenue
Fontana, CA 92335
Phone: (909) 350-4111
Fax: (909) 350-0654
www.jensenprecast.com
Contact: Christopher Purdie (775) 352-6361 (Sparks, NV)

6. Or approved equal.

F. The items specified under this Section shall be furnished by manufacturers having experience in the manufacture of similar products and having a record of successful installations.

PART 3 -- EXECUTION

3.1 EXAMINATION

A. Examine area to receive underground infiltration galleries. Notify ENGINEER if area is not acceptable. Do not begin installation until unacceptable conditions have been corrected.

B. Verify in field before installation, dimensions and soil conditions, including groundwater and soil bearing capacity.

C. Identification:

1. All precast concrete, modular, buried, stormwater storage systems shall be identified at the surface level with permanent, clearly visible markings indicating they are stormwater storage systems.

D. Inspection:

1. General:

a. Precast concrete members, accessories, and aggregate material used during installation shall be inspected prior to installation and any defective, damaged or non-conforming material shall be replaced.

2. Precast Concrete Members:

a. Any precast concrete member with a fracture or continuous crack greater than 12-inches in length and 0.01 in width shall be rejected and replaced.

b. Any precast concrete member that has not reached the required design strength shall be rejected and replaced.

c. Any precast concrete member with indications of imperfections in mixing and/or molding, honeycombed, or open textured surface, shall be rejected and replaced.

d. Any precast concrete member with indications of substantial patches or repairs shall be rejected and replaced.

e. Any precast concrete member with exposed reinforcing steel shall be rejected and replaced.

3. Accessories:

a. All accessory components shall be free from defects and damage.

4. Aggregate Material Used During Installation:

a. All aggregate material shall be supplied with material certifications from the plant indicating conformance to the Referenced Specifications. Non-conforming material shall be rejected and removed from the site.

5. Tests and Inspections - test drain piping with water to ensure free flow before backfilling.

6. Prepare test and inspection reports.

3.2 INSTALLATION

A. Stormwater Storage System Installation:

1. General Locations and Arrangements: Plans and Shop Drawings shall indicate the general location and arrangement of the stormwater storage system. Installation shall conform to ASTM C891. Where specific installation procedures are not

indicated in this Referenced Specification or the Plans, follow the product manufacturer's written instructions.

2. All precast concrete members shall be inspected for defects and cracks before being lowered into the trench. Any defective, damaged or unsound structure or any product that has had its grade disturbed after laying shall be taken up and replaced. The interior of the treatment system shall be free from dirt, excess water and other foreign materials as the installation progresses and left clean at the completion of the installation.

3. An on-site preconstruction meeting is required prior to installation to coordinate logistics with the installing contractor and the manufacturer representative.

B. Excavation:

1. Excavation:

a. Excavate the pit to ensure that sides will be stable under all working conditions. Slope trench walls or provide supports in conformance with all federal, state, and local safety standards. Excavate only as much as can be safely maintained by available equipment.

b. Where excavation walls are stable or supported, provide a width sufficient, but no greater than necessary, to ensure working room to properly and safely place and compact embedment materials. The space between the stormwater storage system and excavation wall must be wider than the compaction equipment used in the compaction area.

2. Dewatering:

a. Do not lay or embed any precast concrete member in standing or running water. Surface runoff shall be prevented from entering the excavation at all times.

b. When water is present in the work area, dewater to maintain stability of in-situ and imported materials. Maintain water level below the stormwater storage system bedding and foundation to provide a stable excavation bottom. Use, as appropriate, sump pumps, well points, deep wells, geofabrics, perforated underdrains, or stone blankets of sufficient thickness to remove and control water in the excavation. When excavating while depressing ground water, ensure the ground water is below the bottom of cut at all times to prevent washout from behind sheeting or sloughing of exposed excavation walls. Maintain control of water in the excavation before, during, and after the stormwater storage system installation and until embedment is installed and sufficient backfill has been placed to prevent flotation of the system, attached piping or accessory drainage structures.

3. Removal of Rock:

a. Rock in either ledge or boulder formation shall be replaced with suitable materials to provide a compacted earth cushion having a thickness between exposed rock and the stormwater storage system of at least 12 inches.

4. Removal of Unstable Material:

    a. Where wet or otherwise unstable soil incapable of properly supporting the stormwater storage system, as determined by the Engineer, is encountered in the bottom of an excavation, such material shall be removed to at least 24 inches below bottom of the system and replaced to the proper grade with select granular material, compacted as directed by the Engineer. When removal of unstable material is due to the fault or neglect of the Contractor while performing shoring and sheeting, water removal, or other specified requirements, such removal and replacement shall be performed at no additional cost to the Owner.

C. Bedding:

1. A stable and uniform bedding shall be provided for the stormwater storage system and any protruding features. The bedding shall be compacted to a minimum of 90 percent of maximum density per AASHTO T99, or as shown in the Plans. Structure bedding shall be a minimum of 6 inches in thickness. The bedding surface shall provide a firm foundation of uniform density throughout the entire footprint of the system.

D. Placing Precast Concrete Members:

1. Each precast concrete member shall be thoroughly examined before being placed; defective or damaged members shall not be used. Precast concrete members shall be placed to within ± 3/4 inch of the elevations as indicated on the Plans. Proper equipment shall be provided for lowering and setting precast concrete members into the excavation. Precast concrete members shall not be laid in water, and the members shall not be laid when trench conditions or weather are unsuitable for such work. Diversion of drainage or dewatering of excavations shall be provided as directed by the Engineer; see dewatering section.

2. Precast concrete members shall receive a 1/2-inch thick by 4-inches wide closed-cell polypropylene foam conforming to ASTM D8139, ASTM D1751, and ASTM D545 on all sides that will abut an adjacent member. The foam member shall remain in place to ensure proper alignment.

3. Precast concrete members shall be placed and aligned to within 1/2 inches of each other horizontally and vertically. The Engineer should be consulted for a course of action when joint gaps exceed 1/2 inches.

4. Precast members transferring vertical loads to other members or slabs shall use a random oriented fiber bearing pad conforming to ASTM D4014 and ASTM D5992 between members with a minimum bearing surface area of 18 square-inches.

5. Minor misalignment of upper sections on slab or upper sections on other members may be adjusted through shimming using random oriented fiber pads conforming to the ASTM D4014 and ASTM D5992 provided the minimum bearing surface area from Section 3.07-D. is maintained.

E. Jointing/Sealing:

1. Joints on the exterior top and side surface shall be sealed using a polyolefin backed exterior joint wrap conforming to ASTM C877 and ASTM C891. The joint wrap shall span the joint by a minimum of 4-inches on either side of the joint.

2. All sealed joints shall be protected from damage during placement of additional members and during final backfill. Damage during construction shall require re-sealing of the joints.

F. Backfilling:

1. General:

a. Backfill placement and compaction shall be constructed in accordance with the Specifications herein and the product manufacturer's published installation guides.

2. Backfilling Stormwater Storage System in Excavation:

a. After the precast concrete member and accessory drainage connections have been properly bedded, select material from excavation or borrow, at a moisture content that will facilitate compaction, shall be placed along all sides of the system in layer depths to ensure minimum compaction density is obtained evenly throughout the backfill material. The backfill shall be brought up evenly on all sides of the structure. Each layer shall be thoroughly compacted with mechanical tampers or rammers. The lift thickness for fill soils will depend on the type of compaction equipment used, but generally should not exceed 8 inches in loose thickness. Tests for density shall be made as necessary to ensure conformance to the compaction requirements as Specified in the Geotechnical Report. Where it is necessary, in the opinion of the Engineer, that sheeting or portions of bracing used be left in place, the contract will be adjusted accordingly. Untreated sheeting shall not be left in place beneath structures or pavements.

b. Fill material shall be per manufacturer's specifications.

c. Prevent wedging action against structure by stepping or serrating slopes bounding or within area to be backfilled.

d. Do not disrupt or damage joint wrap from joints during backfilling.

3. Movement of Construction Machinery:

a. Movement of construction machinery over a stormwater storage system at any stage of construction shall be at the Contractor's risk. Any damaged member shall be removed and replaced. Any equipment used during any stage of construction shall have a loading no greater than HS20 per AASHTO – Standard Specifications for Highway Bridges, 17th Edition – 2002. Permissible equipment shall not be permitted to operate over top of the system with less than 12-inches of structural cover.

G. Do not use units that are damaged, as determined by the Engineer and or manufacturer representative.

3.3 CLEANING

A. Ensure that piping and precast members are clear of dirt and other superfluous material as work progresses.

(END OF SECTION)

SECTION 13447

ELECTRIC ACTUATORS

PART ONE - GENERAL

1.1 SUMMARY

A. Section includes: Electric motor-driven actuators for valves and gates.

1.2 REFERENCES

A. American Water Works Association (AWWA):

1. C504 - Standard for Rubber-Seated Butterfly Valves.

2. C542 - Standard for Electric Motor Actuators for Valves and Slide Gates.

B. National Electrical Manufacturers Association (NEMA):

1. 250 - Enclosures for Electrical Equipment (1000 V Maximum).

1.3 DEFINITIONS

A. NEMA:

1. Type 4X enclosure in accordance with NEMA 250.

2. Type 6P enclosure in accordance with NEMA 250.

3. Type 7 enclosure in accordance with NEMA 250.

1.4 SUBMITTALS

A. Submit as specified in Section 01330 - Submittal Procedures.

B. Provide a complete list/schedule of all actuators being provided with their associated tag names as indicated on the design drawings and/or specifications, service process area and the size of the valve they are actuating.

C. Product data:

1. Electrical ratings:

a. Voltage and number of phases.

b. Starting and running current.

c. Voltage levels and source for control and status.

2. Description of integral control interface.

3. Remote control station components (If applicable).

4. Environmental ratings, including NEMA enclosure rating and submergence capabilities.

5. Gear ratios for both manual and motorized actuation.

6. Opening and closing directions.

7. Allowable starts per hour.

8. List of all included options and accessories.

9. Full travel times.

10. Gearbox data including gear ratio, and gearbox efficiency.

D. Shop drawings:

1. Wiring diagrams:

a. Include all options and expansion cards furnished with each actuator.

2. Dimensioned drawings of each valve and actuator combination.

3. Dimensioned drawings of each valve gearbox.

4. Electric motor data.

E. Calculations:

1. Operating torque.

2. Maximum torque calculations for seating and unseating.

3. Maximum operating torque at starting and normal operation.

4. Signed by Professional Engineer licensed in the State where project is located.

F. Provide draft vendor operation and maintenance manual as specified in Section 01782 - Technical Manuals:

1. Include a list of all configurable parameters, and the final values for each.

2. Include a troubleshooting chart covering the complete valve and controls/electrical power systems, showing description of trouble, probable cause, and suggested remedy.

G. Commissioning submittals:

1. Provide Manufacturer's Certificate of Source Testing as specified in Section 01810 - Commissioning.

a. Affidavit in accordance with AWWA C542.

2. Provide Manufacturer's Certificate of Installation and Functionality Compliance as specified in Section 01810 - Commissioning.

H. Project closeout documents:

1. Provide final vendor operation and maintenance manual as specified in Section 01782 - Technical Manuals.

1.5 WARRANTY

A. Provide warranty as specified in Section 01611 - Guaranty/Warranty.

PART TWO - PRODUCTS

2.1 MANUFACTURERS

A. Manufacturers for lines 4 inch and larger:

1. One of following or equal:

a. Auma:

(1) SA (multi-turn) with Aumatic AC controls.

2.2 CHARACTERISTICS FOR ACTUATORS ON LINES 4 INCHES AND LARGER

A. Provide actuators complete and operable with all components and accessories required for operation.

B. Power supply:

1. Voltage and phases as indicated in the Motorized Actuator Schedule.

2. Valve or gate motion independent of power supply phase rotation.

3. Provide an internal backup power source or mechanical indicator to maintain settings and track valve position when main power is off.

4. The actuators shall incorporate all major components such as the motor, starter, local controls, terminals, etc. housed within a self-contained, sealed enclosure.

C. Size actuator to move gates or valves from full open to closed position within the time indicated in the Motorized Actuator Schedule:

1. If an operating time is not indicated on the Motorized Actuator Schedule, size the actuator to move gates or valves at minimum 12 inches per

minute under maximum load. Measure rate of closure for valves at maximum diameter of disc, plug, or ball.

2. Size actuators so that gear boxes are not required where possible.

D. Control interface:

1. Configuration:

a. Provide a non-intrusive, non-contacting interface for configuring all input and output settings, control values, ranges, torque switch settings, valve positions switch settings, and options.

(1) Configurable from a handheld configuring tool or input devices on the actuator.

2. Local interface, integral to actuator:

a. Non-intrusive, non-contacting selector switches:

(1) LOCAL-STOP-REMOTE:

(a) Motor actuator operation is prevented with the switch in STOP.

(2) OPEN-CLOSE:

(a) Controls the valve when LOCAL-STOP-REMOTE is in LOCAL.

(b) Spring return to center.

(c) Configurable between maintained (actuator runs until end of travel, high torque, or a LOCAL-STOP-REMOTE is switched to STOP) and momentary (actuator stops when lever is released).

b. Local display:

(1) Valve fully open and fully closed indicators.

(2) Numerical display showing actual valve or gate position in percent of travel.

3. Coatings:

a. Material requirements:

(1) Factory prime and coat with an ISO 12944 classification coating of C5M (Marine, offshore estuaries with high salinity) coating with 15-year durability.

(2) Touch-up damaged coatings with manufacturer provided coating repair kit.

b. Application requirements:

(1) Painting shall commence within four hours of blast cleaning.

(2) Each paint coat within the system is to be applied in accordance with the paint manufacturer's instructions.

(3) Paint thickness shall be checked for each coat on each actuator.

c. Qualification requirements:

(1) Operators shall be experienced and proficient in surface preparation and coating application techniques.

(2) Personnel shall have relevant knowledge of health and safety hazard, use of protective equipment, coating materials, mixing and thinning coatings, coating pot life, surface requirements etc.

(3) Personnel carrying out inspection or verification shall be certified as NACE coating inspector or equivalent such as ICorr.

4. Control inputs:

a. Capable of using discrete 24 VDC.

b. Controls the valve when LOCAL-STOP-REMOTE is in REMOTE.

c. Isolated inputs capable of operating from external control voltage source or internal power supply:

d. Provide the following inputs:

(1) OPEN.
(2) CLOSE.
(3) STOP.

e. OPEN and CLOSE inputs configurable between maintained (actuator runs until end of travel, high torque, or a STOP input) and momentary (actuator stops when command is removed).

5. Status outputs:

a. Monitor relay output: Dry contact, normally closed, opens when actuator is not in REMOTE or in the event of any internal fault or alarm condition.

b. Dry contact outputs configured for the functions indicated on the Drawings. Provide the following outputs for all actuators:

(1) Fully closed.
(2) Fully open.
(3) LOCAL-STOP-REMOTE in REMOTE position.

c. All output contacts rated for 5 amps, and 24 VDC.

6. Analog output:

a. Provide an isolated 4-20 milliampere analog output.

(1) Valve or gate position.

E. Materials:

1. Construct motorized actuators of materials suitable for the environment in which actuator is to be installed.

a. Enclosure ratings:

(1) As scheduled with the following requirements.
(a) All actuators will be double sealed for corrosion protection rated at ip68.
(2) NEMA 4X for all actuators located outside of Class I areas.
(3) All others shall be rated FM - Class I Groups B, C & D and Class II E, F, & G.

F. Components:

1. Motors:

a. Specifically designed for valve actuator service with high starting torque, totally enclosed non-ventilated construction.

b. Torque ratings equal to or greater than that required for valve seating and dynamic torques with a 25 percent factor of safety.

(1) Design requirements for rubber-seated AWWA butterfly valves:
(a) Design actuators for maximum gate or valve operating torque, in accordance with and using safety factors required in AWWA C504 and AWWA C542.
(i) Valve actuator torque requirement for open-close service: Not less than the required valve-seating and dynamic torques under design operating conditions in accordance with AWWA C504.
(ii) Valve actuator torque requirement for modulating service: Not less than twice the required valve dynamic torque under design operating conditions in accordance with AWWA C504.

(2) Design requirements for slide gates, gate valves, knife gate valves, globe valves, and diaphragm valves:
(a) Design valves and actuators for maximum operating torque, in accordance with and using safety factors required in AWWA C542.

(b) Design for the maximum torque and thrust running load over the full cycle.
(c) Maximum torque or thrust rating: The actuator stall torque or maximum thrust output shall not exceed the torque or thrust capability of the valve or gate, as determined by the valve or gate manufacturer.

c. Capable of being removed and replaced without draining the actuator gear case.

d. Motor bearings shall be amply proportioned of the anti-friction type and permanently lubricated.

e. Rated for operating under the following conditions without exceeding temperature limits with ambient temperature of 40 degrees Celsius.

(1) Continuous operation for 15 minutes or twice the open-to-close operating time (whichever is greater) at normal operating torque or 33 percent of maximum torque (whichever is greater).
(2) 60 starts per hour for open/close service or 1,200 starts per hour for modulating service.

f. Provide the following motor protection features:

(1) Jammed valve (no valve motion detected through a time delay).
(2) High motor temperature (sensed by an embedded thermostats).
(3) High torque.
(4) Single phasing protection.

G. Enclosures:

1. Actuator housing ratings as indicated in the Motorized Actuator Schedule.

2. Stainless steel external fasteners.

3. Provide O-ring seals for each of the following areas:

a. Between the terminal compartment and the internal electrical elements.

b. Between the mechanical and electrical portions to protect from the ingress of oil, and to protect the mechanical components of oil from dust and moisture when the electrical terminal is open.

4. Provide actuators with the following minimum enclosure ratings as scheduled:

    a. NEMA Type 4X enclosure for general applications.

    b. NEMA Type 6P rated for actuators in underground vaults or where possible submergence is indicated in the Drawings.

        (1) Suitable for a minimum of 48 hours submerged under 3 meters of water.

    c. NEMA Type 7 certified by FM for Class I, Division 1, Groups C, D, E, F, and G, for actuators installed in Class I, Division 1 and 2 areas.

H. Position sensing:

1. Electronic and adjustable using a solid-state encoder wheel.

    a. Mechanical limit switches and potentiometers are not acceptable.

2. Capable of retaining position and monitoring valve or gate motion when valve is manually actuated and when main power is not present.

3. Valve range and position switch outputs field adjustable.

I. Torque sensing:

1. Torque shutdown setting: 40 percent to 100 percent rated torque:

    a. Adjustable in 1 percent increments.

2. Capable of interrupting control circuit during both opening and closing and when valve torque overload occurs.

3. Electrical or electronic torque sensing.

4. Independent of variations in frequency, voltage, or temperature.

5. Provide a temporary inhibit of the torque sensing system during unseating or during starting in mid-travel against high inertia loads.

6. Provide visible verification of torque switch status without any housing disassembly.

J. Manual actuators:

1. Hand wheel for manual operation.

    a. Maximum 80-pound pull on rim when operating gate or valve under maximum load.

b. Provide pull chain when motorized actuator is located more than 6 feet above floor surface.

(1) Chain shall be of sufficient length to reach approximately 4 feet above the operating level.

(2) Where the chain obstructs an aisle or walkway, provide holdback or other means to ensure chain does not create a nuisance or hazard to operating personnel.

2. Declutch lever: Padlockable, capable of mechanically disengaging motor and related gearing and freeing hand wheel for manual operation.

K. Gearing: Hardened alloy steel spur or helical gears and self-locking, alloy bronze worm gear set.

1. Accurately cut to ensure minimum backlash.

L. Bearings:

1. Anti-friction bearing with caged balls or rollers throughout.

2. Sealed-for-life type thrust bearings housed in a separate thrust base.

M. Drive bushing:

1. Easily detachable for machining to suit the valve stem or gearbox input shaft.

2. Positioned in a detachable base of the actuator.

N. Lubrication:

1. Provide totally enclosed actuator gearing with oil or grease filled gear case suitable for operation at any angle.

2. Actuators requiring special or exotic lubricants are not acceptable.

2.3 ACCESSORIES

A. Software:

1. Furnish PC-based diagnostic and configuration software to display diagnostic data and configure actuators.

2. Provide software communications to the valve actuator using Bluetooth wireless or IrDA infrared communications.

a. Provide all accessories and drivers required for operation and communications with a standard personal computer running Microsoft Windows.

B. Termination module cover:

1. For actuators on a valve network, provide a means to keep the valve network in service, in the event where the actuator must be removed.

2. Provide sunshades for all outdoor installations of remote control stations that use an LCD or similar screen. Regular pushbutton, sector switches, and pilot light control stations will not require a sunshade.

2.4 SPARE PARTS AND SPECIAL TOOLS

A. Spare parts:

1. Provide the following (minimum 10 percent of total number of actuators of each model type furnished, but not less than 1 for each model of actuator furnished):

a. Stem nut.

b. Worm shaft subassembly.

c. Drive sleeve subassembly.

d. Complete actuator seal kit.

e. Actuator gearbox oil (sufficient quantity to fill 4 gearboxes).

f. Encoder.

g. Control module.

2. Provide 1 spare motor for each size motor furnished.

B. Setting tool:

1. If required for setting or configuring the actuator, provide a handheld setting tool.

a. Furnish 1 setting tool for every 10 actuators.

b. Capable of communicating with PC-based configuration software and transferring the following in either direction between the computer and programmer and setting tool, and between the setting tool and actuator.

c. Actuator configurations:

(1) Capable of storing up to 10 different configurations.

d. Diagnostic data:

(1) Capable of storing 4 complete sets of diagnostic data.

PART THREE - EXECUTION

3.1 GENERAL

A. As specified in Section 15320 – Electrical Requirements for Mechanical Equipment.

B. Position visual indicators so that they are most easily visible.

3.2 COMMISSIONING

A. As specified in Section 01810 - Commissioning and this Section.

B. Manufacturer services:

1. Provide certificates:

a. Manufacturer’s Certificate of Source Testing:

(1) Proof-of-Design and Performance Test Reports in accordance with AWWA C542.

b. Manufacturer’s Certificate of Installation and Functionality Compliance.

2. Manufacturer’s Representative onsite requirements:

a. Installation: 2 trips, 2 day minimum each.

b. Functional testing: 2 trips, 2 day minimum each.

3. Training:

a. Maintenance: 4 hours per session, 2 sessions.

b. Operation: 2 hours per session, 2 sessions.

C. Source testing:

1. Design and Performance Test Reports in accordance with AWWA C542.

2. Test each actuator with a simulated load.

a. Simulate a typical valve load.

3. Electrical Instrumentation and Controls:

a. Test witnessing: Not witnessed.

D. Functional testing:

1. Installed actuator:

a. Test witnessing: Witnessed.

b. Conduct Level 2 General Equipment Performance Test.

c. Conduct Level 2 Vibration Test.

d. Conduct Level 2 Noise Test.

2. Electrical Instrumentation and Controls:

a. Test witnessing: Witnessed.

b. Conduct testing as specified in Sections 16560 and 17400.

3.3 MOTORIZED ACTUATOR SCHEDULE

A. Provide actuators indicated on the Drawings:

1. Major process actuators are listed in the Intelligent Actuator Schedule in this Section.

B. Abbreviations relating to type:

1. BFV = Butterfly Valve.

2. BV = Ball Valve.

3. PV = Plug Valve.

4. SG = Slide Gate.

C. Abbreviations relating to actuator type:

1. O/C = Open and Close Service.

2. MOD = Modulating Service.

D. Abbreviations relating to controls:

1. PA = Profibus PA.

2. DP = Profibus DP.

3. DN = DeviceNet.

4. FF = Foundation Fieldbus H1.

5. MB = Modbus RTU (RS-485).

6. NET = Manufacturer’s proprietary network.

7. A = Analog (4-20mA) control, modulating duty.

8. D = Discrete control, modulating duty.

9. D-O/C = Discrete Open/Close.

(END OF SECTION)

ATTACHMENTS TO SECTION 13447

Attachments to Electric Actuators Section 13447 consists of one (1) document, as follows:

ATTACHMENT NUMBER	TITLE OF ATTACHMENT	NUMBER OF PAGES IN THIS ATTACHMENT
13447-A1	Motorized Actuator Schedule	1

MOTORIZED ACTUATOR SCHEDULE									
Item	**Reference DWG**	**Type**	**Size**	**Actuator Type**	**NEMA Rating**	**Voltage/ Phase/ Hz**	**Notes**	**Open Time**	**Controls**
Diversion Structure Slide Gate	M-02	SG	42"	O/C	4	480/3/60	1, 2, 3	30 s	D-O/C

Notes:

(1) Provide actuators with vendor-supplied remote control station.

(2) Field verify characteristics prior to sizing motor actuator.

(3) Provide actuators with position analog output.

SECTION 15320

ELECTRICAL REQUIREMENTS FOR MECHANICAL EQUIPMENT

PART 1 – GENERAL

1.1 RELATED DOCUMENTS

A. Drawings and general provisions of Contract, including General and Supplementary Provisions and Division 1A General Requirements, apply to work of this Section.

B. Related Sections: Separate electrical components and materials required for field installation and electrical connections are specified in Division 16.

1.2 SUMMARY

A. This Section specifies the basic requirements for electrical components which are an integral part of packaged mechanical equipment. These components include, but are not limited to factory installed motors, starters, and disconnect switches furnished as an integral part of packaged mechanical equipment.

B. Specific electrical requirements (i.e., horsepower and electrical characteristics) for mechanical equipment are scheduled on the Drawings.

1.3 REFERENCES

A. NEMA Standards MG 1: Motors and Generators

B. NEMA Standards ICS 2: Industrial Control Devices, Controllers, and Assemblies.

C. NEMA Standard 250: Enclosures for Electrical Equipment

D. NEMA Standard KS 1: Enclosed Switches

E. National Electrical Code (NFPA 70).

1.4 SUBMITTALS

A. No separate submittal is required. Submit product data for motors, starters, and other electrical components with submittal data required for the equipment for which it serves, as required by the individual equipment specification sections.

1.5 QUALITY ASSURANCE

A. Electrical components and materials shall be UL labeled.

PART 2 – PRODUCTS

2.1 MOTORS

A. The following are basic requirements for simple or common motors. For special motors, more detailed and specific requirements are specified in the individual equipment specifications.

1. Torque characteristics shall be sufficient to satisfactorily accelerate the driven loads.

2. Motor sizes shall be large enough so that the driven load will not require the motor to operate in the service factor range.

3. Temperature Rating: Rated for 40 deg. C environment with maximum 50 deg. C temperature rise for continuous duty at full load (Class A Insulation).

4. Starting capability: frequency of starts as indicated by automatic control system, and not less than 5 evenly time spaced starts per hour for manually controlled motors.

5. Service Factor: L15 for poly-phase motors and 1.35 for single phase motors.

6. Motor construction: NEMA Standard MG 1, general purpose, continuous duty, Design "B", except "C" where required for high starting torque.

    a. Frames: NEMA Standard No. 48 or 54; use driven equipment manufacturer’s standards to suit specific application.

    b. Bearing:

        1) ball or roller bearings with inner and outer shaft seals;

        2) re-greasable, except permanently sealed where motor is normally inaccessible for regular maintenance;

        3) designed to resist thrust loading where belt drives or other drives produce lateral or axial thrust in motor;

        4) for fractional horsepower, light duty motors, sleeve type bearings are permitted.

    c. Enclosure Type:

        1) open drip-proof motors for indoor use where satisfactorily housed or remotely located during operation;

        2) guarded drip-proof motors where exposed to contact by employees or building occupants;

        3) weather protected Type 1 for outdoor use, Type II where not housed;

    d. Overload protection: built-in thermal overload protection and, where indicated, internal sensing device suitable for signaling and stopping motor at starter.

e. Noise rating: "Quiet" rating on motors located in occupied spaces of building.

f. Nameplate: indicate the full identification of manufacturer, ratings, characteristics, construction, special features and similar information.

2.2 STARTERS, ELECTRICAL DEVICES, AND WIRING

A. Motor Starter Characteristics:

1. Enclosures: NEMA 1, general purpose enclosures with padlock ears, except in wet locations shall be NEMA 3R with conduit hubs, or units in hazardous locations which shall have NEC proper class and division.

2. Type and size of starter shall be as recommended by motor manufacturer and the driven equipment manufacturer for applicable protection and start-up condition.

B. Manual switches shall have:

1. Pilot lights and extra positions for multi-speed motors.

2. Overload protection: melting alloy type thermal overload relays.

C. Magnetic Starters:

1. Maintained contact push buttons and pilot lights, properly arranged for single speed or multi-speed operation as indicated.

2. Trip-free thermal overload relays, each phase.

3. Interlocks and similar devices as required for coordination with control requirements of Division-15 Controls sections.

4. Built-in 120 volts control circuit transformer, fused from line side, where service exceeds 240 volts.

5. Externally operated manual reset.

6. Under-voltage release or protection.

D. Motor connections:

1. Flexible conduit, except where plug-in electrical cords are specifically indicated.

2.3 CAPACITORS

A. Features:

1. Individual unit cells

2. All welded steel housing

3. Each capacitor internally fused

4. Non-flammable synthetic liquid impregnant

5. Craft tissue insulation

6. Aluminum foil electrodes

7. KVAR size shall be as required to correct motor power factor to 90 percent or better and shall be installed on all motors 1 horsepower and larger, that have an uncorrected power factor of less than 85 percent at rated load.

B. Disconnect Switches:

1. Fusible switches: fused, each phase; general duty; horsepower rated; non-teasible quick-make, quick-break mechanism; dead front line side shield; solderless lugs suitable for copper or aluminum conductors; spring reinforced fuse clips; electro silver plated current carrying parts; hinged doors; operating lever arranged for locking in the "OPEN" position; arc quenchers; capacity and characteristics as indicated.

2. Non-fusible switches: for equipment 2 horsepower and smaller, shall be horsepower rated; toggle switch type; quantity of poles and voltage rating as indicated. For equipment larger than 2 horsepower, switches shall be the same as fusible type.

PART 3 – EXECUTION (NOT APPLICABLE)

(END OF SECTION)

SECTION 15440

DRINKING FOUNTAIN & BOTTLE FILLER

Part 1 - GENERAL

1.1 SUMMARY: Drinking Fountain & Bottle Filler with Pet Fountain.

A. Section Includes:

1. Under this item, the Contractor shall furnish all labor, materials, equipment and perform all operations necessary for the completion of the work as shown on the drawings. This includes a drinking fountain in accordance with the drawings, specifications and directions of the County Project Manager.

B. Related Sections:

1. Section 02310 Earthwork.

2. Section 03100 Concrete Formwork.

1.2 SUBMITTALS

A. Comply with requirements in Division 1 Submittals Schedule.

B. Product Data: Submit manufacturer's product data and installation instructions.

C. Closeout Submittals: Submit the following:

1. Warranty documents specified herein.

1.3 WARRANTY

A. Project Warranty: Refer to Conditions of the Contract for project warranty provisions.

B. Manufacturer's Warranty: Submit, for Owner's acceptance, manufacturer's standard warranty document executed by authorized company official. Manufacturer's warranty is in addition to, and not a limitation of, other rights Owner may have under contract documents.
Warranty Period: 1 year from date of shipment.

Part 2 – PRODUCTS

2.1 MANUFACTURES

A. Provide a Murdock model GYQ85-IAP-PF barrier free (ADA compliant), bi-level pedestal mounted drinking fountain with bottle filler and pet fountain. Pricing is available from Recreation Structures. Pasadena, CA Phone 626-568-0509.

B. Substitutions must be approved 10 days prior to bid.

C. Alternate suppliers must meet the qualifications listed under paragraph 1.2.
Model GYQ85-IAP-PF is a barrier free pedestal mounted, vandal resistant, bi-level round drinking fountain made from 18 gage, 304 stainless steel bowls mounted into a

green powder coated 12 gage, heavy duty stainless steel welded pedestal with an integrated bottle filler. Attached pet bowl shall be of the same construction. Pedestal shall have four Mounting holes. It shall come supplied with an In-ground Anchor Plate. Access covers shall be secured with vandal-resistant stainless-steel screws. Bottle filler shall be activated by a 9 volt sensor or a pushbutton as standard and provide 1.0 gpm flow. Unit shall contain a 100 mesh inlet strainer, lead and cyst filter, 6-AA battery pack and laminar flow spout. Self-closing pushbuttons, needing less than 5 pounds force, shall activate internally mounted valves with adjustable stream regulators. Bubblers shall be stainless steel with non-squirt feature and operate on water pressure range of 20-105 psig. Fountain is certified to ANSI A117.1, Public Law 111-380 (NO-LEAD), CHSC 116875 and NSF/ANSI 61, Section 9. Fixture meets ADA and ADA Standing Person, requirements when mounted appropriately.

2.2 MATERIALS

A. Barrier free (ADA compliant), bi-level pedestal mounted drinking fountain shall include:
   a. A Surface coating that is resistant to sunlight, heat, moisture and wear.

   b. The bi-level round drinking fountain made with 18 gage, 304 stainless steel bowl

   c. The round bi-level drinking fountain shall be made from 12 gage, heavy duty welded stainless steel, corrosion and scratch resistant finish.

   d. It shall have a polished chrome plated brass, anti-rotation non-squirt bubbler

   e. A 100 mesh inlet strainer shall be included

   f. Access door, heavy duty steel, vandal resistant.

2.3 WARRANTIES

A. Contractor to provide copies of all warrantees that apply to the County Project Manager.

Part 3 – EXECUTION

3.1 SURFACE CONDITIONS

A. Examine the areas and conditions under which work of this section will be performed. Correct condition detrimental to timely and proper completion of the work.

3.2 INSTALLATION

A. Drinking Fountain shall be installed per the manufacturer's recommendations.

B. The ADA compliant drinking fountain shall be connected to the same water supply line that services the building. The drain line from the drinking fountain shall be connected to the sewer line that also services the building.

3.3 CLEAN-UP

A. Contactor shall clean-up and legally dispose of all unused materials, excess soil and debris at regular intervals throughout the duration of the work and as directed by the County Project Manager, at no additional cost to the owner.

3.4 WARRANTY SERVICE

A. Contactor shall provide a warranty service on all work done by the contractor to be free from defects in workmanship for a period of one year from the date of completion. The Contactor shall promptly, after receiving notice, make good at its expense all defects developed during this period.

(END OF SECTION)

SECTION 15610

PIPING, GENERAL

PART 1 -- GENERAL

1.1 THE REQUIREMENT

A. It shall be the responsibility of the CONTRACTOR to furnish and install all piping systems specified herein and shown on the contract drawings. Each system shall be installed complete with all applicable fittings, hangers, supports, anchors, expansion joints, flexible connections, valves, and accessories to provide a functional system as designed. In addition, all insulation, lining and coating, heat tracing, testing, disinfection, excavation, backfill and encasement shall be the responsibility of the CONTRACTOR.

B. The CONTRACTOR shall provide all tools, equipment, materials, and supplies necessary and shall perform all labor necessary to complete the work specified herein and indicated on the drawings. The CONTRACTOR shall provide all testing apparatus necessary to perform testing as required by the contract documents. The CONTRACTOR shall provide any equipment necessary for inspection of and testing of piping systems specified.

C. Piping shown on drawings and specified herein is intended to define the general layout, configuration, routing, required method of support, pipe size and type only. It is the responsibility of the CONTRACTOR to provide a complete system in accordance with the contract drawings and requirements set forth herein. All details necessary to provide a complete system as specified herein are the responsibility of the CONTRACTOR. The CONTRACTOR shall provide all spools, spacers, adapters, connectors, and supports necessary to provide a complete and functional system. The CONTRACTOR shall furnish pipe supports, hangers, anchors, etc., in addition to those shown on the contract drawings, when necessary to provide a system as specified herein. The CONTRACTOR shall provide lay-out drawings of all piping systems prior to installation showing all piping, equipment, accessories, supports, etc.

1.2 RELATED WORK SPECIFIED ELSEWHERE

A. Division 02 as applicable. Site Work.

B. Section 02310, Earthwork.

C. Section 03300, Cast-in-Place Concrete.

D. Section 05500, Miscellaneous Metalwork.

E. Section 09800, Protective Coating.

F. Division 15 as applicable. Mechanical.

1.3 REFERENCE SPECIFICATIONS, CODES, AND STANDARDS

A. Comply with the reference specifications of the GENERAL REQUIREMENTS.

B. Commercial Standards:

ANSI/ASME B1.20.1	Pipe Threads, General Purpose (inch).
ANSI B16.5	Pipe Flanges and Flanged Fittings, Steel Nickel Alloy and other Special Alloys.
ANSI/AWWA C207	Steel Pipe Flanges for Water Works Service, Sizes 4 in through 144 in.
ANSI/AWWA C606	Grooved and Shouldered Joints.
ANSI/AWS D1.1	Structural Welding Code.
ASTM A307	Specification for Carbon Steel Bolts and Studs, 6,000 psi Tensile.
ASTM A325	Specification for High-Strength Bolts for Structural Steel Joints.
ASTM D792	Test Methods for Specific Gravity and Density of Plastics by Displacement.
ASTM D2000	Classification System for Rubber Products in Automotive Applications.

1.4 CONTRACTOR SUBMITTALS

A. The CONTRACTOR shall complete shop drawings of all piping systems, equipment, accessories, and supports in accordance with SUBMITTALS of the GENERAL REQUIREMENTS. The shop drawings shall include all necessary dimensions and details on pipe joints, fittings, fitting specials, valves, appurtenances, design calculations, and material lists. The submittals shall include detailed layout, spool, or fabrication drawings which show all pipe spools, spacers, adapters, connectors, fittings, and pipe supports necessary to accommodate the equipment and valves provided in a complete and functional system. The CONTRACTOR shall submit detailed LAY-OUT drawings of all systems for approval prior to starting installation. LAY-OUT drawings shall include all dimensions and spacings for pipe joints, fittings, fitting specials, valves, appurtenances, connectors, adapters, supports, hangers, anchors, etc. necessary to provide a complete and functional system as specified herein.

B. All expenses incurred in making samples for certification of tests shall be borne by the CONTRACTOR.

C. The CONTRACTOR shall submit as part of the shop drawings a statement from the pipe fabricator certifying that all pipes will be fabricated subject to a recognized Quality Control Program. An outline of the program shall be submitted to the ENGINEER for review prior to the fabrication of any pipe.

1.5 QUALITY ASSURANCE

A. Inspection: All pipe shall be subject to inspection at the place of manufacture. During the manufacture of the pipe, the INSPECTOR shall be given access to all areas where manufacturing is in progress and shall be permitted to make all inspections necessary to confirm compliance with the Specifications.

B. Material Testing: The INSPECTOR shall have the right at any time to call for and witness the making of test specimens by any welder in accordance with these specifications. Any and all tests shall be at the CONTRACTOR'S expense. The CONTRACTOR shall furnish the ENGINEER 3(three) certified copies of mill test reports. Mill test reports shall show results of the chemical and physical tests made on each melt of steel representing the steel plate furnished for the manufacture of the pipe.

Specimen Plates: The INSPECTOR may require the CONTRACTOR to furnish specimen plates of the steel to be used in the fabrication of the pipe. Specimen plates shall be large enough to provide the number of test specimens required. Should any test specimen fail to meet the requirements of the plate specification, a second specimen plate of the same heat number shall be furnished. Should any one test specimen from the second plate fail, then all plates furnished from the same heat number will be rejected. Tests of these specimens will be made by an Independent Laboratory approved by the ENGINEER. The CONTRACTOR will be responsible for all expenses incurred in making the tests.

Required Tests: Specimen Plates shall be tested as follows:

Reduced Section Tensile Test: The yield point and ultimate tensile strength shall not be less than the minimum of the specified tensile range of the plate used.

Guided Bend Test: Bend tests shall be performed on both root and face weld specimens. The specimen shall be bent cold without fracture 180 degrees around a pin or mandrel, having a diameter 3 times the thickness of the plate, and shall show an elongation of not less than 20 percent across the weld.

Radiographic Test: A 4-1/2 inches by 17 inches spot x-ray shall be taken at a location as directed by the INSPECTOR. Procedures and interpretation shall be in accordance with ASME Boiler and Pressure Vessel Code, Section 8, Division I, Part UW51, with the exception that ASTM E94, Type I, industrial radiographic film shall be used.

Porosity: The maximum acceptable porosity shall be as set forth in Appendix IV of the ASME Boiler and Pressure Vessel Code.

Retest of Welds: Should any of the tests taken from a shift's production fail to meet any of the requirements of these specifications, one additional set of weld tests shall be made from each of the adjoining pipe sections. Retest of welds shall be performed at the CONTRACTOR'S expense, and shall be made and approved before beginning the next shift's production. Should any retest result in failure to meet any of the requirements of these specifications, all pipe sections of that shift's production will be rejected.

C. Welding Procedures: Welding procedure specifications shall be furnished to the ENGINEER for approval prior to the welding of pipe. The specifications shall specify, on a form equivalent to the ASME welding procedure form, the type of plate edge preparation, welding method, arc-voltage, arc-amperes, travel speed, wire size and type, flux type, and all other procedures necessary to make the weld.

D. Welder Qualifications: All welders and welding operators shall be qualified under the applicable provisions of the standard qualification procedure of the ASME Boiler and Pressure Vessel Code, Section IX.

1.6 MANUFACTURER'S SERVICE REPRESENTATIVE

A. Where the assistance of a manufacturer's service representative is advisable, in order to obtain perfect pipe joints, supports, or special connections, the CONTRACTOR shall furnish such assistance at no additional cost to the CITY.

1.7 MATERIAL DELIVERY, STORAGE, AND PROTECTION

A. All piping materials, fittings, valves, and accessories shall be delivered in a clean and undamaged condition and stored off the ground, to provide protection against oxidation caused by ground contact. All defective or damaged materials shall be replaced with new materials.

1.8 CLEANUP

A. After completion of the work, all remaining pipe cuttings, joining and wrapping materials, and other scattered debris, shall be removed from the site. The entire piping system shall be handed over in a clean and functional condition.

PART 2 -- PRODUCTS

2.1 GENERAL

A. All pipes, fittings, and appurtenances shall be furnished in accordance with the requirements of the applicable Sections of Divisions 02 and 15 and as specified herein.

B. Pipe Supports: All pipes shall be adequately supported as shown on plans.

C. Lining: All requirements pertaining to thickness, application, and curing of pipe lining, are in accordance with the requirements of the applicable Sections of Division 02, unless otherwise specified.

D. Coating: All requirements pertaining to thickness, application, and curing of pipe coating, are in accordance with the requirements of the applicable Sections of Division 02, unless otherwise specified. Pipes above ground or in structures shall be coated in accordance with Section 09800, "Protective Coating."

E. Grooved Piping Systems: Piping systems with grooved joints and fittings may be provided in lieu of screwed, flanged, welded, or mechanical joint systems for steel and ductile iron yard piping, subject to approval of the ENGINEER. (Applicable to all piping above and below ground within the property limits of treatment plants, pump stations, and similar installations). All grooved couplings on buried piping must be bonded. To assure uniform and compatible piping components, all grooved fittings, couplings, and valves shall be from the same manufacturer.

F. Fasteners: Whenever stainless steel bolts are specified, it shall mean that all bolts, nuts and washers shall be made of Type 316 stainless steel, unless otherwise noted.

2.2 PIPE FLANGES

A. Flanges: Where the design pressure is 150 psi or less, flanges shall conform to either ANSI/AWWA C207 Class D or ANSI B16.5 150-lb class. Where the design pressure is greater than 150 psi, up to a maximum of 275 psi, flanges shall conform to either ANSI/AWWA C207 Class E, Class F, or ANSI B16.5 150-lb class. Where the design pressure is greater than 275 psi up to a maximum of 700 psi, flanges shall conform to ANSI B16.5 300-lb class. Flanges shall have either flat faces or raised faces and shall be

attached with bolt holes straddling the vertical axis of the pipe unless otherwise shown. Attachment of the flanges to the pipe shall conform to the applicable requirements of ANSI/AWWA C207 or ANSI B16.5. Flanges for miscellaneous small pipes shall be in accordance with the standards specified for these pipes.

B. Blind Flanges: Blind flanges shall be in accordance with ANSI/AWWA C207 or ANSI B16.5, or with the standards for miscellaneous small pipes. All blind flanges for pipe sizes 12-inches and larger shall be provided with welded or screwed eye bolts.

C. Flange Coating: All machined faces of metal blind flanges and pipe flanges shall be coated with a temporary rust-inhibitive coating to protect the metal until the installation is completed.

D. Flange Bolts: All shall conform to ASTM A193; AISI Type 316 Stainless Steel, ANSI B18.2.1. Bolts shall be of such length that after installation, bolts will project 1/8 to 3/8 inch beyond the fact of the nut. No "all-thread" studs will be allowed. Flange Nuts: All shall conform to ASTM A194, AISI Type 316 Stainless Steel, ANSI B18.2.2, heavy hex pattern.

E. Flange Gaskets: Gaskets for flanged joints shall be full-faced, 1/16-inch thick compressed sheets of aramid fiber base, with nitrile binder and non-stick coating, suitable for temperatures to 700 degrees F, a pH of one to eleven, and pressures to 1000 psig. Blind flanges shall have gaskets covering the entire inside face of the blind flange and shall be cemented to the blind flange. Ring gaskets shall not be permitted:

Water Service: Gaskets shall be ASTM D1330, GRADE I, red rubber with 1/8 inch minimum thickness and dimensions to suit contact facing.

F. All flanges are subject to inspection and testing at the discretion of the INSPECTOR.

2.3 THREADED INSULATING CONNECTIONS

A. General: Threaded insulating bushings, unions, or couplings, as appropriate, shall be used for joining threaded pipes of dissimilar metals and for piping systems where corrosion control or cathodic protection are involved.

B. Materials: Threaded insulating connections shall be of nylon, Teflon, polycarbonate, polyethylene, or other nonconductive materials, and shall have ratings and properties to suit the service and loading conditions.

2.4 GROOVED END COUPLINGS

A. General: Grooved End Couplings shall be provided where shown. The couplings shall conform to the requirements of ANSI/AWWA C606, "flexible" grooving for buried piping, or "rigid" grooving for above ground piping and gallery piping inside structures.

Gaskets: Shall be halogenated butyl rubber suitable for the service intended and designed for use with the specified pipe material.

Couplings: Shall be ductile iron conforming to ASTM A536; with Type 316 Stainless Steel bolts, ASTM A193, Grade B-8, Class 2, in buried locations and heat-treated track-head bolts conforming to ASTM A183, minimum tensile 110,000 psi for above ground piping and gallery piping inside structures.

The wall thickness of all grooved piping shall be as specified.

2.5 FLEXIBLE CONNECTORS

A. Flexible connectors shall be installed in all piping connections to engines, blowers, compressors, and other vibrating equipment, and where shown. Flexible connectors shall be flanged, braided stainless steel spools with inner, annular, corrugated stainless steel hose, rated for minimum 150 psi working pressure, unless otherwise shown. The connectors shall be minimum of 9-inches long, face-to-face flanges, unless otherwise shown. The CONTRACTOR shall submit manufacturer's shop drawings and calculations.

2.6 EXPANSION JOINTS

A. All piping subject to expansion and contraction shall be provided with expansion joints to compensate for movement, without exertion of undue forces to equipment or structures. Expansion joints shall be of stainless steel, monel, rubber, or other materials, suitable for each individual service. The CONTRACTOR shall submit detailed calculations and manufacturer's shop drawings and information on materials, temperature and pressure ratings.

2.7 PIPE THREADS

A. All pipe threads shall be in accordance with ANSI/ASME B1.20.

2.8 PIPE SLEEVES

A. Where specified or as indicated on the contract drawings, pipe sleeves shall be provided for piping passing through concrete or masonry walls.

B. Pipe sleeves shall be Type 316L stainless steel with a welded water-stop ring.

PART 3 -- EXECUTION

3.1 GENERAL

A. All piping and appurtenances shall be installed in accordance with the requirements of all applicable and related Divisions of these specifications.

B. Any deviation from lines, grades, or elevations shown on the Contract Drawings must be approved in writing by the ENGINEER

C. Where core drilling is required for pipes passing through existing concrete, all core drilling locations shall be determined by radiograph of the concrete construction to avoid damage to embedded raceways, conduits, and reinforcing steel.

D. Prior to any core drilling of existing concrete, the CONTRACTOR shall obtain approval of all locations, in writing, from the ENGINEER.

3.2 HANDLING

A. All pipe, fittings, and related appurtenances shall be handled in a manner that will insure installation in sound, undamaged, like new condition.

B. Pipe and fittings with cement mortar or epoxy lining or special coatings shall be handled with rubber covered hooks, or other type of equipment to prevent damage.

C. Bare fork lift arms, hooks, cables, or chains shall not be used for handling pipe with special lining or coating.

D. Pipe and fittings in which the lining or coating has been damaged shall be immediately removed from the job site and replaced.

1. In instances where damage is minimal, the CONTRACTOR may, with approval from the ENGINEER, have the damage repaired by a qualified representative of the pipe manufacturer or fabricator.

3.3 STORAGE

A. All pipes shall be stored off the ground at all times, even during installation.

B. Store coated pipe on "extra wide" skids to protect the coating.

C. PVC pipe shall be stored out of direct sunlight to prevent damage and premature deterioration.

D. Pipe with special coatings shall be stored out of direct sunlight to prevent damage to coating.

E. Copper and galvanized pipe shall be covered or stored indoors.

F. Threaded ends of pipe shall be covered to protect the threads.

G. Flanged pipe shall have the flange faces protected.

H. Pipe that has become damaged or unidentifiable due to improper storage shall be rejected and immediately removed from the job site.

3.4 CUTTING PIPE

A. Cutting of pipe shall be done in a neat manner, without damage to the pipe, pipe lining, or pipe coating.

B. Cuts shall be smooth, straight, and at right angles to the pipe axis.

C. Pipe shall be cut using a portable guillotine saw, abrasive wheel "cut-off" saw, or milling cutter only. Use of gas torches for cutting pipe will not be permitted.

1. Where it becomes necessary to cut steel pipe larger than 6 inches in diameter, the CONTRACTOR may, with written permission of the ENGINEER, use gas torch to cut the pipe.

2. Only a qualified pipe fitter or boiler-maker shall make any approved torch cuts of pipe.

D. Field cut holes for saddles shall be made utilizing a hole saw or other mechanical means. Gas torch cutting of holes will not be permitted.

E. After cutting, the end of the pipe shall be dressed with a file or power grinder to remove all internal and external burrs and sharp edges.

F. All damaged or removed lining or coating shall be repaired by a qualified representative of the pipe manufacturer or fabricator.

3.5 CLEANING

A. The interior of all pipe and fittings shall be thoroughly cleaned of all foreign matter prior to installation, and shall be kept clean until the work has been accepted.

B. Before jointing, all joint contact surfaces shall be wire brushed, wiped clean, and kept clean until the jointing is completed.

C. Flange faces shall be wire brushed and cleaned to remove all oil, grease, loose primer, mill scale, or any other foreign matter which could affect the proper seating of the gasket.

D. Prior to testing, pipe shall be thoroughly cleaned, flushed and/or purged in accordance with these specifications.

3.6 PIPE SLEEVES

A. Unless otherwise specified or indicated on the contract drawings, pipes passing through concrete or masonry shall be installed through Type 316 stainless steel sleeves installed before concrete is placed or masonry is laid.

B. The CONTRACTOR shall be responsible for coordinating the installation of sleeves for all piping.

C. Pipe sleeves installed through floors provided with a special finish, such as ceramic tile, resilient tile, or seamless flooring, shall be flush with the finished floor surface, and shall be provided with nickel or chromium plated floor plates.

D. In all other locations where pipes pass through floors, pipe sleeves shall project 2 inches above the finished floor surface, with the projection uniform throughout each floor area.

E. Where it is indicated on the contract drawings to provide for future installation of pipe, sleeves shall be provided and the ends sealed with an approved plastic cap/plug.

F. For piping passing through existing concrete or masonry floors or walls, core drilled holes will be accepted when approved in writing by the ENGINEER.

1. Any reinforcement which is cut while drilling holes in existing concrete or masonry must be coated with an approved epoxy coating prior to pipe being installed.

G. All pipes passing through interior concrete or masonry walls or slabs shall be caulked on both sides with approved caulking.

1. Caulking in fire-rated walls must be approved fire caulking of a color approved by the ENGINEER.

H. All pipes passing through walls or slabs which have one side exposed to the outside, have one side in contact with earth, or have one side exposed to a water bearing or water conveying structure, shall be sealed watertight by the use of modular casing seals ("link-seals") and be caulked on both sides of the wall or slab.

3.7 PIPE INSTALLATION

A. All piping shall be installed as specified, as indicated on the contract drawings and in a manner acceptable to the INSPECTOR.

B. The CONTRACTOR shall provide pipe cut from measurements made at the job site, and not from the contract drawings.

C. Provisions shall be made in laying out all piping throughout to provide for expansion and contraction.

D. Expansion joints or fittings shall be provided on all piping as specified or otherwise indicated on the contract drawings.

E. Piping shall not obstruct openings or passageways.

F. Piping shall be held free of any contact with building construction so as not to transmit noise.

G. All water piping at each fixture, or unit of equipment, shall be provided with an approved shutoff valve and union - WHETHER INDICATED ON THE CONTRACT DRAWINGS OR NOT - which will permit isolation and disconnection of each item without disturbing the rest of the system.

H. A union shall be provided within 2 feet of every threaded-end valve installed, unless there are other acceptable connections which will permit easy removal of the valve.

I. Unions shall also be provided in piping at locations adjacent to all devices or equipment which may require removal in the future, and at all locations specified or indicated on the contract drawings.

J. Non-pressure piping installed above electrical panels or cabinets shall be insulated and drip shields shall be installed to contain and channel any condensate or leakage away from the panels or cabinets.

K. Water supply piping within structures shall be arranged, and facilities provided, for complete drainage.

L. All piping serving metering equipment shall be uniformly graded so that air traps are eliminated and complete venting is provided.

M. Seal water supply shall be piped to within 3 feet of the pumping unit seal box.

N. In all piping, insulating fittings shall be provided to prevent contact of dissimilar metals wherever copper pipe, tubing, or fittings are connected to iron or steel pipe or fittings.

O. Hot Tap : The Contractor shall provide means and methods of performing hot tap connections as required by the contract documents

3.8 PIPE JOINTS

A. Pipe joints shall be provided as specified or as indicated on the contract drawings.

B. Threaded Joints:

1. Pipe threads shall conform to ANSI B2.1, NPT, and shall be full and cleanly cut.

2. Not more than three threads at each pipe connection shall remain exposed after installation.

3. Ends of pipe shall be reamed after threading and before assembly to remove all burrs.

4. Threaded joints in plastic piping shall be made up with Teflon thread tape applied to all male threads.

5. Threaded joints in stainless steel piping shall be made up with Teflon thread sealer and Teflon thread tape applied to all male threads.
6. Thread tape and joint compound or sealers are not to be used in threaded joints which are to be seal welded.

C. Compression Joints:

1. Ends of tubing shall be square cut and all burrs removed.

2. The tubing end shall be fully inserted into the compression fitting and the nut shall be tightened not less than 1-1/4 turns, and not more than 1-1/2 turns past finger-tight, or as recommended by the fitting manufacturer, to produce a leak-tight, torque free connection.

D. Flared Joints:

1. The ends of annealed copper tubing shall be cut square and all burrs removed prior to flaring.

2. Ends shall be uniformly flared without scratches or grooves.

3. Fittings shall be tightened as required to produce a leak-tight joint.

E. Solder and Brazed Joints:

1. Where solder fittings are specified in lines smaller than 2 inches, joints may be soldered or brazed, at the option of the CONTRACTOR.

2. Joints in 2 inches and larger copper tubing shall be brazed.

3. Joints in copper refrigerant piping shall be brazed.

   a. Solder will not be accepted.

4. Surfaces to be joined shall be thoroughly cleaned with flint paper and coated with a thin film of flux.

5. At each joint, tubing shall enter to the full length of the fitting socket.

6. Care should be taken to avoid overheating the metal or flux.

7. While the joint is still hot, all excess filler metal and flux shall be removed with a rag or a brush.

F. Solvent Welded Joints:

1. All joint preparation, cutting, and jointing operations shall comply with the pipe manufacturer's recommendations and ASTM D2855.

2. Pipe ends shall be beveled or chamfered to the dimensions recommended by the pipe manufacturer.

3. Newly assembled joints shall be suitably blocked or restrained to prevent movement during the set time recommended by the manufacturer.

4. Pressure testing of solvent welded piping systems shall not be performed until the applicable curing time, set forth in Table X2.1 of ASTM D2855, has elapsed.

G. Flanged Joints:

1. Flange bolts shall be tightened sufficiently to slightly compress the gasket and effect a seal, but not so tight as to fracture or distort the flange.

2. A plain washer shall be installed under the head and nut of bolts connecting plastic pipe flanges.

3. Anti-seize thread lubricant shall be applied to the threaded portion of all stainless steel bolts during assembly.

4. Connecting flanges shall have similar facings (i.e., flat or raised face).

H. Welded Joints:

1. Welding shall conform to these specifications and recommendations contained in the "Code for Pressure Piping".

I. Rubber Gasketed Joints:

1. Clamps for hubless cast iron soil pipe shall be installed in accordance with the manufacturer's recommendations.

J. Grooved Couplings:

1. Grooves cut in steel pipe shall conform to flexible grooving dimensions as set forth in AWWA C606.

3.9 ALIGNMENT

A. All piping shall be installed to lines, grades, and elevations indicated on the contract drawings.

B. All deviations from the line, grade, or elevation as indicated on the contract drawings shall be approved in writing by the ENGINEER.

C. The CONTRACTOR is responsible for coordinating all other work to insure that piping is installed as indicated on the contract drawings.

D. Piping intended to be straight shall be straight. Deflections from a straight line or grade shall be approved in writing by the ENGINEER and shall be accomplished by the use of approved fittings.

E. For buried piping, all pipe subgrades shall be determined and checked by survey.

F. If laser equipment is used for piping installation, periodic elevation measurements shall be made with survey equipment to verify the accuracy of grade or elevation. If such measurements indicate thermal deflection of the laser due to differences between ground or atmospheric temperature and the air temperature within the pipe, steps shall be taken to prevent further thermal deflections.

3.10 PROTECTIVE COATING

A. All stainless steel, copper, and black steel pipe in buried locations shall have exterior surfaces protected in accordance with Section 09800, "Protection Coating".

3.11 COATING INSPECTION

A. All shop-applied coatings on pipe or fittings shall be inspected for holidays and other defects after receipt of the pipe or fittings on the job site, and again after installation if it is determined by the INSPECTOR that the coating may have been damaged.

1. Inspection shall be made using an electrical holiday detector.

2. The detector used, and inspection procedures, shall be in conformance with the requirements of Section 4.4 of AWWA C209.

B. All field-applied tape wrap on pipe, pipe joints, fittings and valves shall be inspected for holidays and other defects following completion of wrapping and again following installation if it is determined by the INSPECTOR that the wrapping may have been damaged.

C. Inspection of all field-applied wrapping shall be conducted by the City of Los Angeles Bureau of Standards.

D. Holidays and other defects detected during inspection shall be repaired in accordance with the recommendations of the coating or tape wrap manufacturer, as applicable.

1. At the discretion of the INSPECTOR, major areas of defects in pipe coatings may result in rejection of the pipe and its immediate removal from the job-site.

2. At the discretion of the INSPECTOR, major areas of defects in pipe coatings may be repaired on site by a qualified representative of the manufacturer or supplier.

3.12 BURIED PIPE

A. All stainless steel, copper, and black steel pipe in buried locations shall have exterior surfaces protected with a shop-applied plastic coating.

B. All galvanized piping in buried locations shall be wrapped with an approved pipe wrap, or be coated with an approved coal tar coating.

C. Buried pipe shall be protected from lateral displacement by use of the specified pipe embedment and/or encasement.

D. Under no circumstance shall pipe be laid in water.

E. All pipes will be laid on native material unless otherwise specified or indicated on the contract drawings.

F. All pipe subgrade shall be compacted to a relative density of 95 percent, unless otherwise indicated on the contract drawings.

G. All subgrade shall have compaction tests taken and be approved by the INSPECTOR prior to pipe installation.

H. When pipe laying is interrupted, or stopped at the end of the work shift, the open ends of pipe shall be sealed with a watertight plug, or other means acceptable to the INSPECTOR, to prevent water from entering the pipe.

I. Plastic pipe shall be "snaked" in the trench, and shall be kept shaded and shall be covered with backfill immediately following testing.

J. No piping will be encased or backfilled prior to testing and without approval of the INSPECTOR.

3.13 CONCRETE ENCASEMENT

A. All fresh water and potable water piping shall be encased in blue concrete, per the encasement detail in the contract drawings.

B. All other pipe encasement shall be installed where indicated on the contract drawings, per the encasement detail in the contract drawings.

C. Concrete and reinforcement for encasement shall be as specified in the cast-in-place concrete section of these specifications.

D. All pipe to be encased shall be suitably supported and blocked in proper position to allow for complete encasement.

E. All pipes to be encased shall be anchored to prevent floating.

F. All piping to be encased shall be tested as specified and the INSPECTOR shall approve the installation prior to encasement.

3.14 DISINFECTION

A. Disinfection of miscellaneous piping, as applicable, shall be in conformance with the specifications.

1. Disinfecting Solution: Water solution containing chlorine at the minimum concentration of 50 parts per million.

2. Fill entire system with disinfecting solution.

SECTION 15615

VALVES AND GATES, GENERAL

PART 1 -- GENERAL

1.1 THE REQUIREMENT

A. The CONTRACTOR shall provide all tools, supplies, materials, equipment, and labor necessary for furnishing, epoxy coating, installing, adjusting, and testing of all valves and appurtenant work, complete and operable, in accordance with the requirements of the Contract Documents. Where buried valves are shown, the CONTRACTOR shall furnish and install valve boxes to grade, with covers, extensions, and position indicators.

B. The provisions of this Section shall apply to all valves and valve operators specified in the various Sections of Divisions 15 and 17 of these Specifications except where otherwise specified in the Contract Documents. Valves and operators in particular locations may require a combination of units, sensors, limit switches, and controls specified in other sections of these Specifications.

1.2 RELATED WORK SPECIFIED ELSEWHERE

A. Section 09800 Protective Coating.

B. Section 11000 Equipment General Provisions.

C. Section 11805 Hydraulic Gates and Valves General

D. Section 16490 Electric Motors.

E. Division 16 Electrical, applicable sections.

F. Division 17 Instrumentation and Controls, applicable sections, Electric, Hydraulic, and Pneumatic Valves and Operators.

1.3 REFERENCE SPECIFICATIONS, CODES AND STANDARDS

A. Comply with the reference specifications of the GENERAL REQUIREMENTS.

B. Comply with the current provisions of the following Codes and Standards.

ANSI B16.1	Cast Iron Pipe Flanges and Flanged Fittings, Class 25, 125, 250, and 800.
ANSI B16.5	Pipe Flanges and Flanged Fittings, Steel Nickel Alloy and Other Special Alloys.
ANSI/ASME B1.20.1	General Purpose Pipe Threads (inch).
ANSI/ASME B31.1	Power Piping.
ANSI/ASME B31.3	Process Piping.
ANSI/ASME B31.9	Building Services Piping

ASTM A 36	Specification for Structural Steel.
ASTM A 48	Specification for Gray Iron Castings.
ASTM A 126	Specification for Gray Iron Castings for Valves, Flanges, and Pipe Fittings.
ASTM A 536	Specification for Ductile Iron Castings.
ASTM B 61	Specification for Steam or Valve Bronze Castings.
ASTM B 62	Specification for Composition Bronze or Ounce Metal Castings.
ASTM B 148	Specification for Aluminum-Bronze Castings.
ASTM B 584	Specification for Copper Alloy Sand Castings or General Applications.
ANSI/AWWA C207	Steel Pipe Flanges for Water Works Service, Sizes 4 in. through 144 in.
ANSI/AWWA C500	Gate Valves for Water and Sewerage Systems.
ANSI/AWWA C502	Dry-Barrel Fire Hydrants.
ANSI/AWWA C503	Wet-Barrel Fire Hydrants.
ANSI/AWWA C504	Rubber-Seated Butterfly Valves.
ANSI/AWWA C506	Backflow Prevention Devices - Reduced Pressure Principle and Double Check Valves Types.
ANSI/AWWA C507	Ball Valves 6 inches through 48 inches.
ANSI/AWWA C508	Swing-Check Valves for Waterworks Service, 2 inches Through 24 inches NPS.
ANSI/AWWA C509	Resilient-Seated Gate Valves for Water and Sewage Systems.
ANSI/AWWA C516	Large Diameter Rubber-Seated Butterfly Valves
ANSI/AWWA C550	Protective Interior Coatings for Valves and Hydrants.
SSPC-SP-5	White Metal Blast Cleaning.
MSS-SP-70	Manufacturers Standardization Society of the Valve and Fitting Industry; Cast Iron Gate Valves. Flanged and Threaded Ends.

1.4 CONTRACTOR SUBMITTALS

A. Submittals shall be made in accordance with GENERAL REQUIREMENTS. In addition to product information, the CONTRACTOR shall submit for approval lay-out drawings showing valve locations within the piping system, supports, and identification numbers.

B. The following submittals and specific information shall be provided.

1. Shop Drawings: Shop drawings of all valves and operators including associated wiring diagrams and electrical data, shall be furnished as specified in General Requirements. Submit for approval the following:

a. Manufacturer's literature, illustrations, paint certifications, specifications, detailed drawings, data and descriptive literature on all valves and appurtenances.

b. Deviations from Contract Documents.

c. Engineering data including dimensions, materials, size and weight.

d. Fabrication, assembly and installation drawings.

e. CV values, head loss curves, and as required, calculations.

f. Special tools list.

2. Valve Labeling: The CONTRACTOR shall submit a schedule of valves to be labeled indicating in each case the valve location and the proposed wording for the label. Complete nameplate data of valves and actuators is required.

3. Operation and Maintenance Manuals:

a. Submit complete installation, operation and maintenance manuals including test reports, maintenance data and schedules, description of operation, and spare parts information.

b. Furnish Operation and Maintenance Manuals in conformance with the requirements of the General Requirements.

4. Shop Tests: Hydrostatic tests shall be performed, when required by the valve specifications included herein.

5. Certificates: Where specified or otherwise required by ENGINEER, submit Test Certificates and Certificates of Compliance with AWWA standards and other specifications, especially where it concerns the suitability of the materials of construction for the particular application.

1.5 QUALITY ASSURANCE

A. Valve Testing: Valves shall be shop tested per manufacturer's recommendations and applicable AWWA/ANSI specifications prior to shipment. Manufacturer's certification that valves have been shop tested shall be submitted for approval 30 days prior to scheduled shipment.

B. Bronze Parts: Where specified, all interior bronze parts of valves shall conform to the requirements of ASTM B 62, or, where not subject to dezincification, to ASTM B 584.

C. Shop Inspection: Shop inspection of valve construction, testing and coating shall be witnessed and approved by the INSPECTOR. All valves will be shop inspected unless otherwise waived in writing by the INSPECTOR.

D. The CONTRACTOR shall demonstrate that each valve installed as a part of a piping system will operate under field conditions in a manner consistent with the design of the system. All testing of valves shall be witnessed and approved by the INSPECTOR.

E. For all pneumatic, hydraulic, and electric motor operators and controls, it shall be the responsibility of the CONTRACTOR to provide a qualified representative of the valve manufacturer to perform all field adjustments to set operator limit switches for the required functions. The cost of providing a qualified representative of the valve manufacturer for field adjustments shall be included in the CONTRACTOR'S bid. All wiring of motor operators shall be identified with a unique number unlike any other wiring identification. It is the responsibility of the CONTRACTOR to coordinate the requirements of this section with those involving both specifications of Division 16, "Electrical" and Division 17, "Instrumentation and Control."

F. All adjustments, calibration, and/or testing shall be done in the presence of the INSPECTOR.

1.6 PRODUCT DELIVERY, STORAGE, AND HANDLING

A. Deliver materials to the site to ensure uninterrupted progress of the Work. Deliver anchorage devices, which are to be embedded in cast-in-place concrete, in ample time to not delay the Work.

B. All boxes, crates and packages shall be inspected by CONTRACTOR upon delivery to the site. CONTRACTOR shall notify ENGINEER if any loss or damage exists to equipment or components. Replace loss and repair damage to new condition, in accordance with manufacturer’s instructions.

C. Store materials to permit easy access for inspection and identification. Keep all material off the ground, using pallets, platforms or other supports. Protect steel members and packaged materials from corrosion and deterioration.

D. Provide full-face protectors of waterproof material fastened to each side of the valve body to protect joints and the valve interior.

PART 2 -- PRODUCTS

2.1 VALVES

A. General: The CONTRACTOR shall furnish all valves, operators, actuators, valve-operating units, stem extensions, and other accessories as shown or specified. All valves shall have the name of the manufacturer and the site of the valve cast on the body or bonnet or shown on a permanently attached plate in raised letters. All valves shall be new and of current manufacture. All valves, 6-inch and larger, shall have operators with position indicators. Where buried, these valves shall be provided with valve boxes and covers containing position indicators, and valve extensions. Shut-off valves mounted higher than 5 feet 6 inches above working level shall be provided with chain operators.

B. Valve Flanges: The flanges of valves shall be in accordance with Section 15610, "Piping, General" and other Sections of Division 15, "Mechanical."

C. Valve Stems: Except where otherwise specified, valves with motorized operators shall have stems conforming to ASTM A276 Type 316 stainless steel with minimum tensile strength of 95,000 psi, and a minimum yield point of 75,000 psi, and elongation of 25 percent in 2 inches. Manually operated valves shall have silicon-bronze stems conforming to ASTM B584-875, having minimum tensile strength of 60,000 psi, a minimum yield point of 24,000 psi, and elongation of 16 percent in 2 inches. Where subject to dezincification,

manually operated valve stems shall be of bronze conforming to ASTM B62, containing no more than 5 percent zinc, nor more than 2 percent aluminum.

D. Protective Coating: Except where otherwise specified, ferrous surfaces, exclusive of stainless steel surfaces, in the water passages of all valves 4-inch and larger, as well as the exterior surfaces of all submerged, buried or aboveground valves and operators, shall be coated as specified in Section 09800, "Protective Coating". Flange faces of valves shall not be coated. The valve manufacturer shall certify in writing that such coating has been applied and tested in the manufacturing plant prior to shipment, in accordance with these Specifications.

E. Valve Operators:

1. Where shown, certain valves shall be furnished with electric operators, provided by the valve manufacturer. All operators of a given type shall be furnished by the same manufacturer. Where these operators are supplied by different manufacturers, the CONTRACTOR shall coordinate their selection to provide uniformity of each type of electric operator. All valve operators, regardless of type, shall be installed, adjusted, and tested by the valve manufacturer at the manufacturing plant. Unless otherwise specified, all electric, pneumatic, and hydraulic valve operators shall be in accordance with Sections of Division 17, "Instrumentation and Controls."

2. All manual operators shall have levers or handwheels, unless otherwise shown. Where buried, the valves shall have extensions with square nuts or floor stands. Valves mounted higher than 5 feet-6 inches above floor or operating level shall have chain operators. Unless otherwise shown or specified, valves of sizes 4-inch and larger shall have gear-assisted operators.

3. Chainwheel operators shall include chainwheel and chain guide for valve handwheels. Chainwheel shall be made of ductile iron. Rim shall contain as an integral part of the casting a groove into which the chain guide attaches. Chain guide shall be made of malleable iron. Chainwheels shall be adjustable and detachable, furnished complete with Type 310 stainless steel attachment sets for attachment of chainwheel to valve handwheels. Chainwheel operators shall be “Hammer-blow” with safety wheel configuration. Chainwheel safety cables, clips and fasteners shall be Type 316 stainless steel. Ferrous surfaces, exclusive of stainless steel surfaces, shall be coated as specified in Section 09800, "Protective Coating". Chainwheel operators shall also be furnished with Type 316 stainless steel lock-link chains. The chain shall be of sufficient length at approximately 3 feet above the floor or operating level.

F. Valve Labeling: Except when such requirement is waived by the ENGINEER in writing, a label shall be provided on all valves exclusive of hose bibs. The label shall be of 1/16-inch plastic or stainless steel, minimum 2 inches by 4 inches in size, and shall be permanently attached to the valve or on the wall adjacent to the valve as directed by the ENGINEER.

G. Nuts and Bolts: All nuts and bolts on valve flanges and supports shall be Type 316 stainless steel.

H. Lubricating Gun: The CONTRACTOR shall supply a manual lubricating gun for lubricated plug valves in sizes up to 6-inch, inclusive. For larger valves the CONTRACTOR shall furnish a pneumatically operated lubricating gun. The guns shall be of the same manufacturer as the valves. They shall be equipped with flexible connector, pressure gage, and safety valve, with operating instructions and shipped in a labeled tool box.

PART 3 -- EXECUTION

3.1 VALVE INSTALLATION

A. General: All valves, operating units, controls, stem extensions, valve boxes, and accessories shall be installed in accordance with the manufacturer's written instructions and as shown and specified. All valves shall be adequately braced to prevent warpage and bending under the intended use. Valves shall be firmly supported to avoid undue stresses on the pipe.

B. Access: All valves shall be installed to provide easy access for operation, removal, and maintenance and to avoid conflicts between valve operators and structural members or handrails.

C. Valve Accessories:

1. Where combinations of valves, sensors, switches, and controls are specified, it shall be the responsibility of the CONTRACTOR to properly assemble and install these various items so that all systems are compatible and operating properly. The relationship between interrelated items shall be clearly noted on Shop drawing submittals.

2. Valve operators and controls are to be installed where specified and designated on the Contract drawings. The CONTRACTOR is responsible for installation of the correct valve operator and control as specified to provide a complete piping system as specified.

D. All valves shall be field tested following installation to demonstrate that the valve operates under field conditions in a manner consistent with the design of the system.

E. All testing of valves shall be witnessed and approved by the INSPECTOR.

F. The CONTRACTOR shall demonstrate that each valve operator and control installed as a part of a piping system will operate under field conditions as designed and in the manner for which the operator was specified. All testing will be witnessed and approved by the INSPECTOR.

(END OF SECTION)

3. Allow to stand 6 hours minimum.

4. Flush system until chlorine content is at or below content of local water supply.

3.15 AS-BUILT DRAWINGS

A. The CONTRACTOR shall provide surveyed "as-built" drawings for all piping installed.

B. "As-built" drawings shall be provided for buried pipe installations as well as pipe installed in tunnels, galleries, inside buildings, and above-ground outside.

C. For buried pipe installations, surveyed "as-builts" shall include the elevation and location of pipe, valves, and all other pertinent information of the installation, as well as all existing piping or structures in the immediate area.

D. For buried installations, survey shall be taken of location and elevations of all piping installed prior to any encasement or backfill.

E. For buried, encased piping, survey shall be taken both prior to encasement and after the encasement is in place.

F. Drawings shall be forwarded to the ENGINEER for review and approval within five days after the installation is completed.

G. Progress payment will be withheld for all pipe installations for which "as-built" drawings are not received as specified.

(END OF SECTION)

SECTION 15615

VALVES AND GATES, GENERAL

PART 1 -- GENERAL

1.1 THE REQUIREMENT

A. The CONTRACTOR shall provide all tools, supplies, materials, equipment, and labor necessary for furnishing, epoxy coating, installing, adjusting, and testing of all valves and appurtenant work, complete and operable, in accordance with the requirements of the Contract Documents. Where buried valves are shown, the CONTRACTOR shall furnish and install valve boxes to grade, with covers, extensions, and position indicators.

B. The provisions of this Section shall apply to all valves and valve operators specified in the various Sections of Divisions 15 and 17 of these Specifications except where otherwise specified in the Contract Documents. Valves and operators in particular locations may require a combination of units, sensors, limit switches, and controls specified in other sections of these Specifications.

1.2 RELATED WORK SPECIFIED ELSEWHERE

A. Section 09800 Protective Coating.

B. Section 11000 Equipment General Provisions.

C. Section 11805 Hydraulic Gates and Valves General

D. Section 16490 Electric Motors.

E. Division 16 Electrical, applicable sections.

F. Division 17 Instrumentation and Controls, applicable sections, Electric, Hydraulic, and Pneumatic Valves and Operators.

1.3 REFERENCE SPECIFICATIONS, CODES AND STANDARDS

A. Comply with the reference specifications of the GENERAL REQUIREMENTS.

B. Comply with the current provisions of the following Codes and Standards.

ANSI B16.1	Cast Iron Pipe Flanges and Flanged Fittings, Class 25, 125, 250, and 800.
ANSI B16.5	Pipe Flanges and Flanged Fittings, Steel Nickel Alloy and Other Special Alloys.
ANSI/ASME B1.20.1	General Purpose Pipe Threads (inch).
ANSI/ASME B31.1	Power Piping.
ANSI/ASME B31.3	Process Piping.
ANSI/ASME B31.9	Building Services Piping

ASTM A 36	Specification for Structural Steel.
ASTM A 48	Specification for Gray Iron Castings.
ASTM A 126	Specification for Gray Iron Castings for Valves, Flanges, and Pipe Fittings.
ASTM A 536	Specification for Ductile Iron Castings.
ASTM B 61	Specification for Steam or Valve Bronze Castings.
ASTM B 62	Specification for Composition Bronze or Ounce Metal Castings.
ASTM B 148	Specification for Aluminum-Bronze Castings.
ASTM B 584	Specification for Copper Alloy Sand Castings or General Applications.
ANSI/AWWA C207	Steel Pipe Flanges for Water Works Service, Sizes 4 in. through 144 in.
ANSI/AWWA C500	Gate Valves for Water and Sewerage Systems.
ANSI/AWWA C502	Dry-Barrel Fire Hydrants.
ANSI/AWWA C503	Wet-Barrel Fire Hydrants.
ANSI/AWWA C504	Rubber-Seated Butterfly Valves.
ANSI/AWWA C506	Backflow Prevention Devices - Reduced Pressure Principle and Double Check Valves Types.
ANSI/AWWA C507	Ball Valves 6 inches through 48 inches.
ANSI/AWWA C508	Swing-Check Valves for Waterworks Service, 2 inches Through 24 inches NPS.
ANSI/AWWA C509	Resilient-Seated Gate Valves for Water and Sewage Systems.
ANSI/AWWA C516	Large Diameter Rubber-Seated Butterfly Valves
ANSI/AWWA C550	Protective Interior Coatings for Valves and Hydrants.
SSPC-SP-5	White Metal Blast Cleaning.
MSS-SP-70	Manufacturers Standardization Society of the Valve and Fitting Industry; Cast Iron Gate Valves. Flanged and Threaded Ends.

1.4 CONTRACTOR SUBMITTALS

A. Submittals shall be made in accordance with GENERAL REQUIREMENTS. In addition to product information, the CONTRACTOR shall submit for approval lay-out drawings showing valve locations within the piping system, supports, and identification numbers.

B. The following submittals and specific information shall be provided.

1. Shop Drawings: Shop drawings of all valves and operators including associated wiring diagrams and electrical data, shall be furnished as specified in General Requirements. Submit for approval the following:

a. Manufacturer's literature, illustrations, paint certifications, specifications, detailed drawings, data and descriptive literature on all valves and appurtenances.

b. Deviations from Contract Documents.

c. Engineering data including dimensions, materials, size and weight.

d. Fabrication, assembly and installation drawings.

e. CV values, head loss curves, and as required, calculations.

f. Special tools list.

2. Valve Labeling: The CONTRACTOR shall submit a schedule of valves to be labeled indicating in each case the valve location and the proposed wording for the label. Complete nameplate data of valves and actuators is required.

3. Operation and Maintenance Manuals:

a. Submit complete installation, operation and maintenance manuals including test reports, maintenance data and schedules, description of operation, and spare parts information.

b. Furnish Operation and Maintenance Manuals in conformance with the requirements of the General Requirements.

4. Shop Tests: Hydrostatic tests shall be performed, when required by the valve specifications included herein.

5. Certificates: Where specified or otherwise required by ENGINEER, submit Test Certificates and Certificates of Compliance with AWWA standards and other specifications, especially where it concerns the suitability of the materials of construction for the particular application.

1.5 QUALITY ASSURANCE

A. Valve Testing: Valves shall be shop tested per manufacturer's recommendations and applicable AWWA/ANSI specifications prior to shipment. Manufacturer's certification that valves have been shop tested shall be submitted for approval 30 days prior to scheduled shipment.

B. Bronze Parts: Where specified, all interior bronze parts of valves shall conform to the requirements of ASTM B 62, or, where not subject to dezincification, to ASTM B 584.

C. Shop Inspection: Shop inspection of valve construction, testing and coating shall be witnessed and approved by the INSPECTOR. All valves will be shop inspected unless otherwise waived in writing by the INSPECTOR.

D. The CONTRACTOR shall demonstrate that each valve installed as a part of a piping system will operate under field conditions in a manner consistent with the design of the system. All testing of valves shall be witnessed and approved by the INSPECTOR.

E. For all pneumatic, hydraulic, and electric motor operators and controls, it shall be the responsibility of the CONTRACTOR to provide a qualified representative of the valve manufacturer to perform all field adjustments to set operator limit switches for the required functions. The cost of providing a qualified representative of the valve manufacturer for field adjustments shall be included in the CONTRACTOR'S bid. All wiring of motor operators shall be identified with a unique number unlike any other wiring identification. It is the responsibility of the CONTRACTOR to coordinate the requirements of this section with those involving both specifications of Division 16, "Electrical" and Division 17, "Instrumentation and Control."

F. All adjustments, calibration, and/or testing shall be done in the presence of the INSPECTOR.

1.6 PRODUCT DELIVERY, STORAGE, AND HANDLING

A. Deliver materials to the site to ensure uninterrupted progress of the Work. Deliver anchorage devices, which are to be embedded in cast-in-place concrete, in ample time to not delay the Work.

B. All boxes, crates and packages shall be inspected by CONTRACTOR upon delivery to the site. CONTRACTOR shall notify ENGINEER if any loss or damage exists to equipment or components. Replace loss and repair damage to new condition, in accordance with manufacturer’s instructions.

C. Store materials to permit easy access for inspection and identification. Keep all material off the ground, using pallets, platforms or other supports. Protect steel members and packaged materials from corrosion and deterioration.

D. Provide full-face protectors of waterproof material fastened to each side of the valve body to protect joints and the valve interior.

PART 2 -- PRODUCTS

2.1 VALVES

A. General: The CONTRACTOR shall furnish all valves, operators, actuators, valve-operating units, stem extensions, and other accessories as shown or specified. All valves shall have the name of the manufacturer and the site of the valve cast on the body or bonnet or shown on a permanently attached plate in raised letters. All valves shall be new and of current manufacture. All valves, 6-inch and larger, shall have operators with position indicators. Where buried, these valves shall be provided with valve boxes and covers containing position indicators, and valve extensions. Shut-off valves mounted higher than 5 feet 6 inches above working level shall be provided with chain operators.

B. Valve Flanges: The flanges of valves shall be in accordance with Section 15610, "Piping, General" and other Sections of Division 15, "Mechanical."

C. Valve Stems: Except where otherwise specified, valves with motorized operators shall have stems conforming to ASTM A276 Type 316 stainless steel with minimum tensile strength of 95,000 psi, and a minimum yield point of 75,000 psi, and elongation of 25 percent in 2 inches. Manually operated valves shall have silicon-bronze stems conforming to ASTM B584-875, having minimum tensile strength of 60,000 psi, a minimum yield point of 24,000 psi, and elongation of 16 percent in 2 inches. Where subject to dezincification,

manually operated valve stems shall be of bronze conforming to ASTM B62, containing no more than 5 percent zinc, nor more than 2 percent aluminum.

D. Protective Coating: Except where otherwise specified, ferrous surfaces, exclusive of stainless steel surfaces, in the water passages of all valves 4-inch and larger, as well as the exterior surfaces of all submerged, buried or aboveground valves and operators, shall be coated as specified in Section 09800, "Protective Coating". Flange faces of valves shall not be coated. The valve manufacturer shall certify in writing that such coating has been applied and tested in the manufacturing plant prior to shipment, in accordance with these Specifications.

E. Valve Operators:

1. Where shown, certain valves shall be furnished with electric operators, provided by the valve manufacturer. All operators of a given type shall be furnished by the same manufacturer. Where these operators are supplied by different manufacturers, the CONTRACTOR shall coordinate their selection to provide uniformity of each type of electric operator. All valve operators, regardless of type, shall be installed, adjusted, and tested by the valve manufacturer at the manufacturing plant. Unless otherwise specified, all electric, pneumatic, and hydraulic valve operators shall be in accordance with Sections of Division 17, "Instrumentation and Controls."

2. All manual operators shall have levers or handwheels, unless otherwise shown. Where buried, the valves shall have extensions with square nuts or floor stands. Valves mounted higher than 5 feet-6 inches above floor or operating level shall have chain operators. Unless otherwise shown or specified, valves of sizes 4-inch and larger shall have gear-assisted operators.

3. Chainwheel operators shall include chainwheel and chain guide for valve handwheels. Chainwheel shall be made of ductile iron. Rim shall contain as an integral part of the casting a groove into which the chain guide attaches. Chain guide shall be made of malleable iron. Chainwheels shall be adjustable and detachable, furnished complete with Type 310 stainless steel attachment sets for attachment of chainwheel to valve handwheels. Chainwheel operators shall be “Hammer-blow” with safety wheel configuration. Chainwheel safety cables, clips and fasteners shall be Type 316 stainless steel. Ferrous surfaces, exclusive of stainless steel surfaces, shall be coated as specified in Section 09800, "Protective Coating". Chainwheel operators shall also be furnished with Type 316 stainless steel lock-link chains. The chain shall be of sufficient length at approximately 3 feet above the floor or operating level.

F. Valve Labeling: Except when such requirement is waived by the ENGINEER in writing, a label shall be provided on all valves exclusive of hose bibs. The label shall be of 1/16-inch plastic or stainless steel, minimum 2 inches by 4 inches in size, and shall be permanently attached to the valve or on the wall adjacent to the valve as directed by the ENGINEER.

G. Nuts and Bolts: All nuts and bolts on valve flanges and supports shall be Type 316 stainless steel.

H. Lubricating Gun: The CONTRACTOR shall supply a manual lubricating gun for lubricated plug valves in sizes up to 6-inch, inclusive. For larger valves the CONTRACTOR shall furnish a pneumatically operated lubricating gun. The guns shall be of the same manufacturer as the valves. They shall be equipped with flexible connector, pressure gage, and safety valve, with operating instructions and shipped in a labeled tool box.

PART 3 -- EXECUTION

3.1 VALVE INSTALLATION

A. General: All valves, operating units, controls, stem extensions, valve boxes, and accessories shall be installed in accordance with the manufacturer's written instructions and as shown and specified. All valves shall be adequately braced to prevent warpage and bending under the intended use. Valves shall be firmly supported to avoid undue stresses on the pipe.

B. Access: All valves shall be installed to provide easy access for operation, removal, and maintenance and to avoid conflicts between valve operators and structural members or handrails.

C. Valve Accessories:

1. Where combinations of valves, sensors, switches, and controls are specified, it shall be the responsibility of the CONTRACTOR to properly assemble and install these various items so that all systems are compatible and operating properly. The relationship between interrelated items shall be clearly noted on Shop drawing submittals.

2. Valve operators and controls are to be installed where specified and designated on the Contract drawings. The CONTRACTOR is responsible for installation of the correct valve operator and control as specified to provide a complete piping system as specified.

D. All valves shall be field tested following installation to demonstrate that the valve operates under field conditions in a manner consistent with the design of the system.

E. All testing of valves shall be witnessed and approved by the INSPECTOR.

F. The CONTRACTOR shall demonstrate that each valve operator and control installed as a part of a piping system will operate under field conditions as designed and in the manner for which the operator was specified. All testing will be witnessed and approved by the INSPECTOR.

(END OF SECTION)

SECTION 16020

MUNICIPAL FACILITIES GENERAL ELECTRICAL REQUIREMENTS

PART 1 - GENERAL

1.1 DESCRIPTION

A. Related Work:

1. Section 01810, "Commissioning Requirements".

2. Section 16560, "Municipal Facilities Electrical Systems Commissioning".

3. Section 16570, "Municipal Facilities Electrical Testing Requirements".

B. Electrical subcontractor shall attend the Commissioning pre-construction meeting and other required meetings to facilitate coordination and execution of the commissioning scope.

C. Provide pre-functional checklists and complete functional testing under the supervision of the commissioning authority, including preparation of data in form templates. Provide qualifying calibrated instrumentation needed for the prescribed testing procedures.

D. Provide the services of specialized technicians for testing and validation. Technicians may be supplied by the equipment suppliers or from qualified independent testing services.

E. Systems that shall be commissioned are:

1. Lighting system and controls.

2. Storm water diversion and infiltration facilities.

F. Detailed descriptions of electrical commissioning requirements are provided in Section 01810, "Commissioning Requirements".

G. Comply with all provisions of the General Conditions, Supplementary Conditions and General Requirements as applicable to work of all Sections of Division 16 concerning definitions, guarantees, submittals, as-builts, clean-up, etc.

H. Examine all Technical Sections for work required to be included in work in Sections of Division 16 - Electrical Work.

I. All work of this Division shall be coordinated with work of other trades.

1.2 SCOPE

A. Required: Provide all labor, materials, equipment, tools and appliances required to furnish and install all electrical work shown on the Contract Drawing and herein specified in the Sections of Division 16 complete and operable but not limited to the following:

1. All construction power and lighting and power for testing equipment and systems

through final acceptance of test.

2. Power and lighting service raceway(s) underground from the property line to an on-site padmount transformer, and from the transformer to the main service switchboard.

3. Complete lighting and power system(s) including branch circuits, fixtures, outlets, lamps, switches, controllers, and auxiliary equipment.

4. Complete distribution system(s) including switchboards, panelboards, transformers, feeders, and auxiliary equipment.

5. Complete system of exterior (vandal resistant) lighting.

6. Complete Grounding System.

7. Control wiring and devices for equipment specified in Sections of Division 16 and other Technical Sections, except where specifically indicated or noted otherwise on the Contract Drawings or in the Specifications.

8. Connection and testing of electrical equipment and controls specified in Division 16 and other technical sections, except where specifically indicated or noted elsewhere on the Contract Drawing or in the Specifications.

9. Applicable excavating, trenching and backfilling.

1.3 WORK NOT INCLUDED

A. Furnishing all electrical or partially electrically devices related uniquely to mechanical equipment and only as specified in the Mechanical Division 15.

B. Furnishing and installing of all motors.

1.4 RELATED WORK

A. Preparation of Soils Reports, refer to Section 02200 EARTHWORK.

B. Painting of exposed raceways and equipment in DIVISION 9.

C. Commissioning requirements in DIVISION 1.

D. Municipal Facilities Electrical Commissioning Requirements in DIVISION 16.

E. Municipal Facilities Electrical Testing Requirements in DIVISION 16.

1.5 LEGAL REQUIREMENTS AND STANDARDS

A. Required: Comply with the latest, as applicable and effective, during the progress of Contracted Work.

1. Latest Los Angeles City Electrical, Fire and Building Codes and U.B.C. Supplement.

2. California State Administrative Code, Title 24, State Building Standard.

3. (CAL/OSHA) California State Occupational Safety and Health Act.

4. California State Fire Marshal Standards.

5. Los Angeles City Department of Water and Power.

6. U.L. - Underwriters Laboratories Inc.

7. NEC - National Electric Code.

8. ASTM - American Society of Testing and Materials.

9. Current publications of the National Fire Protection Association.

10. National and American Standards Association.

B. General Compliance as Applicable

1. Drawings and specification requirements shall govern where they exceed Code requirements.

2. Where requirements between governing Codes and Regulations vary, the more restrictive provision shall apply.

3. Nothing contained in Contract Documents shall be construed as authority or permission to disregard or violate legal requirements.

1.6 GENERAL REQUIREMENTS

A. Permits and Inspections:

1. Apply and pay for all required electrical work (construction and installation) prescribed by legally constituted public authorities.

2. Arrange and pay for all required inspections or examinations and shall deliver "certifications" of such inspections to the City Engineer prior to acceptance of the electrical work. Obtain approved plans from the Los Angeles City Department of Building and Safety.

B. Site Inspections:

1. Carefully examine the jobsite and existing facilities and compare the Contract Drawings for work coordination.

2. By act of submitting bid, it will be deemed the Contractor has made required inspections and has accepted such job-site conditions and has made allowances thereof in the preparation of "Bid" figures.

C. Verification of Dimensions: All dimensions (scaled, figured or noted) are approximate, given for estimating purposes. Before proceeding with work Contractor shall carefully check and verify all dimensions, sizes, etc. and shall assume full responsibility for proper fitting in and attachment of all materials and equipment to other equipment and to the structure.

D. Examination of the Contract Drawings:

1. Carefully study Contract Drawings and Specifications to verify if any work as laid out or indicated is contrary to or in conflict with applicable Codes and Standards. Report to the City Engineer such data prior to submittal of Bid(s).

2. The City Engineer will then instruct the Contractor on how to proceed.

3. By the act of submitting a "Bid" or "Proposal" Contractor is deemed to have made such study and has accepted all job-site conditions.

E. Substitutions:

1. Items, articles or products named on the Contract Drawings and in the Specifications are intended to establish a standard of quality and required functional performance.

2. If the Contractor desires to propose a substitution or alternate, submit a complete list with detailed specifications and manufacturer's data which differ from those specified within thirty-five (35) days after award of Contract for approval or rejection by the City Engineer.

3. If such submittals are not approved, use specified materials and equipment throughout the Electrical Work.

F. Interpretations:

1. Make all requests for interpretations of the Contract Drawings and/or Specifications to the Contractor through the Architect or City Engineer.

2. Manufacturer's or Supplier's requests for interpretations will be referred to the Contractor.

G. Submittals: Conform to applicable provisions of Section 01330 of the General Requirements and as hereinafter specified.

1. Prepare, review and coordinate schedule of submittals, determining necessary lead time for preparation, submitting, checking, and ordering and delivering materials and equipment to the job-site for timely arrival and conformance with the overall Construction schedule.

2. All submittals will be checked for general compliance with Specifications only. Contractor will be responsible for deviations from the Drawings or Specifications and for errors or omissions of any sort in the Submittals.

3. Shop drawings shall be submitted in completed groups of materials (i.e., all lighting fixtures or all switchgear, etc.). The Contractor shall add and sign the following paragraph on all equipment and materials submitted for review.

   a. "It is hereby certified that the (equipment) (material) shown and marked in this submittal is that proposed to be incorporated into the project; is in compliance with the Contract Drawings and Specifications and can be installed in the allocated spaces".

   b. Failure to add the above written statement for compliance will result in return of submittals to be reviewed.

4. All required submittals on electrical items and equipment shall include complete catalog information such as construction ratings, insulation systems, including manufacturer's certification that items or equipment meet or exceed U.L. and Trade Standards, and the Specifications.

5. Equipment Floor Plans: Submit after approval of material and/or equipment is secured. Prepare for each electrical equipment room drawn to 1/2" = 1'0" scale. Layout drawing shall be to exact scale.

6. Materials list of items and equipment proposed to be provided for the work of this Division 16 and shall include the following as applicable:

   a. Service and distribution switchgear.

   b. Motor control centers.

   c. Lighting control systems, including user interface programs, system configuration, control switches, etc. including wiring diagrams and sequence of operation.

   d. Lighting panelboards.

   e. Dry type transformers.

   f. Conduits.

   g. Conductors.

   h. Electrical equipment layout at 1/2" = 1'-0" scale indicating exact dimensions of equipment, clearances, housekeeping pads.

   i. Disconnect switches, pull boxes and fuses.

   j. Lighting fixtures.

   k. Fire alarm and detection system.

   l. Control devices, standard and special receptacles, switches and finish device plates.

   m. Wiring for storm water diversion and infiltration PLC based control system specified in Division 17.

n. Grounding systems.

o. All fabricated equipment.

H. Special Submissions:

1. Test Reports for the Following:

a. Ground fault devices.

b. Megger Readings: Ground system, motors, feeders and switchgear.

c. Voltage Readings: Distribution, service and motors.
d. Fire alarm system.

2. Maintenance service and operating manuals for all equipment.

3. Items as outlined in other Sections.

I. "No Exceptions Taken": Be responsible for equipment ordered and/or installed prior to receipt of shop drawings returned from the City Engineer bearing the Electrical Engineer's stamp of "No Exceptions Taken". Corrections or modifications to equipment as noted on shop drawings shall be performed or equipment removed from the job site at request of City Engineer without additional compensation.

J. Disapprovals: Any article or equipment supplied by the Contractor disapproved by the Architect or City Engineer as not conforming to the Specifications or not of proper quality or grade or suitability shall be deleted and suitable article or equipment be provided in lieu thereof in conformance with the Specifications at no added cost to the City.

K. Terminology: Generally speaking throughout this Division 16 of the Specifications when the words "or equal" or other words of similar intent and meaning are used implying judgment or decision is to be exercised, it is understood that it is the judgment, discretion, or decision of the City Engineer to which reference is made.

Note: Specifier should name at least two manufacturers plus the words "or equal".

L. Modification of Contract Drawings: In each case where proposed substitute material or equipment will require changes to the design of the Project as indicated on the drawings, for proper installation or operation, appropriate proposed revision drawings prepared and signed by a licensed Engineer shall be furnished by the Contractor for approval by the City Engineer. Make such drawings sufficiently complete for the proper installation and operation of the proposed substitute materials or equipment, and for construction by all of the involved trades of the proposed revisions. The cost of the drawings and the proposed revised construction shall be borne by the Contractor.

M. Record Drawings: Provide in strict accordance with applicable provisions of Section 30 in the GENERAL CONDITIONS of these Specifications concerning accurate locations of raceways, cable runs, outlets and equipment. See also applicable provisions of Section 01783, "Project Record Documents" (as-built) Drawings of the GENERAL REQUIREMENTS of these Specifications.

N. Operation and Maintenance Manuals: Prior to final acceptance of Contracted Work by the City, furnish 4 bound copies of operation and maintenance manuals for all electrical equipment, as required in this Section. The contents shall include description of equipment, names of manufacturers, parts lists, model numbers, maintenance schedules, location of nearest facility for replacement parts or service, wiring and connection diagrams, internal schematic drawings, and other electrical/mechanical data necessary for operation and maintenance.

1.7 QUALITY ASSURANCE

A. General:

1. All equipment and accessories to be the product of a manufacturer regularly engaged in its manufacture.

2. Supply all equipment and accessories new, free from defects and listed by Underwriters' Laboratories, Inc. or bearing its label. Special or custom equipment must bear the label of laboratory recognized by the City of Los Angeles Department of Building and Safety.

3. Supply all equipment and accessories in compliance with the applicable standards listed in Article 1. 5 of this Section and with all applicable National, State and Local codes.

4. All items of a given type shall be the product of the same manufacturer.

B. Labor: Use adequate numbers of skilled workers who are thoroughly trained and experienced in the necessary crafts and completely familiar with specifications, requirements and methods needed for proper performance of the work of Electrical Division 16.

C. Superintendence: Provide an experienced Superintendent to be in charge of erection and/or installation of electrical work together with journeymen helpers to properly unload, erect, connect, adjust, operate and test the work involved to provide a neat, workmanlike and operable installation.

1.8 LOCATION

A. The location of apparatus and equipment indicated on the Contract Drawings are approximate only and shall be changed to meet site conditions as required.

B. Any change in work which has not been installed shall be made by the Contractor without additional compensation, except changes which are caused by Architectural changes which increase or decrease the size of apparatus or materials specified or indicated on the drawings. The Contractor shall submit a detailed breakdown cost estimate of, or credit for, such changes and shall proceed only upon the written authority of the Architect and Engineer.

C. All apparatus and equipment shall be furnished and installed in a manner and in locations avoiding all obstructions, preserving head room, and keeping openings and passageways clear. Changes shall be made in locations of equipment and materials which may be necessary in order to accomplish this.

D. The drawings are essentially diagrammatic to the extent that many offsets, bends, special fittings, and exact locations are not indicated. The Contractor shall carefully study the Contract Drawings and premises in order to determine the best methods, exact location, routes, and building obstructions, etc., and shall install all apparatus and equipment in the available location.

1.9 CUTTING AND PATCHING

A. Conform to provisions of the General Requirements.

B. The Contractor shall do all drilling, cutting and patching of the general construction work existing or new, rough finish and trim, which may be required for the installation of electrical equipment. All patching shall be of the same materials, workmanship and finish as the original work, and shall accurately match all surrounding work.

C. All cutting and patching shall be as approved by the City or City's authorized representative.

1.10 PROTECTION OF WORK

A. The Contractor shall protect all work, material and equipment from damage from any cause whatsoever, and shall provide adequate and proper storage facilities during the progress of the Work. Contractor shall provide for the safety and good condition of all work until final acceptance of the work by the City, and replace all damaged or defective work, materials and equipment before requesting final acceptance.

B. The Contractor shall be held responsible for the protection and correction of the work of all trades from smears, splashes, stain or damages that might occur in the progress of the work.

1.11 WORK COORDINATION

A. The Contractor shall so order electrical work that progress will harmonize with that of other trades so that all work may proceed as expeditiously as possible.

B. So far as possible, the work has been indicated on the Contract Drawings in such positions as to suit and accommodate the work of the other trades, but the work as indicated is largely diagrammatic, and the correct finish position of all equipment and materials cannot always be indicated. Therefore, the Contractor is hereby made directly responsible for the correct placing of electrical work and the proper location and connection of electrical work in relation to the work of other trades.

1.12 JOB SAFET***Y***

A. The Contractor shall be solely and completely responsible for the condition of the premises on which the work is performed and for the safety of all persons and property on the site during performance of the Contract. These requirements shall not be limited to normal working hours, but shall apply continuously.

B. Contractor shall conform to all governing safety regulations.

PART 2 - PRODUCTS

2.1 MATERIALS

A. All materials, items and equipment furnished under this Contract shall be new, recently manufactured and available locally.

B. All materials shall comply with applicable legal requirements and standards hereinbefore specified in this Section 16020.

C. The label of listing by UL shall appear on all materials and equipment for which standards have been established by that agency.

D. Where local or other authorities having jurisdiction have established label or approval requirements, furnish all materials and equipment with either the required labels affixed or the necessary written approval.

E. Examine the Drawings and Specifications and determine the work to be performed by the electrical and other trades. Provide the type and quantity of electrical materials and equipment necessary to complete this work and all systems in proper operation, tested and ready for use.

F. Provide and install all incidental items not indicated on the Drawings nor mentioned in the Specifications that belong to the work described or are required for complete systems.

2.2 MATERIALS LISTING

A. Required: See Subsection 1. 6 G 6 of this Section 16020.

PART 3 - EXECUTION

3.1 UTILITY SERVICES (AS APPLICABLE)

A. Every effort has been made to determine as accurately as possible the requirements of the electrical services. However, before submitting bid, the Contractor shall verify the locations shown on the plans and shall include sufficient funds for material, labor and utility fees for installation of an approved utility service.

B. Before any work is performed on these facilities, verify all electrical, civil, architectural and structural, dimensional and other requirements related to these facilities with the serving utility companies.

C. Should any major changes to the work indicated be necessary to complete the power systems, notify the City Engineer at once and cease all work affected until approval for required modifications has been obtained from the City Engineer.

3.2 WORK RESPONSIBILITIES

A. The drawings indicate diagrammatically the desired locations or arrangement of conduit runs, outlets, equipment, etc., and are to be followed as closely as possible. Proper judgment must be exercised in executing the work so as to secure the best possible installation in the available space and to overcome local difficulties due to space limitations or interference with structural conditions. The Contractor is responsible for the correct placement and coordination of electrical work in relation to the work of other trades. Advise appropriate trade as to locations of access panels.

B. Locations shown on architectural plans and elevations shall take precedence over electrical plan locations, but where a major conflict is evident; notify the Architect or City Engineer for instructions.

C. In the event changes in the indicated locations or arrangement are necessary due to developed conditions in the building construction or rearrangement of furnishings or equipment, such changes shall be made without extra cost, providing the change is ordered before the conduit runs, etc., and work directly connected to same are installed and no extra materials are required.

D. Where equipment is furnished by others, verify dimensions and the correct location of this equipment before proceeding with the roughing in of connections.

E. All scaled and figured dimensions are approximate of typical equipment of the class indicated. Before proceeding with any work, carefully check and verify all dimensions, sizes, etc., with the drawings to see that the equipment will fit into the spaces provided without violation of applicable codes.

F. Should any changes to the work indicated on the Drawings or described in the Specifications be necessary in order to comply with the above requirements, notify the City Engineer immediately and cease work for all parts of the Contract Work which are affected until approval for any required modifications to the construction has been obtained from the City Engineer.

G. Be responsible for any cooperative work which must be altered due to lack of proper supervision or failure to make proper provisions in time. Such changes shall be under the direction of the City Engineer and shall be made to their satisfaction.

H. Perform all work with competent and skilled personnel. Conform to provisions of Subsection 1. 7B of this Section.

I. All work, including aesthetic as well as electrical and mechanical aspects of the work, shall be of the highest quality consistent with the best practices of the trade.

J. Replace or repair, without additional compensation, any work which, in the opinion of the City Engineer does not comply with these requirements.

3.3 GENERAL INSTALLATION (AS APPLICABLE)

A. Unless otherwise specified elsewhere in the Specifications, do all excavating necessary for the proper installation of the electrical work in accordance with the "Earthwork" Section 02220.

B. Locations of Openings: Obtain approval for all chases, shafts and openings required for the installation of the electrical work. Cutting or drilling in any structural member is prohibited without written approval of the Architect or City Engineer. Furnish access panels as required.

C. Finish Around Sleeves: Rough edges shall be finished smooth. Space between conduit and sleeves where conduit passes through exterior walls shall be sealed to permit movement of conduit but prevent entrance of water. Space between conduit and sleeves where conduit passes through fire rated interior walls and slabs shall be sealed with approved materials to provide a fire barrier conforming to the requirements of the governing authorities having jurisdiction, use Dow Corning 3-6548 RTV silicone foam or equal by General Electric if so approved by the applicable authorities having jurisdiction at the job site.

D. Wherever conduit extends through roof, furnish and install flashings in accordance with City Engineer's directions.

E. Be responsible for all cutting and patching which may be required for the proper installation of the electrical work. Work shall be performed by the trade originally installing same and paid for under this Section of the work.

F. Protect all work, materials and equipment from damage from any cause whatever and provide adequate and proper storage facilities during the progress of the work. Storage outdoors shall be weather protected and shall include space heaters to prevent condensation. Provide for the safety and good condition of all work until final acceptance of the work by the City Engineer and replace all damaged or defective work, materials and equipment before requesting final acceptance at no added cost to the City.

G. Conduit and Equipment to be installed: Clean thoroughly to remove plaster, spattered paint, cement and dirt on both exterior and interior.

H. Conduit and Equipment to be painted: Clean all conduits exposed to view in completed structure by removing plaster and dirt. Remove grease, oil and similar material from conduit and equipment by wiping with clean rags and suitable solvents in preparation for paint.

I. All Items with Factory Finish: Remove cement, plaster, grease and oil, and leave all surfaces, including cracks and corners, clean and polished. Touch up any scratched or bare spots to match finish. Factory finish may be approved as prime coat by the Architect (see "Painting" Section).

J. Site Cleaning: Remove from site all packing cartons, scrap materials and other rubbish relating to electrical installation.

K. Electrical equipment and materials exposed to public and in finished areas shall be finish-painted after installation to coordinate with surrounding walls. Surfaces shall be thoroughly cleaned for receiving painting. Paint color coordination shall be as directed by the Architect or City Engineer. Paint shall be identical to that on adjacent surfaces to insure proper matching of quality and color with surrounding areas.

3.4 EXCAVATION, CUTTING AND PATCHING

A. All excavating, trenching and backfilling required for the work of this Division shall conform to the applicable requirements of the "Earthwork" Section 02220 in the Project

Specifications. All excavating and backfilling connected with electrical work, repaving all cuts and providing and maintaining all protective measures for the electrical work excavation required by the governing authorities having jurisdiction shall be performed as a part of the work of this Division.

B. At a time in advance of the work, verify all openings indicated on the Drawings. Should the work of this division require it, furnish new instruction as to requirements for these openings, subject to the Architect's approval. All cutting, patching and reinforcement of the building (subject to the City Engineer's approval) shall be performed under the Section of the Specifications under which the work was originally performed, but the coat shall be an obligation of the Contractor.

3.5 TESTS

A. Conduct resistance to ground tests by qualified personnel to measure resistance to ground at all grounding electrodes. Make tests before slabs of affected areas are poured in order that corrective measures, if requested, may be taken. Submit to the City Engineer a report showing the results of these measurements. If the resistances exceed values specified elsewhere, perform all corrective measures as directed by the City Engineer at no additional cost to City.

B. Prior to energizing any motors, measure the service voltage for phase balance and report immediately to the City Engineer if unbalance exceeds 1% from means.

C. Measure the three-phase voltage at no load and at maximum load conditions and submit to the City Engineer a report showing the results of these measurements.

D. Upon completion of the work and adjustment of all equipment, conduct an operating test for approval at such time as the Architect directs. Conduct the test in the presence of an authorized representative of the State. Demonstrate all systems and equipment to operate in accordance with all requirements of the Contract documents and to be free from all electrical and mechanical defects. Provide all systems free from short circuits and grounds and show an insulation resistance between phase conductors and ground not less than the requirements of the governing electric code. Test all circuits for proper neutral connections.

E. Complete all tests prior to final inspection of project, including corrective work based on the results of the tests.

F. Perform special tests on systems and equipment as specified herein in other sections of this division, using personnel qualified to perform such tests.

G. Measure voltage on secondary side of all transformers with full load connected and adjust taps to provide rated secondary voltage.

H. Submit to the City Engineer a report showing test voltage of L-N on the secondary’s of all transformers.

3.6 PROTECTION

A. Besides the provisions of Subsection 1.10 of this Section comply with the following:

1. Protect all finish parts of the materials and equipment against damage during the progress of the work and until final completion and acceptance. Cover all materials and equipment in storage and during construction in such a manner

that no finished surfaces will be damaged or marred. Keep all moving parts clean, dry and lubricated.

3.7 PRELIMINARY OPERATIONS

A. Required**:** Should the City require that any portion of the systems or equipment be operated prior to the final scheduled dates for completion and acceptance of the work, the Contractor shall consent. Such operation shall be under the direct supervision of, and at the expense of the Contractor, and shall not be construed as an acceptance of any of the work by the City.

3.8 CLEANING UP

A. Conform to applicable provisions of Section 01740 of the General Requirements and the following as applicable.

B. Upon completion of the work and at various times during the progress of the work, remove from the building all surplus materials, rubbish and debris resulting from the work of this division and leave the involved portions of the job-site in a neat, clean and acceptable conditions.

C. Thoroughly clean all switchgear, apparatus, exposed conduit, metal work and accessories for the work of this Division of cement, plaster and other deleterious materials; remove all grease and oil spots with cleaning solvent; carefully wipe all surfaces and scrape all cracks and corners clean.

D. Thoroughly polish all chromium and all plated work. Remove all dirt and stains from lighting fixtures.

E. Leave the entire installation in a neat, clean and usable condition.

3.9 COMPLETION

A. The work will not be reviewed for final acceptance until operating and maintenance data, manufacturer's literature, panel directories and nameplates specified herein have been approved and properly posted or installed and final cleaning of equipment and premises has been completed.

B. When the installation is complete and all adjustments have been made, operate the systems for a period of one week, during which time demonstrate to the City Engineer that the systems are completed and operating in conformance with the Specifications.

3.10 GUARANTEE

A. Conform to applicable provisions of the GENERAL CONDITIONS of these Specifications.

B. Required: Except as may be specified under other sections in the Specifications, guarantee all equipment furnished under the specifications for a period of one year from date of acceptance against defective workmanship and material, and improper installation. Upon notification of failure, correct deficiency immediately and without cost to the City.

C. Standard warranty of manufacturer shall apply for replacement of parts after expiration of the above period. Manufacturer shall furnish replacement parts to the City or his service

agency as directed. Furnish to the City Engineer printed manufacturer's warranties complete with material included and expiration dates, upon completion of project.

3.11 OPERATING AND MAINTENANCE DATA

A. Required: Submit to the City Engineer, complete and at one time, prior to acceptance of the installation, 10 copies of manufacturer's instructions for operation and maintenance of electrical equipment, including replacement parts lists. Each set to be bound in an indexed loose leaf ring binder with permanent cover and permanent identification on back.

3.12 RECORD DRAWINGS

A. Required**:** Conform to the provisions of Subsection 1. 6 M of this Section and as noted hereinafter as applicable.

B. Provide and maintain in good order at the field office a complete set of electrical contract prints. All changes to the contract shall be clearly recorded on this set of prints and initialed by the Contractor on a weekly basis. At the end of the project transfer all changes, using same symbols, to one set of Mylar transparencies. Obtain Mylar transparencies from the Engineer at Contractor's cost.

C. Accurately indicate and dimension all underground conduit runs and conduit stub-outs and all pullboxes from building walls on all Record Drawings.

D. Upon completion of the work and as a prerequisite to issuance of certificate for final payment, deliver one complete set of final prints of the mylars and the Mylar originals themselves.

E. Initial and identify name and telephone number of installing Contractor on all sheets as being a correct and accurate record of the installation. This also includes, but is not limited to, fire alarm and control systems.

3.13 INSPECTION AND ACCEPTANCE PROCEDURES

The City Engineer will submit observation reports periodically during the construction phase detailing Contract deficiencies. The Contractor is responsible for making all corrections immediately to avoid delaying other trades. Final acceptances of the project will not be made until all items have been corrected.

3.14 FINAL ACCEPTANCE OF ELECTRICAL SYSTEMS

A. Prior to Final Acceptance of operating electrical systems Contractor shall do the following, as applicable:

1. Provide materials of the type and quality specified and as necessary for proper operation, tested and ready for use.

2. Deliver to the City Engineer the "as-built" transparency and set of prints as "Record Drawings".

3. Furnish the required operating and maintenance data/manuals.

4. Clean-up of the project pertaining to this Division of the work, as hereinbefore noted in Subsection 3. 8 of this Division.

5. After installation has been completed and adjustments made, operate the system for a period of one week, during which time, demonstrate to the City Engineer that all systems are complete and operating in conformance with Contract documents.

6. Conduct all tests required and as specified in Sections of this Division and submit test reports and corrective actions taken.

7. Submission of all warranties and guarantees.

B. Final Acceptance of Electrical Work Shall Be Contingent On The Following:

1. Contractor replacing defective materials and workmanship.

2. Upon completion of work and adjustments made, Contractor shall conduct an operating test for each system for approval at such time as City Engineer directs. Conduct test in presence of authorized representative of the City Engineer demonstrate that systems and equipment do operate in accordance with requirements of the Contract documents and are free from electrical and mechanical defects.

3. Contractor shall provide the necessary training programs and instructions to the City's representative.

4. Submit copies of manufacturer's instructions and maintenance of electrical equipment including replacement parts lists. Each set shall include one set of shop drawings of equipment installed.

3.15 SUBMITTALS FOR CHANGE ORDERS

A. General: When changes are made during the construction phase, deletions and additions shall be presented in a manner that will indicate the cost of each item of material and corresponding labor. Overhead and profit makeup shall be then added in accordance with the requirements of the GENERAL CONDITIONS.

1. Unit costs shall apply in event of changes, additions and deletions to the contract, as follows:

2. Submit with Bid Costs a unit cost, covering one hour of labor, including all applicable supervision, nonproductive labor, burdens, benefits, insurance, taxes, direct and indirect job expenses including drawings, engineering, temporary power, warehouse, tools, equipment, clean-up, bonds, overhead and profit, charged for labor. Unit cost of labor shall be applicable for duration through completion of the project.

3. Material unit costs shall be based on the latest edition of "Electrical Trade Book", published by Trade Service Publications, Inc. Unit cost shall be taken from extreme right-hand column.

4. Labor unit quantities, for specific items required, shall be those listed in the third column from the National Electrical Contractors' Association, Inc., "NECA Manual of Labor Units".

(END OF SECTION)

SECTION 16100

BASIC MATERIALS AND METHODS

PART 1 -- GENERAL

1.1 THE REQUIREMENT

A. The CONTRACTOR shall furnish all tools, equipment, materials, and supplies and shall perform all labor required to complete the work as indicated on the Drawings and specified herein.

B. This section covers the work necessary to furnish and install the materials specified hereinafter.

1.2 RELATED WORK SPECIFIED ELSEWHERE

A. The following Sections and Divisions applies to the WORK of this Section. Other Sections and Divisions, not referenced below, shall apply to the extent required for proper performance of this WORK.

1. Division 02 Site Work.

2. Division 03 Concrete.

3. Division 09 Finishes.

4. Division 11 Equipment.

5. Division 17 Instrumentation and Control.

6. Work Specified Under Other Divisions:

a. All concrete work required for encasement, installation, or construction of the work specified in the various Sections of Division 16 is included as a part of the work hereunder, and shall be 2500-psi concrete conforming to the applicable requirements of Section 03300, "Cast-in-Place Concrete"; provided, that the following exceptions and supplementary requirements shall apply:

1. Consolidation of encasement concrete around duct banks shall be by hand puddling. No mechanical vibration shall be used.

2. A workability admixture shall be used in encasement concrete, which shall be a hydroxylated carboxylic acid type in liquid form. Admixtures containing calcium chloride shall not be used.

3. Concrete for encasement of conduit or duct banks shall contain an integral red-oxide coloring pigment in the proportion of 8 pounds per cubic yard of concrete.

1.3 REFERENCE CODES AND STANDARDS

A. All work specified herein shall conform to or exceed the applicable requirements of the referenced portions of the following publications to the extent that the provisions thereof

are not in conflict with other provisions of these specifications.

1. Codes and Standards:

LAEC	City of Los Angeles Electrical Code, latest adopted edition.

2. Government Standards:

FS W-C-596H/GEN	Connector, Plug, Receptacle and Cable Outlet, Electrical Power.
FS W-S-896G	Switches, Toggle (Toggle and Lode), Flush Mounted (ac).

3. Commercial Standards:

ANSI B16.5	Pipe Flanges and Flanged Fittings, Steel, Nickel Alloy, and Other Special Alloys.
ANSI C80.1	Electrical Rigid Steel Conduit (ERSC)
ANSI Z55.1	Gray Finishes for Industrial Apparatus and Equipment.
ANSI/UL 467	Grounding and Bonding Equipment, Safety Standard For.
NEMA WD-1-1.10	General Requirements for Wiring Devices.
NEMA PB-1	Panelboards.
NEMA KS-1	Enclosed Switches.
NEMA VE-1	Ventilated Cable Tray.
ICEA S-61-402	Thermoplastic - Insulated Wire and Cable for the Transmission and Distribution of Electrical Energy.
ICEA S-19	Rubber - Insulated Wire and Cable for the Transmission and Distribution of Electrical Energy.
ICEA S-95-658/WC70	Power Cables Rated 2000 Volts or Less.
ICEA S-96-659/WC71	Nonshielded Cables Rated 2,001-5,000 V.
ICEA S-93-639/WC74	5-46 kV Shielded Power Cable.
UL 6	Electrical Rigid Metal Conduit - Steel
UL 489	Molded Case Circuit Breakers.
UL 943	Ground Fault Circuit Interrupters.

B. All equipment furnished by the CONTRACTOR shall be listed by and shall bear the label of Underwriters' Laboratories, Incorporated, (UL) or of an independent testing laboratory acceptable to the CITY's Department of Building and Safety.

C. The construction and installation of all electrical equipment and materials shall comply with all applicable provisions of the Cal/OSHA Safety Orders (Title 8, CCR), State Building Standards, and applicable local codes and regulations.

1.4 CONTRACTOR SUBMITTALS

A. Submittals shall be made in accordance with the requirements of Section 16020, "Municipal Facilities General Electrical Requirements".

1.5 QUALITY ASSURANCE

A. Quality assurance shall be in accordance with all applicable requirements of Section 16020, "Municipal Facilities General Electrical Requirements".

PART 2 -- PRODUCTS

2.1 SERVICE ENTRANCE

A. Provide labor and furnish equipment as required by the electric utility which will provide service to the facility. All such materials and work shall meet the requirements of the utility company.

B. Provide temporary service for construction.

2.2 OUTLET AND DEVICE BOXES

A. General: Provide boxes not less than 2-inches deep, unless shallower boxes are required by structural conditions and are specifically accepted by the ENGINEER. Do not use box extensions to provide wiring space required by the NEC. For hollow masonry construction, provide boxes of sufficient depth so that conduit knockouts or hubs are in the masonry void space.

B. Sheet Steel (SS) Boxes: Provide zinc- or cadmium-plated boxes of the one-piece drawn type. Install 4-inch minimum octagonal boxes for ceiling outlets, except where smaller boxes are required for the particular fixture being installed. Use concrete type boxes in poured concrete slabs. Provide 2-inch by 4-inch minimum boxes for switches and receptacles. Provide plaster rings where required.

C. Cast Steel (CS) Boxes: Provide boxes of cast ferrous metal with gasketed, watertight, cast ferrous metal covers and stainless steel screws. Provide boxes with threaded conduit hubs and cast mounting lugs where lugs are required. Use Crouse-Hinds or Appleton Type FS or FD boxes, or equal.

D. Cast Aluminum (CA) Boxes: Provide boxes of cast, copper-free aluminum with gasketed, watertight, cast copper-free aluminum covers and stainless steel screws. Provide boxes with threaded conduit hubs and cast mounting lugs where lugs are required. Use Crouse-Hinds **or** Appleton Type FS or FD boxes, or equal.

E. Nonmetallic (NM) Boxes: Provide fiberglass boxes with gasketed, watertight covers and stainless steel screws. Provide boxes with conduit hubs and any required mounting lugs. Use Crouse-Hinds, Stahlin, or equal.

F. Provide a box suitable for the conditions encountered at each outlet in the wiring or raceway system and sized in accordance with the LAEC. Use the listed types unless otherwise indicated or accepted.

1. Types to be provided, Steel Raceway System:

Locations	Box Type
Exterior Locations, with:	
Exposed Raceways	316 Stainless steel (NEMA 4X)
Concealed Raceways	316 Stainless steel (NEMA 4X)
Concrete Encased Raceways	316 Stainless steel (NEMA 4X)
Interior Dry Locations, with:	
Exposed Rigid Conduit	Sheet metal
Exposed EMT	Sheet steel
Concealed Raceways	Sheet steel
Concrete Encased Raceways	Cast steel
Lighting Circuits, Ceiling Portion	Sheet steel
Interior Wet Locations, with:	
Exposed Raceways	316 Stainless steel (NEMA 4X)
Concealed Raceways	Cast steel
Concrete Encased Raceways	Cast steel
Lighting Circuits, Ceiling Portion	Sheet steel

2. Types to be Provided, Nonmetallic Raceway System:

Locations	Box Type
Concealed Raceways	Nonmetallic
Concrete Encased Raceways	Precast concrete

G. Device Plates:

1. Types to be Provided:

Locations	Plate Type
All Interior	Plastic
WP Designation	Weatherproof
Flush Mounted Boxes	Plastic
Surface Mounted Cast Metal Boxes	Plastic
Surface Mounted Sheet Metal Boxes	Plastic

2.3 JUNCTION AND PULL BOXES

A. Utilize NEMA 4X 316 stainless steel or fiberglass UV-rated watertight enclosures for outdoor or wet and corrosive locations and where subscript WP is indicated at the box

location on the Drawings. Fiberglass enclosures may be used only with the approval of the ENGINEER.

B. Where outlet boxes are used as junction or pull boxes, use materials as specified under article 2.2, OUTLET AND DEVICE BOXES.

C. Where larger sheet steel boxes are required, utilize boxes of code-gauge, galvanized steel with full-access screw covers mounted with corrosion-resistant stainless steel machine screws.

D. Where larger cast metal boxes are required, use neoprene gasketed, watertight boxes with hinged, cast metal full-access covers, stainless steel cover hardware, and drilled and tapped conduit entrances. Use Crouse-Hinds Series W, O.Z./Gedney Series Y boxes, or equal. For below grade conduit, use Crouse-Hinds Type WJBF, O.Z./Gedney Series YR, or equal, minimum size 8-inches by 8-inches by 6-inches. For hazardous areas, use boxes applicable for the location and hazardous atmosphere present.

E. Where larger nonmetallic boxes are required, they shall be gasketed, watertight, corrosive resistant, and have a hinged, full-access screw cover. The hinge and machine screws shall be stainless steel. The box and cover shall be of high impact strength fiberglass-reinforced polyester material with stability to high heat. The boxes shall have conduit hubs and any required mounting lugs. The minimum size shall be 7-inches by 10-inches by 6-1/2-inches deep. Use Crouse-Hinds, or equal, Type NJB boxes.

F. Use concrete boxes of reinforced, precast concrete, 10-inches by 17-inches minimum inside dimensions, Brooks Products, Inc., No. 3-1/2T, Jensen Precast HT1017, or equal. Mark cast iron cover as per CITY standards. Boxes shall be inspected and approved by the CITY prior to site delivery.

G. Use special boxes where indicated on the Drawings.

2.4 TERMINAL JUNCTION BOXES (TJB)

A. Provide hinged-cover terminal junction boxes of the required type and size where indicated. Utilize NEMA 12 enclosures for indoor dry locations. Utilize NEMA 4X 316 stainless steel watertight enclosures, as described under article 2.4, JUNCTION AND PULL BOXES, for outdoor or wet locations and where subscript WP is indicated at the box location on the Drawings. Provide terminal blocks with a separate connection point for each conductor entering or leaving the box. Provide 25 percent spare terminal points for CITY use following completion of installation. Paint interior surfaces with white enamel or lacquer.

2.5 WIRING DEVICES

A. Switches:

1. General Use Switches: Provide specification grade, totally-enclosed, ac type, quiet tumbler switches meeting NEMA WD 1 performance standards and Federal Specification W-S-896G, and capable of control of lamp loads. Use switches rated at 20 amps, 120/277 volts. Provide operating handles colored white. Switches shall have screw terminals.

2. Weatherproof Switches: Use switches mounted in a cast metal box with gasketed, weatherproof device plate.

B. Receptacles:

1. Single and Duplex: Provide specification grade receptacles meeting NEMA WD 1 performance standards and Federal Specification W-C-596H, and having a contact arrangement such that contact is made on two sides of each inserted blade without detent. Use two-pole, three-wire grounding type receptacles rated 15 amps, 125 volts, NEMA Configuration 5-15R**.**

Acceptable Manufacturers:

1. Crouse-Hinds;
2. Hubbell;
3. Pass & Seymour;
4. Or equal.

2. Weatherproof Receptacles: Receptacles installed in wet or damp locations shall be listed weather-resistant type and mounted in an enclosure that is weatherproof whether or not the attachment plug cap is inserted. An outlet box hood shall be UL listed and identified as extra-duty.

3. Ground Fault Interrupter (GFI) Receptacles: Provide duplex specification grade GFI receptacles tripping at 5 milliamps; rated 15 amps, 120 volts, NEMA Configuration 5-15R and capable of interrupting 1,000 amps without damage. Use units meeting NEMA WD 1, fitting standard sized outlet boxes, having No. 12 AWG copper TW insulated pigtails, having provision for testing, and white in color.

   Use standard model where ground fault protection is needed at an individual location. Use feed-thru model where ground fault protection is specified for "downstream" conventional receptacles. Provide receptacles accepting standard device plates.

   Acceptable Manufacturers:

   1. Crouse-Hinds;
   2. Hubbell;
   3. Pass & Seymour;
   4. Or equal.

4. Special Purpose Receptacles: Provide receptacles of the type, rating, and number of poles indicated or required for the anticipated purpose.

C. Device Plates:

1. General:

a. Provide plates fitting closely and tightly to the box on which they are to be installed. On surface mounted boxes, provide plates which do not extend beyond the sides of the box unless the plates do not have sharp corners or edges.

b. Use plate material compatible with the box material so that galvanic corrosion of the plate and/or box does not occur.

2. Plastic (P) Plates: Provide specification grade device plates manufactured of 0.10-inch minimum thickness, noncombustible, thermosetting material. Provide white one-piece with oval-head metal mounting screws of a color matching that of the plate.

3. Metal (M) Plates: Provide specification grade, one-piece, 0.040-inch nominal minimal thickness, No. 430 satin finish stainless steel device plates with oval-head, matching mounting screws.

4. Engraved Plates: Where device titles are indicated, provide device plates engraved with the designated titles. Provide engraved letters, numbers, or characters 1/8-inch high with filler of black color.

5. Cast Metal (CM) Plates: Provide cast metal device plates of copper-free aluminum with gaskets and stainless steel screws with oval heads.

6. Weatherproof (WP) Plates:

a. Where weatherproof receptacles are designated, the receptacle shall be installed in the specified box with a gasketed, weatherproof, cast metal or stainless steel cover plate with individual cap over each receptacle opening and stainless steel mounting screws. Utilize plates with caps held tightly closed with stainless steel springs when receptacle is not in use.

Acceptable Manufacturers:

1. Crouse-Hinds;

2. Hubbell;

3. Pass & Seymour;

4. Or equal.

b. Where weatherproof switches are designated, the switch shall be installed in the specified box with a gasketed, weatherproof, cast metal cover plate incorporating an external operator for the internal switch and with stainless steel mounting screws.

Acceptable Manufacturers:

1. Crouse-Hinds;

2. Hubbell;

3. Pass & Seymour;

4. Or equal.

7. Raised Sheet Metal (SM) Plates: Provide 1/2-inch high zinc or cadmium-plated steel device plates designed for one-piece drawn type sheet steel boxes.

2.6 LIGHTING AND POWER DISTRIBUTION PANELBOARDS

A. General: Provide circuit breaker panelboards meeting standards established by UL, NEMA PB 1, and the NEC. Where used as service entrance equipment, provide panels UL labeled for that use. Furnish panels with fully rated short circuit current equipment rating. Series connected equipment ratings are not acceptable.

Provide panels rated for connection to an electric system having an available amperes rms symmetrical short circuit current as indicated on drawings or as required by electrical studies. Provide panelboards and circuit breakers suitable for use with 75 degrees C wire at full LAEC 75 degrees C ampacity.

B. Cabinets: Furnish boxes large enough to provide a minimum wiring gutter space on both sides and top and bottom of 4-inches by 4-inches minimum. Provide flush or surface mounted boxes as indicated manufactured with reinforced steel frame and code-gauge, hot-dip galvanized sheet steel. Utilize front trim the same size as the box for surface mounted panelboards and 3/4-inch larger all around than the box for flush mounted panelboards. Panel covers shall be installed with direct screw connections. Adjustable clamps shall not be used. Utilize fronts having doors with concealed hinges and flush type lock and catch device. Provide multipoint locking devices for all doors over 30-inches in height. Key all locks alike, and furnish two milled type keys with each lock. Furnish on door interior a metal directory frame with transparent plastic face and enclosed directory card. Furnish an engraved, laminated plastic nameplate screwed (no adhesives) to the cabinet exterior face indicating the panelboard designation, service voltage, and phases. Nameplates shall be white, engraved to a black core**.** Letter height shall be 1/4 inch.

C. Interiors:

1. Furnished factory assembled panelboard interiors complete with circuit breakers as shown. In addition, space for future circuit breakers shall be provided with easily removable front cover. Utilize panelboards with interiors designed so that circuit breakers can be replaced without disturbing adjacent circuit breakers or without removing the main bus.

2. Provide copper bus bars full sized throughout their length. Make complete provisions for mounting future circuit breakers throughout the full length of the bus. Provide all machining, drilling, or tapping required to add or change circuit breakers in the future. Bolt together and rigidly support bus bars and connection straps on molded insulators.

3. Furnish an insulated neutral bus bar rated the same as the phase bus bars and having at least one terminal screw for each branch circuit. Furnish a copper ground bus bar installed on the panelboard frame, bonded to the box, and containing at least one terminal screw for each circuit. Provide solderless main lugs for main, neutral, and ground bus bars. Provide sub-feed or thru-feed lugs where indicated. Provide lugs and connection points on phase, neutral, and ground buses suitable for copper conductors.

D. Circuit Breakers:

1. Furnish indicating type molded circuit breakers providing ON/OFF and TRIPPED positions of the operating handle. Furnish thermal magnetic, quick-make, quick-break circuit breakers which are non-interchangeable in accordance with the LAEC. Do not use tandem or dual circuit breakers in normal single-pole spaces. Do not use single-pole circuit breakers with handle ties where multiple circuit breakers are indicated. Utilize multi-pole circuit breakers designed so that an overload on one pole automatically causes all poles to open. Provide circuit breakers meeting requirements of UL 489. Install bolt-on circuit breakers in all panelboards. Provide circuit breaker handle padlocking provisions where indicated or required.

2. Where ground fault interrupter (GFI) circuit breakers are indicated or required by the LAEC, provide a unit containing a conventional thermal magnetic trip and a ground fault sensor rated to trip the circuit breaker in approximately 0.025 second for a 5-milliampere ground fault (UL Class A sensitivity). Utilize a ground fault sensor having the same rating as the circuit breaker and having a push-to-test button.

E. Acceptable Manufacturers:

1. Eaton;

2. Schneider Electric;

3. Siemens;

4. Or equal.

2.7 CIRCUIT BREAKERS, INDIVIDUAL, 600 VOLTS AND LESS

A. Mount individual circuit breakers in NEMA 12, industrial use enclosure unless otherwise indicated. Provide NEMA 4X, 316 stainless steel raintight enclosure for circuit breakers mounted outdoors and wherever the subscript WP is indicated on the Drawings. Provide circuit breakers with handles that can be locked in the OFF position. Interlock enclosure and circuit breaker to prevent opening the cover with the circuit breaker in the ON position. Provide quick-make, quick-break, thermal magnetic circuit breakers of the indicating type showing ON/OFF and TRIPPED positions of the operating handle. Do not use single-pole circuit breakers with handle ties where multi-pole circuit breakers are indicated. Utilize multi-pole circuit breakers designed so that an overload on one pole automatically causes all poles to open. Provide circuit breakers meeting the requirements of UL 489 and having a minimum interrupting rating as indicated. Where circuit breakers are used as service entrance equipment, provide units UL labeled for that use. Provide circuit breakers suitable for use with 75 degrees C wire at full LAEC 75 degrees C ampacity.

2.8 FUSED SWITCHES, INDIVIDUAL, 600 VOLTS AND LESS

A. Mount individual fused switches in NEMA 12, industrial use enclosures unless otherwise indicated Provide fused switches that can be locked in the OFF position. Interlock enclosure and switch to prevent opening the cover with the switch in the ON position. Provide fused switches which are quick-make, quick-break, motor rated, load-break, heavy-duty (HD) type having external marking clearly indicating ON and OFF positions. Provide fuses of the current ratings indicated and types specified herein. Utilize fuse mountings that reject Class H fuses and will accept only the current-limiting fuses specified. Provide fused switches meeting the requirements of NEMA KS 1 and UL listed

for application to a system having an available short circuit current as indicated. Where fused switches are used as service entrance equipment, provide units UL labeled for that use. Provide switches suitable for use with 75 degrees C wire at full LAEC 75 degrees C ampacity.

2.9 NONFUSED SWITCHES, INDIVIDUAL, 600 VOLTS AND LESS

A. Mount individual switches in NEMA 12, industrial use enclosure unless otherwise indicated. Provide NEMA 4X, 316 stainless steel raintight enclosure for switches mounted outdoors and wherever the subscript WP is indicated on the Drawings. Provide switches that can be locked in the OFF position. Interlock enclosure and switches to prevent opening the cover with the switch in the ON position. Provide switches which are quick-make, quick-break, motor rated, load-break, heavy-duty (HD) type having external marking clearly indicating ON and OFF positions. Furnish switches meeting the requirements of NEMA KS 1. Provide switches with terminals suitable for use with 75 degrees C wire at full LAEC 75 degrees C ampacity.

2.10 FUSES, 600 VOLTS AND LESS

A. Provide a complete set of current-limiting fuses wherever fuses are indicated. Supply a set of six spare fuses of each type and each current rating installed. Utilize fuses that fit mountings specified with switches and which provide features rejecting Class H fuses. Provide the following types:

1. For motor and transformer circuits, 600 volts and less, 0 to 600 amps, UL Class RK-1 with time delay, Bussmann Type LPS-RK, Shawmut Type A6D-R, or equal.

2. For motor and transformer circuits, 250 volts and less, 0 to 600 amps, UL Class RK-1 with time delay, Bussmann Type LPN-RK, Shawmut Type A2D-R, or equal.

3. For feeder and service circuits, 600 volts and less, 0 to 600 amps, UL Class RK-1, Bussmann Type KTS-R, Shawmut Type A6K-R, or equal.

4. For feeder and service circuits, 250 volts and less, 0 to 600 amps, UL Class RK-1, Bussmann Type KTN-R, Shawmut Type A2K-R, or equal.

5. For feeder and service circuits, 600 volts and less, 601 to 6,000 amps, UL Class L, Bussmann Type KRP-C, Shawmut Type A4BY, or equal.

2.11 PUSHBUTTONS, INDICATING LIGHTS, AND SELECTOR SWITCHES

A. For non-hazardous, indoor, dry locations, including motor control centers, control panels, and individual stations, provide heavy-duty, oil tight type pushbuttons, LED indicating lights, selector switches, and stations for these devices.

B. For non-hazardous, outdoor, or normally wet locations, or where otherwise indicated, provide heavy-duty corrosion-resistant, watertight type pushbuttons, indicating lights, or selector switches mounted in NEMA 4X 316 stainless steel watertight enclosures. Provide special gasketing required to make complete station watertight.

C. Provide devices meeting the requirements of NEMA ICS 2, and having individual, extra-large nameplates indicating their specific function. Provide pushbutton stations with laminated plastic nameplates indicating the drive they control. Provide contacts with NEMA designation rating A600. Install provisions for locking pushbuttons and selector switches in the OFF position wherever lockout provisions are indicated.

D. Utilize selector switches having standard operating levers. Make all LED indicating lights push-to-test type. Provide ON or START pushbuttons colored green. Provide OFF or STOP pushbuttons colored red.

2.12 TERMINAL BLOCKS 600 VOLTS AND LESS

A. Provide 600-volts terminal blocks for termination of all control circuits entering or leaving equipment, panels, or boxes. Provide screw clamp compression, dead front barrier type terminal blocks with current bar providing direct contact with wire between the compression screw and yoke. Provide yoke, current bar, and clamping screw constructed of high strength and high conductivity metal. Utilize yoke that guides all strands of wire into the terminal. Utilize current bar providing dependable vibration-proof connection. Supply terminals constructed to allow connection of wire without any special preparation other than stripping. Rail mount individual terminals to create a complete assembly and provide terminals constructed such that jumpers can be installed with no loss of space on terminal or rail.

B. Size all terminal block components to allow insertion of all necessary wire sizes and types. Supply terminal blocks with marking system allowing the use of preprinted or field-marked tags. Supply UL approved terminal blocks manufactured by Weidmuller, Ideal, or equal. Provide terminal blocks with 25 percent spare termination points for CITY use following completion of installation.

2.13 CONTROL RELAYS

A. Provide industrial control relays, NEMA Class A300 for 300 volts, or A600 for 600 volts, with field convertible contacts, and meeting the requirements of NEMA ICS 2.

B. Where time delay relays are specified or required, unless otherwise noted, provide industrial control relays with a timer attachment adjustable over the range specified on the Drawings.

C. Where latching (mechanically held) relays or motor thermal detector relays are specified, provide industrial control relays with mechanical latch attachment with unlatching coil and coil clearing contacts. Utilize an attachment allowing easy manual latching and unlatching.

2.14 RESET TIMERS

A. Provide synchronous-motor-driven reset timers with a solenoid-operated clutch and suitable for semi-flush, panel mounting. Utilize timers with time range indicated and 10-amp, 120-volts contacts. Provide Eagle Signal Reset timers, Automatic Timing and Controls Reset timers, or equal.

2.15 ELAPSED TIME METERS

A. Provide synchronous-motor-driven, elapsed time meters, 0 to 99,999.9 hours range, non-reset type, suitable for semi-flush, panel mounting. Provide Type 240, 2-1/2-inch Big Look unit, Eagle Signal Elapsed Time unit, or equal.

2.16 MAGNETIC CONTACTORS

A. Provide contactors of the NEMA sizes indicated. Mount contactors in NEMA 12, dust-tight, drip-tight, industrial use enclosures unless otherwise indicated. Utilize contactors manufactured and rated in accordance with NEMA ICS 2.

2.17 MAGNETIC LIGHTING CONTACTORS

A. Provide mechanically held lighting contactors of the current ratings indicated. Mount contactors in NEMA 12, dust-tight, drip-tight, industrial use enclosures unless otherwise indicated. Provide coil-clearing contacts on mechanically held units. Utilize contactors manufactured and rated in accordance with NEMA ICS 2.

2.18 DRY TYPE SMALL POWER TRANSFORMERS (600-VOLTS AND LESS PRIMARY)

A. Provide self-cooled, two-winding, dry type transformers of the ratings indicated and built in accordance with the latest IEEE, ANSI, and NEMA standards. Utilize units with manufacturer's standard insulation class and standard temperature rise. For ratings 3 to 25 kVA single-phase and 3 to 15 kVA 3-phase, provide units with core and coils completely enclosed in a non-ventilated, NEMA **b** weatherproof enclosure. Utilize encapsulated windings on single-phase units 0 to 25 kVA. On all transformers 15 kVA and larger provide units with at least four, 2-1/2 percent, full capacity voltage taps; two above and two below normal voltage rating.

B. Supply units where sound levels determined by tests in accordance with NEMA and ANSI standards do not exceed:
   1. 40 decibels for 0 to 9 kVA.
   2. 45 decibels for 10 to 50 kVA.
   3. 50 decibels for 51 to 150 kVA.
   4. 55 decibels for 151 to 300 kVA.
   5. 60 decibels for 301 to 500 kVA.

C. For transformers 30 kVA and larger, equip units with integral vibration isolators completely isolating the core and coil assembly from the transformer enclosure. For smaller transformers, provide integral vibration isolators or install external vibration isolators which isolate the entire unit from the structure on which it is mounted.

   Utilize only integral or external vibration isolators which are rated for the weight of the transformer and provide 99 percent isolation efficiency at the fundamental frequency of sound emitted by the transformer.

D. Acceptable Manufacturers:
   1. Eaton;
   2. Hammond Power Solutions;
   3. Schneider Electric;
   4. Or equal.

2.19 DRY TYPE, SHIELDED, ISOLATION TRANSFORMERS (600-VOLTS AND LESS PRIMARY)

A. General: Supply dry type transformers providing electrical isolation and noise suppression between the electrical supply system and the critical load. Supply transformers of the ratings

and connections indicated, built in accordance with current IEEE, ANSI, NEMA, and UL standards in a general purpose indoor enclosure. Provide units having six 2-1/2 percent full capacity primary winding taps, three above and three below rated voltage. Provide units with a minimum 80 degrees C and maximum 150 degrees C temperature rise above ambient.

B. Isolation and Noise Suppression:

1. Provide units including core and coils having two foil type electrostatic shields, one located between the primary and secondary windings, and the other located between the core and the secondary winding. Provide a ground lead from each shield out into the unit enclosure.

2. Supply isolation transformers with electrical noise attenuation and other characteristics as follows:

Common mode attenuation	120 dB
Transverse mode attenuation	20 dB
Impedance	4.3
Reactance	Minimum 3 percent; Maximum 4.2
Regulation, no-load to percent full-load	1.2
Output distortion	None added

3. Provide primary surge protection as follows:

Peak transient current	40,000 amps
10-microsecond rise	2.9 kV time volts

C. Additional Features Required:

1. Magnetic field strength around transformer less than 0.1-gauss at 1-1/2-feet.

2. Two thermal switches located in the center cove "hot spot" to provide two-stage (high and high-high alarm) thermal sensing. Each switch rated 5 amps, 120 volts, and having one normally open and one normally closed contact.

D. Acceptable Manufacturers:

1. Eaton;

2. Hammond Power Solutions;

3. Schneider Electric;

4. Or equal.

2.20 LOW VOLTAGE SURGE PROTECTIVE EQUIPMENT

A. Provide secondary surge protective equipment consisting of a surge capacitor and surge arrestor combination located where indicated on the Drawings. Utilize components for all

surge protective equipment covered by this Specification, designed and tested in accordance with ANSI/IEEE C62.11.

B. Provide a surge capacitor impregnated with non-pcb biodegradable dielectric fluid. Include an integral discharge resistor which will drain the residual voltage to 50 volts crest in less than 5 minutes after the unit has been disconnected from the circuit.

C. Provide an arrestor consisting of an assembly of high strength metal oxide valve elements enclosed in a high strength, corrosion-resistant, molded resin housing.

D. Provide a capacitor and arrestor having a mounting nipple, flat washer, and nut suitable for knockout mounting. Install capacitors and arrestors in NEMA 4X (stainless steel) enclosures.

2.21 PENETRATION SEALING SYSTEMS (FIRE STOPS) (NOT USED)

2.22 ELECTRIC VEHICLE PEDESTAL CHARGING STATION

A General: Electrical vehicle (EV) standard single 40A, Level 2, and 75A Level 3 pedestal charging stations in NEMA 3R rated cabinet, designed for outdoor use.

B. Charging stations to provide the following:

1. Output cable: Single output cable extending to 18 feet, with cable organizer integral with pedestal. Standard EV connector complying with SAEJ1772.

2.. Pedestal Electrical supply: 240 VAC, 40A, 60 Hz (Level 2) or 480 VAC, 75A, 60 Hz (Level 3)

3. Charging power output: 208 to 240VAC, 30A -- DC, or 60 A DC

4. Ground fault protection: Internal with auto reclosure.

5. Auto restart after ground fault or mains loss.

6. Authentication using RFID card.

7. Simple user interface: Front panel indicators or display showing power status, charge indicator, system fault indicator, general fault indicator.

8. Ambient operating temperature range: -20 deg F to 120 deg F

9. Manufacturers: Level 2; General Electric EVSRN3, Schneider Electric EVLinkEV 230PSRR, or equal; Level 3: EFACEC Model QC45, Schneider Electric Level 3, or equal.

2.23 ENCLOSURE PAINT AND FINISH

A. All metallic enclosures shall be finished with a prime coat of rust inhibitor and painted as per ANSI No. 61 or as per the ENGINEER's instructions.

PART 3 -- EXECUTION

3.1 JUNCTION AND PULL BOXES

A. Where indicated on the Drawings, and where necessary to terminate, tap-off, or redirect

multiple conduit runs, provide and install appropriately designed junction boxes. Furnish and install pull boxes where necessary in the raceway system to facilitate conductor installation. Provide pull boxes to limit conduit runs to less than 150-feet and to contain no more than the equivalent of three right-angle bends unless accepted by the ENGINEER.

1. Installation:

    a. Make all boxes accessible. Do not install boxes in finished areas unless accepted by the ENGINEER. Mount all boxes plumb and level. Use flush mounted boxes with concealed conduits. Make edges of boxes flush with the final surface.

    b. Mount boxes in a secure, substantial manner, supported independently of conduit by attachment to the building structure or a structural member. Fasten boxes with bolts and expansion shields on concrete or brick, toggle bolts on hollow masonry units, and machine screws or welded threaded studs on steelwork. Threaded studs driven in by a powder charge and provided with lock washers and nuts are acceptable in lieu of expansion shields. Boxes embedded in concrete or masonry need not be additionally supported. Utilize galvanized mounting hardware in industrial areas.

    c. Install boxes for conduits under grade flush with finished grade in locations outside of paved areas, roadways, or walkways.

    d. If adjacent structure is available, the box may be mounted on the structure surface just above finished grade in accessible but unobtrusive location. If it is found desirable to locate boxes in paved areas, roadways, or walkways, obtain ENGINEER's written approval and utilize boxes and covers suitable for the weights to which they may be subjected.

3.2 TERMINAL JUNCTION BOXES (TJB)

A. Install in accordance with all the requirements detailed under article 3.2, JUNCTION AND PULL BOXES above. Label each block and terminal with a permanently attached, non-destructible tag.

3.3 WIRING DEVICES

A. Switches: Mount switches at the heights indicated under article 3.1, OUTLET AND DEVICE BOXES. Mount switches for switch operation in the vertical position.

B. Device Plates:

1. Installation: Securely fasten device plates to switch or receptacle boxes or the wiring device contained therein. Install device plates used with flush mounted boxes with all four edges in continuous contact with the finished wall surfaces without the use of mats or similar materials. Plaster fillings will not be acceptable. Install device plates vertically or horizontally with an alignment tolerance of 1/16-inch. Do not use sectional type device plates.

3.4 LIGHTING AND DISTRIBUTION PANELBOARDS

A. Mount panelboards securely where indicated, plumb, in-line, and square with walls. Unless otherwise indicated, mount panelboard with top of its cabinet approximately 6-feet above the floor. Provide a typewritten circuit directory under a metal-framed transparent plastic

cover inside each panelboard. Provide an engraved, laminated plastic nameplate on the outside of the panelboard showing the panelboard designation, voltage, and phases.

3.5 DRY TYPE TRANSFORMERS (600-VOLTS AND LESS PRIMARY)

A. Mount transformers approximately where indicated. Load any vibration isolators external to the unit properly and provide complete isolation with no direct transformer unit metal in contact with the mounting surface. Connect electrical circuits to transformers by means of moisture proof, flexible conduit in a manner that prevents transformer vibrations from being transmitted to the building or other equipment.

B. Ground neutrals and enclosures of all transformers and all moisture proof flexible conduit in accordance with applicable codes and as otherwise may be indicated. Connect voltage taps on all transformers to give as close as possible to rated output voltage under normal plant load conditions.

3.6 DRY TYPE, SHIELDED, ISOLATION TRANSFORMERS (600-VOLTS AND LESS PRIMARY)

A. Follow instructions for DRY TYPE TRANSFORMERS (600-VOLTS AND LESS PRIMARY) above. In addition, ground isolation shields to the unit enclosure with a conductor of the same material, and at least as big, as the shield ground lead provided with the unit.

END OF SECTION

SECTION 16110

RACEWAYS

PART 1 -- GENERAL

1.1 THE REQUIREMENT

A. The CONTRACTOR shall furnish all tools, equipment, materials, and supplies and shall perform all labor required to complete the work as indicated on the Drawings and specified herein.

1.2 RELATED WORK SPECIFIED ELSEWHERE

A. The following Divisions and Sections applies to the WORK of this Section. Other Sections of the Specifications, not referenced below, shall also apply to the extent required for proper performance of this WORK.

1. Division 02, Site Work.

2. Division 03, Concrete.

3. Division 09, Finishes.

4. Division 11, Equipment.

5. Division 15, Mechanical.

6. Division 17, Instrumentation and Control.

B. Materials and equipment furnished and installed under Divisions 11 and 15 with raceway and electrical conductors furnished, installed, and connected under Division 16, Electrical.

1.3 REFERENCE CODES AND STANDARDS

A. All work specified herein shall conform to or exceed the applicable requirements of the referenced portions of the following publications to the extent that the provisions thereof are not in conflict with other provisions of these specifications.

B. Comply with the current provisions of the following Codes and Standards.

1. Codes and Standards:

LAEC	City of Los Angeles Electrical Code, latest adopted edition.

2. Commercial Standards:

ANSI C80.1	Electrical Rigid Steel Conduit (ERSC).
ANSI/NEMA FB 1	Fittings, Cast Metal Boxes, and Conduit Bodies for Conduit

ANSI/UL 467	Grounding and Bonding Equipment, Safety Standard For.
NEMA TC 2	Electrical Polyvinyl Chloride (PVC) Conduit
NEMA TC 3	Polyvinyl Chloride (PVC) Fittings
NEMA VE-1	Metal Cable Tray Systems.
UL 6	Electrical Rigid Metal Conduit - Steel

C. All equipment furnished by the CONTRACTOR shall be listed by and shall bear the label of Underwriters' Laboratories, Incorporated (UL), or of an independent testing laboratory acceptable to the Building and Safety Department of the City of Los Angeles.

D. The construction and installation of all electrical equipment and materials shall comply with all provisions of the CAL OSHA Safety orders Title 8 CCR, as applicable, State Building Standards, and applicable local codes and regulations.

1.4 CONTRACTOR SUBMITTALS

A. Submittals shall be made in accordance with the requirements of Section 16020, "Municipal Facilities General Electrical Requirements".

B. The following submittals and specific information shall be provided.

1. Catalog cuts, bulletins, or brochures shall be submitted for mass produced non-custom material.

2. The CONTRACTOR shall furnish copies of the manufacturer’s certified test reports for the material being supplied to establish compliance with NEMA RN-1.

1.5 QUALITY ASSURANCE

A. Quality Assurance shall be in accordance with Section 16020, "Municipal Facilities General Electrical Requirements".

PART 2 -- PRODUCTS

2.1 RIGID GALVANIZED STEEL CONDUIT

A. Use rigid steel conduit, including bushings, couplings, elbows, nipples, and other fittings,

galvanized by hot-dipping, and meeting the requirements of ANSI C80.1, ANSI/NEMA FB 1, UL, and the LAEC. Do not use setscrew type couplings, bushings, bends, nipples, and other fittings, unless approved by the ENGINEER or the INSPECTOR. Factory bends are not permitted unless approved by the ENGINEER or the INSPECTOR. Conduit bending radius shall not be less than the minimum cable bending radius of the cable to be installed. See NEC Section 300.34 for conductor bending radius.

2.2 PVC SCHEDULE 40 CONDUIT

A. Use rigid PVC Schedule 40 conduit, UL listed for concrete-encased, underground direct burial, concealed and direct sunlight exposed use, and UL listed and marked for use with conductors having 90 degrees C insulation. Use conduits, couplings, bushings, elbows,

nipples, and other fittings meeting the requirements of NEMA TC 2 and TC 3, UL, NEC, and ASTM specified tests for the intended use. Use only conduit with a factory formed bell on one end. Conduit that requires the use of couplings for straight runs will not be acceptable.

2.3 PVC SCHEDULE 80 CONDUIT

A. Use rigid PVC conduit, Schedule 80, extra heavy wall, UL listed for concrete-encased, underground direct burial, and UL listed and marked for use with conductors having 90 degrees Celsius insulation. Use conduit, couplings, bushings, elbows, nipples, and other fittings meeting the requirements of NEMA TC 2 and TC 3, UL, and LAEC. CONTRACTOR shall account for conduit wall thickness in determining appropriate conduit size. Schedule 80 conduit shall be used as indicated on the drawings. In general, this conduit is used in concrete encased or direct burial locations exposed to vehicular traffic.

2.4 PVC COATED RIGID GALVANIZED STEEL CONDUIT

A. Use PVC coated rigid steel conduit, galvanized inside and out. Prior to coating, the galvanized conduits and fittings shall be UL listed. The galvanized conduit shall have an exterior PVC coating of 40 mils nominal (+10 mils/-5 mils) bonded to the metal. The interior shall be coated with a urethane coating no more than 7 mils thick. Use PVC coated fittings with the same interior and exterior coating requirements. PVC coated fittings and sleeves shall be completely watertight to prevent moisture from penetrating the interior of the conduits and fittings. The PVC coating shall be resistant to ultra-violet rays when installed outdoors. The conduit and fittings shall meet all the requirements of NEMA RN-1.

2.5 FLEXIBLE METAL CONDUIT, LIQUID-TIGHT

A. Use UL listed liquid-tight flexible metal conduit consisting of galvanized steel flexible conduit covered with an extruded PVC jacket and terminated with nylon bushings or bushings with steel or malleable iron body and insulated throat and sealing O-ring. Provide external grounding connector and appropriately sized grounding conductor to assure ground continuity.

2.6 RACEWAY FITTINGS

A. Fittings for Rigid Steel.

1. Use insulated throat bushings of metal with integral plastic bushings rated for 105 degrees C.

2. For insulated throat bushings for rigid steel conduit, use Thomas & Betts Nylon Insulated Metallic Bushings, or O.Z. Gedney Type B, or equal.

3. Use Myers Scru-Tite, or equal hubs for rigid steel conduit.

4. Use conduit bodies for rigid steel conduit of metal and sized as required by the NEC. Use Appleton Form 35 threaded Unilets; Crouse-Hinds Mark 9 or Form 7 threaded condulets; Killark Series O Electrolets; or equal, for normal conduit bodies for rigid steel conduit. Where conduit bodies for rigid steel conduit are required to be approved for hazardous (classified) locations, use conduit bodies manufactured by Appleton, Crouse-Hinds, Killark, or equal.

5. Use only couplings for rigid steel conduit supplied by the conduit manufacturer.

6. Use Appleton Type EYF, EYM, or ESU; Crouse-Hinds Type EYS or EZS; Killark Type EY or EYS; or equal, 40 percent fill sealing fittings for rigid steel conduit. Where condensate may collect on top of a seal, provide a drain by using Appleton Type SF Crouse-Hinds Type EYD or EZD, or equal Drain Seal.

7. Use Appleton Type ECDB, Crouse-Hinds ECD, or equal drain fittings for rigid steel conduit.

8. Fittings for Liquid-Tight Flexible Metal Conduit: Use insulated throat connectors for liquid-tight flexible metal conduit of metal with an integral plastic bushing rated for 105 degrees C, and of the long design type extending outside of the box or other device at least 2-inches. Use Thomas & Betts Super-Tite Nylon Insulated Connectors or equal.

9. Fittings in Hazardous Areas: In hazardous areas, use only fittings approved for the atmosphere involved.

10. Use cable sealing fittings forming a watertight nonslip connection to pass cords and cables into conduit. Size cable sealing fitting for the conductor OD. For conductors with OD's of 1/2-inch or less, provide a neoprene bushing where the conductor enters the connector. Use Crouse-Hinds CGBS, Appleton CG Series, or equal, cable 40 percent fill sealing fittings.

11. Coating thickness of PVC coated fittings shall be the same as that for PVC coated conduits.

2.7 PRECAST MAINTENANCE HOLES AND HANDHOLES

A. Install maintenance holes and handholes precast with 28-day, 3,000 psi minimum compressive strength concrete and designed for AASHTO H-20 loading. Minimum dimensions for maintenance holes and handholes are shown on the Drawings. Increase these as required by use of extension sections to accommodate the several raceway entrances at their required elevations.

B. Provide raceway entrances on all 4 sides. For raceways installed under this Contract, knockout panels or precast individual raceway openings may be used. On sides where no raceways are installed under this Contract, provide knockout panels for future raceway installation.

C. Utilize heavy-duty type frames and covers made of cast iron, as per CITY of Los Angeles standards, suitable for H-20 loading, and having machined bearing surfaces. Provide indented
type covers, solid top design, with two drop handles each. On the upper side of each cover, cast or burned by welder, in integral letters not less than 2-inches high appropriate titles, ELECTRIC HV (for above 600 volts), ELECTRIC LV (for 600 volts and below), or TELEPHONE. Field stamp covers with manhole or handhole numbers indicated on the Drawings.

D. Provide heavy weight cable racks with adjustable arms and acceptable insulators for all cables in each maintenance hole. Set adjustable inserts in the concrete walls for the attachment of racks. Do not use bolts or studs embedded in concrete for attaching racks. Set racks and inserts on not greater than 3-foot centers around the entire inside perimeter of the maintenance hole, arranged so that all spare conduit ends are clear for

future cable installation. Provide racks with a sufficient number of arms and insulators to accommodate cables for each conduit entering or leaving the maintenance hole, including spares.

E. Provide a pulling iron embedded in the concrete wall opposite each raceway entrance and one in the floor vertically below the center of the manhole or handhole cover. Utilize 3/4-inch round stock securely fastened to the overall steel reinforcement before concrete is poured.

F. Utilize maintenance hole and handhole hardware of steel, hot-dip galvanized after fabrication.

G. Acceptable Manufacturers:

1. Brooks Products;

2. Jensen Precast;

3. Oldcastle Precast;

4. Or equal.

H. All prefabricated maintenance holes shall be shop inspected before delivery to the site.

2.8 RACEWAY TAGS

A. Provide permanent, stainless steel markers with raceway designations, minimum 1/4-inch high lettering, pressure stamped, embossed, or engraved onto the tag. Tags relying on adhesives or taped-on markers are not acceptable. Attach tags to raceways with stainless steel wire.

2.9 WARNING TAPE

A. Provide heavy-gauge, yellow plastic tape of 6 -inch minimum width for use in trenches containing electric circuits. Utilize tape made of material resistant to corrosive soil. Use tape with printed warning that an electric circuit is located below the tape.

Acceptable Manufacturers:

1. Brady;

2. Marking Services Inc.;

3. Seton;

4. Or equal.

PART 3 -- EXECUTION

2.1 GENERAL

A. Provide raceway systems meeting or exceeding the requirements of the NEC.

2.2 PROTECTION DURING CONSTRUCTION

A. In addition to the provisions of the GENERAL REQUIREMENTS, and Section 16020,

"Municipal Facilities General Electrical Requirements," prior to installation, store all products specified in this section in a dry location. Following installation, protect products from the effects of moisture, corrosion, and physical damage during construction. Keep openings in conduit and tubing capped with manufactured seals during construction.

2.3 MINIMUM RACEWAY SIZE

A. Use no circular raceway less than 3/4-inch.

2.4 REQUIRED RACEWAY TYPE FOR LOCATION AND INSTALLATION METHOD

A. Exterior, Exposed:

1. PVC coated rigid galvanized steel conduit.

B. Interior, Exposed:

1. Rigid galvanized steel conduit.

2. EMT for above-ceiling application.

C. Interior, Concealed (Not Embedded in Concrete):

1. Rigid galvanized steel conduit.

2. PVC Schedule 40 conduit.

D. Embedded in Concrete Walls or Floors:

1. PVC Schedule 40 conduit.

E. Underground, Direct Earth Burial:

1. PVC Schedule 40 conduit.

2. PVC Schedule 80 conduit. (For vehicular traffic areas)

F. Concrete Encased Raceways:

1. Rigid galvanized steel conduit.

2. PVC Schedule 40 conduit.

G. Under Concrete Floor Slabs:

1. PVC Schedule 40 conduit.

H. Final Connection to Certain Equipment:

1. Make final connection to motors, wall or ceiling mounted fans and unit heaters, dry type transformers, valves, local instrumentation, and other equipment where flexible connection is required to minimize vibration or where required to facilitate removal or adjustment of equipment, with 36-inch maximum length liquid-tight, PVC-jacketed, flexible steel conduit.

2. The flexible conduit shall be long enough to allow the item to which it is connected to be withdrawn or moved off its base. Use liquid-tight flexible metal conduit in outside areas, process areas exposed to moisture, and areas required to be oil free and dust-tight.

I. Special Locations:

1. Use PVC coated rigid galvanized steel conduit:

a. Where conduit changes from underground and/or concrete embedded to exposed.

b. Under equipment mounting pads.

c. In exterior light pole foundations.

J. Communication and Instrumentation Conduits:

1. Communication and instrumentation conduits shall be PVC coated rigid galvanized steel.

2.5 GENERAL INSTALLATION REQUIREMENTS FOR RACEWAYS

A. Location, Routing, and Grouping:

1. Conceal or expose raceways as indicated. Group raceways in same area together. Locate raceways at least 12-inches away from parallel runs of heated piping for other utility systems.

2. Run exposed raceways parallel or perpendicular to walls, structural members, or intersections of vertical planes to provide a neat appearance. Follow surface contours as much as possible.

3. Avoid obstruction of passageways. Run concealed raceways with a minimum of bends in the shortest practical distance considering the building construction and other systems.

4. In block walls, do not run raceways in the same horizontal course with reinforcing steel.

5. In outdoor, underground, or wet locations, use watertight couplings and connections in raceways. Install and equip boxes and fittings so as to prevent water from entering the raceway.

6. Paint all threads of galvanized conduits with UL approved zinc-rich paint or liquid galvanizing compound before assembling. Touch up after assembly to cover nicks or scars.

7. Do not notch or penetrate structural members for passage of raceways except with prior approval of the ENGINEER or the INSPECTOR.

8. Do not run raceways in equipment base foundations.

9. Locate above ground raceways concealed in poured concrete so that the minimum concrete covering is not less than 1-1/2-inches.

10. Except at raceway crossings, separate raceways in slabs not less than six times the raceway outside diameter.

11. Raceways installed under slab floors shall lie completely under the slab with no part of the horizontal run of the raceway embedded within the slab.
12. Install concealed, embedded, and buried raceways so that they emerge at right angles to the surface. Provide support during pouring of concrete to ensure that raceways remain in position.

13. Allow a minimum headroom of 7 feet for conduit passing over walkways.

14. Communication and instrumentation conduits crossing power circuits shall be separated from such circuits by the minimum distance stipulated by the IEEE standards.

B. Support:

1. Support raceways at intervals not exceeding LAEC requirements unless otherwise indicated. Support multiple raceways adjacent to each other by ceiling trapeze. Support individual raceways by wall brackets, strap hangers, or ceiling trapeze, fastened by toggle bolts on hollow masonry units, expansion shields on concrete or brick, and machine screws or welded thread studs on steelwork.

2. Threaded studs driven in by a powder charge shall not be accepted.

3. Support all raceways from building structural members only.

4. Do not use nails anywhere or wooden plugs inserted in concrete or masonry as a base for raceway or box fastenings. Do not weld raceways or pipe straps to steel structures. Do not use wire in lieu of straps or hangers.

C. Bends:

1. Make changes in direction of runs with symmetrical bends. Make bends and offsets of the longest practical radius. Do not heat metal raceways to facilitate bending.

2. Make bends in parallel or banked runs of raceways from the same center or centerline so that bends are parallel and of neat appearance. Make field bends in parallel runs.

3. For PVC conduits, use factory made elbows for all bends 30 degrees or larger. Use rigid steel elbows on all 90-degree bends in PVC conduits. Use acceptable heating methods for forming smaller bends.

4. Make no bends in flexible conduit that exceed 90 degrees or allowable bending radius of the cable to be installed or that significantly restricts the conduits flexibility.

D. Bushing and Insulating Sleeves:

1. Where metallic conduit enters metal equipment enclosures through conduit openings, install a bonding bushing on the end of each conduit. Install a bonding jumper from the bushing to any equipment ground bus or ground pad.

2. If neither exists, connect the jumper to a threaded bolt connection to the metallic enclosure.
3. Use manufacturer's standard insulating sleeves in all metallic conduits or insulated bushings terminating at an enclosure.

E. Expansion Joints: Provide suitable expansion fittings for raceways crossing expansion joints in structures or concrete slabs, or provide other suitable means to compensate for expansion and contraction. Provide for the high rate of thermal expansion and contraction of PVC conduit by providing PVC expansion joints as recommended by the manufacturer and as required.

F. PVC Conduit: Solvent weld PVC conduit joints with solvent recommended by the conduit manufacturer. Follow manufacturer's solvent welding instructions and provide watertight joints. Use acceptable PVC terminal adapters when joining PVC conduit to metallic fittings. Use acceptable PVC female adapters when joining PVC conduit to rigid metal conduit.

G. PVC Coated Rigid Steel Conduit: Install in strict accordance with the manufacturer's instructions. Touch up any damage to the coating with conduit manufacturer acceptable patching compound. PVC boot shall cover all threads. Where belled conduits are used, bevel the unbelled end of the joint before joining. Leave no metallic threads uncovered.

H. Penetrations:

1. Seal the interior of all raceways entering structures at the first box or outlet with oakum or suitable plastic expandable compound to prevent the entrance into the structure of gases, liquids, or rodents.

2. Dry pack with nonshrink grout around raceways that penetrate concrete walls, floors, or ceilings aboveground, or use one of the methods specified for underground penetrations.

3. Where an underground conduit enters a structure through a concrete roof or a membrane waterproofed wall or floor, provide an acceptable, malleable iron, watertight, entrance sealing device. Provide a device having a gland type sealing assembly at each end with pressure bushings which may be tightened at any time when there is no raceway concrete encasement specified or indicated,. When there is raceway concrete encasement specified or indicated, provide such a device with a gland type sealing assembly on the accessible side. Securely anchor all such devices into the masonry construction with one or more integral flanges. Secure membrane waterproofing to such devices in a permanently watertight manner.

4. Where an underground raceway without concrete encasement enters a structure through a nonwaterproofed wall or floor, install a sleeve made of Schedule 40 galvanized pipe.

   Fill the space between the conduit and sleeve with a suitable plastic expandable compound, or oakum and lead joint, on each side of the wall or floor in such a manner as to prevent entrance of moisture. A watertight entrance sealing device as specified may be used in lieu of the sleeve.

5. Where raceways penetrate fire-rated walls, floors, or ceilings, fire stop openings around electrical penetrations to maintain the fire-resistance rating.

6. Raceways passing through roofs shall be flashed.

7. Provide conduit seals where required by Article 500 of the LAEC.

2.6 INSTALLATION REQUIREMENTS FOR UNDERGROUND DIRECT BURIAL CONCRETE-ENCASED RACEWAYS

A. General:

1. Coordinate installation of underground raceways with other outside and building construction work. Maintain existing outside utilities in operation unless otherwise authorized by the ENGINEER.

2. Remove entirely and properly reinstall all raceway installations not in compliance with these requirements.

3. Do not use union type fittings underground.

4. Provide a minimum cover per NEC Table 300.5 for all underground raceways unless otherwise indicated. Warning tape as specified in Part 2 shall be placed no less than 12 inches above conduit and duct bank.

5. Where a concrete-encased duct bank is installed over an extensive area of disturbed earth such as that within the periphery of a building, provide a separate concrete base under the duct bank to ensure stability of raceways during installation. Allow this base to set before the duct bank is installed.

6. Do not backfill underground direct burial and concrete-encased raceways until they have been inspected by the ENGINEER and the INSPECTOR.

7. Warning Tapes: Bury warning tapes approximately 8-inches below grade and above all underground conduit runs or duct banks. Align parallel to and within 12 inches of the centerline of runs.

B. Separation and Support:

1. Separate parallel runs of two or more raceways in a single trench with preformed, nonmetallic spacers designed for the purpose. Install spacers at intervals not greater than that specified in the LAEC for support of the type raceways used, and in no case greater than 10-feet.

2. Support raceways installed in fill areas to prevent accidental bending until

backfilling is complete. Tie raceways to supports, and raceways and supports to the ground, so that raceways will not be displaced when concrete encasement or earth backfill is placed.

C. Arrangement and Routing:

Arrange multiple conduit runs substantially in accordance with any details shown on the Drawings. Locate underground conduits where indicated on the Drawings.

1. Make minor changes in location or cross-section as necessary to avoid obstructions or conflicts. Where raceway runs cannot be installed substantially as shown because of conditions not discoverable prior to digging of trenches, refer the condition to the ENGINEER for instructions before further work is done.

2. Where other utility piping systems are encountered or being installed along a raceway route, maintain a 12-inch minimum vertical separation between raceways and other systems at crossings. Maintain a 12-inch minimum separation between raceways and other systems in parallel runs. Do not place raceways over valves or couplings in other piping systems. Refer conflicts with these requirements to the ENGINEER for instructions before further work is done.

3. Provide insulated grounding bushings on all metallic raceways entering manholes. Provide bell-ends flush with manhole walls on all nonmetallic raceways entering manholes.

4. In multiple conduit runs, stagger raceway coupling locations so that couplings in adjacent raceways are not in the same transverse line.

5. Provide markers at grade to indicate the direction of underground conduits provided under this Contract. Provide markers consisting of double-ended arrows, straight for straight runs and bent at locations where runs change direction. Provide markers at all bends and at intervals not exceeding 100-feet in straight runs. Use markers made of sheet bronze not less than 1/4-inch thick embedded in and secured to the top of concrete posts. Use markers not less than 10-inches long and 3/4-inch wide and marked ELECTRIC CABLES in letters 1/4-inch high incised into the bronze to a depth of 3/32-inch.

6. All conduits shall enter maintenance holes and structures at right angles.

D. Provide expandable grommets for concrete encased raceway passing through wall to the earth.

E. Raceway Coating: At couplings and joints, coat metallic underground direct-burial conduits with Bitumastic No. 50 or equal, or wrap with Scotchrap No. 51, or equal plastic tape with 1/2-inch overlap.

1. Direct Earth Burial Conduit Zone Backfill Installation:

2. Backfill material for the conduit zone of direct burial conduit trenches may be selected from the excavated material if it is free from roots, foreign material, and oversized particles. Use material with 3/4-inch maximum particle size and suitable gradation for satisfactory compaction. Remove material if necessary to meet these requirements.

3. Imported 3/4-inch minus gravel or sand may be used in lieu of material from the excavation.

4. After conduits have been properly installed, backfill the trench with specified material placed around the conduits and carefully tamped around and over them with hand tampers. Final, tamped conduit cover shall be 4-inches minimum.

F. Concrete Encasement:

1. Where indicated, encase conduits in a red concrete envelope sized as indicated and
located at the elevation shown. Use 2,500 psi concrete as specified in Section 03300, "Cast-in-Place Concrete".

2. Maintain a grade of at least 4-inches per 100-feet, either from one maintenance hole or pull box to the next, or from a high point between them, depending on the surface contour.
3. Hold conduits for concrete-encased raceways securely in place by acceptable window type spacer supports. Where, in the opinion of the ENGINEER, ground conditions are such as to require concrete forms, install forms constructed of materials and in a manner acceptable to the ENGINEER. No variations greater than 1/2-inch in 50-feet will be permitted from a straight line.

4. Envelopes may be poured directly against the sides of trenches if the cut is clean, even, and free of loose material. Remove loose material from trenches before and during pouring of concrete to ensure sound envelopes. Carefully spade concrete during pouring to eliminate all voids under and between raceways and honeycombing of the exterior surface.

5. Do not use power-driven tampers unless they are specifically designed for the application, in order to ensure that the watertight integrity of the raceways is maintained.

6. Generally, pour an entire concrete envelope in one continuous pour. Where more than one pour is necessary, terminate each pour in a sloped plane, and insert 3/4-inch reinforcing rod dowels extending into the concrete 18-inches minimum on each side of the joint. Obtain Engineers' approval for the number and location of dowels.

7. Provide reinforcement shown where envelopes connect to manholes or building structures to prevent shearing of joints.

2.7 MAINTENANCE HOLES AND HANDHOLES

A. Install maintenance holes and handholes where shown on the Drawings. Provide excavation, shoring, bracing, backfilling, grading, etc., in accordance with requirements specified elsewhere in these Contract Documents.

B. Do not install maintenance holes or handholes until final conduit grading, including field changes necessitated by underground interferences, has been determined. Set frames to final grades as required.

C. Make installation so that raceways enter maintenance holes or handholes at nearly right angles and as near as possible to one end of a wall, unless otherwise indicated.

D. Install one ground rod in each maintenance hole and handhole. Connect all noncurrent-carrying metal parts in the maintenance holes and any metallic raceway grounding bushings to this ground rod with No. 6 AWG (minimum) copper conductor.

E. CONTRACTOR shall clean and remove all debris from maintenance holes and handholes whether new or existing.

2.8 WIREWAYS

A. Mount wireways securely in accordance with the LAEC and manufacturer's instructions. Locate removable cover or hinged cover on accessible vertical face of wireway unless otherwise indicated.

2.9 PREPARATION FOR PULLING IN CONDUCTORS

A. Do not install crushed or deformed raceways. Avoid traps in raceways where possible. Take care to prevent the lodging of plaster, concrete, dirt, or trash in raceways, boxes, fittings, and equipment during the course of construction. Make raceways entirely free of obstructions or replace them. Ream all raceways, remove burrs, and clean raceway interior before introducing conductors or pull wires.

B. Immediately after installation, plug or cap all raceway ends with watertight and dust-tight seals until the time for pulling in conductors.

C. For concrete-encased raceways, after the concrete envelope has set, pull a mandrel of a diameter approximately 1/4-inch less than the raceway inside diameter, through each raceway. Then pull a bristle brush through each raceway to remove debris.

2.10 EMPTY RACEWAYS

A. Certain raceways will have no conductors pulled in as part of this Contract. Identify with tags at each end and at any intermediate pull point the origin and destination of each such empty raceway. Where a raceway has been identified with a name (number) in the Raceway Schedule, use that name on the tag in lieu of origin and destination. Provide a removable permanent cap over each end of each empty raceway. Mandrel and provide a nylon pull cord in each empty raceway.

2.11 PAINTING

A. Paint raceway systems in accordance with and as specified in Section 09800, "Protective Coating."

(END OF SECTION)

SECTION 16160

CONDUCTORS

PART 1 -- GENERAL

1.1 THE REQUIREMENT

A. The CONTRACTOR shall furnish all tools, equipment, material, and supplies and shall perform all labor required to complete the work as indicated on the Drawings and specified herein.

1.2 RELATED WORK SPECIFIED ELSEWHERE

A. The following Sections or Divisions applies to the WORK of this Section. Other Sections of the Specifications, not referenced below, shall also apply to the extent required for proper performance of this WORK.

1. Division 11 Equipment.

2. Division 17 Instrumentation and Control.

B. Materials and equipment furnished and installed under other divisions with raceway and electrical conductors furnished, installed, and connected under Division 16, Electrical.

1.3 REFERENCE CODES AND STANDARDS

A. All work specified herein shall conform to or exceed the applicable requirements of the referenced portions of the following publications to the extent that the provisions thereof are not in conflict with other provisions of these specifications.

B. Comply with the current provisions of the following Codes and Standards.

1. Codes and Standards:

LAEC	City of Los Angeles Electrical Code, latest adopted edition.

2. Commercial Standards:

ANSI/UL 467	Grounding and Bonding Equipment, Safety Standard For.
ICEA S-95-658/WC70	Power Cables Rated 2000 Volts or Less.
ICEA S-96-659/WC71	Nonshielded Cables Rated 2,001-5,000 V.
ICEA S-93-639/WC74	5-46 kV Shielded Power Cable.
ANSI/UL 62	Flexible Cord and Fixture Wire.
ANSI/UL 510	Insulating Tape.
ANSI/UL 1277	Electric Power and Control Tray Cables with Optional

	Optical Fiber Members.
ASTM B8	Standard Specifications from Concentric Lay Standard Copper Conductors, Hard, Medium-Hard or Soft.
IEEE 48	Standard Test Procedures and Requirements for High Voltage Alternating Current Cable Terminations.
NEMA WC-57	Control, Thermocouple Extension, and Instrumentation Cable.

C. All Conductors furnished by the CONTRACTOR shall be listed by and shall bear the label of Underwriters' Laboratories, Incorporated, (UL).

D. The construction and installation of all electrical equipment and materials shall comply with all provisions of the CAL OSHA Safety Orders Title 8 CCR, as applicable, State Building Standards, and applicable local codes and regulations.

1.4 CONTRACTOR SUBMITTALS

A. Submittals shall be made in accordance with the Section 16020 Municipal Facilities General Electrical Requirements.

B. CONTRACTOR shall submit the following items.

1. Catalog cut sheets and other brochures depicting conductor characteristics.

2. Manufacturer’s certified test records and factory test procedures.

3. Manufacturer’s recommended splicing, testing, and installation procedures and practices.

4. Certified test reports of HI-POT and Megger test results for medium and high voltage cables.

1.5 QUALITY ASSURANCE

A. Conductor Identification System:

1. Provide complete power, control and signal conductor identification system so that after installation, circuits can be easily traced from origin to final destination.

2. Identify power, control and signal conductors at each termination and in all accessible locations such as maintenance holes, handholes, panels, switchboards, pull boxes, terminal boxes, etc. For identification, use type of tags specified herein.

3. Tag conductors using a three-segment conductor numbering scheme which defines the origin of the conductor, the function of the conductor, and the destination of the conductor.

   Example: MCCA-P-MCCB where MCCA is the origin, P is the function identification (P = power, C = control, S = signal, etc.), and MCCB is the destination.

4. For conductors with one point of origin and two or more destinations, expand the function identification number, e.g., PA, PB, etc.

5. Make the origin and destination identification the specific names for the equipment used in the Contract Documents. Make the instrumentation and control identification names exactly as designated, i.e., FT-S-121.

B. Conductor Color Coding:

1. Color coding of multiconductor control and instrumentation cable is specified in the individual cable type specification.

2. For power conductors, provide all single conductors and individual conductors of multiconductor power cables with integral insulation pigmentation of the designated colors, except conductors larger than No. 6 AWG may be provided with color coding by applying a heat shrink tube of the appropriate color.

3. Phase A, B, C implies the direction of positive phase rotation.

4. Use the following colors:

System	Conductor	Color
All Systems	Equipment Grounding	Green
240/120 Volts	Grounded Neutral	White
1-Phase, 3-Wire	One Hot Leg	Black
	Other Hot Leg	Red
208Y/120 Volts	Grounded Neutral	White
3-Phase, 4-Wire	Phase A	Black
	Phase B	Red
	Phase C	Blue
240/120 Volts	Grounded Neutral	White
3-Phase, 4-Wire	Phase A	Black
Delta, Center Tap "High"	(wild) Leg	Orange
Ground on 1-Phase	Phase C	Blue
480Y/277 Volts	Grounded Neutral	White
3-Phase, 4-Wire	Phase A	Brown
	Phase B	Orange
	Phase C	Yellow
4,160 Volt	Grounded Neutral	White
4,800 Volt	Phase A	Yellow
13,800 Volt	Phase B	Red
34,500 Volt	Phase C	Blue

C. For all high voltage cable and all 600 volt cable sized AWG #2 and larger, CONTRACTOR shall furnish cable manufactured no more than one year prior to installation. Provide documentation from the supplier.

PART 2 -- PRODUCTS

2.1 GENERAL

A. The use of a manufacturer's name and model or catalog number is for the purpose of establishing the standard of quality and general configuration desired only. Products of other manufacturers will be considered in accordance with the GENERAL REQUIREMENTS.

2.2 CONDUCTORS

A. Conductors 600 Volts and Below:

1. Unless otherwise indicated, provide stranded conductors, except provide solid conductors where No. 10 AWG and No. 12 AWG are designated for branch circuit power wiring in lighting and receptacle circuits.

2. Provide conductors with Type THW or Type THHN/THWN, except for sizes No. 6 and larger, provide conductors with XHHW, XHHW-2 insulation.

3. Use only copper conductors.

4. For all direct burial and aerial conductors and cables, provide conductors with UL labeling "TYPE USE" and RHW insulation with heavy-duty, black, neoprene sheath meeting the physical requirements and minimum thickness requirements of ICEA S-95-658 NEMA WC70.

5. Where flexible cords and cables are specified, provide Type SO, 600-volt, with the number and size of copper conductors indicated.

6. Conductors for applications of 600 volts and below shall be rated for 600 volts unless otherwise specified.

7. The name of the manufacturer, insulation type, voltage rating and wire size shall be clearly and permanently imprinted throughout the length of each conductor. All conductors and cables supplied shall bear the UL label.

B. Conductors Above 600 Volts:

1. 5 kV Conductors

a. Unless indicated otherwise, provide minimum 19 strand soft annealed uncoated copper conductors with crosslinked polyethylene (XLPE) insulation, extruded semiconducting strand and insulation shields, and a polyvinyl chloride jacket.

b. Provide shielded single conductors with 100 percent insulation level, that meet applicable portions of ICEA S-93-639/NEMA WC74, Ionization Level Requirements. Provide conductors UL listed 1072 Type MV-90.

c. Cable marking shall include manufacturer’s name, insulating material, Conductor size, voltage class and UL mark.

C. Multi-Conductor Cable:

1. Provide cable that is UL listed Type TC and conforms to the requirements of UL 1277 and NEC Article 336, or UL listed Power Limited Circuit Cable that conforms to the requirements of Article 725 of the LAEC. Provide cables permanently and legibly marked with the manufacturer's name, the maximum working voltage for which the cable was designed, the type of cable, and labeled UL (or submit evidence of UL listing).

2. Provide cables as specified under the type number in this section (Type 1, Type 2, etc.). Conduits shown on the Drawings and in the Circuit/Raceway Schedule have been sized to accommodate the outside diameter for each type. For this reason, use cable diameters equal to or less than the diameters specified.

   a. Type 1 (600-Volt Multi-Conductor Control Cable, Type TC):

      (1) General: Multi-conductor control circuit interconnection cable with ground. Suitable for installation in open air, in cable trays, conduit, or other approved raceways. Maximum cable temperature rating 90 degrees C dry locations, 75 degrees C wet locations. Passes vertical tray flame test.
      (2) Individual Conductors: No. 14 AWG, strand copper.

      (3) Insulation and Jackets: Provide conductors having 15-mil PVC insulation with 4-mil nylon jacket, and UL listed as Type THHN/THWN. Color code the conductor group in accordance with ICEA S-95-658/WC70. Include one full size green equipment grounding conductor. Bind conductor group with a spiral wrap of barrier tape. Provide cable with overall outer PVC jacket which is flame-retardant, sunlight- and oil-resistant, and has a nominal thickness as shown in the table below.

      (4) Use only 2, 3, 4, 5, 7, 9, 12, 19, 25, 30, and 37 -conductor cables. The green grounding conductor is included in the number of conductors shown in the table below.

No. of Conductors	Max. Outside Diameter (inches)	Jacket Thickness (mils)
5	0.45	45
7	0.48	45
12	0.65	60
19	0.76	60
25	0.93	60
37	1.04	80

      (5) Acceptable Manufacturers:

         1. Belden;

         2. General Cable;

         3. Southwire;

         4. Or equal.

b. Type 2 (600-Volt Multi-Conductor Power Cable, Type TC):

(1) General: 3 or 4-conductor, with ground and overall jacket. Suitable for installation in open air, in cable trays, conduit, or other approved raceways. Maximum cable temperature rating 90 degrees C dry locations, 75 degrees C wet locations.

(2) Individual Conductors: Class B stranded, coated, or uncoated copper.

(3) Insulation and Jacket: Provide conductors insulated with chemically cross-linked polyethylene or ethylene-propylene, UL rated VW-1. Provide sunlight- and oil-resistant PVC outer jacket with nominal thickness as shown in the following table. Provide phase conductors color-coded black, red, and blue. Provide neutral conductor color-coded white with black tracer.

Conductor Size	No. of Conductors	Wire Size	Max. OD (inches)	Ground Thickness (mils)
12	3	-	0.45	45
	4	-	0.49	45
10	3	-	0.50	45
	4	-	0.58	60
8	3	10	0.66	60
	4	10	0.72	60
6	3	8	0.74	60
	4	8	0.81	60
4	3	8	0.88	60
	4	8	0.97	80
2	3	6	1.01	80
	4	6	1.11	80
1	3	6	1.14	80
	4	6	1.25	80
1/0	3	6	1.22	80
	4	6	1.35	80
2/0	3	6	1.32	80
	4	6	1.46	80
3/0	3	4	1.42	80
	4	4	1.58	80
4/0	3	4	1.56	80
	4	4	1.78	110

(4) Acceptable Manufacturers:

1. General Cable;
2. Okonite;
3. Southwire;
4. Or equal.

c. Type 3 (600-Volt No. 16 AWG Twisted, Shielded Pair Instrumentation Cable, Type TC) (UL 62 & 1277):

(1) General: Single pair instrumentation cable designed for noise rejection for process control, computer, or data log applications. Suitable for installation in cable trays, conduit, or other approved raceways. Maximum cable temperature rating shall be 90 degrees C dry locations, 75 degrees C wet locations.

(2) Individual Conductors: Bare soft annealed copper, Class B, 7-strand concentric per ASTM B 8; 20 AWG, 7-strand tinned copper drain wire.

(3) Insulation and Jacket: Each conductor 15-mil nominal PVC and 4-mil nylon insulation. Pair conductors pigmented black and red. Jacket flame-retardant and sunlight- and oil-resistant PVC with 45 mils nominal thickness. Shield 1.35-mil aluminum/mylar overlapped to provide 100 percent coverage.

(4) Dimension: 0.31 inch nominal OD.

(5) Acceptable Manufacturers:

1. Belden;

2. General Cable;

3. Okonite;

4. Or equal.

d. Type 4 (600-Volt No. 16 Twisted, Shielded Triad Instrumentation Cable, Type TC) (UL 62 & 1277):

(1) General: Single triad instrumentation cable designed for noise rejection for process control, computer, or data log applications. Suitable for installation in cable tray, conduit, or other approved raceways. Maximum cable temperature rating shall be 90 degrees C dry locations, 75 degrees C wet locations.

(2) Conductors: Bare soft annealed copper, Class B, 7-strand concentric per ASTM B 8; 20 AWG, 7-strand, tinned copper drain wire.

(3) Insulation and Jacket: Each conductor, 15-mil nominal PVC and 4-mil nylon insulation. Triad conductors pigmented black, red, and blue. Jacket flame-retardant and sunlight- and oil-resistant PVC with 45 mils nominal thickness. Shield 1.35-mil aluminum/mylar, overlapped to provide 100 percent coverage.

(4) Dimension: 0.32 inch nominal OD.

(5) Acceptable Manufacturers:

1. Belden;

2. General Cable;

3. Okonite;

4. Or equal.

e. Type 5 (600-Volt No. 18 AWG, Multi-twisted Shielded Pairs with a Common Overall Shield Instrumentation Cable, Type TC)(UL 62 & 1277):

(1) General: Twisted, shielded pairs of instrument cables, grouped in a single cable, designed for use as instrumentation, process control, and computer cable. Suitable for installation in cable tray, conduit, or other approved raceways. Maximum cable temperature rating shall be 90 degrees C dry locations, 75 degrees C wet locations.

(2) Conductors: Bare soft annealed copper, Class B, 7-strand, concentric per ASTM B 8. Tinned copper drain wires. Pair drain wire size AWG 20, group drain wire size AWG 18.

(3) Insulation and Jacket: Each conductor 15-mil PVC and 4-mil nylon insulation. Pair conductors pigmented black and red with red conductor numerically printed for group identification. Outer jacket flame-retardant and sunlight- and oil-resistant PVC with nominal thickness as shown in table. Individual pair shield 1.35-mil aluminum/mylar. Group shield 2.35-mil aluminum/mylar, overlapped for 100 percent coverage.

(4) Dimensions as noted in table below:

Number of Pairs	Maximum Outside Dimension (inches)	Nominal Jacket Thickness (mils)
4	0.50	45
8	0.68	60
12	0.82	60
16	0.95	80
20	1.05	80
24	1.16	80
36	1.33	80
50	1.56	80

(5) Acceptable Manufacturers:

1. Belden;

2. General Cable;

3. Okonite;

4. Or equal.

D. Conductor and Cable Tags:

1. Tags relying on adhesives or taped-on markers are not acceptable.

2. Provide conductor tags for conductors No. 12 AWG and below with legible permanent sleeve of yellow or white PVC with machine printed black marking.

3. Provide tags for cables, and for conductors No. 10 AWG and larger, consisting of permanent nylon marker plates with legible designations hot stamped on the plate. Attach these marker plates to conductors and cables with nylon tie cord.

E. Equipment Grounding Conductors:

1. Provide soft-drawn copper conductors, not smaller than AWG12 and as indicated or as required by NEC, for equipment grounding.

2. Provide conductors with green insulation of the same type as all other circuit wires.

F. Direct Buried Grounding Conductors:

1. Provide bare stranded copper conductors, size as indicated, for the ground system grid at transformers, switchgear, and where indicated.

2.3 MANUFACTURED WIRING SYSTEMS

A. Provide a flexible, coordinated means of distributing lighting branch circuit and control wiring.

B. Provide a system rated at 20 amperes load-carrying capacity per phase with final assemblies consisting of a maximum of three, phase conductors. Provide a system manufactured of Type MC cable with 90 degrees C insulation and stranded copper conductors.

C. Provide three, single-phase, five-wire circuit cable configuration with standard color wire coding as per Article 1.5 B. of this Section.

D. Provide a system having a latch/strike locking mechanism with voltage clearly marked on latch. Provide a system UL listed for use in air handling plenums, listed to connect or disconnect under load, and manufactured in accordance with Article No. 604 of the NEC.

PART 3 -- EXECUTION

3.1 GENERAL

A. Do not exceed cable manufacturer's recommendations for maximum pulling tensions and minimum bending radii. Where pulling compound is used, use only UL listed compound compatible with the cable outer jacket and with the raceway involved. contractor shall perform and submit pulling calculation per manufacturers' recommendation to ascertain that there is no overstrain to the cable. The calculation shall be submitted to the ENGINEER for approval."

B. Tighten all screws and terminal bolts using torque type wrenches and/or drivers to tighten to the inch-pound requirements of the NEC and UL.

C. Single conductors and cables in maintenance holes, handholes, vaults, cable trays, and other indicated locations shall be wrapped together by arc and fireproofing tapes, and shall be bundled throughout their exposed length with nylon, self-locking, releasable, cable ties placed at intervals not exceeding 18 inches on centers.

D. Wires and cables in each voltage classification shall be installed in separate raceways and shall be completely isolated at the cable and wire terminations.

E. No vehicles shall be used to pull conductors. Only cable pulling machines shall be used.

F. A means of monitoring cable tension shall be provided at all pulls. (I.e. dynamometer)

3.2 CONDUCTOR 600 VOLTS AND BELOW

A. Provide conductor sizes indicated on Drawings.

B. Wire nuts may be used on solid conductors of 120-volt and 277-volt lighting and 120-volt receptacle circuits only. Place no more than one conductor in any single-barrel pressure connection. Use crimp connectors with tools by same manufacturer and/or UL listed for connectors of all stranded conductors.

C. Soldered mechanical joints insulated with tape will not be acceptable.

D. Vinyl plastic insulating tape for wire and cable splices and terminations shall be flame retardant, 7-mil thick minimum, rated for 90 degrees C minimum meeting the requirements of UL 510.

E. Provide terminals and connectors acceptable for the type of material used.

F. Arrange wiring in cabinets, panels, and motor control centers neatly cut to proper length, remove surplus wire, and bridle and secure in an acceptable manner. Identify all circuits entering motor control centers or other control cabinets in accordance with the conductor identification system specified herein.

G. Terminate control and instrumentation wiring with methods consistent with terminals provided, and in accordance with terminal manufacturer's instructions. Where terminals provided will accept such lugs, terminate all control and instrumentation wiring (except solid thermocouple leads) with insulated, locking-fork compression lugs, Thomas & Betts Sta-Kon, or equal.

H. For terminals designed to accept only bare wire compression terminations, use only stranded wire, and terminate only one wire per terminal. Tighten all terminal screws with torque screwdriver to recommended torque values.

I. Attach compression lugs with a tool specifically designed for that purpose which provides a complete, controlled crimp where the tool will not release until the crimp is complete. Use of plier type crimpers is not acceptable.

J. Cap spare conductors and conductors not terminated with UL listed end caps.

K. Where conductors pass through holes or over edges in sheet metal, remove all burrs, chamfer all edges, and install bushings and protective strips of insulating material to protect the conductors.

L. For conductors that will be connected by others, provide at least 6 feet spare conductor in freestanding panels and at least 2 feet spare in other assemblies. Provide appropriate length of spare conductor in any particular assembly where it is obvious that greater spare conductor length will be needed to reach the termination point.

3.3 CONDUCTORS ABOVE 600 VOLTS

A. Splices will not be permitted unless specifically indicated or approved by the ENGINEER.

B. Make all joints and terminations with high voltage splice and termination kits specified herein and in accordance with splice or termination manufacturer's instructions. Once started, install splices or terminations as a continuous operation.

C. Identify all circuits in accordance with the conductor identification system specified at load centers, maintenance holes, splices, terminations, etc.

D. Provide terminals or connectors acceptable for the type of conductor material used.

E. Give 2 working days notice to the ENGINEER and the INSPECTOR prior to the making of joints or terminations.

F. Cable splices shall be made by qualified cable splicers in accordance with the recommendations of the manufacturer. CONTRACTOR shall furnish documentation detailing the qualifications of each cable splicer to be working on the job.

3.4 CABLES

A. Do not splice without permission of the ENGINEER or the INSPECTOR. Locate splices, when permitted, only in readily accessible cabinets or junction boxes using locknut terminal strips. Splices will not be permitted unless deemed necessary by approved pulling tension calculations.

B. Where connections of cables installed under this section are to be made under Division Instrumentation and Controls, leave pigtails of adequate length for neat bundled type connections.

C. Instrumentation, computer, and control cables run under infinite access floors in control rooms may be installed under the floor without protection. Run individual wires, pairs, or triads in flex conduit under the floor or grouped into bundles at least 3/4 inch in diameter.

D. Maintaining the integrity of shielding of instrumentation cables is essential to the operation of the control systems. Take special care in cable installation to ensure that grounds do not occur because of damage to the jacket over the shield.

E. Cables entering maintenance holes, handholes or vaults shall be sealed at the entrance and exit using an expanding fireproof foam product approved for the purpose.

3.5 CONDUCTOR ARC AND FIREPROOFING TAPES

A. Use arc and fireproofing tapes on all 600-volt single conductors and cables except those rated Type TC at splices in all maintenance holes, handholes, vaults, cable trays, and other indicated locations.

B. Use arc and fireproofing tapes on all 5 kVat splices in all maintenance holes, handholes, vaults, cable trays, and other indicated locations.

C. Wrap together as a single cable all conductors entering from each conduit.

D. Follow tape manufacturer's installation instructions. Secure the arc and fireproofing tape at frequent intervals with bands of the specified glass cloth electrical tape. Make each band of at least two wraps of tape directly over each other.

E. Wrap together as far as possible, conductors carrying phases A, B, and C of the same feeder. Do not wrap together conductors carrying only two of the three phases.

F. The cables shall be placed as closely as possible to their final positions.

G. The cables shall be cleaned of all oil, grease, and cable pulling compounds using suitable solvents and cleaners non-injurious to cable and then wiped completely dry.

H. Any projecting surfaces such as fittings, ground connectors or bonding connections shall be covered with an insulating compound to present a smooth continuous surface for taping.

I. Fireproofing tapes shall be submitted as shop drawings for approval. Tapes shall be 3-inch width half-lapped and extend a minimum of 6-inches into the raceway. Use 3/4” glass tape at three foot intervals to hold tape in place.

3.6 UNDERGROUND DIRECT BURIAL CABLE

A. Comply with requirements for Installation of Underground Direct Burial Raceways in Section 16110, "Raceway", including warning tapes above the cables.

3.7 FIELD TESTS

A. Field test shall be performed on conductors in accordance with Section 16020, "Municipal Facilities Electrical Testing Requirements".

(END OF SECTION)

SECTION 16170

CABINETS AND RACKS

PART 1 -- GENERAL

1.1 GENERAL CONDITIONS

A. See the Conditions of the Contract (General, Supplementary and Special Conditions) and the General Requirements (Division 1).

1.2 WORK INCLUDED

A. This Section covers all equipment cabinets, enclosures and racks as shown on the drawings or as required to house the specified devices and equipment. The work under this Section consists of furnishing materials and equipment, performing labor and services necessary for the installation of the cabinets and racks required for a complete system.

1.3 RELATED WORK SPECIFIED ELSEWHERE

A. Refer to all other Division 16 specification sections and drawings, and to the specifications and Drawings under the General Construction Contract to ascertain the extent of work included.

1.4 REFERENCED SPECIFICATIONS, MATERIALS AND/OR CODES

A. City of Los Angeles Electrical Code, latest adopted edition

B. Electronic Industries Alliance (EIA) Standards. EIA/ECA-310-E

1.5 COOPERATION WITH OTHER TRADES

A. The Contractor shall coordinate the work of the Section with that of other sections as required to ensure that the entire work of this Project will be carried out in an orderly, complete and coordinated fashion.

1.6 SUBMITTALS

A. General: Submittals shall be made in accordance with Section 01330, "Shop Drawings/Submittals" of these specifications.

B. Provide thermal calculations for cabinets. Include sizing calculations for air conditioner or forced ventilation fans. Account for solar gain for outside cabinets.

PART 2 -- PRODUCTS

2.1 MATERIALS

A. Cabinets - Wall Mounted:

1. All equipment cabinets installed indoors shall be NEMA 12 enclosures.

2. All equipment cabinets installed outside or exposed to weather shall be NEMA 4X enclosures.

3. Cabinets shall be constructed of 14 gauge rolled steel.

4. Cabinet doors shall be furnished with key lockable doors with all cabinets under Division 16 keyed alike.

5. All cabinets shall be furnished with removable steel back panels for mounting equipment.

6. Cabinets shall be furnished with appropriate size and quantity of knock-outs for conduit entry.

7. Cabinets shall be grounded as specified in Section 16290, "Municipal Facilities Grounding Systems".

8. Cabinets shall be provided with adequate vents.

9. All cabinets shall be furnished with black on white laminated plastic name plates identifying each cabinet as noted on the drawings. Lettering shall be minimum 3/16-inch high.

10. Cabinet finish shall be ANSI 61 gray inside and out.

11. Cabinets shall be sized in strict accordance with the EIA/ECA-310-E.

12. Cabinet back panels shall be furnished with a ground buss bar.

13. Door size shall be selected to allow a minimum door swing of 90 degrees within the dimensional constraints of the equipment room.

14. Cabinets shall be equipped with index card holders and cards mounted behind heavy plastic on inside of cabinet doors.

15. Affix nameplates to cabinet doors with a minimum of two stainless steel escutcheon pins or screws.

B. Vertical Cabinet - Floor Mounted:

1. All vertical cabinets shall be free-standing floor mounted type having features and/or characteristics as follows:

   a. Panel Width - 19 inches

   b. Panel Height - 78-3/4 inches

   c. Overall Height - 87 inches Nominal

   d. Overall Depth - 25 inches Nominal

   e. Rear Door - Vented, except as otherwise specified.

f. Front door with vents at top and bottom, except as otherwise specified.

g. Plain top panel

h. Frame- 14 ga. Cold rolled sheet steel

i. Side panels - 18 ga.

j. Styled frames with trim

k. 19 inches EIA adjustable mounting rails for front and rear equipment mounting

l. Locks - all cabinets to be keyed alike

m. Units shall be pre-assembled type

n. Color - to be selected by Architect

2. Cabinets grouped side-by-side shall have side panels on each section.

3. Furnish and install blank 19 inches panels of color to match cabinet for all unused vertical mounting units on front mounting rails. Maximum height of each filler panel shall be 10.5 inches.

C. Power Strips:

1. Furnish and install plug-in or hardwired outlet strips as required to support the installed equipment.

2. Power strips shall have a metallic case.

3. Plug-in power strips shall be equipped with a locking plug and shall only be used with a compatible locking-type receptacle.

D. Pedestals:

1. Pedestals shall be weather-tight, seam welded, constructed of 14 gauge galvanized steel. Where indicated on the drawings construction shall be stainless steel.

2. Pedestals shall be furnished with gasketed panel for access to equipment contained within. Panel shall be secured with security screws.

3. Pedestal shall be painted to withstand environmental conditions and the final color shall be as specified by the Architect.

4. Pedestal shall be pre-drilled for mounting of intercom stations, loop detectors, and other equipment as specified herein.

5. Pedestal dimensions shall be as shown on the drawings.

PART 3 -- EXECUTION

3.1 EXECUTION

A. Cabinets:

1. Provide cabinets as necessary for proper installation of the equipment specified and in compliance with all codes and regulations.

2. Secure all cabinets in place with anchors and lag bolts to ensure compliance with seismic requirements.

3. Unused openings in cabinets shall be closed to afford protection equivalent to that of the wall of the cabinet.

B. Ventilation:

1. Furnish and install ventilation fans, vents, and filters for all cabinets where forced air cooling is required to maintain interior cabinet temperature at or below 95 degrees Fahrenheit.

2. For cabinets with forced ventilation, doors and side panels shall be solid with no louvers.

3. Division 17 Subcontractor shall select vented vs. forced air cabinets based on the environment's conditions of the equipment room and equipment to be installed in each cabinet.

C. Pedestals:

1. Provide pedestals at all locations shown on the drawings.

2. Secure pedestals to concrete base with anchors to ensure compliance with seismic requirements. Anchors shall be located such that they are only accessible from inside the enclosure.

3. Coordinate installation of required conduit such that all conduit is stubbed up inside pedestal.

4. Cabinets shall be large enough and equipment spaced in cabinets to provide adequate spacing for airflow and maintenance.

5. Locate all heat producing equipment, such as power supplies and amplifiers, at top of equipment cabinets.

3.2 COMPLETION

A. General:

1. Upon completion of the work, remove excess debris, materials, equipment, apparatus, tools and the like and leave the premises clean, neat and orderly.

2. All cables shall be dressed neatly in each cabinet and rack. Excess cable shall be trimmed and disposed of. Any unused cables shall be identified with stainless steel tags showing the origination and marked as “spare”.

(END OF SECTION)

SECTION 16180

WIRING DEVICES

PART 1 -- GENERAL

1.1 SCOPE

A. Required: Provide and install wiring devices as indicated on the Contract Drawing and herein specified.

B. Comply with the General Conditions, General Requirements and Section 16020, "Municipal Facilities General Electrical Requirements" of this Division 16 concerning definitions, guarantees, submittals, as-builts, clean-up, etc. as applicable to work of this Section.

1.2 SUBMITTALS

A. Submit under the provisions of Section 01330, "Shop Drawings/Submittals".

B. Product Data: For each product specified.

C Maintenance Data: For materials and products to include in maintenance manuals specified in Division 1.

PART 2 -- PRODUCTS

2.1 GENERAL

A. All wiring devices shall be specification grade, UL listed and labeled, conform to NEMA standards and meet the requirements of Federal specifications.

2.2 BOXES

A. Types:

1. Provide galvanized steel knockout type outlet boxes with suitable plaster rings of similar material, for interior concealed wiring in dry, non-hazardous (classified) locations.

2. Provide cast metal boxes for floor outlets, and where installed in walls direct contact with the earth. Floor outlet boxes shall be Walker box 880 series or equal.

3. Provide weatherproof cast metal outlet boxes for surface wiring, or in wet or damp locations, or where indicated on the Drawings, unless otherwise directed by the City Engineer. Boxes shall be Crouse-Hinds FS, FD, GRF, GS, or VXF series.

4. Provide sheet steel type with screw cover for pull and junction boxes over 100 cubic inches, in dry non-hazardous (classified) locations.

B. Sizes: In accordance with Code for the number and size of conductors, but not less than indicated on the drawings nor less than 4 inch square trade size, except for cast metal type, or multigang masonry type embedded in concrete or masonry walls.

C. Accessories:

1. Plaster rings, fixture studs, covers, plates, dividers, etc., as required.

2. Weatherproof covers, plates, and other accessories in wet or damp locations.

2.3 SWITCHES

A. All switches shall be specification grade and meet Federal Spec. W-S-896E.

B. Provide screw type; push-in type connections not acceptable.

C. Switches shall be self-grounding, color coded, silent or quiet type, and rated 120-277 Volts AC, 20 ampere rating, totally enclosed, where installed in AC systems Bakelite or composition base with "T" rating for AC loads, standard toggle handle, side wired only and binding screw terminals with screwdriver slot.

D. Where pilot lights are specified for switches, they shall be the neon type 1/25 W. mounted under the same plate as the switch. Lighted toggles are not acceptable.

E. Momentary contact switches shall be three position toggle, 20 Ampere rating at 120 Volts AC.

F. Single pole switches shall be equal to Bryant 1121-I; two pole switches Bryant 1122-I; three way switches Bryant 1123-I; four way switches Bryant 1124-I.

G. Approved Manufacturers:

1. Hubbell/Bryant;

2. General Electric;

3. Or equal.

2.4 PLATES AND COVERS

A. Required: For all switches, receptacles, junction boxes, telephone and other outlets.

B. Finishes of Plates and Devices:

Location	Plate	Device
General interior finished areas	White	White
Interior finished areas over wood panels	Black	Black
On exterior with spring loaded cover	Corrosion resistant	Brown

In equipment rooms or other generally unfinished areas	Galvanized	Brown
Janitor and utility rooms	Stainless steel	Gray
Toilet rooms	Stainless steel	Ivory

C. Provide the Following: Unless otherwise directed by the City Engineer, provide telephone, TV, and communication outlet plates with a bushed hole.

D. Provide engraved or etched plates for all lock switches, pilot switches, switches from which the equipment or circuit controlled cannot be readily seen, three or more switches under a common plate and for switches as indicated.

E. Stainless steel plates, type 302 non-magnetic with beveled edges, 0.040-inch thick with satin finish. Leviton 84000-40 series or approved equal.

F. Galvanized steel plates shall be square or rectangular and hot dipped galvanized or sherardized beveled edges and 0.040-inch thick.

G. Provide weatherproof receptacles with spring-loaded, corrosion resistant covers with gasket for mounting on outdoor type or flush wall boxes. Leviton 6196-V or approved equal.

H. Provide plates equipped with close fitting openings for the exact device to be used. Provide plates for telephone outlets equipped with bushed openings. Synthetic plates shall be smooth finish as manufactured by Pass & Seymour, Sierra, Leviton, or approved equal.

I. Provide brass covers for floor receptacles with duplex flap opening flush with floor.

J. Provide brass covers for data and communications floor outlets with 2-1/8 x 1 inch combination threaded opening.

K. Engraved plates and covers for equipment and controls, motors, for switches out of sight of the equipment controlled, for receptacles rated other than 125 volts, and for ganged switches (except no more than two switches controlling lights in the same room). Engraving shall provide positive identification acceptable to the City Engineer.

2.5 RECEPTACLES

A. Types:

1. All receptacles shall be specification grade and meet Federal Spec. WC 596 E.

2. Provide screw terminal type receptacles. Push-in type connections are not acceptable.

3. Straight blade 125 volt, 15 and 20 ampere duplex type shall be equal to Bryant 5262-I or 5263-I; single type shall be Bryant 5661-I or 5461-I.

4. Straight blade 250 volt, 15 and 20 ampere duplex type shall be equal to Bryant 5662-I or 5462-I; single type shall be Bryant 5661-I or 5461-I.

5. Combination duplex receptacles, straight blade 125/250 volt, 15 and 20 amperes, shall be equal to Bryant 5292-I or 5492-I.
6. Clock hanger receptacles shall be Bryant 2828-GS or equal.

7. Special outlets of other types shall be as indicated on the Contract Drawings.

2.6 OCCUPANCY SENSORS:

A. Wall-mounted, passive infrared sensors, as specified on the contract drawings or approved equal.

B. Ceiling mounted combination, passive infrared and ultra-sonic, as approved on the contract drawings or approved equal.

2.7 CONTROLS

A. Required: For all equipment furnished in this and other divisions, as required by Code, and as indicated on the Contract Drawings and in the specifications. All devices shall be listed by U.L. or another approved testing laboratory.

B. Types:

1. Circuit Breakers: Thermal-magnetic with interrupting and trip ratings as indicated on the drawings. Equip each breaker with a device for individual padlocking. Circuit breakers shall meet Federal Specifications W-C-375B.

2. Enclosed Safety Switches: Shall be externally operable, heavy duty "tease-proof", fusible and nonfusible with number of poles and ratings as indicated on the Contract Drawings. Provide suitable rejection type fuse holders for Class R fuses. Switches shall meet Federal Spec. W-S-865C. Switches shall be as manufactured by Square D Co. or equal.

3. Fuses: All fuses shall meet U.L. Standard 198. Provide a label within each fuse enclosure indicating fuse replacement type and ratings. Provide one complete set of each type and rating of fuses and limiters, as spares. Fuses shall be one of the following types:

a. Current-limiting Class L; Bussman KRP-C or KTU.

b. Current-limiting Class J; Bussman JKS or JHC.

c. Dual element Class RK-1; Bussman KTS-R or KTN-R.

d. Dual element Class RK-5; Bussman FRS-R or FRN-R.

e. Low Peak dual element Class RK-5; Bussman LPS-R or LPN-R.

f. For secondary protection of control transformers rated 500 V.A. and 50 volts, or less; Bussman FNQ fuses with HPS-D or HPL-B fuse holder or equal.

g. Fuses for direct-current circuits shall be identified for the use.

h. Other required fuses, if not specified, shall be standard nonrenewable type; Bussman FRN or FRS for circuits where available fault current is 10,000 amperes or less.

4. Terminal connection blocks shall be provided in switch and circuit breaker enclosures in which grounded (neutral) conductors are installed.

5. Magnetic Motor Starters: Shall be across-the-line start type with overload and low voltage protection; Square D. Co. Class 8536. Combination starters shall be fusible or nonfusible disconnect switch type; Square D. Co. Class 8538, or motor circuit protector type (instantaneous trip only); Square D. Co. Class 8539. Reversing starters shall be Square D. Co. Class 8736 or 8739 or equal. Ratings shall be as indicated on the Drawings. Equip each circuit breaker with a device for individual padlocking.

6. Manual Motor Starters: Pushbutton type with overloads; Square D. Co. Class 2510 Type M. Toggle type with overloads; Square D. Co. Class 2510 Type F. Toggle type without overloads; Square D. Co. Class 2510 Type K or equal. Each device shall have provision for padlocking.

7. General Purpose Contactors: Shall be ASCO 1000 Series or equal with number of poles and ratings as indicated on the drawings. Provide suitable hinged door enclosures.

8. Lighting Contactors: Electrically operated, mechanically held, with coil clearing contacts; ASCO Remote Control (RC) Switches or equal with number of poles and ratings as indicated on the Drawings. Provide suitable hinged door enclosures.

9. Pushbutton and Other Control Devices: Shall be Square D. Co. Class 9001 Type K or equal, in suitable enclosures with legend plates.

10. Pilot Lights: Shall be Square D. Co. Class 9001 Type K, transformer type or equal. Shall have push-to-test feature where installed in switchboards or motor control centers.

11. Control Relays: Shall be Square D. Co. Class 8501 Types D, H, or L. or equal. Install relays in suitable enclosures.

12. Time Switches: Provide types with minimum 10-hour spring driven automatic rewind reserve power. For control of mechanical systems or equipment provide 7-day dial type with features permitting daily control or omission; Paragon 7000 Series. For control of mechanically held lighting contactors provide astronomic type with day omitting device and momentary contact single pole double-throw switching; Paragon 47216-OSZ or equal. Number of poles and voltages for time switches shall be as indicated on the Drawings.

13. Emergency Control Switches: Shall be ASCO equal to #124 Series break-glass devices for mechanical or data processing rooms or similar applications.

14. Three-Position Selector Switches: Shall be equal to Bryant 4922-I for maintained contact type; Bryant 4921-I for momentary contact type.

15. Manual Timers: Spring-wound timers shall be equal to M.R. Rhoades Inc. "Mark-Time" 125 V. 20 A.

16. Identification: Identify all control and disconnecting devices by engraved laminated plastic nameplates designating the equipment controlled, except where device plates are engraved.

    a. Motors and other equipment shall be suitably and durably identified to correspond to the control or disconnecting device. Nameplate lettering shall be white on black finish and 1/8-inch-high minimum.

    b. Marking shall be as indicated on the drawings or as approved by the City Engineer. Nameplates shall be affixed with a minimum of two escutcheon pins or screws.

PART 3 -- EXECUTION

3.1 GENERAL

A. Each class of device shall be furnished by one manufacturer for the total project. Mixing of devices by different suppliers will not be permitted.

3.2 BOX INSTALLATION

A. Install boxes where indicated on the Contract Drawings and coordinate locations with structural and architectural features for proper installation. Boxes shall be accessible.

B. Install boxes for wall mounted local switches at 4 feet to center above floor or standing surface unless otherwise directed by the City Engineer. The maximum height in handicapped areas shall be 48 inches.

C. Install boxes for wall mounted receptacles, signal and communication outlets at 15 inches to center above floor or standing surface except where located above counter tops, or used for clock outlets, or as otherwise indicated on the Drawings or directed by the City Engineer.

3.3 RECEPTACLE AND SNAP SWITCH INSTALLATION

A. General:

1. Install receptacles and switches square, level, secure, and connected to a single set of circuit conductors at each outlet. Plaster ears of receptacles and switches installed in flush boxes shall be seated against the finish surface.

2. Install closely adjacent snap switches in a single multi-gang type box, unless otherwise directed by the City Engineer.

3. Install permanent barriers between switches where the voltage between switches exceed 300 volts.

4. Connect all devices by wrapping conductor around binding screw terminals.

5. Provide GFCI type receptacles in toilet, kitchen counters and for all outdoor locations where required by code.

3.4 OUTLET PLATES AND COVER INSTALLATIONS

A. General:

1. Install square, level and secure. Plates installed at flush outlets shall be seated against the finish.

2. Properly identify plates and covers as required and noted in Subsections 2. 5 D and K of this Section as applicable.

3. Provide jumbo size plates for outlets installed in masonry walls.

4. Properly align and plumb all devices and plates. Fit plates flat against walls and tights against surfaces of devices without strain on the plate.

5. Code sized (#12 minimum) bonding jumper shall connect grounded outlet box to receptacle grounding terminal on all flush mounted units.

(END OF SECTION)

SECTION 16190

ELECTRICAL IDENTIFICATION

PART 1 -- GENERAL

1.1 SCOPE

A. Required: Furnish and install nameplates and warning sign where indicated on the Contract Drawings or herein specified.

B. Comply with the General Conditions, General Requirements and Division 16 concerning definitions, guarantees, submittals, as-builts, clean-up, etc. as applicable to work of this Section.

C. Work includes but is not necessarily limited to the following:

1. Nameplates and warning signs permanently installed on all electrical equipment and devices including, but not limited to, the following items:

a. Transformers, switchboards, motor control centers, panelboards, variable frequency drives, pullboxes, cabinets and motors.

b. Enclosures for all separately enclosed devices including, but not limited to, disconnect switches, circuit breakers, contactors, time switches control stations and relays, fire alarm panels and lighting control panel.

c. Wall switches not within sight of outlet controlled.

d. Special systems such as, but not limited to, telephone, fire alarm, warning and signal systems. Identification shall be at each equipment rack, terminal cabinet, control panel, annunciator and pullbox.

e. Devices mounted within and part of equipment including circuit breakers, switches, control devices, control transformers, relays, indication devices and instruments.

PART 2 -- PRODUCTS

2.1 NAMEPLATE DESIGNATIONS SHALL CLEARLY STATE

A. Manufacturer's nameplate including equipment design rating of current, voltage, KVA, HP, bus bracing rating or as applicable.

B. Equipment nameplates designating system usage and purpose, system nominal voltage, equipment rating in KVA, amperes, HP and RPM as applicable. Designation data per drawings shall be supplied with Shop Drawings approval.

C. Panelboard nameplates showing panel designation, voltage, phase and source.

2.2 MANUFACTURERS DEVICE NAMEPLATES

Device usage, purpose, or circuit number; manufacturer and electrical characteristic ratings including the following:

A. Circuit Breakers: Voltage, continuous current, maximum interrupting current and trip current.

B. Switches: Voltage, continuous current, horsepower or maximum current switching. If fused, include nameplate stating "Fuses must be replaced with current limiting type of identical characteristics".

C. Contactors: Voltage, continuous current, horsepower or interrupting current, and whether "mechanically held" or "electrically held".

D. Motors: Rated voltage, full load amperes, frequency, phases, speed, horsepower, code letter rating, time rating, type of winding, class and temperature.

E. Controllers: Voltage, current, horsepower and trip setting of motor running overcurrent protection.

F. Motor Control Centers: Horizontal and vertical bus ratings.

2.3 MATERIALS

A. For Nameplates**:** Three layer laminated plastic or Micarta with engraved black letters over white background.

B. For Emergency Equipment: Use engraved white letters over red background.

C. For Warning Signs: Minimum 18 gauge steel with red lettering on white porcelain enamel finish.

PART 3 -- EXECUTION

3.1 MOUNTING

Nameplates shall be mounted by self-tapping, threaded stainless steel screws and bolts, or by rivets. Adhesive types are not acceptable.

3.2 MINIMUM LETTER HEIGHTS ON NAMEPLATES (AS APPLICABLE)

A. Panelboards, Switchboards and Motor Control Centers and Special Systems Enclosures: 1/4 inch identifies equipment designation; 3/16 inch identifies voltage rating and source.

B. Individual Circuit Breakers, Switches, and Motor Starters in Panelboards, Switchboards, and Motor Control Centers: 1/4 inch identifies circuit and load served, including location.

C. Individual Circuit Breakers, Enclosed Switches, and Motor Starters: 1/4 inch identify load served.

D. Transformers: 1/4 inch identifies equipment designation; 3/16 inch identifies primary and secondary voltages, primary source and secondary load. Include location of primary source or secondary load if remote from transformer.

3.3 WARNING SIGNS

A. Warning signs shall be permanently mounted with stainless steel screws or nickel-plated brass bolts.

B. Warning signs to read "DANGER - HIGH VOLTAGE", with letters 1-1/2 inch high, 1/4 inch stroke minimum.

C. Provide warning sign on all doors or immediately next to door for equipment rooms or closets containing equipment energized above 150 volts to ground.

(END OF SECTION)

SECTION 16200

MOTOR CONTROL CENTERS

PART 1 -- GENERAL

1.1 RELATED DOCUMENTS

A. Drawings and general provisions of the Contract, including General and Supplementary Conditions and Division 1 Specification Sections, apply to this Section.

B. Related Sections: The following Sections contain requirements that relate to this Section:

1. Section 16560, "Municipal Facilities Electrical Commissioning Requirements" for commissioning requirements.

2. Section 16570, "Municipal Facilities Electrical Testing Requirements" for testing requirements.

1.2 SUMMARY

A. This Section includes motor-control centers for use on AC circuits rated 600 V and less.

B. Related Sections include the following:

1. Section 16190, "Electrical Identification" for labeling materials.

2. Section 16210, “Switches, Disconnect and Safety”.

1.3 SUBMITTALS

A. Submit under the provisions of Section 01330, "Shop Drawings/Submittals".

B. Product Data: For products specified in this Section. Include dimensions, ratings, short-circuit rating, and data on features and components.

C. Shop Drawings: For each motor-control center specified in this Section. Include dimensioned plans, elevations, and component lists. Show ratings, including short-time and short-circuit ratings, and horizontal and vertical bus ampacities.

1. Schedule of features, characteristics, ratings, and factory settings of individual motor-control center units.

2. Wiring Diagrams: Interconnecting wiring diagrams pertinent to class and type specified for motor-control center. Schematic diagram of each type of controller unit indicated.

D. Field Test Reports: Indicate and interpret test results for compliance with performance requirements.

E. Maintenance Data: For products to include in the maintenance manuals specified in Division 1. Include operating instructions required per 3.4.B.

F. Load-Current and Overload-Relay Heater List: Compile after motors have been installed and arrange to demonstrate that selection of heaters suits actual motor nameplate full-load currents.

G. Qualification Data for Field Testing Agency: Certificates, signed by Contractor, certifying that agency complies with requirements specified in "Quality Assurance" Article below.

1.4 QUALITY ASSURANCE

A. Manufacturer Qualifications: Maintain, within 100 miles of Project site, a service center capable of providing training, parts, and emergency maintenance and repairs.

B. Field Testing Agency Qualifications: An independent testing agency with experience and capability to satisfactorily conduct testing indicated without delaying the Work. Evaluation criteria shall be according to ASTM E 699.

C. Source Limitations: Obtain similar motor-control devices through one source from a single manufacturer.

D. Comply with NFPA 70 NEMA, IEEE, UL & ANSI Standards.

E. Listing and Labeling: Provide motor-control centers and components specified in this Section that are listed and labeled.

1. The Terms "Listed" and "Labeled": As defined in the National Electrical Code, Article 100.

2. Listing and Labeling Agency Qualifications: A "Nationally Recognized Testing Laboratory" as defined in OSHA Regulation 1910.7.

F. Product Selection for Restricted Space: Drawings indicate maximum dimensions for motor-control centers, including clearances between motor-control centers and adjacent surfaces and items, and are based on types and models indicated. Other manufacturers' motor-control centers with equal performance characteristics and complying with indicated maximum dimensions may be considered. Refer to Section 01330, “Shop Drawings/Submittals."

1.5 DELIVERY, STORAGE, AND HANDLING

A. Deliver in shipping splits of lengths that can be moved past obstructions in delivery path as indicated.

B. Store so condensation will not occur on or in motor-control centers. Provide temporary heaters as required to prevent condensation.

C. Handle motor-control centers according to NEMA ICS 2.3, "Instructions for the Handling, Installation, Operation, and Maintenance of Motor Control Centers." Use factory-installed lifting provisions.

1.6 COORDINATION

A. Coordinate features of controllers and accessory devices with pilot devices and control circuits to which they connect.

B. Coordinate features, accessories, and functions of each motor controller with the ratings and characteristics of the supply circuit, the motor, the required control sequence, and the duty cycle of the motor and load.

1.7 EXTRA MATERIALS

A. Furnish extra materials described below that match products installed, are packaged with protective covering for storage, and are identified with labels describing contents.

1. Spare Indicating Lights: Furnish 6 of each type required.

PART 2 -- PRODUCTS

2.1 MANUFACTURERS

A. Available Manufacturers: Subject to compliance with requirements, manufacturers offering products that may be incorporated into the Work include, but are not limited to, the following:

1. Eaton;

2. Tesco Controls;

3. Or equal.

2.2 MOTOR-CONTROL CENTERS

A. Wiring: NEMA ICS 3, Class I, Type B.

B. Enclosures: Free-standing structure as indicated. U.L.listed, NEMA 250, Type 2, unless otherwise indicated to meet environmental conditions at installed location.

1. Outdoor Locations: NEMA 250, Type 3R.

2. Compartments: Modular; individual doors have concealed hinges and quick-captive screw fasteners. Interlocks on combination controller units require disconnect means in off position before door can be opened or closed, except by consciously operating a permissive release device.

3. Interchangeability: Compartments are constructed to remove units without opening adjacent doors, disconnecting adjacent compartments, or disturbing the operation of other units in control center. Units requiring the same size compartment are interchangeable, and compartments are constructed to permit ready rearrangement of units, such as replacing 3 single units with one unit requiring 3 spaces, without cutting or welding.

4. Wiring Spaces: Each vertical section of structure with horizontal and vertical wiring has spaces for wiring to each unit compartment in each section, with supports holding wiring in place.

5. **Controls**: As specified elsewhere herein and as indicated on the Drawings. Each magnetic starter shall be provided with a hand-off-auto selector switch and a red "on" pilot light. Control power shall be 120 volts from integral transformer(s) unless indicated otherwise on the Drawings. Control transformer insulation shall be Class H. Provide suitable primary and secondary over current protection, and ground the secondary of control transformers. The secondary grounded conductor shall be identified with continuous white insulation.

   Where external control circuits are used a disconnecting means shall be provided in the control center and identified with a red laminated plastic nameplate marked "120 volt external control". Provide each motor control unit with a wiring diagram and overload heater chart affixed to the inside of the unit door or cover. Overload heaters shall be installed only after verification of actual motor FLA ratings.

C. Short-Circuit Current Rating for Each Section: Minimum 42,000 amps symmetrical RMS or as specified on the drawings.

2.3 BUSES

A. Material: Plated copper.

B. Ampacity Ratings: As indicated for horizontal and vertical main buses.

C. Equipment Ground Bus: Noninsulated, horizontal copper bus 2 by 1/4 inch, minimum.

D. Horizontal Bus Arrangement: Main phase, and ground buses extended with same capacity the entire length of motor-control center, with provision for future extension at both ends by bolt holes and captive bus splice sections or approved equivalent.

E. Short-Circuit Withstand Rating: Minimum 42,000 amps symmetrical rms Or as specified on the drawings.

2.4 FUNCTIONAL FEATURES

A. Description: Modular arrangement of motor controllers, control devices, overcurrent protective devices, transformers, panelboards, instruments, indicating panels, blank panels, and other items mounted in compartments of motor-control center as indicated.

B. Motor-Controller Units: Combination controller units of types and with features, ratings, and circuit assignments indicated.

   1. Units with full-voltage, across-the-line, magnetic controllers up to and including Size 3 are installed on drawout mountings with connectors that automatically line up and connect with vertical-section buses while being racked into their normal, energized positions.

   2. Units have short-circuit current ratings equal to or greater than short-circuit current rating of motor-control center section.

   3. Units in motor-control centers with Type B wiring shall be equipped with pull-apart terminal strips or drawout terminal boards for external control connections.

C. Overcurrent Protective Devices: Types of devices with features, ratings, and circuit assignments indicated. Individual feeder-tap units through 225-A rating shall be installed

on drawout mountings with connectors that automatically line up and connect with vertical-section buses while being racked into their normal, energized positions.

D. Spaces and Blank Units: Compartments fully bused and equipped with guide rails or equivalent, ready for insertion of drawout units. Provide bus barrier and compartment door.

E. Spare Units: Type, sizes, and ratings as indicated, and installed in compartments indicated "spare."

PART 3 -- EXECUTION

3.1 EXAMINATION

A. Examine surfaces to receive motor control centers for compliance with installation tolerances and other conditions affecting performance of motor control centers installation. Do not proceed with installation until unsatisfactory conditions have been corrected.

3.2 APPLICATIONS

A. Select features of each motor controller to coordinate with ratings and characteristics of supply circuit and motor; required control sequence; duty cycle of motor, drive, and load; and configuration of pilot device and control circuit affecting controller functions.

B. Select horsepower rating of controllers to suit motor controlled.

C. Push-Button Stations: In covers of magnetic controllers for manually started motors where indicated, start contact connected in parallel with sealing auxiliary contact for low-voltage protection.

D. Hand-Off-Automatic Selector Switches: In covers of manual and magnetic controllers of motors started and stopped by automatic controls or interlocks with other equipment.

3.3 INSTALLATION

A. Install motor-control centers according to NEMA ICS 2.3 and manufacturer's written instructions.

B. Anchor each motor-control center assembly to steel-channel sills arranged and sized according to manufacturer's written instructions. Attach by tack welding or bolting. Level and grout sills flush with motor-control center mounting surface.

C. Install motor-control centers on concrete housekeeping bases conforming to Section 03300, "Cast-in-Place Concrete."

D. Fuses: Install fuses in each fusible switch as indicated, oriented for label readability.

3.4 IDENTIFICATION

A. Identify field-installed wiring and components and provide warning signs according to Section 16190, "Electrical Identification."

B. Operating Instructions: Frame printed operating instructions for motor-control centers, including control sequences, and emergency procedures. Fabricate frame of finished wood or metal and cover instructions with clear acrylic plastic. Mount on front of motor-control centers.

3.5 CONTROL WIRING INSTALLATION

A. Install wiring between motor-control devices according to Section 16180, “Wiring Devices."

B. Bundle, train, and support wiring in enclosures.

C. Connect hand-off-automatic switch and other automatic control devices according to an indicated wiring diagram or one that is manufacturer approved, where available.

1. Connect selector switches to bypass only the manual and automatic control devices that have no safety functions when switch is in the hand position.

2. Connect selector switches with motor-control circuit in both hand and automatic positions for safety-type control devices such as low- and high-pressure cutouts, high-temperature cutouts, and motor-overload protectors.

3.6 CONNECTIONS

A. Tighten motor-control center bus joint, electrical connector, and terminal bolts according to manufacturer's published torque-tightening values. Where manufacturer's torque values are not indicated, use those specified in UL 486A and UL 486B.

3.7 FIELD QUALITY CONTROL

A. Testing Agency: Provide services of a qualified independent testing agency to perform specified testing.

B. Testing: After installing motor-control center and after electrical circuitry has been energized, demonstrate product capability and compliance with requirements.

1. Procedures: Perform each visual and mechanical inspection and electrical test stated in NETA ATS, Sections 7.5, 7.6, and 7.16. Certify compliance with test parameters.

2. Remove and replace malfunctioning units with new units, and retest.

3.8 COMMISSIONING

A. Spot check breaker settings against Short Circuit Study. Short Circuit Study to be performed by the contractor.

B. Test the operation of the starters in Hand and Off Automatic control will generally be tested with the functional testing of the device.

C. Spot check insulation resistance on the MCC bus and control circuits.

D. Spot check voltage levels and resistance to ground

3.9 CLEANING

A. Inspect interior and exterior of motor-control centers. Remove paint splatters and other spots, dirt, and debris. Touch up scratches and mars of finish to match original finish. Clean devices internally, using methods and materials recommended by manufacturer.

3.10 DEMONSTRATION

A. Training:

1. Conduct a minimum of 4 hours of training in operation and maintenance as specified in Division 1 Section 01770, "Project Closeout." Include training relating to equipment operation and maintenance procedures.

2. Schedule training with at least 7 days' advance notice. Deliver maintenance manuals to Owner before training commences.

(END OF SECTION)

SECTION 16210

SWITCHES, DISCONNECT AND SAFETY

PART 1 -- GENERAL

1.1 SCOPE

A. Work Included: Not limited to the following:

1. Fabricate, provide and install disconnect and safety type switches where indicated on the Contract Drawing and hereinafter specified.

2. Comply with General Conditions, the General Requirements and the requirements of Division 16 concerning definitions, guarantees, submittals, as-builts, clean-up, etc. as applicable to the work of this Section.

3. Examine all other Sections for work related to those Sections which are required to be included as work under this Section.

1.2 QUALITY ASSURANCE

A. Conform to applicable provisions of Subsection 1.7 of Section 16020, "Municipal Facilities General Electrical Requirements".

B. Conform to applicable Codes and NEMA, ANSI, UL and IEEE Standards, Federal Specification W-S-865,

1.3 SUBMITTALS

Conform to applicable provisions of Section 01330, "Shop Drawings/Submittals" of Division 1, General Requirements and Subsection 1.6 G of Section 16020, "Municipal Facilities General Electrical Requirements".

PART 2 -- PRODUCTS

2.1 GENERAL

A. APPROVED MANUFACTURERS:

1. Appleton;

2. Eaton;

3. Schneider Electric;

4. Or equal.

B. Disconnect Switches: Provide with devices enabling the switch to be locked in the open or closed positions.

C. Manual Motor Switches: Tumbler type rated 3HP, 208 Volts three phase or single phase with or without overload heaters as required to protect equipment served.

D. Externally Operable Safety Switches: To have quick-make, quick-break mechanism, capable of switching 10 times switch rating, with cover interlock to prevent opening with switch in ON position and defeat mechanism for maintenance.

E. Switches: Shall be Heavy Duty (HD) type unless otherwise indicated. Provide NEMA 1 enclosures for interior locations, NEMA 3R enclosures for exterior or wet locations, NEMA 4X 316 SS for corrosive locations and NEMA 7 for hazardous locations. Provide with number of poles, ampacity, voltage and HP rating, fusible or nonfusible as indicated.

F. Fusible Switches: Equip them with rejection clips for UL Class R fuses. Switches having a dual rating when used with dual element fuses shall have a rating so indicated.

G. 600 Amperes or Less Fuses: UL Class RKI with a minimum interrupting rating of 200,000 Amperes, Bussmann "Low-Peak Type" or equal.

PART 3 -- EXECUTION

3.1 GENERAL INSTALLATION

A. Locations: Install switches, disconnects and safety where indicated on the Contract Drawings.

B. Fastenings: Securely fasten switches to structural members or unistrut support as directed by the manufacturer.

C. Manual Motor Starters: Install flush mounted for switching motors 3HP and smaller in finished areas. Install surface mounted in equipment rooms and non-finished areas. Where installed above inaccessible ceilings provide access panels.

(END OF SECTION)

SECTION 16270

SERVICE AND DISTRIBUTION SWITCHBOARD

PART 1-- GENERAL

1.1 SCOPE

A. Work Included: Not limited to the following:

1. Fabricate, provide and install service and distribution switchboards as indicated on the Contract Drawings and hereinafter specified.

2. Comply with the General Conditions, the General Requirements and the requirements of Section 16020, "Municipal Facilities General Electrical Requirements" of this Division 16, concerning definitions, guarantees, submittals, as-builts, clean-up, etc. as applicable to the Work of this Section.

3. Examine all other Sections for work related to those Sections which are required to be included as Work under this Section.

1.2 RELATED WORK

A. Related Sections: The following sections contain requirements that relate to this section:

1. Section 16560 "Municipal Facilities Electrical Commissioning Requirements" for commissioning requirements.

2. Section 16570 "Municipal Facilities Electrical Testing Requirements" for testing requirements.

1.3 QUALITY ASSURANCE

A. Conform to applicable provisions of Sub-Section 1.7 of Section 16020, "Municipal Facilities General Electrical Requirements".

B. Conform to applicable Codes and NEMA, ANSI and IEEE Standards.

1.4 SUBMITTALS

A. Conform to applicable provisions of Section 01330, "Shop Drawings/Submittals" of Division 1 - General Requirements and of Sub-Section 1.6.G of Section 16020, "Municipal Facilities General Electrical Requirements".

B. Shop Drawings shall show and contain the following information:

1. Plans showing top and bottom of switchboards.

2. Front, rear and side elevations of switchboards.

3. Schematic Wiring Diagrams showing the following:

   a. One-line diagram with each circuit numbered.
   b. Schedule showing circuit number, description and rating of protective device(s).
   c. Complete short circuit availability of bus.

4. 1/2 inch - 1 foot-0 inches scale drawings of electrical rooms or areas overall dimensions for equipment layout including space available for conduits and protective devices.

PART 2 -- PRODUCTS

2.1 MATERIALS

A. Each switchboard shall be U.L. listed deadfront, deadrear, completely self-supporting, with the required number of vertical sections bolted together to form one floorstanding switchboard. Construction shall be NEMA Class II with line and load and main bus connections accessible from the front. Provide switchboards of 1000 amperes or greater rating with line and load insulated bus bars. Overcurrent protective devices shall be grouped in convertible type construction. Vertical sections shall have full height bussing and where space for future devices is indicated on the Drawings all the necessary mounting hardware shall be furnished. Switchboards shall include all protective devices and other equipment indicated on the Contract Drawings with the necessary interconnections, instrumentation, and control wiring. Bus shall be copper with plated joints, or tin-plated aluminum. Bus bars shall be mounted on supports of high impact-resistant, non-tracking insulating material, and braced to withstand the maximum available fault current as indicated on the Contract Drawings. Other ratings shall be as indicated on the Contract Drawings. Series-connected or "integrated equipment" short circuit ratings shall not be applied in lieu of, or to comply with, short circuit and interrupting capacity ratings indicated on the Drawings, unless specifically approved by the City Engineer. Switchboards shall be as manufactured by Eaton, Square D. Co., Power Style Class 2700 (Schneider), or equal.

B. Service and distribution sections shall contain circuit breakers, fusible switches, and combination motor starters, with shunt trips, motor operators, ground fault protection, and other accessories, as indicated on the Drawings, as well as provisions for utility metering in accordance with the serving electric utility requirements. Each disconnecting means shall be provided with a means for individual padlocking. Switches shall be heavy-duty, quick-make and quick-break, and horsepower rated through 500 HP. Switches rated over 600 amperes shall be bolted pressure contact type. Ratings of disconnecting means and overcurrent protective devices shall be as indicated on the Drawings. Combination motor controllers shall comply with applicable requirements of Section 16200, "Motor Control Centers".

C. Finish: Interior finish shall be a gray lacquer or enamel; exterior finish shall be a gray baked-on enamel or lacquer. Apply all finish coatings over a rust-inhibiting metal primer.

D. Identification: Each switchboard shall have an engraved laminated plastic nameplate identifying the switchboard as designated and located on the Contract Drawings, and indicating voltage, phase, and number of system conductors. For example, "Switchboard MS 277/480V. 3Ø 4W. Lettering shall be white on black finish and 1/4-inch-high minimum. Nameplates shall be affixed by a minimum of two escutcheon pins or screws. Each device on the switchboard shall be provided with an engraved plastic nameplate as specified in Section 16190, "Electrical Identification".

PART 3 -- EXECUTION

3.1 GENERAL INSTALLATION

A. Switchboard(s) shall be securely bolted to the flooring or structure. Final attachment means shall be in compliance with the seismic requirements of governing authority. Shop Drawings indicating the bolt down requirements shall be provided by the manufacturer along with all necessary calculations and shall be submitted with the Shop Drawings of the switchboard equipment. Refer to other Sections of the Specifications related to seismic requirements.

B. Switchboard(s) shall be installed on a level floor, with shims provided where necessary to attain both horizontal and vertical "plumb" conditions.

C. Switchboard(s) equipment shall be protected during construction in such a manner to prevent plaster, paint, dust, etc. from defacing the finish of equipment. Prior to final acceptance of the equipment, the interior of the equipment shall be cleaned of all foreign materials and debris. Any blemishes or defects on the exterior of the equipment shall be repaired by painting the equipment with paint supplied by the manufacturer of the equipment to match the factory finishes.

D. No operating handles in any switchboard shall be located above 6-foot 6-inches above finish floor. Code clearances on all sides of the switchboard equipment shall be maintained.

E. Switchboards shall be mechanically grounded to the grounding system.

F. Furnish ammeters, voltmeters, current and potential transformers, test blocks, control switches, fuses and circuit breakers, and other devices as indicated on the Drawings. Meters shall be switchboard type semi-flush mounted, with phase selector switches. The height of all devices shall comply with Code and utility company requirements with the switchboard installed on a 2-inch high concrete pad.

G. For solidly grounded "wye" services of more than 150 volts to ground, but not exceeding 600 volts phase to phase, provide ground fault protection of equipment for each service disconnecting means for services rated 1,000 amperes or more, without a single main disconnecting means. Provide ground fault protection of equipment for other systems as indicated on the Drawings.

H. Ground fault sensors shall be zero sequence type unless indicated otherwise on the Drawings. Trip settings shall be as indicated on the Drawings or as directed by the City Engineer.

I. Protection: Keep switchboards covered during construction operations. Clean interior and exterior after all connections are completed. Factory connections shall be checked and re-torqued tight as required. Damage shall be field or factory repaired to a condition acceptable to the City Engineer at no added cost to the City.

J. Operational Test of the ground fault protection system using the primary current injection method shall be performed by qualified personnel with suitable testing/recording equipment in the presence of the City Engineer. Provide the City Engineer with a "Certified Test Report" including test parameters.

3.2 COMMISSIONING OF SWITCHGEAR AND SWITCHBOARD ASSEMBLIES

A. General:

1. Inspect for physical damage.

2. Compare equipment nameplate information with latest single line diagram and report discrepancies.

3. Inspect for proper alignment, anchorage and grounding.

4. Check tightness of accessible bolted bus joints by calibrated torque wrench method. Refer to manufacturer's instruction for proper foot pound levels.

5. Spot check breaker settings against Short Circuit Study.

6. Key interlock systems shall be physically tested to insure proper function.

   a. Closure attempt shall be made on locked open devices. Opening attempt shall be made on locked closed devices.
   b. Key exchange shall be made with devices operated in off-normal positions.

7. All doors, panels and sections shall be inspected for paint, dents, and scratches.

(END OF SECTION)

SECTION 16280

SHORT CIRCUIT AND COORDINATION REPORT

PART 1 -- GENERAL

1.1 THE REQUIREMENT

A. The CONTRACTOR shall prepare a power system analysis of short circuit calculations, a protective device coordination study and a harmonic analysis in accordance with the requirements of these Specifications and as shown.

B. The studies shall include all portions of the electrical distribution system for normal and standby power sources down to and including the (208 V) distribution system.

C. The work to be provided by the CONTRACTOR shall include protection studies for motors supplied with solid state overload and overcurrent protection devices.

D. The work to be provided by the CONTRACTOR shall include an evaluation of harmonic distortion and the furnishing and installation of filters and any other equipment as may be required for harmonic suppression.

1.2 RELATED WORK SPECIFIED ELSEWHERE

A. The Work of the following Sections applies to the work of this Section. Other Sections of the Specifications, not referenced below, shall also apply to the extent required for proper performance of this work.

1. Section 16020, Municipal Facilities General Electrical Requirements.

2. Section 16270, Service and Distribution Switchboard.

3. Section 16340, Low Voltage Motor Control.

1.3 REFERENCE SPECIFICATIONS, CODES AND STANDARDS

A. Comply with the current provisions of the following codes and standards.

1. Codes:

LAEC	City of Los Angeles Electrical Code, latest adopted edition.

2. Commercial Standards:

ANSI/IEEE 141	Recommended Practice for Electrical Power Distribution for Industrial Plants
ANSI/IEEE 242	Recommended Practice for Protection and Coordination of Industrial and Commercial Power Systems
ANSI C 37.010	Standard Application Guide for AC High-Voltage Circuit Breakers

ANSI C 37.5	Calculations of Fault Currents for Application of Power Circuit Breakers
ANSI C-37.13	Low-Voltage AC Power Circuit Breaker (600-Volt Insulation Class)
IEEE 519	Recommended Practices and Requirements for Harmonic Control in Electrical Power Systems

1.4 CONTRACTOR SUBMITTALS

A. Submittals shall be made in accordance with Section 16020, "Municipal Facilities General Electrical Requirements" and as specified herein.

B. The power system analysis shall be submitted to the ENGINEER prior to receiving final approval of the distribution equipment shop drawings and/or release of equipment for manufacture; approval from the ENGINEER may be obtained for a preliminary submittal of sufficient detail to ensure that device selection will be adequate. Preliminary submittal shall indicate the computer program for use in performing the work of this Section.

C. Studies for harmonic current, voltage and line notching test results shall be forwarded to the ENGINEER prior to acceptance testing of the project and subsequent to the installation of all harmonic generating and harmonic-sensitive equipment.

D. Submittals for solid state motor protective devices shall be forwarded to the engineer prior to loading the motor.

E. Final settings of Protective device shall be approved by the ENGINEER prior to project acceptance and shall be based on the results of the power system analysis.

F. The CONTRACTOR shall indicate in the submittal, changes to the protection scheme or equipment selection that will result in improved system reliability and safety.

1.5 QUALITY ASSURANCE

A. Organization's Qualifications:

1. Short circuit studies, protective device evaluation studies, and protective device coordination studies shall be performed by the medium voltage switchgear manufacturer or by an electrical testing service regularly engaged in the short circuit and protective device coordination studies for a period of at least 15 years. The study shall utilize proven computer programs for power system analysis. The studies shall be signed by the professional electrical engineer, registered in the State of California, responsible for the studies.

PART 2 -- PRODUCTS

2.1 GENERAL

A. The organization of the study shall include a single-line and an impedance diagram of the power system. This diagram shall identify all components considered in the study and the ratings of all power devices (this includes, but is not limited to: transformers, circuit breakers, relays, fuses, busses, and cables). The resistance and reactances of all cables shall be identified in the impedance diagram. The study shall contain, from the service

utility company, all written data regarding maximum available short circuit current, voltage, and X/R ratio of the utilities' power system.

2.2 SHORT CIRCUIT STUDY

A. The short circuit study shall be performed with the aid of a digital computer program and shall be in accordance with ANSI C 37.5, IEEE Standard 242, and IEEE Standard 141.

2.3 PROTECTIVE DEVICE EVALUATION STUDY

A. A protective device evaluation study shall be performed to determine the adequacy of circuit breakers, molded case switches, automatic transfer switches, and fuses. Any problem areas or inadequacies in the equipment due to prospective short-circuit currents shall be promptly brought to the ENGINEER's attention.

2.4 PROTECTIVE DEVICE COORDINATION STUDY

A. A protective device coordination study shall be performed to provide the necessary calculations required to select or check the selection of power fuse ratings, protective relay characteristics and settings, ratios and characteristics of associated current transformers, and low-voltage breaker trip characteristics and settings. The results of the study shall govern the final selection of the protective devices.

2.5 TIME/CURRENT COORDINATION CURVES

A. As a minimum, the time/current coordination curves for the power distribution system shall include the following on 5-cycle log-log graph paper:

1. Time/current curves for each protective relay or fuse showing graphically that the settings will provide protection and selectivity within industry standards. Each curve shall be identified, and tap and time dial settings shall be specified.

2. Time/current curves for each device shall be positioned to provide the maximum selectivity to minimize system disturbances during fault clearing.

3. Time/current curves and points for cable and equipment damage.

4. Circuit interrupting device operating and interrupting times.

5. Indicate maximum fault values on the graph.

6. Sketch of bus and breaker arrangement.

7. Magnetizing inrush points of transformers.

8. All restrictions of the ANSI and LAEC shall be adhered to and proper coordination intervals and separation of characteristics curves shall be maintained.

9. Thermal limits of motors 250 hp and above.

2.6 HARMONIC MEASUREMENT

A. The CONTRACTOR shall prepare a report of the distribution system, at all voltage levels, which shall indicate the harmonic currents anticipated at each voltage level. This report

shall indicate sources of harmonic currents, voltages, and line notching of all equipment. The report shall state the tolerance of sensitive equipment to harmonics.

B. CONTRACTOR shall measure harmonics present in the output of harmonic-generating equipment and at the input terminals of sensitive equipment. Install filters to prevent equipment malfunction, due to harmonics. Harmonic measurements shall be performed and documented after the filter installations.

C. All equipment which is required to conform to IEEE 519 shall be measured to determine output harmonic content. The CONTRACTOR shall take the corrective action necessary to attain compliance with IEEE 519, Table. Measurements and documentation shall be performed to demonstrate compliance with the standards.

2.7 MOTOR PROTECTION

A. Overload protection as phase overcurrent for medium voltage motors is specified in other Sections of these Specifications to be solid-state protective modules. The CONTRACTOR shall adjust these modules with respect to actual installed motor torque, current and thermal characteristics so that the best possible motor protection will result. Protective settings shall be submitted, and approved, before respective motors are run under load.

PART 3 -- EXECUTION

3.1 PROTECTIVE DEVICE TESTING, CALIBRATION AND ADJUSTMENT

A. The CONTRACTOR shall provide the services of a qualified field engineer and necessary tools and equipment to test, calibrate, and adjust the protective relays and circuit breaker trip devices as recommended in the power system analysis. The qualifications of the field engineer shall be subject to review and approval by the ENGINEER.

3.2 STUDY REPORTS

A. The results of the power system analysis shall be submitted summarized in a final report. The report shall include, but not limited to the following:

1. Single-line diagram
2. Impedance diagram
3. Tabulation of all protective devices, which shall be identified on the single-line diagram
4. Time/current coordination curves
5. Computerized fault current calculations
6. Specific recommendations, if any
7. Test instrumentation, condition and connections, as applicable, for each study
8. Harmonic measurement results
9. Harmonic distortion correction proposals

(END OF SECTION)

SECTION 16290

MUNICIPAL FACILITIES GROUNDING SYSTEMS

PART 1 -- GENERAL

1.1 SCOPE

A. Required: Provide and ground electrical systems completely and effectively as required by Code and herein specified.

B. Comply with the General Conditions, General Requirements and the requirements of Section 16020, "Municipal Facilities General Electrical Requirements" of this Division 16 concerning definitions, guarantees, submittals, as-builts, clean-up, etc. as applicable to work of this Section.

1.2 SUBMITTALS

A. General: Submit each item in this article according to the conditions of the Contract and Division 1 Section 01330, "Shop Drawings/Submittals".

B. Product Data for grounding rods, connectors and connection materials, and grounding fittings.

C. Field tests and observation reports certified by the testing organization and indicating and interpreting the test reports for compliance with performance requirements.

1.3 RELATED WORK

A. Related Sections: The following sections contain requirements that relate to this section:

1. Section 16560, "Municipal Facilities Electrical Commissioning Requirements" for commissioning requirements.

2. Section 16570, "Municipal Facilities Electrical Testing Requirements" for testing requirements.

1.4 QUALITY ASSURANCE:

A. Testing Agency Qualifications: A “National Recognized Testing Laboratory” (NRTL) As defined in OSHA Regulation 1910.7.

B. Comply with NFPA 70.

C. Comply with UL 467.

D. Listing and Labeling: Provide products specified in this Section that are listed and labeled.

1. The Terms “Listed” and “Labeled”: As defined in the National Electrical Code Article 100.

2. Listing and Labeling Agency Qualifications: A “Nationally Recognized Testing Laboratory” (NRTL) as defined in OSHA Regulation 1910.7.

1.5 REFERENCE STANDARDS:

A. NFPA 70: National Electrical Code – Article 250.

B. Federal Information Processing Standard Publication #94 “Guideline on Electrical Power for ADP Installations”.

C. IEEE Std. 142-1982 “Grounding of Industrial and Commercial Power System (Green Book).

D. IEEE Std. 1100-1992 “Powering and Grounding Sensitive Electronic Equipment” (Emerald Book).

1.6 SYSTEM DESCRIPTION

A. Ground the electrical service system neutral at service entrance equipment to metallic water service and to concrete encased grounding electrodes.

B. Ground each separately derived system neutral to nearest effectively grounded metallic water pipe.

C. Provide telephone and data system grounding conductor at main terminals of respective system bonded to service entrance grounding electrode.

D. Bond together system neutrals, service equipment enclosures, exposed non-current carrying metal parts of electrical equipment, metal raceway systems, grounding conductor in raceways and cables, receptacle ground connectors, metallic plumbing systems and concrete encased electrode.

PART 2 -- PRODUCTS

2.1 MATERIALS

A. Grounding and Bonding Conductors: Soft-drawn stranded copper.

B. Buried or Concealed Joints: Exothermic welded, inspected and approved the Los Angeles City Building Department before concealment.

C. System grounding conductors shall be a minimum of #3 AWG unless otherwise indicated and shall be continuous without joints or splices.

D. Bolted Connections: Everdur hardware, bolts, and lock washers or equal.

E. Welded Connections: Either Erico Cadweld Process or Continental Industries Thermoweld Process or equal.

F. Compression Connections: Thomas & Betts Series 5300 fittings or equal. Use manufacturer's specific instructions and tools for each connection.

G. Ground Rods: Copperweld Steel Company or equal. Provide 3/4 inch copperclad steel driven ground rods, 10 feet long, UL listed, in each manhole and where indicated on Contract Drawings.

PART 3 -- EXECUTION

3.1 GENERAL INSTALLATION

A. Grounding and Bonding: Provide in accordance with all requirements of NEC and other applicable codes, Contract Drawings and the following descriptions. Comply with the codes as a minimum requirement with specifications where they are more stringent. Ground each electrical service to cold water systems and provide supplemental grounding as follows:

1. Structural Steel Electrode: Bond the structural steel frame of the building or structure to the point of ground at service equipment with a continuous bonding conductor equal in size to the grounding electrode conductor, but not smaller than No. 4 AWG or

2. Concrete-Encased Electrode: Provide three minimum No. 4 horizontal reinforcing bars in and near the bottom of the building or structure footing, each with a minimum continuous (no splices) length of 20 feet. Install a continuous bonding conductor equal in size to the grounding electrode conductors, but not smaller than No. 4 A.W.G., bonded to each reinforcing bar by means of corrosion-resistant clamps or welding, to the point of ground at service equipment. The bonding conductor shall be installed in schedule 40 rigid PVC conduit from a point within the footing continuous to the service equipment. A single size 3/0 bare copper conductor with a minimum continuous length of 20 feet may be used in lieu of the three No. 4 reinforcing bars.

B. Separate Buildings or Structures: When two or more buildings or structures are supplied from a common source or service, the grounding system in each building or structure shall have a grounding electrode connected to the metal enclosure of the building or structure disconnecting means and to the AC system grounded circuit conductor on the supply of the building or structure disconnecting means.

C. Separately Derived Systems: Shall be bonded and grounded in accordance with Code.

D. Customer-Station Transformer: Shall be bonded and grounded in accordance with the requirements of the serving electric utility.

E. Nonmetallic Raceways: A Code-sized green, or green with yellow stripe insulated conductor shall be installed with the circuit conductors, for equipment grounding. Ground conductor shall be installed in raceways with branch circuit wiring where indicated on the Contract Drawings.

F. Communication, Sound, and Signal Systems: Metal raceways and enclosures shall be grounded as directed by the City Engineer.

G. The interior metallic cold water pipe system shall be bonded to the main grounding electrode by a conductor sized in accordance with Code, but not smaller than No. 8 A.W.G.

H. Telephone service main backboard or cabinet shall be grounded in accordance with requirements of the telephone serving facility.

I. All grounding and bonding conductors shall be installed with sufficient slack to avoid breaking due to settlement and movement of conductors at attached points.

J. Flexible Conduit: Where equipment grounding or bonding conductors are required they shall be installed inside the conduit except bonding conductors may be installed exterior of the conduit if not over 3 feet maximum length, not smaller than No. 8 A.W.G., and if secured to the conduit at 6 inch. Flexible conduit not to be used as a ground path. Include code size green conductors in all flexible conduit.

K. Transformers and other isolated neutrals shall be grounded from the neutral bushing or connector to grounding electrodes, building steel or metallic code water pipe system.

L. All conduit stub-ups shall be grounded and where multiple stub-ups are made within an equipment enclosure such as a switchboard, they shall be equipped with grounding bushings and bonded together to the enclosure, and the enclosure ground bus with code sized copper conductors.

M. Metallic conduits, wireways, metal enclosures of busways, electrical equipment housing and all non-current carrying metallic parts shall be grounded. The metallic conduit system shall be used for equipment and enclosure grounding but not as a system ground conductor.

3.2 MEASUREMENT OF RESISTANCE TO GROUND

A. All Systems**:** Measure by the "direct" method or the "Fall of Potential" method. The "direct" method, or two terminal test, includes a Megger Earth Tester with terminals connected to the electrode under test and to an all metallic water pipe system. The following limitations apply to this method:

1. The water pipe system must be extensive enough to have a negligible resistance.

2. The water pipe system must be metallic throughout, without any insulating couplings or flanges.

3. The earth electrode under test must be far enough away from the water pipe system to be outside its sphere of influence. Rule of thumb: Distance from the earth-electrode system to the water pipe system should be about 10 times the radius of the electrode or grid to obtain a measurement within an accuracy of 10 percent.

4. Submit test report of the main building grounding electrode's resistance to ground to the City Engineer.

B. Test each receptacle or branch circuit breaker having ground-fault circuit protection to assure that the ground-fault circuit interrupter will not operate when subjected to a ground-fault current of less than 4 milliamperes and will operate when subjected to a ground-fault current exceeding 6 milliamperes. Perform testing using an instrument specifically designed and manufactured for testing ground-fault circuit interrupters. "TEST" button operation will not be acceptable as a substitute for this test. Replace receptacles that do not shutoff power with 5/1000 of an ampere within 1/40th of a second and retest. Submit test report signed by Test Engineer who performed this test.

(END OF SECTION)

SECTION 16320

TRANSFORMERS

PART 1- GENERAL

1.1 SCOPE

A. Required**:** Provide and install dry type transformers work as indicated on the Contract Drawings and Schedules and herein specified.

B. Comply with the General Conditions, General Requirements and the requirements of Division 16 concerning definitions, guarantees, submittals, as-builts, clean-up, etc. as applicable to work of this Section.

1.2 RELATED WORK

A. Related Sections: The following sections contain requirements that relate to this section:

1. Section 16190, Electrical Identification.

2. Section 16560, Municipal Facilities Electrical Commissioning Requirements for commissioning requirements.

3. Section 16570, Municipal Facilities Electrical Testing Requirements for testing requirements.

1.3 QUALITY ASSURANCE

A. Manufacturers: Firms regularly engaged in manufacture of power/distribution transformers of types and ratings required, whose products have been in satisfactory use in similar service for not less than 5 years.

B. Installer's Qualifications: Firm with at least 5 years of successful installation experience on projects utilizing electrical power and distribution transformers similar to those required for this project.

C. NEC Compliance: Comply with NEC as applicable to installation and construction of electrical power/distribution transformers.

D. ANSI Compliance: Comply with applicable requirements of ANSI Standards C57-Series pertaining to power/distribution transformers.

E. NEMA Compliance: Comply with requirements of NEMA Std Pub/No.'s ST 20; "Dry-Type Transformers for General Applications", TR 1.

F. UL Compliance: Comply with applicable requirements of ANSI/UL 506; "Safety Standard for Specialty Transformers". Provide power/distribution transformers and components which are UL-listed and labeled.

G. NESC Compliance: Comply with applicable requirements of National Electrical Safety Code (ANSI Std C2) pertaining to indoor installation of transformers.

H. Testing Agency Qualifications: In addition to requirements specified in Section 01453, "Quality Control," an independent testing agency shall meet OSHA criteria for accreditation of testing laboratories, Title 29, Part 1907; or shall be a full-member company of the InterNational Electrical Testing Association.

1. Testing Agency's Field Supervisor: Person currently certified by the InterNational Electrical Testing Association or the National Institute for Certification in Engineering Technologies, to supervise on-site testing specified in Part 3.

I. Listing and Labeling: Provide transformers specified in this Section that are listed and labeled.

1. The Terms "Listed" and "Labeled": As defined in NFPA 70, Article 100.

2. Listing and Labeling Agency Qualifications: A "Nationally Recognized Testing Laboratory" as defined in OSHA Regulation 1910.7.

1.4 SUBMITTALS

A. Conform to applicable provisions of Section 01330, "Shop Drawings/Submittals" and as herein specified.

B. Product Data**:** Submit manufacturer's technical product data including rated KVA, frequency, primary and secondary voltages, percent taps, polarity, impedance and certification of transformer performance efficiency at indicated loads, percentage regulation at 100 percent and 80 percent power factor, no-load and full-load losses in watts, percent impedance at 75 deg. C, hot-spot and average temperature rise above 40 deg. C ambient temperature, sound level in decibels, and standard published data.

C. Shop Drawings: Submit manufacturer's drawings indicating dimensions, and weight loadings for transformer installations, showing layouts, mountings and supports, spatial relationship to panelboards and associated equipment, include transformer connections to electrical equipment.

D. Wiring Diagrams: Submit wiring protection and control diagrams for power distribution transformers. Clearly differentiate between portions of wiring that are manufacturer-installed and portions to be field-installed.

PART 2 -- PRODUCTS

2.1 ACCEPTABLE MANUFACTURERS

A. Available Manufacturers: Subject to compliance with requirements, manufacturers offering products which may be incorporated in the work included, but are not limited to the following:

1. Eaton;

2. Schneider Electric;

3. Siemens;

4. Or equal.

2.2 DISTRIBUTION TRANSFORMERS

A. General: Except as otherwise indicated, provide manufacturer's standard materials and components as indicated by published product information, designed and constructed as recommended by manufacturer, and as required for completed installation.

B. 15 KVA and Above**:** Shall have drip-proof ventilated enclosures and copper coils of continuous wound construction impregnated with non-hygroscopic thermosetting varnish. Cores shall be constructed of high grade non-aging silicon steel, with high magnetic permeability and low hysteresis losses. Flux densities shall be well below the saturation point. Vibration-absorbing mounts shall be provided between the core/coil and the mounting base. Provide four 2-1/2 percent full capacity primary taps, two above and two below, the rated nominal voltage. Terminals shall be accessible from the front. Insulation materials shall be in accordance with NEMA ST20 standards for a 220 degrees C. U.L. recognized insulation system. Full load temperature rise shall not exceed 80 degrees C. in a 40 degrees C. ambient.

C. Less than 15 KVA: Wall mounted type, copper coils; full load temperature rise shall not exceed 115 degrees C. in a 40 degrees C. ambient.

D. Finishes: Coat interior and exterior surfaces of transformer, including bolted joints, with manufacturer's standard color baked-on enamel.

2.3 CONTROL AND SIGNAL TRANSFORMERS

A. Units comply with NEMA ST 1 and are listed and labeled as complying with UL 506.

B. Ratings: Continuous duty. If rating is not indicated, provide capacity exceeding peak load by 50 percent minimum.

C. Description: Self-cooled, 2 windings.

PART 3 -- EXECUTION

3.1 INSPECTION

A. Installer must examine areas and conditions under which power/distribution transformers and ancillary equipment are to be installed, and notify Contractor in writing of conditions detrimental to proper completion of the work. Do not proceed with the work until satisfactory conditions have been corrected in a manner acceptable to Installer.

B. Coordinate transformer installation work with electrical raceway and wire/cable work, as necessary for proper interface.

C. Tighten electrical connectors and terminals, including screws and bolts, in accordance with equipment manufacturer's published torque tightening values for equipment connectors. Where manufacturer's torquing requirements are not indicated, tighten connectors and terminals to comply with tightening torques specified in UL Std 486A and B.

3.2 GROUNDING

A. Provide equipment grounding connections for power/distribution transformers as indicated. Tighten connections to comply with tightening torques specified in UL Std 486A to ensure permanent and effective grounding.

3.3 CLEANING

A. On completion of installation, inspect components. Remove paint splatters and other spots, dirt, and debris. Repair scratches and mars on finish to match original finish. Clean components internally using methods and materials recommended by the manufacturer.

3.4 INSTALLATION

A. Comply with safety requirements of IEEE C2, National Electrical Safety Code.

B. Arrange equipment to provide adequate spacing for access and for circulation of cooling air.

C. Identify transformers and install warning signs according to Section 16190, "Electrical Identification."

D. Tighten electrical connectors and terminals according to manufacturer's published torque-tightening values. If manufacturer's torque values are not indicated, use those specified in UL 486A and UL 486B.

3.5 TESTING

A. Prior to energizing of transformers, check all accessible connections for compliance with manufacturer's torque tightening Specifications.

B. Prior to energizing, check circuitry for electrical continuity, and for short-circuits.

C. Upon completion of installation of transformers, energize primary circuitry at rated voltage and frequency from normal power source, and test transformers, including, but not limited to, audible sound levels, to demonstrate capability and compliance with requirements. Where possible, correct malfunctioning units at site, then retest to demonstrate compliance; otherwise, remove and replace with new units or components, and proceed with retesting.

(END OF SECTION)

SECTION 16330

PANELBOARDS

PART 1 -- GENERAL

1.1 SCOPE

A. Required: Provide and install complete equipment including circuit breakers and panelboards as indicated on the Contract Drawings and herein specified.

B. Comply with the General Conditions, General Requirements and the requirements of Section 16020, "Municipal Facilities General Electrical Requirements" of this Division 16 concerning definitions, guarantees, submittals, as-builts, clean-up, etc. as applicable to work of this Section.

1.2 RELATED WORK

A. Related Sections: The following sections contain requirements that relate to this section:

1. Section 16560, "Municipal Facilities Electrical Commissioning Requirements" for commissioning requirements.

2. Section 16570, "Municipal Facilities Electrical Testing Requirements" for testing requirements.

1.3 QUALITY ASSURANCE

A. Comply with applicable provisions of Subsection 1.2 of Section 16020, "Municipal Facilities General Electrical Requirements".

B. Conform to the applicable provisions of Subsection 1.6 of Section 16020, "Municipal Facilities General Electrical Requirements" related to legal requirements and standards including NEMA, ANSI and IEEE Standards, NFPA 70, and Federal Specifications.

1. 4 SUBMITTALS

A. Submit under the provisions of Section 01330, "Shop Drawings/Submittals".

B. Product Data: For each type of panelboard, overcurrent protective device, accessory, and component indicated. Include dimensions and manufacturers' technical data on features, performance, electrical characteristics, ratings, and finishes.

C. Maintenance Data: For panelboards and components to include in maintenance manuals specified in Division 1. In addition to requirements specified in Section 01770, "Closeout Procedures," include the following:

1. Manufacturer's written instructions for testing and adjusting overcurrent protective devices.

2. Time-current curves, including selectable ranges for each type of overcurrent protective device.

PART 2 -- PRODUCTS

2.1 GENERAL REQUIREMENTS

A. Cabinets to House Panelboards: Cabinets shall be formed of galvanized metal, chemically cleaned, and all breaks in galvanizing shall be painted with metallic aluminum paint. Minimum size: 20 inches wide by 5-3/4 inches deep. Trims and doors shall be chemically cleaned. Provide ANSI synthetic alkalyd factory enamel finish on the exterior and interior of panels. Provide for circuit directory behind door with glass or heavy plastic protection. Cabinets shall be flush or surface mounted type as indicated with screw cover, hinged doors with flush lock keyed to operate from one key. Cabinets greater than three feet shall have three trim bolts on each side.

B. Identification: Each panelboard shall have an exterior engraved laminated plastic nameplate identifying the panelboard as designated on the Drawings and indicating voltage, phases, and number of system conductors. For example: "Panel A 277/480V. 3ph, 4W". Lettering shall be white on black finish and 3/16 inch high minimum. Nameplates shall be affixed with a minimum of two escutcheon pins or screws. Each circuit breaker shall have a permanent metal or plastic number to identify each circuit. A circuit schedule card and holder shall be mounted on the inside of the door and covered with plastic.

C. Protective Devices:

1. Protective devices, main, branch or sub-feed shall be thermal-magnetic-molded-case circuit breakers, bolt-on type ampacities as scheduled on Drawings. Provide single handle, common trip for two and three-pole units. Handle ties are not acceptable.

2. Circuit Breakers, 250A and Larger: Adjustable magnetic trip setting.

3. Electronic Circuit Breakers, 400A and Larger: RMS sensing; field-replaceable rating plug; with the following field-adjustable settings:

   a. Instantaneous trip.

   b. Long- and short-time pickup levels.

   c. Long- and short-time time adjustments.

   d. Ground-fault pickup level, time delay, and I^2t response. Where indicated on the drawings.

4. GFCI Circuit Breakers: Single- and two-pole configurations with 5-mA trip sensitivity, where indicated on the lighting and appliance panelboards.

5. Molded-case circuit breakers shall be suitable for application; Rype SWD for switching fluorescent lighting loads; Type HACR for heating, air-conditioning, and refrigerating equipment.

D. Electrical Equipment Adjacent to Panelboards: Where scheduled provide a separate cabinet with screw cover and hinged door with flush lock keyed alike with panelboard. A single cabinet may be used when a compartment (with appropriate barriers) under separate lockable door and cover is provided.

E. Finish: As specified for service switchboards in Section 16270, "Service and Distribution Switchboard" service and distribution switchboards.

2.2 DISTRIBUTION PANELBOARDS

A. Each distribution panelboard shall be a deadfront, deadrear, U.L. listed, circuit breaker type with copper buses and comply with Federal Specification W-P-115a. Construction shall be NEMA Class I. Electrical ratings shall be as indicated on the Drawings.

B. Series-connected or "integrated equipment" short circuit ratings shall not be applied in lieu of, or to comply with, short circuit and interrupting capacity ratings indicated on the Drawings unless specifically approved by the City Engineer. Provide fronts with flush cylinder tumbler locks, trim clamps, and concealed hinges.

C. Double doors or doors over 48 inches high shall have 3-point latching. Provide 2 keys for each panelboard. Furnish panelboards with main lugs or main circuit breakers and all other circuit breakers as indicated on the drawings. Each circuit breaker shall be provided with a means for individual padlocking. Distribution panelboards shall be Square D. Co. I-line type or equal.

2.3 LIGHTING AND APPLIANCE PANELBOARDS

A. Each lighting and appliance panelboard shall be a U.L. listed circuit breaker type with copper buses and meet Federal Spec. W-P115a. Electrical ratings shall be as indicated on the Drawings. Series connected or "integrated equipment" ratings shall not be applied in lieu of or to comply with short circuit and interrupting ratings indicated on the Drawings, unless specifically approved by the City Engineer. Provide fronts with flush cylinder tumbler locks, trim clamps, and concealed hinges. Provide two keys for each panelboard. Furnish panelboards with main lugs or main circuit breakers and all circuit breakers as indicated on the Drawings.

B. Each circuit breaker shall be provided with a means for individual padlocking. Lighting and appliance panelboards shall be Square D. Co. Type NQO for 120/240 or 208/120 volt systems, and Type NEHB for 480/277 volt systems.

2.4 FABRICATION AND FEATURES

A. Hinged Front Cover: Entire front trim hinged to box and with standard door within hinged trim cover.

B. Directory Card: With transparent protective cover, mounted inside metal frame, inside panelboard door.

C. Bus: Hard-drawn copper, 98 percent conductivity or Tin-plated aluminum.

D. Main and Neutral Lugs: Mechanical type suitable for use with conductor material.

E. Equipment Ground Bus: Adequate for feeder and branch-circuit equipment ground conductors; bonded to box.

F. Future Devices: Mounting brackets, bus connections, and necessary appurtenances required for future installation of devices.

G. Isolated Equipment Ground Bus: Adequate for branch-circuit equipment ground conductors; insulated from box, where indicated on the Drawings.

H. Extra-Capacity Neutral Bus: Neutral bus rated 200 percent of phase bus and UL listed as suitable for nonlinear loads, where indicated on the Drawings.

I. Skirt for Surface-Mounted Panelboards: Same gage and finish as panelboard front with flanges for attachment to panelboard, wall, and ceiling or floor. Provide back, sides and removable front.

J. Feed-through Lugs: Mechanical type suitable for use with conductor material. Locate at opposite end of bus from incoming lugs or main device, where indicated on the Drawings.

PART 3 -- EXECUTION

3.1 GENERAL INSTALLATION OF PANELBOARDS

A. Install equipment square, level and secure to the building structure by bolting.

B. Align top of adjacent panelboards unless specifically noted otherwise. Install panelboards over 29 inches high to mount highest protective device handle a maximum of 6 feet-6 inches or 5 feet-6 inches for panelboards up to 29 inches high, except where adjacent to taller panelboards.

C. Flush enclosures shall be installed with the front edge flush with combustible finish surfaces and not more than 1/4 inch behind noncombustible finish surfaces, and shall be secured to framing or blocking except where embedded in masonry or concrete.

D. Provide weather-proof gaskets on trims and doors of panelboards located in mechanical areas.

3.2 OTHER APPLICABLE REQUIREMENTS

A. Provide a typewritten circuit directory for each branch circuit. Obtain City facility room numbers and use in final directory.

B. Provide a schematic diagram and sequence of operation for control devices installed under separate door adjacent to panelboards.

C. Install nameplates in accordance with provisions noted in Section 16190, "Electrical Identification".

D. Equip each circuit breaker for electrical discharge lamps with a locking device unless circuit will be switched at panelboard. Equip each circuit breaker for night-light circuits, fire alarm, security and control circuits with a locking device.

E. Provide filler plates for all unused spaces.

F. Stub five 3/4-inch empty conduits from each flush mounted panelboard into accessible ceiling space and cap for future use. Stub four 1-inch empty conduits into raised floor space or below slab not on grade

G. Wiring in Panelboard Gutters: Arrange conductors into groups and bundle and wrap with wire ties after completing load balancing.

3.3 COMMISSIONING

A. Spot check breaker settings against Short Circuit Study

B. Spot check phase balance after system is under load. Ensure proper, thorough and accurate identification of load. Trip breakers and validate load identified. Test GFI breakers.

C. Receptacle Polarity Test: Spot check receptacles installed or reconnected under this contract with a receptacle circuit tester. Tester shall test for open ground, reverse polarity, open hot, open neutral, hot and ground reversed, hot or neutral and hot open.

D. Check circuit labeling by de-energizing circuits while circuit tester is in the receptacle. Labeling shall be checked on the load/receptacle and at the breaker

3.4 CLEANING

A. On completion of installation, inspect interior and exterior of panelboards. Remove paint splatters and other spots. Vacuum dirt and debris; do not use compressed air to assist in cleaning. Repair exposed surfaces to match original finish.

(END OF SECTION)

SECTION 16340

LOW VOLTAGE MOTOR CONTROL

PART 1 -- GENERAL

1.1 THE REQUIREMENT

A. The CONTRACTOR shall furnish and install all group-mounted and unit motor control as required for each motor furnished for installation all in accordance with the requirements of the Contract Documents.

B. When motors furnished differ from the indicated, the CONTRACTOR shall, at no additional cost to the CITY, make the necessary adjustments to wiring, conduit, disconnect devices, motor starters, branch circuit protection, and other affected material or equipment to accommodate the motors actually installed.

C. Make like items of equipment provided hereunder the end products of one manufacturer in order to achieve standardization for appearance, operation, maintenance, spare parts, and manufacturer's service.

1.2 RELATED WORK SPECIFIED ELSEWHERE

A. The work of the following Divisions or Sections applies to the work of this Section. Other Sections of the Specifications, not referenced below, shall also apply to the extent required for proper performance of this work.

1. Section 16020, Municipal Facilities General Electrical Requirements.

2. Section 16100, Basic Materials and Methods.

3. Section 16490, Electric Motors.

1.3 REFERENCE SPECIFICATIONS, CODES, AND STANDARDS

A. All work specified herein shall conform to or exceed the applicable requirements of the referenced portions of the following publications to the extent that the provisions thereof are not in conflict with other provisions of these specifications.

1. Codes and Standards:

LAEC	City of Los Angeles Electrical Code, latest adopted edition
California Code of Regulations	Title 8, Industrial Relations, Subchapter 5, Electrical Safety Orders.

2. Commercial Standards:

UL 845	Standards for Safety Electric Motor Control Centers.
NEMA ICS-1	General Standard for Industrial Control and Systems
NEMA ICS-2	Industrial Control Devices, Controllers and Assemblies

1.4 CONTRACTOR SUBMITTALS

A. Shop drawing submittals shall comply with the "Contractor Submittals" paragraph of Section 16020, "Municipal Facilities General Electrical Requirements".

B. The following submittals and specific information shall be provided.

1. One-line diagrams,

2. Elementary diagrams,

3. Connection diagrams,

4. Interconnection diagrams,

5. Protective device time-current characteristics on conventional-sized transparencies,

6. Operational description,

7. Installation instructions,

8. Maintenance instructions,

9. Spare parts list,

10. Test reports, including procedures, test conditions, results and graphs.

1.5 QUALITY ASSURANCE

A. Quality assurance shall be in accordance with Section 16020, "Municipal Facilities General Electrical Requirements".

B. Electrical and Mechanical Testing: All components shall be factory tested in accordance with the applicable NEMA ICS requirements.

C. Field Testing: Field tests shall be performed in accordance with Section 16570, "Municipal Facilities Electrical Testing Requirements".

PART 2 -- PRODUCTS

2.1 MOTOR CONTROL, GENERAL

A. Provide each motor with a suitable controller and devices that will function as specified for the respective motors and meeting NEMA ICS 2, the NEC, and UL.

B. Provide each motor controller with thermal overload protection in all ungrounded phases. Use protection consisting of thermal overload relays meeting NEMA ICS 2 which are

sensitive to motor current and mounted within the motor controller, or a combination of thermal protectors embedded within the motor windings and controller-mounted overload relays, as indicated. Use overload protection devices of the inverse-time current characteristic type.

C. Provide controller-mounted overload relays of the manual-reset type with externally operated reset button when used without motor thermal protectors; when used in conjunction with thermal protectors, provide the automatic reset type. Select and install overload relay heaters after the actual nameplate full-load current rating of the motor has been determined.

D. If power factor correction capacitors are connected on the load side of the overload relays, incorporate the resulting reduction in line current in the selection of overload relay heaters.

E. Install and connect any required thermal protector monitoring relay provided by motor manufacturer in motor-control circuit and provide manual reset function.

2.2 MANUALLY OPERATED STARTERS, FRACTIONAL HORSEPOWER

A. Provide starters meeting NEMA ICS 2 with the enclosures shown, rated 1 hp at single-phase, ac voltages of 115 and 230 volts, and with thermal overload protection, and toggle or pushbutton operation. Provide for locking in the OFF position.

2.3 MANUALLY OPERATED STARTERS, INTEGRAL HORSEPOWER

A. Provide starters meeting NEMA ICS 2 of the horsepower rating, voltage, number of phases, and enclosure shown and with thermal overload protection, and pushbutton or toggle switch operation. Provide for locking in the OFF position. Provide running overcurrent protection.

2.4 FULL VOLTAGE MAGNETIC STARTERS

A. Provide starters meeting NEMA ICS 2, Class A, with the rating and enclosure shown. Starters shall be full voltage, non-reversing horsepower rated, providing combined protection against running and stalled overloads. Thermal overload relays on all phases shall be temperature compensated bimetallic type with manual reset and inherent single phasing prevention.

2.5 REDUCED VOLTAGE STARTERS

A. Provide starters meeting NEMA ICS 2, Class A, with the rating and enclosure shown. Starters shall be single-step magnetic type, having closed circuit transition and an adjustable time interval between application of starting and running conditions to the motors. Provide autotransformers suitable for medium-duty service as specified in NEMA ICS 2, and with overtemperature protection. Provide taps giving approximately 50 percent, 65 percent, and 80 percent of line voltage at output terminals.

2.6 CONTROL POWER TRANSFORMERS

A. Supply individual control power transformers unless noted otherwise. The transformers shall have sufficient capacity to serve the connected load and limit voltage regulation to 10 percent during contact or pickup. Fuse one side of the secondary winding and ground the other side. Provide primary, current limiting fuses where fuses shown on Drawings, or where required by applicable codes and standards.

2.7 MOTOR CONTROL CENTERS

A. Provide motor control centers and components meeting the requirements of the latest revised NEMA and UL standards and the following requirements, unless otherwise indicated:

RATING	
Voltage	As indicated on the Drawings
Short Circuit Rating	amps rms symmetrical as shown.
NEMA Class	Class 1, or 2, Types A, B, or C with all remote control and signal circuits wired to a separate terminal board compartment in each motor control center lineup; all additions and revisions shall be included in the final as-built record drawings.
ENCLOSURE	
Type	NEMA Type 1 for indoor conditioned locations, Type 12 for indoor unconditioned locations, or NEMA 3R for outdoor locations.
Vertical Section	90-inches high, 20-inches wide, and as shown
Dimensions	20-inches deep, depth as shown
Finish	Exterior: manufacturer's standard gray over a primer and rust inhibitor or as per architectural standard; Interior: white lacquer or enamel
Construction	Sheet steel reinforced with channel or angle irons, section constructed so they may be butted flush, end-to-end against a similar section without bolts, nuts, or cover plates causing interference; removable top cover plates and bottom cover plates
Section Mounting	Removable formed steel channel sills and removable lifting angles
Horizontal Wiring	Full width, top and bottom, accessible from front
Vertical Wiring	Full height, isolated from unit Compartment starters with a separate door, accessible from front
Unit Compartment	Individual compartments separated by steel barriers for each starter, feeder, or other unit capable of being wired from front without unit removal

Compartment Doors	Separate hinged doors for each starter, feeder, or other unit
Door Interlocking	Individual Starter and feeder doors mechanically interlocked so doors cannot be opened with unit energized; defeater mechanism to allow intentional access at any time; provisions for padlocking external disconnect handles in the OFF position
Cable Entrance	Main circuits enter from bottom; control and feeder circuits enter from bottom
Busway Entrance	Pull box with flanged connection for incoming busway, bus connection to motor control center main power bus and cable connection to ground bus and neutral bus; match dimensions of incoming busway; Belleville washers on all bus connection bolts

BUS

Horizontal Power Bus	3-phase fully-insulated, copper bus entire width of control center rated as indicated, constructed to allow future extension of additional sections; pressure type solderless lugs for each incoming line cable; Belleville washers on all bus connection bolts
Vertical Power Bus	3-phase copper bus full height of section rated 300 amps minimum; "sandwich" type bus insulation that provides dead front construction with starter units removed except for bus stab openings; Belleville washers on all bus connection bolts
Neutral Bus	50 percent neutral Copper; Belleville washers on all bus connection bolts
Ground Bus	Copper, 400A minimum capacity; Belleville washers on all bus connection bolts
Bus Bracing	42,000 amps rms symmetrical or as noted on the drawings

MOTOR STARTER UNITS

General	Individual components and control devices including pushbuttons, selector switches, indicating lights, control relays, time delay relays, and elapsed time meters as specified in Section 16100, "Basic Materials and Methods"
Construction	Drawout combination type with stab connections, except where size and weight of equipment make

	this impracticable; readily interchangeable with starters of similar size; provide pull-apart unit control wiring terminal boards on all units
Starters	NEMA standard rating, NEMA Size 1; minimum meeting requirements specified under article 2.1, MOTOR CONTROL, GENERAL
Disconnecting Device	As indicated; disconnecting device lockable in OPEN position
Circuit Breakers	Molded case motor circuit protectors with manufacturer's recommended trip setting for maximum motor protection, tripping indicated by operating handle position; interrupting capacity required for connection to system with short circuit capacity indicated; shunt trip for ground fault protection; copies of circuit breaker time-current characteristics
Fused Switches	Heavy-duty (HD), motor rated, load-break, quick-make, quick-break type meeting requirements of UL and NEMA KS 1; current-limiting fuses as specified with rejection clips
Load Detector Relays	Manual reset with adjustable differential; Relays Cutler-Hammer Type D60LA, or equal
Motor Overload	Temperature compensated, three-pole, Protection bimetallic thermal overload relay; manual-reset overload relays when used independently of other overload protection; automatic-reset when used with integral motor thermal protector
Motor Thermal	Manual-reset interposing Protection Interface relay for connection to motor-mounted thermal protector system
Ground Fault	Same as under FEEDER UNITS AND MAIN PROTECTIVE DEVICE, except instantaneous operation device
Capacitor Connection	Special terminals to allow easy connection of power factor correction capacitors on the source side of starter overload relays on all starters where capacitor connection is shown

CONTROL UNITS

Disconnecting Device	Disconnecting device capable of de-energizing all circuits in the unit. Provide a warning sign giving location of disconnecting device if not located in the unit.
Control Devices	As indicated on the Drawings and as specified in Section 16100, "Basic Materials and Methods"
Wire Markers	Permanent sleeve type markers to be applied to all wires
Control Wiring	Minimum wire size 14 AWG copper

FEEDER UNITS AND MAIN PROTECTIVE DEVICE

Construction	Same as under MOTOR STARTER UNITS, UL service entrance label on main protective device
Circuit Breakers	Unless otherwise indicated, molded case with thermal-magnetic trip and interrupting capacity required for connection to system with short circuit capacity indicated; tripping indicated by operating handle position; suitable for use with 75 degrees C wire at full NEC 75 degrees C ampacity; shunt trip for ground fault protection, and phase monitoring relay; for main and feeder protective devices, use molded case circuit breakers with ambient insensitive solid state trips and having the current sensors and solid state logic circuits integral in the circuit breaker frame; use solid state current control providing adjustable ampere setting, adjustable long-time delay, adjustable short-time trip and delay band, fixed instantaneous trip set at 15 times the current sensor rating and adjustable ground fault trip and delay band; make settings behind a sealable tamper-proof transparent cover; locate a trip button on the front cover of the circuit breakers to permit mechanical simulation overcurrent tripping for test purposes and to trip the breaker quickly in an emergency situation; Submit copies of circuit breaker time-current characteristics.
Fused Switches	Heavy-duty (HD) motor rated, load-break, quick-make, quick-break type meeting requirements of UL and NEMA KS 1; suitable for use with 75 degrees C wire at full NEC 75 degrees C ampacity; current-limiting fuses as specified with rejection clips
Ground Fault Protection	Suitable for 480-volt, 3-phase, three-wire, four-wire, solidly grounded wye

	system; consisting of ground sensors encircling all phase conductors and neutral conductor where used and connected to ground relays with adjustable pickup settings and time-current characteristics indicated; circuit breaker shunt trip and relay operating from a fused 120-volt ac control source within the control center; ground fault system ITE Ground Shield, General Electric Ground Break, or equal; copies of relay time-current characteristics
Key Interlocking	Manufacturer's standard Kirk key interlocking where indicated
Phase Monitoring	3-phase monitoring relay to protect Motor against low Relay voltage, voltage unbalance, and phase reversal; Furnas Class 47, or equal
INSTRUMENTS	
Voltmeter	Scale indicated, switchboard class with 250-degree scale, GE AB-40, or equal, panel type, nominal 4-1/2-inch model with ON/OFF single-phase, 3-phase OFF, four-position, phase-to-phase, phase-to-ground, OFF, seven-position selector switch
Ammeter	Scale indicated, switchboard class with 250-degree scale, GE AB-40, or equal, panel type, nominal 4-1/2-inch model with ON/OFF single-phase, 3-phase OFF, four-position selector switch, C.T.'s with ratio indicated
Ground Detection Lights	Heavy-duty oiltight type with operation explanation nameplate
NAMEPLATES	Engraved with inscription as shown on the single-line diagram, laminated plastic nameplates for each motor control center and each unit, blank nameplates on spaces for future units Nameplates that are white and engraved to a black core; attach nameplates with stainless steel panhead screws
SPACE HEATERS	Thermostatically controlled space heater in the bottom of each vertical section for operation from an external 120V power source
DIAGRAMS	Schematic (elementary) and outline diagrams, equipment schedules, wireless unit connection diagrams, interconnection diagrams

2.8 ACCEPTABLE MANUFACTURERS

A. Eaton;

B. Schneider;

C. Or equal.

PART 3 -- EXECUTION

3.1 GENERAL

A. Perform work in a workmanlike manner with craftsmen skilled in the particular trade. Provide work presenting a neat and finished appearance.

3.2 INSTALLATION

A. Install equipment in strict accordance with submittal drawings and manufacturer's recommendations. Install motor control centers in accordance with NEMA ICS 2.3 as a minimum. Secure motor control centers using approved means as per latest standards and regulations. Grout mounting channels provided with motor control into the floor or mounting pads.

B. Provide a qualified, factory-trained representative to supervise installation, final adjustment, and initial energization of this equipment. Make this representative available for as long as his services are required, but in any case, for a period of two (2) days minimum. At the end of installation and adjustment, provide certification signed by this representative that the equipment has been properly installed and tested, and is ready for energization.

C. Retighten to NEMA standards all current-carrying bolted connections and all support framing and panels.

D. Field adjust the trip settings of all motor starter magnetic trip only circuit breakers. Adjust as per manufacturer’s recommendations. Determine motor rated current from motor nameplate following installation. In the selection of overload relay heaters, allow for motor current reduction where power factor correction capacitors are installed on the load side of the overload heaters. Prepare a typed tabulation of motor name, motor horsepower, nameplate full load current, measured load current, heater catalog number, protective device, trip setting, and include copy in the Technical Manual. Attach to the tabulation a copy of the starter manufacturer's overload heater selection tables, including only the tables for the particular starters provided.

E. After the equipment is installed, touch up any scratches, marks, etc., incurred during shipment or installation of equipment. If required by the ENGINEER because of undue amount of scratches, repaint the entire assembly.

3.3 FIELD TESTS

A. Field tests shall be in accordance with Section 16570, "Municipal Facilities Electrical Testing Requirements".

(END OF SECTION)

SECTION 16380

MUNICIPAL FACILITIES UNINTERRUPTIBLE POWER SYSTEM

PART 1 -- GENERAL

1.1 SCOPE

A. Required**:** Furnish and install the single or three phase uninterruptible power system (U.P.S.) and all accessories indicated on the Contract Drawings and herein specified.

B. Comply with the GENERAL CONDITIONS, GENERAL REQUIREMENTS and the requirements of Section 16020 of this DIVISION 16 concerning definitions, guarantees, submittals, as-builts, clean-up, etc. as applicable to work of this Section.

1.2 RELATED WORK

A. Related Sections: The following sections contain requirements that relate to this section:

1. Section 16560 " Municipal Facilities Electrical Commissioning Requirements " for commissioning requirements.

2. Section 16570 " Municipal Facilities Electrical Testing Requirements" for testing requirements.

1.3 LEGAL REQUIREMENTS AND STANDARDS

A. Comply with applicable Codes and Standards noted in Subsection 1.5 of Section 16020 and the following additional commercial standards:

1.	ANSI/IEEE 241	Electric Power Systems in Commercial Buildings, Recommended Practice for.
2.	ANSI/NEMA 250	Enclosures for Electrical Equipment.
3.	EIA	Electronic Industries Association Standards.
4.	IEEE-587	Standards for Surge Suppression.
5.	NEC	National Electrical Code; Article 700 Emergency Systems.
6.	NEMA PB2	Panelboard.
7.	UL 1012	Underwriter's Laboratory Listing.
8.	UL 1778	UL Standard for Safety – Uninterruptible Power Supply Equipment.
9.	IEEE 944	Recommended Practice for the Application and Testing of Uninterruptible Power Supply for power generating stations.

10.	NEMA PE1	Uninterruptible Power Systems.
11.	California Code of Regulations Commercial Standard	Title 8, Industrial Relations Subchapter 5, Electrical Safety Orders

1.4 SUBMITTALS

A. General**:** Conform to applicable provisions of Subsection 1. 6G in Section 16020 - GENERAL ELECTRICAL REQUIREMENTS.

B. Shop Drawings and Catalogue Data**:** Required to provide sufficient information to indicate scope and quality of the UPS System installation as follows:

1. Block diagram showing system relationships of major components and quantities and interconnecting cable requirements.

2. Control console and panel arrangements, equipment outlet devices, and special mounting details.

3. Wiring diagrams showing terminal identification for field-installed wiring.

4. One-line diagram showing input, output, DC, and bypass circuit breakers and their sizes.

5. Operating and services manuals, furnish 6 copies for the system. The manuals shall be bound in flexible binders and all data contained therein shall be printed or typewritten. Each manual shall include all instruction necessary for proper operation and receiving of the system, and shall include a complete block diagram of the system, a complete circuit diagnosis of the system, and a wiring designation schedule for each amplifier as well as other major components, and a replacement parts list.

6. Outline, plan, and elevation drawings, showing dimensions. Mechanical details shall include anchor bolt size and location requirements and net operating and shipping weights for the equipment.

C. The CONTRACTOR shall obtain and submit to the Engineer the test reports for all equipment and material subject to factory testing.

D. The CONTRACTOR shall obtain from the manufacturer all pass codes necessary to perform diagnostic testing and troubleshooting of the system. These pass codes shall be submitted to the ENGINEER and included in the operations and Maintenance manuals.

E. Test Reports: Contractor to provide to the City a bound report of all inspections and tests required in Section 3.

1.5 QUALITY ASSURANCE

A. General**:** Conform to applicable provisions noted in Subsection 1.7 of Section 16020 - GENERAL ELECTRICAL REQUIREMENTS.

B. Uninterruptible power system components shall be manufactured by firms that are regularly engaged in the production of UPS system including auxiliary equipment similar

to that required for this project and that have been in satisfactory service for at least 10 years.

C. Operation of the uninterruptible power system shall be demonstrated to the City Engineer to prove that under normal conditions UPS will provide power to the designated load without interruptions of functions and loss of stored information.

D. The UPS system, when specified as a three-phase unit, shall be a three-phase system in one unit. Use of three single-phase units to comprise a three-phase system is not acceptable.

E. Fabrication and assembly: Unless otherwise specified, the UPS shall be shop assembled in a single enclosure and shall utilize interchangeable plug-in printed circuit boards and power conversion components wherever possible. Shop assembly shall be performed by the UPS manufacturer; systems fabricated or assembled in whole or in part by parties other than the UPS manufacturer will not be acceptable.

F. Printed circuit boards: All printed circuit board components shall be sprayed on both sides with corrosion inhabitant compound, Konform C416, or equal.

G. During the warranty period, the CONTRACTOR shall respond to trouble calls with a competent repair person at the project site within 24 hours; the CONTRACTOR shall also maintain a full inventory of replacement parts so that all routine repairs can be completed within 24 hours. The manufacturer shall have a local representative to provide technical services.

1.6 WARRANTY

A. General Warranty: Special project warranty specified in this Article shall not deprive the Owner of other rights the Owner may have under other provisions of the Contract Documents and shall be in addition to, and run concurrent with, other warranties made by the Contractor under requirements of the Contract Documents.

B. Special Project Warranty:

1. All materials and equipment furnished and installed here under shall be new and free from all defects.

2. The Contractor shall guarantee the uninterruptible power system (UPS) including equipment and labor for a period of two (2) years from the date of final acceptance.

3. Should any trouble develop within two (2) years from date of final acceptance of the work, due to faulty material and/or workmanship, the trouble shall be corrected by the Contractor without expense to the City.

1.7 MAINTENANCE

A. Required**:** The Contractor shall respond to trouble calls with a competent repair person at the project site within 24 hours; Contractor shall also maintain a full inventory of replacement parts so that all routine repairs can be completed within 24 hours.

PART 2 -- PRODUCTS

2.1 THE SYSTEM

A. General Description**:** This Specification describes a continuous duty, single-phase on-line, solid-state uninterruptible power system (UPS). The UPS shall operate in conjunction with the plant electrical system to provide power conditioning, back-up, and distribution for electronic equipment loads.

B. The UPS shall consist of the following major equipment:

1. Inverter/charger.

2. Static bypass switch.

3. Enclosed, sealed, maintenance-free battery. Battery cabinets for longer protection times.

4. Input, battery, and output breakers.

5. Microprocessor controlled logic and control panel.

6. Six-pole output distribution panelboard.

7. System Metering.

8. Control Panel Display.

2.2 MODES OF OPERATION

A. Modes of This On-Line Fully Automatic System**:**

1. Normal: The critical load is continuously controlled by the inverter/charger. It derives power as needed from the commercial ac source and supplies filtered and regulated ac power to the critical load. In addition, simultaneous float-charging of the battery occurs.

2. Emergency: Upon failure of the commercial ac power, the critical load continues to be supplied by the inverter, which without any switching obtains its power from the storage battery. There is no interruption to the critical load upon failure or restoration of the commercial ac source.

3. Recharge: Upon restoration of the commercial ac source, the inverter/charger recharges the battery. This is an automatic function and causes no interruption to the critical load.

4. Bypass Mode: If the UPS must be taken out of service for overload, load fault, or internal failures, the bypass switch automatically transfers the load to the commercial ac power. Return from bypass mode to normal mode of operation is automatic, except for overload trip which requires manual reset. Transfer to bypass mode can also be initiated manually by operating a key controlled ON/OFF switch on the control panel.

5. Maintenance Mode: If the UPS must be taken out of service for maintenance or repair, the external manual bypass switch must be operated to transfer the load to the alternate source. This transfer shall occur without interruption.

6. Downgrade: If the batteries alone are taken out of service, they shall be disconnected from the by circuit breakers. The UPS shall continue to function and meet all of the performance criteria specified herein, except for the reserve time capability.

2.3 UPS PERFORMANCE CHARACTERISTICS

A. Power Ratings**:** 3.0 kVA or as calculated to meet specified backup power requirements for load power factor range of 0.85 lagging to 0.9 leading.

B. Input:

1. Nominal Input Voltage and Frequency: 60 Hz models: 120/240 vac, single-phase.

2. Operating Input Voltage Range: +13 percent to -20 percent of nominal without battery discharge.

3. Input Power Factor: 0.9 minimum at full load and nominal input voltage.

4. Input Current THD: 10 percent typical at full load (linear or non-linear).

5. Input Surge Suppression: Per IEEE-587 Standards.

C. Output:

1. Nominal Output Voltage: Same as input voltage.

2. Output Voltage Regulation: Within $\pm$2 percent from nominal output voltage for all operating conditions.

3. Manual Output Voltage Adjustment: Within $\pm$5 percent from nominal.

4. Transient Voltage Response: Within ±8 percent from nominal peak voltage for a 100 percent load step.

5. Transient Voltage Recovery: 100 msec to within ±2 percent of nominal.

6. Frequency Regulation: ±0.1 Hz.

7. Output Voltage Harmonic Distortion: 3 percent THD for 100 percent linear load, 5 percent THD for 100 percent non-linear loads at nominal input voltage.

8. Output fully isolated from input and battery.

9. Common mode noise attenuation (without static switch): 55 dB up to 500 kHz.

D. Static Bypass: A static bypass switch includes transfer control logic which automatically transfers the load to bypass upon the following conditions:

1. Output overvoltage or undervoltage.

2. Overload condition of a duration longer than 10 minutes.

3. Overtemperature.

4. Inverter failure: Return to UPS mode of operation upon restoration of normal operating conditions shall be automatic except for overload or inverter failure which shall require a manual restart. Electro-mechanical transfers are break before make.

E. Microprocessor Controlled Logic: Fully automatic operation of the UPS shall be provided through the use of microprocessor-controlled logic. All operating and protection parameters shall be firmware controlled, to eliminate the need for manual adjustments to compensate for component tolerances. The logic includes system and battery test capability to facilitate maintenance and troubleshooting. Start-up, transfers, and battery recharge shall be all automatic functions.

F. Control Panel**:** The UPS shall be equipped with a control panel that provides the following metering, monitoring, and control functions:

ac input voltage	(LINE VOLT)
ac input current	(LINE AMP)
ac input frequency	(LINE HZ)
dc battery voltage	(BATT VOLT)
dc battery current	(BATT AMP)
ac inverter voltage	(LOAD VOLT)
ac inverter current	(LOAD AMP)
ac inverter frequency	(LOAD HZ)

1. The metering display shall automatically blank after five minutes.

2. Alarm Monitoring: The following alarm indicators shall be provided on the control panel display:

a. System Normal (Green): Line is supplying power to the UPS. The UPS is controlling the load voltage, and charging the battery.

b. Alarm (Red): This indicator flashes whenever an alarm condition exists.

c. Battery undervoltage (Yellow): The battery voltage has fallen below 128 v dc. Alarm condition ceases when the battery voltage reaches 132 v dc.

d. Battery discharge (Yellow): The battery is supplying power to the load.

e. Output Overload (Red): The output current exceeds the maximum rating of the system. If the output current exceeds 105 percent of system rating for 10 minutes, the system will respond by transferring to bypass.

f. Sync Loss (Red): The utility line frequency has exceeded safe operating tolerances (±1 Hz or ±3 Hz, switch selectable) and/or the UPS is not synchronized within 5 degrees phase angle of the desired operating point.

g. AC Input Failure (Red): The line voltage is not within normal operating range for the equipment (+13 percent to -20 percent of nominal). The load is being powered by the battery, if not in bypass mode of operation.

h. Over Temp (Red): The internal temperature of the UPS cabinet is above 65 degrees C. UPS will transfer to bypass.

i. Shutdown Imminent (Red): Inverter shutdown is imminent (triggered by the battery discharging below 110 v dc or output overload over eight minutes). The load will be dropped when the battery falls below 95 v dc or the overload exceeds 105 percent for 10 minutes unless the bypass reacts.

j. On Bypass (Red): The load is receiving power which is bypassing the power protection circuitry of the UPS.

k. Inverter not ready (Red): The inverter is not ready to support the critical load.

3. Controls: The following control functions shall be provided on the control panel:

a. ON/OFF: Key operated switch which activates and deactivates UPS operation.

b. Alarm Off: Pushbutton which silences the audible alarm. The alarm will sound again at the reoccurrence of an alarm condition.

c. Test: Pushbutton which initiates a system test routine by simulating a utility power outage. The critical load will be supplied by the battery. When the pushbutton is released, the control circuitry resynchronizes the inverter to the input line and resumes battery charging.

4. Other controls located behind the front door shall include:

a. Audible Alarm Volume Control: Loud, soft and off.

b. Manual Restart: Pushbutton used to restart UPS after an overload or inverter failure trip.

G. Alarm Contact: A dry type summary alarm contact shall be provided for remote indication of alarm conditions.

H. Built-In Distribution: A 6-pole distribution panelboard shall be provided on the output of the system.

I. Environmental Conditions:

1. Efficiency at full, unity power factor load and nominal input voltage: 90 percent for a 3.0 kVA model, or 85 percent for a 1.5 kVA model.

2. Elevation: 5,000 feet (1,500 m) without derating.

3. Acoustical Noise: 50 dB at one meter. (Measured at +25 degrees C.)

4. EMI Suppression: Electromagnetic effects are minimized to ensure that computer systems or other similar electronic systems are neither adversely affecting to, nor are adversely affected by, the UPS. The UPS is certified to meet the requirements of Class A, Subpart J of Part 15 of the FCC Rules and Regulations.

5. Electrostatic Discharge (Commonly Encountered in Carpeted Offices) Immunity: Withstands up to ±25 kV with no disturbance or adverse effect to the load.

6. Ambient Temperature: 40 degrees C.

J. Battery Pack: The battery consists of battery tray(s) either fully enclosed within the UPS cabinet or enclosed in metal cabinet(s) which match the UPS module in appearance. Individual battery trays are modular and individually fused.

1. Battery Type: a sealed, maintenance-free, high-rate type battery shall be used as a stored energy source for the UPS. The battery shall be sized to support the inverter at rated load or the kilowatt load specified for the protection time specified 60 min. The battery shall consist of one or more banks of cells as required, and be a common source for each inverter.

2. Expected Life: 5 years or 200 full discharge cycles at full load.

3. Minimum Final Discharge Voltage: 1.66 volts per cell.

4. Nominal Float Voltage: 2.25 volts per cell.

5. Battery Circuit Breaker: A molded case breaker is provided for battery short circuit protection and as a means of manual disconnection for battery maintenance.

2.4 FUNCTIONAL DESCRIPTION

A. Inverter/Charger**:** The inverter/charger shall employ Pulse Width Modulation (PWM) technology utilizing transistor power blocks as switching elements. The inverter shall be capable of providing the specified quality output power while operating from the ac utility or dc source within the specified operating range. In addition, the inverter shall simultaneously float charge the battery.

B. Electrical Protection:

1. Input protection shall be provided by a thermal-magnetic molded case circuit breaker and transient suppression circuitry.

2. Battery protection shall be provided by individual fusing of each battery tray and a thermal-magnetic molded case circuit breaker.

3. Output protection shall be provided by thermal-magnetic circuit breaker(s), fuses in the inverter circuit, and current limit circuitry.

2.5 ENCLOSURES

A. The UPS shall be housed in a free standing, double dead front (safety shields behind front door) enclosure equipped with casters and leveling feet. Enclosures shall be designed for office or computer room applications. If system consists of more than one cabinet, the cabinets shall be shipped with joining hardware to be bolted together at time of installation.

B. Ventilation: Electronics cabinets shall be designed for natural conversion cooling aided by a thermostatically controlled fan. Air inlets shall be in the lower front and rear; air outlets shall be in the upper rear. Battery cabinets shall be convection cooled.

C. Cable Entry: Units equipped with input cord and plug and output receptacles shall not require any installation. Hard wired systems shall provide for conduit entry through knockouts located in the rear of the unit. Connection between UPS and battery cabinets shall be provided and shall consist of cables and power plugs.

D. Front Access: Major subassemblies shall be modular and shall be replaceable from the front of the unit.

2.6 WARRANTY:

A. The system warranty shall be no less than 12 months after initial startup, and must include all costs including repair, parts, labor, travel and living expenses for the manufacturer's service personnel, within the United States. The manufacturer shall guarantee, in writing, the stated system efficiency.

2.7 DOCUMENTATION AND TRAINING.

A. The UPS shall be supplied with sufficient documentation, including a concise operation and maintenance manual, also including proprietary troubleshooting information, to allow training personnel to troubleshoot and service the UPS. The UPS vendor shall make available a maintenance training school for customer personnel.

B. Operating and Maintenance Manual: The CONTRACTOR shall furnish 6 copies of the operating and maintenance manuals. The manuals shall possess sufficient detail and clarity to enable the owner's technicians to understand and operate the system equipment, and to identify replaceable parts.

PART 3 -- EXECUTION

3.1 GENERAL

A. The uninterruptible power system shall be installed as shown, shall conform with Section 16010, Wastewater Facilities General Electrical Requirements and in accordance with the equipment manufacturer's installation instructions.

B. Detailed Requirements:

1. The Contractor shall receive, store, and assemble all sections of the UPS to form complete units. The Contractor shall make all internal wiring interconnections as required for complete assembly of each UPS. Where wiring connectors are not

supplied by the manufacturer, the Contractor shall furnish the connectors required to complete internal wiring terminations.

2. The Contractor shall take all necessary precautions to eliminate moisture and foreign material from the equipment at all times during storage and installation. Special care shall be taken to prevent corrosion of and damage to the UPS.

3. Each UPS shall be set level and plumb on its floor channels furnished, installed, and grouted in by the Contractor as shown. The Contractor shall furnish all shims necessary to accomplish these requirements.

3.2 INSTALLATION

A. The UPS system shall be set in place, wired and connected in accordance with the approved shop drawings and manufacturer's instructions.

B. Equipment shall be adequately anchored and braced per details on structural contract drawings to withstand the seismic forces at the location where installed.

3.3 ACCEPTANCE INSPECTION AND TESTS

A. Installation, adjustment and testing of the equipment shall be supervised by a manufacturer's representative.

B. All tests shall be witnessed by the ENGINEER.

C. Field Tests: As a minimum, the startup and field test procedures shall include the following:

1. Compare equipment nameplate data with specifications and approved shop drawings.

2. Ensure that shipping members have been removed.

3. Inspect physical, electrical, and mechanical condition.

4. Clean the UPS.

5. Attach a phase rotation meter to the UPS input, output and bypass buses, and observe proper phase sequences.

6. Torque test bus and battery connections at shipping splits.

7. Check each electrical bus for proper phasing and identification.

8. Check and test selector switches and meters for proper operation.

9. Check doors for proper alignment and operation.

10. Check and test each protective device for proper mechanical and electrical operation.

11. Verify protective device overcurrent trip settings against approved coordination study.

12. Verify the correct operation of all sensing devices, alarms, and indicating devices.

13. Perform manufacturer's onsite field test procedures.

14. Demonstrate to the ENGINEER that the interlocks have been tested and agree with the interlocking scheme.

D. Load Test: The installed system shall be load tested for a continuous 24 hour period by means of resistive load banks, provided by equipment manufacturer. The system shall be continuously tested at 1/2 load for 8 hours, 3/4 load for 8 hours and full load for 8 hours. Instrument readings shall be recorded every half hour for the following:

1. Input voltage and current (all three phases, for each module).

2. Input and output frequency.

3. Battery voltage for each module.

4. Output voltage and current (all three phases, for each module).

5. Output kilowatts for each module.

6. Output voltage and current (all three phases).

7. Output kilowatts.

E. Full Load Burn In Test:

1. The installed system shall undergo an additional full load burn-in period of 24 continuous hours. If a failure occurs during the burn-in period, the tests shall be repeated. Instrument readings shall be recorded every half hour as above. During the burn-in period, the following tests shall be performed:

   a. With the UPS carrying maximum continuous design load and supplied from the normal source, switch 100 percent load on and off a minimum of five times within the burn-in period.

   b. With the UPS carrying maximum continuous design load and supplied from the emergency source, repeat the switching operations described. Also, verify that the UPS module rectifier charger unit(s) go into the second-step current limit mode.

   c. With the UPS carrying maximum continuous design load and operating on battery power, repeat the switching operations described above.

   d. Continue operation on battery power for 1 minute, and then restore normal power.

F. Battery Discharge Test:

1. With the battery fully charged, the system shall undergo a complete battery discharge test to full depletion and a recharge to nominal conditions. Instrument readings shall be recorded every minute during discharge for the following:

a. Battery voltage and current for each module.

b. Output voltage and current (all three phases) for each module.

c. Output kilowatts for each module.

d. Output voltage and current (all three phases - system output).

e. Output kilowatts (system output).

f. Output frequency.

3.4 POSTING FRAMED DATA AND INSTRUCTIONS

A. Wiring and control diagram instructions and data shall be framed and posted under acrylic glass in a location adjacent to the UPS system as directed by the ENGINEER. Condensed operating instructions, prepared in typed form, shall be framed as specified above and posted beside the diagrams. The framed instructions shall be posted before acceptance testing of the system.

3.5 FOLLOW-UP VERIFICATION

A. Upon completion of acceptance checks, settings, and tests, the Contractor shall show by demonstration in service that the central uninterruptible power supply is in good operating condition and properly performing the intended function.

3.6 TRAINING OF CITY PERSONNEL

A. A field training course shall be provided by a certified factory-trained technician for designated City personnel. Training shall be provided for a total period of 8 hours of normal working time and shall start after the system is functionally complete but prior to final acceptance test. Field training shall cover the items contained in the operating and maintenance manuals.

(END OF SECTION)

SECTION 16490

ELECTRIC MOTORS

PART 1 -- GENERAL

1.1 THE REQUIREMENT

A. General: The CONTRACTOR shall furnish and install electric motors, accessories, and appurtenances as specified herein and in conformance with the individual specifications of driven equipment, to provide a complete and operable installation, all in accordance with the requirements of the Contract Documents.

1.2 RELATED WORK SPECIFIED ELSEWHERE

A. The work of the following Sections and Divisions applies to the work of this Section. Other Sections of the Specifications, not referenced below, shall also apply to the extent required for proper performance of this work.

1. Section 16020, Municipal Facilities General Electrical Requirements.

2. Division 16, as applicable, Electrical.

3. Division 11, as applicable, Equipment.

1.3 REFERENCE SPECIFICATIONS, CODES, AND STANDARDS

A. All work specified herein shall conform to or exceed the applicable requirements of the referenced portions of the following publications to the extent that the provisions thereof are not in conflict with other provisions of these specifications.

1. LAEC City of Los Angeles Electrical Code, latest adopted edition.

2. Commercial Standards

NEMA MG 1	Motors and Generators
NEMA MG 2	Safety Standard for Construction and Guide for Selection, Installation and Use of Electric Motors and Generators
NEMA MG 10	Energy Management Guide for Selection and Use of Polyphase Motors
IEEE 43	Recommended Practice for Testing Insulation Resistance of Rotating Machinery
IEEE 85	Standard Test Procedure for Airborne Sound Measurement on Rotating Electric Machinery
IEEE 112	Standard Test Procedure for Polyphase Induction Motors and Generators

IEEE 113	Guide on Test Procedures for DC Machines
IEEE 115	Test Procedure for Synchronous Machines

1.4 CONTRACTOR SUBMITTALS

A. Submittals shall be made in accordance with the requirements of Section 16020, "Municipal Facilities General Electrical Requirements".

B. Complete motor data shall be submitted with the driven machinery shop drawings. Motor data shall include:

1. Machine name and specification number of driven machine.
2. Motor manufacturer.
3. Motor type or model and dimension drawing.
4. Nominal horsepower.
5. NEMA design.
6. Frame size.
7. Enclosure.
8. Winding insulation class and treatment.
9. Rated ambient temperature.
10. Service factor.
11. Voltage, phase, and frequency rating.
12. Full load current at rated horsepower for application voltage.
13. Starting code letter, or locked rotor kVA, or current.
14. Special winding configuration such as part-winding, star-delta. Include winding diagram.
15. Rated full load speed.
16. Power Factor at full load.
17. Noise certification and data sheets.
18. Replica of motor nameplate.
19. Bearing types and catalog numbers.

C. If water cooling is required for motor thrust bearings, the shop drawing submittals shall indicate this requirement.

D. The following submittals and specific information shall be provided.

1. General Description:

   a. Motor dimensional drawings. Net motor weight shall be noted on the dimensional drawings. Shipping weight shall also be noted if motors are to be shipped separately from the driven equipment.

   b. Complete motor rating and enclosure type.

   c. Lists of special characteristics and features being provided as specified.

   d. Bearing life.

   e. Type of bearing lubrication.

   f. Statement that carbon brushes are being provided that are suitable for the low speed, continuous operation specified.

2. Motor Characteristics:

   a. Guaranteed minimum efficiency at rated load at rated voltage.

   b. Guaranteed minimum power factor at rated load at rated voltage.

   c. Expected efficiency at 1/2, 3/4, and full load at rated voltage.

   d. Expected power factor at 1/2, 3/4, and full load at rated voltage.

   e. Motor no-load current at rated voltage.

   f. Full load current at rated voltage.

   g. Full load current at 110 percent voltage.

   h. Starting current at rated voltage.

   i. Full load speed.

   j. Certified copy of test report for identical motor tested in accordance with NEMA MG 1-12.53a and IEEE Standard 112, Test Method B, showing full load efficiency not less than specified value. Motors not as specified will be rejected.

   k. Recommended maximum kVAR of power factor correction capacitors when capacitors are switched with motor.

   l. Time in seconds motor can be subjected to locked rotor current at rated voltage without damage to motor with (1) motor initially at rated ambient temperature, and (2) with motor initially at rated temperature rise.

   m. Speed torque curves.

.

3. Motor Tests and Test Reports:

   a. Certified copies of test reports on actual motors being provided.

   b. Short commercial tests, including running light current at rated voltage, high potential, and locked rotor current.

1.5 QUALITY ASSURANCE

A. Quality assurance shall be in accordance with all applicable requirements of Section 16020, "Municipal Facilities General Electrical Requirements".

B. Adjustable frequency driven motors shall be tested as an assembly with the drive and the driven equipment prior to delivery to the site.

1.6 SERVICES OF MANUFACTURER'S REPRESENTATIVE

A. Where motors are part of packaged equipment such as Bridge Crane and Air-Conditioning Unit, a qualified manufacturer's representative shall supervise the unpacking, installation and field testing.

PART 2 -- PRODUCTS

2.1 MATERIALS

A. Materials and equipment shall be standard products of established manufacturers who have produced continuously the type of equipment specified. All equipment and material shall be new and of high quality ensuring long life and reliable operation.

2.2 SERVICE CONDITIONS

A. Motors shall be designed and manufactured for continuous severe duty service.

2.3 RATING AND APPLICATION

A. Unless indicated otherwise in Divisions 11, 13, 14 and 15 in which the design equipment is specified or on the motor data sheets, motor enclosures shall be of the following type(s) approved for its intended purpose:

   1. Motors installed indoors and outdoors shall be totally enclosed fan cooled (TEFC) with a service factor of 1.15.

   2. Motors to be installed in classified areas shall conform to the requirements of NEC Article 500.

B. Motors shall be rated in accordance with the following, unless otherwise specified.

   1. Motors below 1/2 hp shall be rated 115 volts, single phase, 60 Hertz and shall be of the capacitor-start, induction-run type.

2. Motors 1/2 hp through 200 hp inclusive shall be rated 460 volts, three phase, 60 Hertz.

3. Motors 250 hp and above shall be rated three phase, 60 Hertz and voltage as specified.

C. Motor mechanical design shall be in accordance with this Specification and the detailed requirements indicated on the individual motor data sheet.

D. The design and construction of all motors shall be coordinated with the driven equipment requirements.

E. Motors shall be designed for full voltage starting and rated for continuous operation as shown on the Contract Drawings.

F. Motors shall operate successfully under running conditions at rated load at plus or minus 10 percent of rated voltage or plus or minus 5 percent of rated frequency or a combination of the two.

G. In sizing motors, the horsepower rating of the motor, as stamped on the nameplate, shall not be exceeded during any operating conditions of the driven equipment.

H. Starting current at full voltage shall not exceed 650 percent of the motor full load current for all integral horsepower alternating current motors.

I. All motors shall have a safe stall (locked rotor) time equal to or greater than the maximum accelerating time under the worst voltage conditions specified.

J. Motor fans shall be suitable for rotation in either direction. They shall be nonsparking, corrosion resistant material, accurately balanced before assembly on the motor.

K. All motors shall be NEMA Design "B" unless otherwise specified on the motor data sheet, or required by the application.

L. Totally enclosed motors shall be "Severe Duty Chemical Service" type including shaft seals, internal surfaces coated with corrosion resistant paint or epoxy varnish, external surfaces coated with alkyd paint or epoxy enamel.

M. All motors shall be "high-efficiency" design, capable of operating at a higher normal efficiency than the standard industry design.

1. Motors built in NEMA Frames 143T through 445T shall have the guaranteed efficiency stamped on the nameplate. The basis for motor efficiency evaluation shall be IEEE test procedure 112, Method B, using accuracy improvement by segregated loss determination including stray load loss measurements.

2. Motors built in frames larger than 445T shall have the guaranteed efficiency stamped on the nameplate. The test method used in determining efficiency (e.g., Method B-Dynamometer, Method E-Input or Method F-Equivalent Circuit) shall be designated by the CONTRACTOR.

2.4 TERMINAL BOXES

A. Terminal boxes of the split type shall be furnished for each motor unless the base or housing of the motor is of a design which incorporates provisions for incoming cables.

B. Terminal boxes for medium-voltage motors shall have sufficient interior space to permit stress cones to be formed on the incoming cables and to permit the cable shields to be properly terminated and grounded. In addition, boxes shall be sized to contain surge protection equipment.

C. Separate terminal boxes shall be furnished for each accessory device, such as space heaters, temperature detectors, and other items.

D. All boxes shall be heavy duty class, weather tight and thoroughly coated internally and externally with corrosion-resistant paint.

2.5 INSULATION

A. The insulation system shall be Class F with temperature rise (based on maximum ambient temperature of 40 degrees C) of 80 degrees C measured by the resistance method.

B. Motors constructed in NEMA Frame 364 and larger, except totally enclosed motor, shall be vacuum pressure impregnated with 100 percent solids epoxy resins. The completed insulation shall have a minimum resistance of 10 mega-ohms after 168 hours of testing in a humidity chamber maintained at 100 percent relative humidity and 40 degrees C ambient. In addition, motors with form wound coils shall also meet NEMA MG1-20.48 Qualification Test.

C. Totally enclosed motors shall be dipped and baked in epoxy resin. The completed insulation shall have a minimum resistance of 1.5 mega-ohms after testing as in 2.5B above.

2.6 BEARINGS AND LUBRICATION - HORIZONTAL MOTORS

A. All horizontal motors rated 200 hp and below shall have anti-friction bearings, selected to provide an L10 life of 100,000 hours for direct connected motors and 17,500 hours for belt or chain drive motors when belted or chain driven in accordance with the information contained on the data sheets. Further, bearings shall be re-greaseable while running via installed grease fittings.

B. Bearings on horizontal motors rated 250 hp and larger shall be anti-friction or sleeve-type as indicated on the individual Motor Data sheet(s). Bearings shall be constructed and provided with seals so that dirt, moisture, or lubricant leakage around seals will not enter the motor.

C. Motors which have split capsule type sleeve bearing and split bearing brackets shall be designed to permit bearing replacement without removing the bottom bearing bracket. Reservoirs shall be provided with drains, tapped fill openings and separate level gage glasses. Oil throwers and catchers and close running shaft seals shall be designed to prevent oil escape from the bearings and creepage along the shaft. Vents for equalizing bearing oil pressure shall be provided with screens and caps to prevent the entrance of rodents and the like.

D. Motors with sleeve bearings shall have a minimum motor rotor end float and a maximum coupling end float in accordance with NEMA MG1.

E. The requirement for bearing temperature protection will be specified on the individual motor data sheets. When specified, protection shall be resistance type bearing temperature detectors 120 ohms at 0 degrees C tip sensitive with leads brought out to the

head of the device where suitable connection can be made. The detector holder and head assembly shall be suitable for the area classification in which the motors will be installed. The detectors shall sense the temperature at the outer shell of sleeve type bearings.

F. Motors shall be greased type and lubricated with Chevron SRI grease NLGI-2 or equal.

2.7 BEARINGS AND LUBRICATION - VERTICAL MOTORS

A. Vertical motors shall be solid shaft or hollow shaft and bearings shall be anti-friction type grease.

B. Motors for "Process" or "In-Line" service shall be "In-Line, Solid Shaft" type construction with a clamped and locked bearing arrangement. Mounting and shaft extension dimensions and tolerances shall be in accordance with NEMA MG1-18.620 or 18.625. The bearings shall be rated for a L10 minimum life of 2 years or 17,500 hours at the maximum expected up or down thrust the driven equipment may impose during startup or operation at any capacity including shutoff.

2.8 SPACE HEATERS

A. Space heaters shall be supplied to maintain the interior of the motor enclosure above the dew point on all motors 30 hp and larger installed outdoors and on all motors 50 hp and larger installed indoors.

B. Heaters shall be unaffected by the accumulation of moisture and shall have terminals adequately protected against moisture under severe weather conditions. Heaters shall be mounted on noncombustible material and shall operate without thermal damage to the motor or themselves. Heaters shall be rated 120 volts single phase. They shall have a maximum sheath temperature of 200 degrees C.

C. Leads for the heaters shall be brought out into a terminal box separate from the main power leads terminal box or in a separate cabinet, if required.

D. Where motors are provided with space heaters, warning nameplate shall be red background with white letters and shall read: "CAUTION - CONTAINS AN EXTERNAL VOLTAGE SOURCE."

2.9 WINDINGS AND WINDING PROTECTION

A. Stator windings shall be copper.

B. Leads shall be brought out to a terminal box separate from the main power leads terminal box.

C. Motors 250 hp and larger or as indicated shall be furnished with surge capacitors and lightning arrestors mounted in the main power leads terminal box or in a separate cabinet, if required.

D. Motors controlled by variable frequency shall be supplied with thermostats in two phases as a minimum. Any overload condition shall cause all phases to open.

2.10 GROUNDING

A. Each motor shall have a threaded hole in the motor frame with either a bronze bolt and lock washer or a bronze post-type connector for connection to an external ground conductor.

The hole shall be for a 1/2 inch bolt or post-type connector except for motors of 100 hp or less where the size of the bolt or post-type connector may be 3/8 inch. The hole in the motor frame shall be threaded to a depth not less than 1 1/2 times the diameter of the hole to ensure a firm connection. If necessary, a metal pad shall be bonded to the motor frame to provide this depth for the threaded hole. The grounding means shall be located on the same side of the motor as the main lead terminal box.

2.11 BALANCE AND VIBRATION

A. Motors shall be dynamically balanced. Method of measuring dynamic balance shall be when measured in accordance with NEMA MG1-12.06 or MG1-20.52 and with the maximum amplitude values as shown in NEMA MG1-12.05.

B. Motors shall have a maximum peak-to peak amplitude of vibration in accordance with MG1-20.52 when measured in accordance with MG1-12.06 B or MG1-20.53.

2.12 NOISE

A. Maximum sound pressure levels 3 feet from any motor shall not exceed 85dbA.

B. All motors shall be "quiet line" type and shall be so indicated on the submittals, Quiet Line type motors shall be capable of operating at a lower noise level than the standard industry design.

C. Measurement procedures shall in general be guided by the provisions of IEEE Publication No. 85.

2.13 NAMEPLATES

A. Each motor shall have a corrosive-resistant nameplate containing information in accordance with NEMA MG1. In addition, the service factor and efficiency shall be included. For motors of 250 hp and larger, the nameplate shall also state any limitations on the number of starts per day, and conditions of restarting.

PART 3 -- EXECUTION

3.1 INSTALLATION

A. Motors shall be installed in accordance with Division 11, Equipment, Division 16, Electrical and in accordance with the manufacturer’s recommendations.

B. CONTRACTOR shall make provision to protect motors from moisture by connecting power to space heaters. The space heaters shall be connected while in storage and/or before commissioning.

(END OF SECTION)

SECTION 16560

MUNICIPAL FACILITIES ELECTRICAL SYSTEMS COMMISSIONING

PART 1 -- GENERAL

1.1 DESCRIPTION

A. The purpose of this Section is to specify Division 16 responsibilities in the commissioning process which are being directed by the CA. Other electrical systems testing are required under the direction of the CM.

B. The list of commissioned equipment and systems is found in Section 01810, "Fundamental Commissioning Requirements" Part 1.12.

C. Commissioning requires the participation of Division 16 to ensure that all systems are operating in a manner consistent with the Contract Documents. The general commissioning requirements and coordination are detailed in Division 01. Division 16 shall be familiar with all parts of Division 01 and the commissioning plan issued by the CA and shall execute all commissioning responsibilities assigned to them in the Contract Documents.

1.2 RESPONSIBILITIES

A. Electrical Contractors. The commissioning responsibilities applicable to the electrical contractor are as follows (all references apply to commissioned equipment only):

1. Construction and Acceptance Phases:

a. Include the cost of commissioning in the contract price, if not yet let.

b. In each purchase order or subcontract written, include requirements for submittal data, O&M data and training.

c. Attend a commissioning kickoff meeting and other necessary meetings scheduled by the CA to facilitate the construction process.

d. Contractors shall provide normal cut sheets and shop drawing submittals to the CA of commissioned equipment.

e. Provide additional requested documentation, prior to normal O&M manual submittals, to the CA for development of start-up and functional testing procedures.

(1) Typically this will include detailed manufacturer installation and start-up, operating, troubleshooting and maintenance procedures, full details of any owner-contracted tests, fan and pump curves, full factory testing reports, if any, and full warranty information, including all responsibilities of the Owner to keep the warranty in force clearly identified. In addition, the installation and checkout materials that are actually shipped inside the equipment and the actual field checkout sheet forms to be used

by the factory or field technicians shall be submitted to the Commissioning Agent.

(2) The Commissioning Agent may request further documentation necessary for the commissioning process.

(3) This data request may be made prior to normal submittals.

f. Provide a copy of the O&M manuals submittals of commissioned equipment, through normal channels, to the CA for review and approval.

g. Contractors shall assist (along with the design engineers) in clarifying the operation and control of commissioned equipment in areas where the specifications, control drawings or equipment documentation is not sufficient for writing detailed testing procedures.

h. Provide assistance to the CA in preparation of the specific functional performance test procedures specified in Section 16570, "Municipal Facilities Electrical Testing Requirements". Subs shall review test procedures to ensure feasibility, safety and equipment protection and provide necessary written alarm limits to be used during the tests.

i. Develop a full start-up and initial checkout plan using manufacturer's start-up procedures and the prefunctional checklists from the CA. Submit manufacturer's detailed start-up procedures and the full start-up plan and procedures and other requested equipment documentation to CA for review.

j. During the startup and initial checkout process, execute and document the electrical-related portions of the prefunctional checklists provided by the CA for all commissioned equipment.

k. Perform and clearly document all completed startup and system operational checkout procedures, providing a copy to the CA.

l. Address current A/E punch list items before functional testing.

m. Provide skilled technicians to execute starting of equipment and to execute the functional performance tests. Ensure that they are available and present during the agreed upon schedules and for sufficient duration to complete the necessary tests, adjustments and problem-solving.

n. Perform functional performance testing under the direction of the CA for specified equipment in Section 16570, "Municipal Facilities Electrical Testing Requirements" and Section 01810, "Fundamental Commissioning Requirements". Assist the CA in interpreting the monitoring data, as necessary.

o. Correct deficiencies (differences between specified and observed performance) as interpreted by the CA, CM and A/E and retest the equipment.

p. Prepare O&M manuals according to the Contract Documents, including clarifying and updating the original sequences of operation to as-built conditions.

q. During construction, maintain as-built red-line drawings for all drawings and final CAD as-builts for contractor-generated coordination drawings. Update after completion of commissioning (excluding deferred testing). Prepare red-line as-built drawings for all drawings and final as-builts for contractor-generated coordination drawings.

r. Provide training of the Owner's operating personnel as specified.

s. Coordinate with equipment manufacturers to determine specific requirements to maintain the validity of the warranty.

2. Warranty Period:

a. Execute seasonal or deferred functional performance testing, witnessed by the CA, according to the specifications.

b. Correct deficiencies and make necessary adjustments to O&M manuals and as-built drawings for applicable issues identified in any seasonal testing.

B. Electrical Designer/Engineer:

1. Refer to Section 01810, "Fundamental Commissioning Requirements" for the responsibilities of the Electrical Designer/Engineer.

1.3 RELATED WORK

A. Refer to Section 16570 for functional testing requirements.

PART 2 -- PRODUCTS

2.1 TEST EQUIPMENT

A. Division 16 shall provide all test equipment necessary to fulfill the testing requirements of this Division (i.e., light meters).

PART 3 -- EXECUTION

3.1 SUBMITTALS

A. Division 16 shall provide submittal documentation relative to commissioning to the CA as requested by the CA. Refer to Section 01810, "Fundamental Commissioning Requirements" Part 3.3 for additional Division 16 requirements.

3.2 STARTUP

A. The electrical contractors shall follow the start-up and initial checkout procedures listed in the Responsibilities list in this section and in Section 01810, "Fundamental Commissioning Requirements" Part 3.4. Division 16 has start-up responsibility and is required to complete systems and sub-systems so they are fully functional, meeting the

design objectives of the Contract Documents. The commissioning procedures and functional testing do not relieve or lessen this responsibility or shift that responsibility partially to the commissioning agent or Owner.

B. Functional testing is intended to begin upon completion of a system. Functional testing may proceed prior to the completion of systems, or sub-systems at the discretion of the CA and CM. Beginning system testing before full completion does not relieve the Contractor from fully completing the system, including all prefunctional checklists as soon as possible.

3.3 FUNCTIONAL PERFORMANCE TESTS

A. Refer to Section 16570, "Municipal Facilities Electrical Testing Requirements" for specific details on the required functional performance tests.

3.4 TESTING DOCUMENTATION, NON-CONFORMANCE AND APPROVALS

A. Refer to Section 01810, "Fundamental Commissioning Requirements" Part 3.6 for specific details on non-conformance issues relating to prefunctional checklists and tests.

B. Refer to Section 01810, "Fundamental Commissioning Requirements" Part 3.5 for issues relating to functional performance tests.

3.5 OPERATIONS AND MAINTENANCE (O&M) MANUALS

A. Division 16 shall compile and prepare documentation for all equipment and systems covered in Division 16 and deliver to the GC for inclusion in the O&M manuals, according to Section 01810, "Fundamental Commissioning Requirements".

B. The C shall receive a copy of the O&M manuals for review.

3.6 TRAINING OF OWNER PERSONNEL

A. The GC shall be responsible for training coordination and scheduling and ultimately to ensure that training is completed. Refer to Section 01810, "Fundamental Commissioning Requirements" for additional details.

B. The CA shall be responsible for overseeing and approving the content and adequacy of the training of Owner personnel for commissioned equipment. Refer to Section 01810, "Fundamental Commissioning Requirements" for additional details.

C. Electrical Contractor. The electrical contractor shall have the following training responsibilities:

1. Provide the CA with a training plan two weeks before the planned training according to the outline described in Section 01810, "Fundamental Commissioning Requirements", Part 3.8.

2. Provide designated Owner personnel with comprehensive training in the understanding of the systems and the operation and maintenance of each major piece of commissioned electrical equipment or system.

3. Training shall start with classroom sessions, if necessary, followed by hands on training on each piece of equipment, which shall illustrate the various modes of operation, including startup, shutdown, fire/smoke alarm, power failure, etc.

4. During any demonstration, should the system fail to perform in accordance with the requirements of the O&M manual or sequence of operations, the system will be repaired or adjusted as necessary and the demonstration repeated.

5. The appropriate trade or manufacturer's representative shall provide the instructions on each major piece of equipment. This person may be the start-up technician for the piece of equipment, the installing contractor or manufacturer's representative. Practical building operating expertise as well as in-depth knowledge of all modes of operation of the specific piece of equipment is required. More than one party may be required to execute the training.

6. The training sessions shall follow the outline in the Table of Contents of the operation and maintenance manual and illustrate whenever possible the use of the O&M manuals for reference.

7. Training shall include:

    a. Use the printed installation, operation and maintenance instruction material included in the O&M manuals.

    b. Include a review of the written O&M instructions emphasizing safe and proper operating requirements, preventative maintenance, special tools needed and spare parts inventory suggestions. The training shall include start-up, operation in all modes possible, shut-down, seasonal changeover and any emergency procedures.

    c. Discuss relevant health and safety issues and concerns.

    d. Discuss warranties and guarantees.

    e. Cover common troubleshooting problems and solutions.

    f. Explain information included in the O&M manuals and the location of all plans and manuals in the facility.

    g. Discuss any peculiarities of equipment installation or operation.

    h. The format and training agenda in Guidelines for Commissioning HVAC Systems, ASHRAE, 1989R, 1996 is a recommended reference.

    i. Classroom sessions shall include the use of overhead projections, slides, video and audio taped material as might be appropriate.

8. Hands-on training shall include start-up, operation in all modes possible, including manual, shut-down and any emergency procedures and maintenance of all pieces of equipment.

9. The electrical contractor shall fully explain and demonstrate the operation, function and overrides of any local packaged controls, not controlled by the central control system.

   a. Training shall occur after functional testing is complete, unless approved otherwise by the Project Manager.

   b. Duration of Training. The electrical contractor shall provide training on each piece of equipment according to the following schedule.

Hours	System
4	Lighting controls, controllers, and schedules

3.7 DEFERRED TESTING

A. Refer to Section 01810, "Fundamental Commissioning Requirements", Part 3.9 for requirements of deferred testing.

3.8 WRITTEN WORK PRODUCTS

A. Written work products of Contractors will consist of the startup and initial checkout plan described in Section 01810, "Fundamental Commissioning Requirements" and the filled-out startup, initial checkout and pre-functional checklists.

(END OF SECTION)

SECTION 16570

MUNICIPAL FACILITIES ELECTRICAL TESTING REQUIREMENTS

PART 1 – GENERAL

1.1 INCLUDED SYSTEMS AND EQUIPMENT

A. The following is a list of the equipment and system test requirements included in this section:

1. Lighting sweep controls (weekday, weekend, and holiday schedules).

2. Occupancy sensors.

3. Photo sensors (indoor and outdoor).

4. Lighting controllers (indoor and outdoor).

1.2 DESCRIPTION

A. This section specifies the functional testing requirements for Division 16 systems and equipment. From these requirements, the Commissioning Authority (CA) shall develop step-by-step procedures to be executed by the Subs. The general functional testing process, requirements and testing methods definitions are described in Section 01810. The test requirements for each piece of equipment or system contain the following:

1. The contractors responsible to execute the tests, under the direction of the CA.

2. A list of the integral components being tested.

3. Prefunctional checklists associated with the components.

4. Functions and modes to be tested.

5. Required conditions of the test for each mode.

6. Special procedures.

7. Required methods of testing.

8. Required monitoring.

9. Acceptance criteria.

10. Sampling strategies allowed.

1.3 PREREQUISITES

A. The following applicable generic prerequisite checklist items are required to be listed on each written functional test form and be completed prior to functional testing.

1. All related equipment has been started up and calibrated and start-up reports and prefunctional checklists submitted and approved ready for functional testing. Final prefunctional checklists will be provided as part of the Construction Phase Commissioning Plan.

2. All A/E punchlist items for this equipment corrected.

3. These functional test procedures reviewed and approved by installing contractor.

4. Safeties and operating ranges reviewed by the CA.

5. Test requirements and sequences of operation attached.

6. Schedules and set points attached.

7. Record of all values for pre-test set points changed to accommodate testing has been made and a check box provided to verify return to original values (control parameters, limits, delays, lockouts, schedules, etc.).

PART 2 – PRODUCTS

NOT USED.

PART 3 – EXECUTION

3.1 LIGHTING SWEEP CONTROLS

A. Parties Responsible to Execute Functional Test:

1. Lighting Controls contractor: operate the controls.

2. Electrical contractor: assist in testing sequences.

3. CA: to witness, direct and document testing.

B. Prerequisites:

1. The applicable prerequisite checklist items listed in the beginning of Section 16570 shall be listed on each functional test form and checked off prior to functional testing.

C. Functions / Modes Required to be Tested and Test Methods:

1. The following testing requirements are an addition to and do not replace any testing requirements elsewhere in this Division.

Function / Mode	Test Method Manual (demonstration), Monitoring, Either or Both
MISCELLANEOUS FUNCTIONS	
1. All specified functions and features are set up, debugged and fully operable.	Verbal discussion of features
2. Power failure and battery backup and power-up restart functions.	Demonstration
3. Security and access codes.	Demonstration
4. Verify override duration setting.	Demonstration
5. Scheduling features fully functional and setup, including weekdays, weekends, and holidays.	Observation in terminal screens or printouts
SWEEP FUNCTIONS	
1. 50% of the zones with a minimum of 2 zones per controller or relay must be verified by turning on at least 25% of the lights in the zone and witnessing an actual sweep.	Either
OVERRIDE FUNCTIONS	
1. Manual occupant overrides: 25% of the local override switches, with a minimum of 4 switches must be verified by turning the override switches ON after a sweep and seeing the lights turn back on. 100% of the remainder of the switches should be sight verified to be in place.	Either

D. Acceptance Criteria (referenced by function or mode ID):

1. For the conditions, sequences and modes tested, the sweep controls, integral components and related equipment respond to changing conditions and parameters appropriately as expected, as specified and according to acceptable operating practice.

E. Sampling Strategy for Identical Units:

1. Sample the units per the above table. If 10% of the units in the first sample fail the functional performance tests, test another 10% of the group (the 2nd sample). If 10% of the units in the 2nd sample fail, test all remaining units in the whole group, fully at the contractor's expense.

3.2 OCCUPANCY SENSORS

A. Parties Responsible to Execute Functional Test:

1. Electrical contractor: Assist in testing sequences.

2. CA: To witness, direct and document testing.

B. Prerequisites:

1. All occupancy sensor calibration and set points shall be verified prior to functional testing.

2. The applicable prerequisite checklist items listed in the beginning of Section 16570 shall be listed on each functional test form and checked off prior to functional testing.

C. Functions / Modes Required to be Tested and Test Methods:

1. The following testing requirements are an addition to and do not replace any testing requirements elsewhere in this Division.

Function / Mode	Test Method Manual (demonstration), Monitoring, Either or Both
MISCELLANEOUS FUNCTIONS	
1. All specified functions and features are set up, calibrated, debugged, and fully operable.	Verbal discussion of features
2. Occupant over-ride functions and duration setting.	Demonstration
OCCUPANCY SENSOR FUNCTIONS	
1. Test the sequence of operation for all features and modes.	Manual
2. Verify that the controls and sensors are not easily overridden or disabled by occupants.	Visual inspection
3. Verify that the occupancy sensor is in an adequate location and is not being affected by obstructions.	Visual inspection

D. Acceptance Criteria (referenced by function or mode ID):

1. For the conditions, sequences and modes tested, the dimming controls, integral components and related equipment respond to changing conditions and parameters appropriately as expected, as specified and according to acceptable operating practice.

E. Sampling Strategy for Identical Units:

1. Each occupancy sensor and its controlled zone must be tested (no sampling).

3.3 PHOTO SENSORS

A. Parties Responsible to Execute Functional Test:

1. Electrical contractor: assist in testing sequences.

2. CA: to witness, direct and document testing.

B. Prerequisites:

1. All photo sensor calibration and set points shall be verified prior to functional testing.

2. The applicable prerequisite checklist items listed in the beginning of Section 16570 shall be listed on each functional test form and checked off prior to functional testing.

C. Functions / Modes Required to be Tested and Test Methods:

1. The following testing requirements are an addition to and do not replace any testing requirements elsewhere in this Division.

Function / Mode	Test Method Manual (demonstration), Monitoring, Either or Both
MISCELLANEOUS FUNCTIONS	
1. All specified functions and features are set up, calibrated, debugged and fully operable (indoor and outdoor sensors).	Verbal discussion of features
PHOTO SENSOR FUNCTIONS	
1. Test the sequence of operation for all features and modes (weekday, weekend, and holiday schedules) and interlocks with time clocks, if any.	Manual
2. Verify that the controls and sensors are not easily overridden or disabled by occupants.	Visual inspection
3. Verify that the photo sensor is in an adequate location and is not being affected by obstructions.	Visual inspection
DIMMING FUNCTIONS	
1. Verify that dimming does not cause lower than specified light levels in adjacent “non-dimmed” spaces.	

D. Acceptance Criteria (referenced by function or mode ID):

1. For the conditions, sequences and modes tested, the dimming controls, integral components and related equipment respond to changing conditions and parameters appropriately as expected, as specified and according to acceptable operating practice.

E. Sampling Strategy for Identical Units:

1. Each photo sensor and its controlled zone must be tested (no sampling).

END OF SECTION

SECTION 17100

METERS, GENERAL

PART 1 -- GENERAL

1.1 THE REQUIREMENT

A. The CONTRACTOR shall furnish and install all meters and flow measurement devices with associated instrumentation and controls as shown and specified herein, complete and operable, for functions including (but not limited to) flow measurement, density determination, and batch metering of water, wastewater, sludge, chemicals and gases in accordance with the requirements of the Contract Documents.

B. Furnish meters for functions in addition to those listed above wherever required by the Contract Documents and/or required by the specified process.

1.2 RELATED WORK SPECIFIED ELSEWHERE

A. Division 2 and 11, as applicable.

B. Section 09800, Protective Coating.

C. Section 16100, Basic Materials and Methods (Electrical).

D. Section 17400, Process Instrumentation and Control.

1.3 REFERENCE SPECIFICATIONS, CODES, AND STANDARDS

A. Comply with reference specifications of Section 17400, "Process Instrumentation and Control".

B. Commercial Standards:

1.	ANSI/ASME B16.1	Gray Iron Pipe Flanges and Flanged Fittings (Classes 25, 125, 250).
2.	ANSI/AWWA C207	Steel Pipe Flanges for Waterworks Service - Sizes 4 In. Through 144 In. (100 mm Through 3,600 mm).
3.	ANSI/AWWA C701	Cold-Water Meters - Turbine Type, for Customer Service.
4.	ANSI/AWWA C702	Cold-Water Meters - Compound Type.
5.	ANSI/AWWA C704	Propeller-Type Meters for Waterworks Applications.
6.	ASME REPORT	Fluid Meters, Latest Edition.

1.4 CONTRACTOR SUBMITTALS

A. Comply with applicable subsections of Section 17400, "Process Instrumentation and Control".

B. Shop Drawings: The CONTRACTOR shall submit complete shop drawings of all meters for review in accordance with Section 01330, "Shop Drawings/Submittals" of the GENERAL REQUIREMENTS. Each meter shall be identified with its equipment number/tag number as shown or specified.

C. Manufacturer's Data: With the shop drawings, the CONTRACTOR shall also furnish certified calibration curves indicating flow versus differential pressure and any other information called for in the individual meter specifications.

D. O&M Manuals: The CONTRACTOR shall furnish to the ENGINEER eight (8) copies of complete operation and maintenance instructions for all of the metering systems provided to the project including instrumentation and controls, as specified under Section 01782, "Technical Manuals" of the GENERAL REQUIREMENTS.

E. Spare Parts: The CONTRACTOR shall obtain and submit from the manufacturer a list of suggested spare parts for each piece of equipment according to the provisions of Section 01781, "Spare Parts" of the GENERAL REQUIREMENTS. After approval, CONTRACTOR shall furnish such spare parts suitably packaged, identified with the equipment number, and labeled. CONTRACTOR shall also furnish the name, address, and telephone number of the nearest distributor for each piece of equipment. All spare parts are intended for use by the CITY, only, after expiration of the guaranty period. Any spare parts which the ENGINEER permits the CONTRACTOR to use for startup activities shall be replaced by the CONTRACTOR prior to the CITY's acceptance of beneficial use of the equipment.

F. During the term of this Contract the CONTRACTOR shall notify the ENGINEER in writing regarding any manufacturer's modification of the approved spare parts, such as part number, interchangeability, model change or others. If the ENGINEER determines that the modified parts are no longer applicable to the supplied equipment, the CONTRACTOR at its expense shall provide applicable spare parts.

G. Special Tools: A list of special tools required shall be submitted to the ENGINEER for approval. After approval the CONTRACTOR shall supply these tools suitably wrapped and identified for application. Special tools shall include substitute steel spools for each meter for maintenance purposes. Each spool shall be labeled to identify the meter for which temporary replacement is required. The label shall include the meter identification number, size and service.

1.5 QUALITY ASSURANCE

A. Inspection and Testing Requirements: The CONTRACTOR shall obtain the services of an experienced factory service representative to inspect and test all meters for proper performance and installation.

B. Accuracy Requirements: Unless otherwise specified herein, the flow meters shall be guaranteed to register flow to an accuracy of $\pm$2 percent of actual flow throughout the range specified. All density measuring equipment shall have a reference accuracy within $\pm$2 percent of actual solids content over the range specified for each density measurement system.

1.6 MANUFACTURER'S SERVICE REPRESENTATIVE

A. Erection and Startup Assistance: During erection and startup of the plant the CONTRACTOR shall obtain all necessary assistance from an experienced factory service

representative to ensure a correct and high quality installation, in accordance with the Contract Documents and the manufacturer's instructions.

B. Instruction of CITY'S Personnel: After completion of the installation and during startup of the plant, the CONTRACTOR shall instruct the CITY'S personnel in the proper operation, maintenance and repair of all metering equipment. For this purpose, the CONTRACTOR shall obtain the services of an experienced factory service representative, who shall spend sufficient time on the site to fully instruct the CITY'S operating personnel on all phases of its equipment. The ENGINEER shall be the sole judge of what is appropriate and sufficient training.

1.7 CLEANUP

A. After completion and testing of its work, the CONTRACTOR shall remove all debris from the site, clean all meters, controls, cabinets, and other metering appurtenances, and deliver to the CITY each system in proper operating condition.

B. Purge all piping and capillary tubing before connection to the meter. Use water, high pressure air, and/or mechanical mandrel as applicable.

C. Purge all electrical and signal conduits before installation of wiring. Use high pressure air followed by mechanical mandrel passed through the conduits from end to end by pull rope.

1.8 GUARANTEES, WARRANTIES

A. After completion the CONTRACTOR shall furnish to the CITY the manufacturer's written guarantees that the metering systems will operate within the published accuracies and flow ranges and meet these Specifications. The CONTRACTOR shall also furnish the manufacturer's warranties as published in its literature and as specified.

B. Warranty period shall not be less than one (1) year beginning from the day of first beneficial use by the City. Contractor testing shall not be counted in this period. Where necessary the CONTRACTOR shall purchase extended warranty coverage from the manufacturer to meet this requirement. All costs shall be included in the CONTRACTOR’S Bid price for the project.

PART 2 -- PRODUCTS (NOT USED)

PART 3 -- EXECUTION

3.1 INSTALLATION

A. The CONTRACTOR shall assemble and install all equipment specified herein, in strict accordance with the manufacturer's published instructions, under the supervision of the manufacturer's representative, and under the general review of the ENGINEER. All installations shall be accomplished by competent craftsmen of the appropriate trades and in keeping with the highest industrial standards for workmanship.

B. The meters shall be installed in easily accessible locations for ease of reading and maintenance. Where indicated, meters may be used for balancing of flow in several lines in conjunction with throttling and shut-off valves. Wherever possible, all meter installations shall provide the manufacturer's recommended straight run of piping upstream and downstream of the meters. All meters, shut-off and balancing valves shall be firmly supported from the structure or from the floor with approved supports. In-line meters shall

be installed to provide full-line flow and not less than the manufacturer's recommended head at all times.

3.2 TESTING

A. Equipment shall be prepared for operational use in accordance with manufacturer's instructions, including bench test and calibration, where required.

B. Each item shall be subjected to an operating test over the total range of capability of the equipment. Where applicable, tests shall be conducted in accordance with the Test Code of the Standards of the Hydraulic Institute. The CONTRACTOR shall obtain copies of factory test certifications and shall notify the ENGINEER 1 week in advance of all tests to be conducted on site.

3.3 ACCEPTANCE BY CITY

A. Final acceptance of the equipment is contingent on satisfactory operation after installation.

3.4 INSTALLATION, CALIBRATION, TESTING, PRECOMMISSIONING, START-UP AND INSTRUCTION

A. Comply with the applicable subsections of Section 17400, "Process Instrumentation and Control", Part 3 – EXECUTION.

B. CONTRACTOR questions regarding conduct of any part of the work shall be submitted in writing to the ENGINEER for resolution.

END OF SECTION

SECTION 17240

AV FLOW METERS - FIELD MOUNTED

PART 1 -- GENERAL

1.1 THE REQUIREMENT

A. The CONTRACTOR shall furnish and install field-mounted ultrasonic flow meters and all appurtenant work, complete and operable, in accordance with the requirements of the Contract Documents.

B. Each meter shall consist of 2 acoustic sensors, a local flow indicator, an electronic transmitter, associated mounting hardware, cables, junction box, and accessories. The meter shall be bi-directional in measurement, utilizing an ultrasonic velocity measurement to characterize flow volume in the pipe.

1.2 RELATED WORK SPECIFIED ELSEWHERE

A. Section 17100 Meters, General.

B. Section 17400 Process Instrumentation and Controls.

1.3 REFERENCE SPECIFICATIONS, CODES AND STANDARDS

A. Comply with the reference specifications of: Section 17400 Process Instrumentation and Control.

1.4 CONTRACTOR SUBMITTALS

A. Submittals shall be made in accordance with Section 01330, Shop Drawings / Submittals of the GENERAL REQUIREMENTS.

B. Comply with applicable subsections of Section 17400 Process Instrumentation and Control.

1.5 QUALITY ASSURANCE

A. The CONTRACTOR shall obtain the services of a factory-trained specialist to install, check, and calibrate all field-mounted ultrasonic flow meters.

B. All materials and equipment shall be of the highest available quality, new and unused.

PART 2 -- PRODUCTS

2.1 GENERAL

A. Basic Design: Field-mounted ultrasonic flow meters shall consist of transducers mounted in bosses welded directly to metal pipes, or transducers mounted to gasketed saddles strapped to concrete or plastic pipe. The meters shall be suitable for measuring stormwater with an accuracy of ±2 percent (of reading) for flow velocities above one foot per second, and a rangeability of 10 to 1 (or 25 to 1 for higher velocities).

B. Schedule of Field-Mounted Transit-Time Ultrasonic Meters: Field-mounted ultrasonic flow meters shall be provided as indicated on the drawings.

2.2 BASIC MATERIALS

A. Materials of construction shall be all 316 stainless steel or non-metallic corrosion-resistant, including transducers, fasteners and all other accessories and appurtenances. Sensor enclosures shall have IP68 waterproof rating.

B. Metering Elements: Combined digital doppler radar velocity sensing with ultrasonic pulse echo depth sensing to remotely measure open channel flow from above the water surface (non-contact type). Flow meters shall produce a flow measurement based on the principle that the speed of a doppler radar signal varies with flow velocity. The measurement of signal speed or the measurement of transmitted and reflected frequencies infers the pipeline's average velocity. The primary element shall utilize a single pair of electro-acoustic transducers mounted inside a manhole above the water surface. Meters shall provide flow measurement during manhole surcharge flow conditions in addition to open-channel flow conditions.

C. Two sensors shall be permanently mounted inside a manhole provided by the CONTRACTOR, with concrete anchors and installation parts provided by the meter manufacturer. The equipment manufacturer shall review and certify in writing that the installation arrangement and details will provide best possible accuracy.

D. The Transmitter shall be provided with a data logger and integral digital display scaled in engineering units and contained in a NEMA 4X enclosure. The electronics shall incorporate dual phase-lock loops in the flow measuring circuitry, one for each direction of sonic transmission. The electronics shall also incorporate automatic gain control circuitry and interference rejecting circuitry for tuning and to mitigate noise and maintain accuracy in the presence of traces of bubbles, solids, electrical noise and pipe vibration. The output signals from the transmitter shall be 4-20 mA DC proportional to flow rate. Overall metering system accuracy shall conform to ± 1 percent of flow rate for velocities over 1 ft/sec.

E. Transmitter shall be provided with manufacturer-supplied interconnecting cable of up to 1000 ft length as required based on distance between sensor and data logger/control panel. External dessicants and potting/sealant kits shall be provided as needed for proper installation.

2.3 Manufacturers:

A. Hach Flo-Dar AV Sensor with FL1500 stationary data logger;

B. Or equal.

PART 3 -- EXECUTION

3.1 INSTALLATION, CALIBRATION, TESTING, PRECOMMISSIONING, START-UP AND INSTRUCTION

A. Comply with the applicable subsections of Section 17400 Process Instrumentation and Control Part 3 - EXECUTION.

B. The sensors shall be positioned in accordance with the manufacturer's published specifications, using mounting templates provided by the manufacturer. The sensors shall be installed with a minimum of 10 pipe diameters of unobstructed straight upstream approach, and a minimum of 3 pipe diameters of unobstructed straight downstream pipe.

C. Installation shall be in strict accordance with the manufacturer's printed instructions.

D. Field welding or boring of piping and mounting of transducers shall be done only by highly skilled technicians certified in this area of expertise and recommended by the Manufacturer.

END OF SECTION

SECTION 17400

PROCESS INSTRUMENTATION AND CONTROL

PART 1 -- GENERAL

1.1 THE REQUIREMENT

A. This section sets forth the general specification and requirements for the instrumentation work for the construction of the Project.

B. A single Prime Contractor, through the use of a qualified Instrumentation and Control System Subcontractor, shall furnish, install, and place into service the operating process instrumentation, all the control systems, and all the appurtenant work, being provided under this section of these Specifications and the integration of the Control and Instrumentation system and control devices provided under this project all in accordance with the requirements of the Contract Documents. The prime CONTRACTOR may act as an instrumentation and Control System Subcontractor provided the prime CONTRACTOR has been qualified to do the work as required in paragraph 1.1 C herein for Instrumentation Subcontractors.

1. Furnish and install complete instrumentation systems as indicated on the Contract Drawings and as specified herein. Complete all required engineering work such as installation details, As-built drawings, Shop submittals, test procedures, training syllabuses and materials, and similar work described in this Specification, to produce a complete, fully documented and properly operating process instrumentation and control system. Other additional drawings and text records to complete this work shall be provided.

2. The Instrumentation and Control System Subcontractor shall assume full responsibility for integration and signal compatibility of the control and instrumentation systems with existing devices and devices provided under other specification sections and the City SCADA control system.

3. As a minimum, the Instrumentation and Control System Subcontractor under the direction of the CONTRACTOR shall provide:

   a. Implementation of the control and instrumentation system;

      1). Provide all engineering, labor and materials required to prepare analog hardware submittals; design, develop, electronically draft and submit loop drawings and control panel designs; prepare test plan, training plan, and spare parts submittals; procure hardware; fabricate panels; factory test panels; supervise the installation of all instrumentation and, control devices and panels. Perform and document all loop tests, system commissioning, and the performance of the **Thirty (30)** continuous day test for the entire control and instrumentation system.

      2). Provide all engineering, labor, and materials required to prepare Operations and Maintenance Manuals, conduct training classes, and to submit "as-built" or record drawings which reflect the installed state of the control and instrumentation system at the time of acceptance.

b. Integration of the control and instrumentation system with instrumentation and control devices being provided under other specification sections;

1). Provide all engineering, labor, and materials required to review vendor drawings and to design, develop, electronically draft and submit all requisite loop drawings and "As-Built" loop drawings associated with;

a). Equipment being provided under other divisions of these specifications.

b). Owner furnished or existing equipment.

2). Provide all engineering, documentation, labor, and materials required to resolve signal, power, or functional incompatibilities between the control and instrumentation system and interfacing devices.

3). Provide all engineering, labor, and materials required to:
a). Supervise and install all instrumentation and control panels (including City supplied equipment).

b). Verify compliance with the manufacturer's installation recommendations.

c). Conduct, document, supervise the performance, and documentation of testing.

c. The design, development, drafting and submission of all required loop drawings and as-built loop drawings associated with; (a) equipment provided under Division 17; (b) equipment provided under other divisions of these specifications; and (c) CITY furnished equipment. It is the intent of these specifications that all instrumentation loops associated with this project shall be drafted and documented in a CITY approved format as Loop Drawings and shall be submitted for CITY review and approval. All loop drawings shall be developed in an electronic format. The As-Built (final version) shall be submitted both in hard copy and electronic format.

d. All instruments shown on the loop drawings shall be itemized in an instrumentation summary generated by the Instrumentation and Control System Subcontractor. The instrument summary shall be on an electronic **Excel** and hardcopy format and shall list all of the key attributes of each instrument provided under this contract. As a minimum, attributes shall include:

1). Tag Number

2). Reference Drawing No.

3). Loop Drawing Number

4). Service

5). Area Location

6). Associated LCP, PLC PCM, or RTU

7). Calibration Range

8). Manufacturer

9). Model Number

10). Manufacturer serial number.

2. The Instrumentation and Control System Subcontractor shall obtain from the Prime CONTRACTOR the required information on those primary elements, valve actuators, vendor packages, and other control equipment or devices which are furnished by others but are required to be interfaced under this Division.

3. The Instrumentation and Control System Subcontractor shall coordinate his work to ensure that:

   a. All components provided under this Section are properly installed.

   b. The proper type, size, and number of control wires and data communication cables with their conduits are provided, installed, and tested.

   c. The proper type, size, and number of flexible pneumatic tubes with their conduits are provided and installed.

   d. Proper electric power circuits are provided for all instrumentation components and systems.

C. Instrumentation and Control System Subcontractor Experience Requirements: Prime Contractor shall at bid, submit to the CITY documentation listed below for his proposed Instrumentation and Control System Subcontractor:

1. Documentation describing at least two projects of similar size and complexity that have been successfully completed in which the Instrumentation and Control System Subcontractor performed system engineering, system fabrication and installation, documentation (including schematic, wiring and panel assembly drawings), field testing, calibration and start-up, operator instruction and maintenance training. In addition, list the following information for each project:

   a. Name of plant, owner, contact name and telephone number.

   b. Name of manufacturer for the instrumentation furnished.

   c. Type of instruments/equipment furnished

   d. Approximate number of input functions to the system, analog and digital.

   e. Approximate number of output functions from the system, analog and digital.

   f. Contracted cost of the instrumentation and Control System including change orders

   g. Date of completion or acceptance.

2. Identify individual responsible for office engineering and management, and the individual who will be responsible for field testing, calibration, start-up and operator training for this project. Include references of recent projects for these persons.

3. Documentation showing that the Instrumentation Subcontractor has been in the instrumentation and control systems business for minimum of **four** years.

D. Instrumentation and Control System Subcontractors not having the experience requirements and/or failing to submit the above listed documentation will be considered not-qualified for the project. The Contractor shall be responsible for substituting the bid listed Instrumentation Subcontractor with one having the required experience and documentation at no extra cost of the City.

E. The PRIME CONTRACTOR shall assign the Instrumentation and Control System Subcontractor full responsibility for the complete operation of all new and modified instrumentation and control systems. The CONTRACTOR shall have said Subcontractor perform all engineering and coordination necessary in order to select, furnish, install, connect, calibrate, and place into operation all sensors, instruments, alarm equipment, control boards, panels, computers, process control modules, human- machine interfaces, accessories and all other equipment as specified herein. Furthermore, said Subcontractor must calibrate and demonstrate the operability of said systems in accordance with the Contract Documents.

F. The Instrumentation and Control System Subcontractor shall provide all engineering work and installation drawings to produce a complete instrumentation system. If it is necessary to produce additional drawings (due to subcontractor selecting equivalent equipment/instruments in leu of the ones shown on Contract Documents); to complete and document the work, such drawings shall be made at no additional cost to the CITY.

G. The Instrumentation and Control System Subcontractor shall examine all drawings, specifications, and details to become fully acquainted with the method of construction and to evaluate the quantity of Work to be performed. In case of conflicting or incomplete technical information, the Instrumentation and Control System Subcontractor shall include costs in its lump sum bid to coordinate the resolution of these conflicts and deficiencies with the ENGINEER at no additional cost to the CITY. Resolution of these discrepancies shall be obtained from the ENGINEER by the Instrumentation and Control System Subcontractor prior to purchasing of the instrument item.

H. Instrumentation and Control System Subcontractor shall note that the equipment loop, logic and elementary diagrams are based on non-certified vendor information and indicate minimum scope of supply from the Equipment Manufacturer. The Instrumentation and Control System Subcontractor shall include all costs in this bid to add additional instruments, wiring, computer inputs/outputs, controls, conduit, interlocks, electrical hardware, drawing revisions and all related documents and drawings, into the design based on Equipment Manufacturer's final certified prints. Such changes to instrumentation and electrical work shall be incorporated into the scope of work at no additional cost to the CITY.

I. Provide all instrumentation and all related wiring as specified on any one of the following instrument or electrical documents: instrument location drawings, Instrument Index, I/O Tabulation, Loop Descriptions, one-line electrical diagrams, or as indicated on any other Contract Document. Indication of required instrumentation work on any one of these Contract Documents shall require supply and installation of

the instrument and related wiring, supports and appurtenances at no additional cost to the CITY.

J. Provide all equipment, all materials, all labor supervision, all consumables and all scaffolding for the installation of the instrumentation systems, including the following:

1. Provide field engineering design, as required, for mounting and supporting details of all field mounted components.

2. Provide coordination, as required, between manufacturer's drawings and Contract Installation Drawings.

3. Provide any additional schematics and any additional interconnection diagrams that may be required to facilitate erection or completion of equipment installation.

4. Assemble and make interconnection of instruments disconnected for shipping purposes.

5. Remove all temporary supports, all bracing or other foreign objects that were installed in instrument control panels or other equipment to prevent damage during shipping, storage and/or erection.

6. Coordinate work with that of the different trades and disciplines so that interference between conduit, piping, equipment, architectural and structural work shall be avoided.

7. Install and support all instruments and all instrument piping not installed and supported by others. The Instrumentation and Control System Subcontractor shall furnish all hardware and all stands required to mount these items and provide modifications, as required, to meet actual site conditions.

8. All piping shall be field measured prior to fabrication/or erection. Any significant discrepancies between drawings and field measurements shall be reported to the ENGINEER. The CITY shall not be responsible for any costs for rework because of failure to field measure prior to initiating fabrication.

9. Capillary tubing shall be adequately supported and protected. All extra tubing shall be carefully coiled, tied, and protected at the instrument location.

10. Provide temporary nitrogen purging to all panels (LCP, PCM, CSI, City supplied equipment) on site before being permanently installed only where the environment requires purge.

K. Prime Contractor shall be responsible for coordination with the City SCADA system for interface, communication, loop tests, and performance of complete control system.

1.2 RELATED WORK SPECIFIED ELSEWHERE

A. The WORK of the following Sections applies to the WORK of this Section. Other Sections of the Specifications, not referenced below, shall also apply to the extent required for proper performance of this WORK.

1. Section 09800 Protective Coating

2. Section 11000 Equipment General Provisions

3. Section 15320 Electrical Requirements for Mechanical Equipment

4. Section 16020 Municipal Facilities General Electrical Requirements

5. Section 16100 Basic Materials and Methods

6. Section 17450 PLC, SCADA, Network and Communications

B. The monitoring and control system configurations indicated are diagrammatic. The locations of equipment are approximate unless dimensioned. The exact locations and routing of wiring and cables shall be governed by structural conditions and physical interferences and by the location of electrical terminations on equipment.

C. The Prime CONTRACTOR shall arrange a meeting with the engineer, and CITY at the site in order to identify equipment location prior to roughing in. The CITY reserves the right to require minor changes in location of equipment prior to roughing in without incurring any additional costs or charges.

D. Determine exact routing and final terminations for all signal, power, data communication wiring/cable. A site visit and review of the existing system control panel is mandatory.

1.3 REFERENCE SPECIFICATIONS, CODES AND STANDARDS

A. Comply with the reference specifications of the GENERAL REQUIREMENTS

B. Prime Contractor shall procure all necessary permits, pay all associated costs, and shall furnish the ENGINEER with evidence of permit procurement prior to the commencement of the Work.

C. The equipment, materials and installation shall comply with the applicable standards, specifications and regulations of the following:

1. Instrument Society of America/International Society for Automation (ISA).

2. American Petroleum Institute (API).

3. National Electrical Manufacturers Association (NEMA).

4. Occupational Safety and Health Administration(OSHA).

5. American National Standards Institute(ANSI).

6. Military Standards (MIL Standards).

7. National Fire Protection Association (NFPA).

8. Scientific Apparatus Makers Association (SAMA).

9. Institute of Electrical and Electronic Engineers (IEEE).

10. National Electrical Code (NEC).

11. Insulated Cable Engineers Association (ICEA).

12. Local Power and Telephone Companies.

13. Local Authorities having jurisdiction over the work.

14. City of Los Angeles Electrical Code (CLAEC)

15. Underwriters Laboratories (UL)

16. City of Los Angeles, Department of Public Works, Bureau of Sanitation, “Operator Interface Graphic Display Standards”

17. National Institute of Standards and Technology (NIST)

18. Society of Automotive Engineers (S.A.E)

19. American Society for Testing and Materials (ASTM)

20. Steel Structures Painting Council (SSPC)

21. “GREEN BOOK” Standard Specifications for Public Works Construction – latest Edition Adopted by City of Los Angeles.

22. Federal Information Processing Standard (FIPS)

D. All electrical equipment, components, devices, shall be Underwriters Laboratories APPROVED (have the UL label and/or be listed with reexamination in UL Publication Reference No. 1). Alternatively, the equipment shall be APPROVED by a testing laboratory recognized by the City of Los Angeles and shall conform to all applicable requirements of the City of Los Angeles Department of Building and Safety.

1. Review and approval by the CITY Department of Building and Safety Electrical Test Laboratory (ETL) requires submittal of the equipment, components or devices and any current testing documents to the ETL. Where major equipment is submitted to ETL for approval, the Prime CONTRACTOR shall submit to the ENGINEER a detailed schedule showing the approval process and approximate equipment delivery dates to ensure that there will be no effect on the project completion date. No electrical equipment will be approved for delivery to the jobsite without ETL approval. All costs incurred in the approval process shall be included in the Bid.

2. Products being specified in the Contract Specifications does not express or imply approval by UL, the Department of Building and Safety or any other testing

laboratory. Shop drawing approval by the ENGINEER shall not supersede the requirements of the Department of Building and Safety for listed equipment.

1.4 SUBMITTALS/SHOP DRAWINGS

A. Submittals shall be made in accordance with Section 01330**,** Shop Drawings / Submittals of the GENERAL REQUIREMENTS.

B. Shop Drawings: Coordinate the work required in these Specifications so that a complete instrumentation and control system for the facility will be provided and will be supported by accurate shop and as built drawings. The Instrumentation Subcontractor shall prepare and submit complete and organized shop drawings, as specified herein. Interface between instruments, motor starter, control valves, variable speed drives, flow meters, existing instruments, chemical feeders, Instrumentation symbols, and abbreviations, Piping and Instrumentation, Local Control panels, New Instruments, and equipment related to instrumentation and control shall be included in the shop drawing submittal.

C. A table of Contents shall be provided at the beginning of each binder or volume of the Submittal/Manual and shall list entries down to instrument and device level indexed by name, tag number and sequential page number. All pages of each binder/volume shall be sequentially numbered for ease of reference and review. During the period of preparation of this submittal, the Prime CONTRACTOR shall authorize direct, informal liaison between the Instrumentation Subcontractor and the ENGINEER for exchange of technical information. As a result of this informal liaison, oral communication shall not alter the scope of work or cause increase or decrease in the Contract price. During this informal exchange, no oral statement by the ENGINEER shall be construed to give formal approval of any component or method, nor shall any statement be construed to grant formal exception to or variation from these Contract Documents.

D. The Instrumentation and Control System Subcontractor shall submit an analog/digital hardware submittal that utilizes detailed shop drawings and data prepared and organized for easy reference. Section Tabs, Sequential page numbering and Table of Contents / Index Tables shall be used throughout. All shop drawings shall include the letter head and/or title block of the Prime CONTRACTOR responsible for this project. The title block shall include, as a minimum, the Prime CONTRACTOR'S registered business name and address, project name, drawing name, revision level, and personnel responsible for the content of the drawing. The quantity of submittal sets required shall be as specified in Section 01330 of the general requirements. The analog/digital hardware submittal shall be submitted as a complete bound package at one time within ninety (90) calendar days of receipt of Notice to Proceed, and shall include:

1. Drawings showing definitive diagrams for every instrumentation loop and system. These diagrams shall show and identify each component of each loop or system using legend and symbols from ANSI/ISA S5.4, extending the format as shown on Instrumentation Drawings and as defined by the most recent revision in ISA. Each System or Loop diagram shall be drawn on a separate drawing sheet with no more than four loops per drawing. Develop, submit, update and maintain in an as-built condition the loop drawings for all loops in this project including vendor supplied packages, equipment supplied under Division 17 and CITY supplied packages. The loop drawings shall also show all software modules and linkages. In addition to the expanded ISA S5.4 requirements the Loop Diagrams shall also contain the following details:

    a. ISA tag number

b. Functional name of each Loop

c. Tag number of the loop

d. Reference name, drawing, and Loop diagram numbers for any signal continuing off loop diagram sheet.

e. MCC Panel, circuit, and breaker numbers for all power feeds to the loops and instrumentation (i.e., 24VDC and 120VAC).

f. Designation and if appropriate terminal assignments associated with every manhole, pull box, junction box, conduit and panel the loop circuits pass through.

g. Vendor panel, instrument panel, conduit, junction boxes, equipment and DCS terminations, termination identification wire numbers and colors, power circuits, and ground identifications.

h. Calibration range

i. Manufacturer

j. Model Number

2. Fully executed ISA-S20 data sheets for each component, together with a technical product brochure or bulletin. The technical product brochures must be complete enough to verify conformance to all Contract Document requirements. The data sheets, as a minimum, shall show:

a. Component functional description used herein and on the Drawings.
b. Manufacturer's model number or other product designation.

c. Project tag number used herein and on the Drawings.

d. Project system or loop of which the component is a part.

e. Project location or assembly at which the component is to be installed.

f. Input and output characteristics.

g. Scale range and units and multiplier.

h. Requirements for electric supply.

i. Requirements for air supply.

j. Materials of component parts to be in contact with, or otherwise exposed to, process media;

k. Optional/Special requirements or features.

3. A complete index shall appear in the front of each bound submittal volume. A separate technical brochure or bulletin shall be included with each instrument data sheet. The data sheets shall be indexed in the submittal by systems or loops, as a

separate group for each system or loop. If, within a single system or loop, a single instrument is employed more than once, one data sheet with one brochure or bulletin may cover all identical uses of that instrument in that system. Each brochure or bulletin shall include a list of tag numbers for which it applies. System groups shall be separated by labeled tags.

4. Drawings showing both schematic and wiring diagrams for control circuits: Complete details on the circuit interrelationship of all devices within and outside each Control Board shall first be submitted using schematic control diagrams. Subsequent to return of this first submittal by the ENGINEER, piping and wiring diagrams shall be prepared and submitted for review by the ENGINEER; the diagrams shall consist of component layout drawings to scale, showing numbered terminals on components together with the unique number of the wire to be connected to each terminal. Piping and wiring diagrams shall show terminal assignments from all primary measurement devices, such as flow meters, and to all final control devices, such as pumps, valves, chemical feeders and vendor panels. Should an error be found in a shop drawing at any time in the project, it shall be corrected including any field changes found and a "As Built" drawing shall be prepared and submitted for review and approval by the ENGINEER prior to the acceptance of the project. Furnish all necessary equipment suppliers' shop drawings to facilitate inclusion of this information. Respond to all comments on the shop drawing re-submittals made by the ENGINEER either by noted corrections or stating why it was not revised. Any resubmittals received by the ENGINEER which do not contain responses to the ENGINEER's previous comments shall be returned marked "Rejected." No further review by the ENGINEER shall be performed until responses are made to all comments.

5. Assembly and construction drawings for each alarm annunciator, local indicating panel and for other special enclosed assemblies for field installation: These drawings shall include dimensions, identification of all components, surface preparation and finish data, nameplates, and the like. These drawings also shall include enough other details, including prototype photographs, to define exactly the style and overall appearance of the assembly; a finish treatment sample shall be included.

6. Installation, mounting, and anchoring details for all components and assemblies to be field-mounted, including conduit connection or entry details shall be shown in the submittal drawings.

7. A Bill of Material shall be submitted for each field mounted device or assembly as well as cabinet assemblies and sub-assemblies. Bills of Material shall include all items within an enclosure, and shall be complete and detailed. An incomplete submittal shall be rejected, and no further evaluation performed until a completed and detailed bill is submitted.

E. Organization and Binding of Shop Drawings: The organization of the initial shop drawings submittal shall be compatible to eventual inclusion with the technical manuals submittal and shall include final alterations reflecting "As Built" conditions. Accordingly, the final approved multiple-copy shop drawing submittal shall be separately bound in 3-ring binders.

F. Technical Manuals: In addition to updated shop drawing information to reflect actual existing conditions, each set of technical manuals shall include installation, connection, operating, troubleshooting, maintenance and overhaul instructions in complete detail. This shall provide the CITY with comprehensive information on all

systems and components to enable operation, service, maintenance and repair. Exploded or other detailed views of all instruments, assemblies and accessory components shall be included together with complete parts lists and ordering instructions. For additional requirement see the GENERAL REQUIREMENTS.

G. Control Panel Engineering Submittal: The Instrumentation and Control System Subcontractor shall submit a control panel engineering submittal (CPES) for each control panel being provided under this Specification Including intrinsically safe and Fiber Optic patch panels. The CPES shall completely define and document the construction, finish, layout, power and UPS circuits, signal and safety grounding circuits, fuses, circuit breakers, signal circuits, switches, surge protectors, internally mounted instrumentation components, faceplate mounted instrumentation components, internal panel arrangements, and external panel arrangements. All panel drawings shall, as a minimum, be ANSI "B" size (11” X 17”) with all data sheets and manufacturer specification sheets being ANSI "A" size (81/2” X 11”). The submittal shall be in conformance with latest, NEMA Standard and shall be submitted as a singular complete bound volume or multi-volume package within **120** calendar days after notice to Proceed and shall have the following contents:

1. A complete index shall appear in the front of each bound volume. All drawings and data sheets associated with a panel shall be grouped together with the panels being indexed by systems or process areas. All panel tagging and nameplate nomenclature shall be consistent with the requirements of the Contract Documents.

2. Construction drawings drawn to a 1-1/2-inch = 1-foot scale which define and quantify the type and gage of fabrication steel to be used for panel fabrication, the ASTM grade to be used for structural shapes and straps, panel door locks and hinge mechanisms, type of bolts and bolt locations for section joining and anchoring, details on the utilization of "UNISTRUT" and proposed locations, stiffener materials and locations, electrical terminal box and outlet locations, electrical access locations, print pocket locations, writing board locations and lifting lug material and locations.

3. Physical arrangement drawings drawn to 1-1/2-inch = 1 foot scale which define and quantify the physical groupings comprising control panel sections, auxiliary panels, subpanels, and racks. Cutout locations with nameplate identifications shall be provided.

4. Schematic/Elementary diagrams shall depict all control devices and circuits and their functions.

5. Wiring/Connection diagrams shall locate and identify electrical devices, terminals, installed Components/Instruments and interconnecting wiring. These diagrams shall show interconnecting wiring by lines, designate terminal assignments, and show the physical location of all electrical and control devices.

6. Interconnection diagrams shall locate and identify all external connections between the control panel/control panel devices and associated equipment. These diagrams shall show interconnecting wiring by lines, designate terminal assignments, and show the physical location of all panel ingress and egress points.

7. Control sequence diagrams shall be submitted to portray the contact positions or connections required to be made for each successive step of the control action.

8. Manufacturer specification sheets which verify the products conformance to the requirements of the Contract Documents.

9. A bill of material which enumerates all devices associated with the control panel.

H. Test Procedure Submittal:

1. The Instrumentation and Control System Subcontractor shall submit the Procedures proposed to be followed during the tests required under this project. Procedures shall include statement indicating test objectives, test descriptions, forms, and checklists to be used to control and document the required tests.

2. Prior to the preparation of the detailed test procedures, submit outlines of the specific proposed tests. Submittals shall include examples of the proposed forms and checklists. Once the Preliminary Test Procedure Submittals have been reviewed by the ENGINEER and returned stamped either "no exceptions noted" or "make corrections noted", the Instrumentation Subcontractor shall submit the proposed detailed test procedures, forms, and checklists.

3. Once the detailed Test Procedures Submittals have been reviewed by the ENGINEER and returned stamped either "no exceptions noted" or "make corrections noted", the tests shall be scheduled in coordination with ENGINEER.

4. Upon completion of each required test, a copy of the signed-off test procedures shall be submitted as test documentation. These requirements shall apply to the factory testing of all panels, and all on-site tests.

I. The Instrument Subcontractor shall submit the integrated hardware/communication loop testing results from field to the DCS at the end of project.

J. The organization of the initial shop drawing submittal required above shall be compatible to eventual inclusion with the Technical Manuals submittal and shall include final alterations reflecting "record" conditions. Submittals not organized as described above and incomplete submittals for a given Loop will not be accepted. Accordingly, the initial multiple-copy shop drawing submittal shall be separately bound in standard size, 3-ring, loose-leaf, vinyl plastic, hard cover binders suitable for bookshelf storage. Binder ring size shall not exceed 2-inches.

K. Control Valve Submittal: Submit the following data within **90 days** after Notice to Proceed:

1. Type, Dimensional Outline, Mounting Details, body material, packing gland material, Trim material & shaft material.

2. Diagrams (wiring, schematic, logic)

3. Certified Performance Data

4. Calculations for Valve Sizing

5. Welding procedures, Qualification Test, & Non-destructive testing procedures.

6. Cross Sections with Parts List

7. Inspection and Test Plan Prior to acceptance, the control valve supplier shall submit function test verification certifications and hydrostatic leak test certifications.

L. Instrument Installation Detail and Submittal: Submit the following data within **180** days after Notice to Proceed:

1. Detail and Instrument Installationdrawings.

2. Bill of Materials.

1.5 QUALITY ASSURANCE

A. Accuracy: The accuracy of each instrumentation system or loop shall be determined as a probable maximum error; this shall be the square-root of the sum of the squares of certified "accuracies" of the designated components in each system, expressed as a percentage of the actual span or value of the measured variable. Each individual instrument shall have a minimum accuracy of ±0.5 percent of full scale and a minimum repeatability of ±0.25 percent of full scale unless otherwise specified. Instruments which do not conform to or improve upon these criteria are not acceptable.

B. Where materials and equipment are specified to conform to the standards of the Underwriter's Laboratories, the label of, or listing with reexamination in latest UL Publication, shall be accepted as enough evidence that the items conform to Underwriter's Laboratories requirements. In lieu of such label, listing of the materials or equipment by a recognized approved testing laboratory as stated in the CITY of Los Angeles Electrical Code will be acceptable as interpreted by the CITY's Department of Building and Safety.

1.6 PRESUBMITTAL CONFERENCE

A. Arrange and conduct a Pre-submittal Conference on the instrumentation and control system work within 15 days after the notice to proceed. The Instrumentation Subcontractor shall allow **one** eight-hour working day for the conference. The purpose of the Pre-submittal Conference shall be to informally review with the CONTROL SYSTEM ENGINEER and approve the way the Instrumentation and Control System Subcontractor should respond to the Contract requirements before any submittals are prepared. The Instrumentation and Control System Subcontractor shall prepare the following items for presentation at the Pre-submittal Conference:

1. A list of equipment and materials required for the control system and the manufacturer and model number which the Instrumentation and Control System Subcontractor proposes to use for each item.

2. A list of proposed exceptions to the Specifications and Drawings, along with a brief explanation of each. Approval shall be subject to formal submittal and review by the ENGINEER.

3. An exact one-to-one sample of each type of submittal specified herein.

4. A bar chart type schedule for all system related activities from the Pre-submittal Conference through startup and training, plant acceptance and project closeout. The schedule shall include the dates relative to submittals, design, fabrication, programming, factory testing, deliveries, installation, field testing, and training. The schedule shall be subdivided to show activities relative to each major item or group of items.

5. Provide **3** copies on paper, and 1 electronic copy compatible with City Standard software of Pre- submittal Conference data to the ENGINEER.

B. Keep formal meeting minutes. Prior to adjournment of the conference, all parties must concur in writing with the accuracy of the minutes.

C. Preparation of shop drawings shall not commence until after the Pre-submittal Conference. Submittals required for that conference are exempted.

1.7 GUARANTEE

A. The Instrumentation and Control System Subcontractor shall guarantee all equipment and installation, as specified herein, for a period of one year following the date of completion of the work. To fulfill this obligation, the Instrumentation Subcontractor shall utilize technical service personnel designated by the Instrumentation Subcontractor whom he originally assigned project responsibility for instrumentation. Services of a non-critical nature shall be performed within 5 calendar days after notification by the CITY, and critical services as (determined by the ENGINEER) within **24** hours after notification.

1. Equipment, software, and materials which do not achieve design requirements after installation shall be replaced or modified to attain compliance at no additional cost to the CITY. Following replacement or modification, retest the system and perform any additional procedures needed to return/restore complete system to satisfactory operation at no additional cost to the CITY and obtain design compliance approval from the ENGINEER.

2. All parts, materials (excluding consumables), labor, travel, subsistence, or other expenses incurred in providing all services and service visits during the one-year warranty period shall be included in the Bid.

1.8 MANUFACTURER'S REPRESENTATIVE SERVICES

A. Provide jobsite visits and services of a manufacturer's technical field representative for the following items of equipment for calibration, testing and start-up:

1. Flow meters

2. Process Analyzers

3. Programmable controller, HMI

4. Valve actuators

5. Any process sensing devices and indicating devices

B. Provide the following services of qualified technical representatives (see Installation, Calibration, Testing, Pre-commissioning, Start-up, and Instruction herein):

1. Install and connect all instruments, all elements, and all components of every system, including connection of instrument signals to primary measurement elements and to final control elements such as pumps, valves, and chemical feeders.

2. Make all necessary adjustments, calibrations hardware/software interfacing and tests, as called out in the specifications, and drawings.

3. Instruct Plant operating and maintenance personnel on the instrumentation. This time shall be in addition to whatever time is required for other facets of work at the site and shall be during the CITY's normal working days and hours.

1.9 SHOP INSPECTION

A. Shop Inspection and Performance Testing: Arrange for shop inspection and performance testing of the equipment according to Division 11 specifications.

1. All equipment shall be subject to shop inspection in accordance with the GENERAL REQUIREMENTS.

2. The INSPECTOR and CITY Control Systems Engineer of Record shall inspect and participate in the shop/factory testing of all panels prior to shipment.

3. For all equipment, obtain and submit the following to the ENGINEER at least 6 weeks before test date for approval:

a. The Manufacturer's factory test procedure, and report forms, and testing schedule prior to equipment testing.

b. Shop testing of the equipment shall be defined as operation of all panels with simulated input/output. The purpose of the shop test shall be to test mechanical, electrical/control, and instrumentation systems. Verify compliance with the Contract Specifications and drawings and intended design function and make any necessary adjustments or repairs prior to shipment. Simulation of faults and trips from the control panel shall be included. If all panels are to be stored at the Prime Contractor's facility, the shop test shall be successfully completed prior to storage. All panels shall not be shipped until they have been successfully shop tested.

B. Field Performance Test and Reports: All equipment shall be performance tested after installation at the field operating site according to Division 11 specifications.

1. Testing shall not start until all preliminary checks and calibrations have been completed, the installation has been certified ready for testing by the

Manufacturer's representative, and the test forms and procedures have been approved by the ENGINEER.

2. All test information shall be recorded on forms provided by the CITY or approved by the ENGINEER. If forms are not available from the CITY, prepare test forms and submit for approval prior to the scheduled start of the test.

3. Submit the test procedure for approval prior to the scheduled start of the test.

4. Prepare a field performance test report, including all raw data, and submit the report within 14 calendar days after approved completion of the equipment field test.

1.10 PERSONNEL TRAINING; Refer to General Requirements.

PART 2 -- PRODUCTS

2.1 GENERAL

A. Provide all instrumentation and related wiring as specified on any of the following instrumentations and electrical documents:

1. Instrument Location Drawings, Instrument Index, Instrument Data Sheets, Loop/Logic Diagrams, I/O Tabulation, Loop Description, One-Line Electrical Diagrams, and/or as indicated on any other Contract Document.

2. Indication of required instrumentation work on any of these Contract Documents shall require supply and installation of the instrument and related wiring, supports, accessories and appurtenances, at no additional cost to the CITY.

3. Assume full responsibility to perform all engineering to select, furnish, install, program, test, calibrate, and place into operation all instrumentation, control panels, programmable controllers, and hardware/software interfacing with existing Plant DCS, for a complete and functional system.

B. The monitoring and control system configurations indicated are diagrammatic. The locations of equipment are approximate unless dimensioned. The exact locations and routing of wiring and cables shall be governed by structural conditions and physical interferences and by the location of electrical terminations on equipment. All equipment shall be located and installed so that it will be readily accessible for operation and maintenance. The CITY reserves the right to require minor changes in location/orientation of equipment prior to roughing in without incurring any additional costs or charges. The Instrumentation Subcontractor shall review the existing site conditions and examine all shop drawings for the various items of equipment in order to determine terminations for all wiring and cables. All deviations from the Drawings or Specifications must be approved in writing by the ENGINEER.

C. All meters, instruments, and other components shall be new and un-used, and the most recent field- proven models marketed by their manufacturers at the time of submittal of the shop drawings unless otherwise specified to match existing equipment.

D. All panel mounted instruments shall have matching style and general appearance. Instruments performing similar functions shall be of the same type, model, or class, and shall be of one manufacturer.

E. All instrumentation shall be rated for operation in the ambient conditions at the equipment installation locations. 316 Stainless Steel NEMA 4X rated enclosures suitable for the environment shall be furnished in all general purpose areas.

F. All instrumentation in hazardous areas shall be approved for use in the particular hazardous classification in which it is to be installed, and shall at a minimum be NEMA 4X.

G. Analog measurements and control signals shall be electrical as indicated herein and shall vary in direct linear proportion to the measured variable, except as otherwise noted. Electrical signals outside control board(s) shall be 4 to 20 milliamperes dc except as noted. Signals within enclosures may be 1-5 volts dc. Dropping resistors shall be installed at all field side terminations in the control panels to ensure loop integrity.

H. All control panels shall be provided with redundant power supplies which are configured in a fault-tolerant manner to prevent:

1. Interruption of service upon failure.

2. Interruption of service necessitated by the replacement of a power supply.

3. All power supplies shall have an excess rated capacity of forty (40) percent.

I. Each signal and control loop shall be individually fused.

J. Equipment or methods requiring redesign of any project details are not acceptable without prior approval of the ENGINEER. Any changes inherent to a proposed alternative shall be at no additional cost to the CITY. The required approval shall be obtained in writing by the Instrumentation and Control System Subcontractor prior to submittal of shop drawings and data. Any proposal for approval of alternative equipment or methods shall include evidence of improved performance, operational advantage and maintenance enhancement over the equipment or method specified or shall include evidence that a specified component is not available. Otherwise, alternative equipment (other than direct, equivalent substitutions) and alternative methods shall not be proposed.

K. All field mounted instruments, control equipment/enclosures mounted outside of protective structures shall be equipped with suitable electrical surge protective/arresting devices to protect the equipment from damage due to electrical transients induced in the interconnecting lines from lightning discharges or nearby electrical devices. Protective devices used on 120V ac inputs to field mounted equipment shall be secondary surge protectors conforming to the requirements of latest IEEE Standard (latest ANSI C62.1), and UL 1449 latest edition.

L. Provide all equipment, material, labor supervision, consumables, scaffolding, for the installation of the instrumentation systems in accordance with the Drawings and Specifications listed herein.

1. Provide field engineering design, as required, for mounting and supporting details of all field mounted components.

2. Provide coordination, as required, between manufacturer's drawings and contract installation drawings.

3. Provide any additional schematic and interconnection diagrams that may be required to facilitate erection or to complete the installation of equipment.

4. Assemble and make interconnection of instruments disconnected for shipping purposes.

5. Remove all temporary supports, bracing or other foreign objects that were installed in instruments, control panels or other equipment to prevent damage during shipping, storage and/or erection.

6. Contractor shall coordinate his work with that of the different trades so that interference between conduit, piping, equipment, architectural and structural work shall be avoided.

7. Install and support all instruments and instrument piping related to this project not installed and supported by others. Furnish all hardware and stands required to mount these items and modify to meet actual site conditions.

8. All piping shall be field measured prior to fabrication/or erection. Any significant discrepancies between drawings and field measurements shall be reported to the ENGINEER. The CITY shall not be responsible for any costs for rework caused by failure to field measure prior to initiating fabrication.

9. Adequately support and protect capillary tubing. All extra tubing shall be carefully coiled, tied, and protected at the instrument.

M. The equipment loop, logic and elementary diagrams are based on non-certified vendor information and indicate minimum scope of supply from the equipment manufacturer. Include additional costs in the bid to add additional instruments, wiring, computer inputs/outputs, controls, conduit, interlocks, electrical hardware and similar items, into the design based on equipment manufacturer's final certified vendor prints. Revise or produce new loop, logic, and elementary diagrams to meet the equipment manufacturer's wiring requirements. Such changes to instrumentation and electrical work shall be incorporated into the scope of work at no additional cost to the CITY.

N. Provide the following:

1. Furnish and install all pneumatic piping/tubing and make connections at control panels, instruments and control valves. All tubing/pipe fittings and instrument valves shall be 316 stainless steel(SS).

2. Provide field engineering and design to install instrument air supply taps and piping/tubing as herein specified.

3. Install adequate support for pneumatic piping/tubing runs in accordance with Drawings and Specifications.

4. Check all air supply branch headers by blowing with clean compressed air before placing in service and check for tightness/leaks.

5. Clean all transmission and control piping/tubing by blowing with dried and filtered air prior to connecting to instrument components.

6. Leak test all pneumatic control circuits and enclosures in accordance with ISA Recommended Practice RP-7.1.

7. Set manufacturer's recommended supply pressure at all instrument air regulators.

8. Installation, wiring, termination, and installation tests for all analog instruments local control panels, Control System Interfaces (CSIs), panels and equipment furnished by the CITY.

2.2 SPARE PARTS

A. See the provisions of Section 01781, Spare Parts, of the GENERAL REQUIREMENTS unless otherwise noted.

2.3 CONTROL PANELS

A. General

1. The Instrumentation and Control System Subcontractor shall furnish, supply and install all control panels and enclosures for this project.

2. All panels and enclosures shall be rated NEMA 4X. For hazardous locations they shall be rated NEMA 7 or 9.

3. Dimensions shall be in accordance with manufacturer's requirements. Elevations and horizontal spacing shall be subject to ENGINEER's approval.

3. Furnish, supply and install all control panels for this project. This also covers requirements for local control panels being supplied by the Equipment Manufacturer due to the corrosive environments at wastewater treatment plants, the control panels shall be provided with all required taps, fittings, rotameters, regulators, and when specified alarm interlocks to enable the implementation of an air purge system which is in conformance with ISA-S12.4 Type **Z** requirements.

4. This Specifications covers the requirements for the fabrication of instrument panel boards, mounting, finishing, piping and wiring of instrument equipment.

5. Front of panel layouts for all control panels shall be submitted to the ENGINEER for review and approval prior to start of fabrication. Refer to other requirements as outlined in Drawings section below.

6. All conduit entries shall utilize Myers hubs or equivalent and shall be made watertight at the point of entry into the cabinet with O-ring or gasket seals. In runs of PVC coated conduits, the hubs shall also be PVC coated in accordance with the

conduit manufacturers requirements for fittings and accessories (i.e., Rob Roy Plasti-Bond 2 Red Hot PVC coated Rigid galvanized steel (PVC RGS) or equal.

7. Purge systems shall be provided as defined in the Specifications and Drawings.

B. Mounting of Instruments

1. The panel vendor shall provide cut-outs, and shall mount all instrument items shown or specified to be panel mounted, including any instruments specified to be furnished by other vendors but installed in panel.

2. The panel vendor shall also mount, behind the panels, other instrument accessory items as required and/or specified.

3. Enclosure for all the front panel mounted instruments shall be NEMA 4X rated. Instruments which are not rated NEMA 4X shall be covered with a windowed door to provide overall NEMA 4X rating.

4. Rear of panel mounted equipment shall be installed with due regard to accessibility, commissioning adjustments, servicing requirements and cover removal.

5. Spare space shall be kept clear of wiring, to give maximum space for future additions.

C. Piping Requirements

1. The panels shall be furnished with terminal connections near the top, rear of the panel for all tubing and piping which connect to instruments, valves, instrument air supply and other pressure leads to the panel. Terminal connections for tubing are to be bulkhead tube unions as described below. Those for pipe shall be threaded couplings, plugged for shipping purposes.

2. All tubing, pipe fittings and instrument valves shall be 316 stainless steel (SS).

3. Each terminal connection shall have an engraved metal or plastic plate with a terminal and instrument tag number.

D. Electrical Requirements for Control Panels

1. Furnish and install all the necessary conduit, wireways, switches, and electrical fittings with wire for all circuits to instruments and other panel electrical devices to assure a complete and acceptable installation.

2. Signal and low voltage wiring shall be run separately from power and 120-volt control wiring.

3. Conduit, wireways, junction boxes and fittings shall be installed for all signal/instrument wires. Conduit and wireway runs shall include those required between sensors, indicators, between the thermocouple wireway and junction boxes to instruments.

4. Each terminal connection shall have a plastic plate with a terminal and instrument tag number. All wiring shall be identified with permanent machine printed tubular wire markers.

5. Freestanding panels shall be provided with switched LED (9 WATT) back-of-panel lights with built-in diffuser to prevent bright spots and shadows. One light shall be provided for every 4-feet of panel width and shall be mounted inside and in the top of the back-of-panel area.

6. Freestanding panels shall be provided with a 15-amp, 120-volt, ground fault interrupted (GFI) service outlet circuit within the back-of-panel area. The circuit shall be provided with three-wire, 120-volt, 15-ampere, duplex receptacles, one for every 4-feet of panel width (two minimum per panel) and spaced evenly along the back-of-panel area.

7. Panels shall be so sized as to adequately dissipate heat generated by equipment mounted in or on the panel.

8. Where panels are mounted outside or in unshaded areas or indoors where ambient temperatures can exceed 80°F or fall below 60°F, they shall be provided with thermostatically controlled heaters that will maintain their inside temperature above 60 °F. Thermostatically controlled refrigeration type air conditioning shall be provided where necessary to prevent overheating of the equipment enclosed.

9. For all control panels, provide heat-load calculations from the cabinet manufacturer for sizing heaters and air conditioners and for setting thermostats. In general, interior cabinet temperatures shall not exceed 80°F and shall not fall below 60°F unless otherwise recommended by the manufacturers of instrumentation and control equipment to be housed in the control panels.

E. Wiring Methods:

1. Wiring methods and materials for all panels shall be in accordance with the N.E.C. requirements for General Purpose (no open wiring), unless otherwise specified. Open wiring in closed cabinet type panels is allowed when specified in the material specifications. Unless otherwise specified by the material specification, design and installation of materials shall conform to the requirements of the latest edition of the following standards and codes as a minimum.

   a. The National Electrical Code

   b. City of Los Angeles Electrical Code

   c. All National Safety Codes

   d. American Petroleum Institute Standard RP-550

   e. Applicable Local Law and Regulations

2. Unless otherwise specified by the material specifications, all instruments, alarm systems and motor controls shall operate on 120 VAC, 60-Hertz and/or 24 VDC circuits.

3. At a location on the top or bottom of the panel, the panel fabricator shall furnish and install terminal block connections for the main power supply entry.

4. Power Supply switches for alarm units shall be three-pole type, arranged to open both the power and alarm circuits. Each annunciator shall be equipped with a separate switch.

5. Instruments located on the same panel section and serving the same process unit may be connected to a common branch circuit from the power supply. The numbers of circuits that depend on the circuit load are as noted in the contract documents. A 15-amp, two- pole circuit breaker shall be provided in each branch circuit. The circuit load shall not exceed 10 amps. Different panel sections or different process units shall not use common branch circuits.

6. When instruments do not come equipped with integral fuses, the panel fabricator shall furnish and install fuses as required for the protection of individual instruments against fault currents. Fuses shall be mounted on the back of the panel, in DIN rail, fused terminal blocks with knife-blade disconnect switch, blown fuse indicator (LED) and screw terminals for connecting circuit wiring and identified by a service name tag.

7. Where alarm units are single unit types, one switch may be used to disconnect not more than six alarm units located on the same or adjacent panels.

F. Material:

1. Wire for all 120 volt circuits shall be No. 14 AWG stranded with lugs with Type THWN or THHN insulation. All terminals for external wiring connections shall be suitable for wire size Nos. 16 through 12 AWG.

2. Flexible conduit shall not be allowed except when specifically approved by the ENGINEER in writing.

3. Conduit fittings shall be cast metal fittings as specified in the electrical specifications Section 16110, with PVC coating.

4. Splicing of wires in conduits shall not be permitted. All wire terminations/connections shall have crimped wire lugs and shall be landed terminated on strips or blocks in pull boxes or panels.

5. For case grounding, panels shall be furnished with a 1/4" x 1" copper ground bus complete with solderless connectors for one No. 4 AWG bare stranded copper cable. The copper cable shall be furnished and installed and connected to a system ground loop/ground rod.

G. Electrical Locations:

1. When Contract Drawings or Specifications call for thermocouple actuated instruments, the thermocouple lead wire shall be installed, without junction or splicing. The panel vendor shall furnish dedicated empty conduit or wireway running from the instrument(s) to the top or bottom of the panel as called for in the material specifications or as otherwise

required. Sizing of the conduit or wireway shall be in accordance with the capacity and number of instrument wires of the instrument(s).

2. Terminal boxes for incoming and outgoing signal leads shall be located at the top or bottom of the panel as specified in the material specification, or as otherwise required.

H. Panel Annunciation

1. Unless otherwise noted, the following color code and inscriptions shall be followed for the lenses of all indicating lights:

STATUS	INSCRIPTION(S)	COLOR
ON	ON	RED
OFF	OFF	GREEN
OPEN	OPEN	RED
CLOSED	CLOSED	GREEN
LOW	LOW	RED
FAIL	FAIL	RED
HIGH	HIGH	RED

2. Lettering shall be black on white and amber lenses. Lettering shall be white on red and green lenses.

3. Unless otherwise noted, the following color codes and inscriptions shall be followed for all pushbuttons:

LABEL / ABBREV	INSCRIPTION(S)	COLOR
OO	ON / OFF	RED / GREEN
OC	OPEN / CLOSE	RED / GREEN
OCA	OPEN / CLOSE / AUTO	RED / GREEN / BLUE
OOA	ON / OFF / AUTO	RED / GREEN / BLUE
MA	MANUAL / AUTO	AMBER / BLUE
SS	START / STOP	RED / GREEN
E-STOP	EMERGENCY STOP	RED
RESET	RESET	BLACK

All other buttons shall be black. Lettering shall be white on black labels and nameplates.

I. Construction Methods:

1. Materials: Type 316 Stainless Steel shall be standard. Other types may be proposed in writing for use in specific service locations but must be reviewed and approved in writing by the ENGINEER.

   a. Panel section faces shall be #10 gauge minimum thickness, 316 SS for free standing panels and #14 gauge minimum thickness 316 SS for smaller panels. All materials shall be selected for levelness and smoothness.

   b. Relay rack high density type panels shall utilize standard relay racks with 14 gauge 316 SS frame and supports.

   c. Structural Shapes and Strap 316 SS: ASTMA-283.

2. Construction:

   a. All dimensions shall be in accordance with Vendors' requirements and as required in the Contract Documents.

   b. The elevations and horizontal spacing shall be subject to the ENGINEER's approval.

J. Fabrication Requirements:

1. End plates, top plates and top closure panels (to hung ceiling) shall be furnished when required by the material requisition. End plates, top plates and top closure panels shall be removable with countersunk bolts to match panels. Top closure panels shall be furnished in lengths which match the widths of standard panels, except that one top closure panel may extend across two 4-feet 6-inches wide or five 2-feet 0-inches wide standard panels. The vertical joints of these panels shall align with the vertical joints of the standardpanels.

2. End closure or rear closure doors shall be provided when specified. Such doors shall be flush fitting and gasketed and be of the hinged lift-off type with lockable door handles. A common key shall be provided for all doors on one panel assembly. Where removable access panels are specified, they shall be furnished with dished handle fasteners. Screwdriver 1/4 turn or Dzus type fasteners are not acceptable. Handles of adequate size, strength and number (provide in pairs with 2 minimum), shall be furnished and installed on each lift-out section to give a lifting effort of not more than 25 pounds per handle based on the weight of the panel section. Handles shall have padded non-slip surfaces for secure gripping to avoid accidents, and shall be large enough size to enable use of workman's gloves and adequate strength that there will be no bending or deformation in use even when sustaining twice the maximum indicated load.

3. The flanged edges of all panels shall be straight and smooth. Corners shall be welded and ground smooth.

4. The face of the panel shall be true and level after flanging.

5. Panel cut-outs and holes shall be cut or drilled by a method that willnot cause

deformation, scarring or overheating of the surface. Burrs and sharp edges shall be ground smooth.

6. All seams shall be welded and ground smooth. There shall be no exposed sharp edges on the inside or outside of the enclosure.

7. The cabinet bottom flange for anchoring to the foundation pad shall be rolled (not welded) from the vertical walls of the cabinet and shall run around the entire inside perimeter of the enclosure at the manufacturer's standard width.

8. Adjacent panels shall assemble with faces flush. Gaps or cracks shall not be visible from the front of the assembled instrument board.

9. Stiffeners shall be welded to the back of panels as required to prevent panel deformation due to the weight of panel mounted instruments.

10. Data pocket shall be high impactthermoplastic.

11. Panel doors shall have Heavy duty 1/4 turn 3-point latching mechanism constructed of 316L stainless Steel, with nylon rollers at the end of latch rods.

12. Panels shall be self-supporting as defined below.

K. Frameworks and Supports:

1. The rear of each panel section shall have a 316 SS framework assembled to it for supporting conduit, tubing, wireways, switches, air piping and all instrument accessory items such as relay or terminal enclosures, transducers, pressure switches, valves and air relays. The main framework shall be constructed of standard structural shapes. Special shapes such as 316 SS "Unistrut" may be used for secondary supports. Framework must not interfere with instrument connections or access needed for maintenance or adjustments.

2. Two removable lifting lugs shall be provided and shall be designed for moving the fully assembled control panel sections without causing distortion or bending.

L. Preparation of Panel Surface (following shall not apply to 316 stainless Steel):

1. The surface of the panel shall be prepared for finishing in a manner equal to that described below. The entire surface shall comprise the front and rear face of the panel top and bottom, both sides and the edges of all flanges, and the periphery of all holes or cut-outs.

2. All high spots, burrs, and rough spots and sharp edges shall be ground smooth.

3. The surfaces shall be sanded or sandblasted to a smooth, clean brightfinish.

4. All traces of oil shall be removed withsolvent.

5. The first coat of primer shall be appliedimmediately.

M. Panel Finishing (does not apply to 316 Stainless Steel):

1. A thin coat of primer shall be applied over the entire panel surface. Minimum dry film thickness of primer coat shall be 1 mil.

2. Wet sand to smooth clear finish and then dry.

3. At least two coats of air-dry, epoxy paint shall be applied over the entire surface. Dry film thickness of lacquer enamel shall be 1 to 2.5 mil. Color to be as approved by the ENGINEER.

4. Supply two one-pint containers of air drying, matching paint for field touch-up of the panel.

N. Instrument Finishing:

1. The final coats applied to painted surface of instrument cases, doors, or bezels which are visible from the front of panels shall be manufacturer's standard unless otherwise specified.

2. Black japan or "crinkle" finishes on instrument cases are not acceptable.

O. Preparation for Shipment and Shipping:

1. All panels shall be crated for shipment using a heavy framework and skids.

2. The panel sections shall further be cushioned satisfactorily to protect the finish of the instruments and panel during shipment.

3. All instruments which are shipped with the panel shall further have suitable shipping stops and cushioning material installed in a manner to protect instrument parts which could be damaged due to mechanical shock during shipment.

4. Each separate panel unit shall be provided with removable lifting lugs to facilitate handling.

5. All shipments shall be by air ride van, unless otherwise specified or approved.

P. Labor and Workmanship:

1. All panels shall be fabricated, piped and wired by fully qualified workers who are properly trained, experienced and supervised.

2. All personnel used on the project shall be subject to CITY approval.

Q. Drawings:

1. Furnish copies of preliminary drawings for approval. These drawings shall include:

   a. Complete panel layouts showing all outside dimensions, locations and dimensions of panel cutouts, locations of back of panel stiffeners, and panel face drawings to exact scale.

b. Terminal point locations with coded identification for wiring, and piping connections (includes all pneumatic transmission lines).

c. Back of panel piping.

d. Back of panel wiring, including dimensioned location of connections.

2. Fabrication of panels, piping and wiring shall not proceed without the CITY's written release for fabrication or approval of shop drawings by the ENGINEER.

3. The ENGINEER's requirements for final certified drawings include final approved copies of the above described shop drawings as well as certified drawings of instrument equipment furnished by the panel fabricator.

4. The number of copies of final certified drawings required by the ENGINEER and the required procedure for identification of these drawings are covered by Section 01330, Shop Drawings/Submittals, of the GENERALREQUIREMENTS.

R. Inspection and Approval:

1. Panel fabricator must carry out the following tests prior to arrival of the ENGINEER and the INSPECTOR for factory testing (FAT):

a. All air lines shall be purged and adequately tested for leaks.

b. All alarm circuits shall be rung out to determine their operability and proper function.

c. All electrical circuits shall be checked for continuity and where applicable, proper function.

d. All nameplates shall be checked for correct spelling and correct size of letters.

e. Perform any/all other tests needed to place the control panel in proper operating condition.

2. Furnish all necessary testing devices and manpower to perform the tests required by the ENGINEER and the INSPECTOR.

3. If the above tests have not been performed and confirmed prior to the arrival of the ENGINEER and the INSPECTOR, the CONTRACTOR shall be liable for back charges by the ENGINEER for the extra time required for the inspection services.

S. Photographs:

1. Fabricator shall furnish two (2) copies of 8 x 10 glossy photographs of the front, rear and all interior wiring and devices of the finished panel for the ENGINEER's record.

2. Additional photographs shall be provided at the ENGINEER's request where needed for proper documentation.

3. Photos shall be taken in digital format and shall be provided to the ENGINEER in both hard copy and digital form.

2.4 GENERAL ENCLOSURE COMPONENTS

A. Signal Isolators, Converters, and Power Supplies: Signal isolators shall be furnished and installed in each measurement and control loop, wherever required, to ensure adjacent component impedance match, or where feedback paths may be generated or to maintain loop integrity when the removal of a component of a loop is required. Signal converters shall be included where required to resolve any signal level incompatibilities. Signal power supplies shall be as follows, as required by the manufacturer's instrument load characteristics, to ensure enough power to each loop component:

1. Moore Industries;

2. Acromag:

3. Red Lion;

4. Phoenix Contact:

5. Or equal.

B. General Purpose Relays: General purpose relays in the Control Panel (s) shall be plug-in type with 2DPDT contacts rated 10 amperes at 120 VAC. Each relay shall be enclosed in a clear plastic heat and shock resistant dust cover, relays shall also include manual test button, LED status light and hold- down clip. Sockets for relays shall have screw type terminals. Relays shall be:

1. Eaton;

2. Schneider Electric;

3. Allen Bradley;

4. Or equal.

C. Time Delay Relays: Time delay relays shall be pneumatic or electric on-delay or off-delay type, with contacts rated 10-amperes at 120 VAC. Units shall include adjustable dial with graduated scale covering the time range in each case. Time delay relays shall be:

1. Eaton;

2. Schneider Electric;

3. Allen Bradley;

4. Or equal.

D. Interposing/Slave Relays: Additional relays (interposing/slave relays) shall be installed and wired when the number or type of contacts indicated exceed the contact capacity of the specified relays and timers or to isolate field voltages. These relays shall be like general purpose relays as indicated in paragraph “B” above.

E. Circuit Breakers: Circuit breakers shall be single pole, 120 VAC, 15 ampere rating, or as required to protect wires and equipment and mounted inside the panels. Branch circuit breakers in control panels shall be miniature, DIN rail mounted.

F. Nameplates/tag numbers: Nameplates/tag numbers shall be provided for instruments, function titles for each group of instruments, and other components mounted on the front panel(s) as shown.

1. A nameplate and tag number shall be provided for each signal transducer, signal converter, signal isolator, each electronic trip, and the like, mounted inside the panel(s).

2. They shall be descriptive, to define the function and system of such element.

3. Nameplates/tag numbers shall be of the same material as those on the front of the panel(s).

4. The nameplates/tag numbers shall be descriptive to define the equipment tag, function andsystem.

5. The nameplates/tag numbers shall be, made from phenolic material 1/8-inch thick having a black exterior and white center.

6. Nameplates shall be fastened with stainless steel machine screws, or epoxy adhesive where penetrations to the panel are not permitted by the NEMA rating (i.e. NEMA 4/4X).

7. Tag numbers for instruments and equipment numbers for machinery shall be coded to CITY numbering system**.**

8. Nameplates/Tag numbers shall be fabricated from **Laminated plastic.** Colors, lettering, styles, abbreviations and sizes shall be in conformance with latest ISA-RP-60.6 standard with an intended viewing distance of three (3) to six (6) feet as shown or as selected by the ENGINEER.

9. Instrument tags made of 316 stainless steel shall be provided and installed for all field instruments located:
   a. Outdoors
   b. In underground pipe galleries
   c. In Tunnels
   d. In utility trenches
   e. Within 200 feet of any process area

   The Tags shall be stamped or engraved with the instrument Tag Number shown on the Contract Drawings and shall be attached to the instrument with 316 stainless steel wire.

Otherwise, the Tags shall be made of engraved laminated plastic material (see Nameplates above) and shall be attached to the instrument with black zip ties guaranteed for sunlight exposure by the manufacturer.

10. Before being produced, submit a list indicating the wording and tag numbering of all equipment identification Nameplates/Tags along with a sample to the Engineer for approval.

    Manufacturers shall be:

    a. Brady

    b. Or equal.

G. Terminal Blocks: Terminal blocks shall be molded plastic with barriers and box lug/compression screw terminals and shall be rated 15 amperes at 600-volts. White marking strips, fastened securely to the molded sections, shall be provided and wire numbers or circuit identifications shall be marked thereon with permanent marking fluid. Terminal blocks shall be:

1. Allen Bradley;

2. Phoenix Contact;

3. Weidmuller**;**

4. Or equal.

H. Totalizer LED: Totalizers (counters) shall be electronic LED type with 7 (minimum) non-resettable digits. Counters shall be approximately 2"h x 2"w x 3"d and shall be suitable for front panel mounting. Character height shall be 0.140 inches minimum. Each electronic counter shall have a standby battery or non-volatile memory capable of maintaining the last totalized value for a minimum of 72 hours after a utility power failure. Totalizers (counters) shall be:

1. Allen Bradley;

2. Schneider Electric;

3. Or equal.

I. Signal Isolator: Signal isolators shall have complete isolation of the input, output and power circuits. Signal input shall be 4-20 mA into 50 ohms maximum; signal output shall be 4-20 mA into 1000 ohms minimum. Power input shall be 120 VAC 60 Hz. Span and zero shall be adjustable; accuracy shall be ±1 percent of span. Units shall be surface, or rack mounted. Signal isolators shall be:

1. Phoenix Contact;

2. Moore Industries.

3. AGM Electric;

4. Or equal.

J. Signal Converter: Signal converters shall have complete isolation of the input, output and power circuits. Signal input shall be 1-5 VDC into a minimum of 5 megohms input impedance. Signal output shall be 4-20 mA into 1000 ohms minimum. Power input shall be 120 VAC 60 Hz. Span and zero shall be adjustable; accuracy shall be ±0.1 percent of span. Units shall be surface, or rack mounted. Signal converters shall be:

1. Phoenix Contact;

2. Moore Industries;

3. AGM Electric.

4. Or equal.

K. Current Alarm Trip (Switches): Current alarm trips shall be single or dual type as shown. Units shall accept voltage or current input signals. Dead bands shall be adjustable over 100 percent of span for single/dual trips. Alarm trips shall be equipped with 10A DPDT contacts. Alarm trips shall include setpoint dials calibrated 0-100 percent for each trip point. Single alarm trips shall include a dead band adjustment dial calibrated 0-100 percent. Alarm trips shall be:

1. Phoenix Contact;

2. Moore Industries;

3. AGM Electric;

4. Or equal.

L. Selector and Pushbutton Switches: Selector and pushbutton switches shall be rated 10-amperes at 600 volts, shall be heavy-duty, oil-tight and shall have the number of positions and poles indicated. Operators shall be nickel or chrome plated. Switches shall be:

1. Allen Bradley;

2. Eaton;

3. Schneider Electric;

4. ABB

5. Or equal.

M. Indicating Lights: Indication lights shall be high-brightness LED, push-to-test type, and shall be NEMA heavy-duty, oil tight. Each light shall have a screwed-on glass

prismatic lens approximately one-inch in diameter. Each light shall have a factory-engraved legend plate, as shown on the Drawings. Indicating lights shall be:

1. Allen Bradley;

2. Eaton;

3. Schneider Electric;

4. Or equal.

N. Signal and Control Circuit Wiring:

1. Wire type and sizes: Conductor shall be flexible stranded copper machine tool wire; these shall be UL listed Type MTW and shall be rated 600-volts. Wires for instrument signal circuits and alarm input circuits shall be No. 14 AWG. All other wires, including shielded cables, shall be No. 16 AWG minimum.

2. Analog signal, digital signals and power wiring shall each be run in separate conduits.

3. Wire Insulation Colors: Conductors supplying 120 VAC power on the line side of a disconnecting switch shall have a black insulation for the ungrounded conductor. Grounded circuit conductors shall have white insulation. Insulation for ungrounded 120 VAC control circuit conductors shall be red. All wires energized by a voltage source external to the Control Panel(s) shall have yellow insulation. Insulation for all DC conductors shall be blue.

4. Wire Marking: Each signal, control, alarm, and indicating circuit conductor connected to a given electrical point shall be designated by a single unique number which shall be shown on all shop drawings. These numbers shall be marked on all conductors at every terminal using white numbered wire markers which shall be plastic-coated cloth or shall be permanently machine marked heat-shrink plastic and easily visible and readable. Manufacturers shall be:

   a. Brady,

   b. Or equal

2.5 EQUIPMENT SPECIFICATIONS

A. Differential Pressure type Flow Transmitter: Differential pressure flow transmitters shall be two wire devices with the following features: continuously adjustable span, zero and damping adjustments, integral indicator scaled in engineering units, square root extraction, solid state circuitry and 4-20 mA output plus HART. The transmitter shall be rated to withstand up to 2000 psig on either side without incurring damage. Accuracy shall be ±0.25 percent of calibrated span. Process wetted materials shall be 316 SS. Body materials shall be 316 SS. Process connections shall be 1/2" NPT. A five-valve manifold shall be furnished with the transmitter. Unless otherwise

specified, the manifold wetted materials shall be the same as specified for the transmitter. The differential pressure flow transmitter shall be:

1. Emerson- Rosemount;

2. Endress+ Hauser;

3. Honeywell,

4. Or equal.

B. Liquid Level Transmitter: The level transducer shall be a flanged, differential pressure sensing unit. The transmitter shall be a two wire device with the following features: continuously adjustable span, zero and damping adjustments, integral indicator scaled in engineering units, solid state circuitry, and 4-20 mA output plus HART. Accuracy shall be ±0.25 percent of span. Process wetted parts shall be 316SS Body and flange shall be 316SS. The flanged process connection shall be ANSI 3 or 4 inch 150 lbs. The level transmitter shall be:

1. Emerson- Rosemount;

2. Endress+ Hauser;

3. Honeywell**;**

4. Or equal.

C. Ultrasonic Level Transmitter: The system shall use ultrasonic ranging to measure the level of liquid and shall consist of a sensor with interconnecting cable and control transmitter unit which can be located up to 600 feet from the sensing unit. Level sensing shall be automatically compensated over the system temperature range of at least 0 to 50 degrees C and shall incorporate non-linear digital filtering and moving average techniques to reduce noise and atmospheric interference. Transmitter shall be microprocessor based. Calibration shall require no reference targets. Accuracy shall be 1 percent or better. In the case of momentary signal loss, relays shall maintain their last state. Output shall be 4 - 20 mA plus HART proportional to the range of level sensing. Ultrasonic transmitter shall also have a minimum of **five** programmable contacts rated at 10 amps and 115 VAC outputs (SPDT each) with adjustable set points and dead bands which can be used for pump control. The ultrasonic unit shall be powered by 120 VAC. Twenty-five feet of transducer to transmitter interconnecting cable shall be provided or as specified in the Instrument Schedule. Ultrasonic unit shall be:

1. Siemens/ Miltronics Hydroranger;

2. ABB;

3. Endress + Houser;

4. Or equal.

D. Bubbler Assemblies: Bubbler air regulating systems shall be furnished as shown including piping, pressure or level gages, shut-off valves, pressure regulating valves, filter, differential pressure regulator, rotameter, level transmitters, and/or

pressure switches. For those bubbler systems not receiving plant air, a non-lubricated top end air compressor with receiving tank shall be furnished. The continuous air stream generated is intended to provide a self-purging action for low maintenance operation.

E. Pneumatic Systems: Each assembly shall consist of the electrical, electronic, and pneumatic components defined in the specifications and shown on the drawings. Interconnecting tubing for the low pressure connections shall be 1/2" stainless steel with stainless steel fittings. The connection from the low pressure connection on each level transmitter shall be piped to a screened breather-drain. Air pressure gages shall be scaled in psig, bubbler tube level gages shall be scaled in inches or feet of W.C. with minor division not to exceed 3" W.C. All level and pressure gages shall have indicating dials that are a minimum of 2.5" in diameter. The purge air flow shall be set by a needle valve and the flow rate shall be indicated on a direct reading rotameter scale. This scale shall be in standard cubic feet per hour (SCFH) units and shall have a scale range of 0.25 to 2.5 SCFH.

F. Pressure Transmitters: Pressure transmitters shall be two wire devices with the following features: continuously adjustable span, zero and damping adjustments, integral indicators scaled in engineering units, solid state circuitry and 4-20 mA output plus HART. The transmitter shall be rated to withstand up to 2000 psig without incurring damage to the transmitter. Accuracy shall be ±0.25 percent of span. Process wetted materials and body shall be 316 SS. Process connections shall be 1/2" NPT. The transmitter housing shall be rated NEMA 4X plus NEMA 7 or 9 for hazardous locations. Conduit hubs shall be cast integral with the instrument housing and shall be 3/4” NPT. Pressure transmitter shall be.

1. Emerson- Rosemount;

2. Endress+ Hauser;

3. Honeywell**;**

4. Or equal.

G. Differential Pressure Transmitter: Differential pressure transmitters shall be two wire devices with the following features: continuously adjustable span, zero and damping adjustments, integral indicator scaled in engineering units, solid state circuitry and 4-20 mA output plus HART. Accuracy shall be ±0.25 percent of span.

H. Process wetted diaphragm materials shall be as shown on the specification sheets herein. Body materials shall be as shown on the specification sheets herein. Process connections shall be 1/4" or 1/2" NPT as indicated. The transmitter housing shall be rated NEMA 4X (plus NEMA 7 or 9 for hazardous locations). The differential pressure transmitter shall be:

1. Emerson- Rosemount;

2. Endress+ Hauser;

3. Honeywell**;**

4. Or equal.

I. Level Switch Float Tilt Type: Liquid level switches shall be float actuated type designed for use for wastewater sump control. The float when tilted magnetically actuates hermetically sealed SPDT switch within the unit. Switch rated at minimum of 240 VAC, 10 amps. Switch enclosure shall be the appropriate NEMA rating. Process wetted materials shall be PVC or polypropylene. Liquid level switches shall be:

1. Magnetrol Model T10;

2. Warrick Series 10;

3. Xylem Flygt ELM-10;

4. Or equal.

J. Pressure Switches: The pressure switches shall be double-pole, double-throw with adjustable differential range. Minimum differential shall be less than 10 percent of range. Allowable surge pressure shall be 1.5 times range or better. Each pressure switch shall have visible scale and visible contact operation. Pressure switches shall have a contact rating of 10 amperes at 120 volts AC. Pressure switches shall be non-mercury wetted type or snap switches and shall be in NEMA 4X rated enclosures (plus NEMA 7 or 9 for hazardous installations). All pressure switches shall be provided with diaphragm seals. Diaphragm seals shall be provided and included with the pressure switches at the locations shown on the Drawings. Pressure switches shall be:

1. Ashcroft Type 1125A with contacts;

2. Mercoid Series 1000;

3. Or equal.

K. Temperature Switches: Temperature switches shall be either bimetallic or filled system type with three-quarter inch (0.750 inch) NPT thermowell process connection per applicable piping code. Switches shall have SPDT contacts and provided with an adjustable set point. Enclosure shall be rated NEMA 4X plus NEMA 7 or 9 for hazardous environments.

L. Pressure and Vacuum Gages: Pressure gages shall be provided where shown. In all locations where pressure may vary from below to above atmospheric head, compound gages shall be installed.

1. Gage Construction: Gages shall be industrial grade with type 316 stainless steel movement and stainless steel or alloy case or phenol case. Unless otherwise shown or specified, gages shall have a 4-1/2-inch dial, 1/2-inch threaded connection, a Type 316 stainless steel snubber adapter, and a shut-off valve. Gages shall be calibrated to read in engineering units, with an accuracy of ±1 percent of reading, and shall withstand pressures equal to 150 percent of the rated working pressure or vacuum without failure or damage to the gage. All

gages shall be vibration and shock resistant (sealed liquid filled). Pressure gages shall be:

a. Ashcroft Duraguage;

b. Ametek 1981

c. Or equal.

2. Diaphragm Seal: Gages attached to systems involving chemical solutions, corrosive fluids, or other liquids containing one percent or less of solids, shall be equipped with diaphragm seals. For liquid having 1 percent or greater solids content saddle type diaphragm seals shall be used:

a. Ametek;

b. Rosemount;

c. Or equal.

3. Elastomer Diaphragm Seal - For liquids containing solids, pulsating flow: Utilize seals of type 316 stainless steel for liquids having grit, solids or pulsating flows, and for pressures over 1 psi. Use an elastomer diaphragm for pressures of 1 psi and below. All nuts, bolts, fasteners and accessories shall be Type 316 stainless steel. Provide fill connection and valved flush port size 1/4-inch NPT, Gages/Seals shall be capable of disassembly without loss of fill fluid.

4. Installation: All gages and appurtenances shall be installed at the locations shown in the Contract Documents and in accordance with the manufacturer's printed instructions. Care shall be taken to minimize the effect of water hammer or vibrations on the gages. Where indicated or necessary for proper operation, gages shall be mounted independently of vibrating piping or machines and connected to the process with diaphragm seals and flexible capillary tubing.

M. Differential Pressure Gages with Alarm Set points: Differential pressure indicators shall have a six inch dial with differential pressure flow in engineering units. Accuracy shall be ±0.5 percent of full scale. Other requirements shall be like Gages above.

1. Each differential pressure gage (and other device – i.e., transmitters and switches) shall be furnished with a three valve manifold constructed entirely of 316 stainless steel.

2. Differential pressure gages shall be complete with integral high and low alarm set points as shown on the Contract Documents. Alarm setpoint controls shall have indicating scales and shall be adjustable over the entire scale range. Each alarm output shall be a SPDT dry contact rated at 5 amps at 120 VAC minimum.

3. The enclosure shall be rated NEMA 4X (plus NEMA 7 or 9 for hazardous locations). Gages shall be:

   a. Dwyer Series 3000 with switch;

   b. Or equal.

2.6 ELECTRIC ACTUATORS

A. General: As applicable, see Instrument Data Sheet/s in Attachment C and the Contract Plans and other parts of these Specifications for additional requirements.

B. Equipment Requirements: Where electric motor actuators are shown, an electric motor-operated valve control unit shall be attached to the valve operating mechanism by means of a flanged motor adaptor piece. All electric motor operators shall be capable of operating at any mounting angle and position and shall be modulating or open-close type, multi-turn or 1/4-turn as required by the application.

C. Gearing: The motor operator shall include the motor, reduction gearing, reversing starter, torque switches, and limit switches in a weatherproof NEMA 4X and 6 and IP68 (submersible to 20 ft for 72 hours as a minimum) and other necessary equipment in the assembly. Additionally, comply with NEMA 7, Class 1 DIV 1 / 2 where applicable as indicated on the drawings and/or attached valve schedule or other parts of the Contract Documents. The actuator shall be designed and constructed to not require power to be connected during storage or prior to start-up/ commissioning to protect its interior. The operator shall be a single or double reduction unit consisting of spur or helical gears and worm gearing. The spur or helical gears shall be of hardened alloy steel and the worm gear shall be alloy bronze. All gearing shall be accurately cut with hobbling machines. All power gearing shall be oil lubricated to allow for mounting in ANY position, in a sealed housing. Ball or roller bearings shall be used throughout. Operator output speed changes shall be mechanically possible by removing the motor and changing the exposed or helical gear set ratio without further disassembly of the electric operator. For applications requiring the use of external gearboxes, to match a certain speed and torque, or for quarter-turn installations, all power gearing shall be accurately cut to assure minimum backlash. Nonmetallic, aluminum or cast gearing will not be acceptable. Anti-friction bearings shall be used throughout. Multi-turn applications shall use a heavy-duty bevel gearbox, and quarter-turn actuators shall use a heavy duty worm gearbox.

D. Hammer Blow Operation: The unit shall be so designed that a hammer blow is imparted to the stem nut when opening a closed valve or closing an open valve. The device should allow free movement at the stem nut before imparting the hammer blow, enabling the motor to reach full speed before engaging the stem load.

E. Torque Switches - Travel in the opening and closing directions shall be governed by a switch responsive to mechanical torque developed in seating the valve, or by an obstruction met in opening or closing. The torque switch shall be adjustable and shall function without auxiliary relays or other devices. Torque shall be adjustable from 40-100% of the actuator capacity, and adjustable in 1% increments, non-intrusively (no removal of covers).

F. Position Switches - Four contacts shall be provided which can be selected to indicate any position of the valve with each contact selectable as normally open or

normally closed. The contacts shall be rated at 5A, 120V AC, 30V DC. Provision shall be made for 4 additional contacts should they be required or needed for the specified control.

G. Position Indication - The actuator shall provide a local display of the position of the valve and to track and monitor any manual operation of the actuator, even when the power supply is not present. The display shall be able to be rotated in 90° increments to provide easy viewing regardless of actuator mounting position. The local display shall be large enough to be readable from six (6) feet when the actuator is powered up. The actuator shall include a digital position indicator with a display indicating valve position from fully open to fully closed in 1% increments. Red, green, and yellow lights corresponding to Open, Closed, and Intermediate positions shall be included on the actuator.

H. The actuators transformer shall provide 24 VDC or 120 VAC power available for customer use.

I. Jammed valve protection: Torque switch and motor thermal protection shall be provided to prevent motor burn-out. Remote indication of availability/non-availability status of the actuator shall be provided for remote monitoring and control. Monitor relays shall be provided to detect a loss of local three phase or control voltage supply, motor thermostat trip, the local stop button locked off or the selector switch not set to the REMOTE position. Availability of the actuator for remote control shall be indicated by electrical contacts, series connected for all of the above conditions. These contacts shall be connected to a single interposing (monitor) relay integral with the actuator with dry contacts for remote wiring.

J. The remote-control signals shall be 24 VDC or 120 VAC without the need for additional relays.

K. The operator shall be wired in accordance with the schematic diagram and all wiring for external connections shall be connected to marked terminals. The electric circuit diagram of the actuator shall not vary with valve type remaining identical regardless of whether the valve is to open or close on torque or position limit. Two 1-inch and one 1-1/4 or 1-1/2-inch conduit connections shall be provided in the enclosing case.

L. Handwheel Operation: A handwheel shall be provided for emergency operation engaged when the motor is declutched by a lever or similar means; the drive being restored to power automatically by starting the motor. The hand/auto selection lever shall be padlockable in both in Hand and Auto positions. It shall be possible to select hand operation while the actuator is running or start the actuator motor while the hand/auto selection lever is locked in Hand position without damage to the actuator.

M. The handwheel drive shall be mechanically independent of the motor drive, and any gearing shall be such as to permit emergency manual operation in a reasonable time. Worn or damaged gears shall not prevent manual operation. Clockwise operation of the handwheel shall give closing movement of the valve unless otherwise stated in the Contract specification. Valves mounted higher than 5 feet-6 inches above floor or operating level shall have chain operators and a remote-control station at ground level that performs all of the same functions as the actuator mounted station, and complying with all of the test laboratory, NEMA, and other ratings required for the

actuator. Station shall be stand mounted per instrumentation mounting details found in the Contract Drawings.

N. For safety purposes, it shall be possible to disengage the electric drive with the declutch lever. This disengagement and any subsequent reengagement shall not cause any damage to the valve or actuator - even with the motor running.

O. The maximum torque required on the handwheel under the most adverse conditions specified herein shall not exceed 60 ft-lb, and the maximum force required on the rim of the handwheel shall not exceed 60 lb. An arrow and either the word "open" or "close" shall be cast on the handwheel to indicate the direction to turn for manual operation.

P. Motor: The motor shall be of the totally-enclosed, non-ventilated, high-starting torque, low-starting current type for full voltage starting or as otherwise required for modulating service. It shall be suitable for operation on 480-volt, 3-phase, 60-Hz input power, and have Class B insulation, and a motor frame with all dimensions in accordance with the latest revised NEMA Standards. The observed temperature rise by thermometer shall not exceed 55 degrees C above an ambient temperature of 40 degrees C when operating continuously for 15 minutes under full rated load, with a line voltage of not more than 10 percent above or 10 percent below the rated voltage, the motor shall develop full rated torque continuously for 15 minutes without causing the thermal contact protective devices, imbedded in the motor windings to trip or the starter overloads to drop out. All bearings shall be of the ball type and thrust bearings shall be provided where necessary. All bearings shall be provided with suitable seals to confine the lubricant and prevent the entrance of dirt and dust. Motor conduit connections shall be watertight. Motor construction shall incorporate the use of stator and rotor as independent components from the valve operation such that the failure of either item shall not require operator disassembly or gearing replacement. The actuator shall include a device to ensure that the motor runs with the correct rotation for the required direction of valve travel with either phase sequence of the three-phase power supply connected to the actuator. The motor shall be de-energized in the event of stall when attempting to unseat a jammed valve, or if single phasing occurs. Motor temperature shall be sensed by a thermostat to protect against overheating. For On/Off service, this starter shall be an electromechanical type suitable for 60 starts per hour and of a rating appropriate to the motor size.

For modulating duty, a solid-state starter shall be supplied that is suitable for up to a maximum of 1,200 starts per hour. Instant reversal of actuator from one direction to another shall be protected by an automatic time delay circuit.

Q. Starter: There shall be furnished and installed in the integral weatherproof housing on the valve actuator, unless otherwise shown, a suitably sized amperage rated reversing starter with its coils rated for operation on 120-VAC, 1-phase, 60-Hz current. A control power transformer shall be included to provide a 120-VAC source. The starter shall be equipped with 3 overload relays of the automatic reset type (NOTE! Space heaters are not required in properly sealed enclosures, per this revised specification).

R. Operator Appurtenances: The operator for each valve shall be supplied with a push button station with mechanical or electrical lockout device. The pushbutton station enclosure, if separate, shall also be rated for NEMA 4X environments and hazardous duty if needed to meet the areaequirements.

S. Terminal Compartment: A separate terminal compartment which is sealed from the rest of the actuator assembly, shall be provided as part of the actuator housing so that electrical components shall remain sealed (not exposed to the outside environment) during site wiring. The terminal compartment shall be O-ring sealed at the cover and also have an inner watertight and dustproof “O” ring seal between the terminal compartment and the internal electrical elements of the actuator, fully protecting the motor and all other internal components from ingress of moisture and dust when the terminal compartment cover is removed to perform wring on site. Enclosure shall be able to allow for temporary site storage without the need for temporary electrical power supply connection.

T. All external fasteners on the actuator shall be stainless steel and shall be lubricated with anti-seize compound to prevent galling. Threaded covers and other appurtenances shall also be lubricated with anti-seize.

U. Power terminals shall be of the stud type, segregated by an insulating cover. At least three conduit entries shall be provided, threaded with an NPT standard tap with 2/4 inch taper per foot. Fine stranded wire with solderless compression connectors (ring tongue type), shall be used for all electrical connections to the actuator. Terminals for remote controls shall be provided. No external wiring or conduit shall be used for interconnection of components on the actuator.

V. It shall be possible to carry out the setting of the torque, turns, and configuration of the indication contacts via an infra-red setting tool, without opening or removing any electrical compartment covers. Diagnostic information shall be available from both an integrally mounted display window and through non-intrusive means of reading and writing data to the actuator, Two way communication shall be possible to facilitate downloading actuator setup and reading/analyzing the “on board” Data Logger via a IrDA port and non-intrusive hand-held computer/PDA. Diagnostic information from the Data Logger shall include, as a minimum, historical valve torque profiles and an actuator events log that can be stored and analyzed. Provision shall be made to display valve torque demand as a percent of rated actuator torque and position simultaneously, in order to facilitate valve trouble shooting and diagnostics.

W. Closing and opening speeds: The electric actuators and motors shall be sized to close or open the valves at a speed of 12” per minute, unless otherwise shown on the drawings or spec. Startup Kit: Each actuator shall be supplied with a startup kit comprising of installation instructions, electrical wiring diagrams, and enough spare cover screws and seals to compensate for any site losses during the startup/commissioning period.

2.7 PNEUMATIC ACTUATORS

A. The pneumatic actuators shall be used to modulate valves/dampers with a positioner. The pneumatic actuator shall have an integral pressure to milliamp transducer/positioner in order to be able to respond to analog signals of 4-20 mADC at 0 to 30 VDC. The actuator material shall be suitable for the environment that it will be operating in as well as requirements described in the attached design documents Contractor shall prepare and submit ISA data sheets to document compliance with specification requirements. All pneumatic tubing of the actuator shall be 316 SS.

2.8 HYDRAULIC ACTUATORS

Refer to mechanical specifications.

PART 3 -- EXECUTION

3.1 INSTALLATION

A. The Instrumentation Subcontractor shall utilize personnel provided by its assigned organization to accomplish, or oversee the physical installation of all elements, instruments, accessories or assemblies which it furnishes. The Instrumentation Subcontractor shall employ installers who are skilled and experienced in the installation and connection of all elements, instruments, accessories, and assemblies being furnished under this Contract.

B. In summary, it is the general intent of this Contract that all field cabling external to the Local Control panels shall be furnished and installed under provisions of Division 16 Electrical. Further, it is the general intent that all field wiring, i.e., 4-20 mA signal circuits, process equipment control wiring, signal wiring to field instruments, LCPs and PCM input and output wiring, be furnished and installed under Division 16 and be terminated and identified under provisions of Division 17 Instrumentation and Control.

C. The Instrumentation Subcontractor's attention is directed to the electrical and mechanical schematics and details of this project. Referral to these portions of the contract documents shall be required in order to understand the full intent and scope of work required.

3.2 CONTROL PANEL SIGNAL AND CONTROL CIRCUIT WIRING

A. Wiring Installation: All wires shall be run in plastic wireways except (1) field wiring, (2) wiring run between mating blocks in adjacent sections, (3) wiring run from components on a swing-out panel to components on a part of the fixed structure, and (4) wiring run to panel-mounted components. Wiring run from components on a swing-out panel to other components on a fixed panel shall be made up in tied bundles. These bundles shall be tied with nylon wire ties and shall be secured to panels at both sides of the "hinge loop" so that conductors are not strained at the terminals.

B. Wiring run to control devices on the front panels shall be tied together at short intervals with nylon wire ties and secured to the inside face of the panel using adhesive mounts.

C. Wiring to rear terminals on panel-mount instruments shall be run in plastic wireways secured to horizontal brackets run above or below the instruments in about the same plane as the rear of the instruments.

D. Conformance to the above wiring installation requirements shall be reflected by details shown on the shop drawings for the ENGINEER'S review and approval.

E. Wire Marking: Each signal, control, alarm, and indicating circuit conductor connected to a given electrical point shall be designated by a single unique number which shall be shown on all shop drawings. These numbers shall be marked on all conductors at every terminal using white numbered wire markers

which shall be plastic-coated cloth, or permanently machine marked heat-shrink plastic and easily visible and readable.

3.3 INSTRUMENT CABLE TESTS

A. General: The following tests shall be performed on each instrumentation and control system cable which is installed under this Contract. All tests shall be end-to-end tests of installed cables with the ends supported in free air, not adjacent to any grounded object. Complete records of all tests shall be made and delivered to the ENGINEER for review and approval.

B. Continuity tests shall be performed by measuring wire/shield loop resistance of each signal cable as the wires, taken one at a time, are shorted to the channel shield. No loop resistance measurement shall vary by more than ±2 ohms from the calculated average loop resistance value.

C. Insulation resistance tests shall be performed by using a 1000 volt Megger for insulations rated 600V or higher and 500 volts Megger for insulations rated 500V or lower. Megohmmeter shall be used to measure the insulation resistance between each conductor , between each conductor and the conductor shield, between individual conductor shields in a multi-channel cable, between each individual conductor shield and the overall cable shield in a multi conductor cable, between each conductor and ground, and between each shield and ground. Values of resistance less than 1 megohms will be unacceptable. For further detail refer to electrical specifications.

3.4 INSTALLATION, CALIBRATION, TESTING, PRECOMMISSIONING, START-UP

A. General: All systems specified in the applicable Sections of Division 17, shall be installed, Connected/terminated, calibrated and tested, and in coordination with the ENGINEER, shall be started to place the plant processes in operation. This shall include final calibration in concert with equipment specified elsewhere in these Contract Documents, including pumps, samplers, valves and chemical feeders. The installation personnel shall have a final reviewed copy of the shop drawings and data.

B. Installation and Connection: Install and connect all field-mounted components and assemblies under the criteria imposed in this Section under "Manufacturer's Representative Services." The installation personnel shall have a final reviewed copy of the shop drawings and data.

1. The instrument process sensing lines and air signal tubing shall, in general, be installed in a similar manner to the installation of conduit specified under Division 16 specifications. Individual tubes shall be run parallel and near the surfaces from which they are supported. Supports shall be used at intervals of not more than 3 feet of rigid tubing.

2. Bends shall be formed with the proper tool and to uniform radii and shall be made without deforming or thinning the walls of the tubing. Ends of tubing shall be square-cut and cleaned before being inserted in the fittings. Bulkhead fittings shall be provided at all panels requiring pipe and/or tubing entries.

3. All instruments and connecting lines shall have allowance made for movement of equipment caused by seismic loading, vibration, or expansion or contraction

caused by temperature changes. This shall be demonstrated to the ENGINEER during witnessing of field installation work prior to startup.

4. All accessory items required for installation and proper operation of the equipment shall be provided. Such items may include instrument valves, seal pots pigtails.

5. Lines or connections open to atmosphere shall be protected against ingress of foreign matter. Unprotected openings shall have a goose neck, or equivalent, attached to protect against falling particles. Bird screen and insect screens shall be installed.

6. Comply with installation detail in the specifications for mounting of the instrument.

7. Verify that all Differential Pressure elements have three valve 316 SS manifolds.

8. All flexible cables and capillary tubing shall be installed in flexible conduits. The lengths shall be enough to withdraw the element for periodic maintenance.

9. All power and signal wires shall be terminated with spade type lugs.

10. All connectors shall be, as a minimum, watertight.

11. All wires shall be mounted clearly with identification tags at both ends that is of a permanent and reusable nature.

12. All wire and cable shall be connected from terminal to terminal without splices unless specifically approved by the ENGINEER and arranged in a neat manner and securely supported in cable groups. All wiring shall be protected from sharp edges and corners.

13. Verify that all mounting stand and bracket materials and workmanship comply with requirements set forth in the specifications and drawings.

14. Provide a technical field representative to instruct the installation personnel on any and all installation requirements; thereafter, the technical field representative shall be readily available by telephone to answer questions and supply clarification when needed by the installation personnel.

15. Finally, after all installation and connection work has been completed, the technical field representative shall check for correctness, verifying polarity of electric power and signal connections, making sure all liquid or pneumatic process connections are free of leaks, and all other similar details. The technical field representative shall certify in writing that for each loop or system checked out, all discrepancies have been corrected by the installation personnel.

16. Bear all costs and provide all personnel, equipment and materials necessary to implement all activities specified herein.

C. Process Connections: Process Connections and root valves shall be located so that they are accessible. Root valves stem and handle shall be installed clear of mainline insulation.

1. Consistent with measuring needs, process connections shall be located to have minimum movement. Therefore, they shall be as close to the system anchor points as possible.

2. For instruments mounted on a local board, the process connection shall be located as close as practical to the board.

3. Process connections in pipelines shall be oriented to avoid gas pockets in the sensing lines for liquid and vapor, and to avoid liquid pockets in the sensing lines for gas.

D. Valves: Root valves shall conform in design to the main-line class. If a globe-pattern root valve is used for pressure ranges of 0-15 psig, or differential pressure ranges of 0-100 inches H_2O, or vacuum service, its stem shall be installed horizontally. All other globe- pattern root valves shall have the stem vertical. All valves shall be full port ball where available.

1. Relief valves shall be installed without isolation valves.

2. To allow isolation of instruments, each instrument, EXCEPT FOR RELIEF VALVES, shall have a shutoff valve that is close to the instrument and is readily accessible. Where the root valve serves this purpose, instrument valves are not required.

3. If the root valve for a test point is not accessible, pipe or tubing shall be added and an instrument valve installed at convenient location.

E. Instruments: Locate locally mounted instruments near the most convenient point of use consistent with good measuring practice and accessibility. Sensing lines shall be as short as practical.

1. When consistent with good measuring practice, local boards or racks may be used to mount instruments that are grouped together because of common locations or related function.

2. Sensing instruments are preferred to be elevated as follows relative to the process connection in order to avoid gas pockets in a liquid-sensing line or liquid pockets in a gas or vapor sensing line:

Fluid	Preferred Instrument Elevation
Liquid	Below Line
Slurry	Below Line
Steam over 20 psia	Below Line Steam not over 20 psia Above Line
Gas	Above Line

3. Instruments and local boards shall not block walkways. For use, calibration, and repair, they shall be accessible without requiring instrument disassembly or the removal of piping, grating, or other structure.

4. Instruments shall be 4' - 6" above the floor. Exceptions may be made for seismic supports, for instruments accessibility, or for other factors, but must be approved by the ENGINEER prior to the work being done. Enough lighting shall be provided for night-time use.

5. Instruments shall be protected against shock and vibration. Because of vibration, electro- pneumatic signal converters shall not be mounted on control valves.

6. High temperature, high humidity and other ambient factors must be considered when locating instruments that require access for service.

7. Fluid-filled sensing systems, or "capillary tubes", are sealed to the instrument by the instrument manufacturer and are not repairable in the field. Such systems shall not be opened or cut during or after installation and shall be routed and protected as required to guard against damage. Avoid sharp bends in capillary tubing (i.e. bend radius shall not be less than 10 times the diameter of the capillary tubing). Excess lengths of capillary tubing shall be neatly coiled in a protected area or enclosure, e.g., coiled inside a protective shipping cap for 12-inch pipe.

8. Manufacturer's installation requirements, including those relating to unsupported span and minimum bend-radius of capillary tubing, must be submitted for review and approval by the ENGINEER.

9. All instruments shall have nameplates and tag numbers engraved on tags made of 316 stainless steel and attached with 316 stainless steel wire.

F. Sensing Lines: Sensing lines shall have a continuous slope to promote their being kept either full or free of liquid, as appropriate. The slope shall be one inch, or more, per foot of run. For instruments sensing steam at pressures up to 20 psia, 2 inches per foot of run is required as minimum.

1. If an instrument having a large dynamic displacement, e.g., a U-tube manometer, is in liquid service and is mounted above the main line, the sensing line shall descend for at least 36" close to the process connection and before sloping up to the instrument with the intent of preventing the entrapment of a non-condensable in the sensing line and shall be located below process taps.

2. If a sensing line has a liquid purge, the line shall be arranged so that the purge flow is up. If a gas purge is used into a process liquid, the purge flow shall be down.

3. Low points, except for pigtails, shall have a valved drain connection. Drip or dirt chambers shall be installed where needed. For dirty or freezing services, drain valves shall be a gate or ball type suitable for rod out.

4. High points shall have a vent connection with a manual or automatic vent valve except when the fluid is a non-condensable gas and except for pigtails. Not for U-Tube Manometers.

5. The discharge of bleed connections shall be piped to a safe disposal point if opening the bleed may create a hazard. The outlet of the valve on an atmospheric bleed shall not be plugged or capped, otherwise potentially hazardous pressure buildup may occur downstream of the valve.

6. Process fluids shall not be piped to a control room, or control panel, except instrument air, nitrogen, or other inert gas at pressure not exceeding 150 psig.

7. Dead-end sensing lines shall preferably be not over 50 feet long when using 1/4" O.D. tubing. The tubing diameter shall be increased to 1/2” O.D. if a line is over 50 feet long or if the sensing instrument has a large dynamic displacement.

8. Hydrostatic head in a sensing line may affect a measurement. The effect of head shall be considered, particularly for low measuring ranges or low operating pressures.

9. Instruments in steam or vapor service shall have a pigtail or equivalent wet-leg to keep the instrument cool. The pigtail shall be close to the instrument. A wet-leg shall have a filling connection, usually at the top. If the instrument is mounted above the line, it shall be insulated up to the pigtail to minimize refluxing.

10. Use of a condensate pot may be necessary for any measured variable. If used, condensate and seal pots shall be located as close as possible to the process connection.

11. Pulsation dampers, when required, shall be installed close to the instrument, downstream of the instrument block valve.

12. Sensing lines shall be protected against mechanical loads and wear. Otherwise, additional wall thickness shall be required for mechanical strength. Unsupported spans of process and pneumatic tubing shall not exceed 3 feet in length.

13. Expansion bends shall be provided as necessary to allow for movement of supporting structures or change of length due to temperature change.

14. Hot lines shall be covered with insulation for personnel protection.

15. The main-line pipe class shall apply up to the instrument side of the root valve. Beyond that point, the appropriate instrument pipe class shall be used.

G. Fittings: Fittings shall not be used between the process connection and the root valve nor for pipe on the process side of condensate or seal pots, except that displacement and float-type level instruments are normally installed using pipe fittings.

1. So far as practical, bends rather than fittings shall be used to change the direction of a run of tubing or pipe. The minimum bending radius for

cold-bending of tubing shall be three times the outside diameter of tubing.

2. The ferrule of a flareless tube fitting shall be harder than the tube on which it is used.

3. Lubricant and sealant compounds shall be used as required by the city and equipment suppliers.

4. Where a detail specifies a size and type of fitting, a combination of fittings of other sizes but of the same or equivalent type giving the same or better overall effect may be substituted for convenience or if the desired part is not available. Flareless or threaded connections may not be used where weld connections are required. Where a 1/2” socket-weld fitting is required, a pipe 1/2" tube socket-weld fitting plus a 1/2" x 3/8" tube socket-weld fitting may be substituted. A flareless-end valve may be substituted for a threaded valve with flareless connectors, or vice versa. A weld fitting may replace a threaded or flareless fitting unless maintenance access will require the ability to make and break the connection. Each substitution shall require written approval of the ENGINEER.

5. Welding shall conform to project requirements.

H. Instrument Installation Notes - Flow: Condensate pots are not required for a sensing element, e.g., a force balance flow transmitter, which has negligible dynamic displacement. If displacement is not negligible, as for a U-tube manometer, and if the process fluid is either steam, other condensable fluid, water hotter than 250 Deg. F, other fluid that may flash, or moisture laden air then condensate pots shall be used. The pots shall have a volume not less than three times the displaced volume.

1. A pair of condensate pots shall be at the same elevation and as high as, or higher than, the higher process connection.

2. The pipe from a process connection to a condensate pot shall be insulated for process fluids hotter than 250 Deg. F.

3. A pair of head-type sensing lines shall be run together to the maximum extent practical so as to keep both lines at the same temperature. If they are to be insulated, they shall be insulated together.

4. Head-type sensing lines shall be checked to make sure that they are connected to the proper sides, HP and LP, of the instrument.

5. The edges of the holes for orifice taps shall be square or slightly rounded, clean, and free from burrs, wire edges, or other irregularities.

6. For all Differential Pressure type elements, use a 316 SS five valve manifold.

7. Flow meter Installation Criteria: The following table lists the straight pipe run requirement upstream and downstream of each type of meter in terms of the number of required pipe diameters.

TYPE	UPSTREAM	DOWNSTREAM
Orifice plates	20	5
Venturi Tubes	20	5
Pitot Tubes	40	10
Propeller Meters	15	4
Ultrasonic Meters	10	5
Magnetic Meters	5	3

I. Instrument Installation Notes - Level: The lower connection on a vessel for piping to a level instrument is preferred to be on the side of the vessel rather than to come vertically down from the bottom. The intent is to minimize the trapping of solids in the sensing lines.

1. Head-type level instruments shall be located below the process connections on the vessel unless a gas purge is used, in which case the instruments may be located at any convenient elevation.

2. A stilling well shall be used in all cases to reduce the turbulence for displacement type elements located inside a vessel. A well may be required to protect a bubble tube against excessive turbulence.

3. So far as practical, level devices shall be placed away from areas of turbulence and shall not interfere with other vessel parts or instruments, such as thermowells or sample nozzles that may be required.

4. Stilling wells and bubble tubes shall be firmly supported. Head room shall be provided to permit withdrawing the tubes for cleaning and maintenance.

5. Gage glasses and their associated level instruments shall be installed adjacent to each other. The gage glasses and the other instruments shall be visible from a walkway.

6. External-chamber level instruments shall be installed with main-line-class pipe. Gate valves shall be used for root valves and other shutoff valves for these instruments, except that the manufacturer's standard pattern may be used for gage-glass valves.

7. An external-chamber instrument or a differential-pressure-type instrument used to measure level in a vessel that is open to atmosphere may have one of its input connections, as appropriate, open to atmosphere instead of being connected to the vessel. An external- chamber instrument thus installed may require additional bracing.

8. A pair of sensing lines for head-type level measurement shall have an equalizing manifold with bleed valves. Because of support problems, commercial manifold assemblies having flanged outlets shall not be used in seismic applications. In other applications, their use is not recommended for the same reason.

9. The usual level-instrument connections on vessels are:

Head-type instruments:		
	Piped	3/4"
	Flanged-mounted	3" Float or Displacement-type
Switches and Controllers:		1-1/2" Displacement-type Transmitters
	External	1-1/2" or 2"
	Internal	4"
Multi-instrument standpipes		3"

10. Displacement and float-type level instruments shall be placed as close as possible to the vessel to improve response. If any external-chamber instrument or a standpipe unavoidably cannot be located close to the vessel, the size of the connecting pipes shall be enlarged to facilitate the transfer of liquid on level changes, thereby reducing the loss of response caused by the long sensing and equalizing lines. The ENGINEER shall review and approve such installation.

J. Instrument Installation Notes - Pressure Differential: Condensate pots are not required for a sensing element, e.g., a force-balance transmitter that has negligible dynamic displacement. If displacement is not negligible as for a U-tube manometer, and if the process fluid is either steam, other condensable fluid, water hotter than 250°F, or other fluid that may flash, then condensate pots shall be used. The pots shall have a volume not less than three times the displaced volume.

1. A pair differential-pressure sensing lines shall be run together to the maximum extent practical to keep both lines at the same temperature. If they are to be insulated, they shall be insulated together.

2. A pair of condensate pots must be at the same elevation and as high or higher than the higher process connection.

3. The pipe from a process connection to a condensate pot shall be insulated for process fluids hotter than 250°F.

4. The differential-pressure sensing lines shall be checked to make sure that they are connected to the proper sides, HP and LP, of the instrument.

5. A pair of differential-pressure sensing lines shall have an equalizing manifold with bleed valves. Because of support problems, commercial manifold assemblies having flanged outlets shall not be used in seismic applications. In other applications, their use is not recommended for the same reason.

K. Installation – Pressure gauges; All gages and appurtenances shall be installed at the locations shown in the Contract Documents and in accordance with the manufacturer's printed instructions.

1. Care shall be taken to minimize the effect of water hammer or vibrations on gages. Gages shall be filled with oil.

2. Where indicated or necessary for proper operation, gages shall be mounted independently of vibrating piping or machines, and connected to the process with diaphragm seals, snubbers, and flexible capillary tubing.

L. Instrument Installation Notes - Pneumatic: Air supply headers shall be sized as noted on the P&ID. Air-supply branch taps shall come off the top of the header but may come off the side if necessary.

1. Lines for air that is not dry shall be sloped. Dry air lines shall be sloped where possible. Low points shall have drain connections. Air header drains shall be 1/2" size.

2. Branch isolation valves shall be installed as required to reduce interdependence of branches and to facilitate maintenance.

3 Each pneumatic instrument shall have a local 5-Micron air filter, which may be part of an air set if the supply pressure is required to be reduced. When pressure is reduced for an instrument, a relief valve, which may be integral with the reducing regulator in an air set is generally required. The regulator shall be provided with a small output-pressure gage if the instrument does not have a supply-pressure gage.

4. Lubricated air may be required for certain piston actuators or other devices but shall not be used for any other pneumatic devices. If necessary, use a local lubricator.

M. Instrument Installation Notes - Temperature: Non-standard wells are not allowed to be connected to the process pipe or vessel. It is necessary to make sure that there is internal clearance for insertion and that no excessive obstruction to flow is created.

1. Direct-connected readout instruments, e.g., thermometers or indicating transmitters, shall be located near the most convenient point of use consistent with good measuring practice.

2. Filled-system temperature instruments shall follow the manufacturer's limitations, if any, regarding (a) relative elevations of bulb and measuring instrument, and (b) ambient temperatures.

3. Pressure and Temperature instruments shall be installed to minimize exposure to shock, vibration, and radioactivity, and to avoid temperature extremes.

4. Instruments shall not block walkways. For use, calibration, and repair, they shall be accessible without requiring instrument disassembly or the removal of piping, grating, or other structure.

5. Where a pipe is reduced or enlarged for a temperature connection, consideration shall be given to the orientation of the pipe and the possibility of the change of pipe size causing high- or low-point pockets that may affect the measurement by entrapment of material or that may accumulate a radioactive substance.

6. Temperature connections shall be located to provide external clearance for insertion and removal of their sensing elements.

7. The materials and pressure-temperature ratings of pipe fittings used for temperature connections shall conform to the applicable pipe class.

8. Welding shall conform to project requirements.

9. A temperature-well connection to a pipe, which is made by weld-attachment of a fitting or nozzle, shall be drilled to have a hole approximately the same size as the inside diameter of the fitting or nozzle. The intent is to provide clearance for insertion of the well and to minimize the entrapping of fluid.

10. For threaded connections of stainless steel to stainless steel, lubrication is required to prevent seizing and galling.

11. Filled-system temperature elements shall be sealed to the instrument by the instrument manufacturer and are not repairable in the field. Filled systems shall not be opened or cut during installation and shall be routed and protected as required to guard against damage. Excess lengths of capillary tubing for filled systems shall be neatly coiled in a protected area or enclosure, e.g., coiled inside a protective shipping cap for 12 inch pipe, preferably avoiding ambient temperature extremes.

12. Manufacturer's installation requirements, including those relating to unsupported span and minimum bend-radius of capillary tubing, shall be followed.

N. Calibration: Analog instrumentation and control system equipment shall be calibrated and tested after installation to verify that control system requirements aresatisfied.

1. The Instrumentation Subcontractor shall provide all necessary labor, tools, and equipment to calibrate and test each instrument in accordance with the manufacturer's specifications and instructions.

2. Each instrument shall be calibrated at a minimum of **five points** usingtest equipment to simulate inputs and read outputs. A fewer number of calibration steps may be used for selected instruments if prior written approval has been obtained from the ENGINEER.

3. All test equipment and instruments used to simulate inputs and read outputs shall be suitable for the purpose intended and shall have a current calibration record certified to an accuracy greater than that required for the instrument under test. Such test equipment shall have accuracy traceable to the National Bureau of Standards as applicable. All

analog instruments shall be calibrated and tested in place without removal.

4. All test data shall be entered on test forms that verify compliance with all applicable contract accuracy requirements, instrument manufacturer published performance specifications, and permissible tolerances at each point of calibration.

5. A report shall be delivered to the ENGINEER for each instrument, certifying that the instrument has been calibrated, in the presence of the ENGINEER or the ENGINEER's designated representative and meets contract and system requirements. The report shall include but not be limited to pertinent manufacturers name plate data, units span setting, any error in percent at each test point, switch and alarm set points, valve stroking and controller balancing information.

O. Analog/Digital Loop Tests: The Instrumentation and Control System Subcontractor shall provide all necessary labor, tools, and equipment to field test, inspect and adjust each instrument installed under this contract to its specified performance requirement in accordance with manufacturer's specifications and instructions. Any instrument furnished by the Instrumentation and Control System Subcontractor which fails to meet any Contract requirement, or any published manufacturer performance specification for functional and operational parameters, shall be repaired or replaced, by Instrumentation Subcontractor at no cost to the CITY. The Instrumentation and Control System Subcontractor shall bear all costs and provide all personnel, equipment and materials necessary to implement all installation tests and inspection activities specified herein.

1. At least 15 days before the anticipated initiation of installation testing, the Instrumentation and Control System Subcontractor shall submit to the ENGINEER a detailed description, in duplicate, of the installation tests to be conducted to demonstrate the correct installation of the instrumentation and control system and the anticipated dates the testing will occur.

2. Elements such as controllers, electronic function modules, shall be tested and exercised by the Instrumentation Subcontractor to demonstrate correct operation, first individually and then collectively as functional analog networks. Each hardwired analog control network shall be tested to verify proper performance within specified accuracy tolerances. Specified accuracy tolerances for each analog network shall be defined as the root-mean-square (RMS) summation of individual component accuracy requirements. Individual component accuracy requirements shall be as specified by contract requirements or by published manufacturer accuracy specifications, whenever contract accuracy requirements are not specified.

3. Each analog network shall be tested by applying simulated analog/digital and/or discrete inputs to the first element(s) of an analog/digital network (i.e., applying simulated analog and/or discrete signals to element(s) of the network; e.g., controllers, alarms, indicators, valve operators). For networks which incorporate analog elements, simulated sensor inputs corresponding to 10 percent, 50 percent, and 90 percent of span shall be applied, and the resulting element outputs read to verify compliance to calculated root-mean-square- summation accuracy tolerance requirements. Continuously variable analog inputs shall be applied to verify the proper operation and setting off discrete devices (i.e., alarms). Provisional settings shall be made on controllers, alarms, during analog loop tests. All analog loop test

data shall be recorded on test forms, which include calculated root-mean-square-summation system accuracy tolerance requirements for each output.

4. Air systems shall be tested for leaks in compliance with ISA RP7.1. When installation tests have been successfully completed for all individual instruments and all separate analog control networks, a certified copy of all test forms signed by the ENGINEER or the ENGINEER's representative as a witness, with test data entered, shall be furnished to the CITY together with an unequivocal statement that all instrumentation has been successfully calibrated, inspected, and tested.

5. Digital loops shall be tested for loop integrity and on/off function.

P. System Pre-commissioning: The Instrumentation and Control System Subcontractor shall submit an instrumentation and control system Pre-commissioning Completion Report, which shall state that all Contract requirements have been met and shall include a listing of all instrumentation and control system maintenance/repair activities conducted during the pre-commissioning testing. Acceptance of the instrumentation and control system pre- commissioning testing must be provided in writing by the engineer before the 7-day operational testing may begin. Pre-commissioning shall commence after acceptance of all wire, calibration and loop tests, and all inspections have demonstrated instrumentation and control system compliance with all contract requirements. Pre-commissioning shall demonstrate proper operation of all systems under this Contract with process equipment operating over full operating ranges under actual operating conditions.

1. All pre-commissioning and test activities shall follow detailed test procedures, check lists previously developed by the Instrumentation and Control System Subcontractor and reviewed and accepted by the ENGINEER. All test data shall be acquired using equipment as specified and recorded on test forms, previously reviewed by the ENGINEER, which include calculated tolerance limits for each step. Completion of all system pre-commissioning and test activities shall be documented by a certified report, including all test forms with test data entered, delivered to the ENGINEER with a clear and unequivocal statement that all system pre-commissioning and test requirements have been satisfied.

2. Proper operation of all final control elements, control panels and instrumentation furnished under this Contract shall be verified by tests specified herein. Where feasible, system pre-commissioning activities shall, to the greatest extent possible, simulate normal final control element operating conditions in terms of applied process loads, operating ranges and environmental conditions (e.g., using water). Final control elements, control panels, and ancillary equipment shall be tested under start-up and steady-state operating conditions to verify that proper and stable control is achieved using motor control center and local field mounted control circuits. All hardwired and software control circuit interlocks and alarms shall be operational. The control of final control elements and ancillary equipment shall be tested using both manual and automatic (where provided) control circuits. The stable steady-state operation of final control elements running under the control of field mounted automatic analog controllers or software based controllers shall be assured by adjusting the controllers, as required, to eliminate oscillatory final control element operation. Transient stability of final control elements operating under the control of field mounted, and software based automatic analog controllers shall be verified by applying

control signal disturbances, monitoring the amplitude and decay rate of control parameter oscillations (if any) and making necessary controller adjustments, as required, to eliminate excessive oscillatory amplitudes and decay rates.

3. All electronic control stations incorporating proportional, integral and/or differential control circuits shall be optimally tuned, experimentally, by applying control signal disturbances and adjusting the gain, reset and/or rate setting(s) as required to achieve a proper response. Measured final control element variable position/speed setpoint settings shall be compared to measured final control element position/speed values at 25 percent, 50 percent, 75 percent and 100 percent of span and the results checked against specified accuracy tolerances. Specified accuracy tolerances are defined as the root-mean-square-summation of individual component accuracy requirements. Individual component accuracy requirements shall be as specified in the Contract or as specified by published manufacturer accuracy specifications whenever Contract accuracy requirements are not specified.

Q. 30-Day Operational Testing: The Instrumentation and Control System Subcontractor shall provide start-up support to include the Instrumentation and Control System Subcontractor's personnel, electrical personnel, and any instrument manufacturers' representatives as required during the testing period to produce a fully operational system. This support shall be provided at no additional cost to the CITY.

R. Record Drawings: Keep current an approved set of complete loop and schematic diagrams which shall include all field and panel wiring, piping/tubing runs, routing, mounting details, point-to-point diagrams with cable, wire, tube and termination numbers. These drawings shall include all instruments and instrument elements for the complete instrument loop as furnished under Divisions 11, 13, 15, 16 and 17 of this Contract. Drawings shall be a record of work as actually constructed and shall be prepared and submitted as specified in the GENERAL REQUIREMENTS.

3.5 INSTRUMENT LOOP DESCRIPTION -- SEE LOOP DESCRIPTIONS in the drawings.

3.6 INSTRUMENT AND I/O SUMMARIES - SEE INSTRUMENT SUMMARY, included in the drawings.

A. General: An Instrument and I/O Summary has been compiled for most instruments specified to be furnished under this contract.

B. This index is intended to complement the plans and specifications and shall not be construed as representing a complete itemization of instruments specified to be furnished under this contract. Instruments not presently included in the index, but which can be inferred from the Contract Documents and/or are required elsewhere herein shall be included and incorporated into the instrument and I/O summary.

3.7 INSTRUMENT DATA SHEETS - Contractor shall prepare and submit instrument data sheets for instruments specified to be furnished under this project. Data sheets are intended to complement the Instrument and I/O Summary, plans and specifications.

3.8 CALIBRATION FORMS – Contractor shall prepare and submit calibration forms for instruments specified to be furnished under this contract.

END OF SECTION

SECTION 17450
SCADA, PLCS, NETWORK AND COMMUNICATIONS

PART 1 -- GENERAL

1.1 THE REQUIREMENT

A. This section specifies requirements for PLCs, SCADA, networks, and data communications shown on the drawings.

B. The Contractor shall furnish, install, configure, test, and document, all copper and fiber-optic communications network systems, including cables, switches, firewalls, software, and software licenses. The work includes accessories and appurtenances needed to provide reliable communications systems, as specified.

C. Operator HMIs

1. The System Integrator shall create an overview display for the stormwater diversion system at the new Honeywell, or equal, HMI (in LCP-01) attached to the new ControlEdge PLC. Display screens to include alarms, trending, and provide gate control.

2. Venice pump station will monitor the PLC, via the new EPL connection. As part of the scope of this project, the LCP-01 HMI displays will be replicated on the Venice station's new Honeywell, or equal, DCS. The Contractor will provide an Allowance for Honeywell to perform Venice configuration and testing.

D. The Ethernet Private Line (EPL) communications will be provided between LCP-01 and Venice Pump Station. The Contractor to coordinate with the City to arrange installation and testing of the EPL communications line and mounting of the Service Provider's EPL modem/router and associated fiber-optic patch panel.

E. SCADA configuration at Venice Pump Station

1. Contractor and System Integrator shall coordinate with City and Honeywell, or equal, control system staff for implementation of control strategies, graphic user interface screens, alarming, reports, and communication connectivity.

2. Contractor and System Integrator shall lead a minimum of two (2) workshops with City to coordinate PLC and HMI approaches and interface requirements.

3. Contractor and System Integrator shall lead a minimum of two (2) field testing sessions to verify stormwater diversion controls and displays at Venice Pump Station.

1.2 RELATED WORK SPECIFIED ELSEWHERE

A. Other Sections of the Specifications, not referenced below, shall also apply to the extent required for proper performance of the WORK of this Section.

1. All Division 16000 Sections.

2. Section 17400 Process Instrumentation and Controls.

1.3 REFERENCE SPECIFICATIONS, CODES AND STANDARDS

A. The following documents referenced shall mean:

1. EIA Electronics Industry Alliance
2. TIA Telecommunications Industry Association
3. NEC National Electric Code. NFPA 70
4. NECA National Electrical Contractors Association

B. Comply with the applicable provisions of the latest edition of the following standards for design, materials, installation, and testing:

1. TIA/EIA-568-B Telecommunications Cabling Standard.
2. ANSI/ ICEA S-83-596 Optical Fiber Premise Distribution Cable.
3. ANSI/ ICEA S-87-640 Optical Fiber Outside Plant Communications Cable.
4. ANSI/ NECA 301 Standard for Installing and Testing Fiber Optic Cable.
5. TIA/ EIA-526-7 Measurement of Optical Power Loss of Installed Single Mode Fiber.
6. Bellcore GR-20-Core Generic Requirements for Optical Fiber and Optical Fiber Cable.
7. TIA/ EIA 568-B Telecommunications Cabling Standard.

1.4 SUBMITTALS

A. See submittal requirements of Section 17400 “Process Instrumentation and Control”.

B. Furnish submittals including shop drawings, product literature and datasheets,

C. Network and communications test plans: Submit a detailed test plan including the following:

1. Media to be verified and test methodology.
2. Test equipment to be used with calibration certificate.
3. Testing Procedures.
4. Network diagrams.

D. Control Systems testing procedure. See Section 17400.

E. The Shop Drawings: The shop drawings shall include a full description of the PLC system, including documentation of operation theory, programming methods, i.e. ladder logic diagram (All contacts, coils, timers, latches and each section of the ladder shall be clearly annotated and defined. The annotation of each of the input contacts representing a field device shall clearly define the status of the device.), data codes and security features, maintenance and trouble-shooting information. Schematics of all cards or units within the system along with point-to-point wiring diagrams shall be furnished after award of contract.

1. The documentation shall, also, provide a sequential flow chart of the logic implemented. The format of the flow chart and the annotation shall be proposed for acceptance by the ENGINEER before implementation.
2. Two sets of the program and documentation shall be forwarded for review and comments at least 30 days before factory test.

3. Control system architecture and interconnection cabling diagrams for the complete system. Include each cable fiber and copper network cable connection.

F. Product Data

1. Manufacturers brochures with proposed materials and options clearly marked.

2. Data sheets, including catalog numbers with code for determining catalog number code. Include data sheets for all cabinet components, instruments, cables, Ethernet switches, firewalls, and cable management.

3. Manufacturer’s installation instructions for equipment proposed.

4. Submit results of an un-witnessed test performed prior to the witnessed test. Any deficiencies found are to be noted and corrected before the witnessed test. Unwitnessed Test Results together with any re-testing, to be signed by Contractor as being correct.

G. Test Report results: Submit a hardcopy report for approval by the Engineer:

H. O&M Manual: Include in the submitted O&M Manual the following as a minimum:

1. Manufacturers network device data sheets and installation instructions.

2. System Network Diagram showing device model numbers and network addresses.

3. Documentation of all final device configuration settings, IP addresses and passwords.

1.5 QUALITY ASSURANCE

A. Training: A manufacturer's representative shall supply 40 hours of on-site training if required, for CITY personnel. The training shall include, but not be restricted to, operation of programming unit, trouble shooting of system hardware, software, and program development.

B. Communications system installer qualifications: The communications system installer shall:

1. Demonstrate direct experience with installation and testing of communications systems on at least two similar recent projects in the last three years.

2. Utilize qualified, experienced personnel, familiar with the design, installation, and configuration of communications systems.

3. Provide special tools and equipment needed for the installation and testing of the communications system, including but not limited to tools for terminating and testing copper/fiber-optic cables, jack stands for cable reels or cable winches, and OTDR testing

1.6 COMMUNICATIONS WITH VENICE PUMP STATION

A. The Contractor to coordinate with the City of LA and the selected Ethernet Private Line (EPL) Service Provider, to install and test the communications link to Venice Pump Station.

B. The Contractor shall install the Service Providers modem and fiber-optic patch panel in the Local Control Panel (LCP-01).

C. The Contractor to coordinate with Honeywell, or equal and the Engineer/ City to provide PLC register data to allow proper configuration of the SCADA screens at Venice Pump Station and testing of the communications link to the station.

D. The City's Information Technology Agency (ITA) is responsible for selecting and contract with the EPL Service provider to establish the communications link.

PART 2 -- PRODUCTS

2.1 PROGRAMMABLE LOGIC CONTROLLER HARDWARE

A. PLC hardware shall be Honeywell, or equal – ControlEdge 900 platform, no equal, and provide the following features:

1. All PLC components, including power supplies, racks, CPUs, memory, I/O modules and cables shall be standardized to minimize the spare parts inventory and maximize interchangeability, and to conform to the City's LAWINS Standards.

2. All I/O modules shall be installed with appropriate type and size of Remote Termination Cables (RTP) and associated RTP module for field wiring terminations.

3. All CPUs shall have 16MBIts non-volatile memory for retention of key programming.

4. Each PLC shall have the ability to provide 4GBits of Dynamic memory capacity (RAM) and 2GBits of Program memory capacity (Flash)

5. Each PLC shall have the ability to operate in redundant or non-redundant modes and shall have the capability of a maximum of thirty-one (31) I/O bases and 372 Slots.

6. Each PLC shall be provided with redundant power supplies and shall be sized as required for I/O and field requirements. Power supplies shall provide a minimum of 5VDC @ 3.0A and 24VDC @ .6A. Power supply shall be Honeywell, or equal, 900P01-0101.

7. Input power: 120VAC, 60Hz

B. PLC Hardware shall be:

Honeywell, or equal, ControlEdge PLC Hardware		
Part Number	**Manufacturer**	**Description**
900CP1-0200	Honeywell or Equal	Control Processor Module (CPM), ControlEdge 900
900SP1-0200	Honeywell or Equal	Expansion Processor Module (EPM), ControlEdge 900
900R12-0200	Honeywell or Equal	12 I/0 Slot Rack
900P01-0301	Honeywell or Equal	120/240 VAC. 60W Rack Power Supply
900G32-0101	Honeywell or Equal	Digital Input, 24 VDC, 32 Channel
900H32-0102	Honeywell or Equal	Digital Output, 24 VDC, 32 Channel
900A16-0103	Honeywell or	Analog Input High Level, 16 Channel

	Equal	
900B01-0301	Honeywell or Equal	Analog Output, 0 to 20 mA, 4 Channel
900TCK-0200	Honeywell or Equal	Digital I /0 - A/I - Terminal Block
900TEK-0200	Honeywell or Equal	Analog Output - Terminal Block
900TNF-0200	Honeywell or Equal	Filler Block Cover, Spare I/0 Slot

1. PLC I/O modules shall be Honeywell, or equal, Universal Input/Output Module (900U01-0100), or equal.

2. Interposing relays shall be provided for all relay outputs

2.2 HUMAN MACHINE INTERFACE HARDWARE (HMI-100)

A. The Where required, panel mounted HMI shall be Honeywell, Model HC 900 family, or equal.

B. The panel mounted HMIs shall have a keypad and touch-screen, including dedicated membrane keyboard to access up to 80 preformatted graphic displays.

C. The display screen shall be a minimum of 10.4” LCD color screen.

D. The HMI shall be capable of communicating with the PLC via an Ethernet TCP/IP or Modbus TCP connection.

E. Input power: 120VAC, 60Hz via 24VDC Power Supply.

2.3 PLC AND HMI PROGRAMMING DEVELOPMENT SOFTWARE

A. The PLC programming software shall be Honeywell, or equal, ControlEdge Builder– Latest Revision

1. The PLC programming software version for the PLCs shall be certified to run on the latest version of Microsoft Windows.

2. The PLC programming software shall comply with the International IEC 61131-3 standard and support Ladder Diagram, Sequential Function Chart and Structured Text programming language formats.

B. The HMI programming software shall be Honeywell MasterLogic ”Station Designer” for HC 900 family, or equal – Latest Revision

1. The HMI programming software version shall be certified to run on the latest Microsoft Windows platform.

2. The HMI programming software shall be capable of directly accessing tag information in the PLC by using the tag name, and not the memory address.

2.4 PLC APPLICATION OF SOFTWARE DESIGN CRITERIA

A. PLC Program Design:

1. CONTRACTOR shall organize the PLC application software into:

a. Sections

1). Contains all sequential control logic for a specific unit of operation

2). Each section consists of a general logic subsections, followed by unit operation subsections.

b. Subsections: Contains all sequential control logic for specific equipment such as a pump, valve or loop.

2. Program Documentation

a. Note and describe start of a new program section.

b. Annotate the PLC program

c. Briefly describe the control objectives.

d. Identify subsections
e. Subsection documentation includes brief description of control objective followed by a description and tag of the equipment being controlled

f. CONTRACTOR shall provide an, internal or external, organizational index for PLC application software that can be used to quickly search and locate a specific section, such as:

1). Flow, pressure and other process variable monitoring

2). Control valve or VFD PID control

3). Unit pump control

4). Unit blower control

5). Alarms

6). Data communications

7). System time-synchronization

8). PLC program initialization

g. The PLC program shall be able to initialize and bring a PLC unit from an inactive condition (e.g., power failure or hardware reset) to a state of operational readiness. Initialization shall include determination of system status prior to start-up of the operating system software and application software. Initialization shall also include the loading of all memory resident software, operator-entered setpoints, timers, counters, queues and all dynamic database values. For example, existing operator-entered setpoints shall not require operator re-entry after a power failure or after the downloading of a new PLC program.

2.5 HMI APPLICATION SOFTWARE DESIGN

A. General:

1. CONTRACTOR shall develop and submit HMI application software in accordance with ASM guidelines and in strict accordance with these requirements.

2. The following items outline the key objectives in designing the HMI graphic displays:

    a. Easily navigated menus

    b. Provide no more than three (3) mouse actions to navigate to any graphic display

    c. Maintain consistency in graphic display and controls design

    d. Maintain consistent and predictable window operations

    e. Accurate representation of the facility and its operation

    f. Represent control options in an easily understood fashion

    g. Wherever possible, design overview displays similar to the physical layout of the facility. The perspective to the physical layout should be from the local main control room.

    h. Provide operator access to process and alarm setpoints, including the following:

        1). Process alarms (High-High, High, Low, and Low-Low)

        2). Control setpoints.

        3). Process timer setpoints

        4). Sequence setpoints for volume, level, time, etc.

        5). Set or correct the time and date of the Real Time Clock for both the PLC and HMI. The time and date of both the PLC and HMI shall be synchronized to the DCS clock once per day.

    i. Provide an alarm/event screen with listing of current and historical alarms and events, e.g., operator login/commands/set-point entry, change in pump/blower/equipment status, including descriptions, times of occurrence, operator acknowledgement and return to normal status.

    j. Configure the HMI to provide four levels of user access security.

        1). Visitor: View screens only

        2). Operator: View screens, enter process setpoints, and select equipment configuration.

        3). Supervisor: All access provided to an Operator, but in addition ability to change alarm setpoints and PID controller parameters.

        4). Administrator: Access to all functions.

B. HMI's graphics screens shall be programmed to comply with City (WINS) latest HMI standards including symbols, colors, layout, navigation. Provide the following:

1. Overall Facility Layout Operating/Monitoring/Troubleshooting screens.

2. Log – in screen.

3. Process status screen (s).

4. Plant configuration screens.

5. Setpoint entry screens.

6. Alarm logs.

7. Event log.

8. Maintenance screen.

9. Communication screen.

10. Trend screen.

11. Report screens.

12. All screens shall have top three lines to display latest alarms, with date and time stamp, with navigational buttons for navigating between screens.

13. Screen graphics presentation to follow the recommendations of ISA-101, and the existing plant SCADA screens symbols, color scheme, and alarming.

14. Provide pop-up windows for: mini-trends.

15. Provide active page connectors for navigation.

C. Provide pre-configured local trend displays of the following historical data with a choice of time ranges of at least 1hr, 4 hrs, 24 hrs and 7 days.

1. Stormwater diversion flow together wetwell and/or basin level.

2. Pump on/off together with pump discharge flow and pump kW.

3. Facility kW (15 minute average) and kW/1000 gallons of pump discharge flow.

D. PLC/HMI I/O DATABASE

1. CONTRACTOR shall segment all I/O and cards to increase the reliability of all systems and limit any single I/O card failure causing an outage.

2. CONTRACTOR shall provide, coordinate, manage and document a PLC Database in accordance with LAWINS tag naming conventions. The Database shall have the following functions:

a. The database shall contain all the fields necessary to configure the various points including the following per point type:

1). Discrete Point configuration: CONTRACTOR shall provide a PLC/HMI Discrete I/O database of all the analog and discrete points. The I/O list includes the following fields:

a). Loop Number

b). Tag number

c). Type

d). Point description

e). Alarm Description 1

f). Alarm Description 2

g). Closed Condition Input: Description of the state of the input parameter of device when the field or internal PLC contacts are in the CLOSED position.

h). Open Condition Input: Description of the state of the input parameter of device when the field or internal PLC contacts are in the OPEN position.

i). Closed Condition Output: Description of the state of the output signal in the CLOSED condition

j). Open Condition Output: Description of the state of the output signal in the OPEN condition.

k). PLC name and/or number

l). PLC network address

2). Analog Point Configuration: CONTRACTOR shall provide a PLC/HMI I/O database of all analog points that are communicated to and from the DCS and the HMI. The analog I/O database shall include, but is not limited to, the following fields:

a). Attributes that further define the function of the points as listed below: Note that the attributes will be used for sorting and development of the I/O driver configuration. Additional attributes shall be developed to meet the software needs:

i Setpoint read
ii Setpoint write
iii Process variable
iv Flow totalizer read
v Equipment run time

b). Point description

c). Alarm description 1

d). Alarm description 2

e). Engineering units

f). Scale range

g). Alarm ranges:
i High-High
ii High
iii Low
iv Low-Low
v Signal fail
vi Rate of Change
vii Other

h). PLC number

i). PLC I/O hardware address

j). PLC I/O memory address

E. System Growth

1. Contractor shall provide twenty (20) percent spare capacity. Spare capacity shall be based on current ‘equipped’ I/O counts

F. Operations and Maintenance Manuals: Furnish to the ENGINEER 10 complete sets of Operation and Maintenance manuals. The manuals shall include data sheets, catalog cuts, approved shop drawings, manufacturer’s technical manuals, information drawings, etc., for the system, subsystems, and all components, and shall include names, addresses and telephone numbers of equipment suppliers, representatives and repair facilities.

1. This shall include a complete description of the recommended operating procedures, maintenance procedures, and spare/replacement parts list for equipment items with catalog data, diagrams, and drawings or cuts describing the equipment..

2. Each set shall include full size assembly and wiring diagrams; drawings showing "as built" conditions shall be furnished to the CITY

2.6 PLC PANEL

A. Refer to Section 17400 “Process Instrumentation and Control”.

B. Provide 316 stainless steel NEMA 4X PLC cabinet with air conditioner. Size conditioner for a maximum ambient of 110 deg F. Provide cabinet thermal calculations with shop drawing submittal.

C. PLC cabinet to exclude motor starters, VFDs and any 480V devices.

2.7 SPARES

A. The following spare parts shall be provided:

1. One of each type of PLC controller module

2. One of each type of communications and remote I/O module.

3. One I/O module for each ten of each type installed, with a minimum of 2 per type

4. One spare PLC power supply.

5. One field termination module of each type for every ten installed, with a minimum of 2 per type.

6. One of each type of preformed interconnection cable

2.8 MANAGED INDUSTRIAL ETHERNET SWITCH WITH INTEGRAL FIREWALL.

A. Furnish industrial managed Ethernet switches with firewall as shown on the drawings and complying with the requirements of this Section, to provide network connectivity between network components.

B. The Ethernet switch manufacturer shall be CISCO, Industrial Security Appliance 3000, no exceptions

C. Provide the switch with the following minimum features:

1. Fan-less metal enclosure. DIN rail or rack mounting. Built for harsh environments.

2. Ports: As required. Minimum of two shielded RJ45 10/100 Mbps Ethernet ports with auto negotiation. One Ethernet RJ console port.

3. Support Small Form-factor Pluggable (SFP) transceivers, selectable for copper and single/ multi-mode fiber networks. Provide a minimum of 2 SFP ports.

4. SFP fiber transceivers as shown on the drawings. Coordinate transceiver model with the requirements of the ESL Service Provider.

5. Ethernet /IP support. Port security and access control.

6. Rapid Spanning Tree Protocol, and bandwidth control.

7. Power supply: 120 VAC

8. Minimum operating temperature range: -40 to 70 deg C (-40 to 158 deg F)

D. Provide threat defense/malware application and 5-year update subscription. License in the name of the City of LA

2.9 UNMANAGED INDUSTRIAL FAST ETHERNET SWITCH

A. Furnish industrial unmanaged Ethernet switch as shown on the drawings and complying with the requirements of this Section, to provide network connectivity between network components.

B. The Ethernet switch manufacturer shall be CISCO, Industrial Security Appliance 2000, Red Lion N-Tron series, Allen Bradley, or equal.

C. Provide the switch with the following minimum features:

1. Compact, fan-less metal enclosure. DIN rail mounting. Built for harsh environments.

2. Copper ports: As required. Minimum of four shielded RJ45 10/100 Mbps full duplex Ethernet ports with auto negotiation. One Ethernet RJ console port.

3. Support Small Form-factor Pluggable (SFP) transceivers, selectable for copper and single/ multi-mode fiber networks. Provide a minimum of 2 SFP ports.

4. SFP fiber transceivers as shown on the drawings. Coordinate transceiver model with the requirements of the ESL Service Provider.

5. Ethernet /IP support. Port security and access control.

6. Rapid Spanning Tree Protocol, and bandwidth control.

7. Power supply: 120 VAC

8. Minimum operating temperature range: -40 to 70 deg C (-40 to 158 deg F)

9. DIN rail mounting kit.

2.10 FIBER OPTIC PATCH PANELS

A. All fiber-optic cable terminations shall be made in optical patch panel assemblies. Patch panel assemblies shall be of the pre-assembled chassis type with associated rack or wall mounting hardware.

B. To facilitate the transition between outside plant cable and the pre-connectorized cable assemblies, the fibers shall be fusion spliced and housed in a splice tray. Splice tray shall be positioned in the optical patch panel assembly per manufactures recommendation. Splice attenuation shall not exceed 0.2 db. Splice shall be covered with a protective sleeve. Splice tray to provide fiber storage.

C. Provide one port for each fiber specified. Terminate all spare fibers within the patch panel.

D. Provide protection and strain relief for cables entering the patch panels.

E. Provide fiber-optic patch cords to connect between the fiber-optic panel and fiber-optic network equipment.

F. Provide machine printed port labels, and cable management items to maintain a greater than minimum cable bending radius.

G. Manufacturer shall be: Corning Cable Systems, Panduit, Commscope, or equal.

2.11 FIBER-OPTIC CABLE

A. Single mode fiber cables:

1. Type: Single mode, loose tube, gel-free, indoor/outdoor rated with water blocking layer.

2. Designed for inter-building and intra-building backbones Flame retardant, low smoke, zero halogen.

3. Core/ clad diameter: 8.2/ 125 micron

4. Number of fibers: As shown on the drawings. Minimum of 12.

5. Maximum attenuation: 0.4 dB/km at 1310 nm, 0.3 db at 1550 nm

6. Maximum connector loss: 0.75 db

7. Maximum splice loss: 0.2 db

B. Multimode fiber cables

1. Loose-tube, gel free, indoor/outdoor rated with water blocking layer. Color coded fibers according to TIA/EIA-598.

2. Designed for inter-building and intra-building backbones Flame retardant, low smoke, zero halogen.

3. Core/ Clad diameter: 50/125 micron

4. Number of fibers: As shown on the drawings. Minimum of 12 fibers.

5. Maximum attenuation: 2.5 dB/km at 850 nm, 0.3 db at 1550 nm

6. Maximum connector loss: 0.75 db

7. Maximum splice loss: 0.2 db

C. Connectors: LC/UPC-90° (TIA/EIA-604-10A) polished connectors unless required otherwise by equipment.

2.12 COPPER NETWORK CABLE

A. Category 5E, 6 network cable.

1. Cable: CAT 5E, 6 UTP, rated indoor/outdoor as required by NEC Article 800

2. Jacket: FEP/PVC

3. Conductors: 4 pair, 23 AWG minimum

4. Manufacturer: Belden, Berk-Tek, General Cable or equal.

PART 3 -- EXECUTION

3.1 INSTALLATION

A. Install communications equipment and cables as recommended by the manufacturer and in accordance with TIA-568-C.0/ C.1, C.2, C.3

B. Ensure maximum pulling tensions of communications cables are not exceeded, and cable bends maintain proper radius

C. Prior to installation, physically inspect cable for damage to the jacket as it is taken from the reel. Do not install damaged cable.

D. D. Install equipment and cables as recommended by the Manufacturer and in accordance with TIA-568-C.0/C.1,C.2, C.3.

E. Provide all device configuration required to implement the full functionality of the networks/ communication system. Document the final configuration parameters, IP addresses, and passwords. Include a copy in the submitted Operations and Maintenance Manuals.

F. Category 5E, 6 Ethernet network cable testing.

1. Test Ethernet cables with cable network test set (Fluke LinkIQ or similar) and record results.

2. Measure values and determine pass/fail result for each parameter. Include:
   a. Continuity and attenuation
   b. Shorts between conductors
   c. Crossed and reversed pairs
   d. Cable length
   e. Bandwidth.

3.2 TESTING - GENERAL

A. All control panels and other control system equipment shall be factory tested to verify all functions and features of the equipment; both the manufacturer’s published specifications and compliance with all requirements of these Contract Specifications.

B. The ENGINEER may witness testing of the units.

C. Solid-state logic systems shall be tested as complete assemblies. Testing of individual components or modules will not be acceptable. All testing shall be witnessed by the representative of the City Engineer. All costs for travel, lodging, transportation, meals, per-diem and other related expense shall be paid by the Contractor as part of the Contract Bid price. See General Requirements, Section 01453: Sampling, Testing and Fabrication Inspection..

D. Seven Day Acceptance Test:

1. After startup has been completed, the System shall undergo a seven (7) day acceptance test. The System must run continuously for seven (7) consecutive days. During this period, all System functions shall be exercised, and any System interruption and accompanying component, subsystem, or program failure shall be logged for cause of failure, as well as time of occurrence and duration of each failure. A failure shall cause termination of the seven (7) day acceptance test. When the cause of a failure has been corrected, a new seven (7) day acceptance test shall be started. Skilled technicians shall respond to all trouble calls by the CITY.

2. The technician responding to a System malfunction, must prepare a report which includes details concerning the nature of the complaint or malfunction and the resulting repair action required and taken, plus time and date of occurrence and correction.

3. The System Malfunction Report form shall be submitted to the ENGINEER for review and approval before the time of re-start of testing. Failure to obtain ENGINEER approval for the Report form shall cause postponement of testing.

3.3 FIBER-OPTIC CABLE TESTING

A. Provide 100% attenuation testing of all cable fibers while on the reel and prior to installation. Document results including cable manufacturer, date of manufacture, shipping date, cable identification, length and fiber identification. Submit results for approval prior to installation

B. Install communications equipment and cables as recommended by the manufacturer and in accordance with TIA-568-C.0/ C.1, C.2, C.3

C. Ensure maximum pulling tensions of communications cables are not exceeded, and cable bends maintain proper radius..

D. Visual inspection for continuity. Connector and loss testing after installation.

1. Fiber Connector Inspection: Use a fiber optics microscope to check the quality of the termination. A well-made connector is smooth, polished, scratch free with no signs of cracks, chips or areas where the fiber is either protruding from the end of the ferrule or pulling back into it. Remake poor connections.

E. After cable installation use a power meter per EIA/TIA 455-78-B and OTDR per ANSI/TIA/EIA-455-8-2000 to perform bi-directional cable testing of each fiber/ connector system from end to end. Match the source type and wavelength (850, 1300, 1550 nm). Calculate the loss using the average of the two bi-directional measurements.

F. Fiber acceptance power loss for cable, connectors and splices:

1. For each mated connector pair, a maximum of 0.7 dB. Typical 0.5 dB.

2. For each splice a maximum of 0.2 dB

3. For fiber: Attenuation as specified by the manufacturer.

4. Maximum allowable link loss:

   Maximum loss = (0.7dB X # of mated pairs of connectors) +(0.2 dB X #of splices) +fiber loss of total length of cable

G. If the measured loss is greater than the allowable maximum loss, take necessary measures to bring the link loss into compliance.

END OF SECTION

BUREAU OF ENGINEERING

VALLEY VILLAGE PARK
STORM WATER CAPTURE PROJECT
PROJECT NO. EW40085F

ATTACHMENTS

MARCH 2025

City of Los Angeles
California

Department of Public Works
Bureau of Engineering

BUREAU OF ENGINEERING

VALLEY VILLAGE PARK
STORM WATER CAPTURE PROJECT
PROJECT NO. EW40085F

ATTACHMENT 1
GEOTECHNICAL INVESTIGATION REPORT

MARCH 2025

City of Los Angeles
California

Department of Public Works
Bureau of Engineering

ENGINEERING
CITY OF LOS ANGELES

Geotechnical Evaluation

LABOE TOS No. 25
Stormwater Capture Parks Program
Valley Village Park
5000 Westpark Drive
North Hollywood, California

Carollo Engineers

707 Wilshire Boulevard, Suite 3920 | Los Angeles, California 90071

August 12, 2020 | Project No. 211307001







Geotechnical | Environmental | Construction Inspection & Testing | Forensic Engineering & Expert Witness

Geophysics | Engineering Geology | Laboratory Testing | Industrial Hygiene | Occupational Safety | Air Quality | GIS

Ninyo & Moore

Geotechnical & Environmental Sciences Consultants

Ninyo & Moore
Geotechnical & Environmental Sciences Consultants

Geotechnical Evaluation

LABOE TOS No. 25
Stormwater Capture Parks Program
Valley Village Park
5000 Westpark Drive
North Hollywood, California

Mr. Miko Aivazian

Carollo Engineers

707 Wilshire Boulevard, Suite 3920 | Los Angeles, California 90071

August 12, 2020 | Project No. 211307001

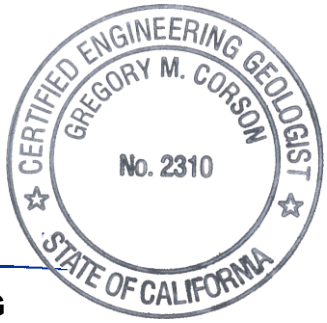



Greg M. Corson, PG, CEG
Principal Geologist

Daniel Chu, PhD, PE, GE
Principal Engineer

KMB/SCM/MRM/GMC/mlc

Distribution: (1) Addressee (via e-mail)

CONTENTS

1 INTRODUCTION 1
2 SCOPE OF SERVICES 1
3 SITE DESCRIPTION 2
4 PROJECT DESCRIPTION AND PROPOSED CONSTRUCTION 2
5 SUBSURFACE EVALUATION AND LABORATORY TESTING 3
6 GEOLOGIC AND SUBSURFACE CONDITIONS 4
7 GROUNDWATER 6
8 FIELD PERCOLATION TESTING 6
9 FLOOD HAZARDS 8
10 FAULTING AND SEISMICITY 8
10.1 Surface Fault Rupture 9
10.2 Site-Specific Ground Motion 9
10.3 Liquefaction 11
10.4 Dynamic Settlement 11
10.5 Lateral Spreading 12
11 CONCLUSIONS 12
12 PRELIMINARY RECOMMENDATIONS 14
12.1 Earthwork 14
12.1.1 Pre-Construction Conference 14
12.1.2 Clearing and Site Preparation 14
12.1.3 Excavation Characteristics 15
12.1.4 Subgrade Preparation for the Infiltration Gallery 15
12.1.5 Subgrade Preparation for the Other Buried Structures 15
12.1.6 Treatment of Near-Surface Soils for At-Grade Structures 16
12.1.7 Temporary Excavations and Shoring 16
12.1.8 Fill Material 17
12.1.9 Fill Placement and Compaction 18
12.2 Underground Utilities 18
12.2.1 Pipe Bedding 18
12.2.2 Modulus of Soil Reaction for Pipe Design 19
12.3 Site-Specific Seismic Design Considerations 19
12.4 Foundations 19
12.4.1 Spread Footings 19

12.4.2 Mat Foundations 20
12.5 Lateral Earth Pressures 20
12.6 Exterior Flatwork 20
12.7 Corrosivity 21
12.8 Concrete Placement 21
12.9 Stormwater Infiltration Gallery 22
12.10 Drainage 22
12.11 Landscaping 22
13 CONSTRUCTION OBSERVATION 22
14 LIMITATIONS 23
15 REFERENCES 25

TABLES

1 – Percolation Test Results 8
2 – 2019 California Building Code Seismic Design Criteria 19

FIGURES

1 – Site Location
2 – Boring, Percolation Test and CPT Locations
3 – Site Plan
4 – Regional Geology
5 – Fault Locations
6 – Acceleration Response Spectra
7 – Seismic Hazard Zones
8 – Lateral Earth Pressures for Braced Excavation
9 – Lateral Earth Pressures for Temporary Cantilevered Shoring
10 – Lateral Earth Pressures for Underground Structures

APPENDICES

A – Boring Logs
B – CPT Soundings
C – Geotechnical Laboratory Testing
D – Analytical Test Results and Manifest for Drum Disposal
E – Liquefaction Analysis

1 INTRODUCTION

In accordance with your request and authorization, we have performed a geotechnical evaluation at Valley Village Park located at 5000 Westpark Drive in North Hollywood, California as part of the Los Angeles Bureau of Engineering (LABOE) Stormwater Capture Parks Program (Figure 1). The purpose of our study was to evaluate the soil and geologic conditions at the site and to provide preliminary geotechnical recommendations for pre-design of proposed Best Management Practices (BMPs) at the site for stormwater infiltration. Our evaluation was performed in general accordance with Task Order Solicitation (TOS) No. 25 (LABOE, 2019) and our referenced proposal dated April 15, 2020 (Ninyo & Moore, 2020). This report presents our findings, conclusions, and recommendations for the Valley Village project.

The intent of the Stormwater Capture Parks Program is to capture up to 2,912 acre-feet of stormwater and urban runoff per year that drain from 5,868 acres within a portion of the San Fernando Valley in order to reduce the potential for flooding, improve stormwater quality, increase water supplies through stormwater capture, and provide recreational, social, and economic benefits (LABOE, 2019). The stormwater runoff will be diverted into proposed stormwater capture and infiltration BMPs within nine City of Los Angeles parks generally located along the SR-170 corridor, including the subject Valley Village Park, for replenishment of the San Fernando Groundwater Basin. According to the Conceptual Study Report (CSR) (Los Angeles Department of Water & Power [LADWP], 2018), the project at Village Park is anticipated to capture and infiltrate stormwater runoff from a tributary area of approximately 455 acres.

2 SCOPE OF SERVICES

Our scope of services was prepared based on our review and the conceptual design provided in the CSR (LADWP, 2018), an anticipated infiltration invert depth of 23.5 feet, and discussions with the client, Carollo Engineers, and included the following:

- Project coordination and planning with subcontractors and client, LABOE, and Los Angeles Department of Recreations and Parks (RAP) personnel, and attendance at a project kick-off meeting.
- Review of readily available background materials, including published topographic maps, geologic maps, fault and seismic hazard maps, groundwater data, stereoscopic aerial photographs, project related plans, and in-house geotechnical information.
- Acquisition of a Los Angeles County Environmental Health Department (LACEHD) permit.
- Field reconnaissance to observe and document the site conditions, mark-out proposed hollow-stem-auger (HSA) boring and cone penetration test (CPT) sounding locations for underground utility clearance by Underground Service Alert, and meet with RAP personnel regarding site access and constraints.

- Subsurface exploration consisting of the drilling, sampling, and logging of three HSA borings, including two borings to depths of approximately 25 feet and one boring to a depth of approximately 76½ feet, and one CPT to a depth of approximately 35½ feet. The purpose of the borings and CPT was to evaluate the subsurface soil conditions and percolation rates of the on-site soils.

- Field percolation testing in the two 25-foot-deep borings in general accordance with the methods presented in the County of Los Angeles Guidelines for Geotechnical Investigation and Reporting Low Impact Development Stormwater Infiltration (COLA, 2017).

- Geotechnical laboratory testing of representative soil samples to evaluate in-situ moisture content and dry density, gradation, percentage of particles finer than the No. 200 sieve, Atterberg limits, consolidation, direct shear strength, and soil corrosivity.

- Data compilation and engineering analysis of the information obtained from our background review, subsurface evaluation, infiltration testing, and laboratory testing.

- Preparation of this geotechnical report presenting our findings, conclusions, and preliminary recommendations pertaining to the design and construction of the proposed improvements.

3 SITE DESCRIPTION

Valley Village Park is a City of Los Angeles park located near the southeastern end of the San Fernando Valley, northwest of the intersection of California State Routes (SR) 134 and 170 (Figure 1). The park consists of a relatively flat, irregular-shaped lot bounded by SR-170 on the northeast and Westpark Drive on the south and west (Figure 2). The Central Branch of Tujunga Wash and North Hollywood Park are located on the opposite side of SR-170. Residential properties are located south and west of Westpark Drive. The park generally consists of large grass-covered and tree-lined areas crossed by dirt/gravel-lined walkways/paths. The northern approximate half of the park includes picnic areas, a restroom structure, and sand-covered playground areas. The park slopes gently downward toward the southeast with site elevations range from approximately 624 feet above mean sea level (MSL) at the northwest corner of the park to approximately 612 feet (MSL) at the southeast corner (United State Geological Survey [USGS], 2018). The approximate middle of the site is crossed by an east to west trending, 90-inch-diameter reinforced concrete pipe (RCP) storm drain as shown on Figure 3.

4 PROJECT DESCRIPTION AND PROPOSED CONSTRUCTION

Based on our review of TOS 25 (LABOE, 2019), Valley Village Park project would consist of the installation of an underground infiltration gallery sized to store approximately 237,500 cubic feet of water. In addition, other design elements include a diversion structure, hydrodynamic separator (HDS) units, flow measuring devises, supervisory control and data acquisition, educational signage, and park restoration/improvements. According to the CSR (LADPW, 2018), which was included as part of TOS 25, the conceptual infiltration gallery would have a footprint of

approximately 24,000 square feet (sf) with an inner height of approximately 12 feet (11 feet of storage), and an invert depth of approximately 23.5 feet below the ground surface (bgs). As indicated our proposed scope of services (2020) was based on our review of the CSR (LADPW, 2018).

Subsequent to performing our subsurface exploration, presented herein, we received preliminary plans from our client (Carollo, 2020), which include two options for BMPs at Valley Village Park. We understand that these plans are subject to change as further design is performed, but the two options presented include the installation of either a underground infiltration gallery with an approximately 282-feet-long by 100-feet-wide by 17-feet-high (interior height) footprint (Figure 3) or a smaller gallery combined with six, 72-inch-diameter dry wells. The smaller gallery would be reduced in width to 75 feet. The other dimensions would remain the same. We understand that the galleries will consist of prefabricated, modular concrete vaults with open bottoms underlain by approximately 2 feet of drain rock over a layer of filter fabric. Concrete foundations could be constructed depending on the type of system selected. The top of the gallery would be at depth of approximately 11 feet bgs and the bottom (invert) would be at a depth of approximately 29 feet bgs. Each option includes the installation of buried concrete improvements, including a new diversion structure that would divert water from the existing 90-inch-diameter RCP storm drain that crosses the park, two HDS units to clean the water, a junction structure/manhole, and a second manhole structure. Two 24-inch-diameter RCPs and a 36-inch-diameter RCP will be installed to connect the improvements to the gallery. The second option would include the installation of an additional 24-inch-diameter RCP to connect the gallery to the dry wells. We understand that upon completion of the BMP installation, the BMPs will be buried with compacted fill and the ground surface returned to its existing condition for continued use as a park. We also understand that Portland-cement concrete (PCC) roads will be constructed to access the new improvements.

5 SUBSURFACE EVALUATION AND LABORATORY TESTING

Our subsurface evaluation was conducted on March 24 through 26, 2020, and consisted of the drilling, logging, and sampling of three HSA borings (B-1, P-1 and P-2) and two CPT soundings (CPT-1 and CPT-2). The borings were drilled using a truck-mounted drill rig with 8-inch diameter augers. Boring B-1 was drilled to a depth of approximately 76½ feet and borings P-1 and P-2 were drilled to depths of approximately 25 feet. The depths of the borings were based on the conceptual design depths for the infiltration basin presented in the CSR (LADWP, 2018). The borings were logged in the field by a representative of Ninyo & Moore and representative bulk and relatively undisturbed soil samples were collected from the borings at selected depths for

laboratory testing. Percolation testing was performed in borings PT-1 and PT-2 as further discussed in Section 7 of this report. The CPT soundings (CPT-1 and CPT-2) were performed using a 30-ton CPT rig with a 15 square centimeter cone to refusal depths of approximately 34.6 and 35.4, respectively. Our proposed included one CPT sounding to a depth of up to approximately 50 feet (Ninyo & Moore, 2020). Since shallow refusal was encountered in our CPT (CPT-1), a second CPT (CPT-2) was performed approximately 7 feet from CPT-1 with similar results. Continuous soil profiles, including cone tip resistance and sleeve friction, were recorded during the sounding. A representative of Ninyo & Moore was on site to observe the CPT soundings. Logs of the exploratory borings are provided in Appendix A. The CPT soundings are presented in Appendix B. The approximate locations of the borings and CPTs are presented on Figures 2 and 3. The borings and CPTs were backfilled with cement-bentonite grout upon completion of the drilling and percolation testing in general accordance with the requirements of LACEHD.

Geotechnical laboratory testing of representative soil samples included tests to evaluate in-situ moisture content and dry density, gradation, percentage of particles finer than the No. 200 sieve Atterberg limits, consolidation, direct shear strength, and soil corrosivity. Moisture and density test results are presented on the boring logs in Appendix A. The remaining test results are presented in Appendix C.

Soil cuttings from the borings and CPT were placed in 55-gallon drums, and a composite soil sample of the drummed soil was collected in an 8-ounce jar for waste characterization. The sample was stored in a chilled cooler and delivered to SunStar Laboratories, Inc. for analytical testing under chain-of-custody protocol. The sample was tested for total petroleum hydrocarbons (gas and diesel range) per United Stated Environmental Protection Agency (EPA) Test Method 8015B, Title 22 metals per EPA Test Methods 6010B/7470/7471, and volatile organic compounds per EPA Test Method 8260B. Based on the characterization test results, the drums were disposed at an approved landfill (Soil Safe in Adelanto, California) by a licensed transportation subcontractor (Belshire). The test results and a copy of the transportation manifest are provided in Appendix D.

6 GEOLOGIC AND SUBSURFACE CONDITIONS

The project site is within the San Fernando Valley, which is generally bounded by the Santa Monica Mountains on the south, Verdugo Mountains on the east, Santa Susana Mountains on the north, and Chatsworth Hills on the west. The valley along with these bounding mountain ranges are part of the Transverse Ranges Geomorphic Province. The province encompasses an approximately 40- to 60-mile-wide area (north to south) that extends approximately 320 miles

(west to east) from Point Arguello and San Miguel Island to the Eagle and Pinto Mountains of the Mojave Desert (Norris and Webb, 1990). The province generally consists of a region of east to west-trending mountain ranges considered atypical to the predominant northwest to southeast structural fabric of California. The atypical trend of the Province is the result of a restraining bend ("the Big Bend") on the San Andreas Fault that has rotated and compressed the region to its current configuration. The compression has resulted in folding and reverse/thrust faulting with similar east to west trends, and regional uplift. The Santa Monica Mountains are the southernmost of the east to west trending ranges of the province and the San Fernando Valley is a synclinal valley infilled with relatively thick deposits of sedimentary rock overlain by alluvial deposits (Norris and Webb, 1980).

Review of regional geologic maps indicate that the park site is generally underlain by Holocene-age wash deposits associated with deposition along the Tujunga Wash (Campbell et al., 2014) (Figure 4). The deposits are described as consisting of unconsolidated gravel, sand, and silt in active or recently active stream beds. The California Department of Mines and Geology (CDMG, 1997) has also mapped the site as being underlain by wash deposits consisting of loose to medium dense, sand and silty sand with lesser quantities of silt and gravel.

Materials encountered during our subsurface exploration generally consisted of undocumented fill underlain by alluvium. The undocumented fill was encountered in each boring to a depth of approximately 1 foot below the ground surface that generally consisted of brown, reddish brown, and dark grayish brown, moist, loose to medium dense, silty sand with variable amounts of gravel and scattered cobbles and pieces of asphalt concrete. Documentation regarding the limits of fill or the placement and compaction of the fill soils was not available for our review. Alluvium was encountered beneath the undocumented fill, to the total depth explored of up to approximately 76½ feet. The alluvium generally consisted of granular deposits of light brown, brown, reddish brown, reddish gray, and light olive brown, moist, loose to very dense, silty sand, clayey sand, poorly graded sand with silt, poorly graded sand, and sandy silt with variable amounts of gravel. The granular deposits were interbedded with fine-grained deposits consisting of brown, olive brown, and reddish brown, very stiff to hard, lean clay with varying amounts of silt and sand. Interbeds of the fine-grained deposits were generally more abundant below a depth of approximately 23½ feet. Generalized descriptions of the materials encountered during our subsurface exploration are presented below. More detailed descriptions of the subsurface materials are presented on the boring and CPT soundings in Appendices A and B, respectively.

7 GROUNDWATER

Seepage and/or groundwater was not encountered in our borings or CPT to the total depth explored of up to approximately 76½ feet. CDMG (1997) indicates that the historic high depth to groundwater at the project site is less than 10 feet below the ground surface. Groundwater monitoring well data (Delta, 2009) available on the State of California Water Resources Control Board's GeoTracker website (SWRCB, 2020) indicates that the depth to groundwater in 2009 was on the order of 105 to 115 feet below the ground surface at a former gas station site located approximately 1,500 feet southeast of the park. The depth to groundwater in a Los Angeles County groundwater monitoring well (Well ID 3813J) located 1,800 feet northwest of the site was approximately 134 feet in 2009 (the latest posted measurement) (COLA, 2020). The depth to groundwater in this well ranged from approximately 105 and 145 feet between 1970 and 2009. It is anticipated that similar depths to groundwater are present at the park site. Fluctuations in the level of groundwater will occur due to variations in ground surface topography, subsurface stratification, rainfall, irrigation practices, groundwater pumping, and other factors that were not evident at the time of our field evaluation.

8 FIELD PERCOLATION TESTING

Percolation testing was performed in percolation borings P-1 and P-2 in general accordance with the County of Los Angeles Guidelines for Geotechnical Investigation and Reporting Low Impact Development Stormwater Infiltration (COLA, 2017). The testing was performed to evaluate the infiltration rate of the on-site soils for use in design of the BMPs by Carollo. The approximate locations of the percolation test borings are shown on Figure 2.

Borings P-1 and P-2 were drilled to depths of approximately 25 feet. Preparation of each boring for percolation testing included the installation of a 2-inch-diameter polyvinyl chloride (PVC) pipe in the borings, the lowest 15 feet of which was slotted, and backfilling the bottom approximately 15 feet of annular space between the borehole wall and pipe with clean gravel. The infiltration zones were pre-soaked with water for at least one hour prior to performing percolation testing. After the borings were pre-soaked, constant-head percolation testing was performed in boring P-1 and falling-head percolation testing was performed in boring P-2.

The constant-head testing was performed by placing clean water in the PVC pipe at a constant flow rate to establish a stabilized head. The flow rate was measured using a digital flow meter. Once a stabilized head was established in the borings, the constant-head test was initiated and the flow was maintained for a period of approximately 2 hours. The field percolation rate was

calculated by measuring the total volume of water infiltrated during the total duration of the test and dividing by the surface area of the tested zone of the boring.

A constant-head could not be established in boring P-2 since the flow rate was lower than the threshold of our equipment. Accordingly, the percolation rate at boring P-2 was evaluated using the falling-head test method. The falling-head test method involved placing clean water into the PVC pipe to establish a head of water and measuring the rate at which the water level dropped in the pipe at consecutive time intervals (approximately 30 minutes). The test was repeated until three consecutive tests provided similar results and a stabilized rate was obtained. The field percolation rate was calculated by measuring the total volume of water infiltrated during the time interval and dividing by the surface area of the tested zone of the boring. The measured field percolation rates are presented in Table 1.

The County of Los Angeles guidelines (COLA, 2017) indicate that the measured field percolation rates should be reduced to account for the long-term performance of the proposed BMPs by dividing the rates by the "Total Reduction Factor (RF)." They define the RF as the product of the "test-specific" reduction factor (RF_t), the "site variability" reduction factor (RF_v), and the "long-term siltation, plugging, and maintenance" reduction factor (RF_s) (i.e., RF = RF_t x RF_v x RF_s).

The guidelines (COLA, 2017) indicate that the RF_t is applied to account for variations in the direction of flow during the test and the reliability of the different test methods. The guidelines provide RF_t values to be used in the equation that vary based on the test method performed. Values of 2 and 3 are specified for the falling-head and constant-head percolation tests, respectively, and were applied to the RF equation accordingly. The RF_v value is applied to account for site variability, number of tests, and thoroughness of the subsurface investigation and ranges from 1 to 3. For the subject park, it is our opinion that an RF_v value of 3 should be used due to the variability of the on-site soils and field percolations rates. The long-term siltation, plugging, and maintenance value (RF_s) also ranges from 1 to 3 and will generally vary on the level of pre-treatment performed prior to infiltration and the level of future maintenance of the system. The RF_s value is to be provided by the BMP designer. For the purposes of this report, an RF_s value of 1 was used to calculate the RF. The RF_t, RF_v, RF_s, and resulting RF values used in our analysis are presented in Table 1. The adjusted percolation rates and average adjusted percolation rate based on these values are also presented in Table 1.

Note that if a different value of RF_s is chosen by the BMP designer, the calculated RF and resulting adjusted percolation rates in Table 1 will need to be revised accordingly.

Table 1 – Percolation Test Results								
Test Boring	Test Type	Approximate Depth of Tested Zone (feet)	Field Percolation Rate (inches/hour)	Reduction Factor				Adjusted Percolation Rate (inches/hour)
				RF_t	RF_v	RF_s	RF	
P-1	Constant Head	15 – 25	38.3	3.0	3.0	1.0	9.0	4.3
P-2	Falling Head	17 – 25	1.1	2.0	3.0	1.0	6.0	0.2
Average Adjusted and Design Percolation Rate (inches/hour)								2

Notes:
RF_t – Test Specific Reduction Factor
RF_v – Site Variability Reduction Factor
RF_s – Long-Term Siltation, Plugging, and Maintenance Reduction Factor (To be adjusted by the BMP designer as needed)
RF – Total Reduction Factor

Based on our evaluation, we recommend that the average adjusted percolation rate of 2 inches per hour, following adjustments by the BMP designer for RF_s, be used for design at Valley Village Park for both shallow and deep infiltration.

9 FLOOD HAZARDS

Based on our review of flood insurance rate maps for the project area (Federal Emergency Management Agency [FEMA], 2020), the project site is not located in the 100-year Flood Hazard Zone, A99. Zone A99 includes areas to be protected from a 100-year flood by the Federal Flood Protection System under construction at the time of publication of the FEMA map; no base flood elevations are given. The site is located within Other Flood Areas – Zone X, which includes areas of 500-year floods and areas of 100-year floods with average depths of less than one foot and areas protected by levees from 100-year floods.

10 FAULTING AND SEISMICITY

The site is in a seismically active area, as is the majority of southern California, and the potential for strong ground motion in the project area is considered significant during the design life of the proposed project. Figure 5 shows the approximate site location relative to the major faults in the region. The site is not located within a State of California EFZ (formerly known as an Alquist-Priolo Special Studies Zone) (Hart and Bryant, 2018). The nearest mapped active fault to the site is the Hollywood fault located approximately 4.1 miles (6.5 kilometers) southeast of the site (USGS, 2008).

The principal seismic hazards evaluated at the subject site are surface fault rupture, ground motion, and liquefaction. A brief description of these principal seismic hazards are discussed in the following sections.

10.1 Surface Fault Rupture

Surface fault rupture is the offset or rupturing of the ground surface by relative displacement across a fault during an earthquake. Based on our review of referenced geologic and fault hazard data, the project site is not transected by known active faults. Therefore, the potential for surface rupture is relatively low. However, lurching or cracking of the ground surface as a result of nearby seismic events is possible.

10.2 Site-Specific Ground Motion

Considering the proximity of the site to active faults capable of producing a M_{max} of 6.0 or more, the project area has a high potential for experiencing strong ground motion. The 2019 CBC specifies that the risk-targeted maximum considered earthquake (MCE_R) ground motion response accelerations be used to evaluate seismic loads for design of buildings and other structures.

In accordance with Chapter 20 of the American Society of Civil Engineers (ASCE) Publication 7-16 (2016) for the Minimum Design Loads and Associated Criteria for Building and Other Structures, the Site Class should be classified based on the average shear wave velocity (V_S) in the upper 30 meters (V_{S30}), the average field standard penetration resistance in the upper 30 meters (blow counts, N), or the average undrained shear strength in the upper 30 meters (S_u). Using the blow counts obtained from boring B-1 and assuming that the blow counts for the soil layers between a depth of 76½ to 100 feet are the same as the blow count from a depth of 76½ feet for conservatism, the average field penetration blow count in the upper 30 meters are within the range of 15 to 50 blows per foot. Accordingly, the site is classified as Site Class D.

Per the 2019 CBC, a site-specific ground motion hazard analysis shall be performed for structures on Site Class D with a mapped MCE_R, 5 percent damped, spectral response acceleration parameter at a period of 1 second (S_1) greater than or equal to 0.2g in accordance with Sections 21.2 and 21.3 of ASCE 7-16. We calculated that the S_1 for the site is equal to 0.678g using the 2020 Applied Technology Council [ATC] seismic design tool (web-based)]; therefore, a site-specific ground motion hazard analysis was performed for the project area.

The site-specific ground motion hazard analysis consisted of the review of available seismologic information for nearby faults and performance of probabilistic seismic hazard analysis (PSHA) and deterministic seismic hazard analysis (DSHA) to develop acceleration response spectrum (ARS) curves corresponding to the MCE_R for 5 percent damping. Prior to the site-specific ground motion hazard analysis, we obtained the mapped seismic ground motion values and developed the general MCE_R response spectrum for 5 percent damping in accordance with Section 11.4 of ASCE 7-16 (ATC, 2020). The V_{S30} is assumed to be 280 meters per second (m/s) (CGS/Willis

Site Classification Map) and the depths to V_S = 1,000 m/s and V_S = 2,500 m/s are assumed to be 350 meters and 1,000 meters, respectively (Southern California Earthquake Center [SCEC] Velocity Model Version 4, Iteration 26, Basin Depth). These values were evaluated using the Open Seismic Hazard Analysis software developed by USGS (USGS, 2019).

The 2014 next generation attenuation (NGA) West-2 relationships were used to evaluate the site-specific ground motions. The NGA relationships that we used for developing the probabilistic and deterministic response spectra are by Chiou and Youngs (2014), Campbell and Bozorgnia (2014), Boore, Stewart, Seyhan, and Atkinson (2014), and Abrahamson, Silva, and Kamai (2014). The Open Seismic Hazard Analysis software developed by USGS (USGS, 2019) was used for performing the PSHA. The Calculation of Weighted Average 2014 NGA Models spreadsheet by the Pacific Earthquake Engineering Research Center (PEER) was used for performing the DSHA (Seyhan, 2014).

PSHA was performed for earthquake hazards having a 2 percent chance of being exceeded in 50 years multiplied by the risk coefficients per ASCE 7-16. The maximum rotated components of ground motions were considered in PSHA with 5 percent damping. For the DSHA, we analyzed accelerations from characteristic earthquakes on active faults within the region using the California Department of Transportation (Caltrans) ARS (Caltrans, 2020) seismic design tool (web-based) and the hazard curves and deaggregation plots at the site using the USGS Unified Hazard Tool application (USGS, 2020a). A magnitude 7.3 event on the Hollywood fault with a distance of 6.5 kilometers from the site was evaluated to be the controlling earthquake. Hence, the DSHA was performed for the site using this event and corrections were made to the spectral accelerations for the 84th percentile of the maximum rotated component of ground motion with 5 percent damping.

The site-specific MCE_R response spectrum was taken as the lesser of the spectral response acceleration at any period from the PSHA and DSHA, and the site-specific general response spectrum was determined by taking two-thirds of the MCE_R response spectrum with some conditions in accordance with Section 21.3 of ASCE 7-16. Figure 6 presents the site-specific MCE_R response spectrum and the site-specific design response spectrum. The general mapped design response spectrum calculated in accordance with Section 11.4 of ASCE 7-16 is also presented on Figure 6 for comparison. The site-specific spectral response acceleration parameters, consistent with the 2019 CBC, are provided in Section 12.3 for the evaluation of seismic loads on buildings and other structures. The site-specific maximum considered earthquake geometric mean (MCE_G) peak ground acceleration, PGA_M, was calculated as 0.828g.

10.3 Liquefaction

Liquefaction is the phenomenon in which loosely deposited granular soils with silt and clay contents of less than approximately 35 percent and non-plastic silts located below the water table undergo rapid loss of shear strength when subjected to strong earthquake-induced ground shaking. Ground shaking of sufficient duration results in the loss of grain-to-grain contact due to a rapid rise in pore water pressure and causes the soil to behave as a fluid for a short period of time. Liquefaction is known generally to occur in saturated or near saturated cohesionless soils at depths shallower than 50 feet below the ground surface. Factors known to influence liquefaction potential include composition and thickness of soil layers, grain size, relative density, groundwater level, degree of saturation, and both intensity and duration of ground shaking.

The State of California Hazard Zones map (CDMG, 1998) indicates that the subject site is located within a mapped area that is considered susceptible to seismically induced liquefaction (Figure 7). Accordingly, the liquefaction potential of the subsurface soils was evaluated using both the CPT and boring data recorded during our subsurface exploration and our laboratory test results of representative soil samples. The liquefaction analysis was based on the National Center for Earthquake Engineering Research procedure (Youd, et al., 2001) using the computer program LiquefyPro (CivilTech, 2008). A groundwater depth of 10 feet was used in our analysis based on the historic high depth to groundwater. A PGAM of 0.828g was used in our analysis for a design earthquake magnitude of 7.3. Our analysis indicates that interbeds of alluvial sand deposits, encountered at depths between 10 to 25 feet and 31 to 33 feet in CPT-1 as well as at depths between 10 to 35 feet in B-1, are potentially liquefiable during the design basis earthquake event assuming groundwater is at a depth of 10 feet. Results of our liquefaction analysis are presented in Appendix E.

10.4 Dynamic Settlement

To evaluate the potential impact from liquefaction, we also performed analysis to estimate the magnitude of dynamic settlement due to liquefaction. In order to estimate the amount of post-earthquake settlement, the method proposed by Tokimatsu and Seed (1987) was used in which the seismically induced cyclic stress ratios and corrected blowcounts (N-values based on correlations from the CPT soundings or from boring) are related to the volumetric strain of the soil. The amount of soil settlement during a strong seismic event depends on the thickness of the liquefiable layers and the density and/or consistency of the soils.

Under the current conditions, a post-earthquake total settlement ranging from approximately 3 to 5 inches is calculated for the site. Based on the guidelines presented in CGS Special Publication 117A (CGS, 2008) and assuming relatively uniform subsurface stratigraphy across

the site, we estimate differential settlement on the order of 1½ to 2½ inch over a horizontal distance of 40 feet. However, the post-earthquake total settlement below the invert depth of the proposed infiltration gallery (approximately 29 feet) is less than ¾ inch. This represents a relatively minor amount of settlement.

10.5 Lateral Spreading

Lateral spreading of the ground surface during an earthquake usually takes place along weak shear zones that have formed within a liquefiable soil layer. Lateral spread has generally been observed to take place in the direction of a free-face (i.e., retaining wall, slope, and channel), but has also been observed to a lesser extent on ground surfaces with very gentle slopes. An empirical model developed by Bartlett and Youd (1995, revised 2002) is typically used to predict the amount of horizontal ground displacement within the site. For sites located in proximity to a free-face, the amount of lateral ground displacement is strongly correlated with the distance of the site from the free-face. Other factors such as earthquake magnitude, distance from the earthquake epicenter, thickness of the liquefiable layers, and the fines content and particle sizes of the liquefiable layers also affect the amount of lateral ground displacement. Due to the lack of a free-face in the vicinity, seismically induced lateral spread is not a design consideration.

11 CONCLUSIONS

Based on the results of our evaluation, it is our opinion that the proposed BMPs at Valley Village Park are feasible from a geotechnical standpoint, provided the recommendations presented in this report are incorporated into the design and construction of the project. In general, the following conclusions were made:

- The subject site is underlain by undocumented fill and granular alluvial materials generally consisting of moist, loose to very dense, silty to clayey sand, poorly graded sand with silt, poorly graded sand, and sandy silt with varying amounts of gravel. The granular alluvial deposits are interbedded with fine-grained materials generally below approximately 23½ feet bgs that generally consist of very stiff to hard, lean clay with varying amounts of silt and sand.
- Our two percolation tests performed in borings P-1 and P-2 indicate that the on-site soils tested at depths of approximately 25 feet have percolation rates of approximately 13 and 2 inches per hour, respectively.
- Our two percolation tests performed in borings P-1 and P-2 indicate that the on-site soils tested at depths of approximately 25 feet have percolation rates of approximately 4.3 and 0.2 inches per hour, respectively. For design purposes, we recommend using a percolation rate of 2 inches per hour for both shallow (gallery) and deep (dry well) infiltration systems. However, this rate should be adjusted as needed in accordance with COLA 2017 guidelines.
- The interbeds of clay and silty clay encountered in our borings and CPTs at depths below approximately 23½ feet could result in decreased infiltration rates for the proposed BMPs depending on their thicknesses, percolation rate, and lateral continuity.

- In general, excavations in the existing fill soil and alluvium should be feasible with earthmoving equipment in good working condition.

- We anticipate that the on-site excavated materials should be suitable for re-use as engineered fill and trench backfill provided they are free of trash, debris, roots, contamination, deleterious materials, and cobbles or hard lumps of material in excess of 4 inches in diameter. Processing of the materials to bring them near the laboratory optimum moisture content per ASTM International (ASTM) test method D 1557 (i.e., drying and/or wetting) prior to use as fill should be planned by the contractor.

- The on-site soils are generally granular and will be prone to caving during excavation. The on-site soils should be considered as Type C soils in accordance with United States Department of Labor Occupational Safety Health Administration (OSHA) regulations. Accordingly, temporary excavations deeper than 4 feet in depth should be laid back at inclinations of 1½ to 1 (horizontal to vertical) or flatter.

- Where excavations cannot be laid back, temporary shoring is anticipated. Shoring should be designed by the contractor to support the excavation sidewalls and to reduce the potential for settlement of adjacent structures, roadways and other site improvements. Shoring should be designed in accordance with OSHA regulations.

- Groundwater was not encountered in our exploratory borings to the total depth explored of approximately 76½ feet. Historical high groundwater levels are approximately 10 feet below the ground surface. Monitoring wells located approximately 1,500 feet southeast and 1,800 feet northwest of the site indicate that the depth to groundwater is on the order of 105 to 134 feet (Delta, 2009 and COLA, 2020). Fluctuations in the level of groundwater will occur due to variations in ground surface topography, subsurface stratification, rainfall, irrigation practices, groundwater pumping, and other factors that were not evident at the time of our field evaluation

- The site is located within a mapped Seismic Hazards Zone considered susceptible to liquefaction (CDMG, 1998). Our site-specific analyses indicate that the sandy interbeds from depths of approximately 10 to 35 feet are susceptible to liquefaction during the design seismic event if groundwater rises to the historical shallow condition of 10 feet.

- Liquefaction-induced ground settlement is estimated to be on the order of 3 to 5 inches at the site. However, the liquefaction-induced dynamic settlement below the invert depth of the proposed infiltration gallery (approximately 29 feet) is less than ¾ inch.

- The site is not located within an Earthquake Fault Zone with the potential for fault rupture as defined by the Alquist-Priolo Earthquake Fault Zoning Act (Hart and Bryant, 2018).

- Hydro-collapse is not considered a design issue given the proposed depth of the infiltration gallery (generally greater than 20 feet), the results of our laboratory testing, and the relatively shallow (less than 10 feet) depth to historic high groundwater.

- The site is not located within a designated flood inundation zone from failure of a dam or the 100-year and 500-year flood events (FEMA, 2020).

- Based on our laboratory corrosion testing, the on-site soil can be classified as non-corrosive based on the Caltrans Corrosion Guidelines (Caltrans, 2018).

12 PRELIMINARY RECOMMENDATIONS

The following sections present our preliminary geotechnical recommendations for design and construction of the project. This project is in preliminary design phase and some aspects of the design will be subject to change. Detailed plans regarding the design of the BMPs have not been developed yet. Accordingly, the following recommendations should be considered preliminary. Ninyo & Moore should review the final plans and develop additional geotechnical recommendations as appropriate. These recommendations are based on our evaluation of the site geotechnical conditions, our understanding of the planned construction, and experience in the vicinity of the project. The work should be performed in conformance with the recommendations presented in this report, project specifications, and appropriate agency standards.

12.1 Earthwork

We anticipate that earthwork at the site will consist of cuts and fills associated with excavations to install the proposed BMP improvements, including the gallery, diversion structure, HDSs, pipelines, joint structure, and manholes. Based on the preliminary plans (Carollo, 2020), excavations for the proposed BMP improvements, to be on the order of 22 to 31 feet in depth. Earthwork will also include preparation of subgrade for the proposed PCC access roads and finish grading for establishment of site drainage. Earthwork operations should be performed in accordance with the requirements of applicable governing agencies and the recommendations presented in the following sections.

12.1.1 Pre-Construction Conference

We recommend that grading and foundation plans be submitted to Ninyo & Moore for review to check for conformance to the recommendations provided in this report. We further recommend that a pre-construction conference be held to discuss the grading recommendations presented in this report. The owner and/or their representative, the governing agencies' representatives, the civil engineer, Ninyo & Moore, and the contractor should be in attendance to discuss the work plan, project schedule, and earthwork requirements.

12.1.2 Clearing and Site Preparation

Prior to excavating or other earthwork, the proposed area of improvements should be cleared of surface obstructions, debris, pavement, abandoned utilities, and other deleterious materials. Obstructions that extend below finish grade, if any, should be removed and the

resulting holes filled with compacted soils. Materials generated from the clearing operations should be removed from the project site and disposed at a legal dump site.

12.1.3 Excavation Characteristics

We anticipate that excavations in the undocumented fill and alluvium should be feasible with earthmoving equipment in good working order. The fill and alluvial materials generally consisted of moist, loose to very dense, silty sand, clayey sand, poorly graded sand with silt, poorly graded sand, and sandy silt with varying amounts of gravel. Interbeds of very stiff to hard, sandy lean clay and silty clay were encountered in the alluvium. Cobbles were encountered in our subsurface exploration and should be anticipated in the excavations. Processing of the materials to bring them near the laboratory optimum moisture content (i.e., drying and/or wetting) prior to use as fill should be planned by the contractor.

12.1.4 Subgrade Preparation for the Infiltration Gallery

Based on our exploratory borings and CPTs, alluvium is anticipated at the bottom of the planned infiltration gallery that should be suitable for support of the gallery and overlying compacted fill. We recommend that minimal compaction be performed on the exposed subgrade and rock blanket placed beneath the gallery. Compaction of the subgrade could potentially reduce the infiltration rate of the gallery. If the subgrade of the infiltration is compacted, we recommend that additional percolation testing be performed. If foundations are to be installed along the bottom of the gallery, the upper approximately 8-inches of subgrade beneath the foundations should be scarified, moisture-conditioned to near optimum moisture content, and recompacted to a relative compaction of 90 percent as evaluated by ASTM D 1557. If loose, soft, and/or wet materials are encountered beneath the foundations, removal and recompaction of the materials may be warranted. The excavation bottoms should be evaluated by our representative during the excavation work.

12.1.5 Subgrade Preparation for the Other Buried Structures

Based on our exploratory borings and CPTs, alluvium is anticipated at the bottom of the planned buried improvements, including the new diversion structure, HDS units, junction structure/manhole, and manhole structure. To provide suitable foundation support for these improvements and to provide a stable working surface, we recommend that the proposed foundations be supported by 2 feet or more of compacted fill. The recompaction work should consist of 1) removing existing materials down approximately 2 feet below the bottom of the foundations, 2) scarifying, moisture conditioning, and compacting the upper 8 inches of the exposed natural subgrade soils, and 3) replacing with fill compacted to 90 percent relative

compaction at slightly above the optimum moisture content as evaluated by ASTM 1557. The limits of removal should extend approximately 2 feet beyond the footprint of the foundations. If drainage rock is placed beneath the foundations, this can be considered part of the 2-foot thick layer of compacted fill beneath the foundations.

12.1.6 Treatment of Near-Surface Soils for At-Grade Structures

If at-grade structures are proposed for the project, the structure foundation loads should be provided to Ninyo & Moore to develop appropriate geotechnical recommendations. For planning purposes, suitable support can generally be provided for lightly loaded at-grade structures by removing and recompacting existing fill and/or alluvium to a depth of approximately 3 feet beneath the bottom of the structure foundations. The over-excavation should remove undocumented fill and expose relatively dense alluvial deposits. Additional over-excavation of loose, soft, and/or wet areas may be appropriate. The limits of the excavation should extend laterally so that the bottom of the excavation is approximately 5 feet beyond the perimeter of the structure or a distance equal to the depth of the overexcavation, whichever is farther. The excavation bottom should be evaluated by our representative during the excavation work. The exposed subgrade should be scarified to approximately 8 inches deep, moisture conditioned, and compacted prior to the placement of new fill. We recommend that the upper 3 feet of soil beneath the foundations be comprised of low-expansion potential material (i.e., soil material with an expansion index [EI] of 50 or less).

12.1.7 Temporary Excavations and Shoring

We recommend that excavations be designed and constructed in accordance with OSHA regulations. These regulations provide shoring design parameters for excavations and trenches up to 20 feet deep based on the soil types encountered. Trenches over 20 feet deep should be designed by the contractor's engineer based on site-specific geotechnical analyses. For planning purposes, we recommend that fill and alluvium be considered as OSHA Type C soil. For trench or other excavations, OSHA requirements regarding personnel safety should be met by using appropriate shoring or by laying back the slopes no steeper than 1½:1 (horizontal to vertical) in the site fill and alluvium. Temporary excavations that encounter seepage may need shoring or may be mitigated by placing sandbags or gravel along the base of the seepage zone. Excavations encountering seepage should be evaluated on a case-by-case basis.

Based on our review of the project drawings, we anticipate that site excavations will be laid-back using temporary slopes (Carollo, 2020). Where slopes cannot be laid back, shoring may

be appropriate. If shoring systems are used for site excavations, they should be designed for the anticipated soil conditions using the lateral earth pressure values shown on Figures 8 through 9 for braced and cantilevered excavations, respectively. The recommended design pressures are based on the assumption that the shoring system is constructed without raising the ground surface elevation behind the shored sidewalls of the excavation, that there are no surcharge loads, such as soil stockpiles and construction materials, and that no loads act above a 1:1 (horizontal to vertical) plane ascending from the base of the shoring system. For a shoring system subjected to the above-mentioned surcharge loads, the contractor should include the effect of these loads on the lateral earth pressures acting on the shored walls.

We anticipate that settlement of the ground surface will occur behind the shored excavations. The amount of settlement depends heavily on the type of shoring system, the contractor's workmanship, and soil conditions. To reduce the potential for distress to adjacent improvements, we recommend that the shoring system be designed to limit the ground settlement behind the shoring system to ½ inch or less. Possible causes of settlement that should be addressed include settlement during installation of the shoring elements, excavation for structure construction, construction vibrations, and removal of the support system. We recommend that shoring installation be evaluated carefully by the contractor prior to construction and that ground vibration and settlement monitoring be performed during construction.

The contractor should retain a qualified and experienced engineer to design the shoring system. The shoring parameters presented in this report are minimum requirements, and the contractor should evaluate the adequacy of these parameters and make the appropriate modifications for their design. We recommend that the contractor take appropriate measures to protect workers. OSHA requirements pertaining to worker safety should be observed.

12.1.8 Fill Material

In general, the on-site soils should be suitable for reuse as fill materials, provided they are free of trash, debris, oversize material, or other deleterious materials. Fill should generally be free of rocks or lumps of material in excess of 4 inches in diameter. Rocks or hard lumps larger than approximately 4 inches in diameter should be broken into smaller pieces or should be removed from the site.

Imported fill material, if used, should also consist of clean, granular material with a low expansion potential, corresponding to an expansion index of 50 or less. The soil should also be tested for corrosive properties prior to importing. We recommend that the imported

materials satisfy the Caltrans (2018) criteria for non-corrosive soils (i.e., soils having a chloride concentration of 500 parts per million [ppm] or less, a soluble sulfate content of approximately 0.15 percent (1,500 ppm) or less, a pH value of 5.5 or higher, or an electrical resistivity of 1,100 ohm-centimeters or more). Materials for use as fill should be evaluated by Ninyo & Moore prior to importing. The contractor should be responsible for the uniformity of import material brought to the site.

12.1.9 Fill Placement and Compaction

Fill material, including trench backfill, should be moisture conditioned and compacted in horizontal lifts to a relative compaction of 90 percent or more as evaluated by ASTM D 1557. Fill material with less than 5 percent fines (passing No. 200 sieve) should be compacted to 95 percent relative compaction in accordance with City of Los Angeles guidelines. Fill material should be moisture-conditioned to slightly above the laboratory optimum moisture content. The lift thickness for fill soils will depend on the type of compaction equipment used but generally should not exceed 8 inches in loose thickness. Special care should be exercised to avoid damaging pipes during compaction of trench backfill. Placement and compaction of the fill soils should be in general accordance with local grading ordinances and good construction practice.

12.2 Underground Utilities

We anticipate that underground pipelines will be supported on native alluvial deposits. Based on the preliminary plans, pipeline inverts may be on the order of 25 feet in depth.

12.2.1 Pipe Bedding

We recommend that pipes be supported on 6 inches or more of granular bedding material, such as sand, with a sand equivalent value of 30 or more. Bedding material should be placed around the pipe and 12 inches or more above the top of the pipe in accordance with the current “Greenbook” Standard Specifications for Public Works. We do not recommend the use of crushed rock as bedding material. It has been our experience that the voids within crushed rock are sufficiently large to allow fines to migrate into the voids, thereby creating the potential for sinkholes and depressions to develop at the surfaces.

Special care should be taken not to allow voids beneath the pipe. Compaction of the bedding material and backfill should proceed up both sides of the pipe. Trench backfill, including bedding material, should be placed in accordance with the recommendations presented in Section 12.1.

12.2.2 Modulus of Soil Reaction for Pipe Design

The modulus of soil reaction is used to characterize the stiffness of soil backfill placed along the sides of buried flexible pipelines for the purpose of evaluating deflection caused by the weight of the backfill above the pipe. We recommend that a modulus of soil reaction of 1,000 pounds per square inch be used for design, provided that granular bedding material is placed adjacent to the pipe, as recommended in the previous section.

12.3 Site-Specific Seismic Design Considerations

Design of the proposed improvements should be performed in accordance with the requirements of governing jurisdictions and applicable building codes. Table 2 presents the site-specific spectral response acceleration parameters in accordance with the CBC (2019) guidelines.

Table 2 – 2019 California Building Code Seismic Design Criteria

Site Coefficients and Spectral Response Acceleration Parameters	Values
Site Class	D
Mapped Spectral Response Acceleration at 0.2-second Period, S_s	2.055g
Mapped Spectral Response Acceleration at 1.0-second Period, S_1	0.678g
Site-Specific Spectral Response Acceleration at 0.2-second Period, S_{MS}	2.094g
Site-Specific Spectral Response Acceleration at 1.0-second Period, S_{M1}	1.691g
Site-Specific Design Spectral Response Acceleration at 0.2-second Period, S_{DS}	1.396g
Site-Specific Design Spectral Response Acceleration at 1.0-second Period, S_{D1}	1.127g
Site-Specific Maximum Considered Earthquake Geometric Mean (MCE_G) Peak Ground Acceleration, PGA_M	0.828g

12.4 Foundations

It is our opinion that the proposed underground structures (i.e., the diversion structure, HDS units, etc.) may be supported by mat foundations. Spread foundations may be used to support other at-grade structures, if planned. The following are our recommendations for project foundations:

12.4.1 Spread Footings

Spread footings bearing on low expansion potential fill soil should extend 18 inches or more below the lowest adjacent finished grade. Continuous and isolated footings should have a width of 24 inches or more. Continuous footings should be reinforced with two No. 4 steel reinforcing bars, one placed near the top and one placed near the bottom of the footings, and further detailed in accordance with the recommendations of the structural engineer.

Footings, as described above and bearing on alluvial materials and compacted fill, may be designed using a net allowable bearing capacity of 2,500 pounds per square foot (psf). Total and differential settlements for footings designed in accordance with the above recommendations are estimated to be less than approximately 1 inch and ½ inch, respectively.

Footings bearing on alluvial materials and compacted fill may be designed using a coefficient of friction of 0.35, where the total frictional resistance equals the coefficient of friction times the dead load. Footings may be designed using a passive resistance value of 300 psf per foot of depth, with a maximum value of 3,000 psf. The allowable lateral resistance can be taken as the sum of the frictional resistance and passive resistance, provided the passive resistance does not exceed one-half of the total allowable resistance. The passive resistance (including the maximum value) may be increased by one-third when considering loads of short duration such as wind or seismic forces.

12.4.2 Mat Foundations

Mat foundations may be supported on compacted fill in accordance with the recommendations presented in the Earthwork section of this report. Foundations should be designed in accordance with structural considerations and the following recommendations. In addition, requirements of the appropriate governing jurisdictions and applicable building codes should be considered in the design of the structures.

The mat foundations may be designed using a net allowable bearing capacity of 4,000 psf. The total and differential settlement corresponding to this allowable bearing load are estimated to be less than approximately 1 inch and ½ inch over a horizontal span of 40 feet, respectively.

Mat foundations typically experience some deflection due to loads placed on the mat and the reaction of the soils directly underlying the mat. A design modulus of subgrade reaction (K) of 50 tons per cubic foot may be used for the subgrade soils in evaluating such deflections.

12.5 Lateral Earth Pressures

Walls for below-grade structures when constructed as recommended above may be designed for lateral pressures represented by the pressure diagram on Figure 10. To reduce the potential for pipe-to-wall differential settlement, which could cause pipe shearing, we recommend that a flexible pipe joint be located close to the exterior of the wall. The type of joint should be such that minor relative movement can be accommodated without distress. The pipe connections should be sufficiently flexible to withstand differential settlement of approximately ¾ inch.

12.6 Exterior Flatwork

We recommend that new exterior concrete sidewalks and flatwork (hardscape) have a thickness of 4 inches and be reinforced with No. 3 steel reinforcing bars placed 24 inches on-center (each way) near the mid-height of the slab. The hardscape should be underlain by 4 inches of clean sand and installed with crack-control joints at an appropriate spacing as designed by the structural

engineer to reduce the potential for shrinkage cracking. Positive drainage should be established and maintained adjacent to flatwork. To reduce the potential for differential offset, joints between the new hardscape and adjacent curbs, existing hardscape, building walls, and/or other structures, and between sections of new hardscape, should be doweled.

12.7 Corrosivity

Laboratory testing was performed on a representative sample of near-surface soil to evaluate soil pH, electrical resistivity, water-soluble chloride content, and water-soluble sulfate content. The soil pH and electrical resistivity tests were performed in general accordance with California Test Method (CT) 643. Chloride content tests were performed in general accordance with CT 422. Sulfate testing was performed in general accordance with CT 417. The laboratory test results are presented in Appendix C.

The soil pH of the sample tested was measured to be 7.3 and the electrical resistivity was measured to be 6,298 ohm-centimeters. The chloride content of the sample was measured to be 45 ppm. The sulfate content of the sample was measured to be 0.001 to percent by weight (i.e., 10 ppm). Based on the laboratory test results and Caltrans criteria (2018), the project site can be classified as a non-corrosive site, which is defined as having earth materials with a pH of more than 5.5, an electrical resistivity of more than 1,100 ohm-centimeters, chloride concentrations of less than 500 ppm, and less than 0.15 percent sulfates (i.e., 1,500 ppm).

12.8 Concrete Placement

Concrete in contact with soil or water that contains high concentrations of water-soluble sulfates can be subject to premature chemical and/or physical deterioration. Based on the CBC (2019), the potential for sulfate attack is negligible for water-soluble sulfate contents in soil ranging from 0.00 to 0.10 percent by weight, moderate for water-soluble sulfate contents ranging from 0.10 to 0.20 percent by weight, severe for water-soluble sulfate contents ranging from 0.20 to 2.00 percent by weight, and very severe for water-soluble sulfate contents over 2.00 percent by weight. The soil sample tested for this evaluation, using CT 417, indicate a water-soluble sulfate content of approximately 0.001 percent by weight (i.e., 10 ppm). Accordingly, the on-site soils are considered to have a negligible potential for sulfate attack. However, due to the potential variability of the on-site soils, consideration should be given to using Type II/V cement for the project.

To reduce the potential for shrinkage cracks in the concrete during curing, we recommend that the concrete for the proposed improvements, if applicable, be placed with a slump of 4 inches based on ASTM C 143. The slump should be checked periodically at the site prior to concrete placement. We further recommend that concrete cover over reinforcing steel for foundations be

provided in accordance with CBC (2019). The structural engineer should be consulted for additional concrete specifications.

12.9 Stormwater Infiltration Gallery

Based on our subsurface evaluation, the park is generally underlain by granular alluvial deposits consisting of silty sand, clayey sand, sand, and sandy silt with interbeds of fine-grained deposits consisting of clay and silty clay. The wide range of adjusted infiltration rates (4.3 and 0.2 inches per hour) is likely due to lateral and vertical variations in material types, including silt and clay content of alluvial interbeds and lenses. Due to site variability and the number of percolation tests performed, we recommend that an infiltration rate of 2 inches per hour, following adjustments by the BMP designer for RF_s, be used for design at Valley Village Park for both shallow and deep infiltration based on our review of our boring logs and laboratory test results. We recommend that the bottoms of the infiltration BMPs be further evaluated during construction. Additional recommendations may be provided at that time if fine-grained materials are present along the bottom of the basin, such as removing the fine-grained material and replacing it with granular material.

Based on our evaluation, the potential for hydro-collapse settlement associated with infiltration is generally low due to the proposed depth of infiltration. However, we generally recommend a setback of 15 feet or more between settlement sensitive structures and proposed infiltration areas.

12.10 Drainage

Proper surface drainage is imperative for satisfactory site performance. Positive drainage should be provided and maintained to direct surface water away from existing foundations. Positive drainage is defined as a slope of 2 percent or more for a distance of 5 feet or more away from foundations and tops of slopes. Surface waters should not be allowed to pond adjacent to footings. We recommend that above-ground structures, if constructed, have roof drains and downspouts installed to collect runoff.

12.11 Landscaping

Project landscaping should consist of drought tolerant plants. Landscape irrigation should be kept to a level just sufficient to maintain plant vigor. Overwatering should not be permitted

13 CONSTRUCTION OBSERVATION

The recommendations provided in this report are based on our understanding of the proposed project and our evaluation of the data collected based on subsurface conditions disclosed by widely spaced exploratory borings. It is imperative that the geotechnical consultant checks the

interpolated subsurface conditions during construction. We recommend that Ninyo & Moore review the project plans and specifications prior to construction. It should be noted that, upon review of these documents, some recommendations presented in this report may be revised or modified.

During construction we recommend that the duties of the geotechnical consultant include, but not be limited to:

- Observing site clearing, grubbing, and removals.
- Observing excavation bottoms, and the placement and compaction of fill, including trench backfill.
- Observing the drilling of dry wells, if chosen for the project.
- Evaluating imported materials prior to their use as fill (if used).
- Performing field tests to evaluate fill compaction.
- Observing foundation excavations for bearing materials and cleaning prior to placement of reinforcing steel or concrete.
- Performing material testing services including concrete compressive strength and steel tensile strength tests and inspections.

The recommendations provided in this report assume that Ninyo & Moore will be retained as the geotechnical consultant during the construction phase of this project. If another geotechnical consultant is selected, we request that the selected consultant indicate to the owner and to our firm in writing that our recommendations are understood and that they are in full agreement with our recommendations.

14 LIMITATIONS

The field evaluation, laboratory testing, and geotechnical analysis presented in this geotechnical report have been conducted in general accordance with current practice and the standard of care exercised by geotechnical consultants performing similar tasks in the project area. No warranty, expressed or implied, is made regarding the conclusions, recommendations, and opinions presented in this report. There is no evaluation detailed enough to reveal every subsurface condition. Variations may exist and conditions not observed or described in this report may be encountered during construction. Uncertainties relative to subsurface conditions can be reduced through additional subsurface exploration. Additional subsurface evaluation will be performed upon request. Please also note that our evaluation was limited to assessment of the geotechnical aspects of the project, and did not include evaluation of structural issues, environmental concerns, or the presence of hazardous materials.

This document is intended to be used only in its entirety. No portion of the document, by itself, is designed to completely represent any aspect of the project described herein. Ninyo & Moore should be contacted if the reader requires additional information or has questions regarding the content, interpretations presented, or completeness of this document.

This report is intended for design purposes only. It does not provide sufficient data to prepare an accurate bid by contractors. It is suggested that the bidders and their geotechnical consultant perform an independent evaluation of the subsurface conditions in the project areas. The independent evaluations may include, but not be limited to, review of other geotechnical reports prepared for the adjacent areas, site reconnaissance, and additional exploration and laboratory testing.

Our conclusions, recommendations, and opinions are based on an analysis of the observed site conditions. If geotechnical conditions different from those described in this report are encountered, our office should be notified, and additional recommendations, if warranted, will be provided upon request. It should be understood that the conditions of a site could change with time as a result of natural processes or the activities of man at the subject site or nearby sites. In addition, changes to the applicable laws, regulations, codes, and standards of practice may occur due to government action or the broadening of knowledge. The findings of this report may, therefore, be invalidated over time, in part or in whole, by changes over which Ninyo & Moore has no control.

This report is intended exclusively for use by the client. Any use or reuse of the findings, conclusions, and/or recommendations of this report by parties other than the client is undertaken at said parties' sole risk.

15 REFERENCES

Abrahamson, N.A., Silva, W.J. and Kamai, R., 2014, Summary of the ASK14 Ground Motion Relation for Active Crustal Regions, Earthquake Spectra: Vol. 30, No. 3, pp. 1025-1055, dated August.

American Concrete Institute, 2019, Building Code Requirements for Structural Concrete (ACI 318-19) and Commentary (ACI 318R-19).

American Concrete Institute (ACI), 2016, ACI Manual of Concrete Practice.

American Society of Civil Engineers (ASCE), 2016, Minimum Design Loads for Building and Other Structures, Standard 7-16.

The Applied Technology Council (ATC), 2020, Hazards by Location, https://hazards.atcouncil.org/#/.

ASTM International (ASTM), 2019, Annual Book of ASTM Standards, West Conshohocken, Pennsylvania.

Bartlett, S.F., and Youd, T.L., 1995, Empirical Prediction of Liquefaction-Induced Lateral Spread Journal of Geotechnical Engineering, American Society of Civil Engineers, Vol. 121, No. 4, 316-329, dated April.

Boore, D.M., Stewart, J.P., Seyhan, E., and Atkinson, G.M., 2014, NGA-West2 Equations for Predicting PGA, PGV, and 5% Damped PSA for Shallow Crustal Earthquakes, Earthquake Spectra, Vol. 30, No. 3, pp. 1057-1085, dated August.

Bowles, J.E., 1996, Foundation Analysis and Design, Fifth Edition, The McGraw-Hill Companies, Inc.

Building Seismic Safety Council, 2009, National Earthquake Hazards Reduction Program (NEHRP) Recommended Seismic Provisions for New Buildings and Other Structures (FEMA P-750).

California Building Standards Commission, 2019, California Building Code (CBC): California Code of Regulations, Title 24, Part 2, Volumes 1 and 2, dated July 1.

California Department of Transportation, 2018, Corrosion Guidelines, Version 3.0, Division of Engineering Services, Materials Engineering and Testing Services, Corrosion Technology Branch, dated March.

California Department of Transportation, 2020, Caltrans ARS Online (V3.0.2), http://dap3.dot.ca.gov/ARS_Online/.

California Department of Conservation, Division of Mines and Geology, 1997, Seismic Hazard Zone Report for the Van Nuys 7.5-Minute Quadrangle, Los Angeles County, California: Seismic Hazard Zone Report 08.

California Department of Conservation, Division of Mines and Geology, 1998, Seismic Hazard Zones Official Map, Van Nuys Quadrangle, 7.5-Minute Series: Scale 1:24,000, dated February 1.

California Geological Survey, 2008, Guidelines for Evaluating and Mitigating Seismic Hazards in California, CDMG Special Publication 117A.

California Geological Survey, 2010, Fault Activity Map of California, http://maps.conservation.ca.gov/cgs/fam/.

California Geological Survey, 2007, Significant California Earthquakes (M > 6.5 or That Caused Loss of Life or More than $200,000* in Damage), *Damage Estimates Have Not Been Adjusted for Inflation, Website http://www.conservation.ca.gov/cgs/rghm/quakes/eq_chron.htm, last edited on June 11.

California Geological Survey, 2018, Earthquake Zones of Required Investigation, https://maps.conservation.ca.gov/cgs/EQZApp/app/.

Campbell, K.W., and Bozorgnia, Y., 2014, NGA-West2 Ground Motion Model for the Average Horizontal Components of PGA, PGV, and 5% Damped Linear Acceleration Response Spectra, Earthquake Spectra, Vol. 30, No. 3, pp. 1087-1115, dated August.

Campbell, R.H., Wills, C.J., Irvine, P.J., Swanson, B.J., 2014, Preliminary Geologic Map of the Los Angeles 30' x 60' Quadrangle, California, Version 2.0: United States Geological Survey, Scale 1:100,000.

Carollo Engineers, 2020, Preliminary Project Drawings, Valley Village Park, 5000 Westpark Drive, North Hollywood, California.

Chiou, B. S.-J., and Youngs, R.R., 2014, Update of the Chiou and Youngs NGA Model for the Average Horizontal Component of Peak Ground Motion and Response Spectra, Earthquake Spectra, August 2014, Vol. 30, No. 3, dated August.

CivilTech Software, 2008, Liquefy Pro (Version 5.5j), A computer program for liquefaction and settlement analysis.

City of Los Angeles, 2004, Methane and Methane Buffer Zones, Bureau of Engineering, Department of Public Works, dated March 31.

City of Los Angeles, Department of Building and Safety, 2014, Site Testing Standards for Methane, Bulletin P/BC 2014-101.

City of Los Angeles, Department of Public Works, Bureau of Engineering, 2019, Pre-Qualified On-Call Wastewater and Environmental Engineering Services Consultant Contract, Task Order Solicitation (TOS) No. 25, Stormwater Capture Parks Program, Pre-Design and Design Services, dated June 12.

County of Los Angeles, Department of Public Works, Geotechnical and Materials Engineering Division, 2017, Guidelines for Geotechnical Investigation and Reporting, Low Impact Stormwater Infiltration, dated June 30.

County of Los Angeles, Department of Public Works, Well Measurement Data, Well Number 3813J; www.dpw.lacounty.gov/general/wells.

City of Los Angeles, Department of Public Works, Bureau of Engineering, 2020, NavigateLA, http://navigatela.lacity.org/navigatela/.

Delta, 2009, First Quarter 2009 Groundwater Monitoring Report, Former Shell Service Station, 11339 Camarillo Street, North Hollywood, California, dated April 2.

Dibblee, T.W., Jr., 1991, Geologic Map of the Beverly Hills and South ½ Van Nuys Quadrangles, Los Angeles County, California: Dibblee Foundation, DF-31, Scale 1:24,000.

Federal Emergency Management Agency, 2020, Flood Insurance Rate Maps, Search by Address, https://msc.fema.gov/portal/search.

Google, 2020, Website for Viewing Aerial Photographs, http://maps.google.com/.

Hart, E.W., and Bryant, W.A., 2018, Earthquake Fault Zones, A Guide for Government Agencies, Property Owners/Developers, and Geoscience Practitioners for Assessing Fault Rupture Hazards in California.

Historical Aerials, 2020, Website for Viewing Aerial Photographs, www.historicaerials.com.

Ishihara, K. and Yoshimine, M. (1992) "Evaluation of settlements in sand deposits following liquefaction during earthquakes," Soils and Foundations, 32 (1), 173-188.

Jennings, C.W. and Bryant, W.A., 2010, Fault Activity Map of California and Adjacent Areas: California Division of Mines and Geology, California Geologic Data Map Series, Map No. 6, Scale 1:750,000.

Joint Cooperative Committee of the Southern California Chapter of the American Public Works Association and Southern California Districts of the Associated General Contractors of California, 2018, "Greenbook," Standard Specifications for Public Works Construction: BNI Building News, Los Angeles, California.

Los Angeles Department of Water and Power, Watershed Management Group and City of Los Angeles Sanitation – Watershed Protection Division, 2018, Conceptual Study Report, Valley Village Park, Stormwater Capture Project, dated March.

Naval Facilities Engineering Command, 1982, Foundations and Earth Structures Design Manuals, dated May

Ninyo & Moore, 2020, Revised Proposal for Geotechnical Consulting Services, Whitsett Fields Park North and Valley Village Park, Stormwater Capture Parks Program, Los Angeles Bureau of Engineering Task Oder Solicitation (TOS) No. 25, Los Angeles, California, Proposal No. 04-02457, dated April 15.

Norris, R.M. and Webb, R.W., 1990, Geology of California: John Wiley & Sons.

Seed, H.B., and Idriss, I.M., 1982, Ground Motions and Soil Liquefaction During Earthquakes, Volume 5 of Engineering Monographs on Earthquake Criteria, Structural Design, and Strong Motion Records: Berkeley, Earthquake Engineering Research Institute.

Seyhan, E, 2014, Weighted Average 2014 NGA West-2 GMPE, Pacific Earthquake Engineering Research Center.

Southern California Earthquake Center, 1999, Recommended Procedures for Implementation of DMG Special Publication 117 Guidelines for Analyzing and Mitigating Liquefaction Hazards in California.

Southern California Earthquake Data Center, 2011, SCEC/Harvard Community Velocity Model, Version 11.9.0.

State of California, State Water Resources Control Board, 2020, GeoTracker Database System, http://geotracker.swrcb.ca.gov/.

Structural Engineers Association of California (SEAOC) and California Office of Statewide Health Planning and Development (OSHPD), 2019, Web Based Seismic Design Maps Tool; https://seismicmaps.org.

Tokimatsu, K., and Seed, H.B., 1987, Evaluation of Settlements in Sands Due to Earthquake Shaking, Journal of the Geotechnical Engineering Division, ASCE, Vol. 113, No. 8, pp. 861-878.

United States Department of Agriculture (USDA), Aerial Photograph, Date 11-18-52, Flight AXJ-4K, Numbers 152, Scale 1:20,000.

United States Geological Survey, 2018, Van Nuys, California, Quadrangle Map, 7.5 Minute Series: Scale 1:24,000.

United States Geological Survey, 2008, National Seismic Hazard Maps, http://geohazards.usgs.gov/cfusion/hazfaults_search/hf_search_main.cfm.

United States Geological Survey and Southern California Earthquake Center, 2019, Open Seismic Hazard Analysis, http://www.opensha.org/.

United States Geological Survey, 2020a, Unified Hazard Tool; https://earthquake.usgs.gov/hazards/interactive/.

United States Geological Survey, 2020b, Slope Based Vs30 Map Viewer; https://usgs.maps.arcgis.com/apps/webappviewer/index.html?id=8ac19bc334f747e486550f32837578e1.

Wills, C.J., and Clahan, L.B., 2006, Developing a Map of Geologically Defined Site-Condition Categories for California, Bulletin of the Seismological Society of America, v. 96, no. 4A, p. 1483–1501.

Yerkes, R.F., 1996, Preliminary Geologic Map of the Van Nuys 7.5' Quadrangle, Southern California.

Youd, T.L., Idriss, I.M., Andrus, R.D., Arango, I., Castro, G., Christian, J.T., Dobry, R., Finn, W.D., Harder, L.F., Hynes, M.E., Ishihara, K., Koester, J.P., Liao, S.S.C., Marcuson, W.F., Martin, G.R., Mitchell, J.K., Moriwaki, Y., Power, M.S., Robertson, P.K., Seed, R.B., and Stokoe, K.H., II., 2001, Liquefaction Resistance of Soils: Summary Report from the 1996 NCEER and 1998 NCEER/NSF Workshops on Evaluation of Liquefaction Resistance of Soils, Journal of Geotechnical and Geoenvironmental Engineering, ASCE, 124(10), 817-833.

FIGURES

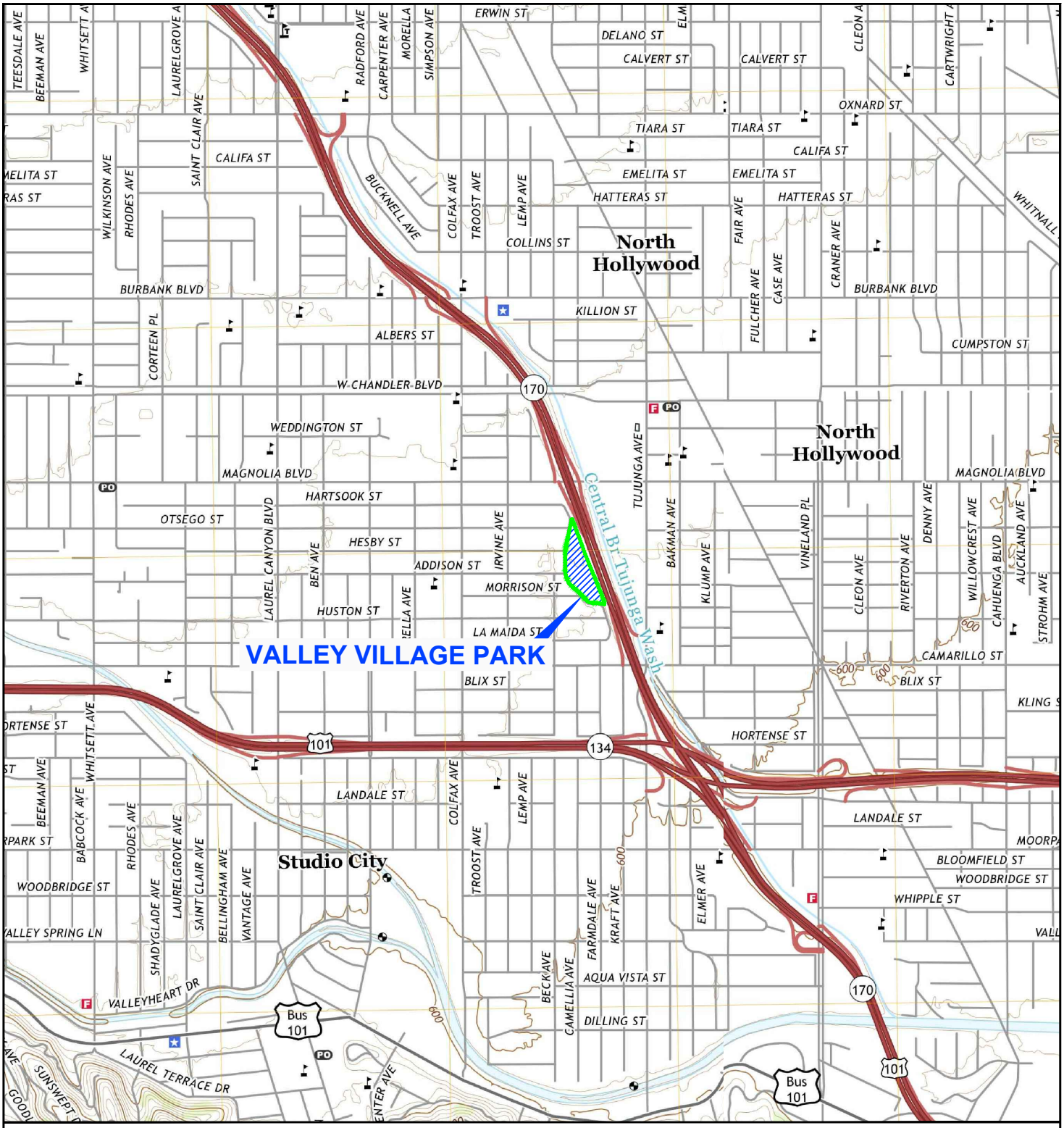

NOTE: DIMENSIONS, DIRECTIONS AND LOCATIONS ARE APPROXIMATE. I REFERENCE: USGS, 2018.

N

FEET
0 2,000 4,000

211307001_SL.dwg 05/28/2020 GK, JDP

FIGURE 1

SITE LOCATION

LABOE TOS NO. 25 - VALLEY VILLAGE PARK
NORTH HOLLYWOOD, CALIFORNIA

211307001 I 8/20

Ninyo & Moore
Geotechnical & Environmental Sciences Consultants

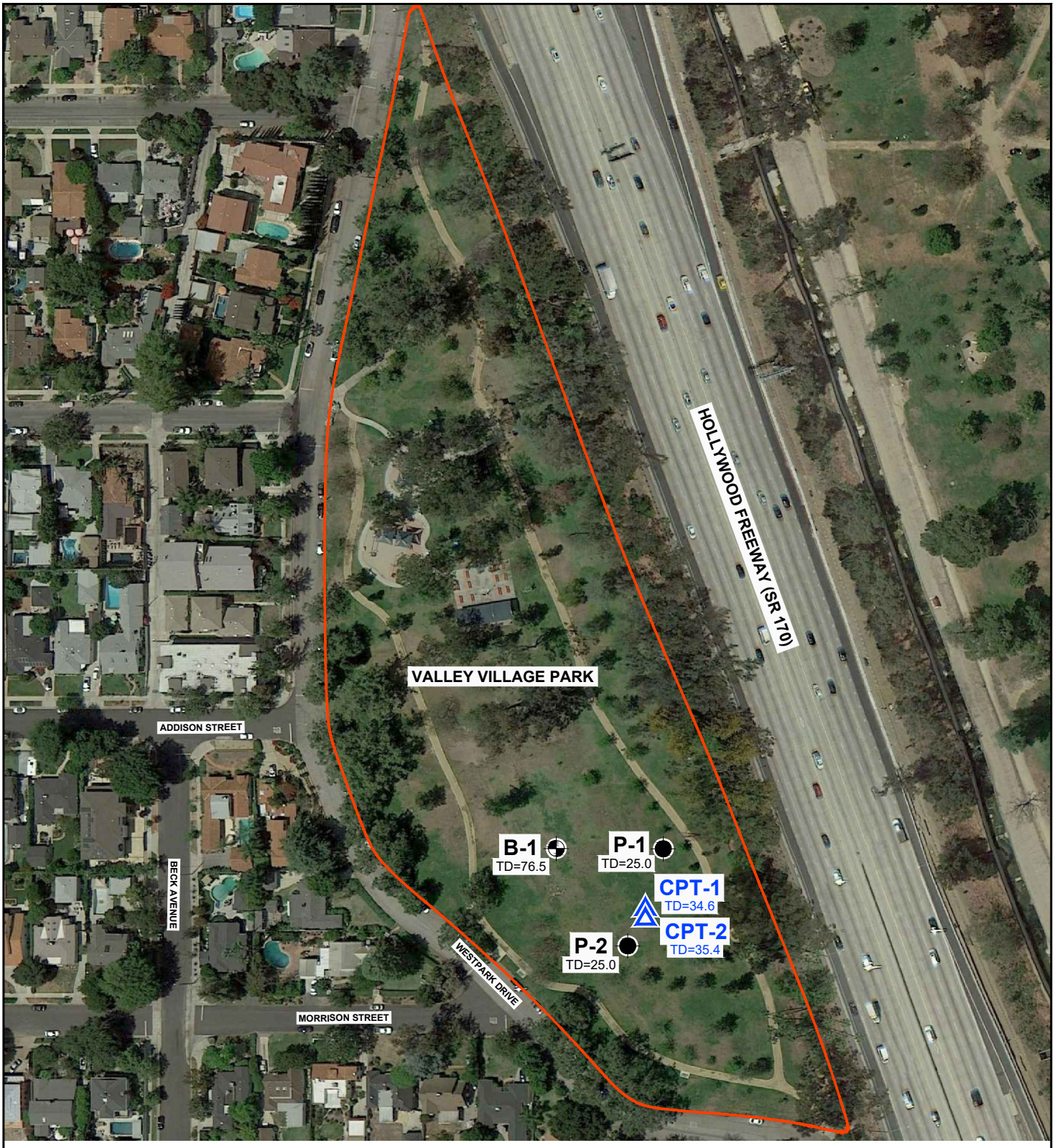

LEGEND

PARK BOUNDARY

B-1 TD=76.5 — BORING; TD=TOTAL DEPTH IN FEET

P-2 TD=25.0 — PERCOLATION TEST; TD=TOTAL DEPTH IN FEET

CPT-2 TD=35.4 — CONE PENETROMETER TEST; TD=TOTAL DEPTH IN FEET

REFERENCE: GOOGLE EARTH, 2020.

N

FEET

0 150 300

NOTE: DIMENSIONS, DIRECTIONS AND LOCATIONS ARE APPROXIMATE.

211307001_SA.dwg 05/28/2020 GK, JDP

FIGURE 2

Ninyo & Moore
Geotechnical & Environmental Sciences Consultants

BORING, PERCOLATION TEST, AND CPT LOCATIONS

LABOE TOS NO. 25 - VALLEY VILLAGE PARK
NORTH HOLLYWOOD, CALIFORNIA

211307001 I 8/20

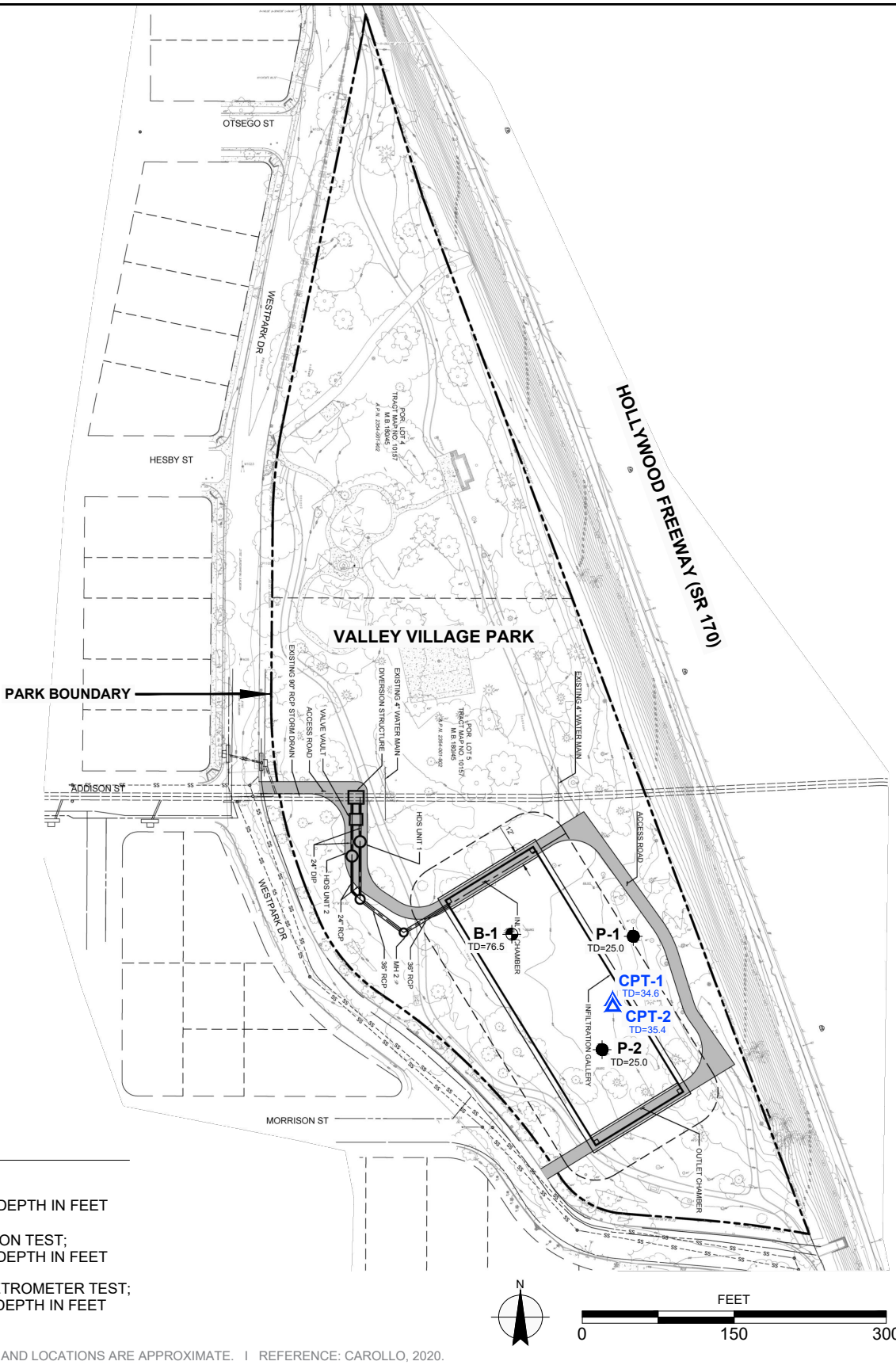

LEGEND

B-1 TD=76.5 — BORING; TD=TOTAL DEPTH IN FEET

P-2 TD=25.0 — PERCOLATION TEST; TD=TOTAL DEPTH IN FEET

CPT-2 TD=35.4 — CONE PENETROMETER TEST; TD=TOTAL DEPTH IN FEET

NOTE: DIMENSIONS, DIRECTIONS AND LOCATIONS ARE APPROXIMATE. I REFERENCE: CAROLLO, 2020.

211307001_SP.dwg 05/28/2020 GK, JDP

FIGURE 3

SITE PLAN

LABOE TOS NO. 25 - VALLEY VILLAGE PARK
NORTH HOLLYWOOD, CALIFORNIA

211307001 I 8/20

Ninyo & Moore
Geotechnical & Environmental Sciences Consultants

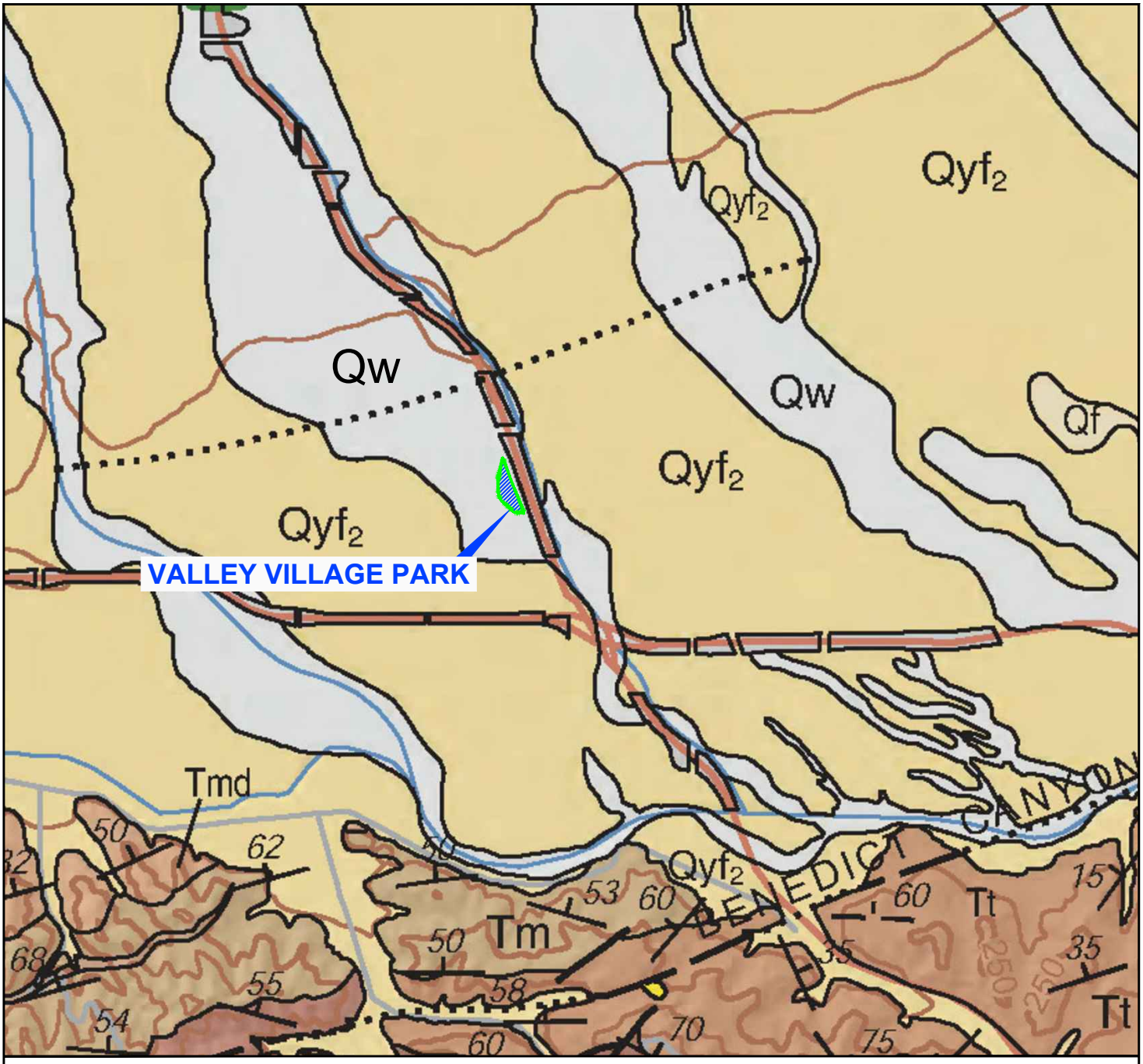

LEGEND

Qaf	ARTIFICIAL FILL	Tm	MODELO FORMATION
Qw	WASH DEPOSITS	Tt	TOPANGA FORMATION
Qyf	YOUNG ALLUVIAL FAN DEPOSITS		FAULT; DOTTED WHERE BURIED
			GEOLOGIC CONTACT

N

FEET

0 3,000 6,000

NOTE: DIMENSIONS, DIRECTIONS AND LOCATIONS ARE APPROXIMATE. I REFERENCE: R.H. CAMPBELL, ET AL., 2014.

211307001_RG.dwg 05/28/2020 GK, JDP

FIGURE 4

Ninyo & Moore
Geotechnical & Environmental Sciences Consultants

REGIONAL GEOLOGY

LABOE TOS NO. 25 - VALLEY VILLAGE PARK
NORTH HOLLYWOOD, CALIFORNIA

211307001 I 8/20

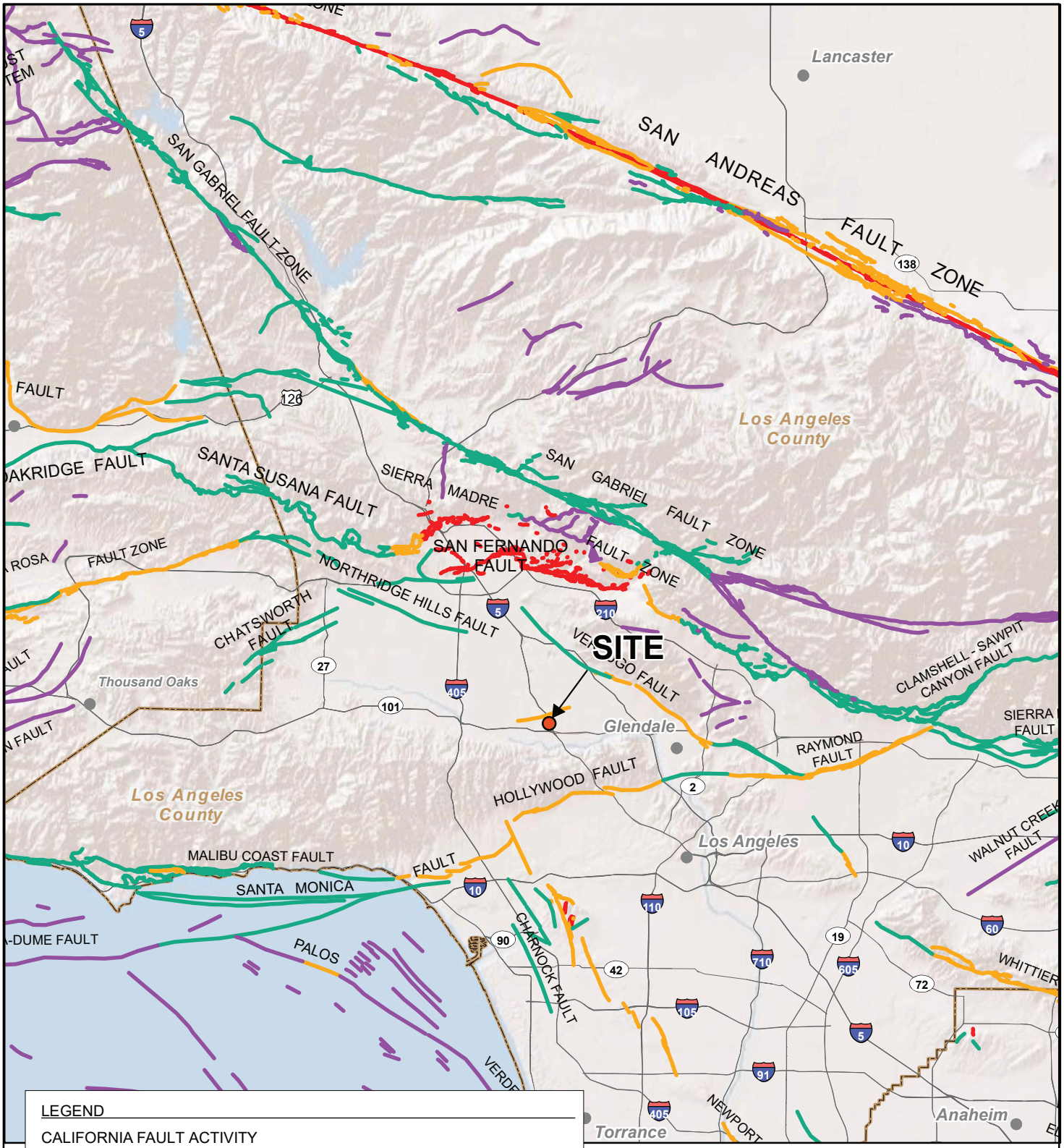

SOURCES: CALIFORNIA DIVISION OF MINES AND GEOLOGY, 1976, ENVIRONMENTAL GEOLOGY OF ORANGE COUNTY, CALIFORNIA, OPEN FILE REPORT 79-8.; JENNINGS, C.W., AND BRYANT, 2010, FAULT ACTIVITY MAP OF CALIFORNIA; ESRI SHADED RELIEF, 2017

NOTE: DIRECTIONS, DIMENSIONS AND LOCATIONS ARE APPROXIMATE.

211307001_FL.mxd 5/5/2020

FIGURE 5

FAULT LOCATIONS

LABOE TOS NO. 25 -VALLEY VILLAGE PARK
NORTH HOLLYWOOD, CALIFORNIA

Ninyo & Moore
Geotechnical & Environmental Sciences Consultants

211307001 | 8/20

PERIOD (seconds)	SITE-SPECIFIC MCE_R RESPONSE SPECTRUM Sa (g)	SITE-SPECIFIC DESIGN RESPONSE SPECTRUM Sa (g)
0.010	0.886	0.591
0.020	0.891	0.594
0.030	0.914	0.609
0.050	1.018	0.679
0.075	1.199	0.799
0.100	1.379	0.919
0.150	1.649	1.099
0.200	1.866	1.244
0.250	2.056	1.371
0.300	2.228	1.486
0.400	2.326	1.551

PERIOD (seconds)	SITE-SPECIFIC MCE_R RESPONSE SPECTRUM Sa (g)	SITE-SPECIFIC DESIGN RESPONSE SPECTRUM Sa (g)
0.500	2.273	1.515
0.750	1.929	1.286
1.000	1.635	1.090
1.500	1.127	0.752
2.000	0.834	0.556
3.000	0.525	0.350
4.000	0.362	0.241
5.000	0.278	0.185
7.500	0.181	0.121
10.000	0.108	0.072

S_{DS} =	1.396 g	S_{D1} =	1.127 g	S_{MS} =	2.094 g	S_{M1} =	1.691 g	PGA_M =	0.828 g

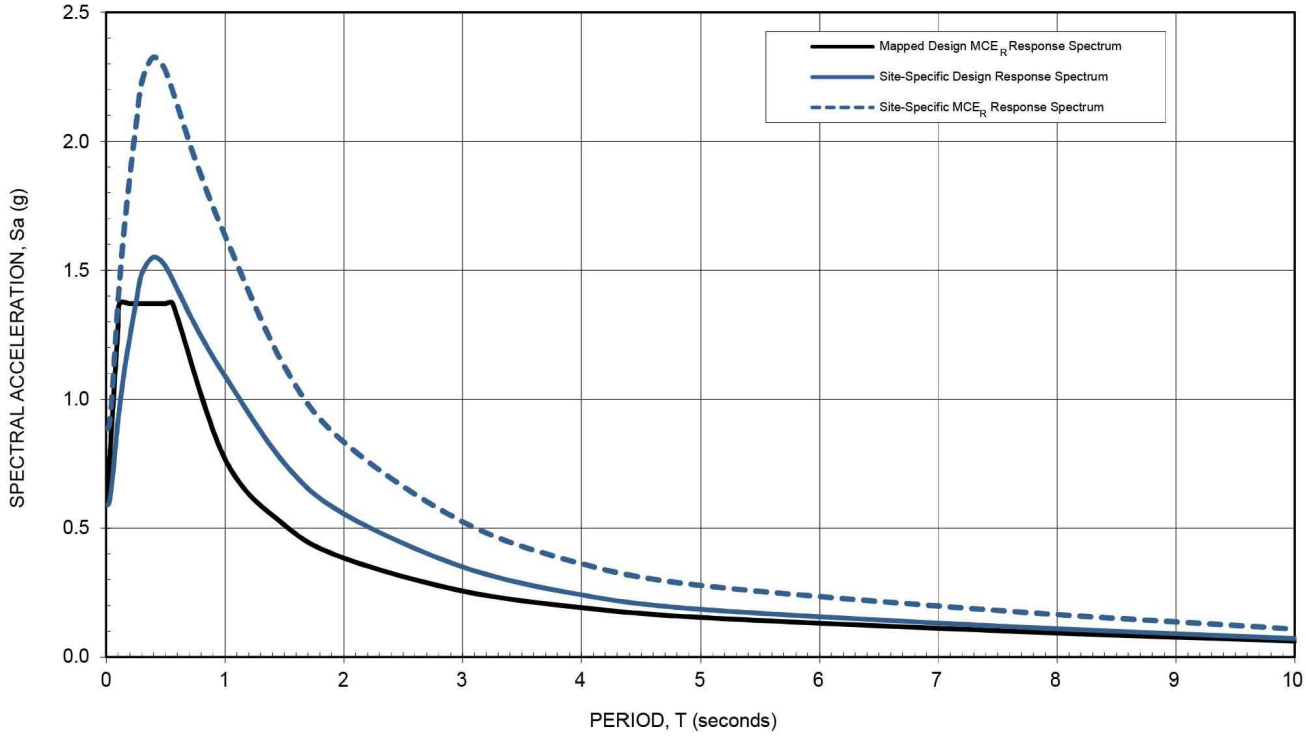

NOTES:

1 The probabilistic ground motion spectral response accelerations are based on the risk-targeted Maximum Considered Earthquake (MCE_R) having a 2% probability of exceedance in 50 years in the maximum direction using the Chiou & Youngs (2014), Campbell & Bozorgnia (2014), Boore et al. (2014), and Abrahamson et al. (2014) attenuation relationships and the risk coefficients.

2 The deterministic ground motion spectral response accelerations are for the 84th percentile of the geometric mean values in the maximum direction using the Chiou & Youngs (2014), Campbell & Bozorgnia (2014), Boore et al. (2014), and Abrahamson et al. (2014) attenuation relationships for deep soil sites considering a Mw 7.3 event on the Hollywood fault zone located 6.54 kilometers from the site. It conforms with the lower bound limit per ASCE 7-16 Section 21.2.2.

3 The Site-Specific MCE_R Response Spectrum is the lesser of spectral ordinates of deterministic and probabilistic accelerations at each period per ASCE 7-16 Section 21.2.3. The Site-Specific Design Response Spectrum conforms with lower bound limit per ASCE 7-16 Section 21.3.

4 The Mapped Design MCE_R Response Spectrum is computed from mapped spectral ordinates modified for Site Class D (stiff soil profile) per ASCE 7-16 Section 11.4. It is presented for the sake of comparison.

211307001_ARS.dwg 05/28/2020 JDP

FIGURE 6

Ninyo & Moore
Geotechnical & Environmental Sciences Consultants

ACCELERATION RESPONSE SPECTRA

LABOE TOS NO. 25 - VALLEY VILLAGE PARK
NORTH HOLLYWOOD, CALIFORNIA

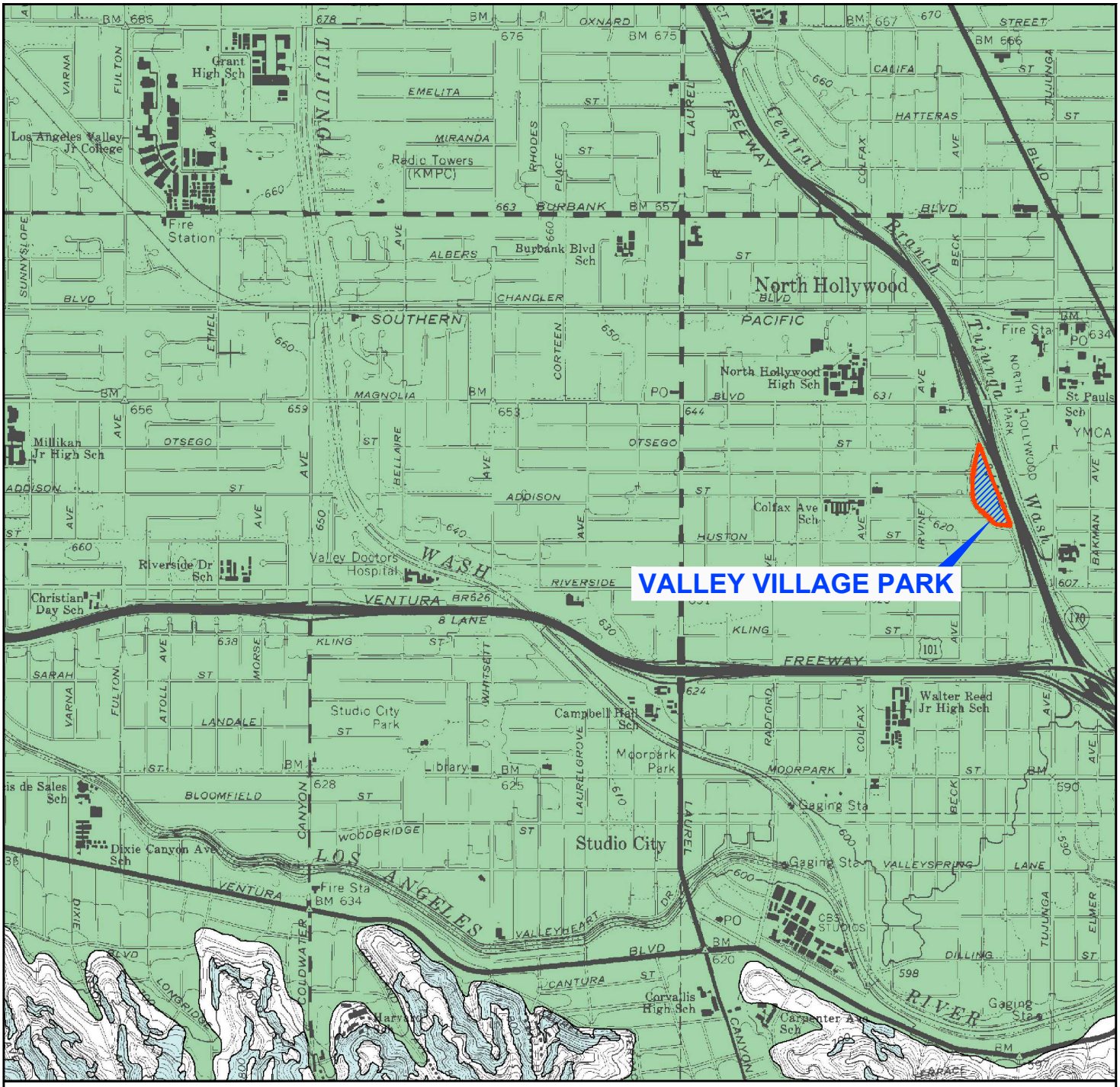

LEGEND

EARTHQUAKE-INDUCED LANDSLIDES

Areas where previous occurrence of landslide movement, or local topographic, geological, geotechnical and subsurface water conditions indicate a potential for permanent ground displacements such that mitigation as defined in Public Resources Code Section 2693(c) would be required.

LIQUEFACTION

Areas where historic occurrence of liquefaction, or local geological, geotechnical and groundwater conditions indicate a potential for permanent ground displacements such that mitigation as defined in Public Resources Code Section 2693(c) would be required.

NOTE: DIMENSIONS, DIRECTIONS AND LOCATIONS ARE APPROXIMATE. I REFERENCE: CDMG, 1998.

N

FEET

0 2,000 4,000

211307001_SHZ.dwg 05/28/2020 GK, JDP

FIGURE 7

Ninyo & Moore

Geotechnical & Environmental Sciences Consultants

SEISMIC HAZARD ZONES

LABOE TOS NO. 25 - VALLEY VILLAGE PARK
NORTH HOLLYWOOD, CALIFORNIA

211307001 I 8/20

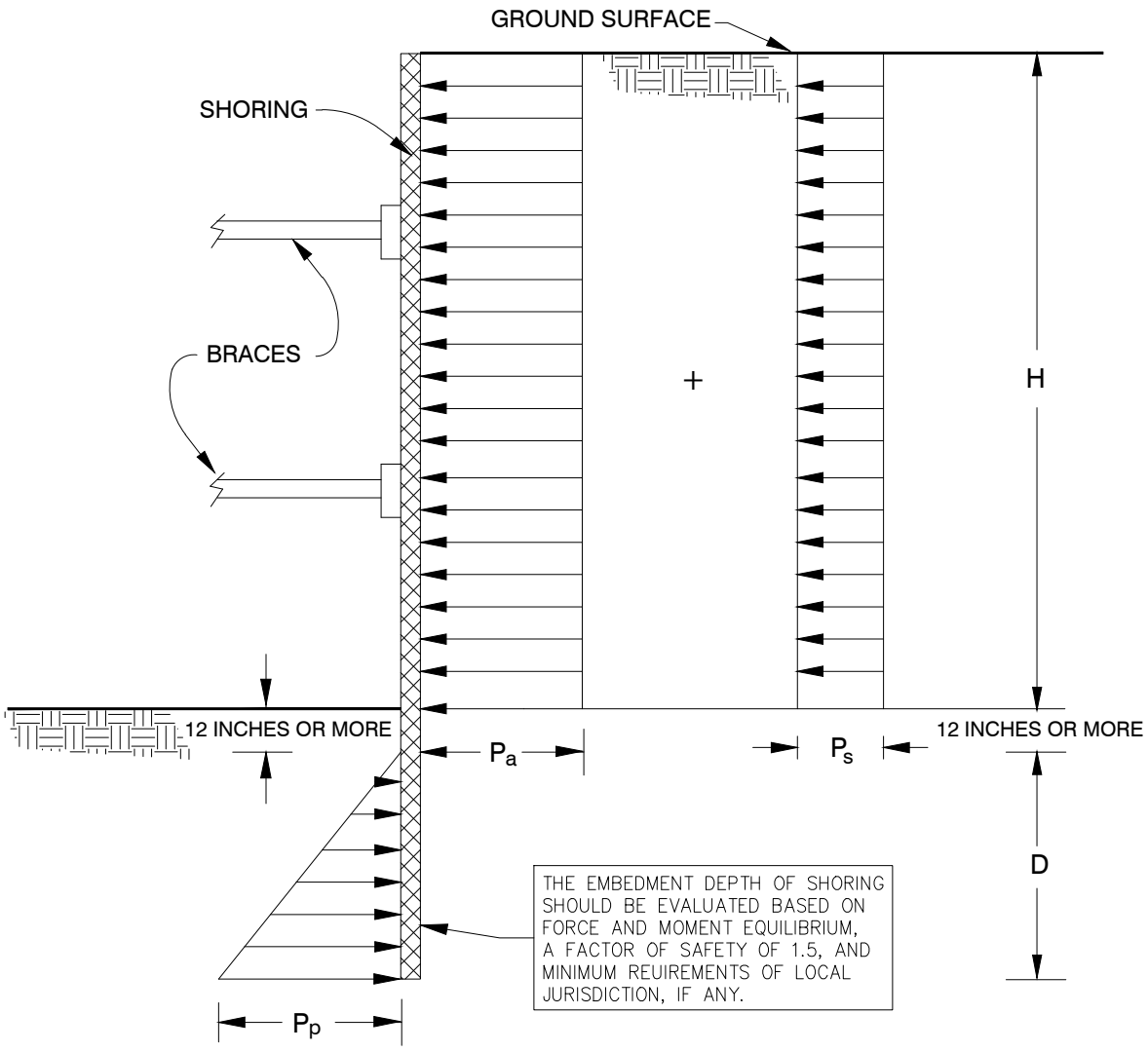

NOTES:

1. APPARENT LATERAL EARTH PRESSURE, P_a
   P_a = 26H psf
2. CONSTRUCTION TRAFFIC INDUCED SURCHARGE PRESSURE, P_s
   P_s = 120 psf
3. PASSIVE LATERAL EARTH PRESSURE, P_p
   P_p = 360D psf
4. ASSUMES GROUNDWATER IS NOT PRESENT
5. SURCHARGES FROM EXCAVATED SOIL OR CONSTRUCTION MATERIALS ARE NOT INCLUDED
6. H AND D ARE IN FEET

NOT TO SCALE

NOTE: DIMENSIONS, DIRECTIONS AND LOCATIONS ARE APPROXIMATE.

211307001_D-LEPBE.dwg 05/28/2020 GK, JDP

FIGURE 8

LATERAL EARTH PRESSURES FOR BRACED EXCAVATION

LABOE TOS NO. 25 - VALLEY VILLAGE PARK
NORTH HOLLYWOOD, CALIFORNIA

Ninyo & Moore
Geotechnical & Environmental Sciences Consultants

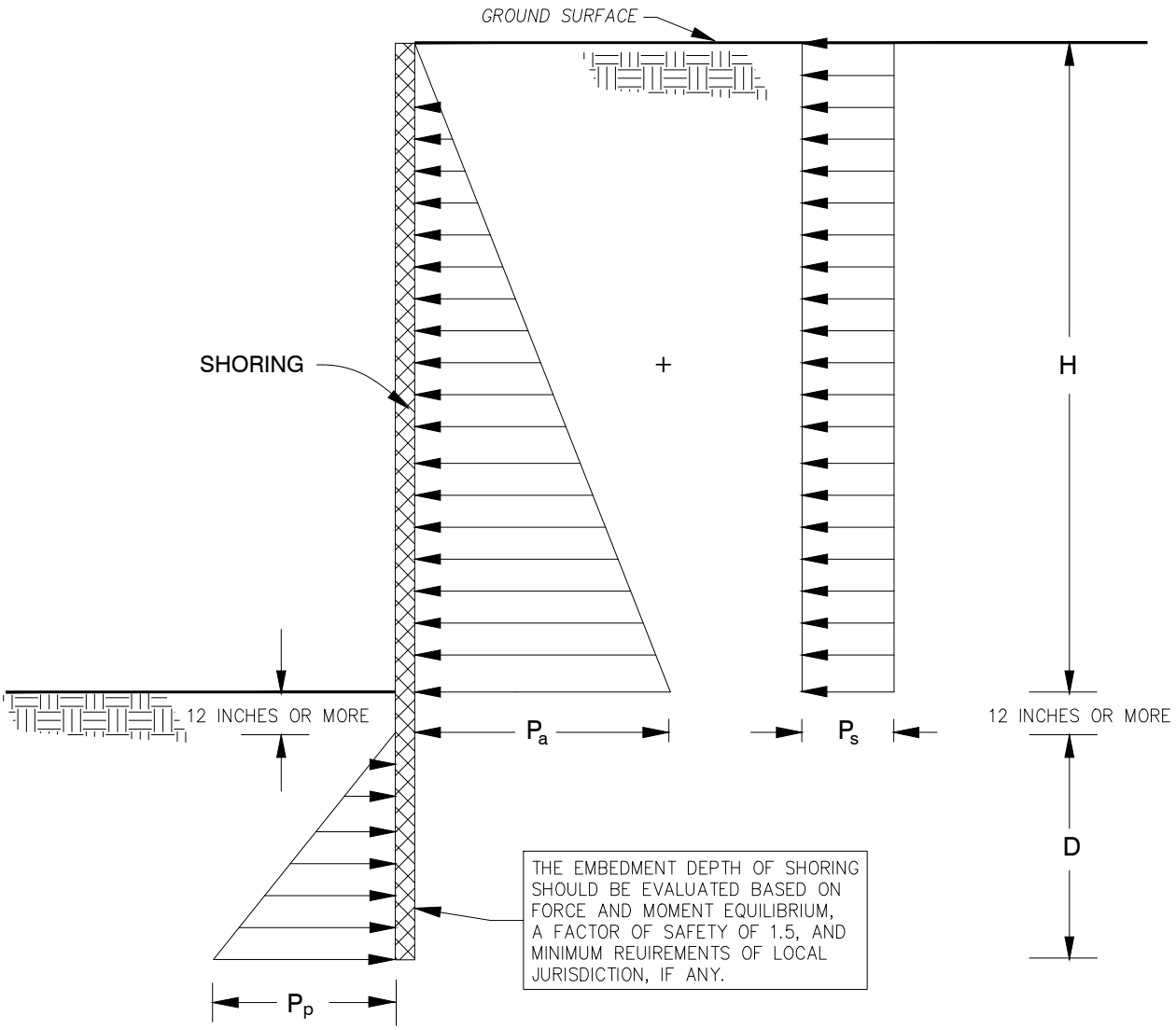

NOTES:

1. ACTIVE LATERAL EARTH PRESSURE, P_a
   P_a = 40 H psf
2. CONSTRUCTION TRAFFIC INDUCED SURCHARGE PRESSURE, P_s
   P_s = 120 psf
3. PASSIVE LATERAL EARTH PRESSURE, P_p
   P_p = 360 D psf
4. ASSUMES GROUNDWATER IS NOT PRESENT
5. SURCHARGES FROM EXCAVATED SOIL OR CONSTRUCTION MATERIALS ARE NOT INCLUDED
6. H AND D ARE IN FEET

NOT TO SCALE

NOTE: DIMENSIONS, DIRECTIONS AND LOCATIONS ARE APPROXIMATE.

211307001_D-LEPCS.dwg 05/28/2020 GK, JDP

FIGURE 9

LATERAL EARTH PRESSURES FOR TEMPORARY CANTILEVERED SHORING

LABOE TOS NO. 25 - VALLEY VILLAGE PARK
NORTH HOLLYWOOD, CALIFORNIA

Ninyo & Moore
Geotechnical & Environmental Sciences Consultants

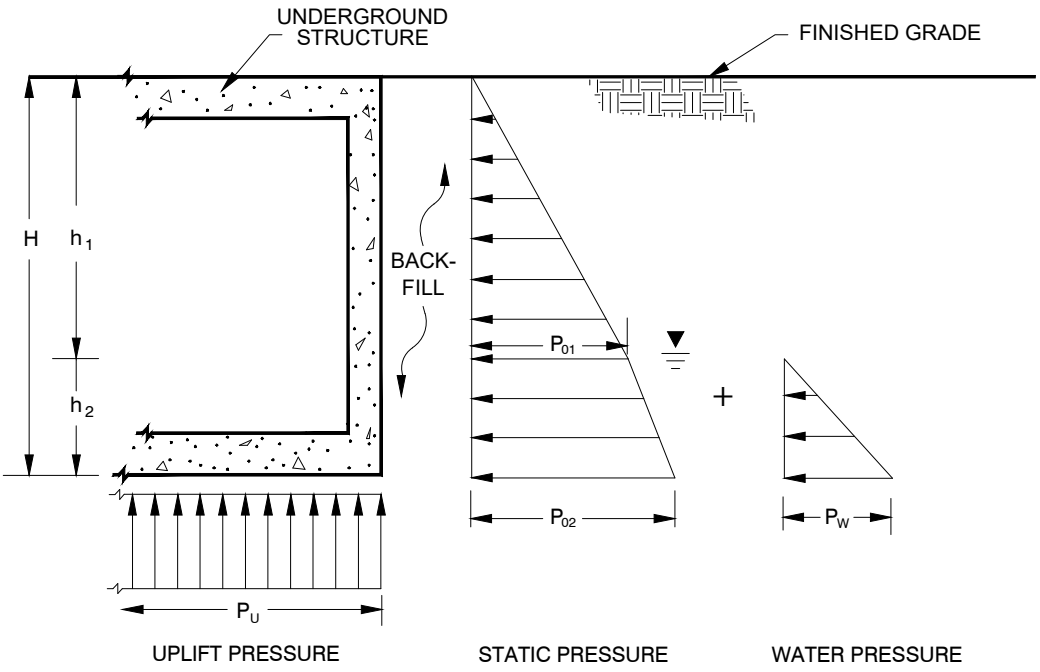

NOTES:

1. APPARENT LATERAL EARTH PRESSURES, P_{01} AND P_{02}
   $P_{01} = 57h$ psf
   $P_{02} = 57h_1 + 28h_2$ psf
2. HYDROSTATIC PRESSURE, P_w
   $P_w = 62.4\ h_2$ psf
3. UPLIFT PRESSURE, P_u
   $P_u = 62.4\ h_2$ psf
4. SURCHARGE PRESSURES CAUSED BY VEHICLES OR NEARBY STRUCTURES ARE NOT INCLUDED
5. H, h_1 AND h_2 ARE IN FEET
6. ▼ GROUNDWATER TABLE

NOT TO SCALE

211307001_D-EP.dwg 05/28/2020 GK, JDP

FIGURE 10

LATERAL EARTH PRESSURES FOR UNDERGROUND STRUCTURES

LABOE TOS NO. 25 - VALLEY VILLAGE PARK
NORTH HOLLYWOOD, CALIFORNIA

Ninyo & Moore
Geotechnical & Environmental Sciences Consultants

APPENDIX A

Boring Logs

APPENDIX A

BORING LOGS

Field Procedure for the Collection of Disturbed Samples

Disturbed soil samples were obtained in the field using the following method.

Bulk Samples

Bulk samples of representative earth materials were obtained from the exploratory borings. The samples were bagged and transported to the laboratory for testing.

The Standard Penetration Test (SPT) Sampler

Disturbed drive samples of earth materials were obtained by means of a Standard Penetration Test sampler. The sampler is composed of a split barrel with an external diameter of 2 inches and an unlined internal diameter of 1-3/8 inches. The sampler was driven into the ground 12 to 18 inches with a 140-pound hammer free-falling from a height of 30 inches in general accordance with ASTM D 1586. The blow counts were recorded for every 6 inches of penetration; the blow counts reported on the logs are those for the last 12 inches of penetration. Soil samples were observed and removed from the sampler, bagged, sealed and transported to the laboratory for testing.

Field Procedure for the Collection of Relatively Undisturbed Samples

Relatively undisturbed soil samples were obtained in the field using the following method.

The Modified Split-Barrel Drive Sampler

The sampler, with an external diameter of 3 inches, was lined with 1-inch-long, thin brass rings with inside diameters of approximately 2.4 inches. The sample barrel was driven into the ground with the weight of a hammer in general accordance with ASTM D 3550. The driving weight was permitted to fall freely. The approximate length of the fall, the weight of the hammer, and the number of blows per foot of driving are presented on the boring logs as an index to the relative resistance of the materials sampled. The samples were removed from the sample barrel in the brass rings, sealed, and transported to the laboratory for testing.

Soil Classification Chart Per ASTM D 2488

Primary Divisions			Secondary Divisions	
			Group Symbol	Group Name
COARSE-GRAINED SOILS more than 50% retained on No. 4 sieve	**GRAVEL** more than 50% of coarse fraction retained on No. 4 sieve	CLEAN GRAVEL less than 5% fines	GW	well-graded GRAVEL
			GP	poorly graded GRAVEL
		GRAVEL with DUAL CLASSIFICATIONS 5% to 12% fines	GW-GM	well-graded GRAVEL with silt
			GP-GM	poorly graded GRAVEL with silt
			GW-GC	well-graded GRAVEL with clay
			GP-GC	poorly graded GRAVEL with clay
		GRAVEL with FINES more than 12% fines	GM	silty GRAVEL
			GC	clayey GRAVEL
			GC-GM	silty, clayey GRAVEL
	SAND 50% or more of coarse fraction passes No. 4 sieve	CLEAN SAND less than 5% fines	SW	well-graded SAND
			SP	poorly graded SAND
		SAND with DUAL CLASSIFICATIONS 5% to 12% fines	SW-SM	well-graded SAND with silt
			SP-SM	poorly graded SAND with silt
			SW-SC	well-graded SAND with clay
			SP-SC	poorly graded SAND with clay
		SAND with FINES more than 12% fines	SM	silty SAND
			SC	clayey SAND
			SC-SM	silty, clayey SAND
FINE-GRAINED SOILS 50% or more passes No. 200 sieve	**SILT and CLAY** liquid limit less than 50%	INORGANIC	CL	lean CLAY
			ML	SILT
			CL-ML	silty CLAY
		ORGANIC	OL (PI > 4)	organic CLAY
			OL (PI < 4)	organic SILT
	SILT and CLAY liquid limit 50% or more	INORGANIC	CH	fat CLAY
			MH	elastic SILT
		ORGANIC	OH (plots on or above "A"-line)	organic CLAY
			OH (plots below "A"-line)	organic SILT
	Highly Organic Soils		PT	Peat

Grain Size

Description		Sieve Size	Grain Size	Approximate Size
Boulders		> 12"	> 12"	Larger than basketball-sized
Cobbles		3 - 12"	3 - 12"	Fist-sized to basketball-sized
Gravel	Coarse	3/4 - 3"	3/4 - 3"	Thumb-sized to fist-sized
	Fine	#4 - 3/4"	0.19 - 0.75"	Pea-sized to thumb-sized
Sand	Coarse	#10 - #4	0.079 - 0.19"	Rock-salt-sized to pea-sized
	Medium	#40 - #10	0.017 - 0.079"	Sugar-sized to rock-salt-sized
	Fine	#200 - #40	0.0029 - 0.017"	Flour-sized to sugar-sized
Fines		Passing #200	< 0.0029"	Flour-sized and smaller

Plasticity Chart

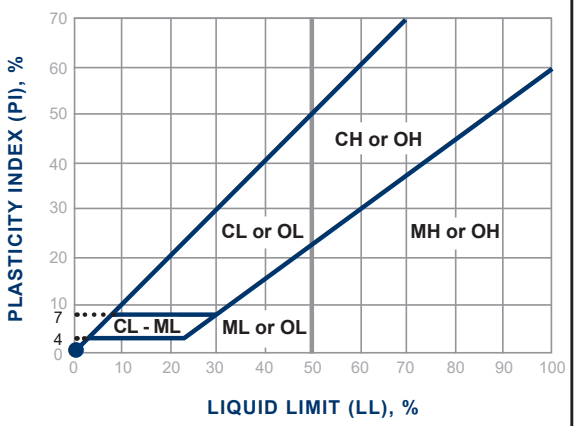

Apparent Density - Coarse-Grained Soil

Apparent Density	Spooling Cable or Cathead		Automatic Trip Hammer	
	SPT (blows/foot)	Modified Split Barrel (blows/foot)	SPT (blows/foot)	Modified Split Barrel (blows/foot)
Very Loose	≤ 4	≤ 8	≤ 3	≤ 5
Loose	5 - 10	9 - 21	4 - 7	6 - 14
Medium Dense	11 - 30	22 - 63	8 - 20	15 - 42
Dense	31 - 50	64 - 105	21 - 33	43 - 70
Very Dense	> 50	> 105	> 33	> 70

Consistency - Fine-Grained Soil

Consis-tency	Spooling Cable or Cathead		Automatic Trip Hammer	
	SPT (blows/foot)	Modified Split Barrel (blows/foot)	SPT (blows/foot)	Modified Split Barrel (blows/foot)
Very Soft	< 2	< 3	< 1	< 2
Soft	2 - 4	3 - 5	1 - 3	2 - 3
Firm	5 - 8	6 - 10	4 - 5	4 - 6
Stiff	9 - 15	11 - 20	6 - 10	7 - 13
Very Stiff	16 - 30	21 - 39	11 - 20	14 - 26
Hard	> 30	> 39	> 20	> 26

Ninyo & Moore
Geotechnical & Environmental Sciences Consultants

USCS METHOD OF SOIL CLASSIFICATION

BORING LOG EXPLANATION SHEET

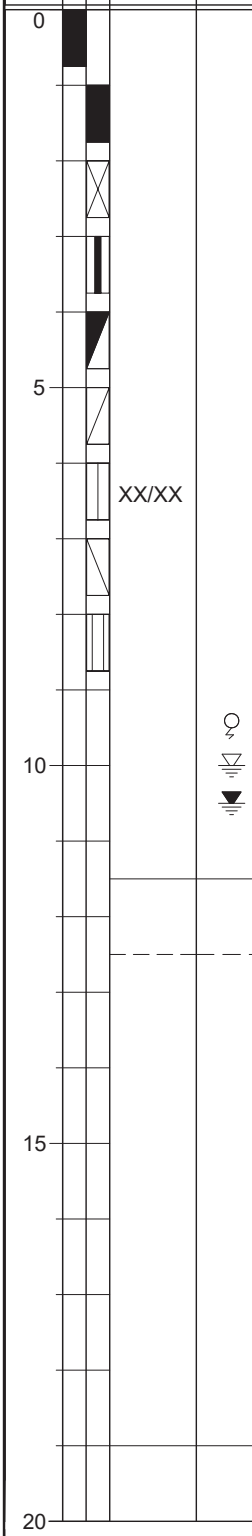

Bulk sample.

Modified split-barrel drive sampler.

No recovery with modified split-barrel drive sampler.

Sample retained by others.

Standard Penetration Test (SPT).

No recovery with a SPT.

Shelby tube sample. Distance pushed in inches/length of sample recovered in inches.

No recovery with Shelby tube sampler.

Continuous Push Sample.

Seepage.

Groundwater encountered during drilling.

Groundwater measured after drilling.

SM

MAJOR MATERIAL TYPE (SOIL):

Solid line denotes unit change.

CL

Dashed line denotes material change.

Attitudes: Strike/Dip
b: Bedding
c: Contact
j: Joint
f: Fracture
F: Fault
cs: Clay Seam
s: Shear
bss: Basal Slide Surface
sf: Shear Fracture
sz: Shear Zone
sbs: Shear Bedding Surface

The total depth line is a solid line that is drawn at the bottom of the boring.

DATE DRILLED 3/26/20 BORING NO. B-1

GROUND ELEVATION 618' ± (MSL) SHEET 1 OF 3

METHOD OF DRILLING 8" Hollow-Stem Auger (Baja Exploration)

DRIVE WEIGHT 140 lbs. (Auto. Trip Hammer) DROP 30"

SAMPLED BY KMB LOGGED BY KMB REVIEWED BY GMC

DEPTH (feet)	SAMPLES (Bulk / Driven)	BLOWS/FOOT	MOISTURE (%)	DRY DENSITY (PCF)	SYMBOL	CLASSIFICATION U.S.C.S.	DESCRIPTION/INTERPRETATION
0						SM	FILL: Brown, moist, loose, silty SAND; organics; few pieces of asphalt concrete.
						SP-SM	ALLUVIUM: Reddish gray, moist, loose, poorly graded SAND with silt; trace gravel; cobbles.
		15					Light brown; medium dense.
10		18	14.3	105.5			Brown.
		17					
						SM	Reddish brown, moist, medium dense, silty SAND.
20		22	6.3	97.9			
						SC	Brown, moist, medium dense, clayey SAND.
		12					
						SM	Brown, moist, medium dense, silty SAND.
30		31	11.6	115.3			
						SP	Light brown, moist, medium dense, poorly graded SAND.
						CL-ML	Brown, moist, hard, silty CLAY.
		50/3"					
						ML	Brown, moist, very dense, sandy SILT.
40							

FIGURE A- 1

Ninyo & Moore
Geotechnical & Environmental Sciences Consultants

LABOE TOS NO. 25 - VALLEY VILLAGE PARK
NORTH HOLLYWOOD, CALIFORNIA

211307001 | 8/20

DATE DRILLED 3/26/20 BORING NO. B-1

GROUND ELEVATION 618' ± (MSL) SHEET 2 OF 3

METHOD OF DRILLING 8" Hollow-Stem Auger (Baja Exploration)

DRIVE WEIGHT 140 lbs. (Auto. Trip Hammer) DROP 30"

SAMPLED BY KMB LOGGED BY KMB REVIEWED BY GMC

DEPTH (feet)	SAMPLES (Bulk / Driven)	BLOWS/FOOT	MOISTURE (%)	DRY DENSITY (PCF)	SYMBOL	CLASSIFICATION U.S.C.S.	DESCRIPTION/INTERPRETATION
40		50/6"				ML	ALLUVIUM: (Continued) Brown, moist, very dense, sandy SILT.
						SP	Light brown, moist, very dense, poorly graded SAND; few gravel.
		84					Few to little gravel.
						CL	Brown, moist, very stiff, sandy lean CLAY.
50		19	27.2	97.3			
						SM	Brown, moist, medium dense, silty SAND.
		16					
60		63/9"					Very dense.
		30					Light olive brown; dense; fine sand.
						ML	Light brown, moist, dense, sandy SILT; laminated; oxidation staining.
70		52					
						SM	Light olive brown, moist, dense, silty SAND; fine sand.
						CL	Olive brown, moist, hard, lean CLAY.
		37					
							Total Depth = 76.5 feet. Groundwater was not encountered during drilling. Backfilled with cement-bentonite grout on 3/27/20.
80							

FIGURE A- 2

Ninyo & Moore
Geotechnical & Environmental Sciences Consultants

LABOE TOS NO. 25 - VALLEY VILLAGE PARK
NORTH HOLLYWOOD, CALIFORNIA

DATE DRILLED 3/26/20 BORING NO. B-1

GROUND ELEVATION 618' ± (MSL) SHEET 3 OF 3

METHOD OF DRILLING 8" Hollow-Stem Auger (Baja Exploration)

DRIVE WEIGHT 140 lbs. (Auto. Trip Hammer) DROP 30"

SAMPLED BY KMB LOGGED BY KMB REVIEWED BY GMC

DEPTH (feet)	SAMPLES Bulk	SAMPLES Driven	BLOWS/FOOT	MOISTURE (%)	DRY DENSITY (PCF)	SYMBOL	CLASSIFICATION U.S.C.S.	DESCRIPTION/INTERPRETATION
80								Notes: Groundwater, though not encountered at the time of drilling, may rise to a higher level due to seasonal variations in precipitation and several other factors as discussed in the report. The ground elevation shown above is an estimation only. It is based on our interpretations of published maps and other documents reviewed for the purposes of this evaluation. It is not sufficiently accurate for preparing construction bids and design documents.
90								
100								
110								
120								

DATE DRILLED 3/26/20 BORING NO. P-1

GROUND ELEVATION 615' ± (MSL) SHEET 1 OF 1

METHOD OF DRILLING 8" Hollow-Stem Auger (Baja Exploration)

DRIVE WEIGHT 140 lbs. (Auto. Trip Hammer) DROP 30"

SAMPLED BY GM LOGGED BY GM REVIEWED BY GMC

DEPTH (feet)	SAMPLES (Bulk / Driven)	BLOWS/FOOT	MOISTURE (%)	DRY DENSITY (PCF)	SYMBOL	CLASSIFICATION U.S.C.S.	DESCRIPTION/INTERPRETATION
0						SM	FILL: Reddish brown, moist, medium dense, silty SAND; trace gravel; few clay pockets.
						SM	ALLUVIUM: Yellowish brown, moist, medium dense, silty SAND; trace gravel.
		15	4.6	104.5		SP	Yellowish brown, moist, medium dense, poorly graded SAND; trace gravel.
10		6					Loose.
		30	3.7	123.5		ML	Reddish brown, moist, medium dense, sandy SILT.
						SP	Yellowish brown, moist, dense, poorly graded SAND.
20		21				SM	Reddish brown, moist, dense, silty SAND.
		25	16.9	113.0		CL	Reddish brown, moist, very stiff, sandy lean CLAY.
30							Total Depth = 25.0 feet. Groundwater was not encountered during drilling. In-situ percolation test performed on 3/27/20. Backfilled with cement bentonite grout on 3/27/20. Notes: Groundwater, though not encountered at the time of drilling, may rise to a higher level due to seasonal variations in precipitation and several other factors as discussed in the report. The ground elevation shown above is an estimation only. It is based on our interpretations of published maps and other documents reviewed for the purposes of this evaluation. It is not sufficiently accurate for preparing construction bids and design documents.
40							

FIGURE A- 4

Ninyo & Moore
Geotechnical & Environmental Sciences Consultants

LABOE TOS NO. 25 - VALLEY VILLAGE PARK
NORTH HOLLYWOOD, CALIFORNIA

DATE DRILLED 3/26/20 BORING NO. P-2

GROUND ELEVATION 617' ± (MSL) SHEET 1 OF 1

METHOD OF DRILLING 8" Hollow-Stem Auger (Baja Exploration)

DRIVE WEIGHT 140 lbs. (Auto. Trip Hammer) DROP 30"

SAMPLED BY GM LOGGED BY GM REVIEWED BY GMC

DEPTH (feet)	SAMPLES (Bulk / Driven)	BLOWS/FOOT	MOISTURE (%)	DRY DENSITY (PCF)	SYMBOL	CLASSIFICATION U.S.C.S.	DESCRIPTION/INTERPRETATION
0						SM	FILL: Dark grayish brown, moist, medium dense, silty SAND with gravel; cobbles.
						SM	ALLUVIUM: Olive brown, moist, medium dense, silty SAND; trace gravel; cobbles.
		68/11"					Very dense.
						SP	Olive brown to light brown, moist, medium dense, poorly graded SAND.
10		17	2.7	95.2			
		18					
						SM	Reddish brown, moist, medium dense, silty SAND; trace gravel.
20		18	14.1	107.0			
		15					
							Total Depth = 25.0 feet. Groundwater was not encountered during drilling. In-situ percolation test performed on 3/27/20. Backfilled with cement bentonite grout on 3/27/20. Notes: Groundwater, though not encountered at the time of drilling, may rise to a higher level due to seasonal variations in precipitation and several other factors as discussed in the report. The ground elevation shown above is an estimation only. It is based on our interpretations of published maps and other documents reviewed for the purposes of this evaluation. It is not sufficiently accurate for preparing construction bids and design documents.
30							
40							

FIGURE A- 5

Ninyo & Moore
Geotechnical & Environmental Sciences Consultants

LABOE TOS NO. 25 - VALLEY VILLAGE PARK
NORTH HOLLYWOOD, CALIFORNIA

APPENDIX B

CPT Soundings

APPENDIX B

CPT SOUNDINGS

Field Procedure for Cone Penetration Testing

The cone penetration testing (CPT) described in this report was conducted by Kehoe Testing and Engineering in general accordance with ASTM D 5778. The cone penetrometer assembly used for this project consisted of a conical tip and a cylindrical friction sleeve. The conical tip had an apex angle of 60 degrees and a cross-section area of approximately 15 square centimeters. The interior of the CPT probe was instrumented with strain gauges that allowed simultaneous measurement of cone tip resistance and friction sleeve resistance during penetration. The cone hydraulically pushed into the soil using the reaction mass of a specially designed 30-ton truck at a constant rate while the cone tip resistance and sleeve friction were recorded at an approximately 1-inch interval and stored in digital form. The computer generated logs presented in the following pages include cone resistance, sleeve friction, pore pressure, and soil behavior type.

Kehoe Testing and Engineering
714-901-7270
steve@kehoetesting.com
www.kehoetesting.com

Project: **Ninyo & Moore / Valley Village Site**
Location: **Los Angeles County, CA**

CPT-1
Total depth: 34.58 ft, Date: 3/25/2020

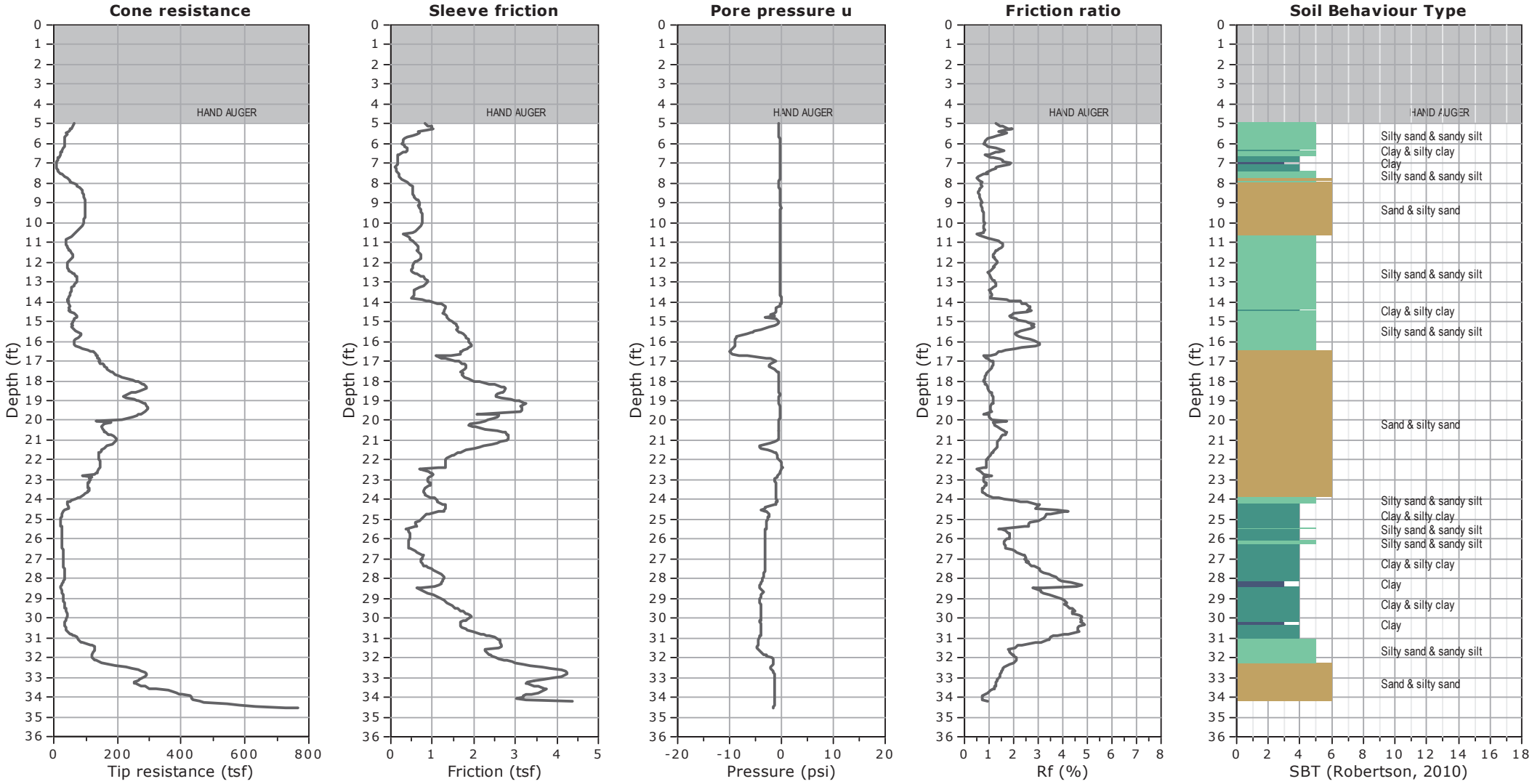

Kehoe Testing and Engineering
714-901-7270
steve@kehoetesting.com
www.kehoetesting.com

Project: **Ninyo & Moore / Valley Village Site**
Location: **Los Angeles County, CA**

CPT-2
Total depth: 35.44 ft, Date: 3/26/2020

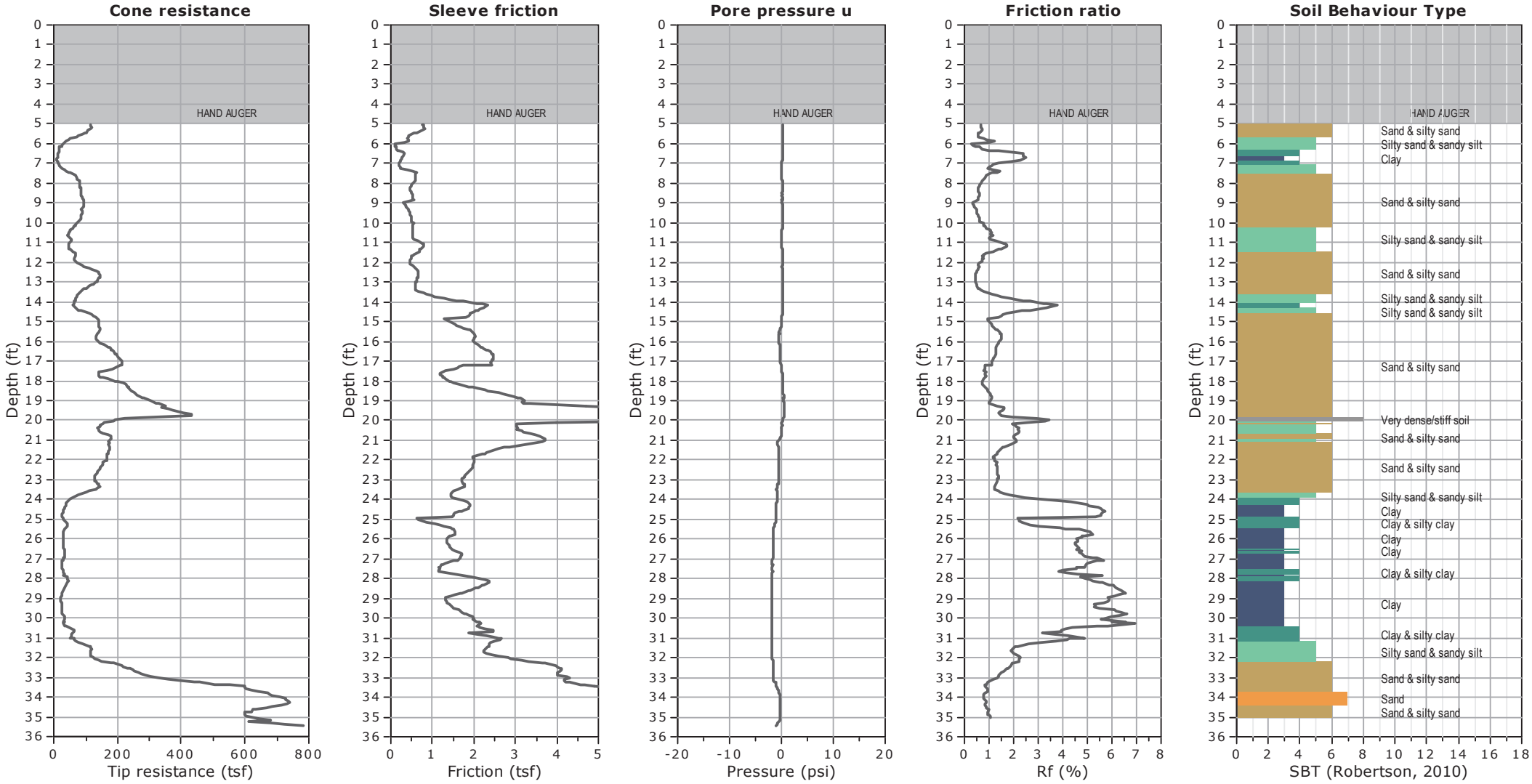

APPENDIX C

Geotechnical Laboratory Testing

APPENDIX C

GEOTECHNICAL LABORATORY TESTING

Classification
Soils were visually and texturally classified in accordance with the Unified Soil Classification System (USCS) in general accordance with ASTM D 2488. Soil classifications are indicated on the logs of the exploratory borings in Appendix B.

In-Place Moisture and Density Tests
The moisture content and dry density of relatively undisturbed samples obtained from the exploratory borings were evaluated in general accordance with ASTM D 2937. The test results are presented on the logs of the exploratory borings in Appendix B.

Gradation Analysis
Gradation analysis tests were performed on selected representative soil samples in general accordance with ASTM D 422. The grain-size distribution curves are shown on Figures C-1 through C-4. These test results were utilized in evaluating the soil classifications in accordance with the USCS.

200 Wash
An evaluation of the percentage of particles finer than the No. 200 sieve in selected soil samples was performed in general accordance with ASTM D 1140. The results of the tests are presented on Figure C-5.

Atterberg Limits
Tests were performed on selected representative fine-grained soil samples to evaluate the liquid limit, plastic limit, and plasticity index in general accordance with ASTM D 4318. These test results were utilized to evaluate the soil classification in accordance with the USCS. The test results and classifications are shown on Figure C-6.

Consolidation Test
Consolidation testing was performed on a selected relatively undisturbed soil sample in general accordance with ASTM D 2435. The sample was inundated during testing to represent adverse field conditions. The percent of consolidation for each load cycle was recorded as a ratio of the amount of vertical compression to the original height of the sample. The results of the test are summarized on Figure C-7.

Direct Shear Tests
Direct shear tests were performed on relatively undisturbed samples in general accordance with ASTM D 3080 to evaluate the shear strength characteristics of selected materials. The samples were inundated during shearing to represent adverse field conditions. The results are shown on Figures C-8 and C-9.

Soil Corrosivity Tests
Soil pH and resistivity tests were performed on a representative sample in general accordance with California Test (CT) 643. The soluble sulfate and chloride content of the selected sample were evaluated in general accordance with CT 417 and CT 422, respectively. The test results are presented on Figure C-10.

GRAVEL		SAND			FINES	
Coarse	Fine	Coarse	Medium	Fine	SILT	CLAY

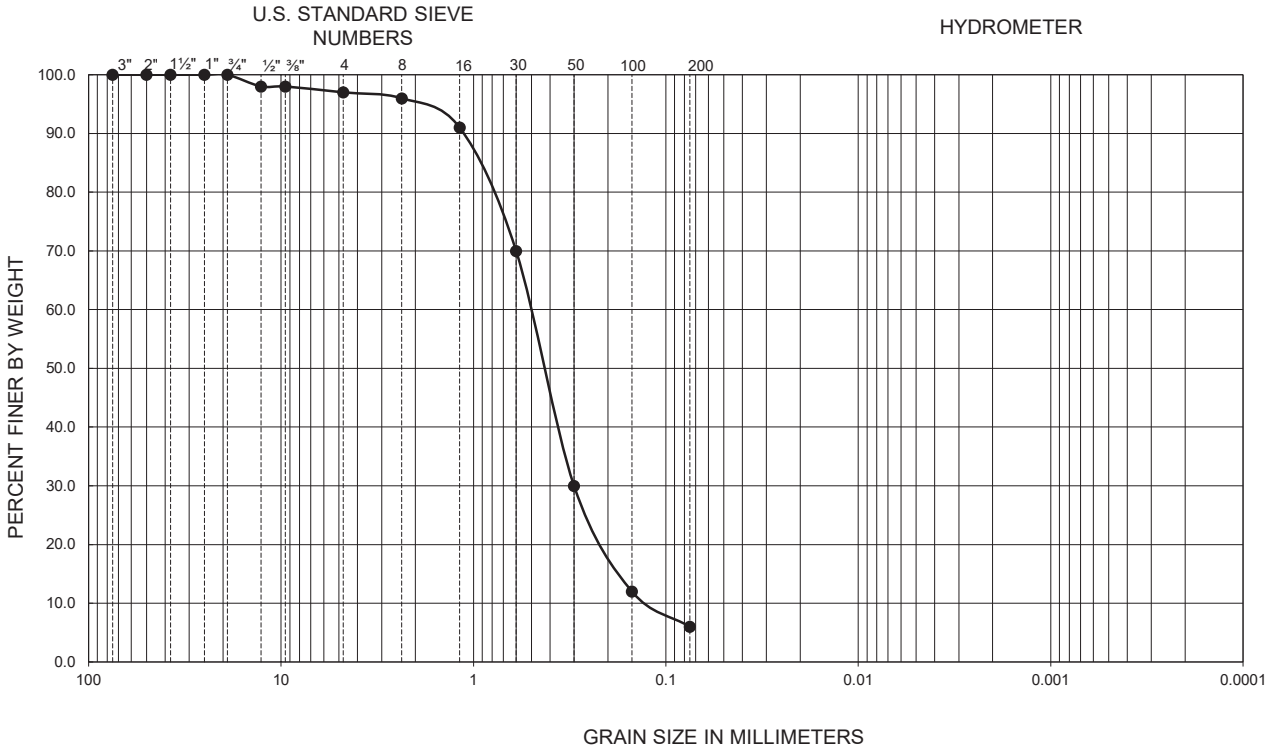

Symbol	Sample Location	Depth (ft)	Liquid Limit	Plastic Limit	Plasticity Index	D_{10}	D_{30}	D_{60}	C_u	C_c	Passing No. 200 (percent)	USCS
●	B-1	5.0-6.5	--	--	--	0.13	0.30	0.50	3.8	1.4	6	SP-SM

PERFORMED IN GENERAL ACCORDANCE WITH ASTM D 422

FIGURE C-1

GRADATION TEST RESULTS

LABOE TOS NO. 25 - VALLEY VILLAGE PARK
NORTH HOLLYWOOD, CALIFORNIA

211307001 | 8/20

Ninyo & Moore
Geotechnical & Environmental Sciences Consultants

211307001 Fig C-1_SIEVE w No 8 @ B-1 5.0-6.5

GRAVEL		SAND			FINES	
Coarse	Fine	Coarse	Medium	Fine	SILT	CLAY

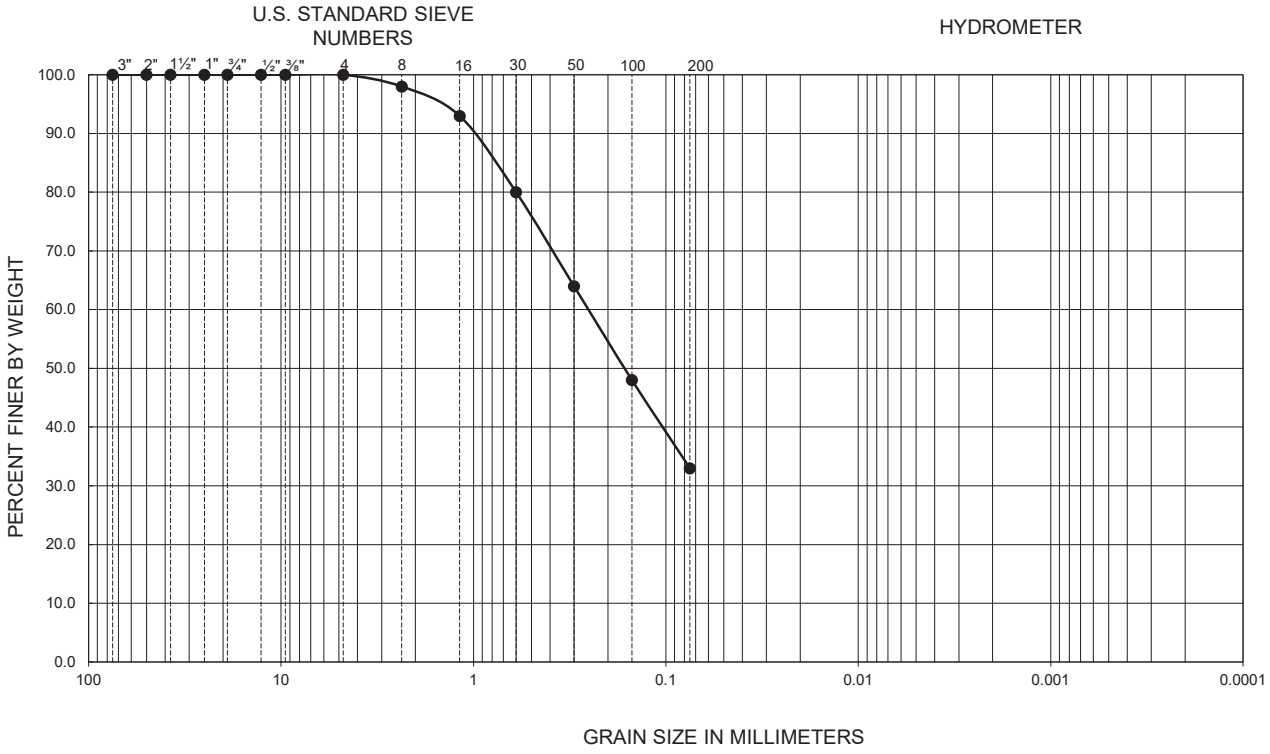

Symbol	Sample Location	Depth (ft)	Liquid Limit	Plastic Limit	Plasticity Index	D_{10}	D_{30}	D_{60}	C_u	C_c	Passing No. 200 (percent)	USCS
●	B-1	30.0-31.0	--	--	--	--	--	--	--	--	33	SM

PERFORMED IN GENERAL ACCORDANCE WITH ASTM D 422

FIGURE C-2

GRADATION TEST RESULTS

LABOE TOS NO. 25 - VALLEY VILLAGE PARK
NORTH HOLLYWOOD, CALIFORNIA

211307001 | 8/20

Ninyo & Moore
Geotechnical & Environmental Sciences Consultants

GRAVEL		SAND			FINES	
Coarse	Fine	Coarse	Medium	Fine	SILT	CLAY

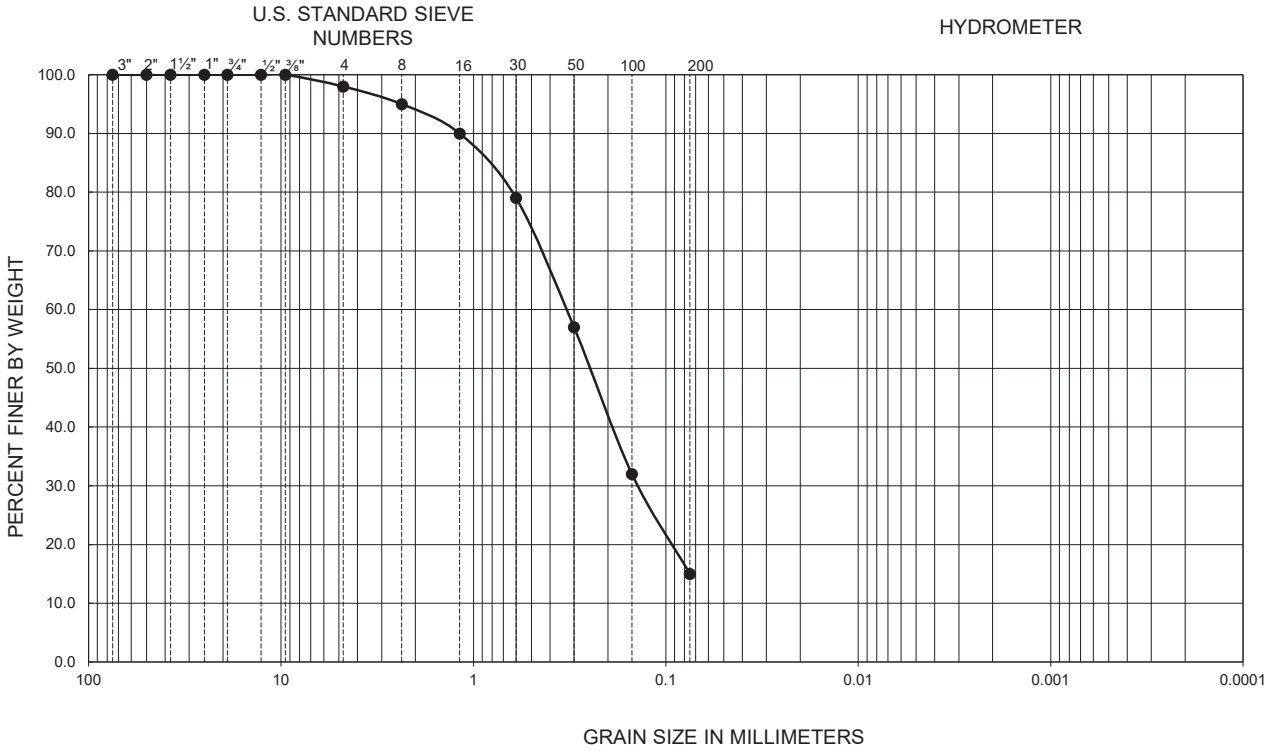

Symbol	Sample Location	Depth (ft)	Liquid Limit	Plastic Limit	Plasticity Index	D_{10}	D_{30}	D_{60}	C_u	C_c	Passing No. 200 (percent)	USCS
●	P-1	5.0-6.0	--	--	--	--	--	--	--	--	15	SM

PERFORMED IN GENERAL ACCORDANCE WITH ASTM D 422

FIGURE C-3

GRADATION TEST RESULTS

LABOE TOS NO. 25 - VALLEY VILLAGE PARK
NORTH HOLLYWOOD, CALIFORNIA

211307001 | 8/20

Ninyo & Moore
Geotechnical & Environmental Sciences Consultants

GRAVEL		SAND			FINES	
Coarse	Fine	Coarse	Medium	Fine	SILT	CLAY

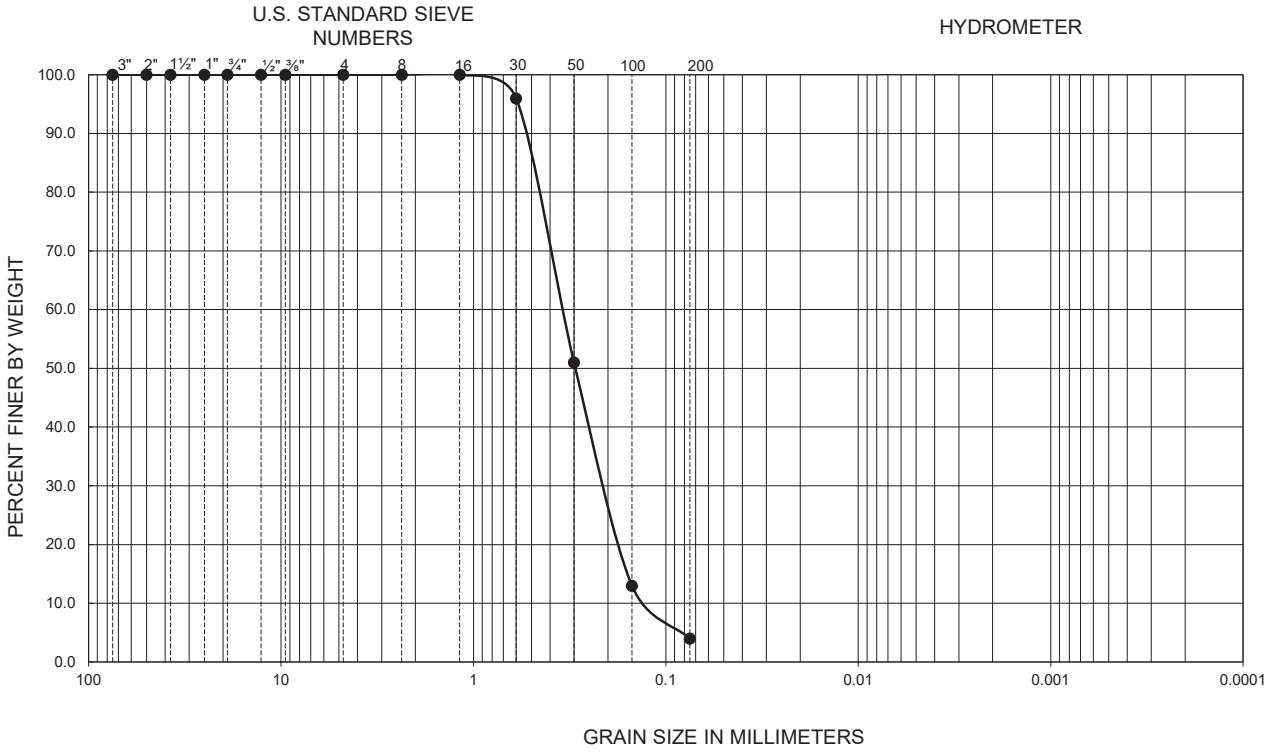

Symbol	Sample Location	Depth (ft)	Liquid Limit	Plastic Limit	Plasticity Index	D_{10}	D_{30}	D_{60}	C_u	C_c	Passing No. 200 (percent)	USCS
●	P-2	10.0-11.5	--	--	--	0.13	0.21	0.35	2.7	1.0	4	SP

PERFORMED IN GENERAL ACCORDANCE WITH ASTM D 422

FIGURE C-4

GRADATION TEST RESULTS

LABOE TOS NO. 25 - VALLEY VILLAGE PARK
NORTH HOLLYWOOD, CALIFORNIA

211307001 | 8/20

Ninyo & Moore
Geotechnical & Environmental Sciences Consultants

SAMPLE LOCATION	SAMPLE DEPTH (ft)	DESCRIPTION	PERCENT PASSING NO. 4	PERCENT PASSING NO. 200	USCS (TOTAL SAMPLE)
B-1	20.0-21.5	SILTY SAND	100	32	SM
P-1	15.0-16.5	SANDY SILT	100	57	ML
P-2	20.0-25.0	SILTY SAND	98	22	SM

PERFORMED IN GENERAL ACCORDANCE WITH ASTM D 1140

FIGURE C-5

Ninyo & Moore
Geotechnical & Environmental Sciences Consultants

NO. 200 SIEVE ANALYSIS TEST RESULTS

LABOE TOS NO. 25 - VALLEY VILLAGE PARK
NORTH HOLLYWOOD, CALIFORNIA

211307001 | 8/20

SYMBOL	LOCATION	DEPTH (ft)	LIQUID LIMIT	PLASTIC LIMIT	PLASTICITY INDEX	USCS CLASSIFICATION (Fraction Finer Than No. 40 Sieve)	USCS
●	B-1	35.0-36.5	26	22	4	CL-ML	CL-ML
■	P-1	23.5-25.0	28	18	10	CL	CL

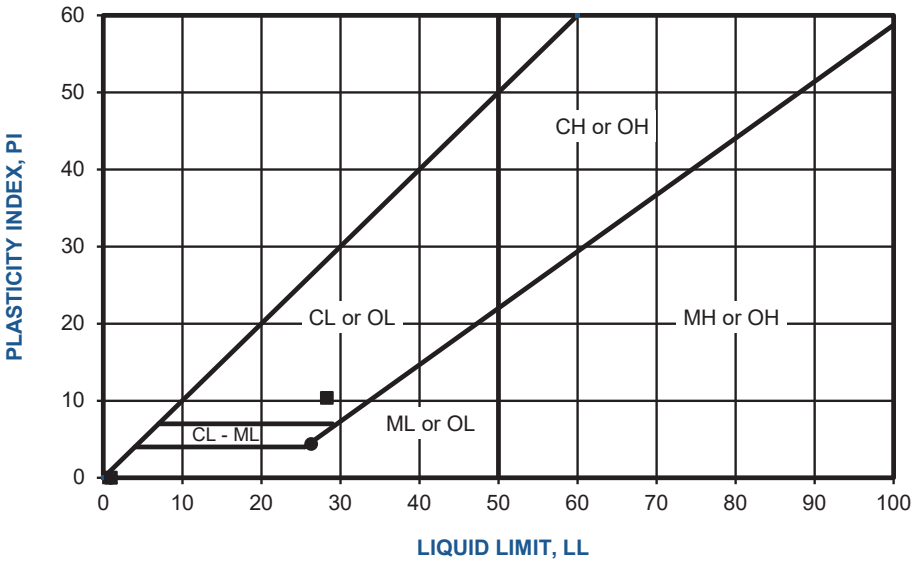

PERFORMED IN GENERAL ACCORDANCE WITH ASTM D 4318

FIGURE C-6

ATTERBERG LIMITS TEST RESULTS

LABOE TOS NO. 25 - VALLEY VILLAGE PARK
NORTH HOLLYWOOD, CALIFORNIA

211307001 | 8/20

Ninyo & Moore
Geotechnical & Environmental Sciences Consultants

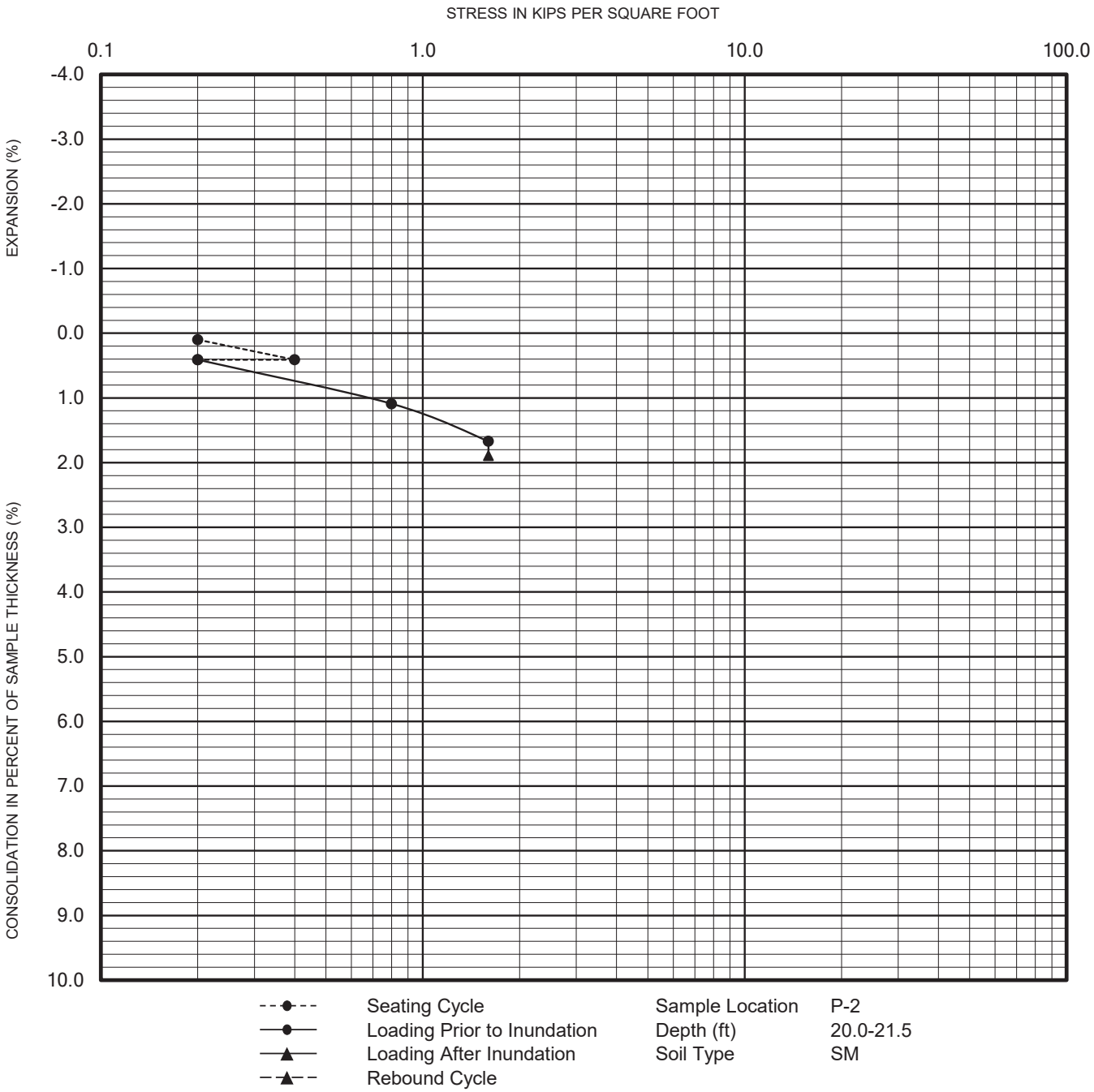

PERFORMED IN GENERAL ACCORDANCE WITH ASTM D 2435

FIGURE C-7

CONSOLIDATION TEST RESULTS

LABOE TOS NO. 25 - VALLEY VILLAGE PARK
NORTH HOLLYWOOD, CALIFORNIA

211307001 | 8/20

Ninyo & Moore
Geotechnical & Environmental Sciences Consultants

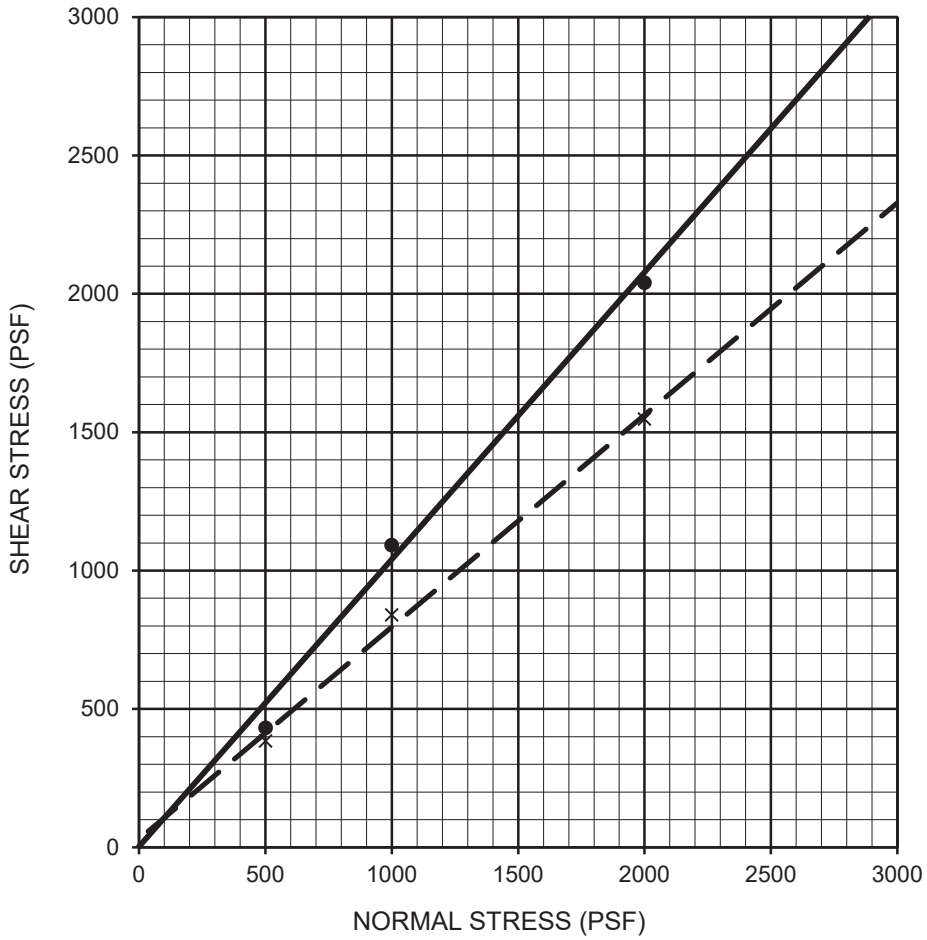

Description	Symbol	Sample Location	Depth (ft)	Shear Strength	Cohesion (psf)	Friction Angle (degrees)	Soil Type
SILTY SAND	—●—	P-1	5.0-6.0	Peak	0	47	SM
SILTY SAND	– – X – –	P-1	5.0-6.0	Ultimate	30	37	SM

PERFORMED IN GENERAL ACCORDANCE WITH ASTM D 3080

FIGURE C-8

DIRECT SHEAR TEST RESULTS

LABOE TOS NO. 25 - VALLEY VILLAGE PARK
NORTH HOLLYWOOD, CALIFORNIA

211307001 | 8/20

Ninyo & Moore
Geotechnical & Environmental Sciences Consultants

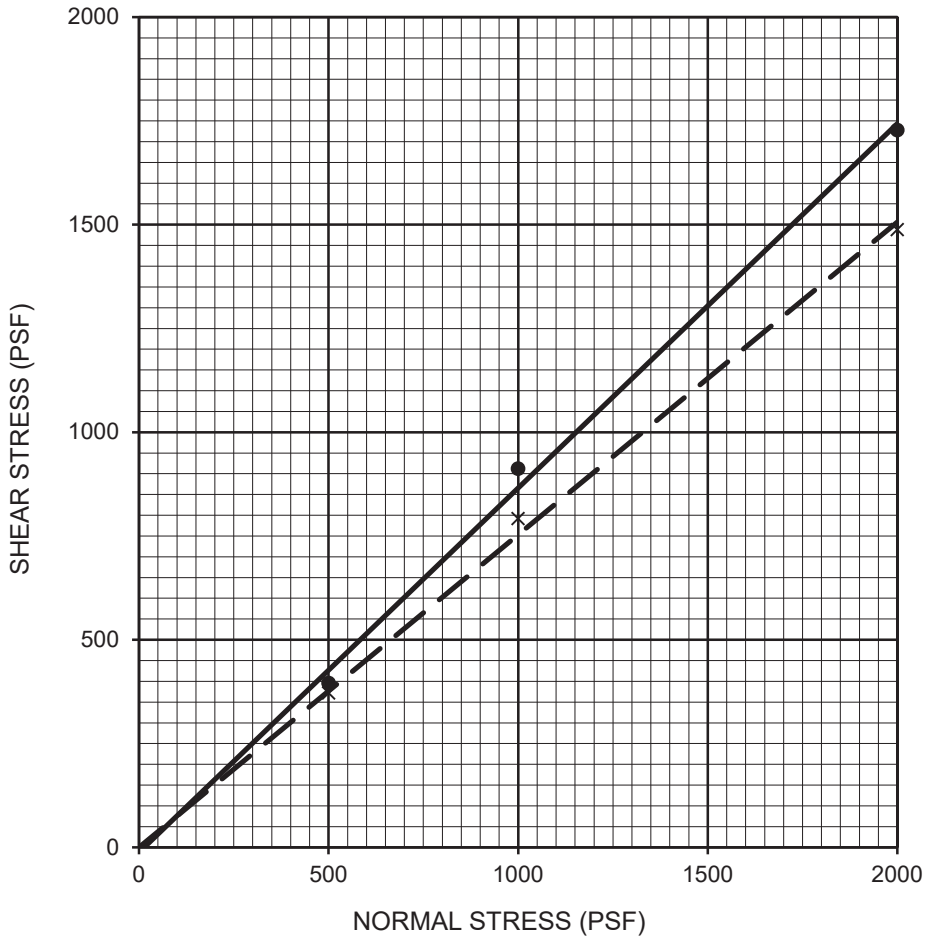

Description	Symbol	Sample Location	Depth (ft)	Shear Strength	Cohesion (psf)	Friction Angle (degrees)	Soil Type
SILTY SAND	—●—	P-2	20.0-21.5	Peak	0	41	SM
SILTY SAND	– – X – –	P-2	20.0-21.5	Ultimate	24	36	SM

PERFORMED IN GENERAL ACCORDANCE WITH ASTM D 3080

FIGURE C-9

DIRECT SHEAR TEST RESULTS

LABOE TOS NO. 25 - VALLEY VILLAGE PARK
NORTH HOLLYWOOD, CALIFORNIA

211307001 | 8/20

Ninyo & Moore
Geotechnical & Environmental Sciences Consultants

SAMPLE LOCATION	SAMPLE DEPTH (ft)	pH [1]	RESISTIVITY [1] (ohm-cm)	SULFATE CONTENT [2]		CHLORIDE CONTENT [3] (ppm)
				(ppm)	(%)	
P-1	0.0-5.0	7.3	6,300	10	0.001	45

[1] PERFORMED IN GENERAL ACCORDANCE WITH CALIFORNIA TEST METHOD 643
[2] PERFORMED IN GENERAL ACCORDANCE WITH CALIFORNIA TEST METHOD 417
[3] PERFORMED IN GENERAL ACCORDANCE WITH CALIFORNIA TEST METHOD 422

FIGURE C-10

CORROSIVITY TEST RESULTS

LABOE TOS NO. 25 - VALLEY VILLAGE PARK
NORTH HOLLYWOOD, CALIFORNIA

Ninyo & Moore
Geotechnical & Environmental Sciences Consultants

211307001 | 8/20

APPENDIX D

Analytical Test Results and Manifest for Drum Disposal

SunStar Laboratories, Inc.
PROVIDING QUALITY ANALYTICAL SERVICES NATIONWIDE

25712 Commercentre Drive
Lake Forest, California 92630
949.297.5020 Phone
949.297.5027 Fax

27 April 2020

Spencer Marcinek
Ninyo & Moore
475 Goddard, Ste. 200
Irvine, CA 92618

RE: LABOE Capture Program/Valley Village

Enclosed are the results of analyses for samples received by the laboratory on 04/07/20 13:03. If you have any questions concerning this report, please feel free to contact me.

Sincerely,



Mike Jaroudi
Project Manager

SunStar Laboratories, Inc.
PROVIDING QUALITY ANALYTICAL SERVICES NATIONWIDE

25712 Commercentre Drive
Lake Forest, California 92630
949.297.5020 Phone
949.297.5027 Fax

Ninyo & Moore	Project: LABOE Capture Program/Valley Village	
475 Goddard, Ste. 200	Project Number: [none]	**Reported:**
Irvine CA, 92618	Project Manager: Spencer Marcinek	04/27/20 14:12

ANALYTICAL REPORT FOR SAMPLES

Sample ID	Laboratory ID	Matrix	Date Sampled	Date Received
WC-1	T201978-01	Soil	03/27/20 03:00	04/07/20 13:03

SunStar Laboratories, Inc.

The results in this report apply to the samples analyzed in accordance with the chain of custody document. This analytical report must be reproduced in its entirety.

Mike Jaroudi, Project Manager

SunStar Laboratories, Inc.
Providing Quality Analytical Services Nationwide

25712 Commercentre Drive
Lake Forest, California 92630
949.297.5020 Phone
949.297.5027 Fax

Ninyo & Moore	Project: LABOE Capture Program/Valley Village	
475 Goddard, Ste. 200	Project Number: [none]	**Reported:**
Irvine CA, 92618	Project Manager: Spencer Marcinek	04/27/20 14:12

DETECTIONS SUMMARY

Sample ID: WC-1 **Laboratory ID:** T201978-01

Analyte	Result	Reporting Limit	Units	Method	Notes
C13-C28 (DRO)	**41**	10	mg/kg	EPA 8015B	
C29-C40 (MORO)	**190**	10	mg/kg	EPA 8015B	
Barium	**81**	1.0	mg/kg	EPA 6010b	
Chromium	**11**	2.0	mg/kg	EPA 6010b	
Cobalt	**6.7**	2.0	mg/kg	EPA 6010b	
Copper	**11**	1.0	mg/kg	EPA 6010b	
Lead	**7.2**	3.0	mg/kg	EPA 6010b	
Nickel	**6.5**	2.0	mg/kg	EPA 6010b	
Vanadium	**22**	5.0	mg/kg	EPA 6010b	
Zinc	**31**	1.0	mg/kg	EPA 6010b	

SunStar Laboratories, Inc.

The results in this report apply to the samples analyzed in accordance with the chain of custody document. This analytical report must be reproduced in its entirety.

Mike Jaroudi, Project Manager

SunStar Laboratories, Inc.
Providing Quality Analytical Services Nationwide

25712 Commercentre Drive
Lake Forest, California 92630
949.297.5020 Phone
949.297.5027 Fax

Ninyo & Moore	Project: LABOE Capture Program/Valley Village	
475 Goddard, Ste. 200	Project Number: [none]	**Reported:**
Irvine CA, 92618	Project Manager: Spencer Marcinek	04/27/20 14:12

WC-1

T201978-01 (Soil)

SunStar Laboratories, Inc.

Analyte	Result	Reporting Limit	Units	Dilution	Batch	Prepared	Analyzed	Method	Notes
Extractable Petroleum Hydrocarbons by 8015B									
C6-C12 (GRO)	ND	10	mg/kg	1	0040722	04/07/20	04/09/20	EPA 8015B	
C13-C28 (DRO)	**41**	10	"	"	"	"	"	"	
C29-C40 (MORO)	**190**	10	"	"	"	"	"	"	
Surrogate: p-Terphenyl		*91.4 %*	*65-135*		"	"	"	"	
Metals by EPA 6010B									
Antimony	ND	3.0	mg/kg	1	0040827	04/08/20	04/09/20	EPA 6010b	
Silver	ND	2.0	"	"	"	"	"	"	
Arsenic	ND	5.0	"	"	"	"	"	"	
Barium	**81**	1.0	"	"	"	"	"	"	
Beryllium	ND	1.0	"	"	"	"	04/09/20	"	
Cadmium	ND	2.0	"	"	"	"	04/09/20	"	
Chromium	**11**	2.0	"	"	"	"	"	"	
Cobalt	**6.7**	2.0	"	"	"	"	"	"	
Copper	**11**	1.0	"	"	"	"	"	"	
Lead	**7.2**	3.0	"	"	"	"	"	"	
Molybdenum	ND	5.0	"	"	"	"	"	"	
Nickel	**6.5**	2.0	"	"	"	"	"	"	
Selenium	ND	5.0	"	"	"	"	"	"	
Thallium	ND	5.0	"	"	"	"	"	"	
Vanadium	**22**	5.0	"	"	"	"	"	"	
Zinc	**31**	1.0	"	"	"	"	"	"	
Cold Vapor Extraction EPA 7470/7471									
Mercury	ND	0.10	mg/kg	1	0040826	04/08/20	04/08/20	EPA 7471A Soil	

SunStar Laboratories, Inc.

The results in this report apply to the samples analyzed in accordance with the chain of custody document. This analytical report must be reproduced in its entirety.

Mike Jaroudi, Project Manager

SunStar Laboratories, Inc.
Providing Quality Analytical Services Nationwide

25712 Commercentre Drive
Lake Forest, California 92630
949.297.5020 Phone
949.297.5027 Fax

Ninyo & Moore	Project: LABOE Capture Program/Valley Village	
475 Goddard, Ste. 200	Project Number: [none]	**Reported:**
Irvine CA, 92618	Project Manager: Spencer Marcinek	04/27/20 14:12

WC-1

T201978-01 (Soil)

SunStar Laboratories, Inc.

Volatile Organic Compounds by EPA Method 8260B

Analyte	Result	Reporting Limit	Units	Dilution	Batch	Prepared	Analyzed	Method	Notes
Bromobenzene	ND	2.5	ug/kg	1	0040829	04/08/20	04/13/20	EPA 8260B	
Bromochloromethane	ND	2.5	"	"	"	"	"	"	
Bromodichloromethane	ND	2.5	"	"	"	"	"	"	
Bromoform	ND	2.5	"	"	"	"	"	"	
Bromomethane	ND	2.5	"	"	"	"	"	"	
n-Butylbenzene	ND	2.5	"	"	"	"	"	"	
sec-Butylbenzene	ND	2.5	"	"	"	"	"	"	
tert-Butylbenzene	ND	2.5	"	"	"	"	"	"	
Carbon tetrachloride	ND	2.5	"	"	"	"	"	"	
Chlorobenzene	ND	2.5	"	"	"	"	"	"	
Chloroethane	ND	2.5	"	"	"	"	"	"	
Chloroform	ND	2.5	"	"	"	"	"	"	
Chloromethane	ND	2.5	"	"	"	"	"	"	
2-Chlorotoluene	ND	2.5	"	"	"	"	"	"	
4-Chlorotoluene	ND	2.5	"	"	"	"	"	"	
Dibromochloromethane	ND	2.5	"	"	"	"	"	"	
1,2-Dibromo-3-chloropropane	ND	5.0	"	"	"	"	"	"	
1,2-Dibromoethane (EDB)	ND	2.5	"	"	"	"	"	"	
Dibromomethane	ND	2.5	"	"	"	"	"	"	
1,2-Dichlorobenzene	ND	2.5	"	"	"	"	"	"	
1,3-Dichlorobenzene	ND	2.5	"	"	"	"	"	"	
1,4-Dichlorobenzene	ND	2.5	"	"	"	"	"	"	
Dichlorodifluoromethane	ND	2.5	"	"	"	"	"	"	
1,1-Dichloroethane	ND	2.5	"	"	"	"	"	"	
1,2-Dichloroethane	ND	2.5	"	"	"	"	"	"	
1,1-Dichloroethene	ND	2.5	"	"	"	"	"	"	
cis-1,2-Dichloroethene	ND	2.5	"	"	"	"	"	"	
trans-1,2-Dichloroethene	ND	2.5	"	"	"	"	"	"	
1,2-Dichloropropane	ND	2.5	"	"	"	"	"	"	
1,3-Dichloropropane	ND	2.5	"	"	"	"	"	"	
2,2-Dichloropropane	ND	2.5	"	"	"	"	"	"	
1,1-Dichloropropene	ND	2.5	"	"	"	"	"	"	

SunStar Laboratories, Inc.

The results in this report apply to the samples analyzed in accordance with the chain of custody document. This analytical report must be reproduced in its entirety.

Mike Jaroudi, Project Manager

SunStar Laboratories, Inc.
Providing Quality Analytical Services Nationwide

25712 Commercentre Drive
Lake Forest, California 92630
949.297.5020 Phone
949.297.5027 Fax

Ninyo & Moore	Project: LABOE Capture Program/Valley Village	
475 Goddard, Ste. 200	Project Number: [none]	**Reported:**
Irvine CA, 92618	Project Manager: Spencer Marcinek	04/27/20 14:12

WC-1

T201978-01 (Soil)

SunStar Laboratories, Inc.

Volatile Organic Compounds by EPA Method 8260B

Analyte	Result	Reporting Limit	Units	Dilution	Batch	Prepared	Analyzed	Method	Notes
cis-1,3-Dichloropropene	ND	2.5	ug/kg	1	0040829	04/08/20	04/13/20	EPA 8260B	
trans-1,3-Dichloropropene	ND	2.5	"	"	"	"	"	"	
Hexachlorobutadiene	ND	2.5	"	"	"	"	"	"	
Isopropylbenzene	ND	2.5	"	"	"	"	"	"	
p-Isopropyltoluene	ND	2.5	"	"	"	"	"	"	
Methylene chloride	ND	10	"	"	"	"	"	"	
Naphthalene	ND	2.5	"	"	"	"	"	"	
n-Propylbenzene	ND	2.5	"	"	"	"	"	"	
Styrene	ND	2.5	"	"	"	"	"	"	
1,1,2,2-Tetrachloroethane	ND	2.5	"	"	"	"	"	"	
1,1,1,2-Tetrachloroethane	ND	2.5	"	"	"	"	"	"	
Tetrachloroethene	ND	1.5	"	"	"	"	"	"	
1,2,3-Trichlorobenzene	ND	2.5	"	"	"	"	"	"	
1,2,4-Trichlorobenzene	ND	2.5	"	"	"	"	"	"	
1,1,2-Trichloroethane	ND	2.5	"	"	"	"	"	"	
1,1,1-Trichloroethane	ND	2.5	"	"	"	"	"	"	
Trichloroethene	ND	1.5	"	"	"	"	"	"	
Trichlorofluoromethane	ND	2.5	"	"	"	"	"	"	
1,2,3-Trichloropropane	ND	2.5	"	"	"	"	"	"	
1,3,5-Trimethylbenzene	ND	2.5	"	"	"	"	"	"	
1,2,4-Trimethylbenzene	ND	2.5	"	"	"	"	"	"	
Vinyl chloride	ND	2.5	"	"	"	"	"	"	
Benzene	ND	2.5	"	"	"	"	"	"	
Toluene	ND	2.5	"	"	"	"	"	"	
Ethylbenzene	ND	2.5	"	"	"	"	"	"	
m,p-Xylene	ND	5.0	"	"	"	"	"	"	
o-Xylene	ND	2.5	"	"	"	"	"	"	
Surrogate: 4-Bromofluorobenzene		*103 %*	*75.4-139*		"	"	"	"	
Surrogate: Dibromofluoromethane		*101 %*	*73.1-125*		"	"	"	"	
Surrogate: Toluene-d8		*99.4 %*	*82.6-117*		"	"	"	"	

SunStar Laboratories, Inc.



Mike Jaroudi, Project Manager

The results in this report apply to the samples analyzed in accordance with the chain of custody document. This analytical report must be reproduced in its entirety.

SunStar Laboratories, Inc.
Providing Quality Analytical Services Nationwide

25712 Commercentre Drive
Lake Forest, California 92630
949.297.5020 Phone
949.297.5027 Fax

Ninyo & Moore	Project: LABOE Capture Program/Valley Village	
475 Goddard, Ste. 200	Project Number: [none]	**Reported:**
Irvine CA, 92618	Project Manager: Spencer Marcinek	04/27/20 14:12

Extractable Petroleum Hydrocarbons by 8015B - Quality Control

SunStar Laboratories, Inc.

Analyte	Result	Reporting Limit	Units	Spike Level	Source Result	%REC	%REC Limits	RPD	RPD Limit	Notes
Batch 0040722 - EPA 3550B GC										
Blank (0040722-BLK1)				Prepared: 04/07/20 Analyzed: 04/09/20						
C6-C12 (GRO)	ND	10	mg/kg							
C13-C28 (DRO)	ND	10	"							
C29-C40 (MORO)	ND	10	"							
Surrogate: p-Terphenyl	*90.4*		*"*	*102*		*88.6*	*65-135*			
LCS (0040722-BS1)				Prepared: 04/07/20 Analyzed: 04/09/20						
C13-C28 (DRO)	450	10	mg/kg	510		88.5	75-125			
Surrogate: p-Terphenyl	*88.7*		*"*	*102*		*86.9*	*65-135*			
LCS Dup (0040722-BSD1)				Prepared: 04/07/20 Analyzed: 04/09/20						
C13-C28 (DRO)	440	10	mg/kg	510		86.3	75-125	2.55	20	
Surrogate: p-Terphenyl	*86.9*		*"*	*102*		*85.1*	*65-135*			

SunStar Laboratories, Inc.

The results in this report apply to the samples analyzed in accordance with the chain of custody document. This analytical report must be reproduced in its entirety.

Mike Jaroudi, Project Manager

SunStar Laboratories, Inc.
Providing Quality Analytical Services Nationwide

25712 Commercentre Drive
Lake Forest, California 92630
949.297.5020 Phone
949.297.5027 Fax

Ninyo & Moore	Project: LABOE Capture Program/Valley Village	
475 Goddard, Ste. 200	Project Number: [none]	**Reported:**
Irvine CA, 92618	Project Manager: Spencer Marcinek	04/27/20 14:12

Metals by EPA 6010B - Quality Control

SunStar Laboratories, Inc.

Analyte	Result	Reporting Limit	Units	Spike Level	Source Result	%REC	%REC Limits	RPD	RPD Limit	Notes
Batch 0040827 - EPA 3050B										
Blank (0040827-BLK1)				Prepared: 04/08/20 Analyzed: 04/09/20						
Antimony	ND	3.0	mg/kg							
Silver	8.08	2.0	"							B-ND
Arsenic	ND	5.0	"							
Barium	ND	1.0	"							
Beryllium	ND	1.0	"							
Cadmium	ND	2.0	"							
Chromium	ND	2.0	"							
Cobalt	ND	2.0	"							
Copper	ND	1.0	"							
Lead	ND	3.0	"							
Molybdenum	ND	5.0	"							
Nickel	ND	2.0	"							
Selenium	ND	5.0	"							
Thallium	ND	5.0	"							
Vanadium	ND	5.0	"							
Zinc	ND	1.0	"							
LCS (0040827-BS1)				Prepared: 04/08/20 Analyzed: 04/09/20						
Arsenic	98.9	5.0	mg/kg	100		98.9	75-125			
Barium	99.9	1.0	"	100		99.9	75-125			
Cadmium	99.4	2.0	"	100		99.4	75-125			
Chromium	99.6	2.0	"	100		99.6	75-125			
Lead	99.9	3.0	"	100		99.9	75-125			
Matrix Spike (0040827-MS1)		**Source: T201972-01**		Prepared: 04/08/20 Analyzed: 04/09/20						
Arsenic	67.6	5.0	mg/kg	94.3	2.02	69.5	75-125			QM-05
Barium	139	1.0	"	94.3	74.1	69.1	75-125			QM-05
Cadmium	70.2	2.0	"	94.3	0.317	74.1	75-125			QM-05
Chromium	83.5	2.0	"	94.3	16.1	71.5	75-125			QM-05
Lead	74.3	3.0	"	94.3	9.12	69.1	75-125			QM-05

SunStar Laboratories, Inc.



Mike Jaroudi, Project Manager

The results in this report apply to the samples analyzed in accordance with the chain of custody document. This analytical report must be reproduced in its entirety.

SunStar Laboratories, Inc.
Providing Quality Analytical Services Nationwide

25712 Commercentre Drive
Lake Forest, California 92630
949.297.5020 Phone
949.297.5027 Fax

Ninyo & Moore	Project: LABOE Capture Program/Valley Village	
475 Goddard, Ste. 200	Project Number: [none]	**Reported:**
Irvine CA, 92618	Project Manager: Spencer Marcinek	04/27/20 14:12

Metals by EPA 6010B - Quality Control

SunStar Laboratories, Inc.

Analyte	Result	Reporting Limit	Units	Spike Level	Source Result	%REC	%REC Limits	RPD	RPD Limit	Notes
Batch 0040827 - EPA 3050B										
Matrix Spike Dup (0040827-MSD1)	**Source: T201972-01**			Prepared: 04/08/20 Analyzed: 04/09/20						
Arsenic	60.3	4.5	mg/kg	90.9	2.02	64.1	75-125	11.3	20	QM-05
Barium	127	0.91	"	90.9	74.1	58.8	75-125	8.79	20	QM-05
Cadmium	62.3	1.8	"	90.9	0.317	68.1	75-125	12.0	20	QM-05
Chromium	72.9	1.8	"	90.9	16.1	62.5	75-125	13.5	20	QM-05
Lead	67.5	2.7	"	90.9	9.12	64.2	75-125	9.69	20	QM-05

SunStar Laboratories, Inc.

The results in this report apply to the samples analyzed in accordance with the chain of custody document. This analytical report must be reproduced in its entirety.

Mike Jaroudi, Project Manager

SunStar Laboratories, Inc.
Providing Quality Analytical Services Nationwide

25712 Commercentre Drive
Lake Forest, California 92630
949.297.5020 Phone
949.297.5027 Fax

Ninyo & Moore	Project: LABOE Capture Program/Valley Village	
475 Goddard, Ste. 200	Project Number: [none]	**Reported:**
Irvine CA, 92618	Project Manager: Spencer Marcinek	04/27/20 14:12

Cold Vapor Extraction EPA 7470/7471 - Quality Control

SunStar Laboratories, Inc.

Analyte	Result	Reporting Limit	Units	Spike Level	Source Result	%REC	%REC Limits	RPD	RPD Limit	Notes
Batch 0040826 - EPA 7471A Soil										
Blank (0040826-BLK1)				Prepared & Analyzed: 04/08/20						
Mercury	ND	0.10	mg/kg							
LCS (0040826-BS1)				Prepared & Analyzed: 04/08/20						
Mercury	0.407	0.10	mg/kg	0.403		101	80-120			
Matrix Spike (0040826-MS1)	**Source: T201972-01**			Prepared & Analyzed: 04/08/20						
Mercury	0.384	0.10	mg/kg	0.397	0.0460	85.0	75-125			
Matrix Spike Dup (0040826-MSD1)	**Source: T201972-01**			Prepared & Analyzed: 04/08/20						
Mercury	0.406	0.10	mg/kg	0.391	0.0460	92.1	75-125	5.67	20	

SunStar Laboratories, Inc.



Mike Jaroudi, Project Manager

The results in this report apply to the samples analyzed in accordance with the chain of custody document. This analytical report must be reproduced in its entirety.

SunStar Laboratories, Inc.
Providing Quality Analytical Services Nationwide

25712 Commercentre Drive
Lake Forest, California 92630
949.297.5020 Phone
949.297.5027 Fax

Ninyo & Moore	Project: LABOE Capture Program/Valley Village	
475 Goddard, Ste. 200	Project Number: [none]	**Reported:**
Irvine CA, 92618	Project Manager: Spencer Marcinek	04/27/20 14:12

Volatile Organic Compounds by EPA Method 8260B - Quality Control

SunStar Laboratories, Inc.

Analyte	Result	Reporting Limit	Units	Spike Level	Source Result	%REC	%REC Limits	RPD	RPD Limit	Notes
Batch 0040829 - EPA 5030 GCMS										
Blank (0040829-BLK1)				Prepared: 04/08/20 Analyzed: 04/13/20						
Bromobenzene	ND	2.5	ug/kg							
Bromochloromethane	ND	2.5	"							
Bromodichloromethane	ND	2.5	"							
Bromoform	ND	2.5	"							
Bromomethane	ND	2.5	"							
n-Butylbenzene	ND	2.5	"							
sec-Butylbenzene	ND	2.5	"							
tert-Butylbenzene	ND	2.5	"							
Carbon tetrachloride	ND	2.5	"							
Chlorobenzene	ND	2.5	"							
Chloroethane	ND	2.5	"							
Chloroform	ND	2.5	"							
Chloromethane	ND	2.5	"							
2-Chlorotoluene	ND	2.5	"							
4-Chlorotoluene	ND	2.5	"							
Dibromochloromethane	ND	2.5	"							
1,2-Dibromo-3-chloropropane	ND	5.0	"							
1,2-Dibromoethane (EDB)	ND	2.5	"							
Dibromomethane	ND	2.5	"							
1,2-Dichlorobenzene	ND	2.5	"							
1,3-Dichlorobenzene	ND	2.5	"							
1,4-Dichlorobenzene	ND	2.5	"							
Dichlorodifluoromethane	ND	2.5	"							
1,1-Dichloroethane	ND	2.5	"							
1,2-Dichloroethane	ND	2.5	"							
1,1-Dichloroethene	ND	2.5	"							
cis-1,2-Dichloroethene	ND	2.5	"							
trans-1,2-Dichloroethene	ND	2.5	"							
1,2-Dichloropropane	ND	2.5	"							
1,3-Dichloropropane	ND	2.5	"							
2,2-Dichloropropane	ND	2.5	"							
1,1-Dichloropropene	ND	2.5	"							
cis-1,3-Dichloropropene	ND	2.5	"							
trans-1,3-Dichloropropene	ND	2.5	"							
Hexachlorobutadiene	ND	2.5	"							
Isopropylbenzene	ND	2.5	"							

SunStar Laboratories, Inc.



Mike Jaroudi, Project Manager

The results in this report apply to the samples analyzed in accordance with the chain of custody document. This analytical report must be reproduced in its entirety.

SunStar Laboratories, Inc.
Providing Quality Analytical Services Nationwide

25712 Commercentre Drive
Lake Forest, California 92630
949.297.5020 Phone
949.297.5027 Fax

Ninyo & Moore	Project: LABOE Capture Program/Valley Village	
475 Goddard, Ste. 200	Project Number: [none]	**Reported:**
Irvine CA, 92618	Project Manager: Spencer Marcinek	04/27/20 14:12

Volatile Organic Compounds by EPA Method 8260B - Quality Control

SunStar Laboratories, Inc.

Analyte	Result	Reporting Limit	Units	Spike Level	Source Result	%REC	%REC Limits	RPD	RPD Limit	Notes
Batch 0040829 - EPA 5030 GCMS										
Blank (0040829-BLK1)				Prepared: 04/08/20 Analyzed: 04/13/20						
p-Isopropyltoluene	ND	2.5	ug/kg							
Methylene chloride	ND	10	"							
Naphthalene	ND	2.5	"							
n-Propylbenzene	ND	2.5	"							
Styrene	ND	2.5	"							
1,1,2,2-Tetrachloroethane	ND	2.5	"							
1,1,1,2-Tetrachloroethane	ND	2.5	"							
Tetrachloroethene	ND	1.5	"							
1,2,3-Trichlorobenzene	ND	2.5	"							
1,2,4-Trichlorobenzene	ND	2.5	"							
1,1,2-Trichloroethane	ND	2.5	"							
1,1,1-Trichloroethane	ND	2.5	"							
Trichloroethene	ND	1.5	"							
Trichlorofluoromethane	ND	2.5	"							
1,2,3-Trichloropropane	ND	2.5	"							
1,3,5-Trimethylbenzene	ND	2.5	"							
1,2,4-Trimethylbenzene	ND	2.5	"							
Vinyl chloride	ND	2.5	"							
Benzene	ND	2.5	"							
Toluene	ND	2.5	"							
Ethylbenzene	ND	2.5	"							
m,p-Xylene	ND	5.0	"							
o-Xylene	ND	2.5	"							
Surrogate: 4-Bromofluorobenzene	*52.2*		*"*	*50.0*		*104*	*75.4-139*			
Surrogate: Dibromofluoromethane	*49.5*		*"*	*50.0*		*99.0*	*73.1-125*			
Surrogate: Toluene-d8	*49.8*		*"*	*50.0*		*99.5*	*82.6-117*			
LCS (0040829-BS1)				Prepared: 04/08/20 Analyzed: 04/13/20						
Chlorobenzene	41.8	2.5	ug/kg	50.0		83.6	65.2-124			
1,1-Dichloroethene	42.8	2.5	"	50.0		85.6	60.9-131			
Trichloroethene	43.2	1.5	"	50.0		86.3	62.1-126			
Benzene	42.8	2.5	"	50.0		85.6	65.3-127			
Toluene	39.8	2.5	"	50.0		79.5	64.3-122			
Surrogate: 4-Bromofluorobenzene	*50.0*		*"*	*50.0*		*99.9*	*75.4-139*			
Surrogate: Dibromofluoromethane	*48.1*		*"*	*50.0*		*96.2*	*73.1-125*			
Surrogate: Toluene-d8	*50.1*		*"*	*50.0*		*100*	*82.6-117*			

SunStar Laboratories, Inc.



Mike Jaroudi, Project Manager

The results in this report apply to the samples analyzed in accordance with the chain of custody document. This analytical report must be reproduced in its entirety.

SunStar Laboratories, Inc.
Providing Quality Analytical Services Nationwide

25712 Commercentre Drive
Lake Forest, California 92630
949.297.5020 Phone
949.297.5027 Fax

Ninyo & Moore	Project: LABOE Capture Program/Valley Village	
475 Goddard, Ste. 200	Project Number: [none]	**Reported:**
Irvine CA, 92618	Project Manager: Spencer Marcinek	04/27/20 14:12

Volatile Organic Compounds by EPA Method 8260B - Quality Control

SunStar Laboratories, Inc.

Analyte	Result	Reporting Limit	Units	Spike Level	Source Result	%REC	%REC Limits	RPD	RPD Limit	Notes
Batch 0040829 - EPA 5030 GCMS										
Matrix Spike (0040829-MS1)	**Source: T201980-02**			Prepared: 04/08/20 Analyzed: 04/13/20						
Chlorobenzene	43.2	2.5	ug/kg	49.8	ND	86.7	65.2-125			
1,1-Dichloroethene	49.4	2.5	"	49.8	ND	99.2	60.9-131			
Trichloroethene	46.1	1.5	"	49.8	ND	92.6	62.1-126			
Benzene	45.7	2.5	"	49.8	ND	91.7	65.3-127			
Toluene	42.7	2.5	"	49.8	ND	85.7	64.3-125			
Surrogate: 4-Bromofluorobenzene	*50.3*		"	*49.8*		*101*	*75.4-139*			
Surrogate: Dibromofluoromethane	*47.8*		"	*49.8*		*96.0*	*73.1-125*			
Surrogate: Toluene-d8	*50.1*		"	*49.8*		*101*	*82.6-117*			
Matrix Spike Dup (0040829-MSD1)	**Source: T201980-02**			Prepared: 04/08/20 Analyzed: 04/13/20						
Chlorobenzene	41.2	2.5	ug/kg	49.8	ND	82.7	65.2-125	4.74	20	
1,1-Dichloroethene	48.6	2.5	"	49.8	ND	97.6	60.9-131	1.61	20	
Trichloroethene	44.3	1.5	"	49.8	ND	88.9	62.1-126	4.10	20	
Benzene	44.3	2.5	"	49.8	ND	89.0	65.3-127	2.99	20	
Toluene	40.7	2.5	"	49.8	ND	81.8	64.3-125	4.66	20	
Surrogate: 4-Bromofluorobenzene	*50.5*		"	*49.8*		*101*	*75.4-139*			
Surrogate: Dibromofluoromethane	*49.0*		"	*49.8*		*98.4*	*73.1-125*			
Surrogate: Toluene-d8	*50.0*		"	*49.8*		*100*	*82.6-117*			

SunStar Laboratories, Inc.

The results in this report apply to the samples analyzed in accordance with the chain of custody document. This analytical report must be reproduced in its entirety.

Mike Jaroudi, Project Manager

SunStar Laboratories, Inc.
Providing Quality Analytical Services Nationwide

25712 Commercentre Drive
Lake Forest, California 92630
949.297.5020 Phone
949.297.5027 Fax

Ninyo & Moore	Project: LABOE Capture Program/Valley Village	
475 Goddard, Ste. 200	Project Number: [none]	**Reported:**
Irvine CA, 92618	Project Manager: Spencer Marcinek	04/27/20 14:12

Notes and Definitions

QM-05	The spike recovery was outside acceptance limits for the MS and/or MSD due to possible matrix interference. The LCS was within acceptance criteria. The data is acceptable as no negative impact on data is expected.
B-ND	The analyte is found in the method blank at a level greater than the reporting limit but the associated samples are ND. There is no impact on data.
DET	Analyte DETECTED
ND	Analyte NOT DETECTED at or above the reporting limit
NR	Not Reported
dry	Sample results reported on a dry weight basis
RPD	Relative Percent Difference

SunStar Laboratories, Inc.

The results in this report apply to the samples analyzed in accordance with the chain of custody document. This analytical report must be reproduced in its entirety.

Mike Jaroudi, Project Manager

SunStar Laboratories, Inc.
PROVIDING QUALITY ANALYTICAL SERVICES NATIONWIDE

SAMPLE RECEIVING REVIEW SHEET

Batch/Work Order #: T20 1978

Client Name: Ninyo & Moore Project: LABOE Capture Programs/Whitsett

Delivered by: ☐ Client ☒ SunStar Courier ☐ GSO ☐ FedEx ☐ Other

If Courier, Received by: Dave Berner Date/Time Courier Received: 4.7.20 ~~13:03~~ DB 12:45

Lab Received by: Brian Charon Date/Time Lab Received: 4.7.20 13:03

Total number of coolers received: Thermometer ID: SC-1 Calibration due : 6/27/20

Temperature:	Cooler #1	1.4 °C +/- the CF (+ 1.2°C)	= 2.6	°C corrected temperature
Temperature:	Cooler #2	°C +/- the CF (+ 1.2°C)	=	°C corrected temperature
Temperature:	Cooler #3	°C +/- the CF (+ 1.2°C)	=	°C corrected temperature

Temperature criteria = ≤ 6°C (no frozen containers)	Within criteria?	☒ **Yes** ☐ **No**
If NO:		
Samples received on ice?	☐ Yes	☐ **No → Complete Non-Conformance Sheet**
If on ice, samples received same day collected?	☐ Yes → Acceptable	☐ **No → Complete Non-Conformance Sheet**

Custody seals intact on cooler/sample	☐ Yes	~~☒ No*~~ DB	☒ N/A
Sample containers intact	☒ Yes	☐ No*	
Sample labels match Chain of Custody IDs	☒ Yes	☐ No*	
Total number of containers received match COC	☒ Yes	☐ No*	
Proper containers received for analyses requested on COC	☒ Yes	☐ No*	
Proper preservative indicated on COC/containers for analyses requested	☐ Yes	~~☒ No*~~ DB	☒ N/A
Complete shipment received in good condition with correct temperatures, containers, labels, volumes preservatives and within method specified holding times	☒ **Yes**	☐ **No***	

* Complete Non-Conformance Receiving Sheet if checked

Cooler/Sample Review - Initials and date: DB 4.7.20

Comments: Sample WC-2 has an extra jar.

SunStar Laboratories, Inc.
25712 Commercentre Dr
Lake Forest, CA 92630
949-297-5020

Chain of Custody Record

Client: Ninyo & Moore
Address: 475 Goddard Suite 200 Irvine CA
Phone: 949.753.7070 Fax: 949.753.7070
Project Manager: Morteza Mirshekari

Date: 4/7/2020 Page: 1 Of 1
Project Name: LABOE Capture Program / Valley Village
Collector:
Client Project #:
Batch #: T201978
EDF #:

	Sample ID	Date Sampled	Time	Sample Type	Container Type	8260	8260 + OXY	8260 BTEX, OXY only	8270	8021 BTEX	8015M (gasoline)	8015M (diesel)	8015M Ext./Carbon Chain	6010/7000 Title 22 Metals	8015 TPHS				Laboratory ID #	Comments/Preservative	Total # of containers
01-	WC-1	3/27/2020	3:00pm	Soil	jar	X								X	X						1

Relinquished by: (signature)	Date / Time	Received by: (signature)	Date / Time
Kelly Byl	4/7/2020 12:45	DB [signature]	4.7.20 12:45
Relinquished by: (signature)	Date / Time	Received by: (signature)	Date / Time
		Mike Jurowi [signature]	4.17-20 11:25
Relinquished by: (signature)	Date / Time	Received by: (signature)	Date / Time

Total # of containers
Chain of Custody seals Y/N/NA
Seals intact? Y/N/NA
Received good condition/cold

Notes

Turn around time:

Sample disposal Instructions: Disposal @ $2.00 each ____ Return to client ____ Pickup ____

SunStar Laboratories, Inc.
PROVIDING QUALITY ANALYTICAL SERVICES NATIONWIDE

WORK ORDER

T201978

Client: **Ninyo & Moore** **Project Manager:** **Mike Jaroudi**
Project: **LABOE Capture Program/Valley Village** **Project Number:** **[none]**

Report To:
Ninyo & Moore
Spencer Marcinek
475 Goddard, Ste. 200
Irvine, CA 92618

Date Due: 04/14/20 17:00 (5 day TAT)
Received By: Dave Berner Date Received: 04/07/20 13:03
Logged In By: Dave Berner Date Logged In: 04/07/20 14:16

Samples Received at: **2.6°C**
Custody Seals No Received On Ice Yes
Containers Intact Yes
COC/Labels Agree Yes
Preservation Confirı No

Analysis	Due	TAT	Expires	Comments
T201978-01 WC-1 [Soil] Sampled 03/27/20 03:00 (GMT-08:00) Pacific Time (US &				
6010 Title 22	04/14/20 15:00	5	04/01/20 03:00	
8015 Carbon Chain	04/14/20 15:00	5	04/10/20 03:00	
8260	04/14/20 15:00	5	04/10/20 03:00	
T201978-02 WC-2 [Soil] Sampled 03/27/20 12:00 (GMT-08:00) Pacific Time (US &				
6010 Title 22	04/14/20 15:00	5	04/01/20 12:00	
8015 Carbon Chain	04/14/20 15:00	5	04/10/20 12:00	
8260	04/14/20 15:00	5	04/10/20 12:00	
T201978-03 WC-1 [Soil] Sampled 03/27/20 12:00 (GMT-08:00) Pacific Time (US &				
6010 Title 22	04/20/20 15:00	1	04/01/20 12:00	
8015 Carbon Chain	04/20/20 15:00	1	04/10/20 12:00	
8260	04/20/20 15:00	1	04/10/20 12:00	

Analysis groups included in this work order

6010 Title 22
subgroup 6010B T22 7470/71 Hg

Reviewed By Date

Manifest

SOIL SAFE OF CA – TPST
Non-Hazardous Soils

↓ Manifest # ↓

Date of Shipment:	Responsible for Payment:	Transport Truck #:	Facility #:	Approval Number:	Load #
5/14/20		929/8306	A07	AS-1729	001

Generator and/or Consultant

Generator's Name and Billing Address:	Generator's Phone #: / Person to Contact: / FAX#:	Customer Account Number
CITY OF LOS ANGELES DEPARTMENT OF RECREATION AND PARKS 211 NORTH FIGUEROA STREET 3RD FLOOR, SUITE 350 LOS ANGELES, CA 90012	818-455-5622	
Consultant's Name and Billing Address:	Consultant's Phone #: / Person to Contact: / FAX#:	Customer Account Number
Generation Site (Transport from): *(name & address)* VALLEY VILLAGE PARK 5000 WESTPARK DR. NORTH HOLLYWOOD, CA 91601	Site Phone #: / Person to Contact: / FAX#:	
Designated Facility (Transport to): *(name & address)* SOIL SAFE 12328 HIBISCUS AVENUE ADELANTO, CA 92301	Facility Phone #: (800) 862-8001 Person to Contact: JOE PROVANSAL FAX#: (760) 246-8004	
Transporter Name and Mailing Address: BELSHIRE 25971 TOWNE CENTRE DRIVE FOOTHILL RANCH, CA 92610 BESI: 318184	Transporter's Phone #: 949-460-5200 Person to Contact: LARRY MOOTHART FAX#: 949-460-5210	CAR000183913 450647 Customer Account Number

Description of Soil	Moisture Content	Contaminated by:	Approx. Qty:	Description of Delivery	Gross Weight	Tare Weight	Net Weight
Sand ☐ Organic ☐ Clay ☐ Other ☐	0 - 10% ☐ 10 - 20% ☐ 20% - over ☐	Gas ☐ Diesel ☐ Other ☐	6 DM	Soil	42820	39100	3720
Sand ☐ Organic ☐ Clay ☐ Other ☐	0 - 10% ☐ 10 - 20% ☐ 20% - over ☐	Gas ☐ Diesel ☐ Other ☐					1.86

List any exception to items listed above: Scale Ticket # 160211

Generator's and/or consultant's certification: I/We certify that the soil referenced herein is taken entirely from those soils descried in the Soil Data Sheet completed and certified by me/us for the Generation Site shown above and nothing has been added or done to such soil that would alter it in any way.

Print or Type Name: Generator ☐ Consultant ☐	Signature and date:	Month	Day	Year
RODRFO (RUDY) PEREZ	Rodolfo Perez	5	6	20

Transporter

Transporter's certification: I/We acknowledge receipt of the soil referenced above and certify that such soil is being delivered in exactly the same condition as when received. I/We further certify that the soil is being directly transported from the Generation Site to the Designated Facility without off-loading, adding to, subtracting from or in any way delaying delivery to such site.

Print or Type Name:	Signature and date:	Month	Day	Year
Carlos Villa	Carlos Villa	05	06	20

Recycling Facility

Discrepancies:

5000WEST
2289361

Recycling Facility certifies the receipt of the soil covered by this manifest except as noted above:

Print or Type Name:	Signature and date:
J. PROVANSAL	5.14.20

Please print or type.

TRANSPORTER COPY

APPENDIX E

Liquefaction Analysis

LIQUEFACTION ANALYSIS

Valley Village

Hole No.=B-1 Water Depth=10 ft Surface Elev.=618

Magnitude=7.25
Acceleration=0.828g

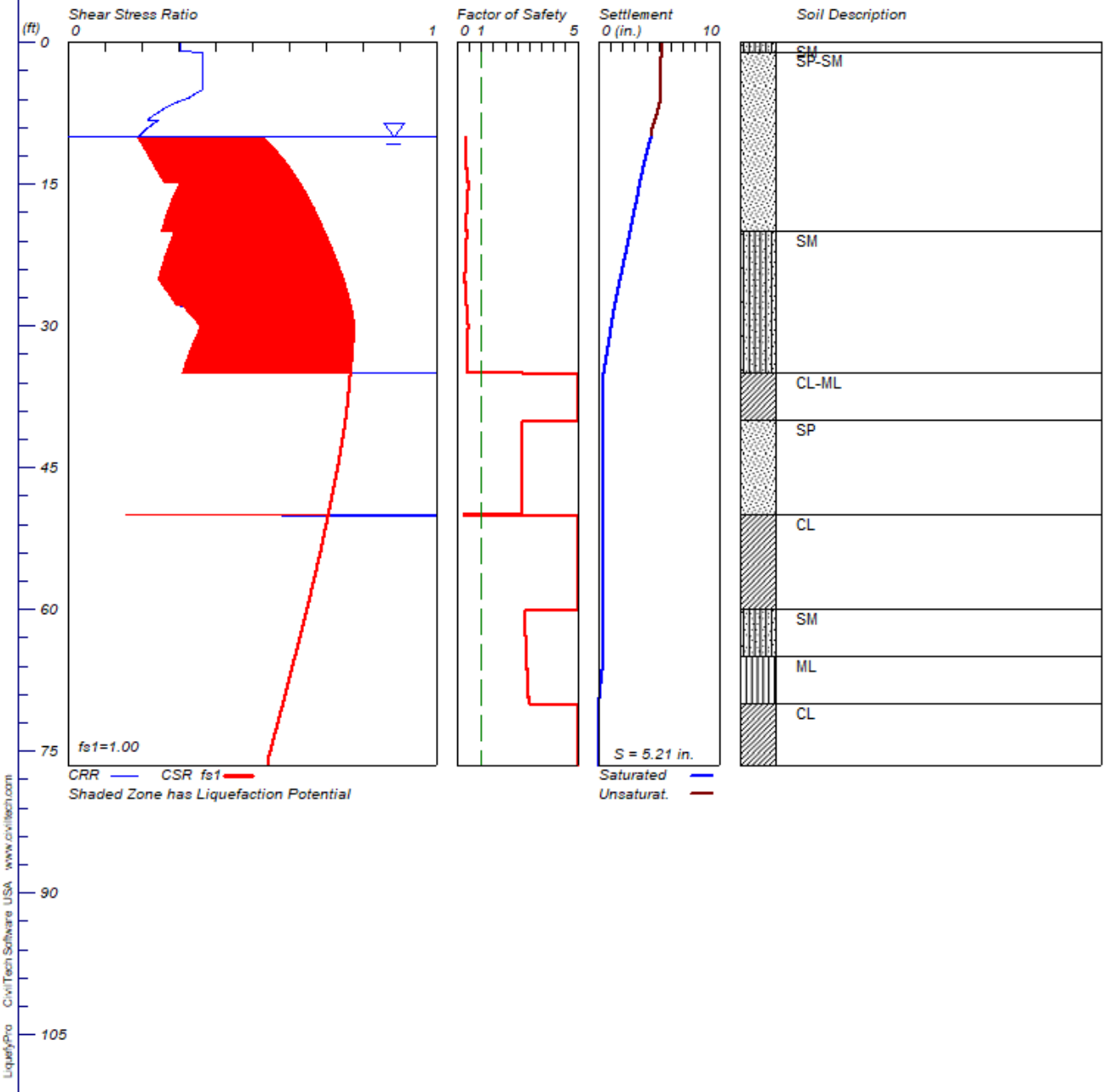

LiquefyPro CivilTech Software USA www.civiltech.com

LIQUEFACTION ANALYSIS

Valley Village

Hole No.=CPT-1 Water Depth=10 ft Surface Elev.=618

Magnitude=7.25
Acceleration=0.828g

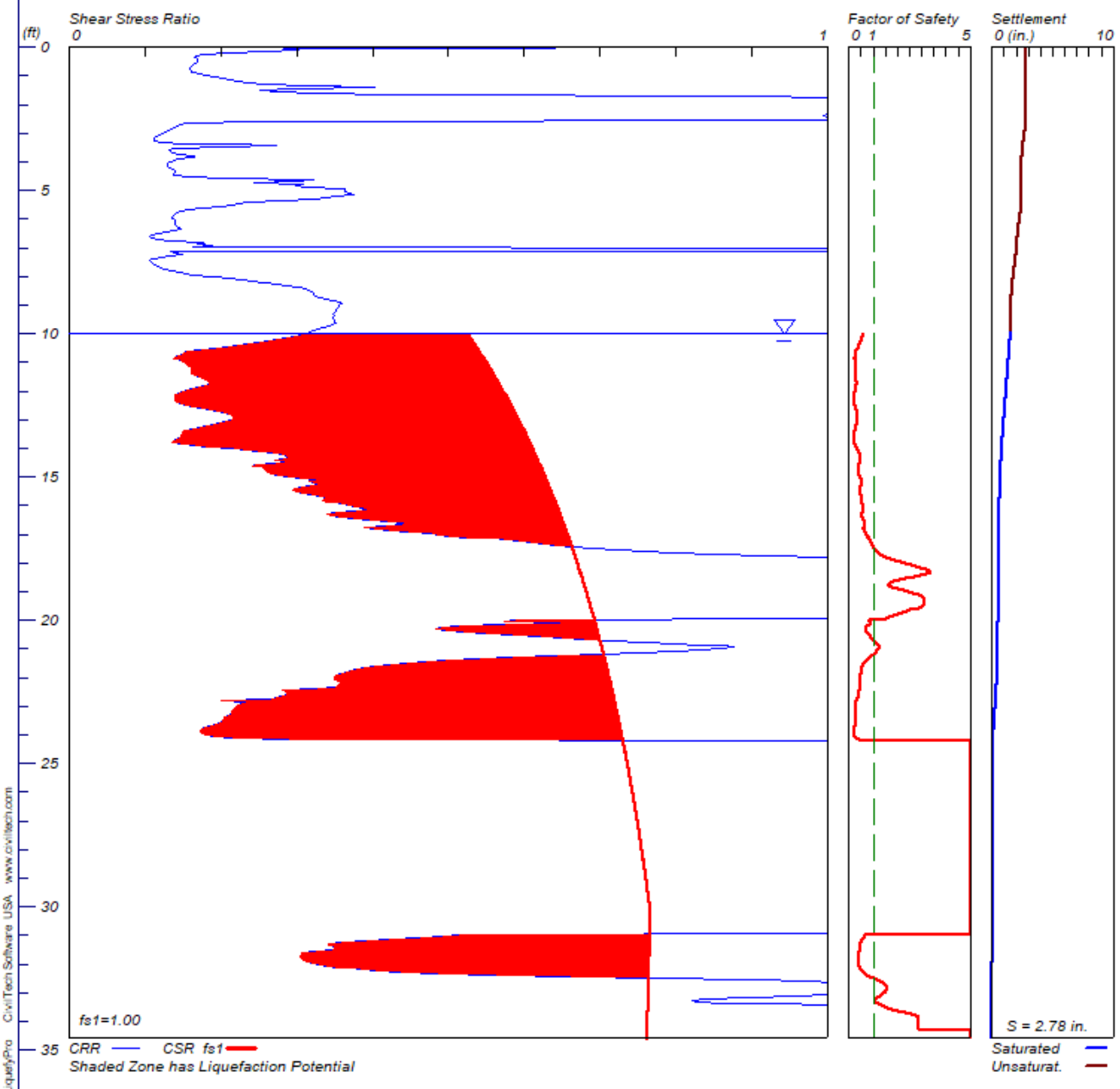

LIQUEFACTION ANALYSIS

Valley Village

Hole No.=CPT-2 Water Depth=10 ft Surface Elev.=618

Magnitude=7.25
Acceleration=0.828g

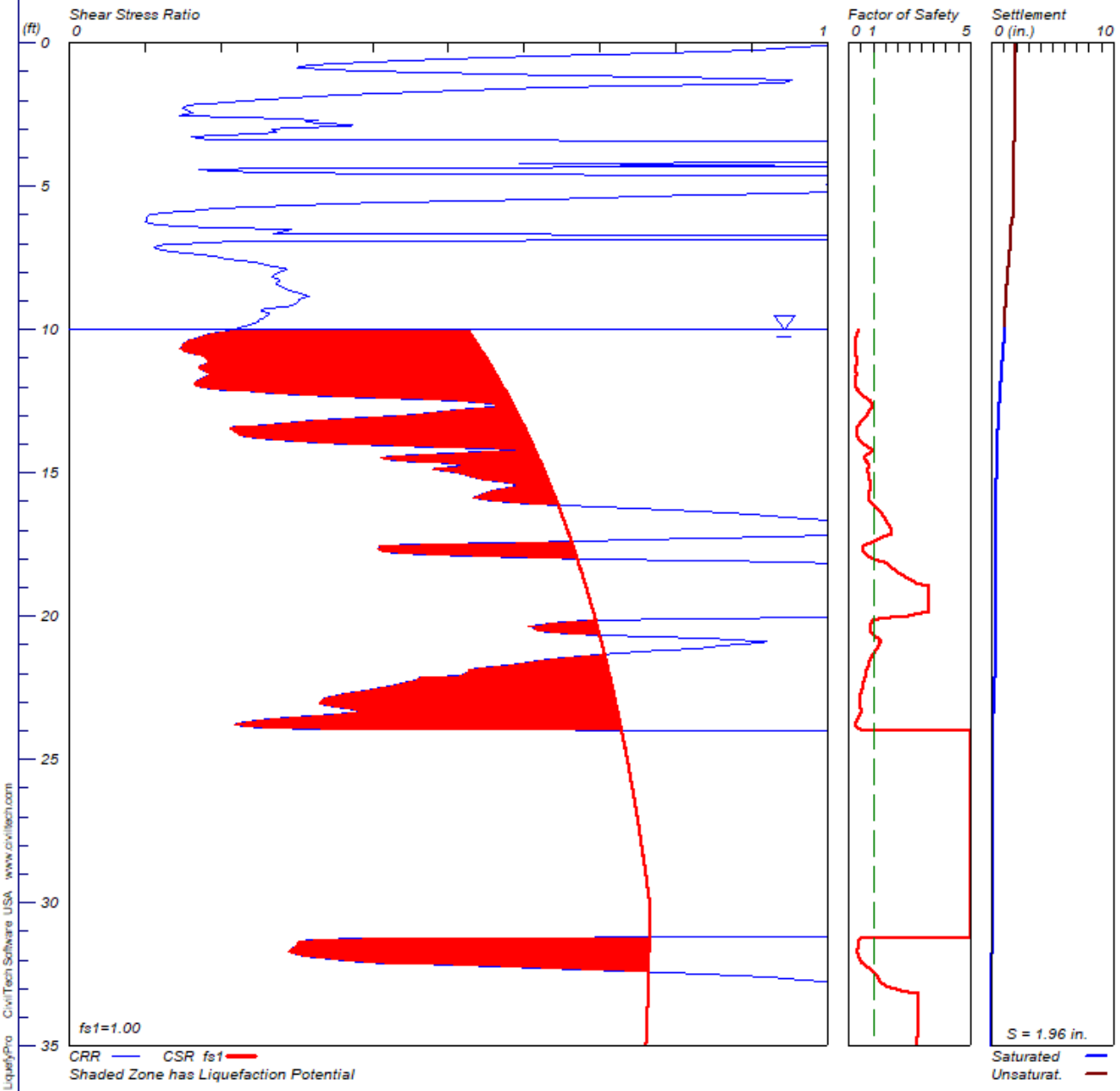

Ninyo & Moore

Geotechnical & Environmental Sciences Consultants

475 Goddard, Suite 200 | Irvine, California 92618 | p. 949.753.7070

ARIZONA | CALIFORNIA | COLORADO | NEVADA | TEXAS | UTAH

www.ninyoandmoore.com

BUREAU OF ENGINEERING

VALLEY VILLAGE PARK
STORM WATER CAPTURE PROJECT
PROJECT NO. EW40085F

ATTACHMENT 2
ENVISION SCORECARD

MARCH 2025

City of Los Angeles
California

Department of Public Works
Bureau of Engineering

ENGINEERING
CITY OF LOS ANGELES

Stantec

Memo

To:	Matthew Huckaby Carollo Engineers, Inc.	From:	Brad Moore, ENV SP Stantec
File:	LABOE Valley Village Park Envision Verification	Date:	August 26, 2022

Reference: 184031280

The Project Team is committed to using the Envision® Sustainable Infrastructure Rating System. Envision is a voluntary rating system, administered by the Institute of Sustainable Infrastructure (ISI), that consists of 64 credits under 5 categories covering economic, environmental, and social sustainability issues for infrastructure projects. The framework relies on inputs from all project partners from inception to completion to advance the project's sustainability performance holistically. The Valley Village Park project (referred to herein as "the Project") will be seeking Envision verification upon completion of the design phase.

1.1 Projected Envision Performance – Verification

Envision scores are assessed on the basis that 0% represents the Project performing at all typical industry averages. Any score above 0% is recognition that the Project is performing above industry standards and providing more sustainable infrastructure. The Projected Envision Score for Valley Village Park is:

- Projected Envision Score – 27.4 percent (Verified)

Projected performance of 27.4%, recognizes that the Project is performing 27.4% better than typical industry averages. If the Project completes Envision verification and is recognized with an Envision Award by ISI at the Verified level – this represents a significant achievement for the Project. However, to receive that award it will require renewed commitment to sustainability performance throughout the remainder of the Project.

1.2 Sustainability Performance Scorecard

A copy of the Envision Scorecard is included at the end of this memo. All performance listed is an estimate and must be confirmed by ISI during verification.

1.3 Verification Pathways

There are two possible verification pathways under Envision v3. The Project will be following Pathway A: Design + Post-Construction. Pathway A is a two-step process with an initial design review followed by post-construction review (see Figure 1).



Figure 1 Envision Assessment Summary: Envision v3 certification Pathway A (Institute for Sustainable Infrastructure)

Under Pathway A, projects can earn an Envision Award following the completion of the design phase. This requires the design team to submit the Envision Verification package to ISI after the completion of design.

The Envision Verification package includes coversheets for each credit where the Project is seeking performance (including credits denoted as Not Applicable), along with supporting documentation that proves the claims being made. Select construction related credits are submitted as "Pending" with the construction related sustainability commitments defined and the expected documents to be produced during construction outlined. This allows projects with extended construction timelines to gain recognition for planning and design achievements. This early recognition offers the benefit of packaging the credit submittals regarding planning and design issues (the bulk of credits) while information is relatively "fresh" as it may become difficult to gather legacy knowledge and documents at project completion.

The "Start Verification" stage is initiated when the Verification Fee is paid to ISI by LABOE. Verification fees are subject to change and dependent on the estimated construction value of the Project. Verification fees are listed online at ISI's website:

https://sustainableinfrastructure.org/project-verification/verification-fees/

The Design Review stage is initiated when all coversheets and supporting documentation is uploaded to ISI's website and submitted for review by an independent Envision Verifier. The Verifier and ISI will review the coversheets and supporting documents for conformance with the Envision framework. The Verifier will review each credit and determine if the project has performed to the level outlined in the Envision framework. After an initial review lasting approximately two months, the Verifier will return comments to the Project Team. The Project Team will have the opportunity to address the comments made by the Verifier and resubmit credits with clarifications or additional documentation requested by the Verifier. Once the Project Team resubmits the updated credits, the Verifier will complete a review of the new material. The Verifier and ISI will decide if the Project should be recognized with an Envision Award during the second review. The second review typically lasts approximately one month. If the Project is recognized with an Envision Award by ISI, then the sustainability commitments will need to be implemented and documented during construction. Documentation produced during construction will be submitted at the end of construction as part of the Post-Construction Review before the Project's Envision Verification is complete.

1.4 Construction Considerations

The following credits have been included in the contract specifications for performance during the construction phase based on existing pursuits or initiatives being implemented by the Project:

NOTE: The summary of construction commitments are a generalized summary of the performance requirement with the exact performance and documentation requirements outlined in the Contract Specifications.

- QL 1.3 Improve Construction Safety – Enhanced – 5 points
    - Summary of Construction Commitments:
        - The Contractor will make strong commitments to monitoring and implementing health and safety in writing.
        - Contractor has a safety rewards program.
        - Contractor has a program ensuring subcontractors maintain a high level of safety.
        - The Contractor provides reliable feedback mechanisms to identify risks, conduct hazard analyses, and communicate hazards to personnel.
        - Documentation of safety and/or security competency training programs from the Contractor.
    - Document Confirming Requirement:
        - Contract Specifications Section 01022 Envision Procedures

- QL 1.6 Minimize Construction Impacts – Superior – 4 points
    - Summary of Construction Commitment:
        - The Contractor shall develop a Construction Management Plan (CMP) to address construction impacts. The CMP must define and mitigate 3 out of the 4 construction impacts listed below:
            - Noise;
            - Safety/wayfinding;
            - Access/mobility; and/or
            - Lighting during construction.
        - Contractor must define in the CMP the feedback mechanisms for stakeholder concerns during construction. The construction contractor is expected to work with affected neighbors to develop construction plans as well as monitoring and corrective action programs.
        - Also, see CMP requirement for Invasive Species under NW 3.4 below.
    - Document Confirming Requirement:
        - Contract Specifications Section 01022 Envision Procedures
- LD 1.1 Provide Effective Leadership and Commitment – Superior – 12 points
    - Summary of Construction Commitments:
        - The Contractor is required to attend and contribute to the sustainability update meetings that will be held on a quarterly basis during construction.
    - Document Confirming Requirement:
        - Contract Specifications Section 01022 Envision Procedures
- RA 1.4 Reduce Construction Waste – Enhanced – 7 points
    - Summary of Construction Commitment:
        - Develop and implement a construction Waste Management Plan (WMP) that identifies the materials to be diverted from disposal.
        - A minimum 50% of waste is recycled, reused or salvaged. Note: this credit excludes soils and rocks which is recognized under Credit RA 1.5 (see below).
    - Document Confirming Requirement:
        - Contract Specifications Section 01022 Envision Procedures and
        - Contract Specifications Section 01572 Construction and Demolition Waste Management
- NW 3.4 Control Invasive Species – Improved – 1 point
    - Summary of Construction Commitment:
        - The Construction Management Plan (CMP) includes practices or policies to avoid the introduction of invasive species. The CMP includes best practices to ensure that construction materials and equipment used on site are free of invasive species.
    - Document Confirming Requirement:
        - Contract Specifications Section 01022 Envision Procedures

It is highly likely that the Contractor procured will be working through their first Envision verified project. This requires the Contractor to monitor and track additional data regarding the items listed above. It will also require the Contractor to submit the documentation demonstrating the goals outlined above have been met near the end of construction. These documents will need to be summarized into coversheets and submitted by the Project's Lead ENV SP (Stantec) to the ISI. An independent expert known as an Envision Verifier will review if the documentation proves the commitments outlined above have been implemented in

the field. If the Verifier finds that the Project Team has not demonstrated their construction commitments, penalties could include losing the Envision Award (potentially awarded at the design phase).

1.5 Disclaimer

Envision Verification is awarded by the ISI, based on their review of the Project's sustainability efforts communicated in the Envision Submission package. The ISI will engage a third-party Envision Verifier to review the Envision Submission package and make recommendations for an overall Envision award. Since there is room for interpretation of the Envision credit requirements, there is a risk that the third-party Verifier interprets the specific Envision requirements and thus awards credit levels of achievement differently than expected by the Project Team.

Any projections of Envision ratings delivered by the consultant are estimates only. While the Consultant cannot guarantee that the ISI will certify any project, the Consultant will take reasonable measures and effort to assist in preparing the Project to achieve the desired Envision Certification. The consultant shall not be held responsible for, nor shall if have any liability for or in respect of:

- ISI rulings that differ from those anticipated; and
- Costs incurred in the effort to obtain an Envision Certification.

Envision Scorecard - Valley Village Park - August 26, 2022

Disclaimer: All Envision performance shown is a projection based on a review on project documentation and anticipated construction methodologies. Any projections of Envision ratings delivered by the Consultant is an estimate only. The Consultant cannot guarantee that the Institute for Sustainable Infrastructure (ISI) will certify any project. The consultant shall not be held responsible for, nor shall if have any liability for or in respect of:
i.ISI rulings that differ from those anticipated; and
ii.Costs incurred in the effort to obtain an Envision Certification.

			Credit Assessment Status	Evaluation Questions Assessed		Assessment Status						Assessed Maximum Points Available	Total Maximum Points
				Yes	No	Improved	Enhanced	Superior	Conserving	Restorative	Points		
Quality of Life	Wellbeing	QL1.1 Improve Community Quality of Life	Assessed	5	2	0	0	10	0	0	10	26	26
		QL1.2 Enhance Public Health & Safety	Assessed	0	6	0	0	0	0	0	0	20	20
		QL1.3 Improve Construction Safety	Assessed	3	2	0	5	0	0	--	5	14	14
		QL1.4 Minimize Noise & Vibration	Not Applicable	0	0	0	0	0	0	0	0	0	12
		QL1.5 Minimize Light Pollution	Not Applicable	0	0	0	0	0	0	0	0	0	12
		QL1.6 Minimize Construction Impacts	Assessed	5	1	0	0	4	0	--	4	8	8
	Mobility	QL2.1 Improve Community Mobility Access	Not Applicable	0	0	0	0	0	0	0	0	0	14
		QL2.2 Encourage Sustainable Transportation	Not Applicable	0	0	--	0	0	0	0	0	0	16
		QL2.3 Improve Access & Wayfinding	Not Applicable	0	0	0	0	0	0	--	0	0	14
	Community	QL3.1 Advance Equity & Social Justice	Assessed	0	7	0	0	0	0	0	0	18	18
		QL3.2 Preserve Historic & Cultural Resources	Not Applicable	0	0	--	0	0	0	0	0	0	18
		QL3.3 Enhance Views & Local Character	Not Applicable	0	0	0	0	0	0	0	0	0	14
		QL3.4 Enhance Public Space & Amenities	Assessed	2	2	1	0	0	0	0	1	14	14

			Credit Assessment Status	Evaluation Questions Assessed		Assessment Status						Assessed Maximum Points Available	Total Maximum Points
				Yes	No	Improved	Enhanced	Superior	Conserving	Restorative	Points		
Leadership	Collaboration	LD1.1 Provide Effective Leadership & Commitment	Assessed	3	1	0	0	12	0	--	12	18	18
		LD1.2 Foster Collaboration & Teamwork	Assessed	4	0	0	0	0	18	--	18	18	18
		LD1.3 Provide for Stakeholder Involvement	Assessed	4	2	0	0	9	0	0	9	18	18
		LD1.4 Pursue Byproduct Synergies	Assessed	0	5	0	0	0	0	0	0	18	18
	Planning	LD2.1 Establish a Sustainability Management Plan	Assessed	0	5	0	0	0	0	--	0	18	18
		LD2.2 Plan for Sustainable Communities	Assessed	5	0	0	0	0	0	16	16	16	16
		LD2.3 Plan for Long-Term Monitoring & Maintenanc	Assessed	3	2	0	5	0	0	--	5	12	12
		LD2.4 Plan for End-of-Life	Assessed	0	5	0	0	0	0	--	0	14	14
	Economy	LD3.1 Stimulate Economic Prosperity & Developmer	Assessed	0	5	0	0	0	0	--	0	20	20
		LD3.2 Develop Local Skills & Capabilities	Assessed	0	4	0	0	0	0	0	0	16	16
		LD3.3 Conduct a Life-Cycle Economic Evaluation	Assessed	1	4	5	0	0	0	0	5	14	14

			Credit Assessment Status	Evaluation Questions Assessed		Assessment Status						Assessed Maximum Points Available	Total Maximum Points
				Yes	No	Improved	Enhanced	Superior	Conserving	Restorative	Points		
Resource Allocation	Materials	RA1.1 Support Sustainable Procurement Practices	Assessed	0	2	0	0	0	0	--	0	12	12
		RA1.2 Use Recycled Materials	Assessed	0	1	0	0	0	0	--	0	16	16
		RA1.3 Reduce Operational Waste	Assessed	0	2	0	0	0	0	--	0	14	14
		RA1.4 Reduce Construction Waste	Assessed	2	0	0	7	0	0	--	7	16	16
		RA1.5 Balance Earthwork On Site	Assessed	0	1	0	0	0	0	--	0	8	8
	Energy	RA2.1 Reduce Operational Energy Consumption	Assessed	0	2	0	0	0	0	--	0	26	26
		RA2.2 Reduce Construction Energy Consumption	Assessed	0	2	0	0	0	0	--	0	12	12
		RA2.3 Use Renewable Energy	Assessed	0	1	0	0	0	0	0	0	24	24
		RA2.4 Commission & Monitor Energy Systems	Assessed	0	3	0	0	0	0	--	0	14	14
	Water	RA3.1 Preserve Water Resources	Assessed	6	0	0	0	0	0	12	12	12	12
		RA3.2 Reduce Operational Water Consumption	Assessed	0	4	0	0	0	0	0	0	22	22
		RA3.3 Reduce Construction Water Consumption	Assessed	0	2	0	0	0	0	--	0	8	8
		RA3.4 Monitor Water Systems	Assessed	2	0	0	0	0	12	--	12	12	12

			Credit Assessment Status	Evaluation Questions Assessed		Assessment Status						Assessed Maximum Points Available	Total Maximum Points
				Yes	No	Improved	Enhanced	Superior	Conserving	Restorative	Points		
Natural World	Siting	NW1.1 Preserve Sites of High Ecological Value	Not Applicable	0	0	0	0	0	0	0	0	0	22
		NW1.2 Provide Wetland & Surface Water Buffers	Not Applicable	0	0	0	0	0	0	0	0	0	20
		NW1.3 Preserve Prime Farmland	Not Applicable	0	0	--	0	0	0	0	0	0	16
		NW1.4 Preserve Undeveloped Land	Assessed	1	1	0	0	12	0	0	12	24	24
	Conservation	NW2.1 Reclaim Brownfields	Not Applicable	0	0	0	0	0	0	0	0	0	22
		NW2.2 Manage Stormwater	Assessed	4	0	0	0	0	0	24	24	24	24
		NW2.3 Reduce Pesticide & Fertilizer Impacts	Assessed	0	4	0	0	0	0	0	0	12	12
		NW2.4 Protect Surface & Groundwater Quality	Assessed	0	6	0	0	0	0	0	0	20	20
	Ecology	NW3.1 Enhance Functional Habitats	Assessed	3	3	0	5	0	0	0	5	18	18
		NW3.2 Enhance Wetland & Surface Water Functions	Assessed	4	3	0	7	0	0	0	7	20	20
		NW3.3 Maintain Floodplain Functions	Assessed	3	2	0	0	0	11	0	11	14	14
		NW3.4 Control Invasive Species	Assessed	1	5	1	0	0	0	0	1	12	12
		NW3.5 Protect Soil Health	Assessed	0	4	--	0	0	0	0	0	8	8

Envision Scorecard - Valley Village Park - August 26, 2022

Disclaimer: All Envision performance shown is a projection based on a review on project documentation and anticipated construction methodologies. Any projections of Envision ratings delivered by the Consultant is an estimate only. The Consultant cannot guarantee that the Institute for Sustainable Infrastructure (ISI) will certify any project. The consultant shall not be held responsible for, nor shall if have any liability for or in respect of:
i.ISI rulings that differ from those anticipated; and
ii.Costs incurred in the effort to obtain an Envision Certification.

			Credit Assessment Status	Evaluation Questions Assessed		Assessment Status						Assessed Maximum Points Available	Total Maximum Points
				Yes	No	Improved	Enhanced	Superior	Conserving	Restorative	Points		
Climate and Resilience	Emissions	CR1.1 Reduce Net Embodied Carbon	Assessed	0	3	0	0	0	0	--	0	20	20
		CR1.2 Reduce Greenhouse Gas Emissions	Assessed	0	2	0	0	0	0	0	0	26	26
		CR1.3 Reduce Air Pollutant Emissions	Not Applicable	0	0	0	0	0	0	0	0	0	18
	Resilience	CR2.1 Avoid Unsuitable Development	Assessed	3	3	0	6	0	0	0	6	16	16
		CR2.2 Assess Climate Change Vulnerability	Assessed	5	0	0	0	0	20	--	20	20	20
		CR2.3 Evaluate Risk and Resilience	Assessed	0	6	0	0	0	0	--	0	26	26
		CR2.4 Establish Resilience Goals and Strategies	Assessed	0	4	--	0	0	0	--	0	20	20
		CR2.5 Maximize Resilience	Assessed	0	5	0	0	0	0	--	0	26	26
		CR2.6 Improve Infrastructure Integration	Assessed	5	0	0	0	0	0	18	18	18	18

	Credit Assessment Status	Evaluation Questions Assessed		Assessment Status						Assessed Maximum Points Available	Total Maximum Points
		Yes	No	Improved	Enhanced	Superior	Conserving	Restorative	Points		
Total Points	All Credits Assessed	74	124	7	35	47	61	70	220	802	1000

Possible Award Level:	Verified

BUREAU OF ENGINEERING

VALLEY VILLAGE PARK
STORM WATER CAPTURE PROJECT
PROJECT NO. EW40085F

ATTACHMENT 3
STORM WATER POLLUTION PREVENTION PLAN

MARCH 2025

City of Los Angeles
California

Department of Public Works
Bureau of Engineering

ENGINEERING
CITY OF LOS ANGELES

STORM WATER POLLUTION PREVENTION PLAN

FOR

CONSTRUCTION ACTIVITIES

Order No. 2009-0009-DWQ
NPDES NO. CAS000002

VALLEY VILLAGE PARK,
STORMWATER CAPTURE PROGRAM

Bryan Powell		
Project Manager	Environmental Manager	Environmental Specialist

Date Updated 2/18/2022

Project Information Summary

Project Location and Address:

Valley Village Park
Assessor ID # 2353-001-902
5000 Westpark Dr.
North Hollywood, CA 91601

Land Owner Name, Address, and Phone Number:
City of Los Angeles
Bureau of Engineering | Department of Public Works
1149 S. Broadway, Suite 630
Los Angeles, CA 90015

Legally Responsible Person (LRP) Signatory - See Appendix J

Developer Name, Address, and Phone No:
TBD

Certified QSD
Pete Silvia, P.E.
QSD Certificate No. 00536

SWPPP Compliance Contact:
Certified QSP
TBD

On-site Contact Person:
QSP or designated responsible person
TBD

Date Notice of Intent Filed:
TBD

State Water Resources Control Board
Waste Discharge Identification (WDID) Number:

WDID: TBD

Table of Contents

PROJECT INFORMATION SUMMARY ..... **I**

TABLE OF CONTENTS ..... **II**

1.0 PURPOSE **1**

2.0 OBJECTIVES **2**

2.1 TRAINING QUALIFICATIONS AND CERTIFICATION REQUIREMENTS (*EFFECTIVE JULY 1, 010*) **2**

3.0 LIST OF CONTRACTORS AND SUBCONTRACTORS **5**

4.0 PROJECT INFORMATION **6**

4.1 Project Description 6
4.2 Project Location 6
4.3 Project Schedule 6
4.4 Existing Site Conditions 6

5.0 POLLUTANT SOURCES AND BMP IDENTIFICATION **7**

5.1 Introduction 7
5.2 Unauthorized Non-Storm Water Discharges 7
5.3 Authorized Non-Storm Water Discharges 8
5.4 Best Management Practices 8
5.4(a) Good Site Management "Housekeeping" *8*
5.4(b) Employee Training Program *9*
5.4(c) Erosion and Sediment Controls *9*
5.4(d) Spill Prevention and Control *10*
5.4(e) Concrete Truck Washing Waste *11*
5.4(f) Hazardous Waste Management and Disposal *11*
5.4(g) Materials Handling and Storage *11*
5.4(h) Vehicle and Equipment Maintenance, Repair and Storage *11*
5.4(i) Waste Management and Disposal *12*
5.4 (j) Scheduling *12*
5.5 (k) Vehicle ingress and egress *13*
5.5 (l) Stockpile Management *13*
5.5 (m) Run on and Run off controls *13*
5.5 (n) Rain Event Action Plan *14*
5.5 (o) Inspections, Maintenance and Repair *14*

6.0 RISK LEVEL 1 MONITORING AND REPORTING REQUIREMENTS **17**

6.1 Inspection / Maintenance Reports 17
6.2 When to Perform Inspections (See Appendix C) 18

7.0 GENERAL REQUIREMENTS **22**

7.1 SWPPP Certification 22
7.2 Annual Site Compliance Evaluation and Certification 22

7.3 SWPPP AMENDMENTS 22
7.4 SWPPP AVAILABILITY 23
8.0 POST-CONSTRUCTION STANDARDS 24
9.0 CERTIFICATION STATEMENT 25

Appendices

Appendix A	Notice of Intent
Appendix B	Site Maps
Appendix C	BMP Inspection Checklist Forms
Appendix D	Training Documentation Forms and Records
Appendix E	Change of Information Form and Amendments Certification
Appendix F	Weather Information Guide
Appendix G	Glossary
Appendix H	Additional Certification Forms
Appendix I	BMP Guides
Appendix J	Legally Responsible Person (LRP) Authorization and Approved Signatures
Appendix K	QSD / QSP Certifications

1.0 Purpose

This Storm Water Pollution Prevention Plan (SWPPP) lists and describes Best Management Practices (BMPs) that will be used during this construction project to minimize the potential for pollutants to leave the site during construction activities. Construction BMPs can include structural devices, material storage methods, and operational procedures used to prevent, control, and treat storm water pollution emanating from the site. Construction activities can disturb large areas that result in erosion and transportation of related particulates such as sediments and dust to nearby waterways. In excess amounts, these particulates can increase water turbidity and consequently impair aquatic life and beneficial uses of the water.

Pollutants such as hydrocarbons, metals, nutrients, toxic substances, trash, and other debris can be generated from a variety of construction activities and can travel with eroded sediments. Potential pollutants traveling with the sediments may include the organic components in the top soil, plant residues, nutrient elements, organic material, deposited atmospheric pollutants, and other liquid and solid wastes.

The amended federal Clean Water Act of 1987 (CWA) added a requirement to address construction site storm water pollution. In California, construction activities consisting of one acre or more of soil disturbance are subject to the National Pollutant Discharge Elimination System (NPDES) General Permit for Discharges of Storm Water Runoff Associated with Construction Activity (General Permit). This permit requires all dischargers (i.e. landowners or developers) to prepare and implement a Storm Water Pollution Prevention Plan (SWPPP) prior to disturbing a site. This (SWPPP) is designed to meet the requirements of the General Permit. This SWPPP must also be implemented at the appropriate level to protect water quality at all times throughout the entire construction project, including both dry and wet weather. BMPs must be implemented and maintained to control erosion, sediment, other construction pollutants, and non-storm water discharges year-round. Other requirements of this SWPPP include employee training, site inspections, and proper maintenance of BMPs as necessary. Los Angeles Department of Water and Power (LADWP) construction crews and personnel, as well as its contractors and subcontractors, are required to follow the guidelines and BMPs outlined in this SWPPP. They are also required to ensure proper implementation and maintenance of such BMPs for the entire duration of this project.

A copy of this SWPPP must be maintained at the construction site. This SWPPP must be modified as necessary to reflect any changes in personnel or construction site conditions.

Amendments to this SWPPP must be documented using the forms provided in Appendix E.

2.0 Objectives

A. The SWPPP shall be designed to address the following objectives:

1. All pollutants and their sources, including sources of sediment associated with construction, construction site erosion and all other activities associated with construction activity are controlled;

2. Where not otherwise required to be under a Regional Water Board permit, all non-storm water discharges are identified and either eliminated, controlled, or treated;

3. Site BMPs are effective and result in the reduction or elimination of pollutants in storm water discharges and authorized non-storm water discharges from construction activity to the BAT/BCT standard;

4. Calculations and design details as well as BMP controls for site run-on are complete and correct, and

5. Stabilization BMPs installed to reduce or eliminate pollutants after construction are completed.

B. To demonstrate compliance with requirements of this General Permit, the QSD shall include information in the SWPPP that supports the conclusions, selections, use, and maintenance of BMPs.

C. The discharger shall make the SWPPP available at the construction site during working hours while construction is occurring and shall be made available upon request by a State or Municipal inspector. When the original SWPPP is retained by a crew member in a construction vehicle and is not currently at the construction site, current copies of the BMPs and map/drawing will be left with the field crew and the original SWPPP shall be made available via a request by radio/telephone. -

2.1 TRAINING QUALIFICATIONS AND CERTIFICATION REQUIREMENTS (Effective July 1, 010)

A. General

The discharger shall ensure that all persons responsible for implementing requirements of this General Permit shall be appropriately trained in accordance with this section 2.1.(See specific e employee training in section 5.4(b) Training should be both formal and informal, occur on an ongoing basis, and should include training offered by recognized governmental agencies or professional organizations. Those responsible for preparing and amending SWPPPs shall comply with the requirements in this section.
The discharger shall provide documentation of all training for persons responsible for implementing the requirements of this General Permit in the Annual Reports.

B. SWPPP Certification Requirements

1. Qualified SWPPP Developer: The discharger shall ensure that SWPPPs are written, amended and certified by a Qualified SWPPP Developer (QSD). A QSD shall have one of the following registrations or certifications, and appropriate experience, as required for:

a. A California registered professional civil engineer;

b. A California registered professional geologist or engineering geologist;

c. A California registered landscape architect;

d. A professional hydrologist registered through the American Institute of Hydrology;

e. A Certified Professional in Erosion and Sediment Control (CPESC) ™ registered through Enviro Cert International, Inc.;

f. A Certified Professional in Storm Water Quality (CPSWQ) ™ registered through Enviro Cert International, Inc.; or

g. A professional in erosion and sediment control registered through the National Institute for Certification in Engineering Technologies (NICET);

Effective two years after the adoption date of this General Permit, a QSD shall have attended a State Water Board-sponsored or approved QSD training course.

2. The discharger shall list the name and telephone number of the currently designated Qualified SWPPP Developer(s) in the SWPPP.

3. Qualified SWPPP Practitioner: The discharger shall ensure that all BMPs required by this General Permit are implemented by a Qualified SWPPP Practitioner (QSP). A QSP is a person responsible for non-storm water and storm water visual observations, sampling and analysis. Effective two years from the date of adoption of this General Permit, a QSP shall be either a QSD or have one of the following certifications:

a. A certified erosion, sediment and storm water inspector registered through Enviro Cert International, Inc.; or

b. A certified inspector of sediment and erosion control registered through Certified Inspector of Sediment and Erosion Control, Inc. Effective two years after the adoption date of this General Permit, a QSP shall have attended a State Water Board-sponsored or approved QSP training course.

4. The LRP shall list in the SWPPP, the name of any Approved Signatory, and provide a copy of the written agreement or other mechanism that provides this authority from the LRP in the SWPPP.

5. The discharger shall include, in the SWPPP, a list of names of all contractors, subcontractors, and individuals who will be directed by the Qualified SWPPP Practitioner. This list shall include telephone numbers and work addresses. Specific areas of responsibility of each subcontractor and emergency contact numbers shall also be included.

6. The discharger shall ensure that the SWPPP and each amendment will be signed by the Qualified SWPPP Developer. The discharger shall include a listing of the date of initial preparation and the date of each amendment in the SWPPP.

3.0 List of Contractors and Subcontractors

The tables below list the contractors and subcontractors conducting work at the site.

General Contractor: TBD			
On-site Supervisor: TBD			
Persons Responsible for BMP Implementation: TBD			
Name	Title	SWPPP Responsibility (ex. BMP inspection. Training)	Phone, Mobile or Pager Number

Sub-Contractor: TBD			
On-site Supervisor: TBD			
Persons Responsible for BMP Implementation: TBD			
Name	Title	SWPPP Responsibility (ex. BMP inspection. Training)	Phone, Mobile or Pager Number

4.0 Project Information

4.1 Project Description

The project disturbs 1.75 acres and entails the construction of open space turf, and underground infiltration gallery.

4.2 Project Location

Stormwater Capture Program (project) is located at 5000 West Park Drive. The project is approximately 200 feet west of State Highway 170. The project is located at Latitude 34° 9' 38.77" N, Longitude 118° 22' 55.13" W and is identified on the Erosion and Sediment Control Plans in Appendix B. The Valley Village Park, Stormwater Capture Program property comprises approximately 3.97 acres and is located in North Hollywood. The property is owned by the City of Los Angeles. Project grading will occur on approximately 1.75 acres. The limits of grading are shown on the Erosion and Sediment Control Plans in Appendix B. The project's location is shown on the Vicinity Map in Appendix B

4.3 Project Schedule

Construction activities will be conducted in one phase with clearing, grading, excavation, and construction occurring in July 2022 through April 2023. Landscaping and site stabilization are proposed to begin in April 2023 until project completion prior to December 2023. The table below lists specific construction elements and the proposed construction timeline.

Proposed Dates	Description
07/13/2022	Start of Project
07/13/2022 – 04/04/2023	Pre-treatment, Diversion, Vault, Pipeline Construction
04/04/2023 – 11/27/2023	Final Landscaping and Site Stabilization
11/27/2023	Project Completion

4.4 Existing Site Conditions

The project property is located entirely on the developed Valley Village Park. There are no known historic sources of contamination or historic significance at the site.

The elevation of the project site ranges from 622 feet to 617 feet above mean sea level. The entire site contains slopes of less than 5% and drains into a culvert passing below Highway 170 and into the Tujunga Wash, a tributary of the Los Angeles River. The Tujunga Wash is listed for water quality impairment on the most recent 303(d)-list for Ammonia, Indicator Bacteria, Copper, and Trash.

The geotechnical investigation for the project indicates that the project site is generally underlain by Holocene- age wash deposits associated with deposition along the Tujunga Wash. The deposits are described as consisting of unconsolidated gravel, sand, and silt in active or recently

active stream beds. The California Department of Mines and Geology has also mapped the site as being underlain by wash deposits consisting of loose to medium dense sand and silty sand with lesser quantities of silt and gravel. Groundwater was not encountered in the exploratory borings to a depth of 76 ½'. Average monitoring records between 1970-2009 suggest depths to ground water range from 105' to 145' in the vicinity of the project.

5.0 Pollutant Sources and BMP Identification

5.1 Introduction

The General Permit requirements must be met on a year-round basis, not just during the wet season. Therefore, this SWPPP, and prescribed Best Management Practices must be implemented at the appropriate level and in a proactive manner during all seasons until the construction project is complete. Post-construction BMPs will be implemented after the project is complete as required by the General Permit (refer to Section 8 of this Plan).

BMPs are defined as "any program, technology, process, siting criteria, operational methods or measures, or engineered systems, that when implemented, prevent, control, remove or reduce pollution."

5.2 Unauthorized Non-Storm Water Discharges

Elimination or reduction of "unauthorized non-storm water discharges" to the storm drain system or receiving waters is a major goal of the General Permit. Most non-storm water discharges are prohibited. Unauthorized non-storm water discharges can be generated from a variety of sources. Examples include, but are not limited to: waters from the rinsing or washing of vehicles, equipment, buildings and pavement; materials that have been improperly disposed of or dumped and spilled, and leaked materials. Such discharges should be eliminated or reduced to the maximum extent practicable.

5.2 (a) Non- Storm Water Management

1. Risk Level 1 dischargers shall implement measures to control all non-storm water dischargers during construction

2. Risk Level 1 dischargers shall wash vehicles in such a manner as to prevent non-storm water discharges to surface water or MS4 drainage systems

3. Risk Level 1 dischargers shall clean streets in such a manner as to prevent unauthorized no-storm water dischargers from reaching surface water or MS4 drainage systems

5.3 Authorized Non-Storm Water Discharges

The General Permit authorizes certain non-storm water discharges that may be necessary for the completion of construction projects. Such discharges include, but are not limited to: irrigation of vegetative erosion control measures; fire hydrant flushing; potable water sources related to the operation and maintenance of potable water systems; drinking fountain water; atmospheric condensates including refrigeration, air conditioning, and compressor condensate; irrigation drainage; springs; ground water; and foundation or footing drainage. These discharges are allowed provided they are: 1) not relied upon to clean up failed or inadequate construction or post construction BMPs designed to keep materials on site; 2) infeasible to eliminate; 3) include BMPs described herein; and 4) do not cause or contribute to a violation of water quality standards. The General Permit prohibits the discharge of sediment-laden water offsite without prior treatment (detention or filtering).

5.4 Best Management Practices

The BMPs described in this document will be implemented to minimize the potential for pollutants to leave the project area and enter the storm drain system to the maximum extent practicable. The BMPs listed below are designed to minimize non-storm water discharges, minimize pollutants in storm water drainage and minimize the release of pollutants that can eventually be carried off by runoff, wind, or tracked out into the storm drain system. BMPs also include planning and preparing for rainfall. The site should be stabilized before a storm and BMPs should be checked for correct implementation prior to storm events. Appendix F lists sources for weather forecasts. Through proactive BMP implementation and good housekeeping measures, the construction site will pose a minimum threat of polluting local waterways through storm water runoff.

BMPs must be implemented to prevent or reduce the contact of non-storm water discharges with potential pollutant sources (i.e. waste storage areas, soil piles) and minimize to the extent practicable the flow or volume of non-storm water discharges.

Detailed descriptions of various types of BMPs for construction projects are located in Appendix I.

5.4(a) Good Site Management "Housekeeping"

1. Risk Level 1 discharges shall implement good site management (i.e., "housekeeping") measures for construction material that could potentially be a threat to water quality if discharged.

- Conduct an inventory of the products used and/or expected to be used and the end products that are produced and/or expected to be produced, this does not include materials and equipment that are designed to be outdoors and exposed to environmental conditions (i.e., poles, equipment pads, cabinets, conductors, insulators, bricks, etc.)

- Cover and berm loose stockpiled construction materials that are not actively being used (i.e. soil, spoils, aggregate, fly-ash, stucco, hydrated lime, etc.)

- Store chemicals in watertight containers (with appropriate secondary containment to prevent any spillage or leakage) or in a storage shed (completely enclosed)
- Minimize exposure of construction materials to precipitation. This does not include materials and equipment that are designed to be outdoors and exposed to environmental conditions

5.4(b) Employee Training Program

All employees working on the site shall receive a general briefing about the importance of preventing storm water pollution, potential sources of storm water pollution, and the BMPs to be implemented at the site. New employees shall be briefed prior to work. Storm water pollution control training may be integrated with other training sessions, such as those conducted for worker safety, spill prevention, or hazardous materials management. Employees are encouraged to provide suggestions/feedback to improve training sessions and implementation of control practices.

Employees responsible for implementing, inspecting, maintaining, or repairing storm water pollution control practices should receive copies of relevant portions of this SWPPP and become familiar with their responsibilities. When such responsibilities shift from one employee to another, the outgoing employee shall pass on all necessary information to ensure the continuing effectiveness of the BMPs and SWPPP compliance, including copies of this SWPPP and inspection checklists. The table provided in Section 3, “List of Contractors and Subcontractors”, may be used to identify employees and their respective SWPPP responsibilities.

For projects that start during the dry season, refresher sessions on storm water pollution control must be conducted prior to the wet season. Additional training will be provided as necessary, based on site inspections and evidence of storm water quality problems.

Documentation of training will be maintained as part of this plan. Training documentation forms are located in Appendix D. Completed training records must be kept with this SWPPP.

5.4(c) Erosion and Sediment Controls

Construction activities that include grading and soil disturbance require a concentrated effort to prevent and minimize the transport of sediments into nearby storm drain inlets. Sediment can flow into nearby storm drain inlets through storm water runoff and non-storm water runoff. When the use of water is required, every effort should be made to contain that water and allow it to evaporate in a bermed area. Remaining sediment and debris must be swept and removed from the street.

Erosion Control

1. Risk Level 1 dischargers shall implement effective wind erosion control

2. Risk Level 1 dischargers shall provide effective cover for inactive areas and all finished slopes, open space, utility backfill, and completed lots

3. Risk Level 1 dischargers shall limit the use of plastic materials when more sustainable, environmentally friendly alternatives exist. Where plastic materials are deemed necessary, the discharger shall consider the use of plastic materials resistant to solar degradation.

Sediment Control

1. Risk Level 1 dischargers shall establish and maintain effective perimeter controls and stabilize all construction entrances and exits to sufficiently control erosion and sediment discharges from the site

2. On sites where sediment basins are to be used, Risk Level 1 dischargers shall, at minimum, design sediment basins according to the method provided in CASQA's Construction BMP Guidance Handbook(to de developed)

Examples of Sediment and Erosion BMPs include the following:

- Stabilized construction site entrances and exits.
- Sweeping up of soil in the areas of soil disturbance and at entrances and exits and construction perimeters.
- Ensure stockpiled soils are kept covered, or bermed to direct runoff into the open trench.
- Placement of sandbags or other barriers in front of storm drain openings to prevent sedimentation of storm water runoff when sediment cannot be contained within the work area.
- Dust control in areas of earthmoving and vehicle traffic.
- Sweeping rather than rinsing as much as practicable.

5.4(d) Spill Prevention and Control

Leaks and spills from construction machinery generally contain petroleum products and heavy metals. Drip pans or some type of impermeable material will be placed under equipment that has been known to leak when such equipment is stored outdoors and not in use. Spills of any type will be cleaned up immediately. Drip pans will be cleaned as necessary to maintain their effectiveness. If absorbent is used for spills, it must be removed promptly and in a proper manner.

5.4(e) Concrete Truck Washing Waste

Concrete truck wash out will only be conducted over the open trench so that all concrete waste is captured and buried in the trench. When that is not feasible and the truck must be washed out in the work area, a containment area will be created to capture the wash water. When dry, concrete waste and residue will be swept and removed. Only as much concrete as needed will be mixed or brought on site in order to reduce the amount of concrete waste. If concrete truck rinsing must occur, it will be done in a contained area. Concrete rinse water must not enter the storm drain system. The concrete containment area must be cleaned out and maintained periodically to minimize the potential of storm water contamination.

5.4(f) Hazardous Waste Management and Disposal

Hazardous waste will be stored and handled in separate collection and containment areas in accordance with state and federal standards. Hazardous waste can be generated from equipment maintenance and refueling activities (e.g., anti-freeze, hydraulic fluids, gasoline, diesel fuel, waste oil). Other hazardous wastes include: pesticides, paints, cleaners, epoxies and sandblast grit. Hazardous waste will be stored in covered, labeled containers and secondary containment will be provided for liquid hazardous wastes. Different types of hazardous wastes will not be mixed so as to promote recycling and prevent undesirable chemical reactions.

5.4(g) Materials Handling and Storage

The primary goal of BMPs for on-site storage of potential pollutants is to minimize the opportunity for them to come into contact with storm water. Hazardous materials, plasters, solvents, paints and other compounds must be properly handled and stored in order to reduce the risk of pollution or contamination. There will be a designated area for all hazardous materials storage, and for any filling or dispensing activity. This area must be located away from drainage paths and should not be directly on the ground (i.e. use plastic liners or containment pallets). This storage area will be covered, or at a minimum, the hazardous materials will be covered in some fashion, either by a tarp, within a covered construction tool bin, or within a storage container. The storage area should be surrounded by berms to prevent any materials from leaving the area should a spill or leak occur. Consideration should be paid to keeping only the minimum amount of hazardous materials on site. Follow manufacturer's instructions regarding storage and use of materials. If any product should come into contact with the soil, that soil will be removed immediately and properly disposed of as hazardous waste.

5.4(h) Vehicle and Equipment Maintenance, Repair and Storage

Vehicles and equipment may pose a threat to storm water quality if their fluids come into contact with storm water runoff. When stored, place drip pans under vehicles or equipment. Vehicles and equipment will be inspected regularly to minimize leaks and drips. Equipment with chronic leakage problems will be returned to the yard for repair prior to continuing its use at the site. Refueling and vehicle maintenance at the construction site will be conducted only when absolutely necessary. When maintenance and repair of vehicles or equipment is required, every effort will be made to prevent any motor related fluids or wastes from leaving the designated

repair area, which shall be located in designated areas away from storm drains and drainage areas. When vehicles or equipment are immobilized and need repair, drip pans and oil-absorbing mats should be placed beneath the vehicle in order to capture spilled fluids. Absorbent materials and other wastes (used oil filters, oily rags, etc.) must be disposed of properly with other hazardous wastes from the site (See Part 5.4(f).). Vehicle washing will not be conducted onsite.

- Prevent oil, grease or fuel to leak in to the ground, storm drains or surface waters
- Place all equipment or vehicles, which are to be fueled, maintained and stored in a designated area fitted with appropriate BMPs

- Clean leaks immediately and dispose of leaked materials properly

5.4(i) Waste Management and Disposal

Specific waste collection areas will be designated on site. Trash hauling dumpsters and trash containers must be covered during storm events or windy conditions as loose trash and debris can be easily transported by water or wind into nearby storm drain inlets. Hazardous waste, concrete waste, and sanitary wastes will be disposed of in the appropriate manner.

- Prevent disposal of any rinse or wash waters or materials on impervious or pervious site surfaces or into the storm drain system
- Ensure the containment of sanitation facilities (e.g., portable toilets) to prevent discharges of pollutants to the storm water drainage system or receiving water
- Clean or replace sanitation facilities and inspecting them regularly for leaks and spills
- Cover waste disposal containers at the end of every business day and during a rain event
- Prevent discharges from waste disposal containers to the storm water drainage system or receiving water
- Contain and securely protect stockpiled waste material from wind and rain at all times unless actively being used
- Implement procedures that effectively address hazardous and non-hazardous spills
- Develop a spill response and implementation plan prior to commencement of construction activities

Sanitary waste facilities should be conveniently located and well maintained. Maintenance and service will be prearranged with a licensed hauler and conducted on a regular basis.

5.4 (j) Scheduling

Work will not be conducted during storm events. Prior to finishing work before a storm event, the work area will be stabilized to reduce the potential for pollutants to leave the area and enter the storm drain system.

5.5 (k) Vehicle ingress and egress

Vehicles and equipment shall pass over metal shaker plates to loosen and remediate soil and debris from ingress/egress access points. Inspect ingress/egress access points daily and sweep tracked sediment as needed.

5.5 (l) Stockpile Management

Stockpile Management procedures and practices are designed to reduce or eliminate air and stormwater pollution from stockpiles of soil, paving materials such as Portland cement, concrete rubble, asphalt concrete, aggregate base, asphalt minder and pressure treated wood.

- Locate stockpiles a minimum of 50 ft away from concentrated flows of stormwater, draining courses, and inlets.
- Protect all stockpiles from stormwater runoff using a temporary perimeter sediment barrier such as berms, dikes, fiber rolls, silt fences, sandbag, gravel bags, or straw bale barriers
- Contain stockpiled materials such as mulches and topsoil when they are not actively being used.
- Contain fertilizers and other landscape materials when they are not actively being used.
- Discontinue the application of any erodible landscape material within 2 days before a forecasted rain event or during periods of precipitation.
- Apply erodible landscape material at quantities and application rates according to manufacture recommendations or based on written specifications by knowledgeable and experienced field personnel.
- Stack erodible landscape material on pallets and cover such materials when not being used or applied.

5.5 (m) Run on and Run off controls

Risk Level 1 discharges shall effectively manage all run-on, all runoff within the site and all runoff that dischargers off the site. Run-on from off site shall be directed away from all disturbed areas or shall collectively be in compliance with the effluent limitations.

5.5 (n) Rain Event Action Plan

Not required for Risk Level 1 dischargers

5.5 (o) Inspections, Maintenance and Repair

- Risk Level 1 dischargers shall ensure that all inspection, maintenance repair and sampling activities at the project location shall be performed or supervised by a Qualified SWPPP Practitioner (QSP) representing the discharger. The QSP may delegate any or all of these activities to an employee trained to do the task(s) appropriately, but shall ensure adequate deployment.

- Risk Level 1 dischargers shall perform weekly inspections and observations, and at least once each 24-hour period during extended storm events, to identify and record BMPs that need maintenance to operate effectively, that have failed, or that could fail to operate as intended. Inspectors shall be the QSP or be trained by the QSP.

- Upon identifying failures or other shortcomings, as directed by the QSP, Risk Level 1 dischargers shall begin implementing repairs or design changes to BMPs within 72 hours of identification and complete the changes as soon as possible.

- For each inspection required, Risk Level 1 dischargers shall complete an inspection checklist, using a form provided by the State Water Board or Regional Water Board or in an alternative format.

- Risk Level 1 dischargers shall ensure that checklists shall remain onsite with the SWPPP and at a minimum, shall include:

    a. Inspection date and date the inspection report was written.

    b. Weather information, including presence or absence of precipitation, estimate of beginning of qualifying storm event, duration of event, time elapsed since last storm, and approximate amount of rainfall in inches.

    c. Site information, including stage of construction, activities completed, and approximate area of the site exposed.

    d. A description of any BMPs evaluated and any deficiencies noted.

    e. If the construction site is safely accessible during inclement weather, list the observations of all BMPs: erosion controls, sediment controls, chemical and waste controls, and non-storm water controls. Otherwise, list the results of visual inspections at all relevant outfalls, discharge points, downstream locations and any projected maintenance activities.

f. Report the presence of noticeable odors or of any visible sheen on the surface of any discharges.

g. Any corrective actions required, including any necessary changes

h. Photographs taken during the inspection, if any.

i. Inspector’s name, title, and signature

Table 5: Summary of Potential Pollutants and BMPs

Activity	Source of Potential Pollutants	Potential Pollutants	BMP Type
Equipment and supply staging	Leaks, spills	Petroleum products, cement, metals, solvents, and other chemicals	✓ Material Handling ✓ Vehicle Maintenance
Excavation, Backfill and Grading	Fresh grading or trenching, vehicle and equipment leakage	Sediment, debris, grease, oil, fuel, other chemicals.	✓ Erosion and Sediment Controls ✓ Vehicle Maintenance ✓ Stockpile Management
Concrete mixing and pouring	Waste concrete, spills	Sediment, cement	✓ Waste Management
Vehicle and equipment rinsing (if done on site)	Wash water, rags, leaks	Petroleum products, other chemicals, sediment	✓ Waste Management ✓ Vehicle Maintenance ✓ Erosion and Sediment Controls
Vehicle Maintenance (if done on site)	Leaks, spills, used parts	Grease, oils, fuel	✓ Vehicle Maintenance
Construction site wastes	Trash cans, portable restrooms, hazardous waste storage. Spoils piles	Trash, debris, sewage, chemicals, sediment	✓ Solid Waste Management ✓ Erosion and Sediment Controls
Material Handling and Storage	Contact with stormwater, leaks and spills		✓ Material Use ✓ Material Delivery and Storage ✓ Spill Prevention and Control
Hazardous Waste Management and Disposal	Contact with stormwater, leaks, spills	Oils, fuel, trash, metals, chemicals	✓ Hazardous Waste Management ✓ Contaminated Soil Management ✓ Spill Prevention and Control

6.0 Risk Level 1 Monitoring and Reporting Requirements

6.1 Inspection / Maintenance Reports

This chapter addresses maintenance, inspection, and repair procedures for all construction-related BMPs to ensure that all graded surfaces, walls, berms, drainage structures, vegetation, erosion and sediment control measures, etc., are maintained in effective condition and are promptly repaired or restored. A properly trained person must be assigned the responsibility to conduct inspections. All completed inspection/ maintenance forms must be kept with this SWPPP. A written site- specific Construction Site Monitoring Program (CSMP) shall be developed and implemented prior to the commencement of construction activities, and revised as necessary to reflect project revisions. The CSMP shall include all monitoring procedures and instructions, location maps, forms, and checklists as required. Inspection forms are included in Appendix C *(effective After July 1, 2010.)*

The goals of the inspection program are:

- To demonstrate that the site is in compliance with the Discharge Prohibitions;
- To determine whether non-visible pollutants are present at the construction site and are causing or contributing to exceedances of water quality objectives;
- To determine whether immediate corrective actions, additional BMP or SWPPP revisions are necessary to reduce pollutants in storm water discharges and authorized non-storm water discharges; and
- To determine whether BMPs included in the SWPPP are effective in preventing or reducing pollutants in storm water discharges and authorized non-storm water discharges.

The inspector should keep in mind that construction activity that cause or contribute to an exceedance of water quality standards must be corrected immediately. If storm water runoff is visibly oily or greasy, turbid, has a strong odor, or if it is known to contain pollutants such as pesticides, debris, sediment, settleable material or suspended material (i.e. trash), then it has potentially exceeded water quality standards.

6.2 When to Perform Inspections (See Appendix C)

Risk Level 1 - Visual Monitoring (Inspection) Requirements for Qualifying Rain Events

a. Risk Level 1 dischargers shall visually observe (inspect) storm water discharges at all discharge locations within two business days (48 hours) after each qualifying rain event.

b. Risk Level 1 dischargers shall visually observe (inspect) the discharge of stored or contained storm water that is derived from and discharged subsequent to a qualifying rain event producing precipitation of ½ inch or more at the time of discharge. Stored or contained storm water that will likely discharge after operating hours due to anticipated precipitation shall be observed prior to the discharge during operating hours.

c. Risk Level 1 dischargers shall conduct visual observations (inspections) during business hours only.

d. Risk Level 1 dischargers shall record the time, date and rain gauge reading of all qualifying rain events.

e. Within 2 business days (48 hours) prior to each qualifying rain event, Risk Level 1 dischargers shall visually observe (inspect):

i. All storm water drainage areas to identify any spills, leaks, or uncontrolled pollutant sources. If needed, the discharger shall implement appropriate corrective actions.

ii. All BMPs to identify whether they have been properly implemented in accordance with the SWPPP. If needed, the discharger shall implement appropriate corrective actions.

iii. Any storm water storage and containment areas to detect leaks and ensure maintenance of adequate freeboard.

f. For the visual observations (inspections) described in e.i and e.iii above, Risk Level 1 dischargers shall observe the presence or absence of floating and suspended materials, a sheen on the surface, discolorations, turbidity, odors, and source(s) of any observed pollutants.

g. Within two business days (48 hours) after each qualifying rain event, Risk Level 1 dischargers shall conduct post rain event visual observations (inspections) to (1) identify whether BMPs were adequately designed, implemented, and effective, and (2) identify additional BMPs and revise the SWPPP accordingly.

h. Risk Level 1 dischargers shall maintain on-site records of all visual observations (inspections), personnel performing the observations, observation dates, weather

conditions, locations observed, and corrective actions taken in response to the observations.

Risk Level 1 – Visual Observation Exemptions

a. Risk Level 1 dischargers shall be prepared to conduct visual observation (inspections) until the minimum requirements of Section 6.2 above are completed. Risk Level 1 dischargers are not required to conduct visual observation (inspections) under the following conditions:

i. During dangerous weather conditions such as flooding and electrical storms.

ii. Outside of scheduled site business hours.

b. If no required visual observations (inspections) are collected due to these exceptions, Risk Level 1 dischargers shall include an explanation in their SWPPP and in the Annual Report documenting why the visual observations (inspections) were not conducted.

Risk Level 1 – Monitoring Methods

Risk Level 1 dischargers shall include a description of the visual observation locations, visual observation procedures, and visual observation follow-up and tracking procedures in the CSMP.

Risk Level 1 – Non-Storm Water Discharge Monitoring

a. Visual Monitoring Requirements:

i. Risk Level 1 dischargers shall visually observe (inspect) each drainage area for the presence of (or indications of prior) unauthorized and authorized non-storm water discharges and their sources.

ii. Risk Level 1 dischargers shall conduct one visual observation (inspection) quarterly in each of the following periods: January- March, April-June, July-September, and October-December. Visual observation (inspections) are only required during daylight hours (sunrise to sunset).

iii. Risk Level 1 dischargers shall ensure that visual observations (inspections) document the presence or evidence of any non storm water discharge (authorized or unauthorized), pollutant characteristics (floating and suspended material, sheen, discoloration, turbidity, odor, etc.), and source. Risk Level 1 dischargers shall maintain on-site records indicating the personnel performing the visual observation (inspections), the dates

and approximate time each drainage area and non-storm water discharge was observed, and the response taken to eliminate unauthorized non-storm water discharges and to reduce or prevent pollutants from contacting non-storm water discharges.

Risk Level 1 – Non-Visible Pollutant Monitoring Requirements

a. Risk Level 1 dischargers shall collect one or more samples during any breach, malfunction, leakage, or spill observed during a visual inspection which could result in the discharge of pollutants to surface waters that would not be visually detectable in storm water.

b. Risk Level 1 dischargers shall ensure that water samples are large enough to characterize the site conditions.

c. Risk Level 1 dischargers shall collect samples at all discharge locations that can be safely accessed.

d. Risk Level 1 dischargers shall collect samples during the first two hours of discharge from rain events that occur during business hours and which generate runoff.

e. Risk Level 1 dischargers shall analyze samples for all non-visible pollutant parameters (if applicable) - parameters indicating the presence of pollutants identified in the pollutant source assessment required (Risk Level 1 dischargers shall modify their CSMPs to address these additional parameters in accordance with any updated SWPPP pollutant source assessment).

f. Risk Level 1 dischargers shall collect a sample of storm water that has not come in contact with the disturbed soil or the materials stored or used on-site (uncontaminated sample) for comparison with the discharge sample.

g. Risk Level 1 dischargers shall compare the uncontaminated sample to the samples of discharge using field analysis or through laboratory analysis.[2]

h. Risk Level 1 dischargers shall keep all field /or analytical data in the SWPPP document.

Risk Level 1 – Particle Size Analysis for Project Risk Justification

Risk Level 1 dischargers justifying an alternative project risk shall report a soil particle size analysis used to determine the RUSLE K Factor. ASTM D-422 (Standard Test Method for Particle-Size Analysis of Soils), as revised, shall be used to determine the percentages of sand, very fine sand, silt, and clay on the site.

Risk Level 1 – Records

Risk Level 1 dischargers shall retain records of all storm water monitoring information and copies of all reports (including Annual Reports) for a period of at least three years. Risk Level 1 dischargers shall retain all records on-site while construction is ongoing. These records include:

a. The date, place, time of facility inspections, sampling, visual observation (inspections), and/or measurements, including precipitation.

b. The individual(s) who performed the facility inspections, sampling, visual observation (inspections), and or measurements.

c. The date and approximate time of analyses.

d. The individual(s) who performed the analyses.

e. A summary of all analytical results from the last three years, the method detection limits and reporting units, and the analytical techniques or methods used.

f. Rain gauge readings from site inspections.

g. Quality assurance/quality control records and results.

h. Non-storm water discharge inspections and visual observation (inspections) and storm water discharge visual observation records

i. Visual observation and sample collection exception records.

j. The records of any corrective actions and follow-up activities that resulted from analytical results, visual observation (inspections), or inspections

Inspections must be performed prior to anticipated storm events, once each 24-hour period during extended storm events and after storm events to identify areas contributing to discharge of storm water associated with the project construction activity. Pre-storm inspections are to ensure that all BMPs are in place and post-storm inspections are to determine whether the BMPs have functioned properly. The inspector should identify BMP effectiveness and implement repairs or design changes as soon as feasible, depending upon worker safety. It is recommended that one or two individuals at the project site be designated as the inspector and weather watcher. When a storm event is predicted, this individual would be responsible for alerting other site employees and making sure that BMPs are properly implemented. Weather information resources are listed in Appendix F.

Stormwater samples must be collected if, during regular inspections, it is determined that any BMPs have failed and there is a potential that the material that was addressed by the

BMP has entered storm water runoff. Samples shall be taken should visual monitoring indicate that there has been a breach, malfunction, leakage, or spill from a BMP which could result in the discharge in storm water of pollutants that would not be visually detectable or if storm water comes into contact with soil amendments or other exposed materials or contamination and is allowed to be discharged. Describe the type of BMP and the pollutants addressed by the BMP on the inspection form.

7.0 General Requirements

7.1 SWPPP Certification

This SWPPP must be certified in accordance with the signatory requirements described below. Use the Compliance Certification Form provided at the end of this section, and make additional copies as needed.

7.2 Annual Site Compliance Evaluation and Certification

This SWPPP must be certified annually to ensure that construction activities comply with the requirements of the General Construction Permit. The certification should be based upon the results of required site inspections. This certification must be completed by July 1 of each year until the construction project is completed and a Notice of Termination (NOT) has been submitted to the State Water Resources Control Board.

7.3 SWPPP Amendments

This SWPPP will be amended whenever:

a. There is a change in construction or operations which may affect the discharge of pollutants to surface waters, ground waters, or the municipal storm drain system (e.g. Additional soils will be stored onsite, or excavation outside of the project area will be necessary);

b. There is a violation of any condition of the General Permit; or

c. The SWPPP has not achieved the general objective of reducing or eliminating pollutants in storm water discharges.

Use Appendix E to document all changes made to the SWPPP. Make additional copies of Appendix E as needed. Each amendment should be signed by the site construction manager or site supervisor and include the date of initial preparation and the date of each amendment. All amendments should be directly attached to this SWPPP.

7.4 SWPPP Availability

This SWPPP must be kept on the site while the site is under construction, beginning with the initial mobilization and ending with the termination of coverage under the permit. It should be available to site employees at all times and provided upon request to the Los Angeles Regional Water Quality Control Board or local storm water agency.

8.0 POST-CONSTRUCTION STANDARDS

A**.** All dischargers shall comply with the following runoff reduction requirements unless they are located within an area subject to post construction standards of an active Phase I or II municipal separate storm sewer system (MS4) permit that has an approved Storm Water Management Plan.

1. This provision shall take effect three years from the adoption date of this permit, or later at the discretion of the Executive Officer of the Regional Board.

2. The discharger shall demonstrate compliance with the requirements of this section by submitting with their NOI a map and worksheets in accordance with the instructions in Appendix 2 of the General Order No. 2009-0009-DWQ. The discharger shall use non-structural controls unless the discharger demonstrates that non-structural controls are infeasible or that structural controls will produce greater reduction in water quality impacts.

3. The discharger shall, through the use of non-structural and structural measures as described in Appendix 2, of the General Order No. 2009-0009-DWQ replicate the pre-project water balance (for this permit, defined as the volume of rainfall that ends up as runoff) for the smallest storms up to the 85th percentile storm event (or the smallest storm event that generates runoff, whichever is larger). Dischargers shall inform Regional Water Board staff at least 30 days prior to the use of any structural control measure used to comply with this requirement. Volume that cannot be addressed using nonstructural practices shall be captured in structural practices and approved by the Regional Water Board. When seeking Regional Board approval for the use of structural practices, dischargers shall document the infeasibility of using non-structural practices on the project site, or document that there will be fewer water quality impacts

4. For sites whose disturbed area exceeds two acres, the discharger shall preserve the pre-construction drainage density (miles of stream length per square mile of drainage area) for all drainage areas within the area serving a first order stream or larger stream and ensure that post project time of runoff concentration is equal or greater than pre-project time of concentration.

B. All dischargers shall implement BMPs to reduce pollutants in storm water discharges that are reasonably foreseeable after all construction phases have been completed at the site (Post-construction BMPs).

9.0 Certification Statement

This SWPPP must be evaluated and re-certified using this form annually by July 1 until the construction project is complete and a Notice of Termination has been submitted to the Regional Board. Use this form for the initial certification, annual re-certification, and re-certification following revisions. Additional blank forms can be made by copying the form included in Appendix H.

"I certify under penalty of law that this document and all attachments were prepared under my direction or supervision in accordance with a system designed to assure that qualified personnel properly gather and evaluate the information submitted. Based on my inquiry of the person or persons who manage the system, or those persons directly responsible for gathering the information, to the best of my knowledge and belief, the information submitted is, true, accurate, and complete. I am aware that there are significant penalties for submitting false information including the possibility of fine and imprisonment for knowing violations."

Initial Certification:

Print Name: Susan Shu, PE _____ Title: Legally Responsible Person ___

Signature:_____ Date: _____

Telephone Number: 213-485-4493 ___

Annual Re-Certification:

Print Name: _____ Title: _____

Signature:_____ Date: _____

Telephone Number: _____

Appendix A

Notice of Intent

SEDIMENT RISK FACTOR WORKSHEET
Instructions: Enter R,K and LS factor values. System will calculate watershed erosion estimates and site sediment risk factor
A. Sediment Risk

A) R Factor Value: (What's this?)	56.62 * Erosivity Calculator
B) K Factor Value (weighted average, by area, for all site soils) (What's this?) ***If not using the SWRCB map(Populate K Factor) upload your analysis on the Attachment Tab prior to submitting to the SWRCB.	0.24 * Populate K Factor
C) LS Factor (weighted average, by area, for all slopes) (What's this?) ***If not using the SWRCB map(Populate LS Factor) upload your analysis on the Attachment Tab prior to submitting to the SWRCB.	0.96002501 * Populate LS Factor
Watershed Erosion Estimate (=R*K*LS) in tons/acre	13.045587855888
Site Sediment Risk Factor Low Sediment Risk: < 15 tons/acre Medium Sediment Risk: >/= 15 and <75 tons/acre High Sediment Risk: >/= 75 tons/acre	Low

RECEIVING WATER (RW) RISK FACTOR WORKSHEET
A. Watershed Characteristics

A.1.(a) Does the disturbed area discharge directly or indirectly to a 303(d) listed waterbody impaired by sediment? OR A.1.(b) Is the disturbed area located within a sub-watershed draining to a 303(d) listed waterbody impaired by sediment? OR A.2. Is the disturbed area located within a planning watershed draining to a waterbody with designated beneficial uses of COLD, SPAWN AND MIGRATORY?	Populate Receiving Water Risk: No * Yes = High, No = Low Statewide Map of High Receiving Water Risk Watersheds	Low

C. Combined Risk Level Matrix

Receiving Water Risk	Sediment Risk: Low	Sediment Risk: Medium	Sediment Risk: High
Low	Level1	Level2	
High	Level2		Level3

Project Sediment Risk:	Low
Project Receiving Water Risk:	Low
Project Combined Risk:	Level1

Save & Exit | Save & Continue

Appendix B

Site Maps

Vicinity Map

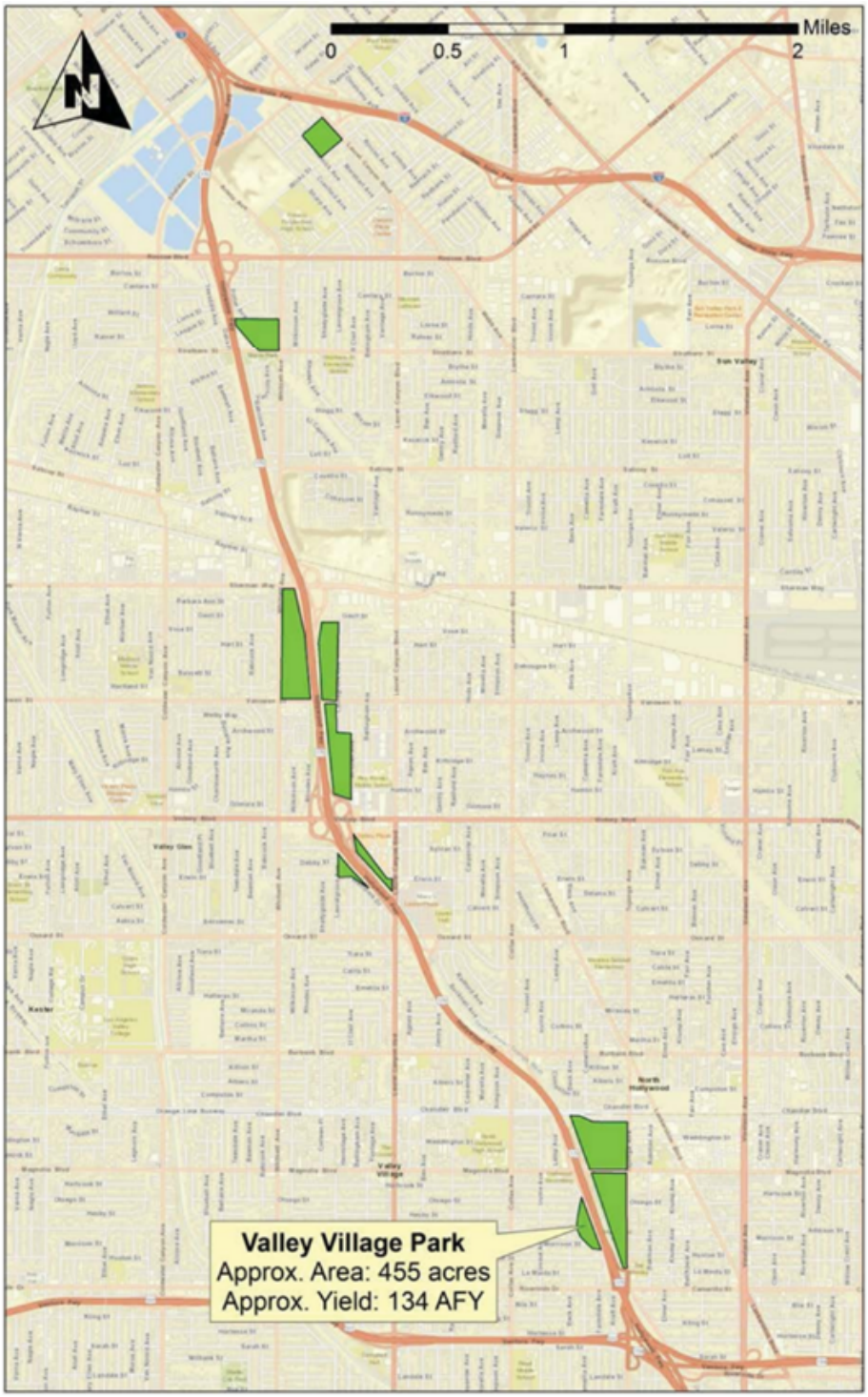

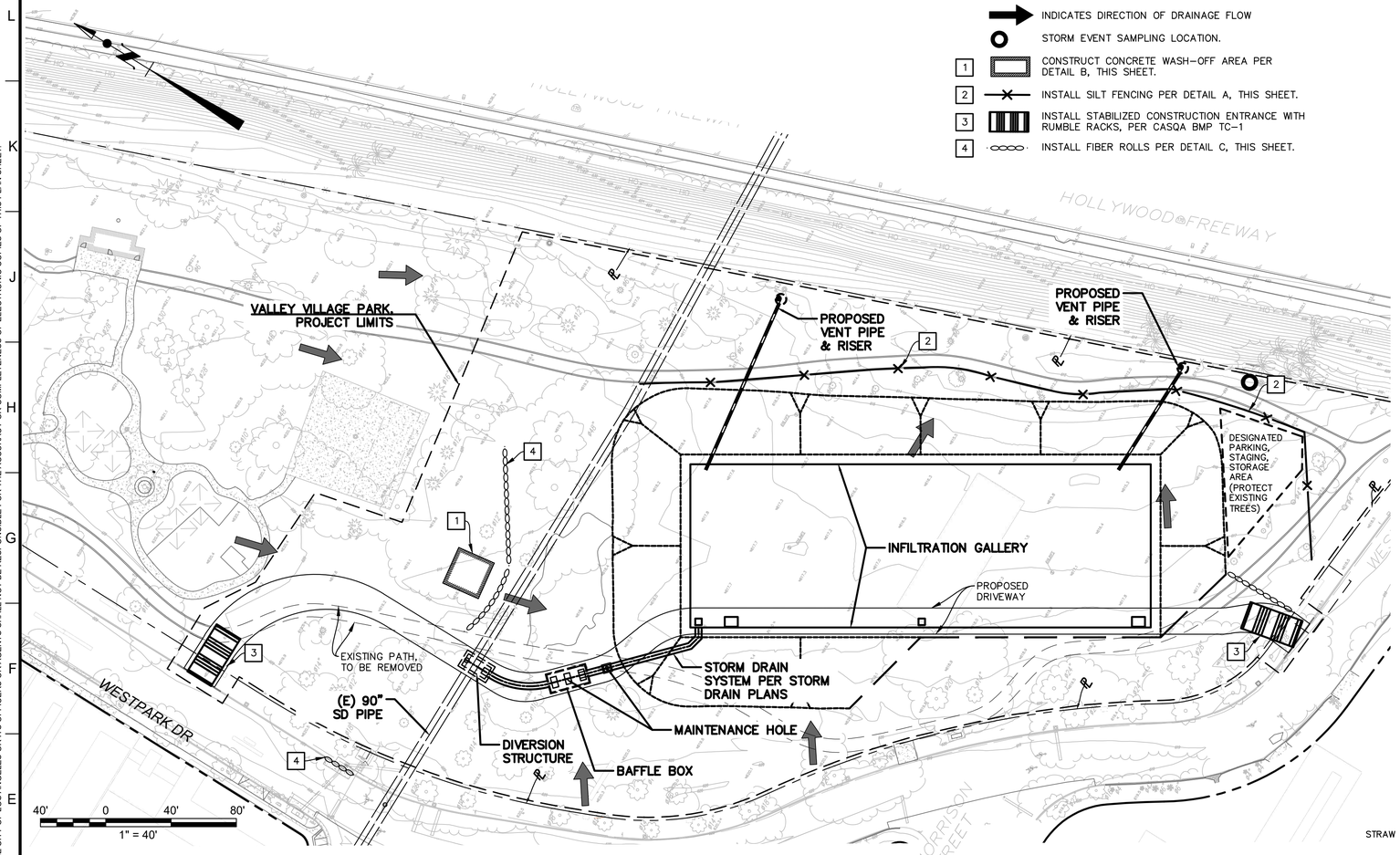

LEGEND

- INDICATES DIRECTION OF DRAINAGE FLOW
- STORM EVENT SAMPLING LOCATION.
- 1 — CONSTRUCT CONCRETE WASH–OFF AREA PER DETAIL B, THIS SHEET.
- 2 — INSTALL SILT FENCING PER DETAIL A, THIS SHEET.
- 3 — INSTALL STABILIZED CONSTRUCTION ENTRANCE WITH RUMBLE RACKS, PER CASQA BMP TC–1
- 4 — INSTALL FIBER ROLLS PER DETAIL C, THIS SHEET.

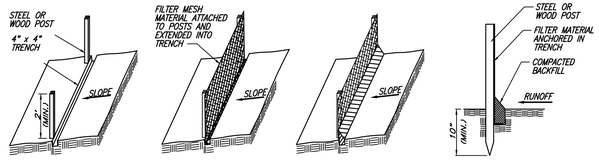

1 – SET POSTS & EXCAVATE TRENCH | 2 – INSTALL FILTER FABRIC | 3 – BACKFILL TRENCH | 4 – CROSS SECTION OF INSTALLED FILTER FABIC

SILT FENCE

NOT TO SCALE — A/1

CONSTRUCTION SPECIFICATIONS:

1. THE HEIGHT OF A SILT FENCE SHALL NOT EXCEED 36 INCHES. STORAGE HEIGHT AND PONDING HEIGHT SHALL NEVER EXCEED 18 INCHES.
2. THE FENCE LINE SHALL FOLLOW THE CONTOUR AS CLOSELY AS POSSIBLE. IF POSSIBLE, THE FILTER FABRIC SHALL BE CUT FROM A CONTINUOUS ROLL TO AVOID THE USE OF JOINTS.
3. JOINTS, WHEN NECESSARY, SHALL BE SPLICED ONLY AT A SUPPORT POST, WITH A MINIMUM 6 INCH OVERLAP AND BOTH ENDS SECURELY FASTENED TO THE POST.
4. POSTS SHALL BE SPACED A MAXIMUM OF 10 FEET APART AND DRIVEN SECURELY INTO THE GROUND (MINIMUM OF 12 INCHES). WHEN EXTRA–STRENGTH FABRIC IS USED WITHOUT THE WIRE SUPPORT FENCE, POST SPACING SHALL NOT EXCEED 6 FEET.
5. TURN THE ENDS OF THE FENCE UPHILL.
6. A TRENCH SHALL BE EXCAVATED APPROXIMATELY 4 INCHES WIDE AND 6 INCHES DEEP ALONG THE LINE OF POSTS AND UPSLOPE FROM THE BARRIER.
7. WHEN STANDARD–STRENGTH FILTER FABRIC IS USED, A WIRE MESH SUPPORT FENCE SHALL BE FASTENED SECURELY TO THE UPSLOPE SIDE OF THE POSTS USING HEAVY DUTY WIRE STAPLES AT LEAST 1INCH LONG, TIE WIRES OR HOG RINGS. THE WIRE SHALL EXTEND INTO THE TRENCH A MINIMUM OF 2 INCHES AND SHALL NOT EXTEND MORE THAN 36 INCHES ABOVE THE ORIGINAL GROUND SURFACE.
8. THE STANDARD–STRENGTH FILTER FABRIC SHALL BE STAPLED OR WIRED TO THE FENCE, AND 6 INCHES OF THE FABRIC SHALL EXTEND INTO THE TRENCH. THE FABRIC SHALL NOT EXTEND MORE THAN 36 INCHES ABOVE THE ORIGINAL GROUND SURFACE. FILTER FABRIC SHALL NOT BE STAPLED TO EXISTING TREES.
9. WHEN EXTRA–STRENGTH FILTER FABRIC AND CLOSER POST SPACING ARE USED, THE WIRE MESH SUPPORT FENCE MAY BE ELIMINATED. IN SUCH A CASE, THE FILTER FABRIC IS STAPLED OR WIRED DIRECTLY TO THE POSTS.
10. THE TRENCH SHALL BE BACKFILLED AND THE SOIL COMPACTED OVER THE TOE OF THE FILTER FABRIC.
11. SILT FENCES PLACED AT THE TOE OF A SLOPE SHALL BE SET AT LEAST 6 FEET FROM THE TOE IN ORDER TO INCREASE PONDING VOLUME.
12. SILT FENCES SHALL BE REMOVED WHEN THEY HAVE SERVED THEIR USEFUL PURPOSE, BUT NOT BEFORE THE UPSLOPE AREA HAS BEEN PERMANENTLY STABILIZED AND ANY SEDIMENT STORED BEHIND THE SILT FENCE HAS BEEN REMOVED.

INSPECTION AND MAINTENANCE:

1. SILT FENCES AND FILTER BARRIERS SHALL BE INSPECTED WEEKLY AFTER EACH SIGNIFICANT STORM (1 INCH IN 24 HOUR). ANY REQUIRED REPAIRS SHALL BE MADE IMMEDIATELY.
2. SEDIMENT SHOULD BE REMOVED WHEN IT REACHES 1/3 HEIGHT OF THE FENCE OR 9 INCHES MAXIMUM.
3. THE REMOVED SEDIMENT SHALL CONFORM WITH THE EXISTING GRADE AND BE VEGETATED OR OTHERWISE STABILIZED.

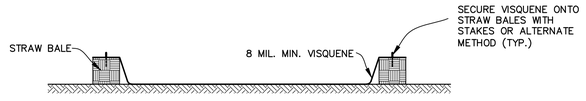

CONCRETE WASH–OFF AREA

NOT TO SCALE — B/1

NOTES:

1. ALL CONCRETE TRUCKS AND FINISHING TOOLS SHALL BE WASHED AT THE WASH OFF AREA.
2. ALL CONCRETE WASTE COLLECTED IN WASH OFF AREA SHALL BE RECYCLED OR APPROPRIATELY DISPOSED OF OFF–SITE.
3. LOCATION AND SIZE OF WASH–OFF AREA MAY BE ADJUSTED TO ACCOMMODATE SITE CONDITIONS.

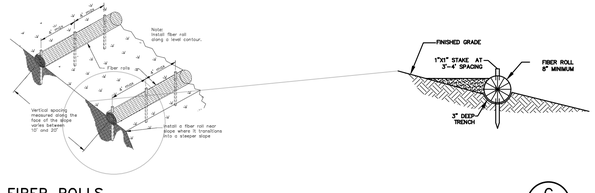

FIBER ROLLS

NOT TO SCALE — C/1

CONSTRUCTION SPECFICATIONS:

1. FIBER ROLLS SHALL BE SPACED WITH NO GREATER THAN 20 FOOT INTERVALS FOR 4:1 (H:V) SLOPE AT LEVEL CONTOURS, OR 10 FOOT INTERVALS FOR SLOPE OF 2:1 (H:V) AT LEVEL CONTOURS.
2. TURN THE ENDS OF THE FIBER ROLLS UPHILL.
3. DIG 8 INCH WIDE TRENCHES AT 3 INCH DEPTH ACROSS THE SLOPE ON THE CONTOUR. INSTALL FIBER ROLLS AND STAKE EVERY 4 FEET PER MANUFACTURER'S RECOMMENDATION. WHEN TRENCHING AND STAKING NOT POSSIBLE, WEIGHT FIBER ROLL WITH SANDBAG EVERY 4 FEET.

EROSION AND SEDIMENT CONTROL NOTES

1. IN ADDITION TO THESE NOTES, THE CONTRACTOR WILL BE RESPONSIBLE FOR ALL EROSION CONTROL REQUIREMENTS SPECIFIED BY THE CITY/COUNTY OF LOS ANGELES, THE PROJECT STORMWATER POLLUTION PREVENTION PLAN (SWPPP), AND THE PROJECT EROSION AND SEDIMENT CONTROL PLAN (ESCP).
2. IT IS THE CONTRACTOR'S RESPONSIBILITY TO ADD OR ADJUST EROSION CONTROL DEVICES AS NECESSARY COMPARED TO THE APPROVED EROSION CONTROL PLAN IN ORDER TO PREVENT EROSION/SEDIMENT FROM LEAVING THE SITE.
3. THE CONTRACTOR SHALL ENSURE ALL PROTECTION MEASURES ARE IN PLACE AT ALL TIMES THROUGHOUT THE YEAR.
4. THE SWPPP REQUIREMENTS SHALL BE IMPLEMENTED PRIOR TO THE COMMENCEMENT OF GRADING AND THROUGHOUT THE YEAR. THE ESCP/SWMP REQUIREMENTS SHALL BE IMPLEMENTED BETWEEN NOVEMBER 1ST AND APRIL 15TH OF EACH YEAR, EXCEPT POLLUTION CONTROL MEASURES SHALL BE IMPLEMENTED YEAR ROUND.
5. THE CONTRACTOR SHALL ADJUST THE LIMITS OF THE PROTECTION MEASURES AS HIS WORK PROGRESSES.
6. THE CONTRACTOR SHALL ADJUST THE LIMITS OF THE PROTECTION MEASURES SHOULD THEY BE INADEQUATE TO CONTROL RUNOFF OF SILT LADEN WATER.
7. THE CONTRACTOR SHALL REMOVE SILT FROM ALL STORM DRAIN APPURTENANCES AND EROSION CONTROL DEVICES AFTER EACH RAIN.
8. THE PROTECTION MEASURES MAY BE TEMPORARILY MOVED OUT OF THE CONTRACTOR'S WAY TO FACILITATE CONSTRUCTION, PROVIDED THEY ARE REINSTALLED PRIOR TO THE NEXT RAIN STORM.
9. THE CONTRACTOR SHALL ADVISE HIS CREW OF THE INTENT OF THE PROTECTION MEASURES PRIOR TO THE START OF THE RAINY SEASON. THE CREW IS ENCOURAGED TO MONITOR THE EFFECTIVENESS OF THE SYSTEM AND ALERT THE CONTRACTOR OF ANY FAILURES OR PROBLEMS AND ADJUST THE EROSION CONTROL DEVICES AS NECESSARY.
10. STAGING, REFUELING OF EQUIPMENT, CONCRETE WASHOUT AND STORAGE OF MATERIALS SHALL BE INSPECTED FREQUENTLY TO ENSURE NO SPILLED HAZARDOUS MATERIALS CONTAMINATE THE EXISTING GROUND OR PAVEMENT. SHOULD THIS OCCUR, THE SPILL SHALL BE CLEANED UP IMMEDIATELY PER COUNTY OF LOS ANGELES STANDARDS. THE DESIGNATED AREAS SHALL CONTAIN SPILLS, FACILITATE CLEAN–UP AND PROPER DISPOSAL AND PREVENT CONTAMINATION FROM DISCHARGING TO THE STORM DRAINS, STREET, DRAINAGE DITCHES, CREEKS, OR WETLANDS. THE AREAS SHALL BE NO LARGER THAN 50 X 50 FOOT UNLESS OTHERWISE APPROVED BYLEAD AGENCY AND SHALL BE LOCATED AT LEAST 100 FEET FROM ANY STORM DRAIN, WATERBODY OR SENSITIVE BIOLOGICAL RESOURCES.
11. ONCE A GRADING AREA IS COMPLETED, THE DISTURBED AREAS SHALL BE PROTECTED FROM BEING ERODED BY WIND OR WATER EROSION BY APPLICATION OF EROSION CONTROL DEVICES AND METHODS SPECIFIED BY THESE PLANS.
12. THE CONTRACTOR SHALL PREVENT WATER CONTAMINATION DURING CONSTRUCTION BY IMPLEMENTING THE FOLLOWING CONSTRUCTION SITE MEASURES:
    A. ALL ENTRANCES/EXITS TO THE CONSTRUCTION SITE SHALL BE STABILIZED USING METHODS DESIGNED TO REDUCE TRANSPORT OF SEDIMENT OFF SITE. STABILIZING MEASURES MAY INCLUDE BUT ARE NOT LIMITED TO USE OF GRAVEL PADS, STEEL RUMBLE PLATES, TEMPORARY PAVING, ETC. ANY SEDIMENT OR OTHER MATERIALS TRACKED OFF SITE SHALL BE REMOVED THE SAME DAY AS THEY ARE TRACKED USING DRY CLEANING METHODS. ENTRANCES/EXITS SHALL BE MAINTAINED UNTIL GRADED AREAS HAVE BEEN STABILIZED BY STRUCTURES, LONG–TERM EROSION CONTROL MEASURES OR LANDSCAPING.
    B. APPLY CONCRETE, ASPHALT, AND SEAL COAT ONLY DURING DRY WEATHER.
    C. STORE, HANDLE AND DISPOSE OF CONSTRUCTION MATERIALS AND WASTE SUCH AS PAINT, MORTAR, CONCRETE SLURRY, FUELS, ETC. IN A MANNER WHICH MINIMIZES THE POTENTIAL FOR STORM WATER CONTAMINATION.
13. ALL OPEN EXCAVATIONS SHALL BE PROTECTED FROM INCLEMENT WEATHER, INCLUDING AREAS ABOVE AND AT THE TOE OF THE EXCAVATION. THIS IS REQUIRED TO KEEP THE EXCAVATIONS FROM BECOMING SATURATED. SATURATION OF THE EXCAVATION MAY RESULT IN A RELAXATION OF THE SOILS WHICH MAY RESULT IN FAILURES. WATER/RUNOFF SHALL BE DIVERTED AWAY FROM THE EXCAVATION AND NOT BE ALLOWED TO FLOW OVER THE EXCAVATION IN A CONCENTRATED MANNER.
14. ALL HILLSIDE EXCAVATIONS SHALL BE PROTECTED DURING INCLEMENT WEATHER AND SHALL EXTEND BEYOND THE EDGES OF THE EXCAVATIONS IN ALL DIRECTIONS. PLASTIC SHEETING ALONG WITH STAKES, ROPES, AND SANDBAGS SHALL BE USED TO PROVIDE PROTECTION OF THE EXCAVATIONS. SLOPES AROUND AN OPEN EXCAVATION SHALL BE TRIMMED TO SLOPE AWAY FROM THE OPEN EXCAVATION SO THAT WATER/RUNOFF WILL NOT DRAIN INTO THE EXCAVATION. AFTER THE INCLEMENT WEATHER HAS CEASED, THE EXCAVATIONS SHALL BE REVIEWED BY THE PROJECT GEOTECHNICAL ENGINEER AND GEOLOGIST FOR SAFETY PRIOR TO RECOMMENCEMENT OF WORK.
15. NO WATER SHALL BE ALLOWED TO POND ADJACENT TO OR FLOW INTO OPEN TRENCHES. ALL OPEN TRENCHES SHALL BE COVERED WITH PLASTIC SHEETING THAT IS ANCHORED WITH SANDBAGS. AREAS AROUND THE TRENCHES SHALL BE SLOPED AWAY FROM THE TRENCHES TO PREVENT WATER RUNOFF FROM FLOWING INTO OR PONDING ADJACENT TO THE TRENCHES. AFTER THE INCLEMENT WEATHER HAS CEASED, THE EXCAVATIONS SHALL BE REVIEWED BY THE PROJECT GEOTECHNICAL ENGINEER AND GEOLOGIST FOR SAFETY PRIOR TO RECOMMENCEMENT OF WORK. FOUNDATION EXCAVATIONS THAT REMAIN OPEN DURING INCLEMENT WEATHER SHALL BE REVIEWED BY THE PROJECT GEOTECHNICAL ENGINEER AND GEOLOGIST PRIOR TO THE PLACEMENT OF STEEL AND CONCRETE TO ENSURE THAT PROPER EMBEDMENT AND CONTACT WITH THE BARING MATERIAL HAVE BEEN MAINTAINED.
16. ALL PILE/CAISSON EXCAVATIONS SHALL BE REVIEWED AND POURED PRIOR TO THE ONSET OF INCLEMENT WEATHER. IT IS NOT RECOMMENDED THAT ANY PILE/CAISSON EXCAVATIONS REMAIN OPEN THROUGH ANY INCLEMENT WEATHER. HOWEVER, IF IT IS NECESSARY TO LEAVE PILE/CAISSON EXCAVATIONS OPEN DURING INCLEMENT WEATHER, ALL WATER AND RUNOFF SHALL BE DIVERTED AWAY FROM AND PREVENTED FROM ENTERING THE PILE/CAISSON EXCAVATIONS. PILE/CAISSON EXCAVATIONS THAT REMAIN OPEN DURING INCLEMENT WEATHER SHALL BE REVIEWED BY THE PROJECT GEOTECHNICAL ENGINEER AND GEOLOGIST PRIOR TO THE PLACEMENT OF STEEL AND CONCRETE TO ENSURE THAT PROPER EMBEDMENT HAS BEEN MAINTAINED. THE BASE OF ALL END/BEARING CAISSONS SHALL BE RE–CLEANED TO ENSURE CONTACT WITH THE PROPER BEARING MATERIAL.
17. DURING THE INCLEMENT TIME OF THE YEAR, OR DURING PERIODS PRIOR TO THE ONSET OF RAIN, ALL FILL THAT HAS BEEN SPREAD AND IS AWAITING COMPACTION SHALL BE COMPACTED BEFORE STOPPING WORK FOR THE DAY OR BEFORE STOPPING WORK BECAUSE OF INCLEMENT WEATHER. THESE FILLS, ONCE COMPACTED, SHALL HAVE THE SURFACE SLOPED TO DRAIN TO ONE AREA WHERE WATER MAY BE REMOVED.
18. ALL STOCK–PILED FILL MATERIALS SHALL BE COVERED WITH PLASTIC SHEETING. THIS ACTION WILL REDUCE THE POTENTIAL FOR THE MOISTURE CONTENT OF THE FILL FROM BECOMING TOO HIGH FOR COMPACTION. IF THE FILL STOCKPILE IS NOT COVERED DURING INCLEMENT WEATHER, THEN AERATING THE FILL TO REDUCE THE MOISTURE CONTENT WOULD BE REQUIRED BY THE GEOTECHNICAL ENGINEER. THIS ACTION IS GENERALLY VERY TIME CONSUMING AND MAY RESULT IN CONSTRUCTION DELAYS. WORK MAY RECOMMENCE, AFTER THE RAIN EVENT, ONCE THE SITE HAS BEEN REVIEWED BY THE PROJECT GEOTECHNICAL ENGINEER.

THE CITY OF LOS ANGELES OR ITS OFFICERS OR AGENTS SHALL NOT BE RESPONSIBLE FOR THE ACCURACY OR COMPLETENESS OF ELECTRONIC COPIES OF THIS PLAN SHEET.

REVISION DATES (DESIGN STAGE ONLY)

ENGINEERING — CITY OF LOS ANGELES

THIS PLAN WAS ELECTRONICALLY SIGNED AND STAMPED

PETER A. SILVIA — No. 70435 — REGISTERED PROFESSIONAL ENGINEER — CIVIL — STATE OF CALIFORNIA

BUREAU OF ENGINEERING

SHEET TITLE: SEDIMENTATION CONTROL PLAN
PROJECT: VALLEY VILLAGE PARK STORM WATER CAPTURE PROJECT
ADDRESS: VALLEY VILLAGE PARK, 5000 Westpark Dr, North Hollywood, CA 91601
VERTICAL CONTROL: VERTICAL CONTROL
HORIZONTAL CONTROL: HORIZONTAL CONTROL

NO.	REVISIONS	DATE	BY
		YY/MM/DD	
		YY/MM/DD	
		YY/MM/DD	
		YY/MM/DD	

CIP NO. SCP0009

INDEX NO. D-XXXXX

CITY OF LOS ANGELES — DEPARTMENT OF PUBLIC WORKS

CITY ENGINEER	DATE
GARY LEE MOORE, P.E., ENV SP	
DESIGN GROUP	
ENGINEER: PVT - MATT HUCKABY	YY/MM/DD
ARCHITECT: XXX	YY/MM/DD
DESIGNED BY: PETE SILVIA, P.E., QSD	YY/MM/DD
DRAWN BY: MATTHEW HENDREN, E.I.T.	YY/MM/DD
CHECKED BY:	YY/MM/DD
APPROVED BY: PVT - MIKO AIVAZIAN	YY/MM/DD

PLANS PREPARED BY:

Carollo
707 WILSHIRE BLVD, SUITE 3920
LOS ANGELES, CA 90017
(213) 489-1587

Stantec
200 East Carrillo Street, Suite 101
Santa Barbara CA
www.stantec.com

WORK ORDER EW40085F

SHEET NAME EC-01

SHEET 49 OF 80 SHEETS

Appendix C

*Storm Water BMP Inspection Checklist**

*(*Make copies as needed)*

*Dischargers shall perform weekly inspections at least once each 24-hr period during extended rain

LADWP CONSTRUCTION SWPPP BMP/ VISUAL INSPECTION REPORT	
Project Location:	**Weather:**
Area of Site Exposed:	**Stage of Construction:**
Date of Inspection: **Time of Inspection:**	**Storm Start Time:**
Inspector:	***Duration of Storm:**
Name:	**Time Since Last Storm:**
Title:	**Approximate Rainfall (in):** **Rain Gauge or NOAA**
Telephone No.:	**Type of Inspection (circle or highlight one) Pre-storm, storm event, post-storm,**
Non Storm Water Quarterly Inspection	**Circle Qtr:** **Jan-Mar, Apr-Jun, Jul-Sep, Oct-Dec**

YES	NO	
		Are the BMPs called for in the SWPPP installed in the proper location according to the specifications for the SWPPP?
		Are all operational storm drain inlets protected from sediment inflow?
		Do any structural BMPs require repair or clean out to maintain adequate function? If yes, indicate which ones:
		Is there evidence of equipment leakage/ spillage of equipment/vehicle maintenance fluids?
		Are construction on-site traffic routes, parking, and storage of equipment and supplies restricted to areas specifically designated for those uses?
		Do any seeded or landscaped areas require maintenance, irrigation, and fertilization, seeding or mulching?
		Is there any evidence that sediment is leaving the site?
		Is there any evidence of floating and suspended material, sheen, discoloration, turbidity, or odor?

		Is there any evidence of sediment, debris, or mud on public roads at intersections with site access roads?
		Is there any evidence of incorrect waste disposal (paints, concrete, solid wastes)?
		Is the overall housekeeping sufficiently maintained?
		Is the vehicle/ equipment maintenance and cleaning areas clean and free of oil, grease or potential pollutants?
		Is the construction area access point stabilized? Has potential for mud/ dirt tracking from the site been minimized?
		Are liquid transfer areas (equipment fueling) clean and protected from rain?
		Are there any visible non-storm water discharges? Is there evidence that non-storm water discharges occurred in the past? If so, describe the non-storm water discharge:
		Are trashcans covered?
		Are sanitary waste facilities in working order and not leaking?
Describe Corrective Actions Taken (if any):		
Describe necessary revisions to the SWPPP (if any):		

Appendix D

Training Documentation Forms and Records

Los Angeles Department of Water and Power
Rain Gauge Reading for
Valley Village Park Stormwater Capture Parks Project

Month of:	Time	Rain Gauge Reading (inches)	Initials
1			
2			
3			
4			
5			
6			
7			
8			
9			
10			
11			
12			
13			
14			
15			
16			
17			
18			
19			
20			
21			
22			
23			
24			
25			
26			
27			
28			
29			
30			
31			

Training Records

Training Date: _____		
Trainer: _____		
Topics Covered: (Check applicable topics)		
SWPPP BMPs _____	BMP Maintenance: _____	Non-Storm Water Discharges: _____
Other:		

Name	*Company*	*Telephone*	*SWPPP Duties*

Appendix E

Change of Information Form and Amendments Certification

Use additional sheets if necessary.

Section Number/ Page Number	Summary of Revisions	Effective Date of Amendment	Initial Date of Preparation	Signature, Name, Title, Phone

Appendix F
Weather Information Guide

The General Permit requires inspections of the construction site prior to anticipated storms, during prolonged storms, and after actual storm events. The following sources may be used to obtain weather forecasts:

National Weather Service:

http://www.nws.noaa.gov/

Appendix G
Glossary

Best Management Practices (BMPs): Any program, technology, process, siting criteria, operational methods or measures, or engineered systems, that when implemented, prevent, control, remove or reduce pollution.

Clean Water Act: The Federal Water Pollution Control Act enacted by Public Law 92-500 as amended by 95-217, 95-576, 96-483, and 97-117; 33 USC. 1251 et seq. Enacted in 1977, the CWA gave EPA the authority to control point-source storm water discharges that convey pollutants to the waters of the United States. Congress amended the CWA in 1987 to create a new section devoted to storm water permitting. In accordance with the 1987 revisions, the EPA adopted regulations in 1990 that established requirements for National Pollutant Discharge Elimination System (NPDES) permits for discharge of storm water from industries and municipalities.

Contamination: "An impairment of the quality of the waters of the state by waste to a degree which creates a hazard to the public health through poisoning or through the spread of disease...including any equivalent effect resulting from the disposal of waste, whether or not waters of the state are affected." [California Water Code Section 13050(k)].

General Permit: The National Pollutant Discharge Elimination System General Permit for Storm Water Discharges Associated with Construction Activities, issued by the State of California Water Resources Control Board (Water Quality Order 99-08-DWQ, adopted August 1999).

Good Housekeeping Practices: The act of maintaining clean, orderly site areas to prevent potential pollutants from contacting storm water.

National Pollutant Discharge Elimination System (NPDES): A permitting process established pursuant to the Clean Water Act that regulates the release of pollutants to waters of the United States.

Non-Storm Water Discharge: Any discharge to surface waters, to a storm drain, or to any other storm water drainage facility that is not composed entirely of storm water or landscape irrigation runoff.

Notice of Intent (NOI): The NOI is the application form used to obtain the General Construction Permit. The NOI indicates the facility's intent to comply with the terms of the permit.

Nuisance: "Anything which meets all of the following requirements: (1) is injurious to health, or is indecent or offensive to the senses, or an obstruction to the free use of property, so as to interfere with the comfortable enjoyment of life and property; (2) affects at the same time an entire community or neighborhood, or any considerable number of persons, although the extent of the annoyance or damage inflicted upon individuals may be unequal; (3) occurs

	during or as a result of the treatment or disposal of wastes." [California Water Code Section 13050(m)].
Pollution:	The "man-made or man-induced alternation of the chemical, physical, biological, and radiological integrity of water." [Clean Water Act Section 502 (19)]. Pollution also means "an alternation of the quality of the waters of the state by waste to a degree which unreasonably affects either...the waters for beneficial uses...or facilities which serve these beneficial uses." [California Water Code Section 13050(l)].
Regional Water Quality Control Board:	State agency responsible for administration and enforcement of the municipal and industrial NPDES storm water permits.
Sanitary Sewer System:	A network of pipelines carrying sewage to a wastewater treatment facility. Storm drains are separate pipeline and are not connected to sanitary sewers.
Significant Materials:	Includes, but is not limited to: raw materials; fuels; materials such as solvents, detergents, and plastic pellets; finished materials such as metallic products; raw materials used in food processing or production; hazardous substances designated under Section 101(14) of Comprehensive Environmental Response, Compensation, and Liability Act (CERCLA); any chemical the facility is required to report pursuant to Section 313 of Title III of Superfund Amendments and Reauthorization Act (SARA); fertilizers; pesticides; and waste products such as ashes, slag, and sludge that have the potential to be released with storm water discharges.
Significant Quantities:	The volume, concentrations, or mass of a pollutant in storm water discharges that can cause or threaten to cause pollution, contamination, or nuisance; adversely impact human health or the environment; and cause or contribute to a violation of any applicable water quality standards for the receiving water.
Storm Water:	Storm water runoff, and surface runoff and drainage. It excludes infiltration and runoff from agricultural land.
Storm Water Discharge:	Storm water at the point where it runs off private property onto adjacent property, the street, canals, creeks, the river, or into the municipal storm drain system.
Storm Water Pollution Prevention Plan (SWPPP):	The SWPPP is a document that identifies sources and activities at a particular construction site that may contribute pollutants to storm water, and commits the property owner to implement specific control measures to prevent or treat such pollutants.
U.S. Environmental Protection Agency (EPA):	The federal agency with authority for enacting and enforcing many environmental laws, including the Clean Water Act.

Appendix H

Certification Statement

"I certify under penalty of law that this document and all attachments were prepared under my direction or supervision in accordance with a system designed to assure that qualified personnel properly gather and evaluate the information submitted. Based on my inquiry of the person or persons who manage the system, or those persons directly responsible for gathering the information, to the best of my knowledge and belief, the information submitted is, true, accurate, and complete. I am aware that there are significant penalties for submitting false information including the possibility of fine and imprisonment for knowing violations."

Initial Certification:

Print Name: Susan Shu, PE Title: Legally Responsible Person

Signature:_____ Date: _____

Telephone Number: 213-485-4493

Annual Re-Certification:

Print Name: _____ Title: _____

Signature:_____ Date: _____

Telephone Number: _____

Appendix I

BMP Fact Sheets

Erosion Control

EC-1 Scheduling
EC-2 Preservation of Existing Vegetation
EC-6 Straw Mulch

Sediment Control

SE-1 Silt Fence
SE-5 Fiber Rolls
SE-7 Street Sweeping and Vacuuming
SE-10 Storm Drain Inlet Protection

Tracking Control

TC-1 Stabilized Construction Entrance/Exit

Wind Erosion

WE-1 Wind Erosion Control

Non Storm Water Controls

NS-1 Water Conservation Practices
NS-2 Dewatering Operation
NS-6 Illicit Connection- Illegal Discharge Connection
NS-7 Potable Water Irrigation Discharge Detection
NS-8 Vehicle & Equipment Cleaning
NS-9 Vehicle & Equipment Fueling
NS-10 Vehicle & Equipment Maintenance
NS-12 Concrete Curing
NS-13 Concrete Finishing

Scheduling EC-1

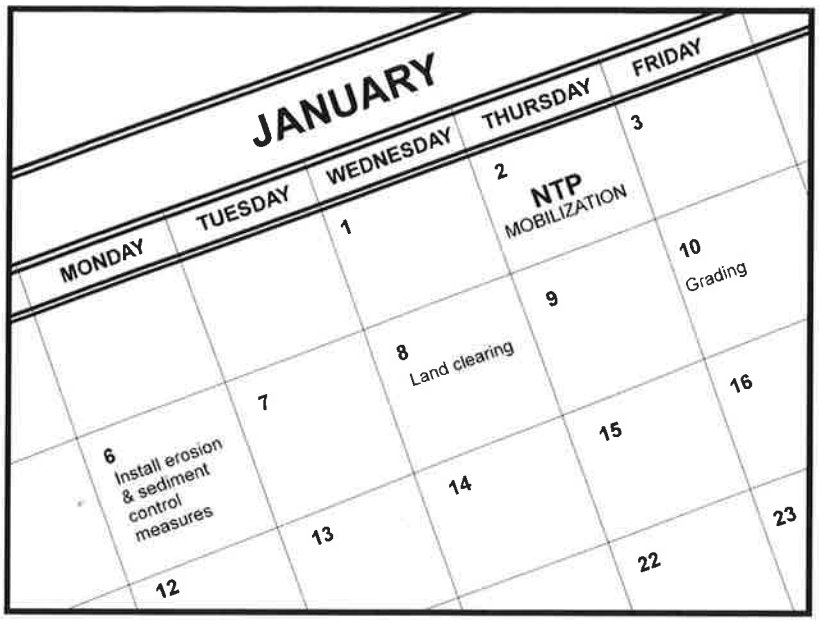

Description and Purpose

Scheduling is the development of a written plan that includes sequencing of construction activities and the implementation of BMPs such as erosion control and sediment control while taking local climate (rainfall, wind, etc.) into consideration. The purpose is to reduce the amount and duration of soil exposed to erosion by wind, rain, runoff, and vehicle tracking, and to perform the construction activities and control practices in accordance with the planned schedule.

Suitable Applications

Proper sequencing of construction activities to reduce erosion potential should be incorporated into the schedule of every construction project especially during rainy season. Use of other, more costly yet less effective, erosion and sediment control BMPs may often be reduced through proper construction sequencing.

Limitations

- Environmental constraints such as nesting season prohibitions reduce the full capabilities of this BMP.

Implementation

- Avoid rainy periods. Schedule major grading operations during dry months when practical. Allow enough time before rainfall begins to stabilize the soil with vegetation or physical means or to install sediment trapping devices.
- Plan the project and develop a schedule showing each phase of construction. Clearly show how the rainy season relates

Categories

EC	Erosion Control	☑
SE	Sediment Control	☒
TC	Tracking Control	☒
WE	Wind Erosion Control	☒
NS	Non-Stormwater Management Control	
WM	Waste Management and Materials Pollution Control	

Legend:

☑ **Primary Objective**

☒ **Secondary Objective**

Targeted Constituents

Sediment	☑
Nutrients	
Trash	
Metals	
Bacteria	
Oil and Grease	
Organics	

Potential Alternatives

None

If User/Subscriber modifies this fact sheet in any way, the CASQA name/logo and footer below must be removed from each page and not appear on the modified version.

CASQA
CALIFORNIA STORMWATER QUALITY ASSOCIATION

to soil disturbing and re-stabilization activities. Incorporate the construction schedule into the SWPPP.

- Include on the schedule, details on the rainy season implementation and deployment of:
  - Erosion control BMPs
  - Sediment control BMPs
  - Tracking control BMPs
  - Wind erosion control BMPs
  - Non-stormwater BMPs
  - Waste management and materials pollution control BMPs
- Include dates for activities that may require non-stormwater discharges such as dewatering, sawcutting, grinding, drilling, boring, crushing, blasting, painting, hydro-demolition, mortar mixing, pavement cleaning, etc.
- Work out the sequencing and timetable for the start and completion of each item such as site clearing and grubbing, grading, excavation, paving, foundation pouring utilities installation, etc., to minimize the active construction area during the rainy season.
  - Sequence trenching activities so that most open portions are closed before new trenching begins.
  - Incorporate staged seeding and re-vegetation of graded slopes as work progresses.
  - Schedule establishment of permanent vegetation during appropriate planting time for specified vegetation.
- Non-active areas should be stabilized as soon as practical after the cessation of soil disturbing activities or one day prior to the onset of precipitation.
- Monitor the weather forecast for rainfall.
- When rainfall is predicted, adjust the construction schedule to allow the implementation of soil stabilization and sediment treatment controls on all disturbed areas prior to the onset of rain.
- Be prepared year-round to deploy erosion control and sediment control BMPs. Erosion may be caused during dry seasons by un-seasonal rainfall, wind, and vehicle tracking. Keep the site stabilized year-round and retain and maintain rainy season sediment trapping devices in operational condition.
- Apply permanent erosion control to areas deemed substantially complete during the project's defined seeding window.
- Avoid soil disturbance during periods with high wind velocities.

Costs

Construction scheduling to reduce erosion may increase other construction costs due to reduced economies of scale in performing site grading. The cost effectiveness of scheduling techniques

should be compared with the other less effective erosion and sedimentation controls to achieve a cost-effective balance.

Inspection and Maintenance

- Verify that work is progressing in accordance with the schedule. If progress deviates, take corrective actions.
- Amend the schedule when changes are warranted.
- Amend the schedule prior to the rainy season to show updated information on the deployment and implementation of construction site BMPs.

References

Stormwater Quality Handbooks Construction Site Best Management Practices (BMPs) Manual, State of California Department of Transportation (Caltrans), November 2000.

Stormwater Management for Construction Activities Developing Pollution Prevention Plans and Best Management Practices (EPA 832-R-92-005), U.S. Environmental Protection Agency, Office of Water, September 1992.

Preservation of Existing Vegetation EC-2

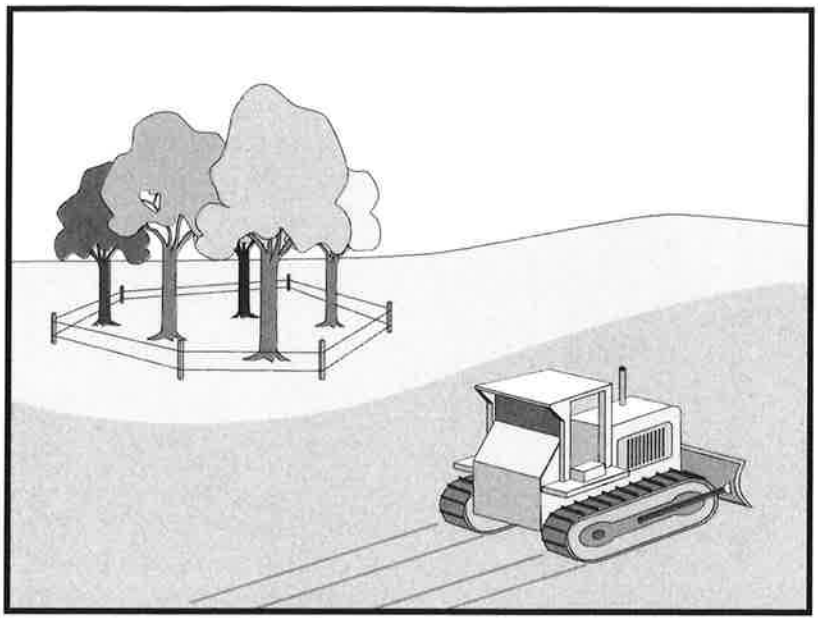

Categories

EC	Erosion Control	☑
SE	Sediment Control	
TC	Tracking Control	
WE	Wind Erosion Control	
NS	Non-Stormwater Management Control	
WM	Waste Management and Materials Pollution Control	

Legend:

☑ **Primary Objective**

☒ **Secondary Objective**

Targeted Constituents

Sediment	☑
Nutrients	
Trash	
Metals	
Bacteria	
Oil and Grease	
Organics	

Potential Alternatives

None

Description and Purpose

Carefully planned preservation of existing vegetation minimizes the potential of removing or injuring existing trees, vines, shrubs, and grasses that protect soil from erosion.

Suitable Applications

Preservation of existing vegetation is suitable for use on most projects. Large project sites often provide the greatest opportunity for use of this BMP. Suitable applications include the following:

- Areas within the site where no construction activity occurs or occurs at a later date. This BMP is especially suitable to multi year projects where grading can be phased.
- Areas where natural vegetation exists and is designated for preservation. Such areas often include steep slopes, watercourse, and building sites in wooded areas.
- Areas where local, state, and federal government require preservation, such as vernal pools, wetlands, marshes, certain oak trees, etc. These areas are usually designated on the plans, or in the specifications, permits, or environmental documents.
- Where vegetation designated for ultimate removal can be temporarily preserved and be utilized for erosion control and sediment control.
- Protecting existing vegetation buffers and swales.

If User/Subscriber modifies this fact sheet in any way, the CASQA name/logo and footer below must be removed from each page and not appear on the modified version.

Preservation of Existing Vegetation EC-2

Limitations

- Requires forward planning by the owner/developer, contractor, and design staff.
- Limited opportunities for use when project plans do not incorporate existing vegetation into the site design.
- For sites with diverse topography, it is often difficult and expensive to save existing trees while grading the site satisfactory for the planned development.

Implementation

The best way to prevent erosion is to not disturb the land. In order to reduce the impacts of new development and redevelopment, projects may be designed to avoid disturbing land in sensitive areas of the site (e.g., natural watercourses, steep slopes), and to incorporate unique or desirable existing vegetation into the site's landscaping plan. Clearly marking and leaving a buffer area around these unique areas during construction will help to preserve these areas as well as take advantage of natural erosion prevention and sediment trapping.

Existing vegetation to be preserved on the site must be protected from mechanical and other injury while the land is being developed. The purpose of protecting existing vegetation is to ensure the survival of desirable vegetation for shade, beautification, and erosion control. Mature vegetation has extensive root systems that help to hold soil in place, thus reducing erosion. In addition, vegetation helps keep soil from drying rapidly and becoming susceptible to erosion. To effectively save existing vegetation, no disturbances of any kind should be allowed within a defined area around the vegetation. For trees, no construction activity should occur within the drip line of the tree.

Timing

- Provide for preservation of existing vegetation prior to the commencement of clearing and grubbing operations or other soil disturbing activities in areas where no construction activity is planned or will occur at a later date.

Design and Layout

- Mark areas to be preserved with temporary fencing. Include sufficient setback to protect roots.
  - Orange colored plastic mesh fencing works well.
  - Use appropriate fence posts and adequate post spacing and depth to completely support the fence in an upright position.
- Locate temporary roadways, stockpiles, and layout areas to avoid stands of trees, shrubs, and grass.
- Consider the impact of grade changes to existing vegetation and the root zone.
- Maintain existing irrigation systems where feasible. Temporary irrigation may be required.
- Instruct employees and subcontractors to honor protective devices. Prohibit heavy equipment, vehicular traffic, or storage of construction materials within the protected area.

- Consider pruning or mowing vegetation instead of removing it to allow for regrowth.
- If possible, retain vegetation buffer around the site and adjacent waterways.

Costs

There is little cost associated with preserving existing vegetation if properly planned during the project design, and these costs may be offset by aesthetic benefits that enhance property values. During construction, the cost for preserving existing vegetation will likely be less than the cost of applying erosion and sediment controls to the disturbed area. Replacing vegetation inadvertently destroyed during construction can be extremely expensive, sometimes in excess of $10,000 per tree.

Inspection and Maintenance

During construction, the limits of disturbance should remain clearly marked at all times. Irrigation or maintenance of existing vegetation should be described in the landscaping plan. If damage to protected trees still occurs, maintenance guidelines described below should be followed:

- Verify that protective measures remain in place. Restore damaged protection measures immediately.
- Serious tree injuries shall be attended to by an arborist.
- Damage to the crown, trunk, or root system of a retained tree shall be repaired immediately.
- Trench as far from tree trunks as possible, usually outside of the tree drip line or canopy. Curve trenches around trees to avoid large roots or root concentrations. If roots are encountered, consider tunneling under them. When trenching or tunneling near or under trees to be retained, place tunnels at least 18 in. below the ground surface, and not below the tree center to minimize impact on the roots.
- Do not leave tree roots exposed to air. Cover exposed roots with soil as soon as possible. If soil covering is not practical, protect exposed roots with wet burlap or peat moss until the tunnel or trench is ready for backfill.
- Cleanly remove the ends of damaged roots with a smooth cut.
- Fill trenches and tunnels as soon as possible. Careful filling and tamping will eliminate air spaces in the soil, which can damage roots.
- If bark damage occurs, cut back all loosened bark into the undamaged area, with the cut tapered at the top and bottom and drainage provided at the base of the wood. Limit cutting the undamaged area as much as possible.
- Aerate soil that has been compacted over a trees root zone by punching holes 12 in. deep with an iron bar and moving the bar back and forth until the soil is loosened. Place holes 18 in. apart throughout the area of compacted soil under the tree crown.
- Fertilization:

- Fertilize trees in the late fall or early spring. Although to note, many native species do not require fertilization.

- Apply fertilizer to the soil over the feeder roots and in accordance with label instructions, but never closer than 3 ft to the trunk. Increase the fertilized area by one-fourth of the crown area for conifers that have extended root systems.

- Retain protective measures until all other construction activity is complete to avoid damage during site cleanup and stabilization.

References

County of Sacramento Tree Preservation Ordinance, September 1981.

Stormwater Quality Handbooks Construction Site Best Management Practices (BMPs) Manual, State of California Department of Transportation (Caltrans), November 2000.

Stormwater Management of the Puget Sound Basin, Technical Manual, Publication #91-75, Washington State Department of Ecology, February 1992.

Water Quality Management Plan for The Lake Tahoe Region, Volume II, Handbook of Management Practices, Tahoe Regional Planning Agency, November 1988.

Straw Mulch

EC-6

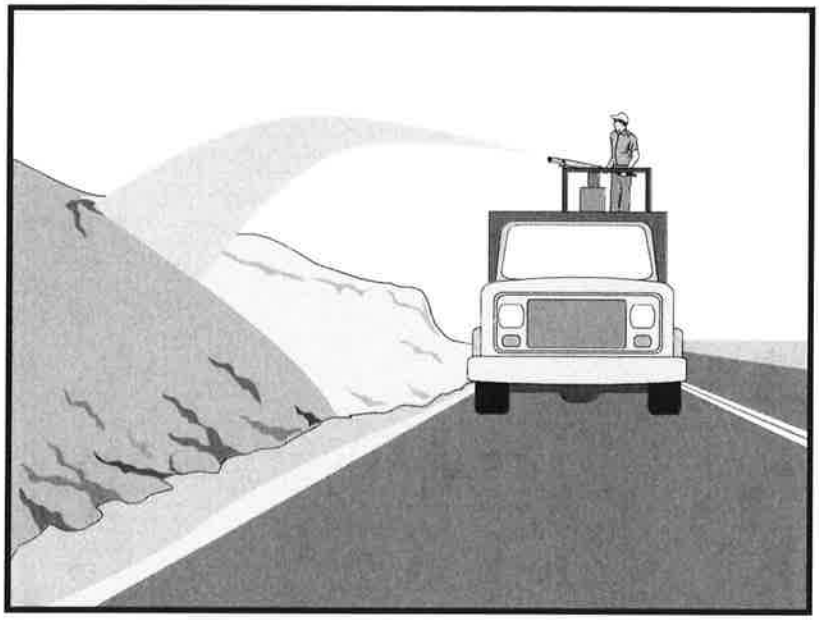

Categories		
EC	Erosion Control	☑
SE	Sediment Control	
TC	Tracking Control	
WE	Wind Erosion Control	☒
NS	Non-Stormwater Management Control	
WM	Waste Management and Materials Pollution Control	

Legend:

☑ **Primary Category**

☒ **Secondary Category**

Description and Purpose

Straw mulch consists of placing a uniform layer of straw and incorporating it into the soil with a studded roller or crimper or anchoring it with a tackifier or stabilizing emulsion. Straw mulch protects the soil surface from the impact of rain drops, preventing soil particles from becoming dislodged.

Suitable Applications

Straw mulch is suitable for disturbed areas requiring temporary protection until permanent stabilization is established. Straw mulch can be specified for the following applications:

- As a stand-alone BMP on disturbed areas until soils can be prepared for permanent vegetation. The longevity of straw mulch is typically less than six months.
- Applied in combination with temporary seeding strategies
- Applied in combination with permanent seeding strategies to enhance plant establishment and final soil stabilization
- Applied around containerized plantings to control erosion until the plants become established to provide permanent stabilization

Limitations

Availability of straw and straw blowing equipment may be limited just prior to the rainy season and prior to storms due to high demand.

Targeted Constituents	
Sediment	☑
Nutrients	
Trash	
Metals	
Bacteria	
Oil and Grease	
Organics	

Potential Alternatives
EC-3 Hydraulic Mulch
EC-4 Hydroseeding
EC-5 Soil Binders
EC-7 Geotextiles and Mats
EC-8 Wood Mulching
EC-14 Compost Blanket

If User/Subscriber modifies this fact sheet in any way, the CASQA name/logo and footer below must be removed from each page and not appear on the modified version.

CASQA
CALIFORNIA STORMWATER QUALITY ASSOCIATION

- There is a potential for introduction of weed seed and unwanted plant material if weed-free agricultural straw is not specified.
- Straw mulch applied by hand is more time intensive and potentially costly.
- Wind may limit application of straw and blow straw into undesired locations.
- May have to be removed prior to permanent seeding or prior to further earthwork.
- "Punching" of straw does not work in sandy soils, necessitating the use of tackifiers.
- Potential fugitive dust control issues associated with straw applications can occur. Application of a stabilizing emulsion or a water stream at the same time straw is being blown can reduce this problem.
- Use of plastic netting should be avoided in areas where wildlife may be entrapped and may be prohibited for projects in certain areas with sensitive wildlife species, especially reptiles and amphibians.

Implementation

- Straw should be derived from weed-free wheat, rice, or barley. Where required by the plans, specifications, permits, or environmental documents, native grass straw should be used.
- Use tackifier to anchor straw mulch to the soil on slopes.
- Crimping, punch roller-type rollers, or track walking may also be used to incorporate straw mulch into the soil on slopes. Track walking can be used where other methods are impractical.
- Avoid placing straw onto roads, sidewalks, drainage channels, sound walls, existing vegetation, etc.
- Straw mulch with tackifier should not be applied during or immediately before rainfall.
- Additional guidance on the comparison and selection of temporary slope stabilization methods is provided in Appendix F of the Handbook.

Application Procedures

- When using a tackifier to anchor the straw mulch, roughen embankment or fill areas by rolling with a crimping or punching-type roller or by track walking before placing the straw mulch. Track walking should only be used where rolling is impractical.
- Apply straw at a rate of between 3,000 and 4,000 lb./acre, either by machine or by hand distribution and provide 100% ground cover. A lighter application is used for flat surfaces and a heavier application is used for slopes.
- Evenly distribute straw mulch on the soil surface.
- Anchoring straw mulch to the soil surface by "punching" it into the soil mechanically (incorporating) can be used in lieu of a tackifier.

- Methods for holding the straw mulch in place depend upon the slope steepness, accessibility, soil conditions, and longevity.
  - A tackifier acts to glue the straw fibers together and to the soil surface. The tackifier should be selected based on longevity and ability to hold the fibers in place. A tackifier is typically applied at a rate of 125 lb./acre. In windy conditions, the rates are typically 180 lb./acre.
  - On very small areas, a spade or shovel can be used to punch in straw mulch.
  - On slopes with soils that are stable enough and of sufficient gradient to safely support construction equipment without contributing to compaction and instability problems, straw can be "punched" into the ground using a knife blade roller or a straight bladed coulter, known commercially as a "crimper."

Costs

Average annual cost for installation and maintenance is included in the table below. Application by hand is more time intensive and potentially more costly.

BMP	Unit Cost per Acre
Straw mulch, crimped or punched	$3,150-$6,900
Straw mulch with tackifier	$2,300-$6,200

Source: Cost information received from individual product suppliers solicited by Geosyntec Consultants (2004). Adjusted for inflation (2016 dollars) by Tetra Tech, Inc.

Inspection and Maintenance

- BMPs must be inspected in accordance with General Permit requirements for the associated project type and risk level. It is recommended that at a minimum, BMPs be inspected weekly, prior to forecasted rain events, daily during extended rain events, and after the conclusion of rain events.
- Areas where erosion is evident should be repaired and BMPs re-applied as soon as possible. Care should be exercised to minimize the damage to protected areas while making repairs, as any area damaged will require re-application of BMPs.
- The key consideration in inspection and maintenance is that the straw needs to last long enough to achieve erosion control objectives. Straw mulch as a stand-alone BMP is temporary and is not suited for long-term erosion control.
- Maintain an unbroken, temporary mulched ground cover while disturbed soil areas are inactive. Repair any damaged ground cover and re-mulch exposed areas.
- Reapplication of straw mulch and tackifier may be required to maintain effective soil stabilization over disturbed areas and slopes.

References

Soil Stabilization BMP Research for Erosion and Sediment Controls: Cost Survey Technical Memorandum, State of California Department of Transportation (Caltrans), July 2007.

Erosion and Sediment Control Manual, Oregon Department of Environmental Quality, February 2005.

Controlling Erosion of Construction Sites, Agricultural Information Bulletin #347, U.S. Department of Agriculture (USDA), Natural Resources Conservation Service (NRCS) (formerly Soil Conservation Service – SCS).

Guides for Erosion and Sediment Control in California, USDA Soils Conservation Service, January 1991.

Manual of Standards of Erosion and Sediment Control Measures, Association of Bay Area Governments, May 1995.

Soil Erosion by Water, Agricultural Information Bulletin #513, U.S. Department of Agriculture, Soil Conservation Service.

Stormwater Quality Handbooks Construction Site Best Management Practices (BMPs) Manual, State of California Department of Transportation (Caltrans), March 2003.

Stormwater Management of the Puget Sound Basin, Technical Manual, Publication #91-75, Washington State Department of Ecology, February 1992.

Water Quality Management Plan for the Lake Tahoe Region, Volume II, Handbook of Management Practices, Tahoe Regional Planning Agency, November 1988.

Water Conservation Practices NS-1

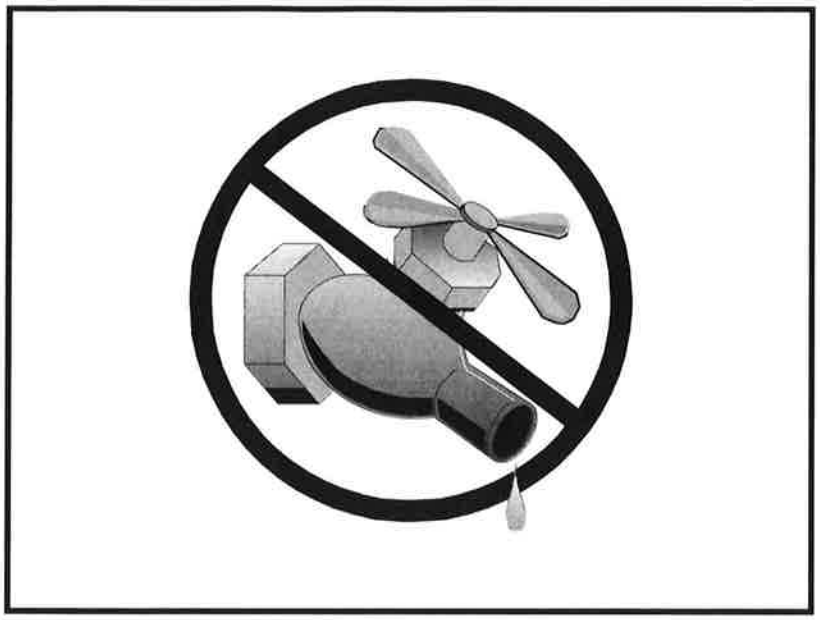

Categories

EC	Erosion Control	☒
SE	Sediment Control	☒
TC	Tracking Control	
WE	Wind Erosion Control	
NS	Non-Stormwater Management Control	☑
WM	Waste Management and Materials Pollution Control	

Legend:

☑ **Primary Objective**

☒ **Secondary Objective**

Targeted Constituents

Sediment	☑
Nutrients	
Trash	
Metals	
Bacteria	
Oil and Grease	
Organics	

Potential Alternatives

None

Description and Purpose

Water conservation practices are activities that use water during the construction of a project in a manner that avoids causing erosion and the transport of pollutants offsite. These practices can reduce or eliminate non-stormwater discharges.

Suitable Applications

Water conservation practices are suitable for all construction sites where water is used, including piped water, metered water, trucked water, and water from a reservoir.

Limitations

- None identified.

Implementation

- Keep water equipment in good working condition.
- Stabilize water truck filling area.
- Repair water leaks promptly.
- Washing of vehicles and equipment on the construction site is discouraged.
- Avoid using water to clean construction areas. If water must be used for cleaning or surface preparation, surface should be swept and vacuumed first to remove dirt. This will minimize amount of water required.

If User/Subscriber modifies this fact sheet in any way, the CASQA name/logo and footer below must be removed from each page and not appear on the modified version.

CASQA
CALIFORNIA STORMWATER QUALITY ASSOCIATION

- Direct construction water runoff to areas where it can soak into the ground or be collected and used.
- Authorized non-stormwater discharges to the storm drain system, channels, or receiving waters are acceptable with the implementation of appropriate BMPs.
- Lock water tank valves to prevent unauthorized use.

Costs

The cost is small to none compared to the benefits of conserving water.

Inspection and Maintenance

- Inspect and verify that activity based BMPs are in place prior to the commencement of authorized non-stormwater discharges.
- Inspect BMPs in accordance with General Permit requirements for the associated project type and risk level. It is recommended that at a minimum, BMPs be inspected weekly, prior to forecasted rain events, daily during extended rain events, and after the conclusion of rain events.
- Inspect BMPs subject to non-stormwater discharges daily while non-stormwater discharges are occuring.
- Repair water equipment as needed to prevent unintended discharges.
  - Water trucks
  - Water reservoirs (water buffalos)
  - Irrigation systems
  - Hydrant connections

References

Stormwater Quality Handbooks - Construction Site Best Management Practices (BMPs) Manual, State of California Department of Transportation (Caltrans), November 2000.

Dewatering Operations NS-2

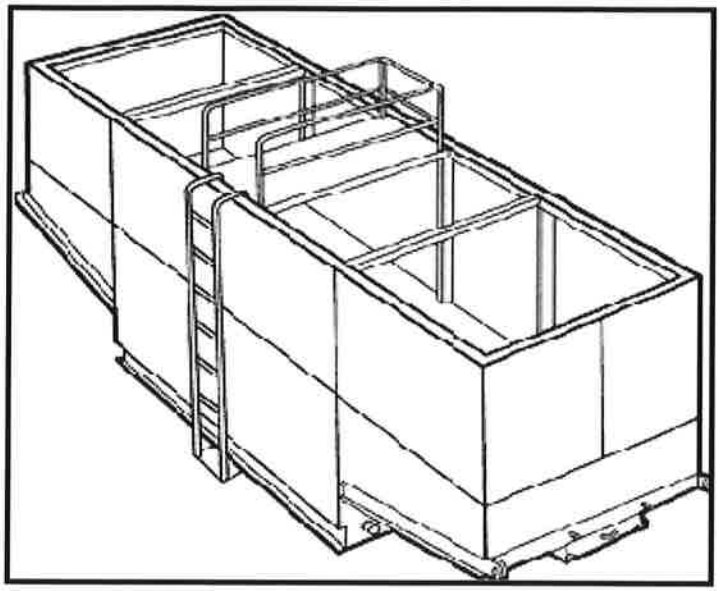

Categories		
EC	Erosion Control	
SE	Sediment Control	☒
TC	Tracking Control	
WE	Wind Erosion Control	
NS	Non-Stormwater Management Control	☑
WM	Waste Management and Materials Pollution Control	

Legend:
☑ **Primary Category**
☒ **Secondary Category**

Description and Purpose

Dewatering operations are practices that manage the discharge of pollutants when non-stormwater and accumulated precipitation (stormwater) must be removed from a work location to proceed with construction work or to provide vector control.

The General Permit incorporates Numeric Action Levels (NAL) for turbidity (see Section 2 of this handbook to determine your project's risk level and if you are subject to these requirements).

Discharges from dewatering operations can contain high levels of fine sediment that, if not properly treated, could lead to exceedances of the General Permit requirements or Basin Plan standards.

The dewatering operations described in this fact sheet are not Active Treatment Systems (ATS) and do not include the use of chemical coagulations, chemical flocculation or electrocoagulation.

Targeted Constituents	
Sediment	☑
Nutrients	
Trash	
Metals	
Bacteria	
Oil and Grease	☑
Organics	

Potential Alternatives

SE-5: Fiber Roll

SE-6: Gravel Bag Berm

If User/Subscriber modifies this fact sheet in any way, the CASQA name/logo and footer below must be removed from each page and not appear on the modified version.

Suitable Applications

These practices are implemented for discharges of non-stormwater from construction sites. Non-stormwaters include, but are not limited to, groundwater, water from cofferdams, water diversions, and waters used during construction activities that must be removed from a work area to facilitate construction.

Practices identified in this section are also appropriate for implementation when managing the removal of accumulated

CASQA
CALIFORNIA STORMWATER QUALITY ASSOCIATION

precipitation (stormwater) from depressed areas at a construction site.

Stormwater mixed with non-stormwater should be managed as non-stormwater.

Limitations

- Dewatering operations will require and should comply with applicable local and project-specific permits and regulations. In some areas, all dewatering activities, regardless of the discharge volume, require a dewatering permit.
- Site conditions will dictate design and use of dewatering operations.
- The controls discussed in this fact sheet primarily address sediment. Other secondary pollutant removal benefits are discussed where applicable.
- The controls detailed in this fact sheet only allow for minimal settling time for sediment particles. Use only when site conditions restrict the use of the other control methods.
- Avoid dewatering discharges where possible by using the water for dust control.

Implementation

- A Construction Site Monitoring Plan (CSMP) should be included in the project Stormwater Pollution Prevention Plan (SWPPP).
- Regional Water Quality Control Board (RWQCB) Regions may require notification and approval prior to any discharge of water from construction sites.
- The destination of discharge from dewatering activities will typically determine the type of permit required for the discharge. For example, when discharging to a water of the U.S., a dewatering permit may be required through the site's governing RWQCB. When discharging to a sanitary sewer or Municipal Separate Storm Sewer System (MS4), a permit may need to be obtained from the owner of the sanitary sewer or MS4 in addition to obtaining an RWQCB dewatering permit. Additional permits or permissions from other agencies may be required for dewatering cofferdams or diversions.
- Dewatering discharges should not cause erosion at the discharge point. Appropriate BMPs should be implemented to maintain compliance with all applicable permits.
- Maintain dewatering records in accordance with all local and project-specific permits and regulations.

Sediment Treatment

A variety of methods can be used to treat water during dewatering operations. Several devices are presented below and provide options to achieve sediment removal. The sediment particle size and permit or receiving water limitations on sediment or turbidity are key considerations for selecting sediment treatment option(s); in some cases, the use of multiple devices may be appropriate. Use of other enhanced treatment methods (i.e., introduction of chemicals or electric current to enhance flocculation and removal of sediment) must comply with: 1) for storm drain or surface water discharges, the requirements for Active Treatment Systems (see SE-11); or 2) for sanitary sewer discharges, the requirements of applicable sanitary sewer discharge permits.

Sediment Basin (see also SE-2)

Description:

- A sediment basin is a temporary basin with a controlled release structure that is formed by excavation or construction of an embankment to detain sediment-laden runoff and allow sediment to settle out before discharging. Sediment basins are generally larger than Sediment Traps (SE-3) and have a designed outlet structure.

Appropriate Applications:

- Effective for the removal of trash, gravel, sand, silt, some metals that settle out with the sediment.

Implementation:

- Excavation and construction of related facilities is required.
- Temporary sediment basins should be fenced if safety is a concern.
- Outlet protection is required to prevent erosion at the outfall location.

Maintenance:

- Maintenance is required for safety fencing, vegetation, embankment, inlet and outlet, as well as other features.
- Removal of sediment is required when the storage volume is reduced by one-third.

Sediment Trap (See also SE-3)

Description:

- A sediment trap is a temporary basin formed by excavation and/or construction of an earthen embankment across a waterway or low drainage area to detain sediment-laden runoff and allow sediment to settle out before discharging. Sediment traps are generally smaller than Sediment Basins (SE-2) and do not have a designed outlet (but do have a spillway or overflow).

Appropriate Applications:

Effective for the removal of large and medium sized particles (sand and gravel) and some metals that settle out with the sediment.

Implementation:

- Excavation and construction of related facilities is required.
- Trap inlets should be located to maximize the travel distance to the trap outlet.
- Use rock or vegetation to protect the trap outlets against erosion.

Maintenance:

- Maintenance is required for vegetation, embankment, inlet and outfall structures, as well as other features.
- Removal of sediment is required when the storage volume is reduced by one-third.

Weir Tanks

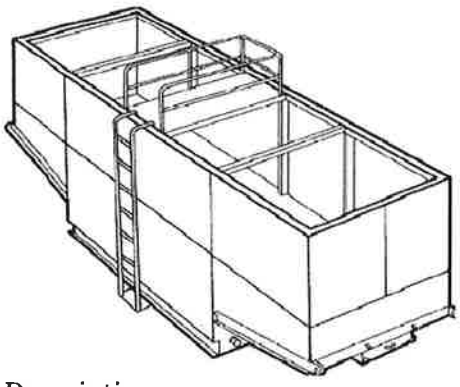

Description:

- A weir tank separates water and waste by using weirs. The configuration of the weirs (over and under weirs) maximizes the residence time in the tank and determines the waste to be removed from the water, such as oil, grease, and sediments.

Appropriate Applications:

- The tank removes trash, some settleable solids (gravel, sand, and silt), some visible oil and grease, and some metals (removed with sediment). To achieve high levels of flow, multiple tanks can be used in parallel. If additional treatment is desired, the tanks can be placed in series or as pre-treatment for other methods.

Implementation:

- Tanks are delivered to the site by the vendor, who can provide assistance with set-up and operation.
- Tank size will depend on flow volume, constituents of concern, and residency period required. Vendors should be consulted to appropriately size tank.
- Treatment capacity (i.e., volume and number of tanks) should provide at a minimum the required volume for discrete particle settling for treatment design flows.

Maintenance:

- Periodic cleaning is required based on visual inspection or reduced flow.
- Oil and grease disposal should be conducted by a licensed waste disposal company.

Dewatering Tanks

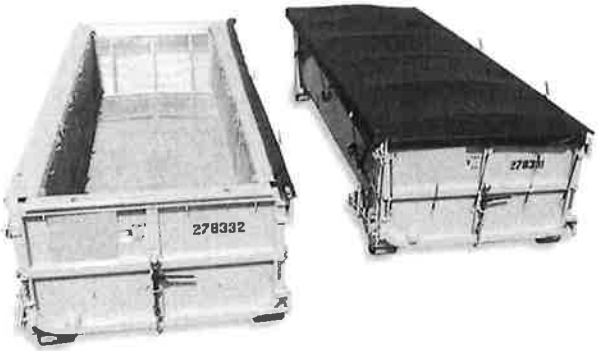

Description:

- A dewatering tank removes debris and sediment. Flow enters the tank through the top, passes through a fabric filter, and is discharged through the bottom of the tank. The filter separates the solids from the liquids.

Appropriate Applications:

- The tank removes trash, gravel, sand, and silt, some visible oil and grease, and some metals (removed with sediment). To achieve high levels of flow, multiple tanks can be used in parallel. If additional treatment is desired, the tanks can be placed in series or as pre-treatment for other methods.

Implementation:

- Tanks are delivered to the site by the vendor, who can provide assistance with set-up and operation.
- Tank size will depend on flow volume, constituents of concern, and residency period required. Vendors should be consulted to appropriately size tank.

Maintenance:

- Periodic cleaning is required based on visual inspection or reduced flow.
- Oil and grease disposal should be conducted by licensed waste disposal company.

Gravity Bag Filter

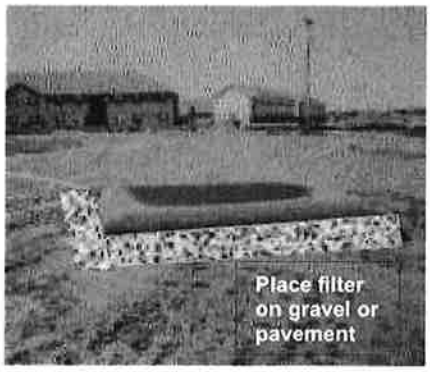

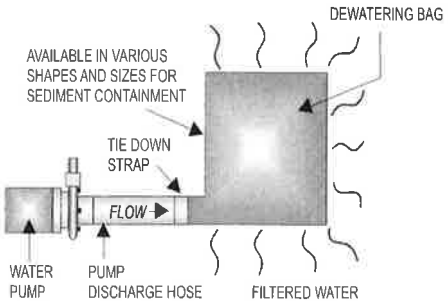

Description:

- A gravity bag filter, also referred to as a dewatering bag, is a square or rectangular bag made of non-woven geotextile fabric that collects gravel, sand, silt, and fines.

Appropriate Applications:

- Effective for the removal of sediments (gravel, sand, silt, and fines). Some metals are removed with the sediment.

Implementation:

- Water is pumped into one side of the bag and seeps through the top, bottom, and sides of the bag.
- Place filter bag on pavement or a gravel bed or paved surface. Avoid placing a dewatering bag on unprotected bare soil. If placing the bag on bare soil is unavoidable, a secondary barrier should be used, such as a rock filter bed placed beneath and beyond the edges of the bag to, prevent erosion and capture sediments that escape the bag.
- Perimeter control around the downstream end of the bag should be implemented. Secondary sediment controls are important especially in the initial stages of discharge, which tend to allow fines to pass through the bag.

Maintenance:

- Inspection of the flow conditions, bag condition, bag capacity, and the secondary barrier (as applicable) is required.
- Replace the bag when it no longer filters sediment or passes water at a reasonable rate.
- Caution should be taken when removing and disposing of the bag, to prevent the release of captured sediment
- Properly dispose of the bag offsite. If sediment is removed from the bag prior to disposal (bags can potentially be reused depending upon their condition), dispose of sediment in accordance with the general maintenance procedures described at the end of this BMP Fact Sheet.

Sand Media Particulate Filter





Description:

- Water is treated by passing it through canisters filled with sand media. Generally, sand filters provide a final level of treatment. They are often used as a secondary or higher level of treatment after a significant amount of sediment and other pollutants have been removed using other methods.

Appropriate Applications:

- Effective for the removal of trash, gravel, sand, and silt and some metals, as well as the reduction of biochemical oxygen demand (BOD) and turbidity.
- Sand filters can be used for stand-alone treatment or in conjunction with bag and cartridge filtration if further treatment is required.
- Sand filters can also be used to provide additional treatment to water treated via settling or basic filtration.

Implementation:

- The filters require delivery to the site and initial set up. The vendor can provide assistance with installation and operation.

Maintenance:

- The filters require regular service to monitor and maintain the level of the sand media. If subjected to high loading rates, filters can plug quickly.
- Venders generally provide data on maximum head loss through the filter. The filter should be monitored daily while in use and cleaned when head loss reaches target levels.
- If cleaned by backwashing, the backwash water may need to be hauled away for disposal or returned to the upper end of the treatment train for another pass through the series of dewatering BMPs.

Pressurized Bag Filter



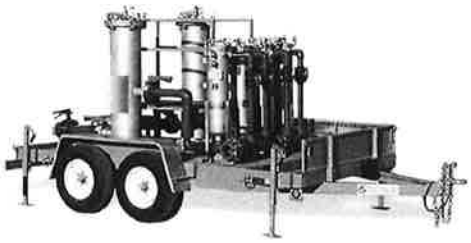

Description:

- A pressurized bag filter is a unit composed of single filter bags made from polyester felt material. The water filters through the unit and is discharged through a header. Vendors provide bag filters in a variety of configurations. Some units include a combination of bag filters and cartridge filters for enhanced contaminant removal.

Appropriate Applications:

- Effective for the removal of sediment (sand and silt) and some metals, as well as the reduction of BOD, turbidity, and hydrocarbons. Oil absorbent bags are available for hydrocarbon removal.

- Filters can be used to provide secondary treatment to water treated via settling or basic filtration.

Implementation:

- The filters require delivery to the site and initial set up. The vendor can provide assistance with installation and operation.

Maintenance:

- The filter bags require replacement when the pressure differential equals or exceeds the manufacturer's recommendation.

Cartridge Filter

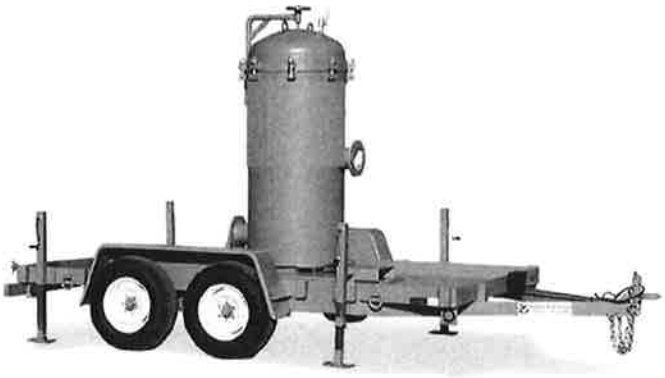

Description:

- Cartridge filters provide a high degree of pollutant removal by utilizing a number of individual cartridges as part of a larger filtering unit. They are often used as a secondary or higher (polishing) level of treatment after a significant amount of sediment and other pollutants are removed. Units come with various cartridge configurations (for use in series with bag filters) or with a larger single cartridge filtration unit (with multiple filters within).

Appropriate Applications:

- Effective for the removal of sediment (sand, silt, and some clays) and metals, as well as the reduction of BOD, turbidity, and hydrocarbons. Hydrocarbons can effectively be removed with special resin cartridges.

- Filters can be used to provide secondary treatment to water treated via settling or basic filtration.

Implementation:

- The filters require delivery to the site and initial set up. The vendor can provide assistance.

Maintenance:

- The cartridges require replacement when the pressure differential equals or exceeds the manufacturer's recommendation.

Costs

- Sediment control costs vary considerably depending on the dewatering and sediment treatment system that is selected. Pressurized filters tend to be more expensive than gravity settling but are often more effective. Simple tanks are generally rented on a long-term basis (one or more months) and can range from $460 per month for a 1,000-gallon tank to $3,400 per month for a 10,000-gallon tank (adjusted for inflation, 2016 dollars, by Tetra Tech Inc.). Mobilization and demobilization costs vary considerably.

Inspection and Maintenance

- Inspect and verify that dewatering BMPs are in place and functioning prior to the commencement of activities requiring dewatering.

- Inspect dewatering BMPs daily while dewatering activities are being conducted.

- Inspect all equipment before use. Monitor dewatering operations to ensure they do not cause offsite discharge or erosion.
- Sample dewatering discharges as required by the General Permit.
- Unit-specific maintenance requirements are included with the description of each unit.
- Sediment removed during the maintenance of a dewatering device may be either spread onsite and stabilized or disposed of at a disposal site as approved by the owner.
- Sediment that is commingled with other pollutants should be disposed of in accordance with all applicable laws and regulations and as approved by the owner.

References

Blueprint for a Clean Bay: Best Management Practices to Prevent Stormwater Pollution from Construction Related Activities; Santa Clara Valley Nonpoint Source Pollution Control Program, 1995.

Stormwater Quality Handbooks - Construction Site Best Management Practices (BMPs) Manual, State of California Department of Transportation (Caltrans), March 2003; Updated March 2004.

Stormwater Management for Construction Activities, Developing Pollution Prevention Plans and Best Management Practices, EPA 832-R-92005; USEPA, April 1992.

Labor Surcharge & Equipment Rental Rates, April 1, 2002 through March 31, 2003, California Department of Transportation (Caltrans).

Erosion and Sediment Control Manual, Oregon Department of Environmental Quality, February 2005.

Illicit Connection/Discharge NS-6

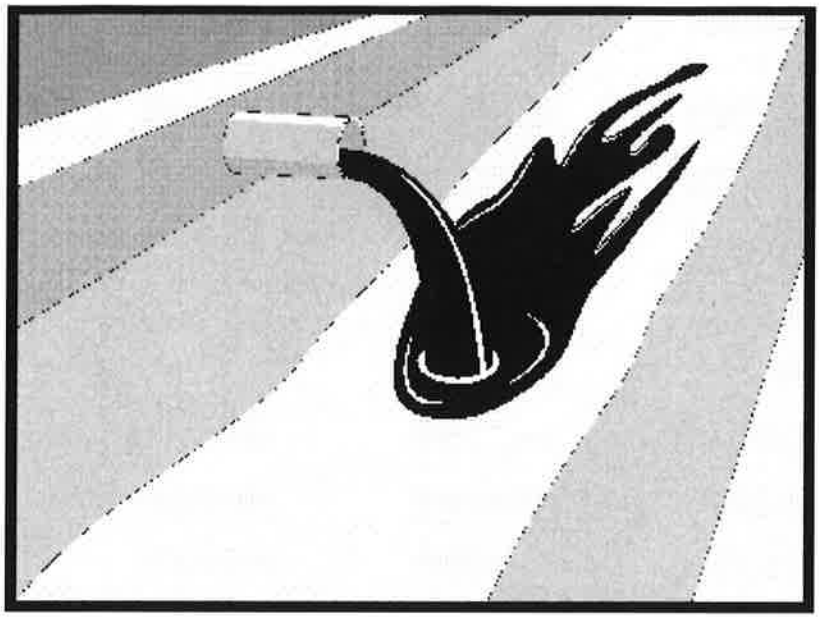

Categories

EC	Erosion Control	
SE	Sediment Control	
TC	Tracking Control	
WE	Wind Erosion Control	
NS	Non-Stormwater Management Control	☑
WM	Waste Management and Materials Pollution Control	

Legend:

☑ **Primary Objective**

☒ **Secondary Objective**

Targeted Constituents

Sediment	
Nutrients	☑
Trash	☑
Metals	☑
Bacteria	☑
Oil and Grease	☑
Organics	☑

Potential Alternatives

None

If User/Subscriber modifies this fact sheet in any way, the CASQA name/logo and footer below must be removed from each page and not appear on the modified version.

Description and Purpose

Procedures and practices designed for construction contractors to recognize illicit connections or illegally dumped or discharged materials on a construction site and report incidents.

Suitable Applications

This best management practice (BMP) applies to all construction projects. Illicit connection/discharge and reporting is applicable anytime an illicit connection or discharge is discovered, or illegally dumped material is found on the construction site.

Limitations

Illicit connections and illegal discharges or dumping, for the purposes of this BMP, refer to discharges and dumping caused by parties other than the contractor. If pre-existing hazardous materials or wastes are known to exist onsite, they should be identified in the SWPPP and handled as set forth in the SWPPP.

Implementation

Planning

- Review the SWPPP. Pre-existing areas of contamination should be identified and documented in the SWPPP.
- Inspect site before beginning the job for evidence of illicit connections, illegal dumping or discharges. Document any pre-existing conditions and notify the owner.

CASQA
CALIFORNIA STORMWATER QUALITY ASSOCIATION

- Inspect site regularly during project execution for evidence of illicit connections, illegal dumping or discharges.
- Observe site perimeter for evidence for potential of illicitly discharged or illegally dumped material, which may enter the job site.

Identification of Illicit Connections and Illegal Dumping or Discharges

- **General** – unlabeled and unidentifiable material should be treated as hazardous.
- **Solids** - Look for debris, or rubbish piles. Solid waste dumping often occurs on roadways with light traffic loads or in areas not easily visible from the traveled way.
- **Liquids** - signs of illegal liquid dumping or discharge can include:
  - Visible signs of staining or unusual colors to the pavement or surrounding adjacent soils
  - Pungent odors coming from the drainage systems
  - Discoloration or oily substances in the water or stains and residues detained within ditches, channels or drain boxes
  - Abnormal water flow during the dry weather season
- **Urban Areas** - Evidence of illicit connections or illegal discharges is typically detected at storm drain outfall locations or at manholes. Signs of an illicit connection or illegal discharge can include:
  - Abnormal water flow during the dry weather season
  - Unusual flows in sub drain systems used for dewatering
  - Pungent odors coming from the drainage systems
  - Discoloration or oily substances in the water or stains and residues detained within ditches, channels or drain boxes
  - Excessive sediment deposits, particularly adjacent to or near active offsite construction projects
- **Rural Areas** - Illicit connections or illegal discharges involving irrigation drainage ditches are detected by visual inspections. Signs of an illicit discharge can include:
  - Abnormal water flow during the non-irrigation season
  - Non-standard junction structures
  - Broken concrete or other disturbances at or near junction structures

Reporting

Notify the owner of any illicit connections and illegal dumping or discharge incidents at the time of discovery. For illicit connections or discharges to the storm drain system, notify the local stormwater management agency. For illegal dumping, notify the local law enforcement agency.

Cleanup and Removal

The responsibility for cleanup and removal of illicit or illegal dumping or discharges will vary by location. Contact the local stormwater management agency for further information.

Costs

Costs to look for and report illicit connections and illegal discharges and dumping are low. The best way to avoid costs associated with illicit connections and illegal discharges and dumping is to keep the project perimeters secure to prevent access to the site, to observe the site for vehicles that should not be there, and to document any waste or hazardous materials that exist onsite before taking possession of the site.

Inspection and Maintenance

- Inspect and verify that activity-based BMPs are in place prior to the commencement of associated activities. While activities associated with the BMP are under way, inspect BMPs in accordance with General Permit requirements for the associated project type and risk level. It is recommended that at a minimum, BMPs be inspected weekly, prior to forecasted rain events, daily during extended rain events, and after the conclusion of rain events.
- Inspect the site regularly to check for any illegal dumping or discharge.
- Prohibit employees and subcontractors from disposing of non-job-related debris or materials at the construction site.
- Notify the owner of any illicit connections and illegal dumping or discharge incidents at the time of discovery.

References

Blueprint for a Clean Bay: Best Management Practices to Prevent Stormwater Pollution from Construction Related Activities; Santa Clara Valley Nonpoint Source Pollution Control Program, 1995.

Stormwater Quality Handbooks - Construction Site Best Management Practices (BMPs) Manual, State of California Department of Transportation (Caltrans), November 2000.

Stormwater Management for Construction Activities, Developing Pollution Prevention Plans and Best Management Practices, EPA 832-R-92005; USEPA, April 1992.

Potable Water/Irrigation NS-7

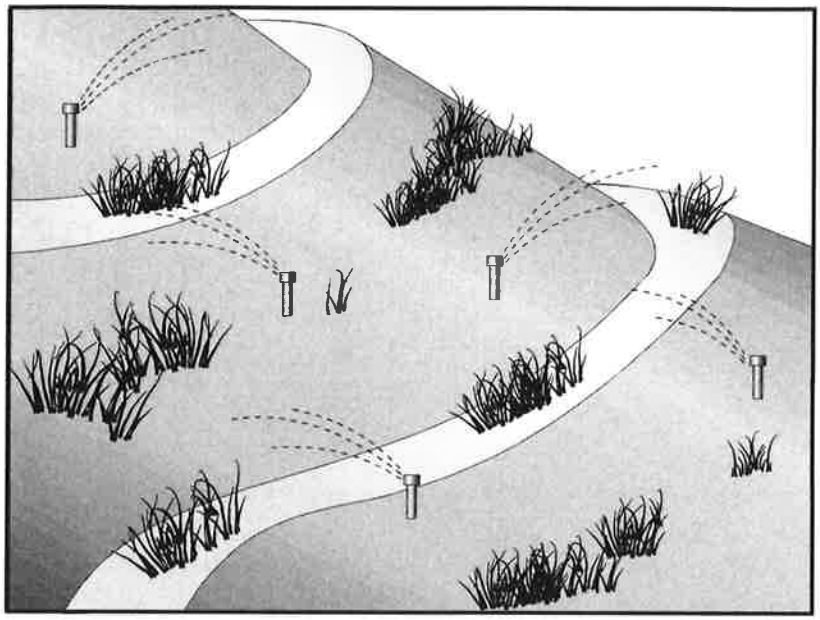

Categories

EC	Erosion Control	
SE	Sediment Control	
TC	Tracking Control	
WE	Wind Erosion Control	
NS	Non-Stormwater Management Control	☑
WM	Waste Management and Materials Pollution Control	

Legend:

☑ **Primary Objective**

☒ **Secondary Objective**

Targeted Constituents

Sediment	☑
Nutrients	☑
Trash	
Metals	☑
Bacteria	
Oil and Grease	
Organics	☑

Potential Alternatives

None

Description and Purpose

Potable Water/Irrigation consists of practices and procedures to manage the discharge of potential pollutants generated during discharges from irrigation water lines, landscape irrigation, lawn or garden watering, planned and unplanned discharges from potable water sources, water line flushing, and hydrant flushing.

Suitable Applications

Implement this BMP whenever potable water or irrigation water discharges occur at or enter a construction site.

Limitations

None identified.

Implementation

- Direct water from offsite sources around or through a construction site, where feasible, in a way that minimizes contact with the construction site.
- Discharges from water line flushing should be reused for landscaping purposes where feasible.
- Shut off the water source to broken lines, sprinklers, or valves as soon as possible to prevent excess water flow.
- Protect downstream stormwater drainage systems and watercourses from water pumped or bailed from trenches excavated to repair water lines.

If User/Subscriber modifies this fact sheet in any way, the CASQA name/logo and footer below must be removed from each page and not appear on the modified version.

CASQA
CALIFORNIA STORMWATER QUALITY ASSOCIATION

- Inspect irrigated areas within the construction limits for excess watering. Adjust watering times and schedules to ensure that the appropriate amount of water is being used and to minimize runoff. Consider factors such as soil structure, grade, time of year, and type of plant material in determining the proper amounts of water for a specific area.

Costs

Cost to manage potable water and irrigation are low and generally considered to be a normal part of related activities.

Inspection and Maintenance

- Inspect and verify that activity-based BMPs are in place prior to the commencement of associated activities. While activities associated with the BMP are under way, inspect BMPs in accordance with General Permit requirements for the associated project type and risk level. It is recommended that at a minimum, BMPs be inspected weekly, prior to forecasted rain events, daily during extended rain events, and after the conclusion of rain events.
- Inspect BMPs subject to non-stormwater discharges daily while non-stormwater discharges occur.
- Repair broken water lines as soon as possible.
- Inspect irrigated areas regularly for signs of erosion and/or discharge.

References

Blueprint for a Clean Bay: Best Management Practices to Prevent Stormwater Pollution from Construction Related Activities; Santa Clara Valley Nonpoint Source Pollution Control Program, 1995.

Stormwater Quality Handbooks - Construction Site Best Management Practices (BMPs) Manual, State of California Department of Transportation (Caltrans), November 2000.

Stormwater Management for Construction Activities, Developing Pollution Prevention Plans and Best Management Practices, EPA 832-R-92005; USEPA, April 1992.

Vehicle and Equipment Cleaning NS-8

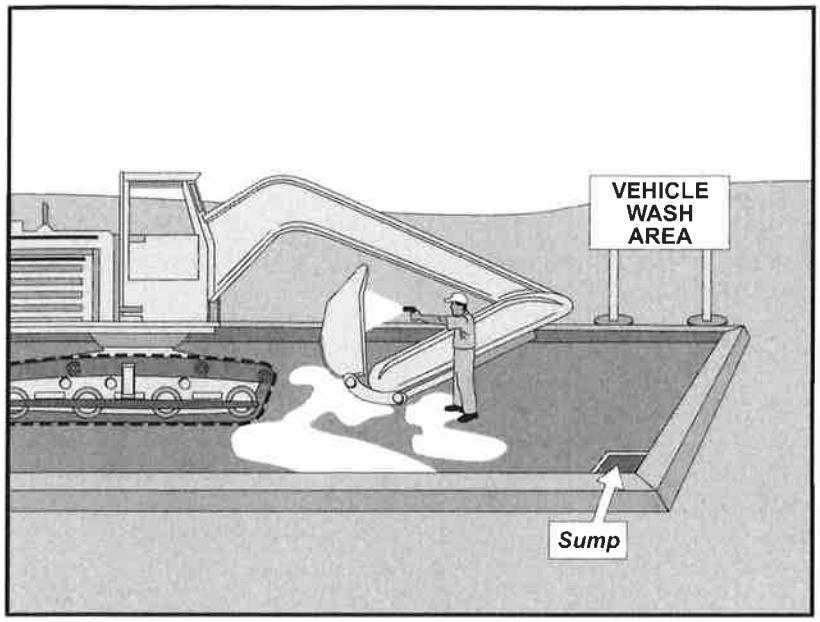

Categories

EC	Erosion Control	
SE	Sediment Control	
TC	Tracking Control	
WE	Wind Erosion Control	
NS	Non-Stormwater Management Control	☑
WM	Waste Management and Materials Pollution Control	

Legend:

☑ **Primary Objective**

☒ **Secondary Objective**

Targeted Constituents

Sediment	☑
Nutrients	☑
Trash	
Metals	
Bacteria	
Oil and Grease	☑
Organics	☑

Potential Alternatives

None

If User/Subscriber modifies this fact sheet in any way, the CASQA name/logo and footer below must be removed from each page and not appear on the modified version.

Description and Purpose

Vehicle and equipment cleaning procedures and practices eliminate or reduce the discharge of pollutants to stormwater from vehicle and equipment cleaning operations. Procedures and practices include but are not limited to: using offsite facilities; washing in designated, contained areas only; eliminating discharges to the storm drain by infiltrating the wash water; and training employees and subcontractors in proper cleaning procedures.

Suitable Applications

These procedures are suitable on all construction sites where vehicle and equipment cleaning is performed.

Limitations

Even phosphate-free, biodegradable soaps have been shown to be toxic to fish before the soap degrades. Sending vehicles/equipment offsite should be done in conjunction with TC-1, Stabilized Construction Entrance/Exit.

Implementation

Other options to washing equipment onsite include contracting with either an offsite or mobile commercial washing business. These businesses may be better equipped to handle and dispose of the wash waters properly. Performing this work offsite can also be economical by eliminating the need for a separate washing operation onsite.

If washing operations are to take place onsite, then:

CASQA
CALIFORNIA STORMWATER QUALITY ASSOCIATION

- Use phosphate-free, biodegradable soaps.
- Educate employees and subcontractors on pollution prevention measures.
- Do not permit steam cleaning onsite. Steam cleaning can generate significant pollutant concentrates.
- Cleaning of vehicles and equipment with soap, solvents or steam should not occur on the project site unless resulting wastes are fully contained and disposed of. Resulting wastes should not be discharged or buried and must be captured and recycled or disposed according to the requirements of WM-10, Liquid Waste Management or WM-6, Hazardous Waste Management, depending on the waste characteristics. Minimize use of solvents. Use of diesel for vehicle and equipment cleaning is prohibited.
- All vehicles and equipment that regularly enter and leave the construction site must be cleaned offsite.
- When vehicle and equipment washing and cleaning must occur onsite, and the operation cannot be located within a structure or building equipped with appropriate disposal facilities, the outside cleaning area should have the following characteristics:
  - Located away from storm drain inlets, drainage facilities, or watercourses
  - Paved with concrete or asphalt and bermed to contain wash waters and to prevent runon and runoff
  - Configured with a sump to allow collection and disposal of wash water
  - No discharge of wash waters to storm drains or watercourses
  - Used only when necessary
- When cleaning vehicles and equipment with water:
  - Use as little water as possible. High-pressure sprayers may use less water than a hose and should be considered
  - Use positive shutoff valve to minimize water usage
  - Facility wash racks should discharge to a sanitary sewer, recycle system or other approved discharge system and must not discharge to the storm drainage system, watercourses, or to groundwater

Costs

Cleaning vehicles and equipment at an offsite facility may reduce overall costs for vehicle and equipment cleaning by eliminating the need to provide similar services onsite. When onsite cleaning is needed, the cost to establish appropriate facilities is relatively low on larger, long-duration projects, and moderate to high on small, short-duration projects.

Inspection and Maintenance

- Inspect and verify that activity-based BMPs are in place prior to the commencement of associated activities. While activities associated with the BMP are under way, inspect BMPs in accordance with General Permit requirements for the associated project type and risk level. It is recommended that at a minimum, BMPs be inspected weekly, prior to forecasted rain events, daily during extended rain events, and after the conclusion of rain events.
- Inspect BMPs subject to non-stormwater discharges daily while non-stormwater discharges occur.
- Inspection and maintenance is minimal, although some berm repair may be necessary.
- Monitor employees and subcontractors throughout the duration of the construction project to ensure appropriate practices are being implemented.
- Inspect sump regularly and remove liquids and sediment as needed.
- Prohibit employees and subcontractors from washing personal vehicles and equipment on the construction site.

References

Stormwater Quality Handbooks - Construction Site Best Management Practices (BMPs) Manual, State of California Department of Transportation (Caltrans), November 2000.

Swisher, R.D. Surfactant Biodegradation, Marcel Decker Corporation, 1987.

Vehicle and Equipment Fueling NS-9

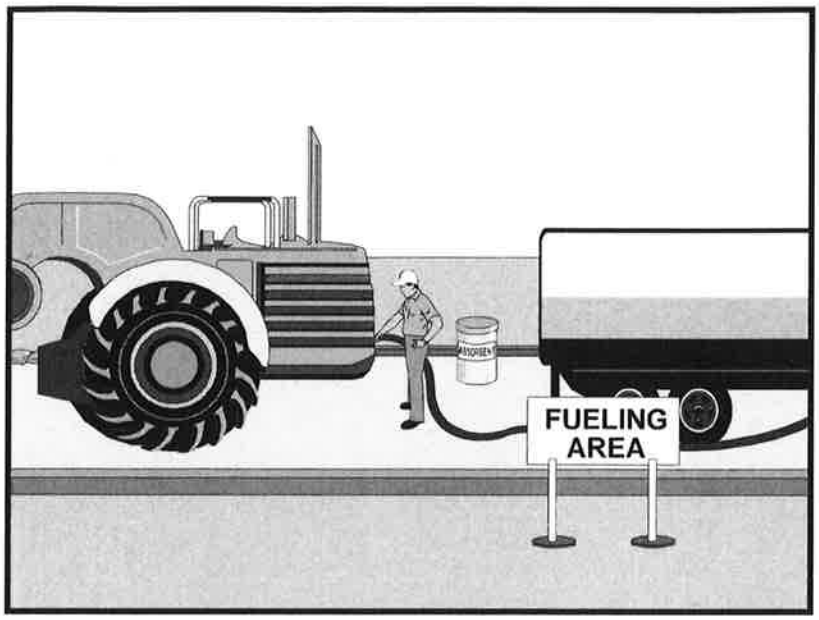

Categories

EC	Erosion Control	
SE	Sediment Control	
TC	Tracking Control	
WE	Wind Erosion Control	
NS	Non-Stormwater Management Control	☑
WM	Waste Management and Materials Pollution Control	

Legend:

☑ **Primary Objective**

☒ **Secondary Objective**

Targeted Constituents

Sediment	
Nutrients	
Trash	
Metals	
Bacteria	
Oil and Grease	☑
Organics	

Potential Alternatives

None

If User/Subscriber modifies this fact sheet in any way, the CASQA name/logo and footer below must be removed from each page and not appear on the modified version.

Description and Purpose

Vehicle equipment fueling procedures and practices are designed to prevent fuel spills and leaks and reduce or eliminate contamination of stormwater. This can be accomplished by using offsite facilities, fueling in designated areas only, enclosing or covering stored fuel, implementing spill controls, and training employees and subcontractors in proper fueling procedures.

Suitable Applications

These procedures are suitable on all construction sites where vehicle and equipment fueling takes place.

Limitations

Onsite vehicle and equipment fueling should only be used where it is impractical to send vehicles and equipment offsite for fueling. Sending vehicles and equipment offsite should be done in conjunction with TC-1, Stabilized Construction Entrance/ Exit.

Implementation

- Use offsite fueling stations as much as possible. These businesses are better equipped to handle fuel and spills properly. Performing this work offsite can also be economical by eliminating the need for a separate fueling area at a site.
- Discourage "topping-off" of fuel tanks.

CASQA
CALIFORNIA STORMWATER QUALITY ASSOCIATION

- Absorbent spill cleanup materials and spill kits should be available in fueling areas and on fueling trucks and should be disposed of properly after use.
- Drip pans or absorbent pads should be used during vehicle and equipment fueling, unless the fueling is performed over an impermeable surface in a dedicated fueling area.
- Use absorbent materials on small spills. Do not hose down or bury the spill. Remove the adsorbent materials promptly and dispose of properly.
- Avoid mobile fueling of mobile construction equipment around the site; rather, transport the equipment to designated fueling areas. With the exception of tracked equipment such as bulldozers and large excavators, most vehicles should be able to travel to a designated area with little lost time.
- Train employees and subcontractors in proper fueling and cleanup procedures.
- When fueling must take place onsite, designate an area away from drainage courses to be used. Fueling areas should be identified in the SWPPP.
- Dedicated fueling areas should be protected from stormwater runon and runoff and should be located at least 50 ft away from downstream drainage facilities and watercourses. Fueling must be performed on level-grade areas.
- Protect fueling areas with berms and dikes to prevent runon, runoff, and to contain spills.
- Nozzles used in vehicle and equipment fueling should be equipped with an automatic shutoff to control drips. Fueling operations should not be left unattended.
- Use vapor recovery nozzles to help control drips as well as air pollution where required by Air Quality Management Districts (AQMD).
- Federal, state, and local requirements should be observed for any stationary above ground storage tanks.

Costs

- All of the above measures are low cost except for the capital costs of above ground tanks that meet all local environmental, zoning, and fire codes.

Inspection and Maintenance

- Inspect BMPs in accordance with General Permit requirements for the associated project type and risk level. It is recommended that at a minimum, BMPs be inspected weekly, prior to forecasted rain events, daily during extended rain events, and after the conclusion of rain events.
- Vehicles and equipment should be inspected each day of use for leaks. Leaks should be repaired immediately, or problem vehicles or equipment should be removed from the project site.
- Keep ample supplies of spill cleanup materials onsite.

- Immediately clean up spills and properly dispose of contaminated soil and cleanup materials.

References

Blueprint for a Clean Bay: Best Management Practices to Prevent Stormwater Pollution from Construction Related Activities; Santa Clara Valley Nonpoint Source Pollution Control Program, 1995.

Coastal Nonpoint Pollution Control Program: Program Development and Approval Guidance, Working Group Working Paper; USEPA, April 1992.

Stormwater Quality Handbooks - Construction Site Best Management Practices (BMPs) Manual, State of California Department of Transportation (Caltrans), November 2000.

Stormwater Management for Construction Activities, Developing Pollution Prevention Plans and Best Management Practices, EPA 832-R-92005; USEPA, April 1992.

Vehicle & Equipment Maintenance NS-10

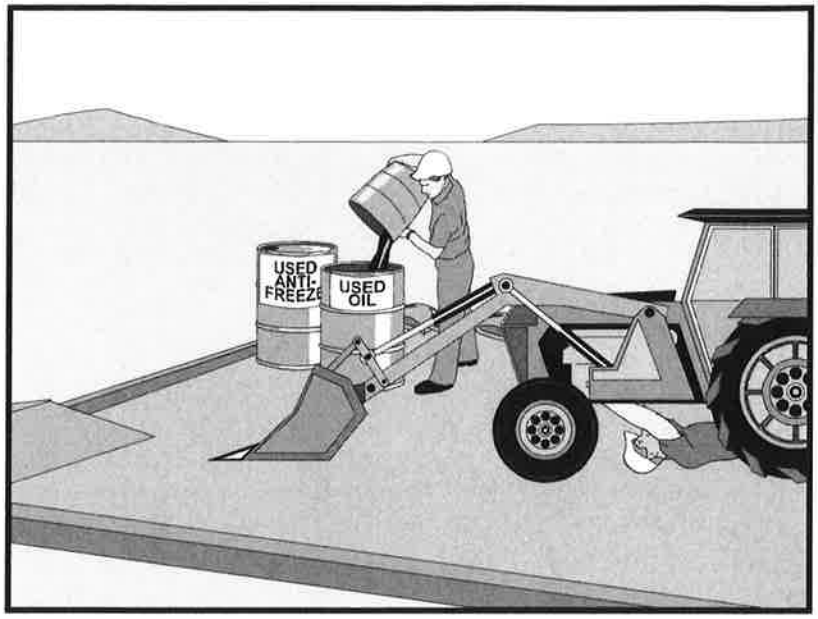

Categories

EC	Erosion Control	
SE	Sediment Control	
TC	Tracking Control	
WE	Wind Erosion Control	
NS	Non-Stormwater Management Control	☑
WM	Waste Management and Materials Pollution Control	

Legend:

☑ **Primary Objective**

☒ **Secondary Objective**

Targeted Constituents

Sediment	
Nutrients	☑
Trash	☑
Metals	
Bacteria	
Oil and Grease	☑
Organics	☑

Potential Alternatives

None

Description and Purpose

Prevent or reduce the contamination of stormwater resulting from vehicle and equipment maintenance by running a "dry and clean site". The best option would be to perform maintenance activities at an offsite facility. If this option is not available then work should be performed in designated areas only, while providing cover for materials stored outside, checking for leaks and spills, and containing and cleaning up spills immediately. Employees and subcontractors must be trained in proper procedures.

Suitable Applications

These procedures are suitable on all construction projects where an onsite yard area is necessary for storage and maintenance of heavy equipment and vehicles.

Limitations

Onsite vehicle and equipment maintenance should only be used where it is impractical to send vehicles and equipment offsite for maintenance and repair. Sending vehicles/equipment offsite should be done in conjunction with TC-1, Stabilized Construction Entrance/Exit.

Outdoor vehicle or equipment maintenance is a potentially significant source of stormwater pollution. Activities that can contaminate stormwater include engine repair and service, changing or replacement of fluids, and outdoor equipment storage and parking (engine fluid leaks). For further information on vehicle or equipment servicing, see NS-8,

If User/Subscriber modifies this fact sheet in any way, the CASQA name/logo and footer below must be removed from each page and not appear on the modified version.

Vehicle and Equipment Cleaning, and NS-9, Vehicle and Equipment Fueling.

Implementation

- Use offsite repair shops as much as possible. These businesses are better equipped to handle vehicle fluids and spills properly. Performing this work offsite can also be economical by eliminating the need for a separate maintenance area.
- If maintenance must occur onsite, use designated areas, located away from drainage courses. Dedicated maintenance areas should be protected from stormwater runon and runoff and should be located at least 50 ft from downstream drainage facilities and watercourses.
- Drip pans or absorbent pads should be used during vehicle and equipment maintenance work that involves fluids, unless the maintenance work is performed over an impermeable surface in a dedicated maintenance area.
- Place a stockpile of spill cleanup materials where it will be readily accessible.
- All fueling trucks and fueling areas are required to have spill kits and/or use other spill protection devices.
- Use adsorbent materials on small spills. Remove the absorbent materials promptly and dispose of properly.
- Inspect onsite vehicles and equipment daily at startup for leaks, and repair immediately.
- Keep vehicles and equipment clean; do not allow excessive build-up of oil and grease.
- Segregate and recycle wastes, such as greases, used oil or oil filters, antifreeze, cleaning solutions, automotive batteries, hydraulic and transmission fluids. Provide secondary containment and covers for these materials if stored onsite.
- Train employees and subcontractors in proper maintenance and spill cleanup procedures.
- Drip pans or plastic sheeting should be placed under all vehicles and equipment placed on docks, barges, or other structures over water bodies when the vehicle or equipment is planned to be idle for more than 1 hour.
- For long-term projects, consider using portable tents or covers over maintenance areas if maintenance cannot be performed offsite.
- Consider use of new, alternative greases and lubricants, such as adhesive greases, for chassis lubrication and fifth-wheel lubrication.
- Properly dispose of used oils, fluids, lubricants, and spill cleanup materials.
- Do not place used oil in a dumpster or pour into a storm drain or watercourse.
- Properly dispose of or recycle used batteries.
- Do not bury used tires.

- Repair leaks of fluids and oil immediately.

Listed below is further information if you must perform vehicle or equipment maintenance onsite.

Safer Alternative Products

- Consider products that are less toxic or hazardous than regular products. These products are often sold under an "environmentally friendly" label.
- Consider use of grease substitutes for lubrication of truck fifth-wheels. Follow manufacturers label for details on specific uses.
- Consider use of plastic friction plates on truck fifth-wheels in lieu of grease. Follow manufacturers label for details on specific uses.

Waste Reduction

Parts are often cleaned using solvents such as trichloroethylene, trichloroethane, or methylene chloride. Many of these cleaners are listed in California Toxic Rule as priority pollutants. These materials are harmful and must not contaminate stormwater. They must be disposed of as a hazardous waste. Reducing the number of solvents makes recycling easier and reduces hazardous waste management costs. Often, one solvent can perform a job as well as two different solvents. Also, if possible, eliminate or reduce the amount of hazardous materials and waste by substituting non-hazardous or less hazardous materials. For example, replace chlorinated organic solvents with non-chlorinated solvents. Non-chlorinated solvents like kerosene or mineral spirits are less toxic and less expensive to dispose of properly. Check the list of active ingredients to see whether it contains chlorinated solvents. The "chlor" term indicates that the solvent is chlorinated. Also, try substituting a wire brush for solvents to clean parts.

Recycling and Disposal

Separating wastes allows for easier recycling and may reduce disposal costs. Keep hazardous wastes separate, do not mix used oil solvents, and keep chlorinated solvents (like,-trichloroethane) separate from non-chlorinated solvents (like kerosene and mineral spirits). Promptly transfer used fluids to the proper waste or recycling drums. Don't leave full drip pans or other open containers lying around. Provide cover and secondary containment until these materials can be removed from the site.

Oil filters can be recycled. Ask your oil supplier or recycler about recycling oil filters.

Do not dispose of extra paints and coatings by dumping liquid onto the ground or throwing it into dumpsters. Allow coatings to dry or harden before disposal into covered dumpsters.

Store cracked batteries in a non-leaking secondary container. Do this with all cracked batteries, even if you think all the acid has drained out. If you drop a battery, treat it as if it is cracked. Put it into the containment area until you are sure it is not leaking.

Costs

All of the above are low cost measures. Higher costs are incurred to setup and maintain onsite maintenance areas.

Inspection and Maintenance

- Inspect and verify that activity-based BMPs are in place prior to the commencement of associated activities. While activities associated with the BMP are under way, inspect BMPs in accordance with General Permit requirements for the associated project type and risk level. It is recommended that at a minimum, BMPs be inspected weekly, prior to forecasted rain events, daily during extended rain events, and after the conclusion of rain events.
- Inspect BMPs subject to non-stormwater discharges daily while non-stormwater discharges occur.
- Keep ample supplies of spill cleanup materials onsite.
- Maintain waste fluid containers in leak proof condition.
- Vehicles and equipment should be inspected on each day of use. Leaks should be repaired immediately, or the problem vehicle(s) or equipment should be removed from the project site.
- Inspect equipment for damaged hoses and leaky gaskets routinely. Repair or replace as needed.

References

Blueprint for a Clean Bay: Best Management Practices to Prevent Stormwater Pollution from Construction Related Activities; Santa Clara Valley Nonpoint Source Pollution Control Program, 1995.

Coastal Nonpoint Pollution Control Program; Program Development and Approval Guidance, Working Group, Working Paper; USEPA, April 1992.

Stormwater Quality Handbooks - Construction Site Best Management Practices (BMPs) Manual, State of California Department of Transportation (Caltrans), November 2000.

Concrete Curing NS-12

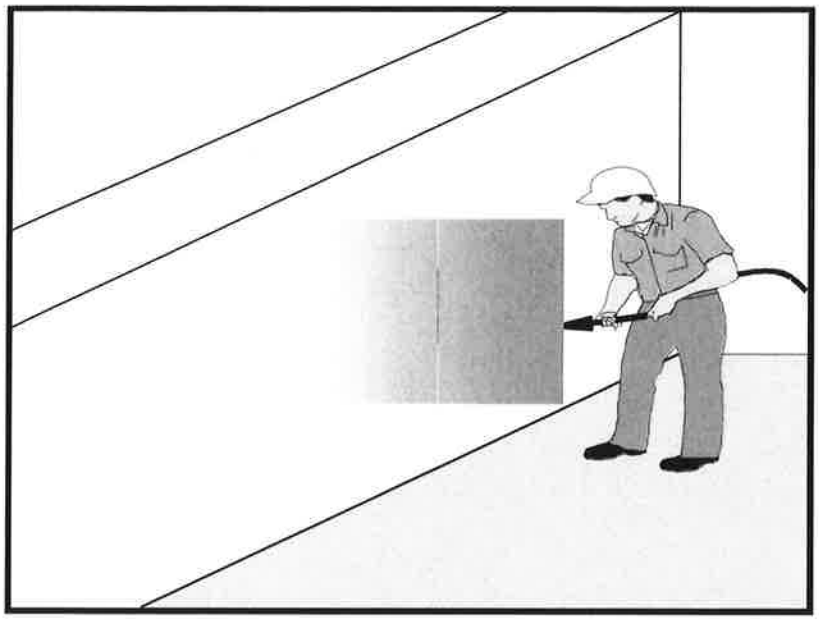

Categories		
EC	Erosion Control	
SE	Sediment Control	
TC	Tracking Control	
WE	Wind Erosion Control	
NS	Non-Stormwater Management Control	☑
WM	Waste Management and Materials Pollution Control	☑

Legend:
☑ **Primary Category**
☒ **Secondary Category**

Targeted Constituents	
Sediment	☑
Nutrients	
Trash	
Metals	☑
Bacteria	
Oil and Grease	☑
Organics	

Potential Alternatives

None

If User/Subscriber modifies this fact sheet in any way, the CASQA name/logo and footer below must be removed from each page and not appear on the modified version.

Description and Purpose

Concrete curing is used in the construction of structures such as bridges, retaining walls, pump houses, large slabs, and structured foundations. Concrete curing includes the use of both chemical and water methods.

Concrete and its associated curing materials have basic chemical properties that can raise the pH of water to levels outside of the permitted range. Discharges of stormwater and non-stormwater exposed to concrete during curing may have a high pH and may contain chemicals, metals, and fines. The General Permit incorporates Numeric Action Levels (NAL) for pH (see Section 2 of this handbook to determine your project's risk level and if you are subject to these requirements).

Proper procedures and care should be taken when managing concrete curing materials to prevent them from coming into contact with stormwater flows, which could result in a high pH discharge.

Suitable Applications

Suitable applications include all projects where Portland Cement Concrete (PCC) and concrete curing chemicals are placed where they can be exposed to rainfall, runoff from other areas, or where runoff from the PCC will leave the site.

Limitations

- Runoff contact with concrete waste can raise pH levels in the water to environmentally harmful levels and trigger permit violations.

CASQA
CALIFORNIA STORMWATER QUALITY ASSOCIATION

Implementation

Chemical Curing

- Avoid over spray of curing compounds.
- Minimize the drift by applying the curing compound close to the concrete surface. Apply an amount of compound that covers the surface but does not allow any runoff of the compound.
- Use proper storage and handling techniques for concrete curing compounds. Refer to WM-1, Material Delivery and Storage.
- Protect drain inlets prior to the application of curing compounds.
- Refer to WM-4, Spill Prevention and Control.

Water Curing for Bridge Decks, Retaining Walls, and other Structures

- Direct cure water away from inlets and watercourses to collection areas for evaporation or other means of removal in accordance with all applicable permits. See WM-8 Concrete Waste Management.
- Collect cure water at the top of slopes and transport to a concrete waste management area in a non-erosive manner. See EC-9 Earth Dikes and Drainage Swales, EC-10, Velocity Dissipation Devices, and EC-11, Slope Drains.
- Utilize wet blankets or a similar method that maintains moisture while minimizing the use and possible discharge of water.

Education

- Educate employees, subcontractors, and suppliers on proper concrete curing techniques to prevent contact with discharge as described herein.
- Arrange for the QSP or the appropriately trained contractor's superintendent or representative to oversee and enforce concrete curing procedures.

Costs

All of the above measures are generally low cost.

Inspection and Maintenance

- Inspect and verify that activity-based BMPs are in place prior to the commencement of associated activities.
- BMPs must be inspected in accordance with General Permit requirements for the associated project type and risk level. It is recommended that at a minimum, BMPs be inspected weekly, prior to forecasted rain events, daily during extended rain events, and after the conclusion of rain events.
- Inspect BMPs subject to non-stormwater discharges daily while non-stormwater discharges occur.
- Sample non-stormwater discharges and stormwater runoff that contacts uncured and partially cured concrete as required by the General Permit.

- Ensure that employees and subcontractors implement appropriate measures for storage, handling, and use of curing compounds.
- Inspect cure containers and spraying equipment for leaks.

References

Blue Print for a Clean Bay-Construction-Related Industries: Best Management Practices for Stormwater Pollution Prevention; Santa Clara Valley Non-Point Source Pollution Control Program, 1992.

Stormwater Quality Handbooks - Construction Site Best Management Practices (BMPs) Manual, State of California Department of Transportation (Caltrans), March 2003.

Stormwater Management for Construction Activities, Developing Pollution Prevention Plans and Best Management Practices, EPA 832-R-92005; USEPA, April 1992.

Erosion and Sediment Control Manual, Oregon Department of Environmental Quality, February 2005.

Concrete Finishing NS-13

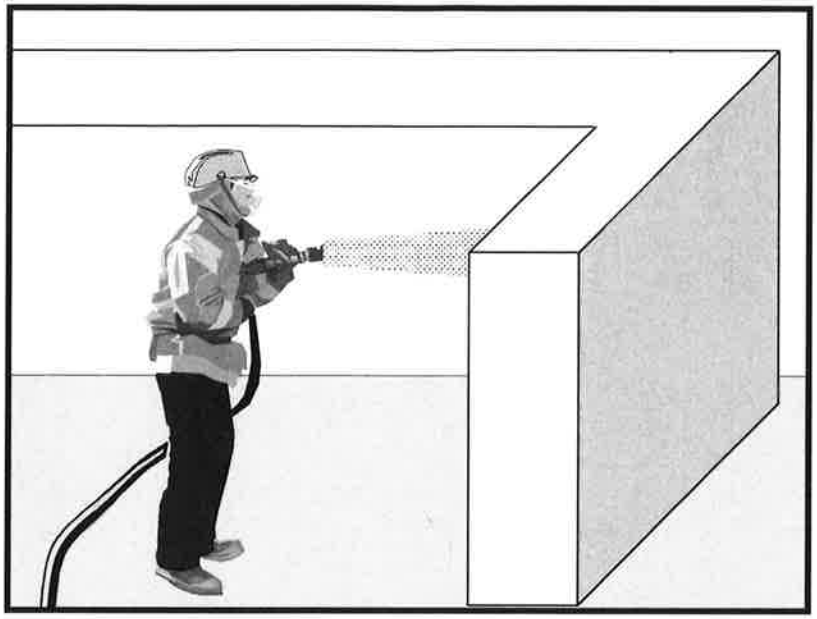

Categories

EC	Erosion Control	
SE	Sediment Control	
TC	Tracking Control	
WE	Wind Erosion Control	
NS	Non-Stormwater Management Control	☑
WM	Waste Management and Materials Pollution Control	☑

Legend:

☑ **Primary Category**

☒ **Secondary Category**

Targeted Constituents

Sediment	☑
Nutrients	
Trash	
Metals	☑
Bacteria	
Oil and Grease	
Organics	☑

Potential Alternatives

None

Description and Purpose

Concrete finishing methods are used for bridge deck rehabilitation, paint removal, curing compound removal, and final surface finish appearances. Methods include sand blasting, shot blasting, grinding, or high-pressure water blasting. Stormwater and non-stormwater exposed to concrete finishing by-products may have a high pH and may contain chemicals, metals, and fines. Proper procedures and implementation of appropriate BMPs can minimize the impact that concrete-finishing methods may have on stormwater and non-stormwater discharges.

The General Permit incorporates Numeric Action Levels (NAL) for pH (see Section 2 of this handbook to determine your project's risk level and if you are subject to these requirements).

Concrete and its associated curing materials have basic chemical properties that can raise pH levels outside of the permitted range. Additional care should be taken when managing these materials to prevent them from coming into contact with stormwater flows, which could lead to exceedances of the General Permit requirements.

Suitable Applications

These procedures apply to all construction locations where concrete finishing operations are performed.

If User/Subscriber modifies this fact sheet in any way, the CASQA name/logo and footer below must be removed from each page and not appear on the modified version.

CASQA
CALIFORNIA STORMWATER QUALITY ASSOCIATION

Limitations

- Runoff contact with concrete waste can raise pH levels in the water to environmentally harmful levels and trigger permit violations.

Implementation

- Collect and properly dispose of water from high-pressure water blasting operations.
- Collect contaminated water from blasting operations at the top of slopes. Transport or dispose of contaminated water while using BMPs such as those for erosion control. Refer to EC-9, Earth Dikes and Drainage Swales, EC-10, Velocity Dissipation Devices, and EC-11, Slope Drains.
- Direct water from blasting operations away from inlets and watercourses to collection areas for infiltration or other means of removal (dewatering). Refer to NS-2 Dewatering Operations.
- Protect inlets during sandblasting operations. Refer to SE-10, Storm Drain Inlet Protection.
- Refer to WM-8, Concrete Waste Management for disposal of concrete debris.
- Minimize the drift of dust and blast material as much as possible by keeping the blasting nozzle close to the surface.
- When blast residue contains a potentially hazardous waste, refer to WM-6, Hazardous Waste Management.

Education

- Educate employees, subcontractors, and suppliers on proper concrete finishing techniques to prevent contact with discharge as described herein.
- Arrange for the QSP or the appropriately trained contractor's superintendent or representative to oversee and enforce concrete finishing procedures.

Costs

These measures are generally of low cost.

Inspection and Maintenance

- Inspect and verify that activity-based BMPs are in place prior to the commencement of associated activities.
- BMPs must be inspected in accordance with General Permit requirements for the associated project type and risk level. It is recommended that at a minimum, BMPs be inspected weekly, prior to forecasted rain events, daily during extended rain events, and after the conclusion of rain events.
- Inspect BMPs subject to non-stormwater discharges daily while non-stormwater discharges occur.
- Sample non-stormwater discharges and stormwater runoff that contacts concrete dust and debris as required by the General Permit.

- Sweep or vacuum up debris from sandblasting at the end of each shift.
- At the end of each work shift, remove and contain liquid and solid waste from containment structures, if any, and from the general work area.
- Inspect containment structures for damage prior to use and prior to onset of forecasted rain.

References

Blueprint for a Clean Bay: Best Management Practices to Prevent Stormwater Pollution from Construction Related Activities; Santa Clara Valley Nonpoint Source Pollution Control Program, 1995.

Stormwater Quality Handbooks - Construction Site Best Management Practices (BMPs) Manual, State of California Department of Transportation (Caltrans), March 2003.

Stormwater Management for Construction Activities, Developing Pollution Prevention Plans and Best Management Practices, EPA 832-R-92005; USEPA, April 1992.

Silt Fence SE-1

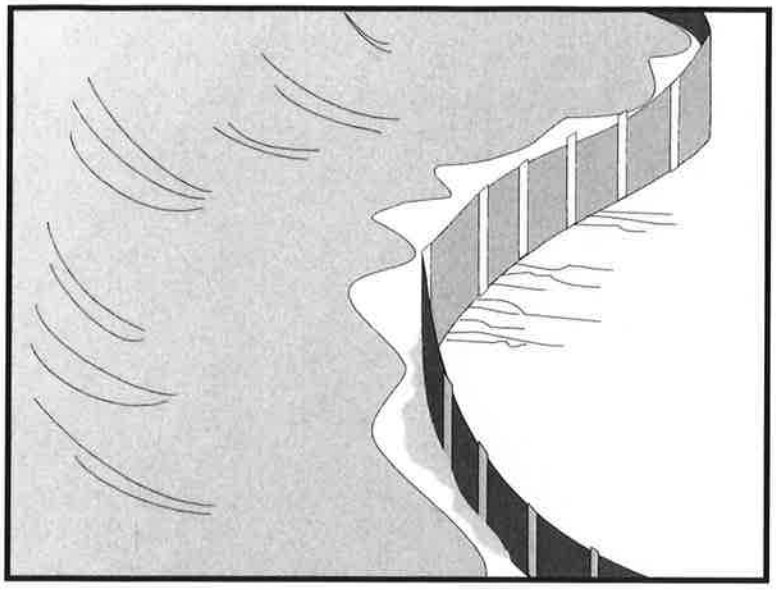

Categories		
EC	Erosion Control	
SE	Sediment Control	☑
TC	Tracking Control	
WE	Wind Erosion Control	
NS	Non-Stormwater Management Control	
WM	Waste Management and Materials Pollution Control	

Legend:
☑ **Primary Category**
☒ **Secondary Category**

Description and Purpose

A silt fence is made of a woven geotextile that has been entrenched, attached to supporting poles, and sometimes backed by a plastic or wire mesh for support. The silt fence detains water, promoting sedimentation of coarse sediment behind the fence. Silt fence does not retain soil fine particles like clays or silts.

Suitable Applications

Silt fences are suitable for perimeter control, placed below areas where sheet flows discharge from the site. They could also be used as interior controls below disturbed areas where runoff may occur in the form of sheet and rill erosion and around inlets within disturbed areas (Storm Drain Inlet Protection, SE-10). Silt fences should not be used in locations where the flow is concentrated. Silt fences should always be used in combination with erosion controls. Suitable applications include:

- At perimeter of a project (although they should not be installed up and down slopes).
- Below the toe or down slope of exposed and erodible slopes.
- Along streams and channels.
- Around temporary spoil areas and stockpiles.

Targeted Constituents	
Sediment (coarse sediment)	☑
Nutrients	
Trash	
Metals	
Bacteria	
Oil and Grease	
Organics	

Potential Alternatives

SE-5 Fiber Rolls

SE-6 Gravel Bag Berm SE-12 Manufactured Linear Sediment Controls

SE-13 Compost Socks and Berms

SE-14 Biofilter Bags

If User/Subscriber modifies this fact sheet in any way, the CASQA name/logo and footer below must be removed from each page and not appear on the modified version.

- Around inlets.
- Below other small cleared areas.

Limitations

- Do not use in streams, channels, drain inlets, or anywhere flow is concentrated.
- Do not use in locations where ponded water may cause a flooding hazard.
- Do not use silt fence to divert water flows or place across any contour line.
- Improperly installed fences are subject to failure from undercutting, overtopping, or collapsing.
- Must be trenched and keyed in.
- According to the State Water Board's *CGP Review, Issue #2* (2014), silt fences reinforced with metal or plastic mesh should be avoided due to plastic pollution and wildlife concerns.
- Not intended for use as a substitute for Fiber Rolls (SE-5), when fiber rolls are being used as a slope interruption device.
- Do not use on slopes subject to creeping, slumping, or landslides.

Implementation

General

A silt fence is a temporary sediment barrier consisting of woven geotextile stretched across and attached to supporting posts, trenched-in, and, depending upon the strength of fabric used, supported with plastic or wire mesh fence. Silt fences trap coarse sediment by intercepting and detaining sediment-laden runoff from disturbed areas in order to promote sedimentation behind the fence.

The following layout and installation guidance can improve performance and should be followed:

- Silt fence should be used in combination with erosion controls up-slope in order to provide the most effective sediment control.
- Silt fence alone is not effective at reducing turbidity. (Barrett and Malina, 2004)
- Designers should consider diverting sediment laden water to a temporary sediment basin or trap. (EPA, 2012)
- Use principally in areas where sheet flow occurs.
- Install along a level contour, so water does not pond more than 1.5 ft. at any point along the silt fence.

- Provide sufficient room for runoff to pond behind the fence and to allow sediment removal equipment to pass between the silt fence and toes of slopes or other obstructions. About 1200 ft.^{2} of ponding area should be provided for every acre draining to the fence.
- Efficiency of silt fences is primarily dependent on the detention time of the runoff behind the control. (Barrett and Malina, 2004)
- The drainage area above any fence should not exceed a quarter of an acre. (Rule of Thumb-100-feet of silt fence per 10,000 ft.^{2} of disturbed area.) (EPA, 2012)
- The maximum length of slope draining to any point along the silt fence should be 100 ft. per ft of silt fence.
- Turn the ends of the filter fence uphill to prevent stormwater from flowing around the fence.
- Leave an undisturbed or stabilized area immediately down slope from the fence where feasible.
- Silt fences should remain in place until the disturbed area draining to the silt fence is permanently stabilized, after which, the silt fence fabric and posts should be removed and properly disposed.
- J-hooks, which have ends turning up the slope to break up long runs of fence and provide multiple storage areas that work like mini-retention areas, may be used to increase the effectiveness of silt fence.
- Be aware of local regulations regarding the type and installation requirements of silt fence, which may differ from those presented in this fact sheet.

Design and Layout

In areas where high winds are anticipated the fence should be supported by a plastic or wire mesh. The geotextile fabric of the silt fence should contain ultraviolet inhibitors and stabilizers to provide longevity equivalent to the project life or replacement schedule.

- Layout in accordance with the attached figures.
- For slopes that contain a high number of rocks or large dirt clods that tend to dislodge, it may be necessary to protect silt fence from rocks (e.g., rockfall netting) ensure the integrity of the silt fence installation.

Standard vs. Heavy Duty Silt Fence

Standard Silt Fence

- Generally applicable in cases where the area draining to fence produces moderate sediment loads.

Heavy Duty Silt Fence

- Heavy duty silt fence usually has 1 or more of the following characteristics, not possessed by standard silt fence.
  - Fabric is reinforced with wire backing or additional support.
  - Posts are spaced closer than pre-manufactured, standard silt fence products.
- Use is generally limited to areas affected by high winds.
- Area draining to fence produces moderate sediment loads.

Materials

Standard Silt Fence

- Silt fence material should be woven geotextile with a minimum width of 36 in. The fabric should conform to the requirements in ASTM designation D6461.

- Wooden stakes should be commercial quality lumber of the size and shape shown on the plans. Each stake should be free from decay, splits or cracks longer than the thickness of the stake or other defects that would weaken the stakes and cause the stakes to be structurally unsuitable.

- Staples used to fasten the fence fabric to the stakes should be not less than 1.75 in. long and should be fabricated from 15-gauge or heavier wire. The wire used to fasten the tops of the stakes together when joining two sections of fence should be 9 gauge or heavier wire. Galvanizing of the fastening wire will not be required.

Heavy-Duty Silt Fence

- Some silt fence has a wire backing to provide additional support, and there are products that may use prefabricated plastic holders for the silt fence and use metal posts instead of wood stakes.

Installation Guidelines – Traditional Method

Silt fences are to be constructed on a level contour. Sufficient area should exist behind the fence for ponding to occur without flooding or overtopping the fence.

- A trench should be excavated approximately 6 in. wide and 6 in. deep along the line of the proposed silt fence (trenches should not be excavated wider or deeper than necessary for proper silt fence installation).

- Bottom of the silt fence should be keyed-in a minimum of 12 in.

- Posts should be spaced a maximum of 6 ft. apart and driven securely into the ground a minimum of 18 in. or 12 in. below the bottom of the trench.

- When standard strength geotextile is used, a plastic or wire mesh support fence should be fastened securely to the upslope side of posts using heavy–duty wire staples at least 1 in. long. The mesh should extend into the trench.

- When extra-strength geotextile and closer post spacing are used, the mesh support fence may be eliminated.
- Woven geotextile should be purchased in a long roll, then cut to the length of the barrier. When joints are necessary, geotextile should be spliced together only at a support post, with a minimum 6 in. overlap and both ends securely fastened to the post.
- The trench should be backfilled with native material and compacted.
- Construct the length of each reach so that the change in base elevation along the reach does not exceed 1/3 the height of the barrier; in no case should the reach exceed 500 ft.
- Cross barriers should be a minimum of 1/3 and a maximum of ½ the height of the linear barrier.
- See typical installation details at the end of this fact sheet.

Installation Guidelines - Static Slicing Method

- Static Slicing is defined as insertion of a narrow blade pulled behind a tractor, similar to a plow blade, at least 10 in. into the soil while at the same time pulling silt geotextile fabric into the ground through the opening created by the blade to the depth of the blade. Once the geotextile is installed, the soil is compacted using tractor tires.
- This method will not work with pre-fabricated, wire backed silt fence.
- Benefits:
    - Ease of installation (most often done with a 2-person crew).
    - Minimal soil disturbance.
    - Better level of compaction along fence, less susceptible to undercutting
    - Uniform installation.
- Limitations:
    - Does not work in shallow or rocky soils.
    - Complete removal of geotextile material after use is difficult.
    - Be cautious when digging near potential underground utilities.

Costs

- It should be noted that costs vary greatly across regions due to available supplies and labor costs.
- Average annual cost for installation using the traditional silt fence installation method (assumes 6 month useful life) is $7 per linear foot based on vendor research. Range of cost is $3.50 - $9.10 per linear foot.

Inspection and Maintenance

- BMPs must be inspected in accordance with General Permit requirements for the associated project type and risk level. It is recommended that at a minimum, BMPs be inspected weekly, prior to forecasted rain events, daily during extended rain events, and after the conclusion of rain events.
- Repair undercut silt fences.
- Repair or replace split, torn, slumping, or weathered fabric. The lifespan of silt fence fabric is generally 5 to 8 months.
- Silt fences that are damaged and become unsuitable for the intended purpose should be removed from the site of work, disposed, and replaced with new silt fence barriers.
- Sediment that accumulates in the BMP should be periodically removed in order to maintain BMP effectiveness. Sediment should be removed when the sediment accumulation reaches 1/3 of the barrier height.
- Silt fences should be left in place until the upgradient area is permanently stabilized. Until then, the silt fence should be inspected and maintained regularly.

- Remove silt fence when upgradient areas are stabilized. Fill and compact post holes and anchor trench, remove sediment accumulation, grade fence alignment to blend with adjacent ground, and stabilize disturbed area.

References

CGP Review #2, State Water Resources Control Board, 2014. Available online at: http://www.waterboards.ca.gov/water_issues/programs/stormwater/docs/training/cgp_review_issue2.pdf.

Manual of Standards of Erosion and Sediment Control Measures, Association of Bay Area Governments, May 1995.

Monitoring Data on Effectiveness of Sediment Control Techniques, Proceedings of World Water and Environmental Resources Congress, Barrett M. and Malina J. 2004.

National Management Measures to Control Nonpoint Source Pollution from Urban Areas, United States Environmental Protection Agency, 2002.

Proposed Guidance Specifying Management Measures for Sources of Nonpoint Pollution in Coastal Waters, Work Group-Working Paper, USEPA, April 1992.

Sedimentation and Erosion Control Practices, and Inventory of Current Practices (Draft), USEPA, 1990.

Southeastern Wisconsin Regional Planning Commission (SWRPC). Costs of Urban Nonpoint Source Water Pollution Control Measures. Technical Report No. 31. Southeastern Wisconsin Regional Planning Commission, Waukesha, WI. 1991.

Stormwater Quality Handbooks - Construction Site Best Management Practices (BMPs) Manual, State of California Department of Transportation (Caltrans), March 2003.

Stormwater Management Manual for The Puget Sound Basin, Washington State Department of Ecology, Public Review Draft, 1991.

U.S. Environmental Protection Agency (USEPA). Stormwater Best Management Practices: Silt Fences. U.S. Environmental Protection Agency, Office of Water, Washington, DC, 2012.

U.S. Environmental Protection Agency (USEPA). Stormwater Management for Industrial Activities: Developing Pollution Prevention Plans and Best Management Practices. U.S. Environmental Protection Agency, Office of Water, Washington, DC, 1992.

Water Quality Management Plan for the Lake Tahoe Region, Volume II, Handbook of Management Practices, Tahoe Regional Planning Agency, November 1988.

Soil Stabilization BMP Research for Erosion and Sediment Controls: Cost Survey Technical Memorandum, State of California Department of Transportation (Caltrans), July 2007.

Erosion and Sediment Control Manual, Oregon Department of Environmental Quality, February 2005.

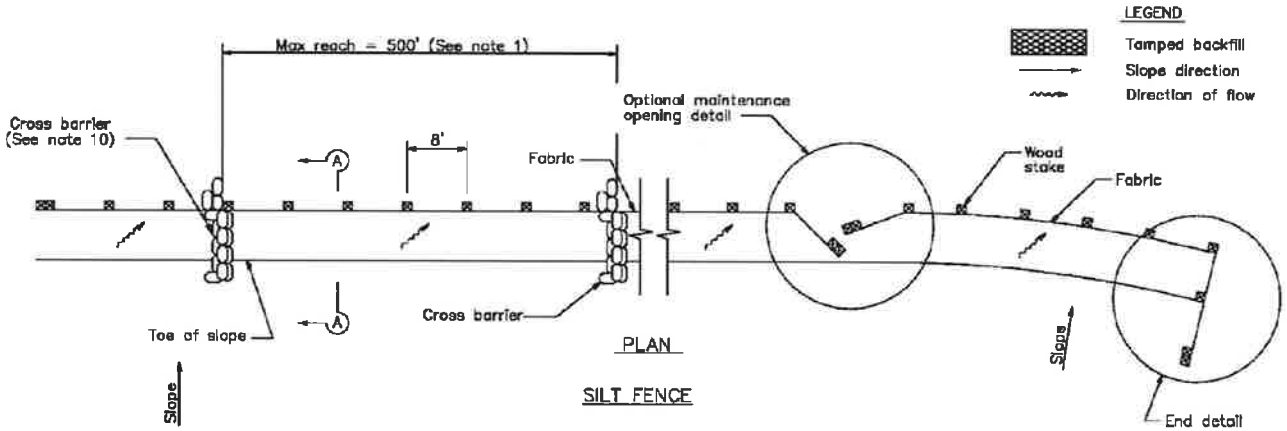

NOTES

1. Construct the length of each reach so that the change in base elevation along the reach does not exceed 1/3 the height of the linear barrier, in no case shall the reach length exceed 500'.
2. The last 8'–0" of fence shall be turned up slope.
3. Stake dimensions are nominal.
4. Dimension may vary to fit field condition.
5. Stakes shall be spaced at 8'–0" maximum and shall be positioned on downstream side of fence.
6. Stakes to overlap and fence fabric to fold around each stake one full turn. Secure fabric to stake with 4 staples.
7. Stakes shall be driven tightly together to prevent potential flow–through of sediment at joint. The tops of the stakes shall be secured with wire.
8. For end stake, fence fabric shall be folded around two stakes one full turn and secured with 4 staples.
9. Minimum 4 staples per stake. Dimensions shown are typical.
10. Cross barriers shall be a minimum of 1/3 and a maximum of 1/2 the height of the linear barrier.
11. Maintenance openings shall be constructed in a manner to ensure sediment remains behind silt fence.
12. Joining sections shall not be placed at sump locations.
13. Sandbag rows and layers shall be offset to eliminate gaps.
14. Add 3–4 bags to cross barrier on downgradient side of silt fence as needed to prevent bypass or undermining and as allowable based on site limits of disturbance.

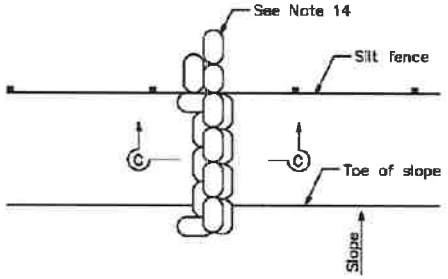

CROSS BARRIER DETAIL

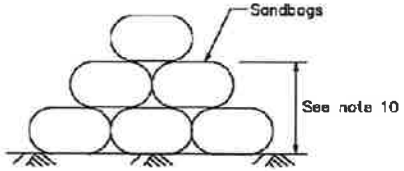

SECTION C–C

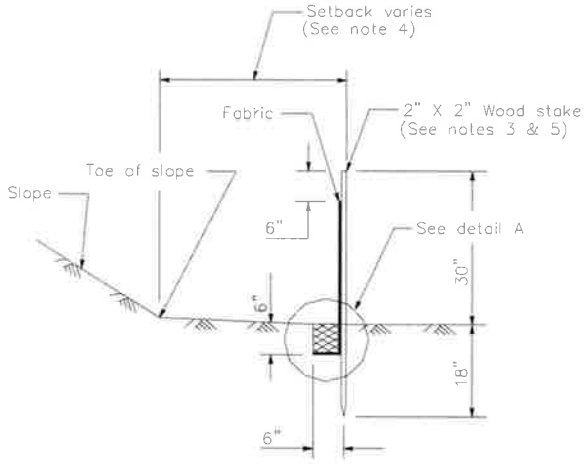

SECTION A–A

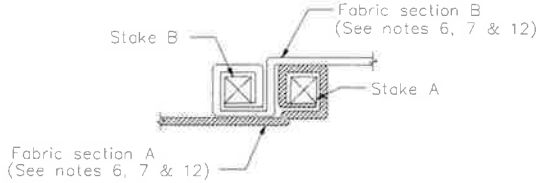

JOINING SECTION DETAIL (TOP VIEW)



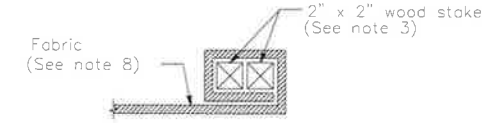

END STAKE DETAIL (TOP VIEW)

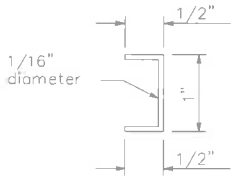

STAPLE DETAIL
(SEE NOTE 9)

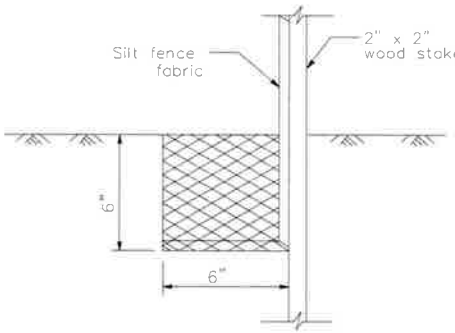

DETAIL A

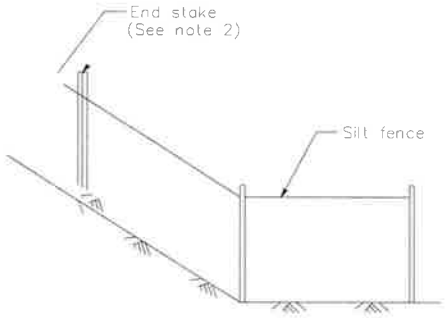

END DETAIL

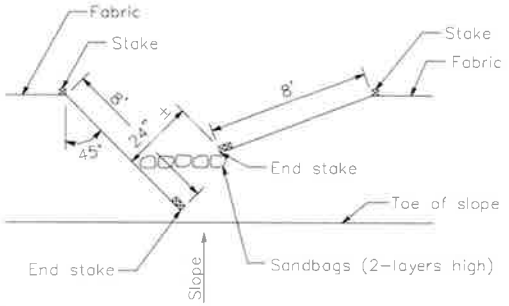

OPTIONAL MAINTENANCE OPENING DETAIL
(SEE NOTE 11)

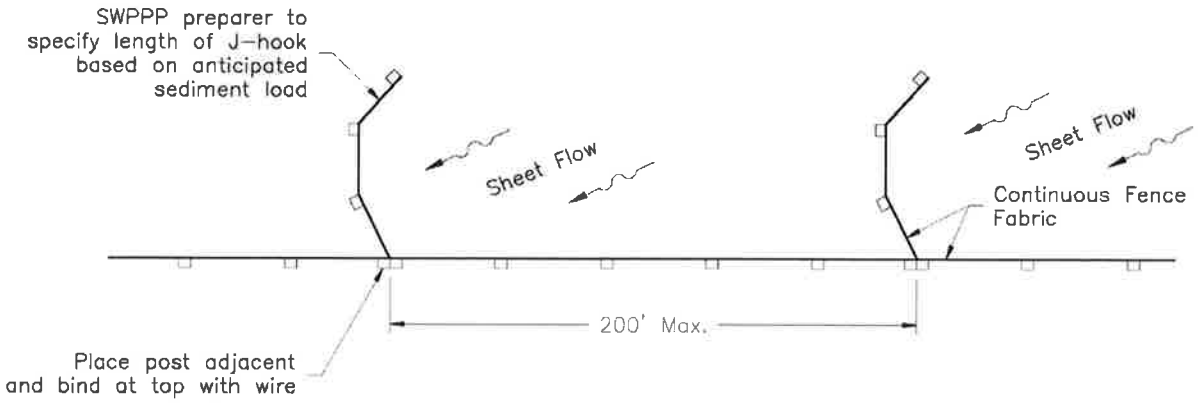
SWPPP preparer to specify length of J-hook based on anticipated sediment load
Sheet Flow
Sheet Flow
Continuous Fence Fabric
200' Max.
Place post adjacent and bind at top with wire

Plan

J-HOOK

Fiber Rolls SE-5

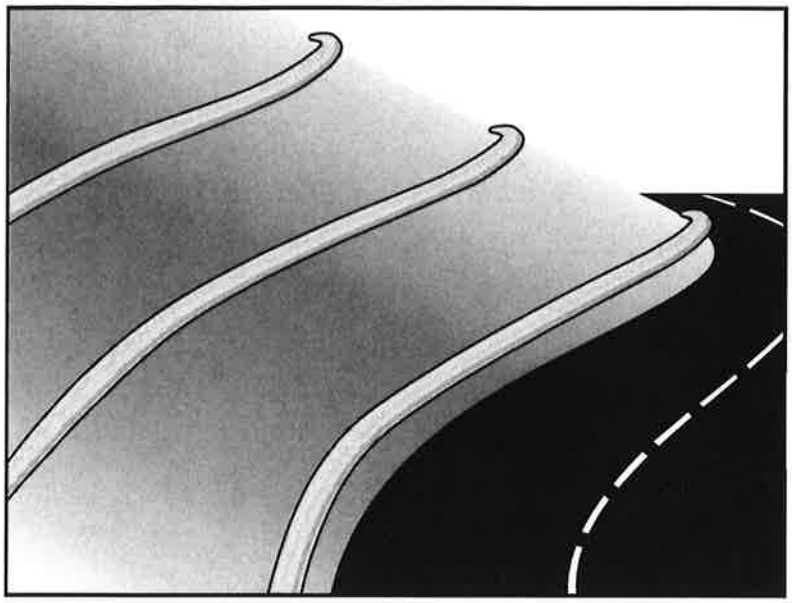

Categories

EC	Erosion Control	☒
SE	Sediment Control	☑
TC	Tracking Control	
WE	Wind Erosion Control	
NS	Non-Stormwater Management Control	
WM	Waste Management and Materials Pollution Control	

Legend:

☑ **Primary Category**

☒ **Secondary Category**

Description and Purpose

A fiber roll (also known as wattles or logs) consists of straw, coir, curled wood fiber, or other biodegradable materials bound into a tight tubular roll wrapped by plastic netting, which can be photodegradable, or natural fiber, such as jute, cotton, or sisal. Additionally, gravel core fiber rolls are available, which contain an imbedded ballast material such as gravel or sand for additional weight when staking the rolls are not feasible (such as use as inlet protection). When fiber rolls are placed at the toe and on the face of slopes along the contours, they intercept runoff, reduce its flow velocity, release the runoff as sheet flow, and provide removal of sediment from the runoff (through sedimentation). By interrupting the length of a slope, fiber rolls can also reduce sheet and rill erosion until vegetation is established.

Suitable Applications

Fiber rolls may be suitable:

- Along the toe, top, face, and at grade breaks of exposed and erodible slopes to shorten slope length and spread runoff as sheet flow.
- At the end of a downward slope where it transitions to a steeper slope.
- Along the perimeter of a project.
- As check dams in unlined ditches with minimal grade.
- Down-slope of exposed soil areas.

Targeted Constituents

Sediment	☑
Nutrients	
Trash	
Metals	
Bacteria	
Oil and Grease	
Organics	

Potential Alternatives

SE-1 Silt Fence

SE-6 Gravel Bag Berm

SE-8 Sandbag Barrier

SE-12 Manufactured Linear Sediment Controls

SE-14 Biofilter Bags

If User/Subscriber modifies this fact sheet in any way, the CASQA name/logo and footer below must be removed from each page and not appear on the modified version.

- At operational storm drains as a form of inlet protection.
- Around temporary stockpiles.

Limitations

- Fiber rolls should be used in conjunction with erosion control, such as hydroseed, RECPs, etc.
- Only biodegradable fiber rolls containing no plastic can remain on a site applying for a Notice of Termination due to plastic pollution and wildlife concerns (State Water Board, 2016). Fiber rolls containing plastic that are used on a site must be disposed of for final stabilization.
- Fiber rolls are not effective unless trenched in and staked. If not properly staked and trenched in, fiber rolls will not work as intended and could be transported by high flows.
- Not intended for use in high flow situations (i.e., for concentrated flows).
- Difficult to move once saturated.
- Fiber rolls have a limited sediment capture zone.
- Fiber rolls should not be used on slopes subject to creep, slumping, or landslide.
- Rolls typically function for 12-24 months, depending upon local conditions and roll material.

Implementation

Fiber Roll Materials

- Fiber rolls should be prefabricated.
- Fiber rolls may come manufactured containing polyacrylamide (PAM), a flocculating agent within the roll. Fiber rolls impregnated with PAM provide additional sediment removal capabilities and should be used in areas with fine, clayey or silty soils to provide additional sediment removal capabilities. Monitoring may be required for these installations.
- Fiber rolls are made from weed-free rice straw, flax, curled wood fiber, or coir bound into a tight tubular roll by netting or natural fiber (see *Limitations* above regarding plastic netting).
- Typical fiber rolls vary in diameter from 6 in. to 20 in. Larger diameter rolls are available as well. The larger the roll, the higher the sediment retention capacity.
- Typical fiber rolls lengths are 4, 10, 20 and 25 ft., although other lengths are likely available.

Installation

- Locate fiber rolls on level contours spaced as follows:
  - Slope inclination of 4:1 (H:V) or flatter: Fiber rolls should be placed at a maximum interval of 20 ft.

  - Slope inclination between 4:1 and 2:1 (H:V): Fiber Rolls should be placed at a maximum interval of 15 ft. (a closer spacing is more effective).
  - Slope inclination 2:1 (H:V) or greater: Fiber Rolls should be placed at a maximum interval of 10 ft. (a closer spacing is more effective).

- Prepare the slope before beginning installation.
- Dig small trenches across the slope on the contour. The trench depth should be ¼ to 1/3 of the thickness of the roll, and the width should equal the roll diameter, in order to provide area to backfill the trench.
- It is critical that rolls are installed perpendicular to water movement, and parallel to the slope contour.
- Start building trenches and installing rolls from the bottom of the slope and work up.
- It is recommended that pilot holes be driven through the fiber roll. Use a straight bar to drive holes through the roll and into the soil for the wooden stakes.
- Turn the ends of the fiber roll up slope to prevent runoff from going around the roll.
- Stake fiber rolls into the trench.
  - Drive stakes at the end of each fiber roll and spaced 4 ft maximum on center.
  - Use wood stakes with a nominal classification of 0.75 by 0.75 in. and minimum length of 24 in.
- If more than one fiber roll is placed in a row, the rolls should be overlapped, not abutted.
- See typical fiber roll installation details at the end of this fact sheet.

Removal

- Fiber rolls can be left in place or removed depending on the type of fiber roll and application (temporary vs. permanent installation). Fiber rolls encased with plastic netting or containing any plastic material will need to be removed from the site for final stabilization. Fiber rolls used in a permanent application are to be encased with a non-plastic material and are left in place. Removal of a fiber roll used in a permanent application can result in greater disturbance; therefore, during the BMP planning phase, the areas where fiber rolls will be used on final slopes, only fiber rolls wrapped in non-plastic material should be selected.
- Temporary installations should only be removed when up gradient areas are stabilized per General Permit requirements, and/or pollutant sources no longer present a hazard. But they should also be removed before vegetation becomes too mature so that the removal process does not disturb more soil and vegetation than is necessary.

Costs

Material costs for straw fiber rolls range from $26 - $38 per 25-ft. roll[1] and curled wood fiber rolls range from $30 - $40 per roll[2].

Material costs for PAM impregnated fiber rolls range between $9.00-$12.00 per linear foot, based upon vendor research[1] .

Inspection and Maintenance

- BMPs must be inspected in accordance with General Permit requirements for the associated project type and risk level. It is recommended that at a minimum, BMPs be inspected weekly, prior to forecasted rain events, daily during extended rain events, and after the conclusion of rain events.
- Repair or replace split, torn, unraveling, or slumping fiber rolls.
- If the fiber roll is used as a sediment capture device, or as an erosion control device to maintain sheet flows, sediment that accumulates in the BMP should be periodically removed in order to maintain BMP effectiveness. Sediment should be removed when sediment accumulation reaches one-third the designated sediment storage depth.
- If fiber rolls are used for erosion control, such as in a check dam, sediment removal should not be required as long as the system continues to control the grade. Sediment control BMPs will likely be required in conjunction with this type of application.
- Repair any rills or gullies promptly.

References

General Construction – Frequently Asked Questions, Storm Water Program website, State Water Resources Control Board, 2009 updated in 2016. Available online at: http://www.waterboards.ca.gov/water_issues/programs/stormwater/gen_const_faq.shtml.

Stormwater Quality Handbooks - Construction Site Best Management Practices (BMPs) Manual, State of California Department of Transportation (Caltrans), March 2003.

Erosion and Sediment Control Manual, Oregon Department of Environmental Quality, February 2005.

[1] Adjusted for inflation (2016 dollars) by Tetra Tech, Inc.
[2] Costs estimated based on vendor query by Tetra Tech, Inc. 2016.

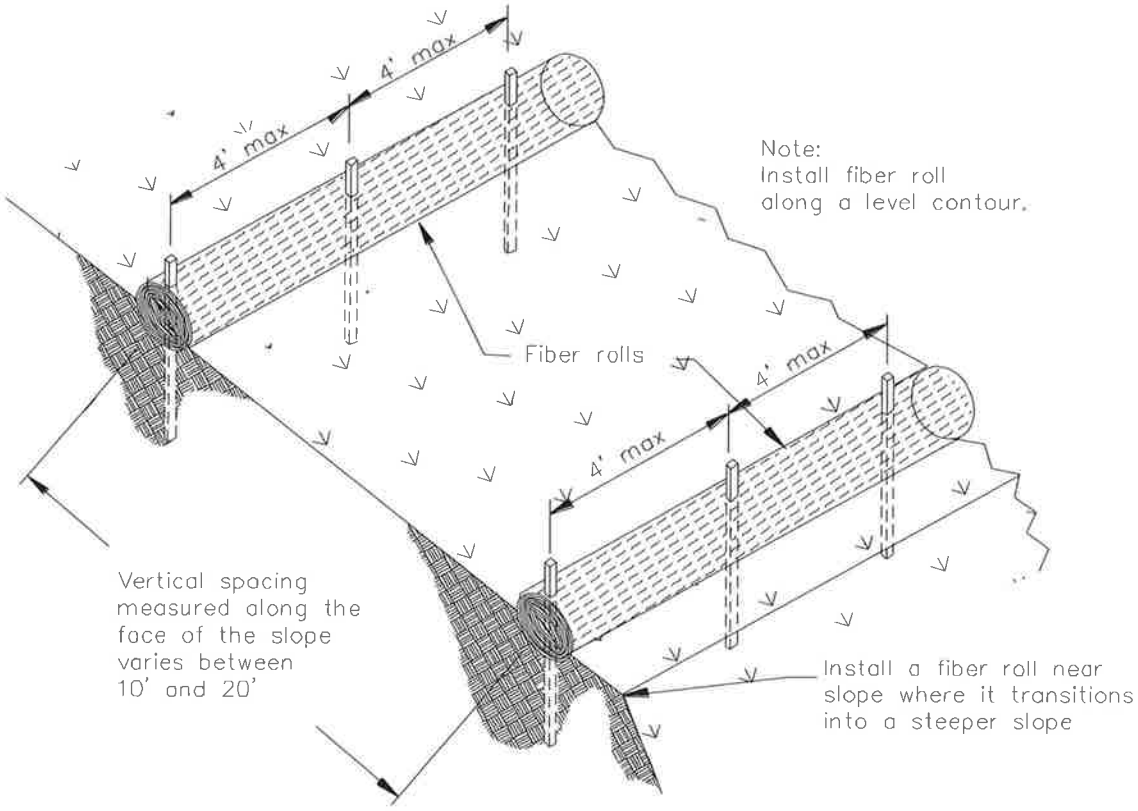

TYPICAL FIBER ROLL INSTALLATION
N.T.S.

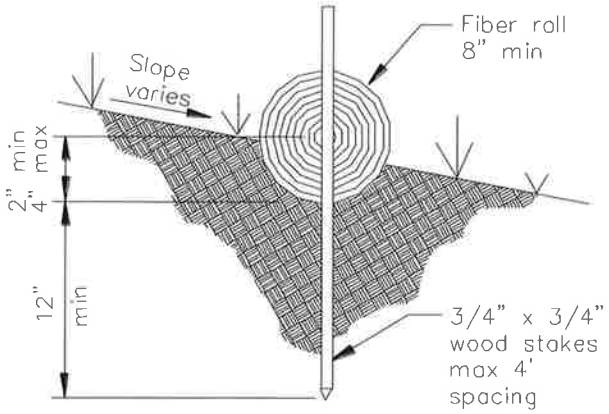

ENTRENCHMENT DETAIL
N.T.S.

Street Sweeping and Vacuuming SE-7

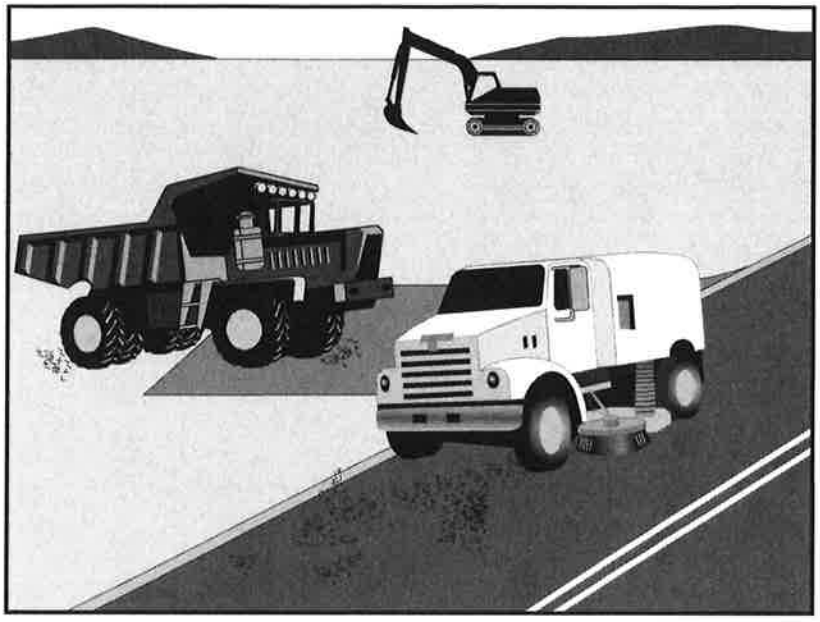

Categories		
EC	Erosion Control	
SE	Sediment Control	☒
TC	Tracking Control	☑
WE	Wind Erosion Control	
NS	Non-Stormwater Management Control	
WM	Waste Management and Materials Pollution Control	

Legend:
☑ **Primary Objective**
☒ **Secondary Objective**

Targeted Constituents	
Sediment	☑
Nutrients	
Trash	☑
Metals	
Bacteria	
Oil and Grease	☑
Organics	

Potential Alternatives

None

Description and Purpose

Street sweeping and vacuuming includes use of self-propelled and walk-behind equipment to remove sediment from streets and roadways and to clean paved surfaces in preparation for final paving. Sweeping and vacuuming prevents sediment from the project site from entering storm drains or receiving waters.

Suitable Applications

Sweeping and vacuuming are suitable anywhere sediment is tracked from the project site onto public or private paved streets and roads, typically at points of egress. Sweeping and vacuuming are also applicable during preparation of paved surfaces for final paving.

Limitations

- Sweeping and vacuuming may not be effective when sediment is wet or when tracked soil is caked (caked soil may need to be scraped loose).
- Sweeping may be less effective for fine particle soils (i.e., clay).

Implementation

- Controlling the number of points where vehicles can leave the site will allow sweeping and vacuuming efforts to be focused and perhaps save money.
- Inspect potential sediment tracking locations daily.

If User/Subscriber modifies this fact sheet in any way, the CASQA name/logo and footer below must be removed from each page and not appear on the modified version.

CASQA
CALIFORNIA STORMWATER QUALITY ASSOCIATION

- Visible sediment tracking should be swept or vacuumed on a daily basis.
- Do not use kick brooms or sweeper attachments. These tend to spread the dirt rather than remove it.
- If not mixed with debris or trash, consider incorporating the removed sediment back into the project

Costs

Rental rates for self-propelled sweepers vary depending on hopper size and duration of rental. Expect rental rates from $ 650/day to $2,500/day[1], plus operator costs. Hourly production rates vary with the amount of area to be swept and amount of sediment. Match the hopper size to the area and expect sediment load to minimize time spent dumping.

Inspection and Maintenance

- Inspect BMPs in accordance with General Permit requirements for the associated project type and risk level. It is recommended that at a minimum, BMPs be inspected weekly, prior to forecasted rain events, daily during extended rain events, and after the conclusion of rain events.
- When actively in use, points of ingress and egress must be inspected daily.
- When tracked or spilled sediment is observed outside the construction limits, it must be removed at least daily. More frequent removal, even continuous removal, may be required in some jurisdictions.
- Be careful not to sweep up any unknown substance or any object that may be potentially hazardous.
- Adjust brooms frequently; maximize efficiency of sweeping operations.
- After sweeping is finished, properly dispose of sweeper wastes at an approved dumpsite.

References

Stormwater Quality Handbooks - Construction Site Best Management Practices (BMPs) Manual, State of California Department of Transportation (Caltrans), November 2000.

[1] Based on contractor query conducted by Tetra Tech, Inc. November 2016.

Storm Drain Inlet Protection SE-10

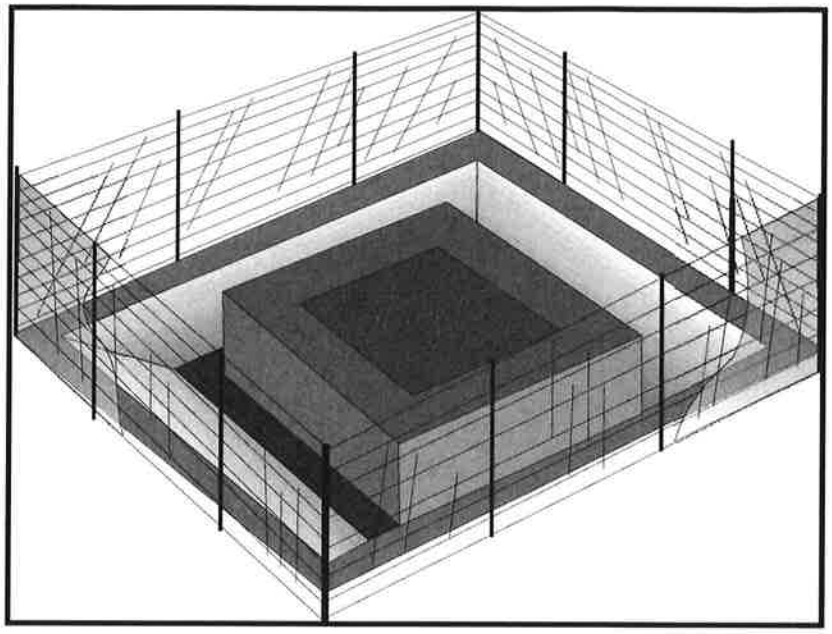

Categories

EC	Erosion Control	
SE	Sediment Control	☑
TC	Tracking Control	
WE	Wind Erosion Control	
NS	Non-Stormwater Management Control	
WM	Waste Management and Materials Pollution Control	

Legend:

☑ **Primary Category**

☒ **Secondary Category**

Targeted Constituents

Sediment	☑
Nutrients	
Trash	☒
Metals	
Bacteria	
Oil and Grease	
Organics	

Potential Alternatives

SE-1 Silt Fence

SE-5 Fiber Rolls

SE-6 Gravel Bag Berm

SE-8 Sandbag Barrier

SE-14 Biofilter Bags

SE-13 Compost Socks and Berms

If User/Subscriber modifies this fact sheet in any way, the CASQA name/logo and footer below must be removed from each page and not appear on the modified version.

Description and Purpose

Storm drain inlet protection consists of a sediment filter or an impounding area in, around or upstream of a storm drain, drop inlet, or curb inlet. Storm drain inlet protection measures temporarily pond runoff before it enters the storm drain, allowing sediment to settle. Some filter configurations also remove sediment by filtering, but usually the ponding action results in the greatest sediment reduction. Temporary geotextile storm drain inserts attach underneath storm drain grates to capture and filter storm water.

Suitable Applications

- Every storm drain inlet receiving runoff from unstabilized or otherwise active work areas should be protected. Inlet protection should be used in conjunction with other erosion and sediment controls to prevent sediment-laden stormwater and non-stormwater discharges from entering the storm drain system.

Limitations

- Drainage area should not exceed 1 acre.
- In general straw bales should not be used as inlet protection.
- Requires an adequate area for water to pond without encroaching into portions of the roadway subject to traffic.
- Sediment removal may be inadequate to prevent sediment discharges in high flow conditions or if runoff is heavily sediment laden. If high flow conditions are expected, use

CASQA
CALIFORNIA STORMWATER QUALITY ASSOCIATION

other onsite sediment trapping techniques in conjunction with inlet protection.

- Frequent maintenance is required.
- Limit drainage area to 1 acre maximum. For drainage areas larger than 1 acre, runoff should be routed to a sediment-trapping device designed for larger flows. See BMPs SE-2, Sediment Basin, and SE-3, Sediment Traps.
- Excavated drop inlet sediment traps are appropriate where relatively heavy flows are expected, and overflow capability is needed.

Implementation

General

Inlet control measures presented in this handbook should not be used for inlets draining more than one acre. Runoff from larger disturbed areas should be first routed through SE-2, Sediment Basin or SE-3, Sediment Trap and/or used in conjunction with other drainage control, erosion control, and sediment control BMPs to protect the site. Different types of inlet protection are appropriate for different applications depending on site conditions and the type of inlet. Alternative methods are available in addition to the methods described/shown herein such as prefabricated inlet insert devices, or gutter protection devices.

Design and Layout

Identify existing and planned storm drain inlets that have the potential to receive sediment-laden surface runoff. Determine if storm drain inlet protection is needed and which method to use.

- The key to successful and safe use of storm drain inlet protection devices is to know where runoff that is directed toward the inlet to be protected will pond or be diverted as a result of installing the protection device.
  - Determine the acceptable location and extent of ponding in the vicinity of the drain inlet. The acceptable location and extent of ponding will influence the type and design of the storm drain inlet protection device.
  - Determine the extent of potential runoff diversion caused by the storm drain inlet protection device. Runoff ponded by inlet protection devices may flow around the device and towards the next downstream inlet. In some cases, this is acceptable; in other cases, serious erosion or downstream property damage can be caused by these diversions. The possibility of runoff diversions will influence whether or not storm drain inlet protection is suitable; and, if suitable, the type and design of the device.
- The location and extent of ponding, and the extent of diversion, can usually be controlled through appropriate placement of the inlet protection device. In some cases, moving the inlet protection device a short distance upstream of the actual inlet can provide more efficient sediment control, limit ponding to desired areas, and prevent or control diversions.
- Seven types of inlet protection are presented below. However, it is recognized that other effective methods and proprietary devices exist and may be selected.

- Silt Fence: Appropriate for drainage basins with less than a 5% slope, sheet flows, and flows under 0.5 cfs.
- Excavated Drop Inlet Sediment Trap: An excavated area around the inlet to trap sediment (SE-3).
- Gravel bag barrier: Used to create a small sediment trap upstream of inlets on sloped, paved streets. Appropriate for sheet flow or when concentrated flow may exceed 0.5 cfs, and where overtopping is required to prevent flooding.
- Block and Gravel Filter: Appropriate for flows greater than 0.5 cfs.
- Temporary Geotextile Storm drain Inserts: Different products provide different features. Refer to manufacturer details for targeted pollutants and additional features.
- Biofilter Bag Barrier: Used to create a small retention area upstream of inlets and can be located on pavement or soil. Biofilter bags slowly filter runoff allowing sediment to settle out. Appropriate for flows under 0.5 cfs.
- Compost Socks: Allow filtered run-off to pass through the compost while retaining sediment and potentially other pollutants (SE-13). Appropriate for flows under 1.0 cfs.

- Select the appropriate type of inlet protection and design as referred to or as described in this fact sheet.
- Provide area around the inlet for water to pond without flooding structures and property.
- Grates and spaces around all inlets should be sealed to prevent seepage of sediment-laden water.
- Excavate sediment sumps (where needed) 1 to 2 ft with 2:1 side slopes around the inlet.

Installation

- ***DI Protection Type 1 - Silt Fence*** - Similar to constructing a silt fence; see BMP SE-1, Silt Fence. Do not place fabric underneath the inlet grate since the collected sediment may fall into the drain inlet when the fabric is removed or replaced and water flow through the grate will be blocked resulting in flooding. See typical Type 1 installation details at the end of this fact sheet.

  1. Excavate a trench approximately 6 in. wide and 6 in. deep along the line of the silt fence inlet protection device.
  2. Place 2 in. by 2 in. wooden stakes around the perimeter of the inlet a maximum of 3 ft apart and drive them at least 18 in. into the ground or 12 in. below the bottom of the trench. The stakes should be at least 48 in.
  3. Lay fabric along bottom of trench, up side of trench, and then up stakes. See SE-1, Silt Fence, for details. The maximum silt fence height around the inlet is 24 in.
  4. Staple the filter fabric (for materials and specifications, see SE-1, Silt Fence) to wooden stakes. Use heavy-duty wire staples at least 1 in. in length.

5. Backfill the trench with gravel or compacted earth all the way around.

- ***DI Protection Type 2 - Excavated Drop Inlet Sediment Trap*** - Install filter fabric fence in accordance with DI Protection Type 1. Size excavated trap to provide a minimum storage capacity calculated at the rate 67 yd^3/acre of drainage area. See typical Type 2 installation details at the end of this fact sheet.

- ***DI Protection Type 3 - Gravel bag*** - Flow from a severe storm should not overtop the curb. In areas of high clay and silts, use filter fabric and gravel as additional filter media. Construct gravel bags in accordance with SE-6, Gravel Bag Berm. Gravel bags should be used due to their high permeability. See typical Type 3 installation details at the end of this fact sheet.

  1. Construct on gently sloping street.
  2. Leave room upstream of barrier for water to pond and sediment to settle.
  3. Place several layers of gravel bags – overlapping the bags and packing them tightly together.
  4. Leave gap of one bag on the top row to serve as a spillway. Flow from a severe storm (e.g., 10-year storm) should not overtop the curb.

- ***DI Protection Type 4 – Block and Gravel Filter*** - Block and gravel filters are suitable for curb inlets commonly used in residential, commercial, and industrial construction. See typical Type 4 installation details at the end of this fact sheet.

  1. Place hardware cloth or comparable wire mesh with 0.5 in. openings over the drop inlet so that the wire extends a minimum of 1 ft beyond each side of the inlet structure. If more than one strip is necessary, overlap the strips. Place woven geotextile over the wire mesh.
  2. Place concrete blocks lengthwise on their sides in a single row around the perimeter of the inlet, so that the open ends face outward, not upward. The ends of adjacent blocks should abut. The height of the barrier can be varied, depending on design needs, by stacking combinations of blocks that are 4 in., 8 in., and 12 in. wide. The row of blocks should be at least 12 in. but no greater than 24 in. high.
  3. Place wire mesh over the outside vertical face (open end) of the concrete blocks to prevent stone from being washed through the blocks. Use hardware cloth or comparable wire mesh with 0.5 in. opening.
  4. Pile washed stone against the wire mesh to the top of the blocks. Use 0.75 to 3 in.

- ***DI Protection Type 5 – Temporary Geotextile Insert (proprietary)*** – Many types of temporary inserts are available. Most inserts fit underneath the grate of a drop inlet or inside of a curb inlet and are fastened to the outside of the grate or curb. These inserts are removable, and many can be cleaned and reused. Installation of these inserts differs between manufacturers. Please refer to manufacturer instruction for installation of proprietary devices.

- ***DI Protection Type 6 - Biofilter bags*** – Biofilter bags may be used as a substitute for gravel bags in low-flow situations. Biofilter bags should conform to specifications detailed in SE-14, Biofilter bags.

    1. Construct in a gently sloping area.
    2. Biofilter bags should be placed around inlets to intercept runoff flows.
    3. All bag joints should overlap by 6 in.
    4. Leave room upstream for water to pond and for sediment to settle out.
    5. Stake bags to the ground as described in the following detail. Stakes may be omitted if bags are placed on a paved surface.

- ***DI Protection Type 7 – Compost Socks*** – A compost sock can be assembled on site by filling a mesh sock (e.g., with a pneumatic blower). Compost socks do not require special trenching compared to other sediment control methods (e.g., silt fence). Compost socks should conform to specification detailed in SE-13, Compost Socks and Berms.

Costs

- Average annual cost for installation and maintenance of DI Type 1-4 and 6 (one-year useful life) is $200 per inlet.
- Temporary geotextile inserts are proprietary, and cost varies by region. These inserts can often be reused and may have greater than 1 year of use if maintained and kept undamaged. Average cost per insert ranges from $50-75 plus installation, but costs can exceed $100. This cost does not include maintenance.
- See SE-13 for Compost Sock cost information.

Inspection and Maintenance

- BMPs must be inspected in accordance with General Permit requirements for the associated project type and risk level. It is recommended that at a minimum, BMPs be inspected weekly, prior to forecasted rain events, daily during extended rain events, and after the conclusion of rain events.
- Silt Fences. If the fabric becomes clogged, torn, or degrades, it should be replaced. Make sure the stakes are securely driven in the ground and are in good shape (i.e., not bent, cracked, or splintered, and are reasonably perpendicular to the ground). Replace damaged stakes. At a minimum, remove the sediment behind the fabric fence when accumulation reaches one-third the height of the fence or barrier height.
- Gravel Filters. If the gravel becomes clogged with sediment, it should be carefully removed from the inlet and either cleaned or replaced. Since cleaning gravel at a construction site may be difficult, consider using the sediment-laden stone as fill material and put fresh stone around the inlet. Inspect bags for holes, gashes, and snags, and replace bags as needed. Check gravel bags for proper arrangement and displacement.

- Sediment that accumulates in the BMP should be periodically removed in order to maintain BMP effectiveness. Sediment should be removed when the sediment accumulation reaches one-third of the barrier height.
- Inspect and maintain temporary geotextile insert devices according to manufacturer's specifications.
- Remove storm drain inlet protection once the drainage area is stabilized.
    - Clean and regrade area around the inlet and clean the inside of the storm drain inlet, as it should be free of sediment and debris at the time of final inspection.

References

Stormwater Quality Handbooks - Construction Site Best Management Practices (BMPs) Manual, State of California Department of Transportation (Caltrans), March 2003.

Stormwater Management Manual for The Puget Sound Basin, Washington State Department of Ecology, Public Review Draft, 1991.

Erosion and Sediment Control Manual, Oregon Department of Environmental Quality, February 2005.

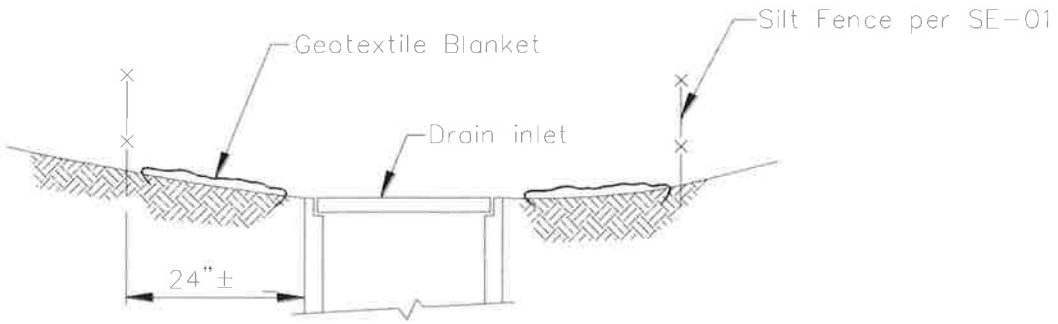

SECTION A–A

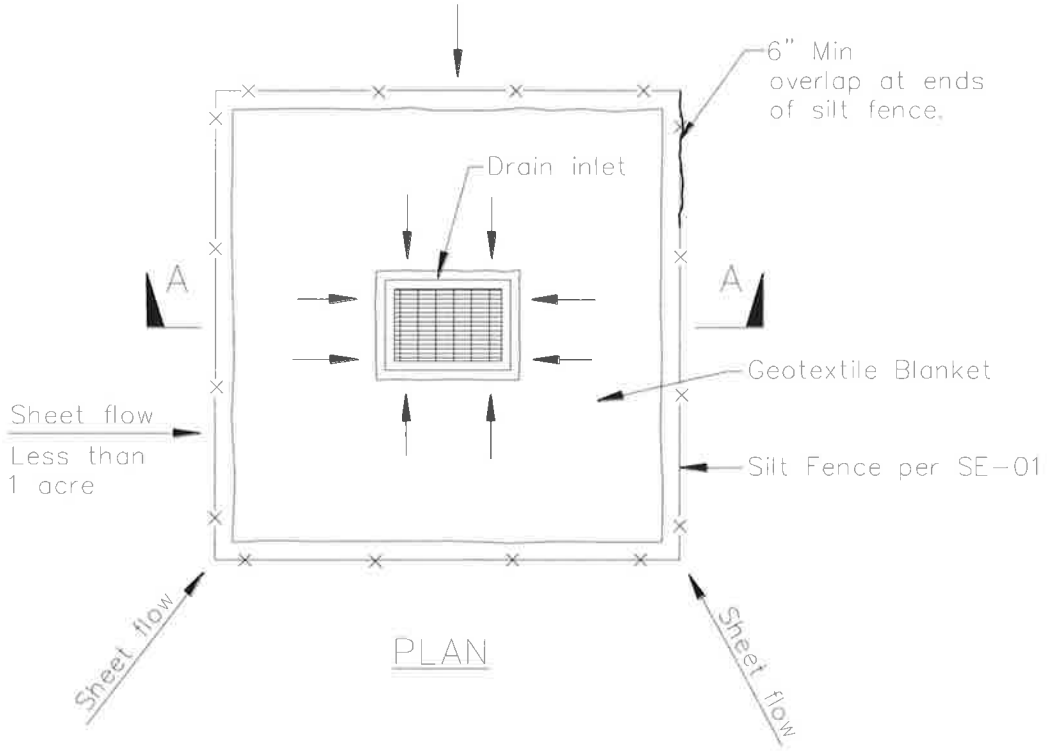

PLAN

DI PROTECTION TYPE 1
NOT TO SCALE

NOTES:

1. For use in areas where grading has been completed and final soil stabilization and seeding are pending.
2. Not applicable in paved areas.
3. Not applicable with concentrated flows.

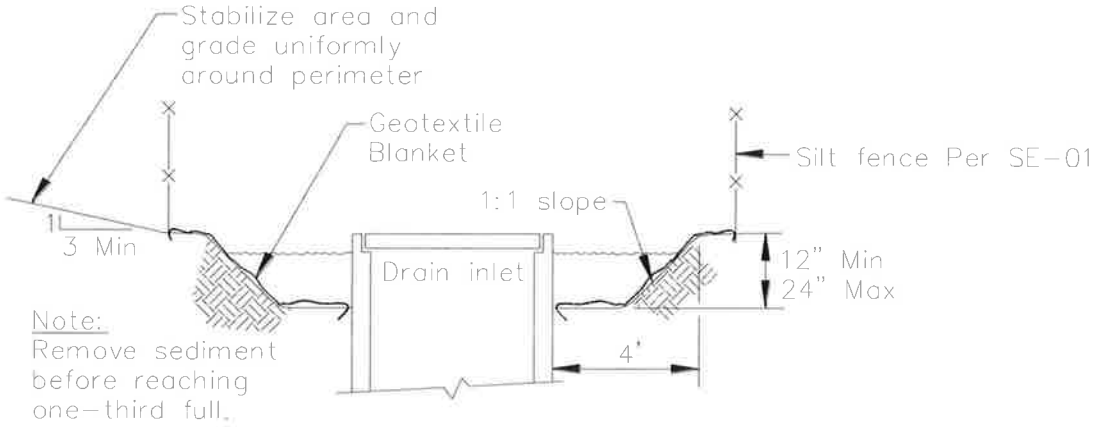

Section A-A

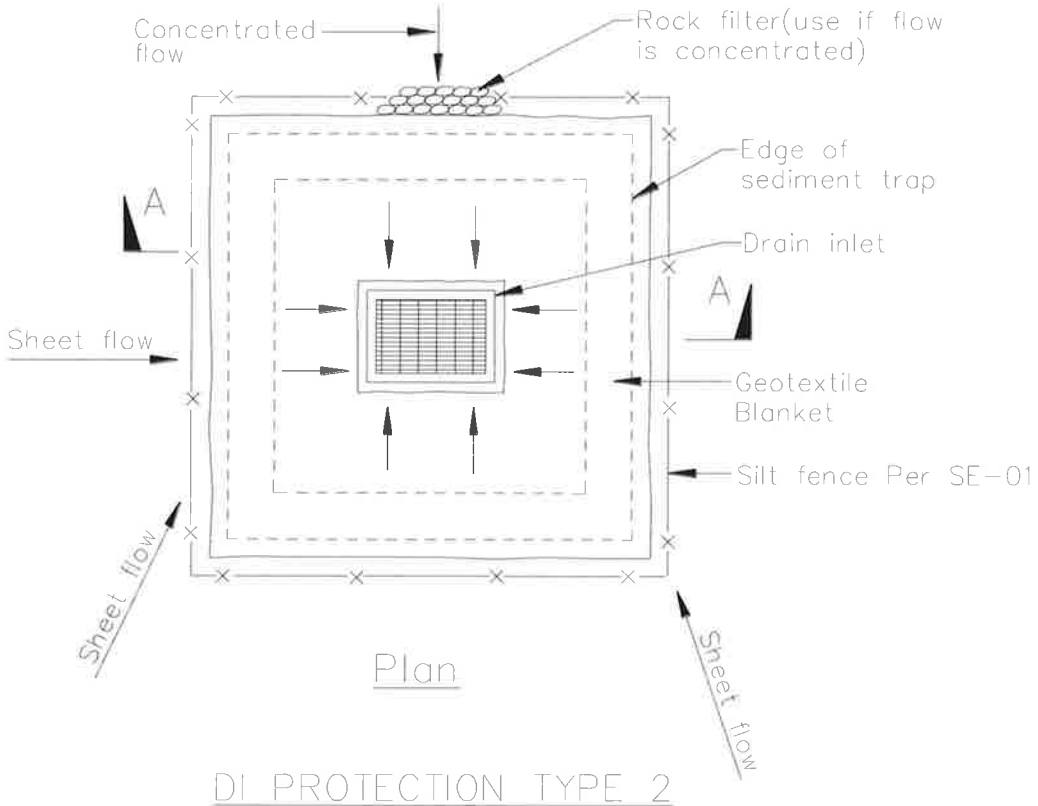

Plan

DI PROTECTION TYPE 2
NOT TO SCALE

Notes
1. For use in cleared and grubbed and in graded areas.
2. Shape basin so that longest inflow area faces longest length of trap.
3. For concentrated flows, shape basin in 2:1 ratio with length oriented towards direction of flow.

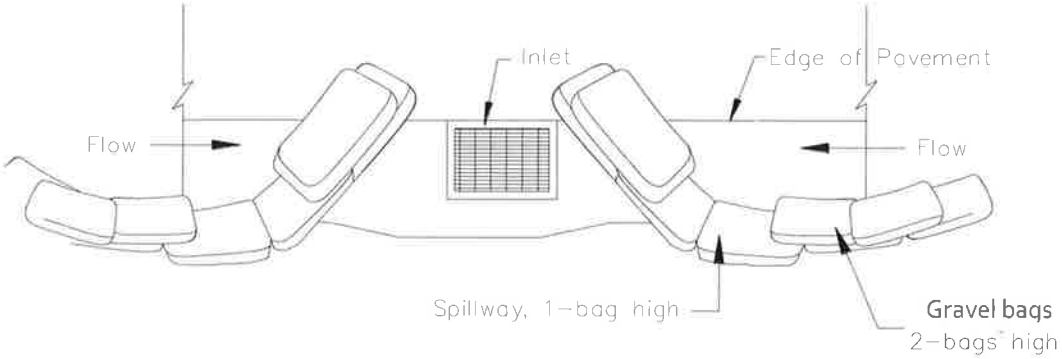

TYPICAL PROTECTION FOR INLET ON SUMP

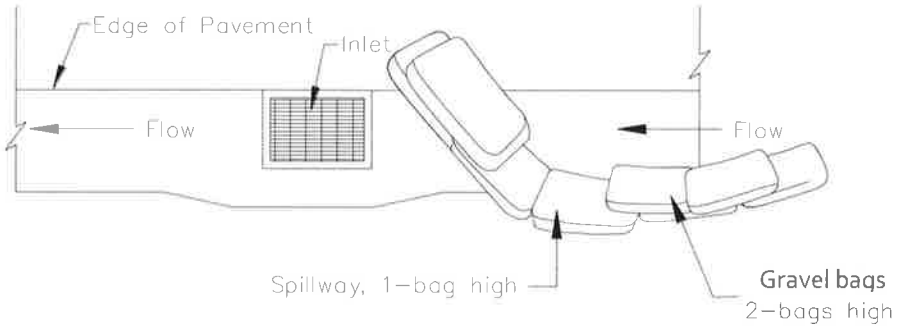

TYPICAL PROTECTION FOR INLET ON GRADE

NOTES:

1. Intended for short-term use.
2. Use to inhibit non-storm water flow.
3. Allow for proper maintenance and cleanup.
4. Bags must be removed after adjacent operation is completed
5. Not applicable in areas with high silts and clays without filter fabric.
6. Protection can be effective even if it is not immediately adjacent to the inlet provided that the inlet is protected from potential sources of pollution.

DI PROTECTION TYPE 3
NOT TO SCALE

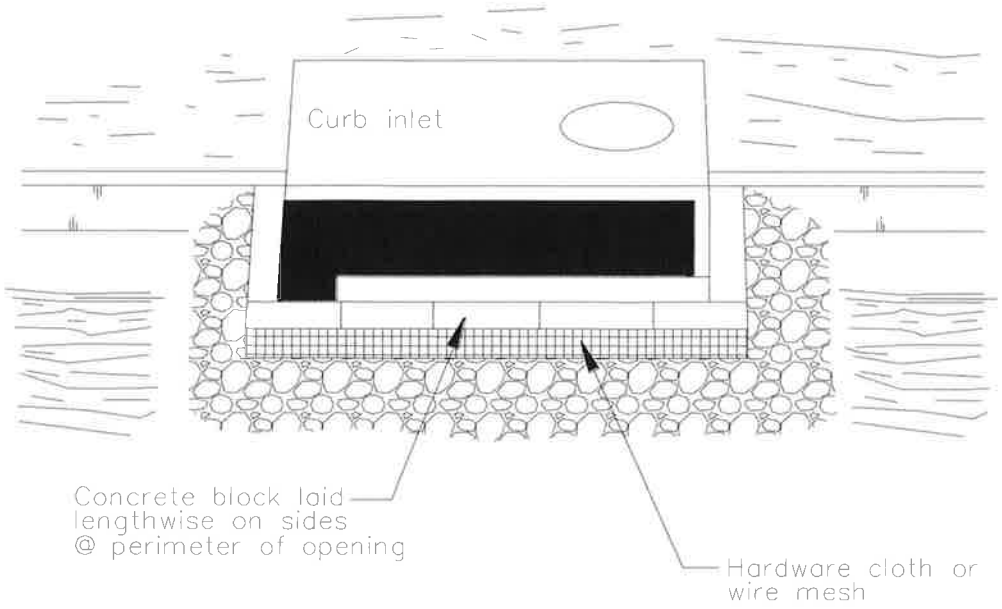

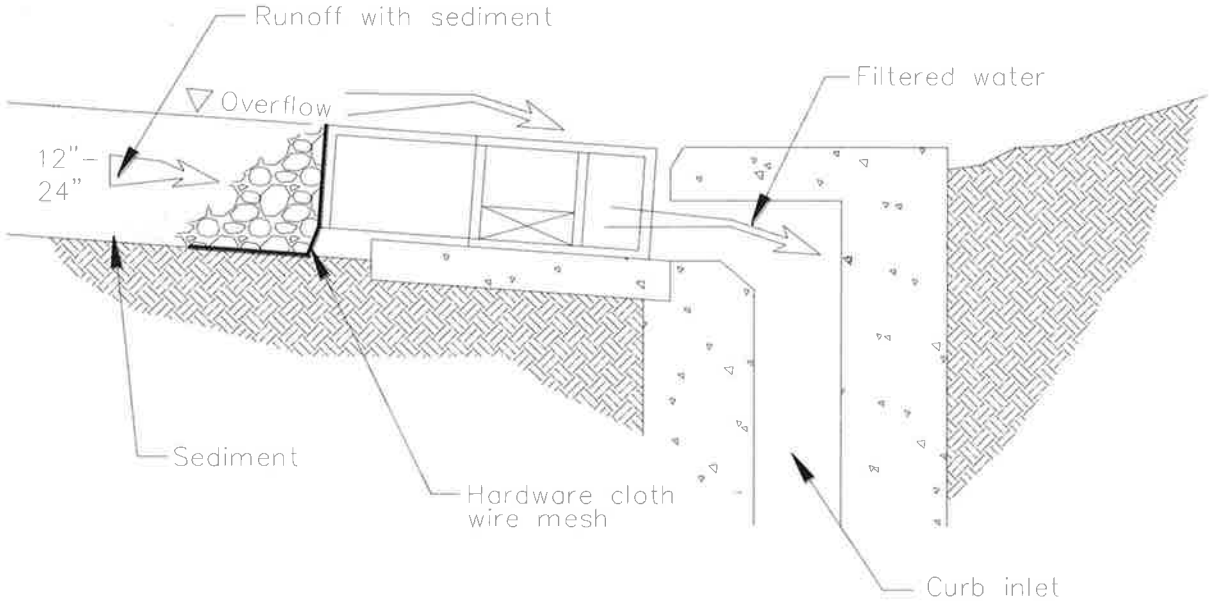

DI PROTECTION – TYPE 4

NOT TO SCALE

Stabilized Construction Entrance/Exit TC-1

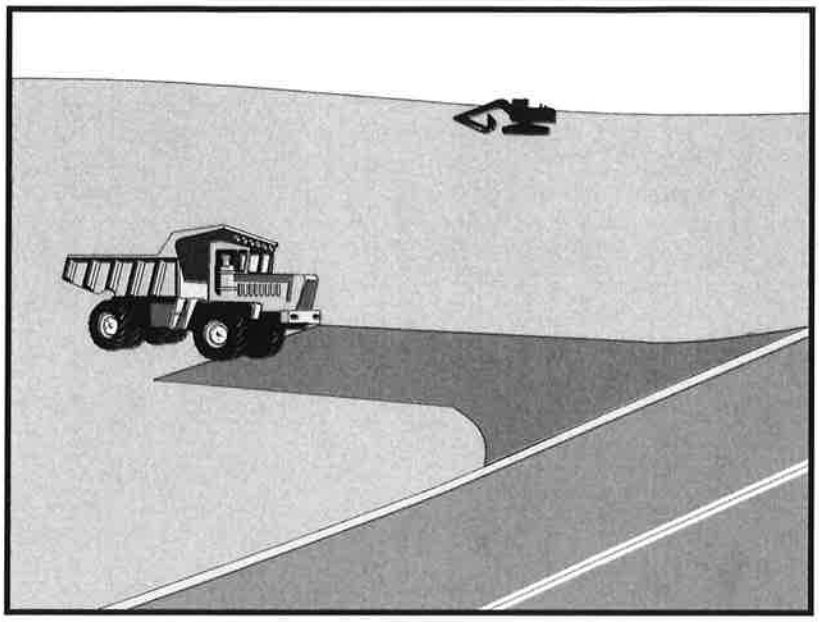

Categories

EC	Erosion Control	☒
SE	Sediment Control	☒
TC	Tracking Control	☑
WE	Wind Erosion Control	
NS	Non-Stormwater Management Control	
WM	Waste Management and Materials Pollution Control	

Legend:

☑ **Primary Objective**

☒ **Secondary Objective**

Targeted Constituents

Sediment	☑
Nutrients	
Trash	
Metals	
Bacteria	
Oil and Grease	
Organics	

Potential Alternatives

None

If User/Subscriber modifies this fact sheet in any way, the CASQA name/logo and footer below must be removed from each page and not appear on the modified version.

Description and Purpose

A stabilized construction access is defined by a point of entrance/exit to a construction site that is stabilized to reduce the tracking of mud and dirt onto public roads by construction vehicles.

Suitable Applications

Use at construction sites:

- Where dirt or mud can be tracked onto public roads.
- Adjacent to water bodies.
- Where poor soils are encountered.
- Where dust is a problem during dry weather conditions.

Limitations

- Entrances and exits require periodic top dressing with additional stones.
- This BMP should be used in conjunction with street sweeping on adjacent public right of way.
- Entrances and exits should be constructed on level ground only.
- Stabilized construction entrances are rather expensive to construct and when a wash rack is included, a sediment trap of some kind must also be provided to collect wash water runoff.

CASQA
CALIFORNIA STORMWATER QUALITY ASSOCIATION

Stabilized Construction Entrance/Exit TC-1

Implementation

General

A stabilized construction entrance is a pad of aggregate underlain with filter cloth located at any point where traffic will be entering or leaving a construction site to or from a public right of way, street, alley, sidewalk, or parking area. The purpose of a stabilized construction entrance is to reduce or eliminate the tracking of sediment onto public rights of way or streets. Reducing tracking of sediments and other pollutants onto paved roads helps prevent deposition of sediments into local storm drains and production of airborne dust.

Where traffic will be entering or leaving the construction site, a stabilized construction entrance should be used. NPDES permits require that appropriate measures be implemented to prevent tracking of sediments onto paved roadways, where a significant source of sediments is derived from mud and dirt carried out from unpaved roads and construction sites.

Stabilized construction entrances are moderately effective in removing sediment from equipment leaving a construction site. The entrance should be built on level ground. Advantages of the Stabilized Construction Entrance/Exit is that it does remove some sediment from equipment and serves to channel construction traffic in and out of the site at specified locations. Efficiency is greatly increased when a washing rack is included as part of a stabilized construction entrance/exit.

Design and Layout

- Construct on level ground where possible.
- Select 3 to 6 in. diameter stones.
- Use minimum depth of stones of 12 in. or as recommended by soils engineer.
- Construct length of 50 ft or maximum site will allow, and 10 ft minimum width or to accommodate traffic.
- Rumble racks constructed of steel panels with ridges and installed in the stabilized entrance/exit will help remove additional sediment and to keep adjacent streets clean.
- Provide ample turning radii as part of the entrance.
- Limit the points of entrance/exit to the construction site.
- Limit speed of vehicles to control dust.
- Properly grade each construction entrance/exit to prevent runoff from leaving the construction site.
- Route runoff from stabilized entrances/exits through a sediment trapping device before discharge.
- Design stabilized entrance/exit to support heaviest vehicles and equipment that will use it.

Stabilized Construction Entrance/Exit TC-1

- Select construction access stabilization (aggregate, asphaltic concrete, concrete) based on longevity, required performance, and site conditions. Do not use asphalt concrete (AC) grindings for stabilized construction access/roadway.
- If aggregate is selected, place crushed aggregate over geotextile fabric to at least 12 in. depth, or place aggregate to a depth recommended by a geotechnical engineer. A crushed aggregate greater than 3 in. but smaller than 6 in. should be used.
- Designate combination or single purpose entrances and exits to the construction site.
- Require that all employees, subcontractors, and suppliers utilize the stabilized construction access.
- Implement SE-7, Street Sweeping and Vacuuming, as needed.
- All exit locations intended to be used for more than a two-week period should have stabilized construction entrance/exit BMPs.

Inspection and Maintenance

- Inspect and verify that activity–based BMPs are in place prior to the commencement of associated activities. While activities associated with the BMPs are under way, inspect BMPs in accordance with General Permit requirements for the associated project type and risk level. It is recommended that at a minimum, BMPs be inspected weekly, prior to forecasted rain events, daily during extended rain events, and after the conclusion of rain events.
- Inspect local roads adjacent to the site daily. Sweep or vacuum to remove visible accumulated sediment.
- Remove aggregate, separate and dispose of sediment if construction entrance/exit is clogged with sediment.
- Keep all temporary roadway ditches clear.
- Check for damage and repair as needed.
- Replace gravel material when surface voids are visible.
- Remove all sediment deposited on paved roadways within 24 hours.
- Remove gravel and filter fabric at completion of construction

Costs

Average annual cost for installation and maintenance may vary from $1,500 to $6,100 each, averaging $3,100 per entrance. Costs will increase with addition of washing rack and sediment trap. With wash rack, costs range from $1,500 - $7,700 each, averaging $4,600 per entrance (All costs adjusted for inflation, 2016 dollars, by Tetra Tech Inc.

References

Manual of Standards of Erosion and Sediment Control Measures, Association of Bay Area Governments, May 1995.

National Management Measures to Control Nonpoint Source Pollution from Urban Areas, USEPA Agency, 2002.

Proposed Guidance Specifying Management Measures for Sources of Nonpoint Pollution in Coastal Waters, Work Group Working Paper, USEPA, April 1992.

Stormwater Quality Handbooks Construction Site Best Management Practices (BMPs) Manual, State of California Department of Transportation (Caltrans), November 2000.

Stormwater Management of the Puget Sound Basin, Technical Manual, Publication #91-75, Washington State Department of Ecology, February 1992.

Virginia Erosion and Sedimentation Control Handbook, Virginia Department of Conservation and Recreation, Division of Soil and Water Conservation, 1991.

Guidance Specifying Management Measures for Nonpoint Pollution in Coastal Waters, EPA 840-B-9-002, USEPA, Office of Water, Washington, DC, 1993.

Water Quality Management Plan for the Lake Tahoe Region, Volume II, Handbook of Management Practices, Tahoe Regional Planning Agency, November 1988.

Stabilized Construction Entrance/Exit TC-1

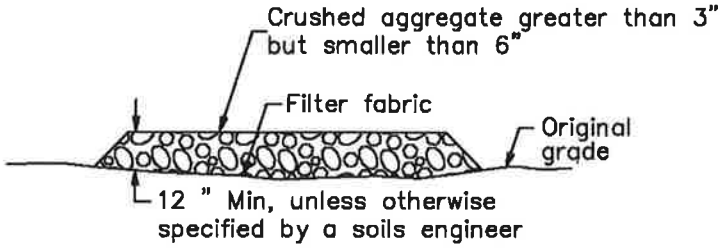

SECTION B–B
NTS

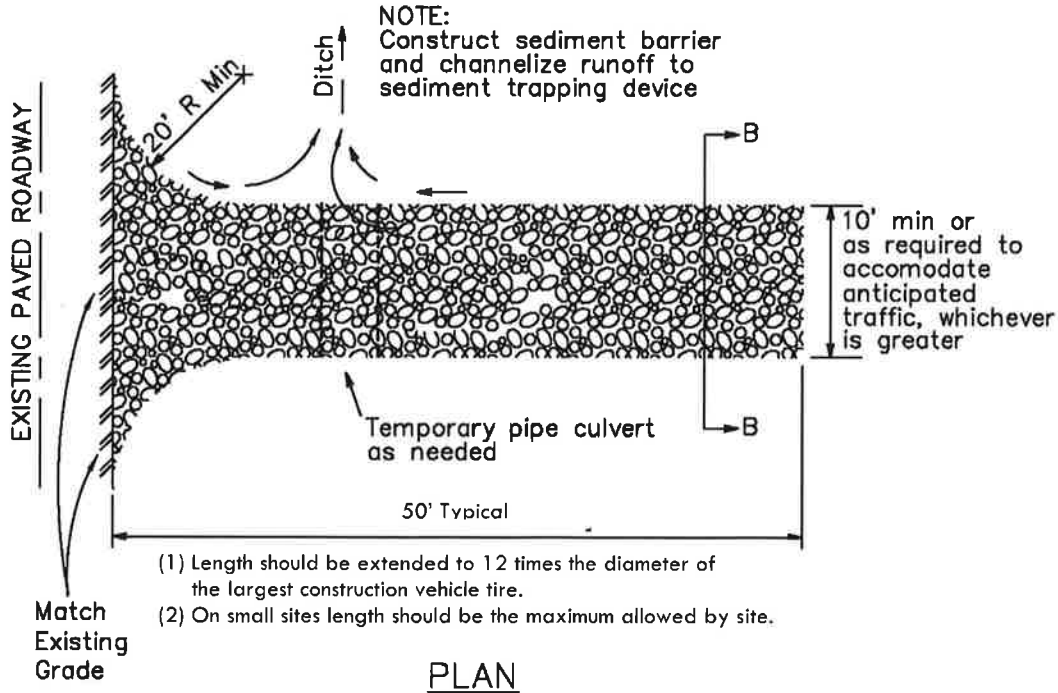

PLAN
NTS

Stabilized Construction Entrance/Exit TC-1

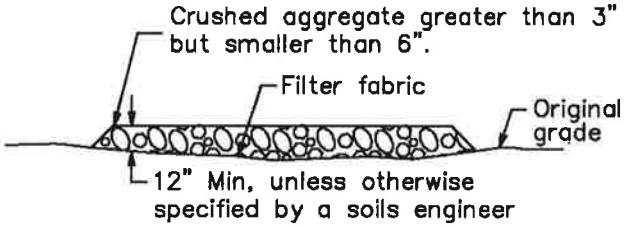

SECTION B–B
NTS

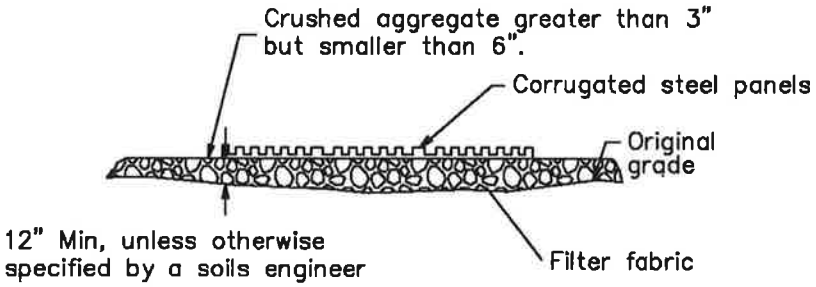

SECTION A–A
NOT TO SCALE

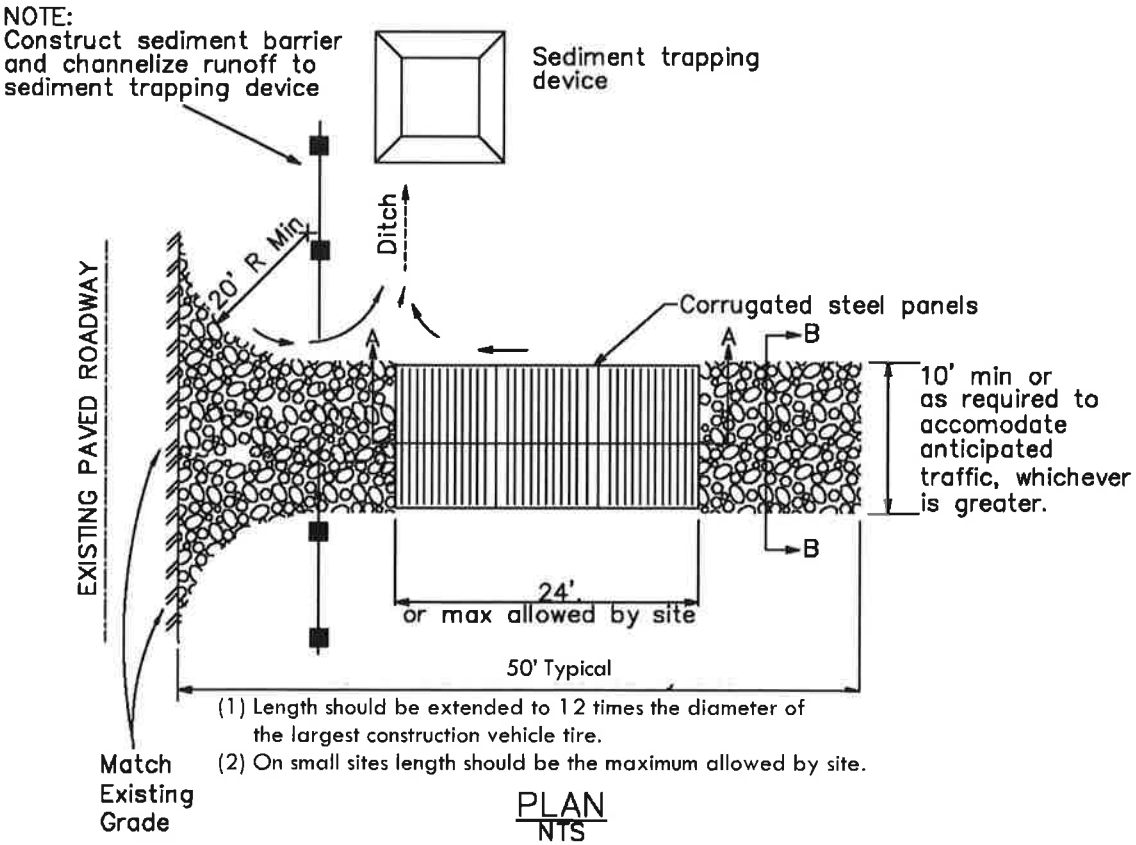

PLAN
NTS

Wind Erosion Control WE-1

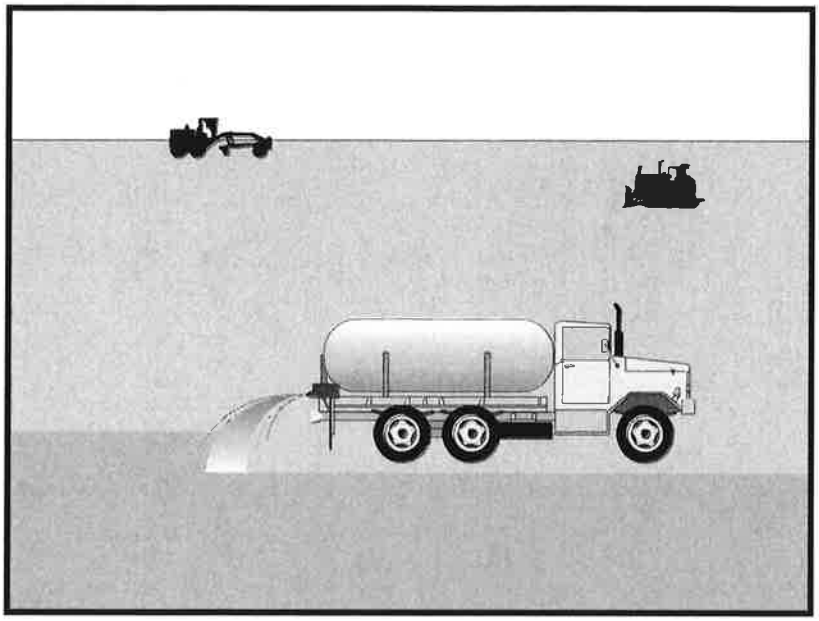

Categories		
EC	Erosion Control	
SE	Sediment Control	☒
TC	Tracking Control	
WE	Wind Erosion Control	☑
NS	Non-Stormwater Management Control	
WM	Waste Management and Materials Pollution Control	

Legend:
☑ **Primary Category**
☒ **Secondary Category**

Targeted Constituents	
Sediment	☑
Nutrients	
Trash	
Metals	
Bacteria	
Oil and Grease	
Organics	

Potential Alternatives

EC-5 Soil Binders

If User/Subscriber modifies this fact sheet in any way, the CASQA name/logo and footer below must be removed from each page and not appear on the modified version.

Description and Purpose

Wind erosion or dust control consists of applying water or other chemical dust suppressants as necessary to prevent or alleviate dust nuisance generated by construction activities. Covering small stockpiles or areas is an alternative to applying water or other dust palliatives.

California's Mediterranean climate, with a short "wet" season and a typically long, hot "dry" season, allows the soils to thoroughly dry out. During the dry season, construction activities are at their peak, and disturbed and exposed areas are increasingly subject to wind erosion, sediment tracking, and dust generated by construction equipment. Site conditions and climate can make dust control more of an erosion problem than water-based erosion. Additionally, many local agencies, including Air Quality Management Districts, require dust control and/or dust control permits in order to comply with local nuisance laws, opacity laws (visibility impairment) and the requirements of the Clean Air Act. Wind erosion control is required to be implemented at all construction sites greater than 1 acre by the General Permit.

Suitable Applications

Most BMPs that provide protection against water-based erosion will also protect against wind-based erosion and dust control requirements required by other agencies will generally meet wind erosion control requirements for water quality protection. Wind erosion control BMPs are suitable during the following construction activities:

CASQA
CALIFORNIA STORMWATER QUALITY ASSOCIATION

- Construction vehicle traffic on unpaved roads
- Drilling and blasting activities
- Soils and debris storage piles
- Batch drop from front-end loaders
- Areas with unstabilized soil
- Final grading/site stabilization

Limitations

- Watering prevents dust only for a short period (generally less than a few hours) and should be applied daily (or more often) to be effective.
- Over watering may cause erosion and track-out.
- Oil or oil-treated subgrade should not be used for dust control because the oil may migrate into drainageways and/or seep into the soil.
- Chemical dust suppression agents may have potential environmental impacts. Selected chemical dust control agents should be environmentally benign.
- Effectiveness of controls depends on soil, temperature, humidity, wind velocity and traffic.
- Chemical dust suppression agents should not be used within 100 feet of wetlands or water bodies.
- Chemically treated subgrades may make the soil water repellant, interfering with long-term infiltration and the vegetation/re-vegetation of the site. Some chemical dust suppressants may be subject to freezing and may contain solvents and should be handled properly.
- In compacted areas, watering and other liquid dust control measures may wash sediment or other constituents into the drainage system.
- If the soil surface has minimal natural moisture, the affected area may need to be pre-wetted so that chemical dust control agents can uniformly penetrate the soil surface.

Implementation

Dust Control Practices

Dust control BMPs generally stabilize exposed surfaces and minimize activities that suspend or track dust particles. The following table presents dust control practices that can be applied to varying site conditions that could potentially cause dust. For heavily traveled and disturbed areas, wet suppression (watering), chemical dust suppression, gravel asphalt surfacing, temporary gravel construction entrances, equipment wash-out areas, and haul truck covers can be employed as dust control applications. Permanent or temporary vegetation and mulching can be employed for areas of occasional or no construction traffic. Preventive measures include minimizing surface areas to be disturbed, limiting onsite vehicle traffic to 15 mph or less, and controlling the number and activity of vehicles on a site at any given time.

Chemical dust suppressants include: mulch and fiber based dust palliatives (e.g. paper mulch with gypsum binder), salts and brines (e.g. calcium chloride, magnesium chloride), non-petroleum based organics (e.g. vegetable oil, lignosulfonate), petroleum based organics (e.g. asphalt emulsion, dust oils, petroleum resins), synthetic polymers (e.g. polyvinyl acetate, vinyl, acrylic), clay additives (e.g. bentonite, montmorillonite) and electrochemical products (e.g. enzymes, ionic products).

Site Condition	Dust Control Practices							
	Permanent Vegetation	Mulching	Wet Suppression (Watering)	Chemical Dust Suppression	Gravel or Asphalt	Temporary Gravel Construction Entrances/Equipment Wash Down	Synthetic Covers	Minimize Extent of Disturbed Area
Disturbed Areas not Subject to Traffic	X	X	X	X	X			X
Disturbed Areas Subject to Traffic			X	X	X	X		X
Material Stockpiles		X	X	X			X	X
Demolition			X			X	X	
Clearing/ Excavation			X	X				X
Truck Traffic on Unpaved Roads			X	X	X	X	X	
Tracking					X	X		

Additional preventive measures include:

- Schedule construction activities to minimize exposed area (see EC-1, Scheduling).
- Quickly treat exposed soils using water, mulching, chemical dust suppressants, or stone/gravel layering.
- Identify and stabilize key access points prior to commencement of construction.
- Minimize the impact of dust by anticipating the direction of prevailing winds.
- Restrict construction traffic to stabilized roadways within the project site, as practicable.
- Water should be applied by means of pressure-type distributors or pipelines equipped with a spray system or hoses and nozzles that will ensure even distribution.
- All distribution equipment should be equipped with a positive means of shutoff.
- Unless water is applied by means of pipelines, at least one mobile unit should be available at all times to apply water or dust palliative to the project.
- If reclaimed waste water is used, the sources and discharge must meet California Department of Health Services water reclamation criteria and the Regional Water Quality

Control Board (RWQCB) requirements. Non-potable water should not be conveyed in tanks or drain pipes that will be used to convey potable water and there should be no connection between potable and non-potable supplies. Non-potable tanks, pipes, and other conveyances should be marked, "NON-POTABLE WATER - DO NOT DRINK."

- Pave or chemically stabilize access points where unpaved traffic surfaces adjoin paved roads.
- Provide covers for haul trucks transporting materials that contribute to dust.
- Provide for rapid clean up of sediments deposited on paved roads. Furnish stabilized construction road entrances and wheel wash areas.
- Stabilize inactive areas of construction sites using temporary vegetation or chemical stabilization methods.

For chemical stabilization, there are many products available for chemically stabilizing gravel roadways and stockpiles. If chemical stabilization is used, the chemicals should not create any adverse effects on stormwater, plant life, or groundwater and should meet all applicable regulatory requirements.

Costs

Installation costs for water and chemical dust suppression vary based on the method used and the length of effectiveness. Annual costs may be high since some of these measures are effective for only a few hours to a few days.

Inspection and Maintenance

- Inspect and verify that activity-based BMPs are in place prior to the commencement of associated activities.
- BMPs must be inspected in accordance with General Permit requirements for the associated project type and risk level. It is recommended that at a minimum, BMPs be inspected weekly, prior to forecasted rain events, daily during extended rain events, and after the conclusion of rain events.
- Check areas protected to ensure coverage.
- Most water-based dust control measures require frequent application, often daily or even multiple times per day. Obtain vendor or independent information on longevity of chemical dust suppressants.

References

Best Management Practices and Erosion Control Manual for Construction Sites, Flood Control District of Maricopa County, Arizona, September 1992.

California Air Pollution Control Laws, California Air Resources Board, updated annually.

Construction Manual, Chapter 4, Section 10, "Dust Control"; Section 17, "Watering"; and Section 18, "Dust Palliative", California Department of Transportation (Caltrans), July 2001.

Prospects for Attaining the State Ambient Air Quality Standards for Suspended Particulate Matter (PM10), Visibility Reducing Particles, Sulfates, Lead, and Hydrogen Sulfide, California Air Resources Board, April 1991.

Stormwater Quality Handbooks Construction Site Best Management Practices (BMPs) Manual, State of California Department of Transportation (Caltrans), March 2003.

Material Delivery and Storage WM-1

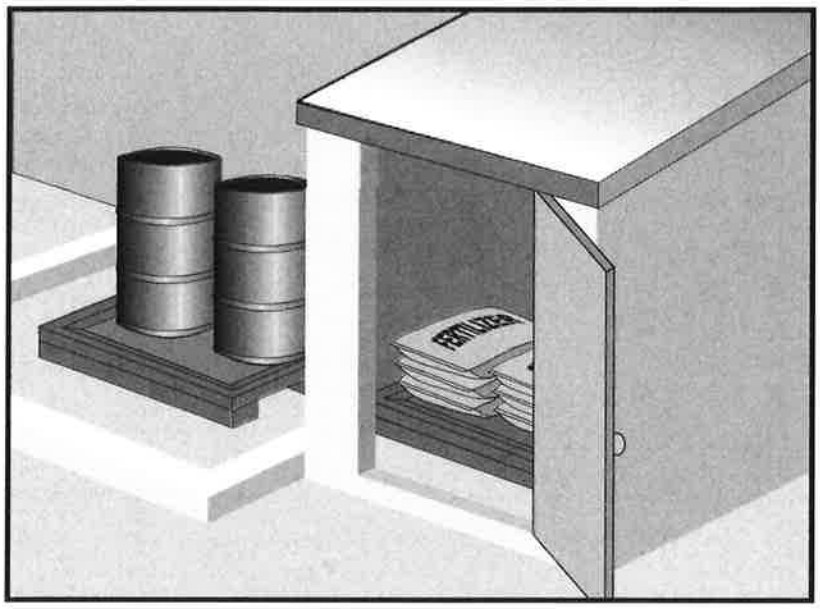

Categories		
EC	Erosion Control	
SE	Sediment Control	
TC	Tracking Control	
WE	Wind Erosion Control	
NS	Non-Stormwater Management Control	
WM	Waste Management and Materials Pollution Control	☑

Legend:
☑ **Primary Category**
☒ **Secondary Category**

Description and Purpose

Prevent, reduce, or eliminate the discharge of pollutants from material delivery and storage to the stormwater system or watercourses by minimizing the storage of hazardous materials onsite, storing materials in watertight containers and/or a completely enclosed designated area, installing secondary containment, conducting regular inspections, and training employees and subcontractors.

This best management practice covers only material delivery and storage. For other information on materials, see WM-2, Material Use, or WM-4, Spill Prevention and Control. For information on wastes, see the waste management BMPs in this section.

Suitable Applications

These procedures are suitable for use at all construction sites with delivery and storage of the following materials:

- Soil stabilizers and binders
- Pesticides and herbicides
- Fertilizers
- Detergents
- Plaster
- Petroleum products such as fuel, oil, and grease

Targeted Constituents	
Sediment	☑
Nutrients	☑
Trash	☑
Metals	☑
Bacteria	
Oil and Grease	☑
Organics	☑

Potential Alternatives

None

If User/Subscriber modifies this fact sheet in any way, the CASQA name/logo and footer below must be removed from each page and not appear on the modified version.

CASQA
CALIFORNIA STORMWATER QUALITY ASSOCIATION

- Asphalt and concrete components
- Hazardous chemicals such as acids, lime, glues, adhesives, paints, solvents, and curing compounds
- Concrete compounds
- Other materials that may be detrimental if released to the environment

Limitations

- Space limitation may preclude indoor storage.
- Storage sheds often must meet building and fire code requirements.

Implementation

The following steps should be taken to minimize risk:

- Chemicals must be stored in water tight containers with appropriate secondary containment or in a storage shed.
- When a material storage area is located on bare soil, the area should be lined and bermed.
- Use containment pallets or other practical and available solutions, such as storing materials within newly constructed buildings or garages, to meet material storage requirements.
- Stack erodible landscape material on pallets and cover when not in use.
- Contain all fertilizers and other landscape materials when not in use.
- Temporary storage areas should be located away from vehicular traffic.
- Material Safety Data Sheets (MSDS) should be available on-site for all materials stored that have the potential to effect water quality.
- Construction site areas should be designated for material delivery and storage.
- Material delivery and storage areas should be located away from waterways, if possible.
  - Avoid transport near drainage paths or waterways.
  - Surround with earth berms or other appropriate containment BMP. See EC-9, Earth Dikes and Drainage Swales.
  - Place in an area that will be paved.
- Storage of reactive, ignitable, or flammable liquids must comply with the fire codes of your area. Contact the local Fire Marshal to review site materials, quantities, and proposed storage area to determine specific requirements. See the Flammable and Combustible Liquid Code, NFPA30.
- An up to date inventory of materials delivered and stored onsite should be kept.

- Hazardous materials storage onsite should be minimized.
- Hazardous materials should be handled as infrequently as possible.
- Keep ample spill cleanup supplies appropriate for the materials being stored. Ensure that cleanup supplies are in a conspicuous, labeled area.
- Employees and subcontractors should be trained on the proper material delivery and storage practices.
- Employees trained in emergency spill cleanup procedures must be present when dangerous materials or liquid chemicals are unloaded.
- If significant residual materials remain on the ground after construction is complete, properly remove and dispose of materials and any contaminated soil. See WM-7, Contaminated Soil Management. If the area is to be paved, pave as soon as materials are removed to stabilize the soil.

Material Storage Areas and Practices

- Liquids, petroleum products, and substances listed in 40 CFR Parts 110, 117, or 302 should be stored in approved containers and drums and should not be overfilled. Containers and drums should be placed in temporary containment facilities for storage.
- A temporary containment facility should provide for a spill containment volume able to contain precipitation from a 25-year storm event, plus the greater of 10% of the aggregate volume of all containers or 100% of the capacity of the largest container within its boundary, whichever is greater.
- A temporary containment facility should be impervious to the materials stored therein for a minimum contact time of 72 hours.
- A temporary containment facility should be maintained free of accumulated rainwater and spills. In the event of spills or leaks, accumulated rainwater and spills should be collected and placed into drums. These liquids should be handled as a hazardous waste unless testing determines them to be non-hazardous. All collected liquids or non-hazardous liquids should be sent to an approved disposal site.
- Sufficient separation should be provided between stored containers to allow for spill cleanup and emergency response access.
- Incompatible materials, such as chlorine and ammonia, should not be stored in the same temporary containment facility.
- Materials should be covered prior to, and during rain events.
- Materials should be stored in their original containers and the original product labels should be maintained in place in a legible condition. Damaged or otherwise illegible labels should be replaced immediately.

- Bagged and boxed materials should be stored on pallets and should not be allowed to accumulate on the ground. To provide protection from wind and rain throughout the rainy season, bagged and boxed materials should be covered during non-working days and prior to and during rain events.
- Stockpiles should be protected in accordance with WM-3, Stockpile Management.
- Materials should be stored indoors within existing structures or completely enclosed storage sheds when available.
- Proper storage instructions should be posted at all times in an open and conspicuous location.
- An ample supply of appropriate spill clean up material should be kept near storage areas.
- Also see WM-6, Hazardous Waste Management, for storing of hazardous wastes.

Material Delivery Practices

- Keep an accurate, up-to-date inventory of material delivered and stored onsite.
- Arrange for employees trained in emergency spill cleanup procedures to be present when dangerous materials or liquid chemicals are unloaded.

Spill Cleanup

- Contain and clean up any spill immediately.
- Properly remove and dispose of any hazardous materials or contaminated soil if significant residual materials remain on the ground after construction is complete. See WM-7, Contaminated Soil Management.
- See WM-4, Spill Prevention and Control, for spills of chemicals and/or hazardous materials.
- If spills or leaks of materials occur that are not contained and could discharge to surface waters, non-visible sampling of site discharge may be required. Refer to the General Permit or to your project specific Construction Site Monitoring Plan to determine if and where sampling is required.

Cost

- The largest cost of implementation may be in the construction of a materials storage area that is covered and provides secondary containment.

Inspection and Maintenance

- BMPs must be inspected in accordance with General Permit requirements for the associated project type and risk level. It is recommended that at a minimum, BMPs be inspected weekly, prior to forecasted rain events, daily during extended rain events, and after the conclusion of rain events.
- Keep storage areas clean and well organized, including a current list of all materials onsite.
- Inspect labels on containers for legibility and accuracy.

- Repair or replace perimeter controls, containment structures, covers, and liners as needed to maintain proper function.

References

Blueprint for a Clean Bay: Best Management Practices to Prevent Stormwater Pollution from Construction Related Activities; Santa Clara Valley Nonpoint Source Pollution Control Program, 1995.

Coastal Nonpoint Pollution Control Program: Program Development and Approval Guidance, Working Group Working Paper; USEPA, April 1992.

Stormwater Quality Handbooks - Construction Site Best Management Practices (BMPs) Manual, State of California Department of Transportation (Caltrans), March 2003.

Stormwater Management for Construction Activities; Developing Pollution Prevention Plans and Best Management Practice, EPA 832-R-92005; USEPA, April 1992.

Material Use

WM-2

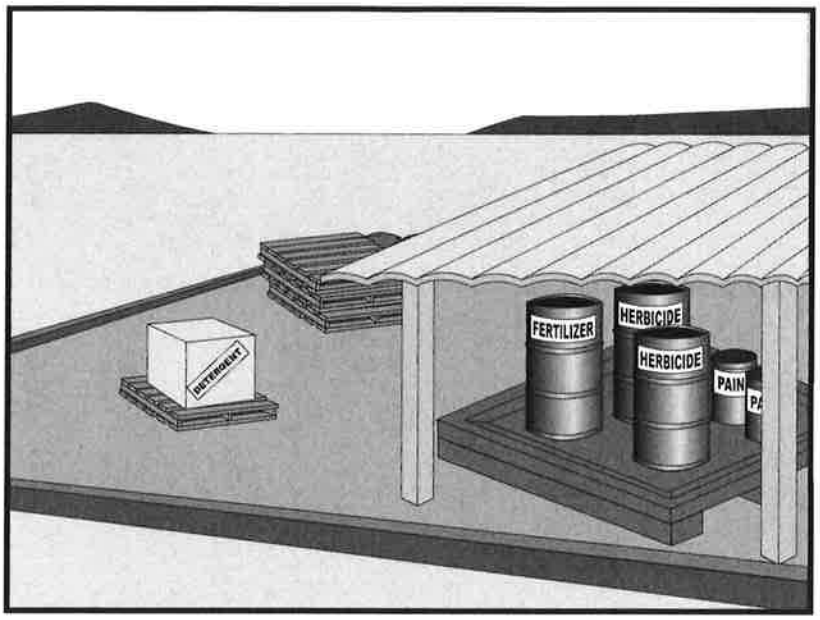

Categories

EC	Erosion Control	
SE	Sediment Control	
TC	Tracking Control	
WE	Wind Erosion Control	
NS	Non-Stormwater Management Control	
WM	Waste Management and Materials Pollution Control	☑

Legend:

☑ **Primary Category**

☒ **Secondary Category**

Description and Purpose

Prevent or reduce the discharge of pollutants to the storm drain system or watercourses from material use by using alternative products, minimizing hazardous material use onsite, and training employees and subcontractors.

Suitable Applications

This BMP is suitable for use at all construction projects. These procedures apply when the following materials are used or prepared onsite:

- Pesticides and herbicides
- Fertilizers
- Detergents
- Petroleum products such as fuel, oil, and grease
- Asphalt and other concrete components
- Other hazardous chemicals such as acids, lime, glues, adhesives, paints, solvents, and curing compounds
- Other materials that may be detrimental if released to the environment

Targeted Constituents

Sediment	☑
Nutrients	☑
Trash	☑
Metals	☑
Bacteria	
Oil and Grease	☑
Organics	☑

Potential Alternatives

None

If User/Subscriber modifies this fact sheet in any way, the CASQA name/logo and footer below must be removed from each page and not appear on the modified version.

CASQA
CALIFORNIA STORMWATER QUALITY ASSOCIATION

Limitations

Safer alternative building and construction products may not be available or suitable in every instance.

Implementation

The following steps should be taken to minimize risk:

- Minimize use of hazardous materials onsite.
- Follow manufacturer instructions regarding uses, protective equipment, ventilation, flammability, and mixing of chemicals.
- Train personnel who use pesticides. The California Department of Pesticide Regulation and county agricultural commissioners license pesticide dealers, certify pesticide applicators, and conduct onsite inspections.
- The preferred method of termiticide application is soil injection near the existing or proposed structure foundation/slab; however, if not feasible, soil drench application of termiticides should follow EPA label guidelines and the following recommendations (most of which are applicable to most pesticide applications):
  - Do not treat soil that is water-saturated or frozen.
  - Application shall not commence within 24-hours of a predicted precipitation event with a 40% or greater probability. Weather tracking must be performed on a daily basis prior to termiticide application and during the period of termiticide application.
  - Do not allow treatment chemicals to runoff from the target area. Apply proper quantity to prevent excess runoff. Provide containment for and divert stormwater from application areas using berms or diversion ditches during application.
  - Dry season: Do not apply within 10 feet of storm drains. Do not apply within 25 feet of aquatic habitats (such as, but not limited to, lakes; reservoirs; rivers; permanent streams; marshes or ponds; estuaries; and commercial fish farm ponds).
  - Wet season: Do not apply within 50 feet of storm drains or aquatic habitats (such as, but not limited to, lakes; reservoirs; rivers; permanent streams; marshes or ponds; estuaries; and commercial fish farm ponds) unless a vegetative buffer is present (if so, refer to dry season requirements).
  - Do not make on-grade applications when sustained wind speeds are above 10 mph (at application site) at nozzle end height.
  - Cover treatment site prior to a rain event in order to prevent run-off of the pesticide into non-target areas. The treated area should be limited to a size that can be backfilled and/or covered by the end of the work shift. Backfilling or covering of the treated area shall be done by the end of the same work shift in which the application is made.
  - The applicator must either cover the soil him/herself or provide written notification of the above requirement to the contractor on site and to the person commissioning the

application (if different than the contractor). If notice is provided to the contractor or the person commissioning the application, then they are responsible under the Federal Insecticide Fungicide, and Rodenticide Act (FIFRA) to ensure that: 1) if the concrete slab cannot be poured over the treated soil within 24 hours of application, the treated soil is covered with a waterproof covering (such as polyethylene sheeting), and 2) the treated soil is covered if precipitation is predicted to occur before the concrete slab is scheduled to be poured.

- Do not over-apply fertilizers, herbicides, and pesticides. Prepare only the amount needed. Follow the recommended usage instructions. Over-application is expensive and environmentally harmful. Unless on steep slopes, till fertilizers into the soil rather than hydraulic application. Apply surface dressings in several smaller applications, as opposed to one large application, to allow time for infiltration and to avoid excess material being carried offsite by runoff. Do not apply these chemicals before predicted rainfall.
- Train employees and subcontractors in proper material use.
- Supply Material Safety Data Sheets (MSDS) for all materials.
- Dispose of latex paint and paint cans, used brushes, rags, absorbent materials, and drop cloths, when thoroughly dry and are no longer hazardous, with other construction debris.
- Do not remove the original product label; it contains important safety and disposal information. Use the entire product before disposing of the container.
- Mix paint indoors or in a containment area. Never clean paintbrushes or rinse paint containers into a street, gutter, storm drain, or watercourse. Dispose of any paint thinners, residue, and sludge(s) that cannot be recycled, as hazardous waste.
- For water-based paint, clean brushes to the extent practicable, and rinse to a drain leading to a sanitary sewer where permitted or contain for proper disposal off site. For oil-based paints, clean brushes to the extent practicable, and filter and reuse thinners and solvents.
- Use recycled and less hazardous products when practical. Recycle residual paints, solvents, non-treated lumber, and other materials.
- Use materials only where and when needed to complete the construction activity. Use safer alternative materials as much as possible. Reduce or eliminate use of hazardous materials onsite when practical.
- Document the location, time, chemicals applied, and applicator's name and qualifications.
- Keep an ample supply of spill clean up material near use areas. Train employees in spill clean up procedures.
- Avoid exposing applied materials to rainfall and runoff unless sufficient time has been allowed for them to dry.
- Discontinue use of erodible landscape material within 2 days prior to a forecasted rain event and materials should be covered and/or bermed.

- Provide containment for material use areas such as masons' areas or paint mixing/preparation areas to prevent materials/pollutants from entering stormwater.

Costs

All of the above are low cost measures.

Inspection and Maintenance

- Inspect and verify that activity-based BMPs are in place prior to the commencement of associated activities.
- BMPs must be inspected in accordance with General Permit requirements for the associated project type and risk level. It is recommended that at a minimum, BMPs be inspected weekly, prior to forecasted rain events, daily during extended rain events, and after the conclusion of rain events.
- Ensure employees and subcontractors throughout the job are using appropriate practices.

References

Blueprint for a Clean Bay: Best Management Practices to Prevent Stormwater Pollution from Construction Related Activities; Santa Clara Valley Nonpoint Source Pollution Control Program, 1995.

Coastal Nonpoint Pollution Control Program: Program Development and Approval Guidance, Working Group Working Paper; USEPA, April 1992.

Comments on Risk Assessments Risk Reduction Options for Cypermethrin: Docket No. OPP–2005–0293; California Stormwater Quality Association (CASQA) letter to USEPA, 2006.Environmental Hazard and General Labeling for Pyrethroid Non-Agricultural Outdoor Products, EPA-HQ-OPP-2008-0331-0021; USEPA, 2008.

Stormwater Quality Handbooks - Construction Site Best Management Practices (BMPs) Manual, State of California Department of Transportation (Caltrans), March 2003.

Stormwater Management for Construction Activities; Developing Pollution Prevention Plans and Best Management Practice, EPA 832-R-92005; USEPA, April 1992.

Stockpile Management WM-3

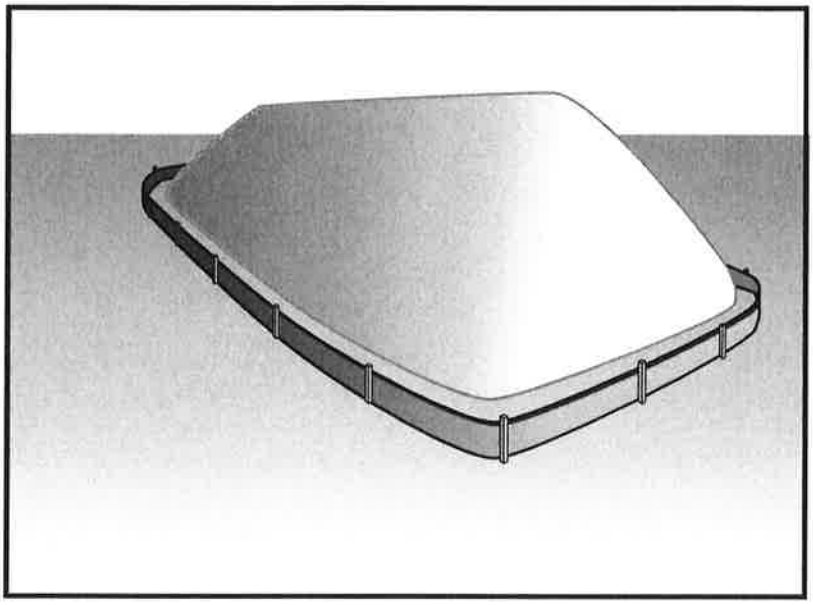

Treat Categories		
EC	Erosion Control	
SE	Sediment Control	☒
TC	Tracking Control	
WE	Wind Erosion Control	
NS	Non-Stormwater Management Control	☒
WM	Waste Management and Materials Pollution Control	☑

Legend:
☑ **Primary Category**
☒ **Secondary Category**

Description and Purpose

Stockpile management procedures and practices are designed to reduce or eliminate air and stormwater pollution from stockpiles of soil, soil amendments, sand, paving materials such as Portland cement concrete (PCC) rubble, asphalt concrete (AC), asphalt concrete rubble, aggregate base, aggregate sub base or pre-mixed aggregate, asphalt minder (so called "cold mix" asphalt), and pressure treated wood.

Suitable Applications

Implement in all projects that stockpile soil and other loose materials.

Limitations

- Plastic sheeting as a stockpile protection is temporary and hard to manage in windy conditions. Where plastic is used, consider use of plastic tarps with nylon reinforcement which may be more durable than standard sheeting.
- Plastic sheeting can increase runoff volume due to lack of infiltration and potentially cause perimeter control failure.
- Plastic sheeting breaks down faster in sunlight.
- The use of Plastic materials and photodegradable plastics should be avoided.

Implementation

Protection of stockpiles is a year-round requirement. To properly manage stockpiles:

Targeted Constituents	
Sediment	☑
Nutrients	☑
Trash	☑
Metals	☑
Bacteria	
Oil and Grease	☑
Organics	☑

Potential Alternatives

None

If User/Subscriber modifies this fact sheet in any way, the CASQA name/logo and footer below must be removed from each page and not appear on the modified version.

CASQA
CALIFORNIA STORMWATER QUALITY ASSOCIATION

- On larger sites, a minimum of 50 ft separation from concentrated flows of stormwater, drainage courses, and inlets is recommended.
- After 14 days of inactivity, a stockpile is non-active and requires further protection described below. All stockpiles are required to be protected as non-active stockpiles immediately if they are not scheduled to be used within 14 days.
- Protect all stockpiles from stormwater run-on using temporary perimeter sediment barriers such as compost berms (SE-13), temporary silt dikes (SE-12), fiber rolls (SE-5), silt fences (SE-1), sandbags (SE-8), gravel bags (SE-6), or biofilter bags (SE-14). Refer to the individual fact sheet for each of these controls for installation information.
- Implement wind erosion control practices as appropriate on all stockpiled material. For specific information, see WE-1, Wind Erosion Control.
- Manage stockpiles of contaminated soil in accordance with WM-7, Contaminated Soil Management.
- Place bagged materials on pallets and under cover.
- Ensure that stockpile coverings are installed securely to protect from wind and rain.
- Some plastic covers withstand weather and sunlight better than others. Select cover materials or methods based on anticipated duration of use.

Protection of Non-Active Stockpiles

A stockpile is considered non-active if it either is not used for 14 days or if it is scheduled not to be used for 14 days or more. Stockpiles need to be protected immediately if they are not scheduled to be used within 14 days. Non-active stockpiles of the identified materials should be protected as follows:

Soil stockpiles

- Soil stockpiles should be covered or protected with soil stabilization measures and a temporary perimeter sediment barrier at all times.
- Temporary vegetation should be considered for topsoil piles that will be stockpiled for extended periods.

Stockpiles of Portland cement concrete rubble, asphalt concrete, asphalt concrete rubble, aggregate base, or aggregate sub base

- Stockpiles should be covered and protected with a temporary perimeter sediment barrier at all times.

Stockpiles of "cold mix"

- Cold mix stockpiles should be placed on and covered with plastic sheeting or comparable material at all times and surrounded by a berm.

Stockpiles of fly ash, stucco, hydrated lime

- Stockpiles of materials that may raise the pH of runoff (i.e., basic materials) should be covered with plastic and surrounded by a berm.

Stockpiles/Storage of treated wood

- Treated wood should be covered with plastic sheeting or comparable material at all times and surrounded by a berm.

Protection of Active Stockpiles

A stockpile is active when it is being used or is scheduled to be used within 14 days of the previous use. Active stockpiles of the identified materials should be protected as follows:

- All stockpiles should be covered and protected with a temporary linear sediment barrier prior to the onset of precipitation.
- Stockpiles of "cold mix" and treated wood, and basic materials should be placed on and covered with plastic sheeting or comparable material and surrounded by a berm prior to the onset of precipitation.
- The downstream perimeter of an active stockpile should be protected with a linear sediment barrier or berm and runoff should be diverted around or away from the stockpile on the upstream perimeter.

Costs

For cost information associated with stockpile protection refer to the individual erosion or sediment control BMP fact sheet considered for implementation (For example, refer to SE-1 Silt Fence for installation of silt fence around the perimeter of a stockpile.)

Inspection and Maintenance

- Stockpiles must be inspected in accordance with General Permit requirements for the associated project type and risk level. It is recommended that at a minimum, BMPs be inspected weekly, prior to forecasted rain events, daily during extended rain events, and after the conclusion of rain events.
- It may be necessary to inspect stockpiles covered with plastic sheeting more frequently during certain conditions (for example, high winds or extreme heat).
- Repair and/or replace perimeter controls and covers as needed to keep them functioning properly.
- Sediment shall be removed when it reaches one-third of the barrier height.

References

Stormwater Quality Handbooks - Construction Site Best Management Practices (BMPs) Manual, State of California Department of Transportation (Caltrans), March 2003.

Spill Prevention and Control WM-4

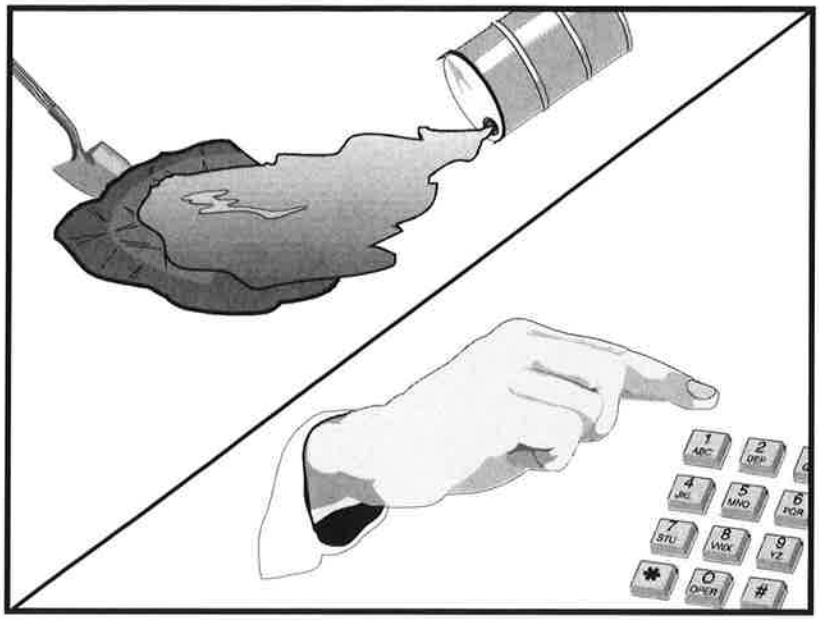

Categories

EC	Erosion Control	
SE	Sediment Control	
TC	Tracking Control	
WE	Wind Erosion Control	
NS	Non-Stormwater Management Control	
WM	Waste Management and Materials Pollution Control	☑

Legend:

☑ **Primary Objective**

☒ **Secondary Objective**

Targeted Constituents

Sediment	☑
Nutrients	☑
Trash	☑
Metals	☑
Bacteria	
Oil and Grease	☑
Organics	☑

Potential Alternatives

None

If User/Subscriber modifies this fact sheet in any way, the CASQA name/logo and footer below must be removed from each page and not appear on the modified version.

Description and Purpose

Prevent or reduce the discharge of pollutants to drainage systems or watercourses from leaks and spills by reducing the chance for spills, stopping the source of spills, containing and cleaning up spills, properly disposing of spill materials, and training employees.

This best management practice covers only spill prevention and control. However, WM-1, Materials Delivery and Storage, and WM-2, Material Use, also contain useful information, particularly on spill prevention. For information on wastes, see the waste management BMPs in this section.

Suitable Applications

This BMP is suitable for all construction projects. Spill control procedures are implemented anytime chemicals or hazardous substances are stored on the construction site, including the following materials:

- Soil stabilizers/binders
- Dust palliatives
- Herbicides
- Growth inhibitors
- Fertilizers
- Deicing/anti-icing chemicals

CASQA
CALIFORNIA STORMWATER QUALITY ASSOCIATION

- Fuels
- Lubricants
- Other petroleum distillates

Limitations

- In some cases, it may be necessary to use a private spill cleanup company.
- This BMP applies to spills caused by the contractor and subcontractors.
- Procedures and practices presented in this BMP are general. Contractor should identify appropriate practices for the specific materials used or stored onsite

Implementation

The following steps will help reduce the stormwater impacts of leaks and spills:

Education

- Be aware that different materials pollute in different amounts. Make sure that each employee knows what a "significant spill" is for each material they use, and what is the appropriate response for "significant" and "insignificant" spills.
- Educate employees and subcontractors on potential dangers to humans and the environment from spills and leaks.
- Hold regular meetings to discuss and reinforce appropriate disposal procedures (incorporate into regular safety meetings).
- Establish a continuing education program to indoctrinate new employees.
- Have contractor's superintendent or representative oversee and enforce proper spill prevention and control measures.

General Measures

- To the extent that the work can be accomplished safely, spills of oil, petroleum products, substances listed under 40 CFR parts 110,117, and 302, and sanitary and septic wastes should be contained and cleaned up immediately.
- Store hazardous materials and wastes in covered containers and protect from vandalism.
- Place a stockpile of spill cleanup materials where it will be readily accessible.
- Train employees in spill prevention and cleanup.
- Designate responsible individuals to oversee and enforce control measures.
- Spills should be covered and protected from stormwater runon during rainfall to the extent that it doesn't compromise clean up activities.
- Do not bury or wash spills with water.

- Store and dispose of used clean up materials, contaminated materials, and recovered spill material that is no longer suitable for the intended purpose in conformance with the provisions in applicable BMPs.
- Do not allow water used for cleaning and decontamination to enter storm drains or watercourses. Collect and dispose of contaminated water in accordance with WM-10, Liquid Waste Management.
- Contain water overflow or minor water spillage and do not allow it to discharge into drainage facilities or watercourses.
- Place proper storage, cleanup, and spill reporting instructions for hazardous materials stored or used on the project site in an open, conspicuous, and accessible location.
- Keep waste storage areas clean, well organized, and equipped with ample cleanup supplies as appropriate for the materials being stored. Perimeter controls, containment structures, covers, and liners should be repaired or replaced as needed to maintain proper function.

Cleanup

- Clean up leaks and spills immediately.
- Use a rag for small spills on paved surfaces, a damp mop for general cleanup, and absorbent material for larger spills. If the spilled material is hazardous, then the used cleanup materials are also hazardous and must be sent to either a certified laundry (rags) or disposed of as hazardous waste.
- Never hose down or bury dry material spills. Clean up as much of the material as possible and dispose of properly. See the waste management BMPs in this section for specific information.

Minor Spills

- Minor spills typically involve small quantities of oil, gasoline, paint, etc. which can be controlled by the first responder at the discovery of the spill.
- Use absorbent materials on small spills rather than hosing down or burying the spill.
- Absorbent materials should be promptly removed and disposed of properly.
- Follow the practice below for a minor spill:
  - Contain the spread of the spill.
  - Recover spilled materials.
  - Clean the contaminated area and properly dispose of contaminated materials.

Semi-Significant Spills

- Semi-significant spills still can be controlled by the first responder along with the aid of other personnel such as laborers and the foreman, etc. This response may require the cessation of all other activities.

- Spills should be cleaned up immediately:
  - Contain spread of the spill.
  - Notify the project foreman immediately.
  - If the spill occurs on paved or impermeable surfaces, clean up using "dry" methods (absorbent materials, cat litter and/or rags). Contain the spill by encircling with absorbent materials and do not let the spill spread widely.
  - If the spill occurs in dirt areas, immediately contain the spill by constructing an earthen dike. Dig up and properly dispose of contaminated soil.
  - If the spill occurs during rain, cover spill with tarps or other material to prevent contaminating runoff.

Significant/Hazardous Spills

- For significant or hazardous spills that cannot be controlled by personnel in the immediate vicinity, the following steps should be taken:
  - Notify the local emergency response by dialing 911. In addition to 911, the contractor will notify the proper county officials. It is the contractor's responsibility to have all emergency phone numbers at the construction site.
  - Notify the Governor's Office of Emergency Services Warning Center, (916) 845-8911.
  - For spills of federal reportable quantities, in conformance with the requirements in 40 CFR parts 110,119, and 302, the contractor should notify the National Response Center at (800) 424-8802.
  - Notification should first be made by telephone and followed up with a written report.
  - The services of a spill's contractor or a Haz-Mat team should be obtained immediately. Construction personnel should not attempt to clean up until the appropriate and qualified staffs have arrived at the job site.
  - Other agencies which may need to be consulted include, but are not limited to, the Fire Department, the Public Works Department, the Coast Guard, the Highway Patrol, the City/County Police Department, Department of Toxic Substances, California Division of Oil and Gas, Cal/OSHA, etc.

Reporting

- Report significant spills to local agencies, such as the Fire Department; they can assist in cleanup.
- Federal regulations require that any significant oil spill into a water body or onto an adjoining shoreline be reported to the National Response Center (NRC) at 800-424-8802 (24 hours).

Use the following measures related to specific activities:

Vehicle and Equipment Maintenance

- If maintenance must occur onsite, use a designated area and a secondary containment, located away from drainage courses, to prevent the runon of stormwater and the runoff of spills.
- Regularly inspect onsite vehicles and equipment for leaks and repair immediately
- Check incoming vehicles and equipment (including delivery trucks, and employee and subcontractor vehicles) for leaking oil and fluids. Do not allow leaking vehicles or equipment onsite.
- Always use secondary containment, such as a drain pan or drop cloth, to catch spills or leaks when removing or changing fluids.
- Place drip pans or absorbent materials under paving equipment when not in use.
- Use absorbent materials on small spills rather than hosing down or burying the spill. Remove the absorbent materials promptly and dispose of properly.
- Promptly transfer used fluids to the proper waste or recycling drums. Don't leave full drip pans or other open containers lying around
- Oil filters disposed of in trashcans or dumpsters can leak oil and pollute stormwater. Place the oil filter in a funnel over a waste oil-recycling drum to drain excess oil before disposal. Oil filters can also be recycled. Ask the oil supplier or recycler about recycling oil filters.
- Store cracked batteries in a non-leaking secondary container. Do this with all cracked batteries even if you think all the acid has drained out. If you drop a battery, treat it as if it is cracked. Put it into the containment area until you are sure it is not leaking.

Vehicle and Equipment Fueling

- If fueling must occur onsite, use designate areas, located away from drainage courses, to prevent the runon of stormwater and the runoff of spills.
- Discourage "topping off" of fuel tanks.
- Always use secondary containment, such as a drain pan, when fueling to catch spills/ leaks.

Costs

Prevention of leaks and spills is inexpensive. Treatment and/ or disposal of contaminated soil or water can be quite expensive.

Inspection and Maintenance

- Inspect and verify that activity–based BMPs are in place prior to the commencement of associated activities. While activities associated with the BMP are under way, inspect BMPs in accordance with General Permit requirements for the associated project type and risk level. It is recommended that at a minimum, BMPs be inspected weekly, prior to forecasted rain events, daily during extended rain events, and after the conclusion of rain events.

- Inspect BMPs subject to non-stormwater discharge daily while non-stormwater discharges occur.
- Keep ample supplies of spill control and cleanup materials onsite, near storage, unloading, and maintenance areas.
- Update your spill prevention and control plan and stock cleanup materials as changes occur in the types of chemicals onsite.

References

Blueprint for a Clean Bay: Best Management Practices to Prevent Stormwater Pollution from Construction Related Activities; Santa Clara Valley Nonpoint Source Pollution Control Program, 1995.

Stormwater Quality Handbooks - Construction Site Best Management Practices (BMPs) Manual, State of California Department of Transportation (Caltrans), November 2000.

Stormwater Management for Construction Activities; Developing Pollution Prevention Plans and Best Management Practice, EPA 832-R-92005; USEPA, April 1992.

Solid Waste Management WM-5

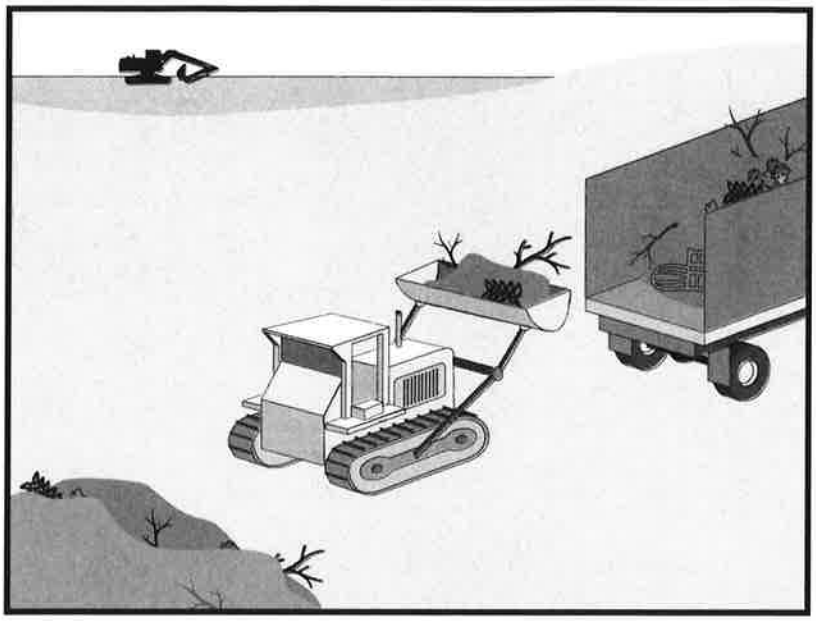

Categories

EC	Erosion Control	
SE	Sediment Control	
TC	Tracking Control	
WE	Wind Erosion Control	
NS	Non-Stormwater Management Control	
WM	Waste Management and Materials Pollution Control	☑

Legend:

☑ **Primary Objective**

☒ **Secondary Objective**

Targeted Constituents

Sediment	☑
Nutrients	☑
Trash	☑
Metals	☑
Bacteria	
Oil and Grease	☑
Organics	☑

Potential Alternatives

None

If User/Subscriber modifies this fact sheet in any way, the CASQA name/logo and footer below must be removed from each page and not appear on the modified version.

Description and Purpose

Solid waste management procedures and practices are designed to prevent or reduce the discharge of pollutants to stormwater from solid or construction waste by providing designated waste collection areas and containers, arranging for regular disposal, and training employees and subcontractors.

Suitable Applications

This BMP is suitable for construction sites where the following wastes are generated or stored:

- Solid waste generated from trees and shrubs removed during land clearing, demolition of existing structures (rubble), and building construction
- Packaging materials including wood, paper, and plastic
- Scrap or surplus building materials including scrap metals, rubber, plastic, glass pieces, and masonry products
- Domestic wastes including food containers such as beverage cans, coffee cups, paper bags, plastic wrappers, and cigarettes
- Construction wastes including brick, mortar, timber, steel and metal scraps, pipe and electrical cuttings, non-hazardous equipment parts, styrofoam and other materials used to transport and package construction materials

CASQA
CALIFORNIA STORMWATER QUALITY ASSOCIATION

- Highway planting wastes, including vegetative material, plant containers, and packaging materials

Limitations

Temporary stockpiling of certain construction wastes may not necessitate stringent drainage related controls during the non-rainy season or in desert areas with low rainfall.

Implementation

The following steps will help keep a clean site and reduce stormwater pollution:

- Select designated waste collection areas onsite.
- Inform trash-hauling contractors that you will accept only watertight dumpsters for onsite use. Inspect dumpsters for leaks and repair any dumpster that is not watertight.
- Locate containers in a covered area or in a secondary containment.
- Provide an adequate number of containers with lids or covers that can be placed over the container to keep rain out or to prevent loss of wastes when it is windy.
- Cover waste containers at the end of each work day and when it is raining.
- Plan for additional containers and more frequent pickup during the demolition phase of construction.
- Collect site trash daily, especially during rainy and windy conditions.
- Remove this solid waste promptly since erosion and sediment control devices tend to collect litter.
- Make sure that toxic liquid wastes (used oils, solvents, and paints) and chemicals (acids, pesticides, additives, curing compounds) are not disposed of in dumpsters designated for construction debris.
- Do not hose out dumpsters on the construction site. Leave dumpster cleaning to the trash hauling contractor.
- Arrange for regular waste collection before containers overflow.
- Clean up immediately if a container does spill.
- Make sure that construction waste is collected, removed, and disposed of only at authorized disposal areas.

Education

- Have the contractor's superintendent or representative oversee and enforce proper solid waste management procedures and practices.
- Instruct employees and subcontractors on identification of solid waste and hazardous waste.
- Educate employees and subcontractors on solid waste storage and disposal procedures.

- Hold regular meetings to discuss and reinforce disposal procedures (incorporate into regular safety meetings).
- Require that employees and subcontractors follow solid waste handling and storage procedures.
- Prohibit littering by employees, subcontractors, and visitors.
- Minimize production of solid waste materials wherever possible.

Collection, Storage, and Disposal

- Littering on the project site should be prohibited.
- To prevent clogging of the storm drainage system, litter and debris removal from drainage grates, trash racks, and ditch lines should be a priority.
- Trash receptacles should be provided in the contractor's yard, field trailer areas, and at locations where workers congregate for lunch and break periods.
- Litter from work areas within the construction limits of the project site should be collected and placed in watertight dumpsters at least weekly, regardless of whether the litter was generated by the contractor, the public, or others. Collected litter and debris should not be placed in or next to drain inlets, stormwater drainage systems, or watercourses.
- Dumpsters of sufficient size and number should be provided to contain the solid waste generated by the project.
- Full dumpsters should be removed from the project site and the contents should be disposed of by the trash hauling contractor.
- Construction debris and waste should be removed from the site biweekly or more frequently as needed.
- Construction material visible to the public should be stored or stacked in an orderly manner.
- Stormwater runon should be prevented from contacting stored solid waste through the use of berms, dikes, or other temporary diversion structures or through the use of measures to elevate waste from site surfaces.
- Solid waste storage areas should be located at least 50 ft from drainage facilities and watercourses and should not be located in areas prone to flooding or ponding.
- Except during fair weather, construction and highway planting waste not stored in watertight dumpsters should be securely covered from wind and rain by covering the waste with tarps or plastic.
- Segregate potentially hazardous waste from non-hazardous construction site waste.
- Make sure that toxic liquid wastes (used oils, solvents, and paints) and chemicals (acids, pesticides, additives, curing compounds) are not disposed of in dumpsters designated for construction debris.

- For disposal of hazardous waste, see WM-6, Hazardous Waste Management. Have hazardous waste hauled to an appropriate disposal and/or recycling facility.
- Salvage or recycle useful vegetation debris, packaging and surplus building materials when practical. For example, trees and shrubs from land clearing can be used as a brush barrier, or converted into wood chips, then used as mulch on graded areas. Wood pallets, cardboard boxes, and construction scraps can also be recycled.

Costs

All of the above are low cost measures.

Inspection and Maintenance

- Inspect and verify that activity–based BMPs are in place prior to the commencement of associated activities. While activities associated with the BMP are under way, inspect BMPs in accordance with General Permit requirements for the associated project type and risk level. It is recommended that at a minimum, BMPs be inspected weekly, prior to forecasted rain events, daily during extended rain events, and after the conclusion of rain events.
- Inspect BMPs subject to non-stormwater discharge daily while non-stormwater discharges occur
- Inspect construction waste area regularly.
- Arrange for regular waste collection.

References

Processes, Procedures and Methods to Control Pollution Resulting from All Construction Activity, 430/9-73-007, USEPA, 1973.

Stormwater Quality Handbooks - Construction Site Best Management Practices (BMPs) Manual, State of California Department of Transportation (Caltrans), November 2000.

Stormwater Management for Construction Activities; Developing Pollution Prevention Plans and Best Management Practice, EPA 832-R-92005; USEPA, April 1992.

Hazardous Waste Management WM-6

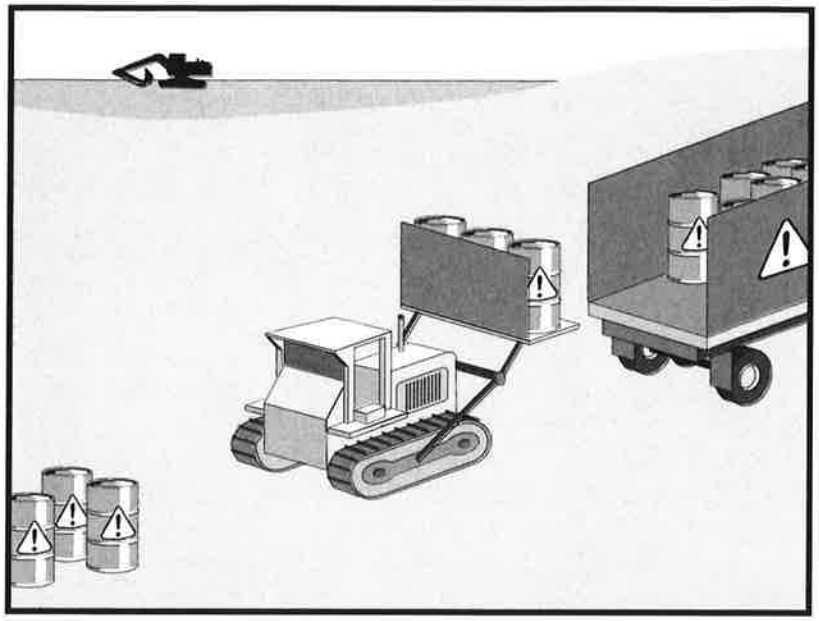

Categories

EC	Erosion Control	
SE	Sediment Control	
TC	Tracking Control	
WE	Wind Erosion Control	
NS	Non-Stormwater Management Control	
WM	Waste Management and Materials Pollution Control	☑

Legend:

☑ **Primary Objective**

☒ **Secondary Objective**

Targeted Constituents

Sediment	
Nutrients	☑
Trash	☑
Metals	☑
Bacteria	☑
Oil and Grease	☑
Organics	☑

Potential Alternatives

None

If User/Subscriber modifies this fact sheet in any way, the CASQA name/logo and footer below must be removed from each page and not appear on the modified version.

Description and Purpose

Prevent or reduce the discharge of pollutants to stormwater from hazardous waste through proper material use, waste disposal, and training of employees and subcontractors.

Suitable Applications

This best management practice (BMP) applies to all construction projects. Hazardous waste management practices are implemented on construction projects that generate waste from the use of:

- Petroleum Products
- Asphalt Products
- Concrete Curing Compounds
- Pesticides
- Palliatives
- Acids
- Septic Wastes
- Paints
- Stains
- Solvents
- Wood Preservatives
- Roofing Tar
- Any materials deemed a hazardous waste in California, Title 22 Division 4.5, or listed in 40 CFR Parts 110, 117, 261, or 302

CASQA
CALIFORNIA STORMWATER QUALITY ASSOCIATION

In addition, sites with existing structures may contain wastes, which must be disposed of in accordance with federal, state, and local regulations. These wastes include:

- Sandblasting grit mixed with lead-, cadmium-, or chromium-based paints
- Asbestos
- PCBs (particularly in older transformers)

Limitations

- Hazardous waste that cannot be reused or recycled must be disposed of by a licensed hazardous waste hauler.
- Nothing in this BMP relieves the contractor from responsibility for compliance with federal, state, and local laws regarding storage, handling, transportation, and disposal of hazardous wastes.
- This BMP does not cover aerially deposited lead (ADL) soils. For ADL soils refer to WM-7, Contaminated Soil Management.

Implementation

The following steps will help reduce stormwater pollution from hazardous wastes:

Material Use

- Wastes should be stored in sealed containers constructed of a suitable material and should be labeled as required by Title 22 CCR, Division 4.5 and 49 CFR Parts 172, 173, 178, and 179.
- All hazardous waste should be stored, transported, and disposed as required in Title 22 CCR, Division 4.5 and 49 CFR 261-263.
- Waste containers should be stored in temporary containment facilities that should comply with the following requirements:
  - Temporary containment facility should provide for a spill containment volume equal to 1.5 times the volume of all containers able to contain precipitation from a 25-year storm event, plus the greater of 10% of the aggregate volume of all containers or 100% of the capacity of the largest tank within its boundary, whichever is greater.
  - Temporary containment facility should be impervious to the materials stored there for a minimum contact time of 72 hours.
  - Temporary containment facilities should be maintained free of accumulated rainwater and spills. In the event of spills or leaks, accumulated rainwater and spills should be placed into drums after each rainfall. These liquids should be handled as a hazardous waste unless testing determines them to be non-hazardous. Non-hazardous liquids should be sent to an approved disposal site.
  - Sufficient separation should be provided between stored containers to allow for spill cleanup and emergency response access.

- Incompatible materials, such as chlorine and ammonia, should not be stored in the same temporary containment facility.
- Throughout the rainy season, temporary containment facilities should be covered during non-working days, and prior to rain events. Covered facilities may include use of plastic tarps for small facilities or constructed roofs with overhangs.

- Drums should not be overfilled, and wastes should not be mixed.
- Unless watertight, containers of dry waste should be stored on pallets.
- Do not over-apply herbicides and pesticides. Prepare only the amount needed. Follow the recommended usage instructions. Over application is expensive and environmentally harmful. Apply surface dressings in several smaller applications, as opposed to one large application. Allow time for infiltration and avoid excess material being carried offsite by runoff. Do not apply these chemicals just before it rains. People applying pesticides must be certified in accordance with federal and state regulations.
- Paint brushes and equipment for water and oil-based paints should be cleaned within a contained area and should not be allowed to contaminate site soils, watercourses, or drainage systems. Waste paints, thinners, solvents, residues, and sludges that cannot be recycled or reused should be disposed of as hazardous waste. When thoroughly dry, latex paint and paint cans, used brushes, rags, absorbent materials, and drop cloths should be disposed of as solid waste.
- Do not clean out brushes or rinse paint containers into the dirt, street, gutter, storm drain, or stream. "Paint out" brushes as much as possible. Rinse water-based paints to the sanitary sewer. Filter and reuse thinners and solvents. Dispose of excess oil-based paints and sludge as hazardous waste.
- The following actions should be taken with respect to temporary contaminant:
  - Ensure that adequate hazardous waste storage volume is available.
  - Ensure that hazardous waste collection containers are conveniently located.
  - Designate hazardous waste storage areas onsite away from storm drains or watercourses and away from moving vehicles and equipment to prevent accidental spills.
  - Minimize production or generation of hazardous materials and hazardous waste on the job site.
  - Use containment berms in fueling and maintenance areas and where the potential for spills is high.
  - Segregate potentially hazardous waste from non-hazardous construction site debris.
  - Keep liquid or semi-liquid hazardous waste in appropriate containers (closed drums or similar) and under cover.

- Clearly label all hazardous waste containers with the waste being stored and the date of accumulation.
- Place hazardous waste containers in secondary containment.
- Do not allow potentially hazardous waste materials to accumulate on the ground.
- Do not mix wastes.
- Use all of the product before disposing of the container.
- Do not remove the original product label; it contains important safety and disposal information.

Waste Recycling Disposal

- Select designated hazardous waste collection areas onsite.
- Hazardous materials and wastes should be stored in covered containers and protected from vandalism.
- Place hazardous waste containers in secondary containment.
- Do not mix wastes, this can cause chemical reactions, making recycling impossible and complicating disposal.
- Recycle any useful materials such as used oil or water-based paint.
- Make sure that toxic liquid wastes (used oils, solvents, and paints) and chemicals (acids, pesticides, additives, curing compounds) are not disposed of in dumpsters designated for construction debris.
- Arrange for regular waste collection before containers overflow.
- Make sure that hazardous waste (e.g., excess oil-based paint and sludge) is collected, removed, and disposed of only at authorized disposal areas.

Disposal Procedures

- Waste should be disposed of by a licensed hazardous waste transporter at an authorized and licensed disposal facility or recycling facility utilizing properly completed Uniform Hazardous Waste Manifest forms.
- A Department of Health Services certified laboratory should sample waste to determine the appropriate disposal facility.
- Properly dispose of rainwater in secondary containment that may have mixed with hazardous waste.
- Attention is directed to "Hazardous Material", "Contaminated Material", and "Aerially Deposited Lead" of the contract documents regarding the handling and disposal of hazardous materials.

Education

- Educate employees and subcontractors on hazardous waste storage and disposal procedures.
- Educate employees and subcontractors on potential dangers to humans and the environment from hazardous wastes.
- Instruct employees and subcontractors on safety procedures for common construction site hazardous wastes.
- Instruct employees and subcontractors in identification of hazardous and solid waste.
- Hold regular meetings to discuss and reinforce hazardous waste management procedures (incorporate into regular safety meetings).
- The contractor's superintendent or representative should oversee and enforce proper hazardous waste management procedures and practices.
- Make sure that hazardous waste is collected, removed, and disposed of only at authorized disposal areas.
- Warning signs should be placed in areas recently treated with chemicals.
- Place a stockpile of spill cleanup materials where it will be readily accessible.
- If a container does spill, clean up immediately.

Costs

All of the above are low cost measures.

Inspection and Maintenance

- Inspect and verify that activity–based BMPs are in place prior to the commencement of associated activities. While activities associated with the BMP are under way, inspect BMPs in accordance with General Permit requirements for the associated project type and risk level. It is recommended that at a minimum, BMPs be inspected weekly, prior to forecasted rain events, daily during extended rain events, and after the conclusion of rain events.
- Inspect BMPs subject to non-stormwater discharge daily while non-stormwater discharges occur
- Hazardous waste should be regularly collected.
- A foreman or construction supervisor should monitor onsite hazardous waste storage and disposal procedures.
- Waste storage areas should be kept clean, well organized, and equipped with ample cleanup supplies as appropriate for the materials being stored.
- Perimeter controls, containment structures, covers, and liners should be repaired or replaced as needed to maintain proper function.

- Hazardous spills should be cleaned up and reported in conformance with the applicable Material Safety Data Sheet (MSDS) and the instructions posted at the project site.
- The National Response Center, at (800) 424-8802, should be notified of spills of federal reportable quantities in conformance with the requirements in 40 CFR parts 110, 117, and 302. Also notify the Governors Office of Emergency Services Warning Center at (916) 845-8911.
- A copy of the hazardous waste manifests should be provided.

References

Blueprint for a Clean Bay: Best Management Practices to Prevent Stormwater Pollution from Construction Related Activities; Santa Clara Valley Nonpoint Source Pollution Control Program, 1995.

Processes, Procedures and Methods to Control Pollution Resulting from All Construction Activity, 430/9-73-007, USEPA, 1973.

Stormwater Quality Handbooks - Construction Site Best Management Practices (BMPs) Manual, State of California Department of Transportation (Caltrans), November 2000.

Stormwater Management for Construction Activities; Developing Pollution Prevention Plans and Best Management Practice, EPA 832-R-92005; USEPA, April 1992.

Contaminated Soil Management WM-7

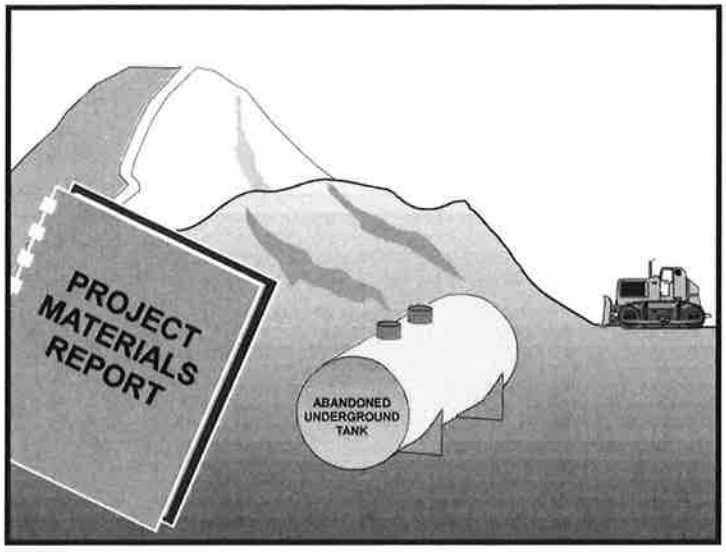

Categories		
EC	Erosion Control	
SE	Sediment Control	
TC	Tracking Control	
WE	Wind Erosion Control	
NS	Non-Stormwater Management Control	
WM	Waste Management and Materials Pollution Control	☑

Legend:
☑ **Primary Objective**
☒ **Secondary Objective**

Description and Purpose
Prevent or reduce the discharge of pollutants to stormwater from contaminated soil and highly acidic or alkaline soils by conducting pre-construction surveys, inspecting excavations regularly, and remediating contaminated soil promptly.

Suitable Applications
Contaminated soil management is implemented on construction projects in highly urbanized or industrial areas where soil contamination may have occurred due to spills, illicit discharges, aerial deposition, past use and leaks from underground storage tanks.

Limitations
Contaminated soils that cannot be treated onsite must be disposed of offsite by a licensed hazardous waste hauler. The presence of contaminated soil may indicate contaminated water as well. See NS-2, Dewatering Operations, for more information.

The procedures and practices presented in this BMP are general. The contractor should identify appropriate practices and procedures for the specific contaminants known to exist or discovered onsite.

Implementation
Most owners and developers conduct pre-construction environmental assessments as a matter of routine. Contaminated soils are often identified during project planning and development with known locations identified in the plans, specifications and in the SWPPP. The contractor should review applicable reports and investigate appropriate call-outs in the

Targeted Constituents	
Sediment	
Nutrients	☑
Trash	☑
Metals	☑
Bacteria	☑
Oil and Grease	☑
Organics	☑

Potential Alternatives
None

If User/Subscriber modifies this fact sheet in any way, the CASQA name/logo and footer below must be removed from each page and not appear on the modified version.

CASQA
CALIFORNIA STORMWATER QUALITY ASSOCIATION

plans, specifications, and SWPPP. Recent court rulings holding contractors liable for cleanup costs when they unknowingly move contaminated soil highlight the need for contractors to confirm a site assessment is completed before earth moving begins.

The following steps will help reduce stormwater pollution from contaminated soil:

- Conduct thorough, pre-construction inspections of the site and review documents related to the site. If inspection or reviews indicated presence of contaminated soils, develop a plan before starting work.
- Look for contaminated soil as evidenced by discoloration, odors, differences in soil properties, abandoned underground tanks or pipes, or buried debris.
- Prevent leaks and spills. Contaminated soil can be expensive to treat and dispose of properly. However, addressing the problem before construction is much less expensive than after the structures are in place.
- The contractor may further identify contaminated soils by investigating:
  - Past site uses and activities
  - Detected or undetected spills and leaks
  - Acid or alkaline solutions from exposed soil or rock formations high in acid or alkaline forming elements
  - Contaminated soil as evidenced by discoloration, odors, differences in soil properties, abandoned underground tanks or pipes, or buried debris.
  - Suspected soils should be tested at a certified laboratory.

Education

- Have employees and subcontractors complete a safety training program which meets 29 CFR 1910.120 and 8 CCR 5192 covering the potential hazards as identified, prior to performing any excavation work at the locations containing material classified as hazardous.
- Educate employees and subcontractors in identification of contaminated soil and on contaminated soil handling and disposal procedures.
- Hold regular meetings to discuss and reinforce disposal procedures (incorporate into regular safety meetings).

Handling Procedures for Material with Aerially Deposited Lead (ADL)

- Materials from areas designated as containing (ADL) may, if allowed by the contract special provisions, be excavated, transported, and used in the construction of embankments and/or backfill.
- Excavation, transportation, and placement operations should result in no visible dust.
- Caution should be exercised to prevent spillage of lead containing material during transport.

- Quality should be monitored during excavation of soils contaminated with lead.

Handling Procedures for Contaminated Soils

- Minimize onsite storage. Contaminated soil should be disposed of properly in accordance with all applicable regulations. All hazardous waste storage will comply with the requirements in Title 22, CCR, Sections 66265.250 to 66265.260.
- Test suspected soils at an approved certified laboratory.
- Work with the local regulatory agencies to develop options for treatment or disposal if the soil is contaminated.
- Avoid temporary stockpiling of contaminated soils or hazardous material.
- Take the following precautions if temporary stockpiling is necessary:
  - Cover the stockpile with plastic sheeting or tarps.
  - Install a berm around the stockpile to prevent runoff from leaving the area.
  - Do not stockpile in or near storm drains or watercourses.
- Remove contaminated material and hazardous material on exteriors of transport vehicles and place either into the current transport vehicle or into the excavation prior to the vehicle leaving the exclusion zone.
- Monitor the air quality continuously during excavation operations at all locations containing hazardous material.
- Procure all permits and licenses, pay all charges and fees, and give all notices necessary and incident to the due and lawful prosecution of the work, including registration for transporting vehicles carrying the contaminated material and the hazardous material.
- Collect water from decontamination procedures and treat or dispose of it at an appropriate disposal site.
- Collect non-reusable protective equipment, once used by any personnel, and dispose of at an appropriate disposal site.
- Install temporary security fence to surround and secure the exclusion zone. Remove fencing when no longer needed.
- Excavate, transport, and dispose of contaminated material and hazardous material in accordance with the rules and regulations of the following agencies (the specifications of these agencies supersede the procedures outlined in this BMP):
  - United States Department of Transportation (USDOT)
  - United States Environmental Protection Agency (USEPA)
  - California Environmental Protection Agency (CAL-EPA)

- California Division of Occupation Safety and Health Administration (CAL-OSHA)
- Local regulatory agencies

Procedures for Underground Storage Tank Removals

- Prior to commencing tank removal operations, obtain the required underground storage tank removal permits and approval from the federal, state, and local agencies that have jurisdiction over such work.
- To determine if it contains hazardous substances, arrange to have tested, any liquid or sludge found in the underground tank prior to its removal.
- Following the tank removal, take soil samples beneath the excavated tank and perform analysis as required by the local agency representative(s).
- The underground storage tank, any liquid or sludge found within the tank, and all contaminated substances and hazardous substances removed during the tank removal and transported to disposal facilities permitted to accept such waste.

Water Control

- All necessary precautions and preventive measures should be taken to prevent the flow of water, including ground water, from mixing with hazardous substances or underground storage tank excavations. Such preventative measures may consist of, but are not limited to, berms, cofferdams, grout curtains, freeze walls, and seal course concrete or any combination thereof.
- If water does enter an excavation and becomes contaminated, such water, when necessary to proceed with the work, should be discharged to clean, closed top, watertight transportable holding tanks, treated, and disposed of in accordance with federal, state, and local laws.

Costs

Prevention of leaks and spills is inexpensive. Treatment or disposal of contaminated soil can be quite expensive.

Inspection and Maintenance

- Inspect and verify that activity–based BMPs are in place prior to the commencement of associated activities. While activities associated with the BMP are under way, inspect BMPs in accordance with General Permit requirements for the associated project type and risk level. It is recommended that at a minimum, BMPs be inspected weekly, prior to forecasted rain events, daily during extended rain events, and after the conclusion of rain events.
- Arrange for contractor's Water Pollution Control Manager, foreman, and/or construction supervisor to monitor onsite contaminated soil storage and disposal procedures.
- Monitor air quality continuously during excavation operations at all locations containing hazardous material.
- Coordinate contaminated soils and hazardous substances/waste management with the appropriate federal, state, and local agencies.

- Implement WM-4, Spill Prevention and Control, to prevent leaks and spills as much as possible.

References

Blueprint for a Clean Bay: Best Management Practices to Prevent Stormwater Pollution from Construction Related Activities; Santa Clara Valley Nonpoint Source Pollution Control Program, 1995.

Processes, Procedures and Methods to Control Pollution Resulting from All Construction Activity, 430/9-73-007, USEPA, 1973.

Stormwater Quality Handbooks - Construction Site Best Management Practices (BMPs) Manual, State of California Department of Transportation (Caltrans), November 2000.

Stormwater Management for Construction Activities; Developing Pollution Prevention Plans and Best Management Practice, EPA 832-R-92005; USEPA, April 1992.

Concrete Waste Management WM-8

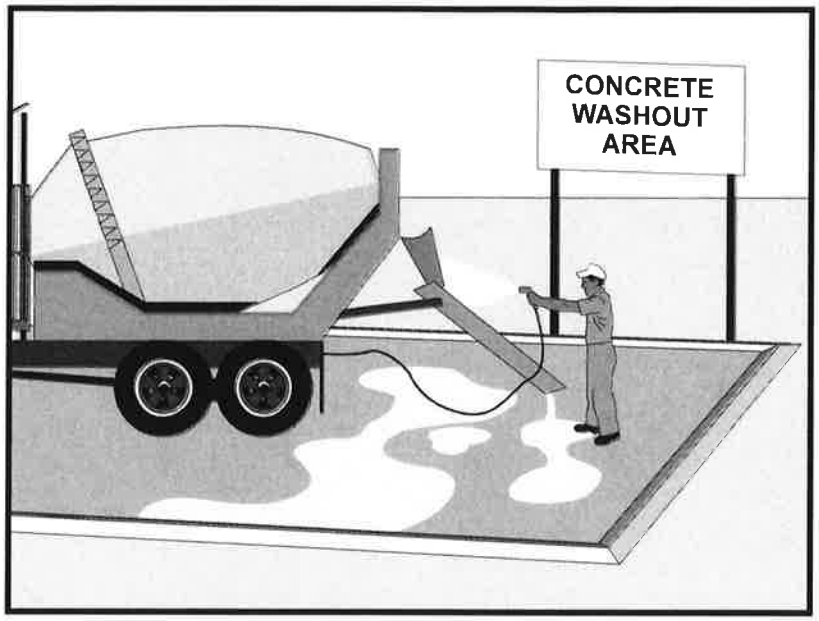

Categories		
EC	Erosion Control	
SE	Sediment Control	
TC	Tracking Control	
WE	Wind Erosion Control	
NS	Non-Stormwater Management Control	☒
WM	Waste Management and Materials Pollution Control	☑

Legend:
☑ **Primary Category**
☒ **Secondary Category**

Targeted Constituents	
Sediment	☑
Nutrients	
Trash	
Metals	☑
Bacteria	
Oil and Grease	
Organics	

Potential Alternatives

None

If User/Subscriber modifies this fact sheet in any way, the CASQA name/logo and footer below must be removed from each page and not appear on the modified version.

Description and Purpose

Prevent the discharge of pollutants to stormwater from concrete waste by conducting washout onsite or offsite in a designated area, and by employee and subcontractor training.

The General Permit incorporates Numeric Action Levels (NAL) for pH (see Section 2 of this handbook to determine your project's risk level and if you are subject to these requirements).

Many types of construction materials, including mortar, concrete, stucco, cement and block and their associated wastes have basic chemical properties that can raise pH levels outside of the permitted range. Additional care should be taken when managing these materials to prevent them from coming into contact with stormwater flows and raising pH to levels outside the accepted range.

Suitable Applications

Concrete waste management procedures and practices are implemented on construction projects where:

- Concrete is used as a construction material or where concrete dust and debris result from demolition activities.
- Slurries containing Portland cement concrete (PCC) are generated, such as from saw cutting, coring, grinding, grooving, and hydro-concrete demolition.
- Concrete trucks and other concrete-coated equipment are washed onsite.

CASQA
CALIFORNIA STORMWATER QUALITY ASSOCIATION

- Mortar-mixing stations exist.
- Stucco mixing and spraying.
- See also NS-8, Vehicle and Equipment Cleaning.

Limitations

- Offsite washout of concrete wastes may not always be possible.
- Multiple washouts may be needed to assure adequate capacity and to allow for evaporation.

Implementation

The following steps will help reduce stormwater pollution from concrete wastes:

- Incorporate requirements for concrete waste management into material supplier and subcontractor agreements.
- Store dry and wet materials under cover, away from drainage areas. Refer to WM-1, Material Delivery and Storage for more information.
- Avoid mixing excess amounts of concrete.
- Perform washout of concrete trucks in designated areas only, where washout will not reach stormwater.
- Do not wash out concrete trucks into storm drains, open ditches, streets, streams or onto the ground. Trucks should always be washed out into designated facilities.
- Do not allow excess concrete to be dumped onsite, except in designated areas.
- For onsite washout:
  - On larger sites, it is recommended to locate washout areas at least 50 feet from storm drains, open ditches, or water bodies. Do not allow runoff from this area by constructing a temporary pit or bermed area large enough for liquid and solid waste.
  - Washout wastes into the temporary washout where the concrete can set, be broken up, and then disposed properly.
  - Washouts shall be implemented in a manner that prevents leaching to underlying soils. Washout containers must be water tight and washouts on or in the ground must be lined with a suitable impervious liner, typically a plastic type material.
- Do not wash sweepings from exposed aggregate concrete into the street or storm drain. Collect and return sweepings to aggregate base stockpile or dispose in the trash.
- See typical concrete washout installation details at the end of this fact sheet.

Education

- Educate employees, subcontractors, and suppliers on the concrete waste management techniques described herein.

- Arrange for contractor's superintendent or representative to oversee and enforce concrete waste management procedures.
- Discuss the concrete management techniques described in this BMP (such as handling of concrete waste and washout) with the ready-mix concrete supplier before any deliveries are made.

Concrete Demolition Wastes

- Stockpile concrete demolition waste in accordance with BMP WM-3, Stockpile Management.
- Dispose of or recycle hardened concrete waste in accordance with applicable federal, state or local regulations.

Concrete Slurry Wastes

- PCC and AC waste should not be allowed to enter storm drains or watercourses.
- PCC and AC waste should be collected and disposed of or placed in a temporary concrete washout facility (as described in Onsite Temporary Concrete Washout Facility, Concrete Transit Truck Washout Procedures, below).
- A foreman or construction supervisor should monitor onsite concrete working tasks, such as saw cutting, coring, grinding and grooving to ensure proper methods are implemented.
- Saw-cut concrete slurry should not be allowed to enter storm drains or watercourses. Residue from grinding operations should be picked up by means of a vacuum attachment to the grinding machine or by sweeping. Saw cutting residue should not be allowed to flow across the pavement and should not be left on the surface of the pavement. See also NS-3, Paving and Grinding Operations; and WM-10, Liquid Waste Management.
- Concrete slurry residue should be disposed in a temporary washout facility (as described in Onsite Temporary Concrete Washout Facility, Concrete Transit Truck Washout Procedures, below) and allowed to dry. Dispose of dry slurry residue in accordance with WM-5, Solid Waste Management.

Onsite Temporary Concrete Washout Facility, Transit Truck Washout Procedures

- Temporary concrete washout facilities should be located a minimum of 50 ft from storm drain inlets, open drainage facilities, and watercourses. Each facility should be located away from construction traffic or access areas to prevent disturbance or tracking.
- A sign should be installed adjacent to each washout facility to inform concrete equipment operators to utilize the proper facilities.
- Temporary concrete washout facilities should be constructed above grade or below grade at the option of the contractor. Temporary concrete washout facilities should be constructed and maintained in sufficient quantity and size to contain all liquid and concrete waste generated by washout operations.

- Temporary washout facilities should have a temporary pit or bermed areas of sufficient volume to completely contain all liquid and waste concrete materials generated during washout procedures.
- Temporary washout facilities should be lined to prevent discharge to the underlying ground or surrounding area.
- Washout of concrete trucks should be performed in designated areas only.
- Only concrete from mixer truck chutes should be washed into concrete wash out.
- Concrete washout from concrete pumper bins can be washed into concrete pumper trucks and discharged into designated washout area or properly disposed of or recycled offsite.
- Once concrete wastes are washed into the designated area and allowed to harden, the concrete should be broken up, removed, and disposed of per WM-5, Solid Waste Management. Dispose of or recycle hardened concrete on a regular basis.
- Temporary Concrete Washout Facility (Type Above Grade)
  - Temporary concrete washout facility (type above grade) should be constructed as shown on the details at the end of this BMP, with a recommended minimum length and minimum width of 10 ft; however, smaller sites or jobs may only need a smaller washout facility. With any washout, always maintain a sufficient quantity and volume to contain all liquid and concrete waste generated by washout operations.
  - Materials used to construct the washout area should conform to the provisions detailed in their respective BMPs (e.g., SE-8 Sandbag Barrier).
  - Plastic lining material should be a minimum of 10 mil in polyethylene sheeting and should be free of holes, tears, or other defects that compromise the impermeability of the material.
  - Alternatively, portable removable containers can be used as above grade concrete washouts. Also called a "roll-off"; this concrete washout facility should be properly sealed to prevent leakage and should be removed from the site and replaced when the container reaches 75% capacity.
- Temporary Concrete Washout Facility (Type Below Grade)
  - Temporary concrete washout facilities (type below grade) should be constructed as shown on the details at the end of this BMP, with a recommended minimum length and minimum width of 10 ft. The quantity and volume should be sufficient to contain all liquid and concrete waste generated by washout operations.
  - Lath and flagging should be commercial type.
  - Plastic lining material should be a minimum of 10 mil polyethylene sheeting and should be free of holes, tears, or other defects that compromise the impermeability of the material.

- The base of a washout facility should be free of rock or debris that may damage a plastic liner.

Removal of Temporary Concrete Washout Facilities

- When temporary concrete washout facilities are no longer required for the work, the hardened concrete should be removed and properly disposed or recycled in accordance with federal, state or local regulations. Materials used to construct temporary concrete washout facilities should be removed from the site of the work and properly disposed or recycled in accordance with federal, state or local regulations.

- Holes, depressions or other ground disturbance caused by the removal of the temporary concrete washout facilities should be backfilled and repaired.

Costs

All of the above are low cost measures. Roll-off concrete washout facilities can be more costly than other measures due to removal and replacement; however, provide a cleaner alternative to traditional washouts. The type of washout facility, size, and availability of materials will determine the cost of the washout.

Inspection and Maintenance

- BMPs must be inspected in accordance with General Permit requirements for the associated project type and risk level. It is recommended that at a minimum, BMPs be inspected weekly, prior to forecasted rain events, daily during extended rain events, and after the conclusion of rain events.

- Temporary concrete washout facilities should be maintained to provide adequate holding capacity with a minimum freeboard of 4 in. for above grade facilities and 12 in. for below grade facilities. Maintaining temporary concrete washout facilities should include removing and disposing of hardened concrete and returning the facilities to a functional condition. Hardened concrete materials should be removed and properly disposed or recycled in accordance with federal, state or local regulations.

- Washout facilities must be cleaned, or new facilities must be constructed and ready for use once the washout is 75% full.

- Inspect washout facilities for damage (e.g. torn liner, evidence of leaks, signage, etc.). Repair all identified damage.

References

Blueprint for a Clean Bay: Best Management Practices to Prevent Stormwater Pollution from Construction Related Activities; Santa Clara Valley Nonpoint Source Pollution Control Program, 1995.

Stormwater Quality Handbooks - Construction Site Best Management Practices (BMPs) Manual, State of California Department of Transportation (Caltrans), November 2000, Updated March 2003.

Stormwater Management for Construction Activities; Developing Pollution Prevention Plans and Best Management Practice, EPA 832-R-92005; USEPA, April 1992.

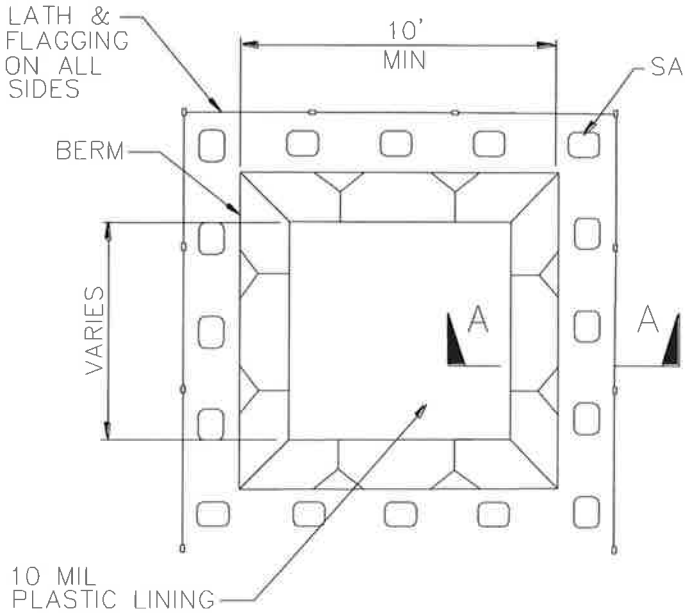

PLAN
NOT TO SCALE
TYPE "BELOW GRADE"

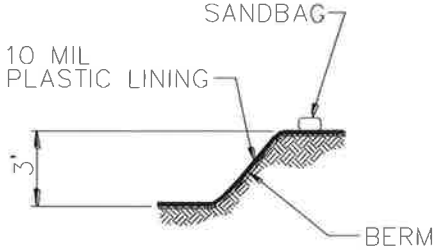

SECTION A–A
NOT TO SCALE

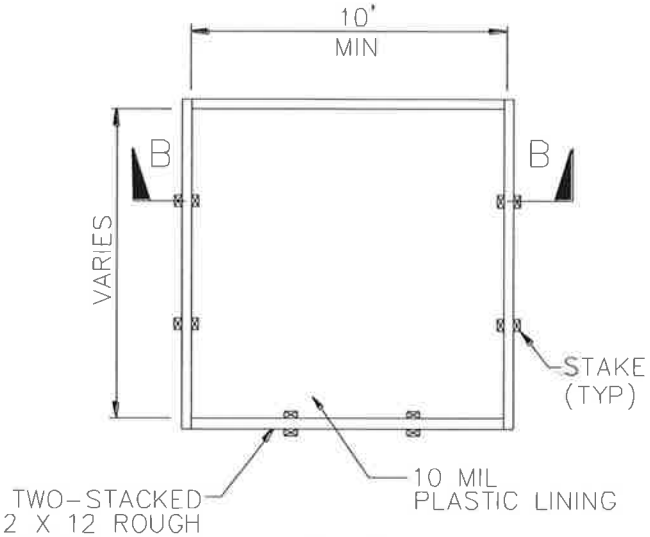

PLAN
NOT TO SCALE
TYPE "ABOVE GRADE"

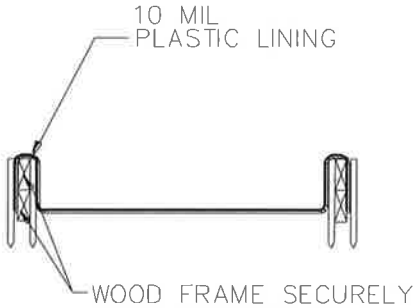

SECTION B–B
NOT TO SCALE

NOTES

1. ACTUAL LAYOUT DETERMINED IN FIELD.
2. THE CONCRETE WASHOUT SIGN SHALL BE INSTALLED WITHIN 30 FT. OF THE TEMPORARY CONCRETE WASHOUT FACILITY.

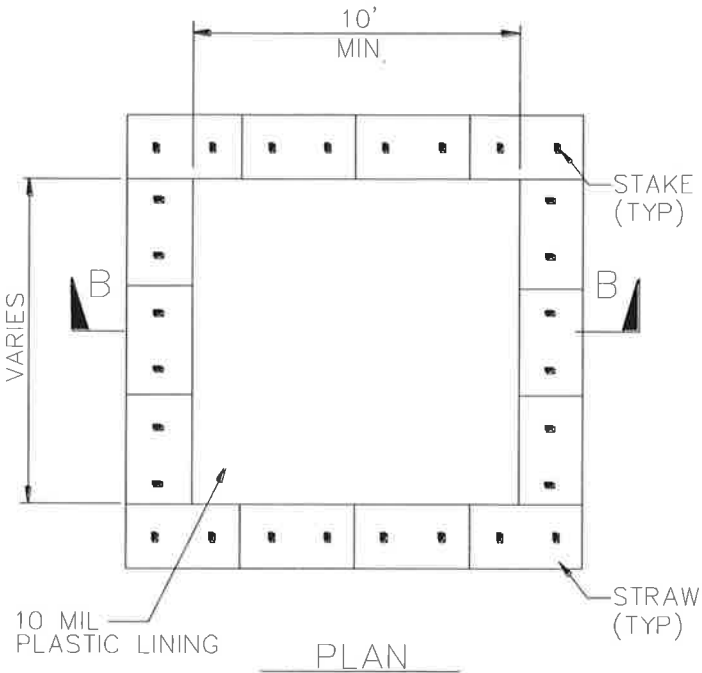

PLAN
NOT TO SCALE
TYPE "ABOVE GRADE"
WITH STRAW BALES

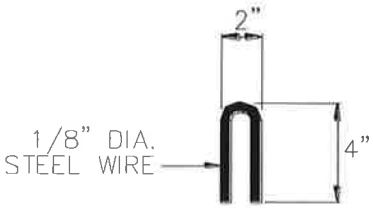

STAPLE DETAIL

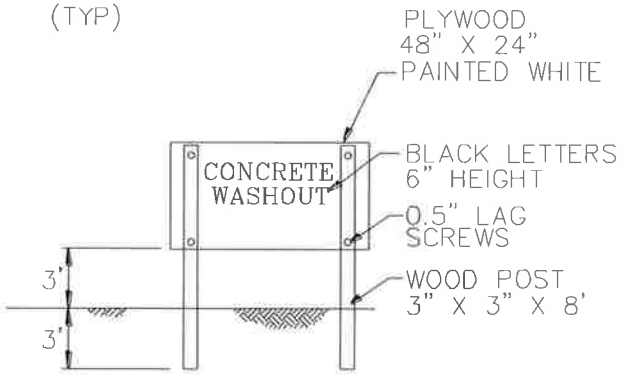

CONCRETE WASHOUT
SIGN DETAIL
(OR EQUIVALENT)

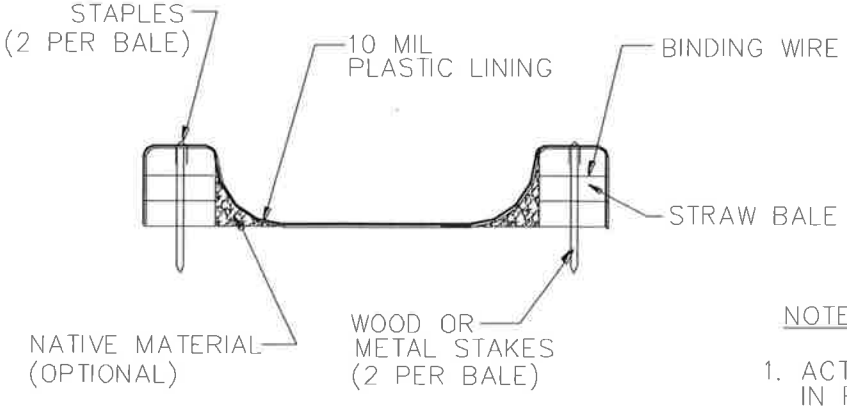

SECTION B–B
NOT TO SCALE

NOTES

1. ACTUAL LAYOUT DETERMINED IN FIELD.
2. THE CONCRETE WASHOUT SIGN SHALL BE INSTALLED WITHIN 30 FT. OF THE TEMPORARY CONCRETE WASHOUT FACILITY.

Sanitary/Septic Waste Management WM-9

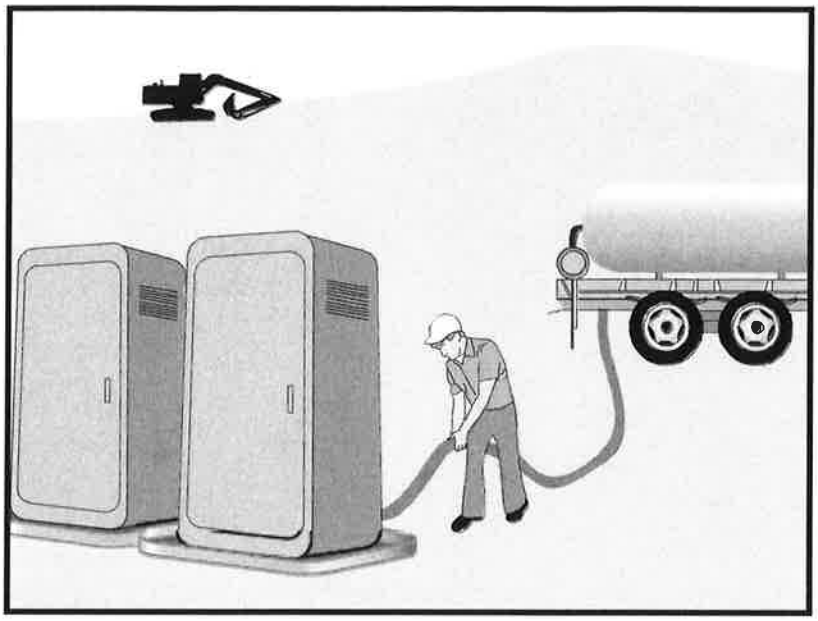

Description and Purpose

Proper sanitary and septic waste management prevent the discharge of pollutants to stormwater from sanitary and septic waste by providing convenient, well-maintained facilities, and arranging for regular service and disposal.

Suitable Applications

Sanitary septic waste management practices are suitable for use at all construction sites that use temporary or portable sanitary and septic waste systems.

Limitations

None identified.

Implementation

Sanitary or septic wastes should be treated or disposed of in accordance with state and local requirements. In many cases, one contract with a local facility supplier will be all that it takes to make sure sanitary wastes are properly disposed.

Storage and Disposal Procedures

- Temporary sanitary facilities should be located away from drainage facilities, watercourses, and from traffic circulation. If site conditions allow, place portable facilities a minimum of 50 feet from drainage conveyances and traffic areas. When subjected to high winds or risk of high winds, temporary sanitary facilities should be secured to prevent overturning.

Categories

EC	Erosion Control	
SE	Sediment Control	
TC	Tracking Control	
WE	Wind Erosion Control	
NS	Non-Stormwater Management Control	
WM	Waste Management and Materials Pollution Control	☑

Legend:

☑ **Primary Category**

☒ **Secondary Category**

Targeted Constituents

Sediment	
Nutrients	☑
Trash	☑
Metals	
Bacteria	☑
Oil and Grease	
Organics	☑

Potential Alternatives

None

If User/Subscriber modifies this fact sheet in any way, the CASQA name/logo and footer below must be removed from each page and not appear on the modified version.

CASQA
CALIFORNIA STORMWATER QUALITY ASSOCIATION

- Temporary sanitary facilities must be equipped with containment to prevent discharge of pollutants to the stormwater drainage system of the receiving water.
- Consider safety as well as environmental implications before placing temporary sanitary facilities.
- Wastewater should not be discharged or buried within the project site.
- Sanitary and septic systems that discharge directly into sanitary sewer systems, where permissible, should comply with the local health agency, city, county, and sewer district requirements.
- Only reputable, licensed sanitary and septic waste haulers should be used.
- Sanitary facilities should be located in a convenient location.
- Temporary septic systems should treat wastes to appropriate levels before discharging.
- If using an onsite disposal system (OSDS), such as a septic system, local health agency requirements must be followed.
- Temporary sanitary facilities that discharge to the sanitary sewer system should be properly connected to avoid illicit discharges.
- Sanitary and septic facilities should be maintained in good working order by a licensed service.
- Regular waste collection by a licensed hauler should be arranged before facilities overflow.
- If a spill does occur from a temporary sanitary facility, follow federal, state and local regulations for containment and clean-up.

Education

- Educate employees, subcontractors, and suppliers on sanitary and septic waste storage and disposal procedures.
- Educate employees, subcontractors, and suppliers of potential dangers to humans and the environment from sanitary and septic wastes.
- Instruct employees, subcontractors, and suppliers in identification of sanitary and septic waste.
- Hold regular meetings to discuss and reinforce the use of sanitary facilities (incorporate into regular safety meetings).
- Establish a continuing education program to indoctrinate new employees.

Costs

All of the above are low cost measures.

Inspection and Maintenance

- BMPs must be inspected in accordance with General Permit requirements for the associated project type and risk level. It is recommended that at a minimum, BMPs be inspected weekly, prior to forecasted rain events, daily during extended rain events, and after the conclusion of rain events.
- Arrange for regular waste collection.
- If high winds are expected, portable sanitary facilities must be secured with spikes or weighed down to prevent over turning.
- If spills or leaks from sanitary or septic facilities occur that are not contained and discharge from the site, non-visible sampling of site discharge may be required. Refer to the General Permit or to your project specific Construction Site Monitoring Plan to determine if and where sampling is required.

References

Stormwater Quality Handbooks - Construction Site Best Management Practices (BMPs) Manual, State of California Department of Transportation (Caltrans), March 2003.

Stormwater Management for Construction Activities; Developing Pollution Prevention Plans and Best Management Practice, EPA 832-R-92005; USEPA, April 1992.

Liquid Waste Management WM-10

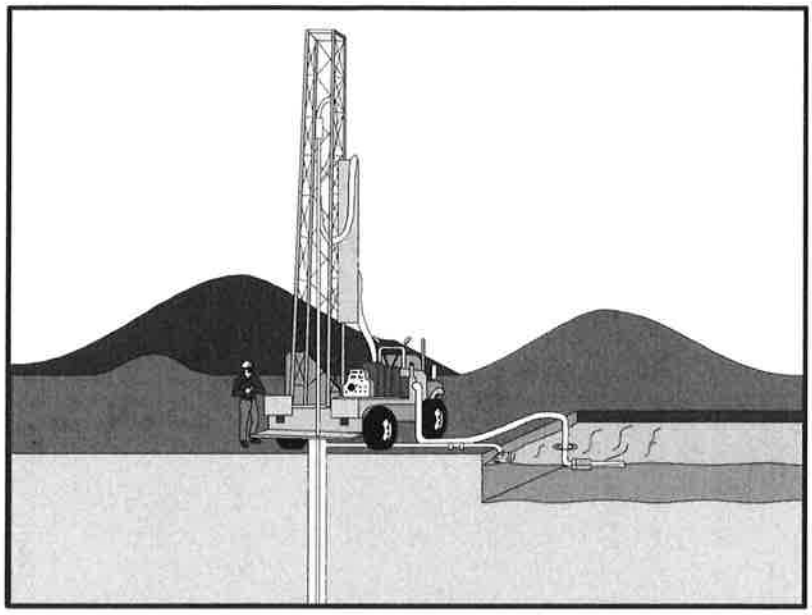

Categories		
EC	Erosion Control	
SE	Sediment Control	
TC	Tracking Control	
WE	Wind Erosion Control	
NS	Non-Stormwater Management Control	
WM	Waste Management and Materials Pollution Control	☑

Legend:
☑ **Primary Objective**
☒ **Secondary Objective**

Targeted Constituents	
Sediment	☑
Nutrients	☑
Trash	☑
Metals	☑
Bacteria	
Oil and Grease	☑
Organics	

Potential Alternatives

None

If User/Subscriber modifies this fact sheet in any way, the CASQA name/logo and footer below must be removed from each page and not appear on the modified version.

Description and Purpose

Liquid waste management includes procedures and practices to prevent discharge of pollutants to the storm drain system or to watercourses as a result of the creation, collection, and disposal of non-hazardous liquid wastes.

Suitable Applications

Liquid waste management is applicable to construction projects that generate any of the following non-hazardous by-products, residuals, or wastes:

- Drilling slurries and drilling fluids
- Grease-free and oil-free wastewater and rinse water
- Dredgings
- Other non-stormwater liquid discharges not permitted by separate permits

Limitations

- Disposal of some liquid wastes may be subject to specific laws and regulations or to requirements of other permits secured for the construction project (e.g., NPDES permits, Army Corps permits, Coastal Commission permits, etc.).
- Liquid waste management does not apply to dewatering operations (NS-2 Dewatering Operations), solid waste management (WM-5, Solid Waste Management), hazardous wastes (WM-6, Hazardous Waste Management), or

CASQA
CALIFORNIA STORMWATER QUALITY ASSOCIATION

concrete slurry residue (WM-8, Concrete Waste Management).

- Typical permitted non-stormwater discharges can include: water line flushing; landscape irrigation; diverted stream flows; rising ground waters; uncontaminated pumped ground water; discharges from potable water sources; foundation drains; irrigation water; springs; water from crawl space pumps; footing drains; lawn watering; flows from riparian habitats and wetlands; and discharges or flows from emergency fire fighting activities.

Implementation

General Practices

- Instruct employees and subcontractors how to safely differentiate between non-hazardous liquid waste and potential or known hazardous liquid waste.
- Instruct employees, subcontractors, and suppliers that it is unacceptable for any liquid waste to enter any storm drainage device, waterway, or receiving water.
- Educate employees and subcontractors on liquid waste generating activities and liquid waste storage and disposal procedures.
- Hold regular meetings to discuss and reinforce disposal procedures (incorporate into regular safety meetings).
- Verify which non-stormwater discharges are permitted by the statewide NPDES permit; different regions might have different requirements not outlined in this permit.
- Apply NS-8, Vehicle and Equipment Cleaning for managing wash water and rinse water from vehicle and equipment cleaning operations.

Containing Liquid Wastes

- Drilling residue and drilling fluids should not be allowed to enter storm drains and watercourses and should be disposed of.
- If an appropriate location is available, drilling residue and drilling fluids that are exempt under Title 23, CCR § 2511(g) may be dried by infiltration and evaporation in a containment facility constructed in conformance with the provisions concerning the Temporary Concrete Washout Facilities detailed in WM-8, Concrete Waste Management.
- Liquid wastes generated as part of an operational procedure, such as water-laden dredged material and drilling mud, should be contained and not allowed to flow into drainage channels or receiving waters prior to treatment.
- Liquid wastes should be contained in a controlled area such as a holding pit, sediment basin, roll-off bin, or portable tank.
- Containment devices must be structurally sound and leak free.
- Containment devices must be of sufficient quantity or volume to completely contain the liquid wastes generated.

- Precautions should be taken to avoid spills or accidental releases of contained liquid wastes. Apply the education measures and spill response procedures outlined in WM-4, Spill Prevention and Control.

- Containment areas or devices should not be located where accidental release of the contained liquid can threaten health or safety or discharge to water bodies, channels, or storm drains.

Capturing Liquid Wastes

- Capture all liquid wastes that have the potential to affect the storm drainage system (such as wash water and rinse water from cleaning walls or pavement), before they run off a surface.

- Do not allow liquid wastes to flow or discharge uncontrolled. Use temporary dikes or berms to intercept flows and direct them to a containment area or device for capture.

- Use a sediment trap (SE-3, Sediment Trap) for capturing and treating sediment laden liquid waste or capture in a containment device and allow sediment to settle.

Disposing of Liquid Wastes

- A typical method to handle liquid waste is to dewater the contained liquid waste, using procedures such as described in NS-2, Dewatering Operations, and SE-2, Sediment Basin, and dispose of resulting solids per WM-5, Solid Waste Management.

- Methods of disposal for some liquid wastes may be prescribed in Water Quality Reports, NPDES permits, Environmental Impact Reports, 401 or 404 permits, and local agency discharge permits, etc. Review the SWPPP to see if disposal methods are identified.

- Liquid wastes, such as from dredged material, may require testing and certification whether it is hazardous or not before a disposal method can be determined.

- For disposal of hazardous waste, see WM-6, Hazardous Waste Management.

- If necessary, further treat liquid wastes prior to disposal. Treatment may include, though is not limited to, sedimentation, filtration, and chemical neutralization.

Costs

Prevention costs for liquid waste management are minimal. Costs increase if cleanup or fines are involved.

Inspection and Maintenance

- Inspect and verify that activity–based BMPs are in place prior to the commencement of associated activities. While activities associated with the BMP are under way, inspect weekly during the rainy season and of two-week intervals in the non-rainy season to verify continued BMP implementation.

- Inspect BMPs subject to non-stormwater discharge daily while non-stormwater discharges occur.

- Remove deposited solids in containment areas and capturing devices as needed and at the completion of the task. Dispose of any solids as described in WM-5, Solid Waste Management.
- Inspect containment areas and capturing devices and repair as needed.

References

Stormwater Quality Handbooks - Construction Site Best Management Practices (BMPs) Manual, State of California Department of Transportation (Caltrans), November 2000.

Appendix J

LRP Authorization

LEGALLY RESPONSIBLE PERSON

Approval and Certification of the Stormwater Pollution Prevention Plan

VALLEY VILLAGE PARK, STORMWATER CAPTURE PROGRAM

"I certify under penalty of law that this document and all Attachments were prepared under my direction or supervision in accordance with a system designed to assure that qualified personnel properly gather and evaluate the information submitted. Based on my inquiry of the person or persons who manage the system or those persons directly responsible for gathering the information, to the best of my knowledge and belief, the information submitted is, true, accurate, and complete. I am aware that there are significant penalties for submitting false information, including the possibility of fine and imprisonment for knowing violations."

Signature of Legally Responsible Person	Date
Susan Shu, PE	213-485-4493
Name of Legally Responsible Person	Telephone Number

Appendix K

Certification of QSD/QSP

CERTIFICATE OF TRAINING

CALIFORNIA CONSTRUCTION GENERAL PERMIT

QUALIFIED SWPPP DEVELOPER (QSD)
AND
QUALIFIED SWPPP PRACTITIONER (QSP)

Pete Silvia

Apr 20, 2021 - May 03, 2023

Certificate # 00536

CASQA
CALIFORNIA STORMWATER QUALITY ASSOCIATION®

California Stormwater Quality Association and
California Construction General Permit Training Team

BUREAU OF ENGINEERING

VALLEY VILLAGE PARK
STORM WATER CAPTURE PROJECT
PROJECT NO. EW40085F

ATTACHMENT 4
UTILITY POTHOLE INFORMATION

MACRH 2025

City of Los Angeles
California

Department of Public Works
Bureau of Engineering

ENGINEERING
CITY OF LOS ANGELES

July 26, 2021

PREPARED BY:

UTILITY SURVEYORS, INC.

AIRX Project #: 21-155 IE
Project Name: Valley Village Park

Utility Locating and Potholing Area:
Addison St & Westpark Dr
North Hollywood, CA

POTHOLING REPORT



2534 E. El Norte Parkway Suite C | Escondido, CA 92027 | P.760.480.2347 | F.760.739.8034 | airxus.com

TABLE OF CONTENTS

1. Description of Pothole Procedures and Site-Specific Details
2. Pothole Project Map(s)
3. Pothole Location Map(s)
4. Pothole Tabulation Report
5. Pothole Data Sheet(s)
6. USA Ticket(s)

Description of Pothole Procedures and Site Specific Details

DESCRIPTION OF POTHOLE PROCEDURES

AIRX Utility Surveyors performs a full range of specialized engineering services including Underground Utility Location and Vacuum Excavation (to verify depth and alignment of underground utilities).

Underground Utility Location employs sophisticated electronic locating devices to trace the route of an underground utility; then the route is marked on the surface with marking paint in paved areas, or with 60 penny nails and feathers in unpaved areas.

Vacuum excavation employs a vacuum truck in conjunction with high-pressure air or water to excavate material and expose an underground utility. A 10 to 12-inch diameter hole is first cored or chiseled through the pavement so that the vacuum hose and high-pressure air or water hose can be inserted.

Utilities found during potholing are located on the surface by placing two reference points (typically 36" apart) on either side of the pothole along the centerline (or edge) of the utility, using paving nails or 60 penny nails as appropriate. Depth measurements (to the nearest ½ inch) are taken midway between the two reference points. Utility alignment, depth, and other data is marked with pink paint (on pavement), or on wood lath (unpaved areas).

SITE SPECIFIC DETAILS

AIRX was contracted by Carollo Engineers to perform utility locating and potholing services at the intersection of Addison St and Westpark Dr, North Hollywood, California. A total of 1 pothole was excavated to establish conflicts and connection points on a variety of utilities. The results of the data are contained in the attached spreadsheet and data sheet.

In preparation of these excavations, AIRX marked out the dig locations and called in for USA (Underground Service Alert). All traffic control plans and permits were drawn and applied for by AIRX and all traffic control was set up by AIRX.

The excavation and discovery went without any incident. Any changes and adjustments are mentioned in the Pothole Tabulation Report and the Pothole Data Sheet. All the results were annotated on the ground and in this report. It is AIRX's recommendation that all pothole locations and the active mark out should be surveyed to aid in the adjustment of utilities on the final plan and profile.

At the pothole location, the utility alignment was marked with pink paint, as well as paving nails or feathers. AIRX used potable water acquired offsite for excavation and all water and material vacuumed was disposed of off-site. No water was allowed to flow into storm drains or natural drainages. The pothole was covered with clean backfill material and compacted to 95% density in 3" lifts. All field work was performed between July 20, 2021.

Pothole Project Map(s)


POTHOLE PROJECT MAP: Valley Village Park, North Hollywood
Otsego St
Otsego St
Otsego St
Otsego St
Irvine Ave
Westpark Dr
Fight Like A Knight
Camp Del Corazon
Central Branch Tujunga Wash
Tujunga Ave
Hesby St
Hesby St
Hesby St
sbyterian Church
Irvine Ave
Westpark Dr
GOLS Soccer
Tujunga
Addison St
Valley Village Park
Playground with a large picnic area
POTHOLE LOCATION MAP
1
Beck Ave
Westpark Dr
Central Branch Tujunga Wash
Tujunga Ave
Morrison St
Irvine Ave
Morrison St
Morrison St
Westpark Dr
170
6A
Television International Magazine
Huston St
Irvine Ave
Beck Ave
Norma Paley Jewelry store
Hollywood Fwy
Huston St
Huston St
PROJECT LOCATIONS ARE APPROXIMATE
POTHOLE PROJECT MAP
1

Pothole Location Map(s)



POTHOLE LOCATION MAP

1

Pothole Tabulation Report

POTHOLE TABULATION REPORT: (, CA)

Pothole Number	Date	Street	Pavement Thickness	Utility Type	Utility Size & Material	Soil Type	Depth-Ground to Top of Utility	Depth-Ground to Top of Encasement	Depth-Ground to Bottom of Encasement	Total Depth Excavated	Utility Orientation	Pothole Project Area Map #	Pothole Location Map #	Description & Location	Notes
1	7/20/2021	Westpark Dr	Asphalt - N/A Concrete - N/A Base - N/A Total - N/A	Water	4.0'' Steel	Subgrade	31.0'' T/P	N/A	N/A	80.0''	N/S	1	1	Pothole 1 is located east of the intersection of Westpark Dr and Addison St. Please refer to Location Map 1 for the approximate location of Pothole 1.	
1	7/20/2021	Westpark Dr	Asphalt - N/A Concrete - N/A Base - N/A Total - N/A	Storm Drain	90.0'' Concrete	Subgrade	78.0'' T/P	N/A	N/A	80.0''	W/E	1	1	Pothole 1 is located east of the intersection of Westpark Dr and Addison St. Please refer to Location Map 1 for the approximate location of Pothole 1.	

Pothole Data Sheet(s)

UTILITY SURVEYORS, INC.

RECORD OF TEST HOLE DATA

AIRX JOB NO:	21-155 IE
TEST HOLE NO:	1
DATE EXCAVATED:	7/20/2021

	UTILITY TYPE	SIZE & MATERIAL	UTILITY DEPTH	ENCASEMENT/ PACKAGE TOP	ENCASEMENT/ PACKAGE BOTTOM	UTILITY DIRECTION
1	Water	4.0" Steel	31.0" T/P	N/A	N/A	N/S
2	Storm Drain	90.0" Concrete	78.0" T/P	N/A	N/A	W/E
3						
4						

Total Depth Excavated **80.0"**

PAVEMENT THICKNESS: **ASPHALT: N/A** **CONCRETE: N/A** **BASE: N/A**

STANDBY REQUIRED: **N/A**

IMMEDIATE SURFACE REPAIR: **Class II Base**

PERMANENT SURFACE REPAIR: **Class II Base**

TARGET UTILITY MARKED BY USA:	**Yes**	TRACER WIRE FOUND:	**No**
MARKOUT LOCATION CORRECT:	**Yes**	PIPE COVER MATERIAL:	**N/A**
UTILITY SHOWN ON PLAN:	**Yes**	OVERBURDEN MATERIAL:	**Subgrade**

COMMENTS:

AREA SHOT



Pothole 1 is located east of the intersection of Westpark Dr and Addison St. Please refer to Location Map 1 for the approximate location of Pothole 1. The photo above was taken in front of Pothole 1 facing NW.

DOWNHOLE VIEW



A downhole view of the utilities found in Pothole 1 and their orientation at the pothole location: 4 inch Steel Water utility at the depth of 31 inches T/P and runs in a NE/SW direction; and 90 inch Concrete Storm Drain utility at the depth of 78 inches T/P and runs in a NW/SE direction. Utilities were found directly on markout.

Permit(s)

DEPARTMENT OF RECREATION AND PARKS

BOARD OF COMMISSIONERS

SYLVIA PATSAOURAS
PRESIDENT

LYNN ALVAREZ
VICE PRESIDENT

TAFARAI BAYNE
NICOLE CHASE
JOSEPH HALPER

HAROLD ARRIVILLAGA
BOARD SECRETARY
(213) 202-2640

City of Los Angeles
California

ERIC GARCETTI
MAYOR

MICHAEL A. SHULL
GENERAL MANAGER

ANTHONY-PAUL (AP) DIAZ, ESQ.
EXECUTIVE OFFICER &
CHIEF OF STAFF

VICKI ISRAEL
ASSISTANT GENERAL MANAGER

CATHIE SANTO DOMINGO
ASSISTANT GENERAL MANAGER

(213) 202-2633 FAX (213) 202-2614

December 15, 2020

Carollo Engineers, Inc.
Miko Aivazian, Project Manager
707 Wilshire Boulevard, Suite 3920
Los Angeles, CA 90017

Dear Mr. Aivazian:

VALLEY VILLAGE PARK – REVOCABLE RIGHT-OF-ENTRY PERMIT NO. 1068 – TO CONDUCT POTHOLING AND SURVEYING

The City of Los Angeles, Department of Recreation and Parks (hereinafter referred to as "RAP"), hereby issues a temporary right of entry permit to Carollo Engineers, Inc. (hereinafter referred to as "PERMITTEE"), for temporary access to Valley Village Park. This Right of Entry permit is granted between RAP and PERMITTEE.

Approval of this Right-of-Entry, Permit No. 1068, is contingent upon the execution of this PERMIT, as provided in Condition No. 13, and the submission of proof of insurance information, as noted in Condition No. 11. This PERMIT will not become effective until all of the above conditions are met, and the executed PERMIT and insurance forms are returned to the RAP representative designated in Condition No. 9.

This revocable Right-of-Entry permit is issued subject to the following conditions:

1. PERMIT AREA DEFINED

   The area (PERMIT AREA) to be covered under this PERMIT is at Valley Village Park, located at 5000 Westpark Drive, North Hollywood, CA 91601. The PERMIT AREA is delineated on the attached map.

2. PERMISSION GRANTED

   Permission is granted to PERMITTEE and/or its contractor(s) to enter the PERMIT AREA to conduct potholing and surveying work. Up to eight personnel will perform the work. Vehicles and equipment will include a survey truck, two support trucks, a pothole truck, and survey/potholing equipment.

It is the responsibility of the PERMITTEE to fulfill all requirements of City Departments and any other agencies and to obtain all approvals prior to the commencement of any work at the site, related to the granting of this PERMIT.

3. TERM

The term of this PERMIT shall be from February 1, 2021 to August 1, 2021. Should additional time be required to complete the permitted work, PERMITTEE shall submit a written request to the addressee listed in Condition No.9.

4. HOURS OF OPERATION

In accordance with this PERMIT, PERMITTEE's hours of operation shall be from 8:00 a.m. to 5:00 p.m., Monday through Friday. PERMITTEE shall not be allowed onto the PERMIT AREA during hours other than those authorized, without RAP's prior written authorization.

5. RAP AUTHORITY

PERMITTEE shall at all times abide by the rules and regulations adopted by RAP or that may hereafter be adopted and shall cooperate fully with RAP employees in the performance of their duties.

Mr. Therman Calloway, Principal Grounds Maintenance Supervisor II and Mr. Rob De Hart, Acting Superintendent of Recreation Operations or their designees are the RAP representative for permitted activities at the subject property. Mr. Calloway may be reached at (818) 756-8189 and Mr. De Hart may be reached at (818) 756-8060. Upon receipt of this PERMIT and prior to the commencement of any work, PERMITTEE shall contact and coordinate all work with Mr. Calloway and Mr. De Hart or their designees.

6. RIGHT OF INSPECTION

Authorized representatives, agents, and employees of RAP shall have the right to enter the PERMIT AREA at any time in case of emergency, and upon reasonable notice for purposes of property inspection.

7. MAINTENANCE OF PROPERTY

PERMITTEE shall be responsible for any damages caused by the permitted work and any necessary repairs required, during the TERM of this PERMIT.

Upon completion of the work, it is understood that PERMITTEE agrees to notify RAP of completion of such work. Notification shall be made to the RAP representatives designated in Condition No. 5.

PERMITTEE shall maintain the PERMIT AREA in an orderly condition during the TERM of the PERMIT or period of permitted work, including the protection of those existing facilities at the site that will not be impacted by this project.

8. RESTORATION AND FINAL INSPECTION

PERMITTEE shall restore all RAP property that is damaged, moved or altered as a result of the permitted work at the PERMIT AREA to its original condition. Said restoration work shall take place immediately upon the conclusion of said work and shall be performed to the satisfaction of RAP. Upon completion of the permitted work, PERMITTEE shall contact the RAP representatives in Condition No. 5 to arrange a final RAP inspection.

9. PERMIT NOTIFICATIONS

Should PERMITTEE desire modifications to this PERMIT, such as time extension to the TERM, requests for said modifications and/or additions shall be submitted in writing to:

Los Angeles City Department of Recreation and Parks
Planning, Maintenance and Construction Branch
Real Estate & Asset Management Unit
221 N. Figueroa Street, Suite 400
Los Angeles, CA 90012

Attention: Cid Macaraeg, Director, Real Estate and Asset Management Unit

Telephone: (213) 202-2608 Fax No.: (213) 202-2612

10. PERMITTEE CONTACT

The PERMITTEE contact will be Miko Aivazian, Project Manager, Carollo Engineers, Inc. and can be reached at: (213) 279-3319 and by email address at: maivazian@carollo.com.

11. INDEMNIFICATION AND INSURANCE

Except for the active negligence or willful misconduct of City, PERMITTEE undertakes and agrees to defend, indemnify and hold harmless City and any and all of City's Boards, Officers, Agents, Employees, Assigns, and Successors in Interest from and against all suits and causes of action, claims, losses, demands and expenses, including, but not limited to, attorney's fees and cost of litigation, damage or liability of any nature whatsoever, for death or injury to any person, including PERMITTEE's employees and agents, or damage or destruction of any property of either party hereto or of third parties, arising in any manner by reason of, or incidental to, the performance of this PERMIT on the part of PERMITTEE and/or its contractor(s) and sub-contractor(s) of any tier.

PERMITTEE is insured and shall additionally insure the City of Los Angeles for the coverages specified by the CAO, as a requirement of this PERMIT. PERMITTEE shall maintain, during the term of this PERMIT, evidence of insurance acceptable to CAO, Risk Management prior to PERMITTEE’s occupancy of the premises.

12. REVOCATION OF PERMIT

RAP may revoke this PERMIT at any time or if PERMITTEE does not comply with the conditions contained herein. Upon receipt of a written notice of revocation, PERMITTEE

shall return the property to its original condition and discontinue all work permitted under this PERMIT.

13. ACCEPTANCE

Please indicate your acceptance of the foregoing, in the signature block of this PERMIT, and return the signed original with the required insurance documents to the RAP representative in Condition No. 9.

Sincerely,

MICHAEL A. SHULL
General Manager

DARRYL FORD
Superintendent
Planning, Maintenance and Construction Branch

DF/CM/IK:ar

Attachment

cc: Therman Calloway, Principal Grounds Maintenance Supervisor II, Valley Region (MS 668)
Rob De Hart, Acting Superintendent of Recreation Operations, Valley Region (MS 667)
Joe Losorelli, Chief Park Ranger (MS 664)

[SIGNATURE PAGE FOLLOWS]

SIGNATURE PAGE

VALLEY VILLAGE PARK – REVOCABLE RIGHT-OF-ENTRY PERMIT NO. 1068

As the authorized representative of PERMITTEE, I hereby accept this Permit No. 1068 and the conditions contained herein:



Signature	Date: 12/16/2020
Miko Aivazian	Project Manager
Printed Name	Title

COMMENCEMENT DATE and RAP PERMIT validation:

Commencement Date

Signature	Date
Printed Name	Title

Valley Village Park



Pothole location

WORK AREA

BUREAU OF ENGINEERING

VALLEY VILLAGE PARK
STORM WATER CAPTURE PROJECT
PROJECT NO. EW40085F

ATTACHMENT 5
LABOE STANDARD PLANS

MARCH 2025

City of Los Angeles
California

Department of Public Works
Bureau of Engineering

ENGINEERING
CITY OF LOS ANGELES

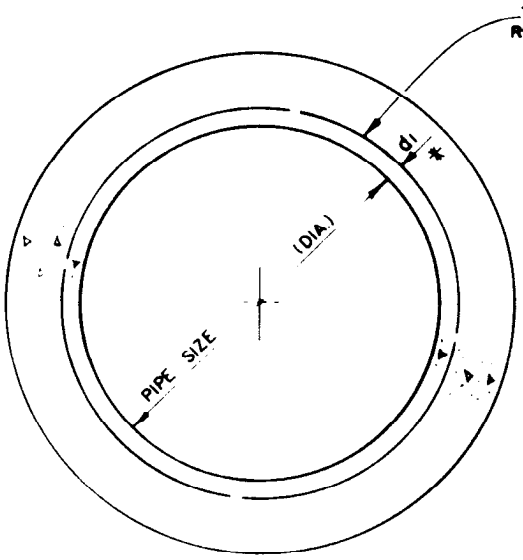

SINGLE CIRCULAR CAGE

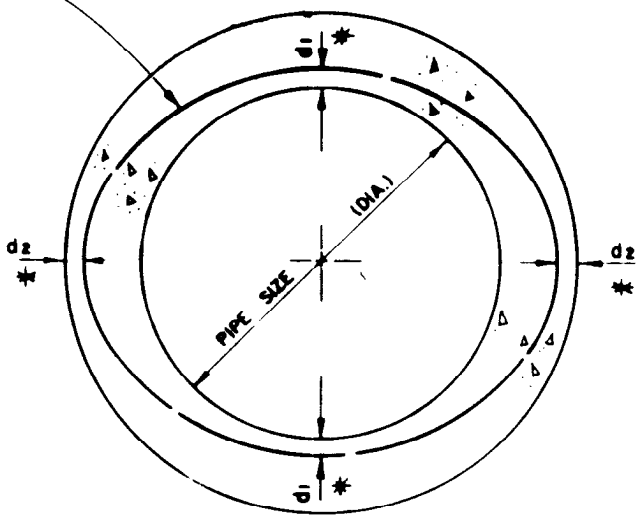

SINGLE ELLIPTICAL CAGE

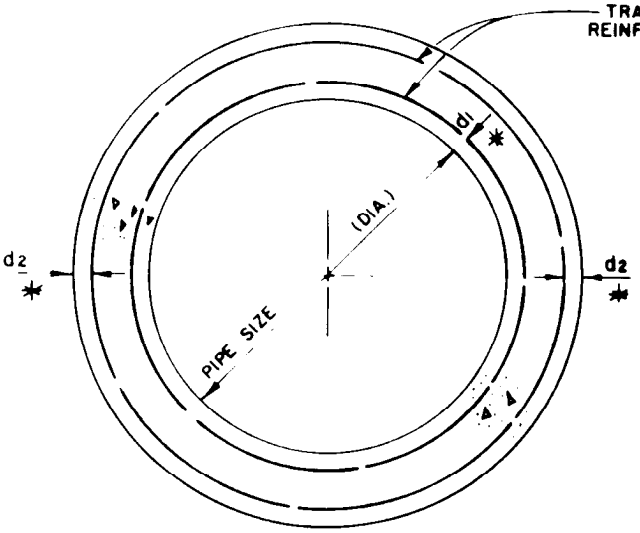

DOUBLE CIRCULAR CAGES

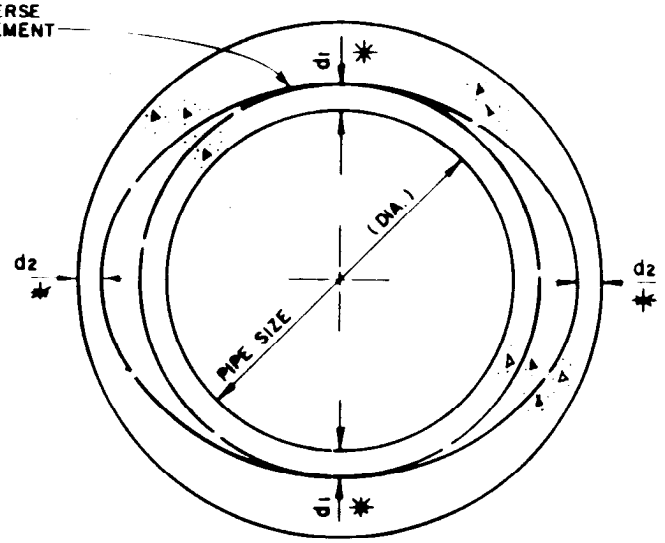

CIRCULAR-ELLIPTICAL CAGES

TYPICAL REINFORCEMENT CONFIGURATIONS

* SEE NOTE 3

DEPARTMENT OF PUBLIC WORKS

BUREAU OF ENGINEERING — CITY OF LOS ANGELES

REINFORCED CONCRETE PIPE

STANDARD PLAN
S-241-0

SUBMITTED April 25 1990
ENGINEER OF DESIGN
DEPUTY ENGINEER

APPROVED May 4 1990
CITY ENGINEER

DESIGNED BY	DRAWN BY	CHECKED BY
RGC	RGM	RGS

REGISTERED PROFESSIONAL ENGINEER — ROBERT G. MOORE — Exp. 12/31/90 — No. 11168 — CIVIL — STATE OF CALIFORNIA

REVISIONS		SUPERSEDES	REFERENCES
NO	DESCRIPTION		

VAULT INDEX NUMBER B-4111

SHEET 1 OF 2 SHEETS

NOTES

1. EXCEPT AS MODIFIED HEREIN, ALL REINFORCED CONCRETE PIPE (RCP) NOT LARGER THAN 108 INCHES INTERNAL DIAMETER SHALL CONFORM TO SUBSECTION 207-2 OF THE STANDARD SPECIFICATIONS. FOR RCP LARGER THAN 108 INCHES, SEE PLANS OR SPECIAL PROVISIONS.

2. WHEN HIGH CHLORIDE, HIGH SULFATE, OR MARINE (WITHIN 1,000 FEET OF OCEAN OR TIDAL WATER) ENVIRONMENTS ARE INDICATED ON THE PLANS OR SPECIAL PROVISIONS, CONCRETE SHALL CONTAIN A MINIMUM OF 7 SACKS OF TYPE II CEMENT PER CUBIC YARD. FOR VERY HIGH SULFATE PRESENCE (OVER 15,000 PPM), 7 SACKS OF TYPE V CEMENT OR A 25% CLASS F FLY ASH MAXIMUM SUBSTITUTION BY WEIGHT WITH TYPE II CEMENT SHALL BE USED, PROVIDED THE TOTAL WEIGHT OF TYPE II CEMENT AND FLY ASH IS AT LEAST 564 POUNDS PER CUBIC YARD.

3. CONCRETE COVER FOR REINFORCING STEEL IN CONCRETE PIPE SHALL CONFORM TO SUBSECTION 207-2.4.2. WHEN "SPECIAL COVER RCP, TYPE_____" IS SPECIFIED ON THE PLANS OR SPECIAL PROVISIONS, THE MINIMUM CLEARANCE (d_1 OR d_2) FOR TRANSVERSE REINFORCEMENT SHALL BE:

TYPE	COVER	USE
I - A	d_1 = 1-1/2" -0" + 1/2"	16 < V ≤ 24
I - B	d_1 = 2" -0" + 1/2"	
II - A	d_1 = 2" -0" + 1/2"	24 < V ≤ 32
II - B	d_1 = 2-1/2" -0" + 1/2"	
III - A	d_1 = 2-1/2" -0" + 1/2"	32 < V ≤ 40
III - B	d_1 = 3" -0" + 1/2"	
IV	SPECIAL DESIGN--SEE PLANS OR SPECIAL PROVISIONS	V > 40
V	d_1, d_2 = 1/2 INCH MINIMUM ADDED TO THAT SPECIFIED IN 207-2.4.2	HIGH CHLORIDE, HIGH GROUNDWATER, OR MARINE ENVIRONMENT

NOTES TO DESIGNERS:

(A) "V" IS AVERAGE VELOCITY, FEET PER SECOND (FPS).
(B) "A" IS USED WHERE DEBRIS IN FLOW DOES NOT OCCUR.
(C) "B" IS USED WHERE DEBRIS IN FLOW OCCURS.
(D) INCREASED CONCRETE COVER IS NOT CUMULATIVE WITH THAT REQUIRED FOR MARINE, HIGH VELOCITY, GROUNDWATER, OR CHLORIDE ENVIRONMENTS, BUT SHOULD BE AT LEAST THE GREATEST OF ANY OF THE REQUIREMENTS.
(E) "d_2" IS APPLICABLE ONLY FOR TYPE V USAGE.
(F) FOR VELOCITIES LESS THAN OR EQUAL TO 16 FPS AND FOR NORMAL ENVIRONMENTS, CONCRETE COVER SHALL CONFORM TO SUBSECTION 207-2.4.2.

CASE 1 BEDDING INSTALLATION

LOAD FACTOR = 1.4

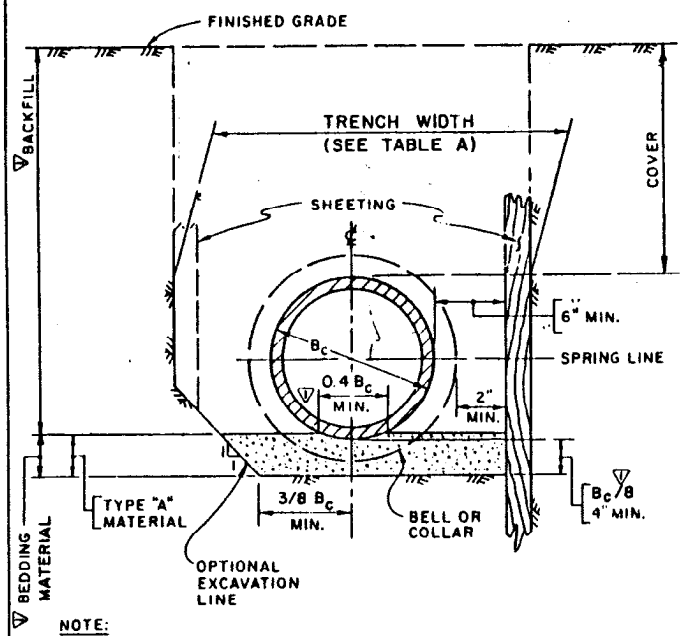

NOTE:

INDICATES UNDISTURBED EARTH

CASE 2 BEDDING INSTALLATION

LOAD FACTOR = 1.8

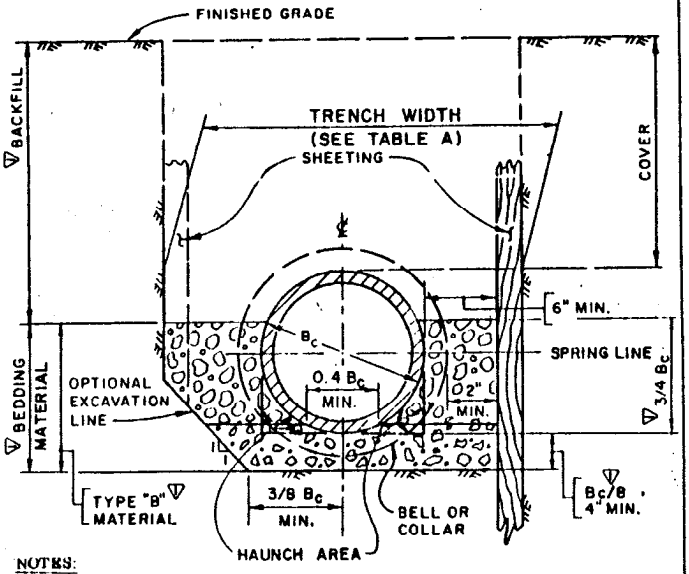

NOTES:

A. INDICATES UNDISTURBED EARTH.

B. TYPE "B" MATERIAL SHALL BE PLACED IN A MANNER SUCH AS SLICING, SHOVEL-SPADING, OR SHOVEL RODDING TO INSURE COMPLETE FILLING OF THE "HAUNCH AREAS" BELOW THE PIPE. (JETTING OF TYPE "B" MATERIAL IS NOT REQUIRED).

CASE 3 BEDDING INSTALLATION

LOAD FACTOR = 2.7

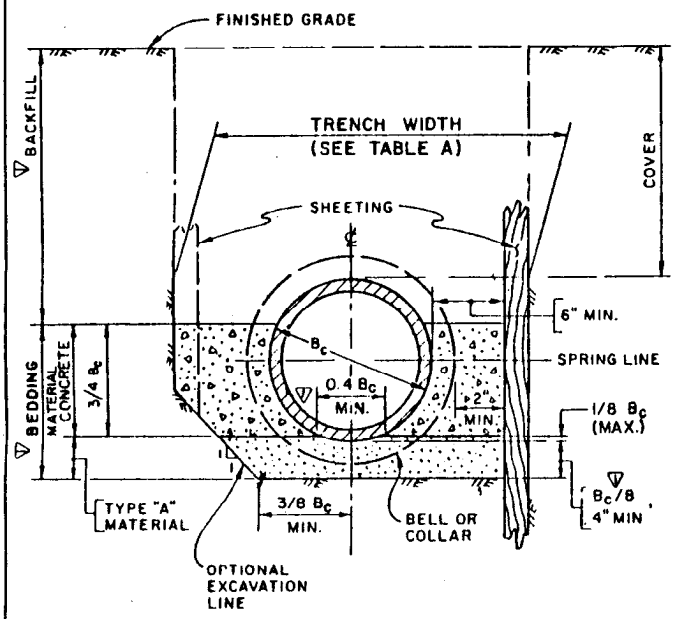

NOTES:

A. INDICATES UNDISTURBED EARTH

B. SEE NOTE 5.

CASE 4 BEDDING INSTALLATION

LOAD FACTOR = 3.2

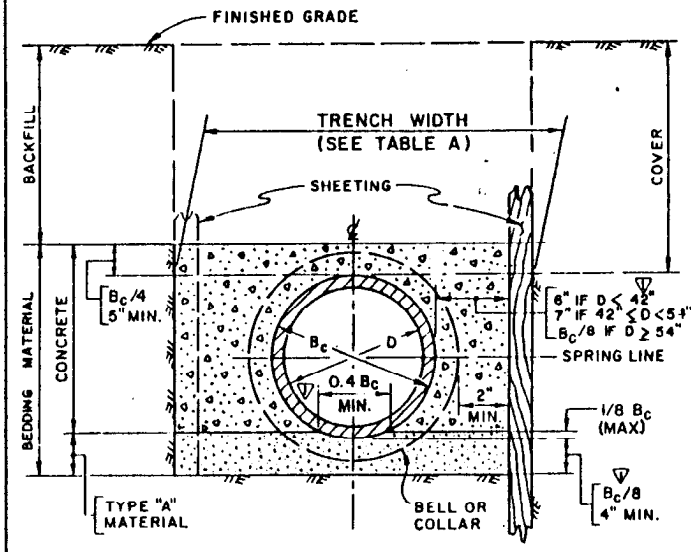

NOTES:

A. INDICATES UNDISTURBED EARTH.

B. < INDICATES "LESS THAN"; ≤ INDICATES "LESS THAN OR EQUAL TO"; ≥ INDICATES "GREATER THAN OR EQUAL TO".

DEPARTMENT OF PUBLIC WORKS

BUREAU OF ENGINEERING — CITY OF LOS ANGELES

PIPE LAYING IN TRENCHES

STANDARD PLAN S-251-1

SUBMITTED Dec. 25, 1973

DIVISION ENGINEER

DEPUTY ENGINEER

APPROVED January 7, 1974

CITY ENGINEER

DESIGNED BY	DRAWN BY	CHECKED BY
A. MAGAÑA	R. FAGNAN	G.K. TAKAKI

REVISIONS				
NO	DATE	DESCRIPTION	DIV. ENG'R.	CITY ENG'R.
1	2-7-77	*BEDDING, BACKFILL LIMITS & DIMENSIONS, CASE 1 & 2 MATERIAL B; CASE 2 CONSTRUCTION PROCEDURES; CASE DESIGNATIONS; USE OF CASE 2 IN TABLE B; GENERAL NOTES; LOAD FACTORS.	Shirley H. Morris	O.C. Gillman

SUPERSEDES	REFERENCES
B-3816	

VAULT INDEX NUMBER B-3893

SHEET 1 OF 2 SHEETS

CASE 5 BEDDING INSTALLATION ▽

LOAD FACTOR = 4.5

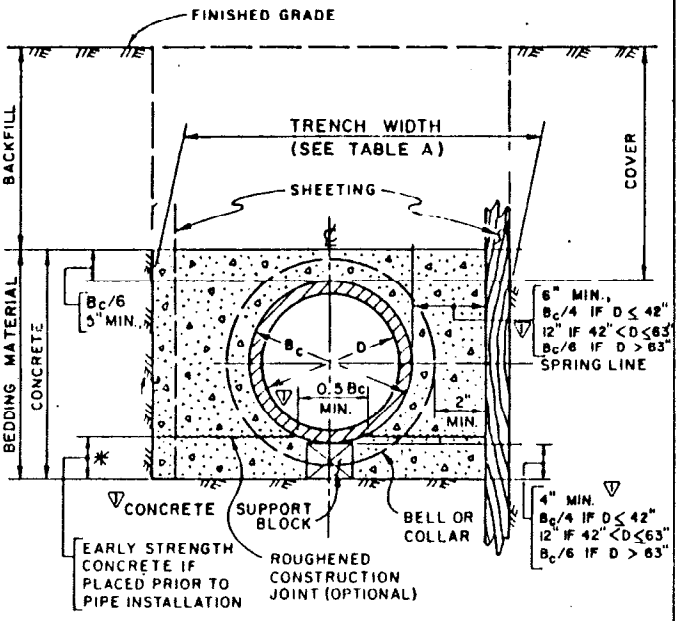

NOTES:

A. ⩘⩘ INDICATES UNDISTURBED EARTH.

▽ B. TREATED PINE SHIMS MAY BE USED FOR GRADE ADJUSTMENT.

C. < INDICATES "LESS THAN"; ≤ INDICATES "LESS THAN OR EQUAL TO", > INDICATES "GREATER THAN".

D. ✱ INDICATES AREA REFERRED TO IN NOTE 12.D.(2).

TABLE A

MAXIMUM ALLOWABLE TRENCH WIDTH

NOTES: A IF COVER LESS THAN 8'-0" – UNLIMITED WIDTH
B IF MAXIMUM ALLOWABLE IS EXCEEDED, PROVIDE SUBSTITUTE INSTALLATION PER TABLE B.

INSIDE DIAMETER	PLASTIC, CLAY & CAST IRON	RCP WITH BELLS OR COLLARS	ACP & RCP WITHOUT BELLS OR COLLARS
6" - 15"	B_c + 18"	B_c + 32"	B_c + 20"
16" - 21"	B_c + 24"		
22" - 42"	B_c + 30"		
43" - 90"	------		
OVER 96"	------	B_c + 32"	B_c + 24"

TABLE B

SUBSTITUTE INSTALLATIONS
(APPLICABLE TO ALL PIPE SIZES)

CASE B	COVER C (Feet)	RATIO = TRENCH WIDTH / MAXIMUM ALLOWABLE TRENCH WIDTH
▽ 1	8.1-15.0	1.00-1.05: 2; 1.10-1.15: 2A; 1.20-1.30: 3A; 1.40-1.50: 4; 1.55-1.60: 1; 1.65-1.75: SPECIAL D; NO LIMIT
	15.1-20.0	
	20.1-30.0	
▽ 2	8.1-15.0	1.00-1.05: 3A; 1.10-1.30: 4; 1.40-1.50: 1; 1.55-1.75: 5; NO LIMIT
	15.1-20.0	
	20.1-30.0	
3	8.1-15.0	1.00-1.05: 4; 1.10-1.30: 5; 1.40-1.75: SPECIAL D; NO LIMIT
	15.1-30.0	
4	8.1-30.0	

NOTES: A. SEE NOTE 2.

B. CASE - INSTALLATION CASE SPECIFIED ON THE PLANS.

C. COVER - IF COVER EXCEEDS 30 FEET SUBSTITUTE SHALL BE AS ORDERED BY THE ENGINEER.

D. SPECIAL - CONTRACTOR SHALL CONSTRUCT SPECIAL AS ORDERED BY THE ENGINEER.

GENERAL NOTES

1. CASE 1 BEDDING INSTALLATION SHALL BE USED FOR ALL PIPE LAYING UNLESS OTHERWISE SPECIFIED ON THE PLANS OR NOTED HEREON.

▽ 2. IF THE ACTUAL TRENCH WIDTH EXCEEDS THE MAXIMUM INDICATED IN TABLE A, THE CONTRACTOR IS REQUIRED TO PROVIDE A SUBSTITUTE INSTALLATION PER TABLE B. HOWEVER, IF RUNNING, CAVING OR SQUEEKING SOILS ARE PRESENT, CASE 2 OR 3 SHALL NOT BE USED AS A SUBSTITUTE. CASE 4 SHALL BE THE MINIMUM SUBSTITUTE.

3. IF THE COVER ON CLAY PIPE IS LESS THAN 42 INCHES MEASURED FROM THE FINISHED GRADE OR INTERIM CONSTRUCTION GRADE, CASE 5 BEDDING INSTALLATION SHALL BE USED.

▽ 4. UNLESS OTHERWISE SPECIFIED ON THE PLANS, THE BEDDING INSTALLATION CASE FOR SEWER HOUSE CONNECTIONS SHALL BE THE SAME AS THAT USED FOR THE MAIN LINE.

5. LOAD FACTORS INDICATED FOR EACH BEDDING INSTALLATION CASE ARE BASED ON THE 3-EDGE BEARING TEST WITH A 1.0 LOAD FACTOR. LOAD FACTORS APPLY IN THE DESIGN OF RCP, VCP AND ACP.

▽ 6. IF RUNNING, CAVING OR SQUEEZING SOILS ARE ENCOUNTERED WHEN CASE 2 OR 3 BEDDING INSTALLATION IS SPECIFIED ON THE PLANS, THE ENGINEER SHALL BE IMMEDIATELY NOTIFIED IN ORDER THAT HE CAN DETERMINE WHAT CORRECTIVE MEASURES SHALL BE TAKEN.

7. ALL COSTS ARISING FROM THE CONTRACTOR'S CHOICE OF OPTIONAL CONSTRUCTION DETAILS, INCLUDING SUBSTITUTE BEDDING INSTALLATIONS WHEN THE MAXIMUM TRENCH WIDTH IS EXCEEDED, SHALL BE CONSIDERED INCLUDED IN THE BID PRICE FOR PIPE IN PLACE.

8. PIPE BELLS AND COUPLINGS OUTSIDE OF THE PIPE BARREL SHALL BE PREVENTED FROM BEARING UPON BEDDING MATERIAL BY SUITABLE EXCAVATION DURING THE PIPE LAYING OPERATIONS.

9. IF A CHANGE IN BEDDING INSTALLATION CASE OCCURS BETWEEN THE JOINTS OF A LENGTH OF PIPE, THE CONTRACTOR SHALL CONSTRUCT THE HIGHER CASE BEDDING INSTALLATION FOR THE ENTIRE LENGTH OF THAT PIPE.

▽ 10. THE HEIGHT OF BEDDING MATERIALS AS DESCRIBED IN SUBSECTION 306-1.2.1 OF THE STANDARD SPECIFICATIONS IS MODIFIED AS ILLUSTRATED IN BEDDING CASES 1 THROUGH 5.

11. BEDDING

A. TYPE "A" MATERIAL:

(1) TYPE "A" MATERIAL SHALL BE ONE OF THE FOLLOWING:

a. SAND
b. NO. 2 OR NO. 4 AGGREGATE OR 1/2" OR 3/4" CRUSHED ROCK FOR PIPES LARGER THAN 24 INCHES IN DIAMETER.
c. NO. 4 AGGREGATE OR 1/2" CRUSHED ROCK FOR PIPES 24 INCHES OR SMALLER IN DIAMETER.
▽ d. UNDISTURBED NATIVE FREE DRAINING MATERIAL HAVING A MINIMUM SAND EQUIVALENT OF 30 AND SHAPED TO FULLY SUPPORT THE PIPE.

▽ (2) IF ANY TYPE "A" MATERIAL DIRECTLY SUPPORTING THE PIPE IS REMOVED OR DISLOCATED IN THE PROCESS OF REMOVING A PIPELAYING SLING, THAT MATERIAL SHALL BE CAREFULLY REPLACED BY HAND-SHOVELING.

▽ B. TYPE "B" MATERIAL SHALL BE NO. 4 AGGREGATE OR 1/2" CRUSHED ROCK.

C. CONCRETE BEDDINGS:

▽ (1) AT LEAST 50% OF CONCRETE BEDDING WITHIN ANY 5-FOOT LENGTH SHALL BE PLACED AGAINST UNDISTURBED EARTH OR AGAINST TIMBER SHEETING WHICH IS PLACED AGAINST UNDISTURBED EARTH AND LEFT IN PLACE. ALL SHEETING ABOVE THE TOP OF BEDDING SHALL BE REMOVED. THE CONTRACTOR MAY REMOVE ALL STEEL SHEETING HAVING WEB THICKNESS OF 1/2" OR LESS. (MODIFIES STANDARD SPECIFICATIONS SUBSECTION 306-1.1.6).

(2) IF BACKFILL IS PLACED IMMEDIATELY AFTER PLACING CONCRETE BEDDING, SEE NOTE 12D.

▽ (3) TRANSVERSE CONSTRUCTION JOINTS SHALL BE PROVIDED AS FOLLOWS:

a. MAXIMUM SPACING SHALL BE 30 FEET FOR CLAY PIPE AND 40 FEET FOR CAST IRON, REINFORCED CONCRETE AND ASBESTOS CEMENT PIPES.
b. JOINTS SHALL BE LOCATED AT THE ENDS OF PIPE BELLS.
c. JOINTS SHALL BE PLACED AT ALL CHANGES BETWEEN ANY TWO BEDDING INSTALLATION CASES.

▽ (4) NO CONSTRUCTION JOINTS OTHER THAN THOSE REQUIRED BY NOTE 11.C.(3) SHALL BE LOCATED ABOVE THE SPRING LINE OF THE PIPE UNLESS AUTHORIZED BY THE ENGINEER OR SPECIFIED ON THE PLANS.

▽ 12. BACKFILLING: (MODIFIES STANDARD SPECIFICATIONS SUBSECTION 306-1.3)

A. BACKFILL MAY CONSIST OF THE EXCAVATED SOIL EXCEPT THAT BACKFILL SHALL NOT CONTAIN ROCKS GREATER THAN 2 INCHES TO A DISTANCE OF 1 FOOT OVER THE TOP OF THE PIPE. THERE WILL BE NO SAND EQUIVALENT REQUIREMENT. IMPORTED COHESIONLESS SAND SHALL NOT BE USED AS A BACKFILL EXCEPT AS PROVIDED FOR IN NOTE 12C.

B. EXCEPT WHERE MECHANICAL COMPACTION IS REQUIRED BY THE PLANS OR SPECIAL PROVISIONS, TRENCH BACKFILL SHALL BE JETTED. FLOODING OR PONDING IS PROHIBITED. THE UPPER 3 FEET OF BACKFILL IN STREETS SHALL EITHER BE JETTED AND ALLOWED TO DRAIN TO PROVIDE A FIRM AND UNYIELDING SUBGRADE OR SHALL BE MECHANICALLY COMPACTED.

C. WHERE MECHANICAL COMPACTION IS SPECIFIED, DAMPENED SAND SHALL BE USED AS BACKFILL TO ONE FOOT OVER THE TOP OF THE PIPE. AFTER DENSIFYING THE SAND BY JETTING, THE REMAINDER OF THE BACKFILL SHALL BE MECHANICALLY COMPACTED. ALL MECHANICALLY COMPACTED BACKFILL SHALL BE COMPACTED TO 90% RELATIVE COMPACTION.

SUBSECTION 306-1.3.2 OF THE STANDARD SPECIFICATIONS IS MODIFIED AS FOLLOWS:

WHERE OTHER TYPES OF IMPACT EQUIPMENT APPROVED BY THE ENGINEER ARE USED OVER SUCH PIPE, THE COMPACTIVE EFFORT PER BLOW SHALL NOT EXCEED THE FOLLOWING LIMITS UNLESS CASE 5 BEDDING IS USED, IN WHICH CASE THE PERMITTED EFFORT MAY BE TWICE THE TABULATED VALUES:

MAXIMUM COMPACTIVE EFFORT (FT-LB PER BLOW)	MINIMUM THICKNESS COMPACTED MATERIAL ABOVE PIPE OR CONCRETE ENCASEMENT (FT)	MINIMUM AREA OF COMPACTING FOOT (SQ IN)
200	1.5	16
400	2	25
625	2.5	36
900	3	36
1,225	3.5	49
1,600	4	64
2,025	4.5	64
2,500	5	64
3,600	6	81
4,900	7	81
6,400	8	100
8,100	9	100
10,000	10	144
12,100	11	144
14,400	12	144
16,900	13	144
19,600	14	144
22,500	15	144
100 x (FT COVER)^2	OVER 15	196

D. BACKFILLING OVER CONCRETE BEDDING (MODIFIES STANDARD SPECIFICATIONS SUBSECTION 306-1.3.1):

BACKFILL MAY BE PLACED IMMEDIATELY AFTER PLACEMENT OF CONCRETE BEDDING, SUBJECT TO THE FOLLOWING CONDITIONS AND RESTRAINTS:

(1) BACKFILL SHALL BE PLACED WITHIN 1 HOUR OF PLACING THE CONCRETE BEDDING AND IS LIMITED TO 10 FEET ABOVE THE TOP OF THE PIPE. WATER DENSIFICATION OF THE INITIAL 10 FEET OF BACKFILL SHALL NOT BE PERMITTED SOONER THAN 12 HOURS FOLLOWING CONCRETE PLACEMENT. ADDITIONAL BACKFILL SHALL NOT BE PLACED UNTIL THE MINIMUM ELAPSED TIME INDICATED IN THE "CONCRETE CLASS USE TABLE", STANDARD SPECIFICATIONS SUBSECTION 201-1.1.2.

(2) EXCEPT FOR THE AREA BELOW THE PIPE INDICATED ON CASE 5 BEDDING INSTALLATION, THE CONCRETE SHALL NOT CONTAIN ACCELERATING ADMIXTURE.

(3) THE CONCRETE BEDDING SHALL BE COVERED WITH A MINIMUM 4 MIL PLASTIC MEMBRANE TO PREVENT CONTAMINATION BY THE BACKFILL.

(4) THE CONCRETE BEDDING SHALL BE INCREASED AT LEAST AN ADDITIONAL 2 INCHES IN DEPTH.

(5) BACKFILL SHALL BE PLACED IN A MANNER WHICH WILL NOT DISTURB OR DISPLACE THE CONCRETE (SUCH AS "TUMBLING" IT DOWN THE SLOPE OF THE MATERIAL ALREADY IN PLACE IN THE TRENCH).

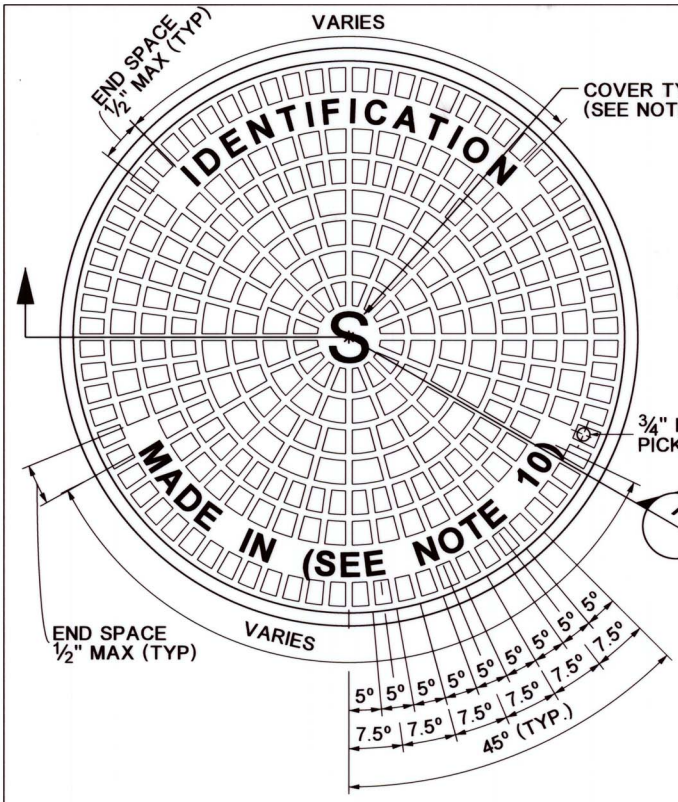

PLAN - TOP OF COVER

(TRAFFIC SIDE)

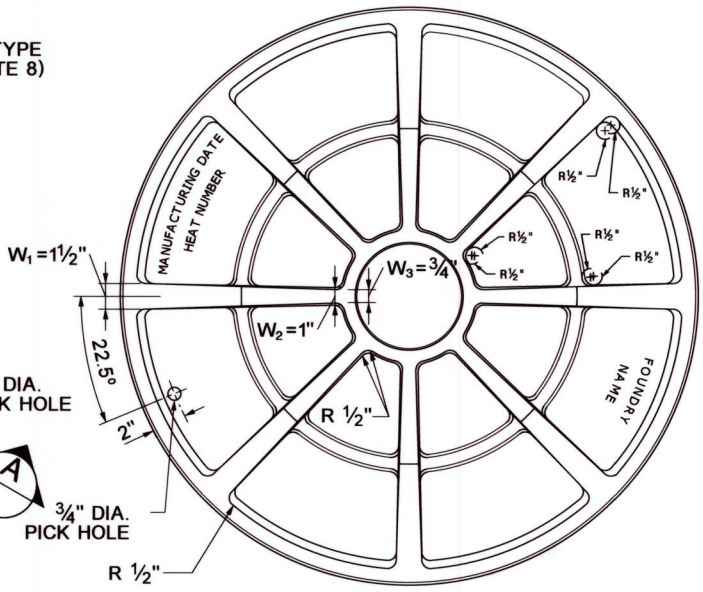

PLAN - BOTTOM OF COVER

(SOFFIT / UNDERSIDE)

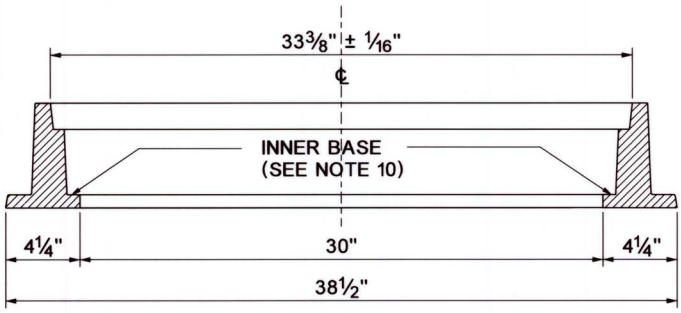

SECTION THRU FRAME

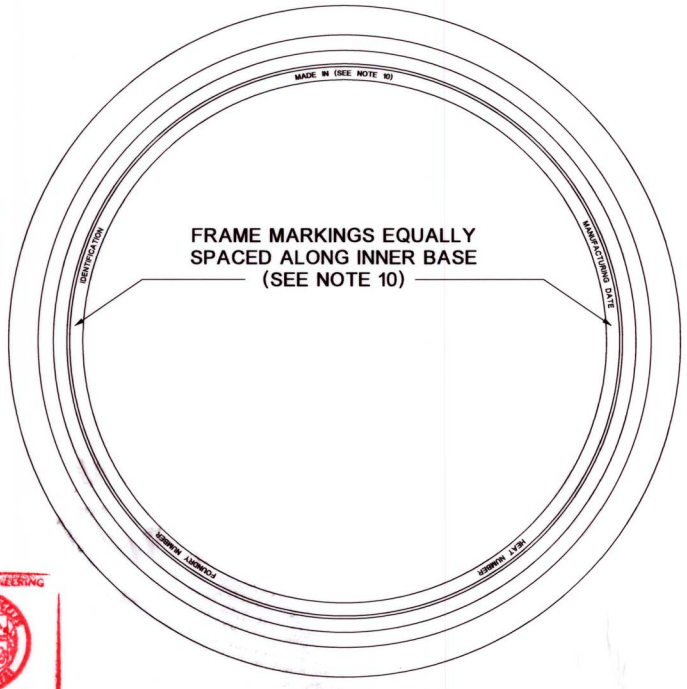

PLAN - TOP OF FRAME

MACHINE FINISH

BUREAU OF ENGINEERING
OFFICIAL RECORD

BUREAU OF ENGINEERING | DEPARTMENT OF PUBLIC WORKS | CITY OF LOS ANGELES

MAINTENANCE HOLE FRAME AND COVER 30-INCH

STANDARD PLAN
S-283-3

PREPARED	SUBMITTED	APPROVED
JONATHAN DE LEON BUREAU OF ENGINEERING CHECKED RAFFI A. MASSABKI, P.E. BUREAU OF ENGINEERING	6/16/11 SAMARA ALI-AHMAD, P.E. DATE ENGINEER OF DESIGN 6/16/11 KENNETH R. REDD, P.E. DATE DEPUTY CITY ENGINEER	6-16-11 GARY LEE MOORE, P.E. DATE CITY ENGINEER

REGISTERED PROFESSIONAL ENGINEER
GARY LEE MOORE
No. C-49446
Exp. 9.30.12
CIVIL
STATE OF CALIFORNIA

SUPERSEDES	REFERENCES
B-4119	S - 601

VAULT INDEX NUMBER B - 4665

SHEET 1 OF 3 SHEETS

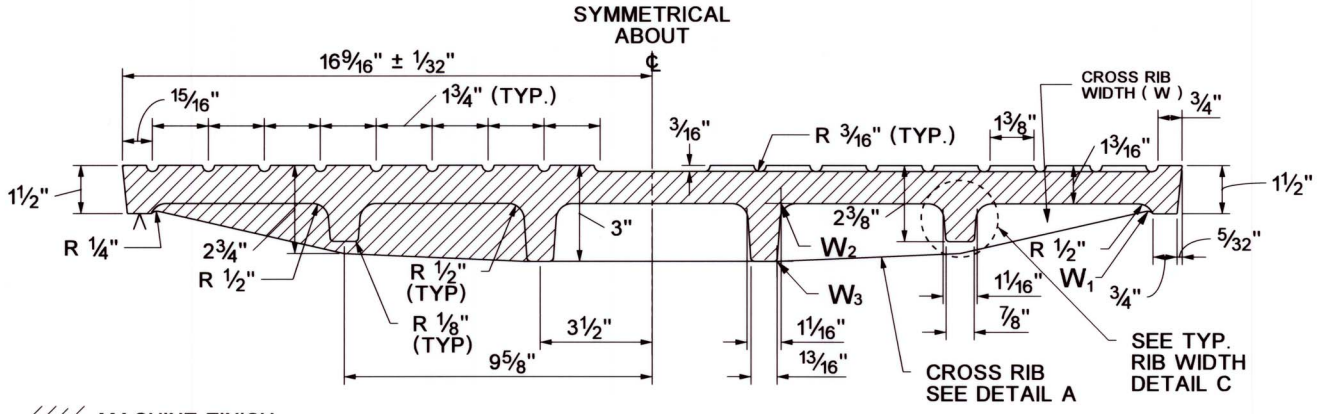

SECTION " A " COVER

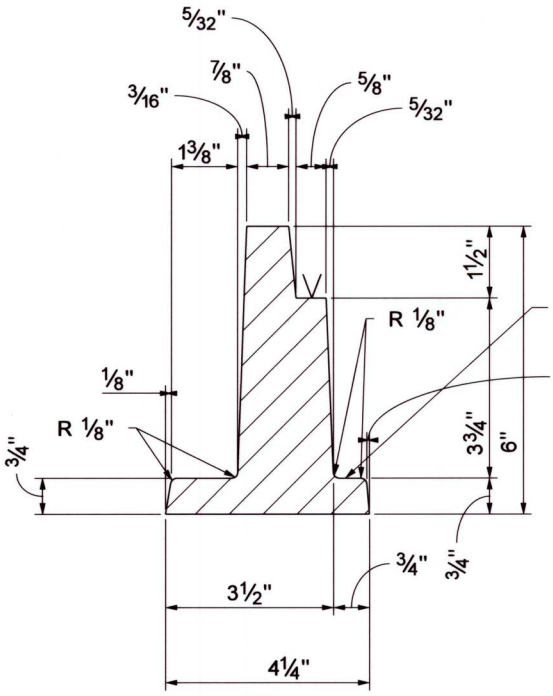

DETAIL OF FRAME

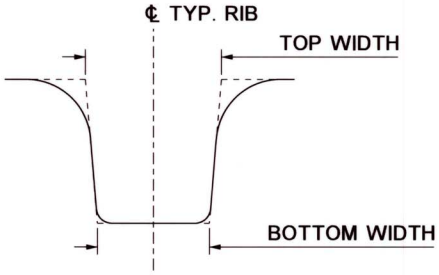

DETAIL C

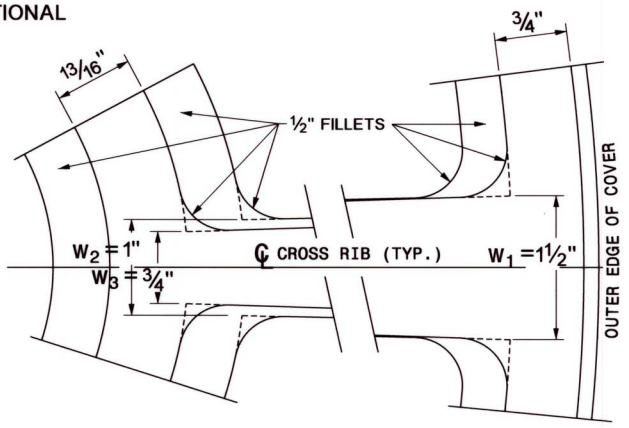

DETAIL A - CROSS RIB

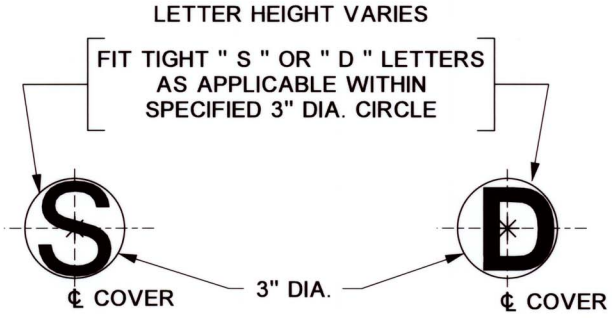

DETAIL B



B - 4665

NOTES

GENERAL

1. MAINTENANCE HOLE FRAME AND COVER SHALL CONFORM TO THE STANDARD SPECIFICATIONS, BROWN BOOK AND THE CITY OF LOS ANGELES STANDARD PLAN S-601 LATEST EDITION. IN CASE OF A CONFLICT BETWEEN THIS STANDARD PLAN "S-283-3" AND OTHER CITY OF LOS ANGELES STANDARD PLANS INCLUDING BUT NOT LIMITED TO STANDARD PLAN "S-601" LATEST EDITION, THIS STANDARD PLAN "S-283-3" SHALL GOVERN.

2. MAINTENANCE HOLE FRAME AND COVER SHALL BE CAST IRON CONFORMING TO SECTION 206-3 OF THE STANDARD SPECIFICATIONS AND SHALL RECEIVE AN ASPHALTIC COATING, AFTER FABRICATION EXCEPT MACHINED SURFACES, CONFORMING TO SECTION 206-3.6 OF THE STANDARD SPECIFICATIONS.

3. ALL HOLES IN CAST IRON SHALL BE DRILLED AFTER CASTING OR PLUGGED PRIOR TO CASTING. THEY SHALL NOT BE PUNCHED.

4. WEIGHT OF MAINTENANCE HOLE FRAME AND COVER SHALL BE PER THE FOLLOWING TABLE :

WEIGHT RANGE	MINIMUM		MAXIMUM
FRAME	305 LBS	-	335 LBS
COVER	305 LBS	-	335 LBS

TESTING

5. MAINTENANCE HOLE FRAME AND COVER SHALL BE TESTED FOR ACCURATE FIT, AND MARKED IN SETS PRIOR TO DELIVERY TO THE JOB SITE.

6. MAINTENANCE HOLE FRAME AND COVER SHALL BE TESTED FOR STRUCTURAL AND IMPACT LOADING, DEFLECTION, LONG TERM ABRASION AND SLIP RESISTANCE IN ACCORDANCE WITH THE CITY OF LOS ANGELES STANDARD PLAN S-601, LATEST EDITION.

7. PROVIDE FABRICATION / BATCH INSPECTION PER SUBSECTION 206-3.2 OF THE STANDARD SPECIFICATION. THE PROOF-LOAD FOR TEST METHOD B, SUBSECTION 206-3.2 OF THE STANDARD SPECIFICATION IS 52,000 LBS.

MARKINGS

8. MAINTENANCE HOLE COVERS FOR USE ON SEWER STRUCTURES SHALL BEAR THE LETTER "S" AND ON STORM DRAIN STRUCTURES THE LETTER "D" LOCATED AT THE CENTER OF THE COVER. SEE DETAIL B ON SHEET 2.

9. MARKINGS LOCATED ON FRAME AND TOP OF COVER SHALL BE FLUSH WITH FINISHED SURFACE. MARKINGS LOCATED ON THE COVER SOFFIT SHALL BE RAISED ABOVE THE ADJACENT FINISHED SURFACE. ETCHING, DIE STAMPING, ENGRAVING OR WELDING ON MARKINGS WILL NOT BE ACCEPTED.

10. COVER TYPE, IDENTIFICATION, FOUNDRY, HEAT NUMBER, MANUFACTURING DATE AND THE ENGLISH NAME OF COUNTRY OF ORIGIN PRECEDED BY "MADE IN" MARKINGS SHALL BE PER THE FOLLOWING TABLE. ALL MARKINGS SHALL BE RAISED, FLAT FACE LETTERS MARKED BY MEANS OF CAST-IN-MOLD LETTERING.

COVER		MARKINGS	FRAME
TOP SURFACE (Traffic side)	**BOTTOM SURFACE** (Soffit/ Underside)	**DESCRIPTION, LOCATION AND SIZE *** (**Height** x Line Width x Depth)	**INNER BASE** (Exposed side)
		IDENTIFICATION	
1-1/2" X 1/4" X 3/16"		" **PRIVATE** " or " **CITY OF LOS ANGELES** "	**5/16"** X 3/16" X 3/16"
		COUNTRY OF ORIGIN	
1-1/2" X 1/4" X 3/16"		**MADE IN** " **THE ENGLISH NAME OF COUNTRY OF ORIGIN** "	**5/16"** X 3/16" X 3/16"
		TYPE of MAINTENANCE HOLE	
Height X 1/4" X 3/16" (See Detail B)		" **S** " for Sewer MH " **D** " for Storm Drain MH	
		OTHER	
	5/16" X 3/16" X 3/16"	**FOUNDRY NAME** **MANUFACTURING DATE** and/ **HEAT NUMBER**	**5/16"** X 3/16" X 3/16"

*** Adjust spacing, kerning and/or mortising of letters as needed such that letters appear evenly spaced. The minimum spacing between words shall be ½ of the letter height specified.**

BUREAU OF ENGINEERING
CITY OF LOS ANGELES
FOUNDED 1781
OFFICIAL RECORD

B - 4665

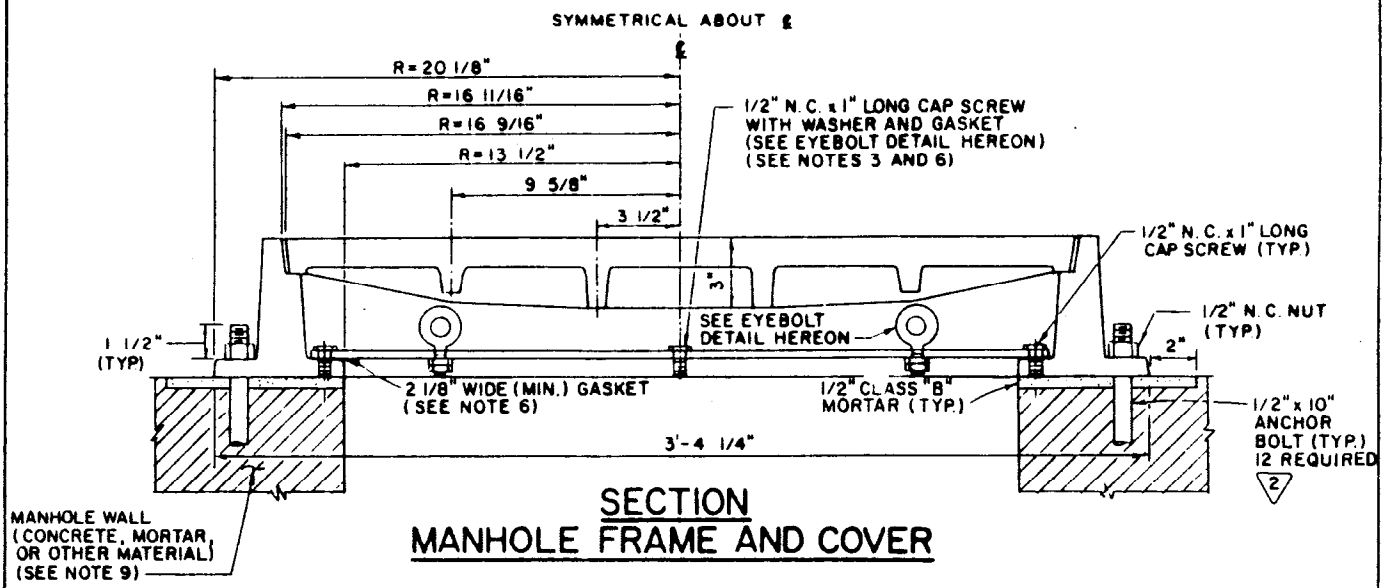

SECTION
MANHOLE FRAME AND COVER

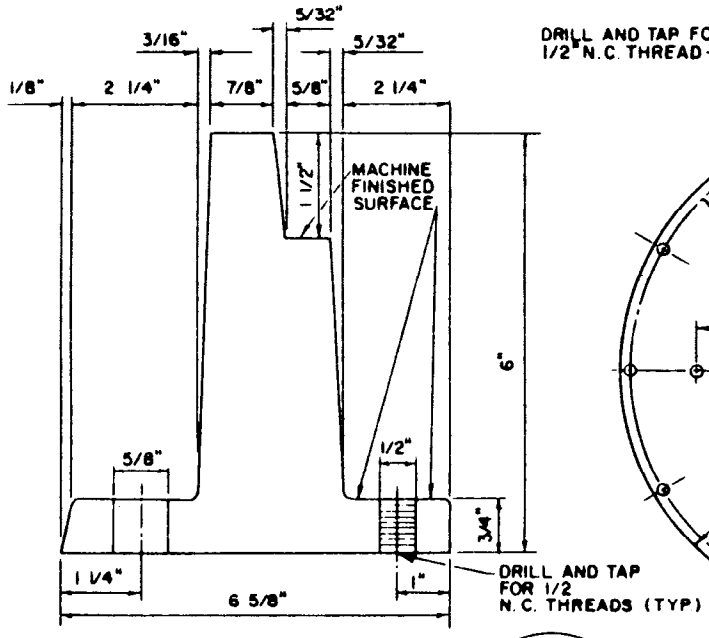

DETAIL OF FRAME

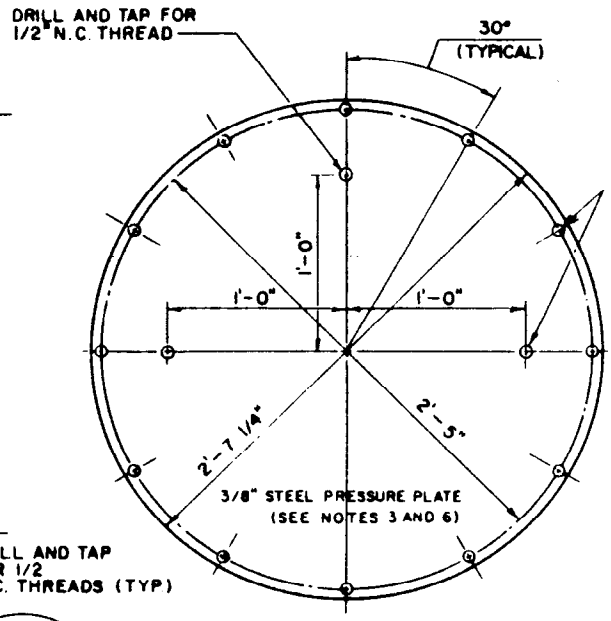

PRESSURE PLATE

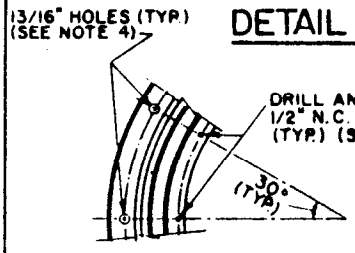

DETAIL OF BOLT HOLE SPACING IN FRAME

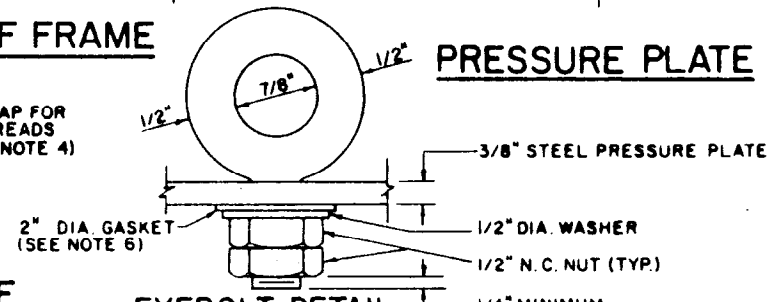

EYEBOLT DETAIL (2 REQUIRED)

DEPARTMENT OF PUBLIC WORKS

BUREAU OF ENGINEERING — CITY OF LOS ANGELES

PRESSURE MANHOLE FRAME AND COVER

STANDARD PLAN S-284-2

SUBMITTED Aug 22 1984

ENGINEER OF DESIGN

DEPUTY ENGINEER

APPROVED 3 1984

CITY ENGINEER

DESIGNED BY	DRAWN BY	CHECKED BY
LIE	RGM	LJM

NO	DATE	DESCRIPTION	ENG'R OF DESIGN	CITY ENG'R
2	9/10/82	CHANGED ANCHOR BOLT CALLOUT		

REVISIONS

SUPERSEDES	REFERENCES
B-1842 B-4011 B-4029	S-283

VAULT INDEX NUMBER B-4050

SHEET 1 OF 2 SHEETS

NOTES:

1. EXCEPT AS OTHERWISE INDICATED HEREON, THE MANHOLE FRAME AND COVER SHALL CONFORM TO STANDARD PLAN S-283, MANHOLE FRAME AND COVER, 30 INCH. THE WEIGHT REQUIREMENT FOR THE FRAME INDICATED ON STANDARD PLAN S-283 SHALL NOT APPLY.
2. MANHOLE FRAME AND COVER SHALL BE CAST IRON CONFORMING TO SECTION 206-3 OF THE STANDARD SPECIFICATIONS.
3. THE PRESSURE PLATE SHALL BE STEEL CONFORMING TO ASTM A-36, AND SHALL BE GALVANIZED AFTER FABRICATION, BUT BEFORE INSTALLATION OF ANY HARDWARE.
4. CAP SCREWS AND EYEBOLTS, INCLUDING WASHERS AND NUTS ATTACHED THERETO, SHALL BE FABRICATED FROM ANY SERIES 300 STAINLESS STEEL.
5. UNLESS OTHERWISE INDICATED, ALL STEEL HARDWARE SHALL CONFORM TO SECTION 206-1.2 OF THE STANDARD SPECIFICATIONS.
6. ALL STEEL, EXCEPT STAINLESS STEEL, SHALL BE GALVANIZED IN CONFORMANCE WITH SECTION 210-3 OF THE STANDARD SPECIFICATIONS AFTER FABRICATION.
7. ALL HOLES IN CAST IRON SHALL BE DRILLED AFTER CASTING OR PLUGGED PRIOR TO CASTING. THEY SHALL NOT BE PUNCHED.
8. ALL IRON CASTINGS SHALL RECEIVE AN ASPHALTIC COATING AFTER FABRICATION, CONFORMING TO SECTION 206-3.6 OF THE STANDARD SPECIFICATIONS.
9. GASKET MATERIAL SHALL BE 1/16 INCH THICK NEOPRENE RUBBER MEETING THE REQUIREMENTS OF SECTION 210-2.3.3 OF THE STANDARD SPECIFICATIONS. PRESSURE PLATE GASKET SHALL BE 2'-7-1/4" O.D.
10. ALL NUTS AND BOLTS SHALL BE TIGHTENED TO A MINIMUM TORQUE OF 25 FOOT-POUNDS.
11. MANHOLE FRAME AND COVER AND PRESSURE PLATE ASSEMBLY SHALL BE TESTED FOR ACCURATE FIT PRIOR TO DELIVERY TO JOBSITE AND MARKED IN SETS.

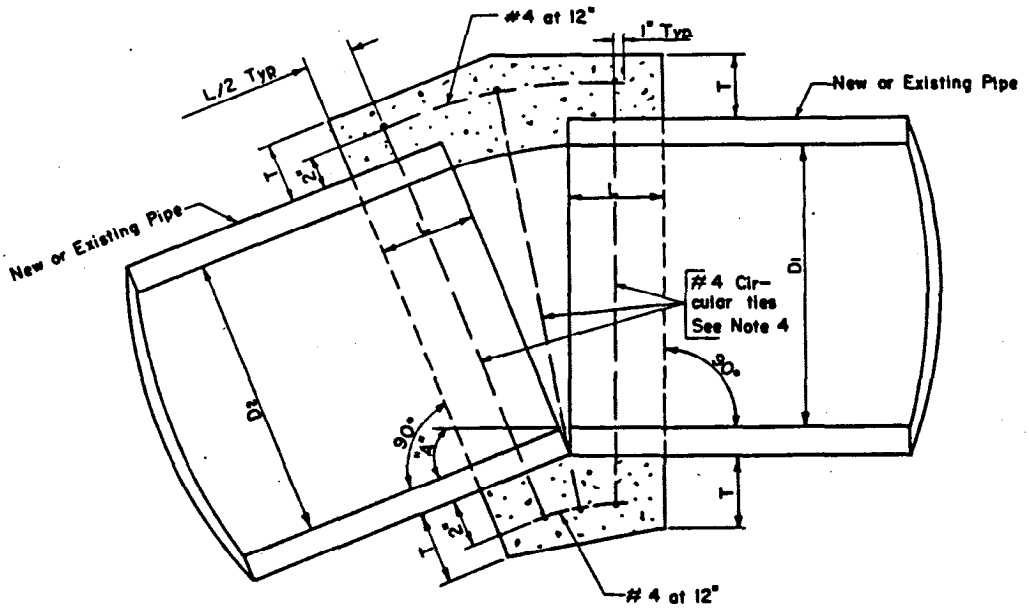

D	L	T	J
12"	12"	4"	1/16"
15"	12"	4"	1/16"
18"	12"	5"	1/16"
21"	12"	5"	1/4"
24"	12"	6"	1/4"
27"	12"	7"	1/4"
30"	12"	7"	5/16"
33"	18"	8"	5/16"
36"	18"	9"	5/16"
39"	18"	9"	5/16"
42"	18"	9"	5/16"
45"	18"	10"	5/16"
48"	18"	10"	3/8"
51"	18"	10"	3/8"
54"	18"	10"	3/8"
57"	18"	10"	3/8"
60"	21"	11"	3/8"
66"	21"	11"	3/8"

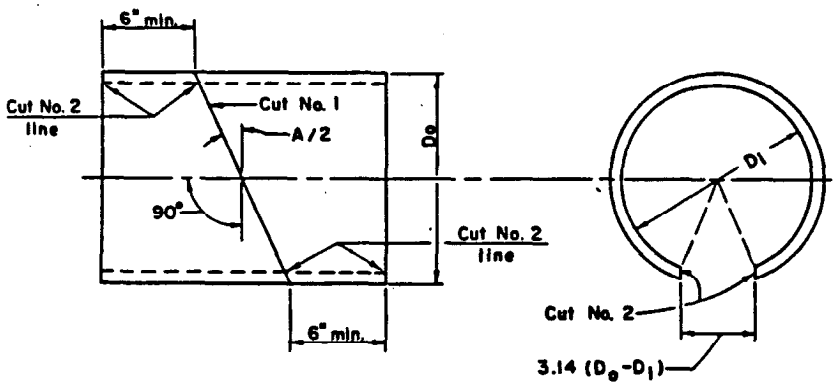

DETAIL "A"

(Sono-Tube, or equal, interior form)

CUT No. 1: Saw the tube at an angle of A/2 with the transverse plane. Reverse one section and tape both sections together forming the deflection angle A.

CUT No. 2: Saw the tube longitudinally removing a strip $3.14(D_o - D_i)$ inches wide on the side opposite the open joint. Bend the ends of the cut together and insert the tube in the pipe.

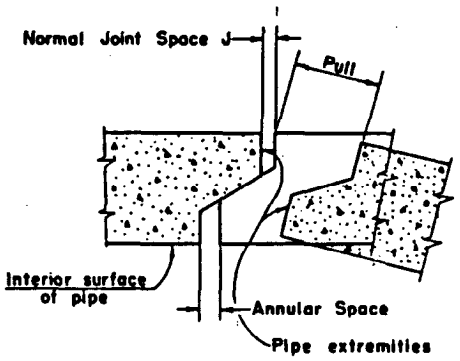

DETAIL "B"

TYPICAL JOINT FOR REINFORCED CONCRETE PIPE

DEPARTMENT OF PUBLIC WORKS

BUREAU OF ENGINEERING — CITY OF LOS ANGELES

CONCRETE COLLAR FOR STORM DRAIN PIPE

STANDARD PLAN S-333-0

SUBMITTED July 29 1971

Mark O'Rilla
DIVISION ENGINEER

Robert Lung
DEPUTY ENGINEER

APPROVED Sept 26 1971

Lyle S. Davies
CITY ENGINEER

DESIGNED BY	DRAWN BY	CHECKED BY
JPO	AKF	JPO

REVISIONS				
NO.	DATE	DESCRIPTION	DIV ENG'R.	CITY ENG'R.

REFERENCES

VAULT INDEX NUMBER B-3794

SHEET 1 OF 2 SHEETS

NOTES

1. A concrete collar is required if the permitted pull at the pipe joint is exceeded. Pulling of joints shall be limited to 3/4-inch from normal closure for pipe 36-inches or less in diameter and to 1-inch from normal closure for pipe 39-inches or more in diameter.

2. Concrete collars shall not be constructed on main line storm drain unless shown on the plans or ordered by the Engineer.

3. Reinforcing shall be used where the pipe diameter is greater than 21-inches and on all pipes where the space between the extremities (outermost elements) is 2 1/2-inches or larger.

4. CIRCULAR TIES:

PIPE DIAMETER	SPACE BETWEEN PIPE EXTREMITIES	NO. OF CIRCULAR TIES
21" or less	2 1/2"	3
24" to 30"	2 1/2" or less	3
33" to 57"	2 1/2" or less	4
60" to 66"	2 1/2" or less	5

Where the space between the pipe extremities exceeds 2 1/2-inches, the number of circular ties shall be increased to maintain an approximate spacing of 6-inches center to center.

5. Concrete shall be Class 6.0-C-3000.

6. For pipe larger than 66-inches in diameter a special collar detail shall be delineated on the project plans.

7. Where the pipe is 21-inches or less in diameter, an interior form of unsealed Sono-Tube, or equal, shall be used to provide a smooth interior joint. The paper form may be left in place. When the pipe is 24-inches or larger a removable interior form shall be used or the interior joint shall be completely filled with mortar and neatly pointed.

8. Where pipes of different diameters are joined with a concrete collar, L and T shall be those of the larger pipe. A concrete collar shall not be constructed connecting a larger diameter pipe upstream to a smaller diameter pipe downstream unless shown on the improvement plans or ordered by the Engineer.

9. The value for angle A shall be shown on the improvement plans.

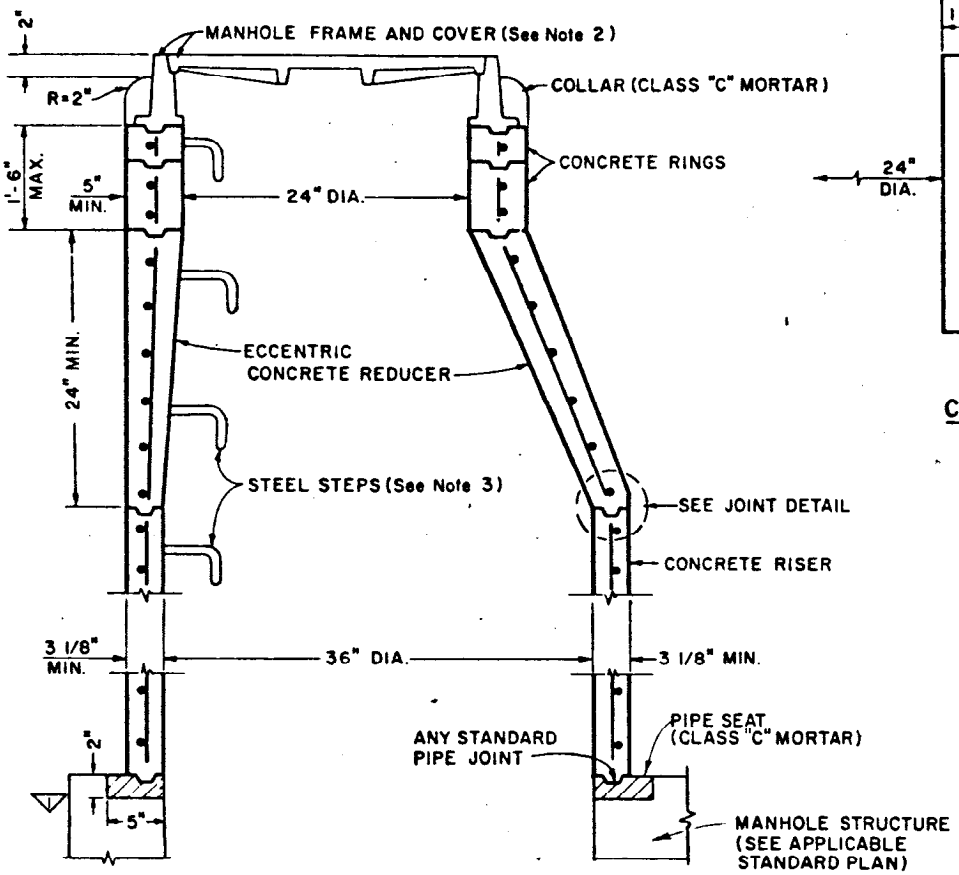

VERTICAL SECTION OF MANHOLE SHAFT

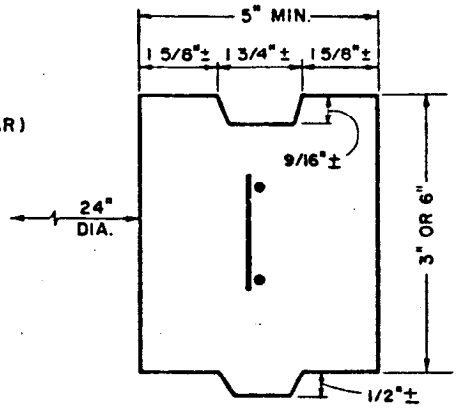

CROSS SECTION OF CONCRETE RING

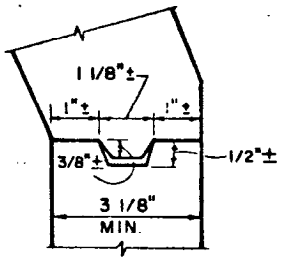

JOINT DETAIL

NOTES

1. THIS STRUCTURE SHALL CONFORM TO ASTM C-478.
2. MANHOLE FRAME AND COVER SHALL CONFORM TO STANDARD PLAN S-281.
3. STEPS SHALL CONFORM TO STANDARD PLAN S-348
4. ALL JOINTS SHALL BE SEALED BY FILLING ANNULAR SPACE WITH CLASS "C" MORTAR. THE INSIDE OF THE SHAFT AT EACH JOINT SHALL BE WIPED CLEAN OF EXCESS MORTAR.
5. ▽ THE VERTICAL SIDE OF THE MANHOLE SHAFT AND THE ECCENTRIC REDUCER SHALL BE LOCATED ABOVE AND IN LINE WITH THE SIDE OF THE CONDUIT BELOW THE MANHOLE.

TYPE I

REINFORCED PRECAST CONCRETE MANHOLE SHAFT

DEPARTMENT OF PUBLIC WORKS

BUREAU OF ENGINEERING — CITY OF LOS ANGELES

PRECAST CONCRETE MANHOLE SHAFT

STANDARD PLAN S-387-1

SUBMITTED June 19, 1979
ENGINEER OF DESIGN
DEPUTY ENGINEER

APPROVED June 27, 1979
CITY ENGINEER

DESIGNED BY	DRAWN BY	CHECKED BY
LIE	KY	LJM

NO	DATE	DESCRIPTION	ENGR OF DESIGN	CITY ENGR
▽	2/3/760	MODIFIED NOTE 5, BASE SECTION		

SUPERSEDES	REFERENCES
B-3975	S-281 S-348

VAULT INDEX NUMBER B-4010

SHEET 1 OF 2 SHEETS

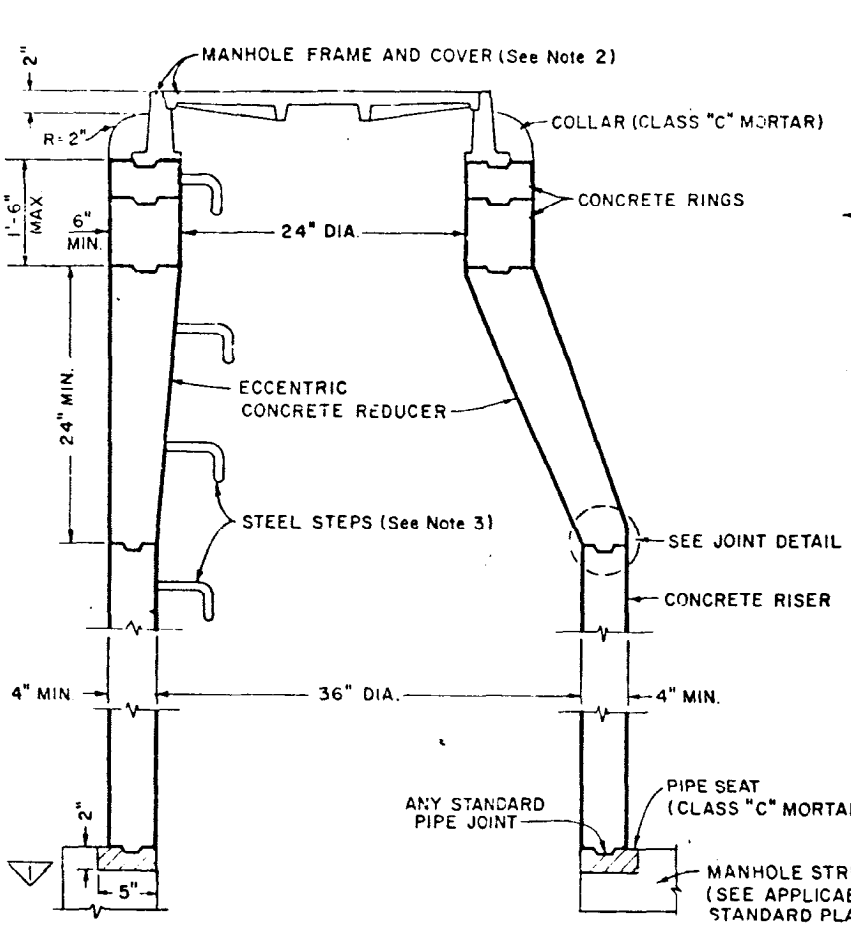

VERTICAL SECTION OF MANHOLE SHAFT

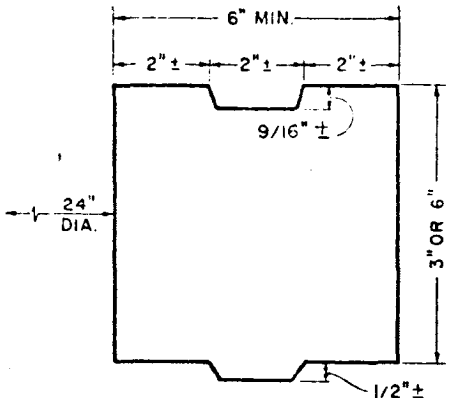

CROSS SECTION OF CONCRETE RING

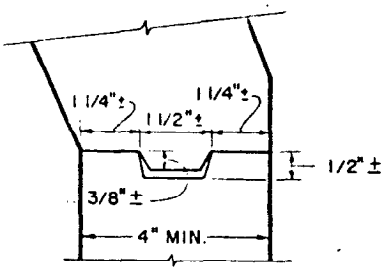

JOINT DETAIL

NOTES

1. THIS STRUCTURE SHALL CONFORM TO ASTM C-478 EXCEPT THE REINFORCEMENT REQUIRED THEREIN MAY BE OMITTED.
2. MANHOLE FRAME AND COVER SHALL CONFORM TO STANDARD PLAN S-281.
3. STEPS SHALL CONFORM TO STANDARD PLAN S-348.
4. ALL JOINTS SHALL BE SEALED BY FILLING ANNULAR SPACE WITH CLASS "C" MORTAR. THE INSIDE OF THE SHAFT AT EACH JOINT SHALL BE WIPED CLEAN OF EXCESS MORTAR.
5. THE VERTICAL SIDE OF THE MANHOLE SHAFT AND THE ECCENTRIC REDUCER SHALL BE LOCATED ABOVE AND IN LINE WITH THE SIDE OF THE CONDUIT BELOW THE MANHOLE.

TYPE II

UNREINFORCED PRECAST CONCRETE MANHOLE SHAFT

STANDARD PLAN NO. S-387-1	VAULT INDEX NUMBER E-4010	SHEET 2 OF 2 SHEETS

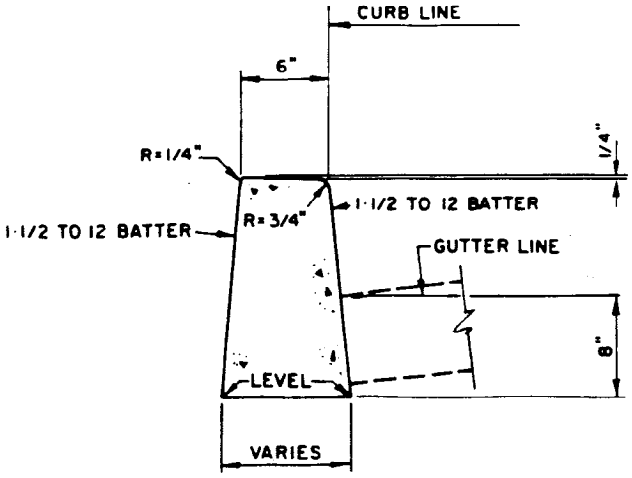

▽2 TYPE A CURB

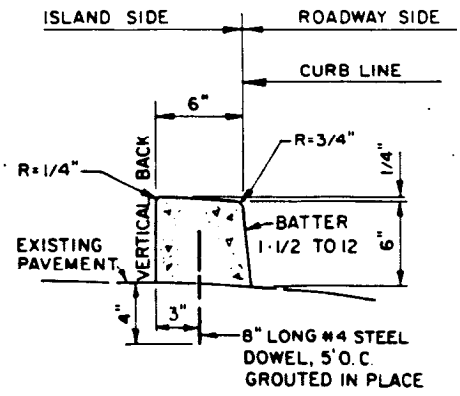

TYPE C DOWELED CURB

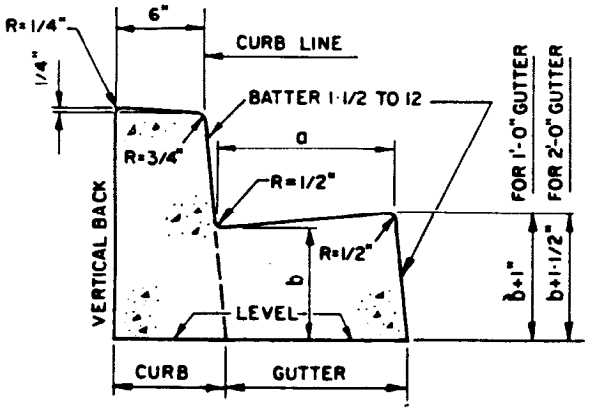

TYPE C
INTEGRAL CURB AND GUTTER

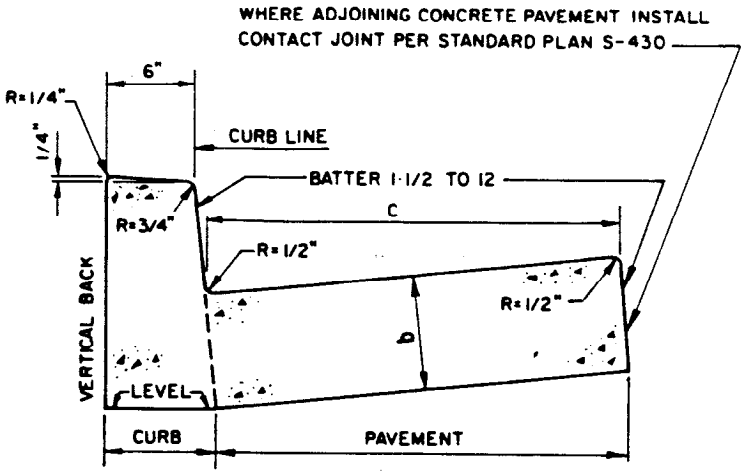

TYPE C INTEGRAL CURB AND CONCRETE PAVEMENT

BARRIER CURBS

DEPARTMENT OF PUBLIC WORKS

BUREAU OF ENGINEERING — CITY OF LOS ANGELES

TYPES OF CURB AND GUTTER

STANDARD PLAN
S-410-2

SUBMITTED June 28, 1989
ENGINEER OF DESIGN
DEPUTY ENGINEER

APPROVED July 21, 1989
CITY ENGINEER

DESIGNED BY	DRAWN BY	CHECKED BY
RAB	RGM	RGS

REGISTERED PROFESSIONAL ENGINEER
RALPH E. VALENZUELA
Exp 3/31/91
No 12450
CIVIL
STATE OF CALIFORNIA

▽ REVISIONS	
NO.	DESCRIPTION
2	REVISED TYPE A CURB AND ALL NOTES. DELETED TYPE B CURB. ADDED TYPE E AND F CURB AND GUTTER.

SUPERSEDES	REFERENCES

VAULT INDEX NUMBER B-4102

SHEET 1 OF 4 SHEETS

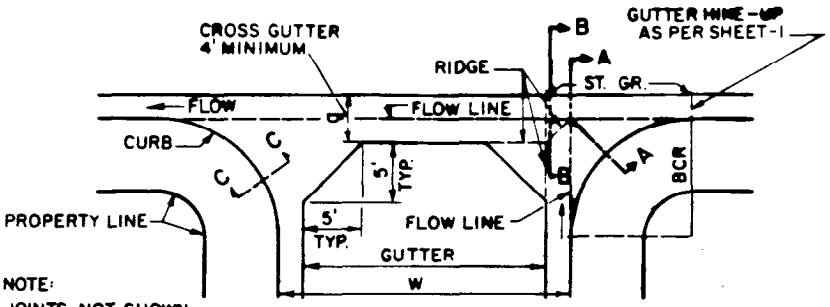

TYPICAL INTERSECTION GUTTER PLAN

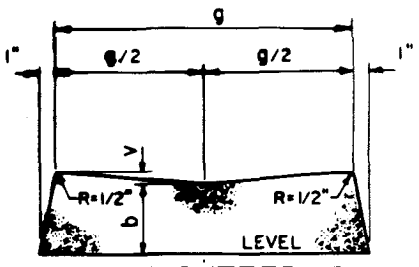

CROSS GUTTER OR LONGITUDINAL GUTTER

CROSS GUTTER		LONGITUDINAL GUTTER	
g	v	g	v
		2'	3/4"
4'	3/8"	4'	1-1/2"
4'+TO 6'	5/8"	4'+TO 6'	2"

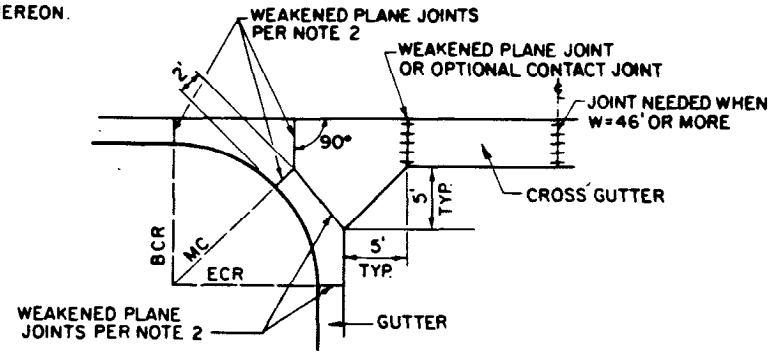

TYPICAL JOINT PLAN

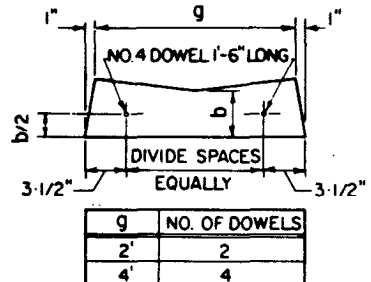

g	NO. OF DOWELS
2'	2
4'	4
6'	6

DOWELS FOR GUTTER CONTACT JOINTS

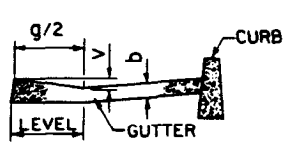

SECTION A-A

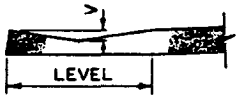

SECTION B-B

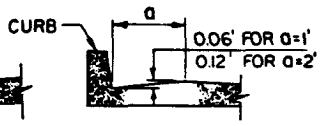

SECTION C-C

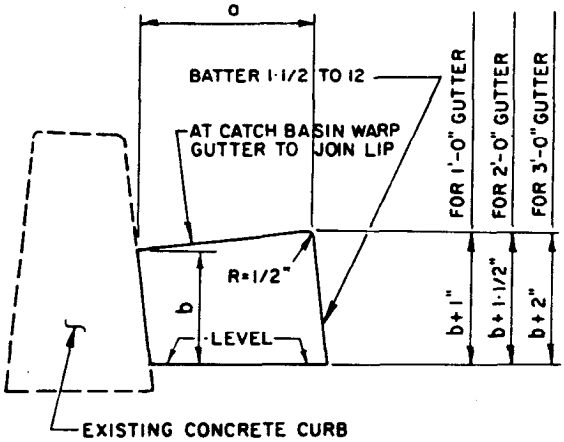

CONCRETE GUTTER

GUTTERS

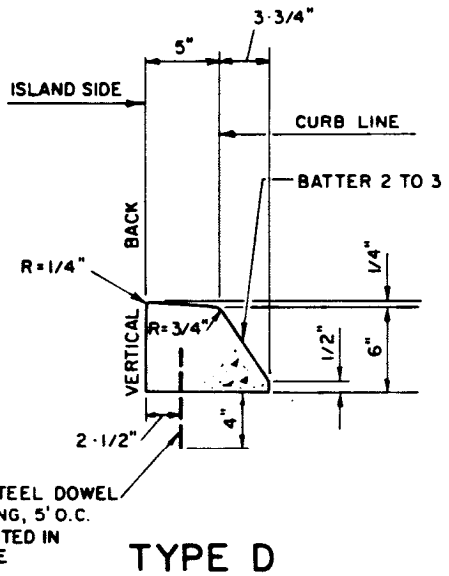

TYPE D
DOWELED CURB

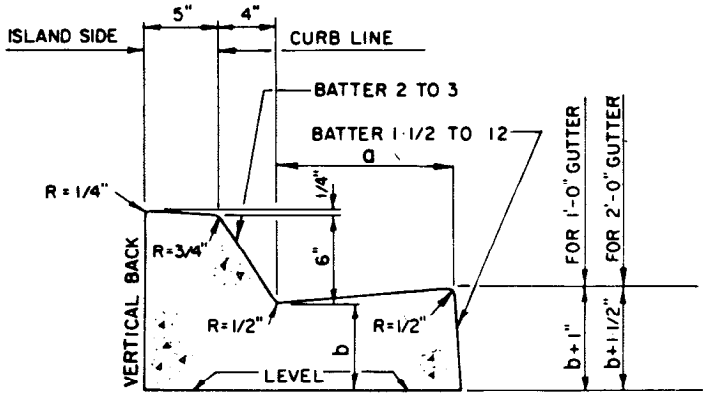

TYPE D
INTEGRAL CURB AND GUTTER

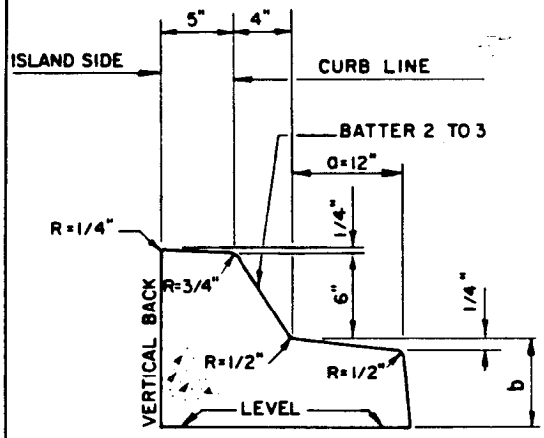

② TYPE E
INTEGRAL CURB AND GUTTER

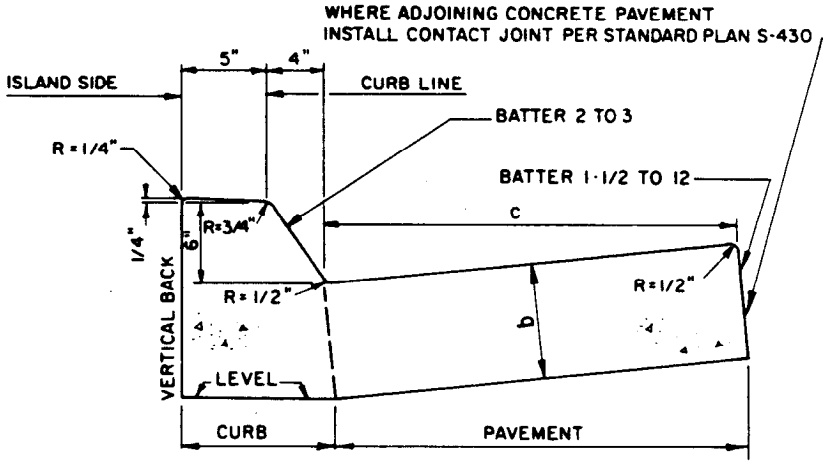

② TYPE F
INTEGRAL CURB AND CONCRETE PAVEMENT

MOUNTABLE CURBS

NOTES

2 1. CURBS AND GUTTERS SHALL BE CONSTRUCTED OF PCC CONFORMING TO SUBSECTION 201-1 AND 303-5.

2 2. WEAKENED-PLANE JOINTS IN CURB AND GUTTER SHALL CONFORM TO STANDARD SPECIFICATIONS FOR PUBLIC WORKS CONSTRUCTION SUBSECTION 303-5.4.3 (C) OR SHALL BE 1-1/2 INCH DEEP SAWCUTS MADE WITHIN 10 TO 24 HOURS AFTER CONCRETE IS PLACED AND SHALL BE PLACED AT LOCATIONS SHOWN ON THE TYPICAL JOINT PLAN HEREON AND AT REGULAR INTERVALS NOT EXCEEDING 20 FEET BETWEEN RETURNS. THEY SHALL ALSO BE LOCATED AT THE E.C. OF ALLEY RETURNS WHERE WALK IS FULL WIDTH. WHERE CROSS GUTTER TRANSITION EXTENDS BEYOND THE CURB RETURN, THE JOINTS SHALL NORMALLY BE PLACED AT THE ENDS OF THE TRANSITION. HOWEVER, JOINTS SHALL ALSO BE PLACED AT THE ENDS OF THE CURB RETURN WHEN THE CROSS GUTTER TRANSITION EXTENDS MORE THAN 5 FEET BEYOND THE RETURN. WHERE GUTTER IS ADJACENT TO CONCRETE PAVEMENT, THE JOINT SHALL BE ALIGNED WITH THE PAVEMENT JOINTS WHERE PRACTICAL.

2 3. A CONTACT JOINT SHALL BE PLACED IN LONGITUDINAL ALLEY GUTTER WHERE IT JOINS CONCRETE ALLEY INTERSECTION.

2 4. CURBS CONSTRUCTED ADJACENT TO EXISTING CURBS HAVING A BATTER OTHER THAN SPECIFIED FOR THE NEW CURBS SHALL BE CONSTRUCTED WITH A TRANSITION SECTION BETWEEN THE CURBS HAVING DIFFERENT BATTERS. THE MINIMUM TRANSITION LENGTH SHALL BE:

TYPE OF CURB	MINIMUM TRANSITION LENGTH
BARRIER CURB TO BARRIER CURB	5'
MOUNTABLE CURB TO MOUNTABLE CURB	10'
BARRIER CURB TO MOUNTABLE CURB	20'

2 5. THE DOWELS IN THE DOWELED CURB MAY BE DELETED AND THE CURB BONDED TO THE SURFACE BY A BONDING AGENT APPROVED BY THE ENGINEER.

2 6. MOUNTABLE CURBS SHALL NOT BE USED ADJACENT TO PEDESTRIAN WALKWAYS.

2 7. DIMENSIONS: (UNLESS OTHERWISE SPECIFIED)

a=2'-0"
b=0'-6"
c=10'-0"

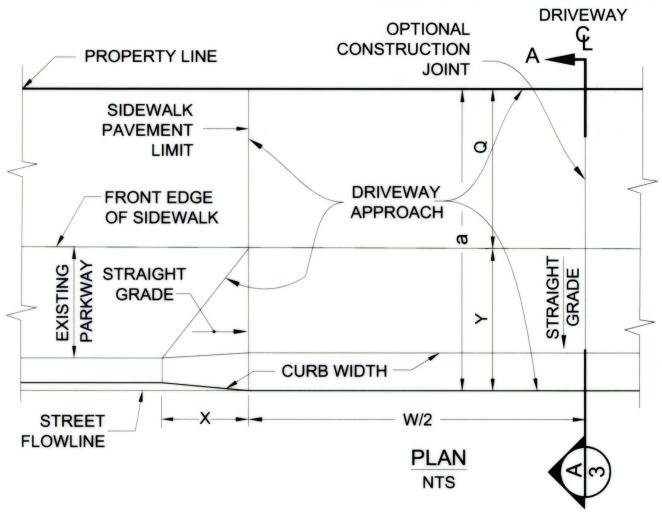

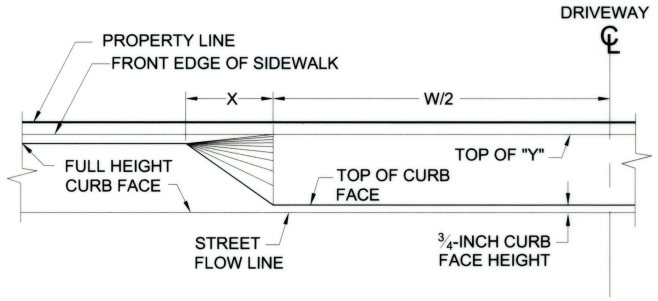

HALF DRIVEWAY APPROACH ELEVATION
NTS

CASE 1

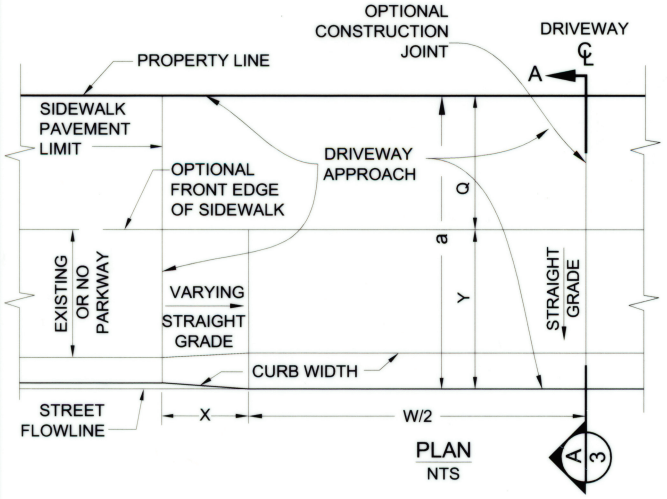

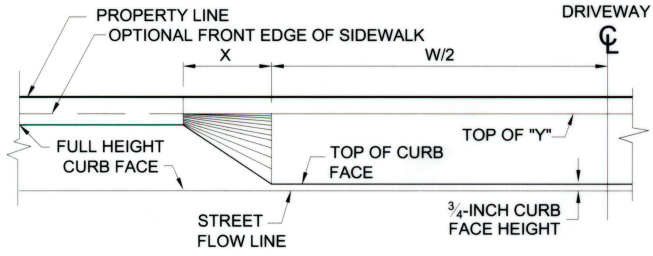

HALF DRIVEWAY APPROACH ELEVATION
NTS

CASE 2

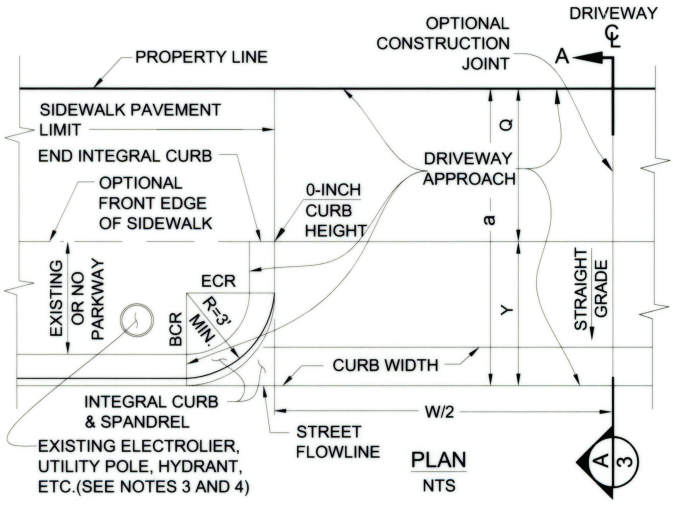

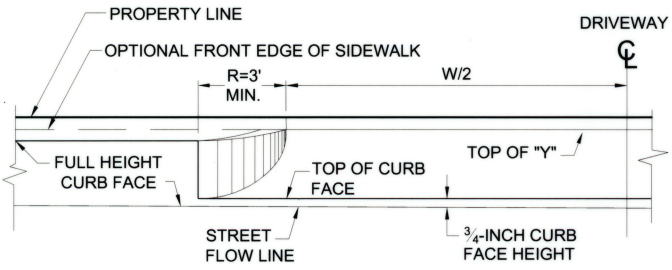

HALF DRIVEWAY APPROACH ELEVATION
NTS

CASE 3

BUREAU OF ENGINEERING
CITY OF LOS ANGELES
FOUNDED 1781
OFFICIAL RECORD

BUREAU OF ENGINEERING

DEPARTMENT OF PUBLIC WORKS

CITY OF LOS ANGELES

DRIVEWAYS

STANDARD PLAN
S-440-4

PREPARED	SUBMITTED	APPROVED	SUPERSEDES	REFERENCES
MARK CHMIELOWIEC, P.E. BUREAU OF ENGINEERING	6-24-14 SAMARA ALI-AHMAD, P.E. DATE ENGINEER OF DESIGN BUREAU OF ENGINEERING		B-3890	S-410 S-444
CHECKED RAFFI MASSABKI, P.E. BUREAU OF ENGINEERING	6/25/14 KENNETH REDD, P.E. DATE DEPUTY CITY ENGINEER	6-25-14 GARY LEE MOORE, P.E. DATE CITY ENGINEER		

REGISTERED PROFESSIONAL ENGINEER
GARY LEE MOORE
No. C-49446
Exp.
CIVIL
STATE OF CALIFORNIA

VAULT INDEX NUMBER: B - 4737

SHEET 1 OF 4 SHEETS

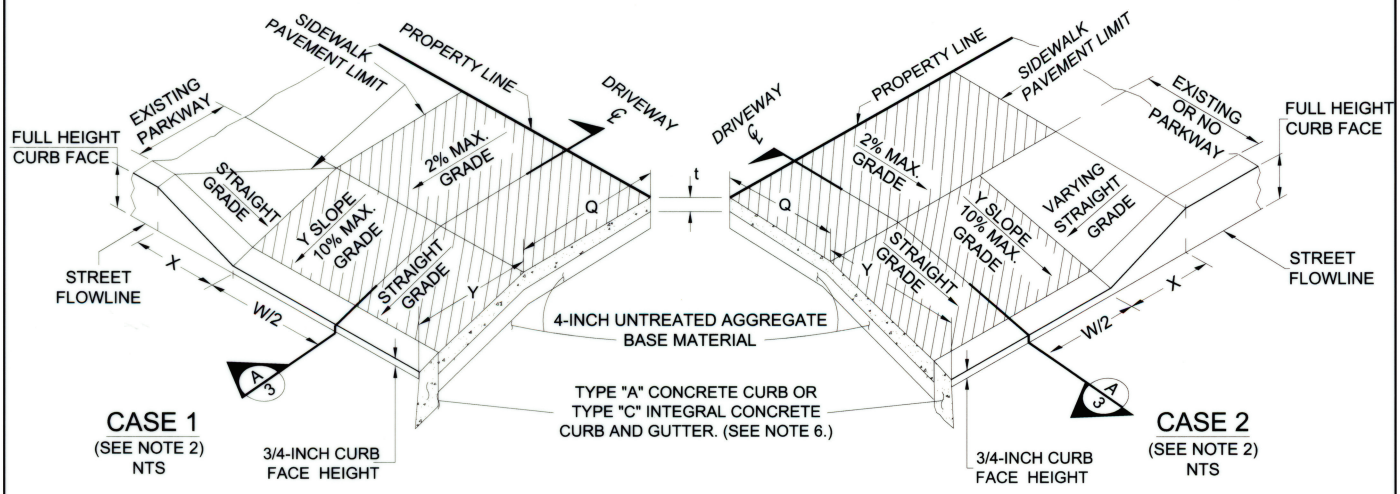

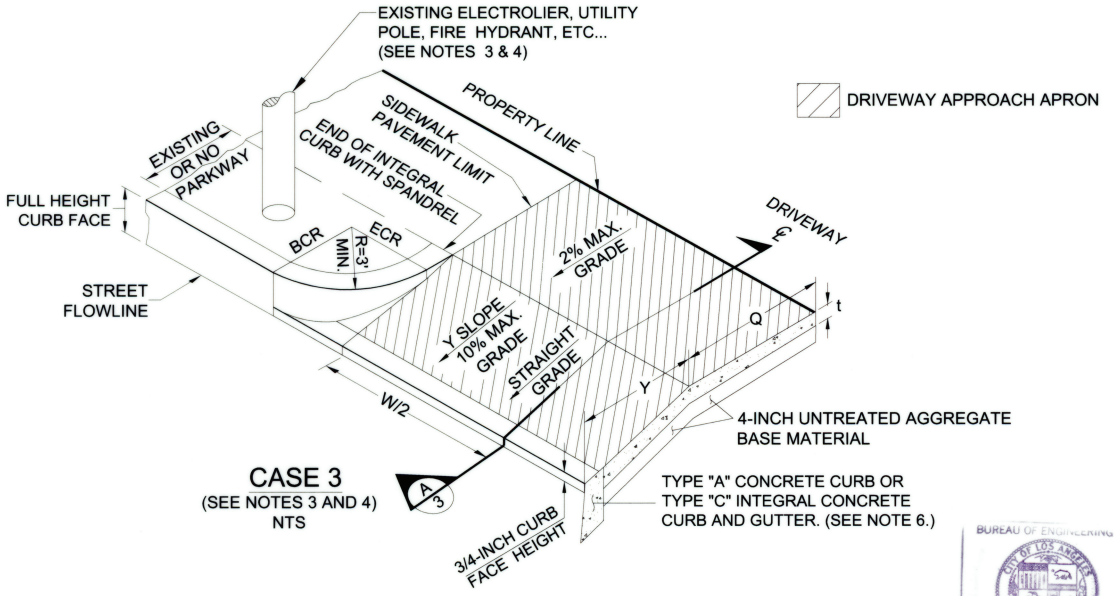

BUREAU OF ENGINEERING
CITY OF LOS ANGELES
OFFICIAL RECORD

NOTES

1. ALL WORK SHALL BE CONSTRUCTED IN ACCORDANCE WITH THE LATEST STANDARD SPECIFICATIONS FOR PUBLIC WORKS CONSTRUCTION ADOPTED BY THE BOARD OF PUBLIC WORKS AS MODIFIED BY THE CORRESPONDING ISSUE OF THE CITY OF LOS ANGELES DEPARTMENT OF PUBLIC WORKS BROWN BOOK.

2. CASE 2 SHALL BE USED IN MOST CIRCUMSTANCES EXCEPT THAT CASE 1 MAY BE USED TO SERVICE R-1 OR R-2 PROPERTY WITH A PARKWAY AND PROVIDED THE Y-SLOPE DOES NOT ENCROACH INTO THE PORTION OF THE DRIVEWAY APPROACH APRON FOR PEDESTRIANS TO CROSS THE DRIVEWAY.

3. CASE 3 SHALL BE USED IN LIEU OF CASE 1 OR CASE 2 RESPECTIVELY TO PRECLUDE THE FOLLOWING CONDITIONS:

   A. A DISTANCE OF LESS THAN 5 FEET BETWEEN A PROPOSED TOP OF "X" AND THE CENTER LINE OF AN ELECTROLIER OR FIRE HYDRANT.

   B. TRAFFIC SIGNALS, UTILITY POLES AND SIGN POSTS IN THE "X" AREA OF A PROPOSED DRIVEWAY.

4. WHERE CASE 3 IS USED, AN ELECTROLIER OR HYDRANT SHALL NOT BE CLOSER THAN 18-INCHES FROM THE DRIVEWAY BCR, AND A TRAFFIC SIGNAL, UTILITY POLE OR SIGN POST SHALL NOT BE CLOSER THAN THE DRIVEWAY BCR.

5. WHERE THERE IS EXISTING INTEGRAL CONCRETE CURB AND GUTTER, BOTH CURB AND GUTTER MUST BE REMOVED. OPTIONAL, IF THE GUTTER IS IN GOOD CONDITION, THE GUTTER MAY BE SAW CUT 4 INCHES TO 6 INCHES FROM THE STREET FLOW LINE AND THE OUTSIDE PORTION LEFT IN PLACE, PROVIDING THAT IT IS NOT LESS THAN 18 INCHES.

6. EITHER TYPE "A" CONCRETE CURB OR TYPE "C" INTEGRAL CONCRETE CURB AND GUTTER SHALL BE EXISTING OR CONSTRUCTED FOR ALL DRIVEWAY APPROACHES. SEE THE LATEST STANDARD PLAN S-410 FOR TYPES OF CURBS. IF EXISTING CURB REQUIRES REMOVAL AND REPLACEMENT, RECONSTRUCT CURB TO MATCH EXISTING CURB TYPE. CITY ENGINEER SHALL DETERMINE THE TYPE OF CURB FOR ALL NEW CURB CONSTRUCTION.

7. WEAKENED PLANE CONTROL JOINTS SHALL BE INSTALLED ALONG BOTH SIDES OF A DRIVEWAY APPROACH APRON AND AT APPROXIMATELY 10 FEET INTERVALS WITHIN THE DRIVEWAY. WHERE THE DISTANCE BETWEEN THE SIDES OF THE DRIVEWAY APPROACH APRON DOES NOT EXCEED 15 FEET, AN INTERMEDIATE WEAKENED PLANE CONTROL JOINT WILL NOT BE REQUIRED.

8. THE AREA INCLUDED WITHIN THE "X" AND "Y" SLOPES (INCLUDING TOP OF CURB) OF THE DRIVEWAY APPROACH SHALL BE FINISHED WITH A WOOD FLOAT. THE BALANCE OF THE DRIVEWAY APPROACH SHALL BE FINISHED IN ACCORDANCE WITH THE LATEST SPECIFICATIONS FOR SIDEWALK.

9. DEFINITIONS AND DIMENSIONS:

DRIVEWAY APPROACH : AREA OF A DRIVEWAY LYING IN THE PUBLIC RIGHT OF WAY BETWEEN THE STREET FLOW LINE AND THE PROPERTY LINE, INCLUDING THE APRON, SIDE SLOPES AND CURB RETURNS WITH SPANDRELS.

DRIVEWAY APPROACH APRON : PORTION OF A DRIVEWAY APPROACH, EXCLUDING THE SIDE SLOPES AND CURB RETURNS WITH SPANDRELS EXTENDING FROM THE STREET FLOW LINE TO THE PROPERTY LINE AND BETWEEN THE ADJOINING SIDEWALK PAVEMENTS.

a = HORIZONTAL LENGTH OF DRIVEWAY APPROACH APRON MEASURED ALONG THE CENTERLINE FROM THE STREET FLOW LINE TO THE PROPERTY LINE.

Q = PORTION OF THE APPROACH APRON FOR PEDESTRIANS TO CROSS THE DRIVEWAY HAVING 4 FEET MINIMUM TRANSVERSE WIDTH AND MAXIMUM TRANSVERSE GRADE OF 2 PERCENT TOWARD THE STREET, INCLUDING THE 1/4-INCH VERTICAL CONSTRUCTION TOLERANCE.

R = DRIVEWAY CURB RETURN RADIUS, 3-FEET MINIMUM, PROVIDING TRANSITION FROM FULL HEIGHT CURB TO THE GRADE OF THE APPROACH APRON.

t = THICKNESS OF CONCRETE DRIVEWAY PAVEMENT, INCLUDING SIDE SLOPES AND CURB RETURN SPANDRELS. A "t" OF 4-INCHES MAY BE USED FOR DRIVEWAYS SERVING NOT MORE THAN FOUR RESIDENTIAL UNITS AND A "t" OF 6 INCHES SHALL BE USE FOR ALL OTHER DRIVEWAYS.

W = WIDTH OF DRIVEWAY APPROACH APRON MEASURED ALONG THE STREET FLOW LINE, EXCLUDING SIDE SLOPES AND CURB RETURNS WITH SPANDRELS. FOR THE "W" WIDTH OF DRIVEWAYS, SEE SECTION 62.105.2 OF THE LOS ANGELES MUNICIPAL CODE.

X = HORIZONTAL LENGTH OF THE SIDE SLOPING PORTION OF THE DRIVEWAY APPROACH, MEASURED ALONG THE STREET FLOW LINE PROVIDING TRANSITION FROM FULL HEIGHT CURB TO THE GRADE OF THE APPROACH APRON.

Y = HORIZONTAL LENGTH OF THE RAMPED PORTION OF THE APPROACH APRON MEASURED ALONG THE DRIVEWAY CENTERLINE FROM THE STREET FLOW LINE TO THE FRONT EDGE OF THE 2 PERCENT TRANSVERSE GRADE FOR PEDESTRIANS.

Y-SLOPE = DIFFERENCE IN ELEVATION ALONG THE DRIVEWAY CENTERLINE BETWEEN THE TOP OF CURB FACE AND THE FRONT EDGE OF THE 2 PERCENT TRANSVERSE GRADE FOR PEDESTRIANS DIVIDED BY THE HORIZONTAL LENGTH OF THE RAMPED PORTION OF DRIVEWAY APPROACH APRON (Y).

FULL HEIGHT CURB FACE (INCHES)		5 (or Less)	6	7	8	9	10**	11**	12** (or more)
MINIMUM DIMENSIONS (FEET)									
CASE 1	X	3	3	3	3	3	3	3	3
CASE 2		3	3	3.5	4	4.5	5	5.5	6
CASE 3	R	3	3	3	3	3	3	3	3
ALL CASES	Y	4.5	5.5	6.5	7.5	8.75	9.75	10.75	11.75
	Q	4	4	4	4	4	4	4	4
	a	8.5	9.5	10.5	11.5	12.75	13.75	14.75	15.75

** FOR EXISTING FULL HEIGHT CURB FACE ONLY

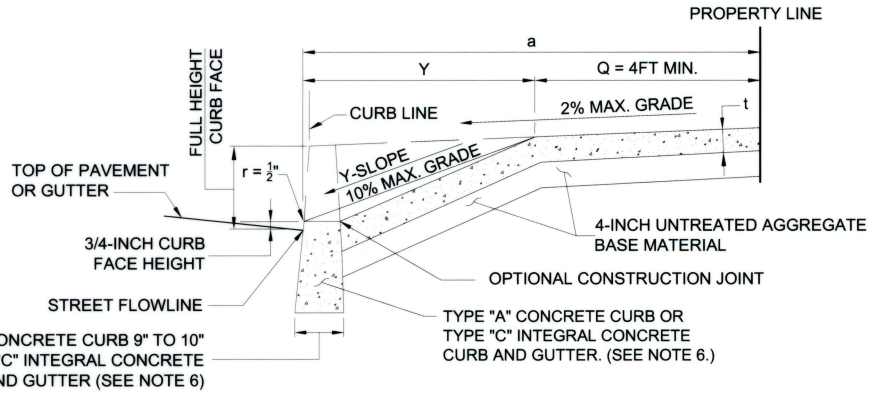

TYPICAL DRIVEWAY SECTION @ CENTERLINE (A)

NTS

BUREAU OF ENGINEERING
CITY OF LOS ANGELES
FOUNDED 1781
OFFICIAL RECORD

10. THE DEPRESSED CURB FACE HEIGHT ALONG THE DRIVEWAY APPROACH APRON SHALL BE 3/4-INCH WITH NEGLIGIBLE BATTER.

11. 4-INCH UNTREATED AGGREGATE BASE MATERIAL SHALL BE INSTALLED UNDER NEW CONCRETE DRIVEWAYS.

12. THE PORTION OF THE APPROACH APRON FOR PEDESTRIANS TO CROSS THE DRIVEWAY SHALL HAVE A MINIMUM WIDTH "Q" OF 4 FEET AND BE GRADED TOWARD THE STREET FLOW LINE. THE MAXIMUM TRAVERSE GRADE SHALL BE 2 PERCENT AND THE MINIMUM SHALL BE 0.5 PERCENT BOTH INCLUDING THE 1/4-INCH VERTICAL CONSTRUCTION TOLERANCE. "Q" LESS THAN 4 FEET SHALL REQUIRE APPROVAL BY THE CITY ENGINEER.

13. THE RAMPED PORTION OF THE DRIVEWAY APPROACH APRON (Y) SHALL HAVE A MAXIMUM GRADE OF 10 PERCENT. GRADES STEEPER THAN 10 PERCENT SHALL REQUIRE APPROVAL BY THE CITY ENGINEER. (SEE AUTOMOBILE TEMPLATES ON SHEET 4)

14. FOR DRIVEWAY DESIGNS EXTENDING ON PRIVATE PROPERTY SEE LOS ANGELES DEPARTMENT OF BUILDING AND SAFETY INFORMATION BULLETIN P/ZC2002-001. THIS STANDARD PLAN SHALL GOVERN WHERE INFORMATION IN THIS BULLETIN CONFLICTS WITH INFORMATION FROM THIS STANDARD PLAN.

15. DEPRESSED SIDEWALKS ADJACENT TO DRIVEWAY APPROACH APRONS SHALL REQUIRE APPROVAL BY THE CITY ENGINEER.

16. AT LOCATIONS WHERE ANY S-440-4 REQUIREMENTS CANNOT BE MET, THE DESIGNER AND/OR CONTRACTOR SHALL REQUEST DIRECTION FROM THE CITY ENGINEER PRIOR TO THE COMPLETION OF DESIGN.

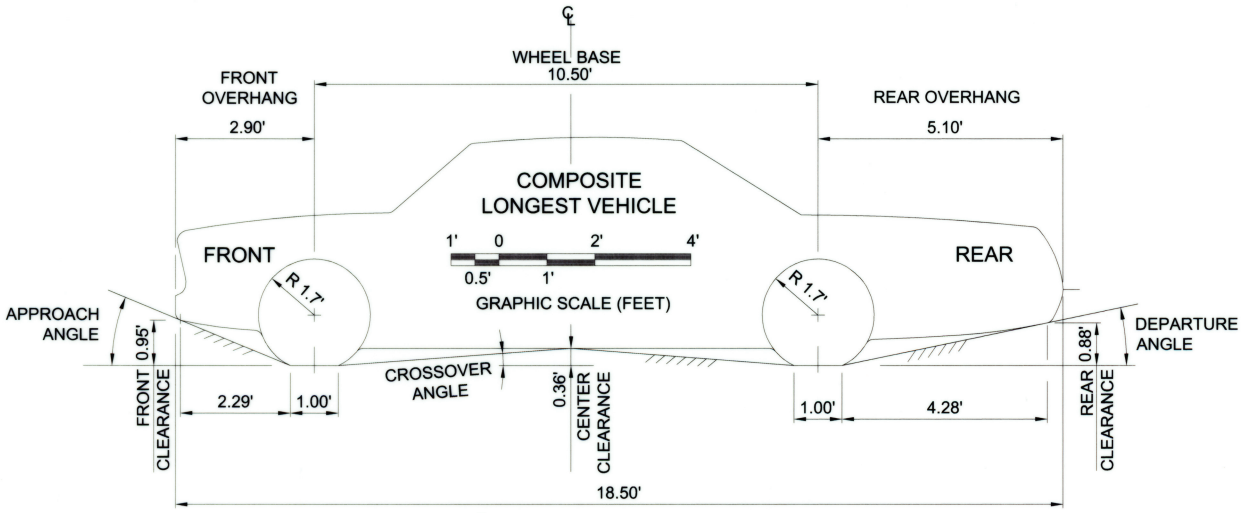

COMPOSITE LONGEST VEHICLE

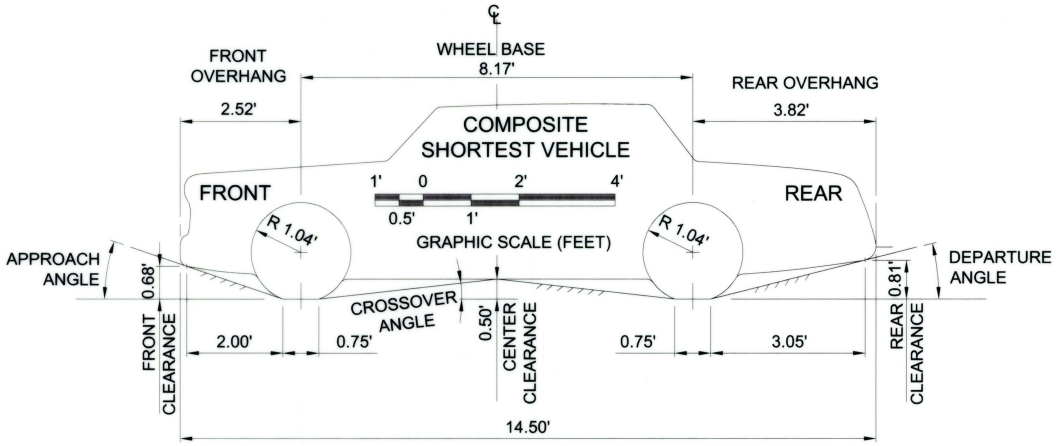

COMPOSITE SHORTEST VEHICLE

AUTOMOBILE TEMPLATES

FOR CHECKING VERTICAL CLEARANCE ALONG DRIVEWAY CENTERLINE

NOTES

THE DRIVEWAY CENTERLINE SHOULD BE PLOTTED TO SCALE (1-INCH EQUALS 2-FEET BOTH HORIZONTALLY AND VERTICALLY) AND EXTEND FROM THE STREET CENTERLINE TO A SUFFICIENT LENGTH BEYOND THE PROPERTY LINE ONTO THE ABUTTING PROPERTY.

BUREAU OF ENGINEERING
CITY OF LOS ANGELES
FOUNDED 1781
OFFICIAL RECORD

CONSTRUCTION SYMBOLS

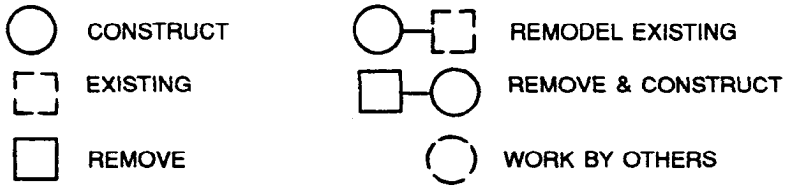

NOTE: WHEN ONE CHOOSES TO USE CONSTRUCTION SYMBOLS, THE USE OF THIS STANDARD PLAN IS MANDATORY. PERTINENT ITEM NUMBERS AND DESCRIPTIONS SHALL BE SHOWN ON EACH SHEET.

ITEM NUMBER	DESCRIPTION	DATA TO BE SHOWN ON LEADER
1.	CONCRETE CURB	TYPE
2.	TYPE C INTEGRAL CURB & GUTTER	b,a
3.	TYPE C INTEGRAL CURB & PAVEMENT	b,c
4.	CONCRETE GUTTER	b,a
5.	CONCRETE LONGITUDINAL GUTTER	b,g
6.	CONCRETE INTERSECTION GUTTER	b,a,g
7.	BUS PAD	W,t,P,L
8.	CONCRETE PAVEMENT	THICKNESS,CLASS
9.	STREET OR ALLEY PER TYPICAL SECTION	
10.	CONCRETE DRIVEWAY	CASE,W,X,Y,a,t
11.	CONCRETE ALLEY INTERSECTION	W,R,t
12.	CONCRETE WALK	THICKNESS
13.	CURB RAMP	CASE,W,X,Y
14.	ASPHALT CONCRETE PAVEMENT	THICKNESS
15.	ASPHALT CONCRETE BERM PER DETAIL	
16.	UNTREATED BASE MATERIAL	THICKNESS,TYPE
17.	ADJUST MANHOLE TO GRADE	TYPE,+(RAISE)',-(LOWER)'
18.	METAL BEAM GUARDRAIL	LIN. FT.
19.	RECONSTRUCT MANHOLE TO GRADE	TYPE,+(RAISE)',-(LOWER)'

BUREAU OF ENGINEERING | DEPARTMENT OF PUBLIC WORKS | CITY OF LOS ANGELES

SYMBOLS FOR CONSTRUCTION NOTES

STANDARD PLAN S-627-0

SUBMITTED 11/8 1989
ENGINEER OF DESIGN L. L. Lewis
DEPUTY ENGINEER
APPROVED 11/21 1989
CITY ENGINEER Robert S. Horii

DESIGN BY	DRAWN BY	CHECK BY
RAB	G MCD	RGS

REGISTERED PROFESSIONAL ENGINEER
ROBERT S. HORII
EXP. 12/31/92
NO. 11782
CIVIL
STATE OF CALIFORNIA

REVISIONS	
NO.	DESCRIPTION

SUPERSEDES	REFERENCES

VAULT INDEX NO. B-4106

SHEET 1 OF 3 SHEETS

ITEM NUMBER	DESCRIPTION	DATA TO BE SHOWN ON LEADER
20.	REMOVE TREE	DIA.,STATION,OFFSET TO CL
21.	COLDPLANE (MILL) AC PAVEMENT	
22.	EXTRUDED ASPHALT CONCRETE (AC) CURB	HEIGHT
23.	GRADE ONLY	
24.	PLANT TREE	SPECIES,GALLON SIZE
25.	TREE WELL COVER - TYPE A	(A-1,OR A-2)
26.	TREE WELL	TYPE(1 OR 2)
27.	GEOTEXTILE	TYPE,WOVEN OR NONWOVEN
28.	JOINT	TYPE
29.	CURB DRAIN	INSIDE DIMENSIONS,MATERIAL
30.	WOODEN WARNING RAIL	LIN. FT.
31.	PIPE HANDRAIL	
32.	GRIND CONCRETE PAVEMENT	
33.	RELOCATE PARKING METER	
34.	VARIABLE THICKNESS ASPHALT CONCRETE PAVEMENT	
35.	INSTALL GUIDE MARKER	
36.	RELOCATE UTILITY POLE	POLE NUMBER
37.	RELOCATE POLE ANCHOR	
38.	RELOCATE AND/OR ADJUST STREET LIGHTING PULL BOX TO GRADE	
39.	RELOCATE AND/OR ADJUST TRAFFIC SIGNAL PULL BOX TO GRADE	
40.	RELOCATE AND/OR ADJUST CATV PULL BOX TO GRADE	
41.	RELOCATE AND/OR ADJUST FIRE HYDRANT TO GRADE	
42.	RELOCATE AND/OR ADJUST ELECTROLIER TO GRADE	
43.	RELOCATE AND/OR ADJUST DWPPS VENT TO GRADE	
44.	RELOCATE AND/OF ADJUST DWPPS MANHOLE TO GRADE	
45.	RELOCATE AND/OR ADJUST DWPWS MANHOLE TO GRADE	
46.	RELOCATE AND/OR ADJUST WATER METER TO GRADE	
47.	RELOCATE STREET SIGN	
48.	TO 77 RESERVED FOR STREET RELATED ITEMS.	
78.	ALLEY GRATING BASIN (AGB)	NO. GRATING ,V
79.	REINFORCED CONCRETE PIPE (RCP)	DIAMETER,D-LOAD
80.	PAVEMENT REMODELING AT CATCH BASIN	X,Y,M
81.	CURBSIDE GRATING BASIN (CGB)	NO. GRATING ,V
82.	JUNCTION STRUCTURE (J.S.)	TYPE
83.	CORRUGATED STEEL PIPE (CSP)	TYPE, DIA ,GAGE
84.	REINFORCED CONCRETE BOX	W BY H
85.	STORM DRAIN MANHOLE	TYPE
86.	WARPED GUTTER AT CATCH BASIN	DIMENSIONS
87.	CATCH BASIN NO.36	NO. GRATING ,V

ITEM NUMBER	DESCRIPTION	DATA TO BE SHOWM ON LEADER
88.	CATCH BASIN NO. 44	W,H,U,S
89.	CATCH BASIN NO. 47	DIMENSIONS
90.	LOW FLOW INLET STRUCTURE	L,X,A
91.	LOW FLOW OUTLET STRUCTURE	L,X,A
92.	SIDEWALK OUTLET STRUCTURE	DIMENSIONS
93.	SIDEWALK CULVERT WITH STEEL PLATE COVER	F,W,H,(J-K),(L-M)
94.	SEAL PER DETAIL	
95.	REINFORCED CONCRETE PIPE-LINED	DIA,D ITEM NUMBER
96.	SEAL WITH 8" BRICK & MORTAR	
97.	CONCRETE COLLAR	
98.	MONOLITHIC CONNECTION	
99.	SIDE OPENING CATCH BASIN	W,V,B
100. TO 130.	RESERVED FOR STORM DRAIN RELATED ITEMS.	
131.	SEWER PIPE	DIMENSIONS
132.	VITRIFIED CLAY PIPE(VCP)	DIMENSIONS
133.	SUPPORT OF PIPES ACROSS TRENCH	CASE
134.	IRON PIPE	DIA.,CAST OR DUCTILE,THICKNESS, CLASS
135.	MANHOLE INNER COVER	B OR C
136.	SEWER MANHOLE	STD. PLAN DESIGNATION, DM,H,SHALLOW
137.	HOUSE CONNECTION SEWER (H.C.)	TYPE,DIA
138.	SADDLE	
139.	CHIMNEYS	TYPE, DIA,H,H_1,H_2
140.	TERMINAL CLEANOUT STRUCTURE "Y" (TCS"Y")	D
141.	CONCRETE BLANKET	LIN.FT.
142.	PIPE ANCHOR	L,Z
143.	TUNNEL	LIN.FT.
144.	JACK PIPE	LIN.FT.
145.	SPECIAL MANHOLE FOR R.C.P. PER DETAIL	
146. TO 176.	RESERVED FOR SEWER RELATED AND MISCELLANEOUS ITEMS.	

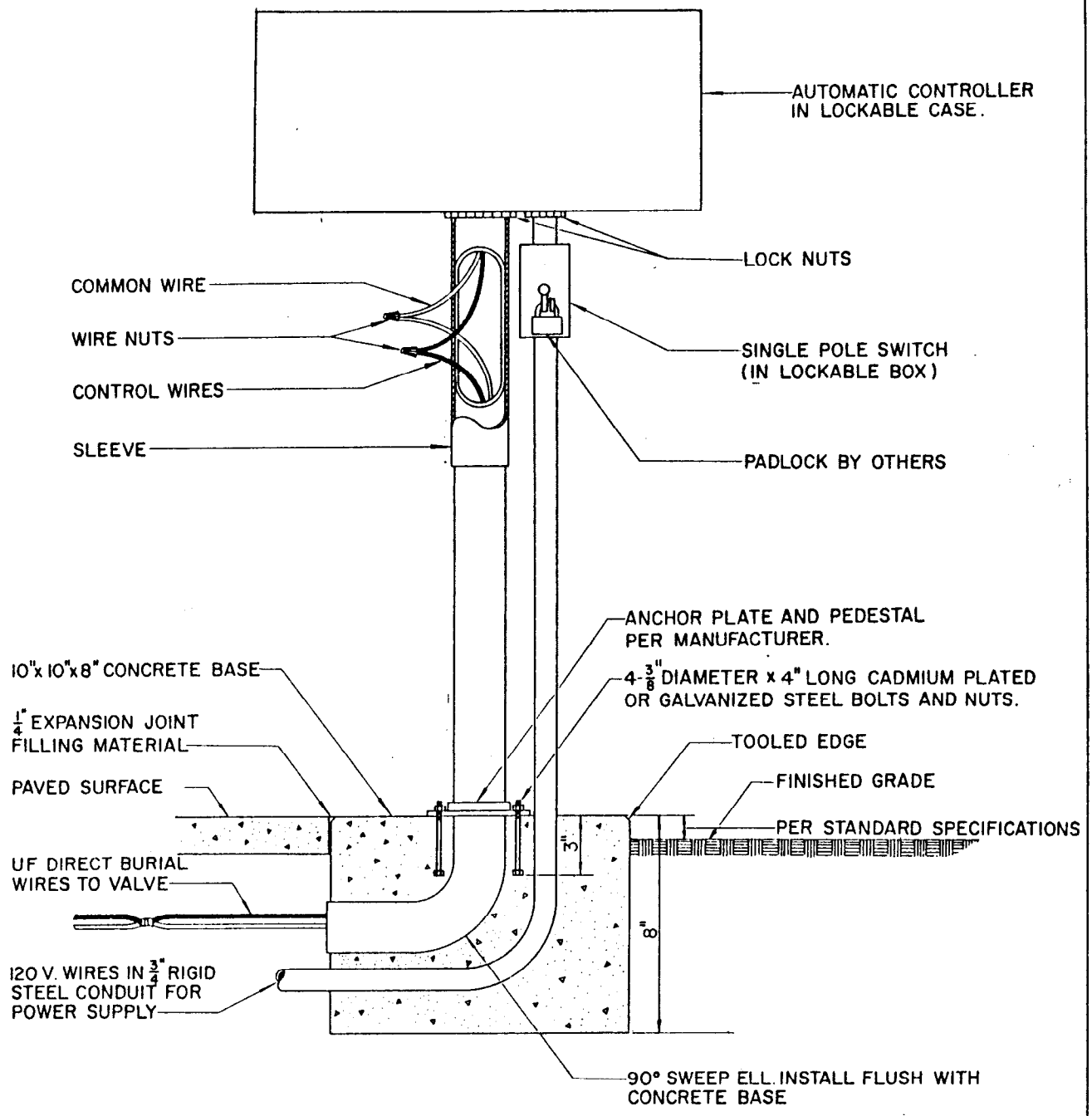

NOTE: AREA AROUND BASE CAN BE EITHER PLANTED, PAVED, OR A COMBINATION

DEPARTMENT OF PUBLIC WORKS

BUREAU OF ENGINEERING — CITY OF LOS ANGELES

ELECTRICAL IRRIGATION CONTROLLER

STANDARD PLAN
S-658-0

SUBMITTED July 7, 1977
Clyford M. Wright
ENGINEER OF DESIGN
Donald R. Flowery
DEPUTY ENGINEER

APPROVED 22 July 1977
Donald C. Tillman
CITY ENGINEER

DESIGNED BY	DRAWN BY	CHECKED BY

REVISIONS

NO.	DATE	DESCRIPTION	ENGR. OF DESIGN	CITY ENG'R.

SUPERSEDES	REFERENCES

VAULT INDEX NUMBER B-3908

SHEET 1 OF 1 SHEET

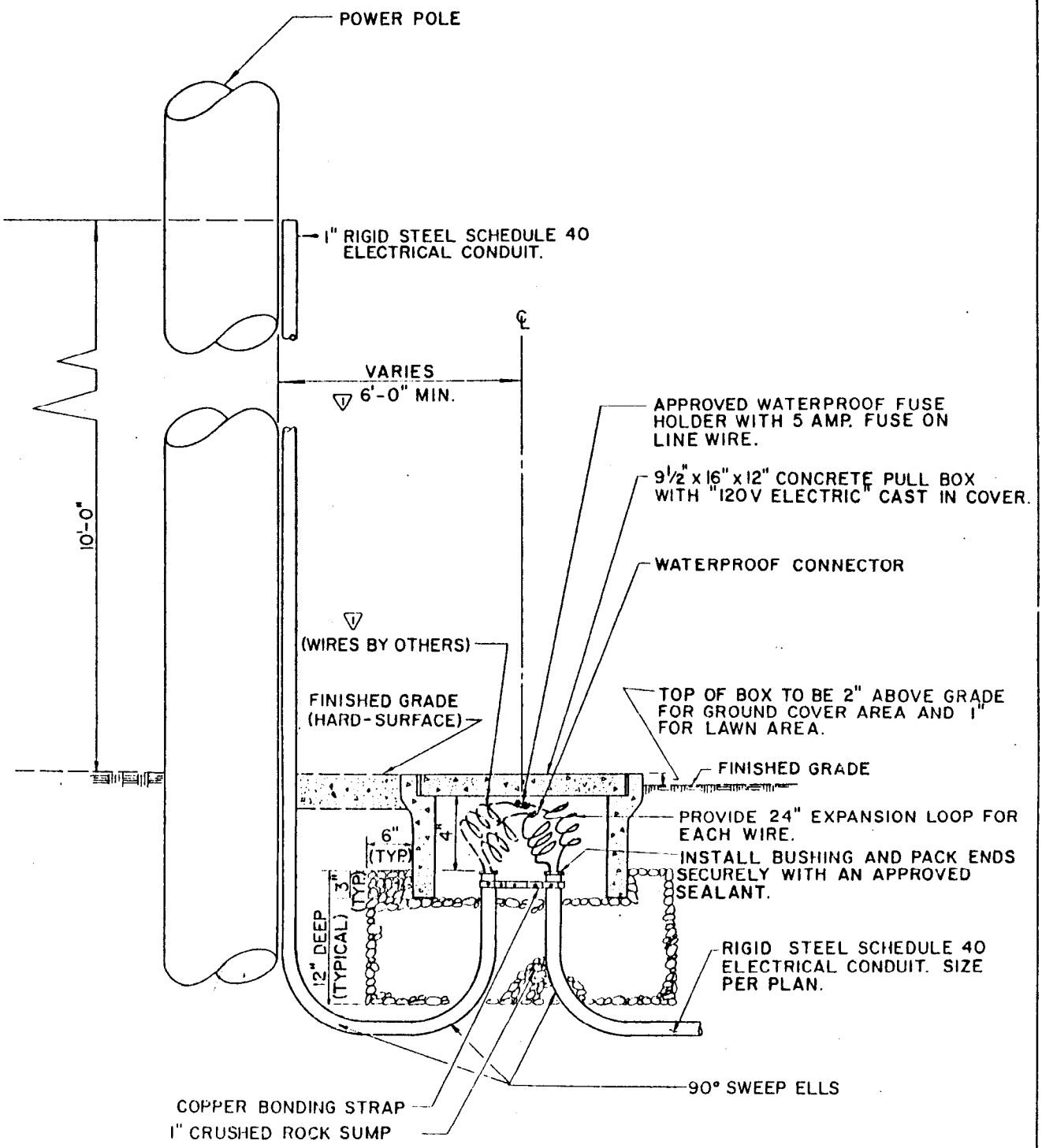

CASE I

NOTE: AREA AROUND BOX CAN EITHER BE PLANTED, HARD-SURFACE, OR A COMBINATION.

DEPARTMENT OF PUBLIC WORKS

BUREAU OF ENGINEERING — CITY OF LOS ANGELES

ELECTRICAL SERVICE

STANDARD PLAN S-660-1

SUBMITTED June 29, 1977
Cliff A. McCullough
ENGINEER OF DESIGN
Harold K. Rowley
DEPUTY ENGINEER

APPROVED 12 July 1977
Donald Christensen
CITY ENGINEER

DESIGNED BY	DRAWN BY	CHECKED BY
LANDSCAPE STANDARD COM	E L C	LANDSCAPE STANDARD COM

REVISIONS

NO.	DATE	DESCRIPTION	ENGR. OF DESIGN	CITY ENG'R.
1	12-79	REVISED PULL BOX REQUIREMENTS AND ADDED SHEET 2.	Clifford McAlbright	D. Christensen

SUPERSEDES	REFERENCES
B-3904	

VAULT INDEX NUMBER B-3994

SHEET 1 OF 2 SHEETS

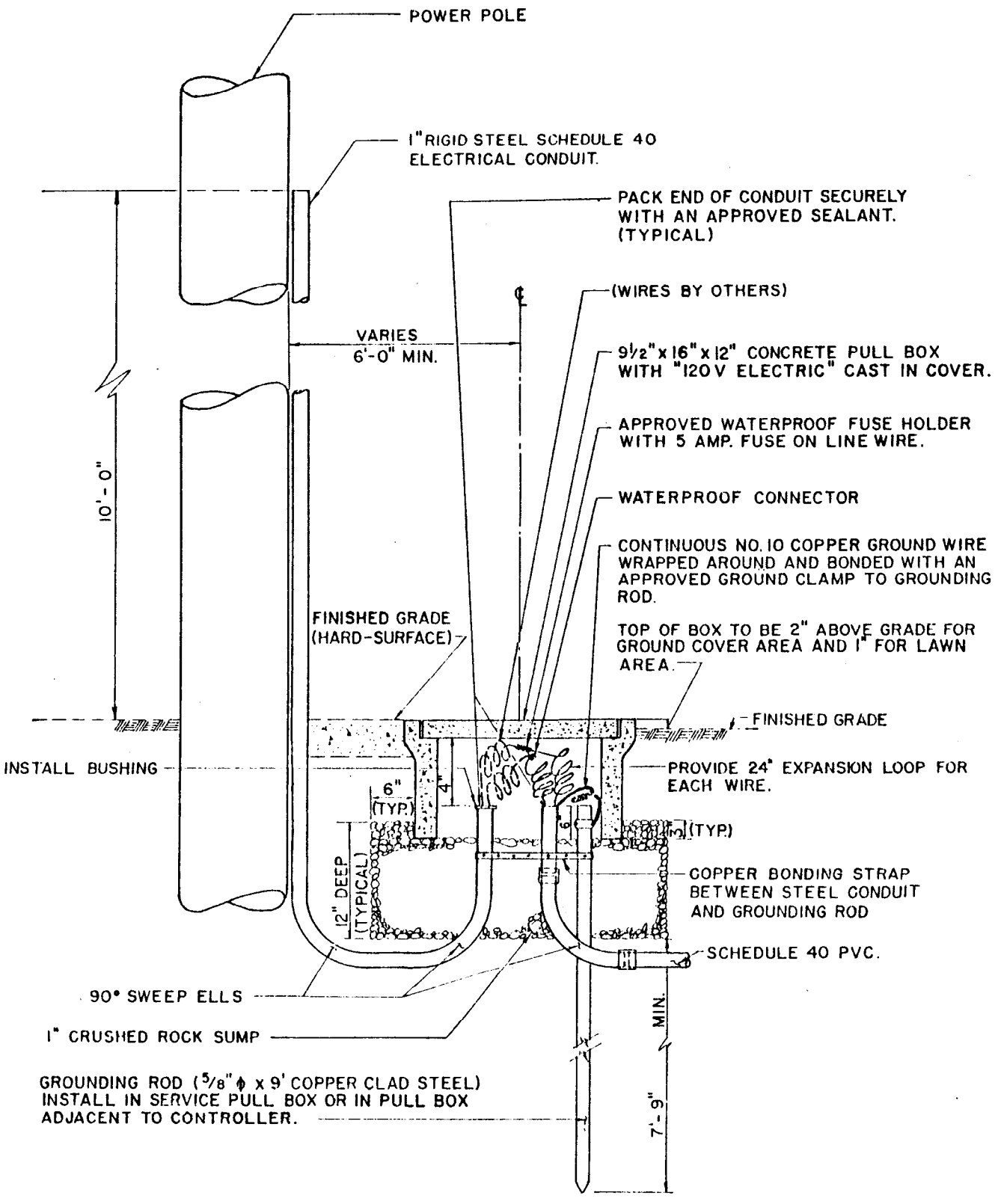

NOTE: AREA AROUND BOX CAN EITHER BE PLANTED, HARD-SURFACE, OR A COMBINATION.

ELECTRICAL SERVICE

CASE 2 V

STANDARD PLAN NO. S-660-1	VAULT INDEX NUMBER B-3994	SHEET 2 OF 2 SHEETS



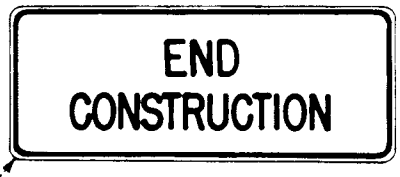

C18 (36"x 36")
PLACED AT BEGINNING OF THE WORK AND AT LEAST ONE PER BLOCK, AND AT CROSS STREETS.

1 C13, C18 AND C19 SIGNS SHALL BE REFLECTORIZED WITH BLACK LETTERS ON AN ORANGE BACKGROUND (SEE MOUNTING AND PLACEMENT DETAILS AT LOWER RIGHT). LETTERS SHALL BE 5" SERIES C.

C13 (48"x 24")
PLACED AT END OF WORK



C19 (36"x 36")
FOR STREET CLOSURES PLACED AS SPECIFIED FOR C18 SIGNS

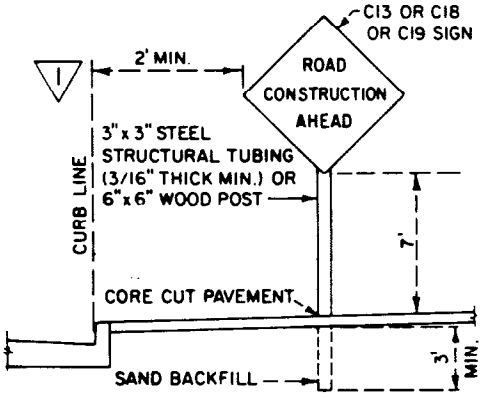

1 

"TIME SIGN" (48"x 24") WITH BLACK LETTERS (5" SERIES C) ON AN ORANGE BACKGROUND. (SEE MOUNTING AND PLACEMENT DETAILS AT RIGHT.) (SEE NOTE 6 FOR WORDING)

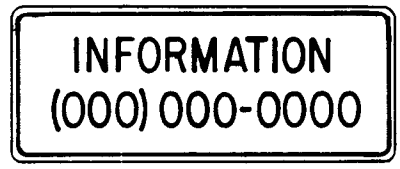

"INFORMATION SIGN" (48"x 24") WITH BLACK LETTERS (5" SERIES C) ON AN ORANGE BACKGROUND. (SEE MOUNTING AND PLACEMENT DETAILS AT RIGHT.) (SEE NOTE 5 FOR TELEPHONE NUMBER.)

1 **INFORMATION SIGN**
TO BE MOUNTED BELOW TIME SIGN AND C13 SIGN

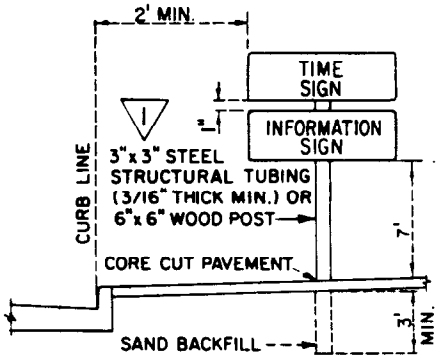

TYPICAL MOUNTING AND PLACEMENT DETAILS
NOT TO SCALE

DEPARTMENT OF PUBLIC WORKS

BUREAU OF ENGINEERING — CITY OF LOS ANGELES

ADVANCE CONSTRUCTION NOTICE SIGNS

STANDARD PLAN
S-791-1

SUBMITTED June 15 1989
ENGINEER OF DESIGN
Lawrence H. Burks
DEPUTY ENGINEER

APPROVED July 11 1989
Robert E. Horii
CITY ENGINEER

DESIGNED BY	DRAWN BY	CHECKED BY
RAB	RGM/GMcD	RGS

REGISTERED PROFESSIONAL ENGINEER ROBERT E. HORII EXP 12/31/92 NO. 11162 CIVIL STATE OF CALIFORNIA

REVISIONS		SUPERSEDES	REFERENCES
NO.	DESCRIPTION	B-4097	
1	REVISED: NOTES, TITLE OF SIGNS, TYPICAL MOUNTING AND PLACEMENT DETAILS, CREDIT SIGNS, AND ADDED TIME SIGN.		

VAULT INDEX NUMBER B-4100

SHEET 1 OF 4 SHEETS

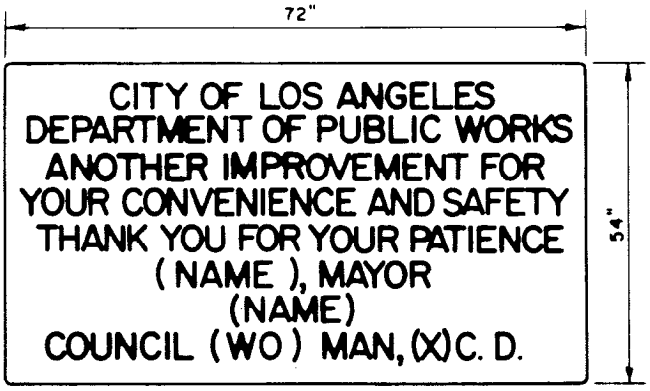

(1) TYPE I CREDIT SIGN

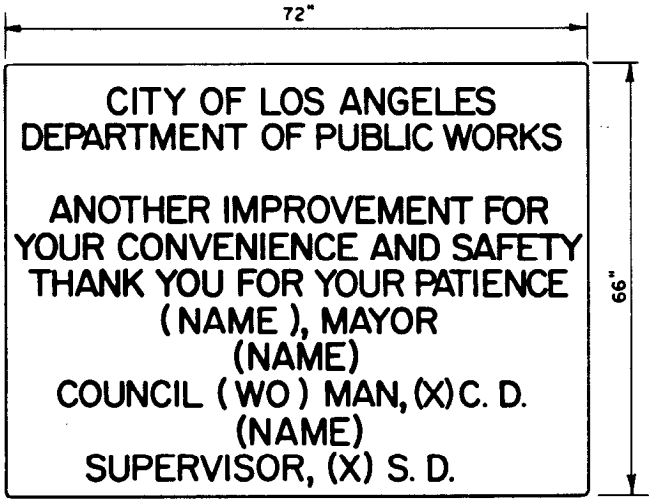

(1) TYPE II CREDIT SIGN

(1) ALL CREDIT SIGNS PLACED 100 FEET IN ADVANCE OF BEGINNING OF WORK.

(1) CREDIT SIGNS (72" x 66" MAXIMUM) WITH WHITE LETTERS (4" SERIES C) ON A BLUE BACKGROUND WITH A WHITE BORDER. (SEE MOUNTING AND PLACEMENT DETAILS AT RIGHT.)

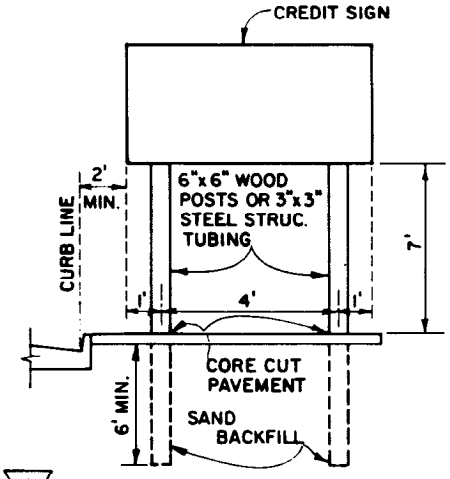

(1) TYPICAL MOUNTING AND PLACEMENT DETAILS

NOT TO SCALE

NOTES

1. THESE SIGNS ARE IN ADDITION TO THOSE REQUIRED BY, AND SHALL CONFORM TO, THE PROVISIONS OF THE LATEST ADOPTED EDITION OF THE "WORK AREA TRAFFIC CONTROL HANDBOOK" (**WATCH**).

2. ALL SIGN AND PLATE PANELS SHALL CONSIST OF HIGH QUALITY REFLECTORIZED SHEETING APPLIED TO A BASE OF ALUMINUM OR PLYWOOD. BASE MATERIAL SHALL BE EXTERIOR GRADE PLYWOOD NOT LESS THAN 3/8 INCH THICK OR SHEET ALUMINUM NOT LESS THAN 0.063 INCH THICK FOR WIDTHS UP TO 42 INCHES AND NOT LESS THAN 0.080 INCH THICK FOR WIDTHS GREATER THAN 42 INCHES. ALL PANELS SHALL BE THE PRODUCT OF A COMMERICIAL TRAFFIC SIGN MANUFACTURER.

3. SIGN PANELS SHALL FACE AND BE VISIBLE TO ONCOMING TRAFFIC AND BE SECURELY FASTENED TO POSTS WITH COMMERICIAL BOLTS, NUTS AND WASHERS SO AS TO RESIST DISPLACEMENT.

▽1 4. THE SIGNS SHALL BE PLACED AT LEAST **7** DAYS BEFORE START OF CONSTRUCTION. PRIOR TO INSTALLATION OF ANY SIGNS, THE CONTRACTOR SHALL HAVE APPLICABLE INSURANCE ON FILE WITH THE CITY ATTORNEY'S OFFICE. UNLESS OTHERWISE SPECIFIED ON THE PLANS, THE SIGNS SHALL BE PLACED AS FOLLOWS:

   A. **C18 SIGNS** SHALL BE PLACED AT THE BEGINNING OF THE WORK AND ONE PER BLOCK WITHIN THE LIMITS OF THE WORK. HOWEVER, NO TWO SUCCESSIVE SIGNS SHALL BE SPACED GREATER THAN 1000 FEET APART. **C18 SIGNS** SHALL ALSO BE PLACED ON CROSS STREETS ONE BLOCK PRECEEDING THE WORK.

   B. **C13 SIGNS** SHALL BE PLACED AT THE END OF THE WORK.

   C. WHEN A STREET CLOSURE IS ALLOWED, **C19 SIGNS** SHALL BE PLACED AS SPECIFIED FOR **C18 SIGNS.**

   D. THE **CREDIT SIGN** SHALL BE PLACED 100 FEET IN ADVANCE OF BEGINNING OF WORK, TWO SIGNS IF WORK INVOLVES BOTH SIDES OF STREET. **CREDIT SIGNS** SHALL BE REQUIRED ON ALL PROJECTS EXCEPT PERMIT PROJECTS. SEE PLANS FOR TYPE AND NAMES.

   E. THE COMBINATION **TIME AND INFORMATION SIGN** SHALL BE PLACED **20** FEET BEHIND THE FIRST **C18 SIGN** AND 20 FEET BEHIND ALL **C13 SIGNS** AND **C19 SIGNS.**

5. FOR CASH AND ASSESSMENT ACT CONTRACTS, THE INFORMATION TELEPHONE NUMBER SHALL BE THE NUMBER OF THE DESIGN OFFICE SPECIFIED ON THE PROJECT PLANS. FOR PERMIT PROJECTS, IT SHALL BE THE NUMBER OF THE PERMITTEE OR ITS RESPONSIBLE DESIGNEE. FOR PROJECTS PERFORMED BY CITY FORCES, THE TELEPHONE NUMBER SHALL BE THAT OF THE BUREAU PERFORMING THE WORK.

▽1 6. FOR WORDING OF THE **TIME SIGN**, CONTACT THE ENGINEER, THE PERMITTEE OR THE RESPONSIBLE DESIGNEE.

7. ALL COSTS INCURRED IN FURNISHING, INSTALLING, MAINTAINING, AND REMOVING THE SIGNS SHALL BE INCLUDED IN OTHER ITEMS FOR WHICH BIDS ARE ENTERED.

▽1 8. SIGNS AT THE BEGINNING AND END OF THE PROJECT SHALL BE LOCATED CLOSE TO, BUT SHALL NOT INTERFERE WITH, THE CONSTRUCTION.

Client Department Logo	225 mm (9") color logos
[PROJECT TITLE]	75 mm (3") Bold Caps
[FUNDING SOURCE]	65 mm (2-1/2") Caps
[NAME], MAYOR	65 mm (2-1/2") Caps
[NAME] COUNCILMEMBER, [X] DISTRICT	55 mm (2-1/4") Caps
[CLIENT NAME] [TITLE-CLIENT GENERAL MANAGER]	55 mm (2-1/4") Caps
DEPARTMENT OF PUBLIC WORKS	55 mm (2-1/4") Caps
[NAME] Board President	50 mm (2") Caps 50 mm (2") Caps & LC
[NAME], P.E. City Engineer	50 mm (2") Caps 50 mm (2") Caps & LC
[NAME] Inspector of Public Works	50 mm (2") Caps 50 mm (2") Caps & LC
["BUREAU OF ENGINEERING" or CONSULTANT FIRM] Design Architect and Engineer	50 mm (2") Caps 50 mm (2") Caps & LC
["BUREAU OF ENGINEERING" or CONSULTANT FIRM] Construction Management	50 mm (2") Caps 50 mm (2") Caps & LC
For questions, please call the Project Manager at [(XXX) XXX-XXXX]	45 mm (1-3/4") Caps & LC

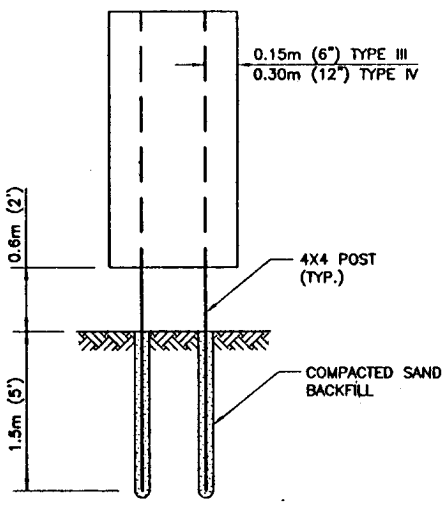

TYPICAL MOUNTING DETAILS

BUILDING CREDIT SIGN TYPE III

[PROJECT TITLE] [FUNDING SOURCE]	75 mm (3") Bold Caps Logo: 225mm (9") color 65 mm (2-1/2") Caps
Client Department Logo	
[NAME], Mayor	65 mm (2-1/2") Caps & LC
[NAME], Councilmember - [X] District	55 mm (2-1/4") Caps & LC
DEPARTMENT OF PUBLIC WORKS [NAME], Board President [NAME], P.E., City Engineer [NAME], Inspector of Public Works	[CLIENT DEPARTMENT NAME] [NAME], [Title/General Manager]
["BUREAU OF ENGINEERING" OR CONSULTANT FIRM], Design Architect and Engineer	50 mm (2") Caps & LC
["BUREAU OF ENGINEERING" OR CONSULTANT FIRM], Construction Management	50 mm (2") Caps & LC
For questions, please call the Project Manager at [(XXX) XXX-XXXX]	45 mm (1-3/4") Caps & LC

BUILDING CREDIT SIGN TYPE IV

NOTES:

1. SIGN BOARD: 1200MM X 2400MM X 19MM (4'X8'X3/4") PLYWOOD (MEDIUM OR HIGH DENSITY OVERLAY, OR MARINE GRADE); PAINT ALL AROUND WITH ONE COAT EXTERIOR PRIMER AND TWO COATS EXTERIOR SEMI-GLOSS WHITE. UNLESS OTHERWISE NOTED, USE TYPE IV.
2. LETTERING: EXTERIOR BLACK PAINT; APPLY BY BRUSH, SILKSCREENING OR EQUIVALENT; DO NOT USE STICKERED, SELF-ADHESIVE OR GLUED LETTERING.
3. LOGOS: OBTAIN SELF-ADHESIVE DECALS FROM ENGINEER; PAINT "CLIENT DEPT. LOGO" PER NOTE 2 UNLESS DECAL IS AVAILABLE.
4. SUBMIT SCALE DRAWING OF SIGN WITH LETTERING TO ENGINEER FOR APPROVAL PRIOR TO FABRICATION.
5. CONTRACTOR OPTION: PAINT NAMES ON 1.5MM (16 GA) ALUMINUM PLACARDS PAINTED PER NOTE 1; SECURELY FASTEN PLACARDS TO SIGN BOARD WITH SCREWS.

BUREAU OF ENGINEERING | DEPARTMENT OF PUBLIC WORKS | CITY OF LOS ANGELES

BUILDING CREDIT SIGNS

STANDARD PLAN S-792-0

SUBMITTED Apr. 4 2002
ENGINEER OF DESIGN
DEPUTY CITY ENGINEER
APPROVED 4/5 2002
CITY ENGINEER

DESIGNED	DRAWN	CHECKED
P. LEE	A. HSU	H. LEE

REGISTERED PROFESSIONAL ENGINEER VITALY B. TROYAN, P.E. No. C-20220 Exp. 9-30-05 CIVIL STATE OF CALIFORNIA

REVISIONS				
NO.	DATE	DESCRIPTION	ENGR. OF DESIGN	CITY ENGR.

SUPERSEDES	REFERENCES

VAULT INDEX NUMBER B-4501

SHEET 1 OF 1 SHEETS

BUREAU OF ENGINEERING

VALLEY VILLAGE PARK
STORM WATER CAPTURE PROJECT
PROJECT NO. EW40085F

ATTACHMENT 6
SUMMARY OF UTILITY FIRST NOTICE REPLIES

MARCH 2025

City of Los Angeles
California

Department of Public Works
Bureau of Engineering

ENGINEERING
CITY OF LOS ANGELES

Date: November 30, 2021

CITY OF LOS ANGELES
DEPARTMENT OF PUBLIC WORKS
BUREAU OF ENGINEERING

SUMMARY OF FIRST NOTICE REPLIES

W.O. No.:	Job ID.:	Project Title:
EW40085D	**1450**	**STORMWATER CAPTURE PARKS PROGRAM VALLEY VILLAGE PARK**

Bidders are advised that project plans usually depict the location of substructures as they existed when the project was designed. Present-day information may indicate that new facilities may have been added or are going to be added. Some of those substructures may now be or will be relocated, abandoned, removed, lowered, raised, blanketed, encased, enlarged, protected, or altered in some other way. Bidders are urged to carefully examine the proposed construction site for any evidence of recent surfacing of excavations, or the possible conflict with surface or aerial installations. Contractor should use the latest substructure maps and prepare their bid accordingly. If further information or clarification is desired, bidders are urged to immediately contact the appropriate utility company or the appropriate District Office of the Bureau of Engineering. Contractors may also contact the Utility Coordination Group, 1149 S. Broadway Street, Suite 140, Los Angeles, CA 90015, naajia.jami@lacity.org. The contractor will need to coordinate work with utility companies during construction if necessary.

Based on the confirmation from the following utility companies, they have facilities within the improvement area that will definitely be affected.

NONE

Based on the confirmation from the following utility companies, they have facilities within the improvement area that may not require relocation but will mark them upon request. Notify Underground Service Alert at 1-800-227-2600 two working days prior to excavation to have facilities marked:

BUREAU OF STREET LIGHTING	Daniel Ordonia	(213) 847 – 1568
SOUTHERN CALIFORNIA GAS – DISTRIBUTION	Jason Sum	(310) 687 – 2011

Based on the confirmation from the following utility companies, there are no facilities within the improvement area that will be affected:

INFORMATION TECHNOLOGY AGENCY	Frank Gonzalez	(213) 978 – 4032
SOUTHERN CALIFORNIA GAS – TRANSMISSION	Ron Silver	(818) 701 – 4536

The following utility companies have not responded to the First Utility Notice, but they may have facilities within the improvement area.

LADWP – POWER	Gibson Phan	(213) 367 – 2715

LADWP – WATER – EAST VALLEY	Glenn Micko	(213) 367 – 1211
AT&T CALIFORNIA	Cathy Hurtado	(626) 817 – 4263

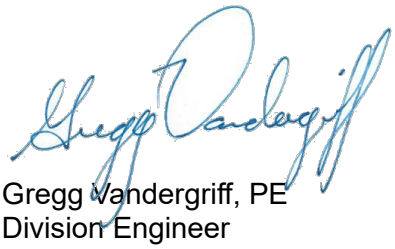

Gregg Vandergriff, PE
Division Engineer
Project Award and Control Division
Bureau of Engineering
Department of Public Works

CITY OF LOS ANGELES
DEPARTMENT OF PUBLIC WORKS
BUREAU OF ENGINEERING

Date: October 25, 2021

The Department of Public Works is scheduling the following improvements:

Project Title: **STORMWATER CAPTURE PARKS PROGRAM VALLEY VILLAGE PARK**
Work Order No.: **EW40085D** **Job ID:** **1450**

Work to Be Performed: The Project consists of installing a 0.7-acre underground infiltration gallery to capture and infiltrate stormwater. Construction of the underground infiltration gallery will include installation of a storm drain diversion structure, storm pipe, a pretreatment device, flow measuring device, level sensors, and educational signage. Runoff will be collected from approximately a 453-acre tributary area and diverted into the infiltration gallery. The galleries shall be sized to store approximately 311,454 cf.

The project will include restoration of existing park components as well as new improvements. Park improvements include improved walking paths, landscaping, benches and seating areas, hydration stations, and an upgraded irrigation system with recycled water.

Please fill out the following and return one copy to the Utility Coordination Group by **November 25, 2021**.
PLEASE UPLOAD A COPY OF YOUR AS-BUILT PLANS, IN THE LINK PROVIDED IN THE EMAIL, SHOWING THE LOCATION OF YOUR FACILITIES (IN OR AROUND THE PROJECT AREA).

Your replies will be transmitted to prospective bidders and used in coordinating this project. Please note proper location of any facilities, live or abandoned, that are not shown or are shown incorrectly on the attached plans. The City will not be responsible for any damage to facilities that are not shown or are shown incorrectly on the plans. Failure to reply may deprive you of the protection provided for in the Standard Specifications. Construction delays and/or expenses due to failure in providing accurate information shall result in an assessment of costs to you, per Los Angeles Municipal Code (LAMC) 62.01 or your Franchise Agreement with the City.

Upon receipt and review of your response(s), the City will contact you to formalize your utility relocation (or protect-in-place) plan, with a utility relocation agreement if necessary.

For questions, please contact the Project Manager Bryan Powell at (213) 485-5908 or bryan.powell@lacity.org.

Thomas Guide Page: 562 Grids: H3

Thank you,

Reynaldo Sison, PE
Project Award and Control Division
Bureau of Engineering

☐ (1) Have prior rights. (Submit proof to our office within 30 days.)
☒ (2) Do not have facilities within the proposed project area.
Protect in place existing LADWP Power facilities to the North of park
☐ (3) Have facilities that will **not require relocation/adjustment** but will mark them upon request.
  (a) ☐ The accompanying recorded plans show facilities not delineated on the project plans.
  (b) ☐ The project plans correctly show our present utility locations.
☐ (4) Have facilities that will **require relocation/adjustment**. The facilities are delineated on the enclosed plan.
  (a) ☐ The following work is contemplated: _____
  (b) ☐ Estimated working days required for construction: _____
  (c) ☐ Construction may begin on _____ and conclude on _____
  (d) ☐ Work will **require** coordination with the contractor. (**EXPLAIN FULLY**).

For Paving Clearance, call: _____ Phone: _____ Station: _____

Return one copy of this First Notice to
Attn: Vishal Mandalia
Department of Public Works
Bureau of Engineering,
Project Award and Control Division
Utility Coordination Group (Mail Stop 501)
1149 S. Broadway, Suite 140
Los Angeles, CA 90015-2213
Tel. (213) 485 - 4506
Email: **vishal.mandalia**@lacity.org

LADWP Power	213-367-2715
Company Name	Phone No.
Gibson Phan	
Representative (Print Name)	
DWPPS.Coordination@ladwp.com	
E-mail Address	
Gibson Phan	12/14/21
Signature	Date

CITY OF LOS ANGELES
DEPARTMENT OF PUBLIC WORKS
BUREAU OF ENGINEERING

Date: October 25, 2021

The Department of Public Works is scheduling the following improvements:

Project Title: **STORMWATER CAPTURE PARKS PROGRAM VALLEY VILLAGE PARK**
Work Order No.: **EW40085D** **Job ID:** **1450**

Work to Be Performed: The Project consists of installing a 0.7-acre underground infiltration gallery to capture and infiltrate stormwater. Construction of the underground infiltration gallery will include installation of a storm drain diversion structure, storm pipe, a pretreatment device, flow measuring device, level sensors, and educational signage. Runoff will be collected from approximately a 453-acre tributary area and diverted into the infiltration gallery. The galleries shall be sized to store approximately 311,454 cf.

The project will include restoration of existing park components as well as new improvements. Park improvements include improved walking paths, landscaping, benches and seating areas, hydration stations, and an upgraded irrigation system with recycled water.

Please fill out the following and return one copy to the Utility Coordination Group by **November 25, 2021**.
PLEASE UPLOAD A COPY OF YOUR AS-BUILT PLANS, IN THE LINK PROVIDED IN THE EMAIL, SHOWING THE LOCATION OF YOUR FACILITIES (IN OR AROUND THE PROJECT AREA).

Your replies will be transmitted to prospective bidders and used in coordinating this project. Please note proper location of any facilities, live or abandoned, that are not shown or are shown incorrectly on the attached plans. The City will not be responsible for any damage to facilities that are not shown or are shown incorrectly on the plans. Failure to reply may deprive you of the protection provided for in the Standard Specifications. Construction delays and/or expenses due to failure in providing accurate information shall result in an assessment of costs to you, per Los Angeles Municipal Code (LAMC) 62.01 or your Franchise Agreement with the City.

Upon receipt and review of your response(s), the City will contact you to formalize your utility relocation (or protect-in-place) plan, with a utility relocation agreement if necessary.

For questions, please contact the Project Manager Bryan Powell at (213) 485-5908 or bryan.powell@lacity.org.

Thomas Guide Page: 562 Grids: H3

Thank you,

Reynaldo Sison, PE
Project Award and Control Division
Bureau of Engineering

☐ (1) Have prior rights. (Submit proof to our office within 30 days.)
☐ (2) Do not have facilities within the proposed project area.
☒ (3) Have facilities that will **not require relocation/adjustment** but will mark them upon request.
  (a) ☐ The accompanying recorded plans show facilities not delineated on the project plans.
  (b) ☐ The project plans correctly show our present utility locations.
☐ (4) Have facilities that will **require relocation/adjustment**. The facilities are delineated on the enclosed plan.
  (a) ☐ The following work is contemplated: _____
  (b) ☐ Estimated working days required for construction: _____
  (c) ☐ Construction may begin on _____ and conclude on _____
  (d) ☐ Work will **require** coordination with the contractor. (**EXPLAIN FULLY**).

For Paving Clearance, call: _____ Phone: _____ Station: _____

Return one copy of this First Notice to
Attn: Vishal Mandalia
Department of Public Works
Bureau of Engineering,
Project Award and Control Division
Utility Coordination Group (Mail Stop 501)
1149 S. Broadway, Suite 140
Los Angeles, CA 90015-2213
Tel. (213) 485 - 4506
Email: **vishal.mandalia**@lacity.org

SoCalGas	(818)701-2510
Company Name	Phone No.
Aldo Gomez	
Representative (Print Name)	
AGGomez@socalgas.com	
E-mail Address	
Aldo Gomez	12/16/2021
Signature	Date

Aldo Gomez
Planning Associate
SoCalGas
PO BOX 2300
Chatsworth, CA 91313
(213) 231-7756
AGGomez@socalgas.com

Protect In Place

December 16, 2021

Department of Public Works
Bureau of Engineering,
Project Award & Control Division
Utility Coordination Group (Mail Stop 501)
1149 S. Broadway, Suite 140
Los Angeles, CA 90015-2213

Subject: First Notice – EW40085D – Stormwater Capture Parks Program Valley Village Park

Northern Region Technical Services Department of SoCalGas operates and maintains various natural gas mains and services within the limits of your proposed project. We (SoCalGas) ask that our facilities be protected in place.

Please be advised that the precise location or depth of our pipeline can only be determined by excavation. Please notify Underground Service Alert (USA) at least two (2) working days prior to the start of any construction.

We appreciate the opportunity to review any future plans you may have. If you have any further questions, please feel free to contact me.

Sincerely,

Aldo Gomez
Planning Associate
SoCalGas
(213) 231-7756
AGGomez@socalgas.com

BUREAU OF ENGINEERING

VALLEY VILLAGE PARK
STORM WATER CAPTURE PROJECT
PROJECT NO. EW40085F

ATTACHMENT 7
TRANSFER AGREEMENT FOR SAFE CLEAN WATER PROGRAM

MARCH 2025

City of Los Angeles
California

Department of Public Works
Bureau of Engineering

ENGINEERING
CITY OF LOS ANGELES

TRANSFER AGREEMENT BETWEEN THE LOS ANGELES COUNTY FLOOD CONTROL DISTRICT AND LOS ANGELES DEPARTMENT OF WATER AND POWER AGREEMENT NO. 2020RPULAR11 SAFE, CLEAN WATER PROGRAM – REGIONAL PROGRAM

This Transfer Agreement, hereinafter referred to as "Agreement," is entered into as of October 29, 2020 by and between the Los Angeles County Flood Control District, hereinafter referred to as "District," and Los Angeles Department of Water and Power for Valley Village Park Stormwater Capture Project, hereinafter referred to as "Recipient."

WHEREAS, District, pursuant to the Los Angeles Region Safe, Clean Water (SCW) Program ordinance (Chapter 16 of the Los Angeles County Flood Control District Code) and the SCW Program Implementation Ordinance (Chapter 18 of the Los Angeles County Flood Control District Code), administers the SCW Program for the purpose of funding Projects and Programs to increase stormwater and urban runoff capture and reduce stormwater and urban runoff pollution in the District;

WHEREAS, Recipient proposes to implement a Funded Activity (as hereafter defined) that is eligible for funding under the SCW Program;

WHEREAS, the Funded Activity is included in a Stormwater Investment Plan (SIP) that has been approved by the County of Los Angeles Board of Supervisors;

WHEREAS, the Board approved a standard template Agreement as required by and in accordance with Section 18.09 of the Los Angeles County Flood Control District Code;

NOW, THEREFORE, in consideration of the promises, mutual representations, covenants and agreements in this Agreement, the District and the Recipient, each binding itself, its successors and assigns, do mutually promise, covenant, and agree as follows:

I. Definitions

The definitions set forth in Sections 16.03 and 18.02 of the Los Angeles County Flood Control District Code shall apply to this Agreement. In addition, the following definitions shall also apply:

"Activity Completion" means that the Funded Activity is complete to the reasonable satisfaction of the District based on review of reports and other documentation as deemed appropriate by the District. If the Funded Activity is an Infrastructure Program Project on District Right-of-Way a separate use and maintenance agreement is required.

"Activity Costs" means the total costs necessary to achieve Activity Completion. The Activity Costs for the Funded Activity are described in Exhibit A.

"Agreement" means this Transfer Agreement, including all exhibits and attachments hereto.

"Budget Plan" means a Recipient's plan for funding Activity Completion, including a description of all sources of funds for Activity Costs and a description of how the SCW Program Contribution will be allocated among the tasks identified in the Scope of Work within each fiscal year. Recipient's Budget Plan is described in Exhibit A.

"Days" means calendar days unless otherwise expressly indicated.

"Fiscal Year" means the period of twelve (12) months terminating on June 30 of any year.

"Funded Activity" means the Infrastructure Program Project, or Scientific Study described in Exhibit A – Scope of Work, including the Stakeholder and Community Outreach Plan and all other tasks and activities described in Exhibit A.

"Safe Clean Water (SCW) Program Contribution" means the portion of the Activity Costs to be paid for with Regional Program funds provided by the District from the SCW Program as described in the Budget Plan.

"Year" means calendar year unless otherwise expressly indicated.

II. Party Contacts

The District and the Recipient designate the following individuals as the primary points of contact and communication regarding the Funded Activity and the administration and implementation of this Agreement.

Los Angeles County Flood Control District		Recipient: Los Angeles Department of Water and Power	
Name:	CJ Caluag	Name:	Peter Tonthat
Address:	11th Floor, PO Box 1460, Alhambra, CA 91802-1460	Address:	111 North Hope Street, Room 318, Los Angeles CA 90012
Phone:	(626) 458-4037	Phone:	213-367-1166
Email:	CCALUAG@dpw.lacounty.gov	Email:	peter.tonthat@ladwp.com

Either party to this Agreement may change the individual identified above by providing written notice of the change to the other party.

III. Exhibits Incorporated BY REFERENCE

The following exhibits to this Agreement, including any amendments and supplements hereto, are hereby incorporated herein and made a part of this Agreement:

EXHIBIT A – SCOPE OF WORK

EXHIBIT B – GENERAL TERMS AND CONDITIONS

EXHIBIT C – SPECIAL CONDITIONS

EXHIBIT D – ADDENDUM TO AGREEMENT

EXHIBIT E – NATURE-BASED SOLUTIONS (Best Management Practices)

EXHIBIT F – OPERATIONS AND MAINTENANCE GUIDANCE DOCUMENT

IV. Activity Completion

A. The Recipient shall implement and complete the Funded Activity in accordance with the work schedule described in Exhibit A,

B. The Recipient shall comply with the terms and conditions in Exhibits A, B, C, D, E, and F of this Agreement, and all applicable provisions of Chapters 16 and 18 of the Code.

C. The Recipient shall fulfill all assurances, declarations, representations, and commitments made by the Recipient in its application for SCW Program Contributions, accompanying documents, and communications filed in support of its application for SCW Program Contributions.

V. SCW PROGRAM FUNDING FOR FUNDED ACTIVITY

A. The District shall disburse the SCW Program Contribution for the 2020-2021 Fiscal Year as described in the corresponding approved Stormwater Investment Plan (SIP) within 45-days of receipt of the signed executed Agreement.

B. If the Funded Activity is included in a duly approved SIP for a subsequent Fiscal Year, the parties shall enter into an addendum to this Agreement, in the form attached as Exhibit D, regarding the disbursement of the SCW Program Contribution for that subsequent Fiscal Year. The Recipient expressly acknowledges and agrees that the District is not obligated to disburse any SCW Program Contributions to Recipient for any Fiscal Year beyond the 2020-21 Fiscal Year unless the Funded Activity is included in a duly approved SIP for a subsequent Fiscal Year , the Recipient has complied with the provisions related to the California Environmental Quality Act in Exhibit C, and the parties have duly executed an addendum to this Agreement for that Fiscal Year.

C. Notwithstanding any other provision of this Agreement, no disbursement shall be made at any time or in any manner that is in violation of or in conflict with federal, state, County laws, policies, or regulations.

D. All disbursements shall be subject to and be made in accordance with the terms and conditions in this Agreement and Chapters 16 and 18 of the Code.

E. The Recipient shall submit the scope of work described in Exhibit A 45-days after approval of the SIP. If the Funded Activity is included in a duly approved SIP for a subsequent Fiscal Year, and there are any changes to the Scope of Work, Budget Plan or any other portions of Exhibit A for that Fiscal Year, a revised Exhibit A will be required as part of the addendum to this Agreement for that Fiscal Year.

VI. Execution of Agreement

This Agreement may be executed simultaneously or in any number of counterparts, including both counterparts that are executed manually on paper and counterparts that are in the form of electronic records and are executed electronically, whether digital or

encrypted, each of which shall be deemed an original and together shall constitute one and the same instrument.

The District and the Recipient hereby agree to regard facsimile/electronic representations of original signatures of authorized officers of each party, when appearing in appropriate places on this Agreement and on any addenda or amendments thereto, delivered or sent via facsimile or electronic mail or other electronic means, as legally sufficient evidence that such original signatures have been affixed to this Agreement and any addenda or amendments thereto such that the parties need not follow up facsimile/electronic transmissions of such documents with subsequent (non-facsimile/electronic) transmission of "original" versions of such documents.

Further, the District and the Recipient: (i) agree that an electronic signature of any party may be used to authenticate this Agreement or any addenda or amendment thereto, and if used, will have the same force and effect as a manual signature; (ii) acknowledge that if an electronic signature is used, the other party will rely on such signature as binding the party using such signature, and (iii) hereby waive any defenses to the enforcement of the terms of this agreement based on the foregoing forms of signature.

IN WITNESS WHEREOF, this Agreement has been executed by the parties hereto.

DEPARTMENT OF WATER AND POWER
OF THE CITY OF LOS ANGELES BY
BOARD OF WATER AND POWER COMMISSIONERS

By: _____
MARTIN L. ADAMS
General Manager and Chief Engineer

Date: 10/4/2021

And: _____
YVETTE L. FURR
Acting Board Secretary

AUTHORIZED BY RES. 022 028
SEP 14 2021

APPROVED AS TO FORM AND LEGALITY
MICHAEL N. FEUER, CITY ATTORNEY

AUG 27 2021

BY _____
JOHN A. CARVALHO
DEPUTY CITY ATTORNEY

IN WITNESS WHEREOF, this Agreement has been executed by the parties hereto.

LOS ANGELES COUNTY
FLOOD CONTROL DISTRICT:

By: _____

Name: Carolina T Hernandez

Title: Assistant Deputy Director

For: Mark Pestrella

Date: 11/01/2021

EXHIBIT A – SCOPE OF WORK

A-1. Budget Plan

The Recipient shall submit a detailed Budget Plan for all eligible expenditures (those incurred after November 7, 2018) for all phases and tasks included in the work schedule for the Funded Activity. The Recipient shall include a summary of leveraged funds and in-kind services for the Funded Activity. For a Funded Activity that will be performed over more than one Fiscal Year, the Budget Plan must clearly identify the amount of SCW Program Contribution for each Fiscal Year.

A-2. Consistent with SCW Program Goals

By signing this Agreement, the Recipient shall provide certification that the Budget Plan is consistent with SCW Program Goals as described in Chapter 18.04 of the Code.

The Recipient shall include a summary of how the identified SCW Program Goals are expected to be achieved through the Funded Activity, including quantitative targets and corresponding metrics for subsequent reporting of all applicable parameters.

A-3. Estimated Reasonable Total Activity Cost

The Recipient shall submit a detailed estimate total Activity Cost for all phases and tasks included in the work schedule for the Funded Activity.

A-4. Funded Activity Description and Scope of Work

The Recipient shall provide a general description of the Funded Activity and a detailed scope of work. The scope of work may include:

1. Project Management, including required reporting
2. General Compliance Requirements/Project Effectiveness and Performance
3. Permitting and Environmental Compliance
4. Planning, Design, and Engineering
5. Stakeholder and Community Outreach/Engagement Activities
6. Right of Way Acquisition
7. Construction and Implementation
8. Operation and Maintenance

A-5. Operations and Maintenance (O&M) Plan

Where the Funded Activity is an Infrastructure Program Project, the Recipient shall submit a plan describing the activities that are expected to be necessary to perform O&M for the

Infrastructure Program Project to ensure it remains in good working order throughout the useful life of the Infrastructure Program Project using SCW Program Contributions. The O&M plan shall address the activities described in Exhibit F to the greatest extent feasible and in as much detail as possible based on the completeness of the Project design and construction. The Recipient shall update the O&M plan in connection with each Addenda until completion of the Infrastructure Program Project and the submittal of a final O&M plan.

The Recipient shall specifically identify the entity that will be performing the O&M for the lifetime of the Project. If this is not the Recipient, the Recipient shall submit a letter of commitment from the entity that will be performing the O&M (See Exhibit F, for example activities). The letter of commitment shall include details demonstrating how the provider is qualified and capable of providing the necessary ongoing O&M services.

The Recipient may elect to request the local Municipality or District to provide O&M for the useful life of the Infrastructure Program Project using SCW Program Contributions. If the Recipient does not elect to seek the District's services or if the District is unable to provide the services as requested, the Recipient shall include in the letter of commitment reference to the above details demonstrating how the provider is qualified and capable of providing the necessary ongoing O&M services.

A-6. Post-Construction Monitoring

Where the Funded Activity is an Infrastructure Program Project, stormwater quality monitoring data shall be collected and reported in a manner consistent with the SWRCB database, the CEDEN for a period of three years. The Recipient shall submit a post-construction monitoring plan when the design phase is complete. The post-construction monitoring plan will evaluate the effectiveness of stormwater treatment facilities and include the project description; quality objectives; sampling design; sampling procedures; quality control; data management verification, and reporting; data quality assessment; and data analysis procedures.

A-7. Sustainability Rating

Where the Funded Activity is an Infrastructure Program Project that has applied for Institute for Sustainable Infrastructure (ISI) verification, the Recipient shall submit the final score and Envision award level.

A-8. Stakeholder and Community Outreach/Engagement Plan

The Recipient shall submit a Stakeholder and Community Outreach/Engagement Plan for Infrastructure Program Projects and include a discussion of how local NGOs or CBOs will be involved, if applicable, and if not, why. Additional outreach/engagement activities, even if funded by other sources, should be referenced to provide an overview of anticipated overall project approach. The plan shall, at a minimum include:

1. Community outreach activities to provide information to residents and information about upcoming meetings or other engagement activity event is scheduled.

Outreach methods used should be appropriate in scale and type to the community being served. Outreach methods include but are not limited to: Online Media Outreach (email blasts, social media, publication on a website) Local Media Outreach (newsletters, local and regional newspapers, and local radio and television) and/or Grassroots Outreach (door-to-door canvassing, phone banking, surveys and focus groups, and distribution of flyers or other printed materials). The District will support outreach efforts through web-based platforms if requested at least four weeks prior to the requested publish date. The District should be included in all social media outreach and notified of all meetings and other engagement events.

2. Community engagement activities solicit, address and seek input from community members for Funded Activities. These events may occur as part of any public meeting with multiple agenda items such as council, commission or committee meetings where public input is invited; or at festivals, fairs, or open houses where a table or booth may be set up.

3. Stakeholder and Community Outreach/Engagement Plan requirements:

   Stakeholder and Community Outreach/Engagement Plan activities should occur at the onset of the project, during the design phase, and during construction.

Infrastructure Program Project Funds	Required Activity 1	Required Activity 2
Up to $2 M	Outreach or Engagement	
Up to $10 M	Outreach	≥1 Engagement
Over $10 M	Outreach	≥ 2 Engagements

4. If the Funded Activity is for the O&M of an Infrastructure Program Project Stakeholder and Community Outreach/Engagement Plan activities should occur biennially to remind communities of the SCW Program Contribution.

5. Activities and measures to mitigate against displacement and gentrification. This includes, as applicable, an acknowledgment that the Funded Activity will be fully subject to and comply with any County-wide displacement policies as well as with any specific anti-displacement requirements associated with other funding sources.

A-9. Tracking Infrastructure Program Project Benefits

The Recipient shall submit an overview of the benefits achieved upon the Activity Completion. SOW shall include quantitative targets and corresponding metrics for subsequent reporting of all applicable parameters.

A-10. Work Schedule and Completion Date

The Recipient shall submit a detailed schedule, including start and completion dates for all phases and tasks of the scope of work for the Funded Activity. For Funded Activities that will be performed over more than one Fiscal Year, the work schedule must clearly identify the phases and tasks that will be performed in each Fiscal Year.

EXHIBIT B – GENERAL TERMS AND CONDITIONS

B-1. Accounting and Deposit of Funding Disbursement

1. SCW Program Contributions distributed to the Recipient shall be held in a separate interest-bearing account and shall not be combined with other funds. Interest earned from each account shall be used by the Recipient only for eligible expenditures consistent with the requirements of the SCW Program.

2. The Recipient shall not be entitled to interest earned on undisbursed SCW Program Contributions; interest earned prior to disbursement is property of the District.

3. The Recipient shall operate in accordance with Generally Accepted Accounting Principles (GAAP).

4. The Recipient shall be strictly accountable for all funds, receipts, and disbursements related to all SCW Program Contributions made to the Recipient.

B-2. Acknowledgement of Credit and Signage

The Recipient shall include appropriate acknowledgement of credit to the District for its support when promoting the Funded Activity or using any data and/or information developed under this Agreement. When the Funded Activity involves the construction phase of an Infrastructure Program Project, signage shall be posted in a prominent location at Project site(s) or at the Recipients headquarters and shall include the Safe, Clean Water Program color logo and the following disclosure statement: "Funding for this project has been provided in full or in part from the Los Angeles County Flood Control District's Safe, Clean Water Program." At a minimum the sign shall be 2' x 3' in size. The Recipient shall also include in each of its contracts for work under this Agreement a provision that incorporates the requirements stated within this paragraph.

When the Funded Activity involves a scientific study, the Recipient shall include the following statement in the study report: "Funding for this study has been provided in full or in part from the Los Angeles County Flood Control District's Safe, Clean Water Program." The Recipient shall also include in each of its contracts for work under this Agreement a provision that incorporates the requirements stated within this paragraph.

B-3. Acquisition of Real Property – Covenant

Any real property acquired in whole or in part with SCW Program funds shall be used for Projects and Programs that are consistent with the SCW Program Goals and with the provisions of Chapter 16 and 18 of the Code.

Any Recipient that acquires the fee title to real property using, in whole or in part, SCW Program funds shall record a document in the office of the Registrar-Recorder/County Clerk containing a covenant not to sell or otherwise convey the real property without the prior express written consent of the District, which consent shall not be unreasonably withheld.

B-4. Amendment

Except as provided in Section II of the Agreement, no amendment or variation of the terms of this Agreement shall be valid unless made in writing and signed by the parties. No oral or written understanding or agreement not incorporated in this Agreement is binding on any of the parties.

B-5. Assignment

The Recipient will not assign this Agreement without the prior consent of the District.

B-6. Audit and Recordkeeping

1. The Recipient shall retain for a period of seven (7) years after Activity Completion, all records necessary in accordance with Generally Accepted Accounting Principles to determine the amounts expended, and eligibility of Projects implemented using SCW Program Contributions. The Recipient, upon demand by authorized representatives of the District, shall make such records available for examination and review or audit by the District or its authorized representatives. Records shall include accounting records, written policies and procedures, contract files, original estimates, correspondence, change order files, including documentation covering negotiated settlements, invoices, and any other supporting evidence deemed necessary to substantiate charges related to SCW Program Contributions and expenditures.

2. The Recipient is responsible for obtaining an independent audit to determine Funded Activity compliance with the terms and conditions of this Agreement and all requirements applicable to the Recipient contained in chapters 16 and 18 of the Code promptly upon Activity Completion. For a Funded Activity that will be performed over the course of a period exceeding three years, the District may also perform an interim independent audit every three (3) years until Activity Completion. Audits shall be funded with Regional Program funds.

3. Recipient shall file a copy of the Activity Completion audit report with the District by the end of the ninth (9th) month from Activity Completion. Recipient shall file a copy of all interim audit reports by the ninth (9th) month from the end of each three (3) year period. Audit reports shall be posted on the District's publicly accessible website.

End-of-Activity		Every Third Fiscal Year		
Projected End Date	**Audit Report Due to District**	**SIP Fiscal Year**	**Audit Period**	**Audit Report Due to District**
1/15/2022	No later than 10/31/2022	2020-21	7/1/2020 to 6/30/2023	No later than 3/31/2024

4. Upon reasonable advanced request, the Recipient shall permit the Chief Engineer, at the District's cost and expense, to examine the Funded Activity. The Recipient shall permit the authorized District representative, including the Auditor-Controller, at the District's cost and expense, to examine, review, audit, and transcribe any and all audit reports, other reports, books, accounts, papers, maps, and other records that relate to the Funded Activity.

5. Expenditures determined by an audit to be in violation of any provision of Chapters 16 or 18 of the Code, or of this Agreement, shall be subject to the enforcement and remedy provisions of Section 18.14 of the Code.

If at any time the Funded Activity cannot fulfill the provisions outlined in Exhibit A, the accounts and books of the Recipient may be reviewed or audited by the District.

B-7. Availability of Funds

District's obligation to disburse the SCW Program Contribution is contingent upon the availability of sufficient funds to permit the disbursements provided for herein. If sufficient funds are not available for any reason including, but not limited to, failure to fund allocations necessary for disbursement of the SCW Program Contribution, the District shall not be obligated to make any disbursements to the Recipient under this Agreement. This provision shall be construed as a condition precedent to the obligation of the District to make any disbursements under this Agreement. Nothing in this Agreement shall be construed to provide the Recipient with a right of priority for disbursement over any other recipient. If any disbursements due the Recipient under this Agreement are deferred because sufficient funds are unavailable, it is the intention of the District that such disbursement will be made to the Recipient when sufficient funds do become available, but this intention is not binding. If this Agreement's funding for any fiscal year is reduced or deleted by order of the Board, the District shall have the option to either cancel this Agreement with no liability occurring to the District or offer an amendment to the Recipient to reflect the reduced amount.

1. The Recipient will not seek disbursement of any Activity Costs that will be disbursed or reimbursed from other funding sources.

2. The Recipient agrees that it will not request a disbursement unless that cost is allowable, reasonable, and allocable.

B-8. Choice of Law

The laws of the State of California govern this Agreement.

B-9. Claims

Any claim of the Recipient is limited to the rights, remedies, and claims procedures provided to the Recipient under this Agreement. Recipient expenditures of a SCW Program Contribution that involves the District shall utilize a separate and specific

agreement to that Project that includes appropriate indemnification superseding that in this Agreement.

B-10. Completion of Funded Activity by the Recipient

The Recipient agrees to pay any and all Activity Costs in excess of the SCW Program Contribution necessary for Activity Completion. The Recipient expressly acknowledges and agrees that if the SCW Program Contribution is not sufficient to pay the Activity Costs in full, the Recipient shall nonetheless complete the Funded Activity and pay that portion of the Activity Costs in excess of the SCW Program Contribution, subject to the provisions of Exhibit C, as applicable.

B-11. Compliance with Law, Regulations, etc.

The Recipient shall, at all times, comply with and require its contractors and subcontractors to comply with all applicable County, state and federal laws, rules, guidelines, regulations, and requirements. Without limitation of the foregoing, the Recipient agrees that, to the extent applicable, the Recipient shall comply with the Code.

B-12. Competitive Bidding and Procurements

The Recipient's contracts with other entities for the acquisition of goods and services and construction of public works with SCW Program Contributions must be in writing and shall comply with all applicable laws and regulations regarding the securing of competitive bids and undertaking competitive negotiations. If the Recipient does not have a written policy to award contracts through a competitive bidding or sole source process, the State Contracting Manual rules must be followed and are available at: https://www.dgs.ca.gov/OLS/Resources/Page-Content/Office-of-Legal-Services-Resources-List-Folder/State-Contracting#@ViewBag.JumpTo

B-13. Continuous Use of Funded Activity; Lease or Disposal of Funded Activity

Where the Funded Activity involves an Infrastructure Program Project, the Recipient shall not abandon, substantially discontinue use of, lease, or dispose of all or a significant part or portion of the Funded Activity during the useful life of 30 years of the Funded Activity without prior written approval of the District. Such approval may be conditioned as determined to be appropriate by the District, including a condition requiring repayment of pro rata amount of all disbursed SCW Program Contributions together with interest on said amount accruing from the date of abandonment, substantial discontinuance, lease or disposal of the Project.

B-14. Default Provisions

The Recipient will be in default under this Agreement under any of the following circumstances:

1. The Recipient has made or makes any false warranty, representation, or statement with respect to this Agreement, any addendum or the application filed to obtain this Agreement;

2. The Recipient materially breaches this Agreement or any addendum, including but not limited to:

    a. Fails to operate or maintain Project in accordance with this Agreement;

    b. Fails to submit timely Quarterly Progress/Expenditure Reports.

    c. Fails to remain in Good Standing (see Section B-34, below).

    d. The Recipient fails to maintain reasonable progress toward SCW Program Goals as described in Section 18.04 of the Code, following an opportunity to cure.

    e. The Recipient fails to maintain reasonable progress toward Project Completion.

    f. Use of SCW Program Contributions for ineligible expenses and/or activities not consistent with the Agreement.

    g. Inappropriate use of SCW Program Contributions, as deemed by the District

Should an event of default occur, the District shall provide a notice of default to the Recipient and shall give the Recipient at least ten calendar days or such longer period as the District, in its reasonable discretion, may authorize, to cure the default from the date the notice is sent via first-class mail to the Recipient. If the Recipient fails to cure the default within the time prescribed by the District, the District may do any of the following:

1. Declare the SCW Program Contribution be immediately repaid, with interest, which shall be equal to the State of California general obligation bond interest rate in effect at the time of the default.

2. Terminate any obligation to make future payments to the Recipient.

3. Terminate the Agreement.

4. Take any other action that it deems necessary to protect its interests.

The Recipient shall not be in default under this Agreement as a result of any breach of this Agreement by the Recipient that is the direct result of the District's failure to make a SCW Program Contribution for any Fiscal Year. Under these circumstances the District may, in its reasonable discretion, terminate this Agreement by providing the Recipient with a written notice of termination. If this Agreement is terminated pursuant to this

paragraph, the parties shall thereafter have no further obligations to each other in connection with the Funded Activity except that the Recipient's indemnification obligations shall survive the termination of this Agreement and continue in full force and effect.

B-15. Disputes

Should a dispute arise between the parties, the party asserting the dispute will notify the other parties in writing of the dispute. The parties will then meet and confer within 21 calendar days of the notice in a good faith attempt to resolve the dispute.

If the matter has not been resolved through the process set forth in the preceding paragraph, any party may initiate mediation of the dispute. Mediation will be before a retired judge or mediation service mutually agreeable to the parties. All costs of the mediation, including mediator fees, will be paid one-half by the District and one-half by the Recipient. SCW Program Contributions shall not be used to pay for any costs of the mediation.

The parties will attempt to resolve any dispute through the process set forth above before filing any action relating to the dispute in any court of law.

B-16. Final Inspection and Certification of Registered Professional

Where the Funded Activity is an Infrastructure Program Project, upon completion of the design phase and before construction, the Recipient shall provide certification by a California Registered Professional (i.e., Professional Civil Engineer, Engineering Geologist) that the design has been completed.

Where the Funded Activity is an Infrastructure Program Project, upon completion of the Project, the Recipient shall provide for a final inspection and certification by a California Registered Professional (i.e., Professional Civil Engineer, Engineering Geologist), that the Project has been completed in accordance with submitted final plans and specifications and any modifications thereto and in accordance with this Agreement.

B-17. Force Majeure.

In the event that Recipient is delayed or hindered from the performance of any act required hereunder by reason of strikes, lockouts, labor troubles, inability to procure materials not related to the price thereof, riots, insurrection, war, or other reasons of a like nature beyond the control of the Recipient, then performance of such acts shall be excused for the period of the delay, and the period for the performance of any such act shall be extended for a period equivalent to the period of such delay.

B-18. Funded Activity Access

When the Funded Activity involves an Infrastructure Program Project the Recipient shall, upon receipt of reasonable advance notice from the District, ensure that the District or

any authorized representative of the foregoing, will have safe and suitable access to the site of the Funded Activity at all reasonable times through Activity Completion.

B-19. Funding Considerations and Exclusions

1. All expenditures of the SCW Program Contribution by Recipient must comply with the provisions of Chapters 16 and 18 of the Code, including but not limited to the provisions regarding eligible expenditures contained in Section 16.05.A.2 and the provision regarding ineligible expenditures contained in Section 16.05.A.3.

2. SCW Program Contributions shall not be used in connection with any Funded Activity implemented as an Enhanced Compliance Action ("ECA") and/or Supplemental Environmental Project ("SEP") as defined by State Water Resources Control Board Office of Enforcement written policies, or any other Funded Activity implemented pursuant to the settlement of an enforcement action or to offset monetary penalties imposed by the State Water Resources Control Board, a Regional Water Quality Control Board, or any other regulatory authority; provided, however, that SCW funds may be used for a Funded Activity implemented pursuant to a time schedule order ("TSO") issued by the Los Angeles Regional Water Quality Control Board if, at the time the TSO was issued, the Funded Activity was included in an approved watershed management program (including enhanced watershed management programs) developed pursuant to the MS4 Permit.

   Recipient certifies that: (a) the Funded Activity is not being implemented as an ECA or SEP; (b) the Funded Activity is not being implemented pursuant to the settlement of an enforcement action or to offset monetary penalties imposed by the State Water Resources Control Board, a Regional Water Quality Control Board, or any other regulatory authority; and (c) the Funded Activity is not being implemented pursuant to a TSO issued by the Los Angeles Regional Water Quality Control Board unless, at the time the TSO was issued, the Funded Activity was included in an approved watershed management program (including enhanced watershed management programs) developed pursuant to the MS4 Permit.

B-20. Indemnification

The Recipient shall indemnify, defend and hold harmless the District and their elected and appointed officers, agents, and employees from and against any and all liability and expense arising from any act or omission of the Recipient, its officers, employees, agents, or subconsultants or contractors in conjunction with Recipient's performance under or pursuant to this Agreement, including defense costs, legal fees, claims, actions, and causes of action for damages of any nature whatsoever, including but not limited to bodily injury, death, personal injury, or property damage.

B-21. Independent Actor

The Recipient, and its agents and employees, if any, in the performance of this Agreement, shall act in an independent capacity and not as officers, employees, or agents of the District.

The Recipient shall not contract work with a contractor who is in a period of debarment from any agency within the District. (LACC Chapter 2.202)

B-22. Integration

This is an integrated Agreement. This Agreement is intended to be a full and complete statement of the terms of the agreement between the District and Recipient, and expressly supersedes any and all prior oral or written agreements, covenants, representations and warranties, express or implied, concerning the subject matter of this Agreement.

B-23. Lapsed Funds

1. The Recipient shall be able to carry over uncommitted Special Parcel Tax funds for up to five (5) years from the end of the fiscal year in which those funds are transferred from the District to the Recipient.

2. If the Recipient is unable to expend the SCW Program Contribution within five (5) years from the end of the Fiscal Year in which those funds are transferred from the District to the Recipient, then lapsed funding procedures will apply. Lapsed funds are funds that were transferred to the Recipient but were not committed to eligible expenditures by the end of the fifth (5th) fiscal year after the fiscal year in which those funds were transferred from the District.

3. Lapsed funds shall be allocated by the Watershed Area Steering Committee of the respective Watershed Area to a new Project with benefit to that Municipality or Watershed Area.

4. In the event that funds are to lapse, due to circumstances beyond the Recipient's control, then the Recipient may request an extension of up to twelve (12) months in which to commit the funds to eligible expenditures. Extension Requests must contain sufficient justification and be submitted to the District in writing no later than three (3) months before the funds are to lapse.

5. The decision to grant an extension is at the sole discretion of the District.

6. Funds still uncommitted to eligible expenditures after an extension is granted will be subject to lapsed funding procedures without exception.

7. Example:

Fiscal Year Transferred	Funds Lapse After	Extension Request Due	Commit By

2020–21	6/30/2026	No later than 3/31/2026	No later than 6/30/2027

B-24. Modification

This Agreement may be amended or modified only by mutual written consent of the Board and Recipient.

B-25. Non-Discrimination

The Recipient agrees to abide by all federal, state, and County laws, regulations, and policies regarding non-discrimination in employment and equal employment opportunity.

B-26. No Obligation of the District

The District will transfer the SCW Program Contribution to the Recipient for the funding of the Funded Activity. The District will have no further obligation, other than to transfer the funds, with respect to the Funded Activity itself.

B-27. No Third-Party Rights

The parties to this Agreement do not create rights in, or grant remedies to, any third party as a beneficiary of this Agreement, or of any duty, covenant, obligation, or undertaking established herein

B-28. Notice

1. The Recipient shall notify the District in writing within five (5) working days of the occurrence of the following:

    a. Bankruptcy, insolvency, receivership or similar event of the Recipient; or

    b. Actions taken pursuant to State law in anticipation of filing for bankruptcy.

2. The Recipient shall notify the District within ten (10) working days of any litigation pending or threatened against the Recipient regarding its continued existence, consideration of dissolution, or disincorporation.

3. The Recipient shall notify the District promptly of the following:

    a. Any significant deviation from in the submitted scope of the Funded Activity for the current Fiscal Year, including discussion of any major changes to the scope of the Funded Activity, noteworthy delays in implementation, anticipated reduction in benefits, and/or modifications that change the SCW Program Goals intended to be accomplished by the Funded Activity. Under no circumstances may the Recipient make changes to the scope of the Funded Activity without receiving prior approval.

b. Cessation of work on the Funded Activity where such cessation of work is expected to or does extend for a period of thirty (30) days or more;

c. Any circumstance, combination of circumstances, or condition, which is expected to or does delay Activity Completion;

d. Discovery of any potential archaeological or historical resource. Should a potential archaeological or historical resource be discovered during construction, the Recipient agrees that all work in the area of the find will cease until a qualified archaeologist has evaluated the situation and made recommendations regarding preservation of the resource. When the District is acting as the Lead Agency under CEQA for the Funded Activity, all work in the area of the find will remain suspended until the District has determined what actions should be taken to protect and preserve the resource and the Recipient agrees to implement appropriate actions as directed by the District;

e. Any public or media event publicizing the accomplishments and/or results of this Agreement and provide the opportunity for attendance and participation by District representatives with at least fourteen (14) days' notice to the District;

f. Activity completion.

B-29. Public Records

The Recipient acknowledges that, except for a subset of information regarding archaeological records, the Funded Activity records and locations are public records including, but not limited to, all of the submissions accompanying the application, all of the documents incorporated by reference into this Agreement, and all reports, disbursement requests, and supporting documentation submitted hereunder.

B-30. Recipient's Responsibility for Work

The Recipient shall be responsible for all work and for persons or entities engaged in work performed pursuant to this Agreement including, but not limited to, contractors, subcontractors, suppliers, and providers of services. The Recipient shall be responsible for responding to any and all disputes arising out of its contracts for work on the Project. The District will not mediate disputes between the Recipient and any other entity concerning responsibility for performance of work.

B-31. Related Litigation

The Recipient is prohibited from using the SCW Program Contribution to pay costs associated with any litigation described in Section 16.05.A.3. of the Code. Regardless of whether the Project or any eventual related project is the subject of litigation, the Recipient agrees to complete the Project funded by the Agreement or to repay all the SCW Program Contribution plus interest to the District.

B-32. Remaining Balance

In the event that the Recipient does not spend all the SCW Program Contribution disbursed for the Funded Activity, Recipient shall promptly return the unspent SCW Program Contribution to the District.

B-33. Reporting

The Recipient shall be subject to and comply with all applicable requirements of the District regarding reporting requirements. Recipients shall report available data through the SCW Reporting Module, once available.

- Quarterly Progress/Expenditure Reports. The Recipient shall submit Quarterly Progress/Expenditure Reports, using a format provided by the District, within forty-five (45) days following the end of the calendar quarter (March, June, September, and December) to the District. The Quarterly Progress/Expenditure Reports shall be posted on the District's publicly accessible website. The Quarterly Progress/Expenditure Report shall include:

    a. Amount of funds received;

    b. Percent overall Funded Activity completion estimate;

    c. Breakdown of how the SCW Program Contribution has been expended;

    d. Documentation that the SCW Program Contribution was used for eligible expenditures in accordance with Chapters 16 and 18 of the Code;

    e. Description of activities that have occurred, milestones achieved, and progress made to date, during the applicable reporting period including comparison to Exhibit A submission and corresponding metrics;

    f. Identification of any phases or tasks of the scope of work that were scheduled to be started or completed during the reporting period (according to the work schedule), but which were delayed, and a discussion of the reasons for the delay, and of lessons learned;

    g. Scheduling concerns and issues encountered that may delay completion of the task;

    h. Work anticipated for the next reporting period;

    i. Any anticipated schedule or budget modifications;

    j. Photo documentation (e.g. photos of community outreach events, stakeholder meetings, groundbreaking ceremonies, and project site that may be used on the publicly accessible District website) of the phases or tasks of the Project completed during the reporting period, as appropriate;

    k. Additional financial or project-related information as required by the District;

l. Certification from a California Registered Professional (Civil Engineer or Geologist, as appropriate), that the Project was conducted in accordance with Exhibit A;

m. Status of Recipient's insurance; and

n. Description of post-performance for each completed infrastructure project is required after the first operational year and for a total of three years after the project begins operation. Post-performance reports shall focus on how each project is actually performing compared to its expected performance; whether the project is operated and maintained and providing intended benefits as proposed. A post-performance template will be provided by the District.

- Quarterly Progress/Expenditure Reports shall be submitted to the District Program Manager no later than forty-five days following the end of the calendar quarter as follows:

Quarter	End of Quarter	Report Due
First Quarter	September	15 November
Second Quarter	December	15 February
Third Quarter	March	15 May
Fourth Quarter	June	15 August

- Annually, a summary of the Quarterly Progress/Expenditure Reports shall be submitted to the Watershed Area Steering Committees to explain the previous year's Quarterly Progress/Expenditure Reports by the Recipient. The summary report shall be submitted six (6) months after the close of the Fourth Quarter. The summary report shall include:

  - Description of the Water Quality Benefits, Water Supply Benefits, and Community Investment Benefits and a summary of how funds have been allocated to achieve SCW Program Goals as articulated in Chapter 18.04 of the Code for the prior year. This includes comparisons to Exhibit A and alignment with corresponding specific quantitative targets and metrics (note that SCW Reporting Module will facilitate graphical representation of pertinent data).

  - When the Funded Activity is an Infrastructure Program Project, include a description of how the County's Local and Targeted Worker Hire Policy has been applied and enforced; or if the Recipient is a Municipality and has adopted its own policy, include a description of how its policy was applied and enforced.

  - Where the Funded Activity is an Infrastructure Program Project that has applied for Institute for Sustainable Infrastructure (ISI) verification, include

a description of the final score and Envision award level. Annually, the Recipient shall prepare and provide members of the public with up-to-date information on the actual and budgeted use of the SCW Program Contribution.

- As Needed Information or Reports. The Recipient agrees to promptly provide such reports, data, and information as may be reasonably requested by the District including, but not limited to material necessary or appropriate for evaluation of the SCW Program or to fulfill any reporting requirements of the County, state or federal government.

B-34. Representations, Warranties, and Commitments

The Recipient represents, warrants, and commits as follows:

1. Authorization and Validity. The execution and delivery of this Agreement, including all incorporated documents, by the individual signing on behalf of Recipient, has been duly authorized by the governing individual(s), board or body of Recipient, as applicable. This Agreement constitutes a valid and binding obligation of the Recipient, enforceable in accordance with its terms, except as such enforcement may be limited by law.

2. No Violations. The execution, delivery, and performance by the Recipient of this Agreement, including all incorporated documents, do not violate any provision of any law or regulation in effect as of the date set forth on the first page hereof, or result in any breach or default under any contract, obligation, indenture, or other instrument to which the Recipient is a party or by which the Recipient is bound as of the date set forth on the first page hereof.

3. No Litigation. There are no pending or, to the Recipient's knowledge, threatened actions, claims, investigations, suits, or proceedings before any governmental authority, court, or administrative agency which affect the Recipient's ability to complete the Funded Activity.

4. Solvency. None of the transactions contemplated by this Agreement will be or have been made with an actual intent to hinder, delay, or defraud any present or future creditors of the Recipient. As of the date set forth on the first page hereof, the Recipient is solvent and will not be rendered insolvent by the transactions contemplated by this Agreement. The Recipient is able to pay its debts as they become due.

5. Legal Status and Eligibility. The Recipient is duly organized and existing and in good standing under the laws of the State of California and will remain so through Activity Completion. The Recipient shall at all times maintain its current legal existence and preserve and keep in full force and effect its legal rights and authority through Activity Completion.

6. Insurance. The Recipient shall follow the Insurance Manual prepared by the Risk Management Office of the Los Angeles County Chief Executive Office. For Infrastructure Program Projects the Recipient shall provide General Liability, Automobile Liability, Worker's Compensation and Employer's Liability, Builder's Risk Course of Construction Insurance, and Professional Liability as specified in the Insurance Manual: https://riskmanagement.lacounty.gov/wp-content/uploads/2019/06/Insurance-Manual-revised-May-2019.pdf

B-35. Requirements for Good Standing

The Recipient must currently be in compliance with the District requirements set forth in this Agreement. The Recipient must demonstrate it has not failed to comply with previous County and/or District audit disallowances within the preceding five years.

B-36. Requirements Related to Recipient's Contractors

1. The Recipient shall apply and enforce provisions mirroring those set forth in the then-current version of the County's Local and Targeted Worker Hire Policy (LTWHP) as to contractors performing work on such a Project. Alternatively, if the Recipient is a Municipality and has adopted its own policy that is substantially similar to the LTWHP, the Recipient may, at its election, choose to apply and enforce the provisions of its own such policy as to contractors performing work on such a Project in lieu of the provisions of the LTWHP.

2. The Recipient shall apply and enforce provisions mirroring those set forth in Los Angeles County Code (LACC) Chapter 2.211 (Disabled Veteran Business Enterprise Preference Program), LACC, Chapter 2.204 (Local Small Business Enterprise Preference Program), LACC, Chapter 2.205 (Social Enterprise Preference Program), LACC, Chapter 2.203 (Contractor Employee Jury Service Ordinance), LACC Chapter 2.206 (Defaulted Tax Program), LACC, Chapter 2.200 (Child Support Compliance Program, LACC, Chapter 2.160 (County Lobbyist Ordinance), Safely Surrendered Baby Law, and Zero Tolerance Policy on Human Trafficking, as to contractors performing work on such an Infrastructure Program Project, subject to statutory authorization for such preference program(s), and subject to applicable statutory limitations for such preference(s); and, furthermore, the Recipient shall take actions to promote increased contracting opportunities for Women-Owned Businesses on the Project, subject to applicable State or federal constitutional limitations.

3. The Recipient shall obtain all necessary approvals, entitlements, and permits required to implement the Project. Failure to obtain any necessary approval, entitlement, or permit shall constitute a breach of a material provision of this Agreement.

4. With respect to a Project funded with SCW Program Contributions through the Regional Program, if the Project has an estimated capital cost of over twenty-five million dollars ($25,000,000),as adjusted periodically by the Chief Engineer in

accordance with changes in the Consumer Price Index for all urban consumers in the Los Angeles area, or other appropriate index, a provision that the Infrastructure Program Project Developer for such a Project must require that all contractors performing work on such a Project be bound by the provisions of: (1) a County-wide Project Labor Agreement (Community Workforce Agreement), if such an agreement has been successfully negotiated between the County and the Trades and is approved by the Board, or (2) a Project Labor Agreement ("PLA") mirroring the provisions of such Community Workforce Agreement.

5. With respect to a Project funded with SCW Program Contributions through the Regional Program, if one or more of the Municipalities that is a financial contributor to a Project has its own PLA, a provision that the Infrastructure Program Project Developer for the Project must require that contractors performing work on the Project are bound to such PLA. If more than one of the contributing Municipalities to a capital project has a PLA, the Project Developer shall determine which of the PLAs will be applied to the Project.

6. Payment Bond. Payment bonds for exceeding twenty-five thousand dollars are required. A payment bond is defined as a surety bond posted by a contractor to guarantee that its subcontractors and material suppliers on the Project will be paid.

7. Performance Bond. Where contractors are used, the Recipient shall not authorize construction to begin until each contractor has furnished a performance bond in favor of the Recipient in the following amounts: faithful performance (100%) of contract value, and labor and materials (100%) of contract value. This requirement shall not apply to any contract for less than $25,000.00. Any bond issues pursuant to this paragraph must be issued by a California-admitted surety. (Pub. Contract Code, 7103; Code Civ. Proc. 995.311.)

8. Prevailing Wage. The Recipient agrees to be bound by all the provisions of Sections 1771 and 1774 of the California Labor Code regarding prevailing wages and requires each of subcontractors to also comply. The Recipient shall monitor all contracts resulting from this Agreement to assure that the prevailing wage provisions of the Labor Code are being met. The Recipient affirms that it is aware of the provisions of section 3700 of the Labor Code, which requires every employer to be insured against liability for workers' compensation or to undertake self-insurance, and the Recipient affirms that it will comply with such provisions before commencing the performance of the work under this Agreement and will make it contractors and subcontractors aware of this provision .

9. Public Funding. This Funded Activity is publicly funded. Any service provider or contractor with which the Recipient contracts must not have any role or relationship with the Recipient, that, in effect, substantially limits the Recipient's ability to exercise its rights, including cancellation rights, under the contract, based on all the facts and circumstances.

B-37. Travel

Any reimbursement for necessary ground transportation and lodging shall be at rates not to exceed those set by the California Department of Human Resources; per diem costs will not be eligible expenses. These rates may be found at http://www.calhr.ca.gov/employees/Pages/travel-reimbursements.aspx. Reimbursement will be at the State travel amounts that are current as of the date costs are incurred by the Recipient. No travel outside the Los Angeles County Flood Control District region shall be reimbursed unless prior written authorization is obtained from the Program Manager.

B-38. Unenforceable Provision

In the event that any provision of this Agreement is determined by a court of competent jurisdiction to be unenforceable, the parties agree that all other provisions of this Agreement have force and effect and shall not be affected thereby.

EXHIBIT C – SPECIAL CONDITIONS

[If the Recipient is a public agency]

C-1. The Recipient acknowledges and agrees that the Recipient is the "lead agency" regarding compliance with the California Environmental Quality Act (CEQA) in connection with the Funded Activity and shall be responsible for the preparation of all documentation, analysis and other work and any mitigation necessary to comply with CEQA in connection with the Funded Activity. By entering into this Agreement, the District is not approving any activity that would be considered a project under CEQA.

C-2. Upon the completion of the documentation, analysis and other work necessary to comply with CEQA as described in section C-1, the Recipient shall promptly provide such documentation, analysis and work to the District. The Recipient acknowledges that the District is a Responsible Agency under CEQA in connection with the Funded Activity and that the District will not disburse the SCW Program Contribution for any activities that meet the definition of a project under CEQA until the Recipient has provided such documentation, analysis and other work to the District and the District has complied with its obligations as a Responsible Agency under CEQA.

C-3. In addition to its other indemnification obligations pursuant to this Agreement, the Recipient hereby agrees to indemnify, defend, and hold harmless District, the County of Los Angeles and their officers, employees, and agents from and against any and all claims and/or actions related to the Funded Activity that may be asserted by any third party or public agency alleging violations of CEQA or the State CEQA Guidelines or the NEPA.

C-4. Notwithstanding any other provision of this Agreement, if any documentation or other analysis pursuant to CEQA discloses that the Funded Activity, or portion thereof, will have one or more significant environmental impacts that cannot be feasibly mitigated, the Recipient shall promptly notify and consult with the District. With the District's approval, the Recipient may determine to terminate or modify the implementation of all or any portion of the Funded Activity in order to avoid such environmental impacts.

C-5. In the event the parties, pursuant to the preceding paragraph, determine to terminate the implementation of the entirety of the Funded Activity, the Recipient shall promptly return all previously disbursed but unspent SCW Program Contributions and the Recipient shall thereafter have no further obligation under this Agreement to implement the Funded Activity. In the event the parties determine to terminate the implementation of a portion of the Funded Activity, the Recipient shall promptly return all previously disbursed but unspent SCW Program Contributions for the terminated portion of the Funded Activity and the Recipient shall thereafter have no further obligation under this Agreement to implement the terminated portion of the Funded Activity, but this Agreement shall remain in full force and effect as to the portion of the Funded Activity not terminated.

[If the Recipient is not a public agency]

C-1. The Recipient shall be responsible for the preparation of all documentation, analysis and other work including any mitigation, necessary to comply with the California Environmental Quality Act (CEQA) in connection with the Funded Activity. Environmental documentation prepared in connection with the Funded Activity will be subject to the review and analysis of the District. Any decisions based on the documentation prepared by the Recipient will reflect the independent judgment of District. By entering into this Agreement, the District is not approving any activity that would be considered a project under CEQA and the Recipient acknowledges that the District will not disburse the SCW Program Contribution for any activities that meet the definition of a project under CEQA until the Recipient has prepared the documentation, analysis and other work necessary to comply with CEQA to the District's satisfaction.

C-2. In addition to its other indemnification obligations pursuant to this Agreement, the Recipient hereby agrees to indemnify, defend, and hold harmless District, the County of Los Angeles and their officers, employees, and agents from and against any and all claims and/or actions related to the Funded Activity that may be asserted by any third party or public agency alleging violations of CEQA or the CEQA Guidelines or the NEPA.

C-3. Notwithstanding any other provision of this Agreement, if any documentation or other analysis pursuant to CEQA discloses that the Funded Activity or any portion thereof will have one or more significant environmental impacts that cannot be feasibly mitigated, the District, after consultation with the Recipient, may terminate the SCW Program Contribution for all or any portion of the Funded Activity or may request that the Funded Activity be modified in order to avoid such environmental impact(s).

C-4. In the event that the District terminates the SCW Program Contribution for the entirety of the Funded Activity, the Recipient shall promptly return all previously disbursed but unspent SCW Program Contributions and the Recipient shall thereafter have no further obligation under this Agreement to implement the Funded Activity. In the event the District terminates the SCW Program Contribution for a portion on of the Funded Activity, the Recipient shall promptly return all previously disbursed but unspent SCW Program Contributions for the terminated portion of the Funded Activity and the Recipient shall thereafter have no further obligation under this Agreement to implement the terminated portion of the Funded Activity, but this Agreement shall remain in full force and effect as to the portion of the Funded Activity for which the SCW Program Contribution was not terminated.

EXHIBIT D – ADDENDUM TO AGREEMENT

-DRAFT TEMPLATE-

ADDENDUM NO. ___ TO
TRANSFER AGREEMENT NO. _____ BETWEEN
THE LOS ANGELES COUNTY FLOOD CONTROL DISTRICT
AND (*INSERT PROJECT DEVELOPER*)
SAFE, CLEAN WATER PROGRAM – REGIONAL PROGRAM

This Addendum No. ___ to Transfer Agreement No. _____, hereinafter referred to as "Addendum No. ___", is entered into as of _____ by and between the Los Angeles County Flood Control District, hereinafter referred to as "District," and ___*(Project Developer/Scientific Studies Applicant)*___, hereinafter referred to as "Recipient."

WHEREAS, District and Recipient entered into Transfer Agreement No. _____ , hereinafter referred to as "Agreement", pertaining generally to the transfer of a SCW Program Contribution (as therein defined) from District to Recipient for the implementation by Recipient of a Funded Activity (as therein defined) to increase stormwater and/or urban runoff capture and/or reduce stormwater and/or urban runoff pollution, on _____;

WHEREAS, the Agreement provides for the disbursement of the SCW Program Contribution for the 2020-21 Fiscal Year (as therein defined), and further provides that if the Funded Activity is included in a duly approved Stormwater Investment Plan (as therein defined) for a subsequent Fiscal Year, the parties shall enter into an addendum to the Agreement regarding the disbursement of the SCW Program Contribution for that subsequent Fiscal Year;

WHEREAS, the Funded Activity has been included in a duly approved Stormwater Investment Plan for Fiscal Year _____;

NOW, THEREFORE, in consideration of the promises, mutual representations, covenants and agreements in this Agreement, the District and the Recipient, each binding itself, its successors and assigns, do mutually promise, covenant, and agree as follows:

1. The definitions set forth in Sections 16.03 and 18.02 of the Los Angeles County Flood Control District Code together with the definitions set forth in the Agreement shall apply to this Addendum No. ___.

2. The District shall disburse the SCW Program Contribution for the _____ Fiscal Year as described in the Budget Plan within ___ days of the execution of this Addendum by the last party to sign.

3. All terms and conditions of the Agreement shall remain in full force and effect.

IN WITNESS WHEREOF, this Addendum No. ___ has been executed by the parties hereto.

_____(*Recipient*)_____:

By: _____

Name:

Title:

Date: _____

LOS ANGELES COUNTY
FLOOD CONTROL DISTRICT:

By: _____

Name:

Title:

Date: _____

EXHIBIT E – NATURE BASED SOLUTIONS (NBS) Best Management Practices

Nature-based solutions (NBS) refers to the sustainable management and use of nature for undertaking socio-environmental challenges, including climate change, water security, water pollution, food security, human health, and disaster risk management. As this environmental management practice is increasingly incorporated into projects for the SCW Program, this guidance document may be expanded upon to further quantify NBS practices based on benefits derived from their incorporation on projects.

The SCW Program defines NBS as a Project that utilizes natural processes that slow, detain, infiltrate or filter Stormwater or Urban Runoff. These methods may include relying predominantly on soils and vegetation; increasing the permeability of Impermeable Areas; protecting undeveloped mountains and floodplains; creating and restoring riparian habitat and wetlands; creating rain gardens, bioswales, and parkway basins; enhancing soil through composting, mulching; and, planting trees and vegetation, with preference for native species. NBS may also be designed to provide additional benefits such as sequestering carbon, supporting biodiversity, providing shade, creating and enhancing parks and open space, and improving quality of life for surrounding communities. NBS include Projects that mimic natural processes, such as green streets, spreading grounds and planted areas with water storage capacity. NBS may improve water quality, collect water for reuse or aquifer recharge, or to support vegetation growth utilizing natural processes.

Recipients are to consider using Nature-Based Solutions for infrastructure projects and include in each Quarterly Progress/Expenditure Report and annual summary whether and how their project achieves a good, better, or best for each of the 6 NBS methods in accordance with the guidance below. Additionally, Quarterly Progress/Expenditure Reports should include discussion on any considerations taken to maximize the class within each method. If at least 3 methods score within a single class, the overall project can be characterized as that class. Recipients must attach a copy of the matrix for each Project with the good, better, or best column indicated for each method, to facilitate District tracking of methods being utilized.

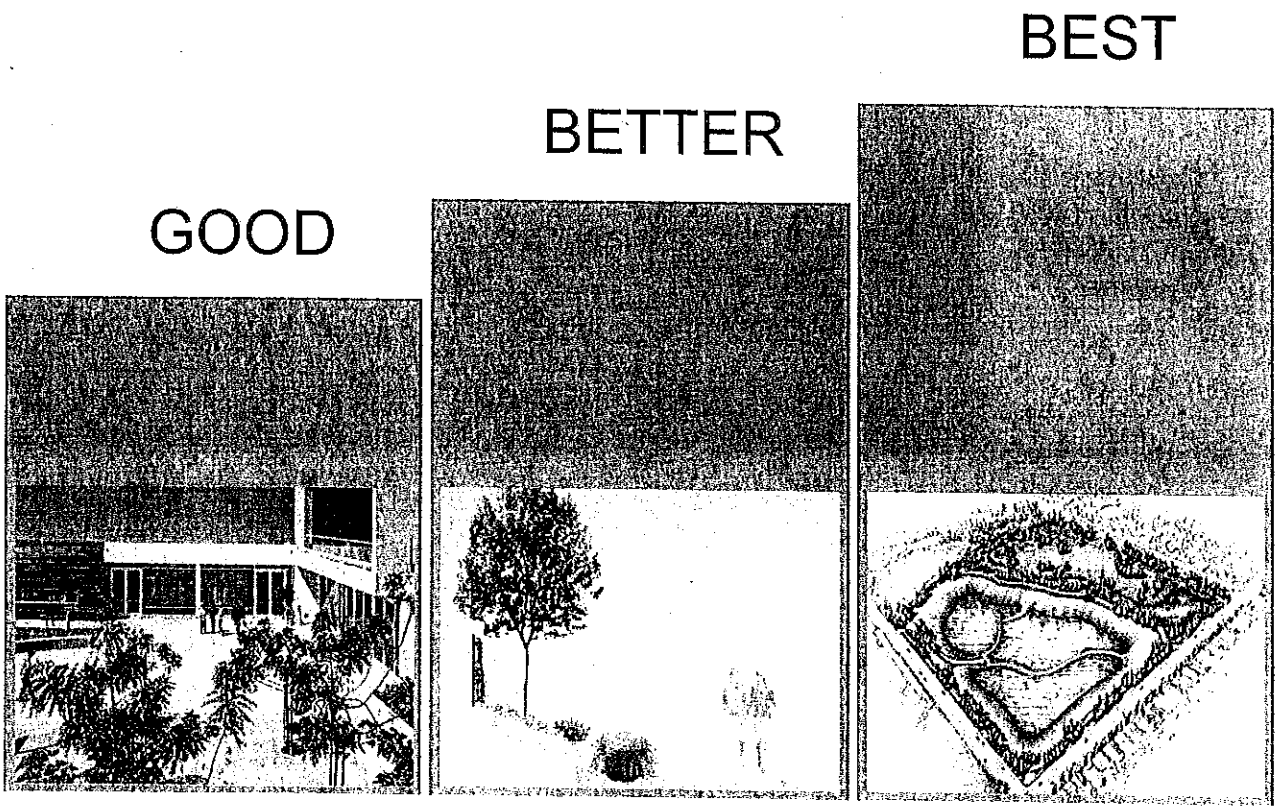

METHODS	GOOD	BETTER	BEST
Vegetation/Green Space	Use of climate-appropriate, eco-friendly vegetation (groundcover, shrubs, and trees) / green space 5%-15% covered by new climate-appropriate vegetation	Use of native, climate-appropriate, eco-friendly vegetation (groundcover, shrubs, and trees) / green space 16%-35% covered by new native vegetation	Establishment of plant communities with a diversity of native vegetation (groundcover, shrubs, and trees) / green space that is both native and climate-appropriate. More than 35% covered by new native vegetation
Increase of Permeability	Installation of vegetated landscape – 25%-49% paved area removed. Redesign of existing impermeable surfaces and/or installation of permeable surfaces (e.g., permeable pavement and infiltration trenches)	Installation of vegetated landscape – 50%-74% paved area removed. Improvements of soil health (e.g., compaction reduction)	Installation of vegetated landscape – 75%-100% paved area removed. Creation of well-connected and self-sustained natural landscapes with healthy soils, permeable surfaces, and appropriate vegetation
Protection of Undeveloped Mountains & Floodplains	• Preservation of native vegetation • Minimal negative impact to existing drainage system	• Preservation of native vegetation • Installation of new feature(s) to improve existing drainage system	• Creation of open green space • Installation of features to improve natural hydrology
Creation & Restoration of Riparian Habitat & Wetlands	• Partial restoration of existing riparian habitat and wetlands • Planting of climate appropriate vegetation between 5 and 15 different climate appropriate or native plant species newly planted • No potable water used to sustain the wetland	• Full restoration of existing riparian habitat and wetlands • Planting of native vegetation – between 16 and 30 different native plant species newly planted • No potable water used to sustain the wetland	• Full restoration and expansion of existing riparian habitat and wetlands • Planting of plant communities with a diversity of native vegetation – greater than 31 native plant species newly planted • No potable water used to sustain the wetland

New Landscape Elements	Elements designed to capture runoff for other simple usage (e.g. rain gardens and cisterns), capturing the 85th percentile 24-hour storm event for at least 50% of the entire parcel	Elements that design to capture/redirect runoff and filter pollution (e.g. bioswales and parkway basins), capturing the 85th percentile 24-hour storm event from the entire parcel	Large sized elements that capture and treat runoff to supplement or replace existing water systems (e.g. wetlands, daylighting streams, groundwater infiltration, floodplain reclamation), capturing the 90th percentile 24-hour storm event from the entire parcel and/or capturing off-site runoff
Enhancement of Soil	Use of soil amendments such as mulch and compost to retain moisture in the soil and prevent erosion Planting of new climate-appropriate vegetation to enhance soil organic matter	Use of soil amendments such as mulch and compost that are locally generated to retain moisture in the soil, prevent erosion, and support locally based composting and other soil enhancement activities Planting of new native, climate-appropriate vegetation to enhance soil organic matter	Use of soil amendments such as mulch and compost that are locally generated, especially use of next-generation design with regenerative adsorbents (e.g. woodchips, biochar) to retain moisture in the soil, prevent erosion, and support on-site composting and other soil enhancement activities Planting of new native, climate appropriate vegetation to enhance soil organic matter

EXHIBIT F – OPERATIONS AND MAINTENANCE GUIDANCE DOCUMENT

Recipient or approved Project operator shall operate and maintain infrastructure projects for the useful life of the project and are to consider using the following guidance for operations and maintenance. Operational maintenance is the care and upkeep of Projects that may require detailed technical knowledge of the Project's function and design. Project specific operational and maintenance plans shall consider the activities listed below and set forth specific activities and frequencies (not limited to those below) as determined to be appropriate by the Municipalities and best practices, including stakeholder engagement as applicable. Operational maintenance is to be performed by the operator of the Project with a purpose to make the operator aware of the state of readiness of the Project to deliver stormwater and urban runoff benefits.

1. Litter Control
    - Regularly removal of litter, nonhazardous waste materials, and accumulated debris near planted areas, rock areas, decomposed granite areas, rest areas, fence perimeters, adjoining access roads and driveways, drains, pedestrian trails, viewing stations, shelter houses, and bicycle pathways.
    - Regularly inspection and maintenance of pet waste stations
    - Maintaining trash receptacles
    - Removal of trash, debris, and blockages from bioswales
    - Inspection and cleaning of trash booms
    - Inspection of weir gates and stop logs to clean debris, as required.

2. Vegetation Maintenance

    - Weed control
        - Recognition and removal of weeds, such as perennial weeds, morning glory, vine-type weeds, ragweed, and other underground spreading weeds.
        - Avoiding activities that result in weed seed germination (e.g. frequent soil cultivation near trees or shrubs)
        - Regularly removal of weeds from landscape areas, including from berms, painted areas, rock areas, gravel areas, pavement cracks along access roads and driveways, drains, pedestrian trails, viewing stations, park shelters, and bicycle paths.

    - Tree and shrubbery trimming and care
        - Removal of dead trees and elimination of diseased/damaged growth
        - Prevent encroachment of adjacent property and provide vertical clearance
        - Inspect for dead or diseased plants regularly

    - Wetland vegetation and landscape maintenance
        - Installation and maintenance of hydrophytic and emergent plants in perennially wet and seasonal, intermittent habitats.
        - Draining and drawdown of wetland and excessive bulrush removal

- Weed and nuisance plant control
- Removal of aquatic vegetation (e.g. algae and primrose) using appropriate watercraft and harvesting equipment
- Wildflower and meadow maintenance
- Grass, sedge, and yarrow management
- Removal of unwanted hydroseed

3. Wildlife Management

- Exotic species control
- Provide habitat management; promote growth of plants at appropriate densities and promote habitat structure for animal species
- Protect sensitive animal species (e.g. protection during critical life stages including breeding and migration)
- Avoid disturbances to nesting birds
- Avoid spread of invasive aquatic species

4. Facility Inspection

- Inspect project sites for rodent and insect infestations on a regular basis
- Inspect for and report graffiti in shelter houses, viewing stations, benches, paving surfaces, walls, fences, and educational and directional signs
- Inspect facilities for hazardous conditions on roads and trails (e.g. access roads and trails, decomposed granite pathways, and maintenance roads)
- Inspect shade structures for structural damage or defacement
- Inspect hardscapes
- Inspect and maintain interpretive and informational signs
- Inspect site furnishings (e.g. benches, hitching posts, bicycle racks)
- Maintain deck areas (e.g. benches, signs, decking surfaces)
- Visually inspect weirs and flap gates for damage; grease to prevent locking.
- Inspect all structures after major storm events, periodically inspect every 3 months, and operate gates through full cycles to prevent them from locking up.

5. Irrigation System Management

- Ensuring automatic irrigation controllers are functioning properly and providing various plant species with proper amount of water.
  - Cycle controller(s) through each station manually and automatically to determine if all facets are functioning properly.
  - Inspection should be performed at least monthly.
  - Recover, replace, or refasten displaced or damaged valve box covers.
  - Inspect and repair bubbler heads.

  - Repair and replace broken drip lines or emitters causing a loss of water (to prevent ponding and erosion).
  - Maintain drip system filters to prevent emitters from clogging. Inspection and cleaning should occur at least monthly.
  - Inspect and clean mainline filters, wye strainers, basket filters, and filters at backflow devices twice a year.
  - Maintain and check function of the drip system.

- Keeping irrigation control boxes clear of vegetation
- Operating irrigation system to ensure it does not cause excessively wet, waterlogged areas, and slope failure
- Utilizing infrequent deep watering techniques to encourage deep rooting, drought tolerant plant characteristics to promote a self-sustaining, irrigation free landscape
- Determine watering schedules based on season, weather, variation in plant size, and plant varieties. At least four times a year (e.g. change of season), reschedule controller systems.
- Turn off irrigation systems at the controller at the beginning of the rainy season, or when the soil has a high enough moisture content.
- Use moisture sensing devices to determine water penetration in soil.

6. Erosion Management and Control

- Inspect slopes for erosion during each maintenance activity
- Inspect basins for erosion
- Take corrective measures as needed, including filling eroded surfaces, reinstalling or extending bank protection, and replanting exposed soil.

7. Ongoing Monitoring Activities

- Monitor controllable intake water flow and water elevation
- Examine inflow and outflow structures to ensure devices are functioning properly and are free of obstructions.
- Water quality sampling (quarterly, unless justified otherwise)
- Checking telemetry equipment
- Tracking and reporting inspection and maintenance records

8. Vector and Nuisance Insect Control

- Monitoring for the presence of vector and nuisance insect species
- Adequate pretreatment of influent wastewater to lessen production of larval mosquitos
- Managing emergent vegetation
- Using hydraulic control structures to rapidly dewater emergent marsh areas
- Managing flow velocities to reduce propagation of vectors

CITY OF LOS ANGELES
DEPARTMENT OF PUBLIC WORKS
BUREAU OF ENGINEERING

CIP NO. SCP0002 - FERNANGELES PARK STORMWATER CAPTURE PROJECT

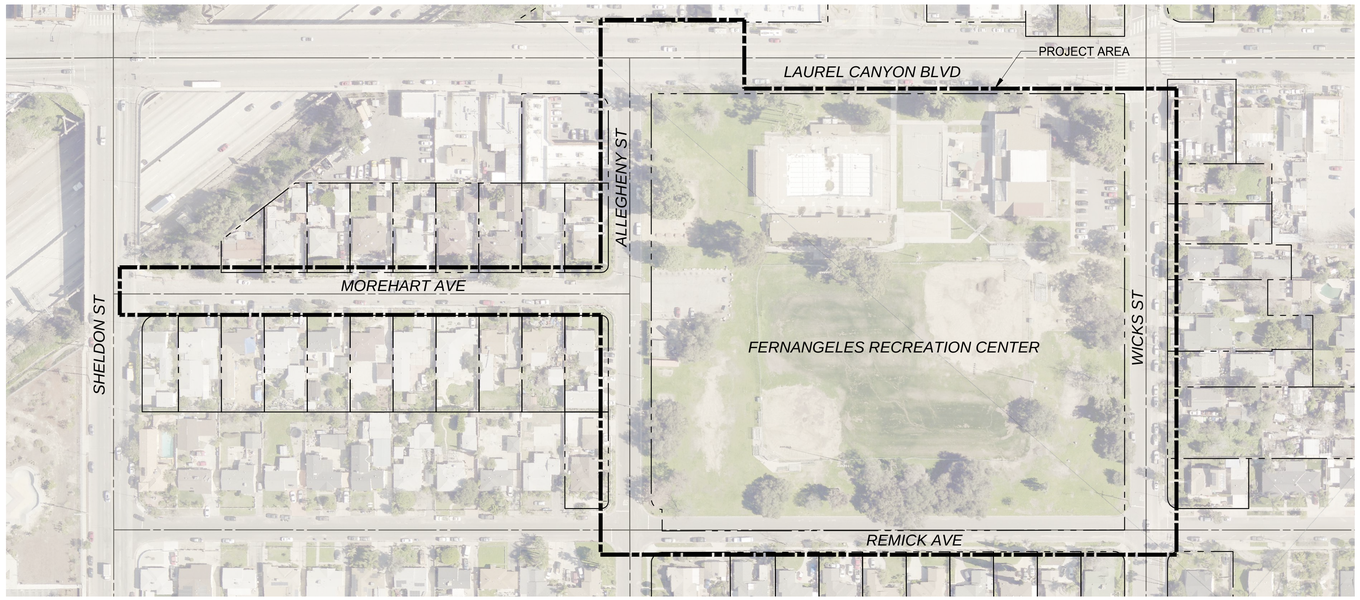

SITE PLAN
NOT TO SCALE

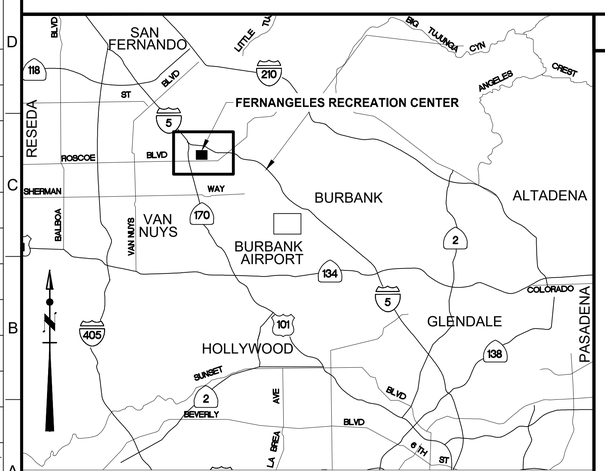

VICINITY PLAN
NOT TO SCALE

PROJECT TEAM

CLIENT: **LOS ANGELES DEPARTMENT OF WATER AND POWER**
JANISSE QUINONES
GENERAL MANAGER AND CHIEF ENGINEER
ART CASTRO, P.E.
WATERSHED MANAGEMENT MANAGER
PETER TONTHAT, P.E.
PROJECT MANAGER

DEPARTMENT OF RECREATION AND PARKS
JIMMY KIM
GENERAL MANAGER
DARRYL FORD
SUPERINTENDENT

PROJECT MANAGEMENT: **CLEAN WATER DIVISION**
CHRISTOPHER F. JOHNSON, P.E., G.E.
DIVISION ENGINEER
ROSHANAK VARJAVAND, P.E., Ph.D.
SENIOR PROJECT MANAGER
EDUARDO HERNANDEZ, P.E.
PROJECT MANAGER
THOMAS LANG
PROJECT ENGINEER
JOSEPH GARCIA
PROJECT ENGINEER

DESIGN SUPPORT: **BUREAU OF ENGINEERING - ARCHITECTUAL DIVISION**
STEVEN FIERCE, AIA
PRINCIPAL ARCHITECT
RICHARD FISHER, ASLA
LANDSCAPE ARCHITECT

DESIGN MANAGEMENT/ CIVIL: **CDM SMITH, INC.**
HALA TITUS, P.E.
PRINCIPAL IN CHARGE
ANTHONY DELLINGER, P.E.
PROJECT MANAGER
ARTHUR GOH, P.E.
PROJECT ENGINEER

CIVIL SITE: **MA ENGINEERING**
JAVIER TISCARENO, P.E.
SENIOR ENGINEER

LANDSCAPE: **NUVIS LANDSCAPE ARCHITECTURE**
PERRY CARDOZA, D.B.E, S.B.E.
PRESIDENT
LAMONT KLECKER, P.L.A.
SENIOR ASSOCIATE

SURVEY: **COAST SURVEYING, INC.**
KURT HOEHN, P.L.S.
PROJECT SURVEYOR

GEOTECHNICAL: **NINYO & MOORE**
DANIEL CHU, PhD, P.E., G.E.
PRINCIPAL ENGINEER
SPENCER MARCINEK, P.E., G.E.
SENIOR PROJECT ENGINEER
GREG CORSON, P.G., C.E.G.
PRINCIPAL GEOLOGIST

STRUCTURAL: **CDM SMITH INC.**
JORDAN MORRIS, P.E., S.E., D.B.I.A.
STRUCTURAL ENGINEER

ELECTRICAL: **PROJECTLINE**
ROBERT GETTER, P.E.
ELECTRICAL ENGINEER

BID AND AWARD: **PROJECT AWARD AND CONTROL DIVISION**
ARSEN VOSKERCHYAN, P.E.
DIVISION MANAGER

CONSTRUCTION MANAGEMENT: **CONSTRUCTION MANAGEMENT DIVISION**
MEGHAN ALDRICH, P.E.
DIVISION ENGINEER

ENGINEERING
CITY OF LOS ANGELES

THIS PLAN WAS ELECTRONICALLY SIGNED AND STAMPED

REGISTERED PROFESSIONAL ENGINEER S. KELLY HOEH No. C-48972 EXP. 06/30/2026 STATE OF CALIFORNIA
01/27/2023

BUREAU OF ENGINEERING
DEPARTMENT OF PUBLIC WORKS
CITY OF LOS ANGELES

VERTICAL CONTROL: CITY OF LOS ANGELES BM 09-20990: 698.94 FEET (NAVD 88)
HORIZONTAL CONTROL: CA STATE PLANE COORD., ZONE 5 (NAD 83 EPOCH 2017.50)

SHEET TITLE: TITLE SHEET
PROJECT: FERNANGELES PARK STORMWATER CAPTURE PROJECT
ADDRESS: FERNANGELES RECREATION CENTER 8951 LAUREL CANYON BLVD, SUN VALLEY, CA 91352

NO.	REVISIONS:	DATE:	BY:

CIP NO. SCP0002
SHEET TYPE GENERAL
INDEX NO.

CITY OF LOS ANGELES
TED ALLEN, P.E.
CITY ENGINEER

DEPUTY CITY ENGINEER/PROGRAM MANAGER — DATE
CITY ENGINEER — DATE

WORK ORDER NO.
EW40079F

SHEET NAME
GI00
SHEET 1 OF 125 SHEETS

THE CITY OF LOS ANGELES OR ITS OFFICERS OR AGENTS SHALL NOT BE RESPONSIBLE FOR THE ACCURACY OR COMPLETENESS OF ELECTRONIC COPIES OF THIS PLAN SHEET.

REVISION DATES (DESIGN STAGE ONLY)

Sheet Version 4.0

C:\CDMEXT\PAVITHRAB\D0495039\GI000.DWG 10/9/2024 4:13 PM

SHEET NO.		DESCRIPTION
GENERAL		
1	GI00	TITLE SHEET
2	GI01	DRAWING INDEX
2A	GI01A	STORMWATER AND GROUNDWATER DOCUMENTATION 1
2B	GI01B	STORMWATER AND GROUNDWATER DOCUMENTATION 2
3	GI02	GENERAL NOTES 1
4	GI03	GENERAL NOTES 2
5	GI04	OVERALL PROJECT SITE PLAN
6	GI05	HYDRAULIC PROFILE - MOREHART AVENUE
7	GI06	HYDRAULIC PROFILE - WICKS STREET
8	GI07	HYDRAULIC PROFILE - LAUREL CANYON BLVD
SURVEY		
9	VF01	SITE SURVEY
TRAFFIC CONTROL		
10	1 of 11	EXHIBIT 1
11	2 OF 11	EXHIBIT 2
12	3 OF 11	EXHIBIT 3
13	4 OF 11	EXHIBIT 4
14	5 OF 11	EXHIBIT 5
15	6 OF 11	EXHIBIT 6
16	7 OF 11	EXHIBIT 7
17	8 OF 11	EXHIBIT 8
18	9 OF 11	EXHIBIT 9
19	10 OF 11	EXHIBIT 10
20	11 OF 11	EXHIBIT 11
21	D-0860	TITLE SHEET - NOTES AND LEGEND LAUREL CANYON BOULEVARD SHELDON ST. TO NEENACH ST., 1 OF 3
22	D-0860	LAUREL CANYON BLVD, SHELDON ST. TO NEENACH ST., 2 OF 3
23	D-0860	LAUREL CANYON BLVD, SHELDON ST. TO NEENACH ST., 3 OF 3
DEMOLITION		
24	DM01	SITE DEMOLITION PLAN
CIVIL		
25	CG01	CIVIL ABBREVIATIONS, SYMBOLS, AND LEGENDS
26	CS01	EXISTING SITE PLAN
27	CS02	LIMITS OF EXCAVATION AND TREE PROTECTION PLAN
28	CS03	GRADING PLAN 1
29	CS04	PARKING LOT STRIPING PLAN
30	CS05	ROADWAY PLAN AND PROFILE 1
31	CS06	ROADWAY PLAN AND PROFILE 2
32	CS07	ROADWAY PLAN AND PROFILE 3
33	CS08	ROADWAY PLAN AND PROFILE 4
34	CS09	ROADWAY CURB RAMP DETAILS 1
35	CS10	ROADWAY CURB RAMP DETAILS 2
36	CS11	ALLEGHENY GREEN STREET IMPROVEMENTS PLAN
37	CS12	GRADING PLAN 1
38	CU01	STORM WATER CONVEYANCE PLAN AND PROFILE 1
39	CU02	STORM WATER CONVEYANCE PLAN AND PROFILE 2
40	CU03	STORM WATER CONVEYANCE PLAN AND PROFILE 3
41	CU04	STORM WATER CONVEYANCE PLAN AND PROFILE 4
42	CU05	STORM WATER CONVEYANCE PLAN AND PROFILE 5
43	CU06	STORM WATER CONVEYANCE PLAN AND PROFILE 6
44	CI01	INFILTRATION GALLERY AND DESILTING BASIN PLAN 1
45	CI02	INFILTRATION GALLERY AND DESILTING BASIN PLAN 2
46	CI03	DESILTING BASIN SECTION
47	CI04	INFILTRATION GALLERIES ENLARGED PLAN AND SECTIONS 1
48	CI05	INFILTRATION GALLERIES ENLARGED PLAN AND SECTIONS 2
49	CI06	DESILTING AND INFILTRATION GALLERIES ENLARGED PLAN AND SECTIONS 1
50	CI07	DESILTING AND INFILTRATION GALLERIES ENLARGED PLAN AND SECTIONS 2
51	CI08	DESILTING AND INFILTRATION GALLERIES ENLARGED PLAN AND SECTIONS 3
52	CI09	DESILTING AND INFILTRATION GALLERIES ENLARGED PLAN AND SECTIONS 4
53	CI10	DESILTING AND INFILTRATION GALLERIES ENLARGED PLAN AND SECTIONS 5
54	CI11	DESILTING AND INFILTRATION GALLERIES ENLARGED PLAN AND SECTIONS 6
55	CI12	DESILTING AND INFILTRATION GALLERIES ENLARGED PLAN AND SECTIONS 7
56	CI13	DESILTING AND INFILTRATION GALLERIES ENLARGED PLAN AND SECTIONS 8
57	CI14	DESILTING AND INFILTRATION GALLERIES ENLARGED PLAN AND SECTIONS 9
58	CI15	DESILTING AND INFILTRATION GALLERIES ENLARGED PLAN AND SECTIONS 10
59	CI16	DESILTING AND INFILTRATION GALLERIES ENLARGED PLAN AND SECTIONS 11
60	CI17	INLET STRUCTURE PLAN AND SECTIONS
61	CI18	HYDRODYNAMIC SEPARATOR PLAN, SECTION AND DETAILS 1
62	CI19	HYDRODYNAMIC SEPARATOR PLAN, SECTION AND DETAILS 2
63	CI20	GATE VAULT & FLOW METER MAINTENANCE HOLE, PLAN, SECTION AND DETAILS
64	CI21	STORMFILTER PRECAST UNITS PLAN AND SECTIONS
65	CI22	CIVIL DETAILS

SHEET NO.		DESCRIPTION
LANDSCAPE ARCHITECTURE		
66	LS01	LANDSCAPE SITE CONSTRUCTION PLAN
67	LS02	LANDSCAPE SITE CONSTRUCTION DETAIL 1
68	LS03	LANDSCAPE SITE CONSTRUCTION DETAIL 2
69	LS04	LANDSCAPE SITE CONSTRUCTION DETAIL 3
70	LS05	LANDSCAPE SITE CONSTRUCTION DETAIL 4
71	LS06	LANDSCAPE SITE CONSTRUCTION DETAIL 5
72	LS07	LANDSCAPE SITE CONSTRUCTION DETAIL 6
73	LS08	LANDSCAPE SITE CONSTRUCTION DETAIL 7
74	LS09	LANDSCAPE SITE CONSTRUCTION DETAIL 8
75	LS10	LANDSCAPE SITE CONSTRUCTION DETAIL 9
76	LS11	LANDSCAPE SITE CONSTRUCTION DETAIL 10
77	LS12	LANDSCAPE SITE CONSTRUCTION DETAIL 11
78	LP01	LANDSCAPE PLANTING PLAN
79	LP02	LANDSCAPE PLANTING LEGEND AND DETAILS
80	LP03	TREE PROTECTION GUIDELINES 1
81	LP04	TREE INVENTORY
82	LI01	LANDSCAPE IRRIGATION PLAN
83	LI02	IRRIGATION LEGEND AND NOTES
84	LI03	IRRIGATION DETAILS 1
85	LI04	IRRIGATION DETAILS 2
86	LI05	IRRIGATION DETAILS 3
87	LI06	IRRIGATION DETAILS 4
88	LI07	IRRIGATION DETAILS 5
89	LI08	IRRIGATION CALCULATIONS
STRUCTURAL		
90	SG01	GENERAL STRUCTURAL NOTES
91	SG02	SPECIAL INSPECTION
92	SB01	GATE VAULT PLANS AND SECTIONS
93	SB02	INLET STRUCTURE PLANS AND SECTIONS
94	SB03	STANDARD DETAILS 1
95	SB04	STANDARD DETAILS 2
ELECTRICAL		
96	EG01	ELECTRICAL GENERAL NOTES
97	EG02	ELECTRICAL SYMBOLS
98	ES01	ELECTRICAL SINGLE LINE DIAGRAM
99	ES02	ELECTRICAL PANEL SCHEDULES
100	ES03	ELECTRICAL SITE PLAN
101	EP01	SB-1, LCP-01, LDC-1, LCMS PLAN AND ELEVATION
102	EP02	OVERALL ELECTRICAL POWER AND INSTRUMENTATION PLAN
103	EP03	ELECTRICAL POWER AND INSTRUMENTATION DETAIL PLAN 1 OF 2
104	EP04	ELECTRICAL POWER AND INSTRUMENTATION DETAIL PLAN 2 OF 2
105	EP05	ELECTRICAL GROUNDING DETAILS
106	EP06	ELECTRICAL SECTIONS AND DETAILS 1 OF 2
107	EP07	ELECTRICAL SECTIONS AND DETAILS 2 OF 2
108	EP08	ELECTRICAL CONTROL SCHEMATIC DIAGRAM - SLIDE GATE
109	EP09	TYPICAL POWER DISTRIBUTION SCHEMATIC DIAGRAM - LCP-01
110	EP10	LADWP TRANSFORMER REQUIREMENT AT FERNANGELES PARK
111	EL01	LIGHTING PLAN
112	EL02	LIGHTING PHOTOMETRIC PLAN
113	EL03	LIGHTING CONTROL SPECIFICATIONS
114	EL04	LIGHTING POWER AND CONTROL DIAGRAM
115	EL05	TITLE 24 SHEETS 1 OF 2
116	EL06	TITLE 24 SHEETS 2 OF 2
INSTRUMENTATION		
117	IG01	INSTRUMENTATION LEGEND AND SYMBOLS 1 OF 2
118	IG02	INSTRUMENTATION SYMBOLS 2 OF 2
119	IP01	INFILTRATION GALLERY - P&ID 1 OF 4
120	IP02	INFILTRATION GALLERY - P&ID 2 OF 4
121	IP03	INFILTRATION GALLERY - P&ID 3 OF 4
122	IP04	INFILTRATION GALLERY - P&ID 4 OF 4
123	IP05	INSTRUMENTATION SCHEDULE
124	IP06	PLC I/O LISTS
125	IP07	LOCAL CONTROL PANEL (LCP-01) LAYOUT

THE CITY OF LOS ANGELES OR ITS OFFICERS OR AGENTS SHALL NOT BE RESPONSIBLE FOR THE ACCURACY OR COMPLETENESS OF ELECTRONIC COPIES OF THIS PLAN SHEET.

REVISION DATES (DESIGN STAGE ONLY)

ENGINEERING
CITY OF LOS ANGELES

THIS PLAN WAS ELECTRONICALLY • SIGNED AND STAMPED

REGISTERED PROFESSIONAL ENGINEER — STEVEN S. TSELEPIS — No. C 48973 — EXP. 06/30/2026 — STATE OF CALIFORNIA — 01/27/2023

BUREAU OF ENGINEERING

VERTICAL CONTROL: BENCH MARK:08-30460:NAVD 88
HORIZONTAL CONTROL: CALIFORNIA STATE PLANE ZONE V. 1983 NAD

SHEET TITLE: DRAWING INDEX

PROJECT: FERNANGELES PARK STORMWATER CAPTURE PROJECT

ADDRESS: FERNANGELES RECREATION CENTER 8851 LAUREL CANYON BLVD, SUN VALLEY, CA 91352

CITY OF LOS ANGELES DEPARTMENT OF PUBLIC WORKS

CITY ENGINEER: TED ALLEN, P.E. — DATE: 04/11/2023

DESIGN GROUP		DATE
ENGINEER:	CDM SMITH INC.	04/11/2023
ARCHITECT:	NA	04/11/2023
DESIGNED BY:	M. MA	04/11/2023
DRAWN BY:	C. BILDERBACK	04/11/2023
CHECKED BY:	P. TAURASI	04/11/2023
APPROVED BY:	A. DELLINGER	04/11/2023

NO.	REVISIONS	DATE	BY
		YY/MM/DD	
		YY/MM/DD	
		YY/MM/DD	
		YY/MM/DD	

CIP NO. SCP0002

INDEX NO.

WORK ORDER EW40079F

SHEET NAME GI01

SHEET 2 OF 125 SHEETS

SHEET VERSION 4.0.1 FILE PATH: C:\CDMEXT\HUCKABEES\D0495039\GI001.DWG PLOT DATE: 11/5/2024 9:54 AM SAVED: 11/5/2024 9:53 AM SAVED BY:HUCKABEES

BOARD OF BUILDING AND SAFETY COMMISSIONERS
JAVIER NUNEZ, PRESIDENT
ELVIN W. MOON, VICE PRESIDENT
JOSELYN GEAGA-ROSENTHAL
LAUREL GILLETTE
GEORGE HOVAGUIMIAN

CITY OF LOS ANGELES
CALIFORNIA

ERIC GARCETTI, MAYOR

DEPARTMENT OF BUILDING AND SAFETY
201 NORTH FIGUEROA STREET
LOS ANGELES, CA 90012

OSAMA YOUNAN, P.E., GENERAL MANAGER, SUPERINTENDENT OF BUILDING
JOHN WEIGHT, EXECUTIVE OFFICER

GEOLOGY AND SOILS REPORT APPROVAL LETTER

November 16, 2022

LOG #123512
SOILS/GEOLOGY FILE - 2

City of Los Angeles, Department of Recreation and Parks
221 N. Figueroa Street, Ste. 400
Los Angeles, CA 90012

TRACT:	1582
LOTS:	FR 23 and FR 24
LOCATION:	8851 N. Laurel Canyon Boulevard

CURRENT REFERENCE REPORT/LETTER(S)	REPORT No.	DATE OF DOCUMENT	PREPARED BY
Geology/Soils Report	211294002	08/31/2020	Ninyo & Moore

The Grading Division of the Department of Building and Safety has reviewed the referenced report that provides recommendations for a proposed stormwater capture and infiltration system to be constructed at Fernangeles Park. According to the report, the proposed facility is intended to capture up to 703,000 cubic-feet of stormwater runoff by diversion structures, water storage structures and infiltration devices. Several alternative designs are being considered. All the alternatives include is a subterranean infiltration gallery about 58,000 square feet in area with an internal height of 14 feet and an invert depth of 20.5 feet.

The earth materials at the subsurface exploration locations consist of 1.5 to 2 feet of uncertified fill underlain by alluvium. The alluvium consists generally of poorly graded sand with variable silt and gravel. Exploration consisted of five hollow-stem auger (HSA) borings and four CPT soundings. Four percolation tests were conducted in the borings. Percolation test results ranged from 3.3 to 18.1 inches/hour, based on three constant head and one falling head percolation tests. Given a long-term reduction factor, the design percolation rate is 3 inches/hour.

According to the consultants, groundwater was not encountered to the maximum depth explored of 58 feet, and historically highest groundwater level is between 150 and 160 feet below the ground surface. The site is relatively level.

The consultants recommend to support the proposed structure(s) on conventional and mat foundations bearing on native undisturbed soils and/or properly placed fill. Temporary excavations of about 20 feet are to be trimmed at a gradient of 1.5:1 (H:V). Shoring is recommended for deeper excavations.

The referenced report is acceptable, provided the following conditions are complied with during site development:

(Note: Numbers in parenthesis ( ) refer to applicable sections of the 2020 City of LA Building Code. P/BC numbers refer the applicable Information Bulletin. Information Bulletins can be accessed on the internet at LADBS.ORG.)

1. The geologist and soils engineer shall review and approve the detailed plans prior to issuance of any permits. This approval shall be by signature on the plans that clearly indicates the geologist and soils engineer have reviewed the plans prepared by the design engineer; and, that the plans include the recommendations contained in their reports (7006.1).
2. All recommendations of the report(s) that are in addition to or more restrictive than the conditions contained herein shall be incorporated into the plans.
3. A copy of the subject and appropriate referenced reports and this approval letter shall be attached to the District Office and field set of plans (7006.1). Submit one copy of the above reports to the Building Department Plan Checker prior to issuance of the permit.
4. A grading permit shall be obtained for all structural fill and retaining wall backfill (106.1.2).
5. All man-made fill shall be compacted to a minimum 90 percent of the maximum dry density of the fill material per the latest version of ASTM D 1557. Where cohesionless soil having less than 15 percent finer than 0.005 millimeters is used for fill, it shall be compacted to a minimum of 95 percent relative compaction based on maximum dry density. Placement of gravel in lieu of compacted fill is only allowed if complying with LAMC Section 91.7011.3.
6. If import soils are used, no footings shall be poured until the soils engineer has submitted a compaction report containing in-place shear test data and settlement data to the Grading Division of the Department; and, obtained approval (7008.2).
7. Compacted fill shall extend beyond the footings a minimum distance equal to the depth of the fill below the bottom of footings or a minimum of three feet, whichever is greater (7011.3).
8. Existing uncertified fill shall not be used for support of footings, concrete slabs or new fill (1809.2, 7011.3).
9. Drainage in conformance with the provisions of the Code shall be maintained during and subsequent to construction (7013.12).
10. Grading shall be scheduled for completion prior to the start of the rainy season, or detailed temporary erosion control plans shall be filed in a manner satisfactory to the Grading Division of the Department and the Department of Public Works, Bureau of Engineering, B-Permit Section, for any grading work in excess of 200 cubic yards (7007.1).

11. The applicant is advised that the approval of this report does not waive the requirements for excavations contained in the General Safety Orders of the California Department of Industrial Relations (3301.1).
12. Temporary excavations that remove lateral support to the public way, adjacent property, or adjacent structures shall be supported by shoring, as recommended. Note: Lateral support shall be considered to be removed when the excavation extends below a plane projected downward at an angle of 45 degrees from the bottom of a footing of an existing structure, from the edge of the public way or an adjacent property. (3307.3.1)
13. Prior to the issuance of any permit that authorizes an excavation where the excavation is to be of a greater depth than are the walls or foundation of any adjoining building or structure and located closer to the property line than the depth of the excavation, the owner of the subject site shall provide the Department with evidence that the adjacent property owner has been given a 30-day written notice of such intent to make an excavation (3307.1).
14. The soils engineer shall review and approve the shoring plans prior to issuance of the permit (3307.3.2).
15. Prior to the issuance of the permits, the soils engineer and/or the structural designer shall evaluate the surcharge loads used in the report calculations for the design of the retaining walls and shoring. If the surcharge loads used in the calculations do not conform to the actual surcharge loads, the soil engineer shall submit a supplementary report with revised recommendations to the Department for approval.
16. Unsurcharged temporary excavations up to 20 feet shall be trimmed back at a gradient not exceeding 1.5:1, as recommended.
17. Shoring shall be designed for the lateral earth pressures specified on Figures 8 & 9 of the 08/31/2020 report; all surcharge loads shall be included into the design. Total lateral load on shoring piles shall be determined by multiplying the recommended EFP by the pile spacing.
18. Shoring shall be designed for a maximum lateral deflection of 1 inch, provided there are no structures within a 1:1 plane projected up from the base of the excavation. Where a structure is within a 1:1 plane projected up from the base of the excavation, shoring shall be designed for a maximum lateral deflection of ½ inch, or to a lower deflection determined by the consultant that does not present any potential hazard to the adjacent structure.
19. A shoring monitoring program shall be implemented to the satisfaction of the soils engineer.
20. All foundations shall derive entire support from native undisturbed soils and/or properly placed fill, as recommended and approved by the geologist and soils engineer by inspection.
21. Footings supported on approved compacted fill or expansive soil shall be reinforced with a minimum of four (4), ½-inch diameter (#4) deformed reinforcing bars. Two (2) bars shall be placed near the bottom and two (2) bars placed near the top of the footing.
22. The seismic design shall be based on a Site Class D, as recommended. All other seismic design parameters shall be reviewed by LADBS building plan check.

23. The seismic design parameters shown on Table 2 (page 19) of the 08/31/2020 report may be used in the design.
24. Retaining walls shall be designed for the lateral earth pressures specified on Figures 10 & 11 of the 08/31/2020 report. All surcharge loads shall be included into the design.
25. All retaining walls shall be provided with a standard surface backdrain system and all drainage shall be conducted in a non-erosive device to the street in an acceptable manner (7013.11).
26. With the exception of retaining walls designed for hydrostatic pressure, all retaining walls shall be provided with a subdrain system to prevent possible hydrostatic pressure behind the wall. Prior to issuance of any permit, the retaining wall subdrain system recommended in the soils report shall be incorporated into the foundation plan which shall be reviewed and approved by the soils engineer of record (1805.4).
27. Installation of the subdrain system shall be inspected and approved by the soils engineer of record and the City grading/building inspector (108.9).
28. Prefabricated drainage composites (Miradrain, Geotextiles) may be only used in addition to traditionally accepted methods of draining retained earth.
29. The infiltration facility design and construction shall comply with the minimum requirements specified in the Information Bulletin P/BC 2020-118.
30. The infiltration system shall be constructed at the location shown on the drawing attached to the current report.
31. The construction of the infiltration system shall be provided under the inspection and approval of the soils engineer.
32. An overflow outlet shall be provided to conduct water to the street in the event that the infiltration system capacity is exceeded. (P/BC 2020-118)
33. Approval for the proposed infiltration system from the Bureau of Sanitation, Department of Public Works shall be secured.
34. A minimum distance of 10 feet (in any direction) shall be provided from adjacent proposed/existing footings to the discharge of the proposed infiltration system. A minimum distance of 10 feet horizontally shall be provided from private property lines to the proposed infiltration system.
35. In the event a dry well is planned, then the dry well area between the blank casing and the surround soils shall be sealed to a minimum depth of 10 feet below the bottom of any adjacent foundation with bentonite slurry (or equivalent) to prevent unintended leakage or horizontal infiltration.
36. All concentrated drainage shall be conducted in an approved device and disposed of in a manner approved by the LADBS (7013.10).

37. Any recommendations prepared by the geologist and/or the soils engineer for correction of geological hazards found during grading shall be submitted to the Grading Division of the Department for approval prior to use in the field (7008.2, 7008.3).
38. The geologist or soils engineer shall inspect all excavations to determine that conditions anticipated in the report have been encountered and to provide recommendations for the correction of hazards found during grading (7008, 1705.6 & 1705.8).
39. Prior to pouring concrete, a representative of the consulting soils engineer shall inspect and approve the footing excavations. The representative shall post a notice on the job site for the LADBS Inspector and the Contractor stating that the work inspected meets the conditions of the report. No concrete shall be poured until the LADBS Inspector has also inspected and approved the footing excavations. A written certification to this effect shall be filed with the Grading Division of the Department upon completion of the work. (108.9 & 7008.2)
40. Prior to excavation an initial inspection shall be called with the LADBS Inspector. During the initial inspection, the sequence of construction; shoring; protection fences; and, dust and traffic control will be scheduled (108.9.1).
41. Installation of shoring shall be performed under the inspection and approval of the soils engineer and deputy grading inspector (1705.6, 1705.8).
42. Prior to the placing of compacted fill, a representative of the soils engineer shall inspect and approve the bottom excavations. The representative shall post a notice on the job site for the LADBS Inspector and the Contractor stating that the soil inspected meets the conditions of the report. No fill shall be placed until the LADBS Inspector has also inspected and approved the bottom excavations. A written certification to this effect shall be included in the final compaction report filed with the Grading Division of the Department. All fill shall be placed under the inspection and approval of the soils engineer. A compaction report together with the approved soil report and Department approval letter shall be submitted to the Grading Division of the Department upon completion of the compaction. In addition, an Engineer's Certificate of Compliance with the legal description as indicated in the grading permit and the permit number shall be included (7011.3).
43. No footing/slab shall be poured until the compaction report is submitted and approved by the Grading Division of the Department.

DANIEL C. SCHNEIDEREIT
Engineering Geologist II

GLEN RAAD
Geotechnical Engineer I

DCS/GR:dcs/gr
Log No. 123512
213-482-0480

cc: Paul Caswell, Applicant
Ninyo & Moore, Project Consultant
VN District Office

CITY OF LOS ANGELES
DEPARTMENT OF BUILDING AND SAFETY
Grading Division

District VN Log No. 123512

APPLICATION FOR REVIEW OF TECHNICAL REPORTS

INSTRUCTIONS

A. Address all communications to the Grading Division, LADBS, 221 N. Figueroa St., 12th Fl., Los Angeles, CA 90012. Telephone No. (213)482-0480.
B. Submit two copies (three for subdivisions) of reports, one "pdf" copy of the report on a CD-Rom or flash drive, and one copy of application with items "1" through "10" completed.
C. Check should be made to the City of Los Angeles.

1. LEGAL DESCRIPTION
Tract: TR 1582
Block: Lots: 23+24
3. OWNER: City of LA
Address: 0 PO Box 51111
City: Los Angeles Zip: 90051
Phone (Daytime):

2. PROJECT ADDRESS:
8851 Laurel Canyon Blvd
4. APPLICANT Paul Caswell
Address: 600 Wilshire Blvd
City: Los Angeles Zip: 90029
Phone (Daytime): 2134572170
E-mail address: caswellpb@cdmsmith.com

5. Report(s) Prepared by: Ninyo & Moore
6. Report Date(s): August 31, 2020
7. Status of project: ☑ Proposed ☐ Under Construction ☐ Storm Damage
8. Previous site reports? ☐ YES if yes, give date(s) of report(s) and name of company who prepared report(s).
9. Previous Department actions? ☐ YES if yes, provide dates and attach a copy to expedite processing.
Dates:
10. Applicant Signature: Position: Engineer

(DEPARTMENT USE ONLY)

REVIEW REQUESTED	FEES	REVIEW REQUESTED	FEES
☐ Soils Engineering		No. of Lots	
☐ Geology		No. of Acres	
☒ Combined Soils Engr. & Geol.	726	☐ Division of Land	
☐ Supplemental		Other	
☐ Combined Supplemental		☒ Expedite	363
☐ Import-Export Route:		☐ Response to Correction	
Cubic Yards:		☐ Expedite ONLY	
		Sub-total	1089
		Surcharge	249.58
		TOTAL FEE	1338.58

Fee Due: 1338.58 10/6/22
Fee Verified By: MC Date:
(Cashier Use Only)
Receipt #142748 pd 10/13/22

ACTION BY:
THE REPORT IS: ☐ NOT APPROVED
☐ APPROVED WITH CONDITIONS ☐ BELOW ☐ ATTACHED

For Geology Date:
For Soils Date:

PC-GRAD.App21 (Rev 01/20/2017) Page 1 of 1 www.ladbs.org

THE CITY OF LOS ANGELES OR ITS OFFICERS OR AGENTS SHALL NOT BE RESPONSIBLE FOR THE ACCURACY OR COMPLETENESS OF ELECTRONIC COPIES OF THIS PLAN SHEET.

REVISION DATES (DESIGN STAGE ONLY)

ENGINEERING
CITY OF LOS ANGELES

THIS PLAN WAS ELECTRONICALLY • SIGNED AND STAMPED

REGISTERED PROFESSIONAL ENGINEER TED S. ALLEN No. C 48973 EXP. 09/30/2023 CIVIL STATE OF CALIFORNIA
01/27/2023

BUREAU OF ENGINEERING

VERTICAL CONTROL:	BENCH MARK (08-30460) NAVD 88
HORIZONTAL CONTROL:	CALIFORNIA STATE PLANE ZONE V. 1983 NAD
SHEET TITLE:	STORMWATER AND GROUNDWATER DOCUMENTATION 1
PROJECT:	FERNANGELES PARK STORMWATER CAPTURE PROJECT
ADDRESS:	FERNANGELES RECREATION CENTER 8851 LAUREL CANYON BLVD, SUN VALLEY, CA 91352

NO.	REVISIONS	DATE	BY
		YY/MM/DD	
		YY/MM/DD	
		YY/MM/DD	
		YY/MM/DD	

CIP NO. SCP0002

INDEX NO.

CITY OF LOS ANGELES DEPARTMENT OF PUBLIC WORKS

CITY ENGINEER: TED ALLEN, P.E. DATE

DESIGN GROUP

ENGINEER:
ARCHITECT:
DESIGNED BY:
DRAWN BY:
CHECKED BY:
APPROVED BY:

WORK ORDER
EW40079F

SHEET NAME
GI01A

SHEET 2A OF 125 SHEETS

Low Impact Development (LID)
Post Construction Stormwater Mitigation
Best Management Practices (BMPs)

STORMWATER BMP(s) VERIFICATION

Upon installation of the approved stormwater BMPs, a Stormwater Observation Report (SOR) Form shall be submitted to Department of Public Works, Bureau of Sanitation. 201 N. Figueroa, 3rd floor, station 18. The SOR Form must be with filed and approved by the Bureau of Sanitation prior to the issuance of a Certificate of Occupancy.

Project Address: 8851 Laurel Canyon Blvd, Sun Valley, CA 91352

RESIDENTIAL (4 UNITS OR LESS, <10,000SF, < 2,500 SF within a ESA)

Item #	Stormwater BMP	Description (Units, total)	Reference Sheet(s)* (Sheet #)
1	Rain Tank(s) – 55 to 130 gal each		
2	Rain Tank(s) – > 130 gal min		
3	Shade Tree - min 15 gal		
4	Flow thru Planter(s)		
5	Permeable pavers / Porous concrete (min 10% open space)	☐ Incidental; _____ total SF ☐ Infiltration; _____ total SF	
6	Rain Garden	☐ #____ - Lined; _____ total SF ☐ #____ - Unlined; _____ total SF	
7	Dry Well		
8	SUMP Pump (modification was not required)		

ALL OTHER DEVELOPMENT
(Residential: 5 ≥ units, 10,000 ≥ SF, within a ESA and ≥2,500SF)

	Item #	Stormwater BMP	Description (Units, total)	Reference Sheet(s)* (Sheet #)
Infiltration	1	Infiltration Basin / Trench	Underground Infiltration Gallery (66,767 SF)	CI01 - CI21
	2	Dry Well		
	3	Permeable pavers / Porous concrete (min 10% open space)	☐ Incidental; _____ total SF ☐ Infiltration; _____ total SF	
Capture & Use	4	Rain Tank(s) – 530 gal min		
	5	Cistern	☐ Above Grade ☐ Below Grade	
Treat & Discharge	6	Flow thru Planter(s)		
	7	Biofiltration	☐ #____ - Lined; _____ total SF ☐ #____ - Unlined; _____ total SF	
	8	Vegetative Swale / Filter Strip		
	9	Hydrodynamic Separator	13' x 7' x 10.25', 13' x 7' x 14.25', 9' x 5' x 8'	CI002, CI003, CI004, CI005, CI01, CI02, CI17, CI18, CI19
	10	Sand Filter	1,680 SF	CI001, CI002, CI003, CI004, CI005
	11	Down Spout Filter(s)		
	12	SUMP Pump (modification was not required)		

* At a minimum: Site Plan, Architectural Elevations, Roof Plan, Civil Sheets and Detail

LA DWP Los Angeles Department of Water & Power
CUSTOMERS FIRST

Eric Garcetti, Mayor

Board of Commissioners
Mel Levine, President
Cynthia McClain-Hill, Vice President
Jill Banks Barad
Christina E. Noonan
Susana Reyes
Susan A. Rodriguez, Secretary

Martin L. Adams, General Manager and Chief Engineer

November 25, 2019

Safe, Clean Water Program
Upper Los Angeles River WASC
900 South Fremont Avenue
Alhambra, California 91803

Dear SCW Program Administrators:

Subject: Fernangeles Park Stormwater Capture Project Water Supply Benefits

The Fernangeles Park Stormwater Capture Project (Project) is located at 8851 Laurel Canyon Boulevard in the Sun Valley Neighborhood of the San Fernando Valley. This Project will treat and capture stormwater runoff from a 292-acre tributary area in the upper Tujunga Wash Watershed and help recharge the San Fernando Groundwater Basin.

The Project is part of the Los Angeles Department of Water and Power's Stormwater Capture Program (Program), an important element to the overall long term plan to enhance the local water supply. The principle of the Program involves capturing precious rainfall and runoff from open space and urban lands for either direct use or infiltration to help improve the health of the groundwater basins.

The Project will capture and infiltrate stormwater through vegetated swales, catch basins, hydrodynamic separators, and an underground infiltration gallery to recharge the San Fernando Groundwater Basin. The Project's estimated annual capture volume was modeled using the EPA's Storm Water Management Model (SWMM 5.1) using 10-year historical rain data (1997-2007) from the City of Burbank's Valley Pumping Plant rain gage (COOP:041194). The simulation estimated a wet weather yield of 175 acre-feet per year (AFY), while dry weather runoff was estimated to be 17 AFY. This is based on low flow diversion monitoring data from 2012 to 2016, where the median value for dry weather runoff is approximately 84 gallons per day per impervious acre of land. The combined total estimated runoff is 192 AFY. SWMM results are attached in Section 2.4.

STORMWATER OBSERVATION REPORT FORM

(Residential ≥ 5 units & All other Development)

LOW IMPACT DEVELOPMENT

IN THE EVENT THAT THE APPROVED STORMWATER BMP CANNOT BE BUILT PER PLANS (OR ANY MODIFICATION), CONSULT WITH BUREAU OF SANITATION STAFF PRIOR TO ANY PLAN MODIFICATIONS. FAILURE TO DO SO MAY DELAY OBTAINING A FINAL APPROVAL AND CERTIFICATE OF OCCUPANCY (C OF O).

STORMWATER OBSERVATION *means the visual observation of the stormwater related Best Management Practices (BMPs) for conformance with the approved LID Plan at significant construction stages and at completion of the project. Stormwater observation does not include or waive the responsibility for the inspections required by Section 108 or other sections of the City of Los Angeles Building Code.*

STORMWATER OBSERVATION *must be performed by the engineer or architect responsible for the approved LID Plan or designated staff in their employment.* ***As part of the observation, provide photos of the BMPs taken during various construction phases.***

STORMWATER OBSERVATION REPORT *must be signed and stamped (see below) by the engineer or architect responsible for the approved LID Plan and submitted to the city prior to the issuance to the certificate of occupancy.* ***PRIOR TO CERTIFICATE OF OCCUPANCY (C of O), SOR FORM, PRINTED PHOTOS OF THE BMPS TAKEN DURING VARIOUS CONSTRUCTION PHASES AND APPROVED STAMPED PLANS BY THE BUREAU OF SANITATION MUST BE SUBMITTED TO THE PUBLIC COUNTER FOR STAFF APPROVAL.***

Project Address:	Building Permit No.:
8851 Laurel Canyon Blvd, Sun Valley, CA 91352	22020-10000-00301
Name of Engineer/Architect responsible for the approved LID Plan: Anthony S. Dellinger	Phone Number: (213) 792-4591

List all BMPs installed as part of the project: Coordinates of the most significant (or typical) BMPs:

BMP Type: Underground Infiltration Gallery 66,767 SF # of units: 1 Lat: 34.229300 ; Long: -118.402543	BMP Type: Hydrodynamic Separator 13' x 7' x 10.25' 13' x 7' x 14.25' # of units: 3 Lat: 34.229878 34.229777 34.227894 ; Long: -118.402626 -118.402974 -118.402252
BMP Type: Sand Filter 1,680 SF # of units: 1 Lat: 34.229858 ; Long: -118.402955	BMP Type: _____ # of units: ____ Lat: _____ ; Long: _____

I DECLARE THAT THE FOLLOWING STATEMENTS ARE TRUE TO THE BEST OF MY KNOWLEDGE:

1. I am the engineer or architect responsible for the approved LID Plan, and;
2. I, or designated staff under my responsible charge, has preformed the required site visits at each significant construction stage and at the completion to verify that the Best Management Practices (BMPs) as shown on approved plans have been constructed and installed in accordance with the approved LID Plan.

Wet Stamp of Engineer or Architect

Signature Date

SCW Program Administrators
November 25, 2019
Page 2

The infiltration substructure was sized to retain the 85th percentile, 24 hour volume, using the Los Angeles County Department of Public Works HydroCalc Calculator software (version 1.0.3). The Project's peak inflow rate was estimated to be 21.8 cubic feet per second (cfs) and has a total 24 hour clear runoff volume of 15.4 acre-feet (AF). The Project will be designed to capture the 21.8 cfs inflow rate and 15.4 AF runoff volume parameters.

Fully endorsed by the Upper Los Angeles River Area (ULARA) Watermaster, projects such as the Fernangeles Park Stormwater Capture Project are key to restoring and maintaining the health of the San Fernando Basin. This Project provides excellent capture, water supply, and other multi-benefits to help achieve the objectives of the Los Angeles County, as defined by the Safe, Clean Water Program Ordinance.

If you have any questions or require additional information, please contact me at (213) 367-1289.

Sincerely,

Rafael Villegas,
Manager of Water Rights and Groundwater Management

CM:lb
c: Rafael Villegas
Conor Mossavi

THIS PLAN WAS ELECTRONICALLY • SIGNED AND STAMPED

ENGINEERING
CITY OF LOS ANGELES

REGISTERED PROFESSIONAL ENGINEER ANTHONY S. DELLINGER No. C 48973 EXP. 09/30/2026 CIVIL STATE OF CALIFORNIA 01/27/2023

BUREAU OF ENGINEERING

VERTICAL CONTROL: BENCH MARK:06-30460 (NAVD 88)
HORIZONTAL CONTROL: CALIFORNIA STATE PLANE ZONE V, 1983 NAD

SHEET TITLE: STORMWATER AND GROUNDWATER DOCUMENTATION 2

PROJECT: FERNANGELES PARK STORMWATER CAPTURE PROJECT

ADDRESS: FERNANGELES RECREATION CENTER 8851 LAUREL CANYON BLVD, SUN VALLEY, CA 91352

NO.	REVISIONS	DATE	BY
		YY/MM/DD	
		YY/MM/DD	
		YY/MM/DD	
		YY/MM/DD	

CIP NO. SCP0002

INDEX NO.

CITY OF LOS ANGELES DEPARTMENT OF PUBLIC WORKS

CITY ENGINEER: TED ALLEN, P.E. DATE

DESIGN GROUP:
ENGINEER:
ARCHITECT:
DESIGNED BY:
DRAWN BY:
CHECKED BY:
APPROVED BY:

WORK ORDER EW40079F

SHEET NAME GI01B

SHEET 2B OF 125 SHEETS

THE CITY OF LOS ANGELES OR ITS OFFICERS OR AGENTS SHALL NOT BE RESPONSIBLE FOR THE ACCURACY OR COMPLETENESS OF ELECTRONIC COPIES OF THIS PLAN SHEET.

REVISION DATES (DESIGN STAGE ONLY)

SHEET VERSION 4.0.1 FILE PATH: C:\CDMEXT\PAVITHRAB\D0495039\GI001B.DWG PLOT DATE: 10/9/2024 4:14 PM SAVED: 10/4/2024 11:59 AM SAVED BY:PAVITHRAB

GENERAL NOTES

1. THESE IMPROVEMENTS CONSIST OF WORK CALLED FOR ONLY ON THIS PLAN. THE PLAN REFERS TO THE CONTRACT DRAWINGS, SPECIFICATIONS, AND SCHEDULE OF WORK INCLUDED HEREIN. THE PLANS SHALL COMPLIES WITH ALL PERMIT AND SPECIAL REPORT REQUIREMENTS.
2. THE CONTRACTOR SHALL CONFORM TO THE GENERAL CONDITIONS AND GENERAL REQUIREMENTS, THE LATEST EDITION AND SUPPLEMENTS OF THE STANDARD SPECIFICATIONS FOR PUBLIC WORKS CONSTRUCTION (SSPWC), SSPWC PARTS 2-6, HEREINAFTER ADOPTED BY THE BOARD OF PUBLIC WORKS AND THE CITY OF LOS ANGELES INCLUDING THE CITY OF LOS ANGELES DEPARTMENT OF PUBLIC WORKS SSPWC ADDITIONS AND AMENDMENTS (BROWN BOOK), LATEST EDITION.
3. THE CONTRACTOR IS REQUIRED TO PARTICIPATE AT ALL PUBLIC RELATIONS AND COMMUNITY MEETINGS UNLESS EXCUSED BY THE CITY.
4. ALL CONSTRUCTION SHALL CONFORM TO THE 2020 CITY OF LOS ANGELES BUILDING CODE.
5. THE CONTRACTOR SHALL COMPLY WITH ALL APPLICABLE ADA REQUIREMENTS.
6. ALIGNMENT AND LOCATION OF EXISTING STRUCTURES AND UTILITIES HAVE BEEN COMPILED WITH THE MOST ACCURATE INFORMATION AVAILABLE. ACTUAL DIMENSIONS, LOCATIONS, ELEVATIONS, ETC. MAY VARY. THE CONTRACTOR SHALL VERIFY EXISTING FIELD CONDITIONS AND BASE WORK ON ACTUAL ON-SITE CONDITIONS AND MEASUREMENTS. ANY DISCREPANCIES, OMISSIONS OR ERRORS ON THE DRAWINGS SHALL BE BROUGHT TO THE ATTENTION OF THE ENGINEER. THE CONTRACTOR SHALL ASSUME FULL RESPONSIBILITY OF ALL REVISIONS DUE TO FAILURE TO GIVE SUCH NOTICE.
7. THE CONTRACTOR IS REQUIRED TO TAKE DUE PRECAUTIONARY MEASURES TO PROTECT THE UTILITY LINES SHOWN AND OTHER STRUCTURES NOT ON RECORD OR NOT SHOWN ON THESE PLANS. WHERE CONSTRUCTION, INCLUDING UTILITY LINES, CROSSES OR IS ADJACENT TO EXISTING UTILITY LINES (FUEL, WATER, SEWER, TELECOMMUNICATION, GAS, OR ELECTRIC), THE CONTRACTOR SHALL DIG TEST PITS AND CAREFULLY HAND EXCAVATE SO AS TO LOCATE, MARK, AND PROTECT THE UTILITY LINES AGAINST DISTURBANCE OR DAMAGE.
8. THE CONTRACTOR IS REQUIRED TO CONTACT UNDERGROUND SERVICE ALERT (USA) FOR UTILITY MARKINGS. CONTACTING USA AT 8-1-1 DOES NOT RELIEVE THE CONTRACTOR OF CONTACTING OWNERS OF NON-PRESSURE CONDUITS, WHO MAY NOT BE REQUIRED TO BE MEMBERS OF USA. THEREFORE, INDIVIDUAL CONTACTS TO SUCH OWNERS ARE REQUIRED.
9. THE CONTRACTOR SHALL GIVE REASONABLE NOTICE TO PROPERTY OWNERS OR OCCUPANTS OF THE PROPOSED IMPROVEMENTS FRONTING THEIR PROPERTY. THE CONTRACTOR SHALL OBTAIN A CITY-APPROVED "NOTICE OF PROPOSED UTILITY WORK" FROM THE ENGINEER AND DISTRIBUTE COPIES NO LATER THAN 10 CALENDAR DAYS PRIOR TO COMMENCEMENT OF CONSTRUCTION IN ACCORDANCE WITH THE REQUIREMENTS OF THE PROJECT MANUAL. NOTICES ARE NOT TO BE PLACED IN OR ATTACHED TO MAIL BOXES.
10. FOR DESCRIPTION OF SUBSURFACE CONDITIONS, REFER TO GEOTECHNICAL EVALUATION LABOE TOS NO. 25 STORMWATER CAPTURE PARKS PROGRAM FERNANGELES RECREATION CENTER, NINYO & MOORE, DATED AUGUST 31, 2020;
11. THE CONTRACTOR SHALL CONTACT NINYO AND MOORE (949) 753-7070 AT LEAST TWO WORKING DAYS IN ADVANCE OF REQUIRED OBSERVATIONS OR INSPECTIONS BY THE GEOTECHNICAL ENGINEER.
12. GEOTECHNICAL OBSERVATION AND TESTING OF MATERIALS SHALL BE DONE IN ACCORDANCE WITH THE GENERAL REQUIREMENT IN SPECIFICATIONS SECTION 01453 SAMPLING, TESTING, AND FABRICATION AND SECTION 01712 SUBSURFACE CONDITIONS.
13. REFER TO GENERAL REQUIREMENTS SECTION 01452 OF THE SPECIFICATIONS FOR INSPECTION REQUIREMENTS.
14. IT IS EXPECTED THAT THE CONTRACTOR MUST PROVIDE SPECIAL PRECAUTIONS FOR WORKER PROTECTION. THESE DEVICES MAY INCLUDE BUT ARE NOT LIMITED TO PROTECTIVE CANOPIES AND SHORING. CONTRACTOR SHALL SUBMIT SHORING PLAN TO BOE FOR REVIEW AND APPROVAL PRIOR TO EXECUTION OF THE SHORING WORK. CONTRACTOR IS RESPONSIBLE FOR DESIGN, IMPLEMENTATION, MAINTENANCE, AND COST OF THE SHORING INCLUDING ITS PERMIT AND PERMIT PROCESS.
15. THE CONTRACTOR SHALL BE RESPONSIBLE FOR ADEQUATELY BRACING AND PROTECTING ALL WORK DURING CONSTRUCTION AGAINST DAMAGE, BREAKAGE, COLLAPSE, DISTORTIONS AND OFF ALIGNMENTS ACCORDING TO CODES AND STANDARDS OF GOOD PRACTICE. RIM ELEVATIONS SHOWN FOR NEW CATCH BASINS ARE APPROXIMATE ONLY. CONTRACTOR SHALL INSTALL FRAMES AND GRATES TO GRADE, AT LOW POINTS WHERE APPLICABLE.
16. AT LEAST THIRTY (30) DAYS BEFORE THE START OF CONSTRUCTION, THE CONTRACTOR/ENGINEER SHALL CONTACT THE BUREAU OF STREET SERVICES, COORDINATING SECTION AT (213) 485-5691 TO VERIFY THAT THERE IS NO PROPOSED PROJECT IN THIS AREA.
17. SURVEY MONUMENT PRESERVATION IS REQUIRED AND SHALL INCLUDE SUBMITTAL OF PRE AND POST CONSTRUCTION SURVEY MONUMENT TIES TO THE ENGINEER AS SPECIFIED IN THE GENERAL REQUIREMENT IN SPECIFICATION SECTION 01722.
18. THE CONTRACTOR MUST MAINTAIN FLOOD CAPACITY AT ALL TIMES DURING CONSTRUCTION. THE CONTRACTOR SHALL BE RESPONSIBLE FOR THE ACCEPTANCE AND CONTROL OF ALL SURFACE AND SUBSURFACE DRAINAGE AND GROUNDWATER ENTERING THE PROJECT AREA. REFER TO SECTION 02235 OF THE SPECIFICATIONS FOR DEWATERING REQUIREMENTS.
19. THE CONTRACTOR SHALL CONDUCT ALL GRADING AND PLANTING OPERATIONS IN ACCORDANCE WITH ALL REQUIRED PERMITS. FOR A LIST OF THE PERMITS, REFER TO SPECIFICATIONS SECTION 01112. CONTRACTOR SHALL COORDINATE WITH THE BUREAU OF STREET SERVICES-URBAN FORESTRY DIVISION FOR ALL TREE PLANTING.
20. CONTRACTOR IS RESPONSIBLE FOR STAKING THE LINE AND GRADE SHOWN ON THE DRAWINGS, PRIOR TO PROCEEDING WITH CONSTRUCTION. THIS WORK INCLUDES, BUT IS NOT LIMITED TO, LOCATION OF ALL PLANTING TYPES. ANY ERRORS OR OMISSIONS ON THE CONSTRUCTION DRAWINGS SHALL BE BROUGHT TO THE IMMEDIATE ATTENTION OF THE ENGINEER. FAILURE TO DO SO DOES NOT RELIEVE THE CONTRACTOR FROM COMPLETING THE WORK AS REQUIRED. ENGINEER WILL REVIEW AND APPROVE IN WRITING PLANTING LAYOUT IN THE FIELD. CONTRACTOR IS RESPONSIBLE FOR STAKING ALL PROPERTY LINES BY A LICENSED SURVEYOR.
21. THE PHYSICAL FEATURES WITHIN THE LIMITS OF THE MAPPING HAVE BEEN SHOWN BASED ON PHOTOGRAMMETRIC MAPPING PROCEDURES AND NATIONAL STANDARDS. DISCONTINUITIES IN CONTOURS ARE THE RESULT OF MAPPING PRODUCED AT DIFFERENT DATES AND USING ALTERNATIVE METHODS (FOR EXAMPLE, AERIAL PHOTOGRAPHY, GROUND SURVEYS, AND ONE (1) FOOT VERSUS FIVE (5) FOOT CONTOUR MAPPING ACCURACIES.)
22. THE CONTRACTOR SHALL BE RESPONSIBLE FOR RESETTING SURVEY CONTROL MONUMENTS DISTURBED BY CONSTRUCTION AS NECESSARY.
23. THE CONTRACTOR SHALL LIMIT CONSTRUCTION AND ANCILLARY ACTIVITIES TO THOSE AREAS WITHIN THE LIMITS OF GRADING AS INDICATED BY THE DAYLIGHT LINE SHOWN ON THE PLANS AND CROSS SECTIONS WITH THE EXCEPTION OF LANDSCAPE AND RESTORATION ACTIVITIES OUTSIDE LIMITS OF GRADING. ANY DISTURBANCE BEYOND THESE LIMITS SHALL BE RESTORED TO ORIGINAL CONDITION BY THE CONTRACTOR AT HIS EXPENSE.
24. PRIOR TO STARTING ANY CONSTRUCTION ACTIVITY, THE CONTRACTOR SHALL COORDINATE AND ATTEND A PRE-CONSTRUCTION MEETING. REFER TO SECTION 01312 IN THE SPECIFICATIONS FOR MEETING REQUIREMENTS.
25. THE TOP ELEVATION OF ALL EXISTING HANDHOLES, MANHOLES, CATCH BASINS, VALVE BOXES, AND FILL CAPS COVERS LOCATED WITHIN THE CONSTRUCTION AREA SHALL BE FLUSH WITH THE PROPOSED GRADE. IF ANY STRUCTURE IS TO BE RESET, CONTRACTOR TO NOTIFY THE ENGINEER IMMEDIATELY PRIOR TO RESETTING.
26. UNSUITABLE MATERIAL, REMOVED VEGETATION, CONSTRUCTION DEBRIS, ETC. SHALL BE PROPERLY REMOVED AND DISPOSED OF OFF-SITE IN ACCORDANCE WITH APPLICABLE FEDERAL, STATE AND LOCAL CODES, ORDINANCES, AND LAWS.
27. THE CONTRACTOR SHALL BE RESPONSIBLE FOR DETERMINING ADEQUATE METHODS AND MEANS OF COMPLETION OF THE WORK PRIOR TO THE COMMENCEMENT OF CONSTRUCTION AND NOTIFY THE ENGINEER IF A CONFLICT IS IDENTIFIED.
28. THE CONTRACTOR SHALL REPLACE ALL PAVING, STABILIZING EARTH, DRIVEWAYS, SIDEWALKS, CONCRETE CURB, ETC. WITH THE SAME TYPE OF MATERIAL THAT WAS DAMAGED DURING CONSTRUCTION OR AS DIRECTED BY THE ENGINEER.
29. UNLESS OTHERWISE SPECIFIED IN CONTRACT DOCUMENTS, ALL WORK SHALL CONFORM TO REQUIREMENTS OF THE SSPWC PARTS 2-6, THE BROWN BOOK (THE CITY'S SUPPLEMENT TO THE SSPWC), AND CITY STANDARD PLANS.
30. ANY POTENTIAL PERMITS FOR DEWATERING ARE THE RESPONSIBILITY OF THE CONTRACTOR, INCLUDING THE PROPER USE AND DISCHARGE OF DEWATERING FLOWS TO MEET ALL WATER QUALITY REQUIREMENTS. THE CONTRACTOR MAY NOT DRAW DOWN GROUNDWATER LEVELS OFFSITE UNLESS PERMITTED BY THE APPLICABLE AGENCIES AND WITH PERMISSION OF THE AFFECTED LANDOWNERS. IF DEWATERING IS NEEDED, A DEWATERING PLAN SIGNED AND STAMPED BY A CALIFORNIA CERTIFIED HYDROGEOLOGIST SHALL BE REVIEWED BY THE BOE-GEOLOGIST. REFER TO SPECIFICATION SECTION 02235 FOR DEWATERING REQUIREMENTS. THE CONTRACTOR SHALL BE RESPONSIBLE FOR CONTROLLING, TREATMENT, AND DISPOSAL OF ALL GROUNDWATER ENCOUNTERED DURING CONSTRUCTION.
31. REFER TO SPECIFICATION SECTION 01562 FOR REQUIRED ENVIRONMENTAL MITIGATION MEASURES AND CONSTRUCTION CONSTRAINTS. MITIGATION MEASURES INCLUDE MEASURES TO REDUCE CONSTRUCTION IMPACT ON AIR QUALITY, BIOLOGICAL RESOURCES, CULTURAL RESOURCES; POTENTIAL HAZARDOUS MATERIAL IMPACTS; IMPACT OF DAYTIME CONSTRUCTION NOISE, AND TRAFFIC.
32. THE CONTRACTOR SHALL COMPLY WITH ALL APPLICABLE RULES AND REGULATIONS. SAFETY IS THE SOLE RESPONSIBILITY OF THE CONTRACTOR.
33. ALL STRUCTURES SHALL COMPLY WITH FEDERAL EMERGENCY MANAGEMENT AGENCY (FEMA) TECHNICAL BULLETIN 2-93 FOR FLOOD PROOFING.
34. ALL STRUCTURE FOUNDATION, EXCAVATION, TRENCH AND BACKFILL SHALL COMPLY WITH THE RECOMMENDATIONS PER THE FOLLOWING GEOTECHNICAL REPORTS:
    A. GEOTECHNICAL EVALUATION LABOE TOS NO.25 STORMWATER CAPTURE PARKS PROGRAM FERNANGELES PARK BY NINYO & MOORE DATED AUGUST 31.2020.
    B. METHANE GAS SURVEY FOR FERNANGELES PARK CITY OF LOS ANGELES, BUREAU OF ENGINEERING STORMWATER CAPTURE PARKS PROGRAM PROJECT (TOS 25) BY NINYO & MOORE DATED JUNE 3,2020.
35. THE CONTRACTOR IS RESPONSIBLE FOR DESIGN, IMPLEMENTATION, MAINTENANCE, AND COST OF THE SHORING INCLUDING ITS PERMIT AND PERMIT PROCESS. CONTRACTOR SHALL SUBMIT THE SHORING DESIGN TO BOE FOR REVIEW AND APPROVAL.
36. THE CONTRACTOR IS RESPONSIBLE TO OBTAIN A HAULING PERMIT AS THE EXPORT AND IMPORT IS GREATER THAN 1,000 CY.
37. THE CONTRACTOR IS REQUIRED TO VIDEO TAPE AND PHOTOGRAPH EXISTING CONDITIONS THROUGHOUT THE NEIGHBORHOOD AND PARK PRIOR TO THE START OF WORK.
38. THE CONTRACTOR SHALL IMPLEMENT THE TREE PROTECTION AND OTHER REQUIREMENTS ON SHEETS LP03 AND LP04 FOR EVERY TREE WITHIN THE CONSTRUCTION SITE PRIOR TO STARTING WORK AT THE PARK.
39. THE CONTRACTOR IS RESPONSIBLE FOR POTHOLING ALONG THE AREAS OF WORK/ALIGNMENTS TO CLEAR ANY OBSTRUCTIONS AND VERIFY EXISTING CONDITIONS INCLUDING INVERT ELEVATIONS. THE CONTRACTOR SHALL PERFORM A MINIMUM OF 1 POTHOLE EVERY 20 FEET ALONG THE ALIGNMENT AND AT ALL CATCH BASINS.
40. ALL AREAS USED BY THE CONTRACTOR AS LAYDOWN AREAS SHALL BE RESTORED WITH NEW SOD AND/OR RESEEDED.
41. THE CONTRACTOR IS RESPONSIBLE FOR DETOURING FOOT TRAFFIC AROUND THE CONSTRUCTION AND CAPTURE THIS IS THE TRAFFIC CONTROL PLANS.
42. AS A MINIMUM THE CONTRACTOR SHALL SUBMIT THE FOLLOWING DEFERRED SUBMITTALS: TEMPORARY SHORING (CONTRACTOR TO DESIGN AND BUILD), MODULAR BURIED STORMWATER INFILTRATION SYSTEM (CONTRACTOR SHALL DESIGN AND BUILD), SEDIMENTATION BASIN, HYDRODYNAMIC SEPARATORS, VENT STRUCTURES, INFILTRATION FILTER SYSTEMS, CALTRANS FLOW PRETREATMENT SYSTEM-STORMFILTER, PRECAST CONCRETE BOX CULVERTS, AND POROUS PAVERS.
43. STORMWATER MANAGEMENT DURING CONSTRUCTION SHALL BE IN ACCORDANCE WITH THE STORMWATER POLLUTION PREVENTION PLAN.
44. TOTAL ESTIMATED EXCAVATION AREA FOR THE PROJECT IS 1.85 ACRES. THIS QUANTITY IS FOR PERMITTING PURPOSES AND SHALL NOT BE USED FOR THE CONTRACTOR'S BID.
45. THE CONTRACTOR IS RESPONSIBLE FOR STAKING ALL PROPERTY LINES BY A LICENSED SURVEYOR.
46. OVERHEAD POWER LINES LOCATION SHOWN ON PLAN IS APPROXIMATED, CONTRACTOR TO FIELD VERITY ACTURAL LOCATION AND HEIGHT.
47. THE CONTRACTOR SHALL BE RESPONSIBLE FOR BARRICADING ITS WORK AREA TO PREVENT VEHICLES FROM PARKING IN THE PROPOSED LINE OF OPERATIONS. ANY DAMAGE TO PARKED VEHICLES CAUSED BY THE CONSTRUCTION OPERATIONS SHALL BE THE CONTRACTORS LIABILITY.ALL TRAFFIC CONTROLS IN THE WORK AREA SHALL CONFORM TO THE "WORK ARE TRAFFIC CONTROL HANDBOOK" (W.A.T.C.H) LATEST EDITION AND THE CALIFORNIA MUTCP.
48. BEFORE CONSTRUCTION IS STARTED, CONTRACTOR SHALL COORDINATE WITH THE OWNER OF EACH UTILITY AND DEFINE THE REQUIREMENTS AND METHODS TO ACCOMMODATE THE PROTECTION, TEMPORARY SUPPORT, ADJUSTMENT, OR RELOCATION OF ANY UTILITIES AFFECTED BY THE PROPOSED NEW WORK.
49. CONTRACTOR SHALL PERFORM DUST CONTROL PROTOCOLS FOR CONSTRUCTION WORK ALONG MOREHART STREET. DUE TO THE LIMITED AVAILABLE STREET SPACE ALONG MOREHART, CONTRACTOR SHALL COORDINATE THE CONSTRUCTION WORK ACCORDINGLY WITH INSTALLATION OF TEMPORARY TRENCH PLATE TO PROVIDE VEHICLE ACCESS AND PARKING FOR THE RESIDENTIAL DRIVEWAYS AND STREET PARKING AT CLOSURE OF DAILY CONSTRUCTION WORKS.
50. CONTRACTOR TO PROVIDE TEMPORARY COVER FOR TRENCH, MANHOLES, VAULTS ETC WITH TRENCH PLATES INSTALLATION PER GREENBOOK REQUIREMENTS AND USE THE APPROVED PRODUCTS BY THE CITY WITH COMPLIANCE TO THE CITY STANDARD PLAN S-601-3.
51. CONTRACTOR TO PROVIDE TREE PROTECTION FOR EVERY TREE WITHIN THE CONSTRUCTION SITE (EXCEPT THOSE BEING REMOVED) PRIOR TO THE START OF WORK AND FOLLOW THE RECREATION AND PARK REQUIREMENTS INCLUDED IN THE LANDSCAPE ARCHITECTURE DRAWINGS AND SPECIFICATIONS.
52. CONTRACTOR SHALL PROTECT EXISTING IMPROVEMENTS WITHIN PROJECT WORK AREA PER GREENBOOK SECTION 400 - PROTECTION AND RESTORATION. CONTRACTOR SHALL RESTORE EXISTING IMPROVEMENTS WITHIN PUBLIC RIGHT-OF-WAY NOT MARKED FOR REMOVAL WHICH ARE DAMAGED OR REMOVED AT CONTRACTOR'S OWN COST.
53. ALL STRUCTURES AND HATCHES SHALL BE AASHTO AND ACI HS-20 RATED.
54. CONTRACTOR SHALL PREPARE A CONSTRUCTION MANAGEMENT PLAN FOR ACCEPTANCE BY THE ENGINEER PRIOR TO THE START OF CONSTRUCTION ACTIVITIES ON THE SITE. THIS PLAN IS TO INCLUDE THE FOLLOWING ITEMS RELATED TO THE CONSTRUCTION ACTIVITIES:
    A. MITIGATION MEASURES AND CONSTRUCTION CONTROLS
    B. PUBLIC FEEDBACK MECHANISMS IN ACCORDANCE WITH CITY POLICIES
    C. TREE PROTECTION
    D. SOIL MANAGEMENT AND REUSE PLAN FOR TOP SOIL AND NATIVE SOILS THAT ARE EXCAVATED
    E. PUBLIC ACCESS AND SIGNAGE TO ADDRESS CLOSURE OF PARK AND MAINTAIN THE RECREATION CENTER OPEN WITH SAFE PUBLIC ACCESS
    F. SITE SECURITY FOR CONSTRUCTION WORKS
    G. TRAFFIC MANAGEMENT PLAN FOR THE RECREATION CENTER SITE
55. CONTRACTOR SHALL PREPARE A CULTURAL RESOURCES MANAGEMENT PLAN FOR ACCEPTANCE BY THE ENGINEER PRIOR TO THE START OF CONSTRUCTION ACTIVITIES ON THE SITE. THIS PLAN IS TO INCLUDE A DESCRIPTION OF HISTORICAL RESOURCES PRESENT WITHIN THE PROJECT AREA, AND DEFINED OPERATIONAL AND PRESERVATION GOALS AND PRIORITIES PLANNED DURING THE CONSTRUCTION.
56. CONTRACTOR SHALL DOCUMENT CONTROL, CONTAINMENT OR SUPPRESSION ACTIVITIES DURING CONSTRUCTION OF MAJOR INVASIVE PLANT INFESTATIONS.
57. HOURS OF CONSTRUCTION ACTIVITIES SHALL BE WITHIN THE ALLOWED HOURS OF 7:00 AM TO 6:00 PM MONDAY THROUGH FRIDAYS. SPECIFIC HOUR RESTRICTIONS FOR CONSTRUCTION ACTIVITIES REQUIRING TEMPORARY TRAFFIC CONTROL ARE INCLUDED IN THE TRAFFIC CONTROL DRAWINGS.
58. DRAINS FROM ALL ACCESS HATCHES TO BE DIRECTED TO A 3 FTx3FTx3FT SUBSURFACE VOLUME OF 3/4" CRUSHED STONE PROVIDED AND INSTALLED BY THE CONTRACTOR.
59. THE ENGINEER DOES NOT WARRANT THE ACCURACY OF THE SCALED DIMENSIONS. ALL DIMENSIONS SHALL BE AS DESIGNATED ON THE PLANS.
60. THE CONTRACTOR SHALL BRING TO THE ENGINEER'S ATTENTION ANY OMISSIONS OR CONFLICTS BETWEEN VARIOUS ELEMENTS OF THE DRAWINGS, NOTES AND DETAILS PRIOR TO PROCEEDING WITH THE WORK.
61. THE CONTRACTOR SHALL VERIFY ALL DIMENSIONS AND CONDITIONS IN THE FIELD BEFORE STARTING WORK. NOTIFY THE ENGINEER IMMEDIATELY OF AND DISCREPANCIES.
62. THE CONTRACTOR SHALL PROTECT ALL PUBLIC AND PRIVATE PROPERTY INSOFAR AS IT MAY BE ENDANGERED BY HIS/HER OPERATIONS FOR THE PROJECT. THE CONTRACTOR SHALL TAKE EVERY NECESSARY PRECAUTION TO AVOID DAMAGE TO EXISTING STRUCTURES AND ENSURE THE SAFETY OF PEDESTRIANS IN THE PROXIMITY OF THE WORK. THE CONTRACTOR SHALL FURNISH AND INSTALL APPROPRIATE SIGNS AND ADEQUATE WARNING DEVICES TO ADVISE THE PUBLIC OF CONSTRUCTION HAZARDS, AND UPON COMPLETION OF THE WORK SHALL PROMPTLY REMOVE THEM. ANY DAMAGE TO THE EXISTING STRUCTURES CAUSED BY THE CONTRACTOR'S OPERATIONS SHALL BE REPAIRED TO THE SATISFACTION OF THE ENGINEER AT NO COST TO THE CITY.
63. THE CONTRACTOR SHALL EXERCISE CARE THAT NO EXCAVATED MATERIAL OR DEBRIS RESULTING FROM HIS OPERATION SHALL RUN DOWN THE EXISTING SLOPE AND STREET OR OTHER PROPERTIES. EXISTING TREES AND SHRUBBERY, WHEN NOT IN DIRECT CONFLICT WITH CONSTRUCTION ACTIVITIES, SHALL BE PROTECTED.
64. EXISTING ABANDONED IMPROVEMENTS AS INDICATED BY THE ENGINEER THAT INTERFERE WITH THE PROPOSED CONSTRUCTION SHALL BE REMOVED AND DISPOSED OF BY THE CONTRACTOR UNLESS OTHERWISE NOTED. ALL MATERIAL SUCH AS VEGETATION, TIMBER, ROCKS, CONCRETE AND ASPHALT.
65. ANY TRENCHING FOR SUBDRAIN SHALL BE PLACED PROGRESSIVELY IN 20 FOOT LENGTHS. TRENCH SHALL BE EXCAVATED IN 20 FOOT LENGTHS AND SHALL BE BACKFILLED PRIOR TO EXCAVATION OF NEXT 20 FOOT SECTION.
66. CONTRACTOR SHALL SUBMIT SITE SPECIFIC PLANS FOR PROPOSED LAYOUT OF TEMPORARY EROSION CONTROL. OBTAIN GRADING INSPECTORS AND DEPARTMENT OF PUBLIC WORKS APPROVAL OF PROPOSED PROCEDURES. (L.A.B.C. SECTION 91.7007.1).
67. THE CONTRACTOR SHALL MAINTAIN ROADWAY ACCESS TO NEIGHBORHOOD PRIVATE PROPERTIES DURING THE NORMAL WORKING HOURS FROM 7:00 AM TO 4:00 PM AND SHALL REMOVE ALL WORKING EQUIPMENT FROM ROADWAY ACCESS BETWEEN HOUR OF 4:00 PM TO 7:00 AM OF THE FOLLOWING MORNING.
68. AT LEAST 10 DAYS BEFORE START OF CONSTRUCTION, THE CONTRACTOR SHALL GIVE THE NOTICE TO THE OCCUPANTS OF ADJACENT PROPERTIES OF THE PROPOSED CONSTRUCTION DATE PER SECTION 7-10 IN BROWNBOOK 7TH EDITION (LATEST).
69. THE CONTRACTOR SHALL NOTIFY HOMEOWNERS, TENANTS, AND PUBLIC EMERGENCY SERVICES (FIRE DEPARTMENT, RECREATION AND PARKS, AND POLICE DEPARTMENT) AFFECTED BY THIS WORK AT LEAST ONE WEEK PRIOR TO MOBILIZATION.
70. THE STAMPED SET OF PLANS APPROVED BY BUILDING AND SAFETY SHALL BE ON THE JOB SITE AT ALL TIMES.
71. FILL SLOPES SHALL BE OVER BUILT AT LEAST 2 TO TO 3 FEET AND TRIMMED BACK TO EXPOSE A FIRM COMPACTED SURFACE ON THE SLOPE FACE.
72. NO FILL TO BE PLACED UNTIL STRIPPING OF VEGETATION, REMOVAL OF UNSUITABLE SOILS AND INSTALLATION OF SUBDRAINS (IF ANY) HAS BEEN INSPECTED AND APPROVED BY THE GEO SOILS ENGINEER.
73. NO ROCK OR SIMILAR MATERIAL GREATER THAN 6" IN DIAMETER SHALL BE PLACED IN THE FILL UNLESS RECOMMENDATION FOR SUCH PLACEMENT HAVE BEEN SUBMITTED BY THE SOIL ENGINEER IN ADVANCE AND APPROVED.
74. UNDERGROUND SERVICE ALERT: BEFORE COMMENCING ANY EXCAVATION , THE CONTRACTOR SHALL OBTAIN AN UNDERGROUND SERVICE ALERT (USA) INQUIRY I.D. NUMBER BY CALLING (800) 227-2600. TWO WORKING DAYS SHALL BE ALLOWED AFTER THE I.D. NUMBER IS OBTAINED AND BEFORE THE CONTRACTOR STARTS THE EXCAVATION WORK SO THAT UTILITY OWNERS CAN BE NOTIFIED. IF THE UTILITY OWNER IS THE CITY OF LOS ANGELES, A CONFIRMATION NUMBER INDICATION THE CITY HAS BEEN NOTIFIES SHALL BE OBTAINED BY USA AND/OR THE CONTRACTOR FROM THE APPROPRIATE CITY DEPARTMENT. THE I.D. NUMBER TOGETHER WITH THE DATE ACQUIRED SHALL BE REPORTED TO THE BUREAU OF CONTRACT ADMINISTRATION WHEN CALLING FOR INSPECTION. I.D. NUMBERS WILL NOT BE GIVEN MORE THAT 10 DAYS BEFORE STARTING EXCAVATION WORK.
75. THE CONTRACTOR SHALL COMPLY WITH THE COUNTY OF LOS ANGLES SAFE, CLEAN WATER PROGRAM CONDITIONS AND REQUIREMENTS AS SPECIFIED IN THE TRANSFER AGREEMENT IN THE SPECIFICATION APPENDICES.

THE CITY OF LOS ANGELES OR ITS OFFICERS OR AGENTS SHALL NOT BE RESPONSIBLE FOR THE ACCURACY OR COMPLETENESS OF ELECTRONIC COPIES OF THIS PLAN SHEET.

REVISION DATES (DESIGN STAGE ONLY)

ENGINEERING
CITY OF LOS ANGELES

THIS PLAN WAS ELECTRONICALLY • SIGNED AND STAMPED

PROFESSIONAL ENGINEER — REGISTERED — CIVIL — STATE OF CALIFORNIA — ANDREW S. SELLINGER — No. C 48973 — EXP. 06/30/2026 — 01/27/2023

BUREAU OF ENGINEERING

VERTICAL CONTROL: BENCH MARK:08-30460:NAVD 88
HORIZONTAL CONTROL: CALIFORNIA STATE PLANE ZONE V. 1983 NAD

SHEET TITLE: GENERAL NOTES 1

PROJECT: FERNANGELES PARK STORMWATER CAPTURE PROJECT

ADDRESS: FERNANGELES RECREATION CENTER 8851 LAUREL CANYON BLVD, SUN VALLEY, CA 91352

NO.	REVISIONS	DATE	BY
		YY/MM/DD	
		YY/MM/DD	
		YY/MM/DD	
		YY/MM/DD	

CIP NO. SCP0002

INDEX NO.

CITY OF LOS ANGELES DEPARTMENT OF PUBLIC WORKS

CITY ENGINEER: TED ALLEN, P.E. — DATE: 04/11/2023

	DESIGN GROUP	DATE
ENGINEER:	CDM SMITH INC.	04/11/2023
ARCHITECT:	NA	04/11/2023
DESIGNED BY:	A. GOH	04/11/2023
DRAWN BY:	C. BILDERBACK	04/11/2023
CHECKED BY:	P. TAURASI	04/11/2023
APPROVED BY:	A. DELLINGER	04/11/2023

WORK ORDER EW40079F

SHEET NAME GI02

SHEET 3 OF 125 SHEETS

SUBGRADE PREPARATION FOR DESILTING BASIN WITH INLET STRUCTURE AND INFILTRATION GALLERY

ALLUVIUM IS ANTICIPATED AT THE BOTTOM OF THE PLANNED INFILTRATION GALLERY, DESILTING BASIN INLET STRUCTURES AND DESILTING BASINS THAT SHOULD BE SUITABLE FOR SUPPORT OF THE STRUCTURES AND OVERLYING COMPACTED FILL. THE EXCAVATION BOTTOM SHOULD BE EVALUATED BY THE ENGINEER DURING THE EXCAVATION WORK. IN THE EVENT THAT UNSUITABLE MATERIAL IS ENCOUNTERED ALONG THE BOTTOM OF THE EXCAVATION, INCLUDING UNDOCUMENTED FILL AND/OR WASTE, THE UNSUITABLE MATERIAL ENCOUNTERED AT THE BOTTOM OF THE STRUCTURE EXCAVATION SHALL BE REMOVED AND REPLACED WITH LOOSELY-PACKED CLEAN SAND OR GRAVEL, SUCH AS ADDITIONAL CRUSHED STONE. THE DECISION FOR REMOVAL AND REPLACEMENT SHALL BE BASED ON THE ENGINEER FIELD OBSERVATIONS. UNLESS DIRECTED BY THE ENGINEER, NO COMPACTION IS TO BE PERFORMED ON THE EXPOSED SUBGRADE, MATERIALS USED TO REPLACE UNSUITABLE MATERIALS (IF NEEDED), AND AND/OR CRUSHED STONE PLACED BENEATH THE STRUCTURES. THE CRUSHED STONE BLANKET SHALL CONSIST OF OPEN-GRADED GRAVEL OF 3/4-INCH TO 1 1/2-INCH DIAMETER ROCK. THE CRUSHED STONE LAYERS SHALL BE FREE OF FINES, DEBRIS, TRASH, ETC. FOR ADDITIONAL INFORMATION SEE GEOTECHNICAL EVALUATION LABOE TOS NO.25 STORMWATER CAPTURE PARKS PROGRAM FERNANGELES PARK BY NINYO & MOORE DATED AUGUST 31,2020.

SUBGRADE PREPARATION FOR ALL OTHER STRUCTURES

IN ORDER TO PROVIDE SUITABLE SUPPORT FOR PROPOSED BURIED AND/OR AT-GRADE STRUCTURES, OTHER THAN INFILTRATION GALLERY AND DESILTING BASINS WITH INLET STRUCTURES, THE EXISTING UNDOCUMENTED FILL AND UPPER LOOSE ALLUVIAL DEPOSITS SHALL BE REMOVED FROM BENEATH THE STRUCTURES. IN ADDITION, THE STRUCTURE FOUNDATIONS SHOULD BE FOUNDED ON 2 FEET OF NEWLY COMPACTED STRUCTURAL FILL MATERIAL. THE OVER EXCAVATION SHALL REMOVE UNDOCUMENTED FULL AND EXPOSE RELATIVELY DENSE ALLUVIAL DEPOSITS. ADDITIONAL OVER-EXCAVATION OF LOOSE, SOFT, AND/OR WET AREAS MAY BE APPROPRIATE. THE EXCAVATION BOTTOM SHALL BE EVALUATED BY THE ENGINEER DURING THE EXCAVATION WORK AND ADDITIONAL RECOMMENDATIONS, IF NEEDED, BE BASED ON FIELD OBSERVATIONS. THE LIMITS OF REMOVAL SHALL EXTEND APPROXIMATELY 2 FEET BEYOND THE FOOTPRINT OF THE FOUNDATIONS. PRIOR TO PLACING COMPACTED STRUCTURAL FILL AND/OR DRAINAGE ROCK, THE UPPER APPROXIMATELY 8 INCHES OF THE EXPOSED BOTTOM SHALL BE SCARIFIED, MOISTURE-CONDITIONED TO NEW OPTIMUM MOISTURE CONTENT, AND RECOMPACTED TO A RELATIVE COMPACTION OF 90 PERCENT AS EVALUATED BY ASTM D 1557. FOR ADDITIONAL INFORMATION SEE GEOTECHNICAL EVALUATION LABOE TOS NO.25 STORMWATER CAPTURE PARKS PROGRAM FERNANGELES PARK BY NINYO & MOORE DATED AUGUST 31,2020.

FILL MATERIAL, FILL PLACEMENT AND COMPACTION

IN GENERAL, THE ON-SITE SOILS SHALL BE SUITABLE FOR REUSE AS STRUCTURAL FILL AND FILL MATERIALS, PROVIDED THEY ARE FREE OF TRASH, DEBRIS, OVERSIZE MATERIAL, OR OTHER DELETERIOUS MATERIALS. FILL SHALL BE FREE OF ROCKS OR LUMPS OF MATERIAL IN EXCESS OF 4 INCHES IN DIAMETER. ROCKS OR HARD LUMPS LARGER THAN APPROXIMATELY 4 INCHES IN DIAMETER SHALL BE BROKEN INTO SMALLER PIECES OR SHALL BE REMOVED FROM THE SITE.

IMPORTED FILL MATERIAL, AS NEEDED AND DIRECTED BY THE ENGINEER, SHALL ALSO CONSIST OF CLEAN, GRANULAR MATERIAL WITH A LOW EXPANSION POTENTIAL, CORRESPONDING TO AN EXPANSION INDEX OF 50 OR LESS. THE SOIL SHALL ALSO BE TESTED FOR CORROSIVE PROPERTIES PRIOR TO IMPORTING. THE IMPORTED MATERIALS SHALL SATISFY THE CALTRANS (2018) CRITERIA FOR NON-CORROSIVE SOILS (i.e., SOILS HAVING A CHLORIDE CONCENTRATION OF 500 PARTS PER MILLION [ppm] OR LESS, A SOLUBLE SULFATE CONTENT OF APPROXIMATELY 0.15 PERCENT (1,500 ppm) OR LESS, A pH VALUE OF 5.5 OR HIGHER, OR AN ELECTRICAL RESISTIVITY OF 1,100 OHM-CENTIMETERS OR MORE). MATERIALS FOR USE AS STRUCTURAL FILL AND FILL WILL BE EVALUATED BY THE ENGINEER PRIOR TO IMPORTING. THE CONTRACTOR SHALL BE RESPONSIBLE FOR THE UNIFORMITY OF IMPORT MATERIAL BROUGHT TO THE SITE.

FILL MATERIAL, INCLUDING STRUCTURAL FILL BENEATH STRUCTURES, BACKFILL AROUND THE PERIMETER AND ABOVE STRUCTURES, AND OTHER, SHALL BE MOISTURE-CONDITIONED AND COMPACTED IN HORIZONTAL LIFTS TO A RELATIVE COMPACTION OF 9 0 PERCENT OR MORE AS EVALUATED BY ASTM D 1557. FILL MATERIAL WITH LESS THAN 5 PERCENT FINES (PASSING NO.200 SIEVE) SHALL BE COMPACTED TO 95 PERCENT RELATIVE COMPACTION IN ACCORDANCE WITH CITY OF LOS ANGELES GUIDELINES AS EVALUATED BY ASTM D 1557. FILL MATERIAL SHALL BE MOISTURE-CONDITIONED TO SLIGHTLY ABOVE THE LABORATORY OPTIMUM MOISTURE CONTENT. THE LIFT THICKNESS SHALL NOT EXCEED 8 INCHES IN LOOSE THICKNESS. PLACEMENT AND COMPACTION OF THE FILL SOILS SHALL BE IN GENERAL ACCORDANCE WITH LOCAL GRADING ORDINANCES AND GOOD CONSTRUCTION PRACTICE.

CONTRACTOR SHALL FOLLOW THE REQUIREMENTS OF THE DESILTING BASIN AND INFILTRATION GALLERY SUPPLIERS FOR SOIL COMPACTION OPERATIONS REGARDING ANY MACHINERY LIMITATIONS, PROTECTIONS AND MONITORING, ETC. NEEDED TO PROPERLY PROTECT THE IN PLACE STRUCTURES. FOR ADDITIONAL INFORMATION SEE GEOTECHNICAL EVALUATION LABOE TOS NO.25 STORMWATER CAPTURE PARKS PROGRAM FERNANGELES PARK BY NINYO & MOORE DATED AUGUST 31,2020.

STREET LIGHTING

(P) INDICATES PROTECT EXISTING STREET LIGHTING FACILITIES. THE CONTRACTOR SHALL PROTECT AND MAINTAIN ALL STREET LIGHTING FACILITIES WITHIN THE WORK AREA. SHOULD ANY DAMAGE TO THE EXISTING STREET LIGHTING SYSTEM OCCUR, THE CONTRACTOR SHALL IMMEDIATELY NOTIFY THE BUREAU OF STREET LIGHTING, FIELD OPERATION DIVISION, BY TELEPHONING (323) 913-4743; OR AFTER 4:30 PM (3:30 PM ON FRIDAYS), CONTACT THE ELECTRIC TROUBLE BOARD OF DWP AT (800) 821-5278 WITHIN THE (213) AND (310) AREA CODES OF LOS ANGELES. THE CONTRACTOR SHALL ARRANGE FOR IMMEDIATE REPAIR AND RESTORATION TO SERVICE OF THE DAMAGED LIGHTING SYSTEM AT NO COST TO THE CITY. A LICENSED ELECTRICAL CONTRACTOR IS REQUIRED TO MAKE ALL REPAIRS. ALL STREET LIGHTING WORK SHOULD BE MADE IN ACCORDANCE WITH THE LATEST EDITION AND SUPPLEMENTS OF THE "STANDARD SPECIFICATION FOR PUBLIC WORKS CONSTRUCTION," ADOPTED BY THE CORRESPONDING ISSUE OF THE BROWN BOOK AND THE BUREAU OF STREET LIGHTING "SPECIAL SPECIFICATIONS" INCLUDING LATEST REVISIONS.

SIGNS AND MARKINGS MAINTENANCE

1. THE CONTRACTOR SHALL FOLLOW THE GREEN BOOK SECTION 400 PROTECTION AND RESTORATION AND MAKE ARRANGEMENTS FOR THE RESTORATION OF ALL OBLITERATED PAVEMENT MARKINGS AND FOR THE REINSTALLATION OF ALL MISSING OR DAMAGED SIGNS, CURB MARKINGS, STAMPED CROSSWALKS, PARKING METERS, ETC. IN SOME CASES, THE CONTRACTOR MAY BE REQUIRED TO INSTALL OBLITERATED AND RELATED PAVEMENT MARKINGS AS WELL AS MISSING, DAMAGED AND/OR RELATED SIGNS, TO THE SATISFACTION OF LADOT.
2. ALL STRIPING AND PAVEMENT MARKINGS SHALL BE INSTALLED UTILIZING THERMOPLASTIC MATERIALS PER LADOT SPECIFICATIONS. THE CONTRACTOR SHALL CONTACT LADOT'S WESTERN DISTRICT OFFICE AT (310) 575-8138 PRIOR TO COMMENCING ANY WORK THAT REQUIRES SIGN AND/OR MARKING MAINTENANCE.
3. IN ADDITION TO SIGNS REQUIRED BY THE REVISIONS OF THE "WORK AREA TRAFFIC CONTROL HANDBOOK" (WATCH), LATEST EDITION, FURNISH AND PLACE SIGNS FOR GIVING ADVANCE NOTICE TO MOTORISTS OF TRAFFIC DISRUPTION AS PART OF THIS PROJECT IN ACCORDANCE WITH SECTION 01581 OF THE SPECIFICATIONS. THE CONTRACTOR IS RESPONSIBLE TO DESIGN, OBTAIN, PAY AND IMPLEMENT A WORK SITE TRAFFIC CONTROL PLAN AND THE CONTRACTOR SHALL MAINTAIN/ADJUST THE PLAN AS IT IS NEEDED FOR THE WORK.
4. TRAFFIC CONTROL SHALL BE IN ACCORDANCE WITH THE LATEST EDITION OF THE WORK AREA TRAFFIC CONTROL HANDBOOK (WATCH) ADOPTED BY THE BOARD OF PUBLIC WORKS OF THE CITY OF LOS ANGELES AND REQUIREMENTS OF THE MANUAL ON UNIFORM TRAFFIC CONTROL DEVICES (MUTCD) PUBLISHED BY THE CALIFORNIA DEPARTMENT OF TRANSPORTATION.
5. FOR TRAFFIC RELATED NOTES PLEASE REFER TO TRAFFIC CONTROL PLANS TR01 THROUGH TR13.
6. CONSTRACTOR SHALL DESING TEMPORARY TRAFFIC CONTROL PLAN FOR EXECUTION OF THE WORK IN PUBLIC STREET ROW. CONTRACTOR IS RESPONSIBLE TO CONTACT LADOT AT (213) 972-8470 FOR REQUIREMENTS, PAY & OBTAIN AS NEEDED PERMITS. TRAFFIC CONTROL SHALL BE IMPLEMENTED AT WORK SITE DURING-CONSTRUCTION.

GENERAL GRADING NOTES

1. ALL GRADING SLOPES SHALL BE PLANTED AND SPRINKLERED. (7012.1)
2. STANDARD 12 INCH HIGH BERM IS REQUIRED AT TOP OF ALL GRADED SLOPES. (7013.3)
3. NO FILL TO BE PLACED, UNTIL CITY GRADING INSPECTOR HAS INSPECTED AND APPROVED THE BOTTOM EXCAVATION.
4. MAN-MADE FILL SHALL BE COMPACTED TO A MINIMUM RELATIVE COMPACTION OF 90% MAX. DRY DENSITY WITHIN 40 FEET BELOW FINISH GRADE, UNLESS A LOWER RELATIVE COMPACTION (NOT LESS THAN 90% OF MAX DRY DENSITY) IS JUSTIFIED BY SOIL ENGINEER.
5. TEMPORARY EROSION CONTROL TO BE INSTALLED BETWEEN OCTOBER 1 AND APRIL 15. OBTAIN GRADING INSPECTOR'S AND DEPARTMENT OF PUBLIC WORKS APPROVAL OF PROPOSED PROCEDURES. (>200 CY)

THE CITY OF LOS ANGELES OR ITS OFFICERS OR AGENTS SHALL NOT BE RESPONSIBLE FOR THE ACCURACY OR COMPLETENESS OF ELECTRONIC COPIES OF THIS PLAN SHEET.

REVISION DATES (DESIGN STAGE ONLY)

CITY OF LOS ANGELES DEPARTMENT OF PUBLIC WORKS BUREAU OF ENGINEERING

ENGINEERING CITY OF LOS ANGELES

THIS PLAN WAS ELECTRONICALLY • SIGNED AND STAMPED

REGISTERED PROFESSIONAL ENGINEER TED S. ALLEN No. C 48973 EXP. 06/30/2026 CIVIL STATE OF CALIFORNIA 01/27/2023

VERTICAL CONTROL: BENCH MARK:08-30460 (NAVD 88)
HORIZONTAL CONTROL: CALIFORNIA STATE PLANE ZONE V. 1983 NAD

SHEET TITLE: GENERAL NOTES 2

PROJECT: FERNANGELES PARK STORMWATER CAPTURE PROJECT

ADDRESS: FERNANGELES RECREATION CENTER 8851 LAUREL CANYON BLVD, SUN VALLEY, CA 91352

NO.	REVISIONS	DATE	BY
		YY/MM/DD	
		YY/MM/DD	
		YY/MM/DD	
		YY/MM/DD	

CIP NO. SCP0002

INDEX NO.

CITY ENGINEER: TED ALLEN, P.E. — DATE: 04/11/2023

DESIGN GROUP		DATE
ENGINEER:	CDM SMITH INC.	04/11/2023
ARCHITECT:	NA	04/11/2023
DESIGNED BY:	A. GOH	04/11/2023
DRAWN BY:	C. BILDERBACK	04/11/2023
CHECKED BY:	P. TAURASI	04/11/2023
APPROVED BY:	A. DELLINGER	04/11/2023

WORK ORDER EW40079F

SHEET NAME GI03

SHEET 4 OF 125 SHEETS

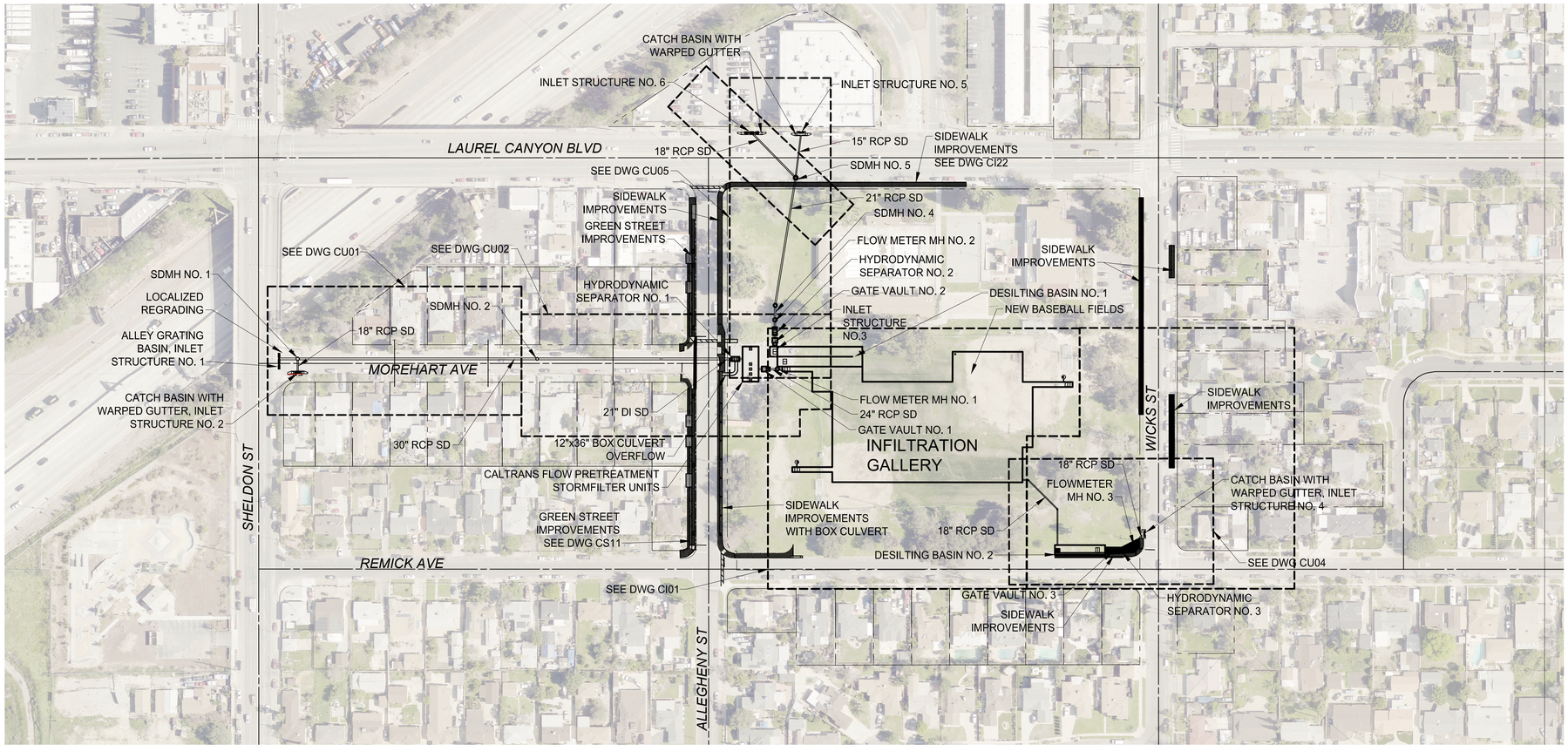

PLAN

100' 0 100' 200'
1" = 100'

THE CITY OF LOS ANGELES OR ITS OFFICERS OR AGENTS SHALL NOT BE RESPONSIBLE FOR THE ACCURACY OR COMPLETENESS OF ELECTRONIC COPIES OF THIS PLAN SHEET.

REVISION DATES (DESIGN STAGE ONLY)

ENGINEERING
CITY OF LOS ANGELES

REGISTERED PROFESSIONAL ENGINEER TED S. ALLEN No. C 48973 EXP. 06/30/2026 STATE OF CALIFORNIA
01/27/2023

THIS PLAN WAS ELECTRONICALLY • SIGNED AND STAMPED •

BUREAU OF ENGINEERING

VERTICAL CONTROL: BENCH MARK:08-30460 (NAVD 88)
HORIZONTAL CONTROL: CALIFORNIA STATE PLANE ZONE V, 1983 NAD

SHEET TITLE: OVERALL PROJECT SITE PLAN

PROJECT: FERNANGELES PARK STORMWATER CAPTURE PROJECT

ADDRESS: FERNANGELES RECREATION CENTER 8851 LAUREL CANYON BLVD, SUN VALLEY, CA 91352

DEPARTMENT OF PUBLIC WORKS

NO.	REVISIONS	DATE	BY
		YY/MM/DD	
		YY/MM/DD	
		YY/MM/DD	
		YY/MM/DD	

CIP NO. SCP0002

INDEX NO.

CITY OF LOS ANGELES

CITY ENGINEER: TED ALLEN, P.E. DATE: 04/11/2023

DESIGN GROUP		DATE
ENGINEER:	CDM SMITH INC.	04/11/2023
ARCHITECT:	NA	04/11/2023
DESIGNED BY:	M. MA	04/11/2023
DRAWN BY:	C. BILDERBACK	04/11/2023
CHECKED BY:	P. TAURASI	04/11/2023
APPROVED BY:	A. DELLINGER	04/11/2023

WORK ORDER EW40079F

SHEET NAME GI04

SHEET 5 OF 125 SHEETS

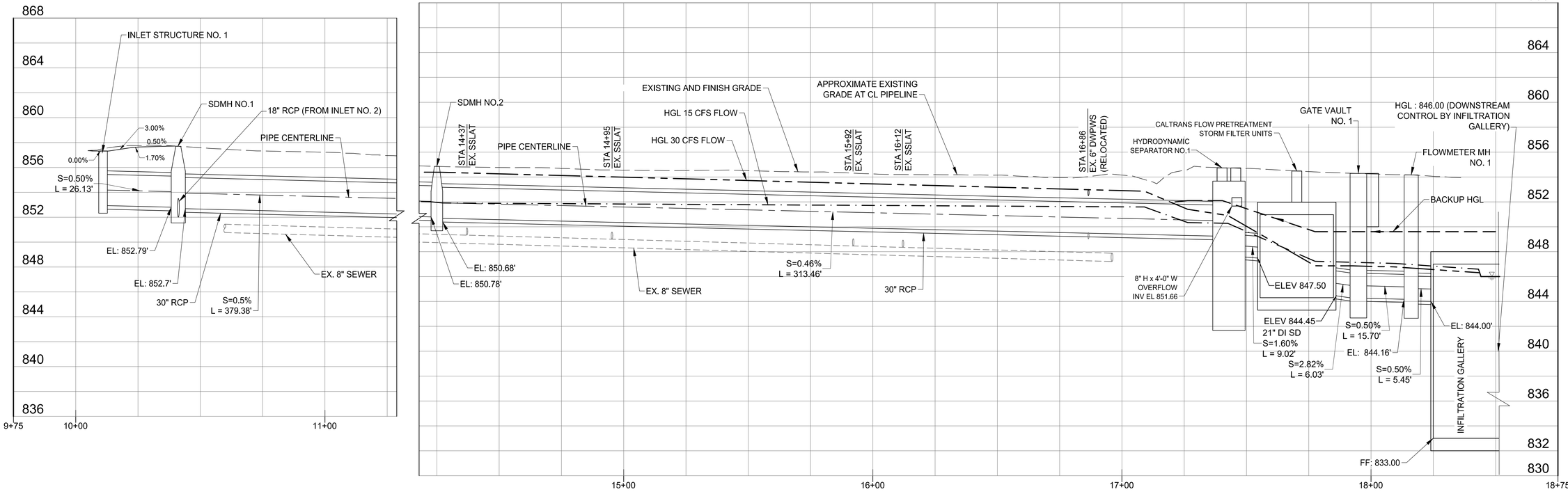

HYDRAULIC PROFILE- CALTRANS PRETREATMENT FLOW

20' 0 20' 40'
1" = 20'
HORIZONTAL

4' 0 4' 4'
1" = 4'
VERTICAL

THE CITY OF LOS ANGELES OR ITS OFFICERS OR AGENTS SHALL NOT BE RESPONSIBLE FOR THE ACCURACY OR COMPLETENESS OF ELECTRONIC COPIES OF THIS PLAN SHEET.

REVISION DATES
(DESIGN STAGE ONLY)

BUREAU OF ENGINEERING • THIS PLAN WAS ELECTRONICALLY SIGNED AND STAMPED •

ENGINEERING
CITY OF LOS ANGELES

REGISTERED PROFESSIONAL ENGINEER
SAMUEL S. TEELUCKSINGH
No. C 48973
EXP. 06/30/2026
STATE OF CALIFORNIA
01/27/2023

VERTICAL CONTROL: BENCH MARK (08-30460) NAVD 88
HORIZONTAL CONTROL: CALIFORNIA STATE PLANE ZONE V, 1983 NAD

SHEET TITLE: HYDRAULIC PROFILE - MOREHART AVE

PROJECT: FERNANGELES PARK STORMWATER CAPTURE PROJECT

ADDRESS: FERNANGELES RECREATION CENTER
8851 LAUREL CANYON BLVD, SUN VALLEY, CA 91352

NO.	REVISIONS	DATE	BY
		YY/MM/DD	
		YY/MM/DD	
		YY/MM/DD	
		YY/MM/DD	

CIP NO.
SCP0002

INDEX NO.

CITY OF LOS ANGELES DEPARTMENT OF PUBLIC WORKS

CITY ENGINEER: TED ALLEN, P.E. — DATE: 04/11/2023

DESIGN GROUP		DATE
ENGINEER:	CDM SMITH INC.	04/11/2023
ARCHITECT:	N/A	04/11/2023
DESIGNED BY:	M. MA	04/11/2023
DRAWN BY:	C. BILDERBACK	04/11/2023
CHECKED BY:	P. TAURASI	04/11/2023
APPROVED BY:	A. DELLINGER	04/11/2023

WORK ORDER
EW40079F

SHEET NAME
GI05

SHEET 6 OF 125 SHEETS

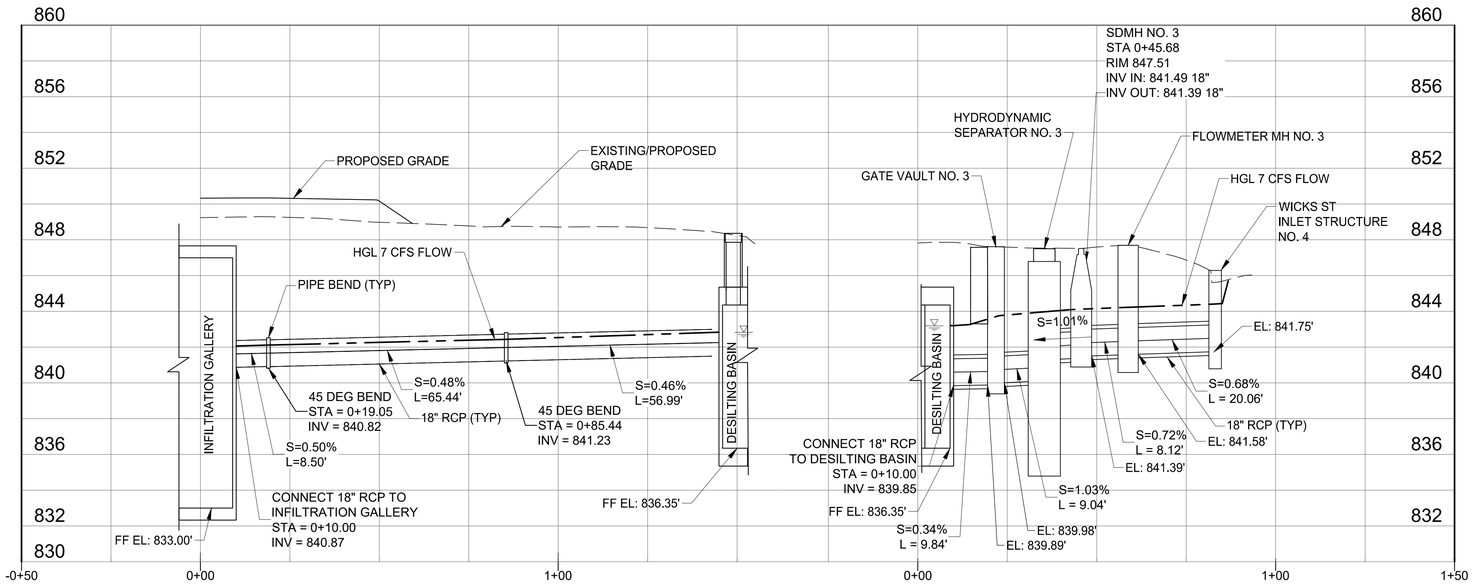

HYDRAULIC PROFILE - WICK ST INLET TO DESILTING BASIN AND INFILTRATION GALLERY

20' 0 20' 40'
1" = 20'
HORIZONTAL

4' 0 4' 4'
1" = 4'
VERTICAL

THE CITY OF LOS ANGELES OR ITS OFFICERS OR AGENTS SHALL NOT BE RESPONSIBLE FOR THE ACCURACY OR COMPLETENESS OF ELECTRONIC COPIES OF THIS PLAN SHEET.

REVISION DATES (DESIGN STAGE ONLY)

ENGINEERING
CITY OF LOS ANGELES

THIS PLAN WAS ELECTRONICALLY SIGNED AND STAMPED

REGISTERED PROFESSIONAL ENGINEER
ANTHONY S. DELLINGER
No. C 48973
EXP. 09/30/2026
STATE OF CALIFORNIA
01/27/2023

BUREAU OF ENGINEERING

VERTICAL CONTROL: BENCH MARK 08-30460 NAVD 88
HORIZONTAL CONTROL: CALIFORNIA STATE PLANE ZONE V, 1983 NAD

SHEET TITLE: HYDRAULIC PROFILE - WICKS STREET

PROJECT: FERNANGELES PARK STORMWATER CAPTURE PROJECT

ADDRESS: FERNANGELES RECREATION CENTER
8851 LAUREL CANYON BLVD, SUN VALLEY, CA 91352

CITY OF LOS ANGELES DEPARTMENT OF PUBLIC WORKS

NO.	REVISIONS	DATE	BY
		YY/MM/DD	
		YY/MM/DD	
		YY/MM/DD	
		YY/MM/DD	

CIP NO. SCP0002

INDEX NO.

		DATE
TED ALLEN, P.E.	CITY ENGINEER	
	DESIGN GROUP	
ENGINEER:	CDM SMITH INC.	04/11/2023
ARCHITECT:	NA	04/11/2023
DESIGNED BY:	M. MA	04/11/2023
DRAWN BY:	C. BILDERBACK	04/11/2023
CHECKED BY:	P. TAURASI	04/11/2023
APPROVED BY:	A. DELLINGER	04/11/2023

WORK ORDER
EW40079F

SHEET NAME
GI06

SHEET 7 OF 125 SHEETS

SHEET VERSION 4.0.1 FILE PATH: C:\CDMEXT\SAMIDURAIM\D0495039\GI006.DWG PLOT DATE: 10/9/2024 2:37 PM SAVED: 10/9/2024 2:36 PM SAVED BY:SAMIDURAIM

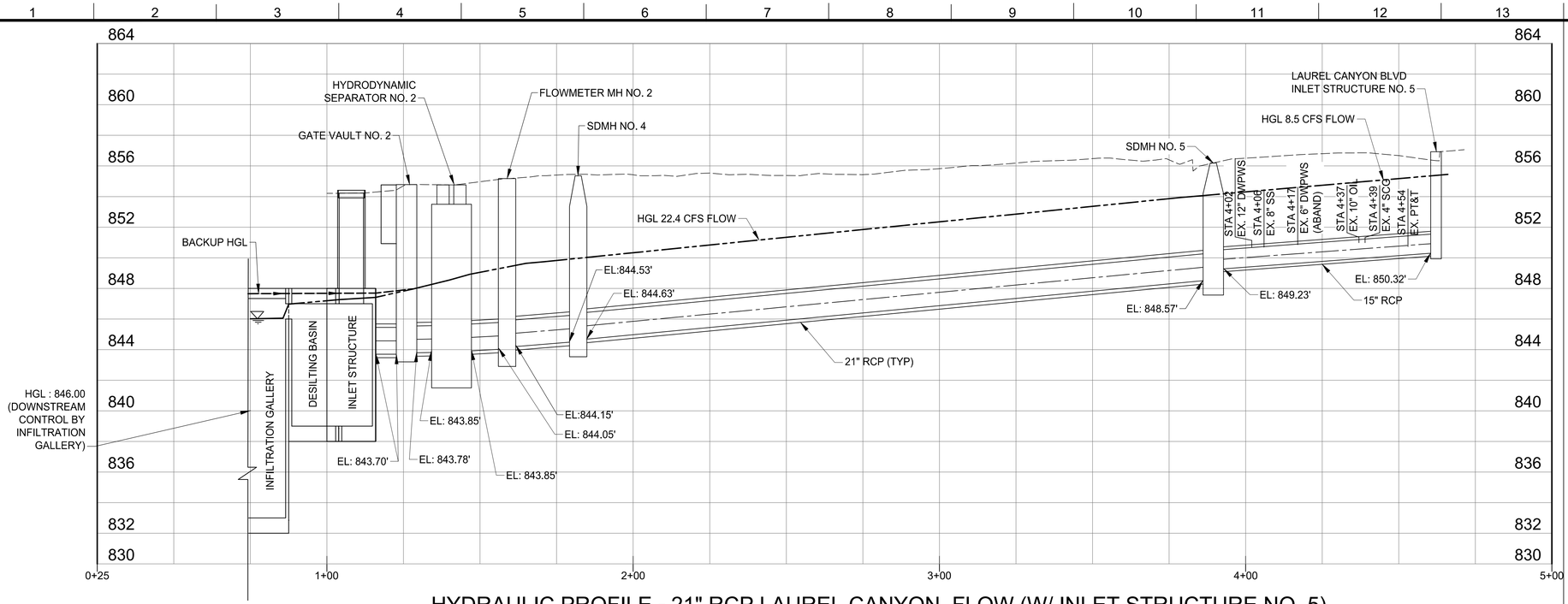

HYDRAULIC PROFILE - 21" RCP LAUREL CANYON FLOW (W/ INLET STRUCTURE NO. 5)

20' 0 20' 40'
1" = 20'
HORIZONTAL

4' 0 4' 4'
1" = 4'
VERTICAL

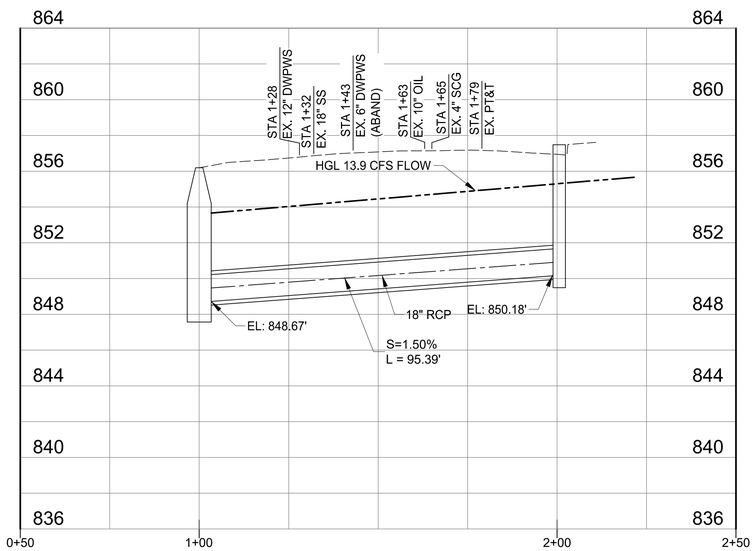

HYDRAULIC PROFILE - INLET STRUCTURE NO. 6

20' 0 20' 40'
1" = 20'
HORIZONTAL

4' 0 4' 4'
1" = 4'
VERTICAL

THE CITY OF LOS ANGELES OR ITS OFFICERS OR AGENTS SHALL NOT BE RESPONSIBLE FOR THE ACCURACY OR COMPLETENESS OF ELECTRONIC COPIES OF THIS PLAN SHEET.

REVISION DATES (DESIGN STAGE ONLY)

ENGINEERING
CITY OF LOS ANGELES

PROFESSIONAL ENGINEER
REGISTERED
TED S. ALLEN
No. C 48973
EXP. 08/31/2026
CIVIL
STATE OF CALIFORNIA
01/27/2023

THIS PLAN WAS ELECTRONICALLY • SIGNED AND STAMPED

BUREAU OF ENGINEERING

VERTICAL CONTROL: BENCH MARK:08-30460 (NAVD 88)
HORIZONTAL CONTROL: CALIFORNIA STATE PLANE ZONE V, 1983 NAD

SHEET TITLE: HYDRAULIC PROFILE - LAUREL CANYON BLVD

PROJECT: FERNANGELES PARK STORMWATER CAPTURE PROJECT

ADDRESS: FERNANGELES RECREATION CENTER
8851 LAUREL CANYON BLVD, SUN VALLEY, CA 91352

NO.	REVISIONS	DATE	BY
		YY/MM/DD	
		YY/MM/DD	
		YY/MM/DD	
		YY/MM/DD	

CIP NO. SCP0002

INDEX NO.

CITY OF LOS ANGELES DEPARTMENT OF PUBLIC WORKS

CITY ENGINEER
TED ALLEN, P.E.

DESIGN GROUP		DATE
ENGINEER:	CDM SMITH INC.	04/11/2023
ARCHITECT:	N/A	04/11/2023
DESIGNED BY:	M. MA	04/11/2023
DRAWN BY:	C. BILDERBACK	04/11/2023
CHECKED BY:	P. TAURASI	04/11/2023
APPROVED BY:	A. DELLINGER	04/11/2023

WORK ORDER
EW40079F

SHEET NAME
GI07

SHEET 8 OF 125 SHEETS

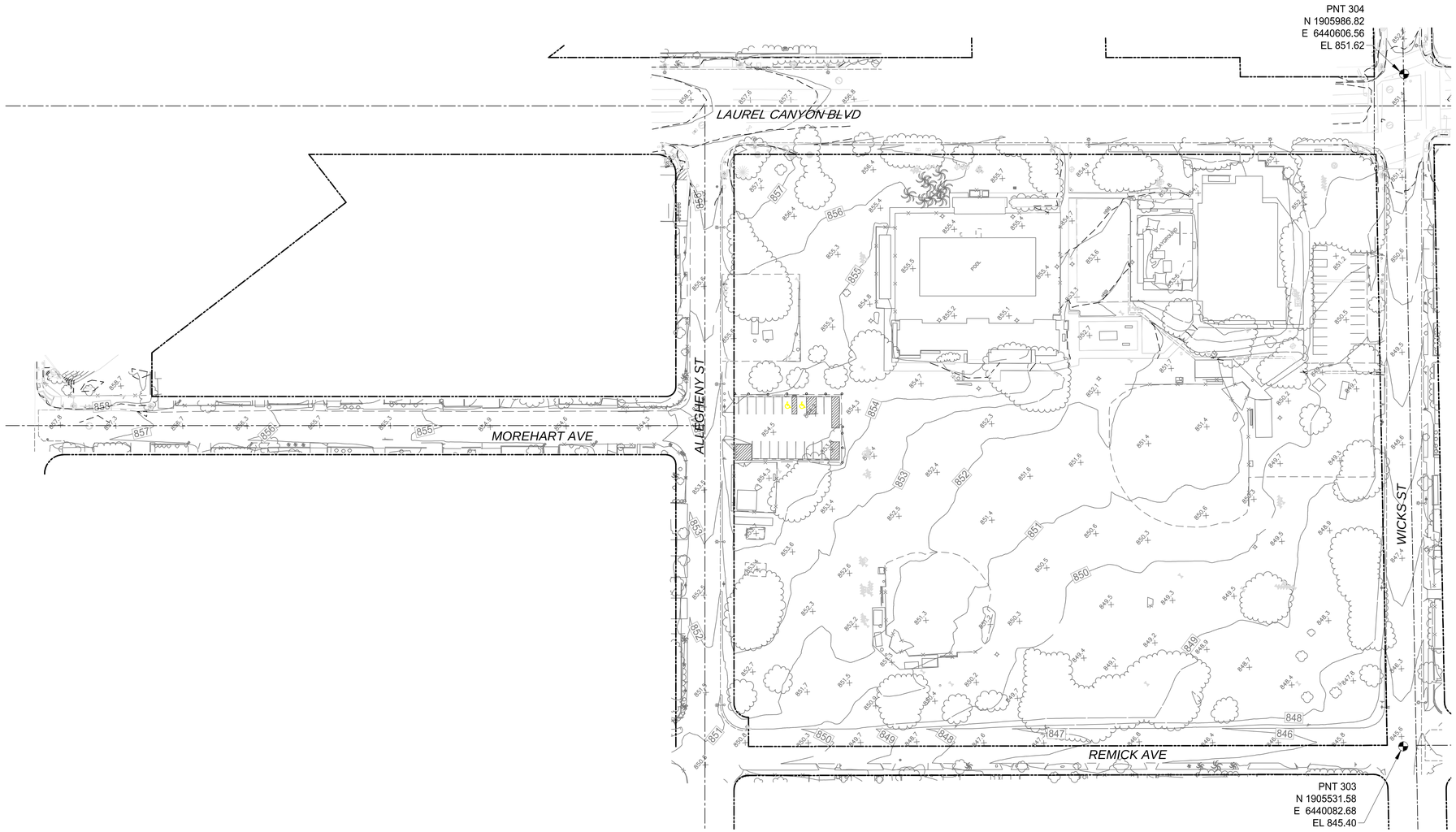

SURVEY PLAN
NTS

NOTES

COORDINATES SHOWN ARE BASED ON THE CALIFORNIA COORDINATE SYSTEM (CCS83), ZONE V, 1983 NAD (2017.50 EPOCH)

BEARINGS ARE BASED ON THE BEARING BETWEEN CALIFORNIA SPATIAL REFERENCE CENTER CONTINUOUS GPS STATIONS "NOPK" TO "LFRS" BEING N86 34 17.8"E

ELEVATIONS ARE BASED ON CITY OF LOS ANGELES BENCH MARK "08-30460", DESCRIBED AS "SPK.; E. CURB WHITSETT AVE., 4.8 FT. S/O BCR S/O CANTARA ST.". ELEV. = 808.204 FEET (NAVD 88, YEAR OF ADJUSTMENT, 2000)

DATE OF SURVEY: JUNE, 2020

LEGEND

- LOCAL BENCHMARK
- SET BENCHMARK
- TRAFFIC SIGNAL POLE
- TRAFFIC SIGNAL POLE WITHOUT MASTARM
- STREET LIGHT POLE
- UTILITY POLE
- FIRE HYDRANT
- UTILITY PULL BOX
- COMMUNICATION PULL BOX
- ELECTRICAL BOX
- STREET LIGHT PULL BOX
- TELEPHONE PULL BOX
- TRAFFIC SIGNAL PULL BOX
- GATE VALVE
- IRRIGATION CONTROL VALVE
- QUICK COUPLER VALVE
- REMOTE CONTROL VALVE
- WATER VALVE
- GAS VALVE
- MANHOLE
- STORM DRAIN MANHOLE
- TELECOMMUNICATIONS MANHOLE
- ELECTRICAL MANHOLE
- SEWER MANHOLE
- CATCH BASIN ACCESS COVER
- TREE (UNCLASSIFIED)
- TREE (PALM)
- VENT
- GUARDPOST
- SIGN
- GUYWIRE
- PARKING METER
- BICYCLE RACK
- WATER METER
- MONITORING WELL
- SANITARY CLEANOUT
- WATER VALVE BOX
- FIRE HYDRANT VALVE
- GAS METER
- POSTAL DROP BOX

THE CITY OF LOS ANGELES OR ITS OFFICERS OR AGENTS SHALL NOT BE RESPONSIBLE FOR THE ACCURACY OR COMPLETENESS OF ELECTRONIC COPIES OF THIS PLAN SHEET.

REVISION DATES (DESIGN STAGE ONLY)

ENGINEERING
CITY OF LOS ANGELES

REGISTERED PROFESSIONAL ENGINEER
S. TED ALLEN
No. C 48973
EXP. 06/30/2026
STATE OF CALIFORNIA
01/27/2023

THIS PLAN WAS ELECTRONICALLY • SIGNED AND STAMPED

CITY OF LOS ANGELES DEPARTMENT OF PUBLIC WORKS
BUREAU OF ENGINEERING

VERTICAL CONTROL: BENCH MARK 08-30460 NAVD 88
HORIZONTAL CONTROL: CALIFORNIA STATE PLANE ZONE V, 1983 NAD

SHEET TITLE: SITE SURVEY

PROJECT: FERNANGELES PARK STORMWATER CAPTURE PROJECT

ADDRESS: FERNANGELES RECREATION CENTER 8851 LAUREL CANYON BLVD, SUN VALLEY, CA 91352

NO.	REVISIONS	DATE	BY
		YY/MM/DD	
		YY/MM/DD	
		YY/MM/DD	
		YY/MM/DD	

CIP NO. SCP0002

INDEX NO.

CITY ENGINEER
TED ALLEN, P.E.

DESIGN GROUP		DATE
ENGINEER:	CDM SMITH INC.	04/11/2023
ARCHITECT:	NA	04/11/2023
DESIGNED BY:	M. MA	04/11/2023
DRAWN BY:	C. BILDERBACK	04/11/2023
CHECKED BY:	P. TAURASI	04/11/2023
APPROVED BY:	A. DELLINGER	04/11/2023

WORK ORDER
EW40079D

SHEET NAME
VF01

SHEET 9 OF 125 SHEETS

W.O. EW40079D

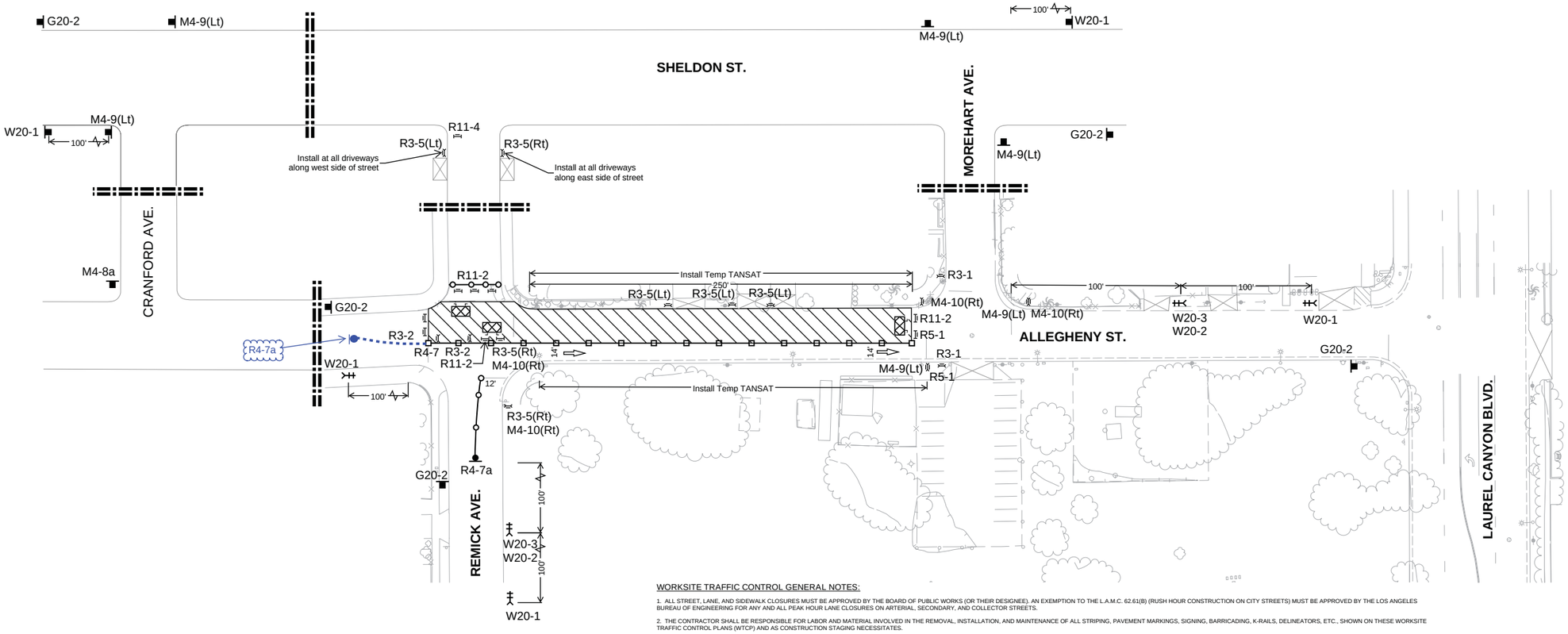



LEGEND

- Type II Barricade w/Sign
- Type III Barricade w/Sign
- Type III Barricade
- Sign on Temporary Stand
- High Level Warning Device w/Sign
- Sign on Channelizing Device
- Channelizing Device (25' Spacing)
- Channelizing Device (15' Spacing)
- Work Zone
- Flagger
- PCMS — Portable Changeable Message Sign
- Arrow Board (Arrow/Chevron Mode)
- Arrow Board (Caution Mode)
- Proposed Storm Drain
- S — Signalized Intersection
- Traffic Flow Direction

NOTICE TO CONTRACTOR

THIS EXHIBIT DEPICTS TYPICAL TRAFFIC CONTROL IMPLEMENTATION FOR WORK WITHIN THE DESIGNATED WORK AREAS. TRAFFIC CONTROL SHOWN ON THIS EXHIBIT IS SHOWN FOR REFERENCE ONLY. STREET IMPROVEMENT WORK DETAILS ARE SHOWN ON THE LABOE-APPROVED "STREET IMPROVEMENT PLANS".

NOTES:

1. THE CONTRACTOR SHALL MAKE ARRANGEMENTS WITH M.T.A. AT (213) 922-4632 OR THE APPROPRIATE TRANSIT SERVICES AT LEAST FIVE (5) DAYS PRIOR TO CONSTRUCTION TO COORDINATE RELOCATION OF THE BUS STOP/ZONE. COORDINATE RELOCATION WITH LADOT FOR INSTALLATION OF "TEMPORARY TOW AWAY NO STOPPING - BUS ZONE" SIGNS.

2. MAINTAIN THREE PEDESTRIAN CROSSWALK ACCESS AT ALL TIMES OR PROVIDE FLAGGERS TO ASSIST PEDESTRIANS THROUGH WORK AREA (ALL CROSSWALKS) DURING ALL WORK HOURS.

3. THE CONTRACTOR SHALL MAINTAIN DRIVEWAY AND MIN. 4-FOOT PEDESTRIAN ACCESS AT ALL TIMES.

CLOSURE IMPACTS:

Metro Transit Impacts? NO
LADOT Signal Impacts? NO
Special Traffic Control (Parking)? YES

WORK HOURS:

MONDAY - FRIDAY 9:00 AM - 3:30 PM
(CONSTRUCTION DURATION: 2 WEEKS)
(DAILY SETUP AND TAKE-DOWN))

WORKSITE TRAFFIC CONTROL GENERAL NOTES:

1. ALL STREET, LANE, AND SIDEWALK CLOSURES MUST BE APPROVED BY THE BOARD OF PUBLIC WORKS (OR THEIR DESIGNEE). AN EXEMPTION TO THE L.A.M.C. 62.61(B) (RUSH HOUR CONSTRUCTION ON CITY STREETS) MUST BE APPROVED BY THE LOS ANGELES BUREAU OF ENGINEERING FOR ANY AND ALL PEAK HOUR LANE CLOSURES ON ARTERIAL, SECONDARY, AND COLLECTOR STREETS.

2. THE CONTRACTOR SHALL BE RESPONSIBLE FOR LABOR AND MATERIAL INVOLVED IN THE REMOVAL, INSTALLATION, AND MAINTENANCE OF ALL STRIPING, PAVEMENT MARKINGS, SIGNING, BARRICADING, K-RAILS, DELINEATORS, ETC., SHOWN ON THESE WORKSITE TRAFFIC CONTROL PLANS (WTCP) AND AS CONSTRUCTION STAGING NECESSITATES.

3. THE CONTRACTOR SHALL PROVIDE WRITTEN NOTIFICATION TO THE LADOT TEMPORARY TRAFFIC MANAGEMENT SECTION AT GHASSAN.CHOUEIRY@LACITY.ORG (E-MAIL) AT LEAST FIVE (5) WORKING DAYS PRIOR TO CONSTRUCTION WITH THE DATE(S) OF IMPLEMENTATION AND TYPE OF TEMPORARY TRAFFIC CONTROL IMPLEMENTATION (INCLUDE ACCEPTANCE DATE ON PLAN AND SHEET NUMBER) INCLUDING A BRIEF DESCRIPTION OF WORK. LADOT RESERVES THE RIGHT TO OBSERVE THESE WORKSITE TRAFFIC CONTROL PLANS IN USE AND TO MAKE NECESSARY CHANGES AS FIELD CONDITIONS WARRANT. ANY CHANGES SHALL SUPERSEDE THESE PLANS. THE CONTRACTOR SHALL BE RESPONSIBLE FOR THE PLACEMENT OF ANY ADDITIONAL TRAFFIC CONTROL DEVICES NECESSARY TO ASSURE PUBLIC SAFETY AT ALL TIMES DURING CONSTRUCTION.

4. THE CONTRACTOR SHALL PERFORM WORK IN ONLY ONE STAGE AT A TIME. THE CONTRACTOR SHALL ONLY UTILIZE THAT PORTION OF THE DESIGNATED "WORK AREA" WHICH IS NEEDED FOR CONSTRUCTION AT ANY GIVEN TIME.

5. ALL CONSTRUCTION RELATED WARNING SIGNS SHALL BE IN BLACK LEGEND WITH ORANGE BACKGROUND AND IN CONFORMANCE WITH THE CALIFORNIA MANUAL ON UNIFORM TRAFFIC CONTROL DEVICES (CAMUTCD) (LATEST EDITION).

6. THE SIGNING AND STRIPING SHOWN FOR REMOVAL ON THESE PLANS MAY BE DIFFERENT THAN WHAT EXISTS AT THE TIME OF INSTALLATION OF A CONSTRUCTION STAGE. THE CONTRACTOR SHALL REMOVE ALL CONFLICTING SIGNING AND STRIPING, WHETHER OR NOT IT IS DEPICTED ACCURATELY ON THESE PLANS. EXISTING SIGNS THAT ARE IN CONFLICT WITH THESE PLANS SHALL BE REMOVED OR COVERED BY THE CONTRACTOR AND RESTORED UPON REMOVAL OF THE WTCP.

7. FOR OTHER REQUIREMENTS RELATED TO TRAFFIC CONTROL PLANS AND WORK AREA MAINTENANCE, THE CONTRACTOR SHALL FOLLOW THE CALIFORNIA MANUAL ON UNIFORM TRAFFIC CONTROL DEVICES (CAMUTCD) (LATEST EDITION), THE "WORK AREA TRAFFIC CONTROL HANDBOOK" (WATCH MANUAL) (2019 EDITION), AND ALL RELATED SECTIONS OF THE STANDARD SPECIFICATIONS FOR PUBLIC WORKS CONSTRUCTION, INCLUDING SECTION 7-10 "PUBLIC CONVENIENCE AND SAFETY." AND 302-4.4 "PUBLIC CONVENIENCE AND TRAFFIC CONTROL."

8. THE CROSSWALKS ACROSS THREE LEGS (IF EXISTING) OF ANY SIGNALIZED INTERSECTION SHALL BE MAINTAINED AT ALL TIMES. "NO PED CROSSING" (R9-3, R9-3bP) SIGNS SHALL BE INSTALLED WHEN A PAINTED CROSSWALK IS UNAVAILABLE FOR USE DUE TO CONSTRUCTION. PEDESTRIAN SIGNAL INDICATIONS FOR THE CLOSED CROSSWALK SHALL BE COVERED AS INDICATED ON THE TEMPORARY TRAFFIC SIGNAL PLAN (IF AVAILABLE) OR PER THE WATCH MANUAL (SECTION 6-5).

9. THE CONTRACTOR SHALL INSTALL R3-18 (NO LEFT AND NO U-TURN) SIGNS AT INTERSECTIONS WHERE THE LEFT TURN LANE HAS BEEN CLOSED FOR CONSTRUCTION. SIGNS SHOULD BE INSTALLED ON TRAFFIC SIGNAL MAST ARMS AND FAR LEFT OF THE INTERSECTION OR AT LOCATIONS WHERE THEY WILL BE CLEARLY VISIBLE BY THE THRU TRAFFIC.

10. THE CONTRACTOR SHALL NOTIFY LACMTA AT (213) 922-4632 AND ANY OTHER AFFECTED TRANSIT SERVICES AT LEAST FIVE (5) WORKING DAYS PRIOR TO CONSTRUCTION.

11. ALL TRAFFIC CONTROL DEVICES SHALL BE KEPT IN THEIR PROPER POSITION AT ALL TIMES, AND SHALL BE REPAIRED, REPLACED, OR CLEANED AS NECESSARY TO PRESERVE THEIR APPEARANCE AND CONTINUITY.

12. THE CONTRACTOR SHALL PROVIDE FLAGGERS AS DEEMED NECESSARY BY LADOT. A FLAGGER SHALL USE ONLY THE APPROVED OCTAGONAL STOP/SLOW PADDLE. SHALL WEAR AN ORANGE CLASS 3 SAFETY VEST (PADDLE AND VEST MUST BE REFLECTORIZED FOR NIGHT WORK), AND HARD HAT, AS REQUIRED BY THE WATCH MANUAL. FLAGGERS MUST BE PROPERLY TRAINED BY THE CONTRACTOR IN PERFORMING THE WORK SAFELY. APPROPRIATE ADVANCE SIGNS MUST BE INSTALLED, PER THE WATCH MANUAL.

13. ALL TEMPORARY TRAFFIC CONTROL DEVICES SHALL BE REMOVED FOLLOWING COMPLETION OF EACH CONSTRUCTION STAGE AND THE PERMANENT TRAFFIC CONTROL DEVICES SHALL BE RESTORED BY THE CONTRACTOR UPON REMOVAL OF WTCP SIGNING AND STRIPING.

14. ALL SIGNS, DELINEATORS, BARRICADES, ETC., SHALL CONFORM TO THE STATE OF CALIFORNIA STANDARD SPECIFICATIONS, THE STATE OF CALIFORNIA MANUAL ON UNIFORM TRAFFIC CONTROL DEVICES (CAMUTCD) (LATEST EDITION), THE "WORK AREA TRAFFIC CONTROL HANDBOOK" (2019 EDITION), THE CITY OF LOS ANGELES DEPARTMENT OF PUBLIC WORKS STANDARD PLAN S-610 (LATEST EDITION), AND THE NOTICE TO CONTRACTORS - COMPREHENSIVE.

15. THE CONTRACTOR SHALL CONTACT THE LADOT SPECIAL TRAFFIC CONTROLS OFFICE AT (213) 485-2298 AT LEAST FIVE (5) WORKING DAYS IN ADVANCE OF EACH NEW CONSTRUCTION STAGE FOR THE INSTALLATION OF TEMPORARY "TOW AWAY NO STOPPING ANY TIME" SIGNS. INSTALLATION OF THE TEMPORARY "TOW AWAY NO STOPPING ANY TIME" SIGNS AT PARKING METER ZONES SHALL ALSO INCLUDE COVERING METER HEADS AND THE ASSOCIATED PARKING RESTRICTION.

16. THE CONTRACTOR SHALL NOTIFY THE LADOT PARKING METER DIVISION AT (213) 473-8270 AT LEAST TEN (10) WORKING DAYS PRIOR TO STARTING CONSTRUCTION WHENEVER PARKING METERS WILL BE AFFECTED.

17. THERE SHALL BE NO STORAGE OF CONSTRUCTION MATERIALS AND EQUIPMENT OUTSIDE THE DESIGNATED WORK AREA AS INDICATED ON THE WTCP. STORAGE OF CONSTRUCTION MATERIALS AND EQUIPMENT WITHIN THE DESIGNATED WORK AREA SHALL BE DONE IN A MANNER NOT TO CREATE VISIBILITY OBSTRUCTIONS TO THE MOTORING PUBLIC.

18. THE CONTRACTOR SHALL MAINTAIN ACCESS TO ALL FUNCTIONAL DRIVEWAYS AT ALL TIMES AND SHALL COORDINATE WITH RESIDENTS AND BUSINESSES FOR ANY CLOSURE OR LIMITED ACCESS RESTRICTION TO THEIR DRIVEWAYS. IF CONSTRUCTION NECESSITATES, THE CONTRACTOR SHALL REVISE THE WORKSITE TRAFFIC CONTROL PLANS TO CHANGE THE SETUP AND ALLOW ACCESS TO A DRIVEWAY THAT IS SHOWN TO BE BLOCKED ON THE APPROVED WTCP. REVISED WORKSITE TRAFFIC CONTROL PLANS SHALL BE PREPARED PER LADOT STANDARDS, SIGNED AND SEALED BY A REGISTERED TRAFFIC AND CIVIL ENGINEER, AND SUBMITTED TO LADOT FOR APPROVAL. FOR ANY DRIVEWAY CLOSURE, CONTRACTOR SHALL COORDINATE AND OBTAIN APPROVAL FROM THE LOS ANGELES BUREAU OF ENGINEERING.

19. THE CONTRACTOR SHALL PROVIDE CHANGEABLE MESSAGE SIGNS AS FIELD CONDITIONS/DETOURS WARRANT, AND AS DEEMED NECESSARY BY LADOT, EVEN IF THEY ARE NOT SHOWN ON THESE PLANS.

20. LOCATION AND SPACING OF TEMPORARY SIGNS AND DELINEATORS SHALL CONFORM TO THE CAMUTCD (LATEST EDITION) AND AS DIRECTED BY THE LADOT ENGINEER.

21. THE CONTRACTOR SHALL BE RESPONSIBLE FOR REPLACEMENT OF ANY MISSING OR DAMAGED SIGNS (DUE TO CONSTRUCTION) ACCORDING TO THE LATEST LADOT SPECIFICATIONS.

22. THE CONTRACTOR SHALL ADHERE TO THE L.A.M.C. 62.61(B) FOR PEAK HOUR EXEMPTIONS.

23. FOR ANY REVISION OR DEVIATION FROM THE APPROVED WORKSITE TRAFFIC CONTROL PLAN AND SIGNAL PLAN, INCLUDING WORK AREAS AND WORK HOURS, THE CONTRACTOR SHALL BE FULLY RESPONSIBLE FOR ALL PLAN PREPARATION AND APPROVAL OF SUCH PLAN PER LADOT MANUAL OF POLICY AND PROCEDURES, SECTION 531.

24. ANY CHANGES TO WORK AREAS, WORK HOURS, AND/OR APPROVED PLANS SHALL BE SUBMITTED TO LABOE/LADOT FOR REVIEW AND APPROVAL.

25. A COPY OF THIS APPROVED WTCP SHALL BE ON THE WORKSITE AT ALL TIMES DURING WORK HOURS AND BE AVAILABLE TO LADOT AND CON-AD UPON REQUEST.

26. THE CONTRACTOR SHALL NOTIFY ALL AFFECTED RESIDENTS, LOS ANGELES POLICE DEPARTMENT, LOS ANGELES FIRE DEPARTMENT, SCHOOLS, COUNCIL OFFICES, AND BUSINESSES AT LEAST FIVE (5) WORKING DAYS PRIOR TO START OF CONSTRUCTION.

27. THE CONTRACTOR SHALL PROVIDE REFLECTORIZED CONES AT TYPE III BARRICADE SUPPORTS TO ALERT PEDESTRIANS TO THE BARRICADE SUPPORTS.

28. ALL TEMPORARY SIGNAGE AND TRAFFIC CONTROL DEVICES INSTALLED ADJACENT TO PEDESTRIAN TRAVEL WAY MUST ALLOW FOR ADA-COMPLIANT PASSAGEWAYS.

* AS NOTED

PLAN ACCEPTED
LADOT Citywide Temporary Traffic Control
Carlos Rodriguez 11/09/2021
Carlos Rodriguez, PE Date
THIS IS NOT A PERMIT

2019 WATCH
Page 50, 51

Exhibit 1
TASK ORDER 25 STORMWATER CAPTURE PARKS PROGRAM
(FERNANGELES RECREATION CENTER)

Updated: 10/25/2021

SCALE: 1"= 40'

WORKSITE TRAFFIC CONTROL GENERAL NOTES:

REFER TO GENERAL NOTES ON SHEET 1 OF 11.

W.O. EW40079D

LEGEND

- Type II Barricade w/Sign
- Type III Barricade w/Sign
- Type III Barricade
- Sign on Temporary Stand
- High Level Warning Device w/Sign
- Sign on Channelizing Device
- Channelizing Device (25' Spacing)
- Channelizing Device (15' Spacing)
- Work Zone
- Flagger
- PCMS — Portable Changeable Message Sign
- Arrow Board (Arrow/Chevron Mode)
- Arrow Board (Caution Mode)
- Proposed Storm Drain
- Ⓢ Signalized Intersection
- Traffic Flow Direction

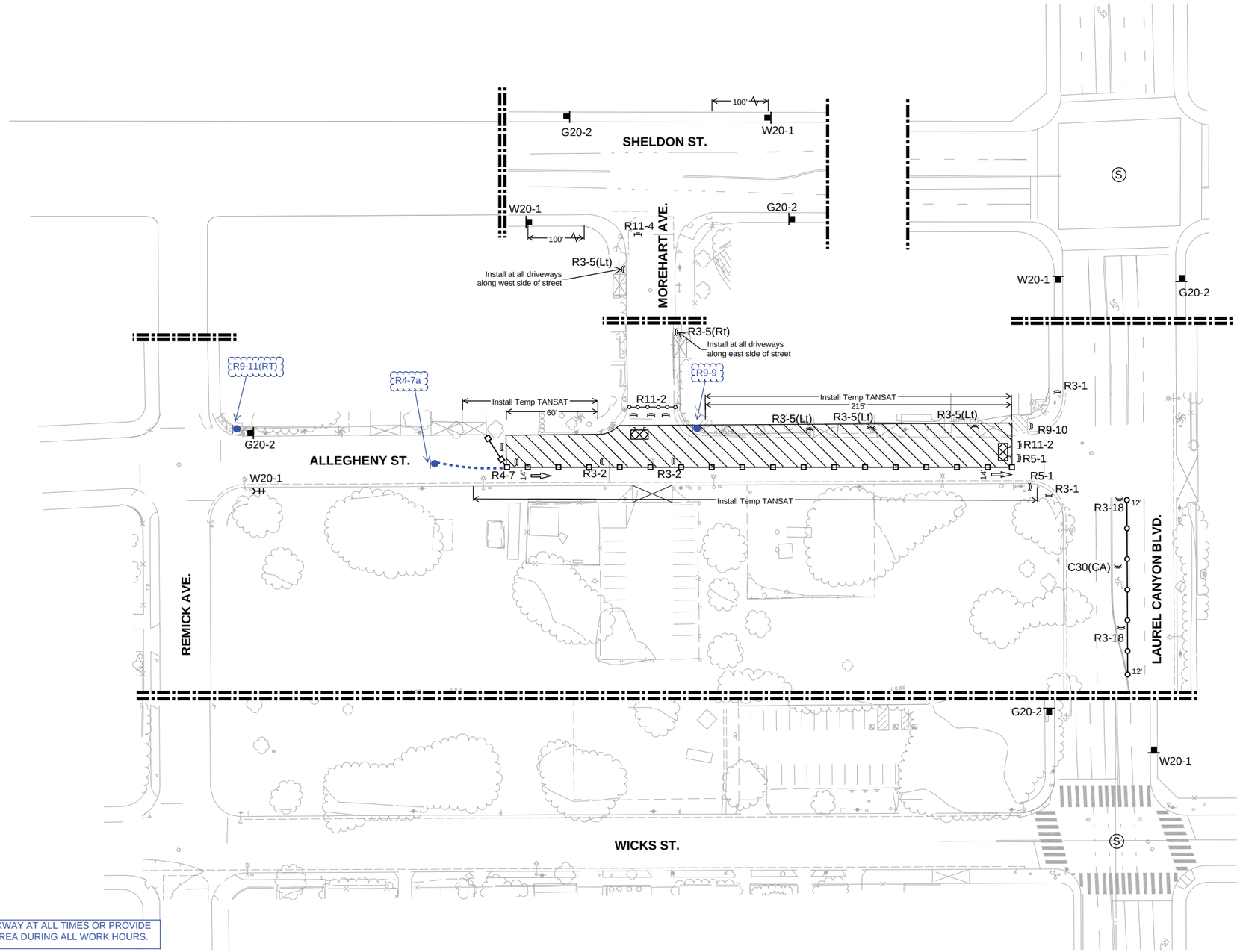

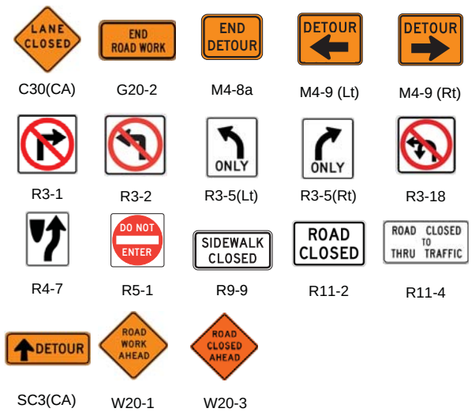

* AS NOTED

PLAN ACCEPTED
LADOT Citywide Temporary Traffic Control
Carlos Rodriguez 11/09/2021
Carlos Rodriguez, PE Date
THIS IS NOT A PERMIT

CONTRACTOR SHALL MAINTAIN 5 FT PEDESTRIAN WALKWAY AT ALL TIMES OR PROVIDE FLAGGER TO ASSIST PEDESTRIANS THROUGH WORK AREA DURING ALL WORK HOURS.

NOTES:
1. THE CONTRACTOR SHALL MAKE ARRANGEMENTS WITH M.T.A. AT (213) 922-4632 OR THE APPROPRIATE TRANSIT SERVICES AT LEAST FIVE (5) DAYS PRIOR TO CONSTRUCTION TO COORDINATE RELOCATION OF THE BUS STOP/ZONE. COORDINATE RELOCATION WITH LADOT FOR INSTALLATION OF "TEMPORARY TOW AWAY NO STOPPING - BUS ZONE" SIGNS.

2. MAINTAIN THREE PEDESTRIAN CROSSWALK ACCESS AT ALL TIMES OR PROVIDE FLAGGERS TO ASSIST PEDESTRIANS THROUGH WORK AREA (ALL CROSSWALKS) DURING ALL WORK HOURS.

3. THE CONTRACTOR SHALL MAINTAIN DRIVEWAY AND MIN. 4-FOOT PEDESTRIAN ACCESS AT ALL TIMES.

CLOSURE IMPACTS:

Metro Transit Impacts? NO
LADOT Signal Impacts? NO
Special Traffic Control (Parking)? YES

WORK HOURS:

MONDAY - FRIDAY 9:00 AM - 3:30 PM
(CONSTRUCTION DURATION: 2 WEEKS)
(DAILY SETUP AND TAKE-DOWN))

NOTICE TO CONTRACTOR
THIS EXHIBIT DEPICTS TYPICAL TRAFFIC CONTROL IMPLEMENTATION FOR WORK WITHIN THE DESIGNATED WORK AREAS. TRAFFIC CONTROL SHOWN ON THIS EXHIBIT IS SHOWN FOR REFERENCE ONLY. STREET IMPROVEMENT WORK DETAILS ARE SHOWN ON THE LABOE-APPROVED "STREET IMPROVEMENT PLANS".

2019 WATCH
Page 50, 51

Exhibit 2
TASK ORDER 25 STORMWATER CAPTURE PARKS PROGRAM
(FERNANGELES RECREATION CENTER)

Updated: 10/25/2021

SCALE: 1"= 40'

WORKSITE TRAFFIC CONTROL GENERAL NOTES:

REFER TO GENERAL NOTES ON SHEET 1 OF 11.

W.O. EW40079D

NOTICE TO CONTRACTOR
THIS EXHIBIT DEPICTS TYPICAL TRAFFIC CONTROL IMPLEMENTATION FOR WORK WITHIN THE DESIGNATED WORK AREAS. TRAFFIC CONTROL SHOWN ON THIS EXHIBIT IS SHOWN FOR REFERENCE ONLY. STREET IMPROVEMENT WORK DETAILS ARE SHOWN ON THE LABOE-APPROVED "STREET IMPROVEMENT PLANS".

NOTES:
1. THE CONTRACTOR SHALL MAKE ARRANGEMENTS WITH M.T.A. AT (213) 922-4632 OR THE APPROPRIATE TRANSIT SERVICES AT LEAST FIVE (5) DAYS PRIOR TO CONSTRUCTION TO COORDINATE RELOCATION OF THE BUS STOP/ZONE. COORDINATE RELOCATION WITH LADOT FOR INSTALLATION OF "TEMPORARY TOW AWAY NO STOPPING - BUS ZONE" SIGNS.

2. MAINTAIN THREE PEDESTRIAN CROSSWALK ACCESS AT ALL TIMES OR PROVIDE FLAGGERS TO ASSIST PEDESTRIANS THROUGH WORK AREA (ALL CROSSWALKS) DURING ALL WORK HOURS.

3. THE CONTRACTOR SHALL MAINTAIN DRIVEWAY AND MIN. 4-FOOT PEDESTRIAN ACCESS AT ALL TIMES.

CONTRACTOR SHALL MAINTAIN 5 FT PEDESTRIAN WALKWAY AT ALL TIMES OR PROVIDE FLAGGER TO ASSIST PEDESTRIANS THROUGH WORK AREA DURING ALL WORK HOURS.

LEGEND

- Type II Barricade w/Sign
- Type III Barricade w/Sign
- Type III Barricade
- Sign on Temporary Stand
- High Level Warning Device w/Sign
- Sign on Channelizing Device
- Channelizing Device (25' Spacing)
- Channelizing Device (15' Spacing)
- Work Zone
- Flagger
- PCMS — Portable Changeable Message Sign
- Arrow Board (Arrow/Chevron Mode)
- Arrow Board (Caution Mode)
- Proposed Storm Drain
- Signalized Intersection
- Traffic Flow Direction

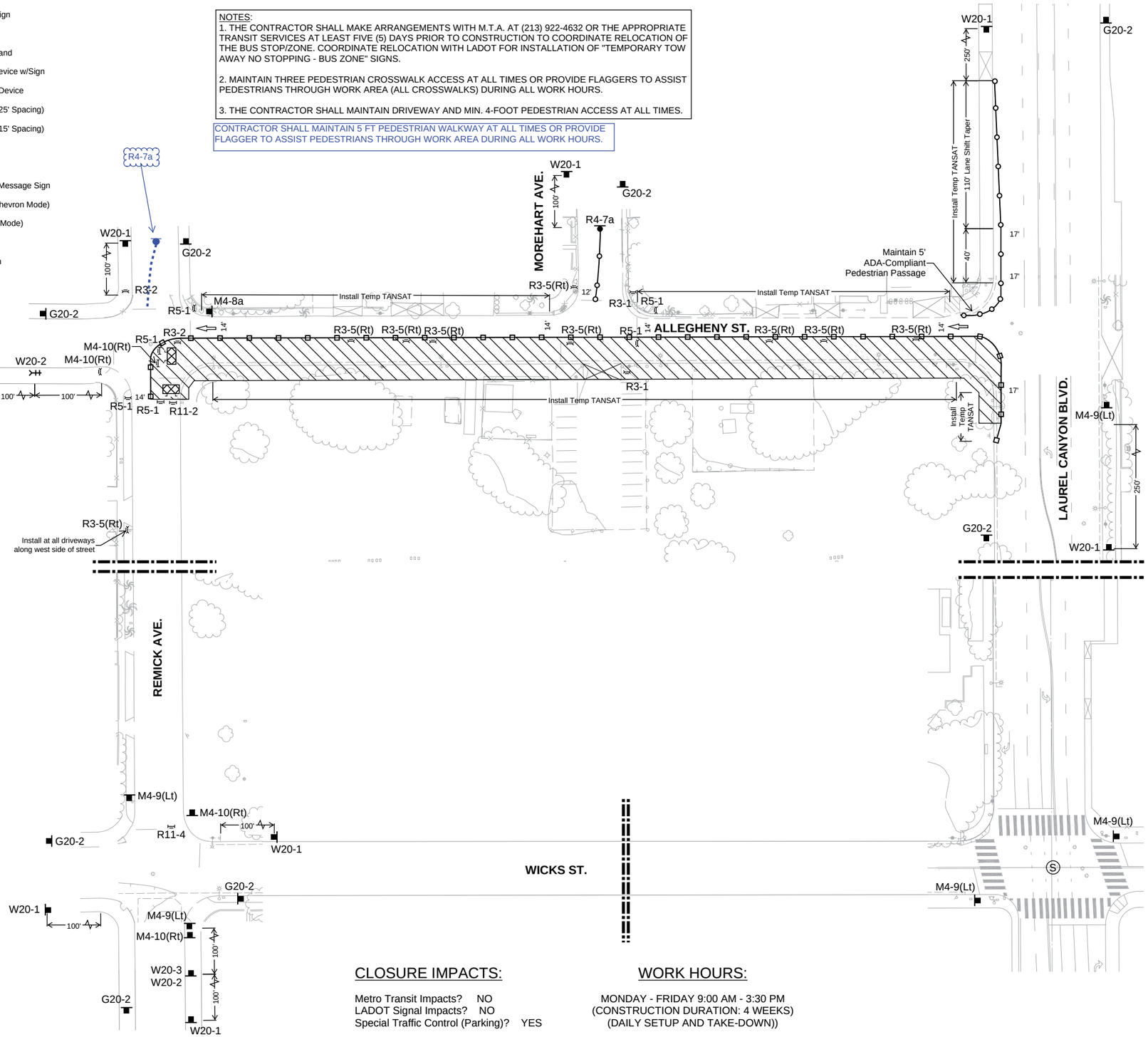

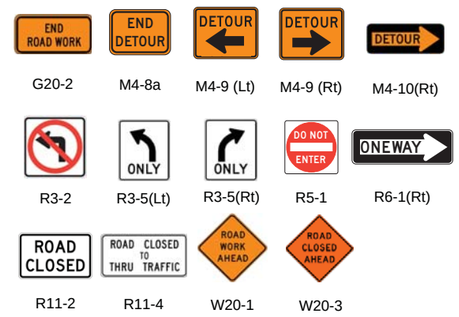

CLOSURE IMPACTS:

Metro Transit Impacts? NO
LADOT Signal Impacts? NO
Special Traffic Control (Parking)? YES

WORK HOURS:

MONDAY - FRIDAY 9:00 AM - 3:30 PM
(CONSTRUCTION DURATION: 4 WEEKS)
(DAILY SETUP AND TAKE-DOWN))

* AS NOTED

PLAN ACCEPTED
LADOT Citywide Temporary Traffic Control
Carlos Rodriguez 11/09/2021
Carlos Rodriguez, PE Date
THIS IS NOT A PERMIT

2019 WATCH
Page 50, 51

Exhibit 3
TASK ORDER 25 STORMWATER CAPTURE PARKS PROGRAM
(FERNANGELES RECREATION CENTER)

Updated: 10/25/2021

SCALE: 1"= 40'

W.O. EW40079D

WORKSITE TRAFFIC CONTROL GENERAL NOTES:

REFER TO GENERAL NOTES ON SHEET 1 OF 11.

LEGEND

- Type II Barricade w/Sign
- Type III Barricade w/Sign
- Type III Barricade
- Sign on Temporary Stand
- High Level Warning Device w/Sign
- Sign on Channelizing Device
- Channelizing Device (25' Spacing)
- Channelizing Device (15' Spacing)
- Work Zone
- Flagger
- PCMS — Portable Changeable Message Sign
- Arrow Board (Arrow/Chevron Mode)
- Arrow Board (Caution Mode)
- Proposed Storm Drain
- Signalized Intersection
- Traffic Flow Direction



SINGLE LANE AHEAD
USE ALT ROUTE

PCMS 'A'
(TO BE IN OPERATION DURING CLOSURE HOURS)

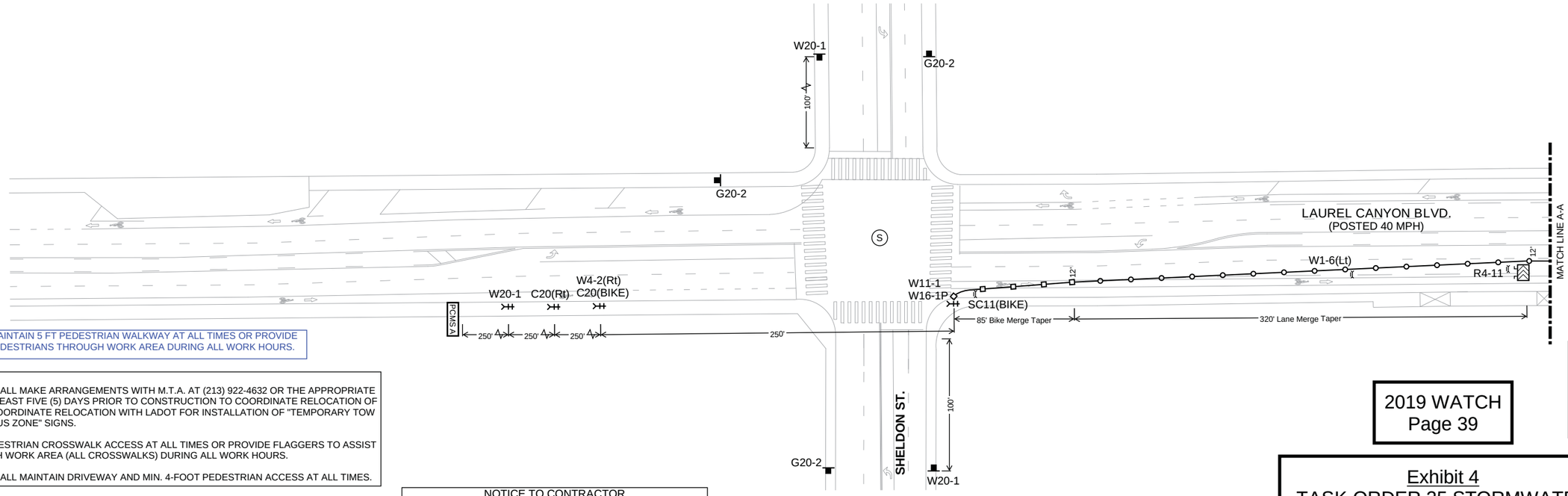

* AS NOTED

CONTRACTOR SHALL MAINTAIN 5 FT PEDESTRIAN WALKWAY AT ALL TIMES OR PROVIDE FLAGGER TO ASSIST PEDESTRIANS THROUGH WORK AREA DURING ALL WORK HOURS.

NOTES:
1. THE CONTRACTOR SHALL MAKE ARRANGEMENTS WITH M.T.A. AT (213) 922-4632 OR THE APPROPRIATE TRANSIT SERVICES AT LEAST FIVE (5) DAYS PRIOR TO CONSTRUCTION TO COORDINATE RELOCATION OF THE BUS STOP/ZONE. COORDINATE RELOCATION WITH LADOT FOR INSTALLATION OF "TEMPORARY TOW AWAY NO STOPPING - BUS ZONE" SIGNS.

2. MAINTAIN THREE PEDESTRIAN CROSSWALK ACCESS AT ALL TIMES OR PROVIDE FLAGGERS TO ASSIST PEDESTRIANS THROUGH WORK AREA (ALL CROSSWALKS) DURING ALL WORK HOURS.

3. THE CONTRACTOR SHALL MAINTAIN DRIVEWAY AND MIN. 4-FOOT PEDESTRIAN ACCESS AT ALL TIMES.

CLOSURE IMPACTS:

Metro Transit Impacts? NO
LADOT Signal Impacts? NO
Special Traffic Control (Parking)? YES

WORK HOURS:

MONDAY - FRIDAY 9:00 AM - 3:30 PM
(CONSTRUCTION DURATION: 2 WEEKS)
(DAILY SETUP AND TAKE-DOWN))

NOTICE TO CONTRACTOR
THIS EXHIBIT DEPICTS TYPICAL TRAFFIC CONTROL IMPLEMENTATION FOR WORK WITHIN THE DESIGNATED WORK AREAS. TRAFFIC CONTROL SHOWN ON THIS EXHIBIT IS SHOWN FOR REFERENCE ONLY. STREET IMPROVEMENT WORK DETAILS ARE SHOWN ON THE LABOE-APPROVED "STREET IMPROVEMENT PLANS".

PLAN ACCEPTED
LADOT Citywide Temporary Traffic Control
Carlos Rodriguez 11/09/2021
Carlos Rodriguez, PE Date
THIS IS NOT A PERMIT

2019 WATCH
Page 39

Exhibit 4
TASK ORDER 25 STORMWATER CAPTURE PARKS PROGRAM
(FERNANGELES RECREATION CENTER)

Updated: 10/25/2021

SCALE: 1"= 40'

SHEET 4 OF 11

WORKSITE TRAFFIC CONTROL GENERAL NOTES:

REFER TO GENERAL NOTES ON SHEET 1 OF 11.

W.O. EW40079D

LEGEND

- Type II Barricade w/Sign
- Type III Barricade w/Sign
- Type III Barricade
- Sign on Temporary Stand
- High Level Warning Device w/Sign
- Sign on Channelizing Device
- Channelizing Device (25' Spacing)
- Channelizing Device (15' Spacing)
- Work Zone
- Flagger
- PCMS — Portable Changeable Message Sign
- Arrow Board (Arrow/Chevron Mode)
- Arrow Board (Caution Mode)
- Proposed Storm Drain
- Ⓢ Signalized Intersection
- Traffic Flow Direction

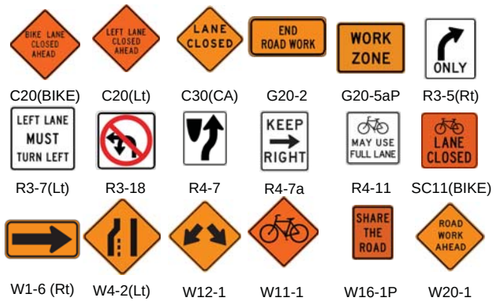

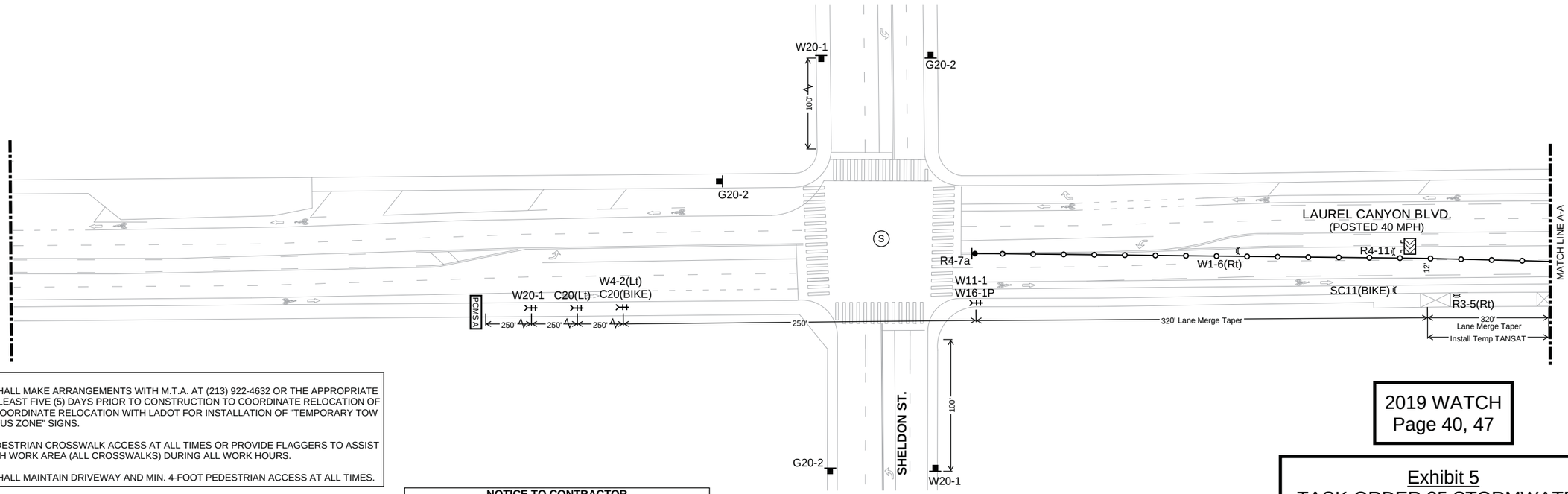

* AS NOTED

NOTES:
1. THE CONTRACTOR SHALL MAKE ARRANGEMENTS WITH M.T.A. AT (213) 922-4632 OR THE APPROPRIATE TRANSIT SERVICES AT LEAST FIVE (5) DAYS PRIOR TO CONSTRUCTION TO COORDINATE RELOCATION OF THE BUS STOP/ZONE. COORDINATE RELOCATION WITH LADOT FOR INSTALLATION OF "TEMPORARY TOW AWAY NO STOPPING - BUS ZONE" SIGNS.

2. MAINTAIN THREE PEDESTRIAN CROSSWALK ACCESS AT ALL TIMES OR PROVIDE FLAGGERS TO ASSIST PEDESTRIANS THROUGH WORK AREA (ALL CROSSWALKS) DURING ALL WORK HOURS.

3. THE CONTRACTOR SHALL MAINTAIN DRIVEWAY AND MIN. 4-FOOT PEDESTRIAN ACCESS AT ALL TIMES.

CLOSURE IMPACTS:

Metro Transit Impacts? NO
LADOT Signal Impacts? NO
Special Traffic Control (Parking)? YES

WORK HOURS:

MONDAY - FRIDAY 9:00 AM - 3:30 PM
(CONSTRUCTION DURATION: 2 WEEKS)
(DAILY SETUP AND TAKE-DOWN))

NOTICE TO CONTRACTOR
THIS EXHIBIT DEPICTS TYPICAL TRAFFIC CONTROL IMPLEMENTATION FOR WORK WITHIN THE DESIGNATED WORK AREAS. TRAFFIC CONTROL SHOWN ON THIS EXHIBIT IS SHOWN FOR REFERENCE ONLY. STREET IMPROVEMENT WORK DETAILS ARE SHOWN ON THE LABOE-APPROVED "STREET IMPROVEMENT PLANS".

PLAN ACCEPTED
LADOT Citywide Temporary Traffic Control
Carlos Rodriguez 11/09/2021
Carlos Rodriguez, PE Date
THIS IS NOT A PERMIT

2019 WATCH
Page 40, 47

Exhibit 5
TASK ORDER 25 STORMWATER CAPTURE PARKS PROGRAM
(FERNANGELES RECREATION CENTER)

Updated: 10/25/2021

SCALE: 1"= 40'

WORKSITE TRAFFIC CONTROL GENERAL NOTES:

REFER TO GENERAL NOTES ON SHEET 1 OF 11.

W.O. EW40079D

LEGEND

- Type II Barricade w/Sign
- Type III Barricade w/Sign
- Type III Barricade
- Sign on Temporary Stand
- High Level Warning Device w/Sign
- Sign on Channelizing Device
- Channelizing Device (25' Spacing)
- Channelizing Device (15' Spacing)
- Work Zone
- Flagger
- Portable Changeable Message Sign (PCMS)
- Arrow Board (Arrow/Chevron Mode)
- Arrow Board (Caution Mode)
- Proposed Storm Drain
- Signalized Intersection
- Traffic Flow Direction

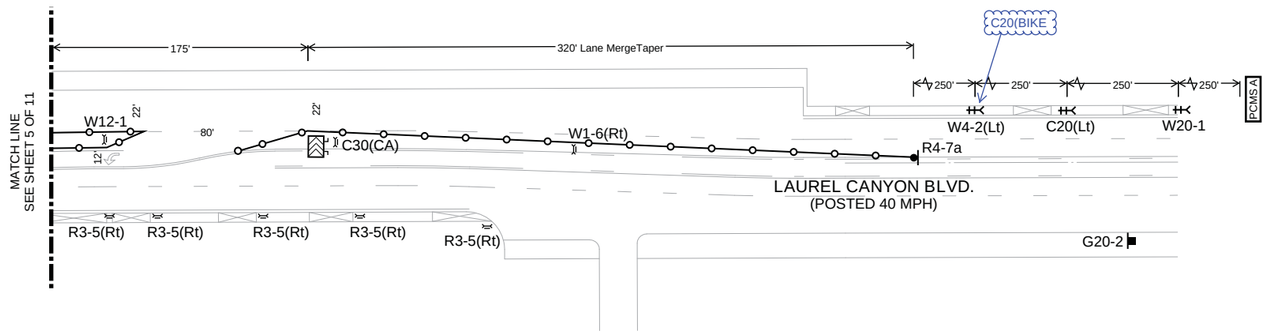

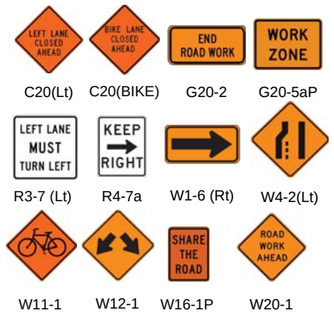

NOTES:

1. THE CONTRACTOR SHALL MAKE ARRANGEMENTS WITH M.T.A. AT (213) 922-4632 OR THE APPROPRIATE TRANSIT SERVICES AT LEAST FIVE (5) DAYS PRIOR TO CONSTRUCTION TO COORDINATE RELOCATION OF THE BUS STOP/ZONE. COORDINATE RELOCATION WITH LADOT FOR INSTALLATION OF "TEMPORARY TOW AWAY NO STOPPING - BUS ZONE" SIGNS.

2. MAINTAIN THREE PEDESTRIAN CROSSWALK ACCESS AT ALL TIMES OR PROVIDE FLAGGERS TO ASSIST PEDESTRIANS THROUGH WORK AREA (ALL CROSSWALKS) DURING ALL WORK HOURS.

3. THE CONTRACTOR SHALL MAINTAIN DRIVEWAY AND MIN. 4-FOOT PEDESTRIAN ACCESS AT ALL TIMES.

CLOSURE IMPACTS:

Metro Transit Impacts? NO
LADOT Signal Impacts? NO
Special Traffic Control (Parking)? YES

WORK HOURS:

MONDAY - FRIDAY 9:00 AM - 3:30 PM
(CONSTRUCTION DURATION: 2 WEEKS)
(DAILY SETUP AND TAKE-DOWN))

NOTICE TO CONTRACTOR

THIS EXHIBIT DEPICTS TYPICAL TRAFFIC CONTROL IMPLEMENTATION FOR WORK WITHIN THE DESIGNATED WORK AREAS. TRAFFIC CONTROL SHOWN ON THIS EXHIBIT IS SHOWN FOR REFERENCE ONLY. STREET IMPROVEMENT WORK DETAILS ARE SHOWN ON THE LABOE-APPROVED "STREET IMPROVEMENT PLANS".

* AS NOTED

PLAN ACCEPTED
LADOT Citywide Temporary Traffic Control
Carlos Rodriguez 11/09/2021
Carlos Rodriguez, PE Date
THIS IS NOT A PERMIT

2019 WATCH
Page 40, 47

Exhibit 5
TASK ORDER 25 STORMWATER CAPTURE PARKS PROGRAM
(FERNANGELES RECREATION CENTER)

Updated: 10/25/2021

SCALE: 1"= 40'

SHEET
6 OF 11

WORKSITE TRAFFIC CONTROL GENERAL NOTES:

REFER TO GENERAL NOTES ON SHEET 1 OF 11.

W.O. EW40079D

LEGEND

- Type II Barricade w/Sign
- Type III Barricade w/Sign
- Type III Barricade
- Sign on Temporary Stand
- High Level Warning Device w/Sign
- Sign on Channelizing Device
- Channelizing Device (25' Spacing)
- Channelizing Device (15' Spacing)
- Work Zone
- Flagger
- PCMS — Portable Changeable Message Sign
- Arrow Board (Arrow/Chevron Mode)
- Arrow Board (Caution Mode)
- Proposed Storm Drain
- Signalized Intersection
- Traffic Flow Direction

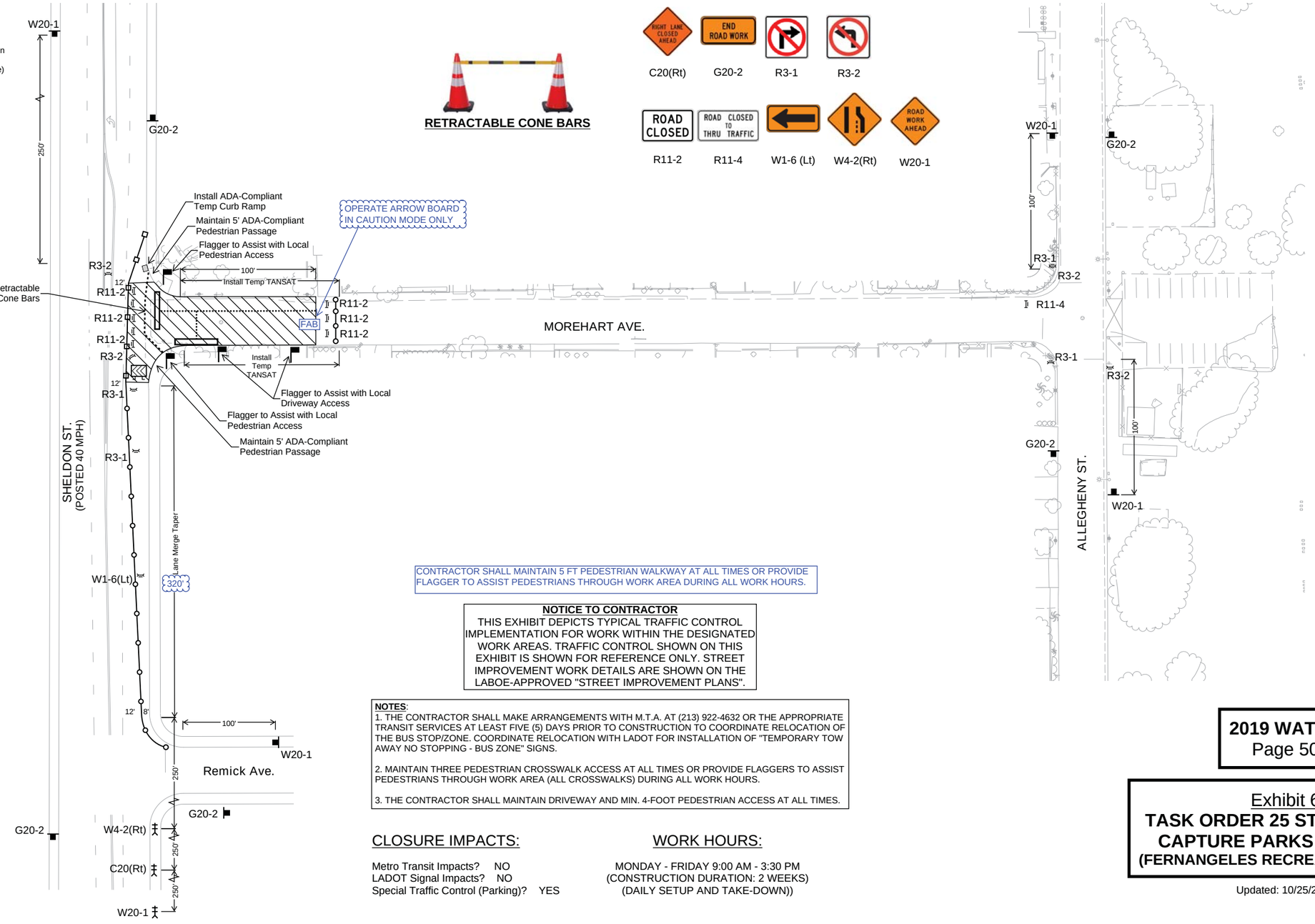

RETRACTABLE CONE BARS

CONTRACTOR SHALL MAINTAIN 5 FT PEDESTRIAN WALKWAY AT ALL TIMES OR PROVIDE FLAGGER TO ASSIST PEDESTRIANS THROUGH WORK AREA DURING ALL WORK HOURS.

NOTICE TO CONTRACTOR

THIS EXHIBIT DEPICTS TYPICAL TRAFFIC CONTROL IMPLEMENTATION FOR WORK WITHIN THE DESIGNATED WORK AREAS. TRAFFIC CONTROL SHOWN ON THIS EXHIBIT IS SHOWN FOR REFERENCE ONLY. STREET IMPROVEMENT WORK DETAILS ARE SHOWN ON THE LABOE-APPROVED "STREET IMPROVEMENT PLANS".

NOTES:

1. THE CONTRACTOR SHALL MAKE ARRANGEMENTS WITH M.T.A. AT (213) 922-4632 OR THE APPROPRIATE TRANSIT SERVICES AT LEAST FIVE (5) DAYS PRIOR TO CONSTRUCTION TO COORDINATE RELOCATION OF THE BUS STOP/ZONE. COORDINATE RELOCATION WITH LADOT FOR INSTALLATION OF "TEMPORARY TOW AWAY NO STOPPING - BUS ZONE" SIGNS.

2. MAINTAIN THREE PEDESTRIAN CROSSWALK ACCESS AT ALL TIMES OR PROVIDE FLAGGERS TO ASSIST PEDESTRIANS THROUGH WORK AREA (ALL CROSSWALKS) DURING ALL WORK HOURS.

3. THE CONTRACTOR SHALL MAINTAIN DRIVEWAY AND MIN. 4-FOOT PEDESTRIAN ACCESS AT ALL TIMES.

CLOSURE IMPACTS:

Metro Transit Impacts? NO
LADOT Signal Impacts? NO
Special Traffic Control (Parking)? YES

WORK HOURS:

MONDAY - FRIDAY 9:00 AM - 3:30 PM
(CONSTRUCTION DURATION: 2 WEEKS)
(DAILY SETUP AND TAKE-DOWN))

* AS NOTED

PLAN ACCEPTED
LADOT Citywide Temporary Traffic Control
Carlos Rodriguez 11/09/2021
Carlos Rodriguez, PE Date
THIS IS NOT A PERMIT

2019 WATCH
Page 50 & 31

Exhibit 6
TASK ORDER 25 STORMWATER CAPTURE PARKS PROGRAM
(FERNANGELES RECREATION CENTER)

Updated: 10/25/2021

SCALE: 1"= 40'

SHEET
7 OF 11

WORKSITE TRAFFIC CONTROL GENERAL NOTES:

REFER TO GENERAL NOTES ON SHEET 1 OF 11.

W.O. EW40079D

LEGEND

- Type II Barricade w/Sign
- Type III Barricade w/Sign
- Type III Barricade
- Sign on Temporary Stand
- High Level Warning Device w/Sign
- Sign on Channelizing Device
- Channelizing Device (25' Spacing)
- Channelizing Device (15' Spacing)
- Work Zone
- Flagger
- PCMS — Portable Changeable Message Sign
- Arrow Board (Arrow/Chevron Mode)
- Arrow Board (Caution Mode)
- Proposed Storm Drain
- Signalized Intersection
- Traffic Flow Direction



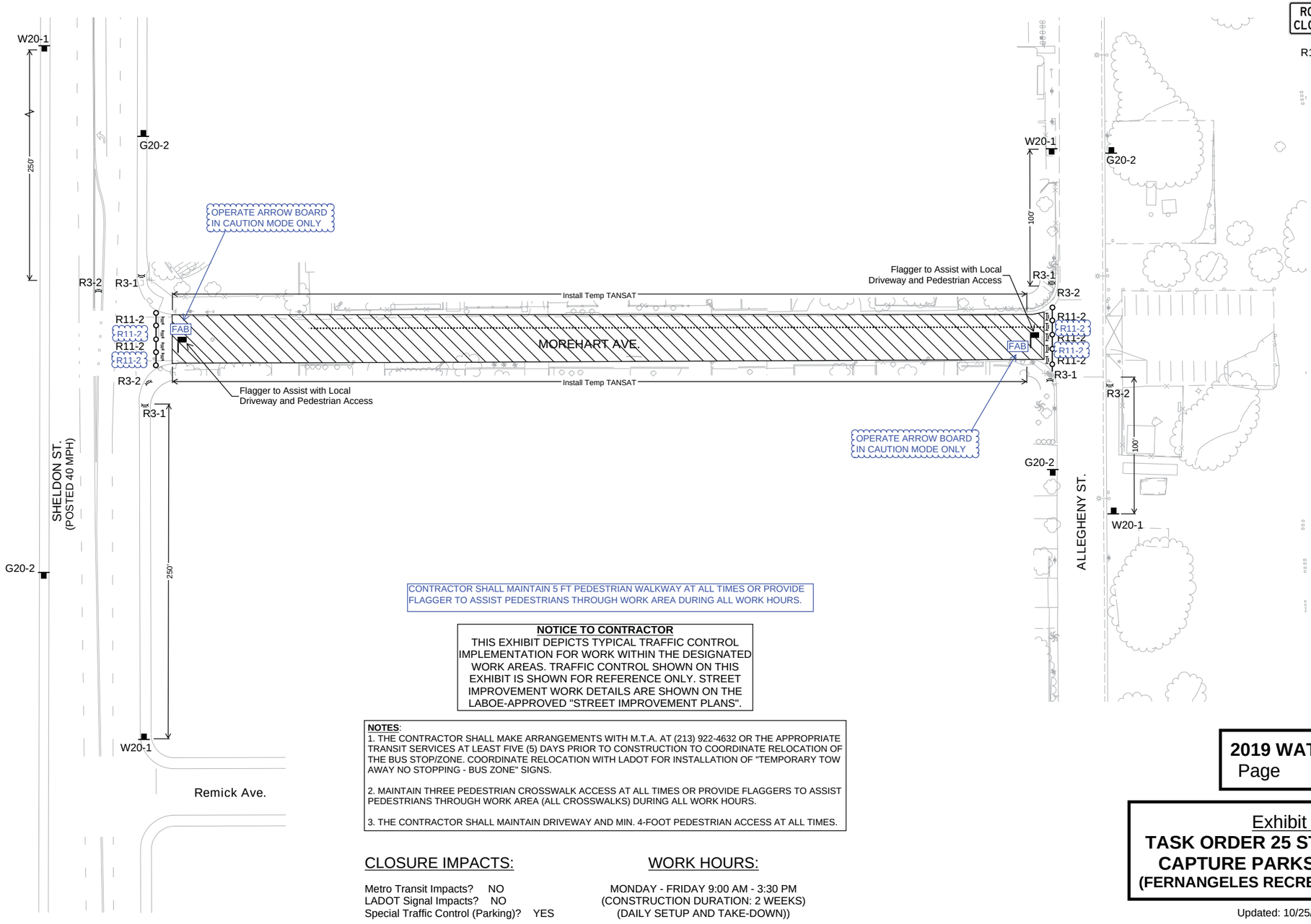

CONTRACTOR SHALL MAINTAIN 5 FT PEDESTRIAN WALKWAY AT ALL TIMES OR PROVIDE FLAGGER TO ASSIST PEDESTRIANS THROUGH WORK AREA DURING ALL WORK HOURS.

NOTICE TO CONTRACTOR

THIS EXHIBIT DEPICTS TYPICAL TRAFFIC CONTROL IMPLEMENTATION FOR WORK WITHIN THE DESIGNATED WORK AREAS. TRAFFIC CONTROL SHOWN ON THIS EXHIBIT IS SHOWN FOR REFERENCE ONLY. STREET IMPROVEMENT WORK DETAILS ARE SHOWN ON THE LABOE-APPROVED "STREET IMPROVEMENT PLANS".

NOTES:

1. THE CONTRACTOR SHALL MAKE ARRANGEMENTS WITH M.T.A. AT (213) 922-4632 OR THE APPROPRIATE TRANSIT SERVICES AT LEAST FIVE (5) DAYS PRIOR TO CONSTRUCTION TO COORDINATE RELOCATION OF THE BUS STOP/ZONE. COORDINATE RELOCATION WITH LADOT FOR INSTALLATION OF "TEMPORARY TOW AWAY NO STOPPING - BUS ZONE" SIGNS.

2. MAINTAIN THREE PEDESTRIAN CROSSWALK ACCESS AT ALL TIMES OR PROVIDE FLAGGERS TO ASSIST PEDESTRIANS THROUGH WORK AREA (ALL CROSSWALKS) DURING ALL WORK HOURS.

3. THE CONTRACTOR SHALL MAINTAIN DRIVEWAY AND MIN. 4-FOOT PEDESTRIAN ACCESS AT ALL TIMES.

CLOSURE IMPACTS:

Metro Transit Impacts? NO
LADOT Signal Impacts? NO
Special Traffic Control (Parking)? YES

WORK HOURS:

MONDAY - FRIDAY 9:00 AM - 3:30 PM
(CONSTRUCTION DURATION: 2 WEEKS)
(DAILY SETUP AND TAKE-DOWN))

* AS NOTED

PLAN ACCEPTED
LADOT Citywide Temporary Traffic Control
Carlos Rodriguez 11/09/2021
Carlos Rodriguez, PE Date
THIS IS NOT A PERMIT

2019 WATCH
Page 50

Exhibit 7
TASK ORDER 25 STORMWATER CAPTURE PARKS PROGRAM
(FERNANGELES RECREATION CENTER)

Updated: 10/25/2021

SCALE: 1"= 40'

WORKSITE TRAFFIC CONTROL GENERAL NOTES:

REFER TO GENERAL NOTES ON SHEET 1 OF 11.

W.O. EW40079D

LEGEND

- Type II Barricade w/Sign
- Type III Barricade w/Sign
- Type III Barricade
- Sign on Temporary Stand
- High Level Warning Device w/Sign
- Sign on Channelizing Device
- Channelizing Device (25' Spacing)
- Channelizing Device (15' Spacing)
- Work Zone
- Flagger
- PCMS — Portable Changeable Message Sign
- Arrow Board (Arrow/Chevron Mode)
- Arrow Board (Caution Mode)
- Proposed Storm Drain
- Signalized Intersection
- Traffic Flow Direction

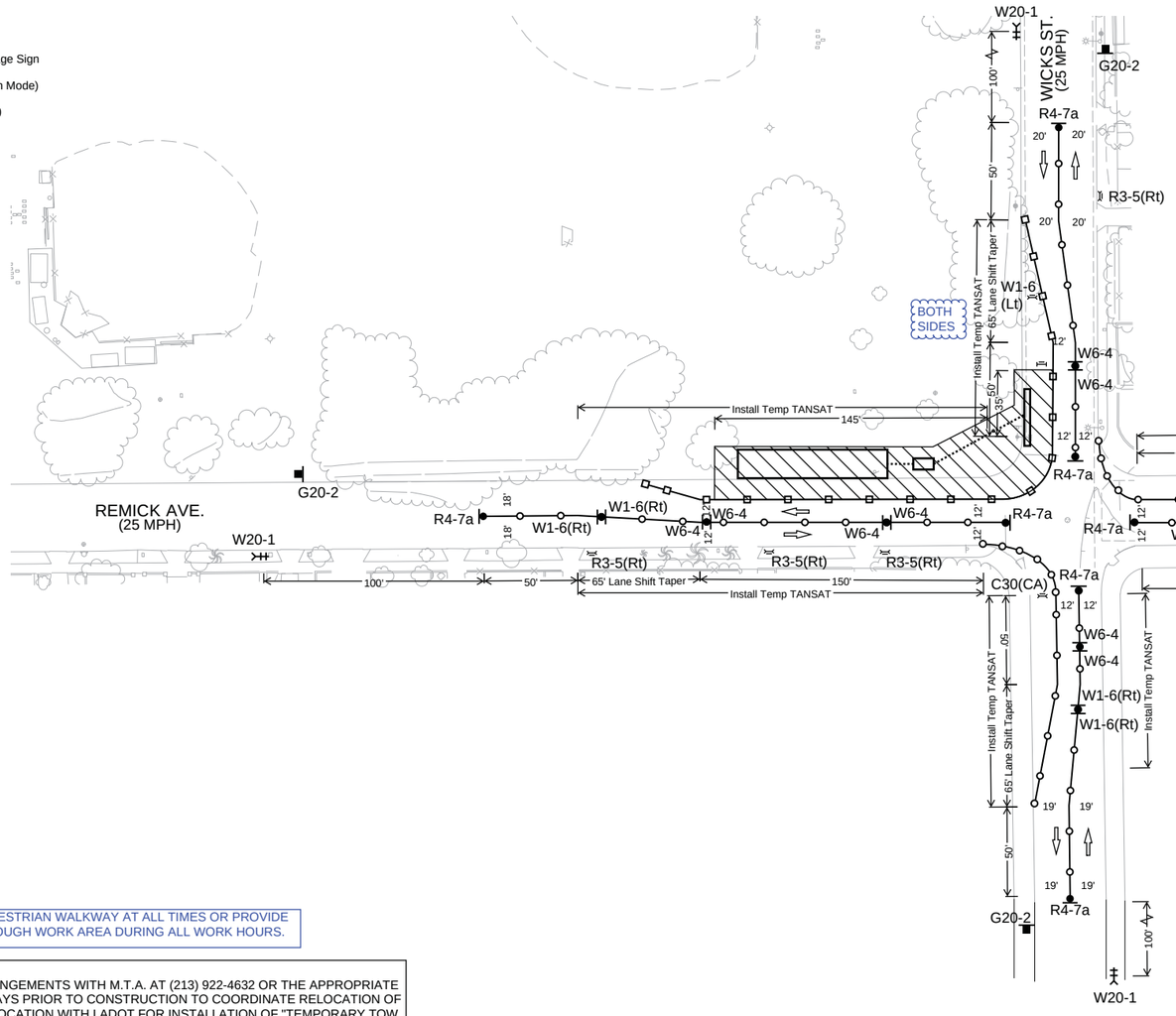



CONTRACTOR SHALL MAINTAIN 5 FT PEDESTRIAN WALKWAY AT ALL TIMES OR PROVIDE FLAGGER TO ASSIST PEDESTRIANS THROUGH WORK AREA DURING ALL WORK HOURS.

NOTES:

1. THE CONTRACTOR SHALL MAKE ARRANGEMENTS WITH M.T.A. AT (213) 922-4632 OR THE APPROPRIATE TRANSIT SERVICES AT LEAST FIVE (5) DAYS PRIOR TO CONSTRUCTION TO COORDINATE RELOCATION OF THE BUS STOP/ZONE. COORDINATE RELOCATION WITH LADOT FOR INSTALLATION OF "TEMPORARY TOW AWAY NO STOPPING - BUS ZONE" SIGNS.

2. MAINTAIN THREE PEDESTRIAN CROSSWALK ACCESS AT ALL TIMES OR PROVIDE FLAGGERS TO ASSIST PEDESTRIANS THROUGH WORK AREA (ALL CROSSWALKS) DURING ALL WORK HOURS.

3. THE CONTRACTOR SHALL MAINTAIN DRIVEWAY AND MIN. 4-FOOT PEDESTRIAN ACCESS AT ALL TIMES.

CLOSURE IMPACTS:

Metro Transit Impacts? NO
LADOT Signal Impacts? NO
Special Traffic Control (Parking)? YES

WORK HOURS:

MONDAY - FRIDAY 9:00 AM - 3:30 PM
(CONSTRUCTION DURATION: 4 WEEKS)
(DAILY SETUP AND TAKE-DOWN))

NOTICE TO CONTRACTOR

THIS EXHIBIT DEPICTS TYPICAL TRAFFIC CONTROL IMPLEMENTATION FOR WORK WITHIN THE DESIGNATED WORK AREAS. TRAFFIC CONTROL SHOWN ON THIS EXHIBIT IS SHOWN FOR REFERENCE ONLY. STREET IMPROVEMENT WORK DETAILS ARE SHOWN ON THE LABOE-APPROVED "STREET IMPROVEMENT PLANS".

* AS NOTED

PLAN ACCEPTED
LADOT Citywide Temporary Traffic Control
Carlos Rodriguez 11/09/2021
Carlos Rodriguez, PE Date
THIS IS NOT A PERMIT

2019 WATCH
Page 42

Exhibit 8
TASK ORDER 25 STORMWATER CAPTURE PARKS PROGRAM
(FERNANGELES RECREATION CENTER)

Updated: 10/25/2021

SCALE: 1"= 40'

SHEET
9 OF 11

WORKSITE TRAFFIC CONTROL GENERAL NOTES:

REFER TO GENERAL NOTES ON SHEET 1 OF 11.

W.O. EW40079D

LEGEND

- Type II Barricade w/Sign
- Type III Barricade w/Sign
- Type III Barricade
- Sign on Temporary Stand
- High Level Warning Device w/Sign
- Sign on Channelizing Device
- Channelizing Device (25' Spacing)
- Channelizing Device (15' Spacing)
- Work Zone
- Flagger
- PCMS — Portable Changeable Message Sign
- Arrow Board (Arrow/Chevron Mode)
- Arrow Board (Caution Mode)
- Proposed Storm Drain
- Signalized Intersection
- Traffic Flow Direction

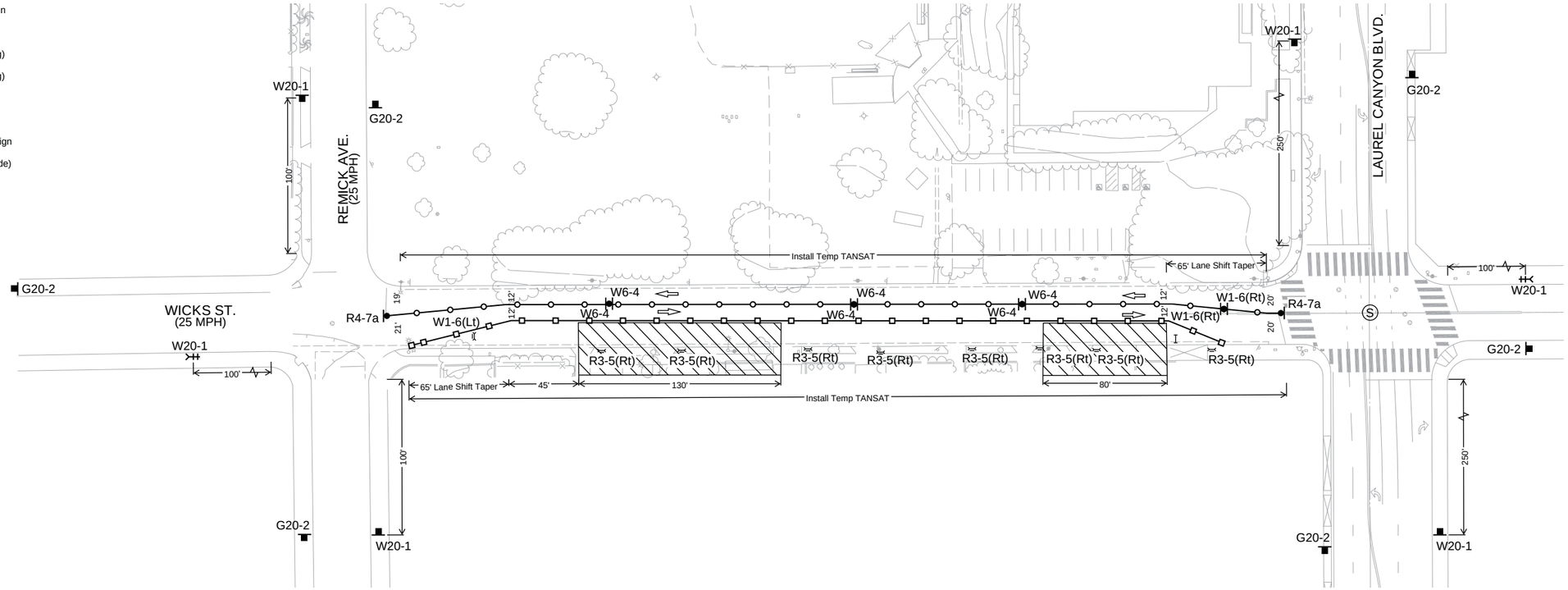



CONTRACTOR SHALL MAINTAIN 5 FT PEDESTRIAN WALKWAY AT ALL TIMES OR PROVIDE FLAGGER TO ASSIST PEDESTRIANS THROUGH WORK AREA DURING ALL WORK HOURS.

NOTES:

1. THE CONTRACTOR SHALL MAKE ARRANGEMENTS WITH M.T.A. AT (213) 922-4632 OR THE APPROPRIATE TRANSIT SERVICES AT LEAST FIVE (5) DAYS PRIOR TO CONSTRUCTION TO COORDINATE RELOCATION OF THE BUS STOP/ZONE. COORDINATE RELOCATION WITH LADOT FOR INSTALLATION OF "TEMPORARY TOW AWAY NO STOPPING - BUS ZONE" SIGNS.

2. MAINTAIN THREE PEDESTRIAN CROSSWALK ACCESS AT ALL TIMES OR PROVIDE FLAGGERS TO ASSIST PEDESTRIANS THROUGH WORK AREA (ALL CROSSWALKS) DURING ALL WORK HOURS.

3. THE CONTRACTOR SHALL MAINTAIN DRIVEWAY AND MIN. 4-FOOT PEDESTRIAN ACCESS AT ALL TIMES.

CLOSURE IMPACTS:

Metro Transit Impacts? NO
LADOT Signal Impacts? NO
Special Traffic Control (Parking)? YES

WORK HOURS:

MONDAY - FRIDAY 9:00 AM - 3:30 PM
(CONSTRUCTION DURATION: 2 WEEKS)
(DAILY SETUP AND TAKE-DOWN))

NOTICE TO CONTRACTOR

THIS EXHIBIT DEPICTS TYPICAL TRAFFIC CONTROL IMPLEMENTATION FOR WORK WITHIN THE DESIGNATED WORK AREAS. TRAFFIC CONTROL SHOWN ON THIS EXHIBIT IS SHOWN FOR REFERENCE ONLY. STREET IMPROVEMENT WORK DETAILS ARE SHOWN ON THE LABOE-APPROVED "STREET IMPROVEMENT PLANS".

* AS NOTED

PLAN ACCEPTED
LADOT Citywide Temporary Traffic Control
Carlos Rodriguez 11/09/2021
Carlos Rodriguez, PE Date
THIS IS NOT A PERMIT

2019 WATCH
Page 42

Exhibit 9
TASK ORDER 25 STORMWATER CAPTURE PARKS PROGRAM
(FERNANGELES RECREATION CENTER)

Updated: 10/25/2021

SCALE: 1"= 40'

SHEET
10 OF 11

WORKSITE TRAFFIC CONTROL GENERAL NOTES:

REFER TO GENERAL NOTES ON SHEET 1 OF 11.

W.O. EW40079D

LEGEND

- Type II Barricade w/Sign
- Type III Barricade w/Sign
- Type III Barricade
- Sign on Temporary Stand
- High Level Warning Device w/Sign
- Sign on Channelizing Device
- Channelizing Device (25' Spacing)
- Channelizing Device (15' Spacing)
- Work Zone
- Flagger
- PCMS — Portable Changeable Message Sign
- Arrow Board (Arrow/Chevron Mode)
- Arrow Board (Caution Mode)
- Proposed Storm Drain
- Signalized Intersection
- Traffic Flow Direction

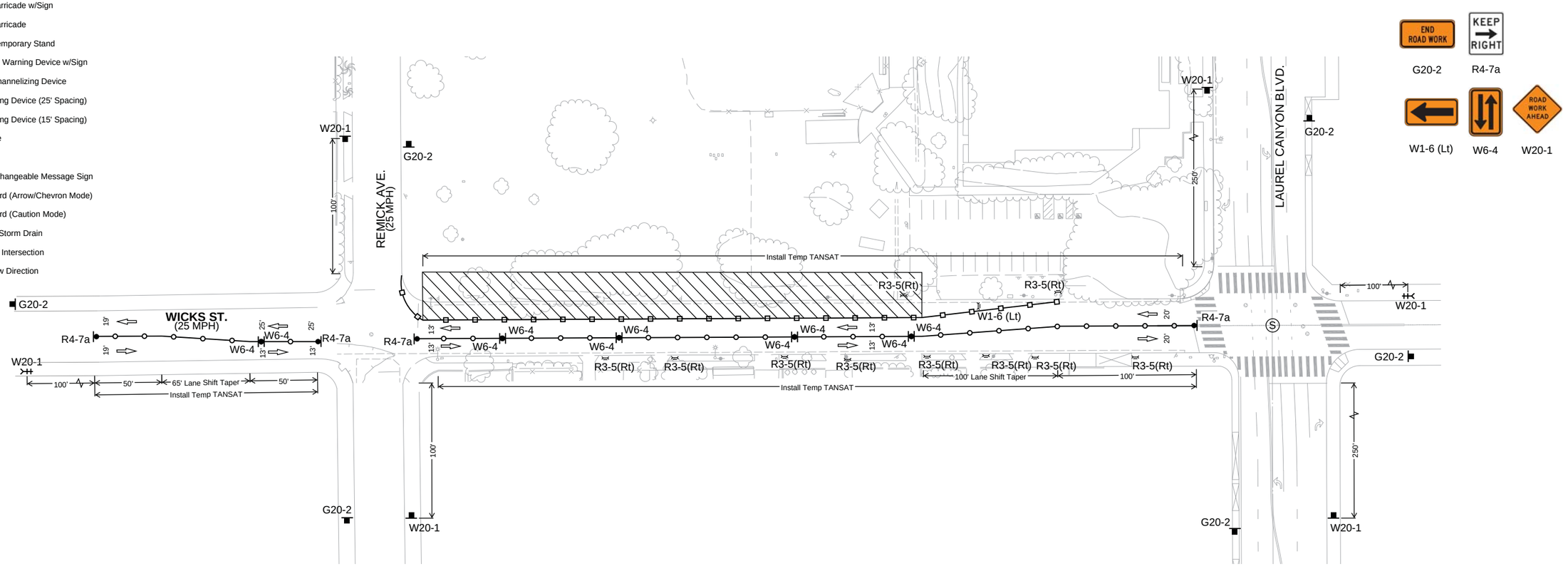

CONTRACTOR SHALL MAINTAIN 5 FT PEDESTRIAN WALKWAY AT ALL TIMES OR PROVIDE FLAGGER TO ASSIST PEDESTRIANS THROUGH WORK AREA DURING ALL WORK HOURS.

NOTES:

1. THE CONTRACTOR SHALL MAKE ARRANGEMENTS WITH M.T.A. AT (213) 922-4632 OR THE APPROPRIATE TRANSIT SERVICES AT LEAST FIVE (5) DAYS PRIOR TO CONSTRUCTION TO COORDINATE RELOCATION OF THE BUS STOP/ZONE. COORDINATE RELOCATION WITH LADOT FOR INSTALLATION OF "TEMPORARY TOW AWAY NO STOPPING - BUS ZONE" SIGNS.

2. MAINTAIN THREE PEDESTRIAN CROSSWALK ACCESS AT ALL TIMES OR PROVIDE FLAGGERS TO ASSIST PEDESTRIANS THROUGH WORK AREA (ALL CROSSWALKS) DURING ALL WORK HOURS.

3. THE CONTRACTOR SHALL MAINTAIN DRIVEWAY AND MIN. 4-FOOT PEDESTRIAN ACCESS AT ALL TIMES.

CLOSURE IMPACTS:

Metro Transit Impacts? NO
LADOT Signal Impacts? NO
Special Traffic Control (Parking)? YES

WORK HOURS:

MONDAY - FRIDAY 9:00 AM - 3:30 PM
(CONSTRUCTION DURATION: 2 WEEKS)
(DAILY SETUP AND TAKE-DOWN))

NOTICE TO CONTRACTOR

THIS EXHIBIT DEPICTS TYPICAL TRAFFIC CONTROL IMPLEMENTATION FOR WORK WITHIN THE DESIGNATED WORK AREAS. TRAFFIC CONTROL SHOWN ON THIS EXHIBIT IS SHOWN FOR REFERENCE ONLY. STREET IMPROVEMENT WORK DETAILS ARE SHOWN ON THE LABOE-APPROVED "STREET IMPROVEMENT PLANS".

* AS NOTED

PLAN ACCEPTED
LADOT Citywide Temporary Traffic Control
Carlos Rodriguez 11/09/2021
Carlos Rodriguez, PE Date
THIS IS NOT A PERMIT

2019 WATCH
Page 42

Exhibit 10
TASK ORDER 25 STORMWATER CAPTURE PARKS PROGRAM
(FERNANGELES RECREATION CENTER)

Updated: 10/25/2021

SCALE: 1"= 40'

SHEET
11 OF 11

WORKSITE TRAFFIC CONTROL PLAN GENERAL NOTES:

1. THIS PHASE OF WORK IS FOR THE CONSTRUCTION OF NEW STORM DRAINS.
2. THE PROPOSED START DATE FOR THIS WTCP IS AUGUST 1, 2023, WITH AN ESTIMATED CONSTRUCTION DURATION OF 4 WEEKS.
3. CONTACT EDUARDO HERNANDEZ AT (213) 485–1637 FOR CONSTRUCTION PERSONNEL RESPONSIBLE FOR WTCP IMPLEMENTATION/MAINTENANCE.

NOTIFICATIONS AND APPROVALS:

1. CONTRACTOR SHALL CONTACT THE LADOT TEMPORARY TRAFFIC MANAGEMENT SECTION'S ENGINEER AT EDGAR.RODRIGUEZ@LACITY.ORG AT LEAST FIVE (5) WORKING DAYS (TO INSPECT MARK OUT) PRIOR TO THE INSTALLATION OF ANY TEMPORARY STRIPING FOR ALL CONSTRUCTION STAGES. DEPARTMENT OF TRANSPORTATION RESERVES THE RIGHT TO OBSERVE THESE TRAFFIC CONTROL PLANS IN USE AND TO MAKE NECESSARY CHANGES AS FIELD CONDITIONS WARRANT. ANY CHANGES SHALL SUPERSEDE THESE PLANS. THE CONTRACTOR SHALL BE RESPONSIBLE FOR THE PLACEMENT OF ANY ADDITIONAL TRAFFIC CONTROL DEVICES NECESSARY TO ENSURE PUBLIC SAFETY AT ALL TIMES DURING CONSTRUCTION.
2. PERMITTEE SHALL COORDINATE WITH THE IMPACTED TRANSIT OPERATOR(S) PRIOR TO PLAN SUBMISSION WHEN ANY EXISTING BUS STOP WILL BE AFFECTED BY CONSTRUCTION ACTIVITIES OR THE PROPOSED IMPROVEMENTS. PROVIDE TWO–WEEK ADVANCE NOTICE FOR POSSIBLE RELOCATION/ABANDONMENTS OF A BUS STOP. FOR METRO BUS STOPS, CONTACT DAVID DANIELS OF METRO STOPS AND ZONES DEPARTMENT AT DANIELSD@METRO.NET.
3. WHENEVER ANY ACTUAL OR PROPOSED CONSTRUCTION ACTIVITY OCCURS WITHIN 5' OF ANY EXISTING CITY TRANSIT FURNITURE, INCLUDING BUT NOT LIMITED TO TRANSIT SHELTERS, PUBLIC AMENITY KIOSKS, NEWSSTAND VENDING KIOSK, AUTOMATED PUBLIC TOILET, BUS BENCH OR ASSOCIATED TRASH RECEPTACLES, PERMITTEE/CONTRACTOR SHALL ARRANGE AND PAY FOR THE REMOVAL, STORAGE, RELOCATION, REPLACEMENT, AND/OR RE–INSTALLATION OF ALL TRANSIT FURNITURE AND THEIR RELATED APPURTENANCES WHETHER SHOWN AND INDICATED ON THE PLANS OR NOT. TRANSIT FURNITURE ARE THE PROPERTY OF THE CITY OF LOS ANGELES AND MAY ONLY BE REMOVED BY THE CITY'S AUTHORIZED VENDORS. CONTACT GLENN FLUTIE OF INSITE STREET MEDIA AT (310)559–1600 FOR BUS BENCHES AND ASSOCIATED TRASH RECEPTACLES. FOR ALL OTHER TRANSIT FURNITURE, CONTACT GUILLERMO GONZALEZ OF OUTFRONT MEDIA JC DECAUX AT (213) 608–0872. ADVANCE ARRANGEMENT SHALL BE MADE 6 WEEKS IN ADVANCE OF THE REQUIRED WORK.
4. CONTRACTOR SHALL NOTIFY LADOT'S SIGNAL MAINTENANCE SUPERVISOR AT (818) 779–7437 FIVE (5) WORKING DAYS PRIOR TO ANY EXCAVATION OR CONSTRUCTION WITHIN 10–FEET OF EXISTING TRAFFIC SIGNAL DETECTOR LOOPS, CONDUIT, INTERCONNECTS, OR ATSAC FIBER OPTIC CABLE.
5. ANY DAMAGE TO TRAFFIC SIGNAL DETECTOR LOOPS, CONDUITS, INTERCONNECTS, OR FIBER OPTIC CABLE SHALL BE REPAIRED IMMEDIATELY BY THE CONTRACTOR AT THEIR OWN EXPENSE. DELAYS IN REPAIR OF INTERCONNECT OR ATSAC FIBER OPTIC CABLE WILL REQUIRE THE PAYMENT OF LIQUIDATION DAMAGES TO THE CITY OF LOS ANGELES DEPARTMENT OF TRANSPORTATION. IMMEDIATELY NOTIFY LADOT SIGNAL REPAIR PERSONNEL AT (213) 485–7721 OF ANY DAMAGES.
6. FOR WTCP IMPLEMENTATION DURATION OF LESS THAN ONE (1) MONTH, THE CONTRACTOR SHALL CONTACT THE LADOT SPECIAL TRAFFIC CONTROLS OFFICE AT (213) 485–2298 AT LEAST FIVE (5) WORKING DAYS IN ADVANCE OF EACH NEW CONSTRUCTION STAGE FOR THE INSTALLATION OF TEMPORARY "TOW AWAY NO STOPPING ANY TIME" SIGNS. FOR WTCP IMPLEMENTATION DURATION OF MORE THAN ONE (1) MONTH, THE CONTRACTOR SHALL FURNISH AND INSTALL "TOW AWAY NO STOPPING ANY TIME" SIGNS PER CITY SPECIFICATION (METAL AND REFLECTORIZED). CONTACT LADOT TEMPORARY TRAFFIC MANAGEMENT SECTION'S ENGINEER FOR SAMPLES.
7. CONTRACTOR SHALL CONTACT THE LADOT PARKING METERS DIVISION AT (213) 473–8270, TEN (10) WORKING DAYS PRIOR TO START OF AND END OF CONSTRUCTION TO ARRANGE AND COORDINATE FOR ANY PARKING METER OR PAY STATION RELATED WORK. THIS WORK INCLUDES, BUT IS NOT LIMITED TO, THE TEMPORARY OR PERMANENT REMOVAL, INSTALLATION, OR RELOCATION OF ANY PARKING METER, PAY STATION, METER POSTS, PARKING SENSORS, PARKING SIGNS, SIGN POSTS, PARKING SPACE NUMBERS, CURB PAINTING, PAVEMENT MARKINGS, AND ANY OTHER RELATED ITEMS DEEMED NECESSARY BY LADOT. CONTRACTOR SHALL PAY THE LADOT PARKING METERS DIVISION FOR INSTALLATION AND REMOVAL COSTS UPON RECEIVING AN INVOICE FOR WORK AS DESCRIBED ABOVE. OCCASIONALLY, PAYMENT MAY BE DEDUCTED FROM THE DEVELOPER'S OR CONTRACTOR'S B–PERMIT DEPOSIT FOR THE PROJECT. FAILURE TO NOTIFY LADOT WILL CAUSE THE CONTRACTOR TO BE LIABLE FOR ANY MISSING OR DAMAGED PARKING METER, PAY STATION, SENSORS, POSTS, SIGNS, ETC., THAT LADOT RECORDS INDICATE ARE PRESENT. UPON APPROVAL BY THE LADOT PARKING METERS DIVISION, CONTRACTOR MAY REMOVE AND DISPOSE OF AFFECTED PARKING METER POSTS IN CONJUNCTION WITH THEIR SIDEWALK DEMOLITION WORK, BUT ONLY AFTER LADOT HAS REMOVED THE PARKING METER HEADS AND ALL METER POST MOUNTED SIGNS, WHERE APPLICABLE.
   PERMANENT REMOVAL OF EACH ON–STREET METERED PARKING SPACE WILL REQUIRE PAYMENT TO LADOT'S PARKING METER DIVISION FOR THE CALCULATED ANNUAL REVENUE AMOUNT PROJECTED OVER A TEN–YEAR PERIOD. IN ADDITION, TEMPORARY REMOVAL OF ANY PARKING METERS LASTING OVER 30 DAYS WILL ALSO REQUIRE PAYMENT OF A CALCULATED REVENUE FOR THE LENGTH OF TIME THE METERS ARE OUT OF SERVICE BEYOND THE INITIAL 30 DAYS. FULL PAYMENT IS REQUIRED AS A CONDITION OF THE PERMIT AND IS REQUIRED OF THE APPLICANT BEFORE LADOT WILL PROVIDE ITS FINAL APPROVAL.
8. NOTIFY FILM LA IN WRITING TO EVENTINFO@FILMLA.COM AT LEAST FIVE (5) WORKING DAYS PRIOR TO CONSTRUCTION TO COORDINATE WITH FILMING ACTIVITIES.
9. LADOT HAS JURISDICTION FOR STRIPING/TRAFFIC CONTROL DEVICES WITHIN CITY RIGHT OF WAY. CONTRACTOR SHALL OBTAIN APPROVAL FROM OTHER GOVERNMENT AGENCIES FOR STRIPING/TRAFFIC CONTROL DEVICES WITHIN OTHER CITIES, COUNTY, AND/OR STATE RIGHT OF WAY, AND FROM PROPERTY OWNERS FOR STRIPING/TRAFFIC CONTROL DEVICES WITHIN ANY PRIVATE PROPERTY.
10. BOARD OF PUBLIC WORKS OR THEIR DESIGNEE (BUREAU OF STREET SERVICES) SHALL APPROVE ALL STREET, ALLEY, AND SIDEWALK CLOSURES. AN EXEMPTION OF THE L.A.M.C. 62.61(B) (RUSH HOUR CONSTRUCTION ON ANY CITY STREETS) MUST BE APPROVED BY BUREAU OF ENGINEERING FOR ALL PEAK HOUR LANE CLOSURES ON ARTERIAL, SECONDARY, OR COLLECTOR STREETS.
11. FOR ALL CONSTRUCTION INVOLVING STREET CLOSURES, DIRECTIONAL STREET CLOSURES, AND ALLEY CLOSURES, CONTRACTOR IS RESPONSIBLE TO NOTIFY ALL AFFECTED AGENCIES INCLUDING LAFD, LAPD, COUNCIL DISTRICT OFFICE, METRO, BSS, USPS, AND PROPERTY OWNERS AT LEAST TEN (10) BUSINESS DAYS PRIOR TO PLAN ACCEPTANCE.

TYPICAL CONTRACTOR RESPONSIBILITIES:

1. THE STRIPING AND SIGNAGE SHOWN FOR REMOVAL ON THESE PLANS MAY BE DIFFERENT THAN WHAT EXISTS AT TIME OF IMPLEMENTATION OF A CONSTRUCTION STAGE. THE CONTRACTOR SHALL REMOVE ALL CONFLICTING SIGNAGE AND STRIPING, WHETHER OR NOT IT IS DEPICTED ACCURATELY ON THESE PLANS.
2. ALL TRAFFIC CONTROL DEVICES SHALL BE KEPT IN THEIR PROPER POSITION AT ALL TIMES, AND SHALL BE REPAIRED, REPLACED OR CLEANED AS NECESSARY TO PRESERVE THEIR APPEARANCE AND CONTINUITY.
3. CONSTRUCTION MATERIALS SHALL NOT BE STORED IN STREETS, ROADS, OR HIGHWAYS FOR MORE THAN FIVE (5) DAYS AFTER UNLOADING. ALL MATERIALS OR EQUIPMENT NOT INSTALLED OR USED IN CONSTRUCTION WITHIN FIVE (5) DAYS AFTER UNLOADING SHALL BE STORED ELSEWHERE BY THE CONTRACTOR AT THEIR EXPENSE UNLESS AUTHORIZED ADDITIONAL STORAGE TIME. CONSTRUCTION EQUIPMENT SHALL NOT BE STORED AT THE WORK SITE BEFORE ITS ACTUAL USE ON THE WORK NOR FOR MORE THAN FIVE (5) DAYS AFTER IT IS NO LONGER NEEDED. TIME NECESSARY FOR REPAIR OR ASSEMBLY OF EQUIPMENT MAY BE AUTHORIZED BY THE ENGINEER. EXCAVATED MATERIAL, EXCEPT THAT WHICH IS TO BE USED AS BACKFILL IN THE ADJACENT TRENCH, SHALL NOT BE STORED IN PUBLIC STREETS UNLESS OTHERWISE PERMITTED. AFTER PLACING BACKFILL, ALL EXCESS MATERIAL SHALL BE REMOVED IMMEDIATELY FROM THE SITE.
4. CONTRACTOR SHALL MAINTAIN ACCESS TO ALL FUNCTIONAL DRIVEWAYS AT ALL TIMES AND SHALL COORDINATE WITH ALL AFFECTED RESIDENTS AND BUSINESSES.
5. CONTRACTOR SHALL PERFORM WORK IN ONLY ONE STAGE AT A TIME. THE CONTRACTOR SHALL ONLY UTILIZE THAT PORTION OF THE DESIGNATED "WORK AREA" WHICH IS NEEDED FOR CONSTRUCTION AT ANY GIVEN TIME.
6. THE IMPLEMENTATION OF WORKSITE TRAFFIC CONTROL PLANS, INCLUDING PAINT REMOVAL/GRINDING, MARK–OUT, LAYOUT AND INSTALLATION OF ALL TRAFFIC CONTROLS, INCLUDING SIGNAL WORK AND STRIPING SHALL ONLY TAKE PLACE DURING OFF–PEAK HOURS; 9AM–3PM. CONTRACTOR SHALL REQUEST APPROVAL FROM LADOT FOR ANY ADDITIONAL TEMPORARY LANE CLOSURES THAT IS NOT INDICATED OR SPECIFIED ON THESE PLANS, REGARDLESS OF DURATION OR TIME PERIOD.
7. ANY CHANGES TO WORK AREAS, WORK HOURS, AND/OR APPROVED PLANS SHALL BE SUBMITTED TO LADOT FOR REVIEW AND ACCEPTANCE.
8. THE CONTRACTOR SHALL BE RESPONSIBLE FOR STRIPING (PROPOSED AND EXISTING) SHOWN ON THIS WTCP TO BE IN GOOD CONDITION AND VISIBLE. THE CONTRACTOR SHALL REPAINT ANY FADED EXISTING STRIPING AS DIRECTED BY THE LADOT ENGINEER.
9. THE CONTRACTOR SHALL BE RESPONSIBLE FOR REPLACING ANY MISSING OR DAMAGED SIGNS (DUE TO CONSTRUCTION) ACCORDING TO THE LATEST LADOT SPECIFICATIONS.
10. FIELD CONDITIONS MAY VARY FROM THOSE SHOWN ON THE WTCP. IN THE EVENT FIELD CONDITIONS ARE DIFFERENT, THE CONTRACTOR SHALL COORDINATE WITH LADOT BEFORE IMPLEMENTING THE WTCP. THE CONTRACTOR MAY BE REQUIRED TO SUBMIT A REVISED WTCP TO LADOT AND THE AUTHORITY FOR ACCEPTANCE PRIOR TO WTCP IMPLEMENTATION.

TEMPORARY CRASH CUSHION INSTALLATION NOTES:

1. Ⓧ INDICATES SAND FILLED MODULE LOCATION AND WEIGHT OF SAND IN POUNDS FOR EACH MODULE. MODULE SPACING IS BASED ON THE GREATER DIAMETER OF THE MODULE.
2. ALL SAND WEIGHTS ARE NOMINAL.
3. THE TEMPORARY CRASH CUSHION ARRAYS SHOWN ON THE PLANS SHALL BE USED ONLY IN LOCATIONS WHERE THERE WILL BE TRAFFIC ON ONE SIDE OF THE TEMPORARY CRASH CUSHION ARRAY.
4. IF THE FIXED OBJECT OR APPROACH END OF THE TEMPORARY RAILING IS LESS THAN 15'–0" FROM THE EDGE OF THE TRAVELED WAY, A TEMPORARY CRASH CUSHION ARRAY IS REQUIRED IN A CONSTRUCTION WORK ZONE.
5. TEMPORARY CRASH CUSHION ARRAYS SHALL NOT ENCROACH ON THE TRAVELED WAY.
6. ARRAYS FOR MEDIAN SHOULDERS SHALL CONFORM TO DETAILS SHOWN ON THIS PLAN FOR OUTSIDE SHOULDERS.
7. PLACE THE TYPE P MARKER PANEL SO THAT THE BOTTOM OF THE PANEL RESTS UPON THE PALLET AND FACES TRAFFIC.

TYPICAL IMPLEMENTATION REQUIREMENTS:

1. THE CONTRACTOR SHALL BE RESPONSIBLE FOR LABOR AND MATERIAL INVOLVED IN THE REMOVAL, INSTALLATION, AND MAINTENANCE OF ALL STRIPING, PAVEMENT MARKINGS, SIGNS, BARRICADES, DELINEATORS, ETC., SHOWN ON THESE WTCP PLANS AND AS CONSTRUCTION STAGING NECESSITATES. STRIPING AND PAVEMENT MARKINGS SHALL BE REMOVED BY WET SANDBLASTING/GRINDING IN ACCORDANCE WITH THE CITY OF LOS ANGELES DEPARTMENT OF TRANSPORTATION (LADOT) SPECIFICATION NO. 76–016–10. PAINTING THE EXISTING STRIPING OVER WITH BLACK PAINT IS NOT PERMITTED. TEMPORARY REFLECTIVE PAVEMENT MARKERS SHALL BE MAINTAINED BY THE CONTRACTOR ADJACENT TO THE SCAR OF THE SANDBLASTED CENTERLINE OR TAPED–OVER CENTERLINE. THERMOPLASTIC SHALL BE USED FOR ALL ROUGH OR UNEVEN SURFACES, INSTALLATIONS LONGER THAN 6 MONTHS, AND/OR AS REQUIRED BY LADOT ENGINEER. PAINT MAY BE USED ON SMOOTH SURFACES FOR INSTALLATION LESS THAN 6 MONTHS. DETOUR TAPE IS NOT PERMITTED.
2. ALL CONSTRUCTION RELATED WARNING SIGNS SHALL BE IN BLACK LEGEND WITH ORANGE BACKGROUND AND IN CONFORMANCE WITH THE CALIFORNIA MANUAL ON UNIFORM TRAFFIC CONTROL DEVICES (CA M.U.T.C.D.) LATEST EDITION.
3. CONTRACTORS SHALL PROVIDE FLAGGERS AS DEEMED NECESSARY BY CITY. A FLAGGER SHALL USE ONLY THE APPROVED OCTAGONAL STOP/ SLOW PADDLE, SHALL WEAR AN ORANGE SAFETY VEST (PADDLE AND VEST MUST BE RETROFLECTORIZED FOR NIGHT WORK) AND HARD HAT, AS REQUIRED BY THE WATCH MANUAL, AND MUST BE PROPERLY TRAINED BY THE CONTRACTOR IN PERFORMING THE WORK SAFELY. APPROPRIATE ADVANCE SIGNS MUST ALSO BE INSTALLED, PER THE WATCH MANUAL.
4. ALL SIGNS, DELINEATORS, BARRICADES, ETC., SHALL CONFORM TO THE CALIFORNIA MUTCD (LATEST EDITION), AND THE CITY OF LOS ANGELES STANDARD PLAN S–610 (THE 'BROWN BOOK)
5. FOR OTHER REQUIREMENTS RELATED TO TRAFFIC CONTROL PLANS AND WORK AREA MAINTENANCE, THE CONTRACTOR SHALL FOLLOW THE CALIFORNIA MUTCD (LATEST EDITION) AND WATCH MANUAL (LATEST EDITION) ADOPTED BY THE CITY, AND ALL RELATED SECTIONS OF THE STANDARD SPECIFICATIONS FOR PUBLIC WORKS CONSTRUCTION, INCLUDING SECTION 7–10 "PUBLIC CONVENIENCE AND SAFETY," AND 302–4.5 "PUBLIC CONVENIENCE AND TRAFFIC CONTROL."
6. LOCATION AND SPACING OF TEMPORARY SIGNS AND DELINEATORS SHALL CONFORM TO THE CALIFORNIA MUTCD (LATEST EDITION) AND AS DIRECTED BY THE LADOT ENGINEER.
7. CONTRACTOR SHALL PROVIDE CHANGEABLE MESSAGE SIGNS/FLASHING ARROW BOARDS AND CONES/BARRICADES AS FIELD CONDITIONS/DETOURS WARRANT AND AS DEEMED NECESSARY BY LADOT, EVEN IF THEY ARE NOT SHOWN ON THESE PLANS.
8. UNLESS K–RAILS AND CRASH CUSHIONS ARE INSTALLED, CONTRACTOR SHALL PROVIDE MIN. 5' SHOULDER FROM ANY OPEN EXCAVATION.
9. ALL K–RAIL ENDS, PLATFORMS AND FIXED OBJECTS SHALL BE PROTECTED BY CRASH CUSHIONS OR BY A QUADGUARD SYSTEM, UNLESS THEY ARE PLACED 15' AWAY FROM EDGE OF TRAVEL WAY. FOR A 20' K–RAIL MAX. VERTICAL DISTANCE DISPLACED CAN NOT EXCEED 5'/K–RAIL, OR A TAPER RATE SHALL NOT EXCEED 1/4.
10. ALL TEMPORARY SIGNAGE INSTALLED ADJACENT TO PEDESTRIAN TRAVEL WAY MUST ALLOW FOR ADA–COMPLIANT PASSAGEWAYS.
11. CONCRETE K–RAIL SECTIONS SHALL BE CONTINUOUSLY CONNECTED. IN AREAS WITH LESS THAN 3 CONCRETE K–RAILS, SECURE K–RAIL TO PAVEMENT PER CALTRANS SPECIFICATIONS T3B.
12. THE CONTRACTOR SHALL INSTALL SIDE REFLECTORS WITH CUBE–CORNER LENSES OR TOP MOUNTED REFLECTORS (FACING THE DRIVER) ON ALL K–RAIL BARRIERS.
13. WHEN REMOVAL IS REQUIRED BY CONSTRUCTION, CROSSWALK MARKINGS AND PEDESTRIAN SIGNAL HEADS SHALL BE COVERED SIMULTANEOUSLY.
14. CONTRACTOR SHALL PROVIDE REFLECTORIZED CONES AT TYPE III BARRICADE SUPPORTS TO ALERT PEDESTRIANS OF THE BARRICADE SUPPORT.
15. CONTRACTOR SHALL PROVIDE ACCESS TO ALL FIRE HYDRANTS WITHIN AND ADJACENT TO THE WORK AREA AT ALL TIMES.
16. CONTRACTOR SHALL PROVIDE ADA COMPLIANT AND MINIMUM 5FT WIDE CONTINUOUS ACCESS FOR PEDESTRIAN PASSAGEWAYS.

RESTORATION STRIPING NOTES:

1. THE CONTRACTOR SHALL BE RESPONSIBLE FOR LABOR AND MATERIAL INVOLVED IN THE MARKOUT, AND INSTALLATION OF ALL RESTORATION STRIPING/PAVEMENT MARKINGS. THE CONTRACTOR SHALL ALSO BE RESPONSIBLE FOR REMOVAL OF ALL CONFLICTING WTCP STRIPING, SIGNING, AND OTHER WTCP–RELATED TRAFFIC CONTROL DEVICES PRIOR TO THE INSTALLATION OF THE FINAL STRIPING. IF THERE IS NO RESTORATION PLAN IN THIS PACKAGE, CONTRACTOR SHALL CONTACT TEMPORARY TRAFFIC MANAGEMENT SECTION FOR THE LATEST STRIPING PLANS SEVEN (7) DAYS PRIOR TO PROJECT COMPLETION.
2. THE CONTRACTOR SHALL BE RESPONSIBLE FOR THE REPAINTING OF ALL EXISTING STRIPING THAT HAS BEEN DAMAGED DURING THE CONSTRUCTION PROCESS.
3. MARKOUT SHALL BE BY HEAVY PAINT BRUSH MARKINGS OVER A PULLED ROPE IN THE RESPECTIVE WHITE AND YELLOW COLORS OF THE PROPOSED STRIPING. STRIPING AND PAVEMENT MARKINGS SHALL BE IN HOT APPLIED ALKYD THERMOPLASTIC IN ACCORDANCE WITH LADOT SPECIFICATION NOS. 51–005–10 AND 76–012–16. PRIMER AND SEALERS ARE REQUIRED AND SHALL CONFORM TO LADOT SPECIFICATION NO. 76–012–16.
4. THE CONTRACTOR SHALL CONTACT LADOT TEMPORARY TRAFFIC MANAGEMENT SECTION'S ENGINEER AT EDGAR.RODRIGUEZ@LACITY.ORG AT LEAST TEN (10) WORKING DAYS BEFORE BEGINNING MARKOUT. THE CONTRACTOR SHALL CORRECT ALL ERRORS IN MARKOUT REQUESTED BY LADOT. THE INSTALLATION OF THERMOPLASTIC STRIPING MAY PROCEED ONLY AFTER APPROVAL OF MARKOUT BY THE LADOT TEMPORARY TRAFFIC MANAGEMENT SECTION.
5. TEMPORARY REFLECTIVE RAISED PAVEMENT MARKERS SHALL BE MAINTAINED ADJACENT TO ANY TEMPORARY CENTERLINE, MARKOUT CENTERLINE OR SCAR OF A SANDBLASTED CENTERLINE, AS APPLICABLE.

SIGNS AND MARKINGS MAINTENANCE:

THE CONTRACTOR SHALL PAY FOR THE RESTORATION OF ALL OBLITERATED PAVEMENT MARKINGS AND FOR THE REINSTALLATION OF ALL MISSING OR DAMAGED SIGNS, CURB MARKINGS, STAMPED CROSSWALKS, PARKING METERS, ETC. IN SOME CASES THE CONTRACTOR MAY BE REQUIRED TO INSTALL OBLITERATED AND RELATED PAVEMENT MARKINGS AS WELL AS MISSING, DAMAGED, AND/OR RELATED SIGNS, TO THE SATISFACTION OF LADOT. ALL STRIPING AND PAVEMENT MARKINGS SHALL BE INSTALLED UTILIZING THERMOPLASTIC MATERIALS PER LADOT SPECIFICATIONS. THE CONTRACTOR SHALL CONTACT LADOT TEMPORARY TRAFFIC MANAGEMENT AT (213) 972–5968 PRIOR TO COMMENCING ANY WORK THAT REQUIRES SIGN AND/OR MARKING MAINTENANCE.

LEGEND

1. = EXISTING STRIPING & MARKINGS TO REMAIN
   = EXISTING STRIPING & MARKINGS TO BE REMOVED
   = PROPOSED STRIPING & MARKINGS
2. = EXISTING SIGN AND POST
   = EXISTING SIGN AND POST TO BE REMOVED OR RELOCATED
   = PROPOSED SIGN AND POST
3. (S) = SIGNALIZED INTERSECTION
4. R/C = EXISTING RED CURB MARKINGS TO REMAIN
   R/C = EXISTING RED CURB MARKINGS TO BE REMOVED
   R/C = PROPOSED RED CURB MARKINGS
5. = EXISTING BIKE LANE PAVEMENT MARKINGS TO REMAIN
   = EXISTING BIKE LANE PAVEMENT MARKINGS TO BE REMOVED
   = PROPOSED BIKE LANE SYMBOL PAVEMENT MARKINGS
6. WORK ZONE LIMITS
7. 28" TRAFFIC CONE WITH 13" REFLECTIVE MARKER
8. 28" EPOXIED SURFACE–MOUNT CHANNELIZER WITH 13" REFLECTIVE MARKER AND FLEXIBLE BASE)
9. TYPE II BARRICADE
10. TYPE II BARRICADE WITH SIGN
11. TYPE III BARRICADE
12. TYPE III BARRICADE WITH SIGN
13. YELLOW FLASHER
14. PORTABLE CHANGEABLE MESSAGE SIGN
15. FLASHING ARROW BOARD (BATTERY OPERATED)
16. FLAGGER
17. TEMPORARY CHAIN LINK FENCE
18. CRASH CUSHION ARRAY "TS11" (PER CALTRANS STD. PLAN T2)
19. ABSORB 350 (TL–2) CRASH CUSHION SYSTEM
20. 20' LONG CONCRETE K–RAIL BARRIER
21. 10' LONG CONCRETE K–RAIL BARRIER
22. TEMPORARY TRAFFIC SIGNAL / STREET LIGHT PLATFORM

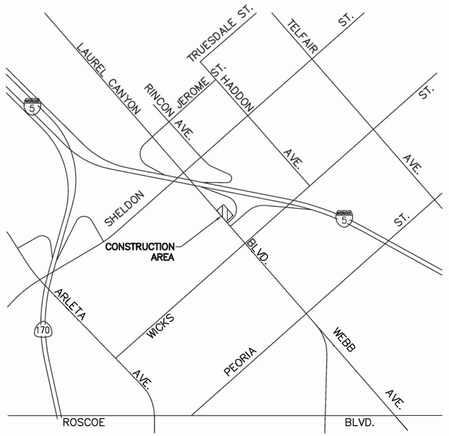

VICINITY MAP
NOT TO SCALE

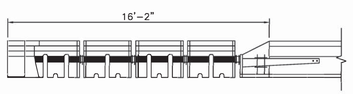

ABSORB 350 CRASH CUSHION SYSTEM DETAIL
FOUR ELEMENT SYSTEM (40 MPH)

THE CONTRACTOR SHALL COMPLY WITH ALL PROVISIONS OF SECTION 7–10 (PUBLIC CONVENIENCE AND SAFETY) OF THE "GREENBOOK" (STANDARD SPECIFICATIONS FOR PUBLIC WORKS CONSTRUCTION, 2015 EDITION). THIS INCLUDES, BUT NOT LIMITED TO, THAT THE CONTRACTOR SHALL PROVIDE SAFE AND ADEQUATE PEDESTRIAN AND VEHICULAR ACCESS TO PROPERTIES ADJACENT TO OR WITHIN THE WORK ZONE, EXCEPT WHEN NECESSARY CONSTRUCTION PRECLUDES SUCH ACCESS FOR REASONABLE PERIODS OF TIME. THE CONTRACTOR SHALL COOPERATE WITH THE VARIOUS PARTIES INVOLVED IN THE DELIVERY OF MAIL AND THE COLLECTION AND REMOVAL OF TRASH AND GARBAGE TO MAINTAIN EXISTING SCHEDULES FOR THESE SERVICES.

THIS WORKSITE TRAFFIC CONTROL PLAN IS NOT A PERMIT

DEPARTMENT OF TRANSPORTATION ACCEPTANCE OF THIS PLAN DOES NOT CONSTITUTE CITY APPROVAL OF THE STREET, LANE, AND/OR SIDEWALK CLOSURE(S) DEPICTED ON THIS PLAN. THE CONTRACTOR SHALL OBTAIN THE APPROPRIATE PERMIT FROM EITHER THE BUREAU OF STREET SERVICES OR THE BUREAU OF ENGINEERING PRIOR TO THE IMPLEMENTATION OF THIS PLAN.

WORKSITE TRAFFIC CONTROL PLAN (4 WEEKS)
8851 LAUREL CANYON BOULEVARD, SUN VALLEY, CA 91352

REVIEWED November 15, 20 22
Transportation Engineer

ACCEPTED November 15, 20 22
Randall Tanji
Senior Transportation Engineer

INSTALLATION DATES
MARKOUT BEGAN:
MARKOUT COMPLETED:
STRIPING COMPLETED:
District: EAST VALLEY
References:

CITY OF LOS ANGELES
DEPARTMENT OF TRANSPORTATION
CONNIE LLANOS, INTERIM GENERAL MANAGER

TITLE SHEET – NOTES AND LEGEND
LAUREL CANYON BOULEVARD
SHELDON ST. TO NEENACH ST.

IF PLAN HAS NOT BEEN IMPLEMENTED WITHIN TWO (2) YEARS OF THE ACCEPTANCE DATE, IT MUST BE RESUBMITTED TO LADOT FOR REVIEW AND ACCEPTANCE.

PROJECT NO. NON B–PERMIT
DRAWING NO. D–0860
SHEET 1 OF 3
INDEX NUMBER

REVISION DESCRIPTION	BY	DATE

REVIEWED: T.E.A. 10–21–21; T.E. SR 10–27–21; S.T.E. SK

T.E. DATE

DISTRICT BIKEWAYS

Pursuant to the California Business and Professions Code, this plan is prepared by and under the responsible charge of work of, the named consulting firm and California Registered Engineers shown below.

PLAN PREPARED BY:

NAME DATE

FPL FPL and Associates, Inc.
Traffic • Transportation • Civil
30 Corporate Park, Suite 401
Irvine, California 92606
(949) 252–1688

REGISTERED PROFESSIONAL ENGINEER — ALEXANDER D. ZUPANSKI — No. C 59351 — Exp. 06–30–23 — CIVIL — STATE OF CALIFORNIA

REGISTERED PROFESSIONAL ENGINEER — ALEXANDER D. ZUPANSKI — No. TR 2400 — Exp. 06–30–23 — TRAFFIC — STATE OF CALIFORNIA

CONSULTANT BUSINESS TAX REGISTRATION NUMBER : 217989–0001–1

1"=20' ORIGINAL MAP SCALE 1"=40'-0"
20 10 0 20 40 60 80 100 FEET
40 20 0 40 80 120 160 200 FEET

Drawing File: S:\Jobs\1147 – BOE TOS 25 (CDM Smith)\Fernangeles\Drawings\BOE TOS25 – TC – Fernangeles (Laurel Canyon).dwg
Sheet Name: TC–01 / Updated: Oct 28, 2022 – 3:53pm / Last Saved By: kevinmoh / Plotted By: kevinmoh

CONSTRUCTION NOTES:

1. CONTRACTOR SHALL COORDINATE WITH THE IMPACTED TRANSIT OPERATOR(S) PRIOR TO PLAN ACCEPTANCE WHEN ANY EXISTING BUS STOP WILL BE AFFECTED BY CONSTRUCTION ACTIVITIES OR THE PROPOSED IMPROVEMENTS. PROVIDE TWO-WEEK ADVANCE NOTICE FOR POSSIBLE RELOCATION/ABANDONMENTS OF A BUS STOP. FOR METRO BUS STOPS, CONTACT DAVID DANIELS OF METRO STOPS AND ZONES DEPARTMENT AT DANIELSD@METRO.NET.
2. CONTRACTOR TO COORDINATE WITH PROPERTY OWNER FOR CLOSURE OF DRIVEWAYS DURING CONSTRUCTION. CONTRACTOR SHALL ALLOW ALTERNATE ACCESS TO PROPERTY DURING THIS PHASE AS NEEDED.
3. CONTRACTOR SHALL MAINTAIN 5' WIDE PEDESTRIAN ADA COMPLIANT WALKWAY AT ALL TIMES.
4. CONTRACTOR SHALL NOTIFY BICYCLE ADVISORY COMMITTEE (BAC) AT LEAST SEVEN (7) DAYS IN ADVANCE OF START OF CONSTRUCTION AT LABAC.COMMITTEE@GMAIL.COM FOR ANY BIKE LANE CLOSURE.

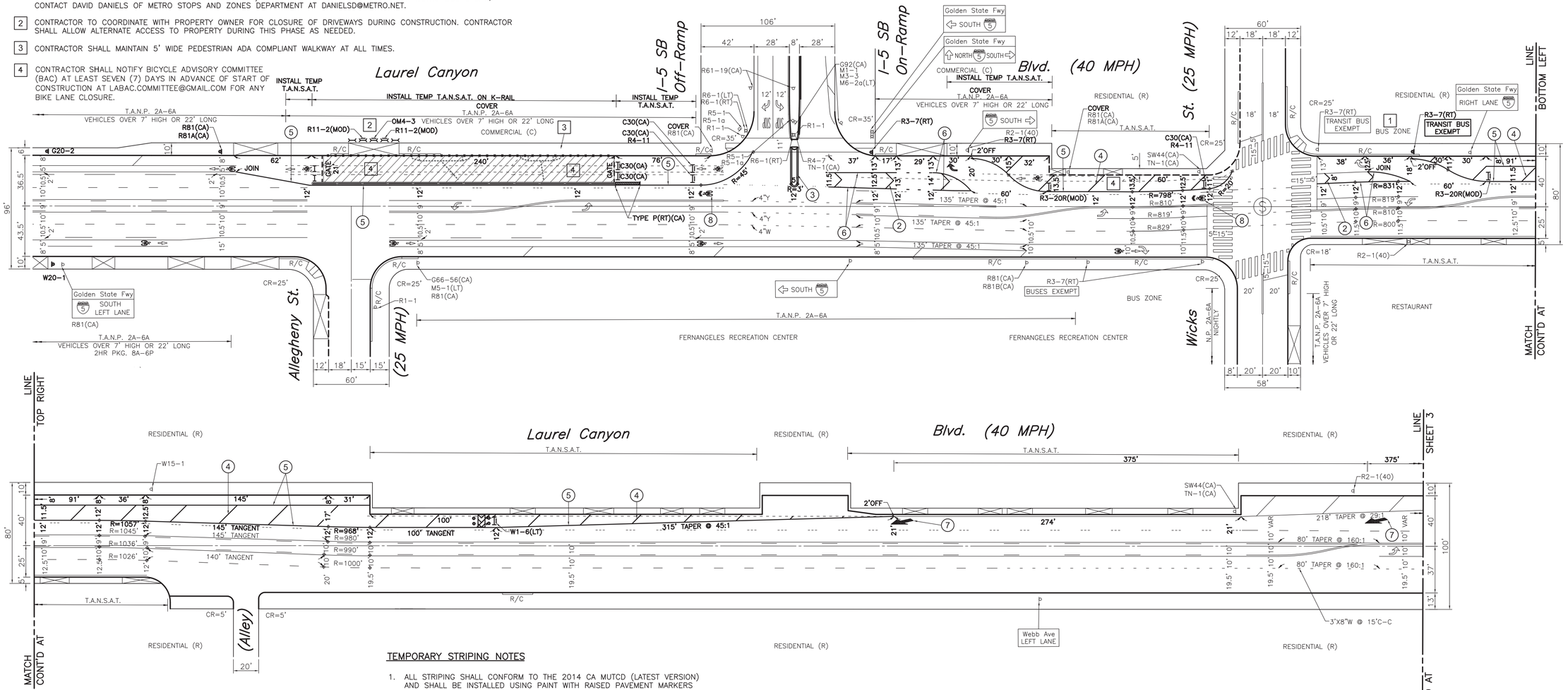

TEMPORARY STRIPING NOTES

1. ALL STRIPING SHALL CONFORM TO THE 2014 CA MUTCD (LATEST VERSION) AND SHALL BE INSTALLED USING PAINT WITH RAISED PAVEMENT MARKERS PER LADOT SPECIFICATIONS.
2. REMOVE ALL CONFLICTING STRIPING PRIOR TO INSTALLATION OF WTCP/TCP.
3. WHEN REMOVAL IS REQUIRED BY CONSTRUCTION, CROSSWALK MARKINGS AND PEDESTRIAN SIGNAL HEADS SHALL BE REMOVED SIMULTANEOUSLY.
4. WHEN REQUIRED BY CONSTRUCTION, THE CONTRACTOR SHALL MAKE ARRANGEMENTS WITH LACMTA, OR THE APPROPRIATE TRANSIT AGENCY, FOR THE TEMPORARY RELOCATION OF BUS STOPS/ZONE. COORDINATE RELOCATION WITH LADOT FOR INSTALLATION OF "TEMPORARY TOW AWAY NO STOPPING-BUS ZONE" SIGNS.
5. CONTRACTOR SHALL PROVIDE REFLECTORIZED CONES AT TYPE III BARRICADE SUPPORTS ON SIDEWALK TO ALERT PEDESTRIANS OF THE BARRICADE SUPPORT.
6. FIELD CONDITIONS MAY VARY FROM THOSE SHOWN ON THE WTCP. IN THE EVENT FIELD CONDITIONS ARE DIFFERENT, THE CONTRACTOR SHALL COORDINATE WITH LADOT AND THE AUTHORITY BEFORE IMPLEMENTING THE WTCP. THE CONTRACTOR MAY BE REQUIRED TO SUBMIT A REVISED WTCP TO LADOT AND THE AUTHORITY FOR APPROVAL PRIOR TO IMPLEMENTATION.
7. BUBBLE NOTES ARE:

(1) 4"X7' WHITE LANE LINE WITH 17' GAP PER CALTRANS DETAIL 9
(2) 12" WHITE CHEVRON LINE @ 40' SPACING
(3) 4" DOUBLE YELLOW LINE (WITH TYPE D TWO-WAY RETROREFLECTIVE RAISED PAVEMENT MARKERS) PER CALTRANS DETAIL 22
(4) 12" WHITE DIAGONAL LINE @ 40' SPACING
(5) 4" WHITE SOLID EDGE LINE PER CALTRANS DETAIL 27B
(6) 8" WHITE SOLID LINE PER CALTRANS DETAIL 38
(7) TYPE IV(R) ARROW PER CA MUTCD FIG. 3B-24(CA)
(8) SHARED LANE MARKING PER CA MUTCD FIG. 9C-9.

SCALE: 1"=40'

LANE CLOSED C30(CA)	END ROAD WORK G20-2
OM4-3	RIGHT LANE MUST TURN RIGHT R3-7(RT)
BEGIN RIGHT TURN LANE R3-20R(MOD)	MAY USE FULL LANE R4-11
DRIVEWAY CLOSED R11-2(MOD)	BIKE LANE R81(CA)
BEGIN R81A(CA)	TYPE P(RT)(CA)
W1-6(LT)	ROAD WORK AHEAD W20-1

Pursuant to the California Business and Professions Code, this plan is prepared by and under the responsible charge of work of, the named consulting firm and California Registered Engineers shown below.

PLAN PREPARED BY:

NAME _____ DATE _____

FPL *FPL and Associates, Inc.*
Traffic • Transportation • Civil
30 Corporate Park, Suite 401
Irvine, California 92606
(949) 252-1688

REGISTERED PROFESSIONAL ENGINEER — ALEXANDER D. ZUPANSKI — No. C 59351 — Exp. 06-30-23 — CIVIL — STATE OF CALIFORNIA

REGISTERED PROFESSIONAL ENGINEER — ALEXANDER D. ZUPANSKI — No. TR 2400 — Exp. 06-30-23 — TRAFFIC — STATE OF CALIFORNIA

CONSULTANT BUSINESS TAX REGISTRATION NUMBER : 217989-0001-1

1"=20' ORIGINAL MAP SCALE 1"=40'
20 10 0 20 40 60 80 100 FEET
40 20 0 40 80 120 160 200 FEET

WORKSITE TRAFFIC CONTROL PLAN (4 WEEKS)
8851 LAUREL CANYON BOULEVARD, SUN VALLEY, CA 91352

REVIEWED November 15, 20 22
Transportation Engineer

ACCEPTED November 15, 20 22
Senior Transportation Engineer

INSTALLATION DATES
MARKOUT BEGAN: _____
MARKOUT COMPLETED: _____
STRIPING COMPLETED: _____
District: EAST VALLEY

References:
A-6496
A-8173

CITY OF LOS ANGELES
DEPARTMENT OF TRANSPORTATION
CONNIE LLANOS, INTERIM GENERAL MANAGER

LAUREL CANYON BLVD.

SHELDON ST. TO NEENACH ST.

IF PLAN HAS NOT BEEN IMPLEMENTED WITHIN TWO (2) YEARS OF THE ACCEPTANCE DATE, IT MUST BE RESUBMITTED TO LADOT FOR REVIEW AND ACCEPTANCE.

PROJECT NO. NON B-PERMIT | DRAWING NO. D-0860 | 2/3

SHEET OF | INDEX NUMBER

REVIEWED	DATE	BY	REVISION DESCRIPTION	DATE
T.E.A.	10-21-21	SR		
T.E.	10-27-21	SK		
S.T.E.				
DISTRICT BIKEWAYS			NO.	

Drawing File: S:\Jobs\1147 - BOE TOS 25 (COM Smith)\Fernangeles\Drawings\BOE TOS25 - TC - Fernangeles (Laurel Canyon).dwg
Sheet Name: TC-02 / Updated: Oct 28, 2022 - 3:51pm / Last Saved By: kenmorton / Plotted By: kenmorton

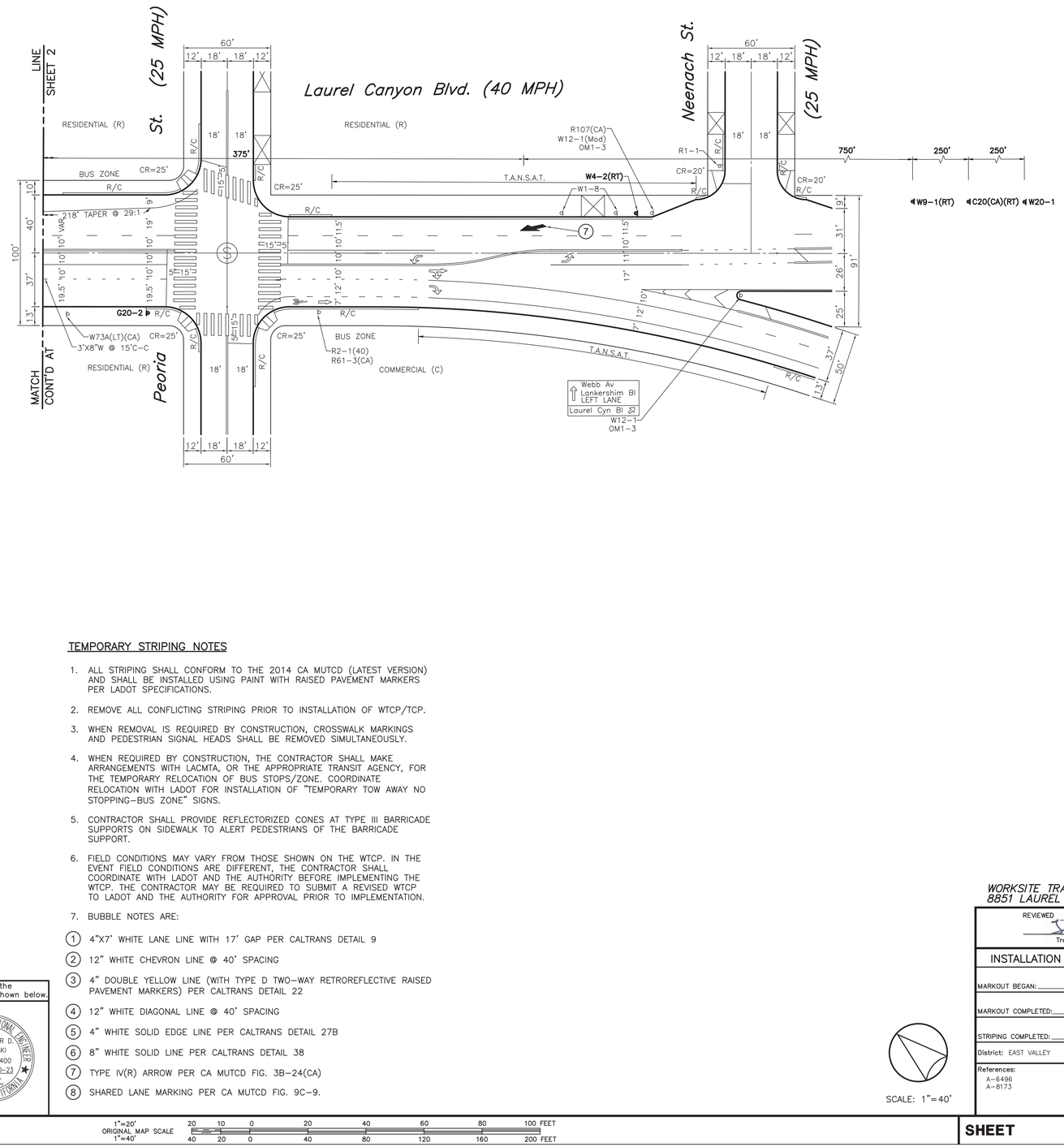

TEMPORARY STRIPING NOTES

1. ALL STRIPING SHALL CONFORM TO THE 2014 CA MUTCD (LATEST VERSION) AND SHALL BE INSTALLED USING PAINT WITH RAISED PAVEMENT MARKERS PER LADOT SPECIFICATIONS.
2. REMOVE ALL CONFLICTING STRIPING PRIOR TO INSTALLATION OF WTCP/TCP.
3. WHEN REMOVAL IS REQUIRED BY CONSTRUCTION, CROSSWALK MARKINGS AND PEDESTRIAN SIGNAL HEADS SHALL BE REMOVED SIMULTANEOUSLY.
4. WHEN REQUIRED BY CONSTRUCTION, THE CONTRACTOR SHALL MAKE ARRANGEMENTS WITH LACMTA, OR THE APPROPRIATE TRANSIT AGENCY, FOR THE TEMPORARY RELOCATION OF BUS STOPS/ZONE. COORDINATE RELOCATION WITH LADOT FOR INSTALLATION OF "TEMPORARY TOW AWAY NO STOPPING-BUS ZONE" SIGNS.
5. CONTRACTOR SHALL PROVIDE REFLECTORIZED CONES AT TYPE III BARRICADE SUPPORTS ON SIDEWALK TO ALERT PEDESTRIANS OF THE BARRICADE SUPPORT.
6. FIELD CONDITIONS MAY VARY FROM THOSE SHOWN ON THE WTCP. IN THE EVENT FIELD CONDITIONS ARE DIFFERENT, THE CONTRACTOR SHALL COORDINATE WITH LADOT AND THE AUTHORITY BEFORE IMPLEMENTING THE WTCP. THE CONTRACTOR MAY BE REQUIRED TO SUBMIT A REVISED WTCP TO LADOT AND THE AUTHORITY FOR APPROVAL PRIOR TO IMPLEMENTATION.
7. BUBBLE NOTES ARE:

(1) 4"X7' WHITE LANE LINE WITH 17' GAP PER CALTRANS DETAIL 9
(2) 12" WHITE CHEVRON LINE @ 40' SPACING
(3) 4" DOUBLE YELLOW LINE (WITH TYPE D TWO-WAY RETROREFLECTIVE RAISED PAVEMENT MARKERS) PER CALTRANS DETAIL 22
(4) 12" WHITE DIAGONAL LINE @ 40' SPACING
(5) 4" WHITE SOLID EDGE LINE PER CALTRANS DETAIL 27B
(6) 8" WHITE SOLID LINE PER CALTRANS DETAIL 38
(7) TYPE IV(R) ARROW PER CA MUTCD FIG. 3B-24(CA)
(8) SHARED LANE MARKING PER CA MUTCD FIG. 9C-9.

SCALE: 1"=40'

1"=20' ORIGINAL MAP SCALE 1"=40'
20 10 0 20 40 60 80 100 FEET
40 20 0 40 80 120 160 200 FEET

Pursuant to the California Business and Professions Code, this plan is prepared by and under the responsible charge of work of, the named consulting firm and California Registered Engineers shown below.

PLAN PREPARED BY:

NAME _____ DATE _____

FPL *FPL and Associates, Inc.*
Traffic • Transportation • Civil
30 Corporate Park, Suite 401
Irvine, California 92606
(949) 252-1688

REGISTERED PROFESSIONAL ENGINEER
ALEXANDER D. ZUPANSKI
No. C 59351
Exp. 06-30-23
CIVIL
STATE OF CALIFORNIA

REGISTERED PROFESSIONAL ENGINEER
ALEXANDER D. ZUPANSKI
No. TR 2400
Exp. 06-30-23
TRAFFIC
STATE OF CALIFORNIA

CONSULTANT BUSINESS TAX REGISTRATION NUMBER : 217989-0001-1

WORKSITE TRAFFIC CONTROL PLAN (4 WEEKS)
8851 LAUREL CANYON BOULEVARD, SUN VALLEY, CA 91352

REVIEWED November 15, 20 22
Transportation Engineer

ACCEPTED November 15, 20 22
Senior Transportation Engineer

INSTALLATION DATES
MARKOUT BEGAN: _____
MARKOUT COMPLETED: _____
STRIPING COMPLETED: _____
District: EAST VALLEY

References:
A-6496
A-8173

CITY OF LOS ANGELES
DEPARTMENT OF TRANSPORTATION
CONNIE LLANOS, INTERIM GENERAL MANAGER

LAUREL CANYON BLVD.

SHELDON ST. TO NEENACH ST.

IF PLAN HAS NOT BEEN IMPLEMENTED WITHIN TWO (2) YEARS OF THE ACCEPTANCE DATE, IT MUST BE RESUBMITTED TO LADOT FOR REVIEW AND ACCEPTANCE.

PROJECT NO. NON B-PERMIT | DRAWING NO. D-0860 | 3 / 3

SHEET OF | INDEX NUMBER

RIGHT LANE CLOSED AHEAD	END ROAD WORK
C20(CA)(RT)	G20-2
W4-2(RT)	RIGHT LANE ENDS W9-1(RT)
ROAD WORK AHEAD W20-1	

NO.	REVISION DESCRIPTION	DATE	BY	DISTRICT
	T.E.	10-21-21	SR	BIKEWAYS
	T.E.A.	10-27-21	SK	
	S.T.E.			
	REVIEWED			

Drawing File: S:\Jobs\1147 - BOE TOS 25 (CDM Smith)\Fernangeles\Drawings\BOE TOS25 - TC - Fernangeles (Laurel Canyon).dwg
Sheet Name: TC-03 / Updated: Oct 28, 2022 - 3:31pm / Last Saved By: kevinmoh / Plotted By: kevinmoh

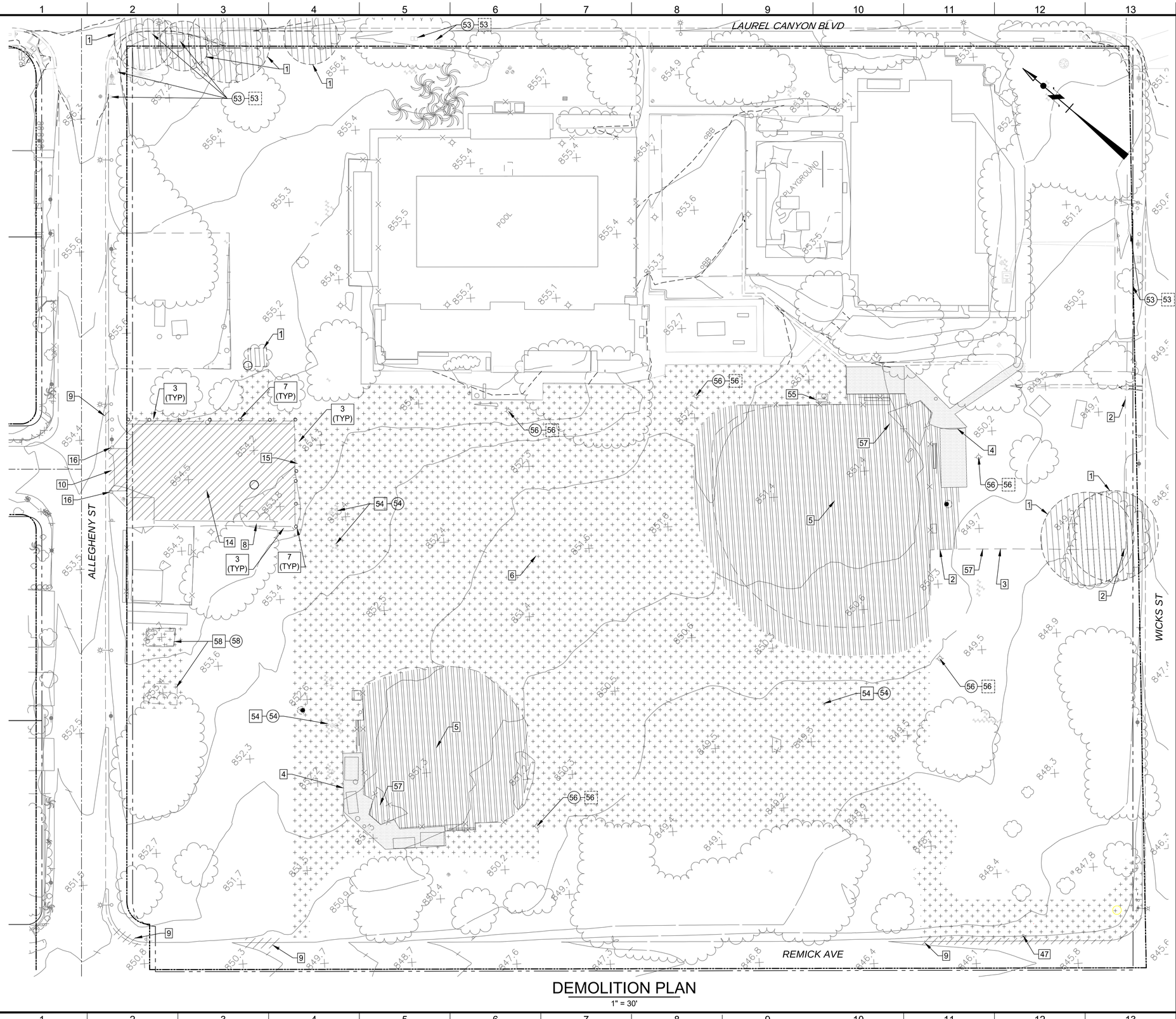

DEMOLITION PLAN

1" = 30'

CONSTRUCTION SYMBOLS

- CONSTRUCT
- EXISTING
- REMOVE
- REMODEL EXISTING
- REMOVE & CONSTRUCT
- WORK BY OTHERS

ITEM NO.	DESCRIPTION
1.	TREE TO BE REMOVED. VERIFY WITH PROJECT MANAGER PRIOR TO REMOVAL.
2.	CONCRETE MOW CURB
3.	TWENTY BOULDERS (TO BE RELOCATED SEE SHEET CS04)
4.	CONCRETE PAVING
5.	DECOMPOSED GRANITE SURFACING
6.	TURF
7.	BOLLARD
8.	TELEPHONE POLE BARRIER
9.	CONCRETE CURB
10.	CONCRETE DRIVEWAY
14.	ASPHALT CONCRETE PAVEMENT
15.	14' MANUAL SWING BARRIER GATE
16.	30' DOUBLE MANUAL SWING BARRIER GATE
20.	REMOVE TREES
34.	VARIABLE THICKNESS ASPHALT CONCRETE PAVEMENT
47.	RELOCATE STREET SIGN
53.	ADJUST UTILITY PULL BOX TO GRADE
54.	RELOCATE IRRIGATION CONTROL VALVE, SEE NOTE 2 HEREON
55.	EXISTING LIGHTING CONTROL PANEL, SEE NOTE 1 HEREON FOR DEMOLITION PROCEDURES
56.	EXISTING SPORTS LIGHTING
57.	EXISTING BASEBALL DIAMOND AND STAGING FACILITIES, SEE NOTE 3 HEREON
58.	REMOVE HORSESHOE PITS AND REPLACE WITH TURF

NOTES

1. EXISTING SPORTS LIGHTING POWER DISTRIBUTION PANELS ARE LOCATED INSIDE EXISTING LIGHTING CONTROL PANEL AS SHOWN ON PLAN. NEW LIGHTING CONTROL AND POWER DISTRIBUTION PANELS WILL REPLACE EXISTING PANELS FOR BASEBALL DIAMONDS. CONTRACTOR SHALL COMPLETE THE FOLLOWING PRIOR TO DEMOLITION OF EXISTING LIGHTING SYSTEMS:
   A. FIELD SURVEY EXISTING LIGHTING POWER DISTRIBUTION PANELS TO IDENTIFY CIRCUITS BEING REPLACED AND CIRCUITS THAT MAY BE DISTURBED BY CONSTRUCTION ACTIVITIES.
   B. FIELD LOCATE BURIED LIGHTING WIRING FROM EXISTING LIGHTING PANEL TO IDENTIFY EXISTING CONDUITS THAT MAY BE DISTURBED BY CONSTRUCTION. EXCAVATE TEST PITS AS NEEDED TO LOCATE ALL BURIED ELECTRICAL CONDUITS WITHIN PROJECT WORK AREAS.
   C. DISCONNECT WIRING TO LIGHT POLES AND FIXTURES BEING REPLACED, AND WIRING TO BE IMPACTED BY CONSTRUCTION, AND PULL WIRES OUT OF EXISTING ELECTRICAL CONDUITS, PRIOR TO CONSTRUCTION AND DEMOLITION OF EXISTING LIGHTING SYSTEMS.
   D. PREPARE AND SUBMIT A DETAILED DEMOLITION PLAN, INCLUDING TEXT DESCRIPTION, DRAWINGS AND PHOTOS, TO EXPLAIN WHAT WILL BE DEMOLISHED, HOW IT WILL BE DEMOLISHED, AND PLANS TO INDICATE LOCATIONS OF CONDUITS TO BE DEMOLISHED AND THOSE TO BE PROTECTED IN-PLACE.
   E. ABANDON IN-PLACE EXISTING LIGHTING DISTRIBUTION PANELS LOCATED IN EXISTING LIGHTING CONTROL PANEL, AND LABEL BREAKERS AS ABANDONED.
2. CONTRACTOR TO FIELD VERIFY LOCATION OF EXISTING IRRIGATION LINES AND CONTROL VALVES. CONTRACTOR SHALL PROTECT THE EXISTING IRRIGATION SYSTEM IN-PLACE IN AREAS NOT IMPACTED BY THE EXCAVATION FOR THE INFILTRATION GALLERY AND DESILTING BASINS.
   A. REMOVE EXISTING IRRIGATION PIPING AND CONTROL VALVES WITHIN THE PROPOSED LIMIT OF EXCAVATION FOR STRUCTURES AS SHOWN IN CS02.
   B. REROUTE EXISTING IRRIGATION PIPING PARTIALLY WITHIN THE LIMIT OF EXCAVATION TO THE NEAREST CONTROL VALVE OUTSIDE OF THE EXCAVATION LIMIT.
3. CONTRACTOR TO COORDINATE WITH RECREATION AND PARK (RAP) STAFFS FOR ITEMS TO BE SALVAGED.
4. SEE TREE PROTECTION PLANS FOR TREE PROTECTION REQUIREMENTS AND LAYOUT OF PROTECTED AREAS.

THE CITY OF LOS ANGELES OR ITS OFFICERS OR AGENTS SHALL NOT BE RESPONSIBLE FOR THE ACCURACY OR COMPLETENESS OF ELECTRONIC COPIES OF THIS PLAN SHEET.

REVISION DATES (DESIGN STAGE ONLY)

ENGINEERING
CITY OF LOS ANGELES

PROFESSIONAL ENGINEER
REGISTERED
No. C 48973
EXP. 08/31/2026
STATE OF CALIFORNIA
CIVIL
01/27/2023

THIS PLAN WAS ELECTRONICALLY • SIGNED AND STAMPED

BUREAU OF ENGINEERING

VERTICAL CONTROL: BENCH MARK (08-30460) NAVD 88
HORIZONTAL CONTROL: CALIFORNIA STATE PLANE ZONE V, 1983 NAD

SHEET TITLE: SITE DEMOLITION PLAN

PROJECT: FERNANGELES PARK STORMWATER CAPTURE PROJECT

ADDRESS: FERNANGELES RECREATION CENTER
8851 LAUREL CANYON BLVD, SUN VALLEY, CA 91352

NO.	REVISIONS	DATE	BY
		YY/MM/DD	
		YY/MM/DD	
		YY/MM/DD	
		YY/MM/DD	

CIP NO. SCP0002

INDEX NO.

CITY OF LOS ANGELES DEPARTMENT OF PUBLIC WORKS

CITY ENGINEER: TED ALLEN, P.E. — DATE: 04/11/2023

DESIGN GROUP		DATE
ENGINEER:	CDM SMITH INC.	04/11/2023
ARCHITECT:	NA	04/11/2023
DESIGNED BY:	M. MA	04/11/2023
DRAWN BY:	C. BILDERBACK	04/11/2023
CHECKED BY:	P. TAURASI	04/11/2023
APPROVED BY:	A. DELLINGER	04/11/2023

WORK ORDER
EW40079F

SHEET NAME
DM01

SHEET 24 OF 125 SHEETS

DESILTING BASIN MODULE LEGEND

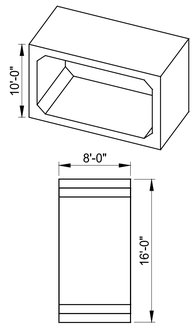

PLAN

TYPE A1

NOT USED

TYPE A2

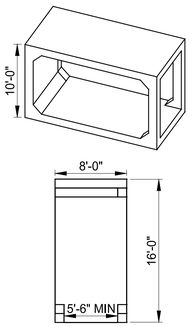

PLAN

TYPE A3

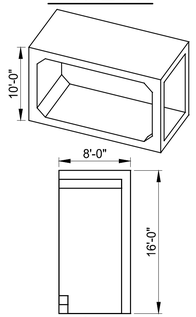

PLAN

TYPE A4

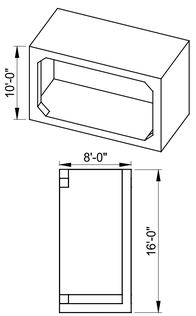

PLAN

TYPE A5

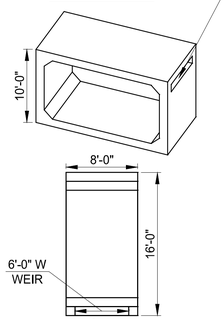

PLAN

TYPE A6

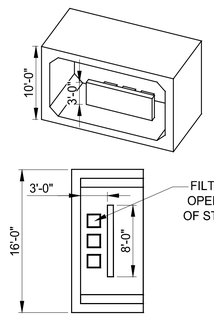

PLAN

TYPE A7

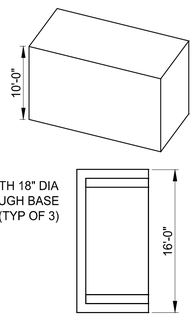

PLAN

TYPE A8

INFILTRATION MODULE LEGEND

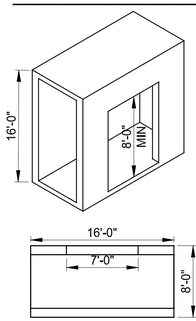

PLAN

TYPE B1

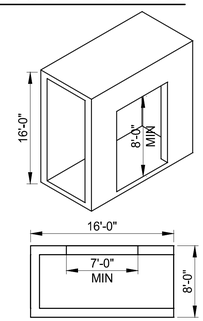

PLAN

TYPE B2

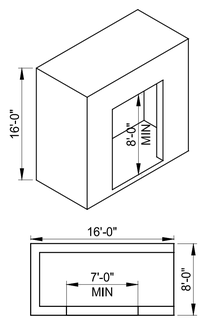

PLAN

TYPE B3

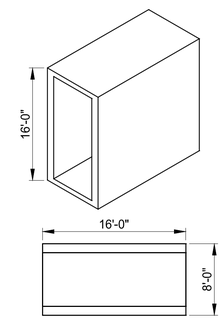

PLAN

TYPE B4

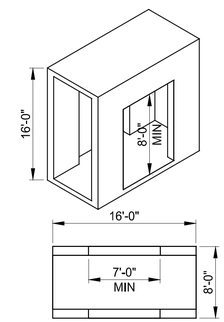

PLAN

TYPE B5

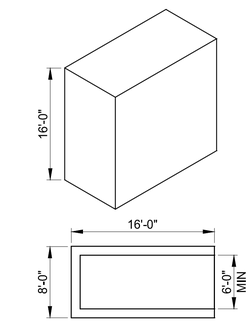

PLAN

TYPE B6

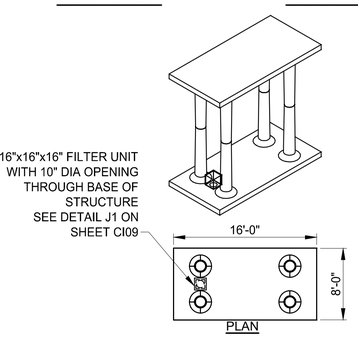

PLAN

TYPE C1

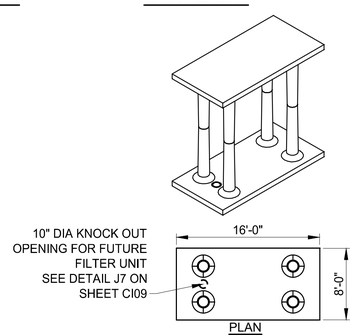

PLAN

TYPE C2

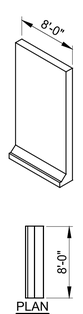

PLAN

TYPE D

NOTE:

1. TYPE B ARE ACCESS AND TURN-AROUND UNITS; TYPE C ARE INFILTRATION AND STORAGE UNITS; TYPE D ARE END WALLS FOR FILTRATION AND STORAGE UNITS.
2. SEE SPECIFICATION SECTION 13200 MODULAR BURIED STORMWATER INFILTRATION SYSTEM FOR REQUIREMENTS INCLUDING SUBSECTIONS 2.1C, 3.5 AND 3.6 FOR SPACER/BACKERS BETWEEN CONCRETE FLOOR MEMBERS, AND JOINT SEALER FOR USE BETWEEN CONCRETE MEMBER FLOOR, WALLS AND ROOFS.

MISCELLANEOUS

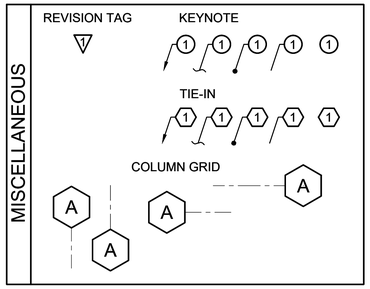

SECTIONS

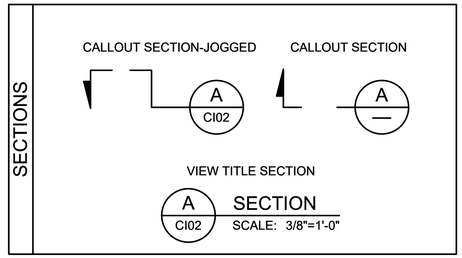

ELEVATION

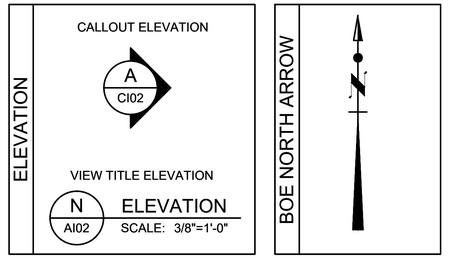

BOE NORTH ARROW

DETAIL

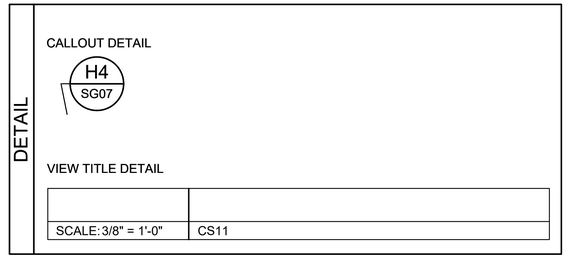

SCALE BAR

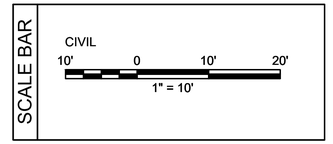

ISOMETRIC

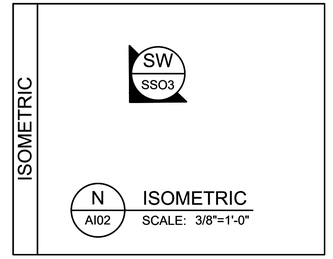

INSET-VIEW

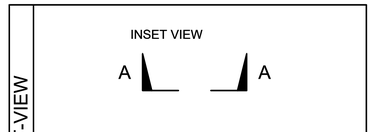

ENLARGEMENT BUBBLE

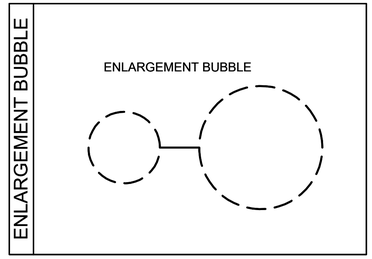

ENLARGED PLAN

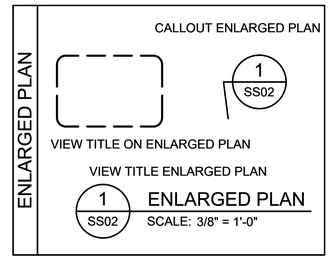

ABBREVIATIONS

AVE	AVENUE
BLVD	BOULEVARD
CL	CENTERLINE
CFS	CUBIC FEET PER SECOND
CONC	CONCRETE
DIA	DIAMETER
EL, ELEV	ELEVATION
EXIST	EXISTING
FF	FINISH FLOOR
HGL	HYDRAULIC GRADE LINE
INV	INVERT
LAT	LATERAL
MAX	MAXIMUM
MH	MAINTENANCE HOLE
NO	NUMBER
RCP	REINFORCED CONCRETE PIPE
REQ'D	REQUIRED
S	SLOPE
SD	STORM DRAIN
SF	SQUARE FEET
SS	SANITARY SEWER
ST	STREET
STA	STATION
TYP	TYPICAL
W	WATER
WSE	WATER SURFACE ELEVATION

LEGEND

- Ⓓ STORM DRAIN MAINTENANCE HOLE
- Ⓢ SANITARY SEWER MAINTENANCE HOLE
- PROPERTY LINE
- ROAD CENTERLINE
- P-5 TD=30.8 — BORING/PERCOLATION TEST: TD= TOTAL DEPTH IN FEET
- B-5 TD=30.8 — BORING: TD= TOTAL DEPTH IN FEET

THE CITY OF LOS ANGELES OR ITS OFFICERS OR AGENTS SHALL NOT BE RESPONSIBLE FOR THE ACCURACY OR COMPLETENESS OF ELECTRONIC COPIES OF THIS PLAN SHEET.

REVISION DATES (DESIGN STAGE ONLY)

BUREAU OF ENGINEERING • THIS PLAN WAS ELECTRONICALLY SIGNED AND STAMPED •

CITY OF LOS ANGELES DEPARTMENT OF PUBLIC WORKS

ENGINEERING CITY OF LOS ANGELES

REGISTERED PROFESSIONAL ENGINEER S. TED ALLEN No. C 48973 EXP. 08/31/2026 STATE OF CALIFORNIA 01/27/2023

VERTICAL CONTROL: BENCH MARK 08-30460 NAVD 88
HORIZONTAL CONTROL: CALIFORNIA STATE PLANE ZONE V, 1983 NAD
SHEET TITLE: CIVIL ABBREVIATIONS, SYMBOLS, AND LEGENDS
PROJECT: FERNANGELES PARK STORMWATER CAPTURE PROJECT
ADDRESS: FERNANGELES RECREATION CENTER 8851 LAUREL CANYON BLVD, SUN VALLEY, CA 91352

NO.	REVISIONS	DATE	BY
		YY/MM/DD	
		YY/MM/DD	
		YY/MM/DD	
		YY/MM/DD	

CIP NO. SCP0002

INDEX NO.

CITY ENGINEER: TED ALLEN, P.E. — DATE: 04/11/2023

DESIGN GROUP		DATE
ENGINEER:	CDM SMITH INC.	04/11/2023
ARCHITECT:	NA	04/11/2023
DESIGNED BY:	C. RICE	04/11/2023
DRAWN BY:	C. BILDERBACK	04/11/2023
CHECKED BY:	P. TAURASI	04/11/2023
APPROVED BY:	A. DELLINGER	04/11/2023

WORK ORDER EW40079F

SHEET NAME CG01

SHEET 25 OF 125 SHEETS

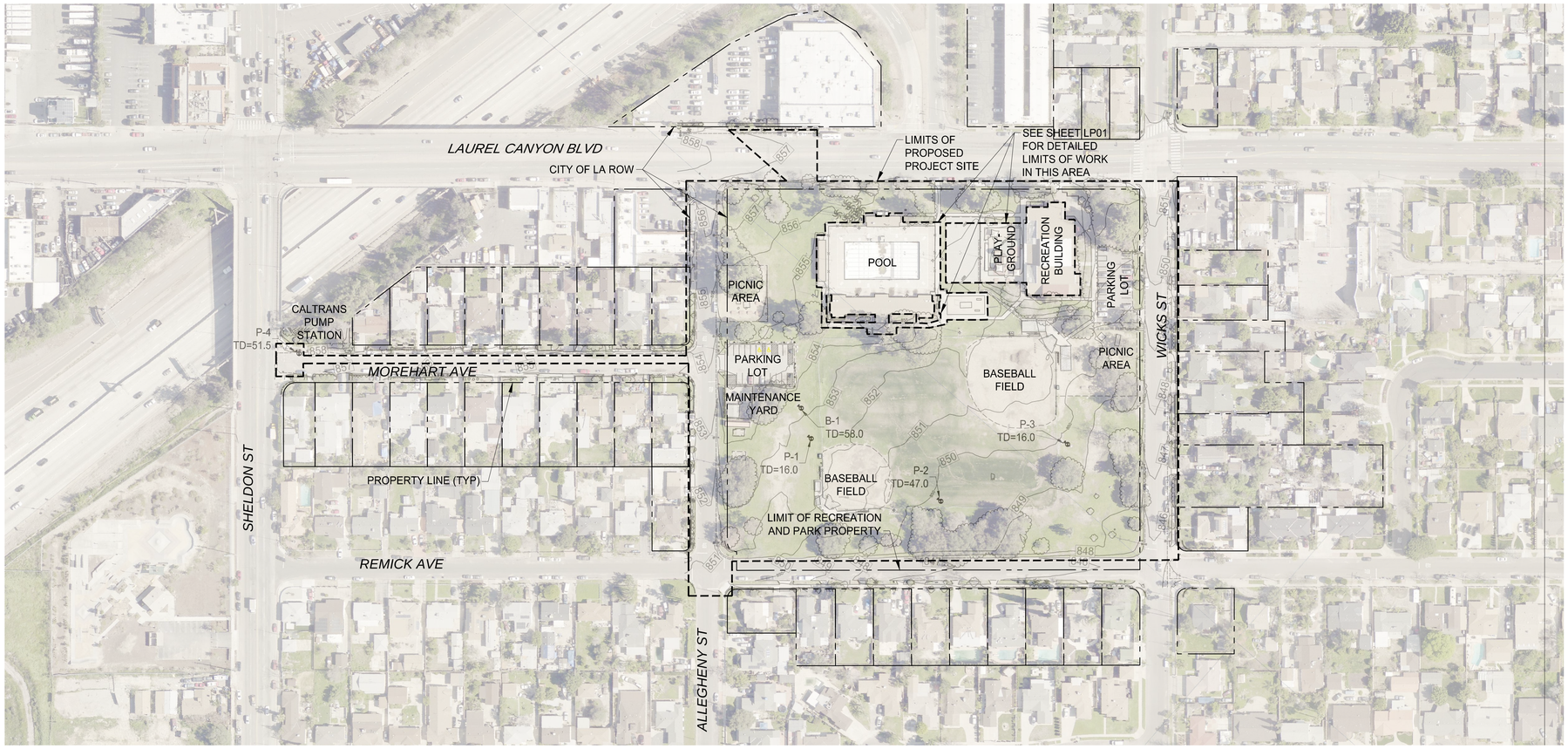

EXISTING SITE PLAN

1" = 100'

100' 0 100' 200'

1" = 100'

NOTE

1. BORING LOCATIONS ARE APPROXIMATE. SEE GEOTECHNICAL REPORT IN APPENDIX TO SPECIFICATIONS FOR MORE DETAILS.

THE CITY OF LOS ANGELES OR ITS OFFICERS OR AGENTS SHALL NOT BE RESPONSIBLE FOR THE ACCURACY OR COMPLETENESS OF ELECTRONIC COPIES OF THIS PLAN SHEET.

REVISION DATES (DESIGN STAGE ONLY)

ENGINEERING
CITY OF LOS ANGELES

REGISTERED PROFESSIONAL ENGINEER S. TED ALLEN No. C 48973 EXP. 06/30/2026 CIVIL STATE OF CALIFORNIA
01/27/2023

THIS PLAN WAS ELECTRONICALLY SIGNED AND STAMPED

CITY OF LOS ANGELES DEPARTMENT OF PUBLIC WORKS BUREAU OF ENGINEERING

VERTICAL CONTROL: BENCH MARK (08-30460 (NAVD 88))
HORIZONTAL CONTROL: CALIFORNIA STATE PLANE ZONE, ZONE V (1983 NAD)

SHEET TITLE: EXISTING SITE PLAN

PROJECT: FERNANGELES PARK STORMWATER CAPTURE PROJECT

ADDRESS: FERNANGELES RECREATION CENTER
10943 HERRICK AVE, PACOIMA, CA 91331

NO.	REVISIONS	DATE	BY
		YY/MM/DD	
		YY/MM/DD	
		YY/MM/DD	
		YY/MM/DD	

CIP NO. SCP0002

INDEX NO.

CITY ENGINEER		DATE
TED ALLEN, P.E.		
	DESIGN GROUP	
ENGINEER:	CDM SMITH INC.	04/11/2023
ARCHITECT:	NA	04/11/2023
DESIGNED BY:	M. MA	04/11/2023
DRAWN BY:	C. BILDERBACK	04/11/2023
CHECKED BY:	P. TAURASI	04/11/2023
APPROVED BY:	A. DELLINGER	04/11/2023

WORK ORDER
EW40079F

SHEET NAME
CS01

SHEET 26 OF 125 SHEETS

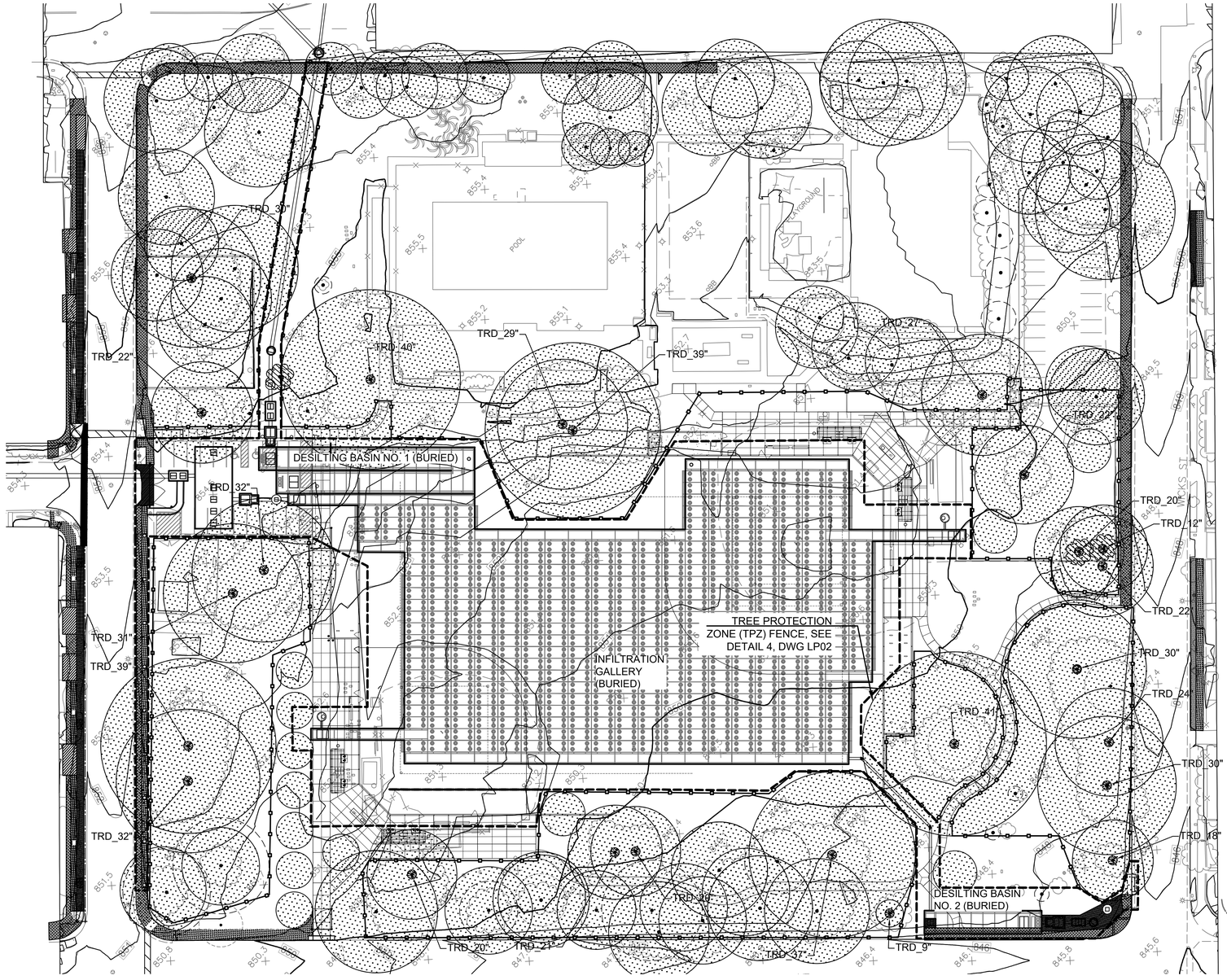

PLAN
1" = 40'

LEGEND

- TREE TO BE REMOVED
- TRD_12" — TREE DIAMETER
- TREE CANOPY
- TREE TO BE PROTECTED
- TREE PROTECTION ZONE (EVERY 1" OF TREE DIAMETER EQUALS 1.5' OF PROTECTION ZONE) MEASURED FROM THE OUTSIDE EDGE OF THE TREE TRUNK AT A HEIGHT OF 3.5 FT FROM THE GROUND
- LIMITS OF TREE PROTECTION ZONE (TPZ) FENCING
- LIMITS OF CONTRACTOR FENCING DURING THE CONSTRUCTION OF SUBSURFACE STRUCTURES

NOTES:

1. SEE LANDSCAPE PLANS FOR ADDITIONAL SITE IMPROVEMENTS WITHIN LIMIT OF WORKS. CONTRACTOR SHALL PROTECT EXISTING TREES PER TREE PROTECTION REQUIREMENTS IN SHEET LP03.
2. LAYDOWN AREA AND TEMPORARY STORAGE SITE IS NOT ALLOWED WITHIN THE TPZ AREAS.
3. TREES TO BE REMOVED SHALL BE COORDINATED WITH THE LANDSCAPE ARCHITECT PRIOR TO REMOVAL.

40' 0 40' 40'
1" = 40'

THE CITY OF LOS ANGELES OR ITS OFFICERS OR AGENTS SHALL NOT BE RESPONSIBLE FOR THE ACCURACY OR COMPLETENESS OF ELECTRONIC COPIES OF THIS PLAN SHEET.

REVISION DATES (DESIGN STAGE ONLY)

ENGINEERING
CITY OF LOS ANGELES

PROFESSIONAL ENGINEER
REGISTERED
S. TED ALLEN
No. C 48973
EXP. 08/31/2024
STATE OF CALIFORNIA
01/27/2023

THIS PLAN WAS ELECTRONICALLY SIGNED AND STAMPED

BUREAU OF ENGINEERING

VERTICAL CONTROL: BENCH MARK 08-30460 (NAVD 88)
HORIZONTAL CONTROL: CALIFORNIA STATE PLANE ZONE V, 1983 NAD

SHEET TITLE: LIMITS OF EXCAVATION AND TREE PROTECTION PLAN

PROJECT: FERNANGELES PARK STORMWATER CAPTURE PROJECT

ADDRESS: FERNANGELES RECREATION CENTER 8851 LAUREL CANYON BLVD, SUN VALLEY, CA 91352

NO.	REVISIONS	DATE	BY
		YY/MM/DD	
		YY/MM/DD	
		YY/MM/DD	
		YY/MM/DD	

CIP NO. SCP0002

INDEX NO.

CITY OF LOS ANGELES DEPARTMENT OF PUBLIC WORKS

CITY ENGINEER	DATE
TED ALLEN, P.E.	04/11/2023

DESIGN GROUP	
ENGINEER:	CDM SMITH INC.
ARCHITECT:	NA
DESIGNED BY:	M. MA
DRAWN BY:	C. BILDERBACK
CHECKED BY:	P. TAURASI
APPROVED BY:	A. DELLINGER

DATE
04/11/2023
04/11/2023
04/11/2023
04/11/2023
04/11/2023

WORK ORDER
EW40079F

SHEET NAME
CS02

SHEET 27 OF 125 SHEETS

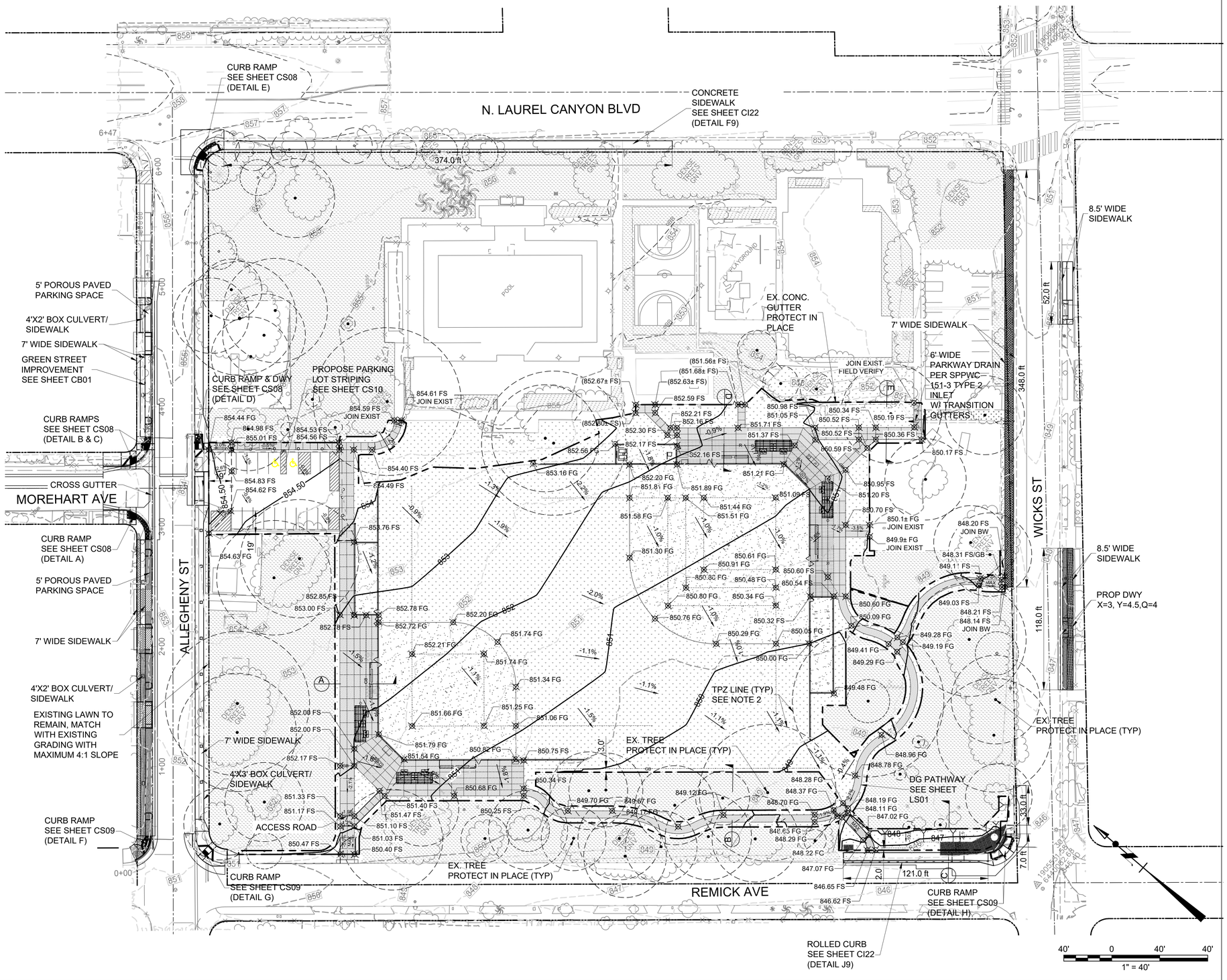

NOTES

1. **GRADING/RETAINING WALL/SHORING PLAN CORRECTION SHEETS (2017 LABC)** ITEM **C-5.**
   a. ALL GRADING SLOPES SHALL BE PLANTED AND SPRINKLERED. (7012.1).
   b. STANDARD 12 INCH HIGH BERM IS REQUIRED AT TOP OF ALL GRADED SLOPES. (7013.3).
   c. NO FILL TO BE PLACED, UNTIL THE CITY GRADING INSPECTOR HAS INSPECTED AND APPROVED THE BOTTOM EXCAVATION.
   d. MAN-MADE FILL SHALL BE COMPACTED TO A MINIMUM RELATIVE COMPACTION OF 90% MAX. DRY DENSITY WITHIN 40 FEET BELOW FINISH GRADE AND 93% OF MAX. DRY DENSITY DEEPER THAN 40 FEET BELOW FINISH GRADE, UNLESS A LOWER RELATIVE COMPACTION (NOT LESS THAN 90% OF MAX. DRY DENSITY) IS JUSTIFIED BY THE SOILS ENGINEER.
   e. TEMPORARY EROSION CONTROL TO BE INSTALLED DURING THE WET SEASON (BETWEEN OCTOBER 1 AND APRIL 15). OBTAIN GRADING INSPECTOR'S AND DEPARTMENT OF PUBLIC WORKS APPROVAL OF PROPOSED PROCEDURES. [>200 CY] (7007.1).
2. **FOR TREE PROTECTION REQUIREMENTS, SEE SHEET LP03 TO LP05.**

EARTHWORK QUANTITIES

CUT:	52,850 CY*
FILL:	0 CY*
EXPORT:	52,850 CY*
IMPORT/FILL:	12,000 CY*

NOTE:
THE RANGES PROVIDED ARE RAW NUMBERS AND PARK ONLY

*REFER TO GEOTECHNICAL REPORT

LEGEND

PARK

- JOIN EXIST/DAYLGHT LINE
- CONCRETE PER LANDSCAPE ARCH. PLANS
- TURF - SOD PER LANDSCAPE ARCH. PLANS
- DG PER LANDSCAPE ARCH. PLANS
- TURF-HYDROSEED DAMAGED AREAS PER LANDSCAPE ARCH. PLANS
- TPZ LINE (LARGER CIRCLE SHOWN AROUND EXISTING TREES)

STREET / SIDEWALKS

- DISTURBED AREAS
- CONCRETE SIDEWALK
- BOX CULVERT/SIDEWALK
- POROUS PAVER
- DG PATHWAY

ABBREVIATIONS

ARCH	ARCHITECTURE
AVE	AVENUE
BLVD	BOULEVARD
BW	BACK OF WALK
C&G	CURB AND GUTTER
CY	CUBIC YARD
DG	DECOMPOSED GRANITE
D/L	DAYLIGHT
DWG	DRAWING
DWY	DRIVEWAY
EX	EXISTING
FG	FINISHED GROUND
FL	FLOWLINE
FS	FINISH SURFACE
GB	GRADEBREAK
LABC	LOS ANGELES BUILDING CODE
MAX	MAXIMUM
NTS	NOT TO SCALE
PROP	PROPOSED
R	RIDGELINE
ST	STREET
TYP	TYPICAL

THIS PLAN WAS ELECTRONICALLY • SIGNED AND STAMPED

ENGINEERING
CITY OF LOS ANGELES

PROFESSIONAL ENGINEER * REGISTERED * JAVIER A. TOSKRENO No. 93424 EXP. 06-30-24 CIVIL * STATE OF CALIFORNIA
01-27-23

CITY OF LOS ANGELES DEPARTMENT OF PUBLIC WORKS
BUREAU OF ENGINEERING

VERTICAL CONTROL: BENCH MARK (08-30460) NAVD 88
HORIZONTAL CONTROL: CALIFORNIA STATE PLANE ZONE V, 1983 NAD

SHEET TITLE: GRADING PLAN 1

PROJECT: FERNANGELES PARK STORMWATER CAPTURE PROJECT

ADDRESS: FERNANAGELES RECREATION CENTER
8851 LAUREL CANYON BLVD, SUN VALLEY, CA 91352

NO.	REVISIONS	DATE	BY
		YY/MM/DD	
		YY/MM/DD	
		YY/MM/DD	
		YY/MM/DD	

CITY ENGINEER

	DATE
TED ALLEN, P.E.	01/27/2023
DESIGN GROUP	01/27/2023
ENGINEER: J. TISCARENO	01/27/2023
ARCHITECT: NA	01/27/2023
DESIGNED BY: A. MARTINEZ	01/27/2023
DRAWN BY: A. MARTINEZ	01/27/2023
CHECKED BY: L. YUEN	01/27/2023
APPROVED BY: XXX	01/27/2023

CIP NO. SCP0002

INDEX NO.

WORK ORDER EW40079F

SHEET NAME CS03

SHEET 28 OF 125 SHEETS

THE CITY OF LOS ANGELES OR ITS OFFICERS OR AGENTS SHALL NOT BE RESPONSIBLE FOR THE ACCURACY OR COMPLETENESS OF ELECTRONIC COPIES OF THIS PLAN SHEET.

REVISION DATES (DESIGN STAGE ONLY)

SHEET VERSION 4.0.1 FILE PATH: C:\CDMEXT\PAVITHRAB\D0621030\CS03.DWG PLOT DATE: 10/9/2024 5:11 PM SAVED: 10/8/2024 12:04 PM SAVED BY:PAVITHRAB

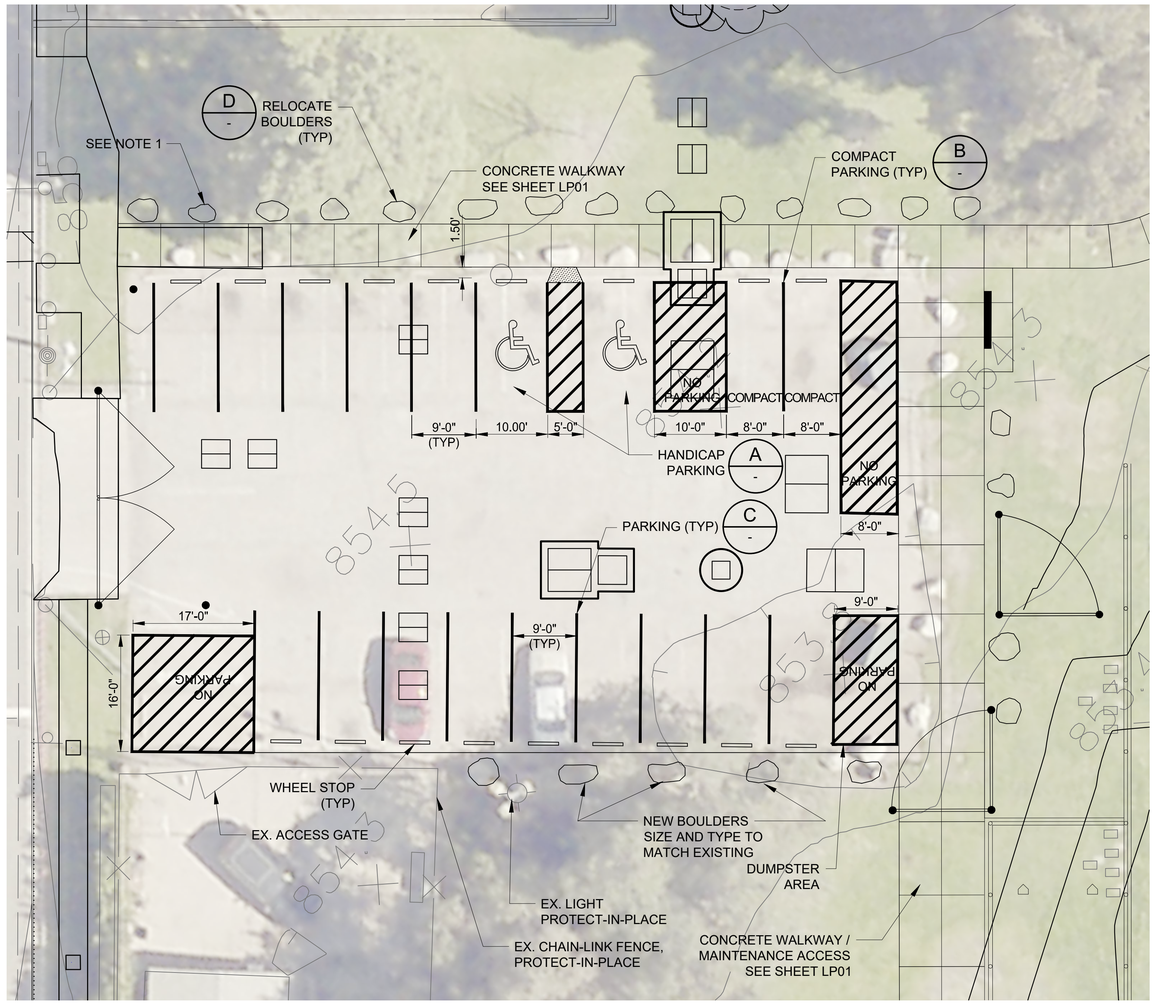

PLAN
1" = 10'

NOTE:

1. RELOCATE THE TWENTY EXISTING BOULDERS TO THE APPROXIMATE LOCATIONS SHOWN. COORDINATE EACH LOCATION WITH IRRIGATION HEAD PLACEMENTS.

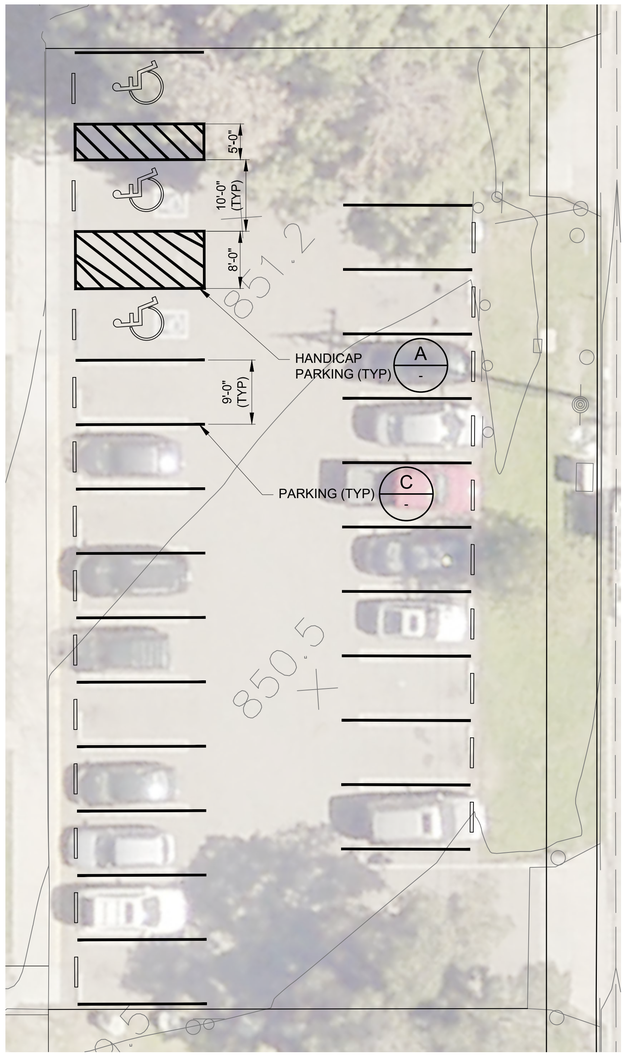

PLAN
1" = 10'

NOTE:

1. REMOVE THE STRIPING AND REPLACE AS SHOWN. DEMOLISH AND REPLACE THE CONCRETE VEHICLE STOPS.

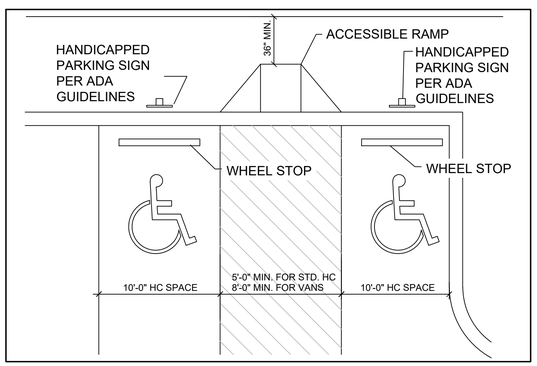

A - HANDICAP PARKING
SCALE: NTS

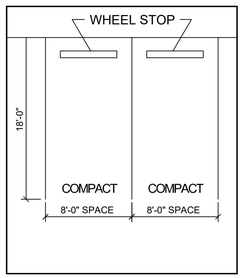

B - COMPACT PARKING
SCALE: NTS

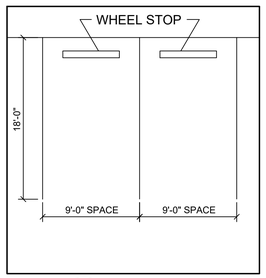

C - PARKING
SCALE: NTS

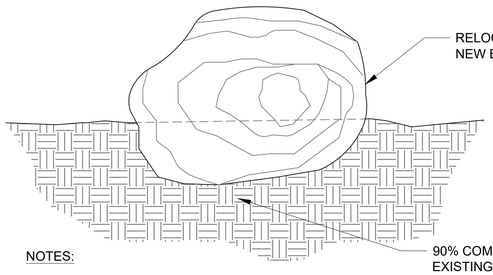

NOTES:

1. BURY A MINIMUM OF 1/3 DEPTH OF BOULDER SIZE.
2. BOULDER SHALL BE EXISTING OR ROUNDED RIVER BOULDER.
3. SCARRED OR BROKEN BOULDER SHALL NOT BE PERMITTED.
4. BOULDER SIZES TO BE SIMILAR/MATCH EXISTING BOULDERS.

D - BOULDER RELOCATION/NEW BOULDER
SCALE: NTS

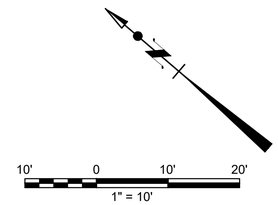

THE CITY OF LOS ANGELES OR ITS OFFICERS OR AGENTS SHALL NOT BE RESPONSIBLE FOR THE ACCURACY OR COMPLETENESS OF ELECTRONIC COPIES OF THIS PLAN SHEET.

REVISION DATES (DESIGN STAGE ONLY)

CITY OF LOS ANGELES DEPARTMENT OF PUBLIC WORKS
BUREAU OF ENGINEERING
THIS PLAN WAS ELECTRONICALLY • SIGNED AND STAMPED

ENGINEERING
CITY OF LOS ANGELES

REGISTERED PROFESSIONAL ENGINEER SCOTT S. TELL No. C 48973 EXP. 08/31/2024 STATE OF CALIFORNIA
01/27/2023

NO.	REVISIONS	DATE	BY
		YY/MM/DD	
		YY/MM/DD	
		YY/MM/DD	
		YY/MM/DD	

CIP NO. SCP0002

INDEX NO.

CITY ENGINEER
TED ALLEN, P.E.

	DESIGN GROUP	DATE
ENGINEER:	CDM SMITH INC.	04/11/2023
ARCHITECT:	NA	04/11/2023
DESIGNED BY:	M. MA	04/11/2023
DRAWN BY:	C. BILDERBACK	04/11/2023
CHECKED BY:	P. TAURASI	04/11/2023
APPROVED BY:	A. DELLINGER	04/11/2023

VERTICAL CONTROL:	BENCH MARK 08-30460 (NAVD 88)
HORIZONTAL CONTROL:	CALIFORNIA STATE PLANE ZONE V, 1983 NAD
SHEET TITLE:	PARKING LOT STRIPING PLAN
PROJECT:	FERNANGELES PARK STORMWATER CAPTURE PROJECT
ADDRESS:	FERNANGELES RECREATION CENTER 8851 LAUREL CANYON BLVD, SUN VALLEY, CA 91352

WORK ORDER
EW40079F

SHEET NAME
CS04
SHEET 29 OF 125 SHEETS

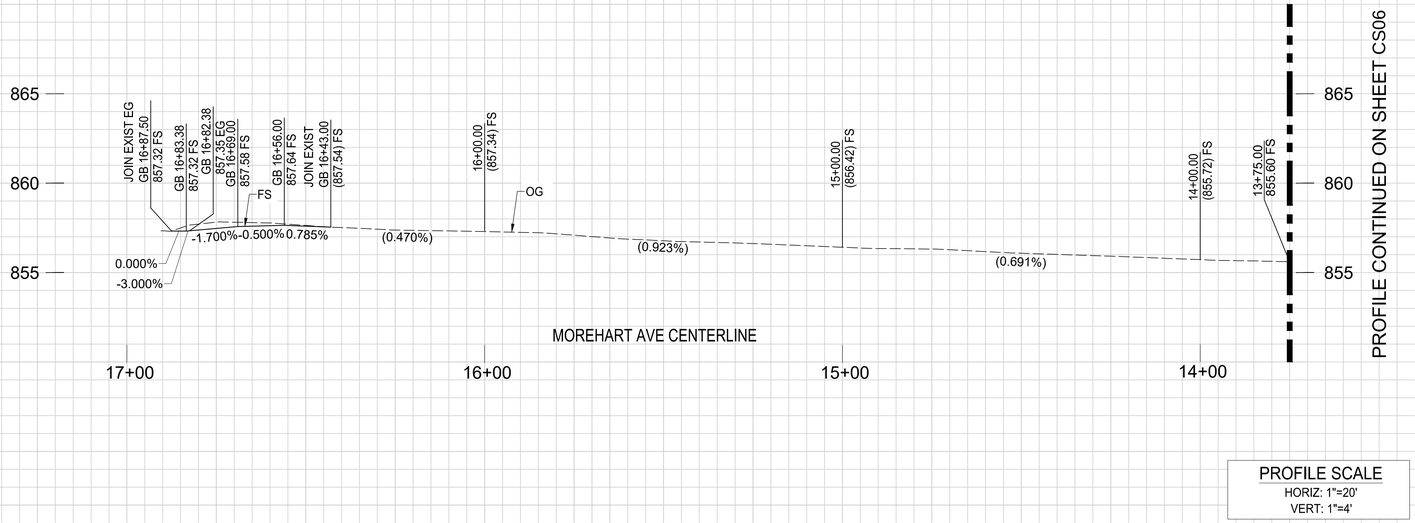

PROFILE SCALE
HORIZ: 1"=20'
VERT: 1"=4'

PROFILE

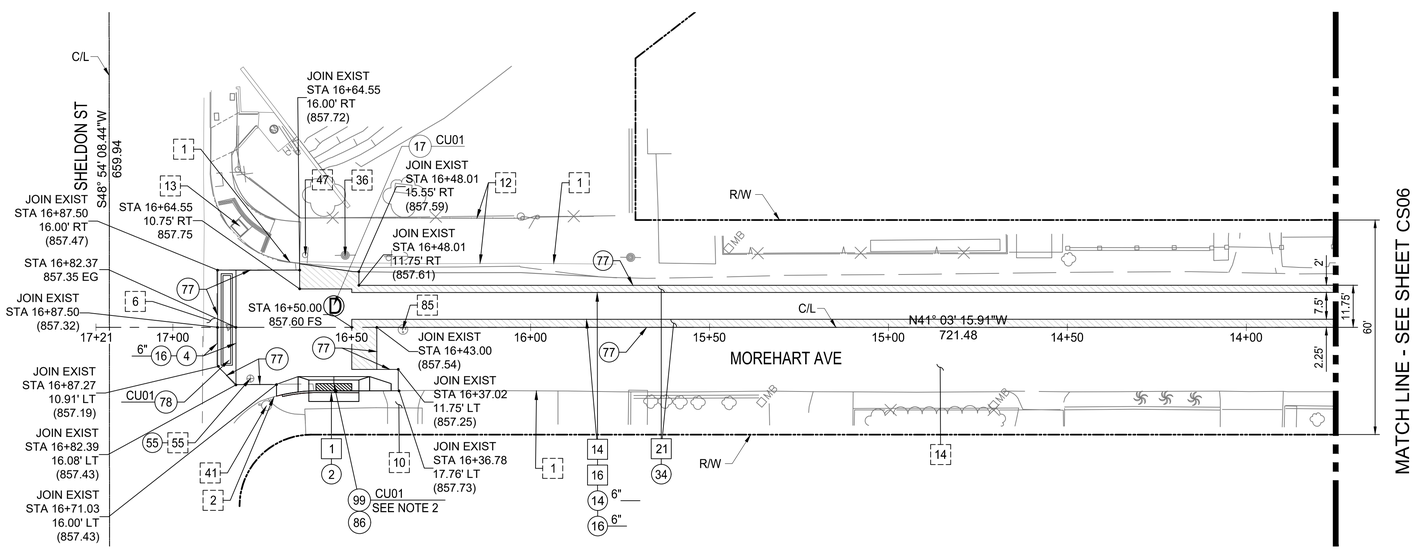

PLAN

CONSTRUCTION SYMBOLS

CONSTRUCT
EXISTING
REMOVE
REMODEL EXISTING
REMOVE & CONSTRUCT
WORK BY OTHERS

CONSTRUCTION ITEMS

ITEM NO.	DESCRIPTION	STANDARD PLAN NO. CITY OF L.A.
1	CONCRETE CURB	
2	TYPE C INTEGRAL CURB & GUTTER	
4	CONCRETE GUTTER	
6	CONCRETE INTERSECTION GUTTER	
10	CONCRETE DRIVEWAY	
12	CONCRETE SIDEWALK	
13	CURB RAMP	
14	ASPHALT CONCRETE PAVEMENT	
16	CRUSHED MISCELLANEOUS BASE	
17	ADJUST MANHOLE TO GRADE	
20	TREE	
21	COLDPLAN (MILL) AC PAVEMENT	
34	VARIABLE THICKNESS ASPHALT CONCRETE PAVEMENT	
41	FIRE HYDRANT	
55	WATER VALVE	
77	SAWCUT LINE & JOIN	
78	ALLEY GRATING BASIN	S-355-0
85	STORM DRAIN MANHOLE	
86	WARPED GUTTER AT CATCH BASIN	S-311-0
99	SIDE OPENING CATCH BASIN	S-351-1

NOTES:

1. FOR STORM DRAIN IMPROVEMENTS, SEE CU PLANS.
2. SEE LABOE STD PLAN S-312-1 FOR PAVEMENT REMODELING AT CATCH BASIN.

LEGEND

EXISTING SIGN
EXISTING WATER VALVE
EXISTING MISCELLANEOUS FEATURE (AS NOTED)
EXISTING STREET LIGHT
EXISTING STREET LIGHT
EXISTING MAINTENANCE HOLE
EXISTING POWER POLE ANCHOR
EXISTING SHRUB
EXISTING FIRE HYDRANT
GRIND AND OVERLAY AC PAVEMENT
EXISTING TREE

20' 10' 0 20' 40'
SCALE: 1" = 20'

THE CITY OF LOS ANGELES OR ITS OFFICERS OR AGENTS SHALL NOT BE RESPONSIBLE FOR THE ACCURACY OR COMPLETENESS OF ELECTRONIC COPIES OF THIS PLAN SHEET.

REVISION DATES (DESIGN STAGE ONLY)

ENGINEERING
CITY OF LOS ANGELES

THIS PLAN WAS ELECTRONICALLY SIGNED AND STAMPED

PROFESSIONAL ENGINEER ★ REGISTERED ★ CIVIL ★ STATE OF CALIFORNIA
JAVIER A. TOSCANO
No. 87194
Exp. 12-31-24
01-27-23

BUREAU OF ENGINEERING

VERTICAL CONTROL: BENCH MARK:08-30460 (NAVD 88)
HORIZONTAL CONTROL: CALIFORNIA STATE PLANE ZONE V, 1983 NAD

SHEET TITLE: ROADWAY PLAN AND PROFILE 1

PROJECT: FERNANGELES PARK STORMWATER CAPTURE PROJECT

ADDRESS: FERNANAGELES RECREATION CENTER
8851 LAUREL CANYON BLVD, SUN VALLEY, CA 91352

NO.	REVISIONS	DATE	BY
		YY/MM/DD	
		YY/MM/DD	
		YY/MM/DD	
		YY/MM/DD	

CIP NO. SCP0001

INDEX NO.

CITY OF LOS ANGELES DEPARTMENT OF PUBLIC WORKS

CITY ENGINEER: TED ALLEN, P.E. — DATE: 01/27/2023

DESIGN GROUP		DATE
ENGINEER:	J. TISCARENO	01/27/2023
ARCHITECT:	NA	01/27/2023
DESIGNED BY:	A. MARTINEZ	01/27/2023
DRAWN BY:	A. MARTINEZ	01/27/2023
CHECKED BY:	L. YUEN	01/27/2023
APPROVED BY:	XXX	01/27/2023

WORK ORDER
EW40079F

SHEET NAME
CS05
SHEET 30 OF 125 SHEETS

SHEET VERSION 4.0.1 FILE PATH: C:\CDMEXT\JVARELA@M-AENGINEERING.COM\D0621030\CS04 THRU CS07.DWG PLOT DATE: 1/27/2023 10:51 AM SAVED: 1/26/2023 11:40 AM SAVED BY:JUAN VARELA

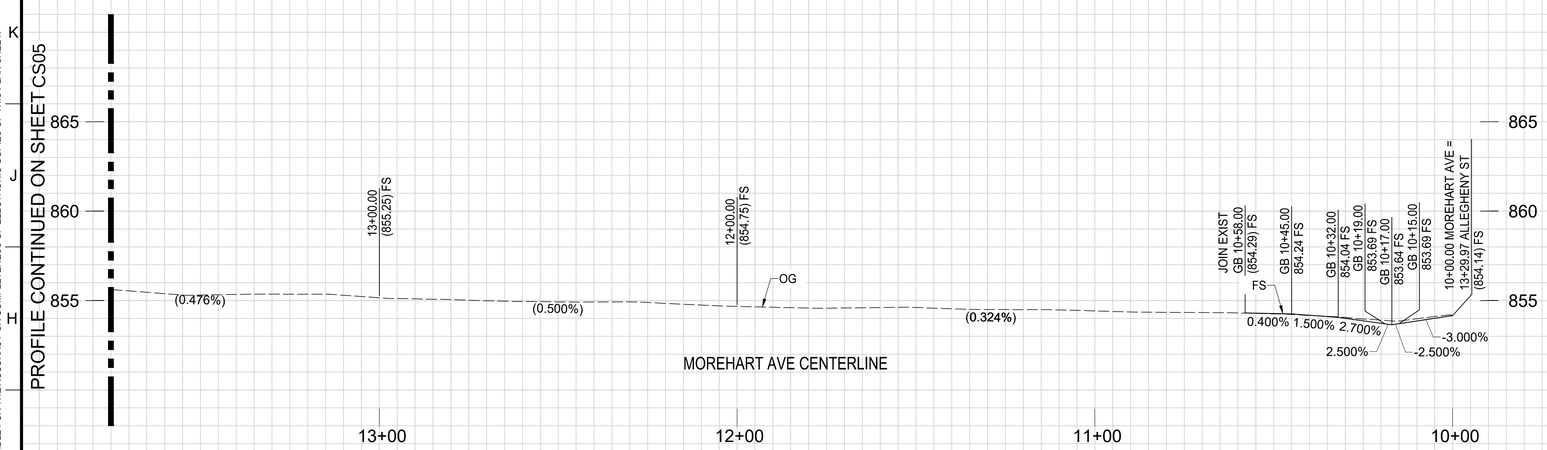

PROFILE SCALE
HORIZ: 1"=20'
VERT: 1"=4'

PROFILE

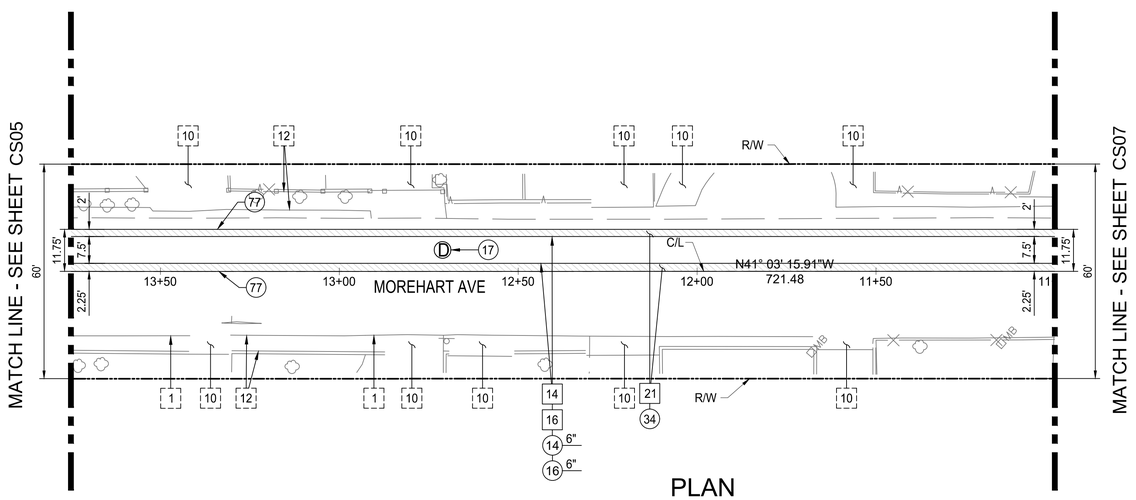

PLAN

CONSTRUCTION SYMBOLS

- CONSTRUCT
- EXISTING
- REMOVE
- REMODEL EXISTING
- REMOVE & CONSTRUCT
- WORK BY OTHERS

CONSTRUCTION ITEMS

ITEM NO.	DESCRIPTION	STANDARD PLAN NO. CITY OF L.A.
1	CONCRETE CURB	
10	CONCRETE DRIVEWAY	
12	CONCRETE SIDEWALK	
14	ASPHALT CONCRETE PAVEMENT	
16	CRUSHED MISCELLANEOUS BASE	
17	ADJUST MANHOLE TO GRADE	
20	TREE	
21	COLDPLANE (MILL) AC PAVEMENT	
34	VARIABLE THICKNESS ASPHALT CONCRETE PAVEMENT	
77	SAWCUT LINE & JOIN	

NOTES:

1. FOR STORM DRAIN IMPROVEMENTS, SEE CU PLANS.
2. SEE LABOE STD PLAN S-312-1 FOR PAVEMENT REMODELING AT CATCH BASIN.

LEGEND

- EXISTING SIGN
- EXISTING MAINTENANCE HOLE
- EXISTING SHRUB
- GRIND AND OVERLAY AC PAVEMENT
- EXISTING TREE

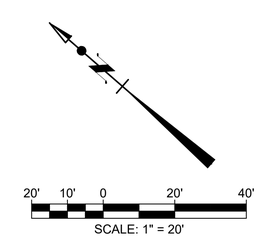

THE CITY OF LOS ANGELES OR ITS OFFICERS OR AGENTS SHALL NOT BE RESPONSIBLE FOR THE ACCURACY OR COMPLETENESS OF ELECTRONIC COPIES OF THIS PLAN SHEET.

REVISION DATES (DESIGN STAGE ONLY)

ENGINEERING
CITY OF LOS ANGELES

THIS PLAN WAS ELECTRONICALLY SIGNED AND STAMPED

REGISTERED PROFESSIONAL ENGINEER JAVIER A. TISCARENO No. 81784 Exp. 03-31-24 STATE OF CALIFORNIA 01-27-23

BUREAU OF ENGINEERING

VERTICAL CONTROL: BENCH MARK 08-30460 NAVD 88
HORIZONTAL CONTROL: CALIFORNIA STATE PLANE ZONE V, 1983 NAD

SHEET TITLE: ROADWAY PLAN AND PROFILE 2

PROJECT: FERNANGELES PARK STORMWATER CAPTURE PROJECT

ADDRESS: FERNANAGELES RECREATION CENTER
8851 LAUREL CANYON BLVD, SUN VALLEY, CA 91352

CIP NO. SCP0001

INDEX NO.

CITY OF LOS ANGELES DEPARTMENT OF PUBLIC WORKS

NO.	REVISIONS	DATE	BY
		YY/MM/DD	
		YY/MM/DD	
		YY/MM/DD	
		YY/MM/DD	

CITY ENGINEER

	DESIGN GROUP	DATE
ENGINEER:	J. TISCARENO	01/27/2023
ARCHITECT:	NA	01/27/2023
DESIGNED BY:	A. MARTINEZ	01/27/2023
DRAWN BY:	A. MARTINEZ	01/27/2023
CHECKED BY:	L. YUEN	01/27/2023
APPROVED BY:	XXX	01/27/2023

TED ALLEN, P.E.

WORK ORDER EW40079F

SHEET NAME CS06

SHEET 31 OF 125 SHEETS

SHEET VERSION 4.0.1 FILE PATH: C:\CDMEXT\JVARELA@M-AENGINEERING.COM\D0621030\CS04 THRU CS07.DWG PLOT DATE: 1/27/2023 10:51 AM SAVED: 1/26/2023 11:40 AM SAVED BY:JUAN VARELA

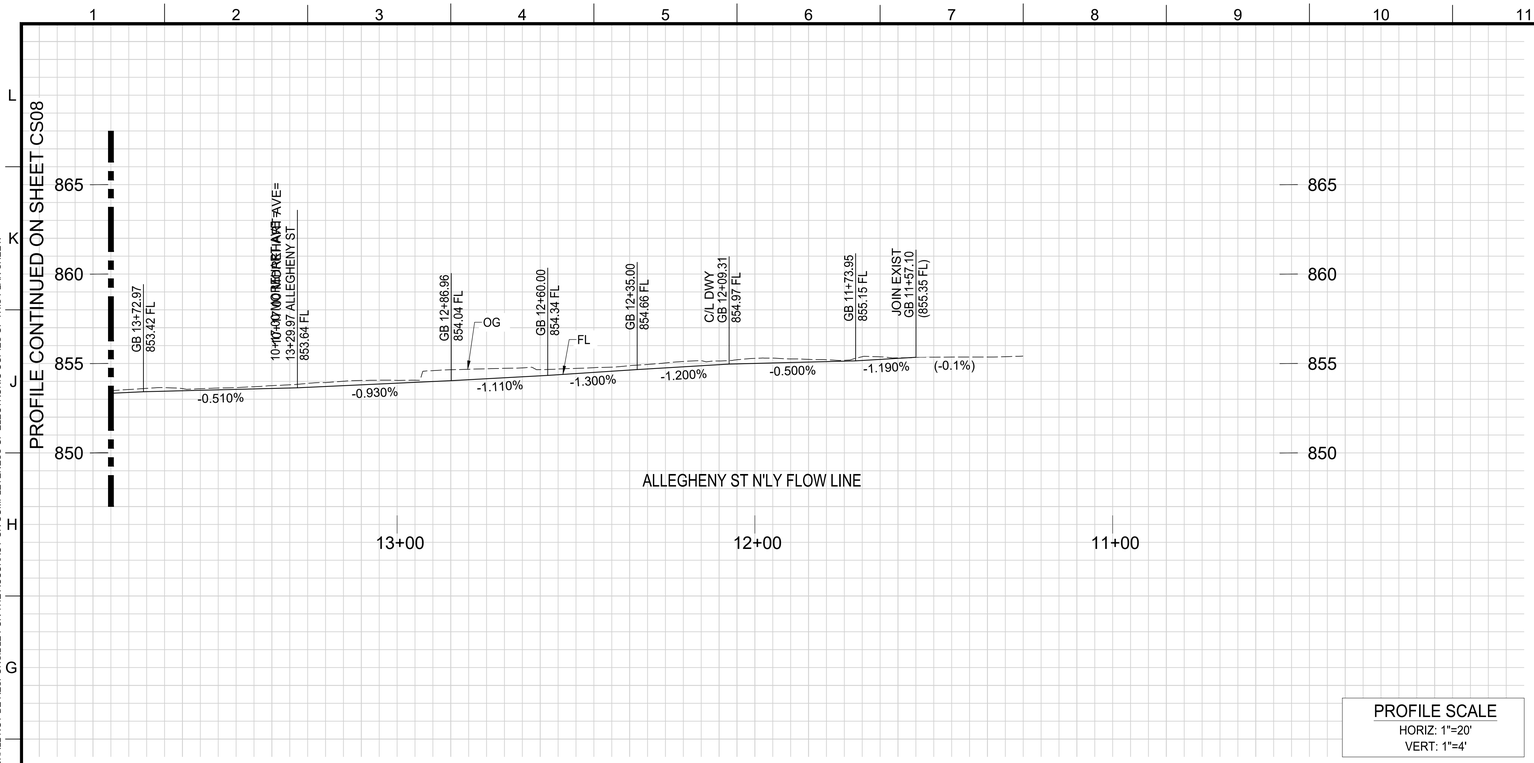

PROFILE SCALE
HORIZ: 1"=20'
VERT: 1"=4'

CONSTRUCTION SYMBOLS

CONSTRUCT — REMODEL EXISTING
EXISTING — REMOVE & CONSTRUCT
REMOVE — WORK BY OTHERS

CONSTRUCTION ITEMS

ITEM NO.	DESCRIPTION	STANDARD PLAN NO. CITY OF L.A.
1	CONCRETE CURB	S-410-2
2	TYPE C INTEGRAL CURB & GUTTER	S-410-2
4	CONCRETE GUTTER - SEE DETAIL A1 ON SHEET CI22	
6	CONCRETE INTERSECTION GUTTER - SEE NOTE 5	S-410-2
10	CONCRETE DRIVEWAY	S-440-4
12	CONCRETE SIDEWALK (t=4")	S-444-0
13	CURB RAMP	S-442-5
14	ASPHALT CONCRETE PAVEMENT	
16	CRUSHED MISCELLANEOUS BASE	
20	TREE	
21	COLDPLAN (MILL) AC PAVEMENT	
34	VARIABLE THICKNESS ASPHALT CONCRETE PAVEMENT	
37	POLE ANCHOR	
36	UTILITY POLE	
38	STREET LIGHTING PULL BOX	
41	FIRE HYDRANT	
42	STREET LIGHT	
46	WATER METER	
47	STREET SIGN	
48	CONCRETE BOLLARD	
51	POROUS PAVER - SEE DETAIL A1 ON SHEET CI22	
52	RELOCATE FENCE/GATE - SEE NOTE 2	
54	CONCRETE RETAINING CURB	S-422-5
55	WATER VALVE	
60	PARKWAY/GRASS	
77	SAWCUT LINE & JOIN	
85	STORM MAINTENANCE HOLE	
100	BOX CULVERT/SIDEWALK - SEE DETAIL A1 ON SHEET CI22	

MATCH LINE - SEE SHEET CS06

PROFILE

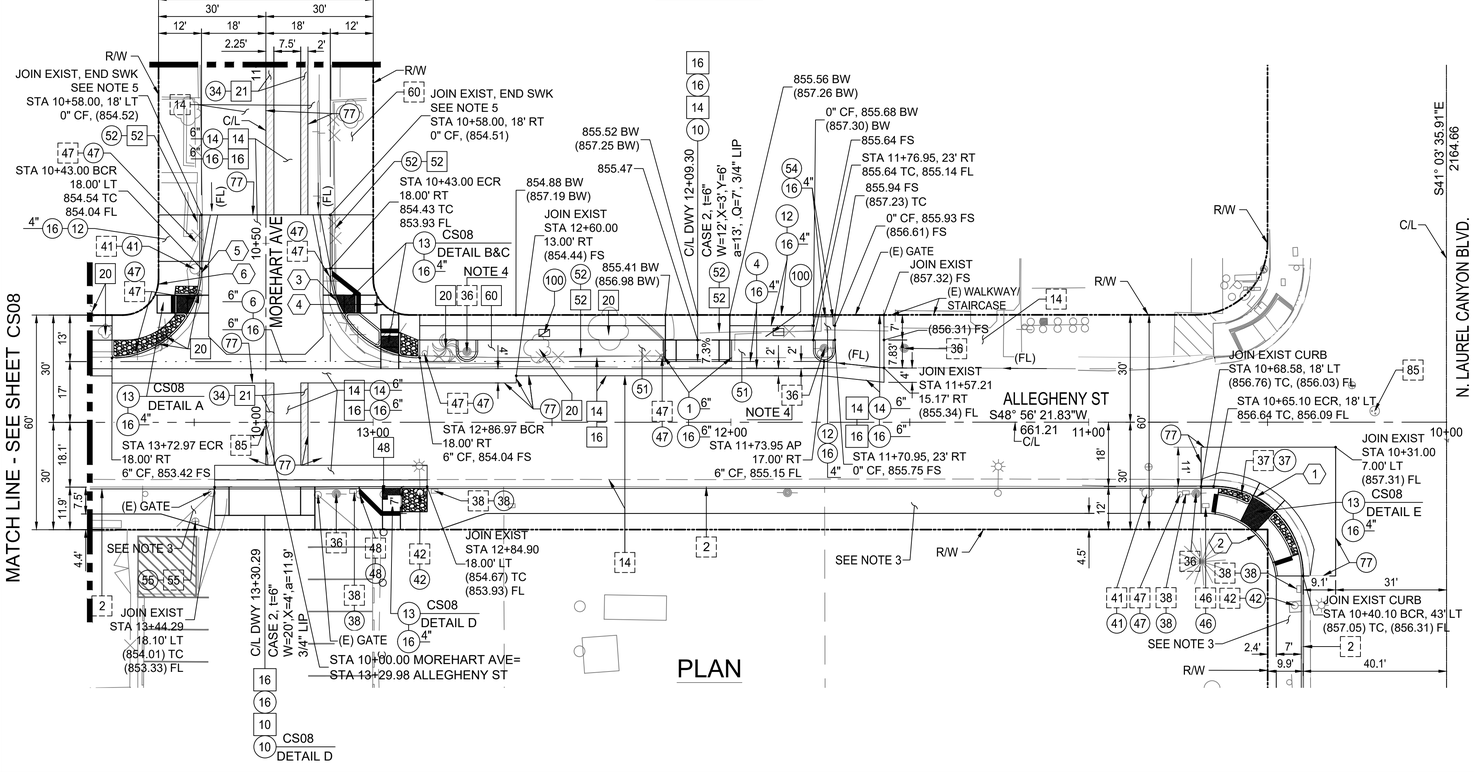

NOTES:

1. PRIOR TO THIS IMPROVEMENT, THE PRIVATE PROPERTY OWNER SHALL MAKE ANY NECESSARY MODIFICATIONS/IMPROVEMENTS WITHIN THE PRIVATE PROPERTY RIGHT-OF-WAY IN ORDER TO MATCH THE PROPOSED BACK OF WALK ELEVATIONS AS SHOWN ON THIS PLAN. THESE IMPROVEMENTS WITHIN THE PRIVATE PROPERTY RIGHT-OF-WAY SHALL BE COMPLETED AT THE PROPERTY OWNER'S EXPENSE.
2. PRIOR TO THIS IMPROVEMENT, THE EXISTING PRIVATE PROPERTY FENCE/WALL SHALL BE REMOVED AND RELOCATED AT THE PROPERTY OWNER'S EXPENSE. THE FENCE/WALL SHALL BE INSTALLED BEHIND THE PUBLIC RIGHT-OF-WAY AND WITHIN THE PRIVATE PROPERTY.
3. SEE CS11 FOR GREEEN STREET IMPROVEMENTS.
4. SEE DETAIL H ON SHEET CS09 FOR TYPICAL BUMPOUT DETAIL.
5. SEE DETAIL A, B, & C ON SHEET CS08 FOR CROSS GUTTER DETAILS AND DETAILS AT THE CONSTRUCTION JOINT ON MOREHART AVE.

LEGEND

- EXISTING SIGN
- EXISTING WATER VALVE
- EXISTING MISCELLANEOUS FEATURE (AS NOTED)
- EXISTING STREET LIGHT
- EXISTING STREET LIGHT
- EXISTING MAINTENANCE HOLE
- EXISTING PLANT
- EXISTING TREE
- EXISTING PALM TREE
- EXISTING SHRUB
- EXISTING FIRE HYDRANT
- GRIND & OVERLAY AC PAVEMENT

CURVE DATA TABLE

No.	RADIUS	DELTA	LENGTH	TANGENT	DESCRIPTION
1	25.00'	90° 00' 09"	39.27'	25.00'	SW CR @ LAUREL CANYON BLVD
2	20.00'	90° 00' 09"	31.42'	20.00'	BW SW CR @ LAUREL CANYON BLVD
3	25.00'	90° 00' 22"	39.27'	25.00'	NE CR @ MOREHART AVE
4	10.00'	90° 00' 22"	15.71'	10.00'	BW NE CR @ MOREHART AVE
5	25.00'	89° 59' 38"	39.27'	25.00'	NW CR @ MOREHART AVE
6	10.00'	89° 59' 38"	15.71'	10.00'	BW NW CR @ MOREHART AVE

20' 10' 0 20' 40'
SCALE: 1" = 20'

THIS PLAN WAS ELECTRONICALLY SIGNED AND STAMPED

JAVIER A. TISCARENO No. 87196 Exp. 06-30-24 REGISTERED PROFESSIONAL ENGINEER CIVIL STATE OF CALIFORNIA 01-27-23

ENGINEERING CITY OF LOS ANGELES

BUREAU OF ENGINEERING • DEPARTMENT OF PUBLIC WORKS • CITY OF LOS ANGELES

VERTICAL CONTROL: BENCH MARK (08-30460) NAVD 88
HORIZONTAL CONTROL: CALIFORNIA STATE PLANE ZONE V, 1983 NAD

SHEET TITLE: ROADWAY PLAN AND PROFILE 3
PROJECT: FERNANGELES PARK STORMWATER CAPTURE PROJECT
ADDRESS: FERNANAGELES RECREATION CENTER 8851 LAUREL CANYON BLVD, SUN VALLEY, CA 91352

NO.	REVISIONS	DATE	BY
		YY/MM/DD	
		YY/MM/DD	
		YY/MM/DD	
		YY/MM/DD	

CIP NO. SCP0001

INDEX NO.

CITY ENGINEER

DESIGN GROUP		DATE
ENGINEER:	J. TISCARENO	01/27/2023
ARCHITECT:	NA	01/27/2023
DESIGNED BY:	A. MARTINEZ	01/27/2023
DRAWN BY:	A. MARTINEZ	01/27/2023
CHECKED BY:	L. YUEN	01/27/2023
APPROVED BY:	XXX	01/27/2023

TED ALLEN, P.E.

WORK ORDER EW40079F

SHEET NAME CS07

SHEET 32 OF 125 SHEETS

THE CITY OF LOS ANGELES OR ITS OFFICERS OR AGENTS SHALL NOT BE RESPONSIBLE FOR THE ACCURACY OR COMPLETENESS OF ELECTRONIC COPIES OF THIS PLAN SHEET.

REVISION DATES (DESIGN STAGE ONLY)

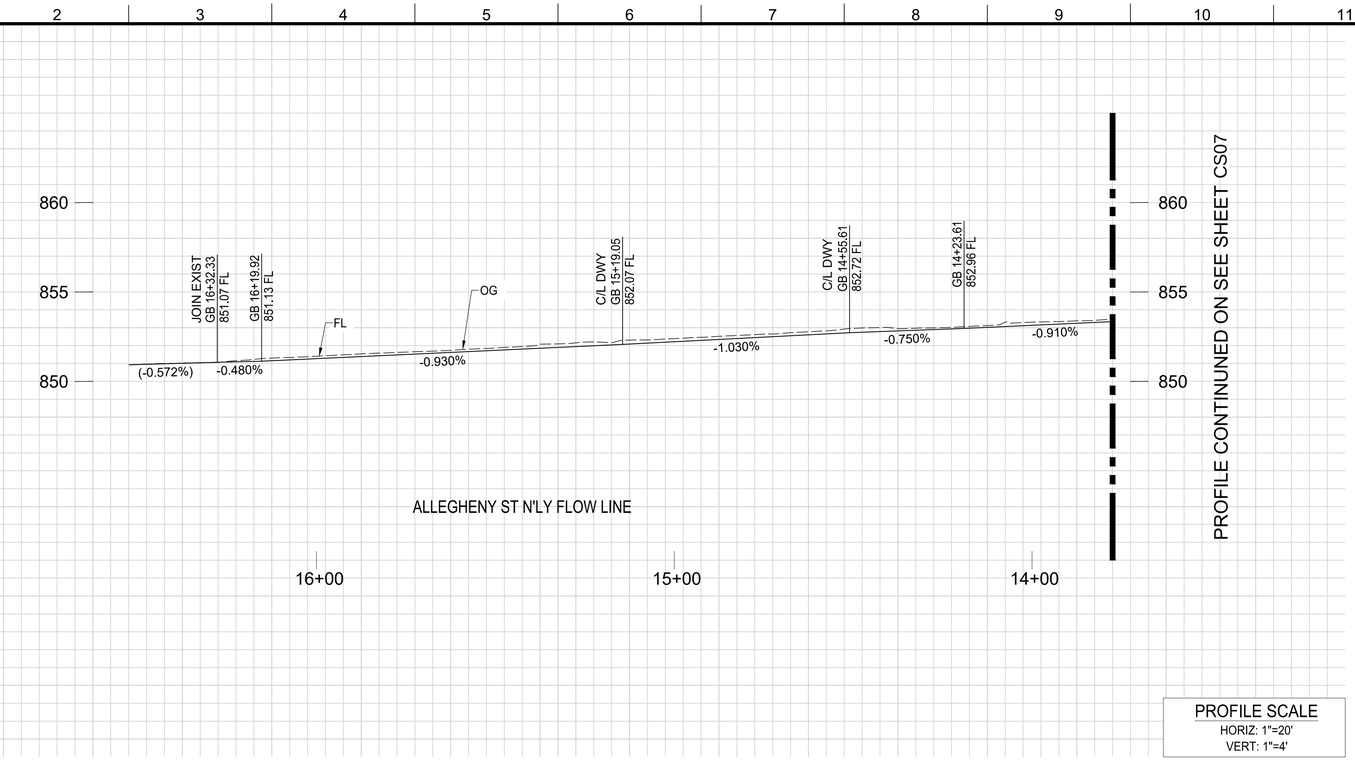

PROFILE SCALE
HORIZ: 1"=20'
VERT: 1"=4'

CONSTRUCTION SYMBOLS

CONSTRUCT	REMODEL EXISTING
EXISTING	REMOVE & CONSTRUCT
REMOVE	WORK BY OTHERS

CONSTRUCTION ITEMS

ITEM NO.	DESCRIPTION	STANDARD PLAN NO. CITY OF L.A.
1	CONCRETE CURB	S-410-2
2	TYPE C INTEGRAL CURB & GUTTER	S-410-2
4	CONCRETE GUTTER - SEE DETAIL A1 ON SHEET CI22	
10	CONCRETE DRIVEWAY	S-440-4
12	CONCRETE SIDEWALK (t=4")	S-444-0
13	CURB RAMP	S-442-5
14	ASPHALT CONCRETE PAVEMENT	
16	CRUSHED MISCELLANEOUS BASE	
20	TREE	
36	UTILITY POLE	
37	POLE ANCHOR	
38	STREET LIGHTING PULL BOX	
42	STREET LIGHT	
47	STREET SIGN	
50	UNKNOWN POLE	
51	POROUS PAVER - SEE DETAIL A1 ON SHEET CI22	
52	RELOCATE FENCE/GATE - SEE NOTE 2	
55	WATER VALVE	
60	PARKWAY/GRASS	
77	SAWCUT LINE & JOIN	
85	STORM DRAIN MAINTENANCE HOLE	
100	BOX CULVERT/SIDEWALK - SEE DETAIL A1 ON SHEET CI22	

NOTES:

1. PRIOR TO THIS IMPROVEMENT, THE PRIVATE PROPERTY OWNER SHALL MAKE ANY NECESSARY MODIFICATIONS/IMPROVEMENTS WITHIN THE PRIVATE PROPERTY RIGHT-OF-WAY IN ORDER TO MATCH THE PROPOSED BACK OF WALK ELEVATIONS AS SHOWN ON THIS PLAN. THESE IMPROVEMENTS WITHIN THE PRIVATE PROPERTY RIGHT-OF-WAY SHALL BE COMPLETED AT THE PROPERTY OWNER'S EXPENSE.
2. PRIOR TO THIS IMPROVEMENT, THE EXISTING PRIVATE PROPERTY FENCE/WALL SHALL BE REMOVED AND RELOCATED AT THE PROPERTY OWNER'S EXPENSE. THE FENCE/WALL SHALL BE INSTALLED BEHIND THE PUBLIC RIGHT-OF-WAY AND WITHIN THE PRIVATE PROPERTY.
3. SEE CS11 FOR GREEN STREET IMPROVEMENTS.
4. SEE DETAIL H ON SHEET CS09 FOR TYPICAL BUMPOUT DETAIL.
5. PRIOR TO CONSTRUCTION, THE STREET CENTERLINE AND THE PROPERTY LINES ON REMICK AVE, NORTH OF ALLEGHENY ST, SHALL BE SURVEYED IN ACCORDANCE TO THE CITY'S STANDARDS. IN ADDITION, THE CONTRACTOR SHALL SURVEY THE EXISTING CONDITION AT THE CONSTRUCTION LIMIT BEFORE THE START OF CONSTRUCTION. CONTRACTOR SHALL PROVIDE DESIGN REVISION AS NEEDED TO ENSURE THE IMPROVEMENT WILL JOIN TO THE EXISTING CONDITION ACCORDINGLY. ANY DESIGN REVISIONS SHALL BE SUBMITTED TO THE CITY FOR REVIEW AND APPROVAL PRIOR TO CONSTRUCTION.

PROFILE

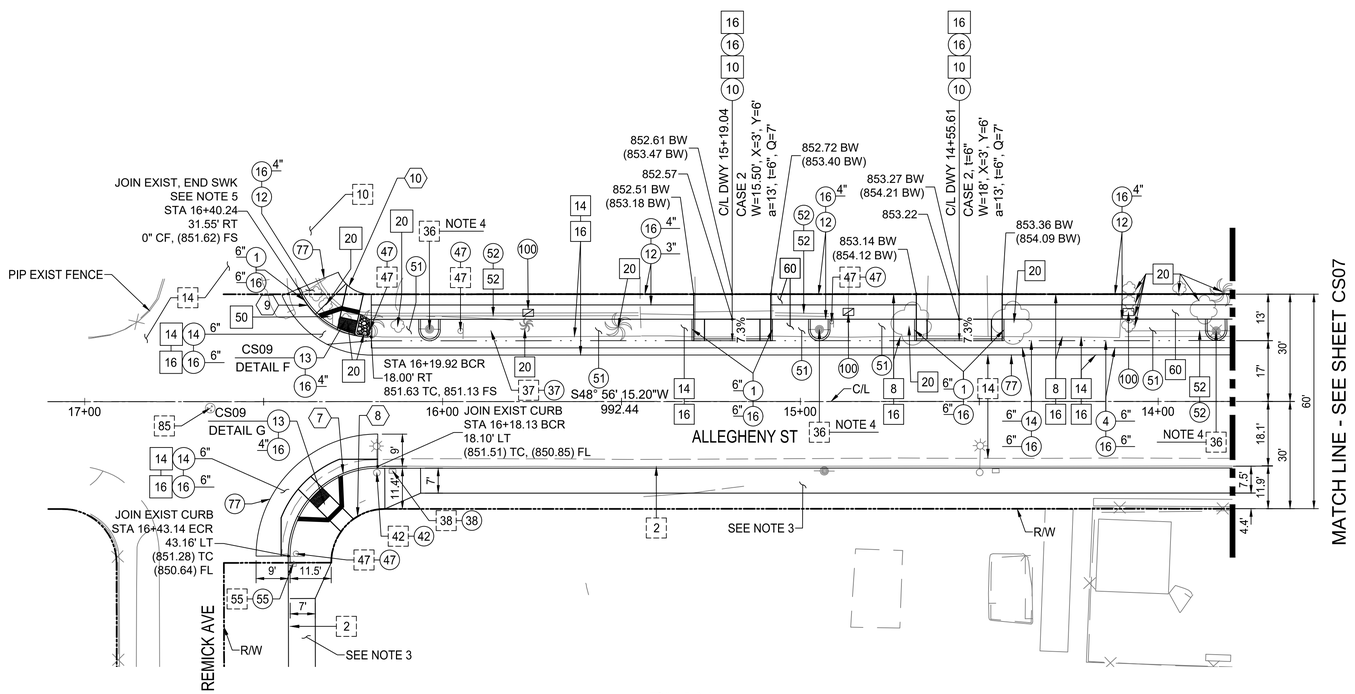

MATCH LINE - SEE SHEET CS07

PLAN

CURVE DATA TABLE

No.	RADIUS	DELTA	LENGTH	TANGENT	DESCRIPTION
7	25.00'	90° 06' 19"	39.32'	25.05'	SE CR @ REMICK ST
8	15.00'	90° 06' 19"	23.59'	15.03'	BW SE CR @ REMICK ST
9	22.00'	67° 25' 16"	25.89'	14.68'	NE CR @ REMICK ST
10	10.00'	67° 27' 51"	11.77'	6.68'	BW NE CR @ REMICK ST

LEGEND

- EXISTING SIGN
- EXISTING WATER VALVE
- EXISTING MISCELLANEOUS FEATURE (AS NOTED)
- EXISTING STREET LIGHT
- EXISTING STREET LIGHT
- EXISTING MAINTENANCE HOLE
- EXISTING PLANT
- EXISTING SHRUB
- EXISTING TREE
- EXISTING PALM TREE

20' 10' 0 20' 40'
SCALE: 1" = 20'

THIS PLAN WAS ELECTRONICALLY SIGNED AND STAMPED

JAVIER A. TISCARENO No. 94,744 Exp. 06-30-24 CIVIL STATE OF CALIFORNIA PROFESSIONAL ENGINEER REGISTERED
01-27-23

ENGINEERING CITY OF LOS ANGELES

BUREAU OF ENGINEERING

VERTICAL CONTROL: BENCH MARK (08-30460) NAVD 88
HORIZONTAL CONTROL: CALIFORNIA STATE PLANE ZONE V, 1983 NAD

SHEET TITLE: ROADWAY PLAN AND PROFILE 4

PROJECT: FERNANGELES PARK STORMWATER CAPTURE PROJECT

ADDRESS: FERNANAGELES RECREATION CENTER
8851 LAUREL CANYON BLVD, SUN VALLEY, CA 91352

CITY OF LOS ANGELES DEPARTMENT OF PUBLIC WORKS

NO.	REVISIONS	DATE	BY
		YY/MM/DD	
		YY/MM/DD	
		YY/MM/DD	
		YY/MM/DD	

CIP NO. SCP0001

INDEX NO.

CITY ENGINEER

	DESIGN GROUP	DATE
TED ALLEN, P.E.		01/27/2023
ENGINEER:	J. TISCARENO	01/27/2023
ARCHITECT:	N/A	01/27/2023
DESIGNED BY:	A. MARTINEZ	01/27/2023
DRAWN BY:	A. MARTINEZ	01/27/2023
CHECKED BY:	L. YUEN	01/27/2023
APPROVED BY:	XXX	01/27/2023

WORK ORDER
EW40079F

SHEET NAME
CS08

SHEET 33 OF 125 SHEETS

THE CITY OF LOS ANGELES OR ITS OFFICERS OR AGENTS SHALL NOT BE RESPONSIBLE FOR THE ACCURACY OR COMPLETENESS OF ELECTRONIC COPIES OF THIS PLAN SHEET.

REVISION DATES (DESIGN STAGE ONLY)

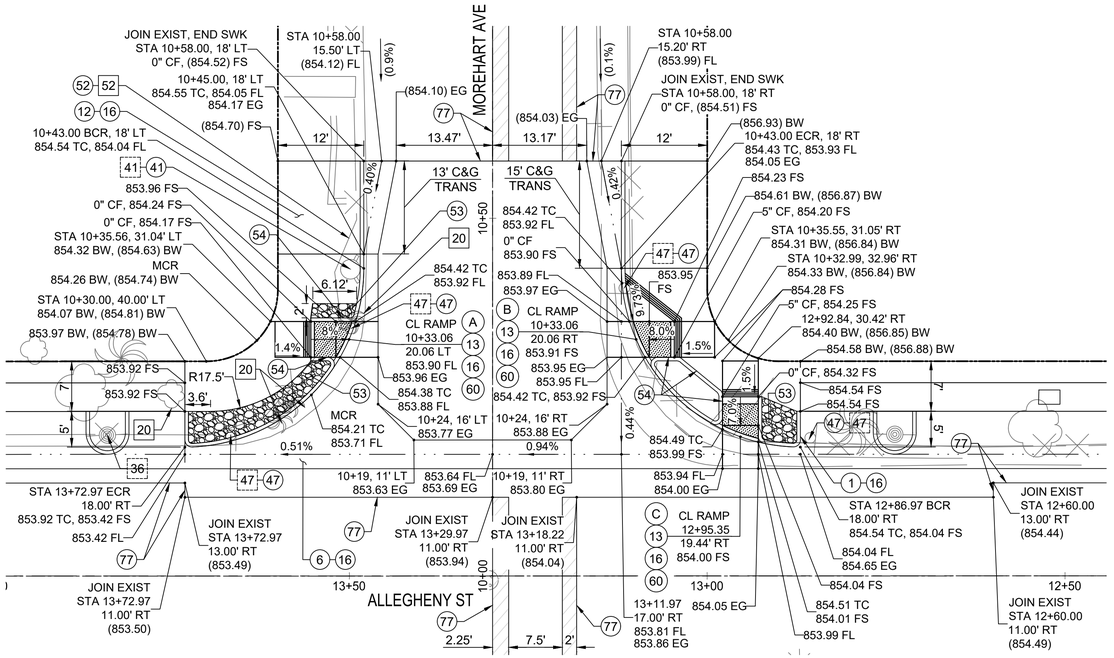

A CS06 **RAMP AT 10+33.06**
SCALE: 1" = 10'

B CS06 **RAMP AT 10+33.06**
SCALE: 1" = 10'

C CS06 **RAMP AT 12+95.35**
SCALE: 1" = 10'

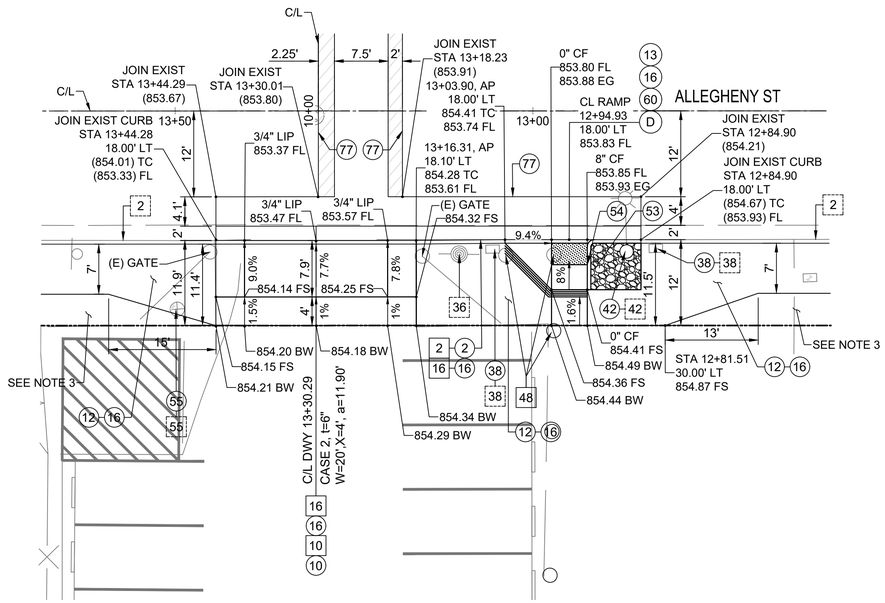

D CS06 **RAMP AT 12+94.93**
SCALE: 1" = 10'

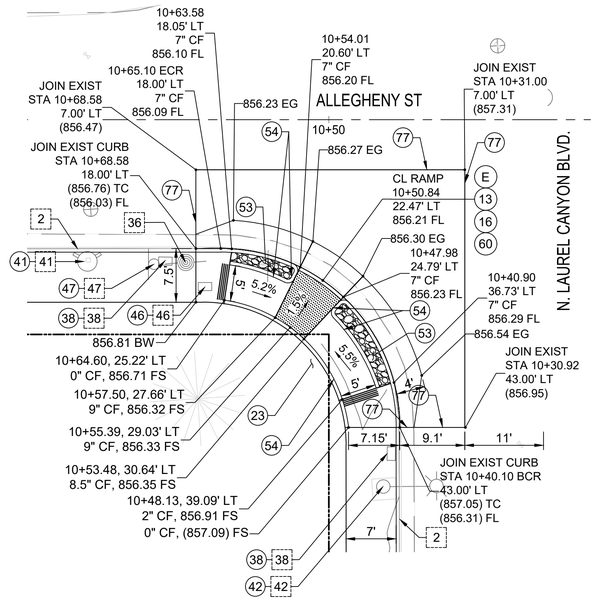

E CS06 **RAMP AT 10+50.84**
SCALE: 1" = 10'

CONSTRUCTION SYMBOLS

CONSTRUCT — REMODEL EXISTING
EXISTING — REMOVE & CONSTRUCT
REMOVE — WORK BY OTHERS

CONSTRUCTION ITEMS

ITEM NO.	DESCRIPTION	STANDARD PLAN NO. CITY OF L.A.
1	CONCRETE CURB	S-410-2
2	TYPE C INTEGRAL CURB & GUTTER	S-410-2
10	CONCRETE DRIVEWAY	S-440-4
12	CONCRETE SIDEWALK (t=4")	S-444-0
13	CURB RAMP	S-442-5
16	CRUSHED MISCELLANEOUS BASE	
20	TREE	
23	GRADE ONLY (3:1 SLOPE MAX)	
36	UTILITY POLE	
38	STREET LIGHTING PULL BOX	
41	FIRE HYDRANT	
42	STREET LIGHT	
46	WATER METER	
47	RELOCATE STREET SIGN	
52	RELOCATE FENCE/GATE - SEE NOTE 2	
53	NON-WALKABLE SURFACE - SEE DETAIL J ON SHEET CS10	
55	WATER VALVE	
54	CONCRETE RETAINING CURB	S-422-5
60	DETECTABLE WARNING SURFACE	
77	SAWCUT LINE & JOIN	

NOTE

1. ALL RETAINING CURB RADII WITHIN THE CURB RETURN ARE 1' UNLESS OTHERWISE SHOWN.
2. PRIOR TO THIS IMPROVEMENT, THE EXISTING PRIVATE PROPERTY FENCE/WALL SHALL BE REMOVED AND RELOCATED AT THE PROPERTY OWNER'S EXPENSE. THE FENCE/WALL SHALL BE INSTALLED BEHIND THE PUBLIC RIGHT-OF-WAY AND WITHIN THE PRIVATE PROPERTY.
3. SEE SHEET CS11 FOR GREEN STREET IMPROVEMENTS.

CURB RAMP DATA

	STATION	OFFSET	CASE	DETAIL	Q	W	X	Y	H
A	MOREHART AVE 10+33.06	20.06' LT	C	3	5.67'	5'	-	3.5'	-
B	MOREHART AVE 10+33.06	20.06' RT	C	4 (MOD)	5.62'	5'	5.5'	3.5'	-
C	ALLEGHENY ST 12+94.35	19.44' RT	C	3 (MOD)	5.38'	5'	-	4'	-
D	ALLEGHENY ST 12+94.93	18.00' LT	D	4	5'	5'	6.5'	7'	-
E	ALLEGHENY ST 10+50.84	22.47' LT	H (MOD)	-	-	5'	-	7.5' 10.1'	*

* SEE CURB RAMP DETAIL

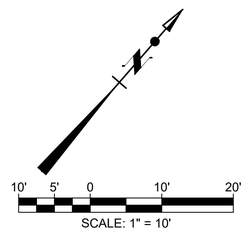

SCALE: 1" = 10'

THE CITY OF LOS ANGELES OR ITS OFFICERS OR AGENTS SHALL NOT BE RESPONSIBLE FOR THE ACCURACY OR COMPLETENESS OF ELECTRONIC COPIES OF THIS PLAN SHEET.

REVISION DATES (DESIGN STAGE ONLY)

ENGINEERING
CITY OF LOS ANGELES

PROFESSIONAL ENGINEER ★ REGISTERED ★ STATE OF CALIFORNIA
JAVIER A. TOSCANO
No. 84794
Exp. 06-30-24
01-27-23

THIS PLAN WAS ELECTRONICALLY • SIGNED AND STAMPED

BUREAU OF ENGINEERING

VERTICAL CONTROL: BENCH MARK:08-30460 (NAVD 88)
HORIZONTAL CONTROL: CALIFORNIA STATE PLANE ZONE V, 1983 NAD

SHEET TITLE: ROADWAY CURB RAMP DETAILS 1

PROJECT: FERNANGELES PARK STORMWATER CAPTURE PROJECT

ADDRESS: FERNANAGELES RECREATION CENTER
8851 LAUREL CANYON BLVD, SUN VALLEY, CA 91352

NO.	REVISIONS	DATE	BY
		YY/MM/DD	
		YY/MM/DD	
		YY/MM/DD	
		YY/MM/DD	

CITY ENGINEER
DATE
TED ALLEN, P.E. 01/27/2023

	DESIGN GROUP	DATE
ENGINEER:	J. TISCARENO	01/27/2023
ARCHITECT:	NA	01/27/2023
DESIGNED BY:	A. MARTINEZ	01/27/2023
DRAWN BY:	A. MARTINEZ	01/27/2023
CHECKED BY:	L. YUEN	01/27/2023
APPROVED BY:	XXX	01/27/2023

CIP NO. SCP0001

INDEX NO.

WORK ORDER EW40079F

SHEET NAME CS09

SHEET 34 OF 125 SHEETS

CITY OF LOS ANGELES DEPARTMENT OF PUBLIC WORKS

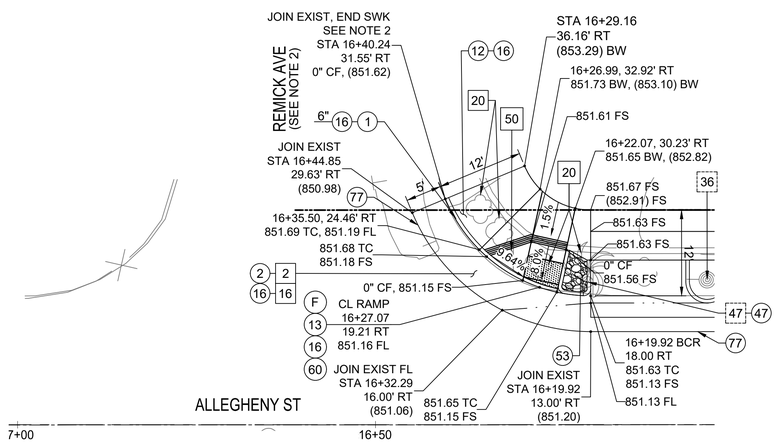

F CS06 RAMP AT 16+27.07

SCALE: 1" = 10'

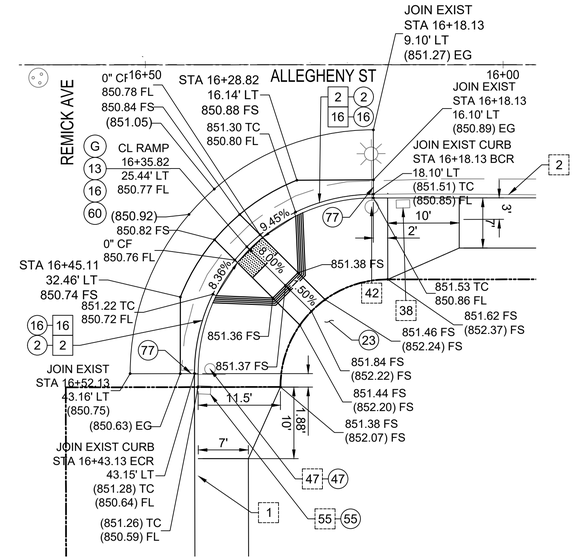

G CS06 RAMP AT 16+35.82

SCALE: 1" = 10'

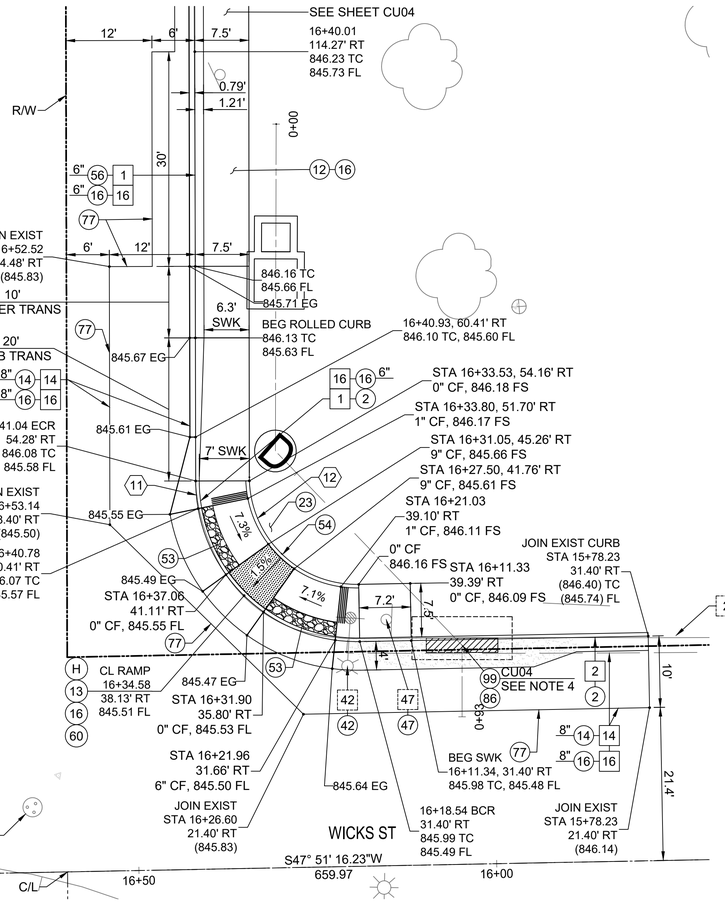

H CS05 RAMP AT 16+34.58

SCALE: 1" = 10'

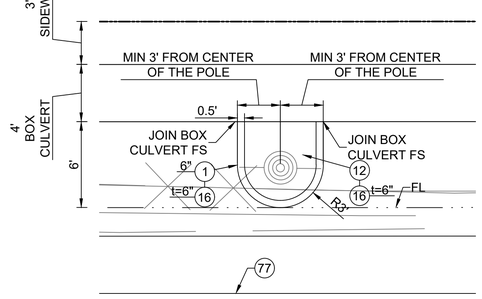

I CS05 CS06 BUMP OUT DETAIL

SCALE: 1" = 5'

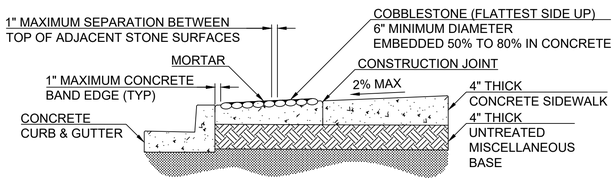

J CS08 CS09 NON-WALKABLE DETAIL

SCALE: 1" = 5'

THE NON-WALKABLE SURFACE INCLUDES THE FOLLOWING:
COBBLESTONES, MORTAR, CONCRETE BAND EDGE, AND 4" CONCRETE LAYER UNDERNEATH THE COBBLESTONES

CONSTRUCTION SYMBOLS

CONSTRUCT	REMODEL EXISTING
EXISTING	REMOVE & CONSTRUCT
REMOVE	WORK BY OTHERS

CONSTRUCTION ITEMS

ITEM NO.	DESCRIPTION	STANDARD PLAN NO. CITY OF L.A.
1	CONCRETE CURB	S-410-2
2	TYPE C INTEGRAL CURB & GUTTER	S-410-2
12	CONCRETE WALK (t=4")	
13	CURB RAMP	S-442-5
16	CRUSHED MISCELLANEOUS BASE	
20	TREE	
23	GRADE ONLY (3:1 SLOPE MAX)	
36	UTILITY POLE	
38	STREET LIGHTING PULL BOX	
42	STREET LIGHT	
47	RELOCATE STREET SIGN	
50	UNKNOWN POLE	
53	NON-WALKABLE SURFACE - SEE DETAIL J ON SHEET CS10	
54	CONCRETE RETAINING CURB	S-422-5
55	WATER VALVE	
56	CONCRETE ROLLED CURB & GUTTER - SEE DETAIL J9 ON SHEET CI22	
60	DETECTABLE WARNING SURFACE	
77	SAWCUT LINE & JOIN	
86	WARPED GUTTER AT CATCH BASIN	S-311-0
99	SIDE OPENING CATCH BASIN	S-351-1

NOTE

1. ALL RETAINING CURB RADII WITHIN THE CURB RETURN ARE 1' UNLESS OTHERWISE SHOWN.
2. PRIOR TO CONSTRUCTION, THE STREET CENTERLINE AND THE PROPERTY LINES ON REMICK AVE, NORTH OF ALLEGHENY ST, SHALL BE SURVEYED IN ACCORDANCE TO THE CITY'S STANDARDS. IN ADDITION, THE CONTRACTOR SHALL SURVEY THE EXISTING CONDITION AT THE CONSTRUCTION LIMIT BEFORE THE START OF CONSTRUCTION. CONTRACTOR SHALL PROVIDE DESIGN REVISION AS NEEDED TO ENSURE THE IMPROVEMENT WILL JOIN THE EXISTING CONDITION ACCORDINGLY. ANY DESIGN REVISIONS SHALL BE SUBMITTED TO THE CITY FOR REVIEW AND APPROVAL PRIOR TO CONSTRUCTION.
3. FOR STORM DRAIN IMPROVEMENTS, SEE CU PLANS.
4. SEE LABOE STD PLAN S-312-1 FOR PAVEMENT REMODELING AT CATCH BASIN.

CURB RAMP DATA

	STATION	OFFSET	CASE	DETAIL	Q	W	X	Y	H
F	ALLEGHENY ST 16+27.07	19.21' RT	C	4	6.23'	5'	5.50'	6'	-
G	ALLEGHENY ST 16+35.82	25.42' LT	I	1	5.12'	5'	5.50'	7.5'	-
H	WICKS ST 16+34.58	38.13' RT	H (MOD)	-	-	5'	-	7'	*

* SEE CURB RAMP DETAIL

CURVE DATA TABLE

No.	RADIUS	DELTA	LENGTH	TANGENT	DESCRIPTION
11	22.50'	90° 58' 46"	35.73'	22.89'	NE CR @ WICKS ST
12	15.00'	90° 58' 46"	23.82'	15.26'	BW NE CR @ WICKS ST

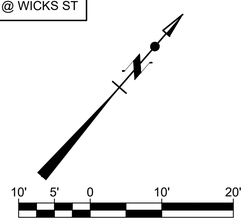

SCALE: 1" = 10'

BUREAU OF ENGINEERING
CITY OF LOS ANGELES
DEPARTMENT OF PUBLIC WORKS

ENGINEERING
CITY OF LOS ANGELES

THIS PLAN WAS ELECTRONICALLY SIGNED AND STAMPED

PROFESSIONAL ENGINEER ★ JAVIER A. TOSCANO ★ No. 91352 ★ REGISTERED ★ STATE OF CALIFORNIA ★ Exp. 01-31-24 01-27-23

VERTICAL CONTROL: BENCH MARK 08-30460 (NAVD 88)
HORIZONTAL CONTROL: CALIFORNIA STATE PLANE ZONE V. 1983 NAD

SHEET TITLE: ROADWAY CURB RAMP DETAILS 2
PROJECT: FERNANGELES PARK STORMWATER CAPTURE PROJECT
ADDRESS: FERNANAGELES RECREATION CENTER 8851 LAUREL CANYON BLVD, SUN VALLEY, CA 91352

BY	DATE	REVISIONS
	YY/MM/DD	
	YY/MM/DD	
	YY/MM/DD	
	YY/MM/DD	

CIP NO. SCP0001

INDEX NO.

CITY ENGINEER
TED ALLEN, P.E.

DESIGN GROUP	DATE
ENGINEER: J. TISCARENO	01/27/2023
ARCHITECT: NA	01/27/2023
DESIGNED BY: A. MARTINEZ	01/27/2023
DRAWN BY: A. MARTINEZ	01/27/2023
CHECKED BY: L. YUEN	01/27/2023
APPROVED BY: XXX	01/27/2023

WORK ORDER
EW40079F

SHEET NAME
CS10
SHEET 35 OF 125 SHEETS

REVISION DATES (DESIGN STAGE ONLY)

THE CITY OF LOS ANGELES OR ITS OFFICERS OR AGENTS SHALL NOT BE RESPONSIBLE FOR THE ACCURACY OR COMPLETENESS OF ELECTRONIC COPIES OF THIS PLAN SHEET.

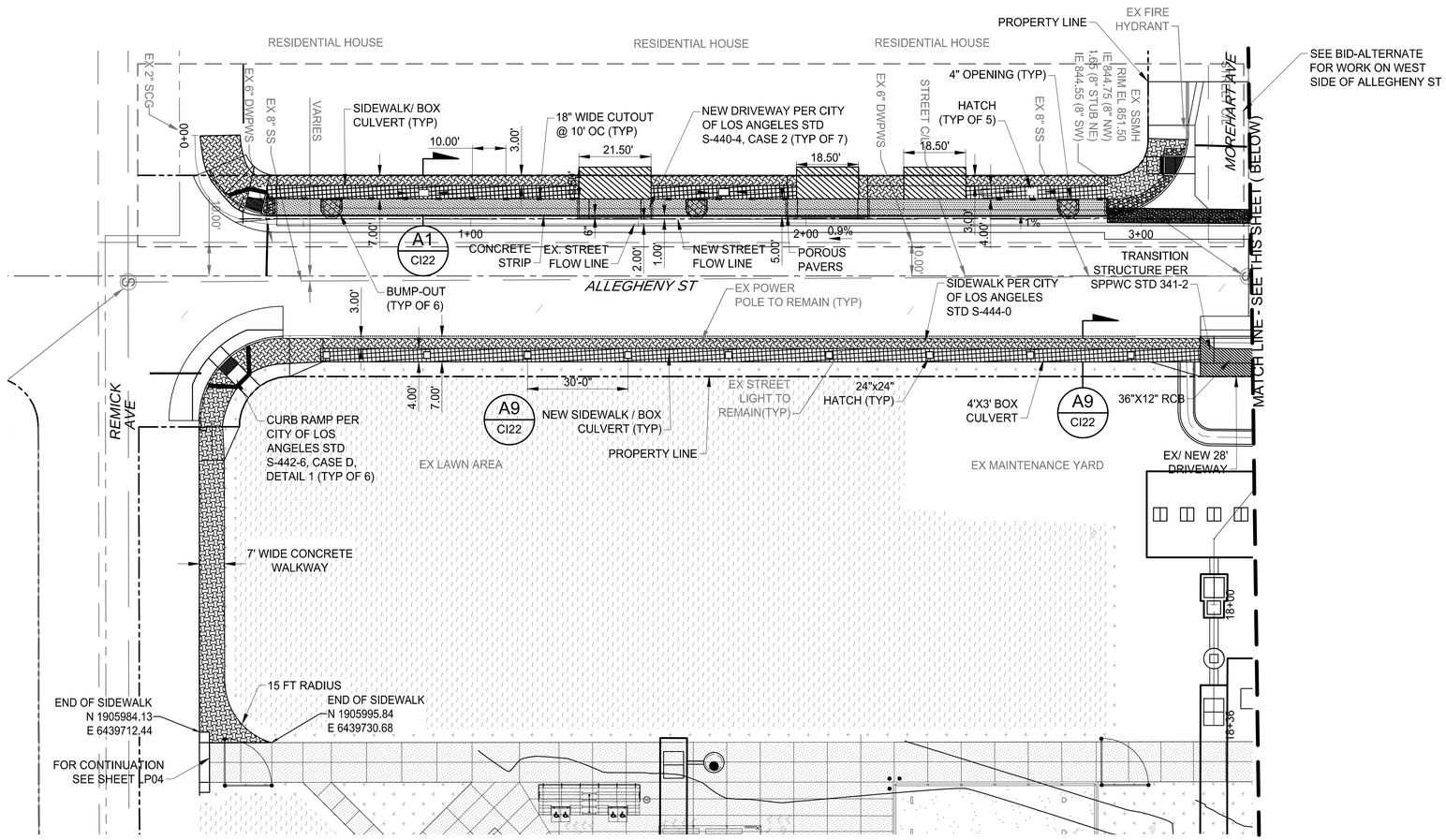

REMICK STREET, ALLEGHENY STREET AND LAUREL CANYON BOULEVARD GREEN STREET IMPROVEMENT PLAN

1" = 20'

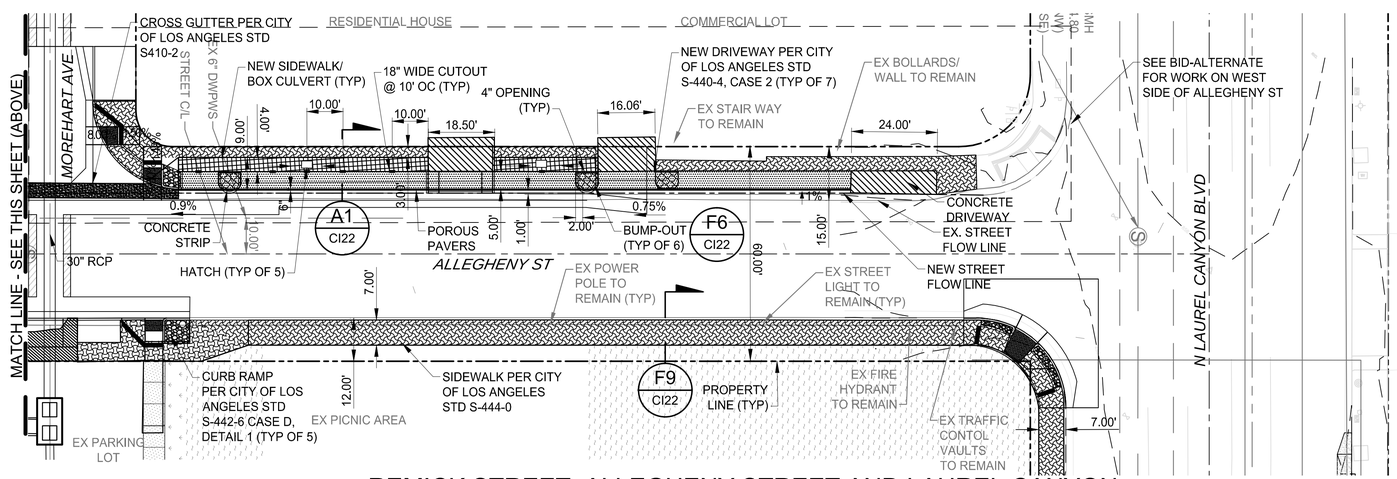

REMICK STREET, ALLEGHENY STREET AND LAUREL CANYON BOULEVARD GREEN STREET IMPROVEMENT PLAN

1" = 20'

NOTE

1. EX SURFACE FEATURES WITHIN CITY ROW TO BE REMOVED BY OTHERS.

LEGEND:

- BUMP OUT
- CONCRETE SIDEWALK
- CURB RAMP
- POROUS PAVER
- BOX CULVERT/ SIDEWALK
- DRIVEWAY APRON

20' 0 20' 40'

1" = 20'

ENGINEERING
CITY OF LOS ANGELES

PROFESSIONAL ENGINEER — TED S. ALLEN — No. C 48973 — EXP. 08/31/2026 — REGISTERED — STATE OF CALIFORNIA — 01/27/2023

THIS PLAN WAS ELECTRONICALLY • SIGNED AND STAMPED

BUREAU OF ENGINEERING

VERTICAL CONTROL: BENCH MARK 08-30460 (NAVD 88)
HORIZONTAL CONTROL: CALIFORNIA STATE PLANE ZONE V, 1983 NAD

SHEET TITLE: ALLEGHENY GREEN STREET IMPROVEMENTS PLAN
PROJECT: FERNANGELES PARK STORMWATER CAPTURE PROJECT
ADDRESS: FERNANGELES RECREATION CENTER 8851 LAUREL CANYON BLVD, SUN VALLEY, CA 91352

NO.	REVISIONS	DATE	BY
		YY/MM/DD	
		YY/MM/DD	
		YY/MM/DD	
		YY/MM/DD	

CIP NO. SCP0002

INDEX NO.

CITY OF LOS ANGELES DEPARTMENT OF PUBLIC WORKS

CITY ENGINEER — DATE

TED ALLEN, P.E. — 04/11/2023

DESIGN GROUP		DATE
ENGINEER:	CDM SMITH INC.	04/11/2023
ARCHITECT:	NA	04/11/2023
DESIGNED BY:	M. MA	04/11/2023
DRAWN BY:	C. BILDERBACK	04/11/2023
CHECKED BY:	P. TAURASI	04/11/2023
APPROVED BY:	A. DELLINGER	04/11/2023

WORK ORDER EW40079F

SHEET NAME CS11

SHEET 36 OF 125 SHEETS

THE CITY OF LOS ANGELES OR ITS OFFICERS OR AGENTS SHALL NOT BE RESPONSIBLE FOR THE ACCURACY OR COMPLETENESS OF ELECTRONIC COPIES OF THIS PLAN SHEET.

REVISION DATES (DESIGN STAGE ONLY)

SHEET VERSION 4.0.1 FILE PATH: C:\CDMEXT\SAMIDURAIM\D0491589\CS111.DWG PLOT DATE: 10/9/2024 3:20 PM SAVED: 10/9/2024 3:18 PM SAVED BY:SAMIDURAIM

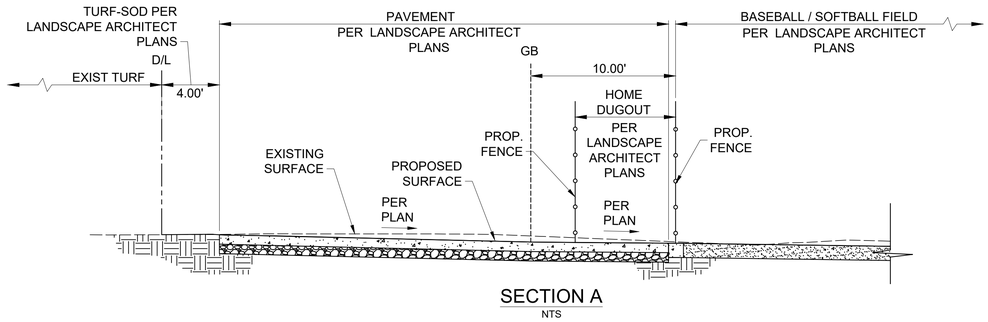

SECTION A
NTS

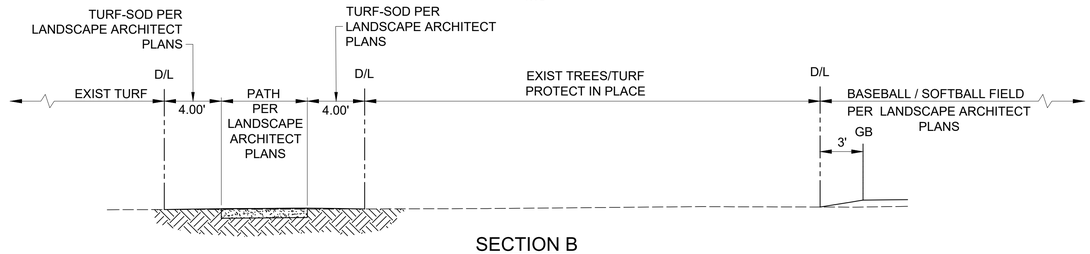

SECTION B
NTS

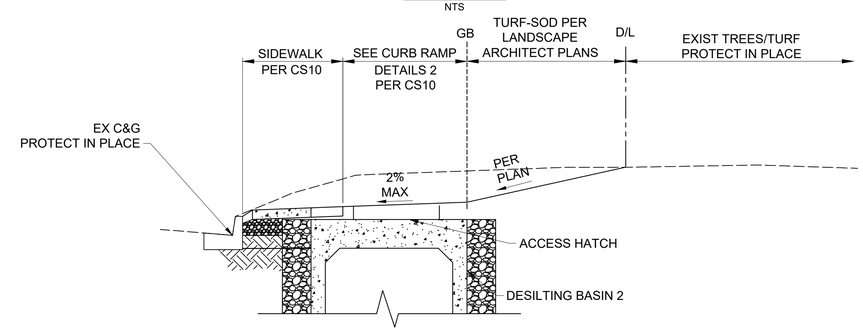

SECTION C
NTS

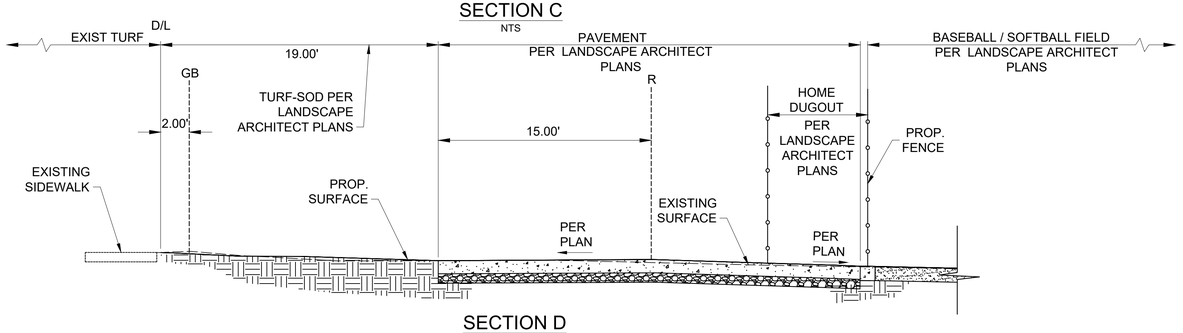

SECTION D
NTS

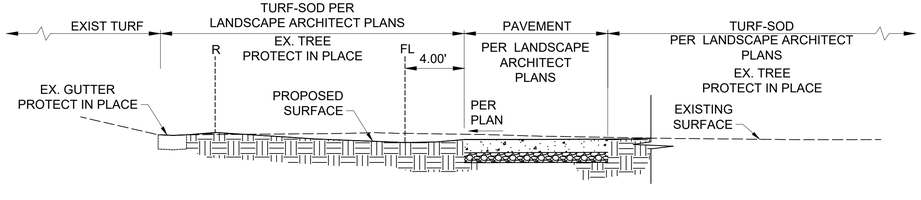

SECTION E
NTS

NOTES

1. **GRADING/RETAINING WALL/SHORING PLAN CORRECTION SHEETS (2017 LABC) ITEM C-5.**
   a. ALL GRADING SLOPES SHALL BE PLANTED AND SPRINKLERED. (7012.1).
   b. STANDARD 12 INCH HIGH BERM IS REQUIRED AT TOP OF ALL GRADED SLOPES. (7013.3).
   c. NO FILL TO BE PLACED, UNTIL THE CITY GRADING INSPECTOR HAS INSPECTED AND APPROVED THE BOTTOM EXCAVATION.
   d. MAN-MADE FILL SHALL BE COMPACTED TO A MINIMUM RELATIVE COMPACTION OF 90% MAX. DRY DENSITY WITHIN 40 FEET BELOW FINISH GRADE AND 93% OF MAX. DRY DENSITY DEEPER THAN 40 FEET BELOW FINISH GRADE, UNLESS A LOWER RELATIVE COMPACTION (NOT LESS THAN 90% OF MAX. DRY DENSITY) IS JUSTIFIED BY THE SOILS ENGINEER.
   e. TEMPORARY EROSION CONTROL TO BE INSTALLED DURING THE WET SEASON (BETWEEN OCTOBER 1 AND APRIL 15). OBTAIN GRADING INSPECTOR'S AND DEPARTMENT OF PUBLIC WORKS APPROVAL OF PROPOSED PROCEDURES. [>200 CY] (7007.1).
2. **FOR TREE PROTECTION REQUIREMENTS, SEE SHEET LP03 TO LP05.**

LEGEND

PARK

- JOIN EXIST/DAYLGHT LINE
- CONCRETE PER LANDSCAPE ARCH. PLANS
- TURF - SOD PER LANDSCAPE ARCH. PLANS
- DG PER LANDSCAPE ARCH. PLANS

ABBREVIATIONS

ARCH	ARCHITECTURE
AVE	AVENUE
BLVD	BOULEVARD
BW	BACK OF WALK
C&G	CURB AND GUTTER
CY	CUBIC YARD
DG	DECOMPOSED GRANITE
D/L	DAYLIGHT
DWG	DRAWING
DWY	DRIVEWAY
EX	EXISTING
FG	FINISHED GROUND
FL	FLOWLINE
FS	FINISH SURFACE
GB	GRADEBREAK
LABC	LOS ANGELES BUILDING CODE
MAX	MAXIMUM
NTS	NOT TO SCALE
PROP	PROPOSED
R	RIDGELINE
ST	STREET
TYP	TYPICAL

THE CITY OF LOS ANGELES OR ITS OFFICERS OR AGENTS SHALL NOT BE RESPONSIBLE FOR THE ACCURACY OR COMPLETENESS OF ELECTRONIC COPIES OF THIS PLAN SHEET.

REVISION DATES (DESIGN STAGE ONLY)

ENGINEERING
CITY OF LOS ANGELES

THIS PLAN WAS ELECTRONICALLY SIGNED AND STAMPED

PROFESSIONAL ENGINEER ★ KINNEY ★ REGISTERED ★ STATE OF CALIFORNIA ★ CIVIL
JAVIER A. TOSCANO
No. 34784
Exp. 06-30-24
01-27-23

BUREAU OF ENGINEERING

VERTICAL CONTROL: BENCH MARK:08-30460 (NAVD 88)
HORIZONTAL CONTROL: CALIFORNIA STATE PLANE ZONE V. 1983 NAD

SHEET TITLE: GRADING PLAN 1

PROJECT: FERNANGELES PARK STORMWATER CAPTURE PROJECT

ADDRESS: FERNANAGELES RECREATION CENTER
8851 LAUREL CANYON BLVD, SUN VALLEY, CA 91352

NO.	REVISIONS	DATE	BY
		YY/MM/DD	
		YY/MM/DD	
		YY/MM/DD	
		YY/MM/DD	

CIP NO. SCP0001

INDEX NO.

CITY OF LOS ANGELES DEPARTMENT OF PUBLIC WORKS

CITY ENGINEER: TED ALLEN, P.E.

DESIGN GROUP		DATE
ENGINEER:	J. TISCARENO	01/27/2023
ARCHITECT:	NA	01/27/2023
DESIGNED BY:	A. MARTINEZ	01/27/2023
DRAWN BY:	A. MARTINEZ	01/27/2023
CHECKED BY:	L. YUEN	01/27/2023
APPROVED BY:	XXX	01/27/2023

WORK ORDER
EW40079F

SHEET NAME
CS12

SHEET 37 OF 125 SHEETS

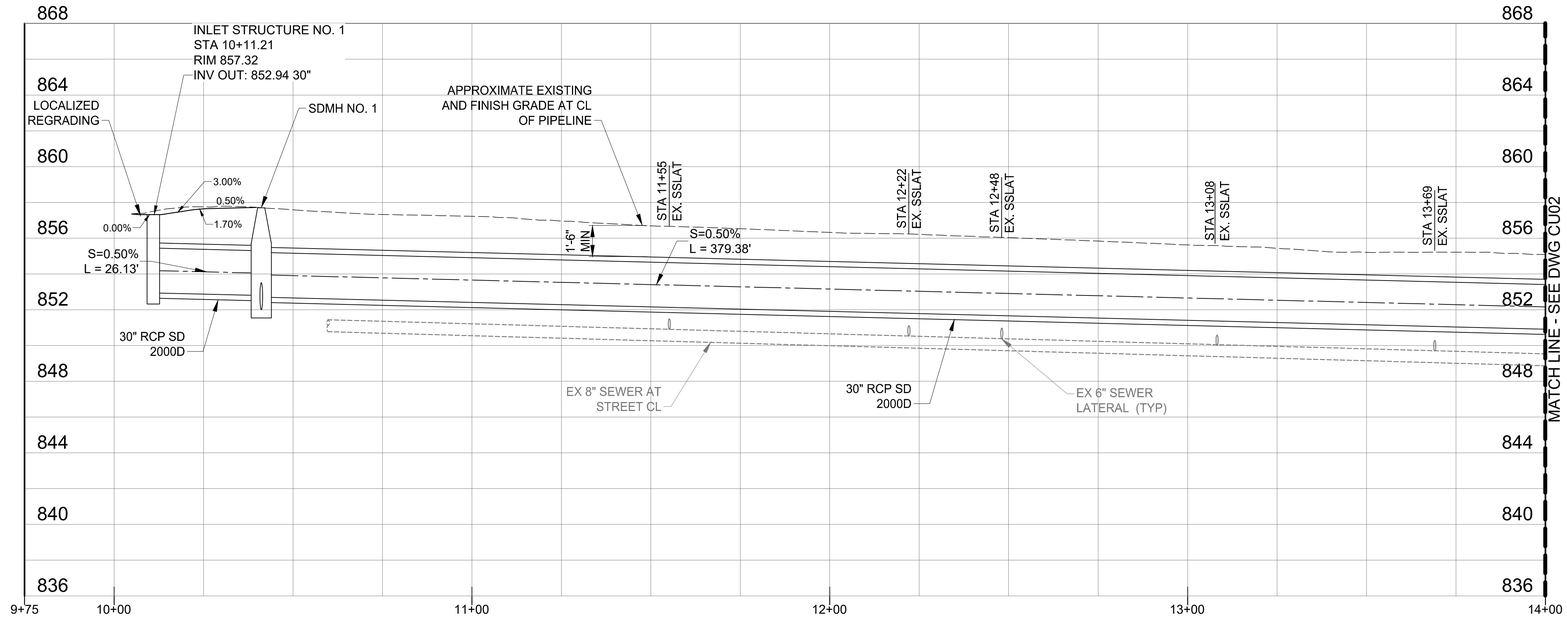

STORM WATER CONVEYANCE PROFILE - MOREHART AVENUE

1" = 20' H; 1" = 4' V

20' 0 20' 40'
1" = 20'

4' 0 4' 4'
1" = 4'

NOTE

1. SDMH NO. 1 SHALL BE 5' ID AND IN ACCORDANCE WITH LABOE STANDARD PLANS S-150-0. PROVIDE PRESSURE FRAME AND COVER PER LABOE STANDARD PLAN S-284-2 WITH THE LETTER "D" LOCATOR ON THE COVER.

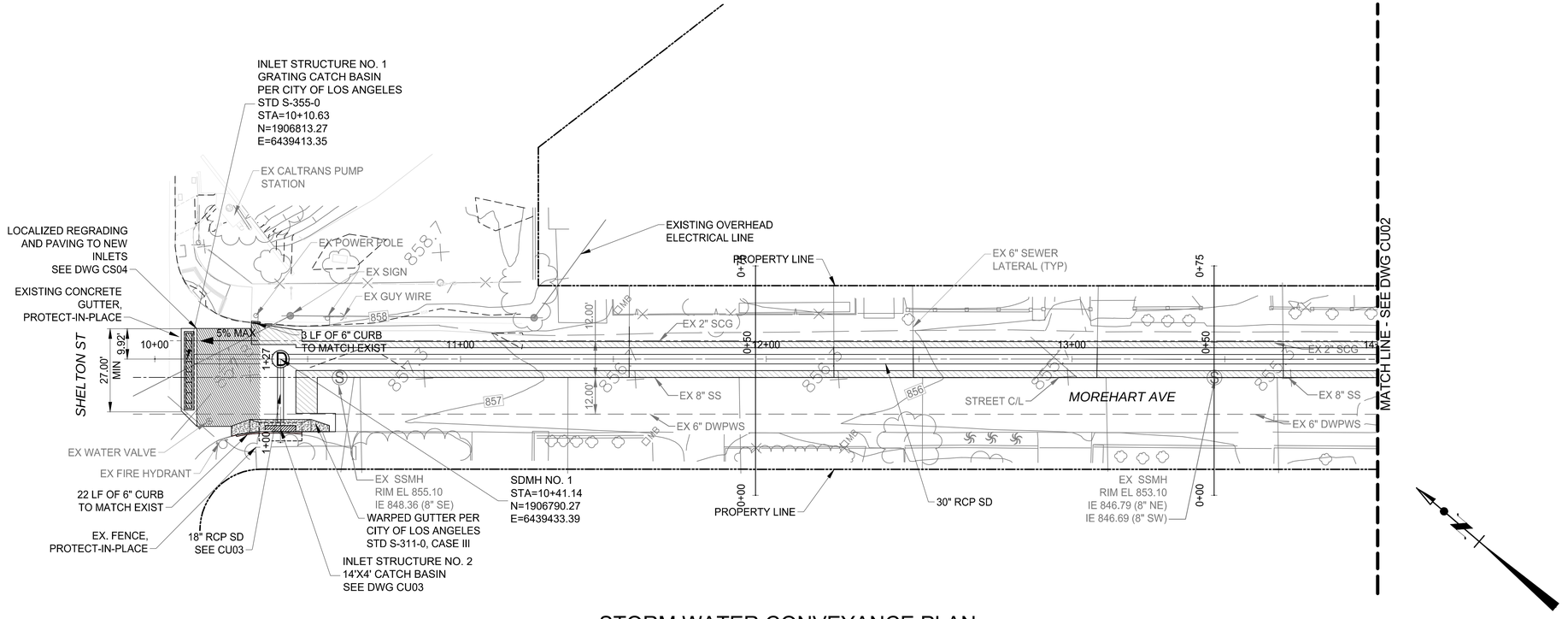

STORM WATER CONVEYANCE PLAN - MOREHART AVENUE

1" = 20'

20' 0 20' 40'
1" = 20'

THE CITY OF LOS ANGELES OR ITS OFFICERS OR AGENTS SHALL NOT BE RESPONSIBLE FOR THE ACCURACY OR COMPLETENESS OF ELECTRONIC COPIES OF THIS PLAN SHEET.

REVISION DATES (DESIGN STAGE ONLY)

BUREAU OF ENGINEERING • THIS PLAN WAS ELECTRONICALLY SIGNED AND STAMPED

ENGINEERING
CITY OF LOS ANGELES

PROFESSIONAL ENGINEER
REGISTERED
TED S. ALLEN
No. C 48973
EXP. 08/31/2026
STATE OF CALIFORNIA
01/27/2023

VERTICAL CONTROL: BENCH MARK 08-30460 (NAVD 88)
HORIZONTAL CONTROL: CALIFORNIA STATE PLANE ZONE V, 1983 NAD

SHEET TITLE: STORM WATER CONVEYANCE PLAN AND PROFILE 1

PROJECT: FERNANGELES PARK STORMWATER CAPTURE PROJECT

ADDRESS: FERNANGELES RECREATION CENTER 8851 LAUREL CANYON BLVD, SUN VALLEY, CA 91352

NO.	REVISIONS	DATE	BY
		YY/MM/DD	
		YY/MM/DD	
		YY/MM/DD	
		YY/MM/DD	

CIP NO. SCP0002

INDEX NO.

CITY OF LOS ANGELES DEPARTMENT OF PUBLIC WORKS

CITY ENGINEER

DESIGN GROUP	DATE
TED ALLEN, P.E.	04/11/2023
ENGINEER: CDM SMITH INC.	04/11/2023
ARCHITECT: NA	04/11/2023
DESIGNED BY: M. MA	04/11/2023
DRAWN BY: C. BILDERBACK	04/11/2023
CHECKED BY: P. TAURASI	04/11/2023
APPROVED BY: A. DELLINGER	04/11/2023

WORK ORDER
EW40079F

SHEET NAME
CU01

SHEET 38 OF 125 SHEETS

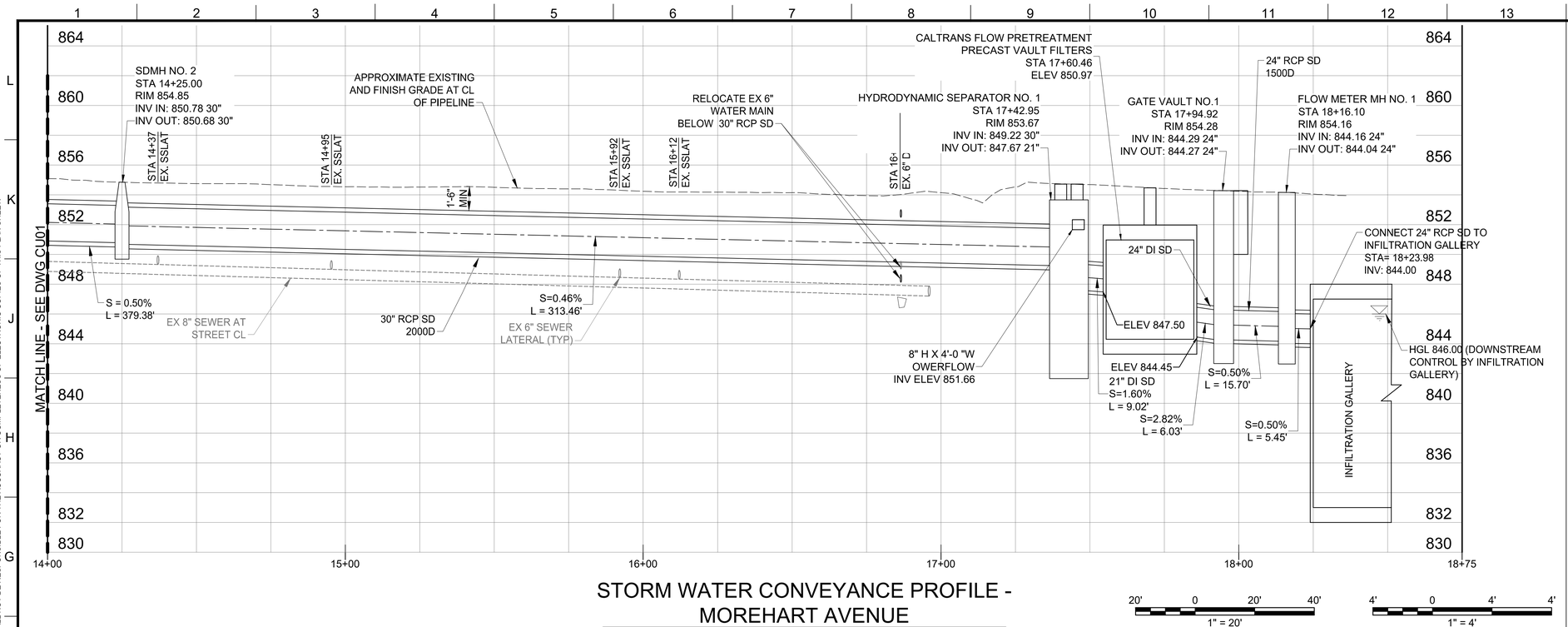

STORM WATER CONVEYANCE PROFILE - MOREHART AVENUE

1" = 20' H; 1" = 4' V

20' 0 20' 40' — 1" = 20'

4' 0 4' 4' — 1" = 4'

NOTE

1. SDMH NO. 2 SHALL BE 5' ID AND IN ACCORDANCE WITH LABOE STANDARD PLANS S-150-0. PROVIDE PRESSURE FRAME AND COVER PER LABOE STANDARD PLAN S-284-2 WITH THE LETTER "D" LOCATOR ON THE COVER.

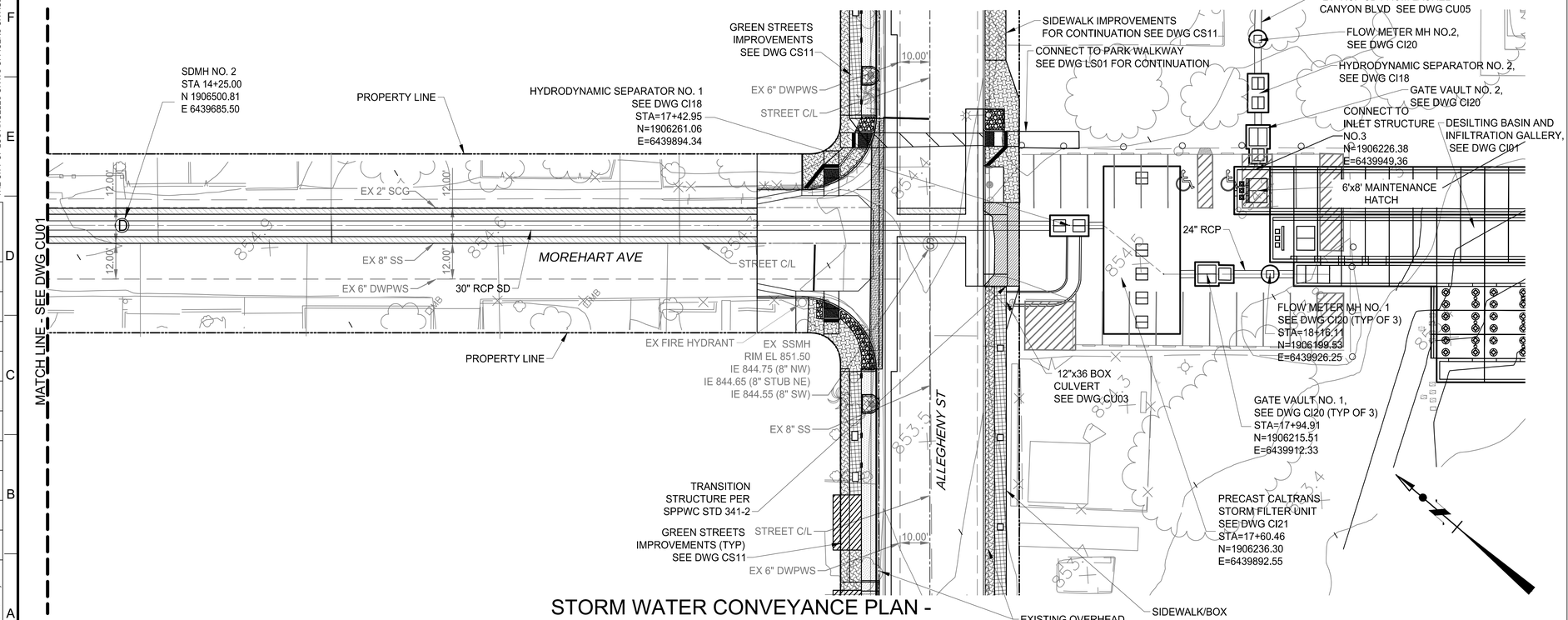

STORM WATER CONVEYANCE PLAN - MOREHART AVENUE

1" = 20'

20' 0 20' 40' — 1" = 20'

THE CITY OF LOS ANGELES OR ITS OFFICERS OR AGENTS SHALL NOT BE RESPONSIBLE FOR THE ACCURACY OR COMPLETENESS OF ELECTRONIC COPIES OF THIS PLAN SHEET.

REVISION DATES (DESIGN STAGE ONLY)

ENGINEERING
CITY OF LOS ANGELES

THIS PLAN WAS ELECTRONICALLY • SIGNED AND STAMPED •

REGISTERED PROFESSIONAL ENGINEER TED S. ALLEN No. C 48973 EXP. 06/30/2026 STATE OF CALIFORNIA 01/27/2023

BUREAU OF ENGINEERING

VERTICAL CONTROL: BENCH MARK (08-30460) NAVD 88
HORIZONTAL CONTROL: CALIFORNIA STATE PLANE ZONE V, 1983 NAD

SHEET TITLE: STORM WATER CONVEYANCE PLAN AND PROFILE 2

PROJECT: FERNANGELES PARK STORMWATER CAPTURE PROJECT

ADDRESS: FERNANGELES RECREATION CENTER 8851 LAUREL CANYON BLVD, SUN VALLEY, CA 91352

NO.	REVISIONS	DATE	BY
		YY/MM/DD	
		YY/MM/DD	
		YY/MM/DD	
		YY/MM/DD	

CIP NO. SCP0002

INDEX NO.

CITY OF LOS ANGELES DEPARTMENT OF PUBLIC WORKS

CITY ENGINEER: TED ALLEN, P.E. — DATE: 04/11/2023

DESIGN GROUP	
ENGINEER:	CDM SMITH INC.
ARCHITECT:	NA
DESIGNED BY:	M. MA
DRAWN BY:	C. BILDERBACK
CHECKED BY:	P. TAURASI
APPROVED BY:	A. DELLINGER

WORK ORDER
EW40079F

SHEET NAME
CU02

SHEET 39 OF 125 SHEETS

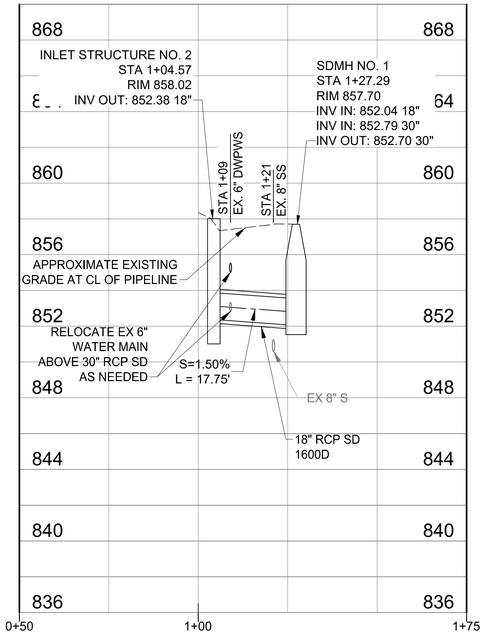

STORM WATER CONVEYANCE PROFILE - MOREHART AVE INLET NO. 2

1" = 20' H; 1" = 4' V

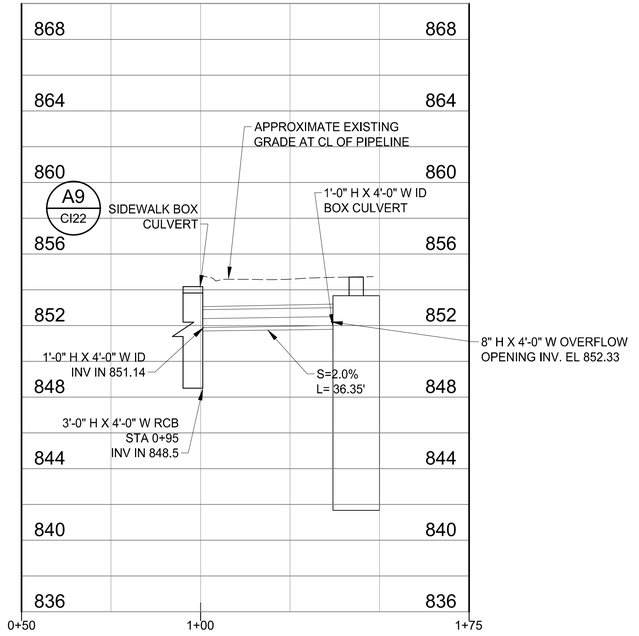

STORM WATER CONVEYANCE PROFILE - HYDRODYNAMIC SEPARATOR OVERFLOW

1" = 20' H; 1" = 4' V

4' 0 4' 4'
1" = 4'

20' 0 20' 40'
1" = 20'

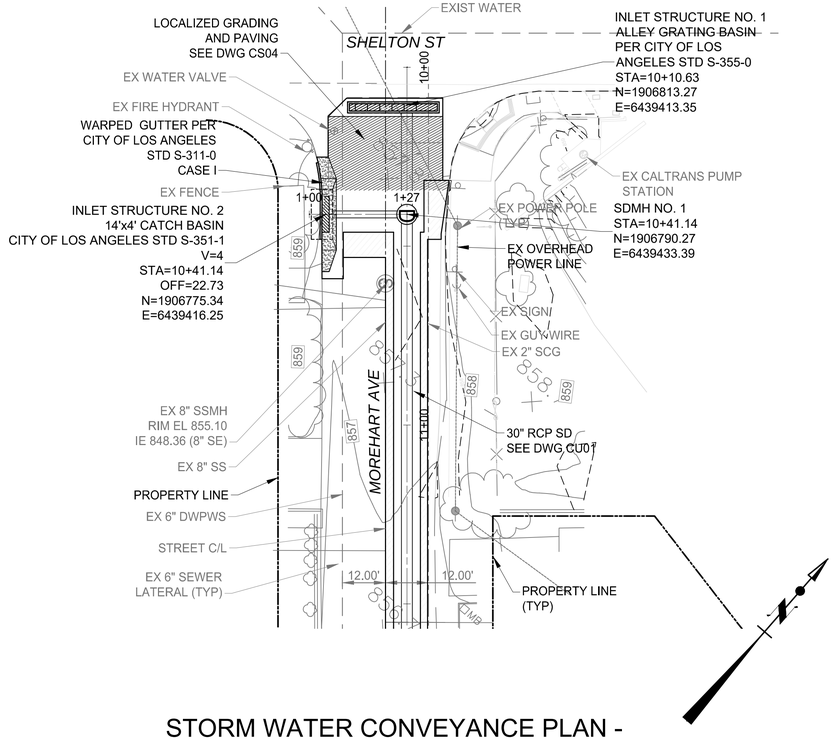

STORM WATER CONVEYANCE PLAN - MOREHART AVE INLET NO. 2

1" = 20'

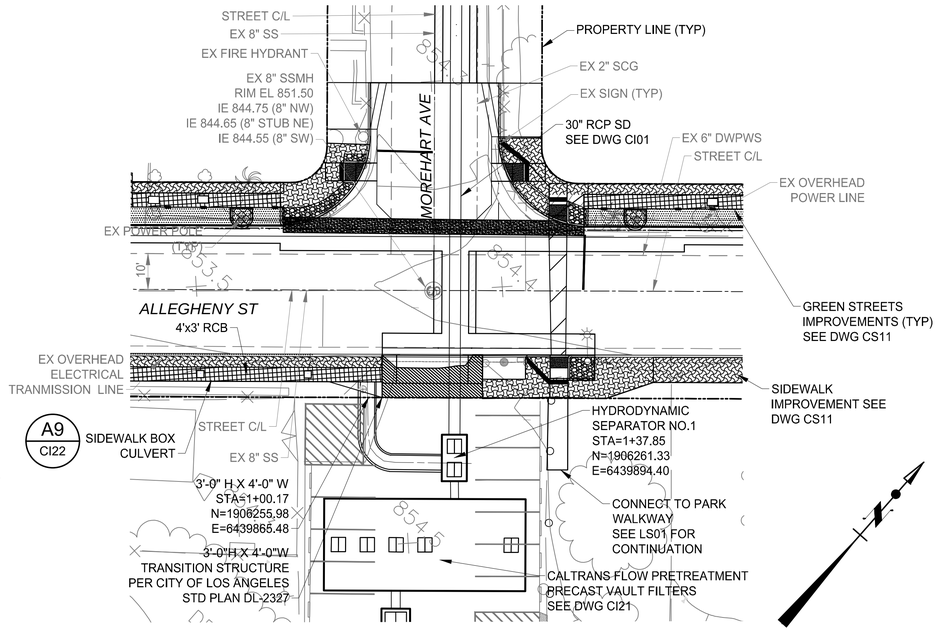

STORM WATER CONVEYANCE PLAN - ALLEGHENY ST INLET NO. 3

1" = 20'

20' 0 20' 40'
1" = 20'

THE CITY OF LOS ANGELES OR ITS OFFICERS OR AGENTS SHALL NOT BE RESPONSIBLE FOR THE ACCURACY OR COMPLETENESS OF ELECTRONIC COPIES OF THIS PLAN SHEET.

REVISION DATES
(DESIGN STAGE ONLY)

ENGINEERING
CITY OF LOS ANGELES

THIS PLAN WAS ELECTRONICALLY
• SIGNED AND STAMPED •

PROFESSIONAL ENGINEER
REGISTERED
TED S. ALLEN
No. C 48973
EXP. 06/30/2026
STATE OF CALIFORNIA
01/27/2023

BUREAU OF ENGINEERING

VERTICAL CONTROL: BENCH MARK (08-30460) NAVD 88
HORIZONTAL CONTROL: CALIFORNIA STATE PLANE ZONE V, 1983 NAD

SHEET TITLE: STORM WATER CONVEYANCE PLAN AND PROFILE 3

PROJECT: FERNANGELES PARK STORMWATER CAPTURE PROJECT

ADDRESS: FERNANGELES RECREATION CENTER
8851 LAUREL CANYON BLVD, SUN VALLEY, CA 91352

CITY OF LOS ANGELES DEPARTMENT OF PUBLIC WORKS

NO.	REVISIONS	DATE	BY
		YY/MM/DD	
		YY/MM/DD	
		YY/MM/DD	
		YY/MM/DD	

CIP NO. SCP0002

INDEX NO.

CITY ENGINEER

	DESIGN GROUP	DATE
ENGINEER:	CDM SMITH INC.	04/11/2023
ARCHITECT:	NA	04/11/2023
DESIGNED BY:	M. MA	04/11/2023
DRAWN BY:	C. BILDERBACK	04/11/2023
CHECKED BY:	P. TAURASI	04/11/2023
APPROVED BY:	A. DELLINGER	04/11/2023

TED ALLEN, P.E.

WORK ORDER
EW40079F

SHEET NAME
CU03

SHEET 40 OF 125 SHEETS

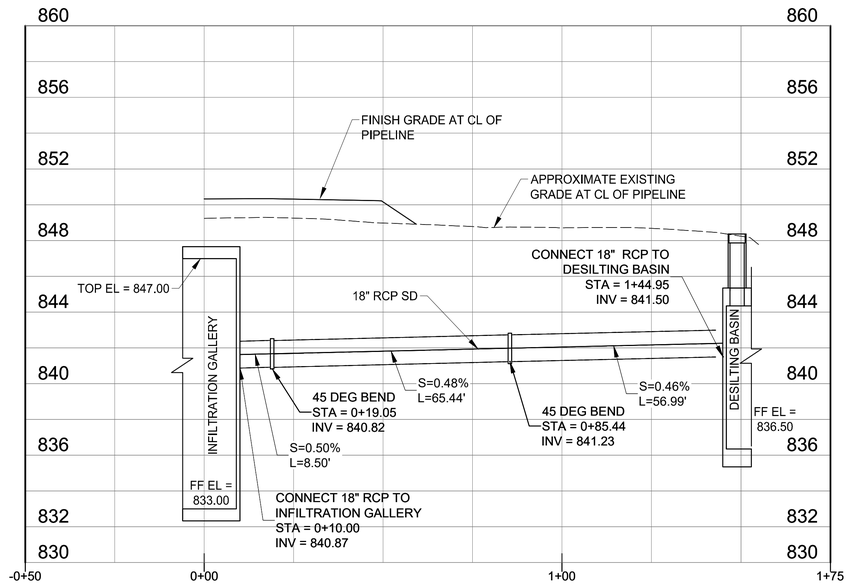

STORM WATER CONVEYANCE PROFILE - SOUTH DESILTING BASIN TO INFILTRATION GALLERY PROFILE

1" = 20' H; 1" = 4' V

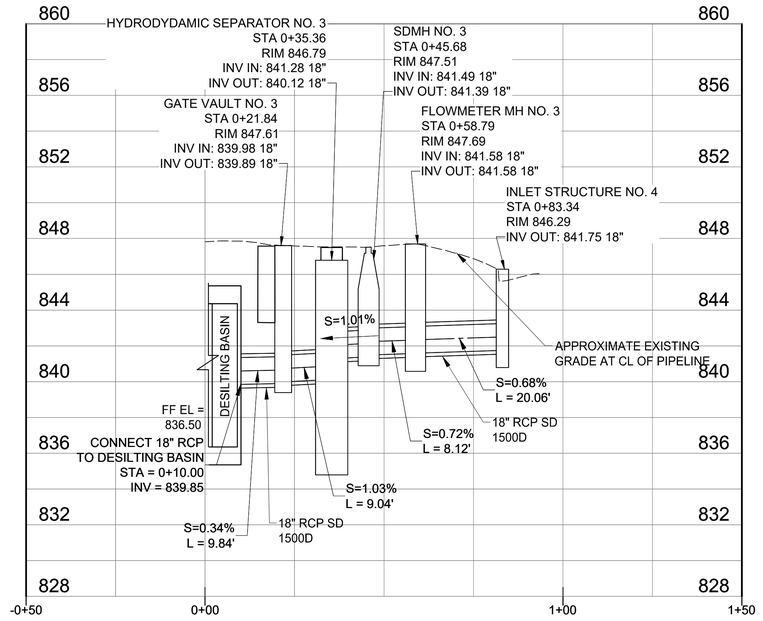

STORM WATER CONVEYANCE PROFILE - WICKS ST INLET NO. 4

1" = 20' H; 1" = 4' V

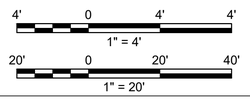

NOTE

1. SDMH NO. 3 SHALL BE 4' ID AND IN ACCORDANCE WITH LABOE STANDARD PLANS S-142-2. PROVIDE PRESSURE FRAME AND COVER PER LABOE STANDARD PLAN S-284-2 WITH THE LETTER "D" LOCATOR ON THE COVER.

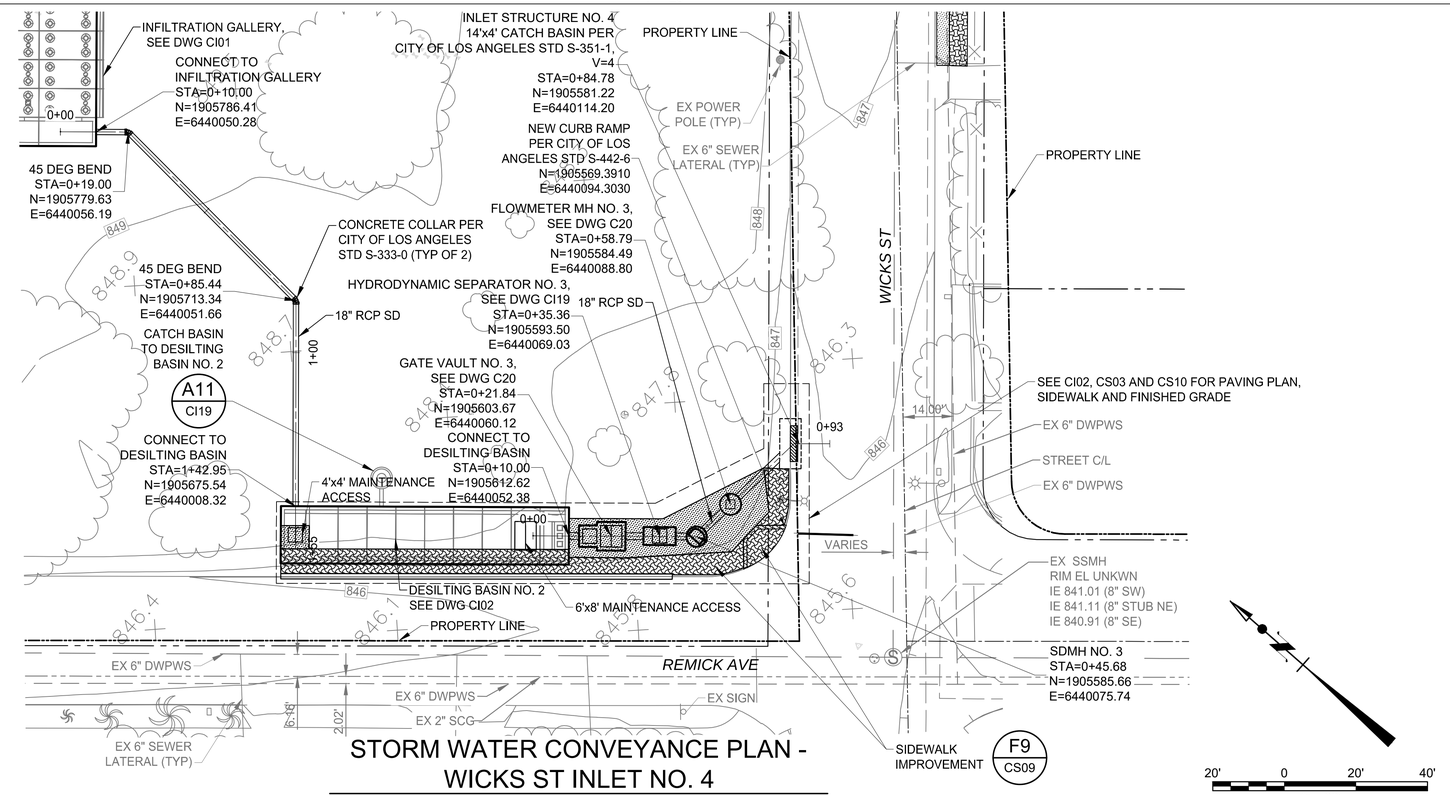

STORM WATER CONVEYANCE PLAN - WICKS ST INLET NO. 4

1" = 20'

THE CITY OF LOS ANGELES OR ITS OFFICERS OR AGENTS SHALL NOT BE RESPONSIBLE FOR THE ACCURACY OR COMPLETENESS OF ELECTRONIC COPIES OF THIS PLAN SHEET.

REVISION DATES (DESIGN STAGE ONLY)

ENGINEERING
CITY OF LOS ANGELES

THIS PLAN WAS ELECTRONICALLY • SIGNED AND STAMPED

REGISTERED PROFESSIONAL ENGINEER
ANDREW S. TELLINGHUISEN
No. C 48973
EXP. 08/31/2026
STATE OF CALIFORNIA
01/27/2023

BUREAU OF ENGINEERING

VERTICAL CONTROL: BENCH MARK (08-30460) NAVD 88
HORIZONTAL CONTROL: CALIFORNIA STATE PLANE ZONE V, 1983 NAD

SHEET TITLE: STORM WATER CONVEYANCE PLAN AND PROFILE 4
PROJECT: FERNANGELES PARK STORMWATER CAPTURE PROJECT
ADDRESS: FERNANGELES RECREATION CENTER 8851 LAUREL CANYON BLVD, SUN VALLEY, CA 91352

NO.	REVISIONS	DATE	BY
		YY/MM/DD	
		YY/MM/DD	
		YY/MM/DD	
		YY/MM/DD	

CIP NO. SCP0002

INDEX NO.

CITY OF LOS ANGELES DEPARTMENT OF PUBLIC WORKS

CITY ENGINEER: TED ALLEN, P.E. — DATE: 04/11/2023

DESIGN GROUP	
ENGINEER:	CDM SMITH INC.
ARCHITECT:	NA
DESIGNED BY:	M. MA
DRAWN BY:	C. BILDERBACK
CHECKED BY:	P. TAURASI
APPROVED BY:	A. DELLINGER

WORK ORDER EW40079F

SHEET NAME CU04

SHEET 41 OF 125 SHEETS

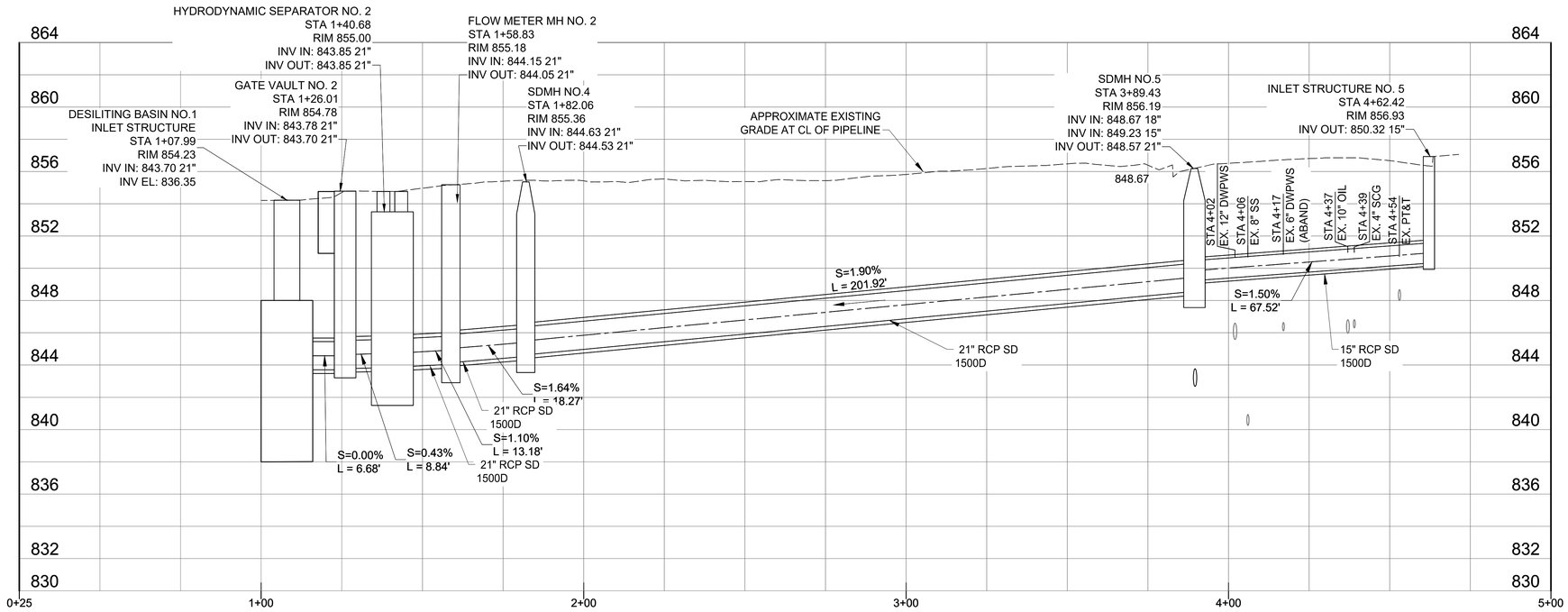

STORM WATER CONVEYANCE PROFILE - LAUREL CANYON BLVD INLET NO. 5

1" = 20' H; 1" = 4' V

4' 0 4' 4'
1" = 4'
20' 0 20' 40'
1" = 20'

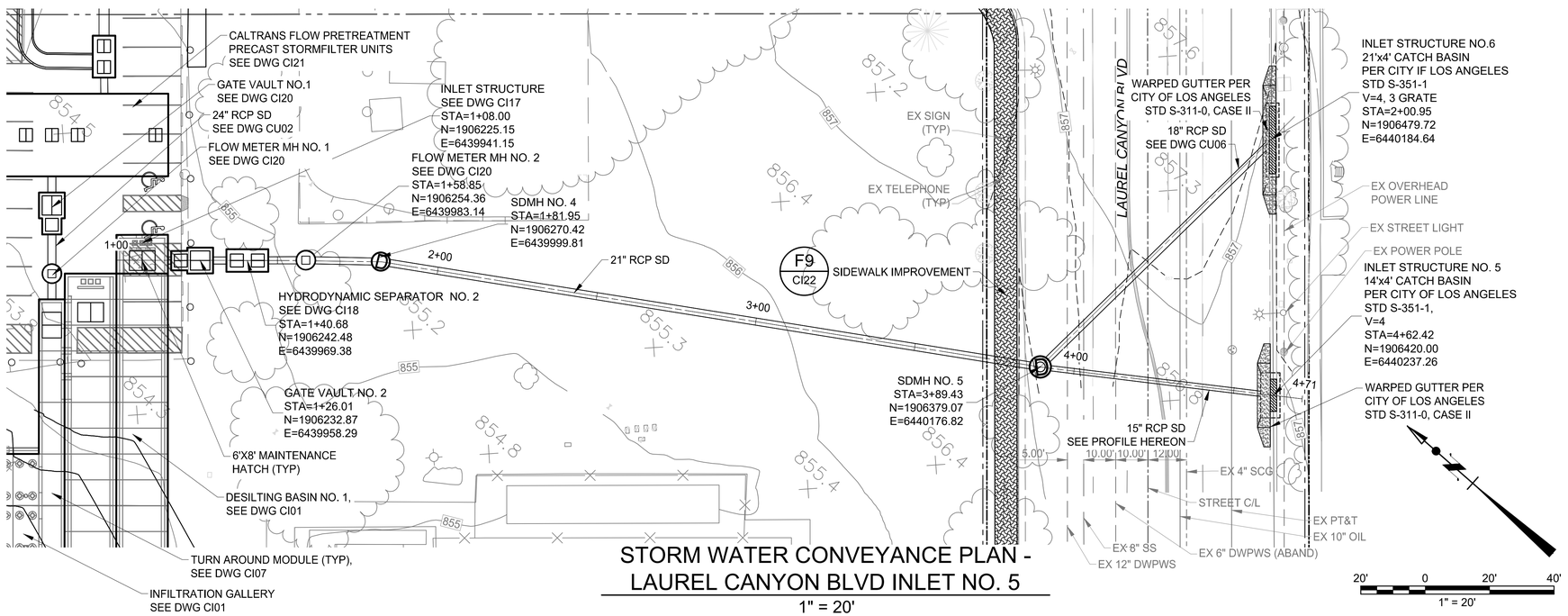

STORM WATER CONVEYANCE PLAN - LAUREL CANYON BLVD INLET NO. 5

1" = 20'

20' 0 20' 40'
1" = 20'

NOTE

1. SDMH NO. 4 AND SDMH NO. 5 SHALL BE 4' ID AND IN ACCORDANCE WITH LABOE STANDARD PLANS S-142-0. PROVIDE PRESSURE FRAME AND COVER PER LABOE STANDARD PLAN S-284-2 WITH THE LETTER "D" LOCATOR ON THE COVER.

ENGINEERING
CITY OF LOS ANGELES

PROFESSIONAL ENGINEER
REGISTERED
TED S. ALLEN
No. C 48973
EXP. 08/31/2026
STATE OF CALIFORNIA
01/27/2023

THIS PLAN WAS ELECTRONICALLY • SIGNED AND STAMPED

BUREAU OF ENGINEERING

VERTICAL CONTROL: BENCH MARK:08-30460;NAVD 88
HORIZONTAL CONTROL: CALIFORNIA STATE PLANE ZONE V, 1983 NAD

SHEET TITLE: STORM WATER CONVEYANCE PLAN AND PROFILE 5

PROJECT: FERNANGELES PARK STORMWATER CAPTURE PROJECT

ADDRESS: FERNANGELES RECREATION CENTER
8851 LAUREL CANYON BLVD, SUN VALLEY, CA 91352

NO.	REVISIONS	DATE	BY
		YY/MM/DD	
		YY/MM/DD	
		YY/MM/DD	
		YY/MM/DD	

CIP NO.
SCP0002

INDEX NO.

CITY OF LOS ANGELES DEPARTMENT OF PUBLIC WORKS

CITY ENGINEER
TED ALLEN, P.E.

DESIGN GROUP		DATE
ENGINEER:	CDM SMITH INC.	04/11/2023
ARCHITECT:	NA	04/11/2023
DESIGNED BY:	M. MA	04/11/2023
DRAWN BY:	C. BILDERBACK	04/11/2023
CHECKED BY:	P. TAURASI	04/11/2023
APPROVED BY:	A. DELLINGER	04/11/2023

WORK ORDER
EW40079F

SHEET NAME
CU05
SHEET 42 OF 125 SHEETS

THE CITY OF LOS ANGELES OR ITS OFFICERS OR AGENTS SHALL NOT BE RESPONSIBLE FOR THE ACCURACY OR COMPLETENESS OF ELECTRONIC COPIES OF THIS PLAN SHEET.

REVISION DATES
(DESIGN STAGE ONLY)

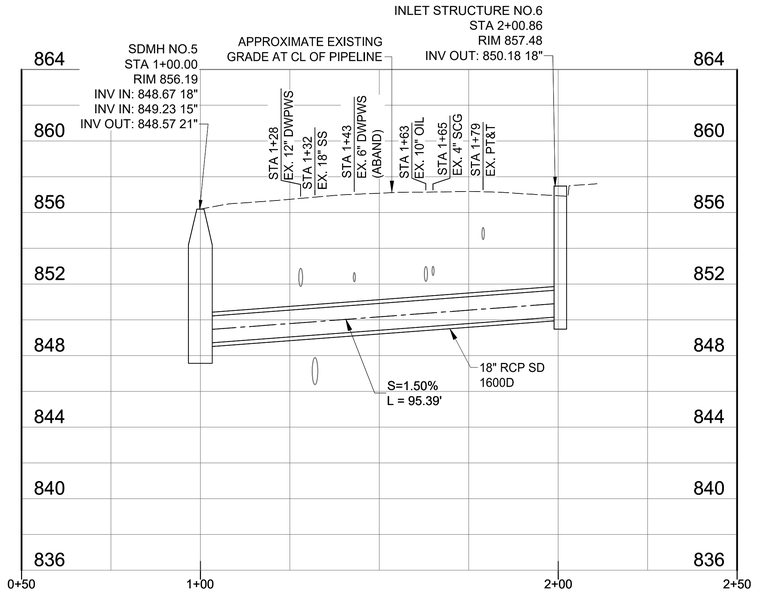

STORM WATER CONVEYANCE PROFILE - LAUREL CANYON BLVD INLET NO. 6

1" = 20' H; 1" = 4' V

4' 0 4' 4'
1" = 4'

20' 0 20' 40'
1" = 20'

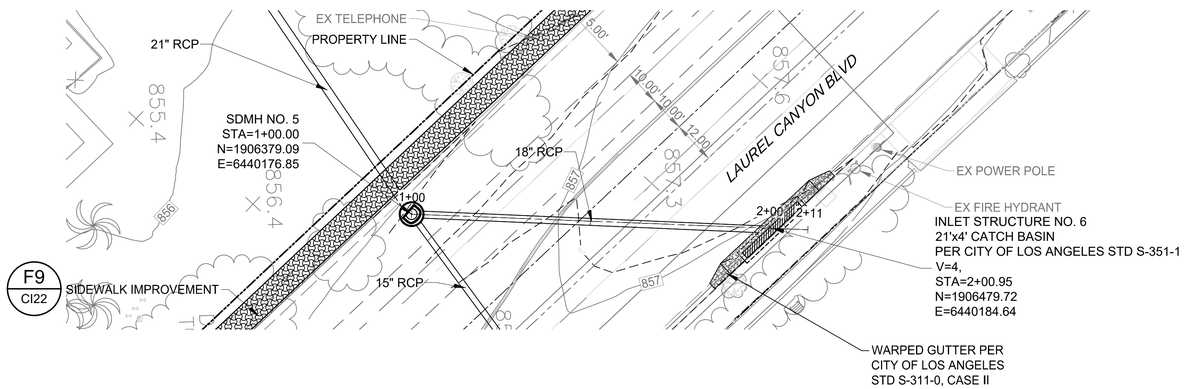

STORM WATER CONVEYANCE PLAN - LAUREL CANYON BLVD INLET NO. 6

1" = 20'

20' 0 20' 40'
1" = 20'

THE CITY OF LOS ANGELES OR ITS OFFICERS OR AGENTS SHALL NOT BE RESPONSIBLE FOR THE ACCURACY OR COMPLETENESS OF ELECTRONIC COPIES OF THIS PLAN SHEET.

REVISION DATES (DESIGN STAGE ONLY)

ENGINEERING
CITY OF LOS ANGELES

PROFESSIONAL ENGINEER
REGISTERED
TED S. ALLEN
No. C 48973
EXP. 08/31/2024
STATE OF CALIFORNIA
01/27/2023

THIS PLAN WAS ELECTRONICALLY • SIGNED AND STAMPED •

BUREAU OF ENGINEERING

VERTICAL CONTROL: BENCH MARK:08-30460;NAVD 88
HORIZONTAL CONTROL: CALIFORNIA STATE PLANE ZONE V, 1983 NAD

SHEET TITLE: STORM WATER CONVEYANCE PLAN AND PROFILE 6

PROJECT: FERNANGELES PARK STORMWATER CAPTURE PROJECT

ADDRESS: FERNANGELES RECREATION CENTER 8851 LAUREL CANYON BLVD, SUN VALLEY, CA 91352

V NO.	REVISIONS	DATE	BY
		YY/MM/DD	
		YY/MM/DD	
		YY/MM/DD	
		YY/MM/DD	

CIP NO. SCP0002

INDEX NO.

CITY OF LOS ANGELES DEPARTMENT OF PUBLIC WORKS

CITY ENGINEER	DATE
TED ALLEN, P.E.	04/11/2023

DESIGN GROUP	
ENGINEER:	CDM SMITH INC.
ARCHITECT:	NA
DESIGNED BY:	M. MA
DRAWN BY:	C. BILDERBACK
CHECKED BY:	P. TAURASI
APPROVED BY:	A. DELLINGER

	DATE
	04/11/2023
	04/11/2023
	04/11/2023
	04/11/2023
	04/11/2023
	04/11/2023

WORK ORDER EW40079F

SHEET NAME CU06

SHEET 43 OF 125 SHEETS

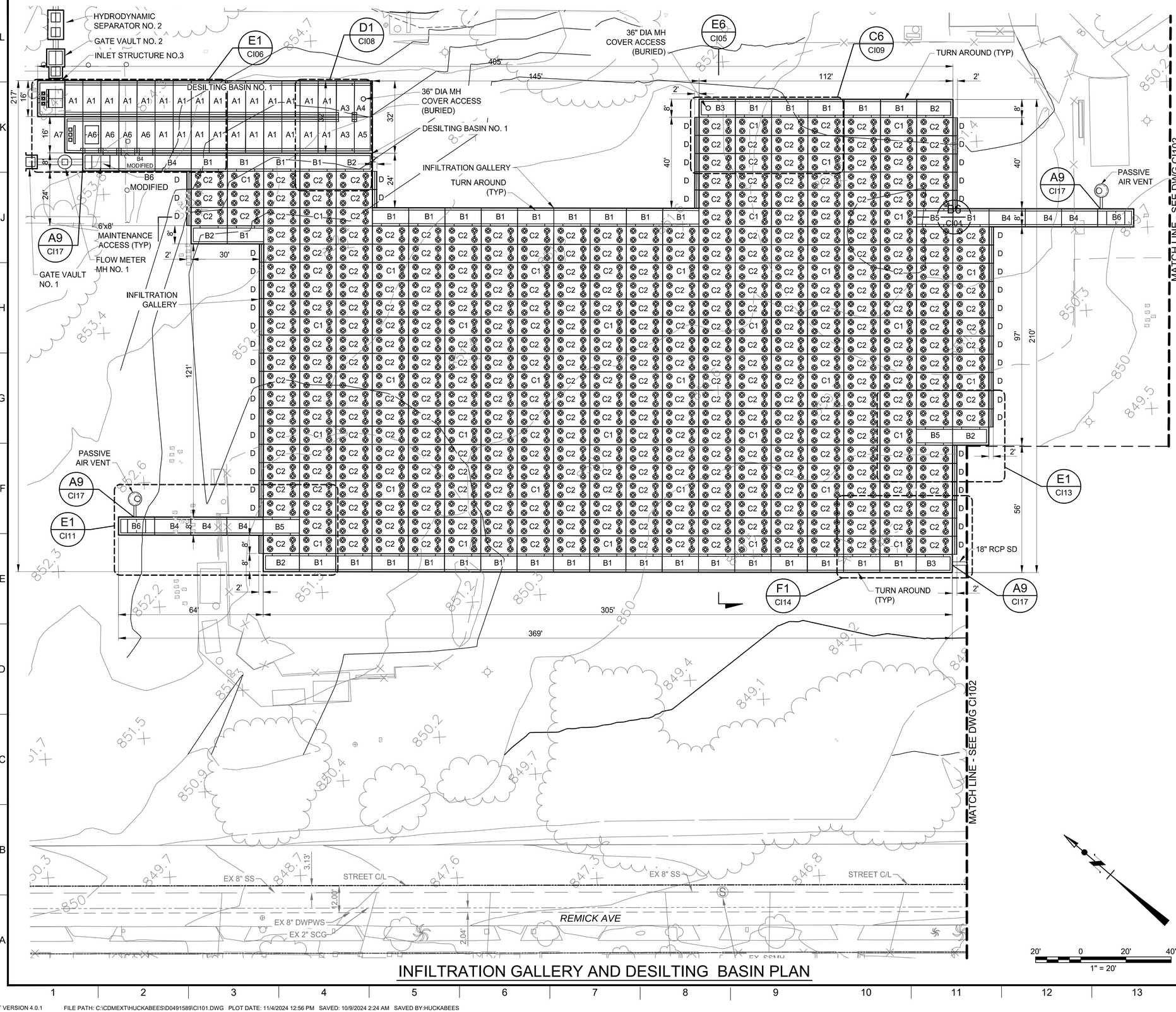

INFILTRATION GALLERY AND DESILTING BASIN PLAN

NOTES:

1. OVERALL DIMENSIONS ARE APPROXIMATE. FINAL DIMENSIONS SHALL BE DETERMINED BASED ON SUPPLIER SHOP DRAWING SUBMITTALS.
2. INFILTRATION DESIGN CRITERIA TO BE BE MET BY INFILTRATION GALLERY SUPPLIER:

   MINIMUM TOTAL VOLUME OF STORAGE WITH 1 FT OF FREEBOARD= 758,000 CF

   MINIMUM TOTAL VOLUME OF STORAGE WITH NO FREEBOARD= 817,000 CF

   MINIMUM AREA OF INFILTRATION BENEATH THE GALLERY INCLUDING STONE BLANKET 2 FT BEYOND PERIMETER = 64,000 SF

   PEAK INFLUENT FLOW RATES THROUGH EACH GATE VAULT SOURCE:
   GATE VAULT NO.1= 15.0 CFS
   GATE VAULT NO.2= 22.4 CFS
   GATE VAULT NO.3= 7.0 CFS

   PROVIDE INTERIOR ACCESS THROUGH MECHANIZED/ELECTRIC VEHICLE (BY OTHERS) WITH A MINIMUM TRAVEL WIDTH OF 4 FEET THAT ALLOWS THE VEHICLE TO CONTINUALLY ACCESS ALL PRECAST UNITS WITH A MAXIMUM OF 32 FEET VEHICLE BACKUP DISTANCE TO EXIT A DEAD END LOCATION. SEE DETAIL BELOW FOR AN ALTERNATE INTERIOR TURN-AROUND ARRANGEMENT

   PROVIDE ALL ACCESS HATCHES AND MANHOLE ACCESS IN SIZES AND LOCATIONS ON PLAN.

   ALL UNITS OF THE INFILTRATION GALLERY SHALL BE DESIGNED FOR HS-20 LOADING.
3. DESILTING BASINS TO BE PROVIDED AS SHOWN ON THE DRAWINGS AND SHALL BE DESIGNED FOR HS-20 LOADING.

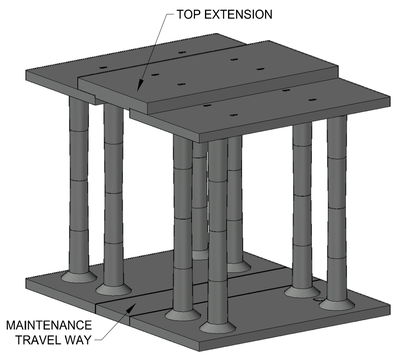

4'-0" MAINTENANCE TRAVEL WAY ISOMETRIC VIEW

THE CITY OF LOS ANGELES OR ITS OFFICERS OR AGENTS SHALL NOT BE RESPONSIBLE FOR THE ACCURACY OR COMPLETENESS OF ELECTRONIC COPIES OF THIS PLAN SHEET.

REVISION DATES (DESIGN STAGE ONLY)

ENGINEERING
CITY OF LOS ANGELES

THIS PLAN WAS ELECTRONICALLY • SIGNED AND STAMPED

PROFESSIONAL ENGINEER — REGISTERED — S. TED ALLEN — No. C 48973 — EXP. 06/30/2026 — CIVIL — STATE OF CALIFORNIA — 01/27/2023

BUREAU OF ENGINEERING • CITY OF LOS ANGELES DEPARTMENT OF PUBLIC WORKS

VERTICAL CONTROL: BENCH MARK 06-30460 (NAVD 88)
HORIZONTAL CONTROL: CALIFORNIA STATE PLANE ZONE V, 1983 NAD

SHEET TITLE: INFILTRATION GALLERY AND DESILTING BASIN PLAN 1

PROJECT: FERNANGELES PARK STORMWATER CAPTURE PROJECT

ADDRESS: FERNANGELES RECREATION CENTER 8851 LAUREL CANYON BLVD, SUN VALLEY, CA 91352

NO.	REVISIONS	DATE	BY
		YY/MM/DD	
		YY/MM/DD	
		YY/MM/DD	
		YY/MM/DD	

CIP NO. SCP0002

INDEX NO.

CITY OF LOS ANGELES DEPARTMENT OF PUBLIC WORKS

CITY ENGINEER: TED ALLEN, P.E.

DESIGN GROUP		DATE
ENGINEER:	CDM SMITH INC.	04/11/2023
ARCHITECT:	NA	04/11/2023
DESIGNED BY:	M. MA	04/11/2023
DRAWN BY:	C. BILDERBACK	04/11/2023
CHECKED BY:	P. TAURASI	04/11/2023
APPROVED BY:	A. DELLINGER	04/11/2023

WORK ORDER EW40079F

SHEET NAME CI01

SHEET 44 OF 125 SHEETS

THE CITY OF LOS ANGELES OR ITS OFFICERS OR AGENTS SHALL NOT BE RESPONSIBLE FOR THE ACCURACY OR COMPLETENESS OF ELECTRONIC COPIES OF THIS PLAN SHEET.

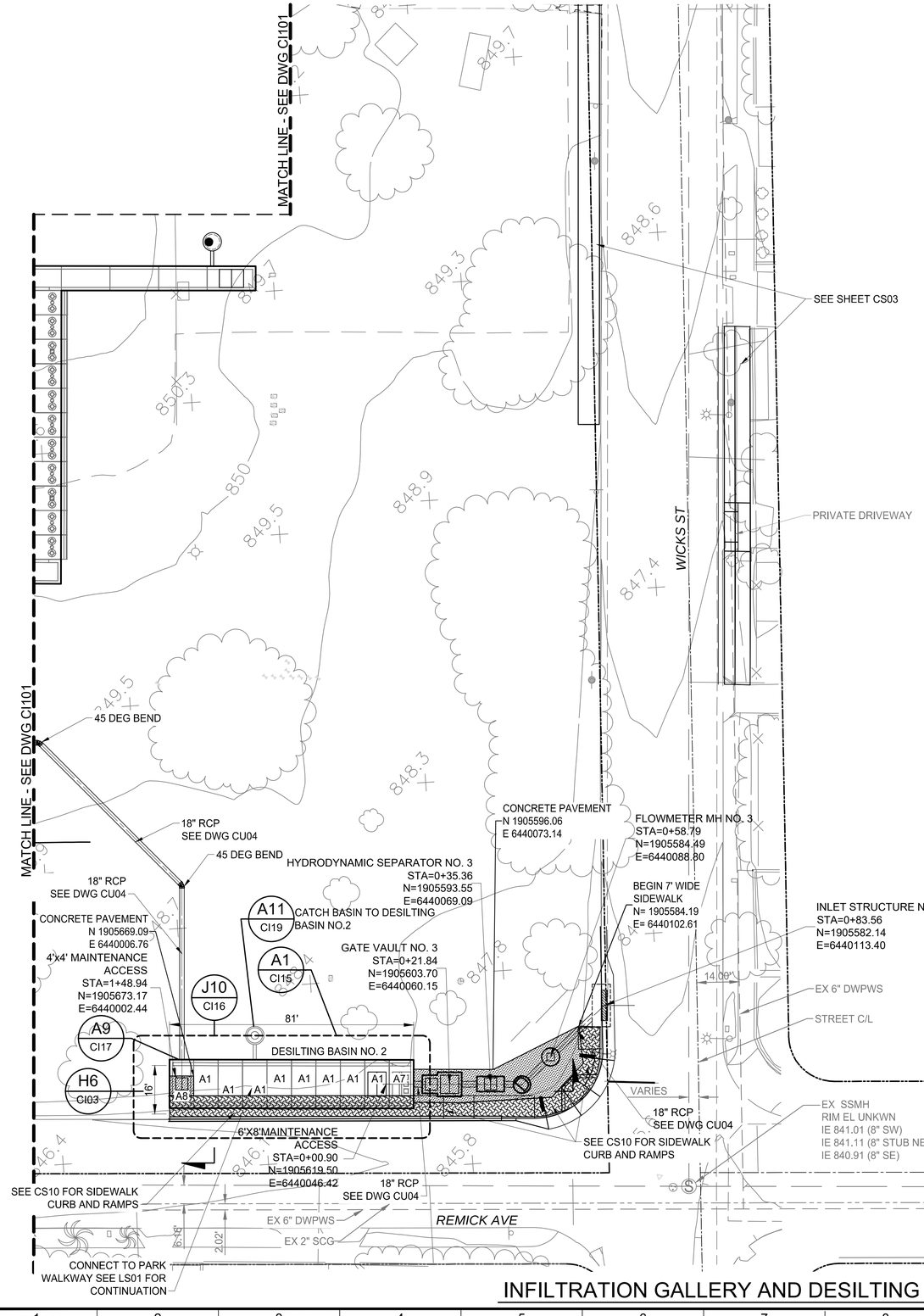

INFILTRATION GALLERY AND DESILTING BASIN PLAN

LEGEND:

- CONCRETE SIDEWALK AND RAMP SEE SHEET CS10
- CONCRETE PAVEMENT COVERING AREA AROUND HATCHES AND MANHOLE COVER

REVISION DATES (DESIGN STAGE ONLY)

BUREAU OF ENGINEERING • THIS PLAN WAS ELECTRONICALLY • SIGNED AND STAMPED

CITY OF LOS ANGELES DEPARTMENT OF PUBLIC WORKS

ENGINEERING
CITY OF LOS ANGELES

REGISTERED PROFESSIONAL ENGINEER
TED S. ALLEN
No. C 48973
EXP. 08/31/2024
STATE OF CALIFORNIA
01/27/2023

NO.	REVISIONS	DATE	BY
		YY/MM/DD	
		YY/MM/DD	
		YY/MM/DD	
		YY/MM/DD	

INDEX NO.

CIP NO. SCP0002

VERTICAL CONTROL: BENCH MARK (08-30460) NAVD 88
HORIZONTAL CONTROL: CALIFORNIA STATE PLANE ZONE V, 1983 NAD

SHEET TITLE: INFILTRATION GALLERY AND DESILTING BASIN PLAN 2

PROJECT: FERNANGELES PARK STORMWATER CAPTURE PROJECT

ADDRESS: FERNANGELES RECREATION CENTER 8851 LAUREL CANYON BLVD, SUN VALLEY, CA 91352

CITY ENGINEER: TED ALLEN, P.E. — DATE: 04/11/2023

DESIGN GROUP		DATE
ENGINEER:	CDM SMITH INC.	04/11/2023
ARCHITECT:	NA	04/11/2023
DESIGNED BY:	M. MA	04/11/2023
DRAWN BY:	C. BILDERBACK	04/11/2023
CHECKED BY:	P. TAURASI	04/11/2023
APPROVED BY:	A. DELLINGER	04/11/2023

WORK ORDER
EW40079F

SHEET NAME
CI02

SHEET 45 OF 125 SHEETS

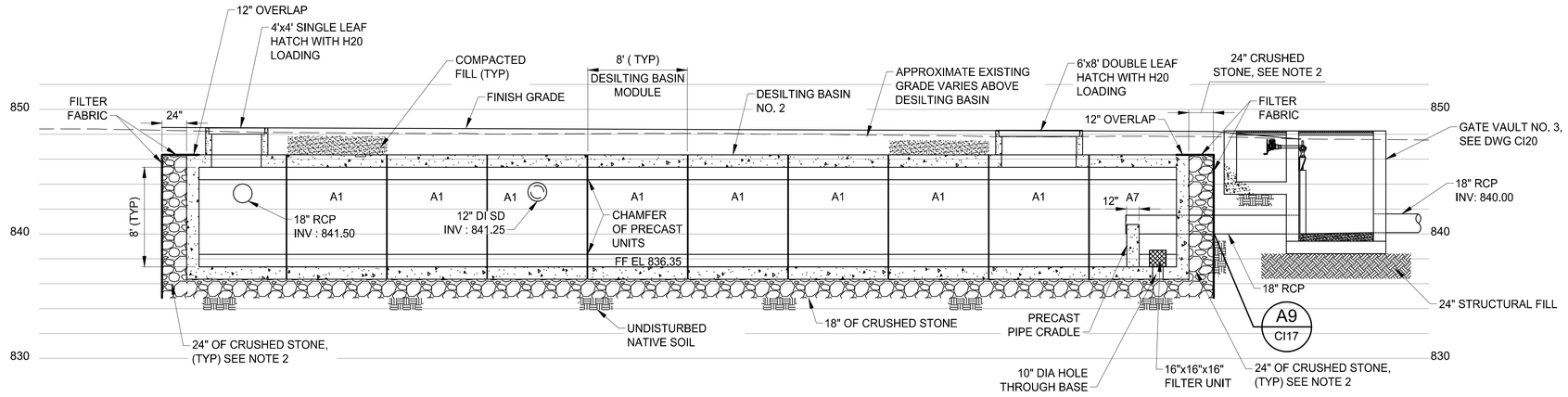

H6 / CI02 DESILTING BASIN NO. 2 SECTION

SCALE: 3/16" = 1'-0"

NOTE

1. SEE SHEET GI03 FOR FILL REQUIREMENTS AROUND THE PERIMETER AND TOP OF THE DESILTING BASINS AND INFILTRATION GALLERIES.
2. FILTER FABRIC TO COVER SIDES AND TOP OF CRUSHED STONE WITH OVERLAP SHOWS. INSTALL STAKES TO HOLD FILTER FABRIC IN PLACE PER FILTER FABRIC MANUFACTURER RECOMMENDATIONS.

THE CITY OF LOS ANGELES OR ITS OFFICERS OR AGENTS SHALL NOT BE RESPONSIBLE FOR THE ACCURACY OR COMPLETENESS OF ELECTRONIC COPIES OF THIS PLAN SHEET.

REVISION DATES (DESIGN STAGE ONLY)

ENGINEERING
CITY OF LOS ANGELES

THIS PLAN WAS ELECTRONICALLY • SIGNED AND STAMPED •

PROFESSIONAL ENGINEER
REGISTERED
TED S. ALLEN
No. C 48973
EXP. 06/30/2024
STATE OF CALIFORNIA
01/27/2023

BUREAU OF ENGINEERING

VERTICAL CONTROL: BENCH MARK:08-30460:NAVD 88
HORIZONTAL CONTROL: CALIFORNIA STATE PLANE ZONE V, 1983 NAD

SHEET TITLE: DESILTING BASIN SECTION

PROJECT: FERNANGELES PARK STORMWATER CAPTURE PROJECT

ADDRESS: FERNANGELES RECREATION CENTER 8851 LAUREL CANYON BLVD, SUN VALLEY, CA 91352

CITY OF LOS ANGELES DEPARTMENT OF PUBLIC WORKS

NO.	REVISIONS	DATE	BY
		YY/MM/DD	
		YY/MM/DD	
		YY/MM/DD	
		YY/MM/DD	

CIP NO. SCP0002

INDEX NO.

CITY ENGINEER

TED ALLEN, P.E. DATE 04/11/2023

DESIGN GROUP	
ENGINEER:	CDM SMITH INC.
ARCHITECT:	NA
DESIGNED BY:	C. RICE
DRAWN BY:	C. BILDERBACK
CHECKED BY:	P. TAURASI
APPROVED BY:	A. DELLINGER

All dates 04/11/2023

WORK ORDER
EW40079F

SHEET NAME
CI03

SHEET 46 OF 125 SHEETS

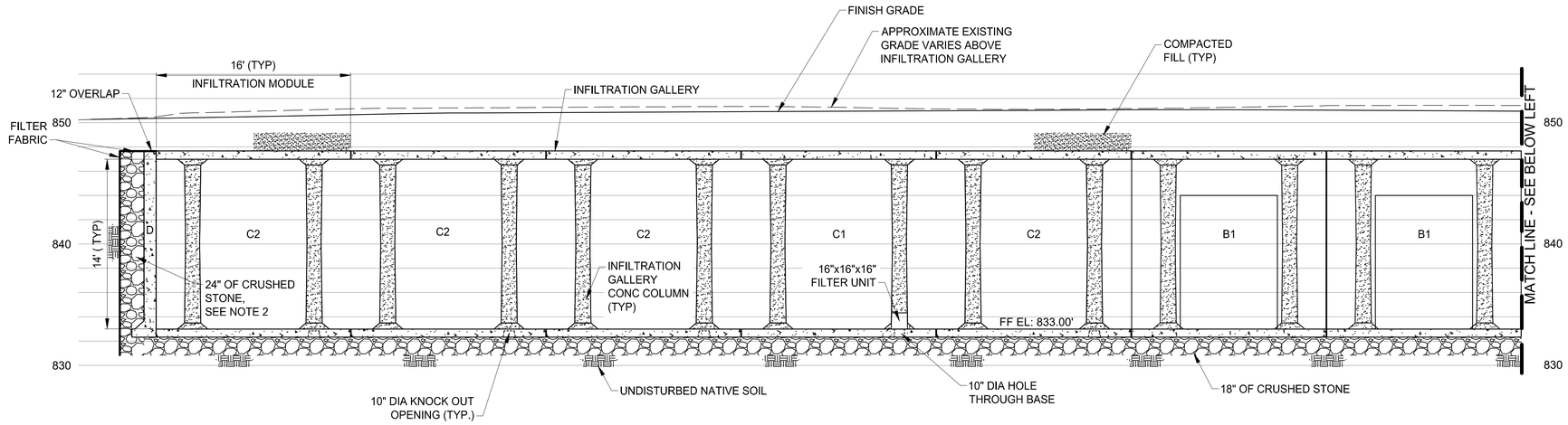

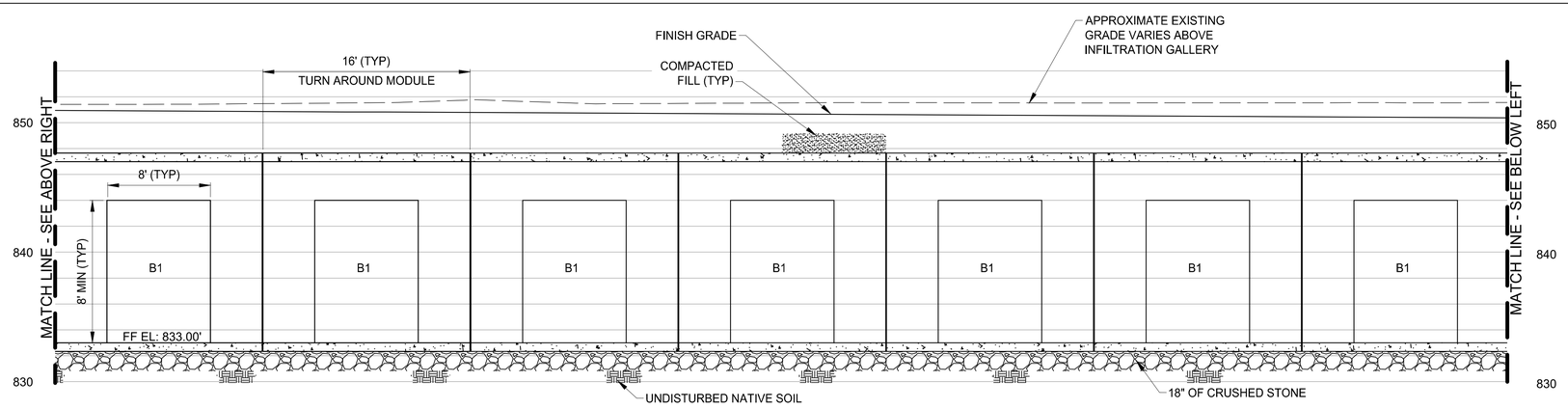

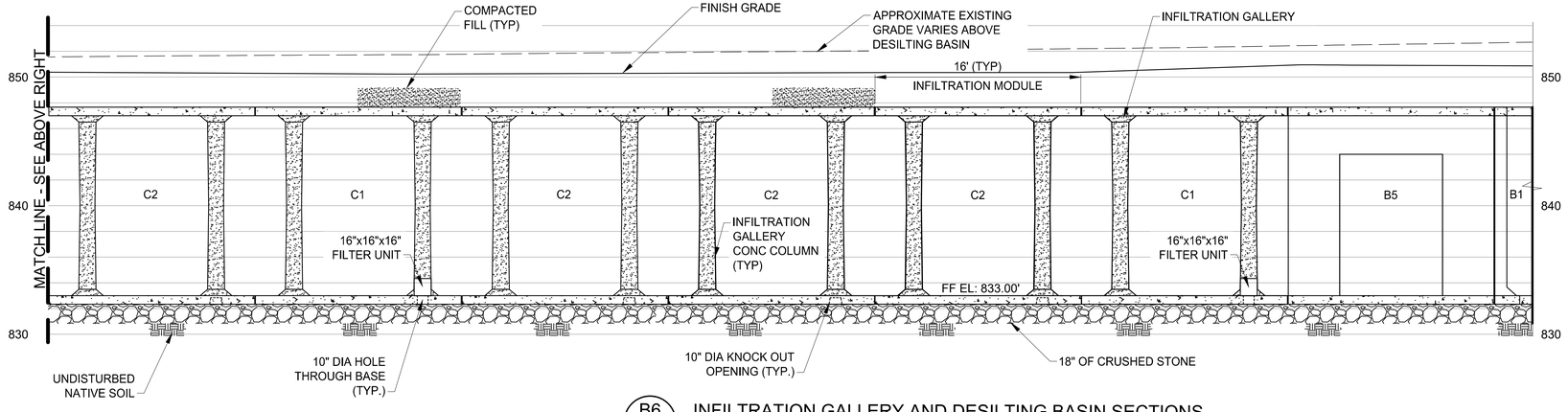

B6 / CI101 INFILTRATION GALLERY AND DESILTING BASIN SECTIONS

SCALE: 3/16" = 1'-0"

NOTES

1. SEE SHEET GI03 FOR FILL REQUIREMENTS AROUND THE PERIMETER AND TOP OF THE DESILTING BASINS AND INFILTRATION GALLERIES.
2. SEE SPECIFICATION SECTION 13200 FOR ADDITIONAL INFORMATION ON THE BURIED STORMWATER INFILTRATION SYSTEM.
3. FILTER FABRIC TO COVER SIDES AND TOP OF CRUSHED STONE WITH OVERLAP SHOWN. INSTALL STAKES TO HOLD FILTER FABRIC IN PLACE PER FILTER FABRIC MANUFACTURER RECOMMENDATIONS.
4. JOINTS ON INFILTRATION GALLERY AND DESILTING BASIN UNITS ARE TO BE GASKETED, FILLED AND SEALED PER SECTION 13200.

THE CITY OF LOS ANGELES OR ITS OFFICERS OR AGENTS SHALL NOT BE RESPONSIBLE FOR THE ACCURACY OR COMPLETENESS OF ELECTRONIC COPIES OF THIS PLAN SHEET.

REVISION DATES (DESIGN STAGE ONLY)

ENGINEERING
CITY OF LOS ANGELES

REGISTERED PROFESSIONAL ENGINEER S. TED ALLEN No. C 48973 EXP. 08/31/2026 CIVIL STATE OF CALIFORNIA 01/27/2023

THIS PLAN WAS ELECTRONICALLY • SIGNED AND STAMPED

BUREAU OF ENGINEERING

VERTICAL CONTROL: BENCH MARK 08-30460 (NAVD 88)
HORIZONTAL CONTROL: CALIFORNIA STATE PLANE ZONE V, 1983 NAD

SHEET TITLE: INFILTRATION GALLERIES ENLARGED PLAN AND SECTIONS 1
PROJECT: FERNANGELES PARK STORMWATER CAPTURE PROJECT
ADDRESS: FERNANGELES RECREATION CENTER 8851 LAUREL CANYON BLVD, SUN VALLEY, CA 91352

NO.	REVISIONS	DATE	BY
		YY/MM/DD	
		YY/MM/DD	
		YY/MM/DD	
		YY/MM/DD	

CIP NO. SCP0002

INDEX NO.

CITY OF LOS ANGELES DEPARTMENT OF PUBLIC WORKS

CITY ENGINEER: TED ALLEN, P.E. DATE 04/11/2023

DESIGN GROUP		DATE
ENGINEER:	CDM SMITH INC.	04/11/2023
ARCHITECT:	NA	04/11/2023
DESIGNED BY:	C. RICE	04/11/2023
DRAWN BY:	C. BILDERBACK	04/11/2023
CHECKED BY:	P. TAURASI	04/11/2023
APPROVED BY:	A. DELLINGER	04/11/2023

WORK ORDER EW40079F

SHEET NAME CI04

SHEET 47 OF 125 SHEETS

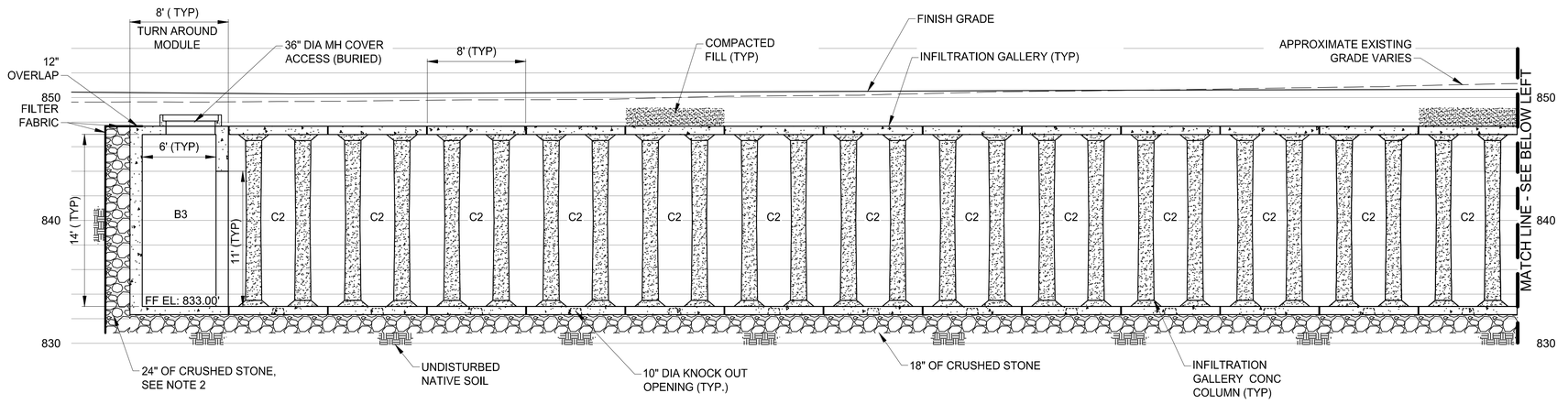

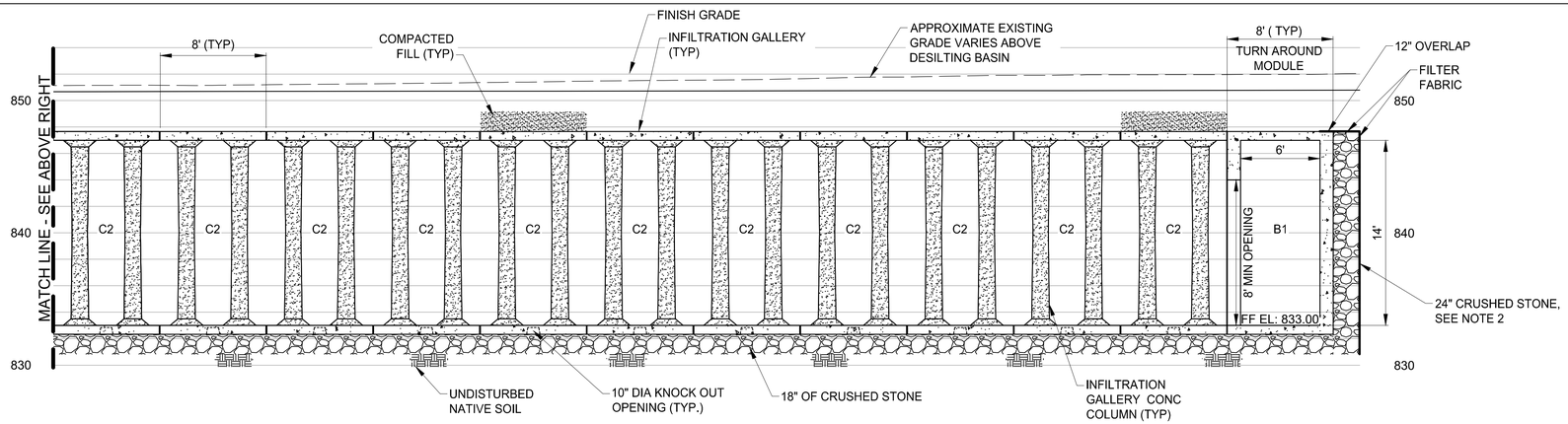

E6 / CI101 INFILTRATION GALLERY AND DESILTING BASIN SECTIONS

SCALE: 3/16" = 1'-0"

NOTES

1. SEE SHEET GI03 FOR FILL REQUIREMENTS AROUND THE PERIMETER AND TOP OF THE DESILTING BASINS AND INFILTRATION GALLERIES.
2. SEE SPECIFICATION SECTION 13200 FOR ADDITIONAL INFORMATION ON THE BURIED STORMWATER INFILTRATION SYSTEM.
3. FILTER FABRIC TO COVER SIDES AND TOP OF CRUSHED STONE WITH OVERLAP SHOWN. INSTALL STAKES TO HOLD FILTER FABRIC IN PLACE PER FILTER FABRIC MANUFACTURER RECOMMENDATIONS.
4. JOINTS ON INFILTRATION GALLERY AND DESILTING BASIN UNITS ARE TO BE GASKETED, FILLED AND SEALED PER SECTION 13200.

THE CITY OF LOS ANGELES OR ITS OFFICERS OR AGENTS SHALL NOT BE RESPONSIBLE FOR THE ACCURACY OR COMPLETENESS OF ELECTRONIC COPIES OF THIS PLAN SHEET.

REVISION DATES (DESIGN STAGE ONLY)

ENGINEERING
CITY OF LOS ANGELES

PROFESSIONAL ENGINEER
REGISTERED
S. TED ALLEN
No. C 48973
EXP. 08/31/2024
CIVIL
STATE OF CALIFORNIA
01/27/2023

THIS PLAN WAS ELECTRONICALLY • SIGNED AND STAMPED

BUREAU OF ENGINEERING

VERTICAL CONTROL: BENCH MARK 08-30460 (NAVD 88)
HORIZONTAL CONTROL: CALIFORNIA STATE PLANE ZONE V, 1983 NAD

SHEET TITLE: INFILTRATION GALLERIES ENLARGED PLAN AND SECTIONS 2
PROJECT: FERNANGELES PARK STORMWATER CAPTURE PROJECT
ADDRESS: FERNANGELES RECREATION CENTER 8851 LAUREL CANYON BLVD, SUN VALLEY, CA 91352

NO.	REVISIONS	BY	DATE
			YY/MM/DD
			YY/MM/DD
			YY/MM/DD
			YY/MM/DD

CIP NO. SCP0002

INDEX NO.

CITY OF LOS ANGELES DEPARTMENT OF PUBLIC WORKS

CITY ENGINEER: TED ALLEN, P.E. DATE 04/11/2023

DESIGN GROUP		DATE
ENGINEER:	CDM SMITH INC.	04/11/2023
ARCHITECT:	NA	04/11/2023
DESIGNED BY:	C. RICE	04/11/2023
DRAWN BY:	C. BILDERBACK	04/11/2023
CHECKED BY:	P. TAURASI	04/11/2023
APPROVED BY:	A. DELLINGER	04/11/2023

WORK ORDER EW40079F

SHEET NAME CI05

SHEET 48 OF 125 SHEETS

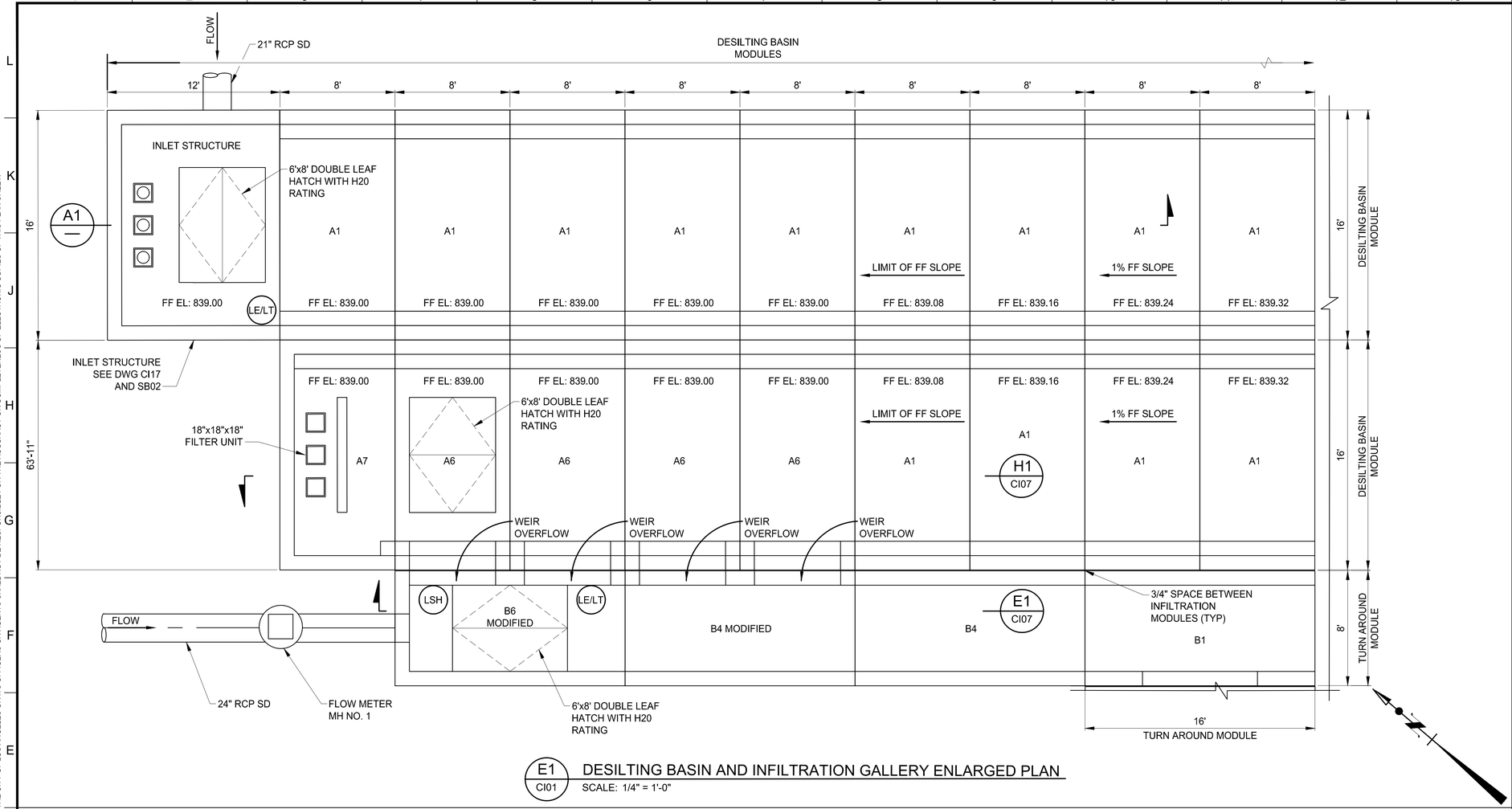

E1 / CI01 DESILTING BASIN AND INFILTRATION GALLERY ENLARGED PLAN

SCALE: 1/4" = 1'-0"

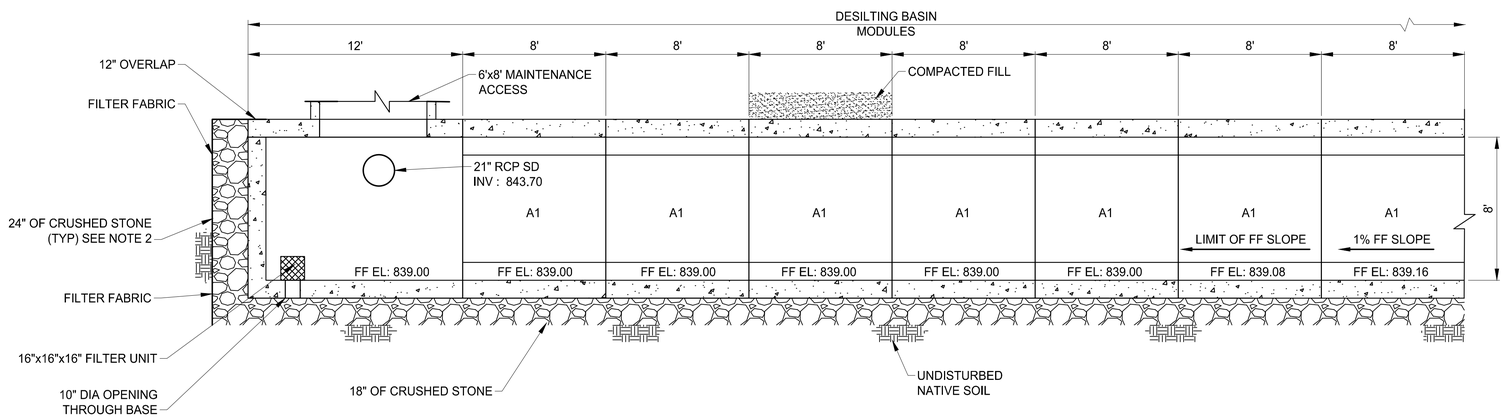

A1 PARTIAL SECTION

SCALE: 1/4" = 1'-0"

NOTES

1. SEE SHEET GI03 FOR FILL REQUIREMENTS AROUND THE PERIMETER AND TOP OF THE DESILTING BASINS AND INFILTRATION GALLERIES.
2. SEE SPECIFICATION SECTION 13200 FOR ADDITIONAL INFORMATION ON THE BURIED STORMWATER INFILTRATION SYSTEM.
3. FILTER FABRIC TO COVER SIDES AND TOP OF CRUSHED STONE WITH OVERLAP SHOWN. INSTALL STAKES TO HOLD FILTER FABRIC IN PLACE PER FILTER FABRIC MANUFACTURER RECOMMENDATIONS.
4. JOINTS ON INFILTRATION GALLERY AND DESILTING BASIN UNITS ARE TO BE GASKETED, FILLED AND SEALED PER SECTION 13200.

THE CITY OF LOS ANGELES OR ITS OFFICERS OR AGENTS SHALL NOT BE RESPONSIBLE FOR THE ACCURACY OR COMPLETENESS OF ELECTRONIC COPIES OF THIS PLAN SHEET.

REVISION DATES (DESIGN STAGE ONLY)

ENGINEERING CITY OF LOS ANGELES

THIS PLAN WAS ELECTRONICALLY • SIGNED AND STAMPED

REGISTERED PROFESSIONAL ENGINEER TED S. ALLEN No. C 48973 EXP. 06/30/2026 STATE OF CALIFORNIA 01/27/2023

BUREAU OF ENGINEERING

VERTICAL CONTROL: BENCH MARK (08-30460) NAVD 88
HORIZONTAL CONTROL: CALIFORNIA STATE PLANE ZONE V, 1983 NAD

SHEET TITLE: DESILTING AND INFILTRATION GALLERIES ENLARGED PLAN AND SECTIONS 1

PROJECT: FERNANGELES PARK STORMWATER CAPTURE PROJECT

ADDRESS: FERNANGELES RECREATION CENTER 8851 LAUREL CANYON BLVD, SUN VALLEY, CA 91352

NO.	REVISIONS	DATE	BY
		YY/MM/DD	
		YY/MM/DD	
		YY/MM/DD	
		YY/MM/DD	

CIP NO. SCP0002

INDEX NO.

CITY OF LOS ANGELES DEPARTMENT OF PUBLIC WORKS

CITY ENGINEER: TED ALLEN, P.E.

DESIGN GROUP	DATE
ENGINEER: CDM SMITH INC.	04/11/2023
ARCHITECT: NA	04/11/2023
DESIGNED BY: M. MA	04/11/2023
DRAWN BY: C. BILDERBACK	04/11/2023
CHECKED BY: P. TAURASI	04/11/2023
APPROVED BY: A. DELLINGER	04/11/2023

WORK ORDER EW40079F

SHEET NAME CI06

SHEET 49 OF 125 SHEETS

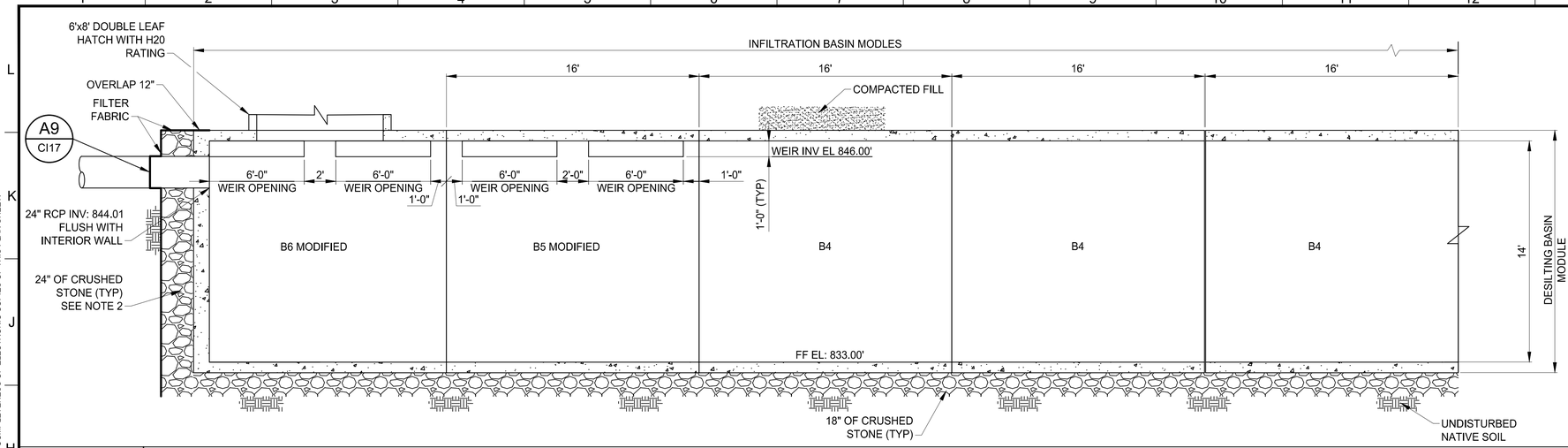

E1/CI06	PARTIAL SECTION
SCALE: 1/4" = 1'-0"	

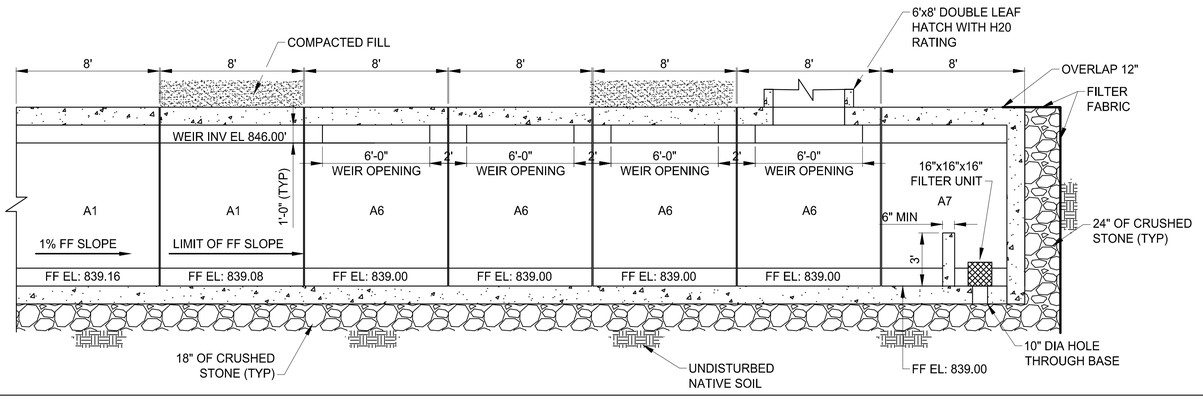

H1/CI06	PARTIAL SECTION
SCALE: 1/4" = 1'-0"	

NOTES

1. SEE SHEET GI03 FOR FILL REQUIREMENTS AROUND THE PERIMETER AND TOP OF THE DESILTING BASINS AND INFILTRATION GALLERIES.
2. SEE SPECIFICATION SECTION 13200 FOR ADDITIONAL INFORMATION ON THE BURIED STORMWATER INFILTRATION SYSTEM.
3. FILTER FABRIC TO COVER SIDES AND TOP OF CRUSHED STONE WITH OVERLAP SHOWN. INSTALL STAKES TO HOLD FILTER FABRIC IN PLACE PER FILTER FABRIC MANUFACTURER RECOMMENDATIONS.
4. JOINTS ON INFILTRATION GALLERY AND DESILTING BASIN UNITS ARE TO BE GASKETED, FILLED AND SEALED PER SECTION 13200.

THE CITY OF LOS ANGELES OR ITS OFFICERS OR AGENTS SHALL NOT BE RESPONSIBLE FOR THE ACCURACY OR COMPLETENESS OF ELECTRONIC COPIES OF THIS PLAN SHEET.

REVISION DATES (DESIGN STAGE ONLY)

ENGINEERING
CITY OF LOS ANGELES

THIS PLAN WAS ELECTRONICALLY SIGNED AND STAMPED

PROFESSIONAL ENGINEER
REGISTERED
TED S. ALLEN
No. C 48973
EXP. 06/30/2026
STATE OF CALIFORNIA
01/27/2023

BUREAU OF ENGINEERING

VERTICAL CONTROL: BENCH MARK (08-30460) NAVD 88
HORIZONTAL CONTROL: CALIFORNIA STATE PLANE ZONE V, 1983 NAD

SHEET TITLE: DESILTING AND INFILTRATION GALLERIES ENLARGED PLAN AND SECTIONS 2

PROJECT: FERNANGELES PARK STORMWATER CAPTURE PROJECT

ADDRESS: FERNANGELES RECREATION CENTER 8851 LAUREL CANYON BLVD, SUN VALLEY, CA 91352

NO.	REVISIONS	DATE	BY
		YY/MM/DD	
		YY/MM/DD	
		YY/MM/DD	
		YY/MM/DD	

CIP NO. SCP0002

INDEX NO.

CITY OF LOS ANGELES DEPARTMENT OF PUBLIC WORKS

CITY ENGINEER: TED ALLEN, P.E. DATE 04/11/2023

DESIGN GROUP		DATE
ENGINEER:	CDM SMITH INC.	04/11/2023
ARCHITECT:	NA	04/11/2023
DESIGNED BY:	M. MA.	04/11/2023
DRAWN BY:	C. BILDERBACK	04/11/2023
CHECKED BY:	P. TAURASI	04/11/2023
APPROVED BY:	A. DELLINGER	04/11/2023

WORK ORDER EW40079F

SHEET NAME CI07

SHEET 50 OF 125 SHEETS

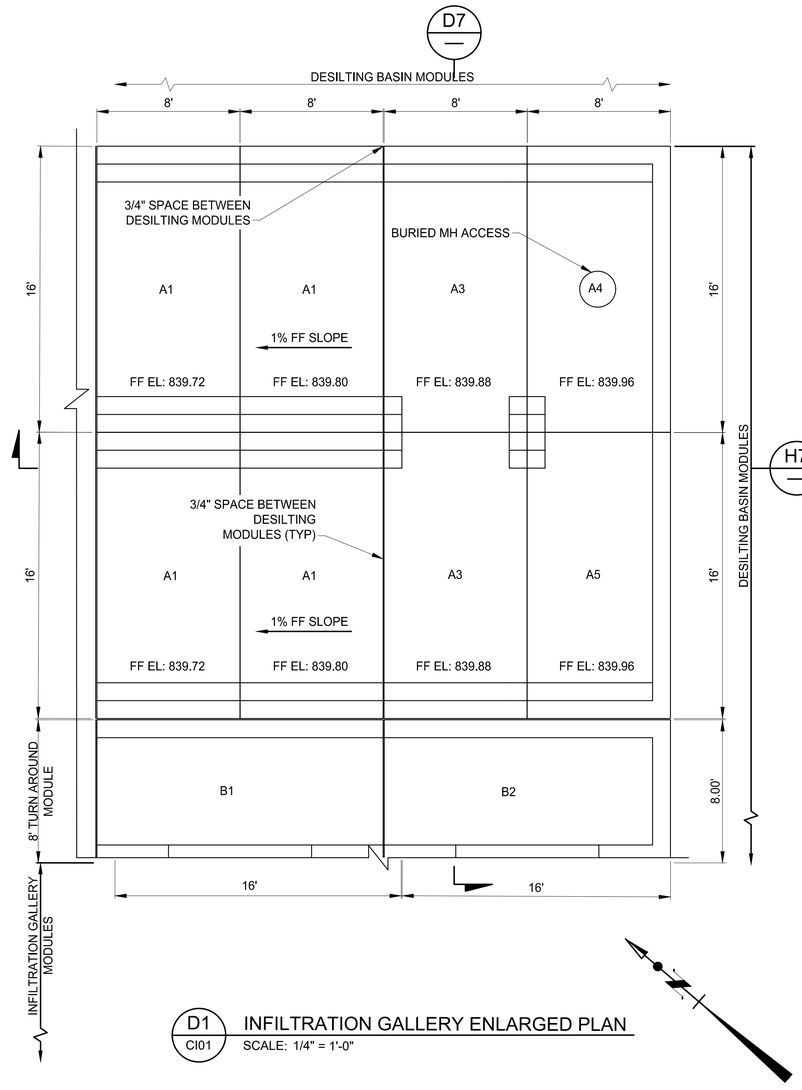

D1 / CI01 INFILTRATION GALLERY ENLARGED PLAN
SCALE: 1/4" = 1'-0"

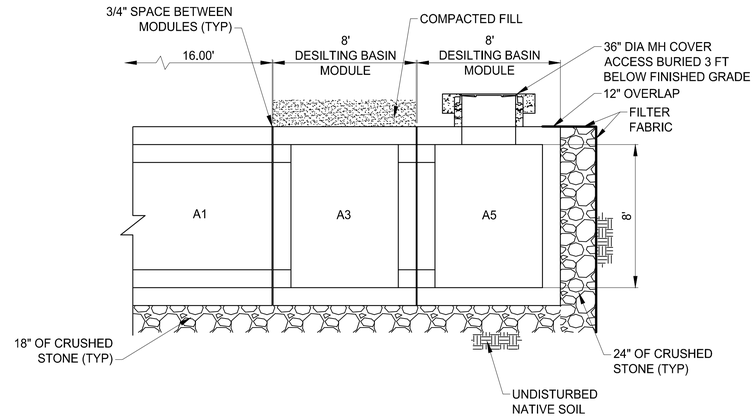

H7 PARTIAL SECTION
SCALE: 1/4" = 1'-0"

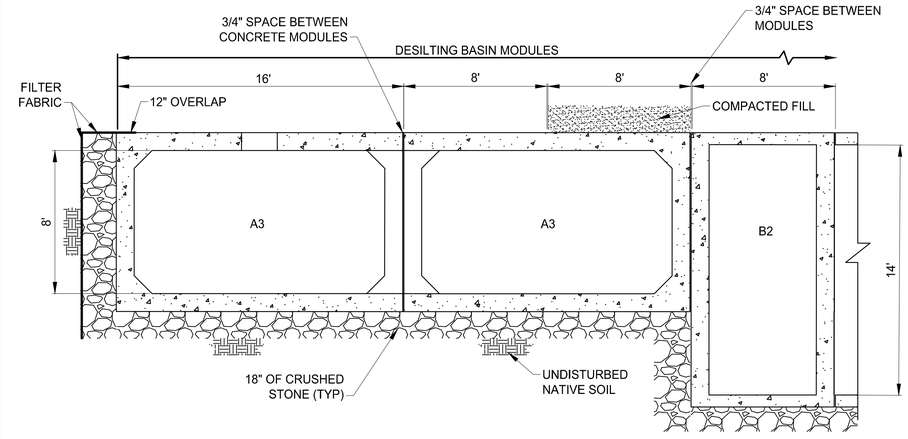

D7 PARTIAL SECTION
SCALE: 1/4" = 1'-0"

A1 PARTIAL SECTION
SCALE: 1/4" = 1'-0"

NOTES

1. SEE SHEET GI03 FOR FILL REQUIREMENTS AROUND THE PERIMETER AND TOP OF THE DESILTING BASINS AND INFILTRATION GALLERIES.
2. SEE SPECIFICATION SECTION 13200 FOR ADDITIONAL INFORMATION ON THE BURIED STORMWATER INFILTRATION SYSTEM.
3. FILTER FABRIC TO COVER SIDES AND TOP OF CRUSHED STONE WITH OVERLAP SHOWN. INSTALL STAKES TO HOLD FILTER FABRIC IN PLACE PER FILTER FABRIC MANUFACTURER RECOMMENDATIONS.
4. JOINTS ON INFILTRATION GALLERY AND DESILTING BASIN UNITS ARE TO BE GASKETED, FILLED AND SEALED PER SECTION 13200.

THE CITY OF LOS ANGELES OR ITS OFFICERS OR AGENTS SHALL NOT BE RESPONSIBLE FOR THE ACCURACY OR COMPLETENESS OF ELECTRONIC COPIES OF THIS PLAN SHEET.

REVISION DATES (DESIGN STAGE ONLY)

ENGINEERING CITY OF LOS ANGELES

THIS PLAN WAS ELECTRONICALLY SIGNED AND STAMPED

REGISTERED PROFESSIONAL ENGINEER ANTHONY S. DELLINGER No. C 48973 EXP. 09/30/2026 STATE OF CALIFORNIA 01/27/2023

BUREAU OF ENGINEERING

VERTICAL CONTROL: BENCH MARK 08-30460 NAVD 88
HORIZONTAL CONTROL: CALIFORNIA STATE PLANE ZONE V, 1983 NAD

SHEET TITLE: DESILTING AND INFILTRATION GALLERIES ENLARGED PLAN AND SECTIONS 3

PROJECT: FERNANGELES PARK STORMWATER CAPTURE PROJECT

ADDRESS: FERNANGELES RECREATION CENTER 8851 LAUREL CANYON BLVD, SUN VALLEY, CA 91352

CIP NO. SCP0002

INDEX NO.

NO.	REVISIONS	DATE	BY
		YY/MM/DD	
		YY/MM/DD	
		YY/MM/DD	
		YY/MM/DD	

CITY OF LOS ANGELES DEPARTMENT OF PUBLIC WORKS

CITY ENGINEER: TED ALLEN, P.E.

	DESIGN GROUP	DATE
ENGINEER:	CDM SMITH INC.	04/11/2023
ARCHITECT:	NA	04/11/2023
DESIGNED BY:	M. MA	04/11/2023
DRAWN BY:	C. BILDERBACK	04/11/2023
CHECKED BY:	P. TAURASI	04/11/2023
APPROVED BY:	A. DELLINGER	04/11/2023

WORK ORDER EW40079F

SHEET NAME CI08

SHEET 51 OF 125 SHEETS

SHEET VERSION 4.0.1 FILE PATH: C:\CDMEXT\SAMIDURAIM\D0491589\CI403.DWG PLOT DATE: 10/9/2024 2:58 PM SAVED: 10/9/2024 2:57 PM SAVED BY:SAMIDURAIM

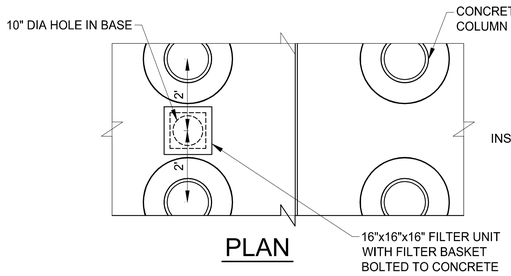

PLAN

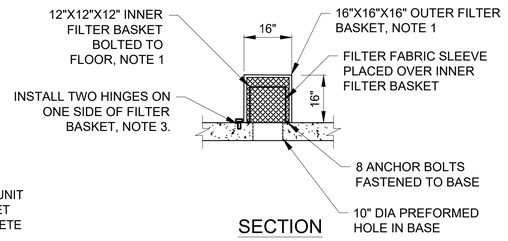

SECTION

NOTES

1. FILTER BASKETS SHALL BE FABRICATED WITH INDUSTRIAL GRADE T-104 STAINLESS STEEL (14-GA)
2. FILTER MATERIAL SHALL BE ADSORB-IT FILTRATION FABRIC OR APPROVED EQUAL AND FITTED OVER 12"X12"X12" INNER FILTER BASKET. MATERIAL SHALL BE RATED FOR 50-MICRON PARTICLE REMOVAL
3. HINGES SHALL BE INSTALLED ON SIDE OF FILTER BASKET OPPOSITE INFILTRATION GALLERY COLUMNS

J1	FILTER UNIT AND INFILTRATION HOLE IN BASIN DETAIL
SCALE: 1/2" = 1'-0"	

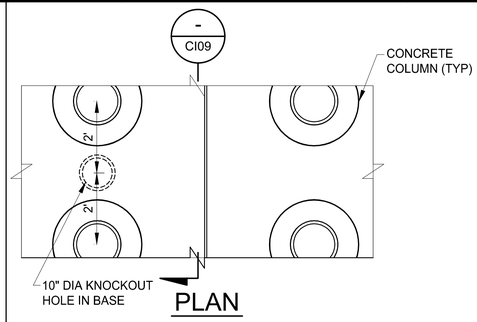

PLAN

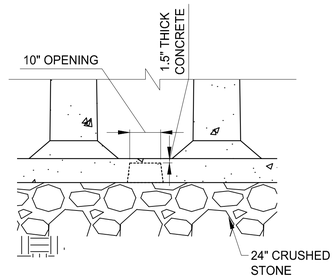

SECTION

J7	KNOCK OUT OPENING FOR FUTURE FILTER UNIT
SCALE: 1/2" = 1'-0"	

NOTES

1. SEE SHEET GI03 FOR FILL REQUIREMENTS AROUND THE PERIMETER AND TOP OF THE DESILTING BASINS AND INFILTRATION GALLERIES.
2. SEE SPECIFICATION SECTION 13200 FOR ADDITIONAL INFORMATION ON THE BURIED STORMWATER INFILTRATION SYSTEM.
3. JOINTS ON INFILTRATION GALLERY AND DESILTING BASIN UNITS ARE TO BE GASKETED, FILLED AND SEALED PER SECTION 13200.

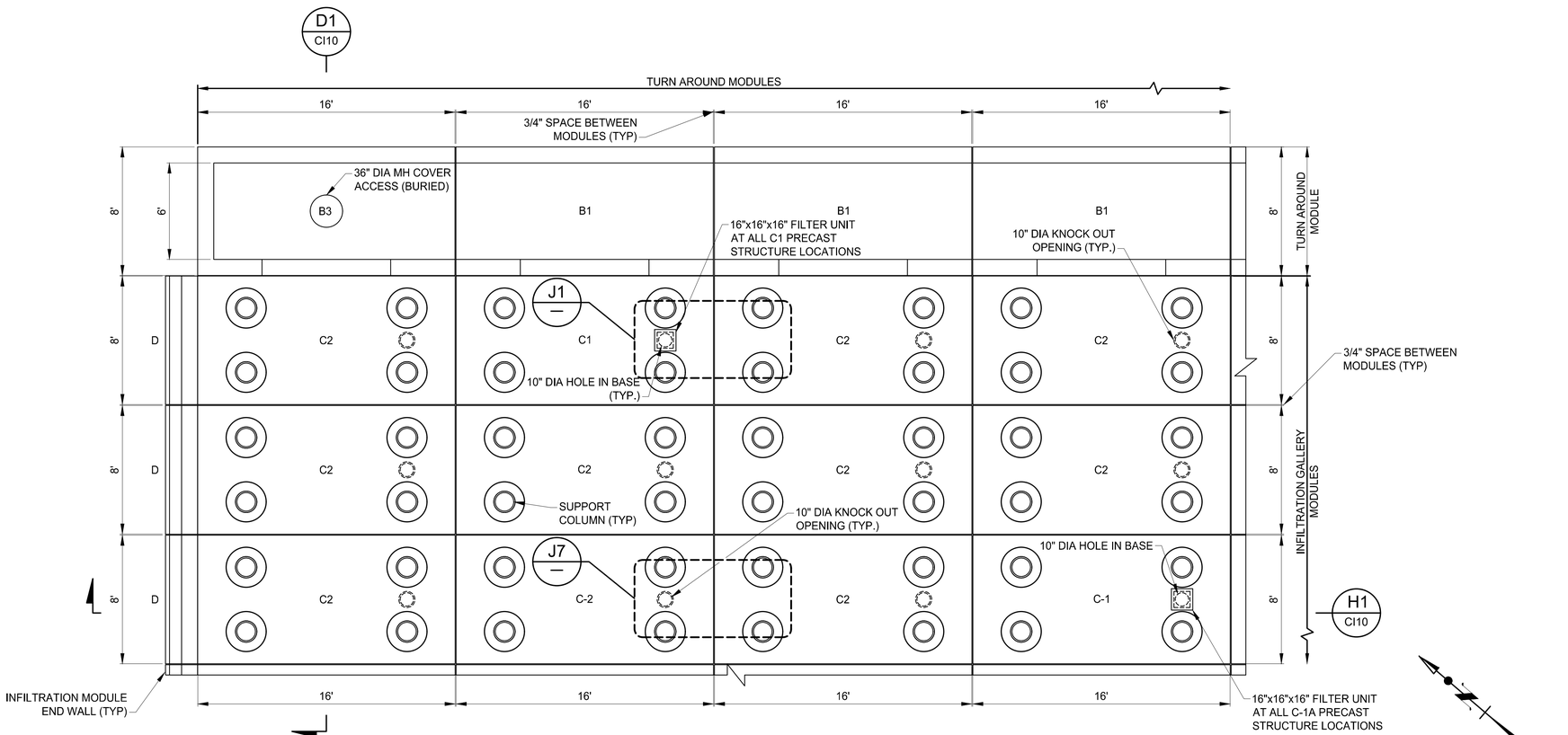

C6 / CI01	INFILTRATION GALLERY ENLARGED PLAN
	SCALE: 1/4" = 1'-0"

THE CITY OF LOS ANGELES OR ITS OFFICERS OR AGENTS SHALL NOT BE RESPONSIBLE FOR THE ACCURACY OR COMPLETENESS OF ELECTRONIC COPIES OF THIS PLAN SHEET.

REVISION DATES (DESIGN STAGE ONLY)

BUREAU OF ENGINEERING • THIS PLAN WAS ELECTRONICALLY SIGNED AND STAMPED

ENGINEERING
CITY OF LOS ANGELES

REGISTERED PROFESSIONAL ENGINEER — ANDREW S. TEEL — No. C 48973 — EXP. 08/31/2026 — STATE OF CALIFORNIA — CIVIL — 01/27/2023

VERTICAL CONTROL: BENCH MARK (08-30460) NAVD 88
HORIZONTAL CONTROL: CALIFORNIA STATE PLANE ZONE V, 1983 NAD

SHEET TITLE: DESILTING AND INFILTRATION GALLERIES ENLARGED PLAN AND SECTIONS 4
PROJECT: FERNANGELES PARK STORMWATER CAPTURE PROJECT
ADDRESS: FERNANGELES RECREATION CENTER 8851 LAUREL CANYON BLVD, SUN VALLEY, CA 91352

NO.	REVISIONS	DATE	BY
		YY/MM/DD	
		YY/MM/DD	
		YY/MM/DD	
		YY/MM/DD	

CIP NO. SCP0002

INDEX NO.

CITY OF LOS ANGELES DEPARTMENT OF PUBLIC WORKS

CITY ENGINEER: TED ALLEN, P.E.

DESIGN GROUP	DATE
ENGINEER: CDM SMITH INC.	04/11/2023
ARCHITECT: NA	04/11/2023
DESIGNED BY: M. MA	04/11/2023
DRAWN BY: C. BILDERBACK	04/11/2023
CHECKED BY: P. TAURASI	04/11/2023
APPROVED BY: A. DELLINGER	04/11/2023

WORK ORDER EW40079F

SHEET NAME CI09

SHEET 52 OF 125 SHEETS

SHEET VERSION 4.0.1 FILE PATH: C:\CDMEXT\SAMIDURAIM\D0491589\CI404.DWG PLOT DATE: 10/9/2024 2:59 PM SAVED: 10/9/2024 2:59 PM SAVED BY:SAMIDURAIM

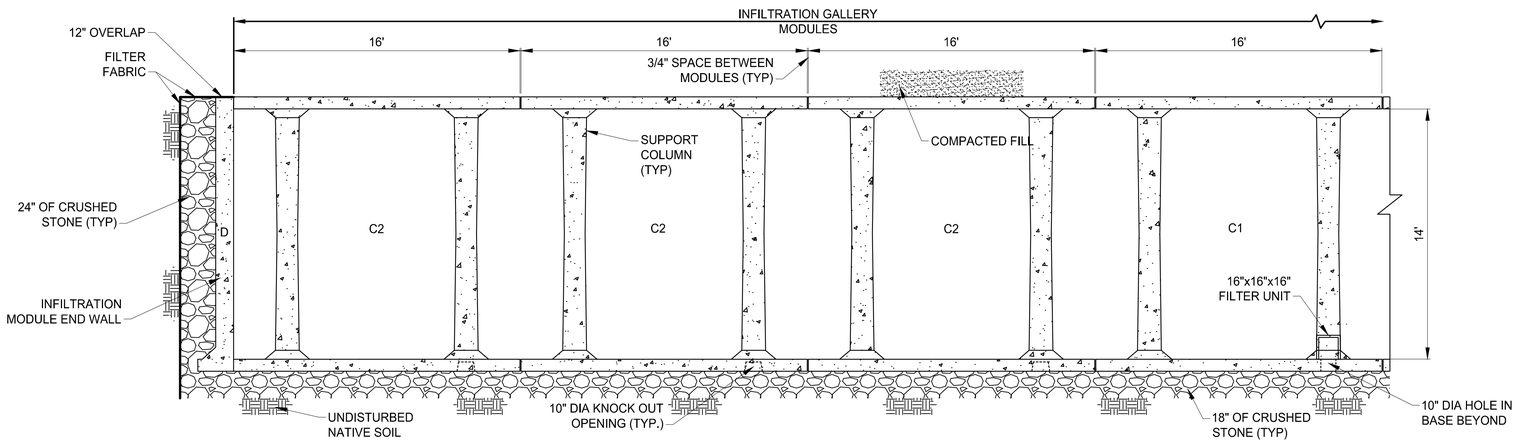

H1/CI109	PARTIAL SECTION
SCALE: 1/4" = 1'-0"	

D1/CI109	PARTIAL SECTION
SCALE: 1/4" = 1'-0"	

NOTES

1. SEE SHEET GI03 FOR FILL REQUIREMENTS AROUND THE PERIMETER AND TOP OF THE DESILTING BASINS AND INFILTRATION GALLERIES.
2. SEE SPECIFICATION SECTION 13200 FOR ADDITIONAL INFORMATION ON THE BURIED STORMWATER INFILTRATION SYSTEM.
3. FILTER FABRIC TO COVER SIDES AND TOP OF CRUSHED STONE WITH OVERLAP SHOWN. INSTALL STAKES TO HOLD FILTER FABRIC IN PLACE PER FILTER FABRIC MANUFACTURER RECOMMENDATIONS.
4. JOINTS ON INFILTRATION GALLERY AND DESILTING BASIN UNITS ARE TO BE GASKETED, FILLED AND SEALED PER SECTION 13200.

THE CITY OF LOS ANGELES OR ITS OFFICERS OR AGENTS SHALL NOT BE RESPONSIBLE FOR THE ACCURACY OR COMPLETENESS OF ELECTRONIC COPIES OF THIS PLAN SHEET.

REVISION DATES
(DESIGN STAGE ONLY)

ENGINEERING
CITY OF LOS ANGELES

THIS PLAN WAS ELECTRONICALLY • SIGNED AND STAMPED

REGISTERED PROFESSIONAL ENGINEER
TED S. ALLEN
No. C 48973
EXP. 08/31/2026
CIVIL
STATE OF CALIFORNIA
01/27/2023

BUREAU OF ENGINEERING

VERTICAL CONTROL: BENCH MARK (08-30460) NAVD 88
HORIZONTAL CONTROL: CALIFORNIA STATE PLANE ZONE V, 1983 NAD

SHEET TITLE: DESILTING AND INFILTRATION GALLERIES ENLARGED PLAN AND SECTIONS 5

PROJECT: FERNANGELES PARK STORMWATER CAPTURE PROJECT

ADDRESS: FERNANGELES RECREATION CENTER 8851 LAUREL CANYON BLVD, SUN VALLEY, CA 91352

NO.	REVISIONS	DATE	BY
		YY/MM/DD	
		YY/MM/DD	
		YY/MM/DD	
		YY/MM/DD	

CIP NO. SCP0002

INDEX NO.

CITY OF LOS ANGELES DEPARTMENT OF PUBLIC WORKS

CITY ENGINEER: TED ALLEN, P.E. — DATE: 04/11/2023

DESIGN GROUP		DATE
ENGINEER:	CDM SMITH INC.	04/11/2023
ARCHITECT:	NA	04/11/2023
DESIGNED BY:	M. MA	04/11/2023
DRAWN BY:	C. BILDERBACK	04/11/2023
CHECKED BY:	P. TAURASI	04/11/2023
APPROVED BY:	A. DELLINGER	04/11/2023

WORK ORDER
EW40079F

SHEET NAME
CI10

SHEET 53 OF 125 SHEETS

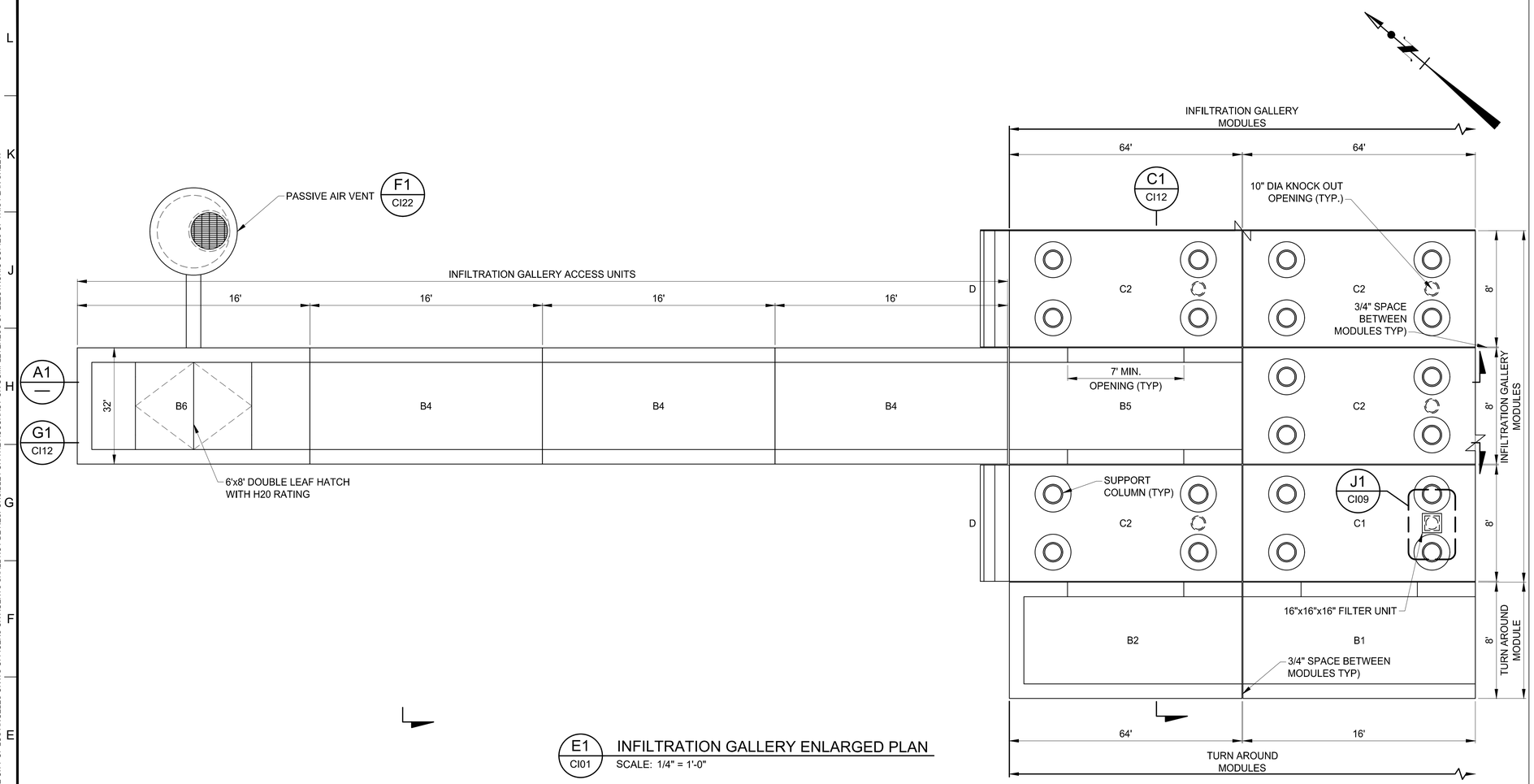

E1 CI01 INFILTRATION GALLERY ENLARGED PLAN

SCALE: 1/4" = 1'-0"

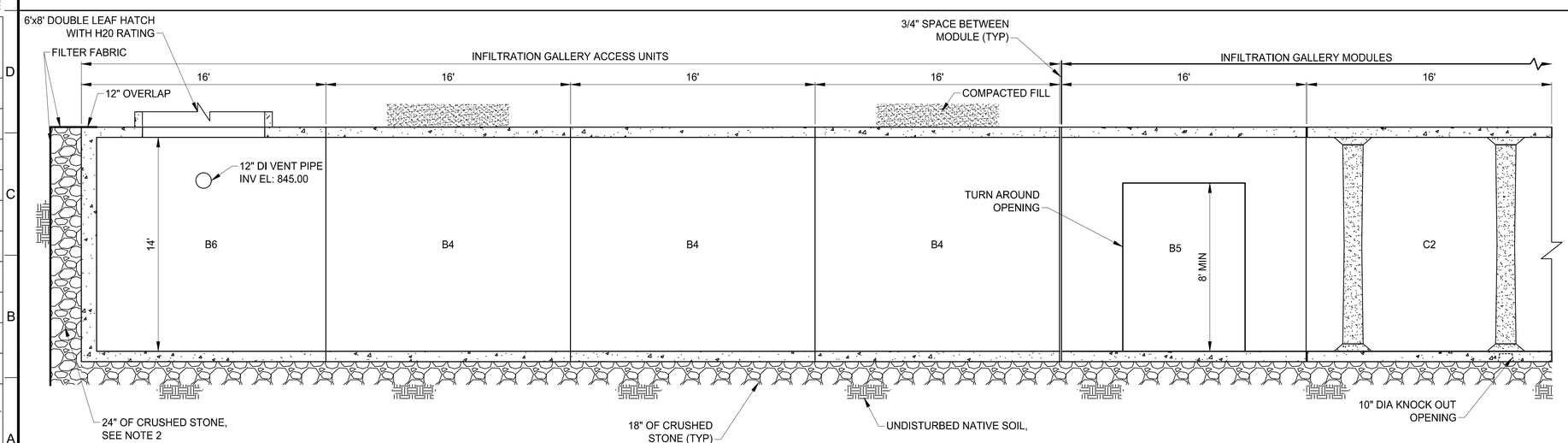

A1/- PARTIAL SECTION

SCALE: 1/4" = 1'-0"

NOTES

1. SEE SHEET GI03 FOR FILL REQUIREMENTS AROUND THE PERIMETER AND TOP OF THE DESILTING BASINS AND INFILTRATION GALLERIES.
2. SEE SPECIFICATION SECTION 13200 FOR ADDITIONAL INFORMATION ON THE BURIED STORMWATER INFILTRATION SYSTEM.
3. FILTER FABRIC TO COVER SIDES AND TOP OF CRUSHED STONE WITH OVERLAP SHOWN. INSTALL STAKES TO HOLD FILTER FABRIC IN PLACE PER FILTER FABRIC MANUFACTURER RECOMMENDATIONS.
4. JOINTS ON INFILTRATION GALLERY AND DESILTING BASIN UNITS ARE TO BE GASKETED, FILLED AND SEALED PER SECTION 13200.

THE CITY OF LOS ANGELES OR ITS OFFICERS OR AGENTS SHALL NOT BE RESPONSIBLE FOR THE ACCURACY OR COMPLETENESS OF ELECTRONIC COPIES OF THIS PLAN SHEET.

REVISION DATES (DESIGN STAGE ONLY)

ENGINEERING
CITY OF LOS ANGELES

THIS PLAN WAS ELECTRONICALLY • SIGNED AND STAMPED

REGISTERED PROFESSIONAL ENGINEER TED S. ALLEN No. C 48973 EXP. 08/31/2026 STATE OF CALIFORNIA 01/27/2023

BUREAU OF ENGINEERING

VERTICAL CONTROL: BENCH MARK (08-30460 (NAVD 88)
HORIZONTAL CONTROL: CALIFORNIA STATE PLANE ZONE V, 1983 NAD

SHEET TITLE: DESILTING AND INFILTRATION GALLERIES ENLARGED PLAN AND SECTIONS 6

PROJECT: FERNANGELES PARK STORMWATER CAPTURE PROJECT

ADDRESS: FERNANGELES RECREATION CENTER 8851 LAUREL CANYON BLVD, SUN VALLEY, CA 91352

NO.	REVISIONS	DATE	BY
		YY/MM/DD	
		YY/MM/DD	
		YY/MM/DD	
		YY/MM/DD	

CIP NO. SCP0002

INDEX NO.

CITY OF LOS ANGELES DEPARTMENT OF PUBLIC WORKS

CITY ENGINEER: TED ALLEN, P.E.

DESIGN GROUP		DATE
ENGINEER:	CDM SMITH INC.	04/11/2023
ARCHITECT:	NA	04/11/2023
DESIGNED BY:	M. MA	04/11/2023
DRAWN BY:	C. BILDERBACK	04/11/2023
CHECKED BY:	P. TAURASI	04/11/2023
APPROVED BY:	A. DELLINGER	04/11/2023

WORK ORDER EW40079F

SHEET NAME CI11

SHEET 54 OF 125 SHEETS

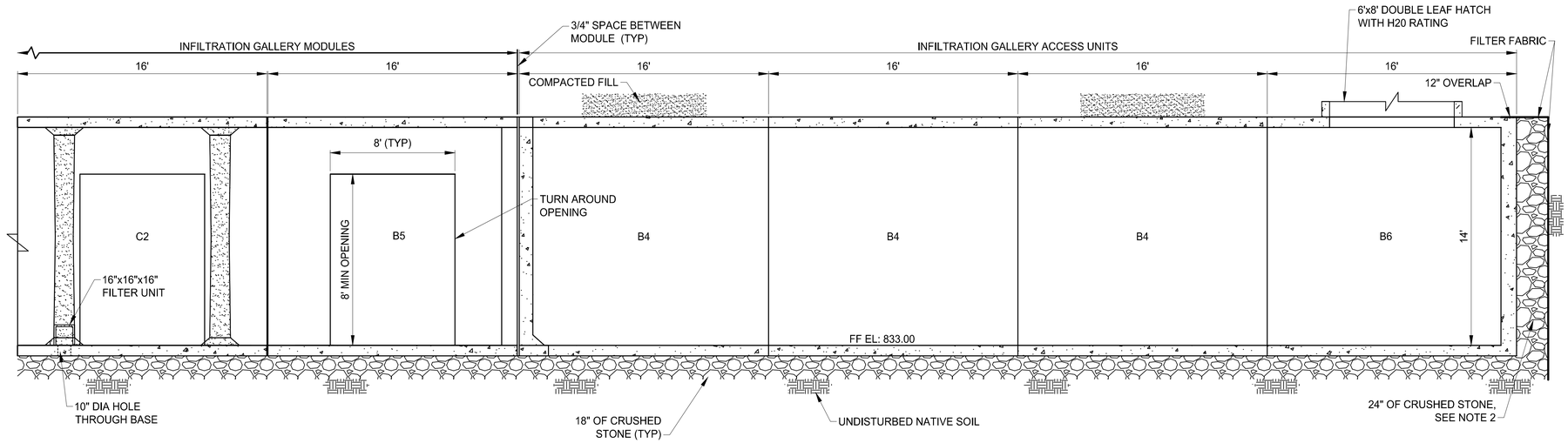

G1/CI11 | PARTIAL SECTION

SCALE: 1/4" = 1'-0"

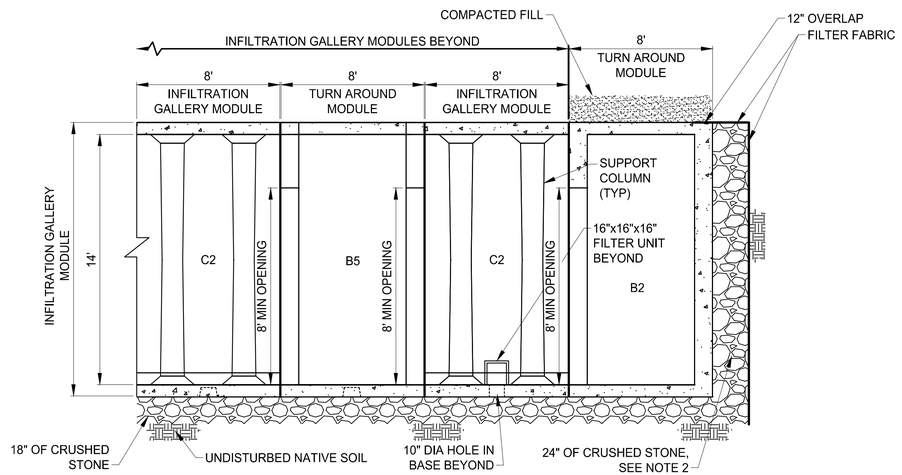

C1/CI11 | PARTIAL SECTION

SCALE: 1/4" = 1'-0"

NOTES

1. SEE SHEET GI03 FOR FILL REQUIREMENTS AROUND THE PERIMETER AND TOP OF THE DESILTING BASINS AND INFILTRATION GALLERIES.
2. SEE SPECIFICATION SECTION 13200 FOR ADDITIONAL INFORMATION ON THE BURIED STORMWATER INFILTRATION SYSTEM.
3. FILTER FABRIC TO COVER SIDES AND TOP OF CRUSHED STONE WITH OVERLAP SHOWN. INSTALL STAKES TO HOLD FILTER FABRIC IN PLACE PER FILTER FABRIC MANUFACTURER RECOMMENDATIONS.
4. JOINTS ON INFILTRATION GALLERY AND DESILTING BASIN UNITS ARE TO BE GASKETED, FILLED AND SEALED PER SECTION 13200.

THE CITY OF LOS ANGELES OR ITS OFFICERS OR AGENTS SHALL NOT BE RESPONSIBLE FOR THE ACCURACY OR COMPLETENESS OF ELECTRONIC COPIES OF THIS PLAN SHEET.

REVISION DATES (DESIGN STAGE ONLY)

ENGINEERING
CITY OF LOS ANGELES

REGISTERED PROFESSIONAL ENGINEER S. TED ALLEN No. C 48973 EXP. 08/31/2026 CIVIL STATE OF CALIFORNIA 01/27/2023

THIS PLAN WAS ELECTRONICALLY • SIGNED AND STAMPED

BUREAU OF ENGINEERING

VERTICAL CONTROL: BENCH MARK 08-30460 (NAVD 88)
HORIZONTAL CONTROL: CALIFORNIA STATE PLANE ZONE V, 1983 NAD

SHEET TITLE: DESILTING AND INFILTRATION GALLERIES ENLARGED PLAN AND SECTIONS 7
PROJECT: FERNANGELES PARK STORMWATER CAPTURE PROJECT
ADDRESS: FERNANGELES RECREATION CENTER 8851 LAUREL CANYON BLVD, SUN VALLEY, CA 91352

NO.	REVISIONS	DATE	BY
		YY/MM/DD	
		YY/MM/DD	
		YY/MM/DD	
		YY/MM/DD	

CIP NO. SCP0002

INDEX NO.

CITY OF LOS ANGELES DEPARTMENT OF PUBLIC WORKS

CITY ENGINEER: TED ALLEN, P.E. — DATE: 04/11/2023

DESIGN GROUP		DATE
ENGINEER:	CDM SMITH INC.	04/11/2023
ARCHITECT:	NA	04/11/2023
DESIGNED BY:	M. MA	04/11/2023
DRAWN BY:	C. BILDERBACK	04/11/2023
CHECKED BY:	P. TAURASI	04/11/2023
APPROVED BY:	A. DELLINGER	04/11/2023

WORK ORDER EW40079F

SHEET NAME CI12

SHEET 55 OF 125 SHEETS

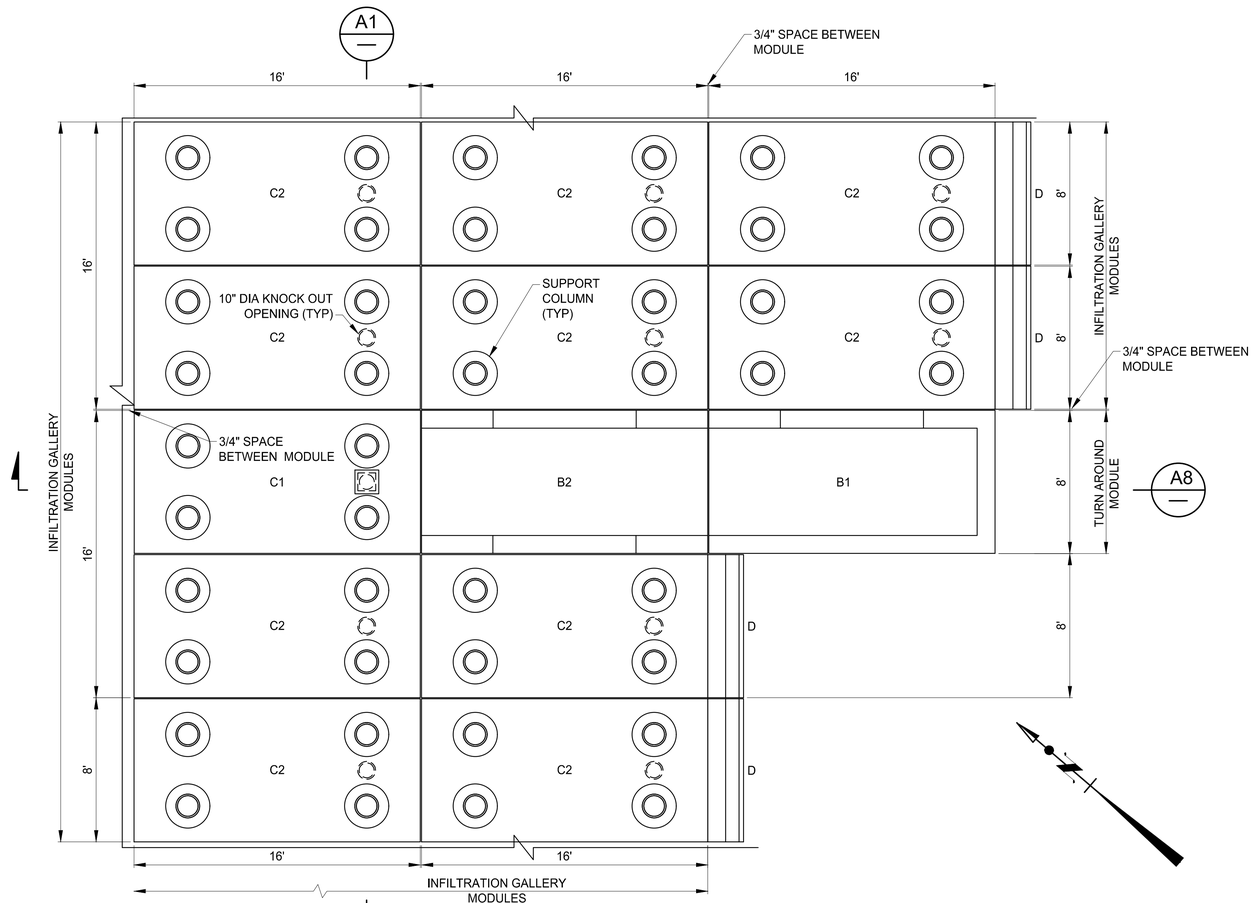

E1 — CI01

INFILTRATION GALLERY ENLARGED PLAN

SCALE: 1/4" = 1'-0"

NOTES

1. SEE SHEET GI03 FOR FILL REQUIREMENTS AROUND THE PERIMETER AND TOP OF THE DESILTING BASINS AND INFILTRATION GALLERIES.
2. SEE SPECIFICATION SECTION 13200 FOR ADDITIONAL INFORMATION ON THE BURIED STORMWATER INFILTRATION SYSTEM.
3. FILTER FABRIC TO COVER SIDES AND TOP OF CRUSHED STONE WITH OVERLAP SHOWN. INSTALL STAKES TO HOLD FILTER FABRIC IN PLACE PER FILTER FABRIC MANUFACTURER RECOMMENDATIONS.
4. JOINTS ON INFILTRATION GALLERY AND DESILTING BASIN UNITS ARE TO BE GASKETED, FILLED AND SEALED PER SECTION 13200.

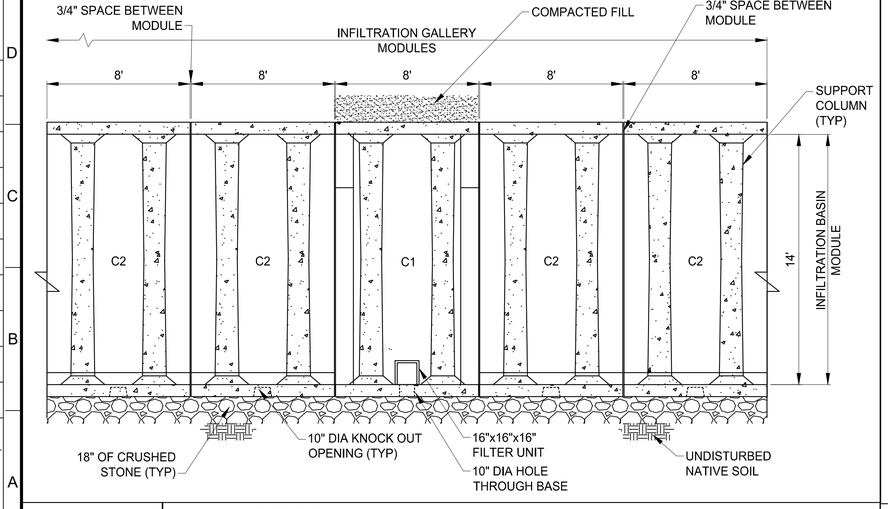

A1 — PARTIAL SECTION

SCALE: 1/4" = 1'-0"

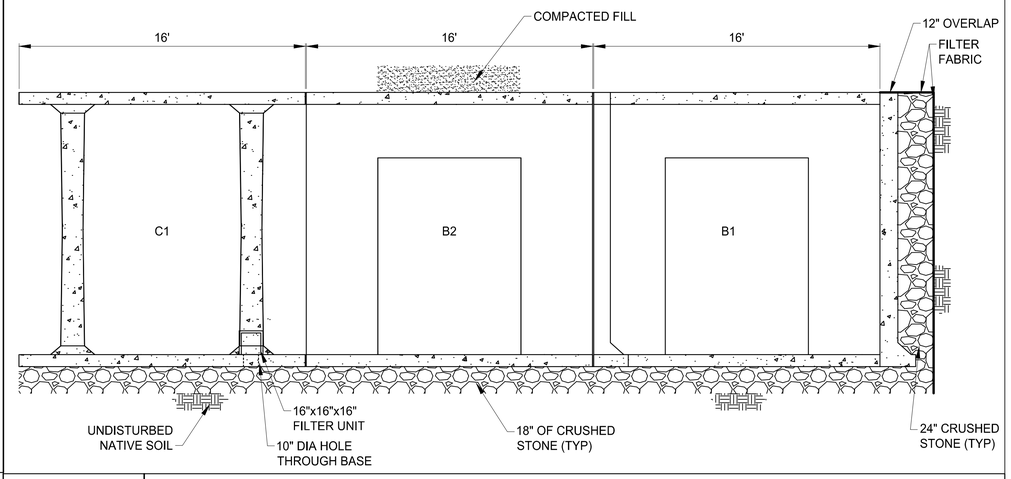

A8 — PARTIAL SECTION

SCALE: 1/4" = 1'-0"

THE CITY OF LOS ANGELES OR ITS OFFICERS OR AGENTS SHALL NOT BE RESPONSIBLE FOR THE ACCURACY OR COMPLETENESS OF ELECTRONIC COPIES OF THIS PLAN SHEET.

REVISION DATES (DESIGN STAGE ONLY)

BUREAU OF ENGINEERING

THIS PLAN WAS ELECTRONICALLY • SIGNED AND STAMPED

ENGINEERING
CITY OF LOS ANGELES

PROFESSIONAL ENGINEER — REGISTERED — S. TED ALLEN — No. C 48973 — EXP. 08/31/2024 — CIVIL — STATE OF CALIFORNIA — 01/27/2023

VERTICAL CONTROL: BENCH MARK (08-30460) NAVD 88
HORIZONTAL CONTROL: CALIFORNIA STATE PLANE ZONE V, 1983 NAD

SHEET TITLE: DESILTING AND INFILTRATION GALLERIES ENLARGED PLAN AND SECTIONS 8
PROJECT: FERNANGELES PARK STORMWATER CAPTURE PROJECT
ADDRESS: FERNANGELES RECREATION CENTER 8851 LAUREL CANYON BLVD, SUN VALLEY, CA 91352

NO.	REVISIONS	DATE	BY
		YY/MM/DD	
		YY/MM/DD	
		YY/MM/DD	
		YY/MM/DD	

CITY OF LOS ANGELES DEPARTMENT OF PUBLIC WORKS

CITY ENGINEER: TED ALLEN, P.E. — DATE: 04/11/2023

	DESIGN GROUP	DATE
ENGINEER:	CDM SMITH INC.	04/11/2023
ARCHITECT:	NA	04/11/2023
DESIGNED BY:	M. MA.	04/11/2023
DRAWN BY:	C. BILDERBACK	04/11/2023
CHECKED BY:	P. TAURASI	04/11/2023
APPROVED BY:	A. DELLINGER	04/11/2023

CIP NO. SCP0002

INDEX NO.

WORK ORDER EW40079F

SHEET NAME CI13

SHEET 56 OF 125 SHEETS

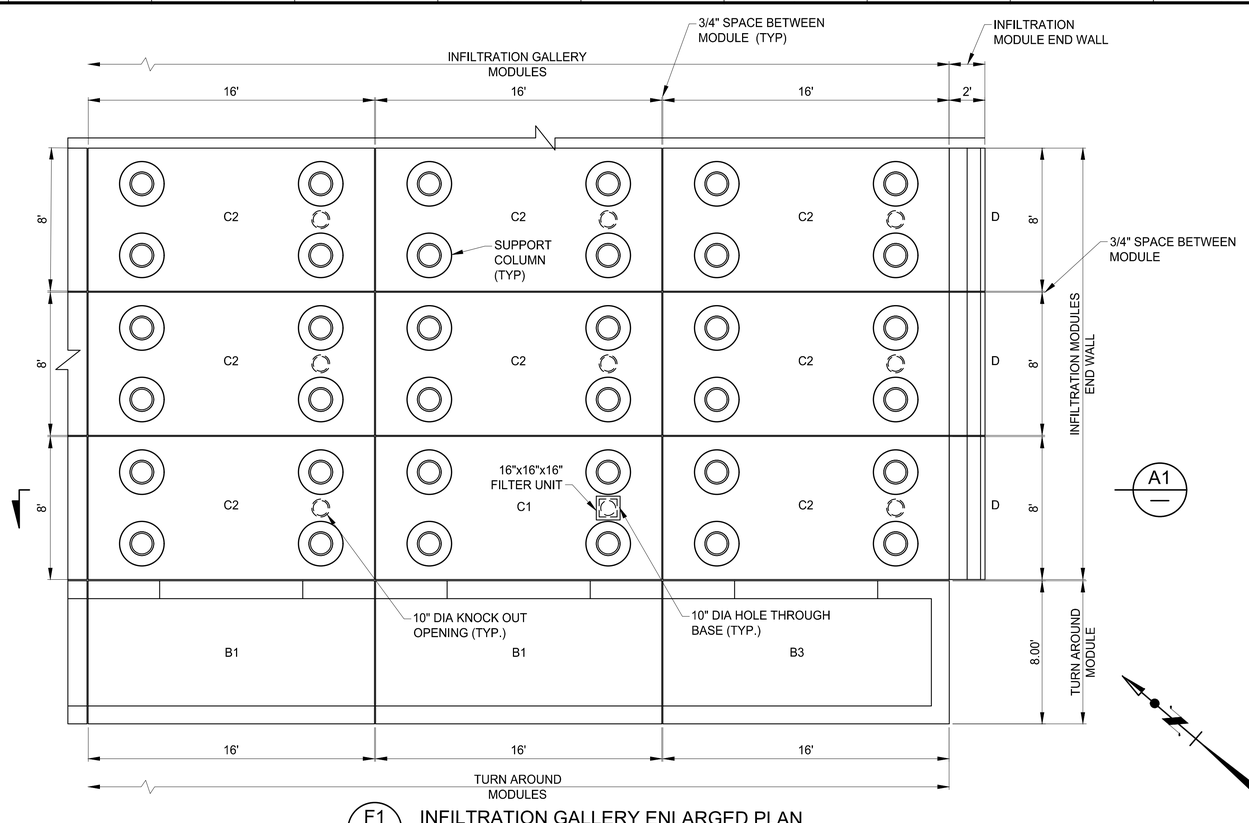

F1 / CI01 INFILTRATION GALLERY ENLARGED PLAN

SCALE: 1/4" = 1'-0"

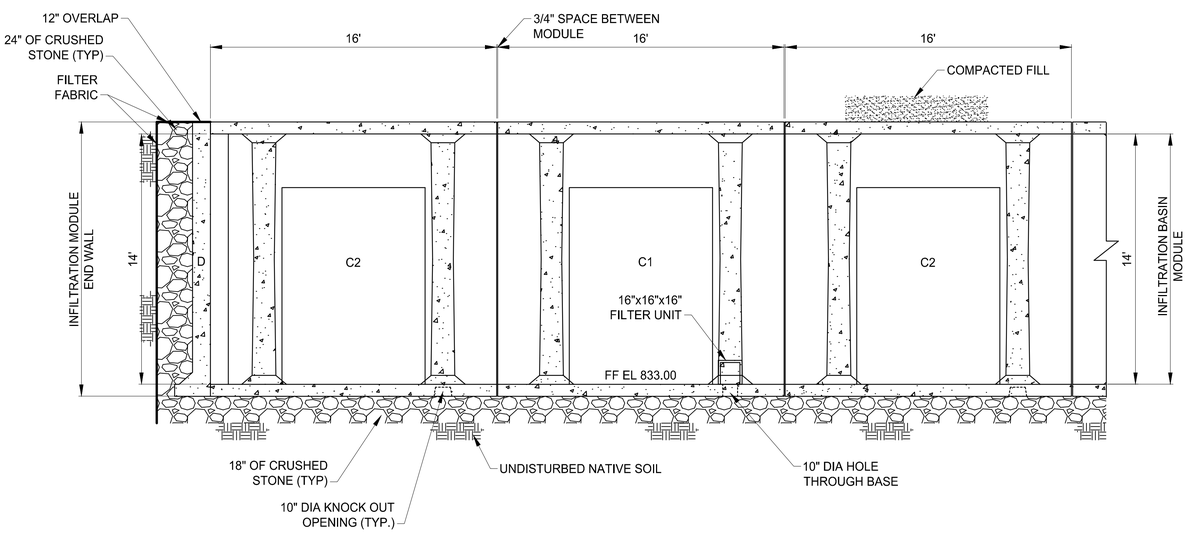

A1 PARTIAL SECTION

SCALE: 1/4" = 1'-0"

NOTES

1. SEE SHEET GI03 FOR FILL REQUIREMENTS AROUND THE PERIMETER AND TOP OF THE DESILTING BASINS AND INFILTRATION GALLERIES.
2. SEE SPECIFICATION SECTION 13200 FOR ADDITIONAL INFORMATION ON THE BURIED STORMWATER INFILTRATION SYSTEM.
3. FILTER FABRIC TO COVER SIDES AND TOP OF CRUSHED STONE WITH OVERLAP SHOWN. INSTALL STAKES TO HOLD FILTER FABRIC IN PLACE PER FILTER FABRIC MANUFACTURER RECOMMENDATIONS.
4. JOINTS ON INFILTRATION GALLERY AND DESILTING BASIN UNITS ARE TO BE GASKETED, FILLED AND SEALED PER SECTION 13200.

ENGINEERING
CITY OF LOS ANGELES

REGISTERED PROFESSIONAL ENGINEER — TED S. ALLEN — No. C 48973 — EXP. 08/31/2024 — STATE OF CALIFORNIA — 01/27/2023

THIS PLAN WAS ELECTRONICALLY • SIGNED AND STAMPED

BUREAU OF ENGINEERING

VERTICAL CONTROL: BENCH MARK (08-30460) NAVD 88
HORIZONTAL CONTROL: CALIFORNIA STATE PLANE ZONE V, 1983 NAD

SHEET TITLE: DESILTING AND INFILTRATION GALLERIES ENLARGED PLAN AND SECTIONS 9
PROJECT: FERNANGELES PARK STORMWATER CAPTURE PROJECT
ADDRESS: FERNANGELES RECREATION CENTER 8851 LAUREL CANYON BLVD, SUN VALLEY, CA 91352

NO.	REVISIONS	DATE	BY
		YY/MM/DD	
		YY/MM/DD	
		YY/MM/DD	
		YY/MM/DD	

CIP NO. SCP0002

INDEX NO.

CITY OF LOS ANGELES DEPARTMENT OF PUBLIC WORKS

CITY ENGINEER: TED ALLEN, P.E. — DATE: 04/11/2023

DESIGN GROUP		DATE
ENGINEER:	CDM SMITH INC.	04/11/2023
ARCHITECT:	NA	04/11/2023
DESIGNED BY:	M. MA	04/11/2023
DRAWN BY:	C. BILDERBACK	04/11/2023
CHECKED BY:	P. TAURASI	04/11/2023
APPROVED BY:	A. DELLINGER	04/11/2023

WORK ORDER EW40079F

SHEET NAME CI14

SHEET 57 OF 125 SHEETS

THE CITY OF LOS ANGELES OR ITS OFFICERS OR AGENTS SHALL NOT BE RESPONSIBLE FOR THE ACCURACY OR COMPLETENESS OF ELECTRONIC COPIES OF THIS PLAN SHEET.

REVISION DATES (DESIGN STAGE ONLY)

NOTES

1. SEE SHEET GI03 FOR FILL REQUIREMENTS AROUND THE PERIMETER AND TOP OF THE DESILTING BASINS AND INFILTRATION GALLERIES.
2. JOINTS ON INFILTRATION GALLERY AND DESILTING BASIN UNITS ARE TO BE GASKETED, FILLED AND SEALED PER SECTION 13200.

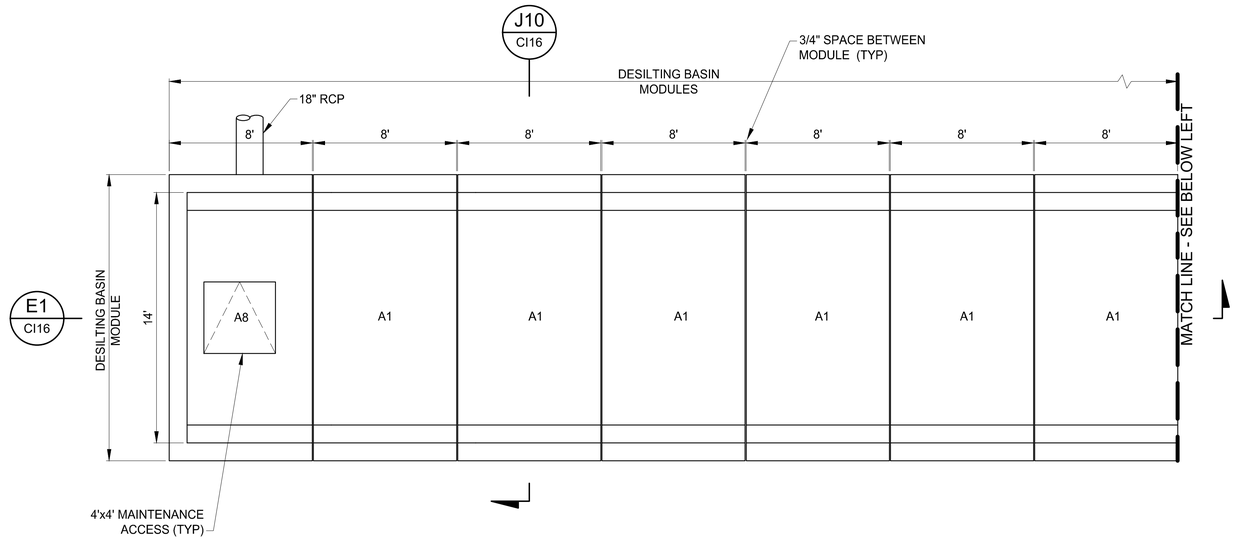

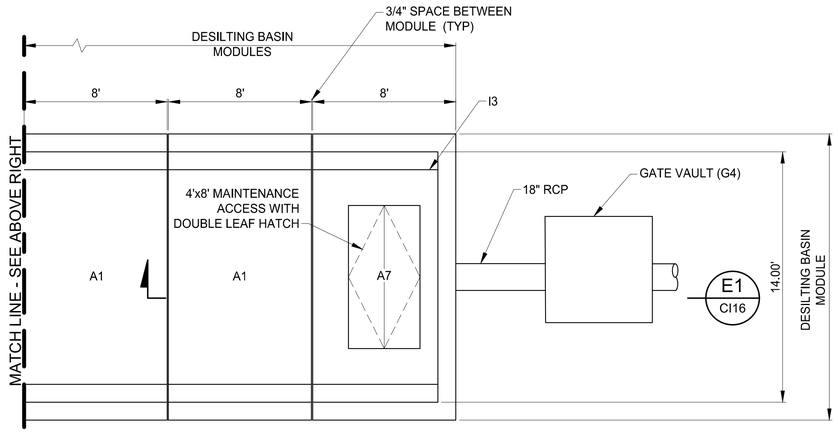

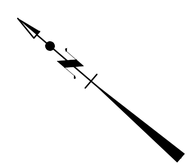

A1 / CI02 DESILTING BASIN ENLARGED PLAN
SCALE: 1/4" = 1'-0"

THE CITY OF LOS ANGELES OR ITS OFFICERS OR AGENTS SHALL NOT BE RESPONSIBLE FOR THE ACCURACY OR COMPLETENESS OF ELECTRONIC COPIES OF THIS PLAN SHEET.

REVISION DATES (DESIGN STAGE ONLY)

ENGINEERING
CITY OF LOS ANGELES

THIS PLAN WAS ELECTRONICALLY SIGNED AND STAMPED

REGISTERED PROFESSIONAL ENGINEER
ANTHONY S. DELLINGER
No. C 48973
EXP. 09/30/2026
STATE OF CALIFORNIA
01/27/2023

BUREAU OF ENGINEERING

VERTICAL CONTROL: BENCH MARK 08-30460 NAVD 88
HORIZONTAL CONTROL: CALIFORNIA STATE PLANE ZONE V, 1983 NAD

SHEET TITLE: DESILTING AND INFILTRATION GALLERIES ENLARGED PLAN AND SECTIONS 10

PROJECT: FERNANGELES PARK STORMWATER CAPTURE PROJECT

ADDRESS: FERNANGELES RECREATION CENTER
8851 LAUREL CANYON BLVD, SUN VALLEY, CA 91352

CITY OF LOS ANGELES DEPARTMENT OF PUBLIC WORKS

NO.	REVISIONS	DATE	BY
		YY/MM/DD	
		YY/MM/DD	
		YY/MM/DD	
		YY/MM/DD	

CIP NO. SCP0002

INDEX NO.

CITY ENGINEER

	DESIGN GROUP	DATE
ENGINEER:	CDM SMITH INC.	04/11/2023
ARCHITECT:	NA	04/11/2023
DESIGNED BY:	M. MA	04/11/2023
DRAWN BY:	C. BILDERBACK	04/11/2023
CHECKED BY:	P. TAURASI	04/11/2023
APPROVED BY:	A. DELLINGER	04/11/2023

TED ALLEN, P.E.

WORK ORDER
EW40079F

SHEET NAME
CI15

SHEET 58 OF 125 SHEETS

SHEET VERSION 4.0.1 FILE PATH: C:\CDMEXT\SAMIDURAIM\D0491589\CI410.DWG PLOT DATE: 10/9/2024 3:06 PM SAVED: 10/9/2024 3:05 PM SAVED BY:SAMIDURAIM

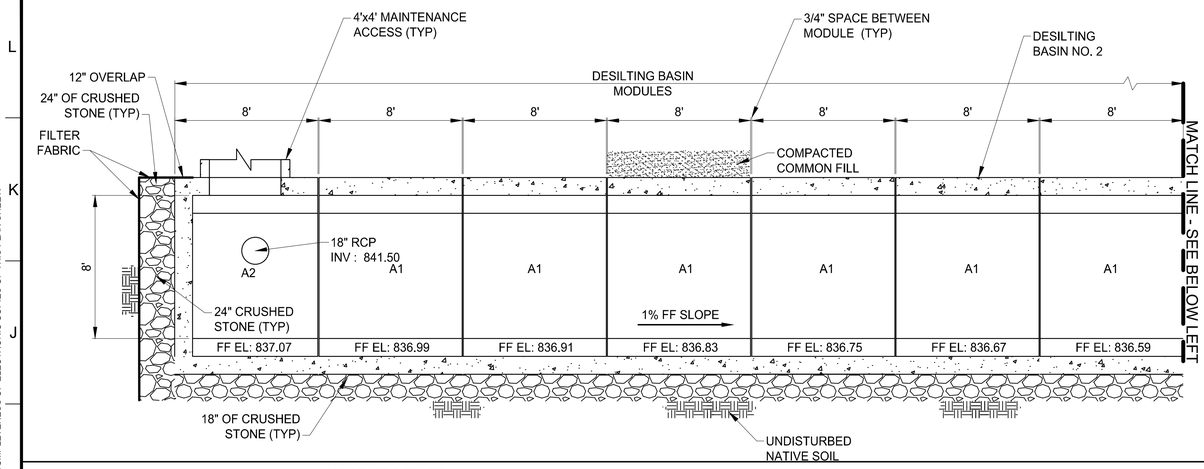

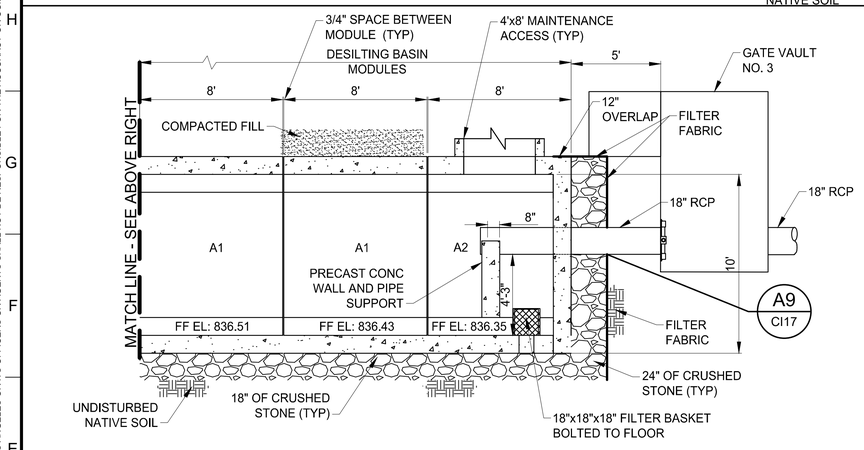

E1	PARTIAL SECTION
SCALE: 1/4" = 1'-0"	

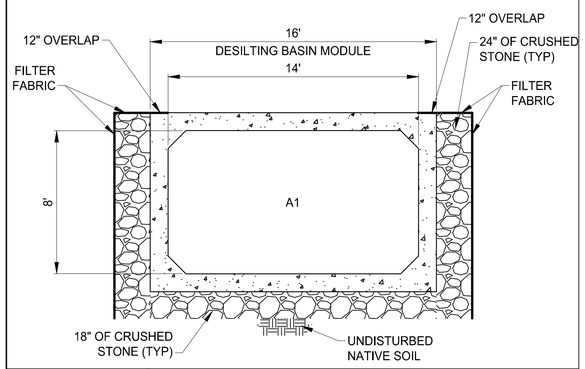

J10	PARTIAL SECTION
SCALE: 1/4" = 1'-0"	

NOTE:

1. SEE SHEET GI03 FOR FILL REQUIREMENTS AROUND THE PERIMETER AND TOP OD THE DESILTING BASINS AND INFILTRATION GALLERIES.
2. FILTER FABRIC TO COVER SIDES AND TOP OF CRUSHED STONE WITH OVERLAP SHOWN. INSTALL STAKES TO HOLD FILTER FABRIC IN PLACE PER FILTER FABRIC MANUFACTURER RECOMMENDATIONS.
4. JOINTS ON INFILTRATION GALLERY AND DESILTING BASIN UNITS ARE TO BE GASKETED, FILLED AND SEALED PER SECTION 13200.

THE CITY OF LOS ANGELES OR ITS OFFICERS OR AGENTS SHALL NOT BE RESPONSIBLE FOR THE ACCURACY OR COMPLETENESS OF ELECTRONIC COPIES OF THIS PLAN SHEET.

REVISION DATES (DESIGN STAGE ONLY)

ENGINEERING
CITY OF LOS ANGELES

THIS PLAN WAS ELECTRONICALLY • SIGNED AND STAMPED

PROFESSIONAL ENGINEER
REGISTERED
No. C 48973
EXP. 08/31/2026
STATE OF CALIFORNIA
01/27/2023

BUREAU OF ENGINEERING

VERTICAL CONTROL: BENCH MARK:08-30460 (NAVD 88)
HORIZONTAL CONTROL: CALIFORNIA STATE PLANE ZONE V. 1983 NAD

SHEET TITLE: DESILTING AND INFILTRATION GALLERIES ENLARGED PLAN AND SECTIONS 11
PROJECT: FERNANGELES PARK STORMWATER CAPTURE PROJECT
ADDRESS: FERNANGELES RECREATION CENTER 8851 LAUREL CANYON BLVD, SUN VALLEY, CA 91352

NO.	REVISIONS	BY	DATE
			YY/MM/DD
			YY/MM/DD
			YY/MM/DD
			YY/MM/DD

CIP NO. SCP0002

INDEX NO.

CITY OF LOS ANGELES DEPARTMENT OF PUBLIC WORKS

CITY ENGINEER	DESIGN GROUP	DATE
TED ALLEN, P.E.		04/11/2023
ENGINEER:	CDM SMITH INC.	04/11/2023
ARCHITECT:	NA	04/11/2023
DESIGNED BY:	M. MA	04/11/2023
DRAWN BY:	C. BILDERBACK	04/11/2023
CHECKED BY:	P. TAURASI	04/11/2023
APPROVED BY:	A. DELLINGER	04/11/2023

WORK ORDER
EW40079F

SHEET NAME
CI16
SHEET 59 OF 125 SHEETS

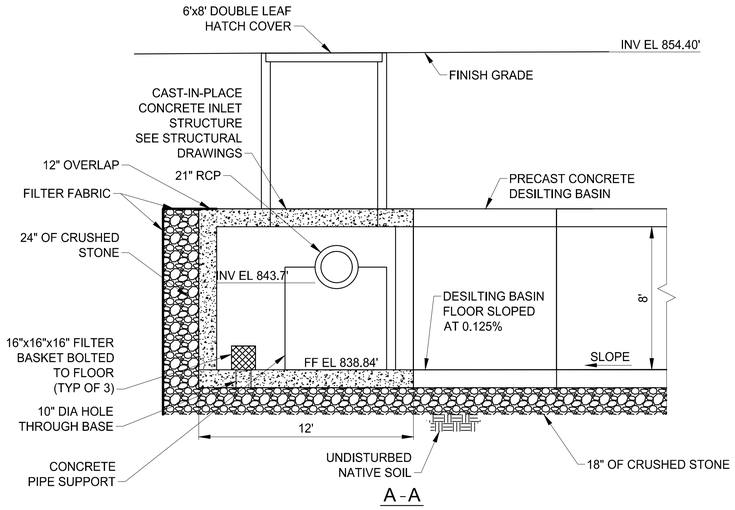

A-A

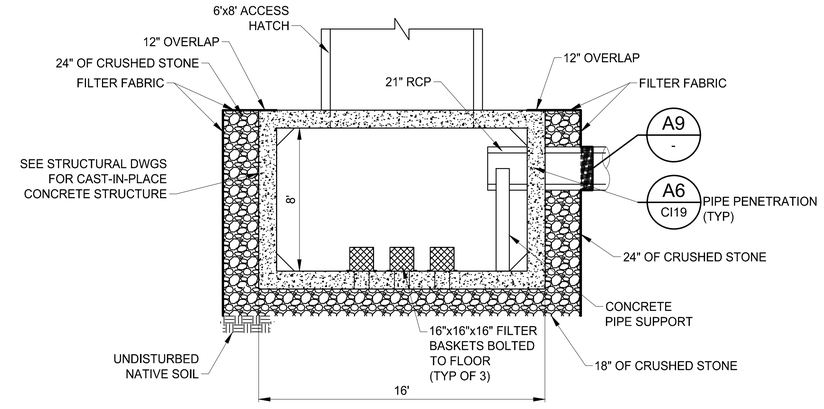

B-B

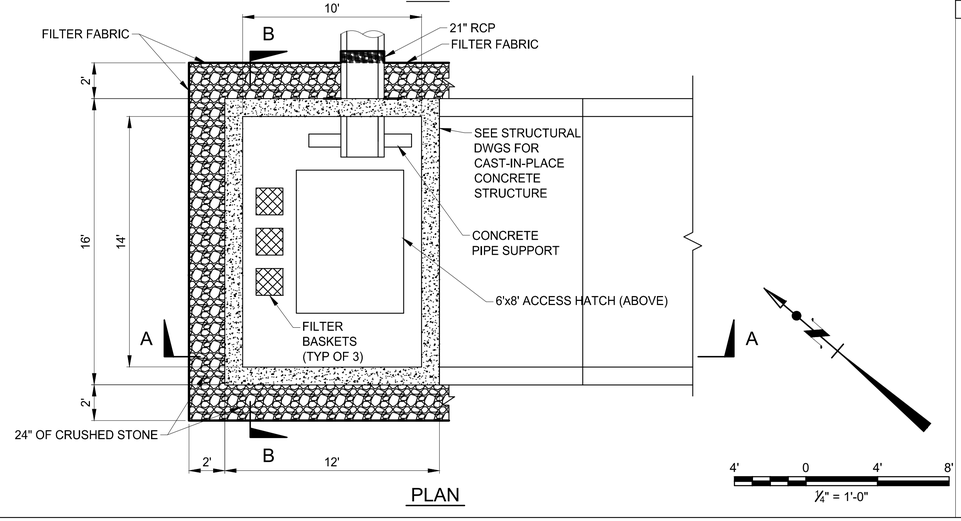

PLAN

A1	INLET STRUCTURE NO. 3 - TO DESILTING BASIN NO. 1
SCALE: 1/4" = 1'-0"	CU01

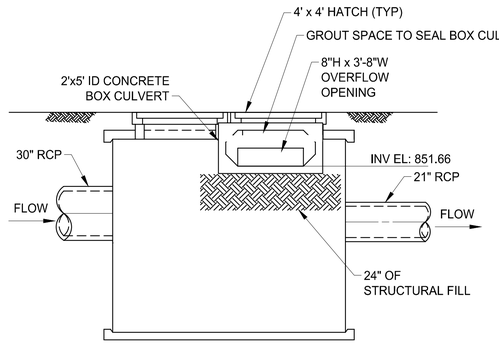

A-A

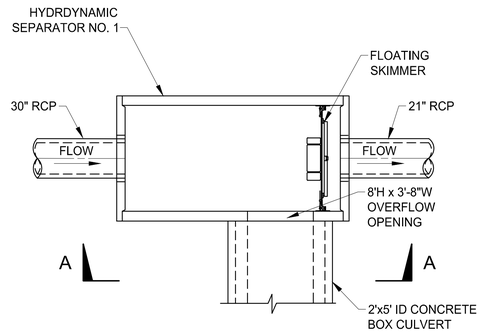

PLAN

E9	OVERFLOW CONNECTION TO HYDRODYNAMIC SEPARATOR NO. 1
SCALE: 1/4"=1'-0"	

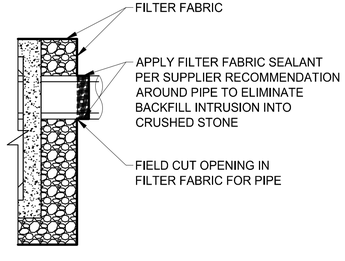

A9	FILTER FABRIC PIPE PENETRATION
SCALE: NTS	

NOTES

1. SEE SHEET GI03 FOR FILL REQUIREMENTS AROUND THE PERIMETER AND TOP OF THE DESILTING BASINS AND INFILTRATION GALLERIES.
2. SEE SPECIFICATION SECTION 13200 FOR ADDITIONAL INFORMATION ON THE BURIED STORMWATER INFILTRATION SYSTEM.
3. FILTER FABRIC TO COVER SIDES AND TOP OF CRUSHED STONE WITH OVERLAP SHOWN. INSTALL STAKES TO HOLD FILTER FABRIC IN PLACE PER FILTER FABRIC MANUFACTURER RECOMMENDATIONS.

THE CITY OF LOS ANGELES OR ITS OFFICERS OR AGENTS SHALL NOT BE RESPONSIBLE FOR THE ACCURACY OR COMPLETENESS OF ELECTRONIC COPIES OF THIS PLAN SHEET.

REVISION DATES (DESIGN STAGE ONLY)

ENGINEERING
CITY OF LOS ANGELES

THIS PLAN WAS ELECTRONICALLY • SIGNED AND STAMPED

PROFESSIONAL ENGINEER
REGISTERED
TED S. ALLEN
No. C 48973
EXP. 08/31/2024
STATE OF CALIFORNIA
01/27/2023

BUREAU OF ENGINEERING

VERTICAL CONTROL:	BENCH MARK (06-30460) NAVD 88
HORIZONTAL CONTROL:	CALIFORNIA STATE PLANE ZONE V, 1983 NAD
SHEET TITLE:	INLET STRUCTURE PLAN AND SECTIONS
PROJECT:	FERNANGELES PARK STORMWATER CAPTURE PROJECT
ADDRESS:	FERNANGELES RECREATION CENTER 8851 LAUREL CANYON BLVD, SUN VALLEY, CA 91352

NO.	REVISIONS	DATE	BY
		YY/MM/DD	
		YY/MM/DD	
		YY/MM/DD	
		YY/MM/DD	

CIP NO. SCP0002

INDEX NO.

CITY ENGINEER	DATE
TED ALLEN, P.E.	04/11/2023

DESIGN GROUP	
ENGINEER:	CDM SMITH INC.
ARCHITECT:	NA
DESIGNED BY:	C. RICE
DRAWN BY:	M. RUSH
CHECKED BY:	P. TAURASI
APPROVED BY:	A. DELLINGER

	04/11/2023
	04/11/2023
	04/11/2023
	04/11/2023
	04/11/2023
	04/11/2023

CITY OF LOS ANGELES DEPARTMENT OF PUBLIC WORKS

WORK ORDER EW40079F

SHEET NAME CI17

SHEET 60 OF 125 SHEETS

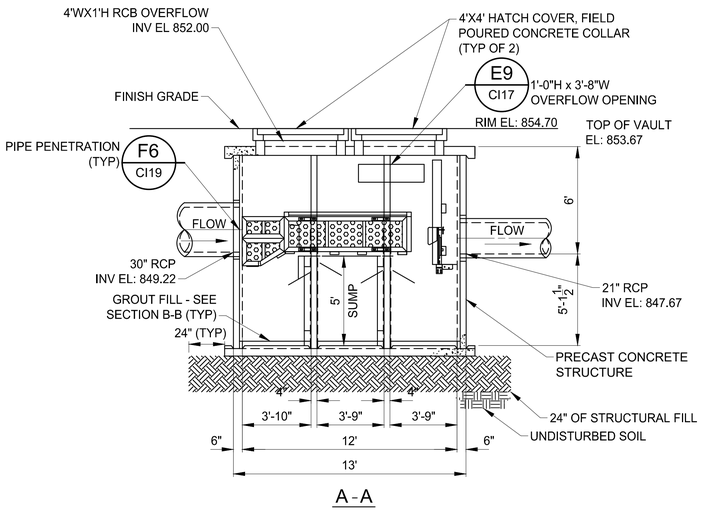

A-A

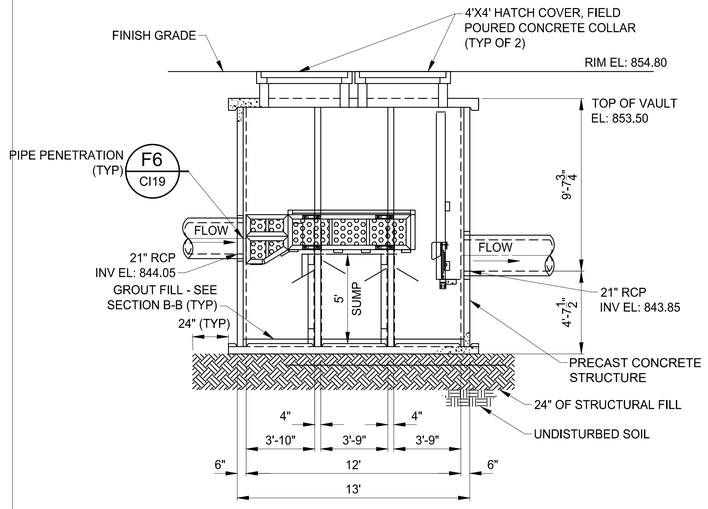

A-A

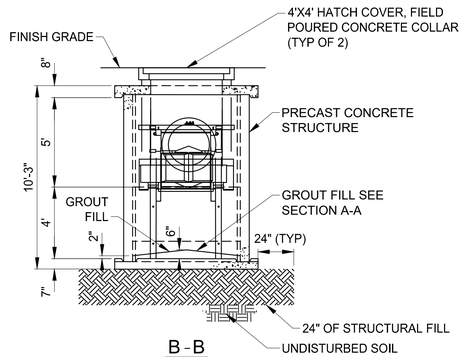

B-B

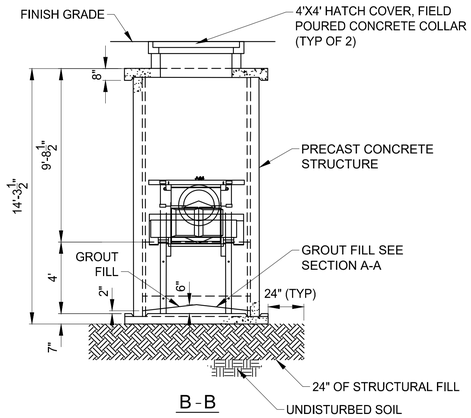

B-B

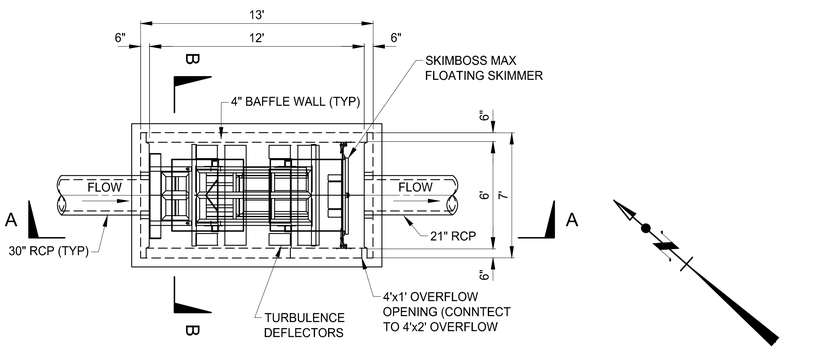

PLAN

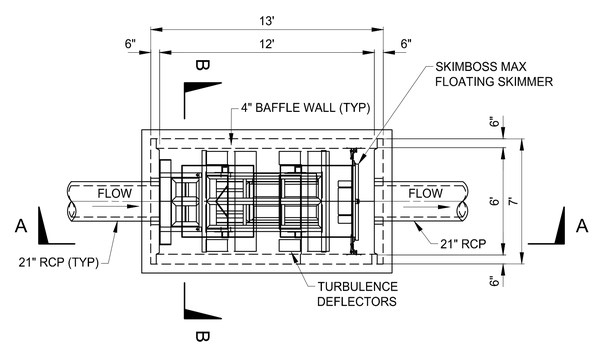

PLAN

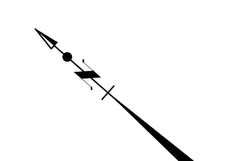

NOTE:

1. SEE SHEET GI03 FOR SUBGRADE PREPARATION. STRUCTURAL FILL AND FILL REQUIREMENTS.

A1	HYDRODYNAMIC SEPARATOR NO. 1	A9	HYDRODYNAMIC SEPARATOR NO. 2
SCALE: 1/4" = 1'-0"		SCALE: 1/4" = 1'-0"	

THE CITY OF LOS ANGELES OR ITS OFFICERS OR AGENTS SHALL NOT BE RESPONSIBLE FOR THE ACCURACY OR COMPLETENESS OF ELECTRONIC COPIES OF THIS PLAN SHEET.

REVISION DATES (DESIGN STAGE ONLY)

ENGINEERING
CITY OF LOS ANGELES

PROFESSIONAL ENGINEER
REGISTERED
TED S. ALLEN
No. C 48973
EXP. 08/31/2024
STATE OF CALIFORNIA
01/27/2023

THIS PLAN WAS ELECTRONICALLY SIGNED AND STAMPED

BUREAU OF ENGINEERING

VERTICAL CONTROL: BENCH MARK (08-30460) NAVD 88
HORIZONTAL CONTROL: CALIFORNIA STATE PLANE ZONE V, 1983 NAD

SHEET TITLE: HYDRODYNAMIC SEPARATOR
PLAN, SECTION AND DETAILS 1

PROJECT: FERNANGELES PARK STORMWATER
CAPTURE PROJECT

ADDRESS: FERNANGELES RECREATION CENTER
8851 LAUREL CANYON BLVD, SUN VALLEY, CA 91352

NO.	REVISIONS	DATE	BY
		YY/MM/DD	
		YY/MM/DD	
		YY/MM/DD	
		YY/MM/DD	

CIP NO. SCP0002

INDEX NO.

CITY OF LOS ANGELES DEPARTMENT OF PUBLIC WORKS

CITY ENGINEER: TED ALLEN, P.E.

DESIGN GROUP	DATE
ENGINEER: CDM SMITH INC.	04/11/2023
ARCHITECT: NA	04/11/2023
DESIGNED BY: C. RICE	04/11/2023
DRAWN BY: M. RUSH	04/11/2023
CHECKED BY: P. TAURASI	04/11/2023
APPROVED BY: A. DELLINGER	04/11/2023

WORK ORDER
EW40079F

SHEET NAME
CI18

SHEET 61 OF 125 SHEETS

SHEET VERSION 4.0.1 FILE PATH: C:\CDMEXT\SAMIDURAIM\D0491589\CI502.DWG PLOT DATE: 10/9/2024 3:11 PM SAVED: 10/9/2024 3:11 PM SAVED BY:SAMIDURAIM

NOTE:

1. SEE SHEET GI03 FOR SUBGRADE PREPARATION, STRUCTURAL FILL AND FILL REQUIREMENTS.

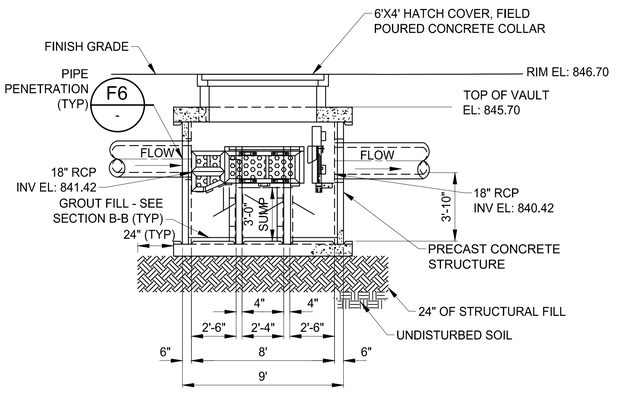

A - A

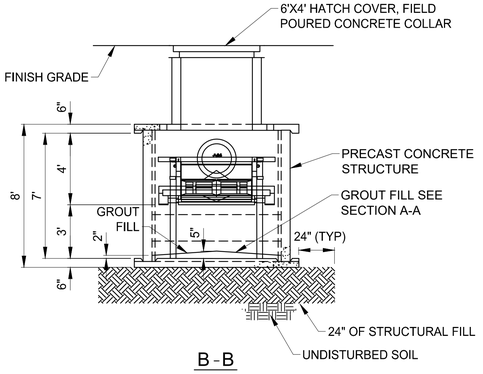

B - B

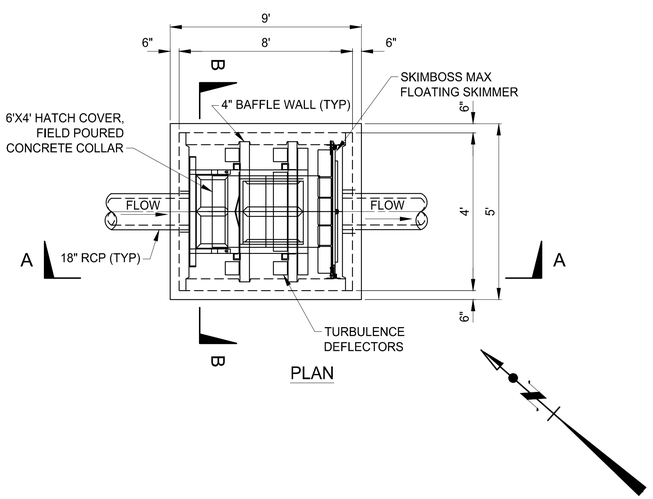

PLAN

A1	HYDRODYNAMIC SEPARATOR NO. 3
SCALE: NTS	

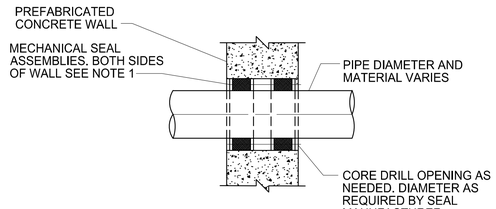

NOTES:

1. PROVIDE ONE MECHANICAL SEAL FOR CONCRETE WALLS 6 INCHES AND SMALLER. PROVIDE TWO MECHANICAL SEALS FOR CONCRETE WALLS GREATER THAN 6 INCHES.

F6	PIPE CONNECTION TO PRECAST CONCRETE STRUCTURE
SCALE: NTS	

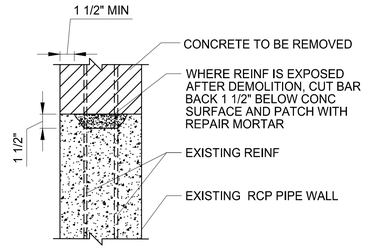

F12	PROTECTION OF EXPOSED REBAR IN EXISTING RCP PIPE
SCALE: NTS	

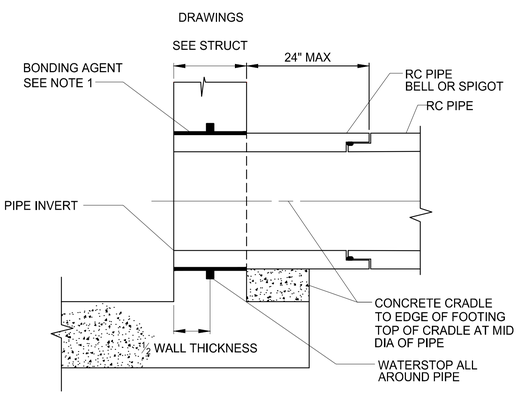

NOTES:

1. THOROUGHLY CLEAN AREA WITH OIL-FREE COMPRESSED AIR, THEN POUR AND CURE THE CONCRETE WALL AROUND THE PIPE.

A6	PIPE CONNECTION TO CAST-IN PLACE CONCRETE STRUCTURE
SCALE: NTS	

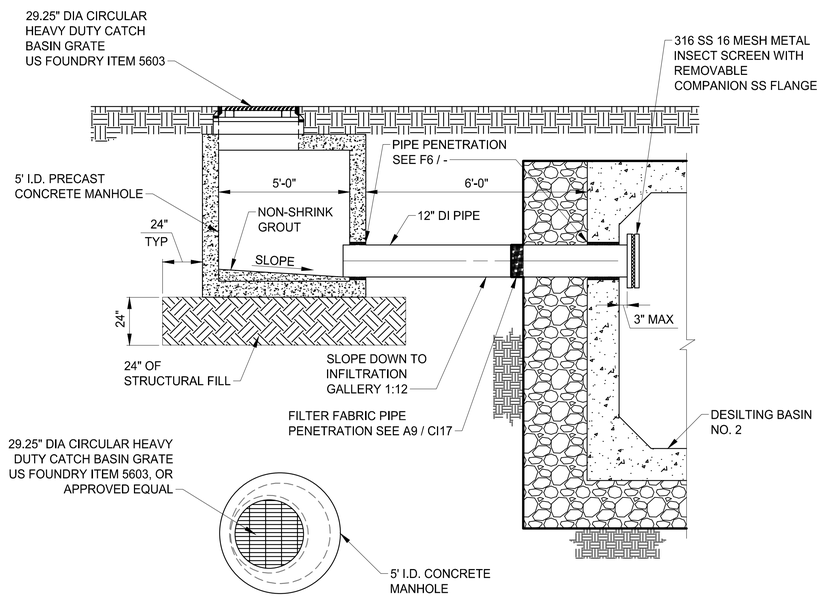

NOTE:

1. SEE SHEET GI03 FOR SUBGRADE PREPARATION, STRUCTURAL FILL AND FILL REQUIREMENT.

A11	CATCH BASIN TO DESILTING BASIN NO. 2
SCALE: NTS	

THE CITY OF LOS ANGELES OR ITS OFFICERS OR AGENTS SHALL NOT BE RESPONSIBLE FOR THE ACCURACY OR COMPLETENESS OF ELECTRONIC COPIES OF THIS PLAN SHEET.

REVISION DATES (DESIGN STAGE ONLY)

ENGINEERING
CITY OF LOS ANGELES

PROFESSIONAL ENGINEER
REGISTERED
TED S. ALLEN
No. C 48973
EXP. 08/31/2026
STATE OF CALIFORNIA
01/27/2023

THIS PLAN WAS ELECTRONICALLY • SIGNED AND STAMPED

BUREAU OF ENGINEERING

VERTICAL CONTROL: BENCH MARK (08-30460) NAVD 88
HORIZONTAL CONTROL: CALIFORNIA STATE PLANE ZONE V, 1983 NAD

SHEET TITLE: HYDRODYNAMIC SEPARATOR PLAN, SECTIONS AND DETAILS 2

PROJECT: FERNANGELES PARK STORMWATER CAPTURE PROJECT

ADDRESS: FERNANGELES RECREATION CENTER 8851 LAUREL CANYON BLVD, SUN VALLEY, CA 91352

NO.	REVISIONS	BY	DATE
			YY/MM/DD
			YY/MM/DD
			YY/MM/DD
			YY/MM/DD

CIP NO. SCP0002

INDEX NO.

CITY OF LOS ANGELES DEPARTMENT OF PUBLIC WORKS

CITY ENGINEER: TED ALLEN, P.E. DATE 04/11/2023

DESIGN GROUP		DATE
ENGINEER:	CDM SMITH INC.	04/11/2023
ARCHITECT:	NA	04/11/2023
DESIGNED BY:	C. RICE	04/11/2023
DRAWN BY:	M. RUSH	04/11/2023
CHECKED BY:	P. TAURASI	04/11/2023
APPROVED BY:	A. DELLINGER	04/11/2023

WORK ORDER EW40079F

SHEET NAME CI19

SHEET 62 OF 125 SHEETS

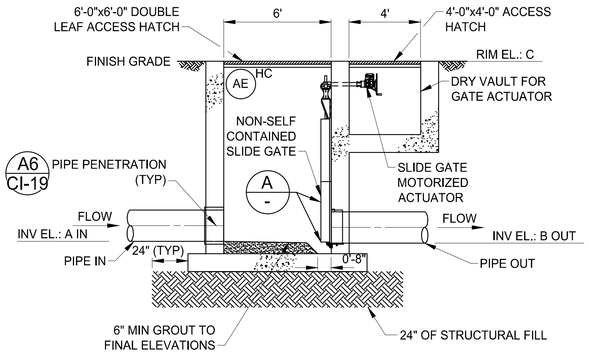

A - A

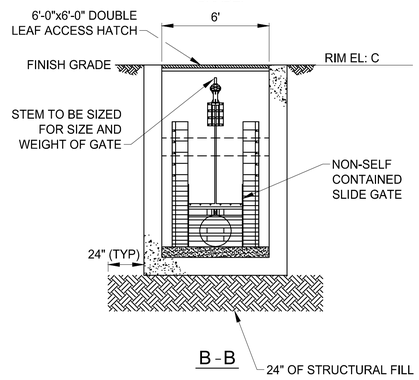

B - B

NOTE:

1. SEE SHEET GI03 FOR SUBGRADE PERPETRATION, STRUCTURAL FILL AND FILL REQUIREMENTS.
2. GATE VAULT NO.1 ALSO INCLUDES AN LE/LT ELEMENT. SEE INSTRUMENTATION DRAWINGS.
3. RIM EL OF GATE VAULT NO. 3 IS ABOVE FINISHED GRADE.

STRUCTURE	SLIDE GATE	SLIDE GATE SIZE (W X H)	PIPE IN	PIPE OUT	A	B	C
GATE VAULT NO.1	SG-1	24" X 24"	24" RCP SD 1500D	24" RCP SD 1500D	844.29	844.27	854.40
GATE VAULT NO. 2	SG-2	24" X 24"	21" RCP SD 1500D	21" RCP SD 1500D	843.78	843.70	854.80
GATE VAULT NO. 3	SG-3	24" X 24"	18" RCP SD 1500D	18" RCP SD 1500D	839.98	839.89	847.50

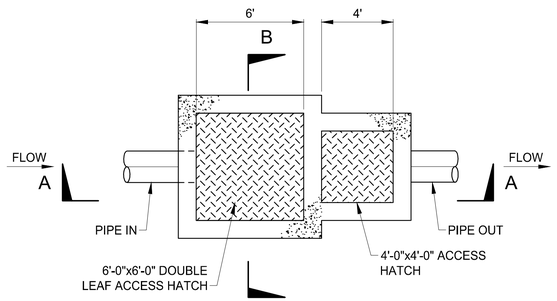

TOP PLAN
NTS

NOTE:

1. SEE STRUCTURAL DRAWINGS FOR CAST-IN-PLACE STRUCTURE.

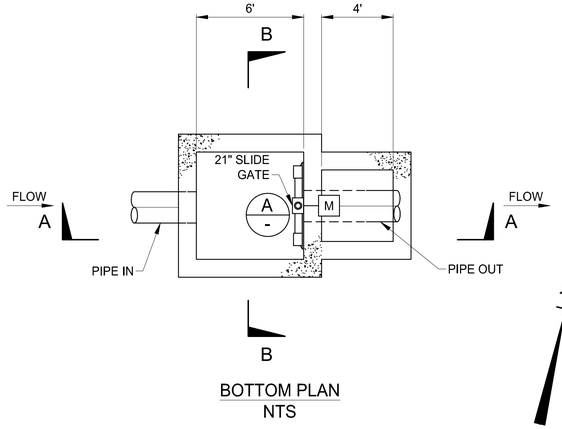

BOTTOM PLAN
NTS

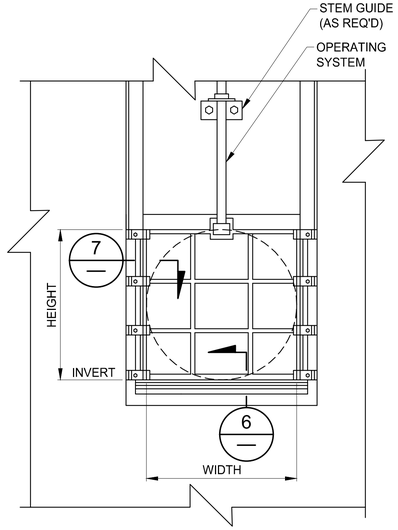

FRONT VIEW

SLIDE GATE

DETAIL A
NTS

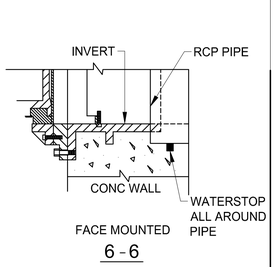

FACE MOUNTED
6 - 6

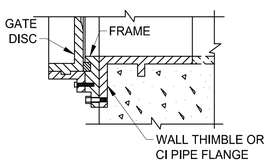

FACE MOUNTED GUIDE
7 - 7

NOTE:

1. SEE SHEET GI03 FOR SUBGRADE PREPARATION, STRUCTURAL FILL AND FILL REQUIREMENTS.

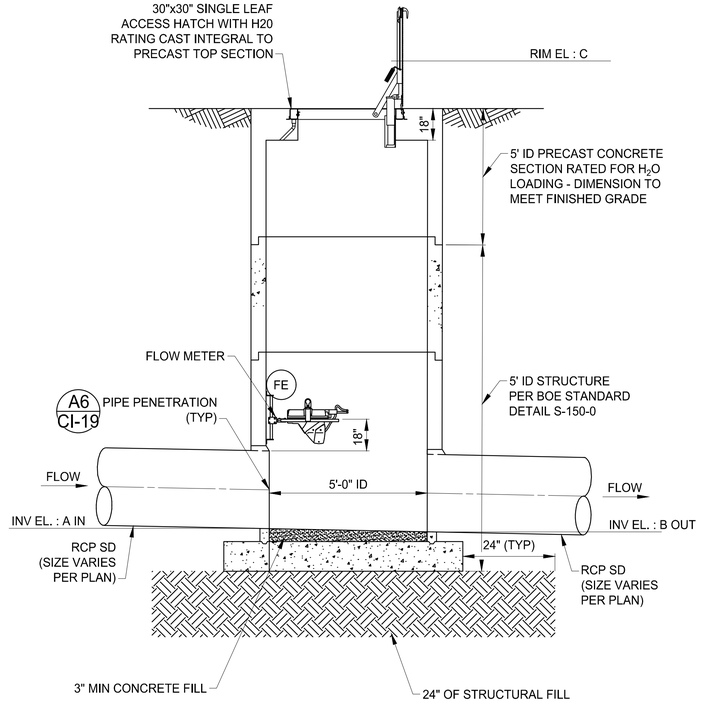

SECTION
NTS

STRUCTURE	PIPE IN	PIPE OUT	A	B	C	FLOW ELEMENT
FLOW METER MH NO. 1	24" RCP SD 150D	24" RCP SD 150D	844.16	844.40	854.16	FE 300
FLOW METER MH NO. 2	21" RCP SD 150D	21" RCP SD 150D	844.25	844.15	855.18	FE 320
FLOW METER MH NO. 3	18" RCP SD 150D	18" RCP SD 150D	841.58	841.58	847.58	FE 340

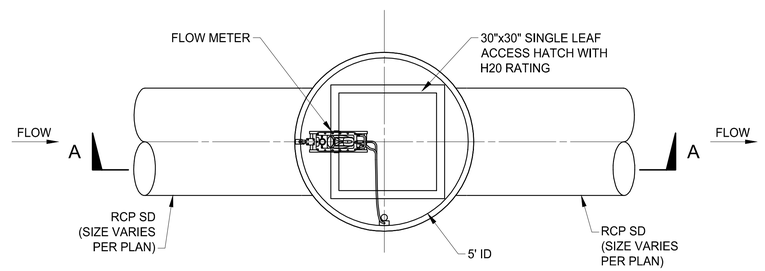

TOP PLAN
NTS

A1	GATE VAULT NOS. 1,2, AND 3	A9	FLOW METER MAINTENANCE HOLE NOS. 1,2, AND 3.
SCALE: NOT TO SCALE	CU01	SCALE: NOT TO SCALE	CI01

THE CITY OF LOS ANGELES OR ITS OFFICERS OR AGENTS SHALL NOT BE RESPONSIBLE FOR THE ACCURACY OR COMPLETENESS OF ELECTRONIC COPIES OF THIS PLAN SHEET.

REVISION DATES (DESIGN STAGE ONLY)

CITY OF LOS ANGELES DEPARTMENT OF PUBLIC WORKS
BUREAU OF ENGINEERING

ENGINEERING
CITY OF LOS ANGELES

THIS PLAN WAS ELECTRONICALLY • SIGNED AND STAMPED

REGISTERED PROFESSIONAL ENGINEER S. TED ALLEN No. C 48973 EXP. 08/31/2026 STATE OF CALIFORNIA 01/27/2023

VERTICAL CONTROL: BENCH MARK (08-30460) NAVD 88
HORIZONTAL CONTROL: CALIFORNIA STATE PLANE ZONE V. 1983 NAD

SHEET TITLE: GATE VAULT & FLOW METER MAINTENANCE HOLE, PLAN, SECTION AND DETAILS

PROJECT: FERNANGELES PARK STORMWATER CAPTURE PROJECT

ADDRESS: FERNANGELES RECREATION CENTER 8851 LAUREL CANYON BLVD, SUN VALLEY, CA 91352

NO.	REVISIONS	DATE	BY
		YY/MM/DD	
		YY/MM/DD	
		YY/MM/DD	
		YY/MM/DD	

CIP NO. SCP0002

INDEX NO.

CITY ENGINEER: TED ALLEN, P.E.

DESIGN GROUP		DATE
ENGINEER:	CDM SMITH INC.	04/11/2023
ARCHITECT:	NA	04/11/2023
DESIGNED BY:	C. RICE	04/11/2023
DRAWN BY:	M. RUSH	04/11/2023
CHECKED BY:	P. TAURASI	04/11/2023
APPROVED BY:	A. DELLINGER	04/11/2023

WORK ORDER
EW40079F

SHEET NAME
CI20

SHEET 63 OF 125 SHEETS

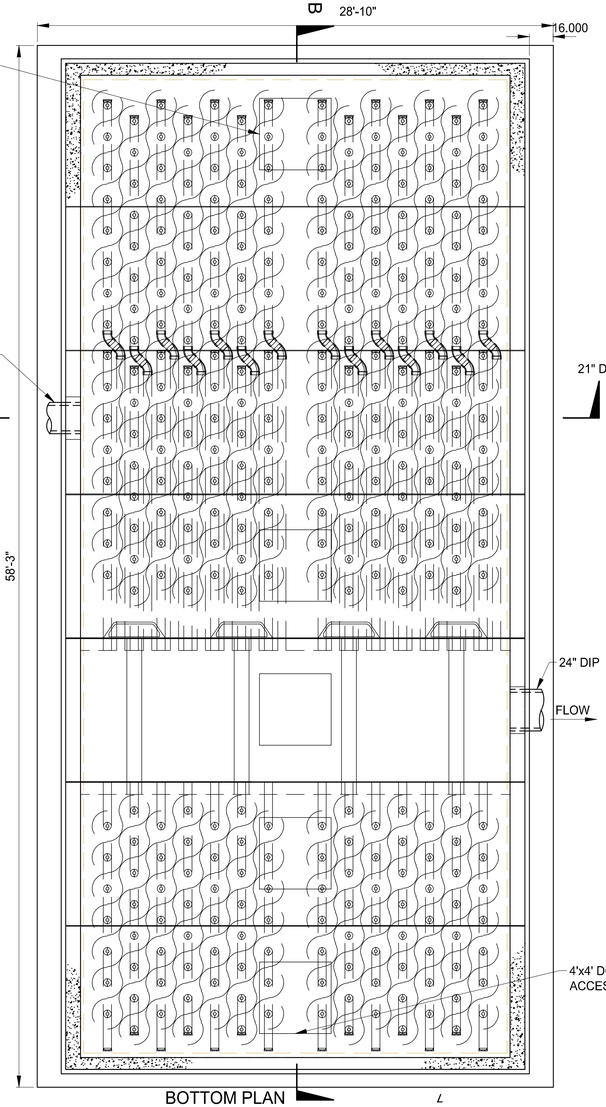

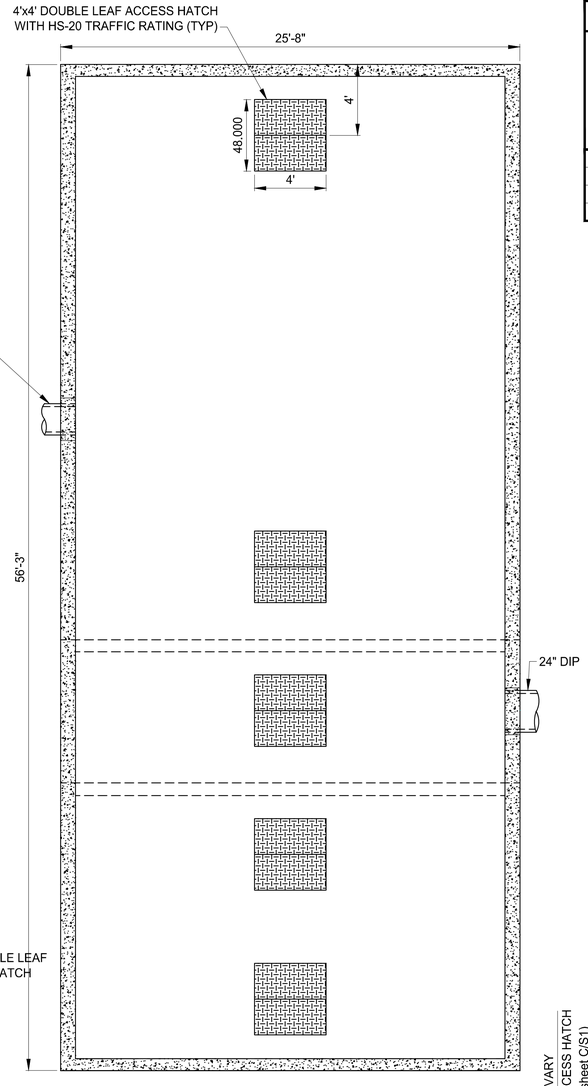

STORMFILTER DESIGN NOTES									
STORMFILTER TREATMENT CAPACITY IS A FUNCTION OF THE CARTRIDGE SELECTION AND THE NUMBER OF CARTRIDGES. THE STANDARD VAULT STYLE IS SHOWN WITH THE MAXIMUM NUMBER OF CARTRIDGES (104). VAULT STYLE ALSO AVAILABLE AS OUTLET BAY (120).									
CARTRIDGE SELECTION									
CARTRIDGE HEIGHT	27"			18"			LOW DROP		
RECOMMENDED HYDRAULIC DROP (H)	3.05'			2.3'			1.8'		
SPECIFIC FLOW RATE (gpm/sf)	2 gpm/sf	1.67* gpm/sf	1 gpm/sf	2 gpm/sf	1.67* gpm/sf	1 gpm/sf	2 gpm/sf	1.67* gpm/sf	1 gpm/sf
CARTRIDGE FLOW RATE (gpm)	22.5	18.79	11.25	15	12.53	7.5	10	8.35	5

* 1.67 gpm/sf SPECIFIC FLOW RATE IS APPROVED WITH PHOSPHOSORB® (PSORB) MEDIA ONLY

GENERAL NOTES

1. CONTECH TO PROVIDE ALL MATERIALS UNLESS NOTED OTHERWISE.
2. DIMENSIONS MARKED WITH ( ) ARE REFERENCE DIMENSIONS. ACTUAL DIMENSIONS MAY VARY, FIELD VERIFY.
3. FOR SITE SPECIFIC DRAWINGS WITH DETAILED VAULT DIMENSIONS AND WEIGHTS, PLEASE CONTACT YOUR CONTECH ENGINEERED SOLUTIONS LLC REPRESENTATIVE. www.ContechES.com
4. STORMFILTER WATER QUALITY STRUCTURE SHALL BE IN ACCORDANCE WITH ALL DESIGN DATA AND INFORMATION CONTAINED IN THIS DRAWING.
5. STRUCTURE SHALL MEET AASHTO HS-20 LOAD RATING, ASSUMING EARTH COVER OF 0' - 5' AND GROUNDWATER ELEVATION AT, OR BELOW, THE OUTLET PIPE INVERT ELEVATION. ENGINEER OF RECORD TO CONFIRM ACTUAL GROUNDWATER ELEVATION. CASTINGS SHALL MEET AASHTO M306 AND BE CAST WITH THE CONTECH LOGO.
6. FILTER CARTRIDGES SHALL BE MEDIA-FILLED, PASSIVE, SIPHON ACTUATED, RADIAL FLOW, AND SELF CLEANING. RADIAL MEDIA DEPTH SHALL BE 7-INCHES. FILTER MEDIA CONTACT TIME SHALL BE AT LEAST 38 SECONDS.
7. SPECIFIC FLOW RATE IS EQUAL TO THE FILTER TREATMENT CAPACITY (gpm) DIVIDED BY THE FILTER CONTACT SURFACE AREA (sq ft).
8. STORMFILTER STRUCTURE SHALL BE PRECAST CONFORMING TO ASTM C-857 AND AASHTO LOAD FACTOR DESIGN METHOD.
9. HATCHES SHALL BE HS-20 LOAD RATED.

INSTALLATION NOTES

1. CONTRACTOR TO PROVIDE EQUIPMENT WITH SUFFICIENT LIFTING AND REACH CAPACITY TO LIFT AND SET THE STORMFILTER VAULT (LIFTING CLUTCHES PROVIDED).
2. CONTRACTOR TO INSTALL JOINT SEALANT BETWEEN ALL VAULT SECTIONS AND ASSEMBLE VAULT.
3. CONTRACTOR TO PROVIDE, INSTALL, AND GROUT PIPES.
4. CONTRACTOR TO TAKE APPROPRIATE MEASURES TO PROTECT CARTRIDGES FROM CONSTRUCTION-RELATED EROSION RUNOFF.

SUBGRADE PREPARATION AND FILL NOTES

1. SEE SHEET G103 FOR SUBGRADE PREPARATION, STRUCTURAL FILL AND FILL REQUIREMENTS.

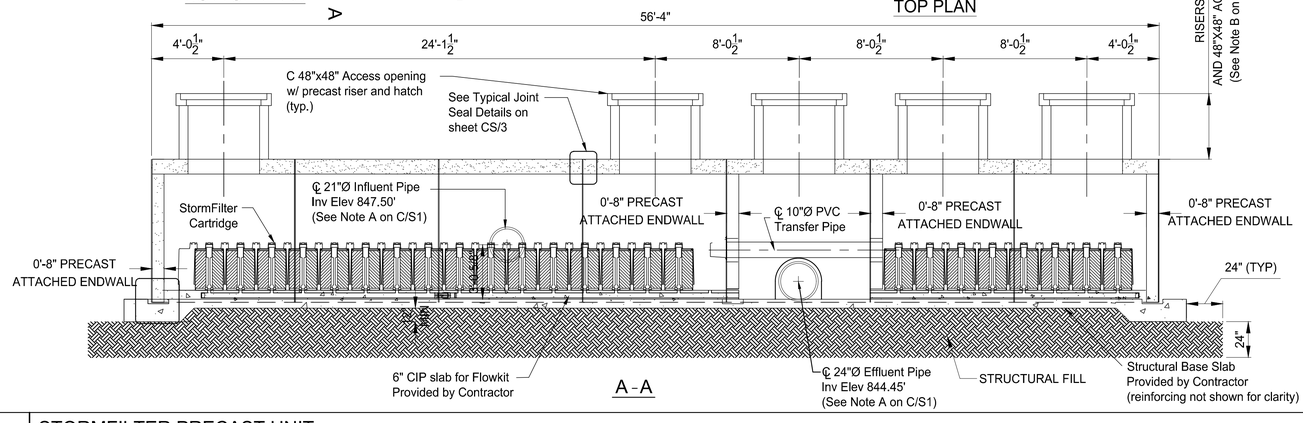

A - A

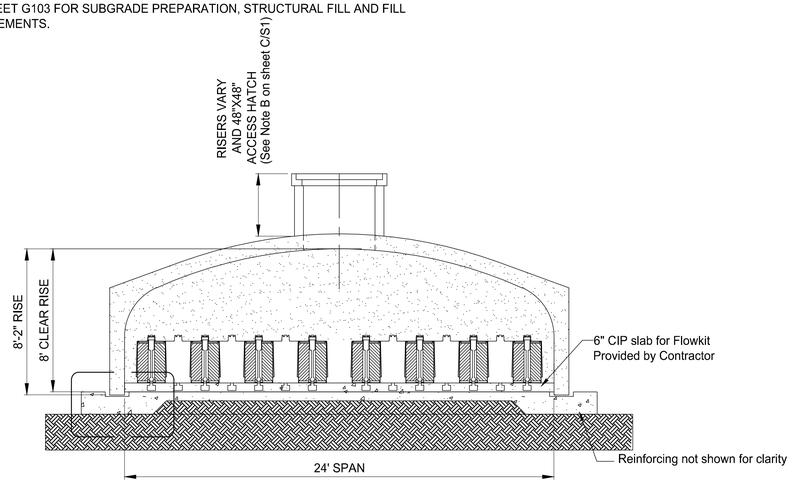

B - B

4' 0 4' 8'
¼" = 1'-0"

THE CITY OF LOS ANGELES OR ITS OFFICERS OR AGENTS SHALL NOT BE RESPONSIBLE FOR THE ACCURACY OR COMPLETENESS OF ELECTRONIC COPIES OF THIS PLAN SHEET.

REVISION DATES (DESIGN STAGE ONLY)

A1 | STORMFILTER PRECAST UNIT

SCALE: 1/4" = 1'-0"

ENGINEERING
CITY OF LOS ANGELES

THIS PLAN WAS ELECTRONICALLY • SIGNED AND STAMPED •

REGISTERED PROFESSIONAL ENGINEER S. TED ALLEN No. C 48973 EXP. 08/31/2026 CIVIL STATE OF CALIFORNIA 01/27/2023

BUREAU OF ENGINEERING

VERTICAL CONTROL: BENCH MARK 08-30460 (NAVD 88)
HORIZONTAL CONTROL: CALIFORNIA STATE PLANE ZONE V, 1983 NAD

SHEET TITLE: STORMFILTER PRECAST UNITS PLANS AND SECTION

PROJECT: FERNANGELES PARK STORMWATER CAPTURE PROJECT

ADDRESS: FERNANGELES RECREATION CENTER 8851 LAUREL CANYON BLVD, SUN VALLEY, CA 91352

NO	REVISIONS	BY	DATE
			YY/MM/DD
			YY/MM/DD
			YY/MM/DD
			YY/MM/DD

CIP NO. SCP0002

INDEX NO.

CITY ENGINEER: TED ALLEN, P.E. — DATE: 04/11/2023

DESIGN GROUP		DATE
ENGINEER:	CDM SMITH INC.	04/11/2023
ARCHITECT:	NA	04/11/2023
DESIGNED BY:	C. RICE	04/11/2023
DRAWN BY:	M. RUSH	04/11/2023
CHECKED BY:	P. TAURASI	04/11/2023
APPROVED BY:	A. DELLINGER	04/11/2023

CITY OF LOS ANGELES DEPARTMENT OF PUBLIC WORKS

WORK ORDER EW40079F

SHEET NAME CI21

SHEET 64 OF 125 SHEETS

SHEET VERSION 4.0.1 FILE PATH: C:\CDMEXT\SAMIDURAIM\D0491589\CI505.DWG PLOT DATE: 10/9/2024 3:13 PM SAVED: 10/9/2024 3:13 PM SAVED BY:SAMIDURAIM

NOTE:

1. SEE SHEET GI03 FOR SUBGRADE PREPARATION, STRUCTURAL FILL AND FILL REQUIREMENT.

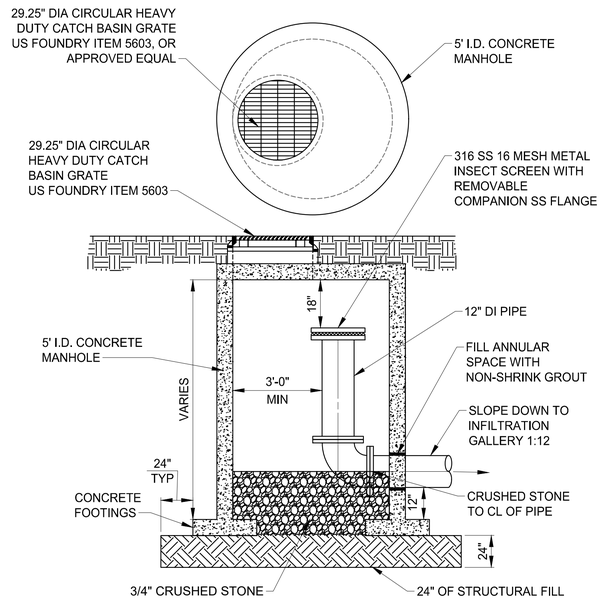

F1	PASSIVE AIR VENT
SCALE: NTS	CU01

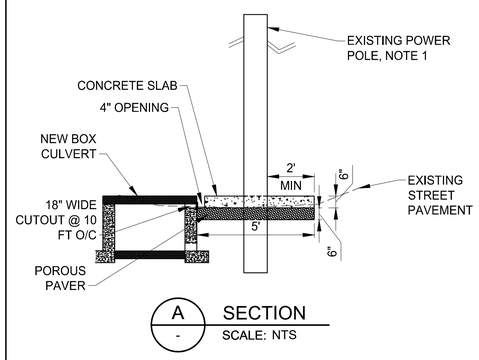

NOTE:

1. PROTECT EXISTING POWER POLE IN-PLACE.

F6	BUMP OUT
SCALE: NTS	CU01

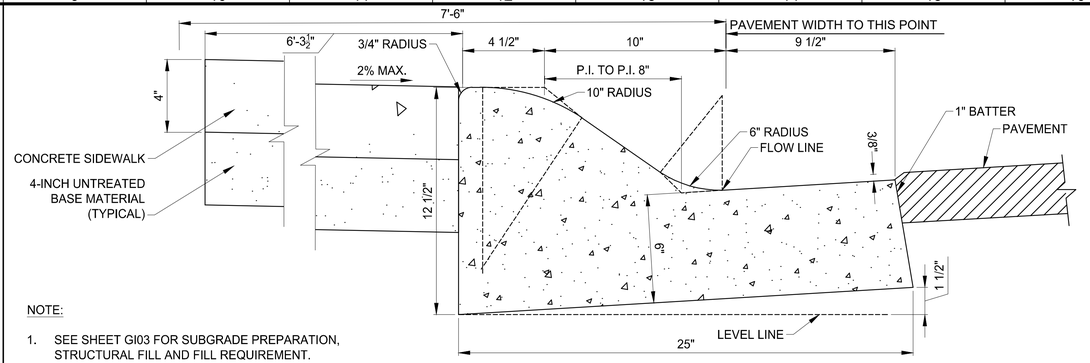

NOTE:

1. SEE SHEET GI03 FOR SUBGRADE PREPARATION, STRUCTURAL FILL AND FILL REQUIREMENT.

J9	ROLLED CURB & GUTTER
SCALE: NTS	

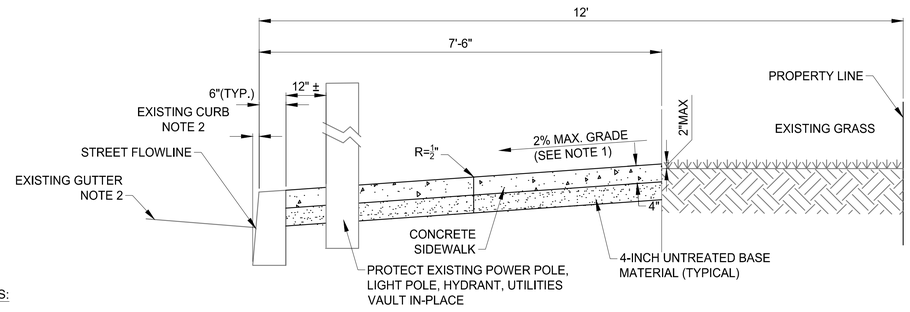

NOTES:

1. INSTALL CONCRETE SIDEWALK PER CITY OF LOS ANGELES STD S-444-0.
2. PROTECT EXISTING CURB AND GUTTER IN-PLACE, EDGE OF NEW SIDEWALK SHALL FLUSH WITH TOP OF CURB.
3. SEE SHEET GI03 FOR SUBGRADE PREPARATION.

F9	TYPICAL SIDEWALK
SCALE: NTS	

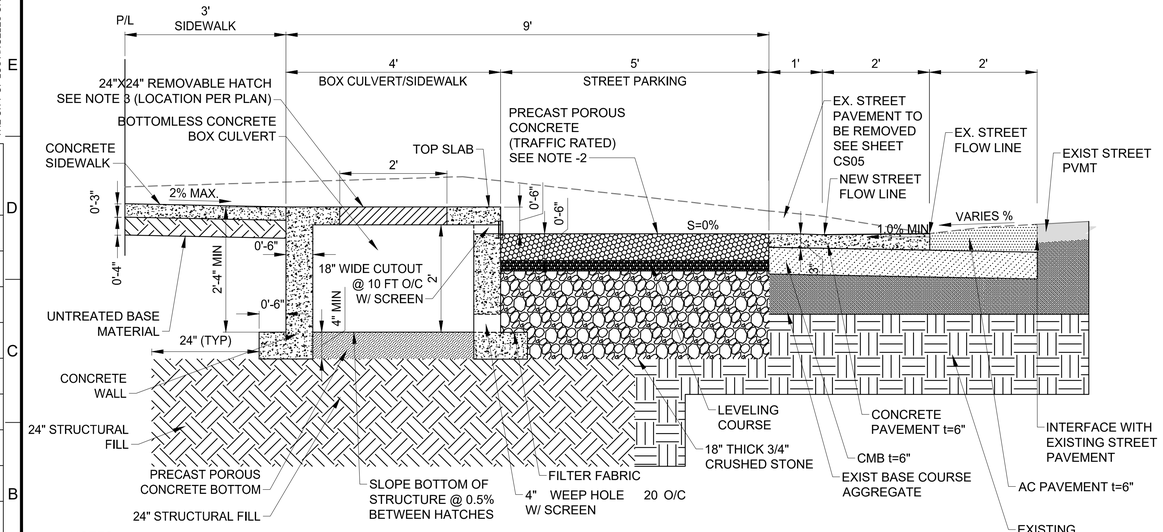

NOTES:

1. INSTALL BOTTOMLESS CONCRETE BOX CULVERT PER MANUFACTURER'S RECOMMENDATIONS. PRODUCT SHALL BE JENSEN SEGMENTAL BOX CULVERT TYPE 3, OR APPROVED EQUIVALENT.
2. TOP OF PRECAST POROUS PAVER SHALL FLUSH WITH NEW/EXISTING STREET FLOWLINE. PRODUCT SHALL BE POROUS CONCRETE SLABS BY STORMCRETE OR APPROVED EQUIVALENT.
3. INSTALL LOCKABLE H-20 RATED SINGLE LEAF OPENING HATCH, BILO J-AL-H20 OR APPROVED EQUIVALENT.
4. SEE SHEET GI03 FOR SUBGRADE PREPARATION, STRUCTURAL FILL AND FILL REQUIREMENTS.

A1	TYPICAL GREEN STREETS SECTION
SCALE: 3/4" = 1'-0"	

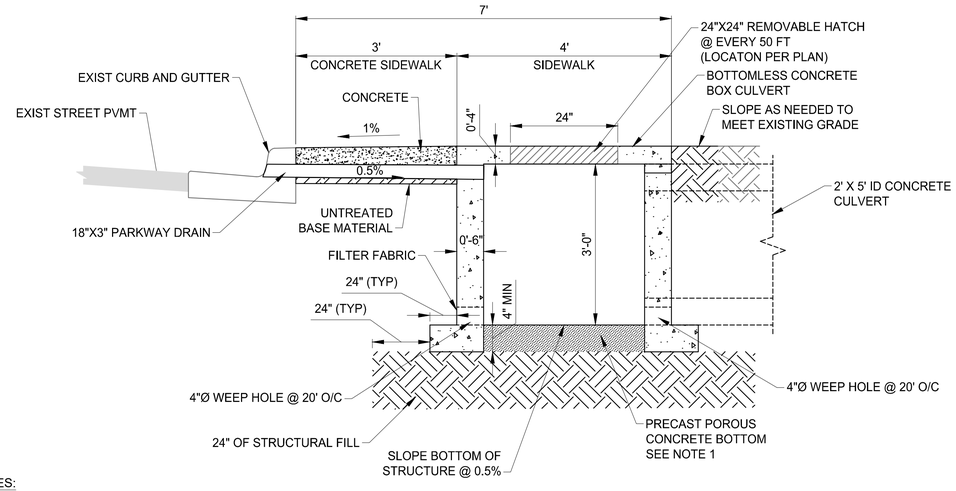

NOTES:

1. PRODUCT SHALL BE POROUS CONCRETE SLABS BY STORMCRETE OR EQUIVALENT.
2. SEE SHEET GI03 FOR SUBGRADE PREPARATION, STRUCTURAL FILL AND FILL REQUIREMENTS.

A9	TYPICAL SIDEWALK SECTION
SCALE:	

THE CITY OF LOS ANGELES OR ITS OFFICERS OR AGENTS SHALL NOT BE RESPONSIBLE FOR THE ACCURACY OR COMPLETENESS OF ELECTRONIC COPIES OF THIS PLAN SHEET.

REVISION DATES (DESIGN STAGE ONLY)

ENGINEERING
CITY OF LOS ANGELES

PROFESSIONAL ENGINEER — REGISTERED — S. TED ALLEN — No. C 48973 — EXP. 08/31/2026 — STATE OF CALIFORNIA — CIVIL — 01/27/2023

THIS PLAN WAS ELECTRONICALLY • SIGNED AND STAMPED •

BUREAU OF ENGINEERING

VERTICAL CONTROL: BENCH MARK (08-30460) NAVD 88
HORIZONTAL CONTROL: CALIFORNIA STATE PLANE ZONE V, 1983 NAD

SHEET TITLE: CIVIL DETAILS

PROJECT: FERNANGELES PARK STORMWATER CAPTURE PROJECT

ADDRESS: FERNANGELES RECREATION CENTER 8851 LAUREL CANYON BLVD, SUN VALLEY, CA 91352

CITY OF LOS ANGELES DEPARTMENT OF PUBLIC WORKS

NO.	REVISIONS	DATE	BY
		YY/MM/DD	
		YY/MM/DD	
		YY/MM/DD	
		YY/MM/DD	

CITY ENGINEER: TED ALLEN, P.E.

DESIGN GROUP		DATE
ENGINEER:	CDM SMITH INC.	04/11/2023
ARCHITECT:	NA	04/11/2023
DESIGNED BY:	C. RICE	04/11/2023
DRAWN BY:	C. BILDERBACK	04/11/2023
CHECKED BY:	P. TAURASI	04/11/2023
APPROVED BY:	A. DELLINGER	04/11/2023

CIP NO. SCP0002

INDEX NO.

WORK ORDER EW40079F

SHEET NAME CI22

SHEET 65 OF 125 SHEETS

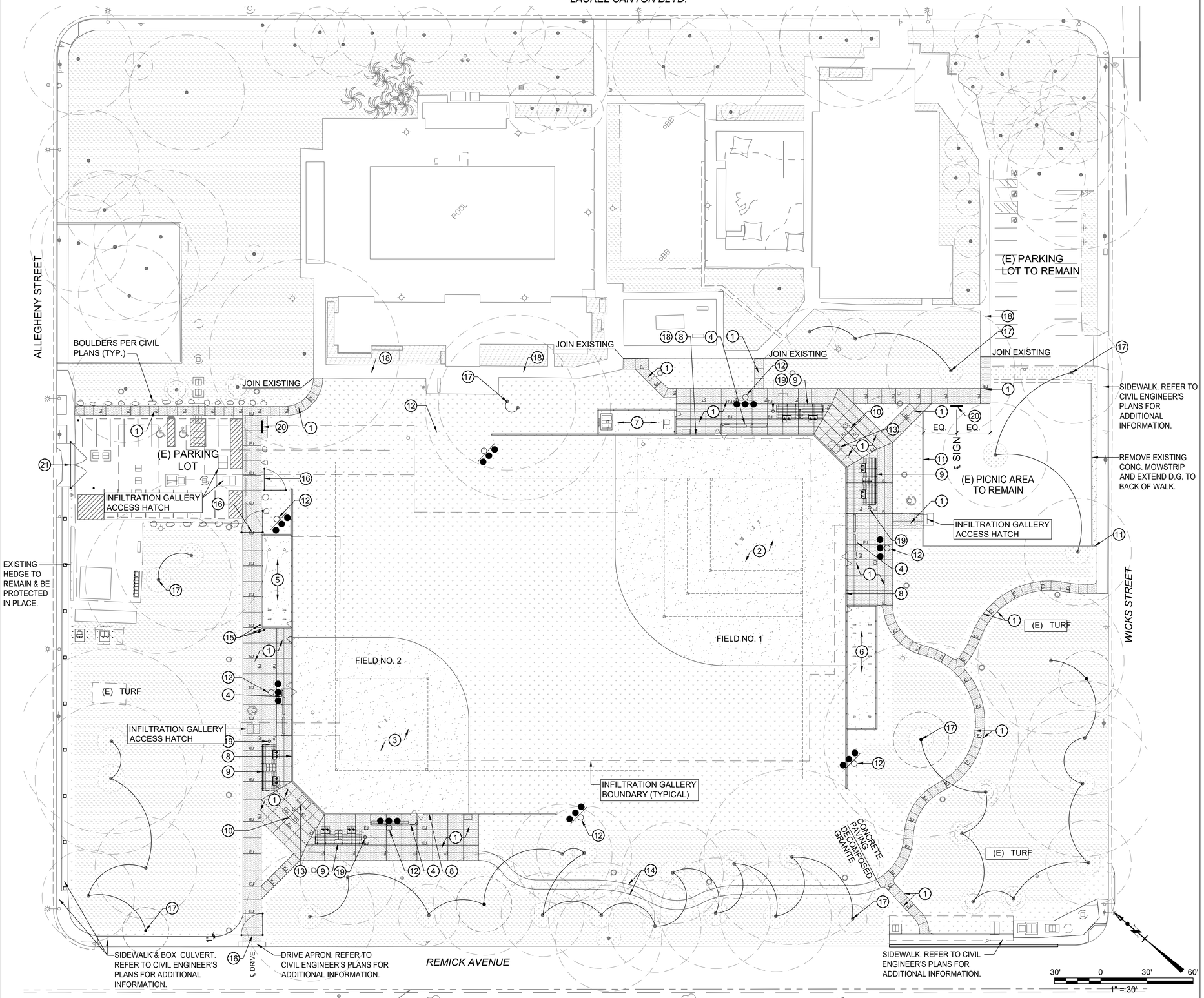

CONSTRUCTION LEGEND

1. FURNISH AND INSTALL CONCRETE PAVING
   COLOR: NATURAL GRAY. FINISH: MEDIUM BROOM
   REFER TO DETAIL 401 & 402, SHEET LS04.
2. BASEBALL FIELD NO.1
   REFER TO BASEBALL FIELD ENLARGEMENT. SEE DETAIL 201, SHEET LS02.
3. BASEBALL FIELD NO.2
   REFER TO BASEBALL FIELD ENLARGEMENT. SEE DETAIL 301, SHEET LS03.
4. DUGOUT
   REFER TO RAP STANDARD PLAN. SEE DETAIL 501, SHEET LS05.
5. BULLPEN 20x60
   REFER TO RAP STANDARD PLAN. SEE DETAIL 901, SHEET LS09.
6. BULLPEN 20x80
   REFER TO RAP STANDARD PLAN. SEE DETAIL 902, SHEET LS09.
7. BATTING CAGE
   REFER TO RAP STANDARD PLAN. SEE DETAIL 801, SHEET LS08. INSTALL 120VAC ELECTRICAL SERVICE FOR EXTERIOR OUTLET.
8. FENCING AND GATES -
   REFER TO BASEBALL FIELD NO.1 AND NO.2 ENLARGEMENTS , SEE DETAIL 201 SHEET LS02 AND DETAIL 301 SHEET LS03.
9. BLEACHERS
   REFER TO BASEBALL FIELD ENLARGEMENTS. SEE DETAIL 201, SHEET LS02 AND DETAIL 301 SHEET LS03.
10. FURNISH AND INSTALL DRINKING FOUNTAIN
    REFER TO RAP STANDARD PLAN. SEE DETAIL 1001, SHEET LS10.
11. 6" WIDE CONCRETE MOWSTRIP -
    REFER TO DETAIL 403, SHEET LS04.
12. FIELD LIGHTING
    REFER TO ELECTRICAL PLANS
13. ANNOUNCER'S AREA
    REFER TO BASEBALL FIELD ENLARGEMENTS DETAIL 201, SHEET LS02 AND DETAIL 301, SHEET LS03. INSTALL 120VAC ELECTRICAL SERVICE WITH EXTERIOR RECEPTACLE & LOCKING COVER. CONFIRM LOCATION PRIOR TO INSTALLATION.
14. DECOMPOSED GRANITE PATH WITH PLASTIC WOOD HEADER
    REFER TO RAP STANDARD PLAN. SEE DETAIL 405, SHEET LS04.
15. FIXED BARRIER POST
    REFER TO RAP STANDARD PLAN. SEE DETAIL 705, SHEET LS07.
16. SINGLE-LEAF VEHICULAR RINO GATE-15' WIDTH REFER TO RAP STANDARD PLAN. SEE DETAIL 1101, SHEET LS11.
17. EXISTING TREES
    TO REMAIN AND BE PROTECTED IN PLACE UNLESS OTHERWISE NOTED. REFER TO TREE INVENTORY PLAN SHEET LP04 AND DEMOLITION PLANS FOR ADDITIONAL INFORMATION.
18. EXISTING PAVING
    TO REMAIN AND BE PROTECTED IN PLACE UNLESS OTHERWISE NOTED. REFER TO DEMOLITION PLANS AND TREE INVENTORY PLAN SHEET LS04
19. TRASH RECEPTACLE
    KEYSTONE RIDGE RE3D-55 "READING" 55 GALLON ROUND LITTER RECEPTACLE WITH LOCKABLE TABS, SIDE ACCESS DOOR, SURFACE MOUNT WITH FLAT LID-NO LINER. SURFACE MOUNT-INSTALL PER MANUFACTURER'S INSTRUCTIONS. COLOR: TO BE DETERMINED.
20. EDUCATIONAL SIGNS
    (2) TOTAL. APPROXIMATE LOCATION SHOWN. SEE DETAIL 1002, SHEET L210 LOCATION TO BE APPROVED BY ENGINEER PRIOR TO INSTALLATION.
21. DOUBLE-LEAF VEHICULAR RINO GATE-30' FULL WIDTH
    SEE DETAIL 1201, SHEET LS12. RINO GATE TO REPLACE EXISTING GATES.

EJ CONCRETE PAVING EXPANSION JOINTS
REFER TO DETAIL 401, SHEET LS04 FOR ADDITIONAL INFORMATION.

CONCRETE PAVING TOOLED SCORELINE
REFER TO DETAIL 401, SHEET LS04 FOR ADDITIONAL INFORMATION.

SODDED TURF. REFER TO PLANTING PLAN SHEET LP01.

EXISTING TURF TO REMAIN. REFER TO PLANTING PLAN SHEET LP01.

3" LAYER OR COMPOSTED WOOD MULCH. REFER TO PLANTING PLAN SHEET LP01.

SHRUB PLANTER AREA. FOR REFERENCE ONLY.

GENERAL NOTES:

1. CONTRACTOR TO SURVEY & STAKE ALL HARDSCAPE & BALLFIELD IMPROVEMENTS FROM DIGITAL CADD FILES PROVIDED BY ENGINEER. THE LAYOUT OF ALL HARDSCAPE AND BALLFIELD IMPROVEMENTS SHALL BE APPROVED BY ENGINEER PRIOR TO CONSTRUCTION. NOTIFY ENGINEER IF FIELD CONDITIONS DEVIATE FROM THOSE SHOWN ON THE PLANS.
2. REFER TO SHEETS LS02 THROUGH LS11 FOR CONSTRUCTION DETAILS.
3. BLEACHERS TO BE INSTALLED UNDER SEPARATE PERMIT BY CONTRACTOR. CONTRACTOR THOUGH BLEACHER MANUFACTURER SHALL SUPPLY ALL REQUIRED STRUCTURAL CALCULATIONS AND ANY OTHER DOCUMENTATION REQUIRED FOR PERMIT APPLICATION.
4. SEE TREE PROTECTION REQUIREMENTS FOR TRENCHING NEAR EXISTING TREES. SPECIAL TRENCHING METHODS MAY BE REQUIRED IN TPZ ZONES.
5. PRIOR TO ANY CONSTRUCTION WITHIN A TREE PROTECTION ZONE, CONTRACTOR SHALL CONTACT THE CITY RECREATION AND PARKS FORESTRY DIVISION ARBORIST, LEON BORODITSKY, AT (213) 425-7390 TO REVIEW AND APPROVE WORK WITHIN THE TPZ PRIOR TO INSTALLATION. NO WORK SHALL BE CONDUCTED WITHOUT CITY ABORIST APPROVAL.

THE CITY OF LOS ANGELES OR ITS OFFICERS OR AGENTS SHALL NOT BE RESPONSIBLE FOR THE ACCURACY OR COMPLETENESS OF ELECTRONIC COPIES OF THIS PLAN SHEET.

REVISION DATES (DESIGN STAGE ONLY)

ENGINEERING
CITY OF LOS ANGELES

THIS PLAN WAS ELECTRONICALLY • SIGNED AND STAMPED

LANDSCAPE ARCHITECT LICENSED 982 REG. STATE OF CALIFORNIA
GREGORY A. LAMONT
EXPIRATION DATE 08-31-2024
1-27-2023

BUREAU OF ENGINEERING

VERTICAL CONTROL:	BENCH MARK:08-30460 (NAVD 88)
HORIZONTAL CONTROL:	CALIFORNIA STATE PLANE ZONE V, 1983 NAD
SHEET TITLE:	LANDSCAPE SITE CONSTRUCTION PLAN
PROJECT:	FERNANGELES PARK STORMWATER CAPTURE PROJECT
ADDRESS:	FERNANGELES RECREATION CENTER 8851 LAUREL CANYON BLVD, SUN VALLEY, CA 91352

NO.	REVISIONS	DATE	BY
		YY/MM/DD	
		YY/MM/DD	
		YY/MM/DD	
		YY/MM/DD	

CIP NO. SCP0002

INDEX NO. 69

CITY OF LOS ANGELES DEPARTMENT OF PUBLIC WORKS

CITY ENGINEER	DATE
TED ALLEN, P.E.	1/27/2023

DESIGN GROUP	
ENGINEER:	CDM SMITH INC.
ARCHITECT:	NUVIS LANDSCAPE ARCHITECTURE
DESIGNED BY:	P. CARDOZA
DRAWN BY:	L. KLECKER
CHECKED BY:	P. CARDOZA
APPROVED BY:	A. DELLINGER

1/27/2023	
1/27/2023	
1/27/2023	
1/27/2023	
1/27/2023	

WORK ORDER EW40079F

SHEET NAME LS01

SHEET 66 OF 125 SHEETS

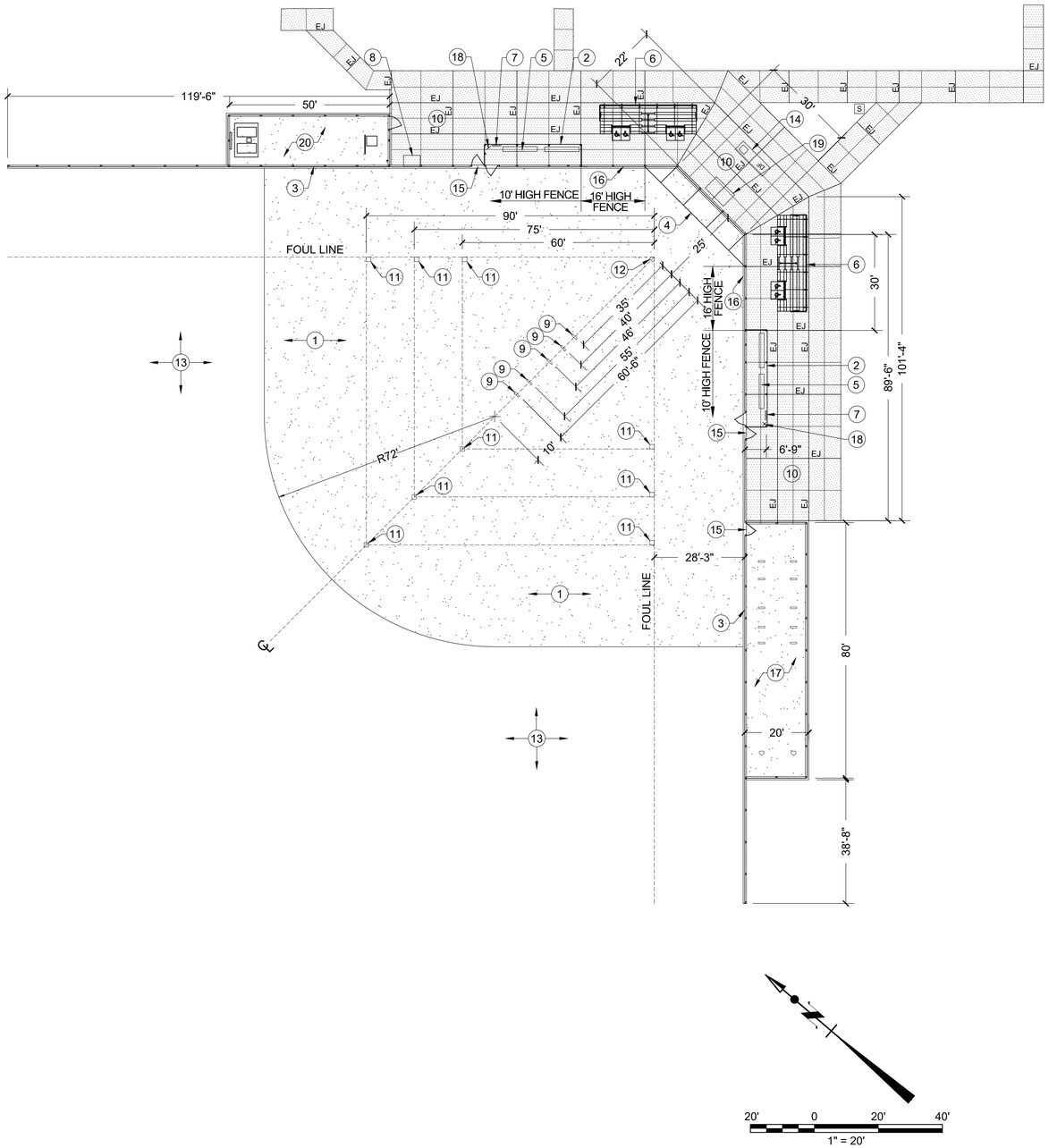

CONSTRUCTION LEGEND

1. INSTALL 4" - 6" LAYER OF "PRO-GOLD SOFTBALL MIX" PER PLANS AND SPECIFICATIONS, OR APPROVED EQUAL. SUPPLIED BY GAIL MATERIALS: 951-667-6106, WWW.GAILMATERIALS.NET.
2. INSTALL 8' HIGH CHAIN LINK FENCE DUGOUT WITH ALUMINUM ROOF PER DETAIL 902, SHEET LS09.
3. INSTALL 10' HIGH CHAIN LINK SIDE LINE FENCE WITH CONCRETE MOW STRIP PER DETAIL 701, SHEET LS07.
4. INSTALL BACKSTOP: MODEL LA1644T (4-1/2" POSTS, FRONT 23'6" HIGH X 44' WIDE; REAR 16' HIGH X 30' WIDE; SIDES 16' HIGH X 10' WIDE, 7'6" DEEP). FROM LA STEELCRAFT. CONTACT: 866-210-5316. INSTALL PER MANUFACTURER'S INSTRUCTIONS. REFER TO DETAIL 1102, SHEET LS11 FOR ADDITIONAL INFORMATION.
5. INSTALL (2) 12' PLAYERS BENCHES, PER DUGOUT. MODEL # PE-12, AVAILABLE FROM NATIONAL RECREATION SYSTEMS, CONTACT: NATE YOUNKER (858) 344-0445, INSTALL PER MANUFACTURER'S INSTRUCTIONS.
6. INSTALL 30', 5-TIER BLEACHERS (2) WITH WHEELCHAIR CUTOUTS, MODEL # NA-0530-ADA-VP, AVAILABLE FROM NATIONAL RECREATION SYSTEMS, CONTACT: NATE YOUNKER (858) 344-0445, INSTALL PER MANUFACTURER'S INSTRUCTIONS.
7. INSTALL (2) BAT RACKS, MODEL # BR-8, AVAILABLE FROM L.A. STEELCRAFT, AVAILABLE FROM NATIONAL RECREATION SYSTEMS, CONTACT: NATE YOUNKER (858) 344-0445, INSTALL PER MANUFACTURER'S INSTRUCTIONS.
8. INFIELD STORAGE BOX, PER DETAIL 704, SHEET LS07.
9. INSTALL BOLCO STEP-DOWN' PITCHERS RUBBER, YOUTH SIZE 4" X 18" SKU# 1236392, AVAILABLE FROM: BSNSPORTS.COM, (800) 856-3488. INSTALL PER MANUFACTURER'S INSTRUCTIONS. FURNISH (1) PITCHER'S RUBBER. INSTALL AT DISTANCES SHOWN ON PLAN. RECREATION AND PARK'S DEPARTMENT SHALL APPROVE PITCHER'S RUBBER PRIOR TO PURCHASE AND INSTALLATION.
10. INSTALL CONCRETE PAVING PER DETAIL 401 & 402, SHEET LS04.
11. INSTALL 'HOLLYWOOD IMPACT' BASE (SKU# 1236439) WITH GROUND ANCHORS (SKU# 1236507) AND BASE PLUGS (SKU# BBRPLUGS), AVAILABLE FROM: BSNSPORTS.COM, (800) 856-3488. INSTALL PER MANUFACTURER'S INSTRUCTIONS. FURNISH (1) SET OF BASES. INSTALL AT DISTANCES SHOWN ON PLAN.
12. INSTALL 'HOLLYWOOD' HOME PLATE, SKU# 1236477,AVAILABLE FROM: BSNSPORTS.COM, (800) 856-3488. INSTALL PER MANUFACTURER'S INSTRUCTIONS.
13. INSTALL OUTFIELD TURF PER PLANTING PLAN AND SPECIFICATIONS.
14. INSTALL MURDOCK HI-LO DRINKING FOUNTAIN PER DETAIL 1001, SHEET LS10.
15. INSTALL 4' WIDE SINGLE CHAIN LINK GATES WHERE INDICATED. PER DETAIL 702, SHEET LS07.
16. INSTALL 16' HIGH CHAIN LINK SIDE LINE FENCE WITH CONCRETE MOW STRIP PER DETAIL 501, SHEET LS05.
17. INSTALL BULLPEN WITH 8' HIGH CHAIN LINK FENCE ON A 12" CONCRETE MOWSTRIP WITH A 4' PEDESTRIAN GATE, DECOMPOSED GRANITE PAVING, TWO HOMEPLATES AND TWO PITCHERS RUBBERS FOR EACH BULLPEN PER DETAIL 902, SHEET LS09.
18. PROVIDE (2) SURFACE MOUNT HELMET RACKS. SKU# 1238464.AVAILABLE FROM: BSNSPORTS.COM, (800) 856-3488. INSTALL PER MANUFACTURER'S INSTRUCTIONS.
19. ANNOUNCERS AREA. PROVIDE 12VAC ELECTRICAL SERVICE WITH EXTERIOR RECEPTACLE AND LOCKING COVER.
20. INSTALL BATTING CAGE PER DETAIL 801, SHEET LS08. INSTALL 120VAC ELECTRICAL SERVICE WITH EXTERIOR RECEPTACLE AND LOCKING COVER.

EJ — CONCRETE PAVING EXPANSION JOINT. REFER TO DETAIL 401, SHEET LS04.

CONCRETE PAVING TOOLED SCORELINE. REFER TO DETAIL 401, SHEET LS04.

NOTE:
ALL FENCING ADJACENT TO PAVING SHALL HAVE PAVING EXTEND BENEATH THE FENCE. ALL OTHER FENCING SHALL HAVE CONCRETE MOW STRIP.

BASEBALL FIELD PLAN
FIELD SIZE 60', 75' AND 90' BASE DISTANCE

201	BASEBALL FIELD PLAN
AS SHOWN	

REVISION DATES (DESIGN STAGE ONLY)

THE CITY OF LOS ANGELES OR ITS OFFICERS OR AGENTS SHALL NOT BE RESPONSIBLE FOR THE ACCURACY OR COMPLETENESS OF ELECTRONIC COPIES OF THIS PLAN SHEET.

ENGINEERING
CITY OF LOS ANGELES

LANDSCAPE ARCHITECT — REGISTERED — CALIFORNIA — No. 5902 — EXPIRATION DATE 08-31-2024

THIS PLAN WAS ELECTRONICALLY • SIGNED AND STAMPED

BUREAU OF ENGINEERING

VERTICAL CONTROL:	BENCH MARK:08-30460 (NAVD 88)
HORIZONTAL CONTROL:	CALIFORNIA STATE PLANE ZONE V, 1983 NAD
SHEET TITLE:	LANDSCAPE SITE CONSTRUCTION DETAIL 1
PROJECT:	FERNANGELES PARK STORMWATER CAPTURE PROJECT
ADDRESS:	FERNANGELES RECREATION CENTER 8851 LAUREL CANYON BLVD, SUN VALLEY, CA 91352

NO.	REVISIONS	DATE	BY
		YY/MM/DD	
		YY/MM/DD	
		YY/MM/DD	
		YY/MM/DD	

CIP NO. SCP0002

INDEX NO.

CITY OF LOS ANGELES DEPARTMENT OF PUBLIC WORKS

CITY ENGINEER	DATE
TED ALLEN, P.E.	1/27/2023

DESIGN GROUP	
ENGINEER:	CDM SMITH INC.
ARCHITECT:	NUVIS LANDSCAPE ARCHITECTURE
DESIGNED BY:	P. CARDOZA
DRAWN BY:	L. KLECKER
CHECKED BY:	P. CARDOZA
APPROVED BY:	A. DELLINGER

	DATE
	1/27/2023
	1/27/2023
	1/27/2023
	1/27/2023
	1/27/2023

WORK ORDER
EW40079F

SHEET NAME
LS02

SHEET 67 OF 125 SHEETS

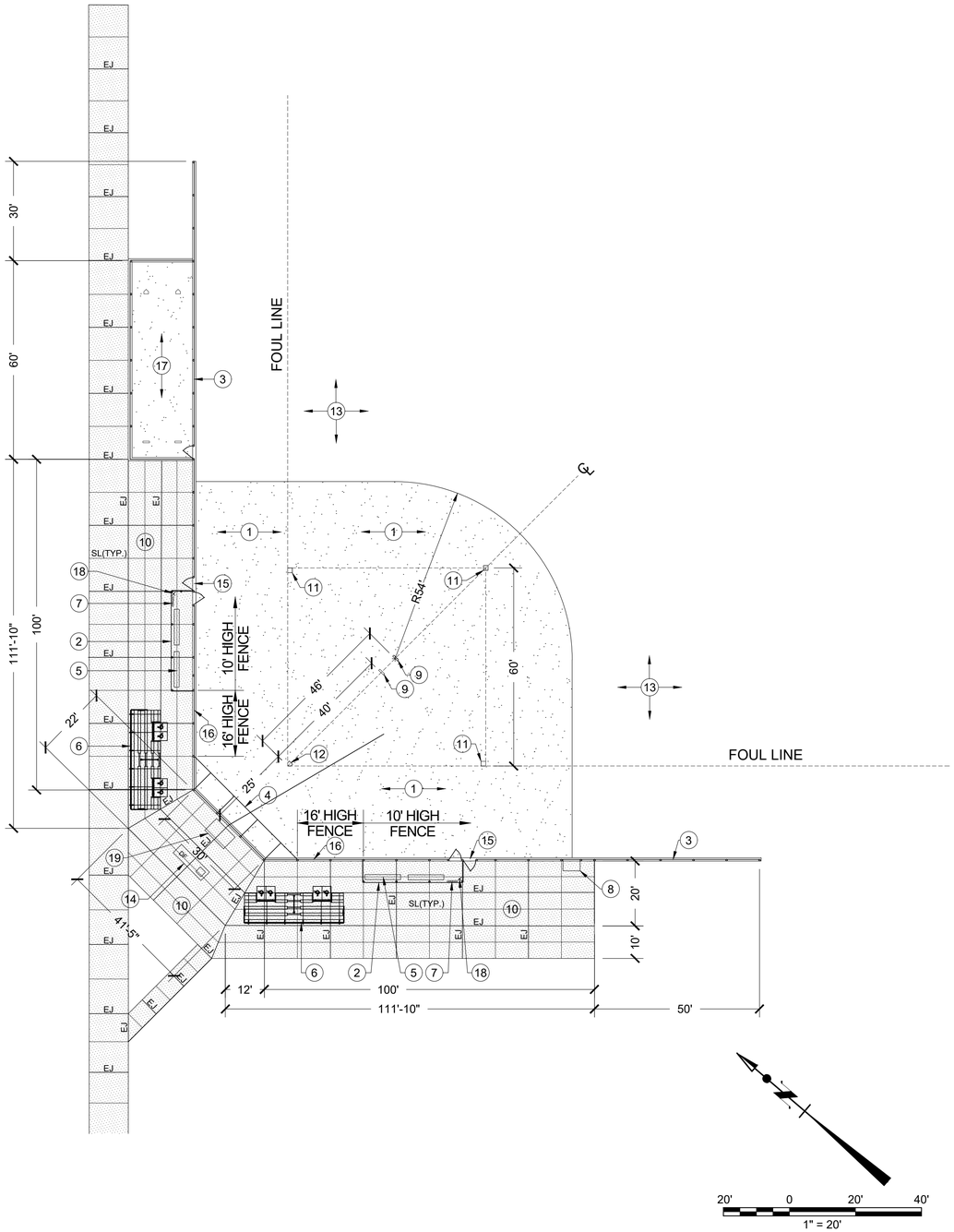

BASEBALL FIELD PLAN
FIELD SIZE 60' BASE DISTANCE

CONSTRUCTION LEGEND

1. INSTALL 4" - 6" LAYER OF "PRO-GOLD SOFTBALL MIX" PER PLANS AND SPECIFICATIONS, OR APPROVED EQUAL. SUPPLIED BY GAIL MATERIALS: 951-667-6106, WWW.GAILMATERIALS.NET.
2. INSTALL 8' HIGH CHAIN LINK FENCE DUGOUT WITH ALUMINUM ROOF PER DETAIL 902, SHEET LS09.
3. INSTALL 10' HIGH CHAIN LINK SIDE LINE FENCE WITH CONCRETE MOW STRIP PER DETAIL 701, SHEET LS07.
4. INSTALL BACKSTOP: MODEL LA1644T (4-1/2" POSTS, FRONT 23'6" HIGH X 44' WIDE; REAR 16' HIGH X 30' WIDE; SIDES 16' HIGH X 10' WIDE, 7'6" DEEP). FROM LA STEELCRAFT. CONTACT: 866-210-5316. INSTALL PER MANUFACTURER'S INSTRUCTIONS. REFER TO DETAIL 1102, SHEET LS11 FOR ADDITIONAL INFORMATION.
5. INSTALL (2) 12' PLAYERS BENCHES, PER DUGOUT. MODEL # PE-12, AVAILABLE FROM NATIONAL RECREATION SYSTEMS, CONTACT: NATE YOUNKER (858) 344-0445, INSTALL PER MANUFACTURER'S INSTRUCTIONS.
6. INSTALL 30', 5-TIER BLEACHERS (2) WITH WHEELCHAIR CUTOUTS, MODEL # NA-0530-ADA-VP, AVAILABLE FROM NATIONAL RECREATION SYSTEMS, CONTACT: NATE YOUNKER (858) 344-0445, INSTALL PER MANUFACTURER'S INSTRUCTIONS.
7. INSTALL (2) BAT RACKS, MODEL # BR-8, AVAILABLE FROM L.A. STEELCRAFT, AVAILABLE FROM NATIONAL RECREATION SYSTEMS, CONTACT: NATE YOUNKER (858) 344-0445, INSTALL PER MANUFACTURER'S INSTRUCTIONS.
8. INFIELD STORAGE BOX, PER DETAIL 704, SHEET LS07.
9. INSTALL BOLCO STEP-DOWN PITCHER'S RUBBER, YOUTH SIZE 4" X 18" SKU# 1236392, AVAILABLE FROM: BSNSPORTS.COM, (800) 856-3488. INSTALL PER MANUFACTURER'S INSTRUCTIONS. FURNISH PITCHER'S RUBBER QUANTITY PER LOCATION SHOWN ON PLAN INSTALL AT DISTANCES SHOWN ON PLAN. RECREATION AND PARK'S DEPARTMENT SHALL APPROVE PITCHER'S RUBBER PRIOR TO PURCHASE AND INSTALLATION.
10. INSTALL CONCRETE PAVING PER DETAIL 401 & 402, SHEET LS04.
11. INSTALL 'HOLLYWOOD IMPACT' BASE (SKU# 1236439) WITH GROUND ANCHORS (SKU# 1236507) AND BASE PLUGS (SKU# BBRPLUGS), AVAILABLE FROM: BSNSPORTS.COM, (800) 856-3488. INSTALL PER MANUFACTURER'S INSTRUCTIONS. FURNISH (1) SET OF BASES. INSTALL AT DISTANCES SHOWN ON PLAN.
12. INSTALL 'HOLLYWOOD' HOME PLATE, SKU# 1236477,AVAILABLE FROM: BSNSPORTS.COM, (800) 856-3488. INSTALL PER MANUFACTURER'S INSTRUCTIONS.
13. INSTALL OUTFIELD TURF PER PLANTING PLAN AND SPECIFICATIONS.
14. INSTALL DRINKING FOUNTAIN PER DETAIL 1001, SHEET LS10.
15. INSTALL 4' WIDE SINGLE CHAIN LINK GATES WHERE INDICATED. PER DETAIL 702, SHEET LS07.
16. INSTALL 16' HIGH CHAIN LINK SIDE LINE FENCE WITH CONCRETE MOW STRIP PER DETAIL 501, SHEET LS05.
17. INSTALL 20' X 60' BULLPEN WITH 8' HIGH CHAIN LINK FENCE ON A 12" CONCRETE MOWSTRIP WITH A 4' PEDESTRIAN GATE, DECOMPOSED GRANITE PAVING, TWO HOME PLATES AND TWO PITCHERS RUBBERS FOR EACH BULLPEN PER DETAIL 901, SHEET LS09.
18. PROVIDE (2) SURFACE MOUNT HELMET RACKS. SKU# 1238464.AVAILABLE FROM: BSNSPORTS.COM, (800) 856-3488. INSTALL PER MANUFACTURER'S INSTRUCTIONS.
19. ANNOUNCERS AREA. PROVIDE 12VAC ELECTRICAL SERVICE WITH EXTERIOR RECEPTACLE AND LOCKING COVER.

EJ — CONCRETE PAVING EXPANSION JOINT. REFER TO DETAIL 401, SHEET LS04.

SL(TYP) — CONCRETE PAVING TOOLED SCORELINE. REFER TO DETAIL 401, SHEET LS04.

NOTE:
ALL FENCING ADJACENT TO PAVING SHALL HAVE PAVING EXTEND BENEATH THE FENCE. ALL OTHER FENCING SHALL HAVE CONCRETE MOW STRIP.

THE CITY OF LOS ANGELES OR ITS OFFICERS OR AGENTS SHALL NOT BE RESPONSIBLE FOR THE ACCURACY OR COMPLETENESS OF ELECTRONIC COPIES OF THIS PLAN SHEET.

REVISION DATES (DESIGN STAGE ONLY)

301 | BASEBALL FIELD PLAN
AS SHOWN

ENGINEERING
CITY OF LOS ANGELES

REG. STATE OF CALIFORNIA — LANDSCAPE ARCHITECT — LAMONT K. MAU — LICENSE No. 5982 — 06/30/2024

BUREAU OF ENGINEERING • THIS PLAN WAS ELECTRONICALLY • SIGNED AND STAMPED

VERTICAL CONTROL: BENCH MARK:08-30460 (NAVD 88)
HORIZONTAL CONTROL: CALIFORNIA STATE PLANE ZONE V, 1983 NAD

SHEET TITLE: LANDSCAPE SITE CONSTRUCTION DETAIL 2

PROJECT: FERNANGELES PARK STORMWATER CAPTURE PROJECT

ADDRESS: FERNANGELES RECREATION CENTER
8851 LAUREL CANYON BLVD, SUN VALLEY, CA 91352

NO.	REVISIONS	DATE	BY
		YY/MM/DD	
		YY/MM/DD	
		YY/MM/DD	
		YY/MM/DD	

CIP NO. SCP0002

INDEX NO.

CITY OF LOS ANGELES DEPARTMENT OF PUBLIC WORKS

CITY ENGINEER: TED ALLEN, P.E. — DATE 1/27/2023

	DESIGN GROUP	DATE
ENGINEER:	CDM SMITH INC.	1/27/2023
ARCHITECT:	NUVIS LANDSCAPE ARCHITECTURE	1/27/2023
DESIGNED BY:	P. CARDOZA	1/27/2023
DRAWN BY:	L. KLECKER	1/27/2023
CHECKED BY:	P. CARDOZA	1/27/2023
APPROVED BY:	A. DELLINGER	1/27/2023

WORK ORDER
EW40079F

SHEET NAME
LS03

SHEET 68 OF 125 SHEETS

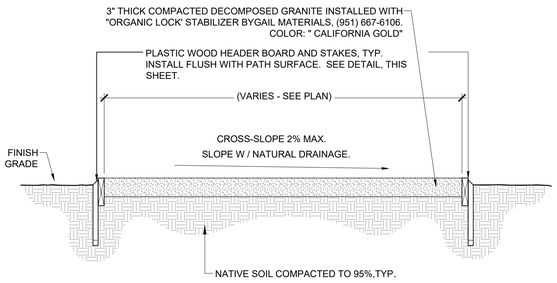

TYPICAL PATH SECTION

NOTES:

1. ALL D.G. PATHS SHALL NOT EXCEED A RUNNING SLOPE GREATER THAN 3%. SEE GRADING PLAN

2. DECOMPOSED GRANITE MATERIAL SHALL BE PRE-MIXED WITH STABILIZER (AMOUNT/RATIO PER MANUFACTURER'S RECOMMENDATION) BY SUPPLIER PRIOR TO PLACEMENT TO ENSURE THOROUGH AND EVEN DISTRIBUTION THROUGHOUT MIXTURE. SEE LANDSCAPE CONSTRUCTION NOTES.

405 | DECOMPOSED GRANITE PATH WITH PLASTIC WOOD HEADER

N.T.S. | RP DETAIL L3820

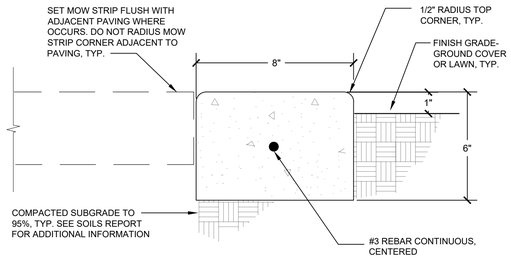

SECTION

NOTES:

1. SCORE MOW STRIP AT 10' O.C. MAX. AND AT ALL CHANGES IN DIRECTION SIMILAR TO CONCRETE PAVING DETAIL.
2. WHEN MOW STRIP IS INSTALLED ADJACENT TO EXISTING A.C. PAVING, THE EXISTING A.C. PAVING SHALL BE SAW-CUT 12" FROM THE EDGE OF THE MOW STRIP AND NEW ASPHALT CONCRETE PLACED AFTER MOW STRIP IS IN PLACE.

403 | CONCRETE MOW STRIP

N.T.S. | BOE VERSION Feb/08 - RF,SD | RP DETAIL L3200

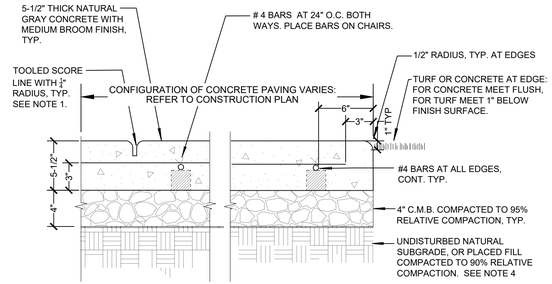

NOTES:

1. PROVIDE TOOLED SCORE LINES, 1" DEEP, AT LOCATIONS SHOWN ON CONSTRUCTION PLAN. SAW-CUT SCORE LINES MAY BE APPROVED AS AN ALTERNATE METHOD AT THE DISCRETION OF THE PROJECT MANAGER.
2. EXPANSION JOINTS SHALL BE CONSTRUCTED PER DETAIL AT LOCATIONS SHOWN ON PLAN.
3. PROVIDE ISOLATION JOINT PER DETAIL AGAINST PREVIOUSLY CONSTRUCTED FIXED ELEMENTS.
4. END OF POUR JOINTS - SEE LANDSCAPE CONSTRUCTION NOTES.

401 | CONC. PAVING W/CM BASE, NO THICK. EDGE

N.T.S | RP REVISED 7-2-13 RWF | RP DETAIL L3020

CONSTRUCTION DETAIL NOTES

1. THE FOLLOWING NOTES APPLY TO ALL DETAILS AS SHOWN IN THIS SET OF DOCUMENTS, UNLESS OTHERWISE NOTED.
2. FOR ADDITIONAL INFORMATION REFER TO CONSTRUCTION NOTES.
3. REFER TO CONSTRUCTION LEGEND FOR INFORMATION RELATIVE TO COLOR, TYPE AND FINISH.
4. UNLESS OTHERWISE NOTED, NEW FINISH SURFACE SHALL BE FLUSH WITH ADJACENT EXISTING SURFACES.
5. FINISH GRADE SHALL BE 1" BELOW FINISH SURFACE AT ALL PLANTER OR TURF AREAS.
6. FINAL LOCATION OF CONSTRUCTION ELEMENTS, DRAINAGE DEVICES, SITE AMENITIES, IRRIGATION EQUIPMENT, AND PLANT MATERIAL MAY REQUIRE ADJUSTMENT DUE TO FIELD CONDITIONS AND SHALL BE APPROVED PRIOR TO CONSTRUCTION.
7. CONTRACTOR SHALL VERIFY ALL MATCHING MATERIALS AND COLORS PRIOR TO INSTALLATION. CONTRACTOR SHALL NOTIFY LANDSCAPE ARCHITECT OF ANY DISCREPANCIES PRIOR TO INSTALLATION.
8. CONTRACTOR SHALL SUBMIT AND OBTAIN BUILDING PERMIT FOR ALL FENCING OVER 10' HIGH. CONTRACTOR SHALL PROVIDE ALL REQUIRED ENGINEERING AND CALCULATIONS FOR FOOTINGS.

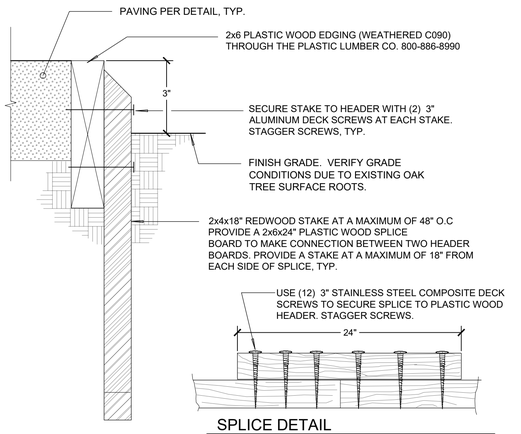

SPLICE DETAIL
(NOT TO SCALE)

406 | PLASTIC WOOD HEADER

N.T.S. | BOE VERSION SEP/07 | RP DETAIL 2101

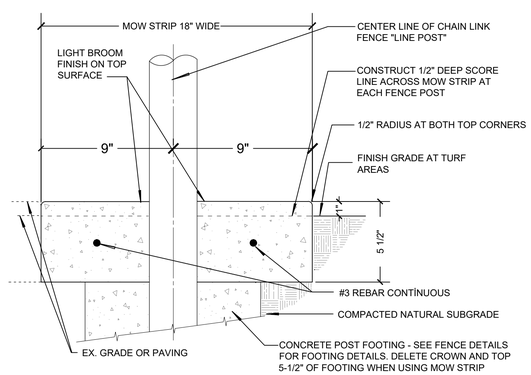

NOTES:

1. PLACE PLASTIC CONTROL JOINTS AT ALL CHANGES IN DIRECTION.
2. WHEN MOW STRIP IS INSTALLED ADJACENT TO EXISTING A.C. PAVING,THE EXISTING A.C. PAVING SHALL BE SAW CUT 12" FROM THE EDGE OF THE MOW STRIP AND NEW ASPHALT CONCRETE PLACED AFTER MOW STRIP IS IN PLACE.
3. CONCRETE SHALL BE NATURAL COLOR UNLESS OTHERWISE NOTED.

404 | CONCRETE MOW STRIP AT CHAINLINK FENCE

N.T.S. | RP DETAIL 321

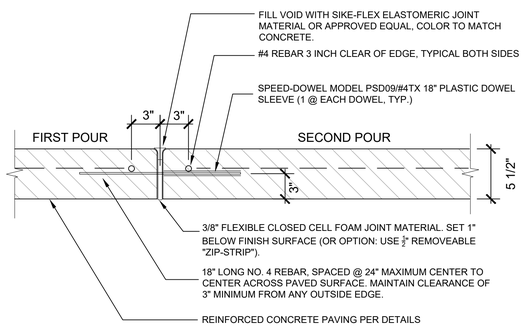

SECTION

NOTE:

1. MAINTAIN LINE AND GRADE AT EXPANSION JOINTS.
2. EXPANSION JOINT SHALL BE PLACE AT MAX. SPACING OF EVERY 20' UNLESS OTHERWISE SPECIFIED ON THE CONSTRUCTION PLAN.

402 | DOWELED EXPANSION JOINT

N.T.S. | RP DETAIL L3070

RAP VERSION 8-4-98 / RDF, JPH

RP VERSION 12-09-04, SLG

THE CITY OF LOS ANGELES OR ITS OFFICERS OR AGENTS SHALL NOT BE RESPONSIBLE FOR THE ACCURACY OR COMPLETENESS OF ELECTRONIC COPIES OF THIS PLAN SHEET.

REVISION DATES (DESIGN STAGE ONLY)

ENGINEERING
CITY OF LOS ANGELES

THIS PLAN WAS ELECTRONICALLY • SIGNED AND STAMPED •

REG. STATE OF CALIFORNIA — LANDSCAPE ARCHITECT — LAMONT V. NUVIS — No. 3962 — 12/31/2023

BUREAU OF ENGINEERING

VERTICAL CONTROL: BENCH MARK:08-30460 (NAVD 88)
HORIZONTAL CONTROL: CALIFORNIA STATE PLANE ZONE V. 1983 NAD

SHEET TITLE: LANDSCAPE SITE CONSTRUCTION DETAIL 3

PROJECT: FERNANGELES PARK STORMWATER CAPTURE PROJECT

ADDRESS: FERNANGELES RECREATION CENTER
8851 LAUREL CANYON BLVD, SUN VALLEY, CA 91352

NO.	REVISIONS	DATE	BY
		YY/MM/DD	
		YY/MM/DD	
		YY/MM/DD	
		YY/MM/DD	

CIP NO. SCP0002

INDEX NO.

CITY OF LOS ANGELES DEPARTMENT OF PUBLIC WORKS

CITY ENGINEER: TED ALLEN, P.E. — DATE: 1/27/2023

DESIGN GROUP		DATE
ENGINEER:	CDM SMITH INC.	1/27/2023
ARCHITECT:	NUVIS LANDSCAPE ARCHITECTURE	1/27/2023
DESIGNED BY:	P. CARDOZA	1/27/2023
DRAWN BY:	L. KLECKER	1/27/2023
CHECKED BY:	P. CARDOZA	1/27/2023
APPROVED BY:	A. DELLINGER	1/27/2023

WORK ORDER
EW40079F

SHEET NAME
LS04

SHEET 69 OF 125 SHEETS

SHEET VERSION 4.0.1 FILE PATH: Z:\DWG\20005-01_LABOE TOS 25 STORMWATER\NUVIS\FERNANGELES RECREATION CENTER\CD'S\SHEETS\FP LCD.DWG PLOT DATE: 1/26/2023 5:12 PM SAVED: 1/26/2023 2:45 PM SAVED BY:LAMONT

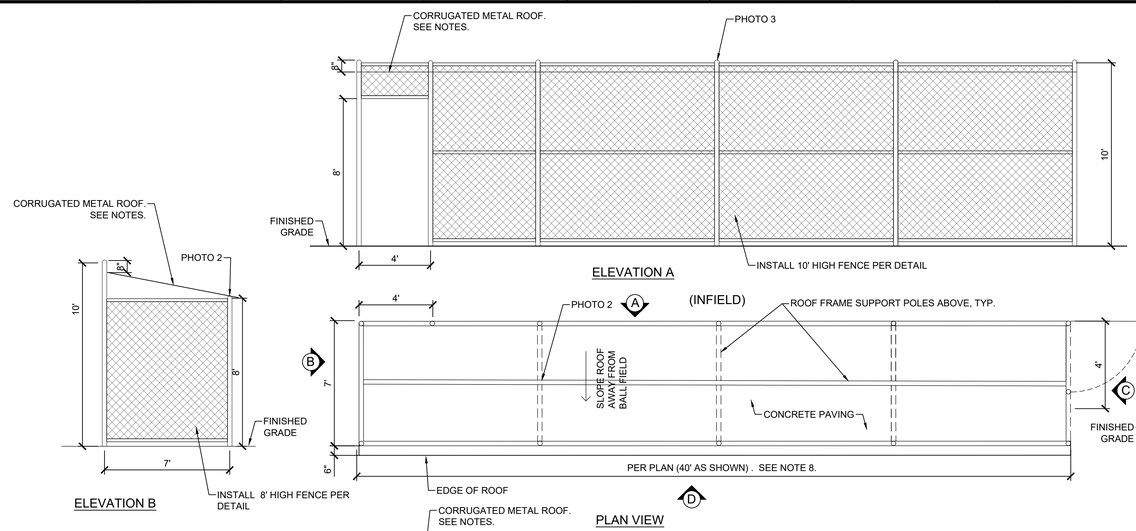

ELEVATION A

ELEVATION B

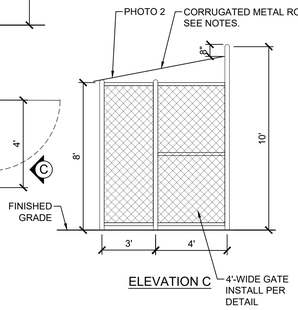

ELEVATION C

PLAN VIEW

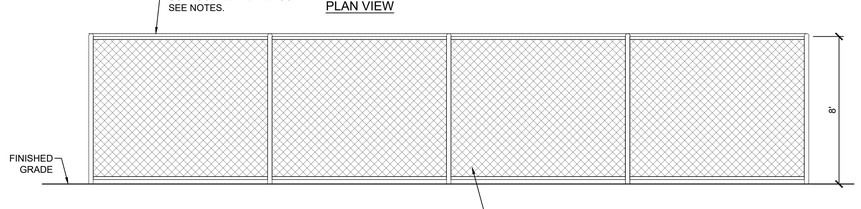

ELEVATION D

NOTES:

1. DUGOUT ROOF COVER IS TO BE 2 ½" X ½", 20 GAUGE, CORRUGATED METAL (ALUMINUM), (CLASS A ROOF) ATTACHED TO ROOF SUPPORT POLES WITH ⅜" X 1 ½" TEC SCREWS AND RUBBER WASHER AT 24" O.C.
2. CORRUGATED METAL SHEETS SHALL HAVE 6" MINIMUM OVERLAPS WHEN STACK JOINING 2 PIECES.
3. DUGOUT ROOF FRAME POST SIZE TO BE SAME SIZE AS TOP AND BOTTOM RAILS OF 8' CHAIN LINK FENCE DETAIL J9/L410.
4. DUGOUT ROOF FRAME POSTS TO BE WELDED TOGETHER. SEE PHOTO 1.
5. WELD DUGOUT ROOF FRAME TO SIDE OF 10' HIGH FENCE POSTS, 8" BELOW TOP OF POST AND ON TOP OF 8' HIGH DUGOUT FENCE POST CAPS. SEE PHOTO 2 & PHOTO 3.
6. SLOPE DUGOUT ROOF TO DRAIN WATER AWAY FROM BALL FIELD.
7. SEE LANDSCAPE CONSTRUCTION NOTES (CHAIN LINK FENCING) FOR ADDITIONAL REQUIREMENTS.
8. FOR 30' DUGOUTS (AS NOTED PER PLAN), OMIT ONE MIDDLE 10' SECTIONS OF FENCING AND ROOFING.
9. DUGOUT FLOOR SHALL BE CONCRETE PAVING PER DETAIL 1, SHEET LS04. COLOR AND FINISH TO MATCH THROUGHOUT.

REFER TO SHEET LS12, DETAIL 1202 FOR BASEBALL DUGOUT IMAGES

501	BASEBALL DUGOUT
N.T.S.	

FENCE CONSTRUCTION NOTES

REFER TO THE SPECIFICATIONS SECTION FOR CHAIN LINK FENCING AND INSTALLATION OF CHAIN LINK FENCE FABRIC PER SSPWC 206-6, 304-3 FOR CHAIN LINK FENCE CONSTRUCTION.

CONTRACTOR SHALL SUBMIT AND OBTAIN BUILDING PERMIT FOR ALL FENCING OVER 10' HIGH. CONTRACTOR SHALL PROVIDE ALL REQUIRED ENGINEERING AND CALCULATIONS FOR FOOTINGS.

MATERIALS:

1. BRACE BANDS & OFFSET TENSION BANDS: 1/8" X 1" HEAVY W/ 3/8" CARRIAGE BOLTS.
2. THREADED TRUSS RODS: 3/8" DIAMETER ASTM A36 STEEL, 6" LONG THREAD BOTH ENDS. DOUBLE NUT EACH END. NO SPLICES ALLOWED.
3. TRUSS TIGHTENER: 5 3/4" X 1" X 5/16" INDUSTRIAL, 0.59 LB./EACH. (BOTH ENDS OF TRUSS ROD)
4. LINE PANEL RAIL END: 1 7/8" OD 1-HOLE OFFSET, PRESSED STEEL, 0.39 LB./EACH.
5. SHEAR PANEL RAIL END: 1 7/8" OD 2-HOLE PRESSED STEEL, 0.59 LB./EACH.
6. CAPS: CAST IRON, 4 1/2" OD = 2.25 LB.
7. POST & RAIL FABRIC TIES, HOG RINGS: 9 GA. STEEL.
8. TENSION BARS: 1/4" X 3/4" 132" CONTINUOUS.
9. CHAIN LINK FABRIC: SEE ELEVATION.
10. POST AND RAILS: ASTM A120, SCH. 40 CLASS 1 OR ASTM F1083
11. ALL 20' FENCE MATERIALS, FABRIC, POSTS ETC. SHALL BE GALVANIZED FINISH, TYP.

CONCRETE:

1. FOOTING CONCRETE DESIGN FC'=2000 PSI: FOR DURABILITY THE CONTRACTOR SHALL PROVIDE 520-C-2500, 4" SLUMP CONCRETE. PORTLAND CEMENT SHALL BE TYPE II PER SSPWC 201-1.2; COMBINED AGGREGATE GRADING SHALL CONFORM WITH SSPW 201-1.3.2.
2. PRIOR TO PROCEEDING WITH INSTALLATION OF FENCE FRAME AND FABRIC, THE CONTRACTOR SHALL ALLOW 7 DAYS FOR THE FOOTING CONCRETE TO CURE.
3. SUBMITTAL - EACH TRUCKLOAD SHALL BE ACCOMPANIED BY A DELIVERY RECEIPT SHOWING SUPPLIER, LOAD WEIGHT, AND MIX COMPOSITION BY WEIGHT. PRIOR TO PLACING CONCRETE, THE CONTRACTOR SHALL PROVIDE THE PROJECT INSPECTOR WITH A COPY OF THE DELIVERY RECEIPT.

DESIGN SOIL STRENGTH VALUES:

LATERAL BEARING: 100 PSF/FT TO 1500 PSF MAX. FOR DESIGN OF ISOLATED POLES, THE ALLOWABLE LATERAL BEARING HAS BEEN INCREASED BY 100 PERCENT.

CHAIN LINK FABRIC FIELD INSTALLATION:

1. FABRIC SHALL BE CONTINUOUS IN THE LONGITUDINAL DIRECTION BY WEAVING CLOSURE TIES, OF THE SAME MATERIAL AS THE FENCE FABRIC, THROUGH BOTH VERTICAL ENDS.
2. FABRIC SHALL BE FASTENED TO THE RAILS AND LINE POSTS WITH TIE WIRES AT 1'-6" ON CENTER.
3. THE HORIZONTAL SEAM (BETWEEN THE TOP & BOTTOM PANEL) SHALL HAVE A 2" LAP AND SHALL BE FASTENED TOGETHER WITH HOG RINGS 1'-6" OC SPACED EVENLY BETWEEN RAIL TIES.
4. FABRIC SHALL BE STRETCHED TIGHTLY AND KNUCKELED TOP AND BOTTOM.
5. FABRIC SHALL BE PLACED 1" ABOVE THE FINISHED SURFACE.

FENCE FRAME FIELD INSTALLATION

1. * POSTS AND RAILS SHALL BE FABRICATED FROM CONTINUOUS PIPE, EXCEPT FOR POST FIELD SPLICE AS SHOWN ON THE PLAN.
2. * FITTINGS SHALL BE FABRICATED FROM A36 STEEL EXCEPT AS OTHERWISE INDICATED HEREIN. ALL POSTS SHALL BE INSTALLED IN A VERTICAL POSITION,
3. * THE BOTTOM RAIL SHALL BE INSTALLED ON A STRAIGHT GRADE BETWEEN POSTS BY EXCAVATING THE HIGH POINTS OF GROUND TO PROVIDE A UNIFORM 2" CLEARANCE .

CONTRACTOR SHALL SUBMIT AND OBTAIN BUILDING PERMIT FOR ALL FENCING OVER 10' HIGH. CONTRACTOR SHALL PROVIDE ALL REQUIRED ENGINEERING AND CALCULATIONS FOR FOOTINGS.

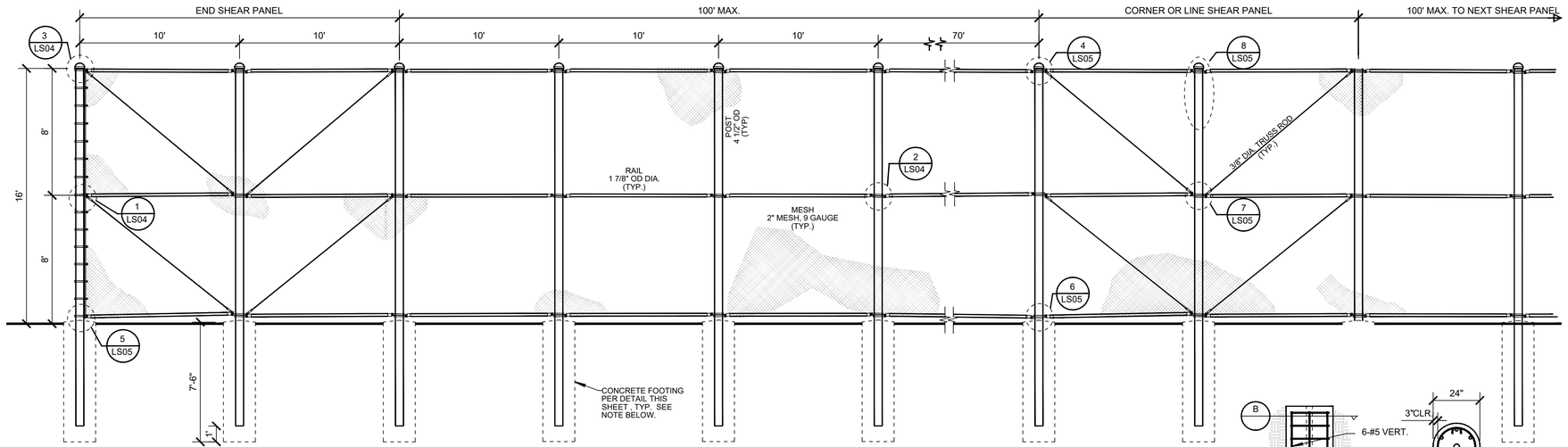

ELEVATION

NOTE:
CONTRACTOR SHALL SUBMIT AND OBTAIN BUILDING PERMIT FOR ALL FENCING OVER 10' HIGH. CONTRACTOR SHALL PROVIDE ALL REQUIRED ENGINEERING AND CALCULATIONS FOR FOOTINGS.

REFER TO SHEET LS04 FOR ADDITIONAL FENCING DETAILS.

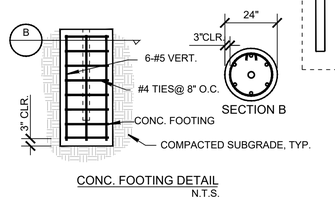

CONC. FOOTING DETAIL
N.T.S.

502	16' HIGH CHAIN LINK FENCE	
N.T.S.		RP DETAIL 5040

THE CITY OF LOS ANGELES OR ITS OFFICERS OR AGENTS SHALL NOT BE RESPONSIBLE FOR THE ACCURACY OR COMPLETENESS OF ELECTRONIC COPIES OF THIS PLAN SHEET.

REVISION DATES (DESIGN STAGE ONLY)

ENGINEERING
CITY OF LOS ANGELES

THIS PLAN WAS ELECTRONICALLY • SIGNED AND STAMPED

REGISTERED LANDSCAPE ARCHITECT TED ALLEN No. 5962 STATE OF CALIFORNIA

BUREAU OF ENGINEERING

VERTICAL CONTROL: BENCH MARK:08-30460 (NAVD 88)
HORIZONTAL CONTROL: CALIFORNIA STATE PLANE ZONE V. (1983 NAD

SHEET TITLE: LANDSCAPE SITE CONSTRUCTION DETAIL 4

PROJECT: FERNANGELES PARK STORMWATER CAPTURE PROJECT

ADDRESS: FERNANGELES RECREATION CENTER 8851 LAUREL CANYON BLVD, SUN VALLEY, CA 91352

CITY OF LOS ANGELES DEPARTMENT OF PUBLIC WORKS

NO.	REVISIONS	DATE	BY
		YY/MM/DD	
		YY/MM/DD	
		YY/MM/DD	
		YY/MM/DD	

CIP NO. SCP0002

INDEX NO.

CITY ENGINEER

	DESIGN GROUP	DATE
ENGINEER:	CDM SMITH INC.	1/27/2023
ARCHITECT:	NUVIS LANDSCAPE ARCHITECTURE	1/27/2023
DESIGNED BY:	P. CARDOZA	1/27/2023
DRAWN BY:	L. KLECKER	1/27/2023
CHECKED BY:	P. CARDOZA	1/27/2023
APPROVED BY:	A. DELLINGER	1/27/2023

TED ALLEN, P.E.

WORK ORDER
EW40079F

SHEET NAME
LS05

SHEET 70 OF 125 SHEETS

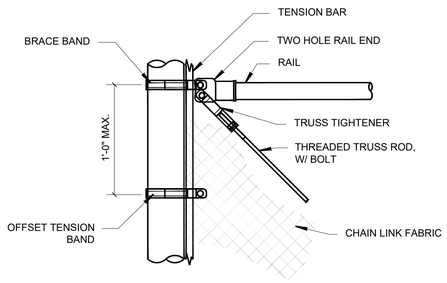

1 CONNECTION AT POST

N.T.S.

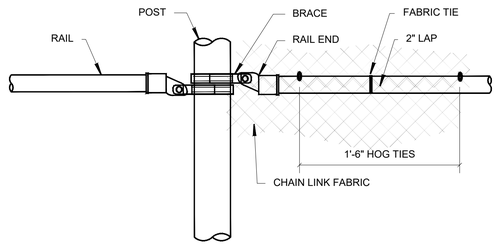

2 RAIL CONNECTION TO POST & CHAIN LINK FABRIC OVER LAP

N.T.S.

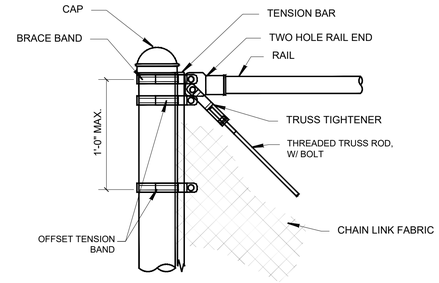

3 CONNECTION AT POST

N.T.S.

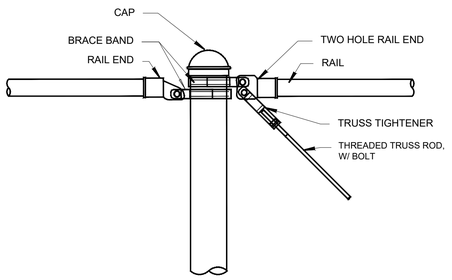

4 RAIL & TRUSS CONNECTION AT POST

N.T.S.

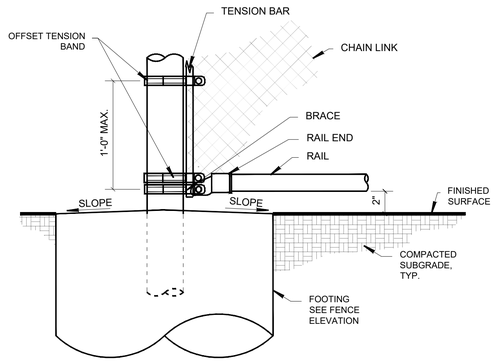

5 CONNECTION AT POST

N.T.S.

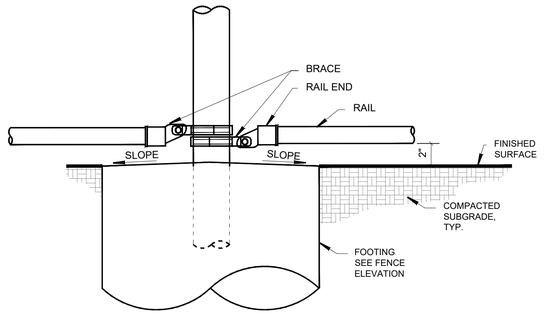

6 RAIL & POST CONNECTION AT FOOTING

N.T.S.

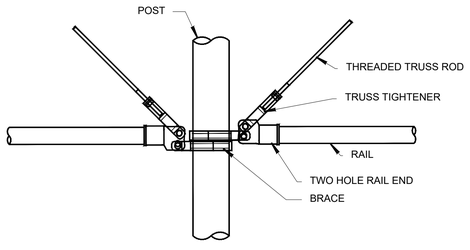

7 RAIL & TRUSS CONNECTION TO POST

N.T.S.

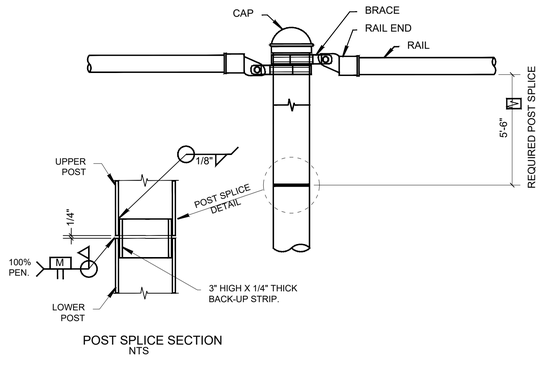

POST SPLICE SECTION
NTS

8 POST SPLICE & RAIL TO POST CONNECTION

N.T.S.

FENCE CONSTRUCTION NOTES

REFER TO THE SPECIFICATIONS SECTION FOR CHAIN LINK FENCING AND INSTALLATION OF CHAIN LINK FENCE FABRIC PER SSPWC 206-6, 304-3 FOR CHAIN LINK FENCE CONSTRUCTION.

CONTRACTOR SHALL SUBMIT AND OBTAIN BUILDING PERMIT FOR ALL FENCING OVER 10' HIGH. CONTRACTOR SHALL PROVIDE ALL REQUIRED ENGINEERING AND CALCULATIONS FOR FOOTINGS.

MATERIALS:

1. BRACE BANDS & OFFSET TENSION BANDS: 1/8" X 1" HEAVY W/ 3/8" CARRIAGE BOLTS.
2. THREADED TRUSS RODS: 3/8" DIAMETER ASTM A36 STEEL, 6" LONG THREAD BOTH ENDS. DOUBLE NUT EACH END. NO SPLICES ALLOWED.
3. TRUSS TIGHTENER: 5 3/4" X 1" X 5/16" INDUSTRIAL, 0.59 LB./EACH. (BOTH ENDS OF TRUSS ROD)
4. LINE PANEL RAIL END: 1 7/8" OD 1-HOLE OFFSET, PRESSED STEEL, 0.39 LB./EACH.
5. SHEAR PANEL RAIL END: 1 7/8" OD 2-HOLE PRESSED STEEL, 0.59 LB./EACH.
6. CAPS: CAST IRON, 4 1/2" OD = 2.25 LB.
7. POST & RAIL FABRIC TIES, HOG RINGS: 9 GA. STEEL.
8. TENSION BARS: 1/4" X 3/4" 132" CONTINUOUS.
9. CHAIN LINK FABRIC: SEE ELEVATION.
10. POST AND RAILS: ASTM A120, SCH. 40 CLASS 1 OR ASTM F1083
11. ALL 20' FENCE MATERIALS, FABRIC, POSTS ETC. SHALL BE GALVANIZED FINISH, TYP.

CONCRETE:

1. FOOTING CONCRETE DESIGN FC'=2000 PSI: FOR DURABILITY THE CONTRACTOR SHALL PROVIDE 520-C-2500, 4" SLUMP CONCRETE. PORTLAND CEMENT SHALL BE TYPE II PER SSPWC 201-1.2; COMBINED AGGREGATE GRADING SHALL CONFORM WITH SSPW 201-1.3.2.
2. PRIOR TO PROCEEDING WITH INSTALLATION OF FENCE FRAME AND FABRIC, THE CONTRACTOR SHALL ALLOW 7 DAYS FOR THE FOOTING CONCRETE TO CURE.
3. SUBMITTAL - EACH TRUCKLOAD SHALL BE ACCOMPANIED BY A DELIVERY RECEIPT SHOWING SUPPLIER, LOAD WEIGHT, AND MIX COMPOSITION BY WEIGHT. PRIOR TO PLACING CONCRETE, THE CONTRACTOR SHALL PROVIDE THE PROJECT INSPECTOR WITH A COPY OF THE DELIVERY RECEIPT.

DESIGN SOIL STRENGTH VALUES:

LATERAL BEARING: 100 PSF/FT TO 1500 PSF MAX. FOR DESIGN OF ISOLATED POLES, THE ALLOWABLE LATERAL BEARING HAS BEEN INCREASED BY 100 PERCENT.

CHAIN LINK FABRIC FIELD INSTALLATION:

1. FABRIC SHALL BE CONTINUOUS IN THE LONGITUDINAL DIRECTION BY WEAVING CLOSURE TIES, OF THE SAME MATERIAL AS THE FENCE FABRIC, THROUGH BOTH VERTICAL ENDS.
2. FABRIC SHALL BE FASTENED TO THE RAILS AND LINE POSTS WITH TIE WIRES AT 1'-6" ON CENTER.
3. THE HORIZONTAL SEAM (BETWEEN THE TOP & BOTTOM PANEL) SHALL HAVE A 2" LAP AND SHALL BE FASTENED TOGETHER WITH HOG RINGS 1'-6" OC SPACED EVENLY BETWEEN RAIL TIES.
4. FABRIC SHALL BE STRETCHED TIGHTLY AND KNUCKELED TOP AND BOTTOM.
5. FABRIC SHALL BE PLACED 1" ABOVE THE FINISHED SURFACE.

FENCE FRAME FIELD INSTALLATION

1. * POSTS AND RAILS SHALL BE FABRICATED FROM CONTINUOUS PIPE, EXCEPT FOR POST FIELD SPLICE AS SHOWN ON THE PLAN.
2. * FITTINGS SHALL BE FABRICATED FROM A36 STEEL EXCEPT AS OTHERWISE INDICATED HEREIN. ALL POSTS SHALL BE INSTALLED IN A VERTICAL POSITION,
3. * THE BOTTOM RAIL SHALL BE INSTALLED ON A STRAIGHT GRADE BETWEEN POSTS BY EXCAVATING THE HIGH POINTS OF GROUND TO PROVIDE A UNIFORM 2" CLEARANCE .

CONTRACTOR SHALL SUBMIT AND OBTAIN BUILDING PERMIT FOR ALL FENCING OVER 10' HIGH. CONTRACTOR SHALL PROVIDE ALL REQUIRED ENGINEERING AND CALCULATIONS FOR FOOTINGS.

THE CITY OF LOS ANGELES OR ITS OFFICERS OR AGENTS SHALL NOT BE RESPONSIBLE FOR THE ACCURACY OR COMPLETENESS OF ELECTRONIC COPIES OF THIS PLAN SHEET.

REVISION DATES (DESIGN STAGE ONLY)

ENGINEERING
CITY OF LOS ANGELES

THIS PLAN WAS ELECTRONICALLY • SIGNED AND STAMPED

REGISTERED LANDSCAPE ARCHITECT — No. 5962 — STATE OF CALIFORNIA — KEVIN L. JONES — 09/30/2024

BUREAU OF ENGINEERING

VERTICAL CONTROL: BENCH MARK (08-30460) NAVD 88
HORIZONTAL CONTROL: CALIFORNIA STATE PLANE ZONE V, 1983 NAD

SHEET TITLE: LANDSCAPE SITE CONSTRUCTION DETAIL 5

PROJECT: FERNANGELES PARK STORMWATER CAPTURE PROJECT

ADDRESS: FERNANGELES RECREATION CENTER 8851 LAUREL CANYON BLVD, SUN VALLEY, CA 91352

CITY OF LOS ANGELES DEPARTMENT OF PUBLIC WORKS

NO.	REVISIONS	DATE	BY
1		YY/MM/DD	
2		YY/MM/DD	
3		YY/MM/DD	
4		YY/MM/DD	

CIP NO. SCP0002

INDEX NO.

CITY ENGINEER

	DESIGN GROUP	DATE
ENGINEER:	CDM SMITH INC.	1/27/2023
ARCHITECT:	NUVIS LANDSCAPE ARCHITECTURE	1/27/2023
DESIGNED BY:	P. CARDOZA	1/27/2023
DRAWN BY:	L. KLECKER	1/27/2023
CHECKED BY:	P. CARDOZA	1/27/2023
APPROVED BY:	A. DELLINGER	1/27/2023

TED ALLEN, P.E.

WORK ORDER EW40079F

SHEET NAME LS06

SHEET 71 OF 125 SHEETS

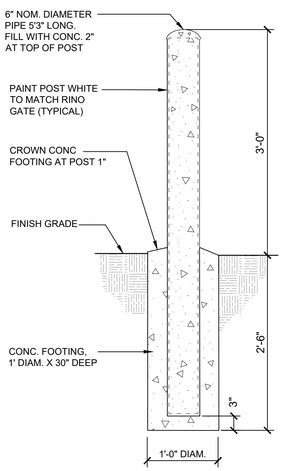

NOTE: POST SHALL BE SCHEDULE 40 GALVANIZED STEEL WATER PIPE.

705 FIXED BARRIER POST

3/4" = 1'-0" | RP DETAIL 100

OPTIONS (OPTIONS CHECKED SHALL PREVAIL)

☐ VINYL COATED CHAIN LINK FABRIC SHALL BE PER SPECIFICATIONS. ALL FENCE MATERIALS SHALL BE AS INDICATED HEREON AND PAINTED PER SPECIFICATIONS TO MATCH THE FABRIC COLOR. THE COLOR SHALL BE: BLACK.

☒ ALL FENCING SHALL HAVE A GALVANIZED FINISH.

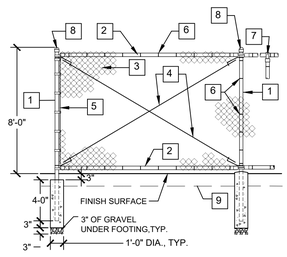

ELEVATION

FENCING MATERIALS

1. POSTS: END, CORNER AND SLOPE POSTS 2-7/8 IN. O.D., LINE POSTS 2-3/8 IN. O.D. POST SPACING TO BE 10'-0" MAX.
2. RAILS: TOP AND BOTTOM RAILS 1-5/8 IN. O.D.
3. FABRIC: 9 GAUGE, 2 IN. MESH, KNUCKLE TOP AND BOTTOM, PLACE ON PATH OR EXTERIOR SIDE OF POSTS.
4. TRUSS ROD: 3/8 IN. DIAM. THREADED AT BOTH ENDS AND TENSIONED WITH TWO INDUSTRIAL TRUSS TIGHTENERS SECURED TO RAIL ENDS. TRUSS PANEL SHALL BE LOCATED AT END AND C ORNER PANELS OF 30" OR GREATER TURN AND AT INTERVALS NOT TO EXCEED 100' . HOG RING FABRIC TO RODS AT MAX. 3'-0" O.C.
5. STRETCHER BAR: 3/16" X 3/4" WITH 1/8" X 1" TENSION BANDS AT 1'-0" O.C.
6. TIE WIRES: 11 GAUGE AT 1'-6" O.C. AT TOP, BOTTOM AND LINE POSTS.
7. LINE POST EYE TOPS & RAIL ENDS SHALL BE MALLEABLE IRON OR PRESSED STEEL. SECURE RAIL ENDS TO POSTS WITH 1/8" X 1" BRACE BANDS.
8. POST CAPS SHALL BE MALLEABLE IRON OR PRESSED STEEL.
9. REQUIRED MOW-STRIP IN TURF AREAS.

NOTES:

1. SEE SPECIFICATIONS SECTION FOR CHAIN LINK FENCE CONSTRUCTION FOR ADDITONAL INFORMATION.
2. CONCRETE FOOTINGS SHALL BE ALLOWED TO SET FOR SEVEN (7) DAYS PRIOR TO INSTALLATION OF FABRIC OR HARDWARE.
3. THE BOTTOM OF THE FABRIC SHALL BE POSITIONED ONE INCH ABOVE FINISH GRADE.
4. IN PAVED AREAS TOP OF CONC. FTG. TO BE 3" BELOW FINISH SURFACE TO ALLOW FOR PAVING ABOVE.
5. IN LANDSCAPED AREAS, TOP OF FOOTING SHALL BE 1" ABOVE FINISH GRADE WITH A 1" CROWN ON TOP OF FTG.
6. INSIDE OR ADJACENT TO TURF AREAS, ALL FENCES SHALL HAVE A 12" WIDE X 6" DEEP CONCRETE MOW-STRIP WITH #4 REBAR CENTERED, TYP. MOW STRIP SHALL BE CENTERED ON FENCE.
7. CONC. FTG. TO BE 2500 PSI @ 28 DAYS. PROVIDE 3" OF GRAVEL UNDER CONC. FTG., TYP.

703 EIGHT FOOT CHAINLINK FENCE

N.T.S. | RP DETAIL 5030

OPTIONS (OPTIONS CHECKED SHALL PREVAIL)

☐ VINYL COATED CHAIN LINK FABRIC SHALL BE AS SPEC'S. ALL FENCE MATERIALS SHALL BE AS INDICATED HEREON AND PAINTED PER SPEC'S TO MATCH FABRIC COLOR. COLOR SHALL BE BLACK.

☒ ALL FENCING SHALL HAVE A STANDARD GALV. FINISH.

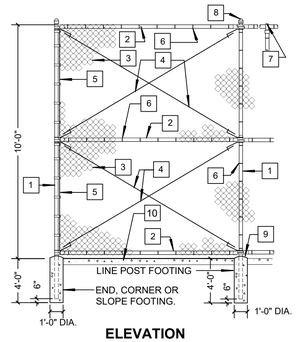

ELEVATION

FENCING MATERIALS

1. POSTS: END, CORNER AND SLOPE POSTS 2-7/8". O.D., LINE POSTS 2-3/8" O.D. POST SPACING TO BE 10'-0" MAX.
2. RAILS: TOP ,MID AND BOTTOM RAILS 1-5/8" O.D.
3. FABRIC: 9 GAUGE, 2" MESH, KNUCKLE TOP AND BOTTOM, PLACE ON ACTIVITY OR LAWN SIDE OF POSTS.
4. TRUSS ROD: 3/8 IN. DIAM. THREADED AT BOTH ENDS AND TENSIONED WITH TWO INDUSTRIAL TRUSS TIGHTENERS SECURED TO RAIL ENDS. TRUSS PANEL SHALL BE LOCATED AT END AND CORNER PANELS OF 30" OR GREATER TURN AND AT INTERVALS NOT TO EXCEED 100'. HOG RING FABRIC TO RODS AT MAX. 3'-0" O.C.
5. STRETCHER BAR: 3/16" X 3/4" WITH 1/8" X 1" TENSION BANDS AT 1'-0" O.C.
6. TIE WIRES: 11 GAUGE AT 1'-6" O.C. AT TOP, MID, BOTTOM RAILS AND LINE POSTS.
7. LINE POST EYE TOPS & RAIL ENDS SHALL BE MALLEABLE IRON OR PRESSED STEEL. SECURE RAIL ENDS TO POSTS WITH 1/8" X 1" BRACE BANDS.
8. POST CAPS SHALL BE MALLEABLE IRON OR PRESSED STEEL.
9. PROVIDE A 1" CROWN AT TOP OF ALL POST FOOTINGS. (MODIFY FOR MOW STRIP OPTION).
10. INSTALL 12" WIDE X 6" DEEP CONCRETE MOW STRIP WITH #4 REBAR CONT. IF REQUIRED. SEE NOTES.

NOTES:

1. SEE SPECIFICATIONS SECTION FOR CHAIN LINK FENCE CONSTRUCTION FOR ADDITONAL INFORMATION.
2. CONCRETE FOOTINGS SHALL BE ALLOWED TO SET FOR SEVEN (7) DAYS PRIOR TO INSTALLATION OF FABRIC OR HARDWARE.
3. THE BOTTOM OF THE FABRIC SHALL BE POSITIONED ONE INCH ABOVE FINISH GRADE.
4. IN PAVED AREAS TOP OF CONC. FTG. TO BE 3" BELOW FINISH SURFACE TO ALLOW FOR PAVING ABOVE.
5. IN LANDSCAPED AREAS, TOP OF FOOTING SHALL BE 1" ABOVE FINISH GRADE WITH A 1" CROWN ON TOP OF FTG.
6. INSIDE OR ADJACENT TO TURF AREAS, ALL FENCES SHALL HAVE A 12" WIDE X 6" DEEP CONCRETE MOW-STRIP WITH #4 REBAR CENTERED, TYP. MOW STRIP SHALL BE CENTERED ON FENCE.
7. CONC. FTG. TO BE 2500 PSI @ 28 DAYS. PROVIDE 3" OF GRAVEL UNDER CONC. FTG., TYP.

701 10' TALL CHAIN LINK FENCE

N.T.S. | RP DETAIL 5040

FENCE CONSTRUCTION NOTES

REFER TO THE SPECIFICATIONS SECTION FOR CHAIN LINK FENCING AND INSTALLATION OF CHAIN LINK FENCE FABRIC PER SSPWC 206-6, 304-3 FOR CHAIN LINK FENCE CONSTRUCTION.

CONTRACTOR SHALL SUBMIT AND OBTAIN BUILDING PERMIT FOR ALL FENCING OVER 10' HIGH. CONTRACTOR SHALL PROVIDE ALL REQUIRED ENGINEERING AND CALCULATIONS FOR FOOTINGS.

MATERIALS:

1. BRACE BANDS & OFFSET TENSION BANDS: 1/8" X 1" HEAVY W/ 3/8" CARRIAGE BOLTS.
2. THREADED TRUSS RODS: 3/8" DIAMETER ASTM A36 STEEL, 6" LONG THREAD BOTH ENDS. DOUBLE NUT EACH END. NO SPLICES ALLOWED.
3. TRUSS TIGHTENER: 5 3/4" X 1" X 5/16" INDUSTRIAL, 0.59 LB./EACH. (BOTH ENDS OF TRUSS ROD)
4. LINE PANEL RAIL END: 1 7/8" OD 1-HOLE OFFSET, PRESSED STEEL, 0.39 LB./EACH.
5. SHEAR PANEL RAIL END: 1 7/8" OD 2-HOLE PRESSED STEEL, 0.59 LB./EACH.
6. CAPS: CAST IRON, 4 1/2" OD = 2.25 LB.
7. POST & RAIL FABRIC TIES, HOG RINGS: 9 GA. STEEL.
8. TENSION BARS: 1/4" X 3/4" 132" CONTINUOUS.
9. CHAIN LINK FABRIC: SEE ELEVATION.
10. POST AND RAILS: ASTM A120, SCH. 40 CLASS 1 OR ASTM F1083
11. ALL 20' FENCE MATERIALS, FABRIC, POSTS ETC. SHALL BE GALVANIZED FINISH, TYP.

CONCRETE:

1. FOOTING CONCRETE DESIGN FC'=2000 PSI: FOR DURABILITY THE CONTRACTOR SHALL PROVIDE 520-C-2500, 4" SLUMP CONCRETE. PORTLAND CEMENT SHALL BE TYPE II PER SSPWC 201-1.2; COMBINED AGGREGATE GRADING SHALL CONFORM WITH SSPW 201-1.3.2.
2. PRIOR TO PROCEEDING WITH INSTALLATION OF FENCE FRAME AND FABRIC, THE CONTRACTOR SHALL ALLOW 7 DAYS FOR THE FOOTING CONCRETE TO CURE.
3. SUBMITTAL - EACH TRUCKLOAD SHALL BE ACCOMPANIED BY A DELIVERY RECEIPT SHOWING SUPPLIER, LOAD WEIGHT, AND MIX COMPOSITION BY WEIGHT. PRIOR TO PLACING CONCRETE, THE CONTRACTOR SHALL PROVIDE THE PROJECT INSPECTOR WITH A COPY OF THE DELIVERY RECEIPT.

DESIGN SOIL STRENGTH VALUES:

LATERAL BEARING: 100 PSF/FT TO 1500 PSF MAX. FOR DESIGN OF ISOLATED POLES, THE ALLOWABLE LATERAL BEARING HAS BEEN INCREASED BY 100 PERCENT.

CHAIN LINK FABRIC FIELD INSTALLATION:

1. FABRIC SHALL BE CONTINUOUS IN THE LONGITUDINAL DIRECTION BY WEAVING CLOSURE TIES, OF THE SAME MATERIAL AS THE FENCE FABRIC, THROUGH BOTH VERTICAL ENDS.
2. FABRIC SHALL BE FASTENED TO THE RAILS AND LINE POSTS WITH TIE WIRES AT 1'-6" ON CENTER.
3. THE HORIZONTAL SEAM (BETWEEN THE TOP & BOTTOM PANEL) SHALL HAVE A 2" LAP AND SHALL BE FASTENED TOGETHER WITH HOG RINGS 1'-6" OC SPACED EVENLY BETWEEN RAIL TIES.
4. FABRIC SHALL BE STRETCHED TIGHTLY AND KNUCKELED TOP AND BOTTOM.
5. FABRIC SHALL BE PLACED 1" ABOVE THE FINISHED SURFACE.

FENCE FRAME FIELD INSTALLATION

1. * POSTS AND RAILS SHALL BE FABRICATED FROM CONTINUOUS PIPE, EXCEPT FOR POST FIELD SPLICE AS SHOWN ON THE PLAN.
2. * FITTINGS SHALL BE FABRICATED FROM A36 STEEL EXCEPT AS OTHERWISE INDICATED HEREIN. ALL POSTS SHALL BE INSTALLED IN A VERTICAL POSITION,
3. * THE BOTTOM RAIL SHALL BE INSTALLED ON A STRAIGHT GRADE BETWEEN POSTS BY EXCAVATING THE HIGH POINTS OF GROUND TO PROVIDE A UNIFORM 2" CLEARANCE .

CONTRACTOR SHALL SUBMIT AND OBTAIN BUILDING PERMIT FOR ALL FENCING OVER 10' HIGH. CONTRACTOR SHALL PROVIDE ALL REQUIRED ENGINEERING AND CALCULATIONS FOR FOOTINGS.

704 BASEBALL INFIELD STORAGE BOX

N.T.S. | RP DETAIL 542

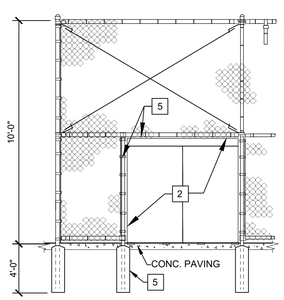

ELEVATION

NOTES:

1. FOR FENCE MATERIALS AND METHODS OF CONSTRUCTION, SEE DETAIL E9/L402.
2. INSTALL INFIELD STORAGE BOX. CAPITOL ENTERPRISES (626-357-3768) "BALL BOX" MODEL # IS 7256 OR APPROVED EQUAL. COLOR: GREEN. INCLUDE ESCAPE LATCH LOCKING DEVICE.
3. STORAGE BOX SHALL BE INSTALLED PER THE MANUFACTURER'S RECOMMENDATION. THE FRONT OF THE BOX SHALL OPEN TOWARDS THE INFIELD AND SHALL BE FLUSH WITH THE FENCE.
4. LOCATE STORAGE BOX ADJACENT TO THE LINE POST. ALL FENCE FABRIC SHALL BE INSTALLED AS TIGHTLY TO THE BOX AS POSSIBLE.
5. INSTALL ADDITIONAL POST, FOOTING, STRETCHER BAR, TENSION BANDS, AND TIE WIRES. MATCH OPENING IN FENCE TO SIZE OF STORAGE BOX. TYPICAL 2" GAP MAX.
6. INSTALL A 5" THICK CONCRETE PAD, 7' LONG X 5' WIDE, IF STORAGE BOX IS TO BE PLACED IN TURF AREA. SLOPE CONCRETE PAD TOWARD INFIELD @ 2%.

RP VERSION 9/29/94 BSL ; REV. RWF 9/19/06

702 10' HIGH CHAIN LINK FENCE PEDESTRIAN GATE

N.T.S. | RP DETAIL 5210

OPTIONS (OPTIONS CHECKED SHALL PREVAIL)

☐ VINYL COATED CHAIN LINK FABRIC SHALL BE AS SPECIFIED IN THE SPECIFICATIONS. ALL FENCE MATERIALS SHALL BE AS INDICATED HEREON AND PAINTED PER SPECIFICATIONS TO MATCH FABRIC COLOR. THE COLOR SHALL BE BLACK.

☒ ALL FENCING SHALL HAVE A STANDARD GALVANIZED FINISH.

☐ INSTALL CONCRETE MOW STRIP UNDER FENCE.

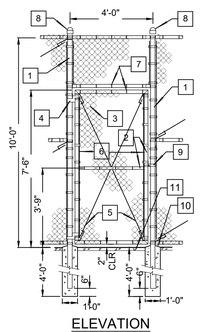

ELEVATION

GATE MATERIALS

1. POSTS: 3-1/2 IN. O.D. WITH 1 FT. DIA. x 4'-0" DEEP FTGS.
2. GATE FRAMES: TOP, BOTTOM AND SIDE MEMBERS 2-3/8 IN. O.D., MID RAIL 1 5/8" O.D. MITER GATEFRAMECORNERS WELD AND GRIND SMOOTH.
3. FABRIC: 9 GAUGE, 2 IN. MESH, KNUCKLE TOP AND BOTTOM, PLACE ON ACTIVITY ON LAWN SIDE OF GATES.
4. HINGES: INDUSTRIAL BULLDOG HINGE (180¡ SWING), 2 HINGES PER GATE, ONE AT TOP AND BOTTOM.
5. TRUSS ROD: 3/8 IN. DIAM. THREADED AT BOTH ENDS AND TENSIONED WITH TWO INDUSTRIAL TRUSS TIGHTENERS SECURED TO GATE FRAME.
6. STRETCHER BAR: 3/16 X 3/4 IN. WITH 1/8 x 1 IN. TENSION BANDS AT 1'-0" O.C.
7. TIE WIRES: 11 GAUGE AT 1'-6" O.C. AT GATE FRAME TOP, BOTTOM AND MID RAILS.
8. POST CAPS: MALLEABLE IRON OR PRESSED STEEL.
9. CAST ALUMINUM FORK LATCH.
10. PROVIDE A 1 IN. CROWN AT TOP OF ALL POST FOOTINGS. (OMIT FOR MOW STRIP OPTION).
11. INSTALL CONCRETE MOW STRIP TO MATCH ADJACENT FENCING IF CHECKED UNDER OPTIONS ABOVE.

NOTES:

1. CHAIN LINK FENCE MATERIALS SHALL CONFORM TO THE CHAIN LINK FENCE SPECITICATIONS.
2. CONCRETE FOOTINGS SHALL BE ALLOWED TO SET FOR SEVEN DAYS PRIOR TO INSTALLATION OF GATES.

THE CITY OF LOS ANGELES OR ITS OFFICERS OR AGENTS SHALL NOT BE RESPONSIBLE FOR THE ACCURACY OR COMPLETENESS OF ELECTRONIC COPIES OF THIS PLAN SHEET.

REVISION DATES (DESIGN STAGE ONLY)

BUREAU OF ENGINEERING • CITY OF LOS ANGELES • DEPARTMENT OF PUBLIC WORKS • CITY OF LOS ANGELES

THIS PLAN WAS ELECTRONICALLY • SIGNED AND STAMPED

ENGINEERING CITY OF LOS ANGELES

REG. CIVIL ENGINEER / LANDSCAPE ARCHITECT / LAND SURVEYOR — STATE OF CALIFORNIA — No. 5962 — EXP. 06/30/2024

VERTICAL CONTROL: BENCH MARK:08-30460 (NAVD 88)
HORIZONTAL CONTROL: CALIFORNIA STATE PLANE ZONE V. 1983 NAD

SHEET TITLE: LANDSCAPE SITE CONSTRUCTION DETAIL 6
PROJECT: FERNANGELES PARK STORMWATER CAPTURE PROJECT
ADDRESS: FERNANGELES RECREATION CENTER 8851 LAUREL CANYON BLVD, SUN VALLEY, CA 91352

NO.	REVISIONS	DATE	BY
		YY/MM/DD	
		YY/MM/DD	
		YY/MM/DD	
		YY/MM/DD	

CIP NO. SCP0002

INDEX NO.

CITY ENGINEER: TED ALLEN, P.E. — DATE: 1/27/2023

DESIGN GROUP		DATE
ENGINEER:	CDM SMITH INC.	1/27/2023
ARCHITECT:	NUVIS LANDSCAPE ARCHITECTURE	1/27/2023
DESIGNED BY:	P. CARDOZA	1/27/2023
DRAWN BY:	L. KLECKER	1/27/2023
CHECKED BY:	P. CARDOZA	1/27/2023
APPROVED BY:	A. DELLINGER	1/27/2023

WORK ORDER EW40079F

SHEET NAME LS07

SHEET 72 OF 125 SHEETS

SHEET VERSION 4.0.1 FILE PATH: Z:\DWG\20005-01_LABOE TOS 25 STORMWATER\NUVIS\FERNANGELES RECREATION CENTER\CD'S\SHEETS\FP LCD.DWG PLOT DATE: 1/26/2023 5:14 PM SAVED: 1/26/2023 2:45 PM SAVED BY:LAMONT

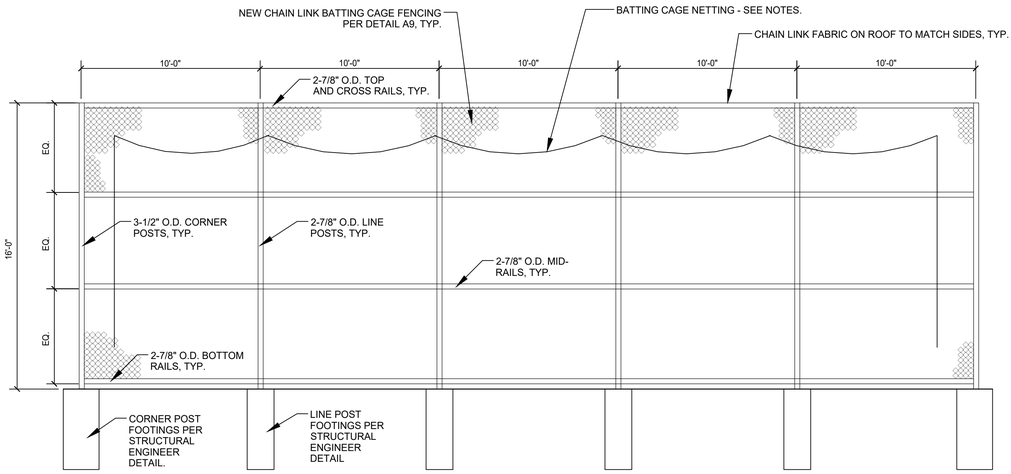

SIDE ELEVATION
SCALE: 1/2" = 1'-0"

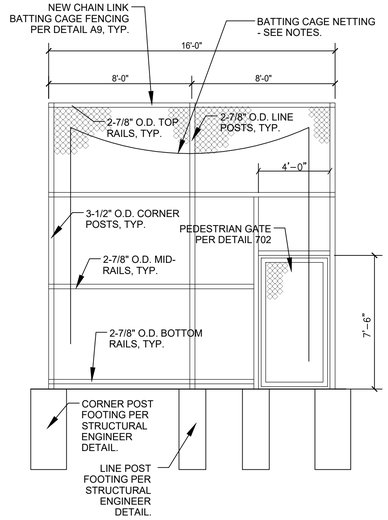

NORTH ELEVATION
SCALE: 1/2" = 1'-0"

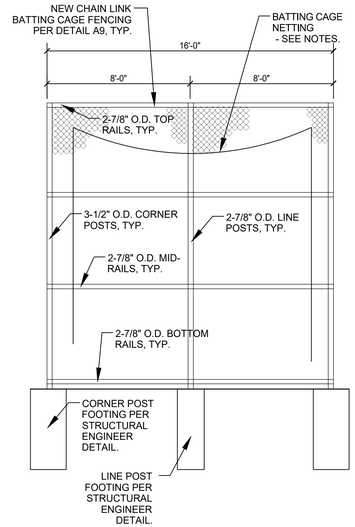

SOUTH ELEVATION
SCALE: 1/2" = 1'-0"

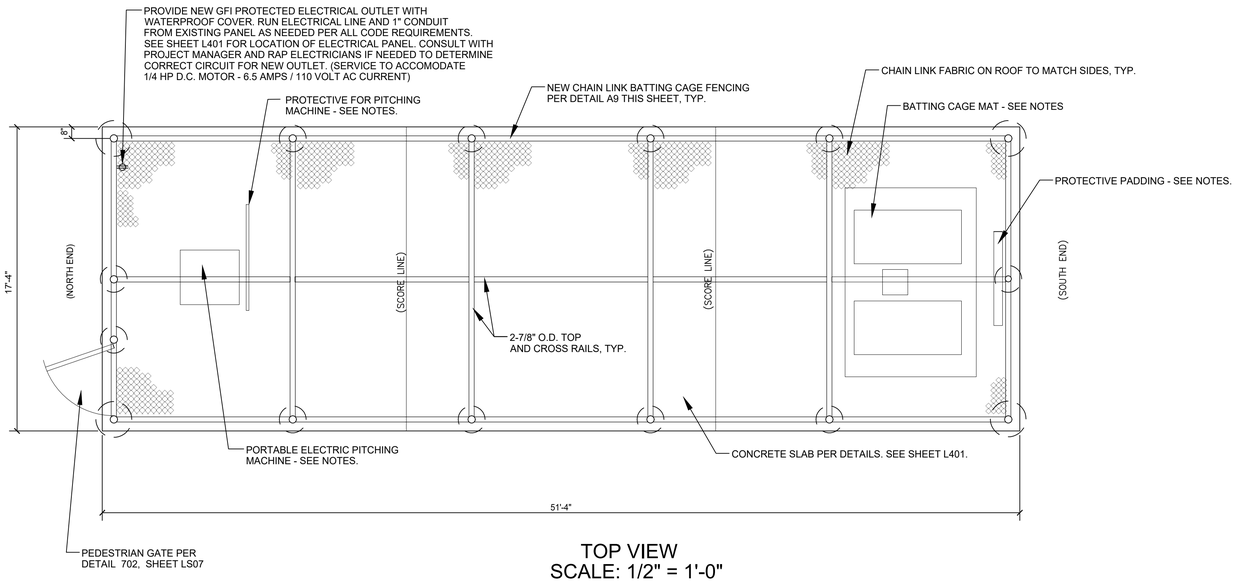

TOP VIEW
SCALE: 1/2" = 1'-0"

BATTING CAGE EQUIPMENT NOTES:

CONTRACTOR SHALL SUPPLY AND INSTALL THE FOLLOWING ITEMS PER MANUFACTURER'S INSTRUCTIONS:

PORTABLE ELECTRIC PITCHING MACHINE: "BULLDOG PITCHING MACHINE", CATALOG NUMBER TB-K12130. AVALABLE FROM TOMARK SPORTS, P.O. BOX 1088, CORONA, CA 92878, PHONE: (800) 959-1844, OR APPROVED EQUAL.

PROTECTIVE SCREEN: "DELUXE L-SHAPED PITCHER'S PROTECTIVE SCREEN", CATALOG NUMBER TB-K13621. AVALABLE FROM TOMARK SPORTS, P.O. BOX 1088, CORONA, CA 92878, PHONE: (800) 959-1844, OR APPROVED EQUAL.

BATTING CAGE MAT: "DIAMONDTURF HOMEPLATE MAT", CATALOG NUMBER TB-KI3843. AVALABLE FROM TOMARK SPORTS, P.O. BOX 1088, CORONA, CA 92878, PHONE: (800) 959-1844, OR APPROVED EQUAL.

FENCE PADDING: "CAGE SAVER DELUXE MODEL", 27 OZ VINYL, CATALOG NUMBER TB-K12003. AVALABLE FROM TOMARK SPORTS, P.O. BOX 1088, CORONA, CA 92878, PHONE: (800) 959-1844, OR APPROVED EQUAL.

BATTING CAGE NETTING: "ENDURO BATTING CAGE NET", 14' WIDE X 12' HIGH, CATALOG NUMBER TB-K14550. AVALABLE FROM TOMARK SPORTS, P.O. BOX 1088, CORONA, CA 92878, PHONE: (800) 959-1844, OR APPROVED EQUAL.

FENCE CONSTRUCTION NOTES

REFER TO THE SPECIFICATIONS SECTION FOR CHAIN LINK FENCING AND INSTALLATION OF CHAIN LINK FENCE FABRIC PER SSPWC 206-6, 304-3 FOR CHAIN LINK FENCE CONSTRUCTION.

CONTRACTOR SHALL SUBMIT AND OBTAIN BUILDING PERMIT FOR ALL FENCING OVER 10' HIGH. CONTRACTOR SHALL PROVIDE ALL REQUIRED ENGINEERING AND CALCULATIONS FOR FOOTINGS.

MATERIALS:

1. BRACE BANDS & OFFSET TENSION BANDS: 1/8" X 1" HEAVY W/ 3/8" CARRIAGE BOLTS.
2. THREADED TRUSS RODS: 3/8" DIAMETER ASTM A36 STEEL, 6" LONG THREAD BOTH ENDS. DOUBLE NUT EACH END. NO SPLICES ALLOWED.
3. TRUSS TIGHTENER: 5 3/4" X 1" X 5/16" INDUSTRIAL, 0.59 LB./EACH. (BOTH ENDS OF TRUSS ROD)
4. LINE PANEL RAIL END: 1 7/8" OD 1-HOLE OFFSET, PRESSED STEEL, 0.39 LB./EACH.
5. SHEAR PANEL RAIL END: 1 7/8" OD 2-HOLE PRESSED STEEL, 0.59 LB./EACH.
6. CAPS: CAST IRON, 4 1/2" OD = 2.25 LB.
7. POST & RAIL FABRIC TIES, HOG RINGS: 9 GA. STEEL.
8. TENSION BARS: 1/4" X 3/4" 132" CONTINUOUS.
9. CHAIN LINK FABRIC: SEE ELEVATION.
10. POST AND RAILS: ASTM A120, SCH. 40 CLASS 1 OR ASTM F1083
11. ALL 20' FENCE MATERIALS, FABRIC, POSTS ETC. SHALL BE GALVANIZED FINISH, TYP.

CONCRETE:

1. FOOTING CONCRETE DESIGN FC'=2000 PSI: FOR DURABILITY THE CONTRACTOR SHALL PROVIDE 520-C-2500, 4" SLUMP CONCRETE. PORTLAND CEMENT SHALL BE TYPE II PER SSPWC 201-1.2; COMBINED AGGREGATE GRADING SHALL CONFORM WITH SSPW 201-1.3.2.
2. PRIOR TO PROCEEDING WITH INSTALLATION OF FENCE FRAME AND FABRIC, THE CONTRACTOR SHALL ALLOW 7 DAYS FOR THE FOOTING CONCRETE TO CURE.
3. SUBMITTAL - EACH TRUCKLOAD SHALL BE ACCOMPANIED BY A DELIVERY RECEIPT SHOWING SUPPLIER, LOAD WEIGHT, AND MIX COMPOSITION BY WEIGHT. PRIOR TO PLACING CONCRETE, THE CONTRACTOR SHALL PROVIDE THE PROJECT INSPECTOR WITH A COPY OF THE DELIVERY RECEIPT.

DESIGN SOIL STRENGTH VALUES:

LATERAL BEARING: 100 PSF/FT TO 1500 PSF MAX. FOR DESIGN OF ISOLATED POLES, THE ALLOWABLE LATERAL BEARING HAS BEEN INCREASED BY 100 PERCENT.

CHAIN LINK FABRIC FIELD INSTALLATION:

1. FABRIC SHALL BE CONTINUOUS IN THE LONGITUDINAL DIRECTION BY WEAVING CLOSURE TIES, OF THE SAME MATERIAL AS THE FENCE FABRIC, THROUGH BOTH VERTICAL ENDS.
2. FABRIC SHALL BE FASTENED TO THE RAILS AND LINE POSTS WITH TIE WIRES AT 1'-6" ON CENTER.
3. THE HORIZONTAL SEAM (BETWEEN THE TOP & BOTTOM PANEL) SHALL HAVE A 2" LAP AND SHALL BE FASTENED TOGETHER WITH HOG RINGS 1'-6" OC SPACED EVENLY BETWEEN RAIL TIES.
4. FABRIC SHALL BE STRETCHED TIGHTLY AND KNUCKELED TOP AND BOTTOM.
5. FABRIC SHALL BE PLACED 1" ABOVE THE FINISHED SURFACE.

FENCE FRAME FIELD INSTALLATION

1. * POSTS AND RAILS SHALL BE FABRICATED FROM CONTINUOUS PIPE, EXCEPT FOR POST FIELD SPLICE AS SHOWN ON THE PLAN.
2. * FITTINGS SHALL BE FABRICATED FROM A36 STEEL EXCEPT AS OTHERWISE INDICATED HEREIN. ALL POSTS SHALL BE INSTALLED IN A VERTICAL POSITION,
3. * THE BOTTOM RAIL SHALL BE INSTALLED ON A STRAIGHT GRADE BETWEEN POSTS BY EXCAVATING THE HIGH POINTS OF GROUND TO PROVIDE A UNIFORM 2" CLEARANCE .

CONTRACTOR SHALL SUBMIT AND OBTAIN BUILDING PERMIT FOR ALL FENCING OVER 10' HIGH. CONTRACTOR SHALL PROVIDE ALL REQUIRED ENGINEERING AND CALCULATIONS FOR FOOTINGS.

801	BATTING CAGE
N.T.S.	

REVISION DATES (DESIGN STAGE ONLY)

THE CITY OF LOS ANGELES OR ITS OFFICERS OR AGENTS SHALL NOT BE RESPONSIBLE FOR THE ACCURACY OR COMPLETENESS OF ELECTRONIC COPIES OF THIS PLAN SHEET.

ENGINEERING
CITY OF LOS ANGELES

THIS PLAN WAS ELECTRONICALLY • SIGNED AND STAMPED

REGISTERED PROFESSIONAL ENGINEER ★ CIVIL ★ STATE OF CALIFORNIA ★ RAUL E. SERRANO ★ No. 39672 ★ LANDSCAPE ARCHITECT ★ No. 5962 ★ LICENSE EXPIRATION 06/30/2024

BUREAU OF ENGINEERING

VERTICAL CONTROL: BENCH MARK (08-30460) NAVD 88
HORIZONTAL CONTROL: CALIFORNIA STATE PLANE ZONE V, 1983 NAD

SHEET TITLE: LANDSCAPE SITE CONSTRUCTION DETAIL 7

PROJECT: FERNANGELES PARK STORMWATER CAPTURE PROJECT

ADDRESS: FERNANGELES RECREATION CENTER 8851 LAUREL CANYON BLVD, SUN VALLEY, CA 91352

NO.	REVISIONS	DATE	BY
		YY/MM/DD	
		YY/MM/DD	
		YY/MM/DD	
		YY/MM/DD	

CIP NO. SCP0002

INDEX NO.

CITY OF LOS ANGELES DEPARTMENT OF PUBLIC WORKS

CITY ENGINEER: TED ALLEN, P.E. — DATE 1/27/2023

DESIGN GROUP		DATE
ENGINEER:	CDM SMITH INC.	1/27/2023
ARCHITECT:	NUVIS LANDSCAPE ARCHITECTURE	1/27/2023
DESIGNED BY:	P. CARDOZA	1/27/2023
DRAWN BY:	L. KLECKER	1/27/2023
CHECKED BY:	P. CARDOZA	1/27/2023
APPROVED BY:	A. DELLINGER	1/27/2023

WORK ORDER
EW40079F

SHEET NAME
LS08

SHEET 73 OF 125 SHEETS

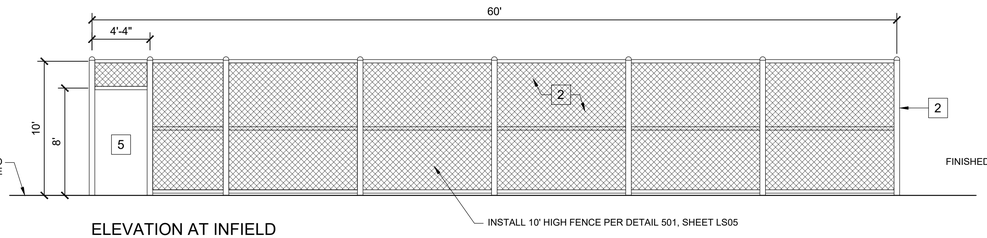

ELEVATION AT INFIELD

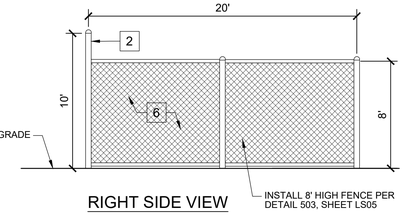

RIGHT SIDE VIEW

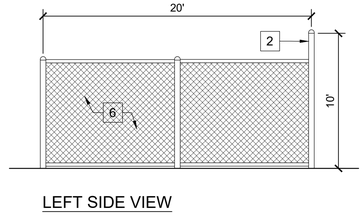

LEFT SIDE VIEW

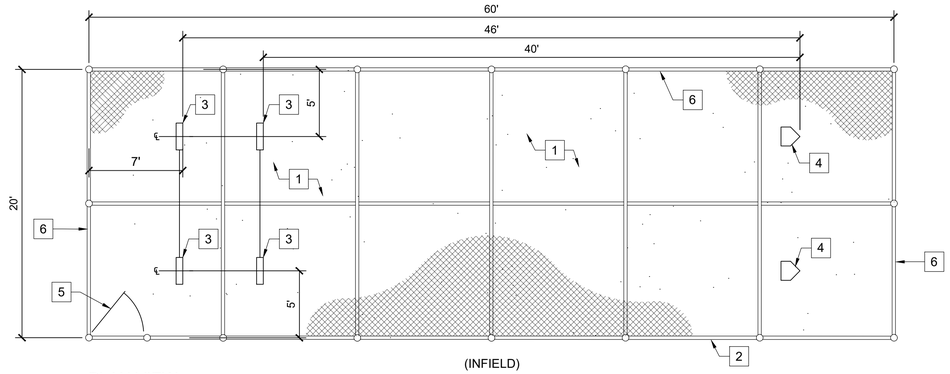

PLAN VIEW

701	BASEBALL BULLPEN-20'X60'
N.T.S.	

1. INSTALL 4" - 6" LAYER OF "PRO-GOLD SOFTBALL MIX" PER PLANS AND SPECIFICATIONS, OR APPROVED EQUAL. SUPPLIED BY GAIL MATERIALS: 951-667-6106, WWW.GAILMATERIALS.NET.
2. INSTALL 10' HIGH CHAIN LINK SIDE LINE FENCE WITH CONCRETE MOW STRIP PER DETAIL 501, SHEET LS05.
3. INSTALL BOLCO STEP-DOWN' PITCHERS RUBBER, YOUTH SIZE 4" X 18" SKU# 1236392, AVAILABLE FROM: BSNSPORTS.COM, (800) 856-3488. INSTALL PER MANUFACTURER'S INSTRUCTIONS.
4. INSTALL 'HOLLYWOOD' HOME PLATE, SKU# 1236477,AVAILABLE FROM: BSNSPORTS.COM, (800) 856-3488. INSTALL PER MANUFACTURER'S INSTRUCTIONS. INSTALL (1) PER EACH BULLPEN AT EACH FIELD.
5. INSTALL 4' WIDE SINGLE CHAIN LINK GATES WHERE INDICATED. PER DETAIL 502, SHEET LS05.
6. INSTALL 8' HIGH CHAIN LINK FENCE WITH CONCRETE MOW STRIP PER DETAIL 303, SHEET LS03.

FENCE CONSTRUCTION NOTES:

REFER TO THE SPECIFICATIONS SECTION FOR CHAIN LINK FENCING AND INSTALLATION OF CHAIN LINK FENCE FABRIC PER SSPWC 206-6, 304-3 FOR CHAIN LINK FENCE CONSTRUCTION.

ALL FENCING ADJACENT TO PAVING SHALL HAVE PAVING EXTEND BENEATH THE FENCE. ALL OTHER FENCING SHALL HAVE CONCRETE MOW STRIP.

MATERIALS:
1. BRACE BANDS & OFFSET TENSION BANDS: 1/8" X 1" HEAVY W/ 3/8" CARRIAGE BOLTS.
2. THREADED TRUSS RODS: 3/8" DIAMETER ASTM A36 STEEL, 6" LONG THREAD BOTH ENDS. DOUBLE NUT EACH END. NO SPLICES ALLOWED.
3. TRUSS TIGHTENER: 5 3/4" X 1" X 5/16" INDUSTRIAL, 0.59 LB./EACH. (BOTH ENDS OF TRUSS ROD)
4. LINE PANEL RAIL END: 1 7/8" OD 1-HOLE OFFSET, PRESSED STEEL, 0.39 LB./EACH.
5. SHEAR PANEL RAIL END: 1 7/8" OD 2-HOLE PRESSED STEEL, 0.59 LB./EACH.
6. CAPS: CAST IRON, 4 1/2" OD = 2.25 LB.
7. POST & RAIL FABRIC TIES, HOG RINGS: 9 GA. STEEL.
8. TENSION BARS: 1/4" X 3/4" 132" CONTINUOUS.
9. CHAIN LINK FABRIC: SEE ELEVATION.
10. POST AND RAILS: ASTM A120, SCH. 40 CLASS 1 OR ASTM F1083
11. ALL 20' FENCE MATERIALS, FABRIC, POSTS ETC. SHALL BE GALVANIZED FINISH, TYP.

CONCRETE:
1. FOOTING CONCRETE DESIGN FC'=2000 PSI: FOR DURABILITY THE CONTRACTOR SHALL PROVIDE 520-C-2500, 4" SLUMP CONCRETE. PORTLAND CEMENT SHALL BE TYPE II PER SSPWC 201-1.2; COMBINED AGGREGATE GRADING SHALL CONFORM WITH SSPW 201-1.3.2.
2. PRIOR TO PROCEEDING WITH INSTALLATION OF FENCE FRAME AND FABRIC, THE CONTRACTOR SHALL ALLOW 7 DAYS FOR THE FOOTING CONCRETE TO CURE.
3. SUBMITTAL - EACH TRUCKLOAD SHALL BE ACCOMPANIED BY A DELIVERY RECEIPT SHOWING SUPPLIER, LOAD WEIGHT, AND MIX COMPOSITION BY WEIGHT. PRIOR TO PLACING CONCRETE, THE CONTRACTOR SHALL PROVIDE THE PROJECT INSPECTOR WITH A COPY OF THE DELIVERY RECEIPT.

DESIGN SOIL STRENGTH VALUES:
LATERAL BEARING: 100 PSF/FT TO 1500 PSF MAX. FOR DESIGN OF ISOLATED POLES, THE ALLOWABLE LATERAL BEARING HAS BEEN INCREASED BY 100 PERCENT.

CHAIN LINK FABRIC FIELD INSTALLATION:
1. FABRIC SHALL BE CONTINUOUS IN THE LONGITUDINAL DIRECTION BY WEAVING CLOSURE TIES, OF THE SAME MATERIAL AS THE FENCE FABRIC, THROUGH BOTH VERTICAL ENDS.
2. FABRIC SHALL BE FASTENED TO THE RAILS AND LINE POSTS WITH TIE WIRES AT 1'-6" ON CENTER.
3. THE HORIZONTAL SEAM (BETWEEN THE TOP & BOTTOM PANEL) SHALL HAVE A 2" LAP AND SHALL BE FASTENED TOGETHER WITH HOG RINGS 1'-6" OC SPACED EVENLY BETWEEN RAIL TIES.
4. FABRIC SHALL BE STRETCHED TIGHTLY AND KNUCKELED TOP AND BOTTOM.
5. FABRIC SHALL BE PLACED 1" ABOVE THE FINISHED SURFACE.

FENCE FRAME FIELD INSTALLATION
1. * POSTS AND RAILS SHALL BE FABRICATED FROM CONTINUOUS PIPE, EXCEPT FOR POST FIELD SPLICE AS SHOWN ON THE PLAN.
2. * FITTINGS SHALL BE FABRICATED FROM A36 STEEL EXCEPT AS OTHERWISE INDICATED HEREIN. ALL POSTS SHALL BE INSTALLED IN A VERTICAL POSITION,
3. * THE BOTTOM RAIL SHALL BE INSTALLED ON A STRAIGHT GRADE BETWEEN POSTS BY EXCAVATING THE HIGH POINTS OF GROUND TO PROVIDE A UNIFORM 2" CLEARANCE .

CONTRACTOR SHALL SUBMIT AND OBTAIN BUILDING PERMIT FOR ALL FENCING OVER 10' HIGH. CONTRACTOR SHALL PROVIDE ALL REQUIRED ENGINEERING AND CALCULATIONS FOR FOOTINGS.

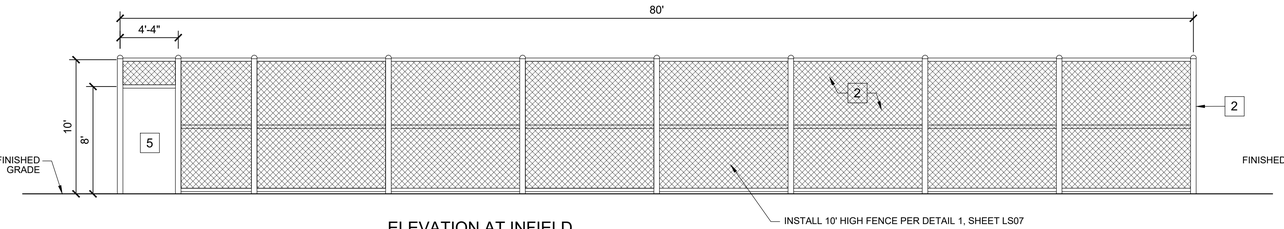

ELEVATION AT INFIELD

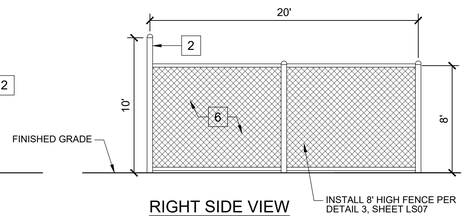

RIGHT SIDE VIEW

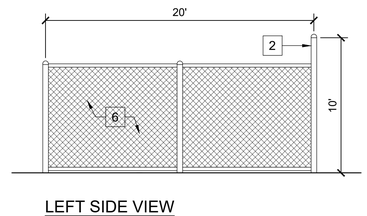

LEFT SIDE VIEW

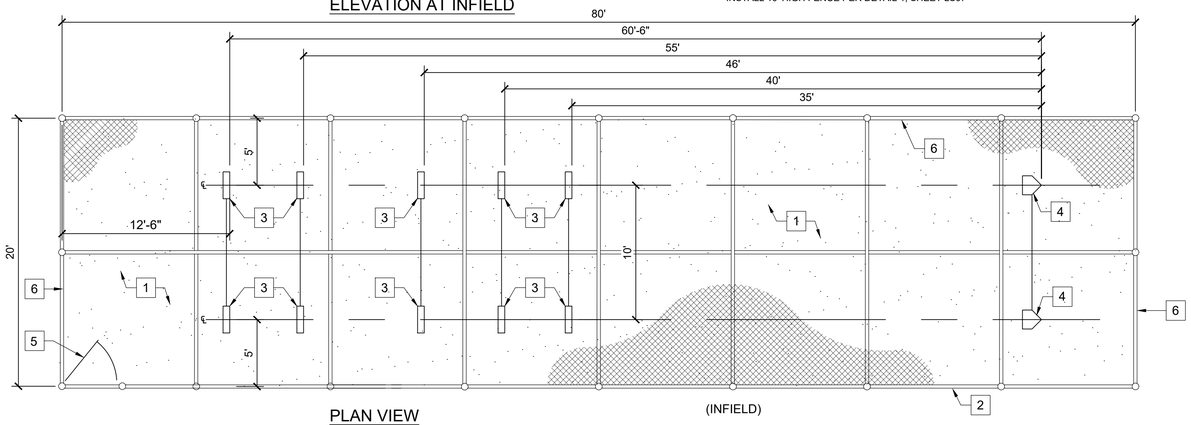

PLAN VIEW

902	BASEBALL BULLPEN-20'X80'
N.T.S.	

1. INSTALL 4" - 6" LAYER OF "PRO-GOLD SOFTBALL MIX" PER PLANS AND SPECIFICATIONS, OR APPROVED EQUAL. SUPPLIED BY GAIL MATERIALS: 951-667-6106, WWW.GAILMATERIALS.NET.
2. INSTALL 10' HIGH CHAIN LINK SIDE LINE FENCE WITH CONCRETE MOW STRIP PER DETAIL 1, SHEET LS07.
3. INSTALL BOLCO STEP-DOWN' PITCHERS RUBBER, YOUTH SIZE 4" X 18" SKU# 1236392, AVAILABLE FROM: BSNSPORTS.COM, (800) 856-3488. INSTALL PER MANUFACTURER'S INSTRUCTIONS.
4. INSTALL 'HOLLYWOOD' HOME PLATE, SKU# 1236477,AVAILABLE FROM: BSNSPORTS.COM, (800) 856-3488. INSTALL PER MANUFACTURER'S INSTRUCTIONS. INSTALL (1) PER EACH BULLPEN AT EACH FIELD.
5. INSTALL 4' WIDE SINGLE CHAIN LINK GATES WHERE INDICATED. PER DETAIL 2, SHEET LS07.
6. INSTALL 8' HIGH CHAIN LINK FENCE WITH CONCRETE MOW STRIP PER DETAIL 3, SHEET LS07.

THE CITY OF LOS ANGELES OR ITS OFFICERS OR AGENTS SHALL NOT BE RESPONSIBLE FOR THE ACCURACY OR COMPLETENESS OF ELECTRONIC COPIES OF THIS PLAN SHEET.

REVISION DATES (DESIGN STAGE ONLY)

THIS PLAN WAS ELECTRONICALLY SIGNED AND STAMPED

ENGINEERING
CITY OF LOS ANGELES

REG. CIVIL ENGINEER * CIVIL * STATE OF CALIFORNIA
LANDSCAPE ARCHITECT * LANDSCAPE * STATE OF CALIFORNIA
REG. NO. 5902
EXPIRATION DATE 08/31/2024

BUREAU OF ENGINEERING

VERTICAL CONTROL: BENCH MARK (08-30460) NAVD 88
HORIZONTAL CONTROL: CALIFORNIA STATE PLANE ZONE V, 1983 NAD

SHEET TITLE: LANDSCAPE SITE CONSTRUCTION DETAIL 8

PROJECT: FERNANGELES PARK STORMWATER CAPTURE PROJECT

ADDRESS: FERNANGELES RECREATION CENTER
8851 LAUREL CANYON BLVD, SUN VALLEY, CA 91352

DEPARTMENT OF PUBLIC WORKS

NO.	REVISIONS	DATE	BY
		YY/MM/DD	
		YY/MM/DD	
		YY/MM/DD	
		YY/MM/DD	

CIP NO. SCP0002

INDEX NO.

CITY OF LOS ANGELES

CITY ENGINEER: TED ALLEN, P.E. — DATE: 1/27/2023

DESIGN GROUP		DATE
ENGINEER:	CDM SMITH INC.	1/27/2023
ARCHITECT:	NUVIS LANDSCAPE ARCHITECTURE	1/27/2023
DESIGNED BY:	P. CARDOZA	1/27/2023
DRAWN BY:	L. KLECKER	1/27/2023
CHECKED BY:	P. CARDOZA	1/27/2023
APPROVED BY:	A. DELLINGER	1/27/2023

WORK ORDER
EW40079F

SHEET NAME
LS09

SHEET 74 OF 125 SHEETS

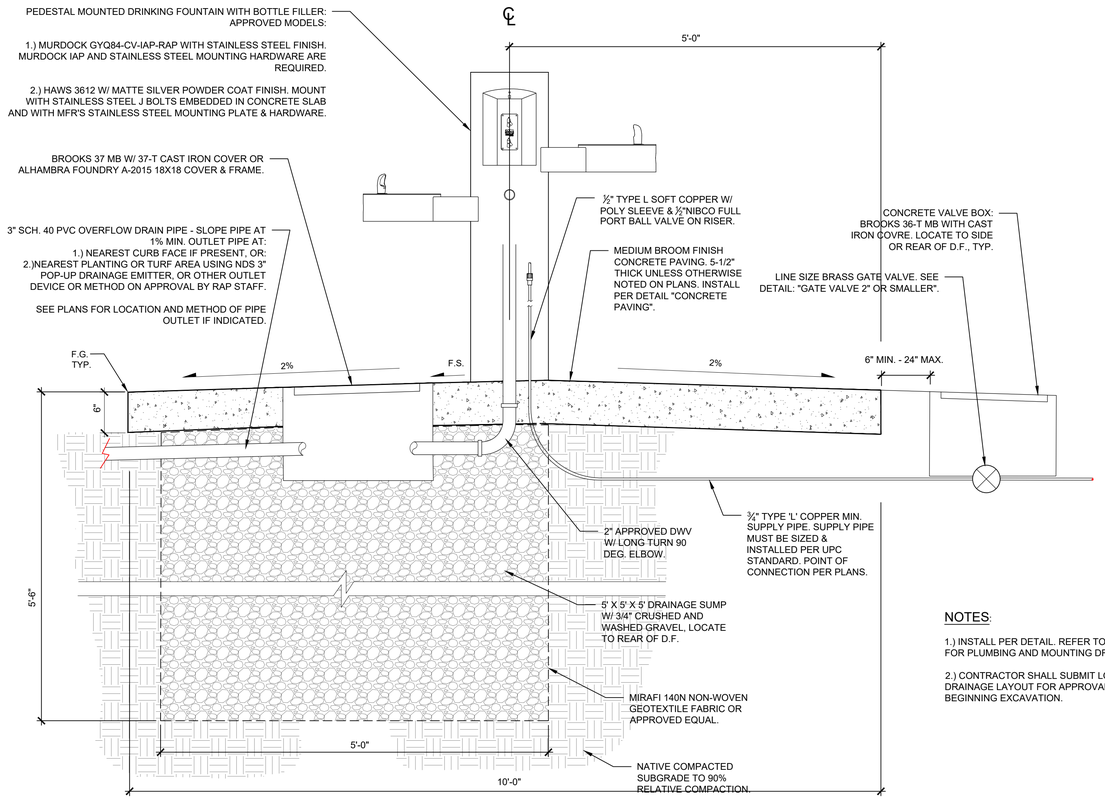

1001	ACCESSIBLE DRINKING FOUNTAIN	
N.T.S.	BOE Version Feb/22	RP DETAIL L1732

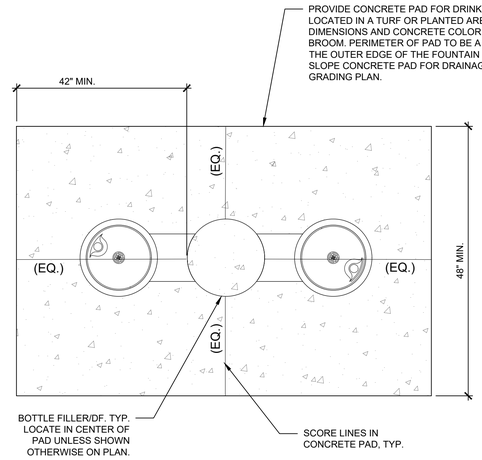

PLAN VIEW - LAYOUT
NOT TO SCALE

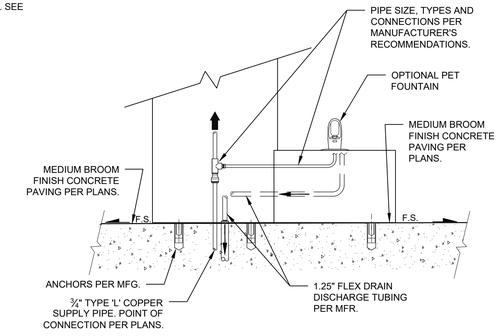

OPTIONAL PET FOUNTAIN
SIDE VIEW - SECTION
NOT TO SCALE

NOTES:

1.) INSTALL PER DETAIL. REFER TO MANUFACTURER'S INSTRUCTION FOR PLUMBING AND MOUNTING DRINKING FOUNTAIN UNIT.

2.) CONTRACTOR SHALL SUBMIT LOCATION FOR SUMP AND OVERFLOW DRAINAGE LAYOUT FOR APPROVAL BY PROJECT MANAGER PRIOR TO BEGINNING EXCAVATION.

DOMESTIC LINE STERILIZATION PROCEDURE:

1.) FLUSH DOMESTIC WATER LINES COMPLETELY.
2.) USING A PROPORTIONING PUMP, INJECT SODIUM HYPOCHLORITE LIQUID DISINFECTANT INTO THE DOMESTIC LINE THROUGH A ¾" SERVICE COCK AT A POINT AS CLOSE TO THE WATER METER AS POSSIBLE.
3.) OPEN BUBBLERS ON ALL D.F. UNITS INSTALLED TO DISTRIBUTE DISINFECTANT THROUGHOUT THE DOMESTIC LINE SYSTEM.
4.) VERIFY BY TESTING THAT A MINIMUM CONCENTRATION OF 50 PPM OF DISINFECTANT IS ACHIEVED AT EACH D.F. UNIT.
5.) DISINFECTANT SHALL REMAIN IN THE SYSTEM FOR 24 HOURS MINIMUM.
6.) AT THE END OF THE 24 HOUR PERIOD, THE RESIDUAL LEVEL OF DISINFECTANT SHALL NOT BE LESS THAN 10 PPM.
7.) ALL LINES SHALL BE FLUSHED THOROUGHLY AFTER DISINFECTION IS COMPLETED.
8.) A WATER SAMPLE AT EACH D.F. UNIT SHALL BE TESTED BY AN APPROVED TESTING LABORATORY. REQUIRED RESULTS ARE:
- COLIFORM-AEROGENES ORGANISMS: NEGATIVE
- TOTAL BACTERIA PLATE COUNT: LESS THAN 100 PER CUBIC CENTIMETER
- WATER POTABILITY: SAFE TO USE

IF THE REQUIRED RESULTS ARE NOT MET, STERILIZATION PROCESS LISTED ABOVE SHALL BE REPEATED UNTIL THE REQUIRED TEST RESULTS ARE MET.

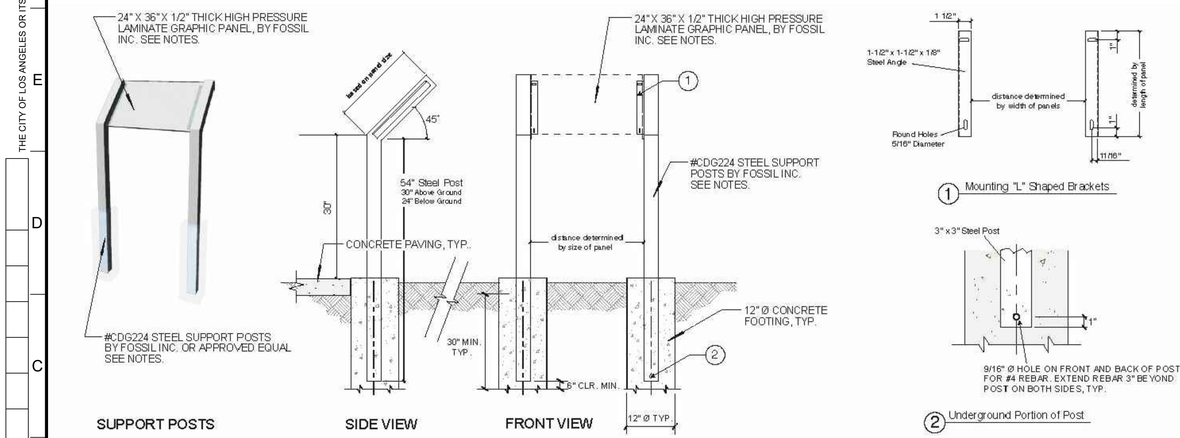

INTERPRETIVE PANEL NOTES:

1.) CONTRACTOR SHALL PROVIDE AND INSTALL (2) INDIVIDUAL INTERPRETIVE SIGN PANELS AND SUPPORTS PER PLAN AND DETAIL. FINAL LOCATION OF EACH PANEL SHALL BE APPROVED BY ENGINEER PRIOR TO INSTALLATION.

2.) 24" X 36" X 1/2" THICK SIGN PANELS MUST BE MANUFACTURED AS DIGITAL HIGH PRESSURE LAMINATE (DHPL) COMPOSED OF SEVERAL LAYERS OF PHENOLIC RESIN IMPREGNATED KRAFT FILLER PAPER, A DIGITALLY IMAGED EMBEDDED GRAPHIC, A LAYER OF MELAMINE RESIN, AND SURFACED BY A LAYER OF TRANSLUCENT EXTERIOR UV / GRAFFITI-RESISTANT OVERLAY PROTECTION AS SUPPLIED BY FOSSIL INDUSTRIES, INC., (631) 245-4172, WWW.FOSSILGRAPHICS.COM, OR APPROVED EQUAL.

3.) THE ENTIRE PANEL, INCLUDING EXTERIOR OVERLAY, MUST BE BONDED UNDER HEAT AND EXTREME PRESSURE TO FORM A COMPOSITE PANEL. THE FINISH MUST BE SMOOTHLY TEXTURED WITH REFLECTIVITY OF 30 +OR (5) GLOSS UNITS. THE DHPL GRAPHICS MUST BE WARRANTED FOR A MINIMUM OF 10 YEARS AGAINST FADING, DE-LAMINATION AND WEATHER DETERIORATION.

4.) EMBEDDED GRAPHICS MUST BE MADE USING A 12-COLOR HIGH-DEFINITION PRINT AT 200 DPI.

5.) GRAPHIC IMAGE FILES AS NECESSARY FOR PRODUCTION OF EACH INDIVIDUAL SIGN PANEL SPECIFIED WILL BE SUPPLIED BY THE PROJECT MANAGER AT THE TIME OF FABRICATION.

6.) SIGN PANEL MANUFACTURER SHALL PROVIDE A PRODUCTION QUALITY SAMPLE FROM A SUPPLIED GRAPHIC FILE FOR APPROVAL PRIOR TO FINAL FABRICATION AND DELIVERY.

1002	INTERPRETIVE SIGN PANEL	
N.T.S.		

NOTES:

1. GRANT FUNDS SIGN:
   ONE (1) SIGN SHALL BE PROVIDED FOR GRANT FUNDS. GRANT FUNDS SIGN SHALL INCLUDE COLOR LOGO AND DISCLOSURE STATEMENT FROM COUNTY OF LOS ANGELES SAFE, CLEAN WATER PROGRAM. COLOR LOGO AND DISCLOSURE STATEMENT SHALL BE EQUALLY PROMINENT ON THE SIGN. THE SIGN SHALL BE PREPARED IN A PROFESSIONAL MATTER. THE CONTRACTOR SHALL CREATE A GRANT FUNDS SIGN AT LEAST TWO (2) FEET TALL BY THREE (3) FEET WIDE MADE OF 3/4" THICK EXTERIOR GRADE PLYWOOD OR OTHER APPROVED MATERIAL IN A PROMINENT LOCATION ON THE PROJECT SITE AND SHALL MAINTAIN THE SIGN IN GOOD CONDITION FOR THE DURATION OF THE CONSTRUCTION PERIOD. THE CONTRACTOR SHALL SUBMIT A SHOP DRAWING OF THE GRANT FUNDS SIGN FOR APPROVAL. THE CONTENTS OF THE SIGN WILL INCLUDE: "FUNDING FOR THIS PROJECT HAS BEEN PROVIDED IN FULL OR IN PART FROM THE LOS ANGELES COUNTY FLOOD CONTROL DISTRICT'S SAFE, CLEAN WATER PROGRAM."
2. CONTRACTOR SHALL INSTALL EDUCATIONAL SIGNS PER 2019 CALIFORNIA BUILDING CODE SECTION 11B-216, 11B-302, AND 11B-703, IF APPLICABLE. CONTRACTOR SHALL SUBMIT SHOP DRAWINGS FOR REVIEW AND APPROVAL BY THE ENGINEER PRIOR TO INSTALLATION PER SPECIFICATION SECTION 01330 SHOP DRAWINGS/SUBMITTALS OF THE GENERAL REQUIREMENTS.
3. GRAPHIC IMAGE FOR THE SIGN SHALL BE PROVIDED BY THE ENGINEER. SIGN GRAPHIC BELOW IS A DRAFT PLACEHOLDER, FINAL GRAPHIC IMAGE SHALL BE PROVIDED BY THE ENGINEER.



CONSTRUCTION DETAIL NOTES

1. THE FOLLOWING NOTES APPLY TO ALL DETAILS AS SHOWN IN THIS SET OF DOCUMENTS, UNLESS OTHERWISE NOTED.
2. FOR ADDITIONAL INFORMATION REFER TO CONSTRUCTION NOTES.
3. REFER TO CONSTRUCTION LEGEND FOR INFORMATION RELATIVE TO COLOR, TYPE AND FINISH.
4. UNLESS OTHERWISE NOTED, NEW FINISH SURFACE SHALL BE FLUSH WITH ADJACENT EXISTING SURFACES.
5. FINISH GRADE SHALL BE 1" BELOW FINISH SURFACE AT ALL PLANTER OR TURF AREAS.
6. FINAL LOCATION OF CONSTRUCTION ELEMENTS, DRAINAGE DEVICES, SITE AMENITIES, IRRIGATION EQUIPMENT, AND PLANT MATERIAL MAY REQUIRE ADJUSTMENT DUE TO FIELD CONDITIONS AND SHALL BE APPROVED PRIOR TO CONSTRUCTION.
7. CONTRACTOR SHALL VERIFY ALL MATCHING MATERIALS AND COLORS PRIOR TO INSTALLATION. CONTRACTOR SHALL NOTIFY LANDSCAPE ARCHITECT OF ANY DISCREPANCIES PRIOR TO INSTALLATION.
8. CONTRACTOR SHALL SUBMIT AND OBTAIN BUILDING PERMIT FOR ALL FENCING OVER 10' HIGH. CONTRACTOR SHALL PROVIDE ALL REQUIRED ENGINEERING AND CALCULATIONS FOR FOOTINGS.

REVISION DATES (DESIGN STAGE ONLY)

THE CITY OF LOS ANGELES OR ITS OFFICERS OR AGENTS SHALL NOT BE RESPONSIBLE FOR THE ACCURACY OR COMPLETENESS OF ELECTRONIC COPIES OF THIS PLAN SHEET.

CITY OF LOS ANGELES DEPARTMENT OF PUBLIC WORKS
BUREAU OF ENGINEERING
ENGINEERING CITY OF LOS ANGELES
THIS PLAN WAS ELECTRONICALLY • SIGNED AND STAMPED

REGISTERED LANDSCAPE ARCHITECT — No. 5962 — STATE OF CALIFORNIA — 1/27/2023

V NO.	REVISIONS	DATE	BY
		YY/MM/DD	
		YY/MM/DD	
		YY/MM/DD	
		YY/MM/DD	

CIP NO. SCP0002
INDEX NO.

CITY ENGINEER	DATE
TED ALLEN, P.E.	1/27/2023

DESIGN GROUP	
ENGINEER:	CDM SMITH INC.
ARCHITECT:	NUVIS LANDSCAPE ARCHITECTURE
DESIGNED BY:	P. CARDOZA
DRAWN BY:	L. KLECKER
CHECKED BY:	P. CARDOZA
APPROVED BY:	A. DELLINGER

VERTICAL CONTROL:	BENCH MARK 08-30460 (NAVD 88)
HORIZONTAL CONTROL:	CALIFORNIA STATE PLANE ZONE V. 1983 NAD
SHEET TITLE:	LANDSCAPE SITE CONSTRUCTION DETAIL 9
PROJECT:	FERNANGELES PARK STORMWATER CAPTURE PROJECT
ADDRESS:	FERNANGELES RECREATION CENTER 8851 LAUREL CANYON BLVD, SUN VALLEY, CA 91352

WORK ORDER EW40079F

SHEET NAME LS10
SHEET 75 OF 125 SHEETS

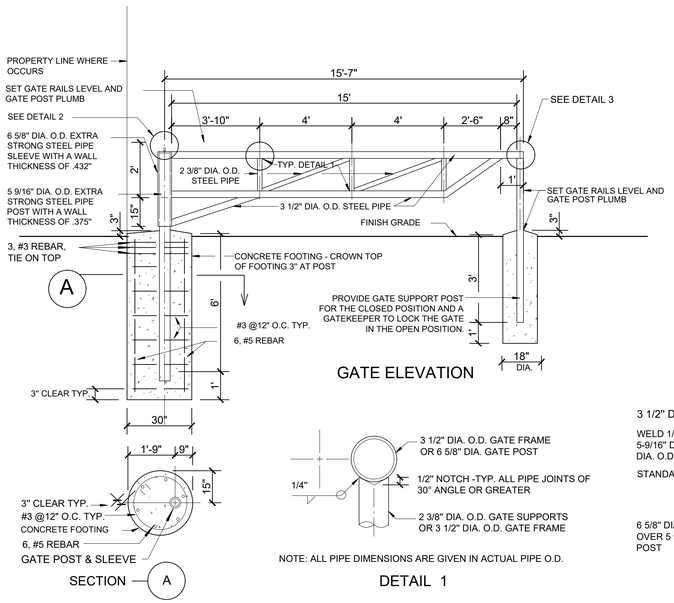

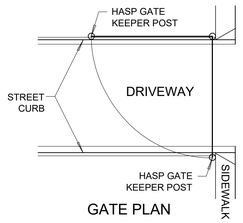

GATE SPECIFICATIONS

1. FABRICATION AND PAINTING: GATE SHALL BE SHOP-FABRICATED AND PAINTED. FABRICATION AND PAINTING SHALL BE DONE UNDER BUREAU OF CONTRACT ADMINISTRATION INSPECTION.
2. ALL PIPE FOR GATE CONSTRUCTION SHALL BE NON-GALVANIZED STEEL.
3. PIPE FOR GATE CONSTRUCTION SHALL BE AS FOLLOWS:
   A. TOP AND BOTTOM RAILS, DIAGONAL AND VERTICAL BRACING AND SUPPORT POSTS SHALL BE SCH. 40 STANDARD STEEL.
   B. 5-9/16" DIAM. O.D. PIPE POST SHALL BE HIGH STRENGTH STEEL PIPE; WALL THICKNESS SHALL BE 0.375".
   C. 6 5/8" DIA. O.D. PIPE POST SLEEVE SHALL BE HIGH STRENGTH STEEL PIPE; WALL THICKNESS SHALL BE 0.432".
4. ALL WELDS SHALL BE GROUND SMOOTH. ALL WELDS SHALL BE PER A.N.S.I./A.W.S. D1.1.81.
5. PROVIDE AND INSTALL AN ADDITIONAL SUPPORT POST TO SECURE THE GATE WHEN FULLY OPEN. THE GATE KEEPER UPPORT POST SHALL HAVE A HASP AS INDICATED IN DETAIL 3A, 3B AND 3C BELOW.
6. ADJUST THE HEIGHT OF THE GATE AND SUPPORT POSTS TO ACCOMMODATE THE EXISTING GRADES.
7. COLOR AND FINISH:
   A. ALL EXTERIOR SURFACES SHALL BE CLEANED WITH "OAKITE" OR EQUAL PRIOR TO PRIMING
   B. ALL EXTERIOR COMPONENTS SHALL BE PRIMED WITH ONE COAT OF RUST-INHIBITING ZINC PRIMER (NO PRIMER OR PAINT ON 5-9/16" DIAM POST).
   C. ALL EXTERIOR COMPONENTS SHALL BE PAINTED WITH TWO COATS OF ACRYLIC ENAMEL; COLOR SHALL BE 'OSHA' NO. 2166 (WHITE)
8. PRIOR TO INSTALLATION OF GATE, COMPLETELY COAT THE ENTIRE ABOVE GRADE SURFACE OF THE 5-9/16" DIA. O.D. GATE POST WITH GREASE. AFTER THE GATE IS INSTALLED, FILL THE SPACE BETWEEN THE POST SLEEVE AND POST WITH ADDITIONAL GREASE USING BOTH GREASE FITTINGS.

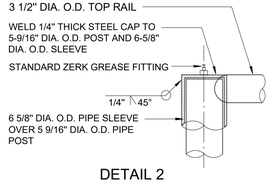

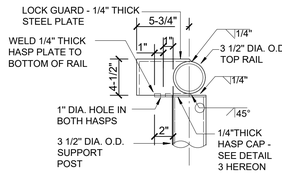

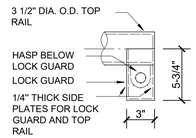

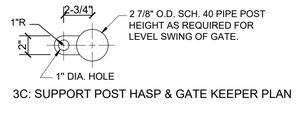

DETAILS 3A-3C: HASP AND LOCK GUARD

CONSTRUCTION DETAIL NOTES

1. THE FOLLOWING NOTES APPLY TO ALL DETAILS AS SHOWN IN THIS SET OF DOCUMENTS, UNLESS OTHERWISE NOTED.
2. FOR ADDITIONAL INFORMATION REFER TO CONSTRUCTION NOTES.
3. REFER TO CONSTRUCTION LEGEND FOR INFORMATION RELATIVE TO COLOR, TYPE AND FINISH.
4. UNLESS OTHERWISE NOTED, NEW FINISH SURFACE SHALL BE FLUSH WITH ADJACENT EXISTING SURFACES.
5. FINISH GRADE SHALL BE 1" BELOW FINISH SURFACE AT ALL PLANTER OR TURF AREAS.
6. FINAL LOCATION OF CONSTRUCTION ELEMENTS, DRAINAGE DEVICES, SITE AMENITIES, IRRIGATION EQUIPMENT, AND PLANT MATERIAL MAY REQUIRE ADJUSTMENT DUE TO FIELD CONDITIONS AND SHALL BE APPROVED PRIOR TO CONSTRUCTION.
7. CONTRACTOR SHALL VERIFY ALL MATCHING MATERIALS AND COLORS PRIOR TO INSTALLATION. CONTRACTOR SHALL NOTIFY LANDSCAPE ARCHITECT OF ANY DISCREPANCIES PRIOR TO INSTALLATION.
8. CONTRACTOR SHALL SUBMIT AND OBTAIN BUILDING PERMIT FOR ALL FENCING OVER 10' HIGH. CONTRACTOR SHALL PROVIDE ALL REQUIRED ENGINEERING AND CALCULATIONS FOR FOOTINGS.

1101	SINGLE-LEAF VEHICULAR RINO GATE - 15' WIDTH
N.T.S.	RP DETAIL --

STEELCRAFT PRODUCTS — P.O. Box 90365 - Pasadena, CA 91103 — PHN 626-798-7401 FAX 626-798-1482 — MODEL BS 1644T BASEBALL BACKSTOP — SHEET 1 OF 4

DO NOT SCALE DRAWING

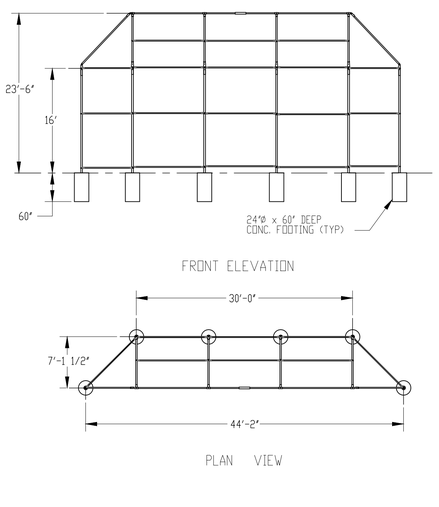

Monday, August 2, 2021 6:18:36 AM | TIW | DATE 9/23/02 | DWG. NO. BS1644TA-1

STEELCRAFT PRODUCTS — P.O. Box 90365 - Pasadena, CA 91103 — PHN 626-798-7401 FAX 626-798-1482 — MODEL BS 1644T BASEBALL BACKSTOP — SHEET 2 OF 4

DO NOT SCALE DRAWING

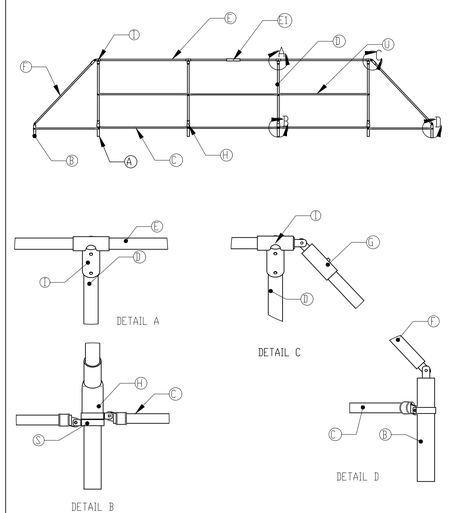

Monday, August 2, 2021 6:18:36 AM | TIW | DATE 3/14/02 | DWG. NO. BS1644TA-2

STEELCRAFT PRODUCTS — P.O. Box 90365 - Pasadena, CA 91103 — PHN 626-798-7401 FAX 626-798-1482 — MODEL BS 1644T BASEBALL BACKSTOP — SHEET 3 OF 4

PARTS LIST

ITEM	QUANT	PART NO.	DESCRIPTION
A	4	F04BS288	BACK POSTS 2-7/8" OD GALV. PIPE @ 19'-0"
B	2	F04BS289	FRONT POSTS 2-7/8" OD GALV. PIPE @ 19'-0" w/ LUGS
C	15	F04BS151	HORIZ. BRACES 1-5/8" OD GALV. PIPE @ 9'-5 1/2"
D	4	F04BS256	HOOD SUPPORT 2-3/8" OD GALV. PIPE @ 9'-9"
E	2	F04BS257	HOOD FRONT TIE 2-3/8" OD GALV. PIPE @ 15'-2-1/2"
E1	1	F04BS259	HOOD FRONT TIE 2-7/8" OD GALV. PIPE @ 18" w/ SET SCRW
F	2	F04BS258	TRIANGLE SUPPORT 2-3/8" OD GALV. PIPE @ 9'-6 1/4" w/ LU
G	2	F04BS355	SWIVEL TUBE
H	4	F04BS356	BACK POST ANGLE FITTING w/ SET SCREWS
I	4	F04BS358	"T" FITTING FOR FRONT HORIZONTAL
J	2	P06BS412	ROLL OF 9 ga 50' X 8' CHAIN LINK FABRIC
K	1	P06BS211	ROLL OF 11 ga 50' X 10' CHAIN LINK FABRIC (HOOD)
M	6	P06BS310	3/4" X 10'-0" TENSION BARS (FOR HOOD)
N	60	P06BS270	2-7/8" TENSION BANDS
O	30	P06BS230	2-3/8" TENSION BANDS
P	300	P06BS001	ALUMINUM TIE WIRES
Q	36	P06BS011	1-5/8" RAIL END FITTINGS
R	6	P06BS231	2-3/8" BRACE BANDS
S	22	P06BS271	2-7/8" BRACE BANDS
T	12	P06BS351	TENSION BARS @ 7'-0"
U	3	F04BS359	TOP HORIZ BRACES 1-5/8" OD X 9'-6 1/4"
V	8	P06BS351	3-1/2" BRACE BANDS (ANGLE FITTINGS)

DO NOT SCALE DRAWING | DATE 9/23/02 | DWG. NO. BS1644TA-3

STEELCRAFT PRODUCTS — P.O. Box 90365 - Pasadena, CA 91103 — PHN 626-798-7401 FAX 626-798-1482 — MODEL BS 1644T BASEBALL BACKSTOP — SHEET 4 OF 4

ASSEMBY INSTRUCTIONS

1. Dig six (6) holes @ 60" deep and 24" diam as shown on the plan view.
2. Place the four 2-7/8" od back posts (A) in the four back holes.
3. Place the two 2-7/8" od end posts (B) in the end holes with lugs parallel to the front opening.
4. Each post shall be 16'-0" above ground and 10'-0" on center. Place a horizontal brace (C) on the ground between each of the posts. Place a rail end fitting on each end of these braces. Place a brace band over each post adjacent to each rail end fitting. Bolt rail end fitting to the corresponding brace band. Make sure the horizontal brace fits into the rail end fittings at least 1". If they don't, adjust the posts accordingly.
   **NOTE: All carriage bolt heads are facing the playing field.
5. With the proper spacing assured, plumb all posts and pour the concrete footings. Allow 24 hrs. for concrete to set and then proceed as follows.
6. Attach four angle fittings (H) to back posts (A).
7. Hood Post Erection: Insert the four hood support posts (D) into open end of the four angle fittings (H) on back posts, with bent portion toward the playing field.
8. Tighten set screws holding hood posts in place.
9. Install mid (C) and front (E) horizontal tie members, using four "T" fitting (I). Attach triangle supports (F).
10. Install horizontal braces (C) between the posts above ground. These braces can be installed in a manner similar to directions in item 4. Larger size bands are furnished for use on the angle fittings.
11. Unroll the 9 ga wire (J) from end of roll. Stretch the wire for measuring and open the knuckle on each side at the roll at 9'-7" and weave out one strand of wire.
12. Weave a tension bar (T) through the last loops on the un-knuckled sides. Place this wire against playing field side of one of the wing panels with the tension bars parallel to the uprights.
13. Stretch wire on the wing panels. Slip 6 tension bands (N) over each post adjacent to the tension bars. The tension bars must be offset so that the wire will be stretched on the playing field side (Inside) of the backstop. Equally space the 6 tension band up and down the posts on each side of the wire panel and bolt into position.

    **NOTE: If the wire is too loose, remove a strand of wire as in Item 11 above or, if the wire is too tight to fasten into position, reweave into panel, the strand of wire removed in Item 11 above.
14. Stretch Wire Back Panel The back two panels will be stretched in one piece between outside back posts (A). The length of the wire needed should be 3" shorter than the distance between the inside of the two corner posts (A). (Make sure wire is stretched when measuring)
15. Place this wire against the playing field side of the backstop with the tension bars parallel and adjacent to posts (A). Stretch and secure into position with 6 tension bands on each post.
16. Install and stretch wire in the opposite wing as described in Items 12 and 13 above.
17. Stretch Wire - Hood Panels Install wire on hood, one panel at a time. Measure out the 11 ga chain link (J) wire as in Item 12 above, and install as in Item 13.
    **NOTE: Wire goes on the outside (top) of hood.
18. Stretch Wire - Corner Panels Install wire on corner panels using 11 ga chain link (K) wire. Cut off extra wire where necessary. Tie at 12" along top side panels.
19. Use tie wire (O) and tie all chain link to the adjacent horizontal braces at approx. 18" apart.
20. Tighten all set screws and bolts & nuts.

DO NOT SCALE DRAWING | DATE 9/23/02 | DWG. NO. BS1644TA-4

NOTE: BASEBALL BACKSTOP DETAILS AND NOTES ARE FOR REFERENCE ONLY. CONTRACTOR SHALL CONTACT LA STEELCRAFT FOR RECOMMENDATIONS FOR INSTALLATION. LA STEELCRAFT, PASADENA CA. lasteelcraft.com 1-800-851-0865

CONTRACTOR SHALL SUBMIT AND OBTAIN BUILDING PERMIT FOR ALL FENCING OVER 10' HIGH. CONTRACTOR SHALL PROVIDE ALL REQUIRED ENGINEERING AND CALCULATIONS FOR FOOTINGS.

1102	BASEBALL BACKSTOP
N.T.S.	

THE CITY OF LOS ANGELES OR ITS OFFICERS OR AGENTS SHALL NOT BE RESPONSIBLE FOR THE ACCURACY OR COMPLETENESS OF ELECTRONIC COPIES OF THIS PLAN SHEET.

REVISION DATES (DESIGN STAGE ONLY)

CITY OF LOS ANGELES DEPARTMENT OF PUBLIC WORKS BUREAU OF ENGINEERING • THIS PLAN WAS ELECTRONICALLY • SIGNED AND STAMPED

ENGINEERING — CITY OF LOS ANGELES

LANDSCAPE ARCHITECT — LAWRENCE A. SWAN — LICENSE NO. 3962 — REGISTERED PROFESSIONAL LANDSCAPE ARCHITECT — 12/31/2023 — STATE OF CALIFORNIA

VERTICAL CONTROL: BENCH MARK 09-30460 NAVD 88
HORIZONTAL CONTROL: CALIFORNIA STATE PLANE ZONE V. 1983 NAD

SHEET TITLE: LANDSCAPE SITE CONSTRUCTION DETAIL 10

PROJECT: FERNANGELES PARK STORMWATER CAPTURE PROJECT

ADDRESS: FERNANGELES RECREATION CENTER 8851 LAUREL CANYON BLVD, SUN VALLEY, CA 91352

NO.	REVISIONS	DATE	BY
		YY/MM/DD	
		YY/MM/DD	
		YY/MM/DD	
		YY/MM/DD	

CIP NO. SCP0002

INDEX NO.

CITY ENGINEER	DATE
TED ALLEN, P.E.	1/27/2023

DESIGN GROUP	
ENGINEER:	CDM SMITH INC.
ARCHITECT:	NUVIS LANDSCAPE ARCHITECTURE
DESIGNED BY:	P. CARDOZA
DRAWN BY:	L. KLECKER
CHECKED BY:	P. CARDOZA
APPROVED BY:	A. DELLINGER

WORK ORDER EW40079F

SHEET NAME LS11

SHEET 76 OF 125 SHEETS

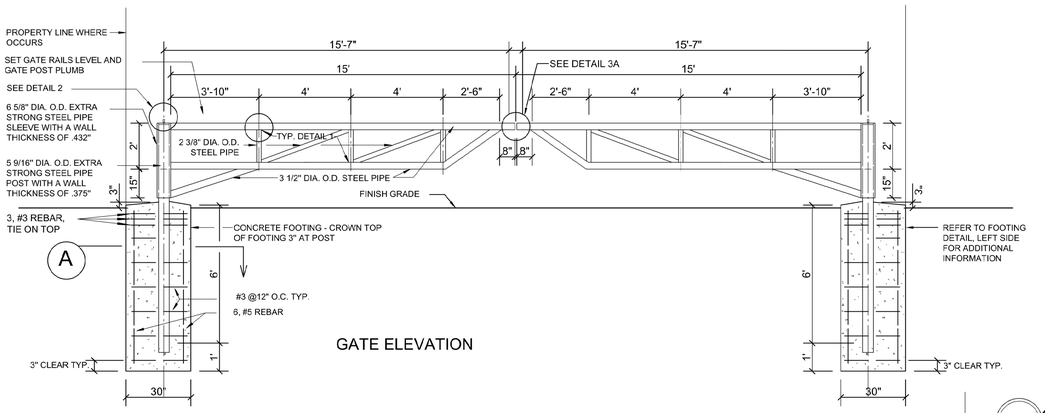

GATE ELEVATION

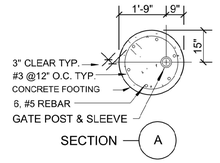

GATE SPECIFICATIONS

1. SUBMIT SHOP DRAWING FOR REVIEW AND APPROVAL TO PROJECT ENGINEER PRIOR TO CONSTRUCTION.
2. DESIGN IS BASED ON SINGLE RHINO GATE CITY STANDARD DETAIL. DESIGN IS WITHOUT GATE SUPPORT POST IN CLOSED POSITION. CONTRACTOR TO PROVIDE STRUCTURAL CALCULATIONS TO ACCOMMODATE GATE DESIGN WITHOUT CENTER SUPPORT POSTS.
3. FABRICATION AND PAINTING: GATE SHALL BE SHOP-FABRICATED AND PAINTED. FABRICATION AND PAINTING SHALL BE DONE UNDER BUREAU OF CONTRACT ADMINISTRATION INSPECTION.
4. ALL PIPE FOR GATE CONSTRUCTION SHALL BE NON-GALVANIZED STEEL.
5. PIPE FOR GATE CONSTRUCTION SHALL BE AS FOLLOWS:
   A. TOP AND BOTTOM RAILS, DIAGONAL AND VERTICAL BRACING AND SUPPORT POSTS SHALL BE SCH. 40 STANDARD STEEL.
   B. 5-9/16" DIAM. O.D. PIPE POST SHALL BE HIGH STRENGTH STEEL PIPE; WALL THICKNESS SHALL BE 0.375".
   C. 6 5/8" DIA. O.D. PIPE POST SLEEVE SHALL BE HIGH STRENGTH STEEL PIPE; WALL THICKNESS SHALL BE 0.432".
5. ALL WELDS SHALL BE GROUND SMOOTH. ALL WELDS SHALL BE PER A.N.S.I./A.W.S. D1.1.81.
6. PROVIDE AND INSTALL AN ADDITIONAL SUPPORT POST TO SECURE THE GATE WHEN FULLY OPEN. THE GATE KEEPER SUPPORT POST SHALL HAVE A HASP AS INDICATED IN DETAIL 3A, 3B, 3C AND 3D BELOW.
7. ADJUST THE HEIGHT OF THE GATE AND SUPPORT POSTS TO ACCOMMODATE THE EXISTING GRADES.
8. COLOR AND FINISH:
   A. ALL EXTERIOR SURFACES SHALL BE CLEANED WITH "OAKITE" OR EQUAL PRIOR TO PRIMING
   B. ALL EXTERIOR COMPONENTS SHALL BE PRIMED WITH ONE COAT OF RUST-INHIBITING ZINC PRIMER (NO PRIMER OR PAINT ON 5-9/16" DIAM POST).
   C. ALL EXTERIOR COMPONENTS SHALL BE PAINTED WITH TWO COATS OF ACRYLIC ENAMEL; COLOR SHALL BE 'OSHA' NO. 2166 (WHITE)
8. PRIOR TO INSTALLATION OF GATE, COMPLETELY COAT THE ENTIRE ABOVE GRADE SURFACE OF THE 5-9/16" DIA. O.D. GATE POST WITH GREASE. AFTER THE GATE IS INSTALLED, FILL THE SPACE BETWEEN THE POST SLEEVE AND POST WITH ADDITIONAL GREASE USING BOTH GREASE FITTINGS.

1201	DOUBLE-LEAF VEHICULAR RINO GATE - 15' WIDTH	
N.T.S.		RP DETAIL --

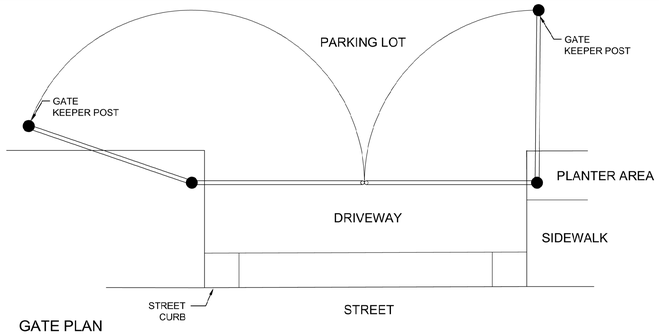

GATE PLAN

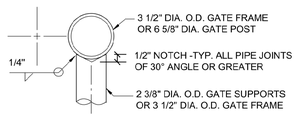

NOTE: ALL PIPE DIMENSIONS ARE GIVEN IN ACTUAL PIPE O.D.

DETAIL 1

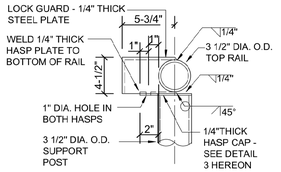

3B: LOCK GUARD-END VIEW

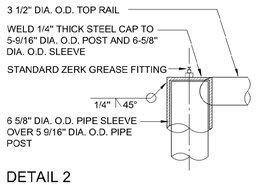

DETAIL 2

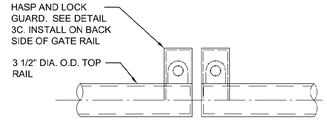

3A: HASP & LOCK GUARD TOP VIEW

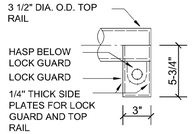

3C: LOCK GUARD TOP VIEW

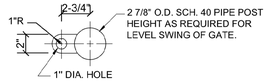

3C: SUPPORT POST HASP & GATE KEEPER PLAN

DETAILS 3D: HASP AND LOCK GUARD






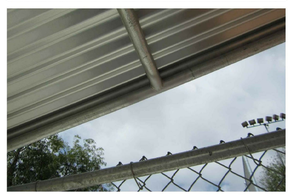




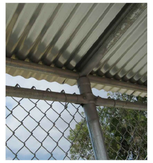

1202	BASEBALL DUGOUT DETAIL IMAGES
N.T.S.	

CONSTRUCTION DETAIL NOTES

1. THE FOLLOWING NOTES APPLY TO ALL DETAILS AS SHOWN IN THIS SET OF DOCUMENTS, UNLESS OTHERWISE NOTED.
2. FOR ADDITIONAL INFORMATION REFER TO CONSTRUCTION NOTES.
3. REFER TO CONSTRUCTION LEGEND FOR INFORMATION RELATIVE TO COLOR, TYPE AND FINISH.
4. UNLESS OTHERWISE NOTED, NEW FINISH SURFACE SHALL BE FLUSH WITH ADJACENT EXISTING SURFACES.
5. FINISH GRADE SHALL BE 1" BELOW FINISH SURFACE AT ALL PLANTER OR TURF AREAS.
6. FINAL LOCATION OF CONSTRUCTION ELEMENTS, DRAINAGE DEVICES, SITE AMENITIES, IRRIGATION EQUIPMENT, AND PLANT MATERIAL MAY REQUIRE ADJUSTMENT DUE TO FIELD CONDITIONS AND SHALL BE APPROVED PRIOR TO CONSTRUCTION.
7. CONTRACTOR SHALL VERIFY ALL MATCHING MATERIALS AND COLORS PRIOR TO INSTALLATION. CONTRACTOR SHALL NOTIFY LANDSCAPE ARCHITECT OF ANY DISCREPANCIES PRIOR TO INSTALLATION.
8. CONTRACTOR SHALL SUBMIT AND OBTAIN BUILDING PERMIT FOR ALL FENCING OVER 10' HIGH. CONTRACTOR SHALL PROVIDE ALL REQUIRED ENGINEERING AND CALCULATIONS FOR FOOTINGS.

THE CITY OF LOS ANGELES OR ITS OFFICERS OR AGENTS SHALL NOT BE RESPONSIBLE FOR THE ACCURACY OR COMPLETENESS OF ELECTRONIC COPIES OF THIS PLAN SHEET.

REVISION DATES (DESIGN STAGE ONLY)

BUREAU OF ENGINEERING
ENGINEERING
CITY OF LOS ANGELES
THIS PLAN WAS ELECTRONICALLY • SIGNED AND STAMPED

REG. CIVIL ENGINEER — ARCHITECT — LANDSCAPE ARCHITECT — STATE OF CALIFORNIA

VERTICAL CONTROL: BENCH MARK 08-30460 (NAVD 88)
HORIZONTAL CONTROL: CALIFORNIA STATE PLANE ZONE V, 1983 NAD

SHEET TITLE: LANDSCAPE SITE CONSTRUCTION DETAIL 10
PROJECT: FERNANGELES PARK STORMWATER CAPTURE PROJECT
ADDRESS: FERNANGELES RECREATION CENTER 8851 LAUREL CANYON BLVD, SUN VALLEY, CA 91352

NO.	REVISIONS	DATE	BY
		YY/MM/DD	
		YY/MM/DD	
		YY/MM/DD	
		YY/MM/DD	

CIP NO. SCP0002

INDEX NO.

CITY OF LOS ANGELES DEPARTMENT OF PUBLIC WORKS

CITY ENGINEER: TED ALLEN, P.E. — DATE: 1/27/2023

DESIGN GROUP		DATE
ENGINEER:	CDM SMITH INC.	1/27/2023
ARCHITECT:	NUVIS LANDSCAPE ARCHITECTURE	1/27/2023
DESIGNED BY:	P. CARDOZA	1/27/2023
DRAWN BY:	L. KLECKER	1/27/2023
CHECKED BY:	P. CARDOZA	1/27/2023
APPROVED BY:	A. DELLINGER	1/27/2023

WORK ORDER EW40079F

SHEET NAME LS12

SHEET 77 OF 125 SHEETS

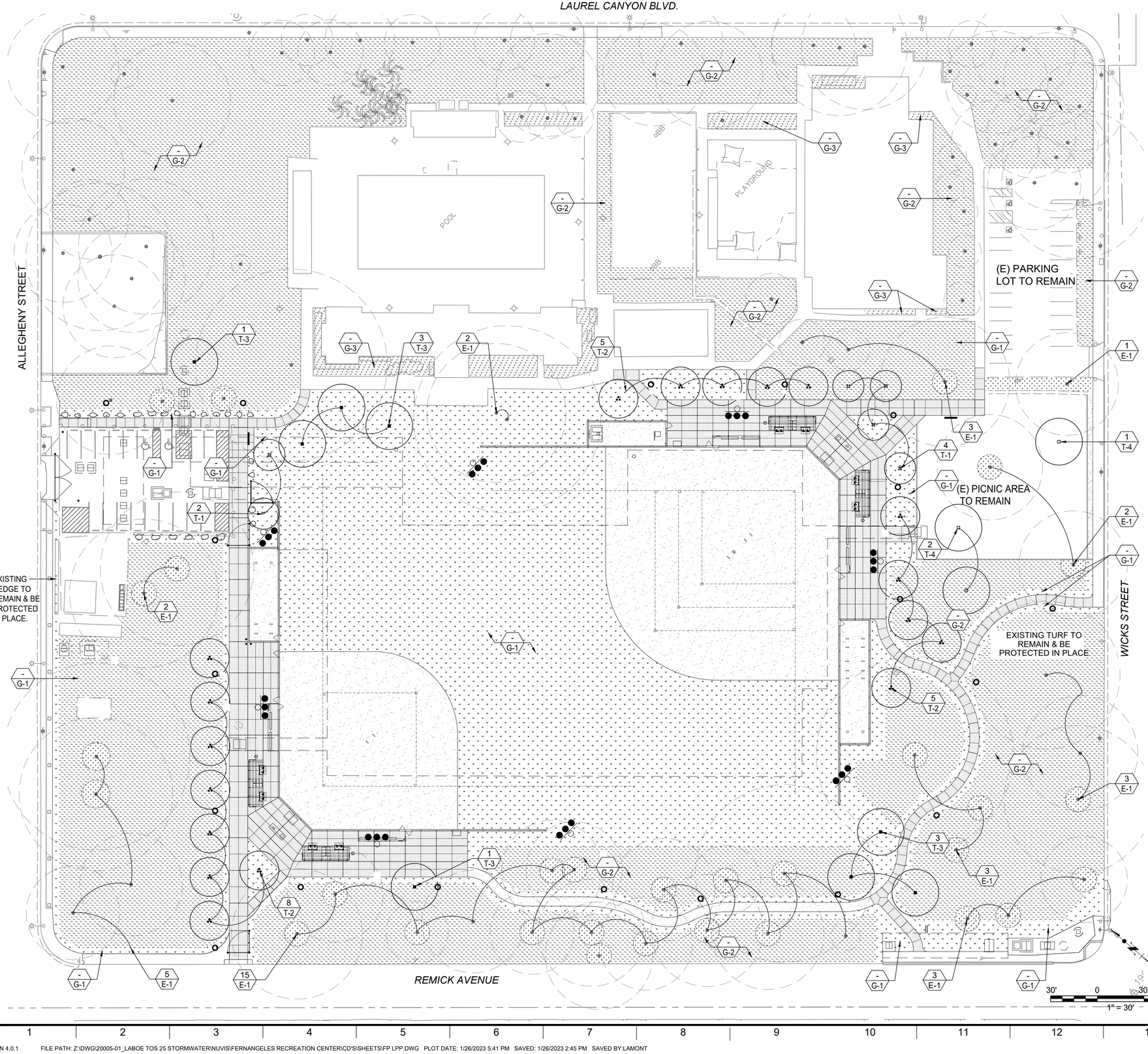

PLANTING PLAN NOTES

1. CONTRACTOR SHALL PROVIDE ALL LABOR, MATERIALS, AND EQUIPMENT NECESSARY TO FURNISH AND INSTALL PLANT MATERIAL AS SHOWN ON THE DRAWINGS AND AS DESCRIBED IN THE SPECIFICATIONS.
2. ALL WORK ON THE IRRIGATION SYSTEM, INCLUDING HYDROSTATIC, COVERAGE, AND OPERATIONAL TESTS AND THE BACKFILLING AND COMPACTION OF TRENCHES SHALL BE COMPLETED AND APPROVED PRIOR TOCOMMENCING PLANTING OPERATIONS.
3. PLANT LIST ON THE DRAWINGS SHALL BE USED AS A GUIDE ONLY. CONTRACTOR SHALL TAKEOFF AND VERIFY SIZES AND QUANTITIES BY PLAN CHECK.
4. LOCATIONS OF PLANT MATERIAL SHALL BE REVIEWED ON SITE BY THE CITY/OWNER'S AUTHORIZED REPRESENTATIVE PRIOR TO INSTALLATION.
5. TREES SHALL BE PLANTED NO CLOSER THAN TEN FEET (10') FROM UTILITIES.
6. IF, DURING PLANTING OPERATIONS THERE SEEMS TO BE MINIMAL OR NO PERCOLATION IN PLANTING PITS, CONTRACTOR SHALL CEASE PLANTING OPERATIONS AND IMMEDIATELY NOTIFY THE CITY/OWNER'S AUTHORIZED REPRESENTATIVE TO DISCUSS ALTERNATIVE TO MAINTAINING POSITIVE ROOTBALL DRAINAGE MEASURES.
7. SEE LANDSCAPE PLANTING SPECIFICATIONS FOR SOIL PREPARATION REQUIREMENTS.

KEY NOTES

1. ALL AREAS DISTURBED BY CONSTRUCTION ACTIVITY WILL REQUIRE TURF REPLACEMENT AND REMEDIATION FOR SOIL COMPACTION. REFER TO TURF NOTE, SHEET LP02.

PLANT LEGEND

SYMBOL	ABBREV.	WUCOLS	BOTANICAL NAME COMMON NAME	SIZE
TREES				
#	T-1	M	LOPHOSTEMON CONFERTUS BRISBANE BOX	36" BOX
⁂	T-2	M	PISTACIA CHINENSIS CHINESE PISTACHE	36" BOX
■	T-3	M	QUERCUS VIRGINIANA SOUTHERN LIVE OAK	36" BOX
▫	T-4	L	TIPUANA TIPU TIPU TREE	48" BOX
○	E-1		EXISTING TREE EXISTING TREE	EXISTING
SHRUBS / GROUNDCOVERS				
G-1		H	TURF-SOD A-G SOD BALL PARK BLEND	SOD
G-2		H	TURF-HYDROSEEDED STOVERS 'PRO SPORTSFIELD ULTRA' OR APPROVED EQUAL TRENCH REPAIR AND DAMAGED TURF AREAS	HYDROSEED
G-3		N.A.	SHRUB PLANTER AREA AREA SHOWN FOR REFERENCE ONLY	EXISTING
G-4			INSTALL A 3" LAYER OF COMPOSTED RECYCLED GREENWASTE WOOD CHIP MULCH 4" MINUS SIZE. MULCH SHALL BE SPREAD EVENLY THROUGHOUT ALL PLANTER AREAS SHOWN. REFER TO SPECIFICATIONS. SUBMIT SAMPLE FOR APPROVAL PRIOR TO OBTAINING AND INSTALLATION.	

ENGINEERING
CITY OF LOS ANGELES

REG. STATE OF CALIFORNIA — LANDSCAPE ARCHITECT — LAURENCE V. AMEN — No. 5962 — 1/27/2023

THIS PLAN WAS ELECTRONICALLY • SIGNED AND STAMPED

BUREAU OF ENGINEERING

VERTICAL CONTROL: BENCH MARK 08-30460 (NAVD 88)
HORIZONTAL CONTROL: CALIFORNIA STATE PLANE ZONE V, 1983 NAD

SHEET TITLE: LANDSCAPE PLANTING PLAN

PROJECT: FERNANGELES PARK STORMWATER CAPTURE PROJECT

ADDRESS: FERNANGELES RECREATION CENTER
8851 LAUREL CANYON BLVD, SUN VALLEY, CA 91352

CITY OF LOS ANGELES DEPARTMENT OF PUBLIC WORKS

NO.	REVISIONS	DATE	BY
		YY/MM/DD	
		YY/MM/DD	
		YY/MM/DD	
		YY/MM/DD	

CIP NO. SCP0002

INDEX NO.

CITY ENGINEER
TED ALLEN, P.E.

DESIGN GROUP		DATE
ENGINEER:	CDM SMITH INC.	1/27/2023
ARCHITECT:	NUVIS LANDSCAPE ARCHITECTURE	1/27/2023
DESIGNED BY:	P. CARDOZA	1/27/2023
DRAWN BY:	L. KLECKER	1/27/2023
CHECKED BY:	P. CARDOZA	1/27/2023
APPROVED BY:	A. DELLINGER	1/27/2023

WORK ORDER
EW40079F

SHEET NAME
LP01

SHEET 78 OF 125 SHEETS

THE CITY OF LOS ANGELES OR ITS OFFICERS OR AGENTS SHALL NOT BE RESPONSIBLE FOR THE ACCURACY OR COMPLETENESS OF ELECTRONIC COPIES OF THIS PLAN SHEET.

REVISION DATES (DESIGN STAGE ONLY)

SHEET VERSION 4.0.1 FILE PATH: Z:\DWG\20005-01_LABOE TOS 25 STORMWATER\NUVIS\FERNANGELES RECREATION CENTER\CD'S\SHEETS\FP LPP.DWG PLOT DATE: 1/26/2023 5:41 PM SAVED: 1/26/2023 2:45 PM SAVED BY:LAMONT

NOTE: TURF AREAS

THE CONSTRUCTION SHALL CONSIST OF TWO PRIMARY STAGES.

STAGE 1: CIVIL CONSTRUCTION OF ALL THE STORM WATER RELATED ELEMTNES AND THE SITE IMPROVEMENTS SHOWN INSIDE THE PRIMARY LIMITS OF WORK. (I.E. CONSTRUCTION FENCING).

A. DURING THIS STAGE, ALL EXISTING TURF AND LANDSCAPING TO REMAIN OUTSIDE THE PRIMARY CONSTRUCTION AREA (I.E. CONSTRUCTION FENCING) SHALL REMAIN ACCESSIBLE TO THE PUBLIC AND WILL BE MAINTAINED BY THE PARKS DEPARTMENT STAFF. DURING THIS PERIOD, THE CONTRACTOR SHALL NOT INTERRUPT THE EXISTING IRRIGATION WATER SUPPLY TO THESE AREAS AND SHALL ASSURE THE EXISTING CONTROL SYSTEM REMAINS IN OPERATION. ANY DISRUPTION TO IRRIGATION IN THESE AREAS THAT CAUSES DAMAGE TO THE EXISTING TURF HEALTH OR COVERAGE WILL BE REPAIRED AT THE CONTRACTOR'S EXPENSE BY OVERSEEDING WITH A SEED MIX OF SIMILAR COMPOSITION AS THE TURF TO BE REPAIRED/REPLACED AND FERTILIZED WITH A BALANCED LONG-RELEASE TURF FERTILIZER.

B. THE NEW IRRIGATION AND PLANTING WORK INSIDE THE PRIMARY WORK AREA MAY BE INCLUDED IN THIS STAGE AT THE CONTRACTOR'S DISCRETION.

C. INSIDE THE PRIMARY LIMITS OF WORK, AREAS OF EXISTING TURF TO BE RETAINED DURING CONSTRUCTION SHALL BE IRRIGATED AND MAINTAINED BY THE CONTRACTOR AS NEEDED. AFTER THE COMPLETION OF PRIMARY CONSTRUCTION, ANY EXISTING TURF AREAS WHICH ARE DEAD OR DAMAGED BY CONSTRUCTION ACTIVITY (INCLUDING ANY AREAS USED FOR PARKING, STORAGE, LAYDOWN, IRRIGATION TRENCHING ETC.) MUST BE REPLACED WITH THE SOD SPECIFIED AFTER THE AREA HAS BEEN DE-COMPACTED TO THE SATISFACTION OF THE ENGINEER AND AMENDED PER THE LANDSCAPE PLANTING SPECIFICATIONS. ANY AREAS OF EXISTING TURF REMAINING WITH BARE AREAS LARGER THAN 12" X12" SHALL BE REPAIRED BY OVERSEEDING. DEAD OR BARE AREAS LARGER THAN 36" X36" SHALL BE REPAIRED WITH SOD. AT COMPLETION OF THE MAINTENANCE AND ESTABLISHMENT PERIOD (SEE LANDSCAPE PLANTING SPECIFICATIONS), A FULL HEALTHY AND CONTINUOUS COVER OF TURF IS EXPECTED.

D. ALL TURF AREAS DAMAGED OR REMOVED BY CONSTRUCTION ACTIVITY SHALL BE DE-COMPACTED (IF OUTSIDE OF EXCAVATION LIMITS) AND AMENDED PER THE LANDSCAPE PLANTING SPECIFICATIONS, THEN PLANTED WITH SOD AS SPECIFIED IN THE PLANTING LEGEND.

STAGE 2: DURING THIS STAGE (AFTER SUBSTANTIAL COMPLETION OF STAGE 1), ADDITIONAL SITE AND IRRIGATION IMPROVEMENTS OUTSIDE THE PRIMARY LIMITS OF WORK (SEE IRRIGATION PLANS) SHALL BE COMPLETED IN THE REMAINDER OF THE PARK AREAS AS INDICATED ON THE PLANS. ANY AREAS OF EXISTING TURF DAMAGED BY CONSTRUCTION OR IRRIGATION TRENCHING SHALL BE REPAIRED AT THE CONTRACTOR'S EXPENSE BY OVERSEEDING WITH A SEED MIX OF SIMILAR COMPOSITION AS THE TURF TO BE REPLACED AND FERTILIZED WITH A BALANCED LONG-RELEASE TURF FERTILIZER.

PLANT LEGEND

SYMBOL	ABBREV.	WUCOLS	BOTANICAL NAME	COMMON NAME	SIZE	SPACING	REMARKS	QTY.
TREES								
	T-1	M	LOPHOSTEMON CONFERTUS	BRISBANE BOX	36" BOX	AS SHOWN	STANDARD-LOW BRANCHING	7
	T-2	M	PISTACIA CHINENSIS	CHINESE PISTACHE	36" BOX	AS SHOWN	STANDARD	18
	T-3	M	QUERCUS VIRGINIANA	SOUTHERN LIVE OAK	36" BOX	AS SHOWN	STANDARD	7
	T-4	L	TIPUANA TIPU	TIPU TREE	48" BOX	AS SHOWN	STANDARD	3
	E-1		EXISTING TREE	EXISTING TREE	EXISTING	EXISTING	PROTECT IN PLACE SEE TREE PROTECTION REQUIREMENTS SHEET LP03	
SHRUBS / GROUNDCOVERS								
	G-1	H	TURF-SOD	A-G SOD BALL PARK BLEND	SOD	PER PLAN		91,200 SQ.FT.
	G-2	H	TURF-HYDROSEEDED	STOVERS 'PRO SPORTSFIELD ULTRA' OR APPROVED EQUAL	SEED	PER PLAN	ALL AREAS DAMAGED DUE TO CONSTRUCTION AND IRRIGATION INSTALLATION	136,598 SQ.FT.
	G-3	N.A.	SHRUB PLANTER AREA	AREA SHOWN FOR REFERENCE ONLY	EXISTING	EXISTING		
	G-4		INSTALL A 3" LAYER OF COMPOSTED RECYCLED GREENWASTE WOOD CHIP MULCH 4" MINUS SIZE. MULCH SHALL BE SPREAD EVENLY THROUGHOUT ALL PLANTER AREAS SHOWN. REFER TO SPECIFICATIONS. SUBMIT SAMPLE FOR APPROVAL PRIOR TO OBTAINING AND INSTALLATION.					600 SQ.FT.

PLANT QUANTITIES AND SQUARE FOOTAGE QUANTITIES ON THE DRAWINGS SHALL BE USED AS A GUIDE ONLY. CONTRACTOR SHALL TAKEOFF AND VERIFY SIZES AND QUANTITIES BY PLAN CHECK.

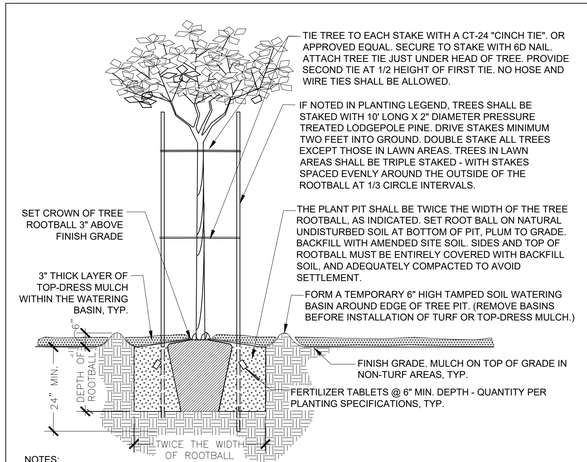

NOTES:
1. ALL TREES PLANTED IN LAWN AREAS SHALL HAVE A 48" DIAMETER UNPLANTED AREA AROUND EACH TREE TRUNK. INSTALL 4" TOP-DRESS MULCH INSIDE CIRCLE.
2. WHEN PLANTING TREES IN AREAS TO RECEIVE SOD, CONTRACTOR SHALL COMPENSATE FOR THE THICKNESS OF THE SOD AND SET TOP OF TREE ROOTBALL APPROPRIATELY TO AVOID A LOW AREA AND PONDING OF WATER.

201	TREE PLANTING AND STAKING	
N.T.S.	BOE VERSION DEC/19	RP DETAIL L2000

THE CITY OF LOS ANGELES OR ITS OFFICERS OR AGENTS SHALL NOT BE RESPONSIBLE FOR THE ACCURACY OR COMPLETENESS OF ELECTRONIC COPIES OF THIS PLAN SHEET.

REVISION DATES (DESIGN STAGE ONLY)

ENGINEERING
CITY OF LOS ANGELES

THIS PLAN WAS ELECTRONICALLY • SIGNED AND STAMPED •

LANDSCAPE ARCHITECT LICENSE NO. 5982 REGISTERED STATE OF CALIFORNIA
GREGORY P. KEARNEY
12/31/2024

BUREAU OF ENGINEERING

VERTICAL CONTROL:	BENCH MARK 08-30460 (NAVD 88)
HORIZONTAL CONTROL:	CALIFORNIA STATE PLANE ZONE V, 1983 NAD
SHEET TITLE:	LANDSCAPE PLANTING LEGEND AND DETAILS
PROJECT:	FERNANGELES PARK STORMWATER CAPTURE PROJECT
ADDRESS:	FERNANGELES RECREATION CENTER 8851 LAUREL CANYON BLVD, SUN VALLEY, CA 91352

NO.	REVISIONS	DATE	BY
		YY/MM/DD	
		YY/MM/DD	
		YY/MM/DD	
		YY/MM/DD	

CIP NO. SCP0002

INDEX NO.

CITY OF LOS ANGELES DEPARTMENT OF PUBLIC WORKS

CITY ENGINEER: TED ALLEN, P.E. — DATE: 1/27/2023

DESIGN GROUP		DATE
ENGINEER:	CDM SMITH INC.	1/27/2023
ARCHITECT:	NUVIS LANDSCAPE ARCHITECTURE	1/27/2023
DESIGNED BY:	P. CARDOZA	1/27/2023
DRAWN BY:	L. KLECKER	1/27/2023
CHECKED BY:	P. CARDOZA	1/27/2023
APPROVED BY:	A. DELLINGER	1/27/2023

WORK ORDER EW40079F

SHEET NAME LP02

SHEET 79 OF 125 SHEETS

TREE PROTECTION – EXISTING TREES
All trees to remain in place shall be protected using the following guidelines:

TREE PROTECTION SPECIFICATIONS
These tree protection specifications shall be followed to protect all trees whose dripline is encroached upon either directly or indirectly by construction within City parks.

ANY FAILURE BY THE CONTRACTOR TO ADHERE TO THE REQUIREMENTS SPECIFIED BELOW WILL RESULT IN THE SUSPENSION OF ALL CONSTRUCTION ACTIVITIES, TO BE DONE AT THE CONTRACTOR'S EXPENSE. THE CONTRACTOR SHALL BE RESPONSIBLE FOR REPLACEMENT OF OR PAYMENT FOR ANY TREES DAMAGED THROUGH NON-COMPLIANCE WITH THESE SPECIFICATIONS. THE MONETARY OR REPLACEMENT VALUE OF IMPACTED TREES WILL BE DETERMINED BY A RECREATION AND PARKS (RAP) ARBORIST OR BY A RAP APPROVED ISA CERTIFIED ARBORIST.

A Recreation and Parks Arborist shall be invited to the Job Start Meeting and also notified 48-hours prior to construction. Contact Steve Dunlap (213) 485-4826.

All trees that occur within the area of work, as shown on the plans, and *NOT* specifically designated for removal, shall be protected by the following means:

1. **Defining the Tree Protection Zone (TPZ)** - The **radius** (not the diameter) of the TPZ, measured from the outside of the tree trunk, shall be calculated according to the following:
   (a) **Single trunk trees -** multiply the trunk diameter in inches, measured 4.5' above grade, by 1.5 feet.
   (b) **Multi trunk trees -** multiply the sum of the diameters of all trunks in inches, measured 4.5' above grade, by 1.5 feet.
   (c) **Palm trees -** 5' from the base of the trunk.
   (d) **If a TPZ is delineated on the plans, the size and shape shown on the plans shall supercede the above requirements.**

2. The contractor shall install a 5' high temporary chain link fence with one pedestrian access gate along the boundary of the TPZ. See detail for temporary chain link fence on detail sheet.

3. The contractor shall provide one sign per each 20 lineal ft. of fence surrounding the TPZ indicating that fencing shall not be removed. See TPZ sign detail.

4. No work is permitted within the TPZ without the approval of: 1) the project Landscape Architect, 2) the Project Manager, and 3) RAP Forestry staff. Any work authorized by RAP Forestry staff within the TPZ must be done in accordance with the recommendations of RAP Forestry and under the supervision of a Monitoring Arborist. The Monitoring Arborist shall be supplied by the Contractor at his own expense, and be an ISA Certified Arborist or a Registered Consulting Arborist with verifiable experience in protecting trees. The Monitoring Arborist must be approved by RAP Forestry prior to commencement of work.

5. Within the TPZ, the contractor shall adhere to the following requirements, including, but not limited to:
   (a) No stockpiling or storage of any material, debris, or soil.
   (b) No storage of any construction equipment.
   (c) No vehicular access.
   (d) No un-approved trenching, excavation or disturbance of soil will be allowed.
   (e) No objects of any kind shall be attached to tree trunks.
   (f) For any approved excavation or trenching, no cutting of roots over 2" diameter will be allowed. Contractor shall use a pneumatic drill (a.k.a. "air spade") to excavate under woody roots larger than 2" in diameter. If any roots are unintentionally severed, remedial cuts are to be made under the supervision the Monitoring arborist, and soil backfilled immediately.

6. Within the boundaries of the construction zone (including the TPZ), the contractor shall be responsible for mitigating construction-related dust accumulation on all trees by spraying the trunks, limbs, and foliage with water to a maximum height of 30 feet during the months of April through November, at monthly intervals.

7. Beyond the TPZ, the contractor shall also be responsible for protecting all existing trees to remain in place within the boundaries of the construction zone, including vehicular access areas, lay down areas, and any other areas impacted by construction activities. Any damage to trees in these areas shall also be subject to the same monetary or replacement requirements specified below. Any necessary root cutting in this area must be approved in advance by either RAP Forestry or by a RAP approved ISA certified arborist employed by the Contractor. See also the General Conditions for any damage done by the contractor to landscaping or other park amenities that fall outside the boundaries of the construction zone.

8. Irrigation to all existing trees NOT specifically designated for removal shall be kept in operation for the duration of the project. Contractor shall be responsible for hand watering all impacted trees if necessitated by temporary shutdowns to or demolition of existing irrigation systems. Trees are to be irrigated deeply and as often as required such that soil moisture is detectable at a minimum depth of 18" using a soil probe.

9. Upon completion of all trenching, grading, excavation and soil preparation work, contractor shall remove all items installed to protect trees during the construction process with approval of the Project Manager.

10. Any of the following Southern California native tree species fall under Ordinance No. 177404 of the Los Angeles Municipal Code:
    (a) Oaks, including Valley Oak (*Quercus lobata)*, California Live Oak (*Quercus agrifolia),* or any other tree of the oak genus indigenous to California but excluding Scrub Oak *(Quercus dumosa/Q. berberidifolia);*
    (b) Southern California Black Walnut *(Juglans californica* var. *californica);*
    (c) Western Sycamore *(Platanus racemosa);*
    (d) California Bay *(Umbellularia californica).*

Contractor shall comply with the requirements of the ordinance found at:
http://cityplanning.lacity.org/Code_Studies/Other/ProtectedTreeOrd.pdf.

DAMAGES
If a tree that is designated to remain is removed or caused to be irreversibly damaged as determined by the Recreation and Parks Arborist, install a replacement tree matching in size, quality and variety using an installer designated by the Recreation and Parks Arborist. If an acceptable replacement tree is not available, pay damages to the City for the value of the damaged tree as assessed by the tree value formula in the ISA Guide for Establishing Value of Trees and Other Plants.

FENCING MATERIALS

1. POSTS: O.D., LINE POSTS 2-3/8 IN. O.D. POST SPACING TO BE 10'-0" MAX. POSTS TO BE DRIVEN 2' BELOW RELATIVE GRADE.
2. FABRIC: 9 GAUGE, 2 IN. MESH, KNUCKLE TOP AND BOTTOM, PLACE ON OUTER SIDE OF POST.
3. TIE WIRES: 11 GAUGE AT 12" O.C.
4. POST TOPS MALLEABLE IRON OR PRESSED STEEL.
5. 24"x18" SIGN. ATTACH WITH TIE WIRES. SIGN TO BE PROVIDED BY RAP.
6. HINGES: INDUSTRIAL BULLDOG HINGE (180 SWING) 2 HINGES PER GATE, ONE TOP AND ONE BOTTOM.
7. GATE FRAME: SIDES, 2-3/8" DIA
8. LOCKABLE CAST ALUMINUM FORK LATCH POST TOPS MALLEABLE IRON OR PRESSED STEEL.

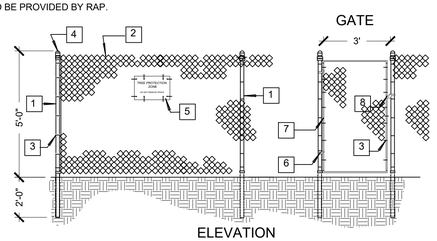

NOTES:
1. THE BOTTOM OF THE FABRIC SHALL BE POSITIONED ONE INCH ABOVE FINISH GRADE.
2. PROVIDE FOR ONE 3' WIDE GATE PER ENCLOSURE.
3. ALL FENCING TO HAVE A STANDARD GALVANIZED FINISH.

301 | 5' HIGH TREE PROTECTION FENCE
N.T.S. | RP DETAIL 500.1

THE CITY OF LOS ANGELES OR ITS OFFICERS OR AGENTS SHALL NOT BE RESPONSIBLE FOR THE ACCURACY OR COMPLETENESS OF ELECTRONIC COPIES OF THIS PLAN SHEET.

REVISION DATES (DESIGN STAGE ONLY)

THIS PLAN WAS ELECTRONICALLY • SIGNED AND STAMPED •

ENGINEERING
CITY OF LOS ANGELES

REGISTERED LANDSCAPE ARCHITECT R. VINCENT LAMONT No. 5982 STATE OF CALIFORNIA

BUREAU OF ENGINEERING

VERTICAL CONTROL: BENCH MARK:08-30460 (NAVD 88)
HORIZONTAL CONTROL: CALIFORNIA STATE PLANE ZONE V, 1983 NAD

SHEET TITLE: TREE PROTECTION GUIDELINES 1

PROJECT: FERNANGELES PARK STORMWATER CAPTURE PROJECT

ADDRESS: FERNANGELES RECREATION CENTER 8851 LAUREL CANYON BLVD, SUN VALLEY, CA 91352

NO.	REVISIONS	DATE	BY
		YY/MM/DD	
		YY/MM/DD	
		YY/MM/DD	
		YY/MM/DD	

CIP NO. SCP0002

INDEX NO.

CITY OF LOS ANGELES DEPARTMENT OF PUBLIC WORKS

CITY ENGINEER: TED ALLEN, P.E. DATE 1/27/2023

DESIGN GROUP		DATE
ENGINEER:	CDM SMITH INC.	1/27/2023
ARCHITECT:	NUVIS LANDSCAPE ARCHITECTURE	1/27/2023
DESIGNED BY:	P. CARDOZA	1/27/2023
DRAWN BY:	L. KLECKER	1/27/2023
CHECKED BY:	P. CARDOZA	1/27/2023
APPROVED BY:	A. DELLINGER	1/27/2023

WORK ORDER EW40079F

SHEET NAME LP03

SHEET 80 OF 125 SHEETS

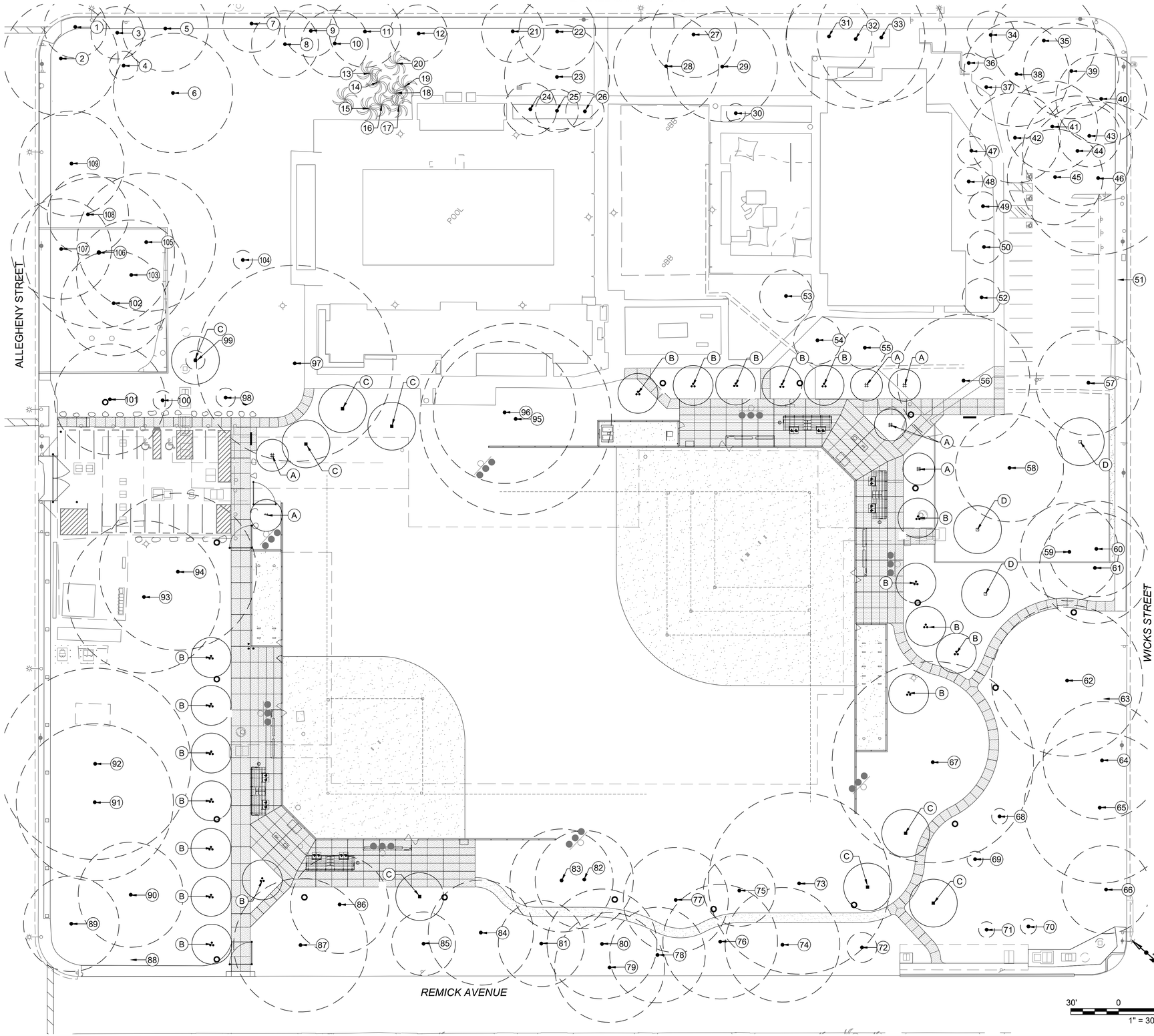

TREE INVENTORY

NO.	BOTANICAL NAME	COMMON NAME	DIA.	REMARKS
1	FRAXINUS VELUTINA	ARIZONA ASH	13"	REMOVE
2	PINUS CANARIENSIS	CANARY ISLAND PINE	24"	
3	FRAXINUS VELUTINA	ARIZONA ASH	11"	REMOVE
4	ARBUTUS UNEDO	STRAWBERRY TREE	6"	
5	MORUS ALBA	WHITE MULBERRY	18"	REMOVE
6	MORUS ALBA	WHITE MULBERRY	25"	
7	FRAXINUS VELUTINA	ARIZONA ASH	12"	REMOVE
8	PINUS CANARIENSIS	CANARY ISLAND PINE	14"	
9	FRAXINUS VELUTINA	ARIZONA ASH	11"	
10	PINUS CANARIENSIS	CANARY ISLAND PINE	12"	
11	FRAXINUS VELUTINA	ARIZONA ASH	15"	
12	FRAXINUS VELUTINA	ARIZONA ASH	12"	
13	WASHINGTONIA ROBUSTA	MEXICAN FAN PALM	14"	
14	WASHINGTONIA ROBUSTA	MEXICAN FAN PALM	14"	
15	WASHINGTONIA ROBUSTA	MEXICAN FAN PALM	15"	
16	WASHINGTONIA ROBUSTA	MEXICAN FAN PALM	16"	
17	WASHINGTONIA ROBUSTA	MEXICAN FAN PALM	15"	
18	WASHINGTONIA ROBUSTA	MEXICAN FAN PALM	15"	
19	WASHINGTONIA ROBUSTA	MEXICAN FAN PALM	16"	
20	WASHINGTONIA ROBUSTA	MEXICAN FAN PALM	14"	
21	FRAXINUS VELUTINA	ARIZONA ASH	13"	
22	FRAXINUS VELUTINA	ARIZONA ASH	16"	
23	PINUS CANARIENSIS	CANARY ISLAND PINE	22"	
24	CALLIANDRA INAEQUILATERA	RED POWDERPUFF	11"	
25	CALLIANDRA INAEQUILATERA	RED POWDERPUFF	9"	
26	CALLIANDRA INAEQUILATERA	RED POWDERPUFF	8"	
27	PINUS CANARIENSIS	CANARY ISLAND PINE	18"	
28	PINUS CANARIENSIS	CANARY ISLAND PINE	22"	
29	PINUS CANARIENSIS	CANARY ISLAND PINE	23"	
30	TABEBUIA ROSEA	PINK TRUMET TREE	4"	
31	FRAXINUS VELUTINA	ARIZONA ASH	18"	
32	GREVILLEA ROBUSTA	SILK OAK	29"	
33	GREVILLEA ROBUSTA	SILK OAK	27"	
34	FRAXINUS VELUTINA	ARIZONA ASH	10"	
35	MORUS ALBA	WHITE MULBERRY	22"	
36	LAGERSTROEMIA INDICA	CRAPE MYRTLE	4"	
37	LAGERSTROEMIA INDICA	CRAPE MYRTLE	4"	
38	CERATONIA SILIQUA	CAROB	22"	
39	PINUS CANARIENSIS	CANARY ISLAND PINE	20"	
40	PINUS CANARIENSIS	CANARY ISLAND PINE	19"	
41	CERATONIA SILIQUA	CAROB	19"	
42	CERATONIA SILIQUA	CAROB	19"	
43	PINUS CANARIENSIS	CANARY ISLAND PINE	13"	
44	PINUS CANARIENSIS	CANARY ISLAND PINE	23"	
45	PINUS CANARIENSIS	CANARY ISLAND PINE	20"	
46	PINUS CANARIENSIS	CANARY ISLAND PINE	32"	
47	PLATANUS X ACERIFOLIA	LONDON PLANE	6"	
48	PLATANUS X ACERIFOLIA	LONDON PLANE	6"	
49	PLATANUS X ACERIFOLIA	LONDON PLANE	6"	
50	PLATANUS X ACERIFOLIA	LONDON PLANE	7"	
51	TABEBUIA ROSEA	PINK TRUMET TREE	3"	
52	PLATANUS X ACERIFOLIA	LONDON PLANE	8"	
53	PLATANUS X ACERIFOLIA	LONDON PLANE	11"	
54	PLATANUS X ACERIFOLIA	LONDON PLANE	10"	
55	PLATANUS X ACERIFOLIA	LONDON PLANE	9"	
56	QUERCUS AGRIFOLIA	COAST LIVE OAK	28"	
57	QUERCUS AGRIFOLIA	COAST LIVE OAK	22"	
58	QUERCUS AGRIFOLIA	COAST LIVE OAK	23"	
59	QUERCUS AGRIFOLIA	COAST LIVE OAK	29"	REMOVE
60	QUERCUS AGRIFOLIA	COAST LIVE OAK	20"	REMOVE
61	QUERCUS AGRIFOLIA	COAST LIVE OAK	25"	
62	PLATANUS RACEMOSA	CALIFORNIA SYCAMORE	34"	
63	BRACHYCHITON POPULNEUS	BOTTLE TREE	N.A	
64	BRACHYCHITON POPULNEUS	BOTTLE TREE	18"	
65	QUERCUS AGRIFOLIA	COAST LIVE OAK	27"	
66	QUERCUS AGRIFOLIA	COAST LIVE OAK	26"	
67	QUERCUS AGRIFOLIA	COAST LIVE OAK	35"	
68	QUERCUS LOBATA	VALLEY OAK	3"	
69	QUERCUS LOBATA	VALLEY OAK	3"	
70	QUERCUS LOBATA	VALLEY OAK	3"	
71	QUERCUS LOBATA	VALLEY OAK	3"	
72	SCHINUS TEREBINTHIFOLIA	BRAZILIAN PEPPER	7"	
73	QUERCUS AGRIFOLIA	COAST LIVE OAK	34"	
74	QUERCUS AGRIFOLIA	COAST LIVE OAK	24"	
75	QUERCUS AGRIFOLIA	COAST LIVE OAK	15"	
76	QUERCUS AGRIFOLIA	COAST LIVE OAK	24"	
77	QUERCUS AGRIFOLIA	COAST LIVE OAK	29"	
78	QUERCUS AGRIFOLIA	COAST LIVE OAK	20"	
79	QUERCUS AGRIFOLIA	COAST LIVE OAK	N.A.	
80	QUERCUS AGRIFOLIA	COAST LIVE OAK	23"	
81	QUERCUS AGRIFOLIA	COAST LIVE OAK	18"	
82	QUERCUS AGRIFOLIA	COAST LIVE OAK	19"	
83	QUERCUS AGRIFOLIA	COAST LIVE OAK	22"	
84	EUCALYPTUS SIDEROXYLON	RED IRONBARK	19"	
85	QUERCUS AGRIFOLIA	COAST LIVE OAK	13"	
86	QUERCUS AGRIFOLIA	COAST LIVE OAK	17"	
87	QUERCUS AGRIFOLIA	COAST LIVE OAK	28"	
88	N/A	N/A	N/A	
89	EUCALYPTUS SIDEROXYLON	RED IRONBARK	20"	
90	EUCALYPTUS SIDEROXYLON	RED IRONBARK	22"	
91	QUERCUS AGRIFOLIA	COAST LIVE OAK	32"	
92	QUERCUS AGRIFOLIA	COAST LIVE OAK	38"	
93	QUERCUS AGRIFOLIA	COAST LIVE OAK	30"	
94	QUERCUS AGRIFOLIA	COAST LIVE OAK	32"	
95	EUCALYPTUS	EUCALYPTUS SPECIES	37"	
96	EUCALYPTUS	EUCALYPTUS SPECIES	29"	
97	EUCALYPTUS	EUCALYPTUS SPECIES	39"	
98	QUERCUS LOBATA	VALLEY OAK	4"	
99	QUERCUS LOBATA	VALLEY OAK	3"	REMOVE
100	QUERCUS LOBATA	VALLEY OAK	5"	
101	PINUS CANARIENSIS	CANARY ISLAND PINE	19"	
102	PINUS CANARIENSIS	CANARY ISLAND PINE	22"	
103	PINUS CANARIENSIS	CANARY ISLAND PINE	23"	
104	CERCIS OCCIDENTALIS	WESTERN REDBUD	4"	
105	PINUS CANARIENSIS	CANARY ISLAND PINE	29"	
106	PINUS CANARIENSIS	CANARY ISLAND PINE	21"	
107	PINUS CANARIENSIS	CANARY ISLAND PINE	21"	
108	PINUS CANARIENSIS	CANARY ISLAND PINE	17"	
109	PINUS CANARIENSIS	CANARY ISLAND PINE	22"	

TOTAL REMOVED CALIPER INCHES: 106

PROPOSED TREES

NO.	BOTANICAL NAME	COMMON NAME	DIA.	QUANTITY
A	LOPHOSTEMON CONFERTUS	BRISBANE BOX	36"	6
B	PISTACHE CHINENSIS	CHINESE PISTACHE	36"	18
C	QUERCUS VIRGINIANA	SOUTHERN LIVE OAK	36"	8
D	TIPUANA TIPU	TIPU TREE	48"	3

TOTAL PROPOSED CALIPER INCHES: 108*

* NOTE: PROPOSED CALIPER DIA. INCH IS BASED ON THE FOLLOWING:
15 GALLON TREE = 1" CALIPER
24" BOX TREE= 2" CALIPER
36" BOX TREE = 3" CALIPER
48" BOX TREE = 4" CALIPER

THE CITY OF LOS ANGELES OR ITS OFFICERS OR AGENTS SHALL NOT BE RESPONSIBLE FOR THE ACCURACY OR COMPLETENESS OF ELECTRONIC COPIES OF THIS PLAN SHEET.

REVISION DATES (DESIGN STAGE ONLY)

ENGINEERING
CITY OF LOS ANGELES

THIS PLAN WAS ELECTRONICALLY • SIGNED AND STAMPED

LANDSCAPE ARCHITECT
LICENSE No. 5982
STATE OF CALIFORNIA
REGISTERED
01/26/2023
RENEWAL 08/31/2024

CITY OF LOS ANGELES DEPARTMENT OF PUBLIC WORKS
BUREAU OF ENGINEERING

VERTICAL CONTROL: BENCH MARK (08-30460) NAVD 88
HORIZONTAL CONTROL: CALIFORNIA STATE PLANE ZONE V. 1983 NAD

SHEET TITLE: TREE INVENTORY

PROJECT: FERNANGELES PARK STORMWATER CAPTURE PROJECT

ADDRESS: FERNANGELES RECREATION CENTER
8851 LAUREL CANYON BLVD, SUN VALLEY, CA 91352

NO.	REVISIONS	DATE	BY
		YY/MM/DD	
		YY/MM/DD	
		YY/MM/DD	
		YY/MM/DD	

CIP NO. SCP0002

INDEX NO.

CITY ENGINEER

TED ALLEN, P.E.

DESIGN GROUP		DATE
ENGINEER:	CDM SMITH INC.	1/27/2023
ARCHITECT:	NUVIS LANDSCAPE ARCHITECTURE	1/27/2023
DESIGNED BY:	P. CARDOZA	1/27/2023
DRAWN BY:	L. KLECKER	1/27/2023
CHECKED BY:	P. CARDOZA	1/27/2023
APPROVED BY:	A. DELLINGER	1/27/2023

WORK ORDER
EW40079F

SHEET NAME
LP04

SHEET 81 OF 125 SHEETS

NOTE:
EXISTING IRRIGATION BACKFLOW DEVICE. RETAIN & PROTECT IN PLACE.

NOTE:
POINT OF CONNECTION. SEE POINT OF CONNECTION NOTE 1, AT RIGHT

NOTE:
SEE CONTROLLER NOTE 2, AT RIGHT

LOCATE MANIFOLD HERE

MAINLINE AND MANIFOLDS SHOWN IN PAVED AREAS FOR DRAWING CLARITY ONLY. LOCATE AS CLOSE AS POSIBLE TO PLANTING AREAS IRRIGATED, TYP.

NO TRENCHING IN ROOT ZONE OF EXISTING OAK TREES. RUN LATERALS AND MAIN AT PERIMETER OF PLANTING AREA

CONTROL WIRE CONDUIT W/O MAINLINE, TYP. REFER TO DETAIL 601/LI06

NEW IRRIGATION CONTROLLER & RAIN SWITCH HERE AT EX. CONTROLLER LOC. USE EX. ELEC. AT P.O.C.

LAUREL CANYON BLVD

ALLEGHENY STREET

WICKS STREET

REMICK AVENUE

PLAYGROUND

DENSE TREES ONLY

EX 8" SS

EX 8" DWS

EX SSMH – RIM EL 849.75 IE 839.88 (8" NE) IE 839.78 (8" SW) IE 840.75 (8" NE)

IRRIGATION SCHEDULE

SYMBOL	MANUFACTURER/MODEL/DESCRIPTION
P Q T H TT TQ ⊗ F	TORO 570Z-6P-PRX 5 SERIES TURF SPRAY, 6" POP-UP WITH BUILT IN-RISER PRESSURE REGULATOR, AND X-FLOW WATER SHUT-OFF DEVICE. ALSO INCLUDES THE ZERO FLUSH WIPER SEAL. 1/2" FEMALE-THREADED INLET.
O T H TT TQ F	TORO 570Z-6P-PRX 8 SERIES TURF SPRAY, 6" POP-UP WITH BUILT IN-RISER PRESSURE REGULATOR, AND X-FLOW WATER SHUT-OFF DEVICE. ALSO INCLUDES THE ZERO FLUSH WIPER SEAL. 1/2" FEMALE-THREADED INLET.
Q T H TT TQ F	TORO 570Z-6P-PRX 10 SERIES TURF SPRAY, 6" POP-UP WITH BUILT IN-RISER PRESSURE REGULATOR, AND X-FLOW WATER SHUT-OFF DEVICE. ALSO INCLUDES THE ZERO FLUSH WIPER SEAL. 1/2" FEMALE-THREADED INLET.
Q T H TT TQ F	TORO 570Z-6P-PRX 15 SERIES TURF SPRAY, 6" POP-UP WITH BUILT IN-RISER PRESSURE REGULATOR, AND X-FLOW WATER SHUT-OFF DEVICE. ALSO INCLUDES THE ZERO FLUSH WIPER SEAL. 1/2" FEMALE-THREADED INLET.
2SST 4SST 4CST 4SST 4S-SST 9SST	TORO 570Z-6P-PRX TURF STRIP SPRAY TURF SPRAY, 6" POP-UP WITH BUILT IN-RISER PRESSURE REGULATOR, AND X-FLOW WATER SHUT-OFF DEVICE. ALSO INCLUDES THE ZERO FLUSH WIPER SEAL. 1/2" FEMALE-THREADED INLET.
1401 1402 1404 1408	RAIN BIRD RWS-M-B-C-1402 1401 ROOT WATERING SYSTEM WITH 18" TUBE, .50 GPM BUBBLER AND CHECK VALVE ON RISER. INSTALL WITH SAND SOCK. QUANTITY PER TREE AS SHOWN ON PLANS

SYMBOL	MANUFACTURER/MODEL/DESCRIPTION
25	RAINBIRD 5000 SERIES ROTOR WITH MPR NOZZLE 25 TURF ROTOR WITH SWING JOINT PER DETAIL 502/LI05.
30	RAINBIRD 5000 SERIES ROTOR WITH MPR NOZZLE 30 TURF ROTOR WITH SWING JOINT PER DETAIL 502/LI05.
35	RAINBIRD 5000 SERIES ROTOR WITH MPR NOZZLE 35 TURF ROTOR WITH SWING JOINT PER DETAIL 502/LI05.
07	TORO T7PSS-02 7.0 SERIES TURF ROTOR WITH HUNTER TJS SWING JOINT PER DETAIL 302/LI03
09	TORO T7PSS-02 9.0 SERIES TURF ROTOR WITH HUNTER TJS SWING JOINT PER DETAIL 302/LI03
12	TORO T7PSS-02 12.0 SERIES TURF ROTOR WITH HUNTER TJS SWING JOINT PER DETAIL 302/LI03
16	TORO T7PSS-02 16.0 SERIES TURF ROTOR WITH HUNTER TJS SWING JOINT PER DETAIL 302/LI03

SYMBOL	MANUFACTURER/MODEL/DESCRIPTION
	TORO 220 BRASS REMOTE CONTROL VALVE (RCV), SIZE AS SHOWN. INSTALL PER DETAIL 401/LI04
	RAIN BIRD 44-LRC 1" QUICK COUPLER VALVE WITH LOCKING VINYL COVER PER DETAIL 405/LI04
	LATERAL ISOLATION VALVE 3"X 6" GASKET X MALE SWIVEL LATERAL ISOLATION VALVE, (HARCO PT # 8413062PN)
	NIBCO PCR-619-RW IPS 3" INSTALL PER DETAIL 404/LI04
M	BUCKNER-SUPERIOR 3100 2" 2" NORMALLY OPEN MASTER VALVE. INSTALL PER DETAIL 304/LI03
BF	FEBCO LF860-NRS 2" REDUCED PRESSURE ZONE ASSEMBLY BACKFLOW DEVICE. EXISTING TO REMAIN, IN EXISTING ENCLOSURE TO BE TESTED AND CERTIFIED BY CONTRACTOR. CONTRACTOR TO VERIFY SIZE/MAKE/MODEL.
C	RAIN MASTER EAGLE PLUS 2-WIRE CONTROLLER ASSEMBLY WITH MODEL TW-D-1 (EGP-TW, EGP-ICENTRAL, EGP-ISVC5Y) 2-WIRE DECODERS AND MODEL TW-LA-1 LIGHTNING ARRESTOR EVERY 600 FT. INSTALL CONTROLLER WITHIN STRONG BOX MODEL SB-24SS FRONT OPENING STAINLESS STEEL ENCLOSURE
R	HUNTER MINI-CLIK RAIN SENSOR
FS	TORO TFS-200 3" FLOW SENSOR. INSTALL PER DETAIL 304/LI03. WIRE DIRECTLY TO CONTROLLER USING RAINMASTER SEND-CAB-14 SENSOR CABLE IN SCH 80 PVC CONDUIT. CONNECT TO CONTROLLER PER MFR'S INSTRUCTIONS.
	IRRIGATION LATERAL LINE: IRRIGATION LATERAL LINE PVC LATERAL PIPE SCH. 40, SOLVENT WELD WITH SCH. 40 PVC FITTINGS
	IRRIGATION MAINLINE: PVC MAINLINE CLASS 200 BELL AND GASKET 3" AND LARGER WITH DUCTILE IRON PUSH-ON FITTINGS AND MECHANICAL JOINT RESTRAINTS. 30" MIN. COVER.
	PIPE SLEEVE: PVC SCHEDULE 40 AS SLEEVING SEE IRRIGATION SPECIFICATIONS. REFER TO DETAIL 502/LI05

Valve Callout
Valve Number
Valve Flow
Valve Size

30' 0 30' 60'
1" = 30'

REVISION DATES (DESIGN STAGE ONLY)

THE CITY OF LOS ANGELES OR ITS OFFICERS OR AGENTS SHALL NOT BE RESPONSIBLE FOR THE ACCURACY OR COMPLETENESS OF ELECTRONIC COPIES OF THIS PLAN SHEET.

ENGINEERING
CITY OF LOS ANGELES

THIS PLAN WAS ELECTRONICALLY • SIGNED AND STAMPED

REGISTERED LANDSCAPE ARCHITECT V. HOBBS LICENSE NO. 5963 STATE OF CALIFORNIA

BUREAU OF ENGINEERING

VERTICAL CONTROL: BENCH MARK:08-30460 (NAVD 88)
HORIZONTAL CONTROL: CALIFORNIA STATE PLANE ZONE V, 1983 NAD

SHEET TITLE: LANDSCAPE IRRIGATION PLAN

PROJECT: FERNANGELES PARK STORMWATER CAPTURE PROJECT

ADDRESS: FERNANGELES RECREATION CENTER 8851 LAUREL CANYON BLVD, SUN VALLEY, CA 91352

NO.	REVISIONS	DATE	BY
		YY/MM/DD	
		YY/MM/DD	
		YY/MM/DD	
		YY/MM/DD	

CIP NO. SCP0002

INDEX NO.

CITY OF LOS ANGELES DEPARTMENT OF PUBLIC WORKS

CITY ENGINEER: TED ALLEN, P.E.

DESIGN GROUP	DATE
ENGINEER: CDM SMITH INC.	1/27/2023
ARCHITECT: NUVIS LANDSCAPE ARCHITECTURE	1/27/2023
DESIGNED BY: P. CARDOZA	1/27/2023
DRAWN BY: L. KLECKER	1/27/2023
CHECKED BY: P. CARDOZA	1/27/2023
APPROVED BY: A. DELLINGER	1/27/2023

WORK ORDER EW40079F

SHEET NAME LI01

SHEET 82 OF 125 SHEETS

IRRIGATION_SCHEDULE

SYMBOL	MANUFACTURER/MODEL/DESCRIPTION	QTY	PSI
Q T H TT TQ F	TORO 570Z-6P-PRX 5 SERIES MPR PLUS SERIES TURF SPRAY, 6" POP-UP WITH BUILT IN-RISER PRESSURE REGULATOR, AND X-FLOW WATER SHUT-OFF DEVICE. ALSO INCLUDES THE ZERO FLUSH WIPER SEAL. 1/2" FEMALE-THREADED INLET.	38	30
Q T H TT TQ F	TORO 570Z-6P-PRX 8 SERIES MPR PLUS SERIES TURF SPRAY, 6" POP-UP WITH BUILT IN-RISER PRESSURE REGULATOR, AND X-FLOW WATER SHUT-OFF DEVICE. ALSO INCLUDES THE ZERO FLUSH WIPER SEAL. 1/2" FEMALE-THREADED INLET.	82	30
Q T H TT TQ F	TORO 570Z-6P-PRX 10 SERIES MPR PLUS SERIES TURF SPRAY, 6" POP-UP WITH BUILT IN-RISER PRESSURE REGULATOR, AND X-FLOW WATER SHUT-OFF DEVICE. ALSO INCLUDES THE ZERO FLUSH WIPER SEAL. 1/2" FEMALE-THREADED INLET.	141	30
Q T H TT TQ F	TORO 570Z-6P-PRX 15 SERIES MPR PLUS SERIES TURF SPRAY, 6" POP-UP WITH BUILT IN-RISER PRESSURE REGULATOR, AND X-FLOW WATER SHUT-OFF DEVICE. ALSO INCLUDES THE ZERO FLUSH WIPER SEAL. 1/2" FEMALE-THREADED INLET.	84	30
2SST 3SST 4CST 4SST 4S-SST 4SST	TORO 570Z-6P-PRX TURF STRIP SPRAY TURF SPRAY, 6" POP-UP WITH BUILT IN-RISER PRESSURE REGULATOR, AND X-FLOW WATER SHUT-OFF DEVICE. ALSO INCLUDES THE ZERO FLUSH WIPER SEAL. 1/2" FEMALE-THREADED INLET.	5	30
1401 1402 1404 1408	RAIN BIRD RWS-M-B-C-1402 1401 ROOT WATERING SYSTEM WITH 18" TUBE, .50 GPM BUBBLER AND CHECK VALVE ON RISER. INSTALL WITH SAND SOCK. QUANTITY PER TREE AS SHOWN ON PLANS	136	30

SYMBOL	MANUFACTURER/MODEL/DESCRIPTION	QTY	PSI
25	RAINBIRD 5000 SERIES ROTOR WITH MPR NOZZLE 25 TURF ROTOR WITH SWING JOINT PER DETAIL 502/LI05.	27	45
30	RAINBIRD 5000 SERIES ROTOR WITH MPR NOZZLE 30 TURF ROTOR WITH SWING JOINT PER DETAIL 502/LI05.	24	45
35	RAINBIRD 5000 SERIES ROTOR WITH MPR NOZZLE 35 TURF ROTOR WITH SWING JOINT PER DETAIL 502/LI05.	41	45
07	TORO T7PSS-02 7.0 SERIES TURF ROTOR WITH HUNTER TJS SWING JOINT PER DETAIL 302/LI03	73	50
09	TORO T7PSS-02 9.0 SERIES TURF ROTOR WITH HUNTER TJS SWING JOINT PER DETAIL 302/LI03	34	50
12	TORO T7PSS-02 12.0 SERIES TURF ROTOR WITH HUNTER TJS SWING JOINT PER DETAIL 302/LI03	33	50
16	TORO T7PSS-02 16.0 SERIES TURF ROTOR WITH HUNTER TJS SWING JOINT PER DETAIL 302/LI03	31	50

MAX SPACING SHALL NOT EXCEED MANUFACTURER STATED RADIUS AT AVAILABLE OPERATING PRESSURE.

SYMBOL	MANUFACTURER/MODEL/DESCRIPTION	QTY
	TORO 220 BRASS REMOTE CONTROL VALVE (RCV), SIZE AS SHOWN. INSTALL PER DETAIL 401/LI04	71
	RAIN BIRD 44-LRC 1" QUICK COUPLER VALVE WITH LOCKING VINYL COVER PER DETAIL 405/LI04	11
	LATERAL ISOLATION VALVE 3"X 6" GASKET X MALE SWIVEL LATERAL ISOLATION VALVE, (HARCO PT # 8413062PN)	11
	NIBCO PCR-619-RW IPS 3" INSTALL PER DETAIL 404/LI04	3
M	BUCKNER-SUPERIOR 3100 2" 2" NORMALLY OPEN MASTER VALVE. INSTALL PER DETAIL 304/LI03	1
BF	FEBCO LF860-NRS 2" REDUCED PRESSURE ZONE ASSEMBLY BACKFLOW DEVICE. EXISTING TO REMAIN, IN EXISTING ENCLOSURE TO BE TESTED AND CERTIFIED BY CONTRACTOR. CONTRACTOR TO VERIFY SIZE/MAKE/MODEL.	1
C	RAIN MASTER EAGLE PLUS 2-WIRE CONTROLLER ASSEMBLY WITH MODEL TW-D-1 (EGP-TW, EGP-ICENTRAL, EGP-ISVC5Y) 2-WIRE DECODERS AND MODEL TW-LA-1 LIGHTNING ARRESTOR EVERY 600 FT. INSTALL CONTROLLER WITHIN STRONG BOX MODEL SB-24SS FRONT OPENING STAINLESS STEEL ENCLOSURE	1
R	HUNTER MINI-CLIK RAIN SENSOR	1
FS	TORO TFS-200 3" FLOW SENSOR. INSTALL PER DETAIL 304/LI03. WIRE DIRECTLY TO CONTROLLER USING RAINMASTER SEND-CAB-14 SENSOR CABLE IN SCH 80 PVC CONDUIT. CONNECT TO CONTROLLER PER MFR`S INSTRUCTIONS.	1
	IRRIGATION LATERAL LINE: IRRIGATION LATERAL LINE PVC LATERAL PIPE SCH. 40, SOLVENT WELD WITH SCH. 40 PVC FITTINGS	21,532 L.F.
	IRRIGATION MAINLINE: PVC MAINLINE CLASS 200 BELL AND GASKET 3" AND LARGER WITH DUCTILE IRON PUSH-ON FITTINGS AND MECHANICAL JOINT RESTRAINTS. 30" MIN. COVER.	2,342 L.F.
	PIPE SLEEVE: PVC SCHEDULE 40 AS SLEEVING SEE IRRIGATION SPECIFICATIONS. REFER TO DETAIL 502/LI05	12.7 L.F.

Valve Callout

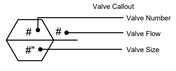

NO SYMBOL	AS APPROVED	1-1/4" SCH. 40 PVC, GRAY ELECTRICAL CONDUIT FOR FLOW SENSOR / MASTER VALVE WIRES OR CENTRAL CONTROL COMMUNICATION CABLE, PROVIDE PULL BOX AT A MAXIMUM OF 200 FEET ON CENTER FOR A 3 FOOT WIRE LOOP OR ANY SPLICES. INSTALL INSIDE A STANDARD RECTANGULAR VALVE BOX.
NO SYMBOL	PAIGE OR EQUAL	INSULTED CONDUCTORS FOR A 2-WIRE SYSTEM. REFER TO IRRIGATION SYSTEM PROJECT SPECIFICATION MANUAL FOR MORE INFORMATION.
NO SYMBOL	RAIN MASTER	TW-SPLICE-14 14-GUAGE WATER TIGHT CONNECTOR
NO SYMBOL	RAIN BIRD	ALL VALVE BOXES SHALL BE PER DETAILS AND IRRIGATION SYSTEM PROJECT SPECIFICATION MANUAL. FOR USE IN NON-VEHICULAR TRAFFIC SITUATIONS ONLY. DO NOT INSTALL IN CONCRETE OR ASPHALT. ALL BOXES INSTALLED IN PLANTER AREAS.
NO SYMBOL	AS APPROVED	ALL SOLVENT WELD MAINLINES ABOVE 2" IN SIZE SHALL HAVE CONCRETE THRUST BLOCKING INSTALLED AT ALL DIRECTIONAL CHANGES INCLUDING ELBOWS (45° AND 90°) AND TEES. MAINLINE PIPES UNDER 2" SIZE AND ALL LATERAL LINES DO NOT REQUIRE THRUST BLOCKING. SEE THRUST BLOCK DETAIL 504/LI05.
NO SYMBOL	CHRISTY'S OR EQUAL	MODEL STND IDENTIFICATION TAGS
NO SYMBOL	HARCO	EPOXY COATED DUCTILE IRON FITTINGS WITH STAINLESS STEEL HARDWARE. REFER TO SPECIFICATIONS

CRITICAL ANALYSIS

Generated: 2022-12-05 09:12

P.O.C. NUMBER: 01
Water Source Information: EXISTING 2" WATER METER AT APPROXIMATE LOCATION SHOWN. VERIFY LOCATION, SIZE, AVAILABLE STATIC PRESSURE, AND CONDITION PRIOR TO START OF WORK

FLOW AVAILABLE
Water Meter Size: 2"
Flow Available 120 GPM

PRESSURE AVAILABLE
Static Pressure at POC: 80 PSI
Elevation Change: 5.00 ft
Service Line Size: 3"
Length of Service Line: 20 ft
Pressure Available: 78 PSI

DESIGN ANALYSIS
Maximum Station Flow: 55.7 GPM
Flow Available at POC: 120 GPM
Residual Flow Available: 64.3 GPM

Critical Station: 10
Design Pressure: 50 PSI
Friction Loss: 3.12 PSI
Fittings Loss: 0.31 PSI
Elevation Loss: 0 PSI
Loss through Valve: 5.06 PSI
Pressure Req. at Critical Station: 53.5 PSI
Loss for Fittings: 0.14 PSI
Loss for Main Line: 1.42 PSI
Loss for POC to Valve Elevation: 0 PSI
Loss for Backflow: 12.4 PSI
Loss for Master Valve: 1.03 PSI
Loss for Water Meter: 2.33 PSI
Critical Station Pressure at POC: 70.8 PSI
Pressure Available: 78 PSI
Residual Pressure Available: 2.23 PSI

IRRIGATION NOTES

1. IRRIGATION SYSTEM COMPONENTS ARE SHOWN DIAGRAMMATICALLY. CONTRACTOR SHALL MARK MAINLINE ROUTING AND MANIFOLD LOCATIONS IN THE FIELD FOR REVIEW AND APPROVAL BY ENGINEER. LATERAL LINE LOCATIONS SHALL BE ROUTED WHEN POSSIBLE TO AVOID TREE PROTECTION ZONES. SEE TREE PROTECTION SPECIFICATIONS FOR TRENCHING REQUIREMENTS INSIDE TPZ'S.
2. AT ALL TIMES DURING CONSTRUCTION, CONTRACTOR SHALL MAINTAIN TEMPORARY WATER SUPPLY AND CONTROLLER CONNECTED TO AREAS WITH PLANT MATERIAL TO REMAIN, OR PROVIDE ALTERNATE METHOD OF IRRIGATION. SEE TURF PROTECTION NOTES AND TREE PROTECTION REQUIREMENTS..
3. ANY EXISTING IRRIGATION SYSTEM COMPONENTS DEPICTED HEREIN ARE BASED UPON AS-BUILT RECORD DRAWINGS, AND ARE SHOWN HERE FOR INFORMATIONAL PURPOSES ONLY. CONTRACTOR SHALL VERIFY THE LOCATION OF ALL EXISTING SYSTEM COMPONENTS TO REMAIN PRIOR TO ENGAGING IN CONSTRUCTION ACTIVITIES. CONTRACTOR SHALL IMMEDIATELY NOTIFY PROJECT MANAGER OF ANY DISCREPANCIES BETWEEN AS-BUILT AND EXISTING CONDITIONS.
4. THE CONTRACTOR SHALL VERIFY THE LOCATIONS OF ALL EXISTING UTILITIES, STRUCTURES AND SERVICES BEFORE COMMENCING WORK. THE LOCATIONS OF ANY UTILITIES, STRUCTURES AND SERVICES SHOWN IN THESE PLANS ARE APPROXIMATE ONLY. ANY DISCREPANCIES BETWEEN THESE PLANS AND ACTUAL FIELD CONDITIONS SHALL BE REPORTED TO THE PROJECT MANAGER IMMEDIATELY. THE CONTRACTOR SHALL PROMPTLY REPAIR OR REPLACE ANY EXISTING OR NEWLY CONSTRUCTED UTILITIES OR SITE FEATURES DAMAGED BY THEIR WORK AT THEIR OWN EXPENSE.
5. THE CONTRACTOR SHALL NOT WILLFULLY INSTALL ANY EQUIPMENT AS SHOWN ON THE PLANS WHEN IT IS OBVIOUS IN THE FIELD THAT CONDITIONS OR OBSTRUCTIONS EXIST THAT WERE UNKNOWN AT THE TIME THESE PLANS WERE PREPARED. CONTRACTOR SHALL IMMEDIATELY NOTIFY THE PROJECT MANAGER OF ANY SUCH CONDITIONS PRIOR TO PERFORMING ANY AFFECTED WORK. IN THE EVENT THAT THIS NOTIFICATION IS NOT GIVEN, THE CONTRACTOR SHALL ASSUME FULL RESPONSIBILITY FOR ANY NECESSARY MODIFICATIONS TO COMPLETED WORK.
6. CONTRACTOR SHALL COORDINATE THEIR WORK WITH OTHER CONTRACTORS FOR THE LOCATION AND INSTALLATION OF PIPE SLEEVES AND LATERALS UNDER PAVING IN A TIMELY MANNER. SEE TRENCHING DETAIL FOR SLEEVING REQUIREMENTS. PLACE SLEEVES IN ACCORDANCE WITH APPLICABLE CODES.
7. THE CONTRACTOR SHALL FLUSH AND PRESSURE TEST ALL MAINLINES PER LANDSCAPE CONSTRUCTION NOTES. CONTRACTOR SHALL FLUSH ALL LATERAL LINES AND IRRIGATION HEADS PER THE LANDSCAPE CONSTRUCTION NOTES.
8. THE INTENT OF THESE IRRIGATION PLANS IS TO PROVIDE HEAD-TO-HEAD COVERAGE TO ALL TURF AREAS. **WHERE NEW IRRIGATION SYSTEMS INTERFACE WITH EXISTING HEADS TO REMAIN, ACTUAL LOCATIONS OF EXISTING HEADS SHALL BE VERIFIED IN THE FIELD. IF REQUIRED, HEAD LAYOUT IN NEW CONSTRUCTION AREAS WILL BE ADJUSTED IN THE FIELD UNDER THE DIRECTION OF THE ENGINEER AS NEEDED TO ACHIEVE THE REQUIRED COVERAGE**. AS PART OF THE SCOPE OF WORK, THE CONTRACTOR SHALL PROVIDE ANY ADDITIONAL HEADS AND/OR ALTERNATE NOZZLES REQUIRED TO ACHIEVE PROPER COVERAGE WITH A MINIMUM OF OVERSPRAY AT NO ADDITIONAL COST TO THE CITY.
9. UPON COMPLETION OF INSTALLATION, CONTRACTOR SHALL CONDUCT A COVERAGE TEST PER IRRIGATION SPECIFICATIONS. CONTRACTOR SHALL NOTIFY PROJECT MANAGER TO REQUEST THE TEST, WHICH WILL BE SCHEDULED AT THE SOONEST DATE POSSIBLE PER AVAILABILITY OF RAP AND LADWP STAFF.
10. REFER TO IRRIGATION SYSTEMS SPECIFICATIONS FOR ADDITIONAL INFORMATION REGARDING THIS SECTION OF WORK.
11. IN ADDITION TO THE SLEEVES AND CONDUITS SHOWN ON THE DRAWINGS, THE IRRIGATION CONTRACTOR SHALL BE RESPONSIBLE FOR COORDINATING THE INSTALLATION OF SLEEVES AND CONDUITS OF SUFFICIENT SIZE WITHIN ALL PAVED AREAS.
12. NOTIFY CITY REPRESENTATIVE OF ANY ASPECTS OF LAYOUT THAT WILL PROVIDE INCOMPLETE OR INSUFFICIENT WATER COVERAGE OF PLANT MATERIAL AND DO NOT PROCEED UNTIL THEIR INSTRUCTIONS ARE OBTAINED.
13. EQUIPMENT SHOWN IN HARDSCAPE AREAS ARE FOR DESIGN CLARIFICATION ONLY AND SHALL BE INSTALLED WHENEVER POSSIBLE WITHIN PLANTED AREAS A REASONABLE, REACHABLE DISTANCE FROM HARDSCAPE OR TURF AREAS.
LOCATION OF MAINLINE ROUTING, MANIFOLDS AND CONTROL WIRE CONDUIT & PULL BOXES SHALL BE LAID OUT BY CONTRACTOR FOR APPROVAL OF RAP STAFF AND PROJECT ENGINEER PRIOR TO EXCAVATION. CONTRACTOR MAY BE REQUIRED TO MODIFY PROPOSED ROUTING AND LOCATIONS AT NO ADDITIONAL COST TO CITY.
14. DUE TO THE SCALE OF THE DRAWINGS, IT IS NOT POSSIBLE TO INDICATE ALL OFFSETS, FITTINGS, SLEEVES, ETC., WHICH MAY BE REQUIRED. CAREFULLY INVESTIGATE THE STRUCTURAL AND FINISHED CONDITIONS AFFECTING ALL WORK AND PLAN WORK ACCORDINGLY, FURNISHING SUCH FITTINGS, ETC., AS MAY BE REQUIRED TO MEET SUCH CONDITIONS. THE WORK SHALL BE INSTALLED IN SUCH A MANNER AS TO AVOID CONFLICTS BETWEEN IRRIGATION SYSTEMS, PLANTING, AND ARCHITECTURAL FEATURES.
15. LOCATION OF TREE PLANTING AND ASSOCIATED IRRIGATION HEADS MAY BE MODIFIED BY THE CITY AT THE TIME OF LAYOUT AT NO ADDITIONAL COST TO THE CITY. MAXIMUM CHANGE IN LOCATION SHALL BE LESS THAN 25'.

TRENCHING NOTES:

1. SEE TREE PROTECTION REQUIREMENTS SHEET LP03 FOR TRENCHING IN TREE PROTECTION ZONES.
2. SPECIAL TRENCHING METHODS MAY BE REQUIRED INSIZED TREE PROTECTION ZONES INCLUDING HAND TRENCHING AT THE DISCRETION OF RAP FORESTRY AND/OR CONTRACTORS' MONITORING ARBORIST.

POINT OF CONNECTION NOTE 1:

POINT OF CONNECTION SHALL BE AT AN EXISTING 3" BACKFLOW DEVICE. TIE INTO EXISTING MAINLINE AT APPROXIMATE LOCATION SHOWN. VERIFY THE ACTUAL LOCATION, SIZE AND WATER PRESSURE IN THE FIELD PRIOR TO STARTING WORK. IF ANY OF THE POC INFORMATION SHOWN ON THESE DRAWINGS IS FOUND TO BE DIFFERENT THAN THE ACTUAL POC INFORMATION GATHERED IN THE FIELD, IMMEDIATELY NOTIFY THE ENGINEER. SHOULD THE CONTRACTOR FAIL TO VERIFY THE POC INFORMATION ANY CHANGES REQUIRED BY LOW PRESSURE OR VOLUME SHALL BE THE SOLE RESPONSIBILITY OF THE CONTRACTOR.

CONTROLLER NOTE 2:

REMOVE (2) EXISTING CONTROLLERS AND ENCLOSURES, AND REPLACE WITH NEW 2-WIRE CONTROLLER AND ENCLOSURE PER LEGEND AND SPECIFICATIONS. INSTALL NEW CONTROLLER IN THE SAME LOCATION AS PREVIOUS, AND CONNECT TO THE EXISTING POWER SUPPLY.

NOTE:
THE IRRIGATION SYSTEM WAS DESIGNED FOR A STATIC WATER PRESSURE OF 73 PSI. CONTRACTOR SHALL VERIFY EXISTING STATIC WATER PRESSURE PRIOR TO COMMENCING WORK. IF STATIC WATER PRESSURE IS LESS THAN 73 PSI, THEN CONTRACTOR SHALL NOTIFY THE ENGINEER IMMEDIATELY FOR DIRECTION ON HOW TO PROCEED. FAILURE TO NOTIFY ENGINEER SHALL PLACE ALL REQUIRED REPAIRS/EQUIPMENT AND OTHER RELATED COST AS THE FULL RESPONSIBILITY OF THE IRRIGATION CONTRACTOR.

KEY NOTES

1. REFER TO SHEET LI02 FOR IRRIGATION LEGEND AND NOTES.
2. REFER TO SHEETS LI03-LI07 FOR DETAILS.
3. REFER TO SHEET LI08 FOR CALCULATIONS.

THE CITY OF LOS ANGELES OR ITS OFFICERS OR AGENTS SHALL NOT BE RESPONSIBLE FOR THE ACCURACY OR COMPLETENESS OF ELECTRONIC COPIES OF THIS PLAN SHEET.

REVISION DATES (DESIGN STAGE ONLY)

CITY OF LOS ANGELES DEPARTMENT OF PUBLIC WORKS BUREAU OF ENGINEERING

ENGINEERING CITY OF LOS ANGELES

REG. CIVIL ENGINEER / LANDSCAPE ARCHITECT — No. 5962 — STATE OF CALIFORNIA — TED ALLEN — 08/31/2024

THIS PLAN WAS ELECTRONICALLY • SIGNED AND STAMPED

VERTICAL CONTROL: BENCH MARK:08-30460 (NAVD 88)
HORIZONTAL CONTROL: CALIFORNIA STATE PLANE ZONE V. 1983 NAD

SHEET TITLE: IRRIGATION LEGEND AND NOTES

PROJECT: FERNANGELES PARK STORMWATER CAPTURE PROJECT

ADDRESS: FERNANGELES RECREATION CENTER 8851 LAUREL CANYON BLVD, SUN VALLEY, CA 91352

NO	REVISIONS	DATE	BY
		YY/MM/DD	
		YY/MM/DD	
		YY/MM/DD	
		YY/MM/DD	

CIP NO. SCP0002

INDEX NO.

CITY ENGINEER	DATE
TED ALLEN, P.E.	1/27/2023

DESIGN GROUP	
ENGINEER:	CDM SMITH INC.
ARCHITECT:	NUVIS LANDSCAPE ARCHITECTURE
DESIGNED BY:	P. CARDOZA
DRAWN BY:	L. KLECKER
CHECKED BY:	P. CARDOZA
APPROVED BY:	A. DELLINGER

WORK ORDER EW40079F

SHEET NAME LI02

SHEET 83 OF 125 SHEETS

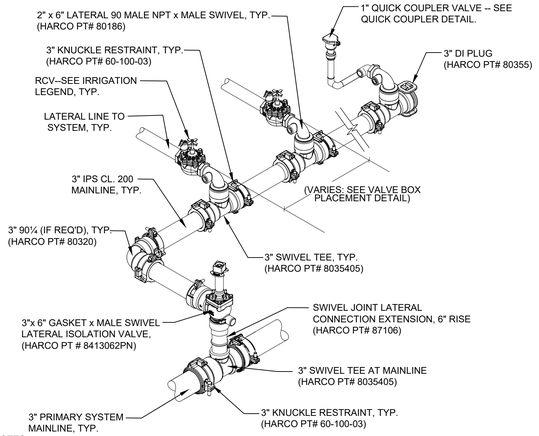

NOTES:
1.) ALL FITTINGS AND RESTRAINTS ARE AS AS MANUFACTURED BY HARCO FITTINGS (www.harcofittings.com) OR APPROVED EQUAL. INSTALL ALL FITTINGS AND RESTRAINTS PER MANUFACTURER'S INSTRUCTIONS.
2.) SEE VALVE BOX PLACEMENT, RCV INSTALLATION, AND QUICK COUPLER INSTALLATION DETAILS FOR ADDITIONAL INFORMATION.

305	VALVE MANIFOLD ASSEMBLY	
N.T.S.	BOE VERSION 02/16/18 RWF	RP DETAIL 135

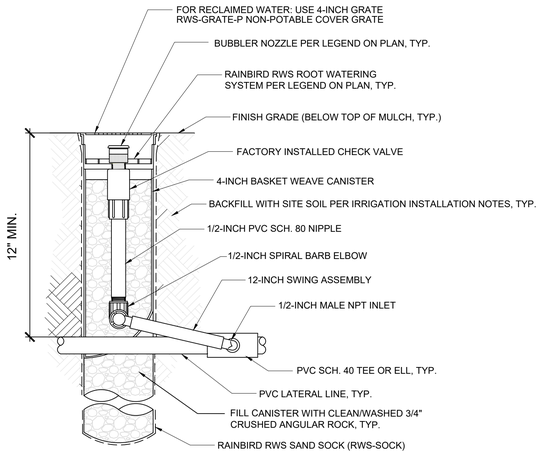

NOTE: ALWAYS LOCATE RWS CANISTERS WITHIN 12" OR LESS FROM EDGE OF TREE ROOTBALL.

303	ROOT WATERING SYSTEM BUBBLER ASSEMBLY	
N.T.S.	BOE VERSION Sep/07 - RF	RAP DETAIL L1660

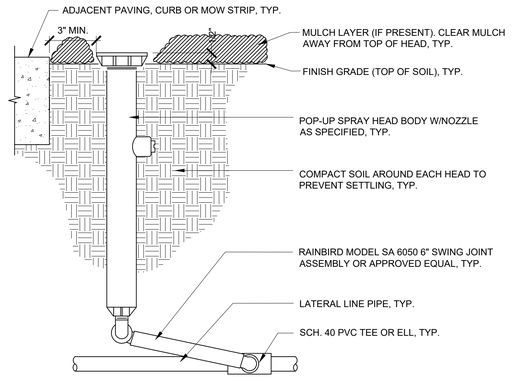

NOTES:
1. PLACE ALL HEADS 1/4" ABOVE FINISH GRADE AT INITIAL INSTALLATION. SET HEADS 3" AWAY FROM WALKS, CURBS, OR MOW STRIPS.
2. INSTALL ALL HEADS PERPENDICULAR TO FINISH GRADE.
3. THOROUGHLY FLUSH ALL LATERAL LINE PIPES TO REMOVE DIRT AND DEBRIS BEFORE INSTALLATION OF NOZZLES.
4. ADJUST ALL HEADS TO PROPER ARC AND RADIUS AS NECESSARY TO ACHIEVE PROPER COVERAGE AND UNIFORMITY. IF PROPER COVERAGE AND UNIFORMITY IS NOT ACHIEVED WITH THE SPECIFIED NOZZLE, CONTRACTOR SHALL CHANGE NOZZLE AS NEEDED IN CONSULTATION WITH LANDSCAPE ARCHITECT UNTIL DESIRED PERFORMANCE IS ACHIEVED.

REVISED: 6/14/06 RWF/SLG

301	POP-UP SPRAY HEAD INSTALLATION	
N.T.S.	REVISED: 6/09/20 RWF	RP DETAIL 1622

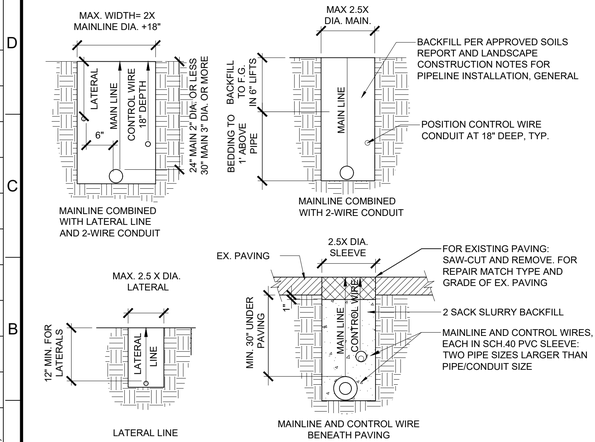

NOTE:
1. PIPE AND CONTROL WIRE CROSSING UNDER PAVING OR WALKWAY OVER 8' WIDE SHALL BE SLEEVED AS INDICATED ABOVE.
2. PIPE BEDDING AND BACKFILL SHALL BE PER APPROVED SOILS REPORT AND LANDSCAPE CONSTRUCTION NOTES, PIPELINE INSTALLATION GENERAL.

306	IRRIGATION TRENCHING DETAIL - 2 WIRE	
N.T.S.	BOE VERSION 02/08/18	RP DETAIL 1350

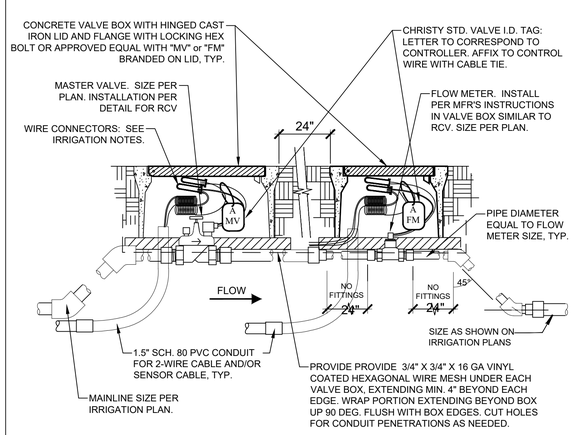

NOTES:
1. CONNECT FLOW METER LEADS TO SENSOR DECODER OR SENSOR CABLE PER CONTROLLER MFR'S INSTRUCTIONS.
2. CONNECT MASTER VALVE LEADS TO SENSOR DECODER PER CONTROLLER MFR'S INSTRUCTIONS.
3. ALL WIRE CONNECTIONS SHALL BE MADE WITH A WIRE CONNECTOR PER IRRIGATION NOTES.

304	FLOW METER AND MASTER VALVE, 2-WIRE SYSTEM	
N.T.S.		RAP DETAIL L1512

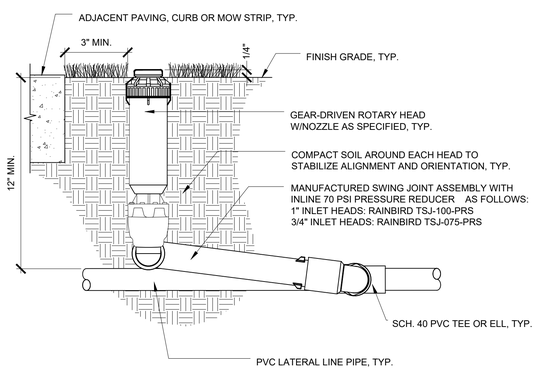

NOTES:
1. PLACE ALL HEADS 1/4" ABOVE FINISH GRADE AT INITIAL INSTALLATION. SET HEADS 3" AWAY FROM WALKS, CURBS, OR MOW STRIPS.
2. INSTALL ALL HEADS PERPENDICULAR TO FINISH GRADE.
3. THOROUGHLY FLUSH ALL LATERAL LINE PIPES TO REMOVE DIRT AND DEBRIS BEFORE INSTALLATION OF NOZZLES.
4. ADJUST ALL HEADS TO PROPER ARC AND RADIUS AS NECESSARY TO ACHIEVE PROPER COVERAGE AND UNIFORMITY. IF PROPER COVERAGE AND UNIFORMITY IS NOT ACHIEVED WITH THE SPECIFIED NOZZLE, CONTRACTOR SHALL CHANGE NOZZLE AS NEEDED IN CONSULTATION WITH LANDSCAPE ARCHITECT UNTIL DESIRED PERFORMANCE IS ACHIEVED.

REVISED: 6/14/06 RWF/SLG

302	GEAR-DRIVEN ROTOR HEAD INSTALLATION	
N.T.S.		RP DETAIL 162

THE CITY OF LOS ANGELES OR ITS OFFICERS OR AGENTS SHALL NOT BE RESPONSIBLE FOR THE ACCURACY OR COMPLETENESS OF ELECTRONIC COPIES OF THIS PLAN SHEET.

REVISION DATES (DESIGN STAGE ONLY)

ENGINEERING
CITY OF LOS ANGELES

LANDSCAPE ARCHITECT
KEVIN HOBBS
LICENSE NO. 5982
REGISTERED PROFESSIONAL ENGINEER
CIVIL
TED ALLEN
LICENSE NO. 72023
REGISTERED PROFESSIONAL ENGINEER
ELECTRICAL
LEE KLECKER
LICENSE NO. 27602
REGISTERED PROFESSIONAL ENGINEER
REGISTERED LANDSCAPE ARCHITECT
STATE OF CALIFORNIA

THIS PLAN WAS ELECTRONICALLY • SIGNED AND STAMPED •

BUREAU OF ENGINEERING

VERTICAL CONTROL: BENCH MARK:08-30460 (NAVD 88)
HORIZONTAL CONTROL: CALIFORNIA STATE PLANE ZONE V. 1983 NAD

SHEET TITLE: IRRIGATION DETAILS 1

PROJECT: FERNANGELES PARK STORMWATER CAPTURE PROJECT

ADDRESS: FERNANGELES RECREATION CENTER
8851 LAUREL CANYON BLVD, SUN VALLEY, CA 91352

CITY OF LOS ANGELES DEPARTMENT OF PUBLIC WORKS

NO.	REVISIONS	DATE	BY
		YY/MM/DD	
		YY/MM/DD	
		YY/MM/DD	
		YY/MM/DD	

CITY ENGINEER

DESIGN GROUP	DATE
ENGINEER: CDM SMITH INC.	1/27/2023
ARCHITECT: NUVIS LANDSCAPE ARCHITECTURE	1/27/2023
DESIGNED BY: P. CARDOZA	1/27/2023
DRAWN BY: L. KLECKER	1/27/2023
CHECKED BY: P. CARDOZA	1/27/2023
APPROVED BY: A. DELLINGER	1/27/2023

CIP NO. SCP0002

INDEX NO.

WORK ORDER EW40079F

SHEET NAME LI03

SHEET 84 OF 125 SHEETS

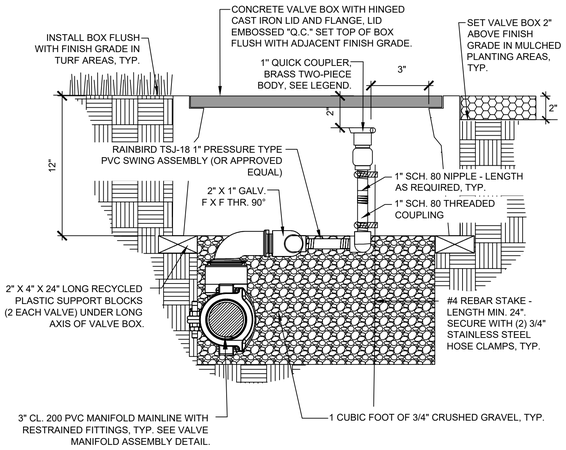

NOTES:
1) SEE RELATED DETAIL FOR MANIFOLD PIPE & FITTINGS.

VERSION 05/16/17 RWF/gm

405	QUICK COUPLING VALVE INSTALLATION DETAIL	
N.T.S.		RP DETAIL L1201

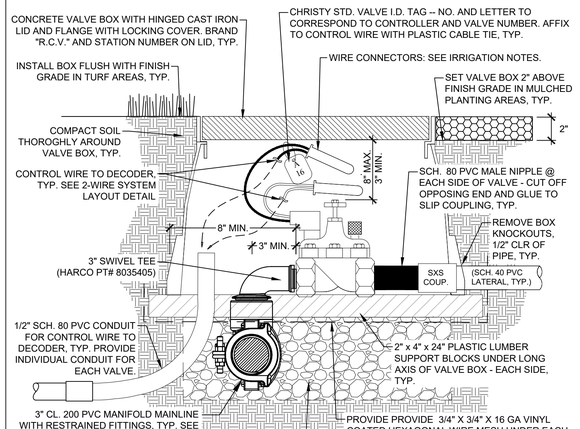

NOTES:
1. SEE APPLICABLE DETAILS FOR 2-WIRE DECODER AND CABLE INSTALLATION

1/14/20 RWF

401	RCV INSTALLATION DETAIL, 2-WIRE SYSTEM	
N.T.S.		RP DETAIL 1402

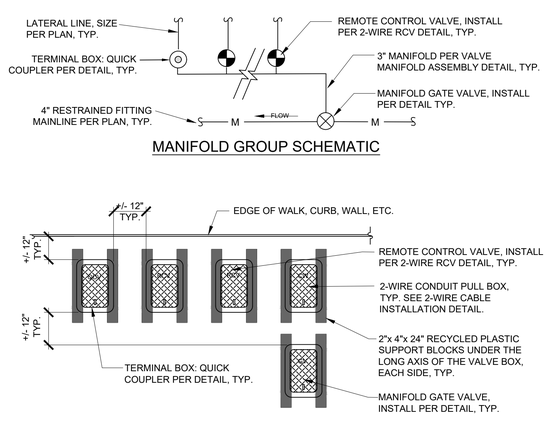

MANIFOLD GROUP SCHEMATIC

NOTES:
1. ALL VALVES SHALL BE INSTALLED IN A MANIFOLD GROUP SIMILAR TO THAT SHOWN IN ABOVE SCHEMATIC. SEE PLANS FOR NUMBER OF RCV/QCV FOR EACH MANIFOLD, TYP.
2. ALL BOXES SHALL BE SQUARE TO ONE ANOTHER AND TO THE EDGES OF ADJACENT FIXED OBJECTS WHERE PRESENT.

406	VALVE BOX PLACEMENT	
N.T.S.	BOE_VERSION_FEB/18	RP DETAIL 1410

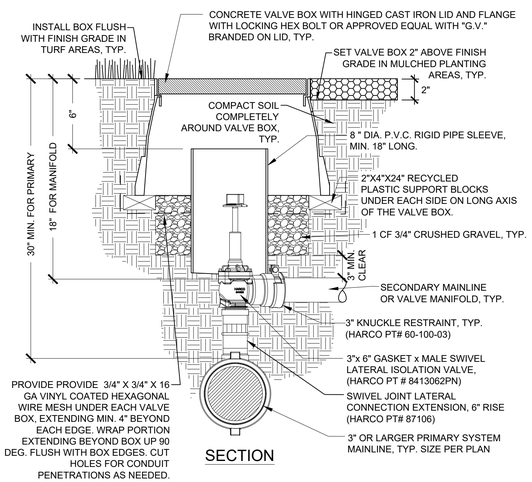

SECTION

404	MANIFOLD GATE VALVE, 3" and Larger Mainline	
N.T.S.	BOE VERSION 02/14/18 - RF	RP DETAIL L1102

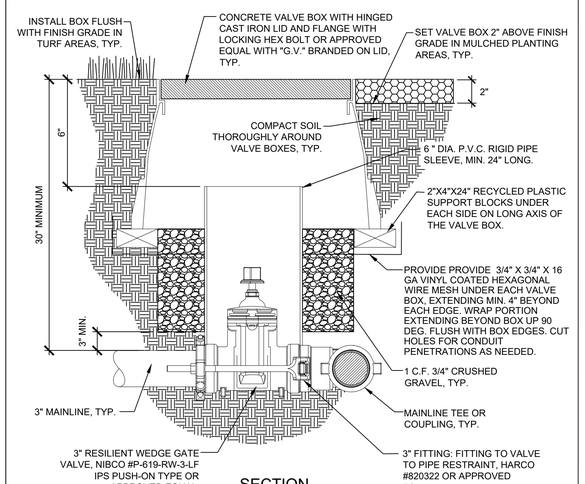

SECTION

402	3" MAINLINE ISOLATION VALVE	
N.T.S.	BOE VERSION May/17 - RF/gm	RP DETAIL L1101

THE CITY OF LOS ANGELES OR ITS OFFICERS OR AGENTS SHALL NOT BE RESPONSIBLE FOR THE ACCURACY OR COMPLETENESS OF ELECTRONIC COPIES OF THIS PLAN SHEET.

REVISION DATES (DESIGN STAGE ONLY)

ENGINEERING
CITY OF LOS ANGELES

THIS PLAN WAS ELECTRONICALLY • SIGNED AND STAMPED •

LANDSCAPE ARCHITECT ★ V. HINOJOSA ★ LANDSCAPE ARCHITECT No. 5963 ★ REGISTERED ★ STATE OF CALIFORNIA ★ 12/31/2024

BUREAU OF ENGINEERING

VERTICAL CONTROL:	BENCH MARK 08-30460 (NAVD 88)
HORIZONTAL CONTROL:	CALIFORNIA STATE PLANE ZONE V, 1983 NAD
SHEET TITLE:	IRRIGATION DETAILS 2
PROJECT:	FERNANGELES PARK STORMWATER CAPTURE PROJECT
ADDRESS:	FERNANGELES RECREATION CENTER 8851 LAUREL CANYON BLVD, SUN VALLEY, CA 91352

CITY OF LOS ANGELES DEPARTMENT OF PUBLIC WORKS

NO.	REVISIONS	DATE	BY
		YY/MM/DD	
		YY/MM/DD	
		YY/MM/DD	
		YY/MM/DD	

CIP NO. SCP0002

INDEX NO.

CITY ENGINEER		DATE
TED ALLEN, P.E.		
DESIGN GROUP		
ENGINEER:	CDM SMITH INC.	1/27/2023
ARCHITECT:	NUVIS LANDSCAPE ARCHITECTURE	1/27/2023
DESIGNED BY:	P. CARDOZA	1/27/2023
DRAWN BY:	L. KLECKER	1/27/2023
CHECKED BY:	P. CARDOZA	1/27/2023
APPROVED BY:	A. DELLINGER	1/27/2023

WORK ORDER
EW40079F

SHEET NAME
LI04

SHEET 85 OF 125 SHEETS

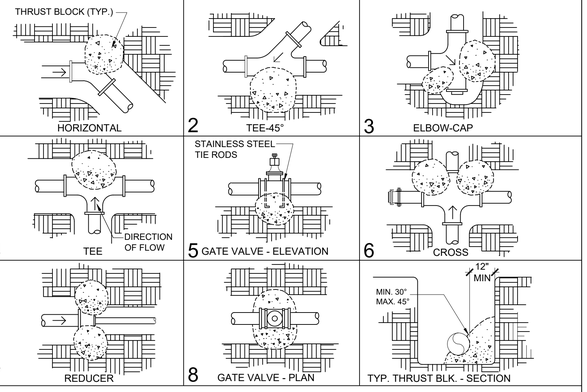

1. PLASTIC PIPE SHALL BE INSTALLED PER IRRIGATION INSTALLATION NOTES AND TRENCHING DETAIL.
2. THE PORTLAND CEMENT CONCRETE USED FOR THRUST BLOCKS SHALL BE MIN. 470-B-2000 CONC.
3. ALL ANCHOR RODS SHALL BE GALVANIZED STEEL MIN. 1/2" INCH IN DIAMETER.
4. SIZE OF THRUST BLK.: 4" PIPE = 4 CU. FT. CONC., 6" PIPE = 6 CU. FT., 8" PIPE = 8 CU. FT.
5. WRAP ALL FITTINGS WITH SIX MIL PLASTIC BEFORE POURING THRUST BLOCKS.
6. POOR SOIL CONDITIONS : USE THRUST BLOCKS FOR 3" PIPE AT SIZE SHOWN FOR 4" PIPE.
7. ALL THRUST BLOCKS SHALL BEAR AGAINST UNDISTURBED SOIL.

RAP VERSION 3/1/92 RCM, JPH

504	THRUST BLOCK INSTALLATION	
N.T.S.	BOE VERSION Sep/07	RP DETAIL L1340

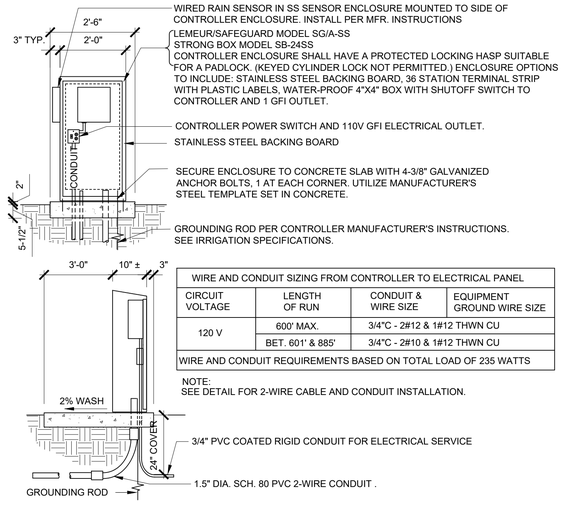

WIRED RAIN SENSOR IN SS SENSOR ENCLOSURE MOUNTED TO SIDE OF CONTROLLER ENCLOSURE. INSTALL PER MFR. INSTRUCTIONS

LEMEUR/SAFEGUARD MODEL SG/A-SS
STRONG BOX MODEL SB-24SS
CONTROLLER ENCLOSURE SHALL HAVE A PROTECTED LOCKING HASP SUITABLE FOR A PADLOCK. (KEYED CYLINDER LOCK NOT PERMITTED.) ENCLOSURE OPTIONS TO INCLUDE: STAINLESS STEEL BACKING BOARD, 36 STATION TERMINAL STRIP WITH PLASTIC LABELS, WATER-PROOF 4"X4" BOX WITH SHUTOFF SWITCH TO CONTROLLER AND 1 GFI OUTLET.

CONTROLLER POWER SWITCH AND 110V GFI ELECTRICAL OUTLET.

STAINLESS STEEL BACKING BOARD

SECURE ENCLOSURE TO CONCRETE SLAB WITH 4-3/8" GALVANIZED ANCHOR BOLTS, 1 AT EACH CORNER. UTILIZE MANUFACTURER'S STEEL TEMPLATE SET IN CONCRETE.

GROUNDING ROD PER CONTROLLER MANUFACTURER'S INSTRUCTIONS. SEE IRRIGATION SPECIFICATIONS.

WIRE AND CONDUIT SIZING FROM CONTROLLER TO ELECTRICAL PANEL			
CIRCUIT VOLTAGE	LENGTH OF RUN	CONDUIT & WIRE SIZE	EQUIPMENT GROUND WIRE SIZE
120 V	600' MAX.	3/4"C - 2#12 & 1#12 THWN CU	
	BET. 601' & 885'	3/4"C - 2#10 & 1#12 THWN CU	
WIRE AND CONDUIT REQUIREMENTS BASED ON TOTAL LOAD OF 235 WATTS			

NOTE:
SEE DETAIL FOR 2-WIRE CABLE AND CONDUIT INSTALLATION.

3/4" PVC COATED RIGID CONDUIT FOR ELECTRICAL SERVICE

1.5" DIA. SCH. 80 PVC 2-WIRE CONDUIT .

503	CONTROLLER AND ENCLOSURE	
N.T.S.	BOE VERSION Feb/18	RAP DETAIL L1470

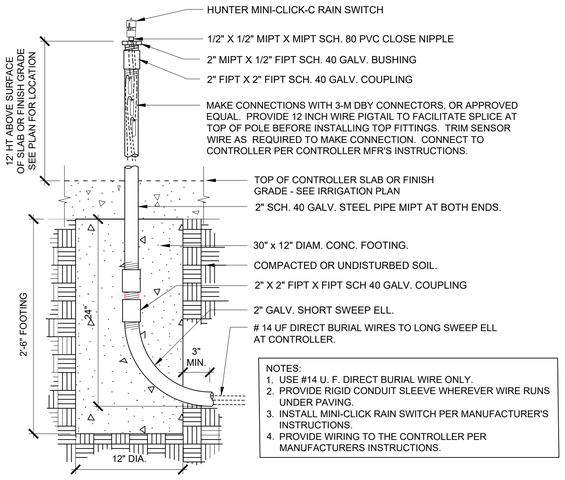

HUNTER MINI-CLICK-C RAIN SWITCH

1/2" X 1/2" MIPT X MIPT SCH. 80 PVC CLOSE NIPPLE

2" MIPT X 1/2" FIPT SCH. 40 GALV. BUSHING

2" FIPT X 2" FIPT SCH. 40 GALV. COUPLING

MAKE CONNECTIONS WITH 3-M DBY CONNECTORS, OR APPROVED EQUAL. PROVIDE 12 INCH WIRE PIGTAIL TO FACILITATE SPLICE AT TOP OF POLE BEFORE INSTALLING TOP FITTINGS. TRIM SENSOR WIRE AS REQUIRED TO MAKE CONNECTION. CONNECT TO CONTROLLER PER CONTROLLER MFR'S INSTRUCTIONS.

TOP OF CONTROLLER SLAB OR FINISH GRADE - SEE IRRIGATION PLAN

2" SCH. 40 GALV. STEEL PIPE MIPT AT BOTH ENDS.

30" x 12" DIAM. CONC. FOOTING.

COMPACTED OR UNDISTURBED SOIL.

2" X 2" FIPT X FIPT SCH 40 GALV. COUPLING

2" GALV. SHORT SWEEP ELL.

14 UF DIRECT BURIAL WIRES TO LONG SWEEP ELL AT CONTROLLER.

NOTES:
1. USE #14 U. F. DIRECT BURIAL WIRE ONLY.
2. PROVIDE RIGID CONDUIT SLEEVE WHEREVER WIRE RUNS UNDER PAVING.
3. INSTALL MINI-CLICK RAIN SWITCH PER MANUFACTURER'S INSTRUCTIONS.
4. PROVIDE WIRING TO THE CONTROLLER PER MANUFACTURERS INSTRUCTIONS.

501	POLE MOUNTED RAIN SWITCH	
N.T.S.	BOE VERSION DEC/21	RP DETAIL L1460

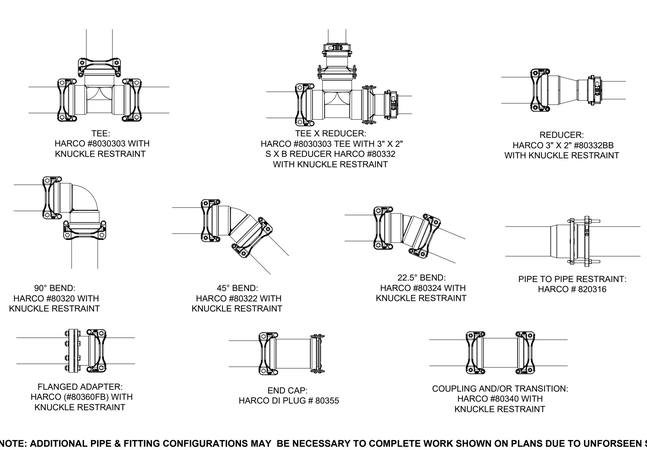

NOTE: ADDITIONAL PIPE & FITTING CONFIGURATIONS MAY BE NECESSARY TO COMPLETE WORK SHOWN ON PLANS DUE TO UNFORSEEN SITE CONDITIONS. CONSULT MANUFACTURER FOR ADDITIONAL INFORMATION. USE #60-100-03 KNUCKLE RESTRAINT ON FITTINGS WHERE DESIGNATED.

505	RESTRAINED FITTINGS FOR 3" MAINLINE	
N.T.S.	BOE VERSION DEC/08 - RF	RP DETAIL 1312

MAINLINE PIPE FITTINGS:

1.) DUCTILE IRON FITTINGS WILL BE REQUIRED FOR ALL MAINLINE PIPE CONNECTIONS (CONSTANT PRESSURE) FOR 3" OR LARGER PIPE UNDER THE FOLLOWING CONDITIONS:

A. AS SHOWN ON OTHER DETAILS INCLUDED WITHIN IN THESE PLANS AND SPECIFICATIONS.

B. AT ALL DIRECTIONAL FITTINGS SUCH AS TEES, ELBOWS, ETC., AND REDUCERS, ADAPTERS AND COUPLINGS AS NOTED OR DETAILED.

2.) DUCTILE IRON FITTINGS SHALL BE A "PUSH-ON" TYPE FOR IPS SIZED PVC PIPE BY HARCO FITTINGS (www.harcofittings.com) OR APPROVED EQUAL.

3.) ALL GASKETED PVC PIPE JOINTS WITHIN 25' OF DUCTILE IRON DIRECTIONAL FITTINGS SHALL BE RESTRAINED USING PIPE TO PIPE RESTRAINT SHOWN. FOR END CAPS AND TERMINAL GATE VALVES, ALL GASKETED PVC PIPE JOINTS WITHIN 40' SHALL BE RESTRAINED USING PIPE TO PIPE RESTRAINT SHOWN. REFER TO MANUFACTURERS FITTING RESTRAINT GUIDE FOR ADDITIONAL INFORMATION.

4.) ALL BOLTS ON FITTING RESTRAINTS SHALL BE TIGHTENED USING A TORQUE WRENCH ONLY FOLLOWING THE MANUFACTURER'S SPECIFICATIONS. THE CONTRACTOR SHALL BE PREPARED TO VERIFY THE TORQUE OF THE BOLTS WITH A TORQUE WRENCH IN THE PRESENCE OF THE BOA INSPECTOR AND SHALL HAVE A TORQUE WRENCH AVAILABLE ON SITE UNTIL JOB ACCEPTANCE.

5.) GLUED JOINTS **SHALL NOT BE** USED IN ANY MAINLINE PVC FITTINGS OR PIPE 3" OR LARGER IN DIAMETER UNLESS SPECIFICALLY DENOTED ON PLANS OR DETAILS INCLUDED IN THIS DRAWING SET.

6.) THRUST BLOCKS **SHALL ONLY BE** USED FOR MAINLINE FITTINGS WHERE SPECIFICALLY DESIGNATED IN PLANS OR DETAILS.

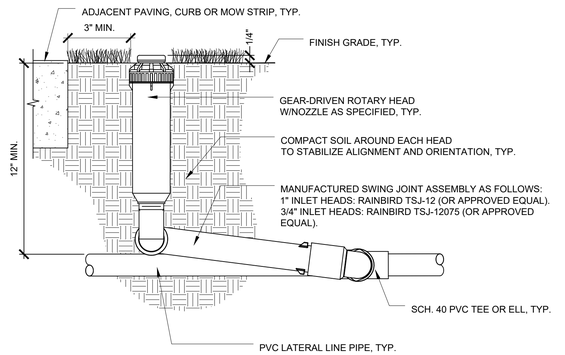

FINISH GRADE, TYP.

GEAR-DRIVEN ROTARY HEAD W/NOZZLE AS SPECIFIED, TYP.

COMPACT SOIL AROUND EACH HEAD TO STABILIZE ALIGNMENT AND ORIENTATION, TYP.

MANUFACTURED SWING JOINT ASSEMBLY AS FOLLOWS:
1" INLET HEADS: RAINBIRD TSJ-12 (OR APPROVED EQUAL).
3/4" INLET HEADS: RAINBIRD TSJ-12075 (OR APPROVED EQUAL).

SCH. 40 PVC TEE OR ELL, TYP.

PVC LATERAL LINE PIPE, TYP.

NOTES:
1. PLACE ALL HEADS 1/4" ABOVE FINISH GRADE AT INITIAL INSTALLATION. SET HEADS 3" AWAY FROM WALKS, CURBS, OR MOW STRIPS.
2. INSTALL ALL HEADS PERPENDICULAR TO FINISH GRADE.
3. THOROUGHLY FLUSH ALL LATERAL LINE PIPES TO REMOVE DIRT AND DEBRIS BEFORE INSTALLATION OF NOZZLES.
4. ADJUST ALL HEADS TO PROPER ARC AND RADIUS AS NECESSARY TO ACHIEVE PROPER COVERAGE AND UNIFORMITY. IF PROPER COVERAGE AND UNIFORMITY IS NOT ACHIEVED WITH THE SPECIFIED NOZZLE, CONTRACTOR SHALL CHANGE NOZZLE AS NEEDED IN CONSULTATION WITH LANDSCAPE ARCHITECT UNTIL DESIRED PERFORMANCE IS ACHIEVED.

REVISED: 6/14/06 RWF/SLG

502	GEAR-DRIVEN ROTOR HEAD INSTALLATION	
N.T.S.	REFINFO	RP DETAIL 1621

THE CITY OF LOS ANGELES OR ITS OFFICERS OR AGENTS SHALL NOT BE RESPONSIBLE FOR THE ACCURACY OR COMPLETENESS OF ELECTRONIC COPIES OF THIS PLAN SHEET.

REVISION DATES (DESIGN STAGE ONLY)

ENGINEERING
CITY OF LOS ANGELES

REGISTERED LANDSCAPE ARCHITECT — No. 5982 — STATE OF CALIFORNIA — RENEWAL 08/31/2024

THIS PLAN WAS ELECTRONICALLY • SIGNED AND STAMPED •

BUREAU OF ENGINEERING

VERTICAL CONTROL: BENCH MARK:08-30460 (NAVD 88)
HORIZONTAL CONTROL: CALIFORNIA STATE PLANE ZONE V, 1983 NAD

SHEET TITLE: IRRIGATION DETAILS 3

PROJECT: FERNANGELES PARK STORMWATER CAPTURE PROJECT

ADDRESS: FERNANGELES RECREATION CENTER 8851 LAUREL CANYON BLVD, SUN VALLEY, CA 91352

CITY OF LOS ANGELES DEPARTMENT OF PUBLIC WORKS

NO.	REVISIONS	DATE	BY
		YY/MM/DD	
		YY/MM/DD	
		YY/MM/DD	
		YY/MM/DD	

CIP NO. SCP0002

INDEX NO.

CITY ENGINEER: TED ALLEN, P.E.

DESIGN GROUP	DATE
ENGINEER: CDM SMITH INC.	1/27/2023
ARCHITECT: NUVIS LANDSCAPE ARCHITECTURE	1/27/2023
DESIGNED BY: P. CARDOZA	1/27/2023
DRAWN BY: L. KLECKER	1/27/2023
CHECKED BY: P. CARDOZA	1/27/2023
APPROVED BY: A. DELLINGER	1/27/2023

WORK ORDER EW40079F

SHEET NAME LI05

SHEET 86 OF 125 SHEETS

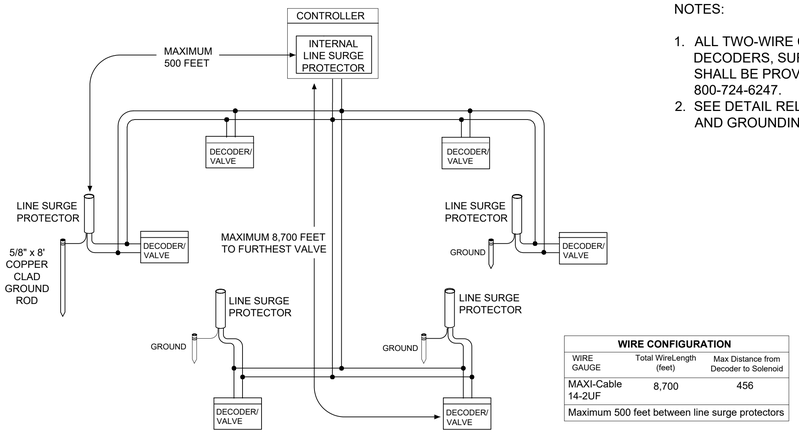

WIRE CONFIGURATION		
WIRE GAUGE	Total WireLength (feet)	Max Distance from Decoder to Solenoid
MAXI-Cable 14-2UF	8,700	456
Maximum 500 feet between line surge protectors		

NOTES:

1. ALL TWO-WIRE COMPONENTS (WIRE, DECODERS, SURGE PROTECTORS, ETC.) SHALL BE PROVIDED BY RAINBIRD, 800-724-6247.
2. SEE DETAIL RELATED DETAILS FOR WIRING AND GROUNDING CONNECTIONS.

602	2-WIRE SYSTEM LAYOUT	
N.T.S.	B.O.E. 02/16/18	L1372

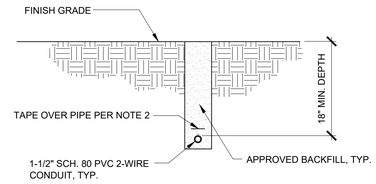

SECTION

NOTES:
1. SOLVENT WELD ALL JOINTS. PRIMER NOT REQUIRED.
2. MARK LOCATION OF PIPE AND WIRE WITH A CONTINUOUS ALUMINUM BACKED, 3 INCH WIDE RED, UNLABELED TAPE, INSTALLED ABOVE PIPE, AS MANUFACTURED BY TERRA-TAPE/GRIFFOLYN CO., (800) 231-2417 OR APPROVED EQUAL.
3. SHOW ALIGNMENT OF ALL CONTROL WIRE NOT INSTALLED WITH MAINLINE ON AS-BUILT DRAWINGS.

RP VERSION 02/01/18 RWF

601	CONTROL WIRE WITHOUT MAINLINE, 2-WIRE SYSTEM	
N.T.S.	BOE VERSION Jan/07	RP DETAIL L1422

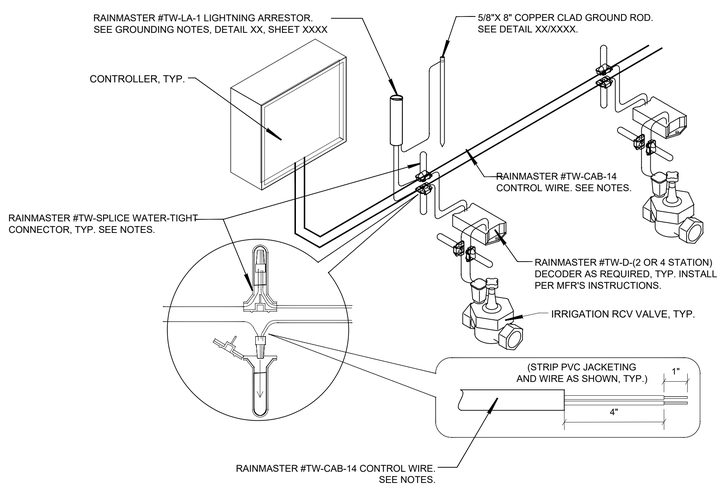

WIRING NOTES:
1.) CONTROL WIRE SHALL BE RAINMASTER #TW-CAB-14 OR APPROVED EQUAL: POLYETHYLENE DOUBLE-JACKETED OR UF-B UL PVC DOUBLE-JACKETED TWO-CONDUCTOR SOLID CORE DESIGNED FOR DIRECT BURIAL WITH INSULATION 3/16 INCH (.060Ó) THICK, HIGH DENSITY, SUNLIGHT RESISTANT INCASED IN AN OUTER JACKET OF POLYETHYLENE OR PVC CONFORMING TO ICEA S-GL-402 OR NEMA WC5, HAVING A MINIMUM WALL THICKNESS OF .045 INCHES. (TWO-WIRE POLYETHYLENE "TWISTED" CABLE OR SINGLE STRAND 14-GAUGE PVC IRRIGATION WIRE DOES NOT CONFORM TO THESE SPECIFICATIONS AND WILL NOT BE ACCEPTED).

2.) ALL WIRE INSULATION SHALL BE INTACT AND FREE OF NICKS AND CUTS

3.) ATTACHING DECODERS:

- TWIST WIRES TO PROVIDE A SOLID MECHANICAL CONNECTION BEFORE SECURING THE ATTACHMENT BY ADDING THE WIRE NUT.
- RAINMASTER #TW-SPLICE-14 OR APPROVED EQUAL (SURESPLICE, TRADEMARKED) GEL FILLED CONNECTORS (OR SIMILAR) SHALL BE USED ON ALL CONNECTIONS.
- GREASE FILLED WIRE NUTS WILL NOT BE ACCEPTED.
- TEST ALL CONNECTIONS BEFORE IMMERSING THE WIRE NUT IN THE GEL-FILLED CAP.
- ADHERE TO ALL LOCAL AND NATIONAL BUILDING AND ELECTRICAL CODES.
- CONTRACTOR SHALL GUARANTEE ALL WIRE CONNECTIONS TO BE ABSOLUTELY WATER TIGHT.

4.) ALL EQUIPMENT SHALL BE INSTALLED PER THE MANUFACTURER'S SPECIFICATIONS.

603	2-WIRE IRRIGATION SYSTEM WIRING (RAINMASTER OR EQUAL)
N.T.S.	

THE CITY OF LOS ANGELES OR ITS OFFICERS OR AGENTS SHALL NOT BE RESPONSIBLE FOR THE ACCURACY OR COMPLETENESS OF ELECTRONIC COPIES OF THIS PLAN SHEET.

REVISION DATES (DESIGN STAGE ONLY)

ENGINEERING
CITY OF LOS ANGELES

THIS PLAN WAS ELECTRONICALLY • SIGNED AND STAMPED •

LANDSCAPE ARCHITECT KEVIN V. HOBBS LICENSE No. 5982 REGISTERED STATE OF CALIFORNIA 08/30/2023 RENEWAL DATE 10/31/2025

BUREAU OF ENGINEERING

VERTICAL CONTROL: BENCH MARK 08-30460 (NAVD 88)
HORIZONTAL CONTROL: CALIFORNIA STATE PLANE ZONE V, 1983 NAD

SHEET TITLE: IRRIGATION DETAILS 4

PROJECT: FERNANGELES PARK STORMWATER CAPTURE PROJECT

ADDRESS: FERNANGELES RECREATION CENTER 8851 LAUREL CANYON BLVD, SUN VALLEY, CA 91352

NO.	REVISIONS	DATE	BY
		YY/MM/DD	
		YY/MM/DD	
		YY/MM/DD	
		YY/MM/DD	

CIP NO. SCP0002

INDEX NO.

CITY OF LOS ANGELES DEPARTMENT OF PUBLIC WORKS

CITY ENGINEER: TED ALLEN, P.E. — DATE 1/27/2023

DESIGN GROUP		
ENGINEER:	CDM SMITH INC.	1/27/2023
ARCHITECT:	NUVIS LANDSCAPE ARCHITECTURE	1/27/2023
DESIGNED BY:	P. CARDOZA	1/27/2023
DRAWN BY:	L. KLECKER	1/27/2023
CHECKED BY:	P. CARDOZA	1/27/2023
APPROVED BY:	A. DELLINGER	1/27/2023

WORK ORDER EW40079F

SHEET NAME LI06

SHEET 87 OF 125 SHEETS

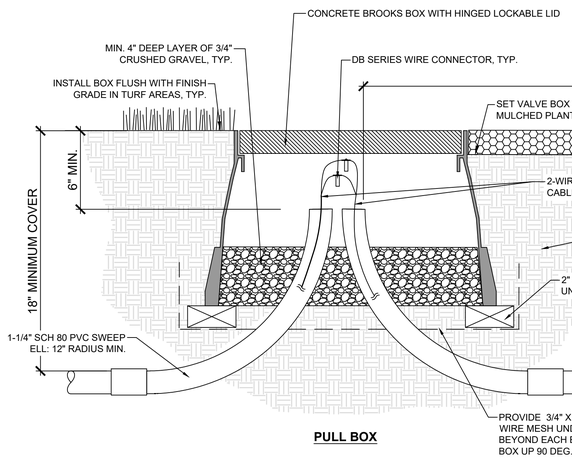

PULL BOX

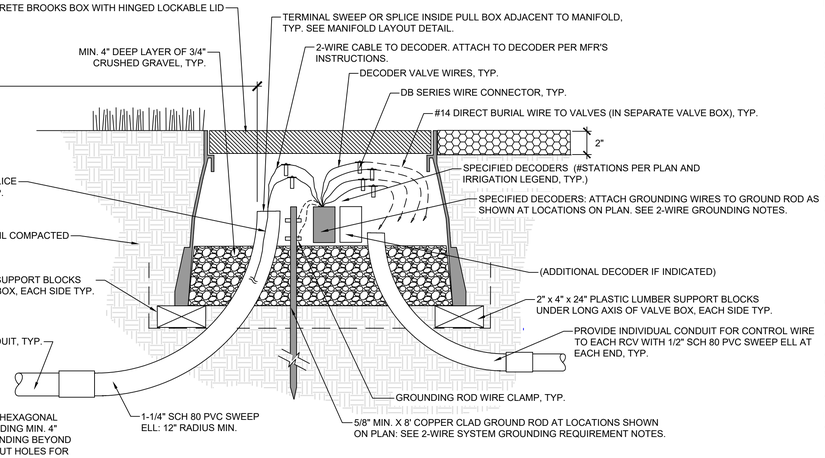

TERMINAL OR MANIFOLD BOX

701	2-WIRE CABLE INSTALLATION AND GROUNDING	
N.T.S.		RP DETAIL L1430

NOTES:

1. ALL CONDUIT AND FITTINGS SHALL BE SCHEDULE 80 PVC. CHANGES IN DIRECTION OF CONDUIT PATH SHALL NOT EXCEED 360 DEG. FOR EACH SECTION BETWEEN PULL BOXES.
2. MAXIMUM DISTANCE BETWEEN PULL BOXES SHALL BE 200 FEET.
3. MAXIMUM LENGTH OF SECONDARY WIRE PATH (14 AWG) FROM FIELD DECODER TO SOLENOID IS 450 FEET.
4. PROVIDE A COIL OF MIN. 24" OF 2-WIRE CABLE AT EACH SPLICE OR DECODER CONNECTION POINT.

TWO-WIRE SYSTEM GROUNDING REQUIREMENTS:

SURGE PROTECTION USING PROPER GROUNDING RODS IS REQUIRED FOR PROTECTION AGAINST SURGE DAMAGE DUE TO LIGHTNING OR OTHER ELECTRICAL SURGE EVENTS. CONFORMANCE TO THIS SURGE SUPPRESSION SPECIFICATION IS NECESSARY TO RETAIN WARRANTY PROTECTION UNDER MANUFACTURER'S WARRANTY TERMS.

THE INSTALLATION SHALL CONFORM TO MANUFACTURER'S INSTRUCTIONS, AND MUST MEET OR EXCEED THE AMERICAN SOCIETY OF IRRIGATION CONSULTANTS (ASIC) EARTH GROUNDING GUIDELINE 100-2002.
HTTP://WWW.ASIC.ORG/UPLOADS/ASSETS/011007_121320_ASIC_GROUNDING_GUIDELINES.DOC

GROUND RODS AS REFERRED TO IN THIS SPECIFICATION SHALL CONFORM TO THE FOLLOWING STANDARDS:

1.) ALL GROUNDING RODS SHALL BE BARE COPPER OF 5/8" DIAMETER OR GREATER, AND 8' LENGTH OR GREATER.

2.) A MEASURED RESISTANCE READING OF NO MORE THAN 10 OHMS IS NECESSARY AT EACH LIGHTNING ARRESTOR. ASIC SPEC: SECTION 7.0 - MEASURING RESISTANCE, ITEM A.

GROUND RODS SHALL BE LOCATED AT A MINIMUM DISTANCE TO ASSURE THAT THE TWO-WIRE PATH IS OUTSIDE OF THE ELECTRODE SPHERE OF INFLUENCE FOR THE GROUNDING ROD: THE GROUND ROD MUST BE CONNECTED AT LEAST 8' AWAY FROM THE TWO-WIRE PATH, AT A RIGHT ANGLE TO THE TWO-WIRE PATH.

UNDER NO CIRCUMSTANCES SHOULD A GROUND ROD BE INSTALLED IN OR UNDER A VALVE BOX, METER BOX OR ELECTRICAL BOX.

CONNECTIONS TO GROUNDING RODS:
ALL CONNECTIONS TO GROUND RODS SHALL CONFORM TO ASIC EARTH GROUNDING GUIDELINE 100-2002, AND SHALL CONSIST OF A SCREW CLAMP TYPE OF CONNECTION.

ANY WIRE EXTENSIONS REQUIRED TO CONNECT FROM A GROUND ROD TO A LIGHTNING ARRESTOR OR ENCLOSURE GROUND LUG SHALL BE BARE COPPER, AND SHALL NOT HAVE ANY SHARP BENDS OR KINKS. WIRE EXTENSIONS CONNECTED TO LIGHTNING ARRESTORS SHALL USE A CADWELD TYPE OR SCREW CLAMP TYPE CONNECTION WHERE THE BARE COPPER GROUND WIRE MEETS THE GREEN GROUNDING WIRE FROM THE LIGHTNING ARRESTOR.

THE CITY OF LOS ANGELES OR ITS OFFICERS OR AGENTS SHALL NOT BE RESPONSIBLE FOR THE ACCURACY OR COMPLETENESS OF ELECTRONIC COPIES OF THIS PLAN SHEET.

REVISION DATES (DESIGN STAGE ONLY)

ENGINEERING
CITY OF LOS ANGELES

THIS PLAN WAS ELECTRONICALLY • SIGNED AND STAMPED •

LANDSCAPE ARCHITECT ★ REGISTERED ★ No. 5982 ★ KEVIN L. STRONG ★ STATE OF CALIFORNIA
EXPIRATION DATE: 08/31/2024

BUREAU OF ENGINEERING

VERTICAL CONTROL: BENCH MARK (08-30460) NAVD 88
HORIZONTAL CONTROL: CALIFORNIA STATE PLANE ZONE V, 1983 NAD

SHEET TITLE: IRRIGATION DETAILS 5

PROJECT: FERNANGELES PARK STORMWATER CAPTURE PROJECT

ADDRESS: FERNANGELES RECREATION CENTER
8851 LAUREL CANYON BLVD, SUN VALLEY, CA 91352

NO.	REVISIONS	DATE	BY
		YY/MM/DD	
		YY/MM/DD	
		YY/MM/DD	
		YY/MM/DD	

CIP NO. SCP0002

INDEX NO.

CITY OF LOS ANGELES DEPARTMENT OF PUBLIC WORKS BOARD OF

CITY ENGINEER: TED ALLEN, P.E. DATE 1/27/2023

DESIGN GROUP		DATE
ENGINEER:	CDM SMITH INC.	1/27/2023
ARCHITECT:	NUVIS LANDSCAPE ARCHITECTURE	1/27/2023
DESIGNED BY:	P. CARDOZA	1/27/2023
DRAWN BY:	L. KLECKER	1/27/2023
CHECKED BY:	P. CARDOZA	1/27/2023
APPROVED BY:	A. DELLINGER	1/27/2023

WORK ORDER
EW40079F

SHEET NAME
LI07

SHEET 88 OF 125 SHEETS

CONTROLLER SCHEDULE

IRRIGATION CONTROLLER SCHEDULE- ESTABLISHMENT PERIOD

DATE: 2/24/2021
PROJECT: Fernangeles Recreation Center
CLIENT: City of Los Angeles
PREPARED BY NUVIS

CITY: Los Angeles
WUCOLS ZONE: Los Angeles

REVISION HISTORY:
REVISED BY:

CONTROLLER 'H'

E.T. DATA

	JAN	FEB	MAR	APR	MAY	JUN	JUL	AUG	SEP	OCT	NOV	DEC
MONTHLY	2.80	2.80	4.10	5.60	6.00	6.80	7.60	7.80	5.80	5.20	3.70	3.20
WEEKLY	0.65	0.65	0.95	1.30	1.40	1.58	1.77	1.81	1.35	1.21	0.86	0.74
DAILY	0.09	0.10	0.13	0.19	0.19	0.23	0.25	0.25	0.19	0.17	0.12	0.10

SCHEDULING DATA

%of ET	Efficiency Rate	Days Per Week
1.25	0.81	6

IRRIGATION SCHEDULE- MINUTES PER DAY

STATION	JAN	FEB	MAR	APR	MAY	JUN	JUL	AUG	SEP	OCT	NOV	DEC
TURF	7	7	10	13	14	16	18	19	14	12	9	8

STATION	PRECIP. RATE	CROP COEF.
	1.21	0.8

IRRIGATION CONTROLLER SCHEDULE- ESTABLISHED

DATE: 2/24/2021
PROJECT: Fernangeles Recreation Center
CLIENT: City of Los Angeles
PREPARED BY NUVIS

CITY: Los Angeles
WUCOLS ZONE: Los Angeles

REVISION HISTORY:
REVISED BY:

CONTROLLER 'H'

E.T. DATA

	JAN	FEB	MAR	APR	MAY	JUN	JUL	AUG	SEP	OCT	NOV	DEC
MONTHLY	2.80	2.80	4.10	5.60	6.00	6.80	7.60	7.80	5.80	5.20	3.70	3.20
WEEKLY	0.65	0.65	0.95	1.30	1.40	1.58	1.77	1.81	1.35	1.21	0.86	0.74
DAILY	0.09	0.10	0.13	0.19	0.19	0.23	0.25	0.25	0.19	0.17	0.12	0.10

SCHEDULING DATA

%of ET	Efficiency Rate	Days Per Week
1	0.81	3

IRRIGATION SCHEDULE- MINUTES PER DAY

STATION	JAN	FEB	MAR	APR	MAY	JUN	JUL	AUG	SEP	OCT	NOV	DEC
TURF	11	11	16	22	23	26	29	30	22	20	14	12

STATION	PRECIP. RATE	CROP COEF.
	1.21	0.8

WATER EFFICIENT LANDSCAPE WORKSHEET

California Water Efficient Landscape Worksheet

Reference Evapotranspiration (ET_o)		61.5	Project Type		Non-Residential		0.45
Hydrozone # / Planting Description[a]	Plant Factor (PF)	Irrigation Method[b]	Irrigation Efficiency (IE)[c]	ETAF (PF/IE)	Landscape Area (Sq. Ft.)	ETAF x Area	Estimated Total Water Use (ETWU)[d]
Regular Landscape Areas							
TURF AREA (SLA)	0	Overhead	0.75	0.00	218144	0	0
TREE BUBBLER	0.5	Overhead	0.75	0.67	1500	1000	38130
SHRUB AREA	0.2	Overhead	0.75	0.27	3884	1036	39493
			0.75	0.00		0	0
			0.75	0.00		0	0
			0.75	0.00		0	0
			0.75	0.00		0	0
			0.75	0.00		0	0
			0.75	0.00		0	0
			0.75	0.00		0	0
			0.75	0.00		0	0
			0.75	0.00		0	0
			0.75	0.00		0	0
			0.75	0.00		0	0
			0.75	0.00		0	0
			0.75	0.00		0	0
			0.75	0.00		0	0
			0.75	0.00		0	0
			0.75	0.00		0	0
			0.75	0.00		0	0
			0.75	0.00		0	0
			0.75	0.00		0	0
			0.75	0.00		0	0
			0.75	0.00		0	0
			0.75	0.00		0	0
			0.75	0.00		0	0
			0.75	0.00		0	0
			0.75	0.00		0	0
			0.75	0.00		0	0
			0.75	0.00		0	0
				Totals	223528	2036	77623
Special Landscape Areas							
	[redacted]			1		0	0
				1		0	0
				Totals	0	0	0
						ETWU Total	77623
						Maximum Allowed Water Allowance (MAWA)[e]	3835405

WATER CONSERVATION NOTES

1. THE IRRIGATION IS SUPPLIED BY A POTABLE WATER CONNECTIONS.
2. LOCKS SHALL BE INSTALLED ON ALL PUBLICLY ACCESSIBLE EXTERIOR FAUCETS AND HOSE BIBS.
3. A FINAL REPORT FOR THE TESTING AND ADJUSTING OF ALL NEW SYSTEMS SHALL BE COMPLETED PRIOR TO FINAL APPROVAL BY THE FIELD INSPECTOR. THIS REPORT SHALL BE SIGNED BY THE INDIVIDUAL RESPONSIBLE FOR PERFORMING THESE SERVICES.
4. THERE IS NO SPECIAL LANDSCAPE AREA (SLA) AS PART OF THESE PLANS
5. RECIRCULATING WATER SYSTEMS SHALL BE USED FOR WATER FEATURES.
6. PRESSURE REGULATING DEVICES ARE REQUIRED IF WATER PRESSURE IS BELOW OR EXCEEDS THE RECOMMENDED PRESSURE OF THE SPECIFIED IRRIGATION DEVICES.
7. CHECK VALVES OR ANTI-DRAIN VALVES ARE REQUIRED ON ALL SPRINKLER HEADS WHERE LOW POINT DRAINAGE COULD OCCUR.
8. A DIAGRAM OF THE IRRIGATION PLAN SHOWING HYDROZONES SHALL BE KEPT WITH THE IRRIGATION CONTROLLER FOR SUBSEQUENT MANAGEMENT PURPOSES.
9. A CERTIFICATE OF COMPLETION SHALL BE FILLED OUT AND CERTIFIED BY EITHER THE SIGNER OF THE LANDSCAPE PLANS, THE SIGNER OF THE IRRIGATION PLANS, OR THE LICENSED LANDSCAPE CONTRACTOR FOR THE PROJECT.
10. AN IRRIGATION AUDIT REPORT SHALL BE COMPLETED AT THE TIME OF FINAL INSPECTION.
11. AT THE TIME OF FINAL INSPECTION, THE PERMIT APPLICANT MUST PROVIDE THE OWNER OF THE PROPERTY WITH A CERTIFICATE OF COMPLETION, CERTIFICATE OF INSTALLATION, IRRIGATION SCHEDULE AND A SCHEDULE OF LANDSCAPE AND IRRIGATION MAINTENANCE.
12. A FINAL REPORT FOR THE TESTING AND ADJUSTING OF ALL NEW SYSTEMS SHALL BE COMPLETED PRIOR TO FINAL APPROVAL BY THE FIELD INSPECTOR. THIS REPORT SHALL BE SIGNED BY THE INDIVIDUAL RESPONSIBLE FOR PREFORMING THESE SERVICES.
13. AN OPERATIONS AND SYSTEMS MANUAL SHALL BE PROVIDED TO THE OWNER OR REPRESENTATIVE AND TO THE FIELD INSPECTOR AT THE TIME OF FINAL INSPECTION.

THE PORTIONS OF THE PLANS REGARDING IRRIGATION DESIGN ASPECTS OF THE PROJECT HAVE BEEN REVIEWED AND APPEAR TO BE IN SUBSTANTIAL CONFORMANCE WITH THE RECOMMENDATIONS CONTAINED IN THE CURRENT CITY OF TUSTIN AND STATE MODEL WATER EFFICIENT LANDSCAPE ORDINANCE. WE MAKE NO REPRESENTATIONS OF THE ACCURACY OF THE DIMENSIONS, MEASUREMENTS, CALCULATIONS OR ANY PORTION OF THE DESIGN.

"I HAVE COMPLIED WITH THE CRITERIA OF THE ORDINANCE AND APPLIED THEM ACCORDINGLY FOR THE EFFICIENT USE OF WATER IN THE IRRIGATION DESIGN PLAN."

BY: NUVIS — DATE: 10/31/2022
RLA # 3943
EXP. 12/31/23

I AGREE TO COMPLY WITH THE REQUIREMENTS OF THE WATER EFFICIENT LANDSCAPE ORDINANCE AND SUBMIT A COMPLETE LANDSCAPE DOCUMENT PACKAGE.

BY: NUVIS — DATE: 10/31/2022
RLA # 3943
EXP. 12/31/23

LANDSCAPE QUANTITIES

LOW WATER USE LANDSCAPE AREA (SPRAY IRRIGATION):	3.884 S.F.	(01.73%)
MEDIUM WATER USE LANDSCAPE AREA (BUBBLER IRRIGATION):	1.500 S.F.	(00.67%)
SLA WATER USE LANDSCAPE AREA (TURF IRRIGATION):	218,144 S.F.	(97.60%)
TOTAL:	223,528 S.F.	(100%)

THE CITY OF LOS ANGELES OR ITS OFFICERS OR AGENTS SHALL NOT BE RESPONSIBLE FOR THE ACCURACY OR COMPLETENESS OF ELECTRONIC COPIES OF THIS PLAN SHEET.

REVISION DATES (DESIGN STAGE ONLY)

ENGINEERING
CITY OF LOS ANGELES

THIS PLAN WAS ELECTRONICALLY • SIGNED AND STAMPED

LANDSCAPE ARCHITECT — REGISTERED — STATE OF CALIFORNIA — 3943 — RENEWAL 08/31/2024

BUREAU OF ENGINEERING

VERTICAL CONTROL: BENCH MARK (08-30460) NAVD 88
HORIZONTAL CONTROL: CALIFORNIA STATE PLANE ZONE V, 1983 NAD

SHEET TITLE: IRRIGATION CALCULATIONS

PROJECT: FERNANGELES PARK STORMWATER CAPTURE PROJECT

ADDRESS: FERNANGELES RECREATION CENTER
8851 LAUREL CANYON BLVD, SUN VALLEY, CA 91352

NO.	REVISIONS	DATE	BY
		YY/MM/DD	
		YY/MM/DD	
		YY/MM/DD	
		YY/MM/DD	

CIP NO. SCP0002

INDEX NO.

CITY OF LOS ANGELES DEPARTMENT OF PUBLIC WORKS

CITY ENGINEER: TED ALLEN, P.E. — DATE: 1/27/2023

DESIGN GROUP		DATE
ENGINEER:	CDM SMITH INC.	1/27/2023
ARCHITECT:	NUVIS LANDSCAPE ARCHITECTURE	1/27/2023
DESIGNED BY:	P. CARDOZA	1/27/2023
DRAWN BY:	L. KLECKER	1/27/2023
CHECKED BY:	P. CARDOZA	1/27/2023
APPROVED BY:	A. DELLINGER	1/27/2023

WORK ORDER
EW40079F

SHEET NAME
LI08

SHEET 89 OF 125 SHEETS

DESIGN CRITERIA:

CODES:
CBC-2019 (CALIFORNIA BUILDING CODE 2019)

ACI 318-14 (BUILDING CODE REQUIREMENTS FOR STRUCTURAL CONCRETE)

ACI 350-06 (CODE REQUIREMENTS FOR ENVIRONMENTAL ENGINEERING CONCRETE STRUCTURES)

DESIGN LOADS:

DEAD LOADS:
INCLUDE WEIGHT OF ALL MATERIALS OF CONSTRUCTION

LIVE LOADS:

TOP SLABS	200	PSF (NON-REDUCIBLE)

RISK CATEGORY III

WIND DESIGN DATA:

BASIC WIND SPEED V_{ULT}	101	MPH (ULTIMATE)
V_{ASD}	78	MPH (ALLOWABLE)
EXPOSURE CATEGORY	C	

SEISMIC DESIGN DATA:

SOIL SITE CLASS	D
MAPPED SPECTRAL RESPONSE ACCELERATIONS	
SHORT PERIOD	Ss = 2.042g
ONE SECOND PERIOD	S1 = 0.699g
SPECTRAL RESPONSE COEFFICIENTS	
SHORT PERIOD	Sds = 1.469g
ONE SECOND PERIOD	Sd1 = 1.201g
SEISMIC DESIGN CATEGORY	D
SEISMIC IMPORTANCE FACTOR	Ie = 1.25

SNOW:

GROUND SNOW LOAD Pg	0 PSF (NON-REDUCIBLE)

FOUNDATIONS:

FOR GEOTECHNICAL INFORMATION, REFER TO "STORMWATER CAPTURE PARKS PROGRAM – FERNANGELES RECREATION CENTER GEOTECHNICAL INVESTIGATION" DATED AUGUST 31ST, 2020 BY NINYO & MOORE IRVINE, CA

ALLOWABLE BEARING PRESSURE = 4000 PSF (MAT FOUNDATION)
1/3 INCREASE IN BEARING PRESSURE FOR SHORT TERM LOADING IS ALLOWED

ALL EXTERIOR FOUNDATIONS SHALL EXTEND TO A DEPTH = 18"

LATERAL SOIL PRESSURES:
AT-REST = 57 PSF
PASSIVE = 300 PSF
SEISMIC = 48*H PSF (TRIANGULAR - WHERE H IS HEIGHT OF SOIL)
SURCHARGE COEFFICIENT = 0.47
STRUCTURAL FILL COMPACTION = 90% (ASTM D1557)

FOUNDATION PREPARATION:

FOUNDATION SHALL BE PLACED ON A MINIMUM OF 2 FT OF NEW STRUCTURAL FILL.
SEE CIVIL DRAWINGS FOR STRUCTURAL FILL AND OVER EXCAVATION REQUIREMENTS.

SEISMIC REQUIREMENTS - NON-STRUCTURAL COMPONENTS:

IN ACCORDANCE WITH THE REQUIREMENTS OF THE CBC AND BY REFERENCE ASCE 7-16, ALL MECHANICAL, ELECTRICAL AND NON-STRUCTURAL COMPONENTS AND EQUIPMENT AND ANCHORAGES SHALL BE DESIGNED IN ACCORDANCE WITH THE REQUIREMENTS OF SECTION 13 OF ASCE 7 WITH A COMPONENT IMPORTANCE FACTOR Ip=1.0

FOR THIS PURPOSE, ALL COMPONENTS AND EQUIPMENT SHALL BE CONSIDERED TO HAVE THE SAME SEISMIC DESIGN CATEGORY AS THAT OF THE STRUCTURE THEY OCCUPY.

GENERAL CONDITIONS:

ALL STRUCTURAL DRAWINGS SHALL BE USED IN CONJUNCTION WITH THE OTHER PROJECT DRAWINGS AND SPECIFICATIONS.

SEE MECHANICAL, ELECTRICAL, AND CIVIL DRAWINGS FOR ANCHORS, PIPE SLEEVES, CONDUITS OR OTHER ITEMS TO BE EMBEDDED IN OR PASS THROUGH THE STRUCTURE MEMBERS. IN GENERAL, EMBEDMENTS AND PENETRATIONS LESS THAN 12 INCHES IN DIAMETER ARE NOT SHOWN ON STRUCTURAL DRAWINGS.

STANDARD DETAILS SHALL BE USED AT ALL APPLICABLE LOCATIONS, UNLESS NOTED OTHERWISE ON DRAWINGS.

SEE CIVIL SITE PLANS FOR STRUCTURE LOCATION COORDINATES.

FIELD VERIFY ALL EXISTING DIMENSIONS PRIOR TO CONSTRUCTION.

WRITTEN DIMENSIONS SHALL TAKE PRECEDENCE OVER SCALED SIZES.

CONSTRUCTION NOTES:

TEMPORARY SHORING SHALL NOT BE REMOVED UNTIL THE FULL STRENGTH (f'c) ACHIEVED.

PRIOR TO INSTALLATION OF EQUIPMENT COORDINATE AND CONFIRM THE ANCHORAGE REQUIREMENTS WITH THE MANUFACTURER. THE ANCHORAGE SYSTEM SHALL NOT DAMAGE THE CONCRETE.

CONTRACTOR SHALL VERIFY ALL DIMENSIONS IN THE FIELD. THE ENGINEER SHALL BE NOTIFIED OF ANY DISCREPANCY BETWEEN DRAWINGS IMMEDIATELY UPON DISCOVERY.

CAST-IN-PLACE CONCRETE:

REINFORCED CONCRETE SHALL CONFORM TO ACI 318, ACI 350, ACI 301 & ACI 350.5.

REINFORCING STEEL FABRICATION SHALL BE IN ACCORDANCE WITH THE LATEST EDITION OF THE CRSI MANUAL OF STANDARD PRACTICE.

ALL EXPOSED CORNERS OF CONCRETE SHALL HAVE 3/4" CHAMFER, UNLESS OTHERWISE NOTED.

WALL REINFORCEMENT AT CORNERS OR JUNCTIONS OF WALLS SHALL BE CONTINUOUS, LAPPED, OR TERMINATED IN AN ACI STANDARD 90 DEGREE STANDARD HOOK DETAIL. LAP SPLICES SHALL CONFORM WITH THE TABLE ON THE STANDARD DETAIL SHEETS.

UNLESS OTHERWISE INDICATED ON THE DRAWINGS, BARS SHALL BE DOWELED. DOWELS SHALL BE THE SAME SIZE AND SPACING AS THE REINFORCEMENT WHICH IS SPLICED UNLESS OTHERWISE NOTED.

SLAB, BEAM, AND COLUMN REINFORCING BARS SHALL HAVE A MINIMUM EXTENSION OR ANCHORAGE INTO SUPPORTS IN ACCORDANCE WITH ACI 318 AND ACI 350.

STIRRUP SUPPORT BARS SHALL BE PROVIDED AS REQUIRED TO SECURE TOP BARS AGAINST DISPLACEMENT.

UNLESS OTHERWISE INDICATED ON THE DRAWINGS, CONCRETE COVER OVER #11 AND SMALLER REINF BARS SHALL BE AS FOLLOWS:

SLABS:
FORMED CONCRETE SURFACES AND UNFORMED TOP SURFACES FOR DRY CONDITIONS.....2"
FORMED CONCRETE SURFACES AND UNFORMED TOP SURFACES EXPOSED TO WEATHER, IN CONTACT WITH SOIL OR FLUIDS, OR LOCATED OVER FLUIDS.....2"
AT UNFORMED CONCRETE SURFACES CAST AGAINST THE SOIL OR CONCRETE WORK MATS..... 3"
BEAMS:
FORMED CONCRETE SURFACES FOR DRY CONDITIONS:
STIRRUPS, SPIRALS AND TIES.....2"
PRINCIPAL REINFORCEMENT.....2 1/2"
FORMED CONCRETE SURFACES EXPOSED TO WEATHER, IN CONTACT WITH SOIL OR FLUIDS, OR BEAMS LOCATED OVER FLUIDS:
STIRRUPS AND TIES.....2"
PRINCIPAL REINFORCEMENT.....2 1/2"
WALLS:
FORMED CONCRETE SURFACES FOR DRY CONDITIONS..... 2"
FORMED CONCRETE SURFACES EXPOSED TO WEATHER OR IN CONTACT WITH SOIL OR FLUIDS.....2"

CONCRETE COVER IS THE LEAST DISTANCE BETWEEN EMBEDDED REINFORCEMENT AND THE SURFACE OF THE CONCRETE. THE SURFACE OF THE CONCRETE IS THE BOTTOM OF RUSTICATION OR REVEAL STRIPS WHEN USED.

NO BACKFILL SHALL BE PLACED AGAINST WALLS UNTIL CONCRETE HAS REACHED THE SPECIFIED STRENGTH AND ALL CONNECTING SLABS AND BEAMS PROVIDING SUPPORT TO THE WALLS HAVE BEEN CAST AND HAVE REACHED THE SPECIFIED STRENGTH. BACKFILL MATERIALS AND TECHNIQUE SHALL FOLLOW THE GEOTECHNICAL REPORT RECOMMENDATIONS.

CONCRETE ANCHORS AND POST-INSTALLED REBAR:

CONTRACTOR SHALL LOCATE EXISTING REINFORCING USING NON-DESTRUCTIVE METHODS PRIOR TO DRILLING HOLES FOR ADHESIVE AND EXPANSION ANCHORS. ADJUST SPACING OF ANCHORS TO MISS REINFORCING AND SUBMIT FOR APPROVAL OF THE ENGINEER.

ADHESIVE FOR EMBEDDED DOWELS AND ANCHORS IN CONCRETE SHALL BE HILTI HIT-HY-200 (ICC EVALUATION REPORT 3187), OR APPROVED EQUAL. ALL DRILLED HOLES SHALL BE SIZED ACCORDING TO MANUFACTURER'S RECOMMENDATIONS.

EXPANSION ANCHORS IN CONCRETE SHALL BE HILTI KWIK BOLT TZ, (ICC EVALUATION REPORT 1917) OR APPROVED EQUAL.

CONCRETE JOINTS:

CONSTRUCTION JOINTS SHALL NOT BE PLACED AT LOCATIONS OTHER THAN THOSE SHOWN ON THE DRAWINGS WITHOUT THE PRIOR WRITTEN APPROVAL OF THE ENGINEER.

CONSTRUCTION JOINTS AND SURFACES SHALL BE PREPARED IN ACCORDANCE WITH SPECIFICATIONS.

MISCELLANEOUS METALS:

ANCHORS AND FASTENERS FOR ALUMINUM CONSTRUCTION SHALL BE TYPE 316 STAINLESS STEEL UNLESS NOTES OTHERWISE.

ALL ANGLE FRAMES ARE TO BE MITERED AND WELDED OR MOLDED AT CORNERS.

HOT-DIP GALVANIZING, SHOP PAINTING AND FIELD PAINTING, WHERE REQUIRED, SHALL BE IN ACCORDANCE WITH THE SPECIFICATIONS.

PROVIDE ANTI-SEIZE COMPOUND FOR STAINLESS STEEL OR ALUMINUM HARDWARE.

TYPICAL STRUCTURAL MATERIALS:

SEE PROJECT SPECIFICATIONS AND NOTES ON DRAWINGS FOR INDIVIDUAL STRUCTURES FOR DETAILED OR SPECIAL REQUIREMENTS.

CONCRETE
STRUCTURAL CONCRETE: f'c = 4500 PSI
SITE WORK CONCRETE, INCLUDING FILL DUCT ENCASEMENT AND MISC. CIVIL STRUCTURES, WHERE NOTED: f'c = 3000 PSI
REINFORCING STEEL: ASTM A615, GRADE 60 (Fy = 60,000 PSI)
CEMENT: ASTM C150, TYPE II

STRUCTURAL STEEL:
MISC PLATES AND BARS - ASTM A36
ANCHOR RODS: ASTM F1554, 3/4" MINIMUM UNO (Fy 36 KSI)
WELDING ELECTRODES: E70XX (Ft = 70 KSI)

STRUCTURAL ALUMINUM:
ALLOY: 6061-T6
SHAPES: ASTM B308
SHEET: ASTM B209
BOLTS, NUTS AND WASHERS: TYPE 316 STAINLESS STEEL OR TYPE 2024-T4
WELDING FILLER MATERIAL: 5356

ABBREVIATIONS:

ABBREVIATIONS AND DESIGNATIONS FOR STEEL MEMBERS MAY BE FOUND IN THE CURRENT MANUAL OF STEEL CONSTRUCTION MANUAL BY AISC.

ABBREVIATIONS OF TECHNICAL SOCIETIES AND TRADE ASSOCIATIONS MAY BE FOUND IN THE SPECIFICATIONS.

WELDING SYMBOLS AND ABBREVIATIONS MAY BE FOUND IN AWS 2.4.

&	AND
@	AT
	DIAMETER
#	NUMBER
AB	ANCHOR BOLT
ABV	ABOVE
ADDL	ADDITIONAL
AGG	AGGREGATE
AL	ALUMINUM
ALT	ALTERNATE (ING)
APPROX	APPROXIMATE (LY)
ARCH	ARCHITECT (URAL) (URE)
B TO B	BACK TO BACK
BEV	BEVEL (ED)
BLK	BLOCK
BLKG	BLOCKING
BOT	BOTTOM
BRG	BEARING
C TO C	CENTER TO CENTER
CIRC	CIRCUMFERENTIAL
CJ	CONSTRUCTION JOINT
℄ OR CL	CENTERLINE
CLJ	CONTROL JOINT
CLR	CLEAR
COL	COLUMN
COMP	COMPRESSIBLE
CONC	CONCRETE
CONN	CONNECTION
CONT	CONTINUOUS
CPLG	COUPLING
CSK	COUNTERSINK
CTG	COATING
CTR	CENTER (ED)
d	PENNEY
DET	DETAIL
DIA	DIAMETER
DIAG	DIAGONAL
DIR	DIRECTION
DL	DEAD LOAD
DO	DITTO
DWG	DRAWING
DWL	DOWEL
EA	EACH
EB	EXPANSION BOLT
EF	EACH FACE
EL	ELEVATION
ELEC	ELECTRIC (AL)
EMBED	EMBEDMENT
EQ	EQUAL (LY)
EQPT	EQUIPMENT
ES	EACH SIDE
EW	EACH WAY
EXP JT	EXPANSION JOINT
EXST	EXISTING
EXT	EXTERIOR
f'c	CONCRETE COMPRESSION STRESS
FAB	FABRICATE (OR) (ED)
FD	FLOOR DRAIN
FDN	FOUNDATION
FF	FAR FACE
FIN	FINISH (ED)
FL	FLOOR
FLG	FLANGE (ED)
FT	FEET/FOOT
FTG	FOOTING/FITTING
GA	GAGE
GALV	GALVANIZED
GI	GALVANIZED IRON
GR	GRADE
GRTG	GRATING
HAS	HEADED ANCHOR STUD
HD	HEAVY DUTY
HDR	HEADER
HOR	HORIZONTAL
HP	HIGH POINT
HR	HANDRAIL
IAW	IN ACCORDANCE WITH
ID	INSIDE DIAMETER
IF	INSIDE FACE
IN	INCH
INT	INTERIOR
INVT	INVERT
JT	JOINT
KO	KNOCKOUT
L	ANGLE DESIGNATION OR LENGTH
LLH	LONG LEG HORIZONTAL
LLV	LONG LEG VERTICAL
LOC	LOCATION/LOCATED
LONG	LONGITUDINAL
LP	LOW POINT
LT	LEFT
LW	LIGHTWEIGHT
MATL	MATERIAL
MAX	MAXIMUM
MB	MACHINE BOLTS
MECH	MECHANICAL
MFD	MANUFACTURED
MFG	MANUFACTURING
MFR	MANUFACTURER
MIN	MINIMUM
MISC	MISCELLANEOUS
NF	NEAR FACE
NSG	NON-SHRINK GROUT
NTS	NOT TO SCALE
OC	ON CENTER
OD	OUTSIDE DIAMETER
OF	OUTSIDE FACE
OPNG	OPENING
OPP	OPPOSITE
OPP HD	OPPOSITE HAND
OPT	OPTIONAL
PCF	POUNDS PER CUBIC FOOT
PCJ	PARTIAL CONTRACTION JOINT
PJF	PREMOLDED JOINT FILLER
OR PL	PLATE
PLYWD	PLYWOOD
PRCST	PRECAST
PREFAB	PRE-FABRICATED
PSF	POUNDS PER SQUARE FOOT
PSI	POUNDS PER SQUARE INCH
PVMT	PAVEMENT
R	RISER (S)
RAD	RADIUS
RC	REINFORCED CONCRETE
RCP	REINFORCED CONCRETE PIPE
REF	REFERENCE/REFER
REINF	REINFORCE (D) (ING) (MENT)
REQD	REQUIRED
REV	REVISION
RLG	RAILING
RO	ROUGH OPENING
RT	RIGHT
SCHED	SCHEDULE
SCJ	SLAB CONTROL JOINT
SECT	SECTION
SFR	SYNTHETIC FIBER REINFORCED
SIM	SIMILAR
SP	SPACE (S) (D)
SPEC	SPECIFICATION/SPECIFIED
SQ	SQUARE
SST	STAINLESS STEEL
STD	STANDARD
STIF	STIFFENER
STIR	STIRRUP (S)
SYM	SYMMETRICAL
T	TREAD (S)
T&B	TOP AND BOTTOM
TF	TOP FACE
THD	THREADED
THK	THICK (NESS)
TOC	TOP OF CONCRETE
TOS	TOP OF STEEL
TOW	TOP OF WALL
TRNSV	TRANSVERSE
TSL	TOP OF SLAB
TYP	TYPICAL
UNO	UNLESS NOTED OTHERWISE
VB	VAPOR BARRIER
VERT	VERTICAL
VIF	VERIFY IN FIELD
W	WIDE FLANGE
W/	WITH
W/O	WITHOUT
WP	WORKING POINT
WS	WATERSTOP
WWF	WELDED WIRE FABRIC

DEFERRED DESIGN

THE FOLLOWING PORTIONS OF THE PROJECT ARE DEFERRED DESIGN ITEMS AND HAVE NOT BEEN DESIGNED BY THE ENGINEER OF RECORD:

a. PRECAST STRUCTURES AND CONNECTIONS
b. PIPE SUPPORTS AND ANCHORAGE
c. EQUIPMENT AND ELECTRICAL GEAR ANCHORAGE

DEFERRED DESIGN ITEMS SHALL BE SUBMITTED TO THE ENGINEER FOR REVIEW DURING THE CONSTRUCTION PHASE OF THE PROJECT.

DEFERRED DESIGN ITEMS SHALL BE STAMPED AND SEALED BY A REGISTERED CALIFORNIA CIVIL OR STRUCTURAL ENGINEER.

DEFERRED DESIGN ITEMS SHALL NOT BE ERECTED OR INSTALLED UNTIL ENGINEER OF RECORD HAS REVIEWED THE SUBMITTAL DOCUMENTS AND INDICATED THAT THEY HAVE BEEN FOUND TO BE IN GENERAL CONFORMANCE WITH THE DESIGN OF THE STRUCTURE.

LEAK TEST FOR LIQUID CONTAINING STRUCTURES

LEAK TESTING SHALL BE PREFORMED ON LIQUID CONTAINING CONCRETE BASINS IN ACCORDANCE WITH ACI 350.1. LEAK TEST SHALL BE PERFORMED PRIOR TO BACKFILLING AND WITH ROOF SLAB INSTALLED. WATER LEVEL FOR TESTING SHALL BE TO THE FOLLOWING ELEVATIONS:

a. GATE VAULT NO. 1 = EL 854.50
b. GATE VAULT NO. 2 = EL 854.00
c. GATE VAULT NO. 3 = EL 847.65
d. INLET STRUCTURE = NOT REQUIRED

THE CITY OF LOS ANGELES OR ITS OFFICERS OR AGENTS SHALL NOT BE RESPONSIBLE FOR THE ACCURACY OR COMPLETENESS OF ELECTRONIC COPIES OF THIS PLAN SHEET.

REVISION DATES (DESIGN STAGE ONLY)

ENGINEERING
CITY OF LOS ANGELES

THIS PLAN WAS ELECTRONICALLY • SIGNED AND STAMPED

REGISTERED PROFESSIONAL ENGINEER JOSHUA NIL MORRIS C 80907 CIVIL STATE OF CALIFORNIA 01/27/2023

CITY OF LOS ANGELES DEPARTMENT OF PUBLIC WORKS BUREAU OF ENGINEERING

VERTICAL CONTROL: VERTICAL CONTROL
HORIZONTAL CONTROL: HORIZ CTRL

SHEET TITLE: GENERAL STRUCTURAL NOTES

PROJECT: FERNANGELES PARK STORMWATER CAPTURE PROJECT

ADDRESS: FERNANGELES RECREATION CENTER 8851 LAUREL CANYON BLVD, SUN VALLEY, CA 91352

NO.	REVISIONS	DATE	BY
		YY/MM/DD	
		YY/MM/DD	
		YY/MM/DD	
		YY/MM/DD	

CIP NO. SCP0002

INDEX NO.

CITY ENGINEER
TED ALLEN, P.E.

DESIGN GROUP	DATE
ENGINEER: CDM SMITH INC.	01/27/2023
ARCHITECT: NA	01/27/2023
DESIGNED BY: S. SURESH	01/27/2023
DRAWN BY: P. BALA	01/27/2023
CHECKED BY: J. BAUCHMOYER	01/27/2023
APPROVED BY: J. MORRIS	01/27/2023

WORK ORDER
EW40079F

SHEET NAME
SG01

SHEET 90 OF 125 SHEETS

STRUCTURAL OBSERVATION:

STRUCTURAL OBSERVATIONS SHALL BE CONDUCTED IN ACCORDANCE WITH THE REQUIREMENTS SET FORTH IN CHAPTER 17 OF THE CBC.

IN ACCORDANCE WITH THE REQUIREMENTS OF CHAPTER 1704 OF THE CBC, THE OWNER SHALL EMPLOY A REGISTERED DESIGN PROFESSIONAL TO PERFORM STRUCTURAL OBSERVATIONS FOR SEISMIC RESISTANCE. SITE VISITS SHALL BE MADE TO OBSERVE GENERAL COMPLIANCE WITH THE APPROVED STRUCTURAL PLANS, SPECIFICATIONS AND CHANGE ORDERS. THE REGISTERED DESIGN PROFESSIONAL SHALL SUBMIT A STATEMENT IN WRITING TO THE BUILDING OFFICIAL AND OWNER STATING THAT THE SITE VISITS HAVE BEEN MADE AND IDENTIFY ANY REPORTED DEFICIENCIES THAT, TO THE BEST OF THE STRUCTURAL OBSERVER'S KNOWLEDGE, HAVE NOT BEEN RESOLVED. STRUCTURAL OBSERVATIONS DO NOT INCLUDE OR WAIVE THE INSPECTIONS REQUIRED BY SECTIONS 109, 1705 OR OTHER SECTIONS OF THE CODE.

PER CBC 1704.6, ALL CAST-IN-PLACE CONCRETE STRUCTURES ARE SUBJECT TO STRUCTURAL OBSERVATION AT A FREQUENCY OF ONCE PER STRUCTURE PER ELEMENT DURING REINFORCMENT INSTALLATION FOR EACH OF THE FOLLOWING ELEMENTS: FOUNDATIONS, WALLS, AND TOP SLABS.

SCHEDULE OF SPECIAL INSPECTIONS

1. THIS DRAWING IS PROVIDED TO OUTLINE THE MINIMUM LEVEL OF SPECIAL INSPECTIONS DURING CONSTRUCTION TO ENSURE CONFORMANCE TO THE REQUIREMENTS OF THE CONTRACT DOCUMENTS. A STATEMENT OF SPECIAL INSPECTIONS WILL BE PREPARED BY A REGISTERED DESIGN PROFESSIONAL AND SUBMITTED WITH THE BUILDING PERMIT APPLICATION.

2. SPECIAL INSPECTIONS WILL BE CONDUCTED IN ACCORDANCE WITH THE REQUIREMENTS SET FORTH IN CHAPTER 17 OF THE CALIFORNIA BUILDING CODE (CBC).

3. IN ACCORDANCE WITH THE REQUIREMENTS OF CHAPTER 17 OF THE CALIFORNIA BUILDING CODE, THE OWNER WILL PROVIDE A SPECIAL INSPECTOR (AN APPROVED AGENCY OR AGENCIES, INDEPENDENT FROM THE CONTRACTOR AND EMPLOYING QUALIFIED PERSONNEL) TO PERFORM SPECIAL INSPECTIONS IDENTIFIED IN THE STATEMENT OF SPECIAL INSPECTIONS. THE SPECIAL INSPECTOR WILL FURNISH INSPECTION REPORTS TO THE ENGINEER AND BUILDING OFFICIAL.

4. SPECIAL INSPECTIONS SHALL NOT RELIEVE THE CONTRACTOR OF RESPONSIBILITY FOR QUALITY CONTROL OF THE WORK OR FOR CONFORMANCE TO THE REQUIREMENTS OF THE CONTRACT DOCUMENTS. DETECTION, OR FAILURE TO DETECT, DEFECTS IN THE WORK SHALL NOT RELIEVE THE CONTRACTOR OF RESPONSIBILITY TO CORRECT ALL DEFECTS IN THE WORK, WHETHER DETECTED OR NOT, AND OF RESPONSIBILITY FOR CONFORMANCE TO THE REQUIREMENTS OF THE CONTRACT DOCUMENTS.

5. REMOVE AND REPLACE, OR REPAIR, DEFECTS IN THE WORK AND WORK NOT IN CONFORMANCE WITH THE REQUIREMENTS OF THE CONTRACT DOCUMENTS AT NO ADDITIONAL COST TO THE OWNER. CONTRACTOR SHALL BEAR THE COSTS FOR THE INSPECTION OF ANY REPLACED OR REPAIRED PORTIONS OF THE WORK.

6. CONTRACTOR SHALL COOPERATE WITH SPECIAL INSPECTIONS BY PROVIDING SUFFICIENT NOTICE FOR THE SCHEDULING OF PERSONNEL AND BY ALLOWING FREE AND SAFE ACCESS TO THE WORK FOR OBSERVATION, VERIFICATION, SAMPLING AND INSPECTION. PROVIDE AND PERMIT THE USE OF LADDERS, SCAFFOLDING, INCIDENTAL EQUIPMENT, AND SAFETY EQUIPMENT AS MAY BE REQUIRED TO CONDUCT SPECIAL INSPECTIONS. ALL SUCH PROVISIONS FOR FREE AND SAFE ACCESS AND EQUIPMENT SHALL BE SAFE, IN GOOD WORKING CONDITION, AND ERECTED, MAINTAINED, AND HANDLED BY QUALIFIED PERSONNEL.

7. SPECIAL INSPECTIONS DO NOT APPLY TO CONTRACTOR'S EQUIPMENT, TEMPORARY STRUCTURES USED FOR CONSTRUCTION, MEANS AND METHODS OF CONSTRUCTION, OR SITE SAFETY. CONTRACTOR SHALL REMAIN RESPONSIBLE FOR ADEQUACY AND SAFETY OF EQUIPMENT, TEMPORARY STRUCTURES USED FOR CONSTRUCTION, MEANS AND METHODS OF CONSTRUCTION AND SITE SAFETY.

STRUCTURAL LEGEND AND SYMBOLS

GRATING OR PLANK SPAN DIRECTION

EARTH FILL

UNDISTURBED EARTH

CONCRETE

EXPANSION JOINT

GROUT

GRANULAR FILL

GRATING

CHECKERED PLATE

TABLE 1 - REQUIRED SPECIAL INSPECTIONS AND TESTS OF SOILS (CBC, TABLE 1705.6)

VERIFICATION AND INSPECTION	CBC REFERENCE	INSPECTION FREQUENCY		REFERENCE STANDARD	REMARKS
		CONTINUOUS	PERIODIC		
VERIFY MATERIALS BELOW SHALLOW FOUNDATIONS ARE ADEQUATE TO ACHIEVE THE DESIGN BEARING CAPACITY	1705.6		X	CONTRACT DOCUMENTS AND GEOTECHNICAL REPORT	REFER TO THE FOLLOWING TABLES FOR ADDITIONAL RELATED SPECIAL INSPECTIONS
VERIFY EXCAVATIONS ARE EXTENDED TO PROPER DEPTH AND HAVE REACHED PROPER MATERIAL			X		
PERFORM CLASSIFICATION AND TESTING OF COMPACTED FILL MATERIALS			X		
VERIFY USE OF PROPER MATERIALS, DENSITIES AND LIFT THICKNESSES DURING PLACEMENT AND COMPACTION OF COMPACTED FILL		X			
PRIOR TO PLACEMENT OF COMPACTED FILL, INSPECT SUBGRADE AND VERIFY THAT SITE HAS BEEN PREPARED PROPERLY			X		

TABLE 2 - REQUIRED VERIFICATION AND INSPECTION OF CONCRETE CONSTRUCTION (CBC, TABLE 1705.3)

VERIFICATION AND INSPECTION	CBC REFERENCE	INSPECTION FREQUENCY		REFERENCE STANDARD
		CONTINUOUS	PERIODIC	
INSPECTION OF REINFORCING STEEL AND PLACEMENT	1705.3 1908.4		X	ACI 318: CH 20, 25.2, 25.3, 26.5.1-26.5.3
INSPECT ANCHORS CAST IN CONCRETE	1705.3		X	ACI 318: 17.8.2
INSPECT ANCHORS POST-INSTALLED IN HARDENED CONCRETE MEMBERS	1705.3			
a. ADHESIVE ANCHORS		X		ACI 318: 17.8.2.4
b. MECHANICAL ANCHORS			X	ACI 318: 17.8.2
VERIFICATION AND INSPECTION OF MECHANICAL REINFORCING STEEL COUPLING SYSTEM (WHEN SPECIFIED OR APPROVED IN WRITING). PRODUCT NAME AND MODEL NUMBER/TYPE, REINFORCING STEEL GRADE AND BAR DIAMETER(S) TO BE SPLICED. THREADED SYSTEMS: END PLUGS INSTALLED OVER INTERNALLY THREADED ENDS, INTERNAL AND EXTERNAL THREAD CONDITION AND CLEANLINESS, PROPER LENGTH OF INSERTION, AND TIGHTENED TO MANUFACTURER'S RECOMMENDED TORQUE. SET SCREW TYPE SYSTEMS: PROPER LENGTH OF INSERTION, SET SCREWS TIGHTENED TO MANUFACTURER'S RECOMMENDED TORQUE. OTHER TYPES OF MECHANICAL REINFORCING STEEL COUPLING SYSTEMS OR SUBSTITUTIONS: VERIFICATION AND INSPECTION REQUIREMENTS WILL BE ESTABLISHED BY THE ENGINEER.		X		PER ICC TEST REPORT FOR COUPLING SYSTEM
VERIFYING USE OF REQUIRED DESIGN MIX	1705.3 1904.1 1904.2 1908.2 1908.3		X	ACI 318: CH 19, 26.4.3, 26.4.4
PRIOR TO CONCRETE PLACEMENT, FABRICATE SPECIMENS FOR STRENGTH TESTS, PERFORM SLUMP AND AIR CONTENT TESTS, AND DETERMINE THE TEMPERATURE OF THE CONCRETE	1705.3 1908.10	X		ACI 318: 26.4.5, 26.12 ASTM C172 ASTM C31
INSPECT CONCRETE PLACEMENT FOR PROPER APPLICATION TECHNIQUES	1705.3 1908.6 1908.7 1908.8	X		ACI 318: 26.4.5
VERIFY MAINTENANCE OF SPECIFIED CURING TEMPERATURE AND TECHNIQUES	1705.3 1908.9		X	ACI 318: 26.10.1(b)
INSPECT FORMWORK FOR SHAPE, LOCATION AND DIMENSIONS OF THE CONCRETE MEMBER BEING FORMED	1705.3		X	ACI 318: 26.10.1(b)

THE CITY OF LOS ANGELES OR ITS OFFICERS OR AGENTS SHALL NOT BE RESPONSIBLE FOR THE ACCURACY OR COMPLETENESS OF ELECTRONIC COPIES OF THIS PLAN SHEET.

REVISION DATES (DESIGN STAGE ONLY)

BUREAU OF ENGINEERING • THIS PLAN WAS ELECTRONICALLY SIGNED AND STAMPED •

ENGINEERING CITY OF LOS ANGELES

REGISTERED PROFESSIONAL ENGINEER JONATHAN L. MORRIS C 80907 CIVIL STATE OF CALIFORNIA 01/27/2023

VERTICAL CONTROL: VERTICAL CONTROL
HORIZONTAL CONTROL: HORIZ CTRL

SHEET TITLE: SPECIAL INSPECTION

PROJECT: FERNANGELES PARK STORMWATER CAPTURE PROJECT

ADDRESS: FERNANGELES RECREATION CENTER 8851 LAUREL CANYON BLVD, SUN VALLEY, CA 91352

NO.	REVISIONS	DATE	BY
		YY/MM/DD	
		YY/MM/DD	
		YY/MM/DD	
		YY/MM/DD	

CIP NO. SCP0002

INDEX NO.

CITY OF LOS ANGELES DEPARTMENT OF PUBLIC WORKS

CITY ENGINEER: TED ALLEN, P.E. — DATE: 01/27/2023

	DESIGN GROUP	DATE
ENGINEER:	CDM SMITH INC.	01/27/2023
ARCHITECT:	NA	01/27/2023
DESIGNED BY:	S. SURESH	01/27/2023
DRAWN BY:	P. BALA	01/27/2023
CHECKED BY:	J. BAUCHMOYER	01/27/2023
APPROVED BY:	J. MORRIS	01/27/2023

WORK ORDER EW40079F

SHEET NAME SG02

SHEET 91 OF 125 SHEETS

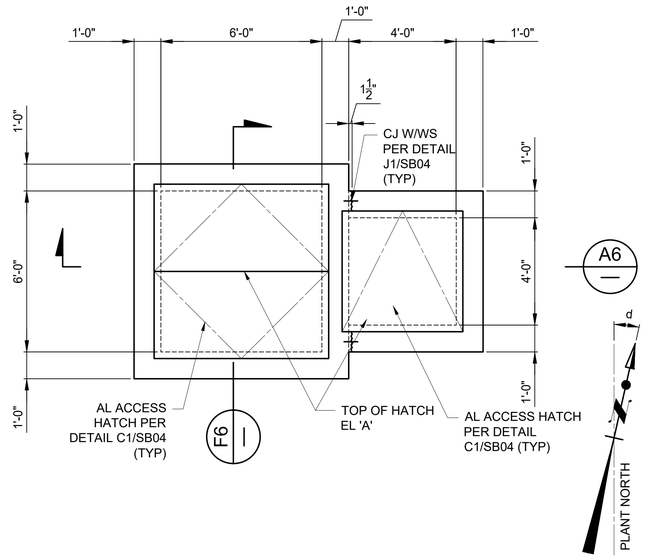

TOP PLAN
3/8"=1'-0"

2' 0 2' 4'
3/8" = 1'-0"

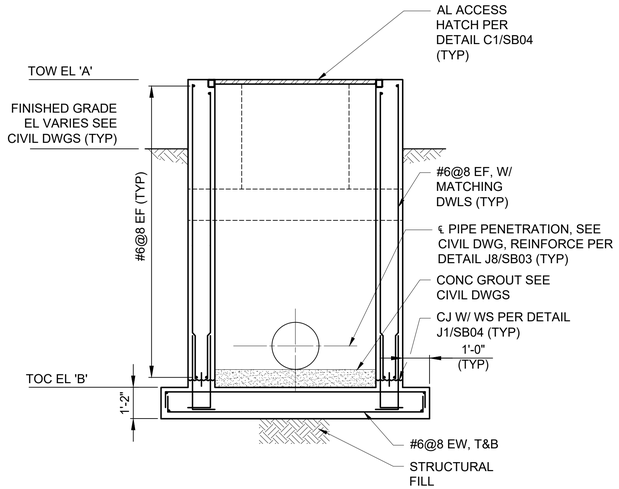

F6 SECTION
SCALE: 3/8"=1'-0"

2' 0 2' 4'
3/8" = 1'-0"

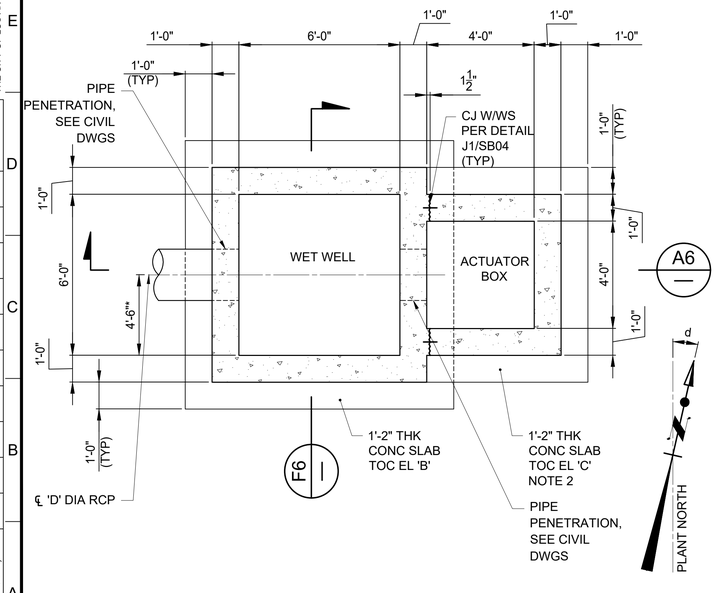

FOUNDATION PLAN
3/8"=1'-0"

2' 0 2' 4'
3/8" = 1'-0"

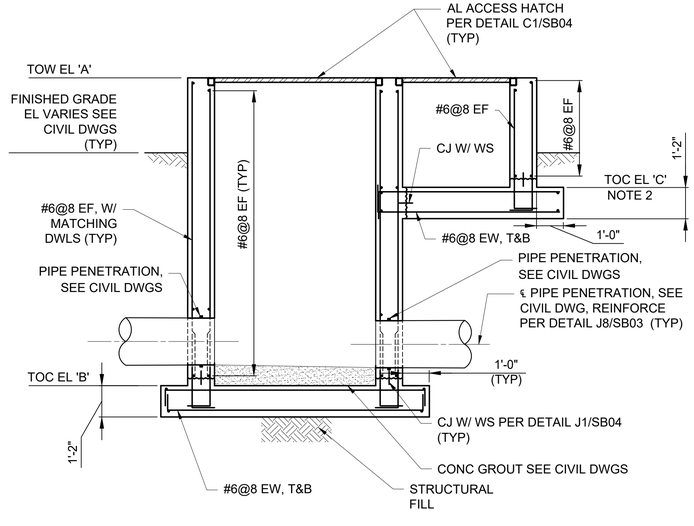

A6 SECTION
SCALE: 3/8"=1'-0"

2' 0 2' 4'
3/8" = 1'-0"

NOTE:

1. * INDICATES DIMENSIONS AND /OR INFORMATION TO BE COORDINATED BY THE CONTRACTOR WITH THE CIVIL DRAWINGS PRIOR TO FABRICATION AND CONSTRUCTION.
2. ACCESS BOX FOR GATE ACTUATOR IS DESIGNED TO BE GRADE SUPPORTED. THE WETWELL SHALL BE CONSTRUCTED, LEAK TESTED AND BACKFILLED PRIOR TO CONSTRUCTION OF ACTUATOR BOX.
3. SEE CIVIL DRAWINGS FOR STRUCTURAL FILL AND OVER EXCAVATION REQUIREMENTS.

GATE VAULT ELEVATION SCHEDULE

SL. NO	NAME	A TOP OF WALL EL	B TOP OF BASE SLAB EL	C TOP OF ACTUATOR BOX BASE SLAB EL	D PIPE DIAMETER IN INCHES	d NORTH IN ANGLE
1	GATE VAULT NO. 1	EL 854.40	EL 843.50	EL 849.40	24	77
2	GATE VAULT NO. 2	EL 854.80	EL 842.95	EL 849.80	21	13
3	GATE VAULT NO. 3	EL 847.50	EL 839.10	EL 843.50	18	77

THE CITY OF LOS ANGELES OR ITS OFFICERS OR AGENTS SHALL NOT BE RESPONSIBLE FOR THE ACCURACY OR COMPLETENESS OF ELECTRONIC COPIES OF THIS PLAN SHEET.

REVISION DATES (DESIGN STAGE ONLY)

ENGINEERING
CITY OF LOS ANGELES

REGISTERED PROFESSIONAL ENGINEER JOSHUA NIL MORRIS No. C 80907 CIVIL STATE OF CALIFORNIA 01/27/2023

THIS PLAN WAS ELECTRONICALLY • SIGNED AND STAMPED

BUREAU OF ENGINEERING

VERTICAL CONTROL: VERTICAL CONTROL:
HORIZONTAL CONTROL: HORIZ CTRL:

SHEET TITLE: GATE VAULT PLANS AND SECTIONS
PROJECT: FERNANGELES PARK STORMWATER CAPTURE PROJECT
ADDRESS: FERNANGELES RECREATION CENTER 8851 LAUREL CANYON BLVD, SUN VALLEY, CA 91352

NO.	REVISIONS	DATE	BY
		YY/MM/DD	
		YY/MM/DD	
		YY/MM/DD	
		YY/MM/DD	

CIP NO. SCP0002

INDEX NO.

CITY OF LOS ANGELES DEPARTMENT OF PUBLIC WORKS

CITY ENGINEER	DESIGN GROUP	DATE
TED ALLEN, P.E.	ENGINEER: CDM SMITH INC.	01/27/2023
	ARCHITECT: NA	01/27/2023
	DESIGNED BY: S. SURESH	01/27/2023
	DRAWN BY: P. BALA	01/27/2023
	CHECKED BY: J. BAUCHMOYER	01/27/2023
	APPROVED BY: J. MORRIS	01/27/2023

WORK ORDER EW40079F

SHEET NAME SB01

SHEET 92 OF 125 SHEETS

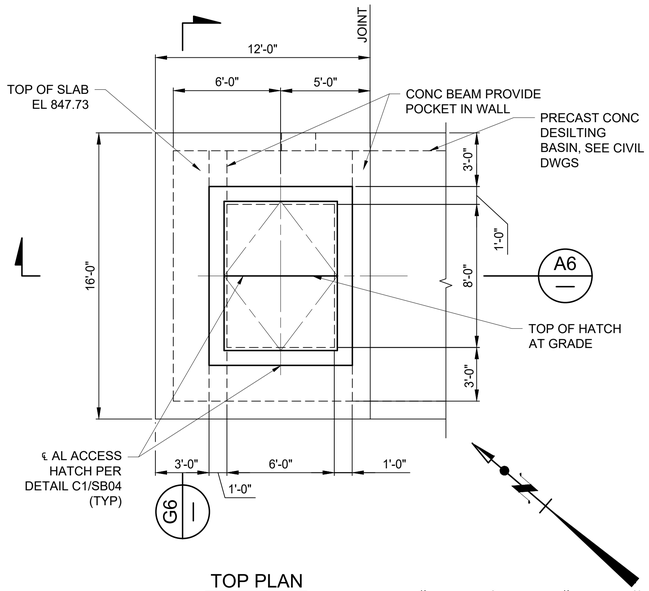

TOP PLAN
1/4"=1'-0"

4' 0 4' 8'
¼" = 1'-0"

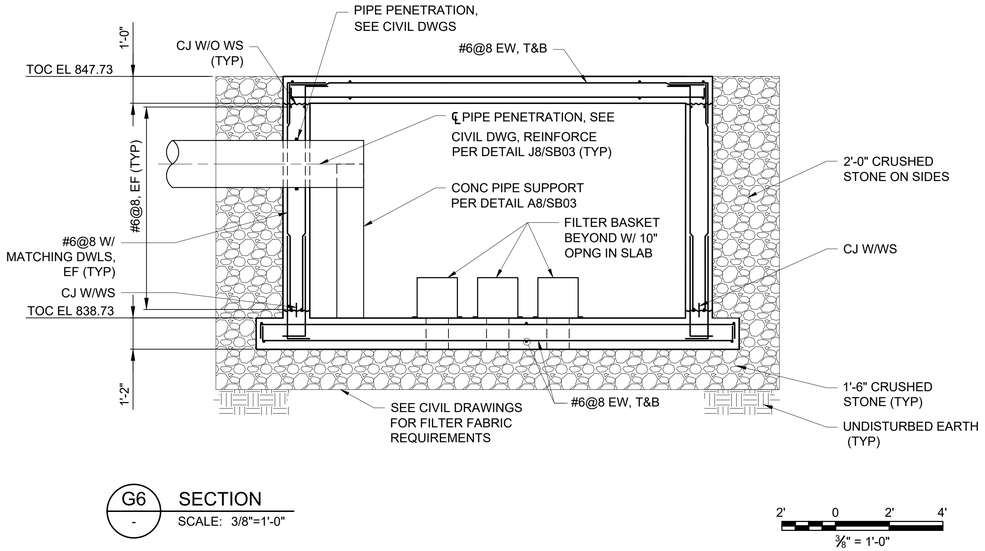

G6 SECTION
SCALE: 3/8"=1'-0"

2' 0 2' 4'
⅜" = 1'-0"

NOTES:
1. * INDICATES DIMENSIONS AND /OR INFORMATION TO BE COORDINATED BY THE CONTRACTOR WITH THE CIVIL DRAWINGS PRIOR TO FABRICATION AND CONSTRUCTION.
2. CONTRACTOR TO CONFIRM AND COORDINATE CONNECTION BETWEEN PRECAST AND INLET STRUCTURE PRIOR TO CONSTRUCTION.
3. SEE CIVIL DRAWINGS FOR CRUSHED STONE REQUIREMENTS.

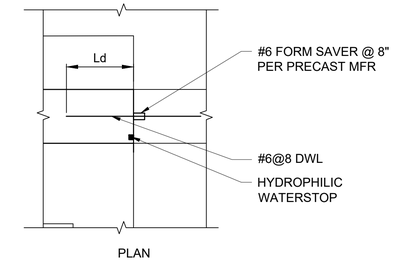

G13 PRECAST TO CAST-IN-PLACE WALL CONNECTION
SCALE: 3/8"=1'-0"

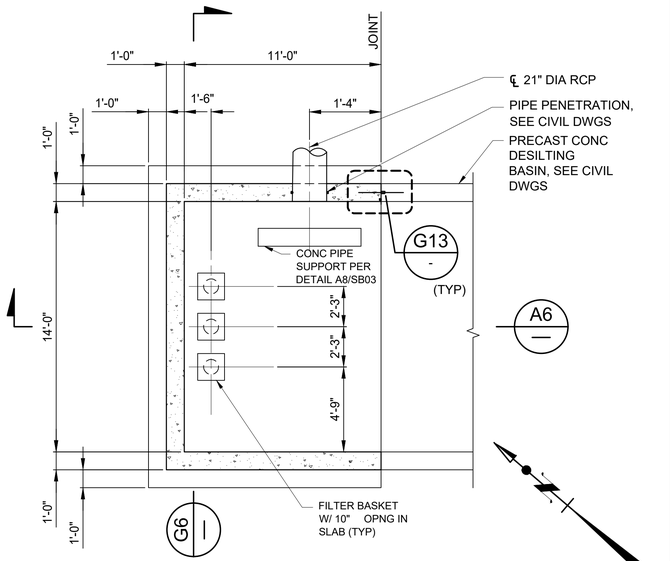

FOUNDATION PLAN
1/4"=1'-0"

4' 0 4' 8'
¼" = 1'-0"

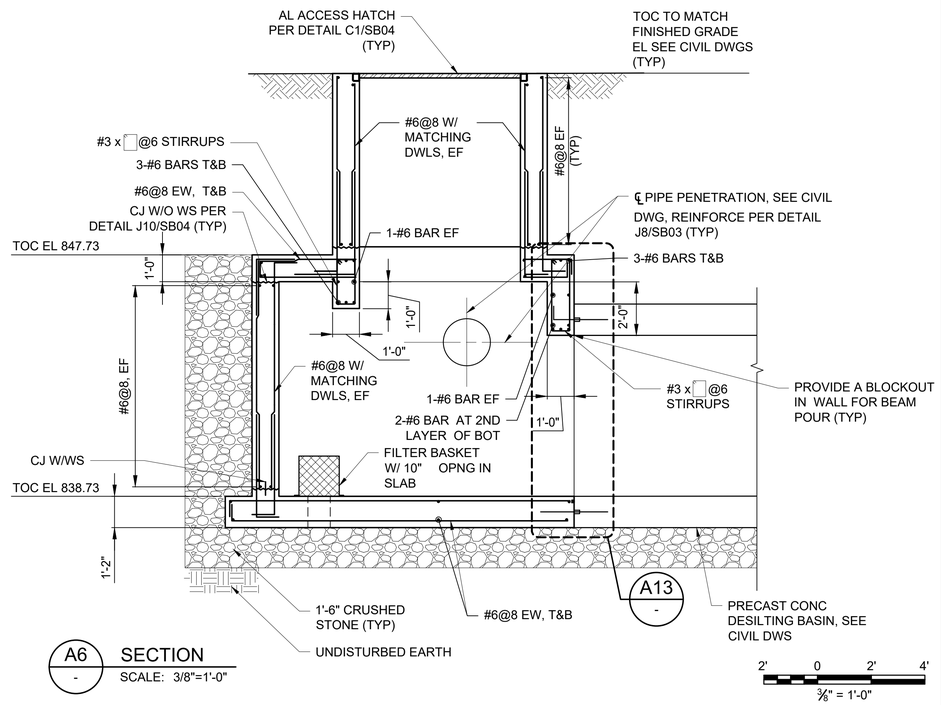

A6 SECTION
SCALE: 3/8"=1'-0"

2' 0 2' 4'
⅜" = 1'-0"

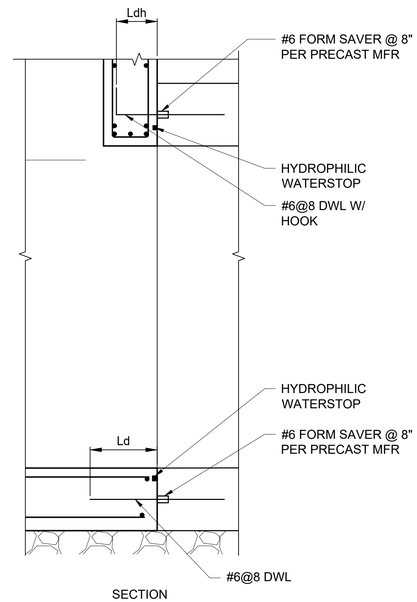

A13 PRECAST TO CAST-IN-PLACE SLAB/BEAM CONNECTION
SCALE: 3/8"=1'-0"

THE CITY OF LOS ANGELES OR ITS OFFICERS OR AGENTS SHALL NOT BE RESPONSIBLE FOR THE ACCURACY OR COMPLETENESS OF ELECTRONIC COPIES OF THIS PLAN SHEET.

REVISION DATES (DESIGN STAGE ONLY)

ENGINEERING
CITY OF LOS ANGELES

REGISTERED PROFESSIONAL ENGINEER JONATHAN L. MORRIS CIVIL STATE OF CALIFORNIA C 80907 01/27/2023

THIS PLAN WAS ELECTRONICALLY • SIGNED AND STAMPED

BUREAU OF ENGINEERING

VERTICAL CONTROL: VERTICAL CONTROL
HORIZONTAL CONTROL: HORIZ CTRL

SHEET TITLE: INLET STRUCTURE PLANS AND SECTION

PROJECT: FERNANGELES PARK STORMWATER CAPTURE PROJECT

ADDRESS: FERNANGELES RECREATION CENTER 8851 LAUREL CANYON BLVD, SUN VALLEY, CA 91352

NO.	REVISIONS	DATE	BY
		YY/MM/DD	
		YY/MM/DD	
		YY/MM/DD	
		YY/MM/DD	

CIP NO. SCP0002

INDEX NO.

CITY OF LOS ANGELES DEPARTMENT OF PUBLIC WORKS

CITY ENGINEER: TED ALLEN, P.E. — DATE: 01/27/2023

DESIGN GROUP		DATE
ENGINEER:	CDM SMITH INC.	01/27/2023
ARCHITECT:	NA	01/27/2023
DESIGNED BY:	S. SURESH	01/27/2023
DRAWN BY:	P. BALA	01/27/2023
CHECKED BY:	J. BAUCHMOYER	01/27/2023
APPROVED BY:	J. MORRIS	01/27/2023

WORK ORDER
EW40079F

SHEET NAME
SB02

SHEET 93 OF 125 SHEETS

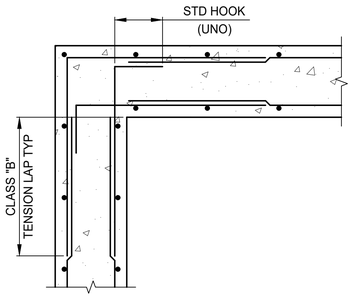

J1 WALL CORNER REINFORCING

SCALE: NTS | -

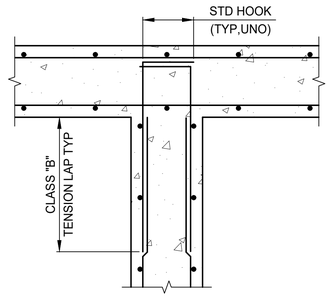

J4 WALL INTERSECTION REINFORCING

SCALE: NTS | -

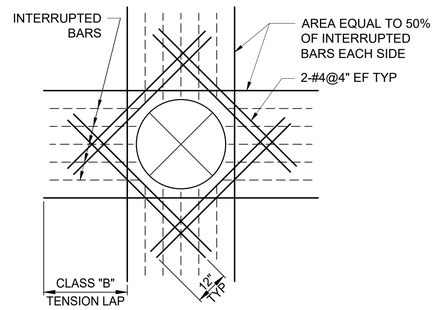

NOTE:
1. WHERE OPENING IS WITHIN 4'-0" OF BASE SLAB PROVIDE MATCHING DOWELS FOR ADDITIONAL BARS.

J8 REINFORCEMENT AT CIRCULAR OPENINGS 12" OR GREATER

SCALE: NTS | -

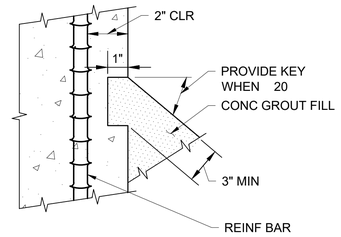

J14 CONCRETE GROUT FILL KEY

SCALE: NTS | -

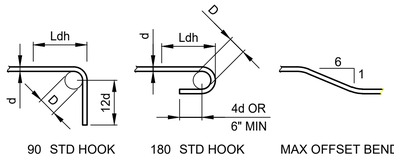

D=6d FOR #3 TO #8
D=8d FOR #9 TO #11
D=12d FOR #14 AND #18

PRINCIPAL REINFORCING

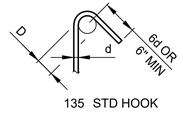

MIN D=1 1/2" FOR #3
MIN D=2" FOR #4
MIN D=2 1/2" FOR #5

STIRRUPS AND TIES

BAR SIZE	DIAMETER (d_b) (INCHES)	STD HOOK (Ldh) (INCHES)
#3	0.375	6
#4	0.5	7
#5	0.625	9
#6	0.75	10
#7	0.875	12
#8	1.0	14
#9	1.125	15
#10	1.25	17
#11	1.375	19

NOTES:
1. ALL BENDS SHALL BE MADE COLD.
2. #14 AND #18 BARS SHALL BE BEND TESTED AND LAB APPROVED PRIOR TO BENDING.

F1 BAR BENDS

SCALE: NTS | -

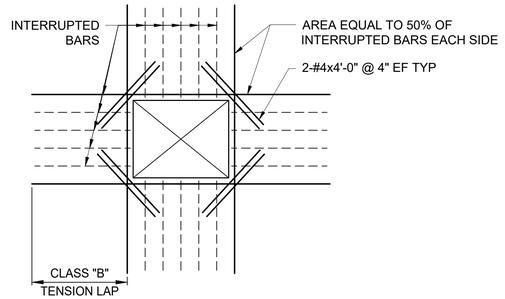

NOTE:
1. WHERE OPENING IS WITHIN 4'-0" OF BASE SLAB PROVIDE MATCHING DOWELS FOR ADDITIONAL BARS.

F8 REINFORCEMENT AT RECTANGULAR OPENINGS 12" OR GREATER

SCALE: NTS | -

		WALLS AND SLABS				BEAMS AND COLUMNS			
		DEVELOPMENT LENGTH (L_d) (INCHES)		CLASS B LAP SPLICE (INCHES)		DEVELOPMENT LENGTH (L_d) (INCHES)		CLASS B LAP SPLICE (INCHES)	
BAR SIZE	DIAMETER (db) (INCHES)	"TOP" BARS	OTHER	"TOP" BARS	OTHER	"TOP" BARS	OTHER	"TOP" BARS	OTHER
		REINFORCING BARS IN TENSION							
#3	0.375	12	12	16	16	19	15	24	19
#4	0.5	15	12	20	16	25	19	32	25
#5	0.625	19	15	24	19	31	24	40	31
#6	0.75	22	17	29	22	37	29	48	37
#7	0.875	33	25	42	33	54	42	70	54
#8	1.0	37	29	48	37	62	48	80	62
#9	1.125	46	36	60	46	70	54	91	70
#10	1.25	57	44	74	57	79	61	102	79
#11	1.375	68	53	89	68	87	67	113	87

NOTES:
1. "TOP" BARS ARE HORIZONTAL REINFORCEMENT PLACED SO THAT MORE THAN 12" OF FRESH CONCRETE IS CAST IN THE MEMBER BELOW THE DEVELOPMENT LENGTH OR SPLICE.
2. CENTER TO CENTER SPACING OF BARS BEING DEVELOPED OD SPLICED SHALL A) NOT BE LESS THAN 3db, WITH CLEAR COVER NOT LESS THAN 1 1/2". WHERE db = DIAMETER OF REINFORCING BAR.
3. TABLE IS BASED ON f'c = 4000 PSI AND fy = 60,000 PSI. LAP SPLICE AND DEVELOPMENT LENGTHS SHALL BE INCREASED FOR LOWER CONCRETE COMPRESSIVE STRENGTH AS FOLLOWS:

	MULTIPLIER
f'c 2500 PSI	1.27
f'c 3000 PSI	1.16
f'c 4500 PSI	0.94

A1 STANDARD HOOK AND LAP SPLICE IN CONCRETE

SCALE: NTS | -

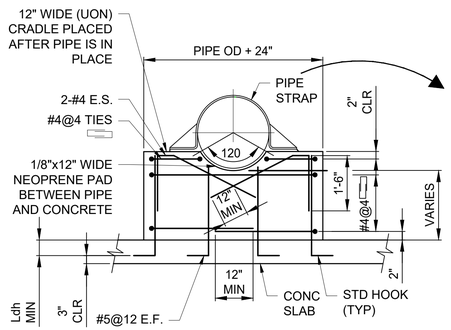

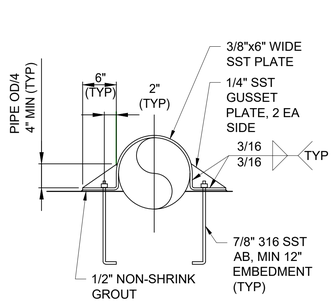

A8 TYPICAL CONCRETE PIPE CRADLE

SCALE: NTS | -

THE CITY OF LOS ANGELES OR ITS OFFICERS OR AGENTS SHALL NOT BE RESPONSIBLE FOR THE ACCURACY OR COMPLETENESS OF ELECTRONIC COPIES OF THIS PLAN SHEET.

REVISION DATES (DESIGN STAGE ONLY)

THIS PLAN WAS ELECTRONICALLY • SIGNED AND STAMPED

REGISTERED PROFESSIONAL ENGINEER JONATHAN L. MORRIS C 80907 CIVIL STATE OF CALIFORNIA 01/27/2023

ENGINEERING CITY OF LOS ANGELES

BUREAU OF ENGINEERING

VERTICAL CONTROL: VERTICAL CONTROL
HORIZONTAL CONTROL: HORIZ CTRL

SHEET TITLE: STANDARD DETAILS I

PROJECT: FERNANGELES PARK STORMWATER CAPTURE PROJECT

ADDRESS: FERNANGELES RECREATION CENTER 8851 LAUREL CANYON BLVD, SUN VALLEY, CA 91352

NO.	REVISIONS	DATE	BY
		YY/MM/DD	
		YY/MM/DD	
		YY/MM/DD	
		YY/MM/DD	

CIP NO. SCP0002

INDEX NO.

CITY OF LOS ANGELES DEPARTMENT OF PUBLIC WORKS

CITY ENGINEER: TED ALLEN, P.E. DATE 01/27/2023

DESIGN GROUP		DATE
ENGINEER:	CDM SMITH INC.	01/27/2023
ARCHITECT:	NA	01/27/2023
DESIGNED BY:	S. SURESH	01/27/2023
DRAWN BY:	P. BALA	01/27/2023
CHECKED BY:	J. BAUCHMOYER	01/27/2023
APPROVED BY:	J. MORRIS	01/27/2023

WORK ORDER EW40079F

SHEET NAME SB03

SHEET 94 OF 125 SHEETS

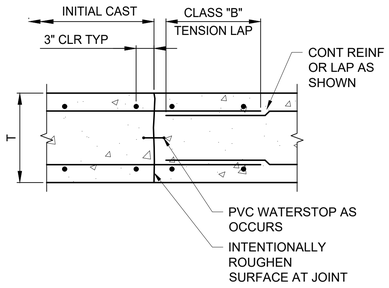

J1	SLAB/WALL CONSTRUCTION JOINT (CJ)
SCALE:NTS	-

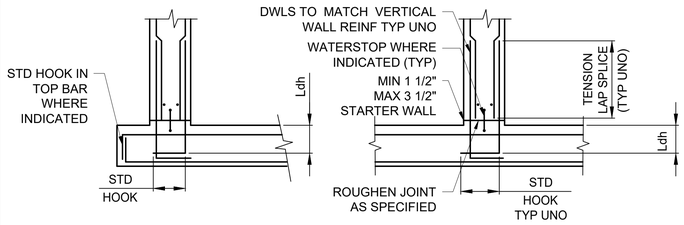

NOTES:
1. STARTER WALL MAY BE ELIMINATED AT JOINTS WITHOUT WATERSTOP.
2. SEE INTERMEDIATE WALL FOR INFORMATION NOT GIVEN FOR END WALL.
3. PROVIDE ADDITIONAL REINFORCEMENT EF IN BOT 3'-0" OF WALL WHERE NOTED ON DRAWINGS. BARS SHALL BE SAME SIZE AS AND LOCATED HALFWAY BETWEEN TYPICAL HORIZ REINFORCEMENT.

J5	WALL CONSTRUCTION JOINT AT BASE SLAB
SCALE:NTS	-

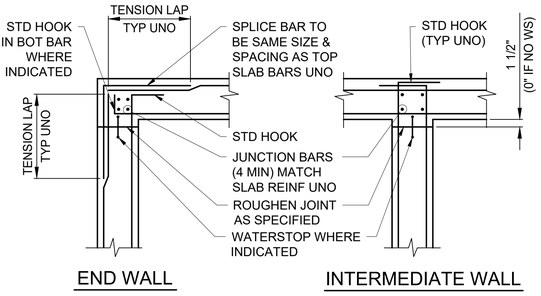

J10	WALL CONSTRUCTION JOINT AT TOP SLAB
SCALE:NTS	-

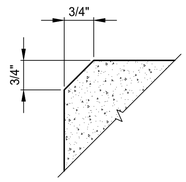

NOTES:
1. SEE CAST-IN-PLACE CONCRETE NOTES.
2. NO CHAMFER REQUIRED WHERE FLUSH EXTERIOR CMU OR BRICK MASONRY ABOVE.

F1	CHAMFER
SCALE:NTS	-

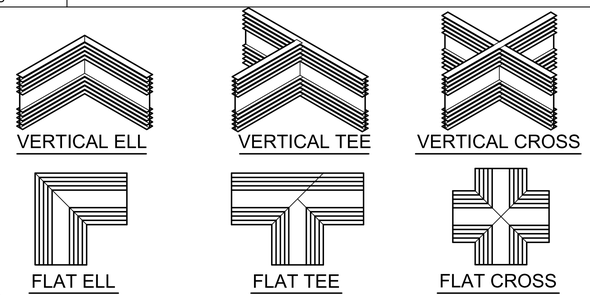

NOTES:
1. PVC WATERSTOPS SHOWN, SIMILAR FOR STAINLESS STEEL AND THERMOPLASTIC ELASTOMERIC RUBBER WATERSTOPS.
2. ALL FITTINGS SHALL BE FACTORY MADE OR SHOP WELDED IN ACCORDANCE WITH MANUFACTURERS RECOMMENDATIONS.
3. ONLY STRAIGHT BUTT SPLICES MAY BE MADE IN FIELD.

F5	WATERSTOP FITTINGS
SCALE:NTS	-

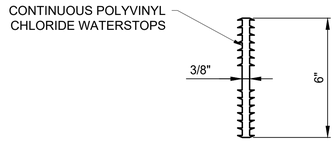

F10	PVC JOINT WATERSTOP
SCALE:NTS	-

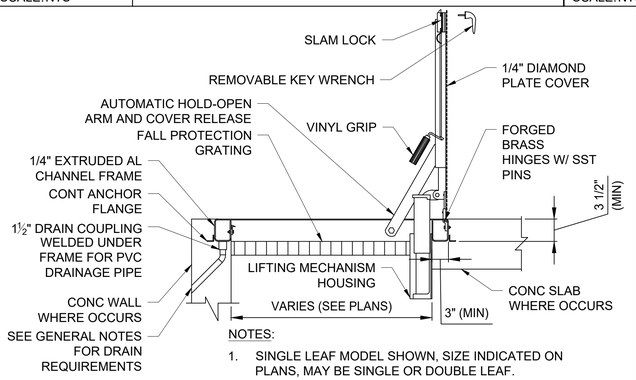

NOTES:
1. SINGLE LEAF MODEL SHOWN, SIZE INDICATED ON PLANS, MAY BE SINGLE OR DOUBLE LEAF.

C1	ALUMINUM ACCESS HATCH
SCALE:NTS	-

THE CITY OF LOS ANGELES OR ITS OFFICERS OR AGENTS SHALL NOT BE RESPONSIBLE FOR THE ACCURACY OR COMPLETENESS OF ELECTRONIC COPIES OF THIS PLAN SHEET.

REVISION DATES (DESIGN STAGE ONLY)

ENGINEERING
CITY OF LOS ANGELES

REGISTERED PROFESSIONAL ENGINEER JONATHAN L. MORRIS CIVIL C 80907 STATE OF CALIFORNIA 01/27/2023

THIS PLAN WAS ELECTRONICALLY • SIGNED AND STAMPED

CITY OF LOS ANGELES DEPARTMENT OF PUBLIC WORKS BUREAU OF ENGINEERING

VERTICAL CONTROL: VERTICAL CONTROL
HORIZONTAL CONTROL: HORIZ CTRL

SHEET TITLE: STANDARD DETAILS II

PROJECT: FERNANGELES PARK STORMWATER CAPTURE PROJECT

ADDRESS: FERNANGELES RECREATION CENTER 8851 LAUREL CANYON BLVD, SUN VALLEY, CA 91352

NO.	REVISIONS	DATE	BY
		YY/MM/DD	
		YY/MM/DD	
		YY/MM/DD	
		YY/MM/DD	

CIP NO. SCP0002

INDEX NO.

CITY ENGINEER	DATE
TED ALLEN, P.E.	01/27/2023

DESIGN GROUP	
ENGINEER:	CDM SMITH INC.
ARCHITECT:	NA
DESIGNED BY:	S. SURESH
DRAWN BY:	P. BALA
CHECKED BY:	J. BAUCHMOYER
APPROVED BY:	J. MORRIS

	DATE
	01/27/2023
	01/27/2023
	01/27/2023
	01/27/2023
	01/27/2023
	01/27/2023

WORK ORDER
EW40079F

SHEET NAME
SB04

SHEET 95 OF 125 SHEETS

ABBREVIATIONS

A	AMPERE, AUTO, AMMETER	MBS	MAINTENANCE BYPASS SWITCH
AC	ALTERNATING CURRENT	MCC	MOTOR CONTROL CENTER
AF	AMPERE FRAME SIZE OF CIRCUIT BREAKERS	MCP	MOTOR CIRCUIT PROTECTOR
		MECH	MECHANICAL
AFF	ABOVE FINISHED FLOOR	MR	MULTIPLE RATIO
AMP	AMPERES, AMPERAGE	MFR	MANUFACTURER
APPROX	APPROXIMATE	MH+	MOUNTING HEIGHT
ASYM	ASYMMETRIC,ASYMMETRICAL	MH	MAINTENANCE HOLE
AT	AMPERE TRIP	MIN	MINUTES, MINIMUM
ATS	AUTOMATIC TRANSFER SWITCH	MISC	MISCELLANEOUS
AUTO	AUTOMATIC	MLO	MAIN LUGS ONLY
AUX	AUXILIARY	MOV	MOTOR OPERATED VALVE
AWG	AMERICAN WIRE GAUGE	MS	MANUAL MOTOR STARTER
		MSA	MAIN SERVICE ENTRANCE EQUIPMENT "A"
BC	BARE COPPER		
BKR	BREAKER	MSDA	MAIN DISTRIBUTION SWITCHBOARD "A"
BLDG	BUILDING	MTG	MOUNTING
		MTR	MOTOR
C	CONDUIT, CLOSED CLOSING RELAY OR CONTACTOR	(N)	NEW
		N	NEUTRAL
CAB	CABINET	NA	NON-AUTOMATIC
CAP	CAPACITOR, CAPACITY	NC	NORMALLY CLOSED
CAT	CATALOG	NF	UNFUSED, NON-FUSED
CB	CIRCUIT BREAKER	NO, NOS	NUMBER, NUMBERS
CKT	CIRCUIT	NIC	NOT IN CONTRACT
CM	CIRCULAR MIL	NTS	NOT TO SCALE
CO	CONDUIT ONLY		
COAX	COAXIAL (CABLE)	OC	ON CENTER
COMM	COMMUNICATION	OD	OUTSIDE DIAMETER
CONN	CONNECTION, CONNECTOR	OL	OVERLOAD RELAY
COT'N	CONTINUATION		
CP	CONTROL PANEL	P	POLE, POWER OR PRESSURE
CPT	CONTROL POWER TRANSFORMER	PB	PULL BOX, PUSHBUTTON
		PB STA	PUSHBUTTON STATION
CR	CONTROL RELAY	PCM	PROCESS CONTROL MODULE
CS	CONTROL SWITCH	PH,Ø	PHASE
CSI	CONTROL SYSTEM INTERFACE	PM	POWER MONITOR
CT	CONTROL TRANSFORMER	PMM	PROCESS MONITORING MODULE
CU	COPPER	PNL	PANEL
		POS	POSITIVE
DBS	DEPARTMENT OF BUILDING AND SAFETY	PQM	POWER QUALITY METER
		PS	PRESSURE SWITCH
DC	DIRECT CURRENT	PT	POTENTIAL TRANSFORMER
DIA	DIAMETER	PV	PHOTOVOLTAIC
DIAG	DIAGRAM	PVC	POLYVINYL CHLORIDE
DIM	DIMENSION	PWR	POWER
DISC	DISCONNECT	P & ID	PROCESS & INSTRUMENTATION DIAGRAM
DISTR	DISTRIBUTION		
DN	DOWN		
DS	DISCONNECT SWITCH	R	REACTOR OR RECTIFIER
DWG	DRAWING	REC	RECEPTACLE
		RECPTS	RECEPTACLES
EA	EACH	REF	REFERENCE
EL	ELEVATION (HEIGHT)	REQ'D	REQUIRED
ELEV	ELEVATION (VIEW)	REV	REVERSE CONTACTOR COIL
EMLA	EMERGENCY LIGHTING PANEL "A"	RGS	RIGID GALVANIZED STEEL
EMT	ELECTRICAL METALLIC TUBING	RM	ROOM
ENCL	ENCLOSURE		
EP	EXPLOSION PROOF	SBDB	STANDBY DISTRIBUTION BOARD
EPL	ETHERNET PRIVATE LINE	SEC	SECOND OR SECONDARY
EQPT	EQUIPMENT	SC	SHORT CIRCUIT
ER	CONDUCTANCE LEVEL RELAY	SCH	SCHEDULE
EXIST		SEC	SECONDS, SECONDARY
OR (E)	EXISTING	SECT	SECTION
		SEL SW	SELECTOR SWITCH
FA	FIRE ALARM	SEQ	SEQUENCE
FACP	FIRE ALARM CONTROL PANEL	SHLD	SHIELDED
FC	FOOT CANDLE	SHT	SHEET
FDR	FEEDER	SN	SOLID NEUTRAL
FIG	FIGURE	SOL	SOLENOID
FIN	FINISHED	SP	SPARE
FIXT	FIXTURE	SST	STAINLESS STEEL
FLEX	FLEXIBLE	STA	STATION
FLA	FULL LOAD AMPS	STD	STANDARD
FT	FOOT	STL	STEEL
FTG	FOOTING	SV	SOLENOID VALVE
FUT	FUTURE	SW	SWITCH
		SWBD	SWITCHBOARD
GALV	GALVANIZED	SWGR	SWITCHGEAR
GFCI	GROUND FAULT CIRCUIT INTERRUPT	SYMM	SYMMETRICAL
GRD, GND	GROUND	SYS	SYSTEM
HOA	HAND - OFF - AUTOMATIC	TB	TERMINAL BOX
HP	HORSEPOWER	TEMP	TEMPERATURE
HZ	HERTZ	TERM	TERMINAL
HGT	HEIGHT	TR	TRANSFORMER
HV	HIGH VOLTAGE	TYP	TYPICAL
HS	HANDSWITCH		
		UG	UNDERGROUND
IC	INTERRUPTING CAPACITY	UPS	UNINTERRUPTABLE POWER SUPPLY
ID	INSIDE DIAMETER		
I/O	INPUT/OUTPUT	UNO	UNLESS NOTED OTHERWISE
INSTR	INSTRUMENT	UST	UNIT SUBSTATION TRANSFORMER
JB	JUNCTION BOX	VA	VOLT-AMPS
		V	VOLTAGE, VOLTS
KCMIL	KILO-CIRCULAR MILS	VFD	VARIABLE FREQUENCY DRIVE
KHZ	KILOHERTZ	VSD	VARIABLE SPEED DRIVE (OTHER THAN VFD)
KV	KILOVOLT		
KVA	KILO VOLT AMPERE	W	WATTS, WIRE
KVAR	KILOVAR	WP	WEATHERPROOF
KW	KILOW ATT	XFMR	TRANSFORMER
LCP	LOCAL CONTROL PANEL	MISCELLANEOUS	
LED	LIGHT EMITTING DIODE		
LOC	LOCAL	1/C	SINGLE CONDUCTOR
LOS	LOCKOUT STOP	2/C	TWO CONDUCTOR
LS	LEVEL SWITCH	3P	THREE-POLE
LTG	LIGHTING	3PH	THREE PHASE
LACEC	LOS ANGELES CITY ELECTRICAL CODE	3W	THREE WIRE
		4/C	FOUR CONDUCTOR
M	MOTOR CONTACTOR COIL	4P	FOUR-POLE
MA	MILLIAMPERE	% IMP	PERCENT IMPEDANCE
MAX	MAXIMUM		

GENERAL NOTES

RACEWAYS

1. CONDUIT RUNS WHERE SHOWN ARE DIAGRAMMATIC, AND SHOULD BE RUN TO SUIT SITE CONDITIONS EXCEPT WHERE SHOWN DIMENSIONED ON THE DRAWINGS. THE RACEWAY SYSTEM SHALL COMPLY WITH ALL CODES, INCLUDING BUT NOT LIMITED TO:
   a. NEC.
   b. CITY OF LA ELECTRICAL CODES AND PLAN CHECK REQUIREMENTS.
   c. GROUNDING PER NEC ARTICLE 250.
2. CONTRACTOR SHALL PROVIDE AND INSTALL ALL NECESSARY CONDUITS, FITTINGS, JUNCTION BOXES AND ALL NECESSARY COMPONENTS WHETHER SHOWN OR NOT ON THE DRAWINGS. TO MAKE ELECTRICAL INSTALLATION COMPLETE AND OPERATIONAL.
3. ALL ELECTRICAL CONDUITS ARE SHOWN DIAGRAMMATICALLY AND PANEL AND EQUIPMENT LOCATIONS SHALL BE PLACED TO SUIT FIELD CONDITIONS.
4. ELECTRICAL CONTRACTOR TO LIMIT THE NUMBER OF 90° BENDS BETWEEN PULL POINTS TO COMPLY WITH THE REQUIREMENTS OF THE CALIFORNIA ELECTRICAL SAFETY ORDERS, THE NATIONAL ELECTRICAL CODE AND THE LOS ANGELES CITY ELECTRICAL CODE.
5. PROVIDE 30" (MAXIMUM) LENGTH OF FLEXIBLE CONDUIT WHERE RIGID CONDUIT TERMINATES AT EQUIPMENT SUBJECT TO MOVEMENT FROM VIBRATION, EXPANSION AND CONTRACTION.
6. ELECTRICAL CONTRACTOR SHALL PROVIDE GALVANIZE STEEL SUPPORTS FOR ALL ELECTRICAL WORK (CONDUIT, PANELS, BOXES ETC.)
7. CONDUITS TERMINATED AT MOTOR CONTROL CENTER, SWITCHGEAR CONTROL CABINETS, ETC, SHALL BE EQUIPPED WITH GROUNDING BUSHINGS AND SHALL BE EFFECTIVELY BONDED TO GROUNDING BUSES.
8. ALL OUTDOOR ELECTRICAL DEVICES AND ENCLOSURES SHALL BE WEATHERPROOF AND CORROSION RESISTANT (NEMA 4X OR 3R) ALL INDOOR DEVICES AND ENCLOSURES SHALL BE NEMA 12.
9. SWITCHGEAR, MOTOR CONTROL CENTERS, AND ALL OUTDOOR FREE STANDING CABINETS/PANELS SHALL BE SET ON A 4" HIGH MINIMUM CONCRETE PAD.
10. ALL SWITCHES, PULL BOXES, ETC. SHALL BE MOUNTED 48" ABOVE FLOOR SURFACES UNLESS NOTED OTHERWISE.
11. ALL BENDS IN CABLES SHALL BE MADE SO THAT THE PROTECTIVE COVERING OF THE CABLE WILL NOT BE INJURED. NO BEND SHALL HAVE A RADIUS LESS THAN THE MINIMUM RECOMMENDED BY THE CABLE MANUFACTURER.
12. THE MINIMUM SIZE OF CONDUIT INSTALLED ABOVE GRADE SHALL BE 3/4" UNLESS OTHERWISE NOTED.
13. INSTALLATIONS SHALL BE IN ACCORDANCE WITH ALL CODES AND STANDARDS. ALL LIGHTING AND RECEPTACLE CIRCUITS SHALL INCLUDE 1#12 GROUND WIRE.
14. ALL ABOVE GRADE CONDUITS AND FITTINGS SHALL BE RIGID GALVANIZED STEEL. USE RIGID STEEL CONDUIT, INCLUDING BUSHINGS, COUPLINGS, ELBOWS, NIPPLES, AND OTHER FITTINGS, GALVANIZED BY HOT-DIPPING, AND MEETING THE REQUIREMENTS OF ANSI C80.1, ANSI C80.4, UL, AND THE LAEC. DO NOT USE SETSCREW TYPE COUPLINGS, BUSHINGS, BENDS, NIPPLES, AND OTHER FITTINGS, UNLESS APPROVED BY THE ENGINEER OR THE INSPECTOR. FACTORY BENDS ARE NOT PERMITTED UNLESS APPROVED BY THE ENGINEER OR THE INSPECTOR.
15. REQUIRE ALL INSTALLED UNDERGROUND CONDUITS, ENCASED IN CONCRETE SHALL BE PVC SCHEDULE 40, AS A MINIMUM. ALL UNDERGROUND CONDUIT SHALL BE BURIED A MINIMUM OF 24 INCHES BELOW GRADE WITH TRACEABLE WARNING TAPE 12" ABOVE CONDUIT. SEE TYPICAL CONDUIT PLACEMENT IN TRENCH DETAIL (SEE SHEET EP07, DETAIL E-15).

CONDUCTORS

1. PROVIDE CONDUCTORS WITH TYPE THW OR TYPE THHN/THWN INSULATION. EXCEPT FOR SIZES NO. 6 AND LARGER SHALL HAVE WITH XHHW INSULATION.
2. ALL POWER AND CONTROL CABLES SHALL BE COPPER. NETWORK CABLES SHALL BE FIBER OPTIC CABLE WHERE SPECIFIED.
3. PROVIDE CABLE THAT IS UL LISTED TYPE TC AND CONFORMS TO THE REQUIREMENTS OF UL 1277 AND NEC ARTICLE 340, OR UL LISTED POWER LIMITED CIRCUIT CABLE THAT CONFORMS TO THE REQUIREMENTS OF ARTICLE 725 OF THE LAEC. PROVIDE CABLES PERMANENTLY AND LEGIBLY MARKED WITH THE MANUFACTURER'S NAME, THE MAXIMUM WORKING VOLTAGE FOR WHICH THE CABLE WAS TESTED, THE TYPE OF CABLE, AND LABELED UL (OR SUBMIT EVIDENCE OF UL LISTING).
4. ACCEPTABLE MANUFACTURERS: SOUTHWIRE, HOUSTON WIRE AND CABLE COMPANY, BELDEN ALPHA WIRE COMPANY, GENERAL CABLE OR EQUAL.

TYPE 1 (600-VOLT MULTI-CONDUCTOR CONTROL CABLE, TYPE TC)

1. MULTI-CONDUCTOR CONTROL CIRCUIT INTERCONNECTION CABLE WITH GROUND. SUITABLE FOR INSTALLATION IN OPEN AIR, IN CABLE TRAYS, CONDUIT, OR OTHER APPROVED RACEWAYS. MAXIMUM CABLE TEMPERATURE RATING 90 DEGREES C DRY LOCATIONS, 75 DEGREES C WET LOCATIONS. PASSES VERTICAL TRAY FLAME TEST.

TYPE 2 (600-VOLT NO. 16 AWG TWISTED, SHIELDED PAIR INSTRUMENTATION CABLE, TYPE TC)

1. SINGLE PAIR INSTRUMENTATION CABLE DESIGNED FOR NOISE REJECTION FOR PROCESS CONTROL, COMPUTER, OR DATA LOG APPLICATIONS. SUITABLE FOR INSTALLATION IN CABLE TRAYS, CONDUIT, OR OTHER APPROVED RACEWAYS. MAXIMUM CABLE TEMPERATURE RATING SHALL BE 90 DEGREES C DRY LOCATIONS, 75 DEGREES C WET LOCATIONS.
2. INDIVIDUAL CONDUCTORS: BARE SOFT ANNEALED COPPER, CLASS B, 7-STRAND CONCENTRIC PER ASTM B 8; 20 AWG, 7-STRAND TINNED COPPER DRAIN WIRE.

TYPE 3 (600-VOLT MULTI-CONDUCTOR POWER CABLE, TYPE TC):

1. 3 OR 4 -CONDUCTOR, WITH GROUND AND OVERALL JACKET. SUITABLE FOR INSTALLATION IN OPEN AIR, IN CABLE TRAYS, CONDUIT, OR OTHER APPROVED RACEWAYS. MAXIMUM CABLE TEMPERATURE RATING 90 DEGREES C DRY LOCATIONS, 75 DEGREES C WET LOCATIONS.
2. INDIVIDUAL CONDUCTORS: CLASS B STRANDED, COATED, OR UNCOATED COPPER.

TYPE 4 (600-VOLT NO. 16 TWISTED, SHIELDED TRIAD INSTRUMENTATION CABLE, TYPE TC):

1. SINGLE TRIAD INSTRUMENTATION CABLE DESIGNED FOR NOISE REJECTION FOR PROCESS CONTROL, COMPUTER, OR DATA LOG APPLICATIONS. SUITABLE FOR INSTALLATION IN CABLE TRAY, CONDUIT, OR OTHER APPROVED RACEWAYS. MAXIMUM CABLE TEMPERATURE RATING SHALL BE 90 DEGREES C DRY LOCATIONS, 75 DEGREES C WET LOCATIONS.
2. CONDUCTORS: BARE SOFT ANNEALED COPPER, CLASS B, 7-STRAND CONCENTRIC PER ASTM B 8; 20 AWG, 7-STRAND, TINNED COPPER DRAIN WIRE.

TYPE 5 (600-VOLT NO. 18 AWG, MULTI-TWISTED SHIELDED PAIRS WITH A COMMON OVERALL SHIELD INSTRUMENTATION CABLE, TYPE TC):

1. TWISTED, SHIELDED PAIRS OF INSTRUMENT CABLES, GROUPED IN A SINGLE CABLE, DESIGNED FOR USE AS INSTRUMENTATION, PROCESS CONTROL, AND COMPUTER CABLE. SUITABLE FOR INSTALLATION IN CABLE TRAY, CONDUIT, OR OTHER APPROVED RACEWAYS. MAXIMUM CABLE TEMPERATURE RATING SHALL BE 90 DEGREES C DRY LOCATIONS, 75 DEGREES C WET LOCATIONS.
2. BARE SOFT ANNEALED COPPER, CLASS B, 7-STRAND, CONCENTRIC PER ASTM B 8. TINNED COPPER DRAIN WIRES. PAIR DRAIN WIRE SIZE AWG 20, GROUP DRAIN WIRE SIZE AWG 18.

GROUNDING

1. ALL METALLIC STRUCTURES AND EQUIPMENT SUCH AS STRUCTURAL STEEL, GENERATOR AND MOTOR FRAMES, ENCLOSURES, CABINETS FOR SWITCHGEAR AND OTHER ELECTRIC EQUIPMENT, METALLIC CONDUITS, CABLE TRAYS, STAIRS, FENCES AND HANDRAILS SHALL BE PERMANENTLY AND EFFECTIVELY GROUNDED. THE GROUND CONNECTION SHALL BE MADE TO THE PLANT GROUND GRID. REFER TO STANDARD DETAILS.
2. ALL GROUNDING CONDUCTORS SHALL BE BARE STRANDED SOFT DRAWN COPPER, CLASS B, UNLESS OTHERWISE NOTED.
3. THE GROUND CABLE SHALL BE INSTALLED, WHERE POSSIBLE, BENEATH SLABS, ATTACHED TO BUILDING STEEL OR RUN IN RACEWAYS AS SHOWN.
4. BURIED GROUND CABLES SHALL BE A MINIMUM OF 18" BELOW GRADE EXCEPT UNDER BUILDINGS WHERE THEY SHALL BE A MINIMUM OF 6" BELOW BOTTOM OF SLAB.
5. CONDUIT RUNS SHALL BE BONDED TOGETHER TO FORM A CONTINUOUS ELECTRICAL CONDUCTOR.
6. WHERE SEAL-TIGHT FLEXIBLE CONDUIT FOR MOTOR CONNECTION IS USED, PROVIDE GROUNDING JUMPER BETWEEN THE RIGID STEEL CONDUIT (MOTOR FEEDER) AND THE MOTOR BOX OR FRAME.
7. GENERATOR CASINGS, EXCITERS, SWITCHGEARS, MOTOR CONTROL CENTERS, LARGE METAL TANKS, TRANSFORMER CORES, AND MOTOR FRAMES LARGER THAN 150HP SHALL BE GROUNDED AT TWO POINTS.
8. THE FRAMES OF MOTORS SMALLER THAN 150HP SHALL BE GROUNDED DIRECTLY TO THE GROUND GRID OR TO THE STEEL COLUMN CONNECTED TO THE GROUND LOOP WITH COPPER WIRE OF SIZE AS REQUIRED BY THE LOS ANGELES CITY ELECTRICAL CODE.
9. ALL EQUIPMENT GROUND TERMINAL LUGS SHALL BE OF THE MECHANICAL TYPE.
10. BENDS IN GROUND CABLE SHALL BE GREATER THAN 12 TIMES THE CABLE OUTSIDE DIAMETER.
11. GROUNDING CONDUCTOR PIGTAIL AND INSERT LOCATIONS ARE APPROXIMATE ONLY. CONTRACTOR SHALL VERIFY IN THE FIELD AND LOCATE THEM CLOSE TO MOTOR, EQUIPMENT, GENERATOR, OR METAL STRUCTURE SERVED.
12. GROUNDING PIGTAIL SHALL BE THE SAME SIZE AS THE PHASE WIRE BUT NO LESS THAN NUMBER 8 AWG.
13. WHERE BARE GROUND CONDUCTORS ARE EXPOSED, CONTRACTOR SHALL PROVIDE PVC SCHEDULE 80 CONDUITS WITH ULTRA-VIOLET LIGHT PROTECTION.
14. ALL FLEXIBLE MOTOR CONDUITS SHALL HAVE OUTER GROUND CONDUCTOR.

EQUIPMENT AND DEVICES

1. ALL EQUIPMENT DIMENSIONS SHOWN ON PLANS AND ELEVATIONS ARE APPROXIMATE ONLY. THE CONTRACTOR SHALL USE THE SHOP DRAWINGS FOR PROPER FOUNDATION AND PAD LAYOUT, ETC. FOR FINAL INSTALLATION WITHOUT ANY ADDITIONAL COST TO THE CITY.
2. IT IS INCUMBENT UPON THE CONTRACTOR TO COORDINATE WITH HIS SUBCONTRACTORS TO MAKE SURE THAT EQUIPMENT SUPPLIERS PROVIDE ALL NECESSARY ELECTRICAL INFORMATION TO THE ELECTRICAL SUBCONTRACTOR FOR INCLUSION OF COSTS IN BID PACKAGE. ALL NECESSARY MATERIALS AND LABOR TO COMPLETE ELECTRICAL INSTALLATION SHALL BE PROVIDED WHETHER SHOWN OR NOT SHOWN ON THE DRAWINGS. ALL ELECTRICAL WORK SHALL BE IN ACCORDANCE WITH ALL CODES AND STANDARDS PER SPECIFICATION.
3. SWITCHGEARS, SWITCHBOARDS, MOTOR CONTROL CENTERS AND ALL FREE STANDING PANELS SHALL BE SET WITH LEVELING CHANNELS UNLESS OTHERWISE NOTED.
4. CONTRACTOR TO PROVIDE DESIGNS AND DETAILS FOR ALL MOUNTING AND ANCHORAGE OF EQUIPMENT IN ACCORDANCE WITH CHAPTER 23 OF THE LATEST EDITION OF THE UNIFORM BUILDING CODE AND LOS ANGELES BUILDING CODE.

MISCELLANEOUS

1. THE CONTRACTOR TO CONFIRM EXISTING CONDITIONS INCLUDING CONDUIT RUNS. ELECTRICAL DESIGN UPGRADE IS BASED ON CITY-PROVIDED, EXISTING "AS-BUILT" DRAWINGS WHICH MAY NOT BE ENTIRELY ACCURATE.
2. IN CASE OF INTERFERENCE BETWEEN ELECTRICAL EQUIPMENT AND OTHER EQUIPMENT THE CONTRACTOR SHALL NOTIFY THE ENGINEER IN WRITING AND THE ENGINEER SHALL REVIEW PROPOSED CHANGES BEFORE THEY ARE MADE.
3. ALL RECEPTACLES SHALL BE MOUNTED 18" ABOVE FLOOR SURFACE, UNLESS OTHERWISE NOTED ON THE DRAWINGS.
4. ALL RECEPTACLES IN OUTDOOR AND ANTICIPATED WET AREAS SHALL BE GROUND FAULT INTERRUPTER TYPE RECEPTACLES WITH WEATHER PROOF COVER PLATES.
5. PROVIDE MAINTENANCE HOLES OR PULL BOXES WHEREVER THEY ARE REQUIRED TO MAKE A WORKABLE INSTALLATION.
6. CIRCUITS OF DIFFERENT SERVICE VOLTAGE RANGES SHALL BE INSTALLED IN SEPARATE RACEWAYS, PULLBOXES AND JUNCTION BOXES. THE VOLTAGE AND SERVICE LEVELS ARE:
   (1) 120V-480VOLT
   (2) INSTRUMENTATION AND CONTROL LESS THAN 50VDC
      a) ANALOG
      b) SIGNAL
   (3) TELEPHONE AND COMMUNICATIONS.
   (4) FIBER OPTICS
7. RECEPTACLES, LIGHTING AND CONTROL CIRCUITS SHALL BE TYPE THHN/THWN WIRE.
8. ALL ELECTRICAL EQUIPMENT AND DEVICES SHALL BE UL APPROVED OR OTHER INDEPENDENT AGENCIES APPROVED BY THE CITY OF LOS ANGELES.
9. NO PIPING, DUCTS OR FOREIGN EQUIPMENT SHALL BE PERMITTED TO BE LOCATED WITHIN THE DEDICATED SPACE ABOVE THE ELECTRICAL EQUIPMENT.

MINIMUM SUBMITTAL REQUIREMENTS FOR SCHEMATIC DIAGRAMS:

1. ALL CONTROLS SHOWN DE-ENERGIZED.
2. CONTRACTOR SHALL INCORPORATE NECESSARY FUNCTIONS FOR PROPER OPERATIONS AND PROTECTION OF SYSTEMS.
3. SLAVE OR INTERPOSING RELAYS SHALL BE ADDED WHERE REQUIRED TO PROVIDE ALL NECESSARY CONTACTS REQUIRED FOR THE SCHEMATIC DIAGRAM SHOWN.
4. ALL DEVICES SHOWN ON MOTOR STARTER SCHEMATIC DIAGRAMS SHALL BE MOUNTED IN MOTOR STARTER CUBICLES, UNLESS OTHERWISE NOTED.
5. ALL MOTOR NAMEPLATES SHALL BE STAINLESS STEEL, PERMANENTLY SECURED TO THE MOTOR, AND PROVIDE THE FOLLOWING INFORMATION: (1) NEMA DESIGN LETTER, (2) VOLTAGE, (3) PHASES, (4) FREQUENCY, (5) HORSEPOWER, (6) FULL LOAD CURRENT, (7) CLASS OF INSULATION, (8) FULL LOAD RPM, (9) AMBIENT TEMPERATURE/SERVICE FACTOR, (10) TIME RATING, (11) KVA CODE, (12) FRAME SIZE, (13) MFG. TYPE OR MODEL, (14) MFG. CATALOG NUMBER WITH DATE CODE, AND (15) SERIAL NUMBER.

SCOPE OF WORK

1. ADDITION OF 480V, 3 PHASE, 4 WIRE, 400A, ELECTRICAL SERVICE TRANSFORMER TO THE SITE.
2. ADDITION OF ELECTRICAL SERVICE AND DISTRIBUTION PANELS.
3. POWER AND CONTROL WIRING FOR STORMWATER DIVERSION EQUIPMENT.
4. POWER AND CONTROL WIRING FOR SPORT LIGHTING SYSTEMS.
5. POWER AND CONTROL WIRING FOR PATHWAY LIGHTING.
6. SUPERVISORY CONTROL AND DATA ACQUISITION (SCADA) CONTROL PANEL FOR STORMWATER DIVERSION PROGRAMMABLE CONTROLLER, AND FOR RADIO COMMUNICATION EQUIPMENT.
7. METHANE HAZARD SITE: METHANE BUFFER ZONE.

ELECTRICAL STUDIES

1. CONTRACTOR IS RESPONSIBLE FOR PREPARING A POWER SYSTEM ANALYSIS REPORT INCLUDING SHORT CIRCUIT CALCULATIONS, A PROTECTIVE DEVICE COORDINATION STUDY, ARC-FLASH STUDY, AND A HARMONIC ANALYSIS. THE STUDY SHALL BEGIN WITH THE UTILITY COMPANY'S FEEDER PROTECTIVE DEVICE AND INCLUDE ALL OF THE ELECTRICAL DISTRIBUTION EQUIPMENT DOWN TO AND INCLUDING LOW VOLTAGE MOTOR CONTROL CENTERS, POWER DISTRIBUTION PANEL BOARDS AND LIGHTING PANELS AND TRANSFORMERS.
2. ALL INFORMATION REQUIRED TO PERFORM THE STUDY SHALL BE OBTAINED BY THE ENTITY PERFORMING THE STUDY. ALL COSTS FOR THIS WORK INCLUDING FIELD SETTINGS OF DEVICES, ADJUSTMENTS, AND MODIFICATIONS TO EQUIPMENT THAT ARE REQUIRED FOR CONFORMANCE WITH THE APPROVED STUDY SHALL BE INCLUDED IN THE CONTRACTOR BID PROPOSAL AND IS NOT REIMBURSABLE BY THE CITY.
3. PROVIDE AND INSTALL ARC-FLASH AWARENESS WARNING LABELS ON EACH ELECTRICAL EQUIPMENT PANEL AS REQUIRED.

ELECTRIC MOTORS

1. UNLESS OTHERWISE SPECIFIED, ALL 3-PHASE MOTORS SHALL BE TEFC, SQUIRREL-CAGE INDUCTION, CONSTANT SPEED, HAVE ANTI-FRICTION BEARINGS AND CLASS F INSULATION, AND BE IN ACCORDANCE WITH ALL NEMA STANDARDS. MOTORS SHALL HAVE A MINIMUM SERVICE FACTOR OF 1.15 AT 40°C AMBIENT, AND STAINLESS STEEL AUTOMATIC BREATHER-DRAINS AT THE LOWEST POINT OF THE MOTOR ENCLOSURE.
2. ALL SINGLE-PHASE MOTORS, UNLESS OTHERWISE SPECIFIED, SHALL MEET ALL NEMA STANDARDS, BE TEFC, WITH ANTI-FRICTION BEARINGS, CLASS F INSULATION, AND HAVE A 1.15 SERVICE FACTOR AT 40°C AMBIENT.
3. ALL MOTORS LARGER THAN 3 HORSEPOWER SHALL BE PREMIUM EFFICIENCY, CAST IRON, CORROSIVE RESISTANT, HOSTILE ENVIRONMENT DESIGN, BALDOR "ECP", RELIANCE "XE", U. S. MOTORS "CORRO-DUTY", OR EQUAL. MOTORS LESS THAN 3 HORSEPOWER SHALL BE OF CAST IRON, STEEL OR ALUMINUM CONSTRUCTION, PREMIUM EFFICIENCY, AND CORROSIVE RESISTANT, HOSTILE ENVIRONMENT DESIGN.
4. MOTORS AND CONTROLS SHALL BE ADEQUATELY SIZED SO THE NAMEPLATE RATING WILL NOT BE EXCEEDED UNDER THE MAXIMUM DESIGN CAPACITY OF THE EQUIPMENT SUPPLIED.

THE CITY OF LOS ANGELES OR ITS OFFICERS OR AGENTS SHALL NOT BE RESPONSIBLE FOR THE ACCURACY OR COMPLETENESS OF ELECTRONIC COPIES OF THIS PLAN SHEET.

REVISION DATES (DESIGN STAGE ONLY)

ENGINEERING
CITY OF LOS ANGELES

REGISTERED PROFESSIONAL ENGINEER
ROBERT D. GETTER
No. E 21884
Exp. 06-30-23
ELECTRICAL
STATE OF CALIFORNIA
01/27/2023

THIS PLAN WAS ELECTRONICALLY • SIGNED AND STAMPED

BUREAU OF ENGINEERING

VERTICAL CONTROL: BENCH MARK (08-30460 NAVD 88)
HORIZONTAL CONTROL: CALIFORNIA STATE PLANE ZONE V, 1983 NAD

SHEET TITLE: ELECTRICAL GENERAL NOTES
PROJECT: FERNANGELES PARK STORMWATER CAPTURE PROJECT
ADDRESS: FERNANGELES RECREATION CENTER 8851 LAUREL CANYON BLVD, SUN VALEY, CA 91352

CITY OF LOS ANGELES DEPARTMENT OF PUBLIC WORKS

NO.	REVISIONS	DATE	BY
		YY/MM/DD	
		YY/MM/DD	
		YY/MM/DD	
		YY/MM/DD	

CITY ENGINEER

DESIGN GROUP		DATE
ENGINEER:	TED ALLEN, P.E.	01/27/2023
ARCHITECT:	PROJECTLINE TECHNICAL SERVICES	01/27/2023
DESIGNED BY:	NA	01/27/2023
DRAWN BY:	J. CHIN	01/27/2023
CHECKED BY:	J. CHIN	01/27/2023
APPROVED BY:	A. CARRIE	01/27/2023
	R. GETTER	01/27/2023

CIP NO. SCP0002

INDEX NO.

WORK ORDER EW40079F

SHEET NAME EG01

SHEET 96 OF 125 SHEETS

E L E C T R I C A L S Y M B O L S

P L A N

- CONDUIT RUN EXPOSED
- CONDUIT RUN, UNDERGROUND
- CONDUIT RUN, CONCEALED IN CEILING OR WALL.
- CONDUIT RUN, CHANGE IN ELEVATION
- CONDUIT BENDS UP OR TOWARD OBSERVER
- CONDUIT BENDS DOWN OR AWAY FROM OBSERVER
- T — CONDUIT CONTAINING: T=TELEPHONE, FA=FIRE ALARM, S=SIGNAL, ET=EMERGENCY TELEPHONE, PA=PUBLIC ADDRESS
- FLEXIBLE CONDUIT
- CONDUIT FITTING
- CONDUIT CAPPED
- CONDUIT SEAL
- ¾"C WITH 8 NO.12 WIRES MAX. AS SHOWN. NO CIRCUIT # NOTED. CONDUIT RUNS NOT MARKED ARE ¾"C WITH 2#12 WIRES ONLY. WIRE SIZES OTHER THAN #12 ARE MARKED. PROVIDE 1#12 WIRE FOR GROUNDING
- LPA-1/3/5, 2/4,7 — CROSS MARKS ON CONDUIT WITH CKT.# NOTED INDICATE NUMBER OF NO. 12 WIRES IN¾"C HOMERUN ONLY.3/4" CONDUIT WITH 9 NO.12 WIRES SHOWN, CIRCUITS 1,3 & 5 WITH COMMON NEUTRAL CIRCUITS 2 & 4 WITH COMMON NEUTRAL & CIRCUIT 7 WITH SEPARATE NEUTRAL HOMERUN TO PANEL `LPA'.
- P15 — CONDUIT NUMBER, SEE CONDUIT SCHEDULE P = POWER, C = CONTROL, S = SIGNAL; 15 =ARBITRARY SEQUENTIAL NUMBER
- 3/4"C- 2#10 — CONDUIT RUNS NOT LISTED IN CONDUIT SCHEDULE ARE NOTED AS SHOWN.
- JUNCTION BOX
- GROUND INSERT
- GROUND WIRE, MAIN LOOP (UNDERGROUND)
- GROUND WIRE, TAP EXPOSED
- UNDERGROUND TAP
- GROUND ROD
- GROUND WELL AND ROD FOR PAVED AREAS
- GROUND WELL AND ROD FOR UNPAVED AREAS
- GROUNDING CONDUCTOR PIGTAILED ABOVE FINISHED FLOOR
- LIGHTNING PROTECTION SYS., AIR TERMINAL
- 2A — CEILING OR PENDANT MTD. LTG. FIXTURE "2" INDICATES CIRCUIT NUMBER. "a" INDICATES FIXTURE CONTROLLED BY SW "a".
- 2 — CEILING OR PENDANT MTD. LED LTG. FIXTURE "2" INDICATES CIRCUIT NO.
- WALL MOUNTED LED LTG. FIXTURE
- EMERGENCY LED LIGHTING FIXTURE
- 1 — LIGHTING FIXTURE CONNECTED TO EMERGENCY CIRCUIT "1" INDICATES CIRCUIT NO.
- LED STRIP LIGHTING FIXTURE
- LED STRIP EMERGENCY LIGHTING FIXTURE
- LED STRIP LIGHTING FIXTURE TANDEM WIRED
- WALL MOUNTED LIGHTING FIXTURE
- FLOODLIGHT
- STREETLIGHT
- E — EMERGENCY LIGHTING UNIT, SELF CHARGING BATTERY TYPE WITH LOW VOLTAGE SEALED LAMPS
- EXIT LIGHT
- RE — RECESSED EXIT LIGHT
- A, 2/40, 3, ±8'-6" — LTG. FIXTURE TYPE 'A', 2-40 WATT LAMPS, 3=NUMBER OF FIXTURES; 8'-6"=ACTUAL MOUNTING HEIGHT
- 3/4"C-(2)TSP#16 3/4"C-2#12 + 1#12 GND; 3/4"C-(2)TSP#16 3/4"C-2#12 + 1#12 GND — (2)JUNCTION BOXES AND CORRESPONDING CONDUITS AS SHOWN

- T — THERMOSTAT
- C — CLOCK HANGER, RECEPTACLE
- 120V, 1Ø ELECTRIC MOTOR
- HORIZONTAL MOTOR
- VERTICAL MOTOR
- H — HEATER
- SS — PUSHBUTTON STATION; "SS"=START-STOP, LOS=LOCK-OUT-STOP, "SLOS"=START-LOCK-OUT-STOP
- H-O-A — SELECTOR SWITCH H-O-A=HAND, OFF, AUTOMATIC, L-O-R=LOCAL OFF REMOTE
- TELEPHONE OUTLET, PUBLIC
- TELEPHONE OUTLET, PRIVATE
- BELL
- BUZZER
- P — H=HORN, S=SPEAKER, SN=SIREN, P=PUBLIC ADDRESS
- S — SPEAKER, CEILING MOUNTED - SURFACE MOUNTED
- LIGHTING PANEL/POWER PANEL
- CONTROL PANEL
- MOTOR CONTROL CENTER
- TC — TERMINAL CABINET
- MH — MAINTENANCE HOLE
- HH — HANDHOLE
- PB — PULLBOX
- FA — FIRE ALARM MANUAL STATION
- T — TRANSFORMER
- MAGNETIC MOTOR STARTER
- MAGNETIC CONTACTOR
- F — DISCONNECT SWITCH, N=NON FUSIBLE, F=FUSIBLE
- EMERGENCY TELEPHONE STATION
- TC — TELEPHONE TERMINAL CABINET
- $a — SINGLE POLE SWITCH. "a" INDICATES CIRCUIT CONTROLLED
- $3 — THREE-WAY SWITCH
- $P — SWITCH AND PILOT LIGHT
- $MC — MANUAL MOTOR STARTER
- $WP — WEATHERPROOF SWITCH

WALL	FLOOR	
		120V SINGLE RECEPTACLE, NEMA CONFIGURATION 5-20.
		120V DUPLEX RECEPTACLE, NEMA CONFIGURATION 5-20
		SPECIAL PURPOSE RECEPTACLE (INDICATE RATING)
WP	VP	POWER RECEPTACLE, XP=EXPLOSION PROOF, WP=WEATHERPROOF, VP=VAPORTIGHT

- LS(T) — DEVICE AS IDENTIFIED ON P&ID:
  LS (T) = LEVEL SWITCH (TRANSMITTER)
  TS (T) = TEMPERATURE SWITCH (TRANSMITTER)
  FS (T) = FLOW SWITCH (TRANSMITTER)
  PS (T) = PRESSURE SWITCH (TRANSMITTER)
  TE = THERMAL ELEMENT (THERMOCOUPLE)
  LMS = LIMIT SWITCH
  SV = SOLENOID VALVE
  TI = TEMPERATURE INDICATOR
  LX = TRANSDUCER
  :OR REFER TO THE I&C LEGEND AND SYMBOLS.
- 1 / N—E—2 — DETAIL #1, ON DWG. 0-E-3
- DELTA-WYE CONNECTION
- ZIG-ZAG CONNECTION FOR GRD. XFMR
- B — "B" DENOTES SECTION LETTER 0-E-3 DENOTES REFERENCE TO DRAWING ON WHICH DETAIL IS SHOWN.

O N E L I N E D I A G R A M

- N—N — NETWORK
- BUS
- POWER CONDUCTOR
- CONTROL METERING, SIGNAL OR INDICATING LIGHT CONDUCTOR
- ELECTRIC INPUT (OR FUTURE)
- —K— INTERLOCK (K=MECHANICAL KEY)
- —E— ELECTRIC INTERLOCK
- BUS-DUCT, AMPERE RATING & NO. OF CONDUCTOR SHOWN
- CROSSING OF CONDUCTOR NOT CONNECTED
- CONNECTION OF CONDUCTORS
- CABLE TERMINATION
- SEPARABLE CONNECTOR (DRAW-OUT TYPE)
- THERMAL OVERLOAD
- GROUND CONNECTION
- LIGHTNING ARRESTOR
- SURGE CAPACITOR
- M — HIGH OR LOW VOLTAGE DISCONNECT SWITCH, AIR BREAK M=MOTOR OPERATED
- FUSE
- FUSED DISCONNECT SWITCH
- RECTIFIER
- RES — RESISTOR
- SPACE HEATER
- RHEOSTAT, ADJUSTABLE RESISTOR
- BATTERY (MULTICELL)
- CONTACT, NORMALLY OPEN
- CONTACT, NORMALLY CLOSED
- POWER RECEPTACLE
- 400AF / 600AT — E — AIR CIRCUIT BREAKER AF=AMPERE FRAME RATING, AT=AMPERE TRIP RATING E=ELECTRIC OPERATED, ST=SHUNT TRIP, NO=NORMALLY OPEN, NC=NORMALLY CLOSED WITHOUT CIRCLE = MANUALLY OPERATED.
- 1200A 52 NA — AIR OR VACUUM CIRCUIT BREAKER (GENERAL) HIGH OR MEDIUM VOLTAGE 34.5KV, 13.8KV OR 4.8KV (DEVICE NO. 52) NA=NON AUTOMATIC AC=AMPERE CAPACITY, IC=INTERRUPTING CAPACITY.
- STC 3 — 3=QUANTITY REQUIRED (INDICATE CURRENT RATIO), STC=SATURATED CURRENT XFMR.
- 3 — POTENTIAL TRANSFORMER 3=QUANTITY REQ'D. CPT=CONTROL POWER TRANSFORMER, PPT=POTENTIAL POWER TRANSFORMER, PST=PHASE SHIFT TRANSFORMER
- ZERO SEQUENCE CURRENT TRANSFORMER
- 1200 / 5 / MR 3 — BUSHING TYPE CURRENT TRANSFORMER 3=QUANTITY REQUIRED. 1200/5 SIGNIFIES CT RATIO MR SIGNIFIES MULTIPLE RATIOS OF CT
- POWER TRANSFORMER TWO WINDINGS.
- WINDING , GENERAL SYMBOL OR REACTOR
- WYE CONNECTION SYMBOL WITH SOLID GROUNDING NEUTRAL.
- WYE CONNECTION SYMBOL WITH NEUTRAL GROUNDING RESISTOR
- WYE CONNECTION SYMBOL WITH NEUTRAL GROUNDING TRANSFORMER AND SEC. SHUNT RESISTOR.

- G — GENERATOR, WITH SEPARATE EXCITER
- 10 2S — 3Ø INDUCTION MOTOR, 10 HORSEPOWER, 2S=2 SPEED WINDING, 2S2W=2 SPEED 2 WINDINGS
- 30 — 3Ø WOUND ROTOR INDUCTION MOTOR 10 HORSEPOWER.
- 51 — PROTECTIVE RELAY FUNCTION NUMBERS PER ANSI STANDARD C37.2 51 = AC TIME OVERCURRENT RELAY.
- 50/51 — MULTI-FUNCTION PROTECTIVE RELAY 50 = INSTANTANEOUS OVERCURRENT RELAY 51 = TIME OVERCURRENT RELAY.
- A — INSTRUMENT A=AMMETER, V=VOLTMETER, W=WATTMETER, KWH=KILOWATT HOUR METER, PF=POWER FACTOR METER, VAR=VARMETER, mA= MILLIAMPERE, AH=AMPERE-HOUR, uA=MICROAMMETER, FM=FREQUENCY METER SI=SPEED INDICATOR ETM=ELAPSED TIME METER AR=RECORDER, AMPS VR=RECORDER, VOLTS WR=RECORDER, WATTS WHD=WATT-HOUR DEMAND METER
- A VAR — TRANSDUCER, A=CURRENT, W=WATT F=FREQUENCY, V=VOLTAGE, VAR=VAR
- SELECTOR SWITCH, HOA=HAND-OFF-AUTOMATIC, LOR=LOCAL-OFF-REMOTE SPSEL=HIGH-OFF-LOW
- ST,SP,J — PUSHBUTTON STATION, 3=NUMBER OF STATIONS, RES=RESET, OP=OPEN, CL=CLOSE EX=EXTEND, RT=RETRACT, ST=START SP=STOP, F=FORWARD, R=REVERSE, L=LEFT, R=RIGHT, J=JOG, U=UP, D=DOWN, FA=FAST, SL=SLOW, H=HAND O=OFF, A=AUTO.
- E — AUTOMATIC TRANSFER SWITCH
- THMS — EQUIPMENT AUXILIARIES: RTD= RESISTANCE TEMPERATURE DETECTOR THMS = THERMISTOR VIB = VIBRATION SWITCH TC = THERMOCOUPLE
- A — INDICATING LIGHT A=AMBER, B=BLUE C=CLEAR, G=GREEN, NE=NEON, O=ORANGE, OP=OPALESCENT, P=PURPLE, R=RED, W=WHITE, Y=YELLOW.
- VR — VOLTAGE REGULATOR
- A — INTERLOCK K=KEY, R=RELAY, ARROW TERMINATES AT DEVICE
- AS — INSTRUMENT & CONTROL SWITCHES AS=AMMETER SWITCH VS=VOLTMETER SWITCH TS=TEST SWITCH SS=SYNCHRONIZING SWITCH SEL=SELECTOR SWITCH CS=CONTROL SWITCH
- VFD — VARIABLE FREQUENCY DRIVE EQUIPMENT
- P — PULSER
- TD — TIME DELAY RELAY
- 1 / R — MAGNETIC STARTER FULL VOLTAGE. R=REVERSING, RV=REDUCED VOLTAGE, 2S=TWO SPEED, 2SR= TWO SPEED REVERSING 2=NEMA SIZE OF CONTACTOR
- 3A MCP / 1 / R — COMBINATION MAGNETIC STARTER AND CIRCUIT BREAKER 3A=CONTINUOUS RATING IN AMPERES 1=DENOTES STARTER SIZE MCP=DENOTES MOTOR CIRCUIT PROTECTOR R=REVERSING

- COMBINATION MAGNETIC STARTER AND FUSED DISCONNECT SWITCH-LOW VOLTAGE.
- MAGNETIC STARTER, MEDIUM VOLTAGE
- 3 — POTENTIAL TRANSFORMER AND DRAWOUT FUSE. 3=QUANTITY REQUIRED.
- DISCONNECT SWITCH AND FUSE
- ADJUSTABLE OR VARIABLE FUNCTION
- 3-PHASE, DELTA CONNECTION
- 3-PHASE, 3-WIRE, GROUNDED CORNER DELTA
- 3-PHASE, OPEN DELTA
- 3-PHASE, OPEN DELTA, GROUNDED AT COMMON POINT.
- TIP-P022A/B/C — CABLE TAG NUMBER: TIP = AREA DESIGNATION 022 = ARBITRARY SEQUENTIAL NUMBER P = POWER A/B/C = PHASES AND CABLE COUNT C = CONTROL I = INSTRUMENTATION AL = ALARM CC = COMMUNICATION DC = DIRECT CURRENT FO = FIBER OPTICS
- EQUIPMENT OR DEVICE LOCATED IN CENTRAL CONTROL ROOM.
- EQUIPMENT OR DEVICE LOCATED IN SWITCHGEAR OR MOTOR CONTROLLER
- EQUIPMENT OR DEVICE LOCATED IN LOCAL CABINET
- DA 123A — DIGITAL ALARM INPUT (HARD-WIRED) TO ANNUNCIATOR PANEL.
- 4753 UA 123A — DIGITAL ALARM INPUT TO SCADA SYSTEM 4753 INDICATES LOOP NUMBER
- 4753 UI 123A — IMPULSE OR ANALOG INPUT TO SCADA SYSTEM 4753 - INDICATES LOOP NUMBER
- EQUIPMENT OR DEVICE LOCATED IN CSI
- 2 — SPECIAL NOTE DESIGNATION
- KWH — UTILITY COMPANY ELECTRICAL METER
- PM — ELECTRONIC POWER METER

THE CITY OF LOS ANGELES OR IT'S OFFICERS OR AGENTS SHALL NOT BE RESPONSIBLE FOR THE ACCURACY OR COMPLETENESS OF ELECTRONIC COPIES OF THIS PLAN SHEET.

REVISION DATES (DESIGN STAGE ONLY)

ENGINEERING — CITY OF LOS ANGELES

REGISTERED PROFESSIONAL ENGINEER — ROBERT D. GETTER — No. E 21884 — Exp. 06-30-23 — ELECTRICAL — STATE OF CALIFORNIA — 01/27/2023

THIS PLAN WAS ELECTRONICALLY • SIGNED AND STAMPED

BUREAU OF ENGINEERING

VERTICAL CONTROL:	BENCH MARK (08-30460) NAVD 88
HORIZONTAL CONTROL:	CALIFORNIA STATE PLANE ZONE V, 1983 NAD
SHEET TITLE:	ELECTRICAL SYMBOLS
PROJECT:	FERNANGELES PARK STORMWATER CAPTURE PROJECT
ADDRESS:	FERNANGELES RECREATION CENTER 8851 LAUREL CANYON BLVD, SUN VALLEY, CA 91352

NO.	REVISIONS	DATE	BY
		YY/MM/DD	
		YY/MM/DD	
		YY/MM/DD	
		YY/MM/DD	

CIP NO. SCP0002

INDEX NO.

CITY OF LOS ANGELES — DEPARTMENT OF PUBLIC WORKS — BUREAU OF ENGINEERING

CITY ENGINEER:	TED ALLEN, P.E.	DATE
DESIGN GROUP		01/27/2023
ENGINEER:	PROJECTLINE TECHNICAL SERVICES	01/27/2023
ARCHITECT:	NA	01/27/2023
DESIGNED BY:	J. CHIN	01/27/2023
DRAWN BY:	J. CHIN	01/27/2023
CHECKED BY:	A. CARRIE	01/27/2023
APPROVED BY:	R. GETTER	01/27/2023

WORK ORDER EW40079F

SHEET NAME EG02

SHEET 97 OF 125 SHEETS

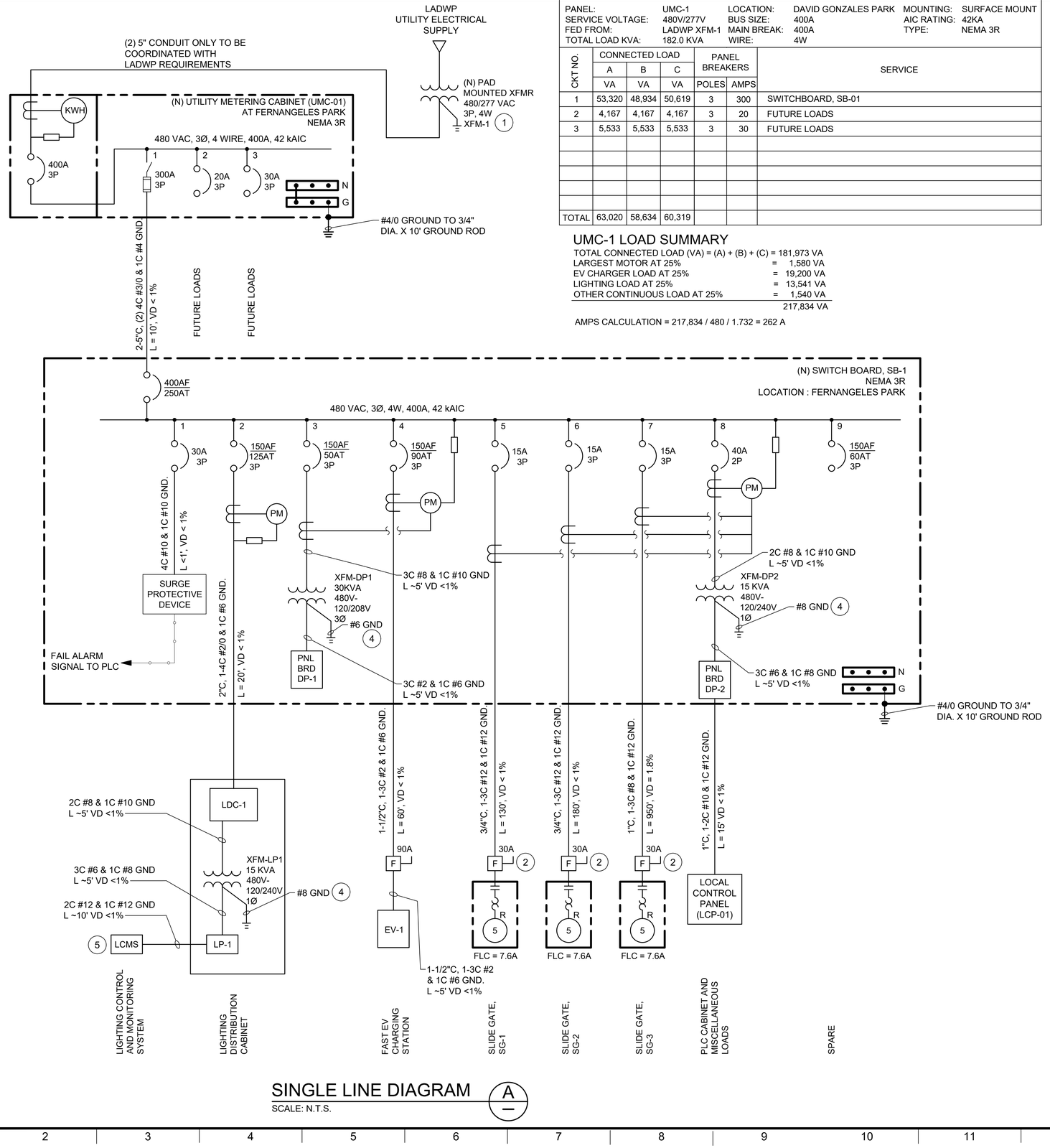

SINGLE LINE DIAGRAM

SCALE: N.T.S.

PANEL:	UMC-1	LOCATION:	DAVID GONZALES PARK	MOUNTING:	SURFACE MOUNT	
SERVICE VOLTAGE:	480V/277V	BUS SIZE:	400A	AIC RATING:	42KA	
FED FROM:	LADWP XFM-1	MAIN BREAK:	400A	TYPE:	NEMA 3R	
TOTAL LOAD KVA:	182.0 KVA	WIRE:	4W			

CKT NO.	CONNECTED LOAD A (VA)	CONNECTED LOAD B (VA)	CONNECTED LOAD C (VA)	PANEL BREAKERS POLES	PANEL BREAKERS AMPS	SERVICE
1	53,320	48,934	50,619	3	300	SWITCHBOARD, SB-01
2	4,167	4,167	4,167	3	20	FUTURE LOADS
3	5,533	5,533	5,533	3	30	FUTURE LOADS
TOTAL	63,020	58,634	60,319			

UMC-1 LOAD SUMMARY

TOTAL CONNECTED LOAD (VA) = (A) + (B) + (C) =		181,973 VA
LARGEST MOTOR AT 25%	=	1,580 VA
EV CHARGER LOAD AT 25%	=	19,200 VA
LIGHTING LOAD AT 25%	=	13,541 VA
OTHER CONTINUOUS LOAD AT 25%	=	1,540 VA
		217,834 VA

AMPS CALCULATION = 217,834 / 480 / 1.732 = 262 A

PANEL:	SB-1	LOCATION:	DAVID GONZALES PARK	MOUNTING:	SURFACE MOUNT	
SERVICE VOLTAGE:	480V/277V	BUS SIZE:	400A	AIC RATING:	42KA	
FED FROM:	UMC-1	MAIN BREAK:	250A	TYPE:	NEMA 3R	
TOTAL LOAD KVA:	152.8 KVA	WIRE:	4W			

SB-1 SECTION	CONNECTED LOAD A (VA)	CONNECTED LOAD B (VA)	CONNECTED LOAD C (VA)	PANEL BREAKERS POLES	PANEL BREAKERS AMPS	SERVICE
2C	-	-	-	3	30	SURGE PROTECTIVE DEVICE, SPD-1
3B	19,017	16,731	18,416	3	125	LIGHTING DISTRIBUTION CABINET, LDC-1 BREAKER
3F	2,106	2,106	2,106	3	15	SLIDE GATE, SG-3 CONTROL PANEL (5HP)
3M	-	1,500	1,500	2	40	15 KVA, 480V/120-240V, 1Ø, MINI POWER CENTER, DP-2
4B	-	-	-	3	60	SPARE BREAKER (FUTURE LOAD)
4D	20,785	20,785	20,785	3	150	LEVEL 3, FAST EV CHARGER
4G	2,106	2,106	2,106	3	15	SLIDE GATE, SG-1 CONTROL PANEL (5HP)
4J	2,106	2,106	2,106	3	15	SLIDE GATE, SG-2 CONTROL PANEL (5HP)
5M	7,200	3,600	3,600	3	50	30 KVA, 480V/120-208V, 3Ø, XFM-2
TOTAL	53,320	48,934	50,619			

SB-1 LOAD SUMMARY

TOTAL CONNECTED LOAD (VA) = (A) + (B) + (C) =		152,873 VA
LARGEST MOTOR AT 25%	=	1,580 VA
EV CHARGER LOAD AT 25%	=	19,200 VA
LIGHTING LOAD AT 25%	=	13,541 VA
OTHER CONTINUOUS LOAD AT 25%	=	1,540 VA
		188,734 VA

AMPS CALCULATION = 188,734 / 480 / 1.732 = 227 A

KEY NOTES:

1. LADWP PROPOSED TRANSFORMER.
2. PROVIDE A NEMA 4X DISCONNECT ADJACENT TO GATE IN DRY VAULT FOR SLIDE GATES SG-1, SG-2 AND SG-3. SEE SCHEMATIC DIAGRAM DRAWING SHEET EP07 FOR ALL SLIDE GATES CONTROL.
3. SIZE THE SURGE PROTECTIVE DEVICE PER MANUFACTURER'S RECOMMENDATION.
4. SEPARATELY DERIVED SYSTEM SHALL BE GROUNDED PER NEC ARTICLE 250.30 (A) AND COMPLY WITH 250.20 AND 250.26.
5. SEE SHEET EL06 FOR LIGHTING POWER AND CONTROL DIAGRAM.

ENGINEERING
CITY OF LOS ANGELES

REGISTERED PROFESSIONAL ENGINEER
ROBERT D. GETTER
No. E 21884
Exp. 06-30-23
ELECTRICAL
STATE OF CALIFORNIA
01/27/2023

THIS PLAN WAS ELECTRONICALLY • SIGNED AND STAMPED

BUREAU OF ENGINEERING

VERTICAL CONTROL: BENCH MARK 08-03460 NAVD 88
HORIZONTAL CONTROL: CALIFORNIA STATE PLANE ZONE V. 1983 NAD

SHEET TITLE: ELECTRICAL SINGLE LINE DIAGRAM
PROJECT: FERNANGELES PARK STORMWATER CAPTURE PROJECT
ADDRESS: FERNANGELES RECREATION CENTER 8851 LAUREL CANYON BLVD, SUN VALLEY, CA 91352

CITY OF LOS ANGELES DEPARTMENT OF PUBLIC WORKS

NO.	REVISIONS	DATE	BY
		YY/MM/DD	
		YY/MM/DD	
		YY/MM/DD	
		YY/MM/DD	

CIP NO. SCP0002

INDEX NO.

CITY ENGINEER
TED ALLEN, P.E.

		DATE
DESIGN GROUP		
ENGINEER:	PROJECTLINE TECHNICAL SERVICES	01/27/2023
ARCHITECT:	NA	01/27/2023
DESIGNED BY:	J. CHIN	01/27/2023
DRAWN BY:	J. CHIN	01/27/2023
CHECKED BY:	A. CARRIE	01/27/2023
APPROVED BY:	R. GETTER	01/27/2023

WORK ORDER
EW40079F

SHEET NAME
ES01

SHEET 98 OF 125 SHEETS

THE CITY OF LOS ANGELES OR ITS OFFICERS OR AGENTS SHALL NOT BE RESPONSIBLE FOR THE ACCURACY OR COMPLETENESS OF ELECTRONIC COPIES OF THIS PLAN SHEET.

REVISION DATES
(DESIGN STAGE ONLY)

SHEET VERSION 4.0.1 FILE PATH: C:\CDMEXT\JCHIN@PROJECTLINETS.COM\D0591899\ES01.DWG PLOT DATE: 1/26/2023 12:51 PM SAVED: 1/26/2023 9:19 AM SAVED BY:JCHIN

PANEL: LDC-1 | LOCATION: FERNANGELES PARK | MOUNTING: SURFACE MOUNT
SERVICE VOLTAGE: 480V/277V | BUS SIZE: 150A | AIC RATING: 22KA
FED FROM: SWITCHBOARD SB-1 | MAIN BREAK: 125A | TYPE: NEMA 3R
TOTAL LOAD KVA: 54.2 KVA | WIRE: 4W

LOAD IN VA					BRK	CKT	CKT	BRK				LOAD IN VA		
A	B	C	CIRCUIT DESCRIPTION	NOTE	TRIP	POLES			TRIP	POLES	CIRCUIT DESCRIPTION	A	B	C
1447			LCMS - C1		30		1	2	30		LCMS - C2	1447		
	1447		AT POLE A1	ZONE 1		3	3	4			AT POLE A2		1099	
		1099					5	6		3				1447
1454			LCMS - C4		30		7	8	30		LCMS - C7	3012		
	1802		AT POLE B2	ZONE 1			9	10			AT POLE B3		3012	
		1802				3	11	12		3				3552
1802			LCMS - C3		30		13	14	30		LCMS - C8	3012		
	2042		AT POLE B1	ZONE 1			15	16			AT POLE B4		3552	
		1694				3	17	18		3				3012
1447			LCMS - C6		30		19	20	30		LCMS - C5	1447		
	1339		AT POLE A4	ZONE 2			21	22			AT POLE A3		1339	
		1687				3	23	24		3				1687
543			LCMS-C9 (SECURITY)	ZONE 3	10	1	25	26	10	1	LCMS-C10 (SECURITY)	543		
	289		LCMS - C11	ZONE 4	10		27	28	10		LCMS - C12		347	
		289	PATHWAY LIGHTING			2	29	30		2	PATHWAY LIGHTING			347
174			LCMS - C11	ZONE 4	10		31	32	10		LCMS - C12	289		
	174		PATHWAY LIGHTING			2	33	34		2	PATHWAY LIGHTING		289	
		1800	PANEL LP-1		30		35	36						
2400						2	37	38						
							39	40						
							41	42						
9267	7093	8371	PHASE TOTAL								PHASE TOTAL	9750	9638	10045
			TOTAL CONNECTED LOAD = 54.17 KVA								BALANCED LINE CURRENT = 65.2 A			
			25% OF LIGHTING LOAD = 13.54 KVA								25% OF LIGHTING LOAD = 16.3 A			
			TOTAL DEMAND LOAD = 67.71 KVA								BALANCED DEMAND CURRENT = 81.5 A			

PANEL: LP-1 | LOCATION: INSIDE LDC-1 CABINET | MOUNTING: SURFACE MOUNT
SERVICE VOLTAGE: 240V/120V | PHASE: 1 Ø | AIC RATING: 10K
FED FROM: LDC-1 | MAIN BREAK: 40A | TYPE: NEMA 12
TOTAL LOAD KVA: 4.2 KVA | WIRE: 3W

LOAD IN VA					BRK	CKT	CKT	BRK				LOAD IN VA	
A	B	CIRCUIT DESCRIPTION	NOTE	TRIP	POLES			TRIP	POLES	NOTE	CIRCUIT DESCRIPTION	A	B
1200		LCMS LIGHTING CONTROL		15	1	1	2	15	1		PA SYSTEM	1500	
	1500	PA SYSTEM & BATTING		20	1	3	4	15	1		SPARE		
				15	1	5	6	15	1				
				15	1	7	8	15	1				
				15	1	9	10	15	1				
						11	12						
1200	1500	PHASE TOTAL									PHASE TOTAL	1500	0
		TOTAL CONNECTED LOAD = 4.2 KVA					BALANCED LINE CURRENT = 17.5A						

PANEL: DP-1 | LOCATION: FERNANGELES PARK | MOUNTING: SURFACE MOUNT
SERVICE VOLTAGE: 120/208V | MAIN BREAK: 50A | AIC RATING: 10KA
FED FROM: SWITCHBOARD SB-1 | WIRE: 4W | TYPE: NEMA 12
TOTAL LOAD KVA: 30 KVA

LOAD IN VA					BRK	CKT	CKT	BRK				LOAD IN VA		
A	B	C	CIRCUIT DESCRIPTION	NOTE	TRIP	POLES			TRIP	POLES	NOTE	CIRCUIT DESCRIPTION	A	B	C
3600			LEVEL 2, EV CHARGER		40		1	2	40			SPARE			
	3600					2	3	4		2					
			SPARE		40		5	6	40			LEVEL 2, EV CHARGER			3600
						2	7	8		2			3600		
							9	10							
							11	12							
							13	14							
							15	16							
							17	18							
3600	3600	0	PHASE TOTAL									PHASE TOTAL	3600	0	3600
			TOTAL CONNECTED LOAD = 14.4 KVA									BALANCED LINE CURRENT = 40A			
			25% OF EV LOAD = 3.6 KVA									25% OF EV LOAD = 10 A			
			TOTAL DEMAND LOAD = 18.0 KVA									BALANCED DEMAND CURRENT = 50 A			

PANEL: DP-2 | LOCATION: FERNANGELES PARK | MOUNTING: SURFACE MOUNT
SERVICE VOLTAGE: 240V/120V | PHASE: 1 Ø | AIC RATING: 10K
FED FROM: SWITCHBOARD, SB-1 | MAIN BREAK: 40A | TYPE: NEMA 12
TOTAL LOAD KVA: 3 KVA | WIRE: 3W

LOAD IN VA				BRK	CKT	CKT	BRK				LOAD IN VA	
A	B	CIRCUIT DESCRIPTION	TRIP	POLES			TRIP	POLES	NOTE	CIRCUIT DESCRIPTION	A	B
3000		LOCAL CONTROL PANEL	30	1	1	2	20	1		SPARE		
		SPARE	20	1	3	4	15	1		SPARE		
			15	1	5	6	20	1				
			15	1	7	8	15	1				
			15	1	9	10	15	1				
					11	12						
3000	0	PHASE TOTAL								PHASE TOTAL	0	0
		TOTAL CONNECTED LOAD = 3 KVA				BALANCED LINE CURRENT = 12.5A						

THIS PLAN WAS ELECTRONICALLY SIGNED AND STAMPED

REGISTERED PROFESSIONAL ENGINEER ROBERT D. GETTER No. E 21884 Exp. 06-30-23 ELECTRICAL STATE OF CALIFORNIA
01/27/2023

ENGINEERING
CITY OF LOS ANGELES

BUREAU OF ENGINEERING

VERTICAL CONTROL: BENCH MARK 08-03460 NAVD 88
HORIZONTAL CONTROL: CALIFORNIA STATE PLANE ZONE V. 1983 NAD

SHEET TITLE: ELECTRICAL PANEL SCHEDULES

PROJECT: FERNANGELES PARK STORMWATER CAPTURE PROJECT

ADDRESS: FERNANGELES RECREATION CENTER 8851 LAUREL CANYON BLVD, SUN VALLEY, CA 91352

CITY OF LOS ANGELES DEPARTMENT OF PUBLIC WORKS

NO.	REVISIONS	DATE	BY
		YY/MM/DD	
		YY/MM/DD	
		YY/MM/DD	
		YY/MM/DD	

CIP NO. SCP0002

INDEX NO.

CITY ENGINEER: TED ALLEN, P.E. — DATE: 01/27/2023

DESIGN GROUP		DATE
ENGINEER:	PROJECTLINE TECHNICAL SERVICES	01/27/2023
ARCHITECT:	NA	01/27/2023
DESIGNED BY:	J. CHIN	01/27/2023
DRAWN BY:	J. CHIN	01/27/2023
CHECKED BY:	A. CARRIE	01/27/2023
APPROVED BY:	R. GETTER	01/27/2023

WORK ORDER
EW40079F

SHEET NAME
ES02

SHEET 99 OF 125 SHEETS

THE CITY OF LOS ANGELES OR ITS OFFICERS OR AGENTS SHALL NOT BE RESPONSIBLE FOR THE ACCURACY OR COMPLETENESS OF ELECTRONIC COPIES OF THIS PLAN SHEET.

REVISION DATES (DESIGN STAGE ONLY)

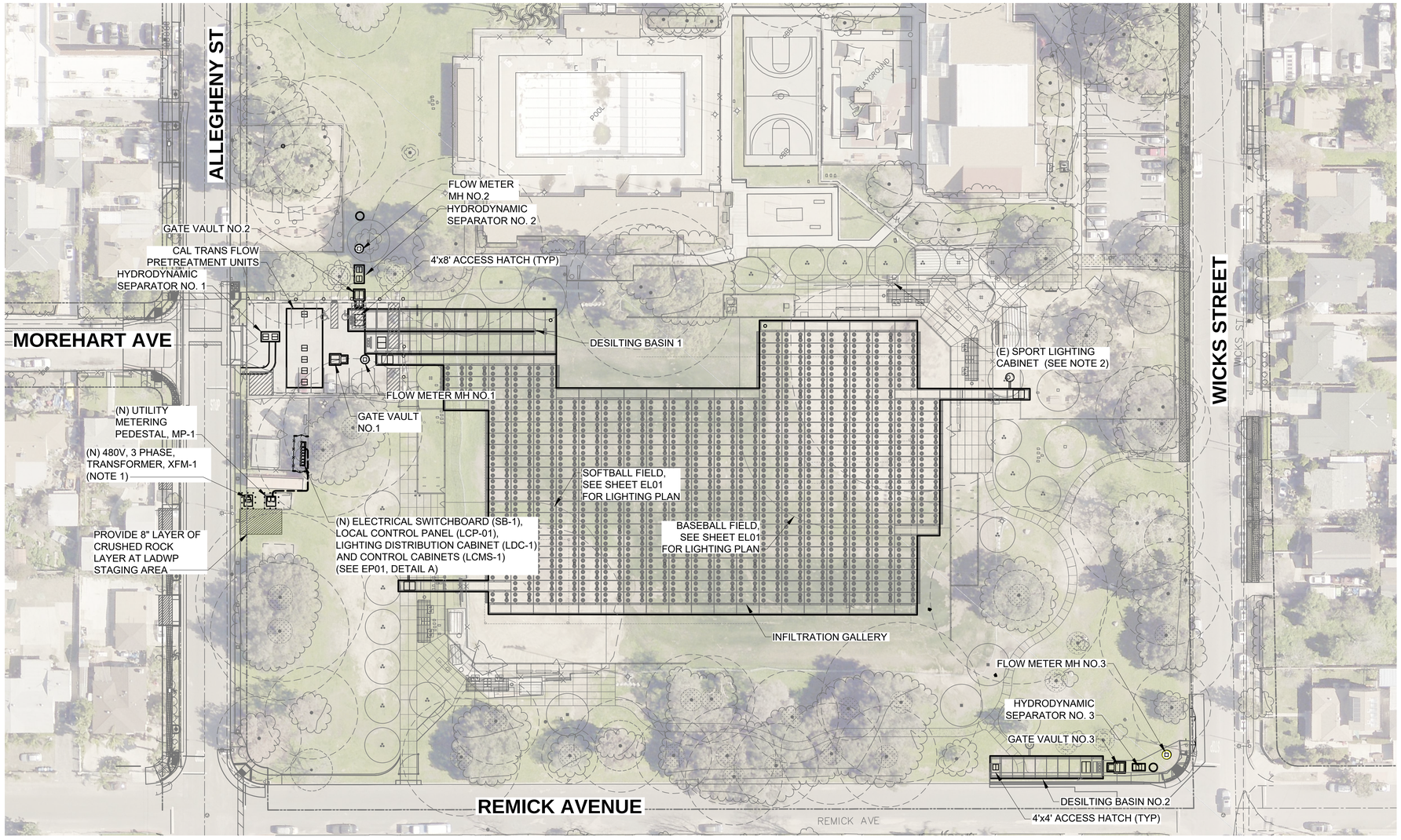

ELECTRICAL SITE PLAN

SCALE: 1" = 40'-0"

40' 0 40' 80'

1" = 40'

NOTES:

1. LADWP PROPOSED TRANSFORMER.
2. EXISTING SPORTS LIGHTING POWER DISTRIBUTION PANELS ARE LOCATED INSIDE EXISTING LIGHTING CONTROL PANEL AS SHOWN ON PLAN. NEW LIGHTING CONTROL AND POWER DISTRIBUTION PANELS WILL REPLACE EXISTING PANELS FOR BASEBALL DIAMONDS. CONTRACTOR SHALL COMPLETE THE FOLLOWING PRIOR TO DEMOLITION OF EXISTING LIGHTING SYSTEMS:
   A. FIELD SURVEY EXISTING LIGHTING POWER DISTRIBUTION PANELS TO IDENTIFY CIRCUITS BEING REPLACED AND CIRCUITS THAT MAY BE DISTURBED BY CONSTRUCTION ACTIVITIES.
   B. FIELD LOCATE BURIED LIGHTING WIRING FROM EXISTING LIGHTING PANEL TO IDENTIFY EXISTING CONDUITS THAT MAY BE DISTURBED BY CONSTRUCTION. EXCAVATE TEST PITS AS NEEDED TO LOCATE ALL BURIED ELECTRICAL CONDUITS WITHIN PROJECT WORK AREAS.
   C. DISCONNECT WIRING TO LIGHT POLES AND FIXTURES BEING REPLACED, AND WIRING TO BE IMPACTED BY CONSTRUCTION, AND PULL WIRES OUT OF EXISTING ELECTRICAL CONDUITS, PRIOR TO CONSTRUCTION AND DEMOLITION OF EXISTING LIGHTING SYSTEMS.
   D. PREPARE AND SUBMIT A DETAILED DEMOLITION PLAN, INCLUDING TEXT DESCRIPTION, DRAWINGS AND PHOTOS, TO EXPLAIN WHAT WILL BE DEMOLISHED, HOW IT WILL BE DEMOLISHED, AND PLANS TO INDICATE LOCATIONS OF CONDUITS TO BE DEMOLISHED AND THOSE TO BE PROTECTED IN-PLACE.
   E. ABANDON IN-PLACE EXISTING LIGHTING DISTRIBUTION PANELS LOCATED IN EXISTING LIGHTING CONTROL PANEL, AND LABEL BREAKERS AS ABANDONED.
3. CONTRACTOR TO PROVIDE FEEDER POWER TO TWO BASEBALL DIAMONDS FROM NEW LIGHTING DISTRIBUTION PANEL PER LIGHTING SITE PLAN (EL01).

THE CITY OF LOS ANGELES OR ITS OFFICERS OR AGENTS SHALL NOT BE RESPONSIBLE FOR THE ACCURACY OR COMPLETENESS OF ELECTRONIC COPIES OF THIS PLAN SHEET.

REVISION DATES (DESIGN STAGE ONLY)

ENGINEERING
CITY OF LOS ANGELES

REGISTERED PROFESSIONAL ENGINEER
ROBERT D. GETTER
No. E 21884
Exp. 06-30-23
ELECTRICAL
STATE OF CALIFORNIA
01/27/2023

THIS PLAN WAS ELECTRONICALLY • SIGNED AND STAMPED

CITY OF LOS ANGELES DEPARTMENT OF PUBLIC WORKS
BUREAU OF ENGINEERING

VERTICAL CONTROL: BENCH MARK (08-30460) (NAVD 88)
HORIZONTAL CONTROL: CALIFORNIA STATE PLANE ZONE V, 1983 NAD

SHEET TITLE: ELECTRICAL SITE PLAN
PROJECT: FERNANGELES PARK STORMWATER CAPTURE PROJECT
ADDRESS: FERNANGELES RECREATION CENTER 8851 LAUREL CANYON BLVD, SUN VALEY, CA 91352

NO.	REVISIONS	DATE	BY
		YY/MM/DD	
		YY/MM/DD	
		YY/MM/DD	
		YY/MM/DD	

CIP NO. SCP0002

INDEX NO.

CITY ENGINEER

	DESIGN GROUP	DATE
TED ALLEN, P.E.		
ENGINEER:	PROJECTLINE TECHNICAL SERVICES	01/27/2023
ARCHITECT:	NA	01/27/2023
DESIGNED BY:	J. CHIN	01/27/2023
DRAWN BY:	J. CHIN	01/27/2023
CHECKED BY:	A. CARRIE	01/27/2023
APPROVED BY:	R. GETTER	01/27/2023

WORK ORDER EW40079F

SHEET NAME ES03

SHEET 100 OF 125 SHEETS

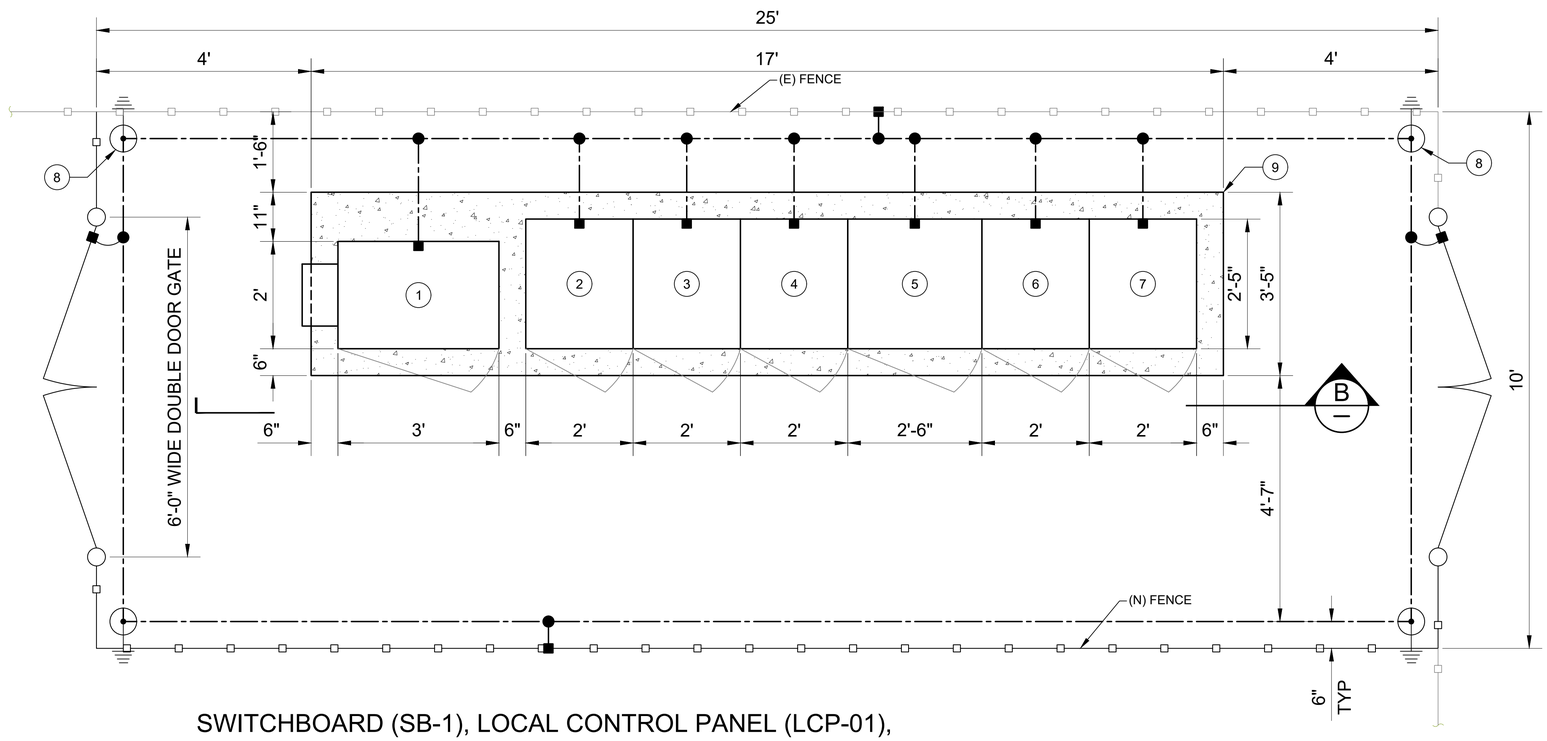

SWITCHBOARD (SB-1), LOCAL CONTROL PANEL (LCP-01),
LIGHTING DISTRIBUTION CABINET (LDC-1) & LIGHTING CONTROL CABINETS (LCMS) PLAN

SCALE: 3/4" = 1'-0"

A / ES03

KEY NOTES:

1	LOCAL CONTROL PANEL LCP-01, NEMA 4X, 316 SS CABINET. SEE SHEET IP07 FOR INTERIOR LAYOUT OF LCP-01.
2	MAIN BREAKER DISCONNECT, SEE SWITCHBOARD SB-1 INTERIOR ELEVATION, NEMA 3R, 316 SS CABINET.
3	LIGHTING DISTRIBUTION CABINET (LDC-1) BREAKER, SLIDE GATE (SG-3) CONTROL PANEL, 15KVA MINI-POWER CENTER, SEE SWITCHBOARD SB-1 INTERIOR ELEVATION, NEMA 3R, 316 SS CABINET.
4	SPARE 60A BREAKER, FAST CHARGING (EV-1) BREAKER, SLIDE GATE (SG-1) & SLIDE GATE (SG-2) CONTROL PANELS, SEE SWITCHBOARD SB-1 INTERIOR ELEVATION, NEMA 3R, 316 SS CABINET.
5	30KVA TRANSFORMER, LEVEL 2 CHARGING STATION PANEL BOARD, SEE SWITCHBOARD SB-1 INTERIOR ELEVATION, NEMA 3R, 316 SS CABINET.
6	LIGHTING DISTRIBUTION CABINET, (LDC-1) NEMA 3R SS CABINET.
7	LIGHTING CONTROL CABINET (LCMS-1) NEMA 3R SS CABINET.
8	3/4" D x 10' COPPER CLAD GROUND ROD INSTALL IN GROUND WELL SEE SHEET EP05 AT DETAIL E-01 AND E-03.
9	EQUIPMENT CONCRETE PAD DETAIL. (SEE SHEET EP07 AT DETAIL E-14)
10	#4/0 BARE SOFT DRAWN COPPER GROUNDING CONDUCTOR. BURY A MINIMUM DEPTH OF 2'-6" BELOW GRADE. CADWELD GROUND TAP CONNECTIONS AND CONNECTION AT GROUND ELECTRODE.

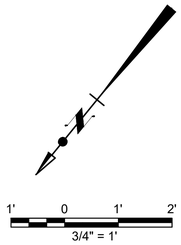

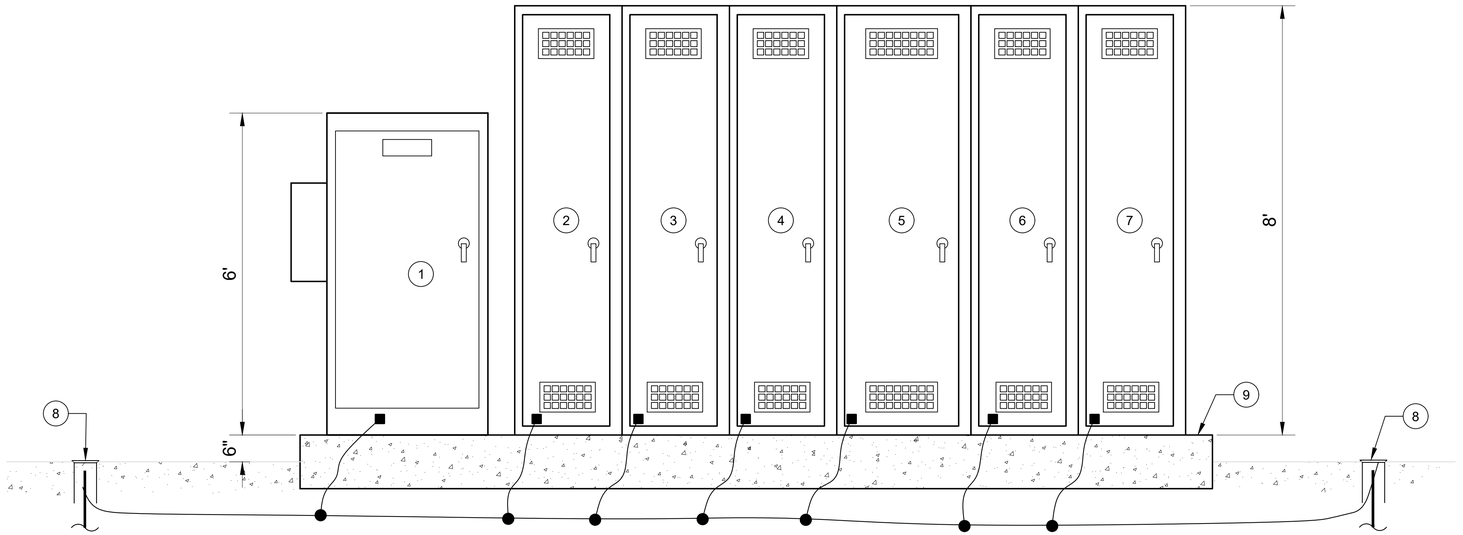

SWITCHBOARD (SB-1), LOCAL CONTROL PANEL (LCP-01),
LIGHTING DISTRIBUTION CABINET(LDC-1) & LIGHTING CONTROL CABINETS (LCMS) EXTERIOR ELEVATION

SCALE: 3/4" = 1'-0"

B / ES03

2	3	4	5	6	7
METERING PANEL	(LDC-1) BREAKER	SPARE BREAKER 60A	LEVEL 2 EV CHARGING STATIONS PANELBOARD (DP-1)	480V/277V THREE PHASE LIGHTING DISTRIBUTION PANEL (LDC-1)	LIGHTING CONTROL AND MONITORING CABINET (LCMS)
	SPACE	(EV-1) BREAKER			
SURGE PROTECTIVE DEVICE	SLIDE GATE, SG-3 CONTROL PANEL	SLIDE GATE, SG-1 CONTROL PANEL			
MAIN BREAKER DISCONNECT	15KVA 480V/120-240V SINGLE PHASE MINI POWER CENTER WITH DP-2	SLIDE GATE, SG-2 CONTROL PANEL	30 KVA 480V/120-208V THREE PHASE TRANSFORMER	15KVA 480V/120-240V SINGLE PHASE MINI POWER CENTER WITH LP-1	
		SPACE			

SB-1, LDC-1, AND LCMS INTERIOR ELEVATION

SCALE: 3/4" = 1'-0"

C / ES03

THE CITY OF LOS ANGELES OR ITS OFFICERS OR AGENTS SHALL NOT BE RESPONSIBLE FOR THE ACCURACY OR COMPLETENESS OF ELECTRONIC COPIES OF THIS PLAN SHEET.

REVISION DATES (DESIGN STAGE ONLY)

ENGINEERING
CITY OF LOS ANGELES

REGISTERED PROFESSIONAL ENGINEER
ROBERT D. GETTER
No. E 21884
Exp. 06-30-23
ELECTRICAL
STATE OF CALIFORNIA
01/27/2023

THIS PLAN WAS ELECTRONICALLY • SIGNED AND STAMPED

BUREAU OF ENGINEERING

VERTICAL CONTROL: BENCH MARK 08-03460 NAVD 88
HORIZONTAL CONTROL: CALIFORNIA STATE PLANE ZONE V, 1983 NAD

SHEET TITLE: SB-1, LCP-01, LDC-1, LCMS PLAN AND ELEVATION

PROJECT: FERNANGELES PARK STORMWATER CAPTURE PROJECT

ADDRESS: FERNANGELES RECREATION CENTER 8851 LAUREL CANYON BLVD, SUN VALEY, CA 91352

NO.	REVISIONS	DATE	BY
		YY/MM/DD	
		YY/MM/DD	
		YY/MM/DD	
		YY/MM/DD	

INDEX NO.

CIP NO. SCP0002

CITY OF LOS ANGELES DEPARTMENT OF PUBLIC WORKS

CITY ENGINEER	DESIGN GROUP	DATE
TED ALLEN, P.E.		01/27/2023
ENGINEER:	PROJECTLINE TECHNICAL SERVICES	01/27/2023
ARCHITECT:	NA	01/27/2023
DESIGNED BY:	J. CHIN	01/27/2023
DRAWN BY:	J. CHIN	01/27/2023
CHECKED BY:	A. CARRIE	01/27/2023
APPROVED BY:	R. GETTER	01/27/2023

WORK ORDER
EW40079F

SHEET NAME
EP01

SHEET 101 OF 125 SHEETS

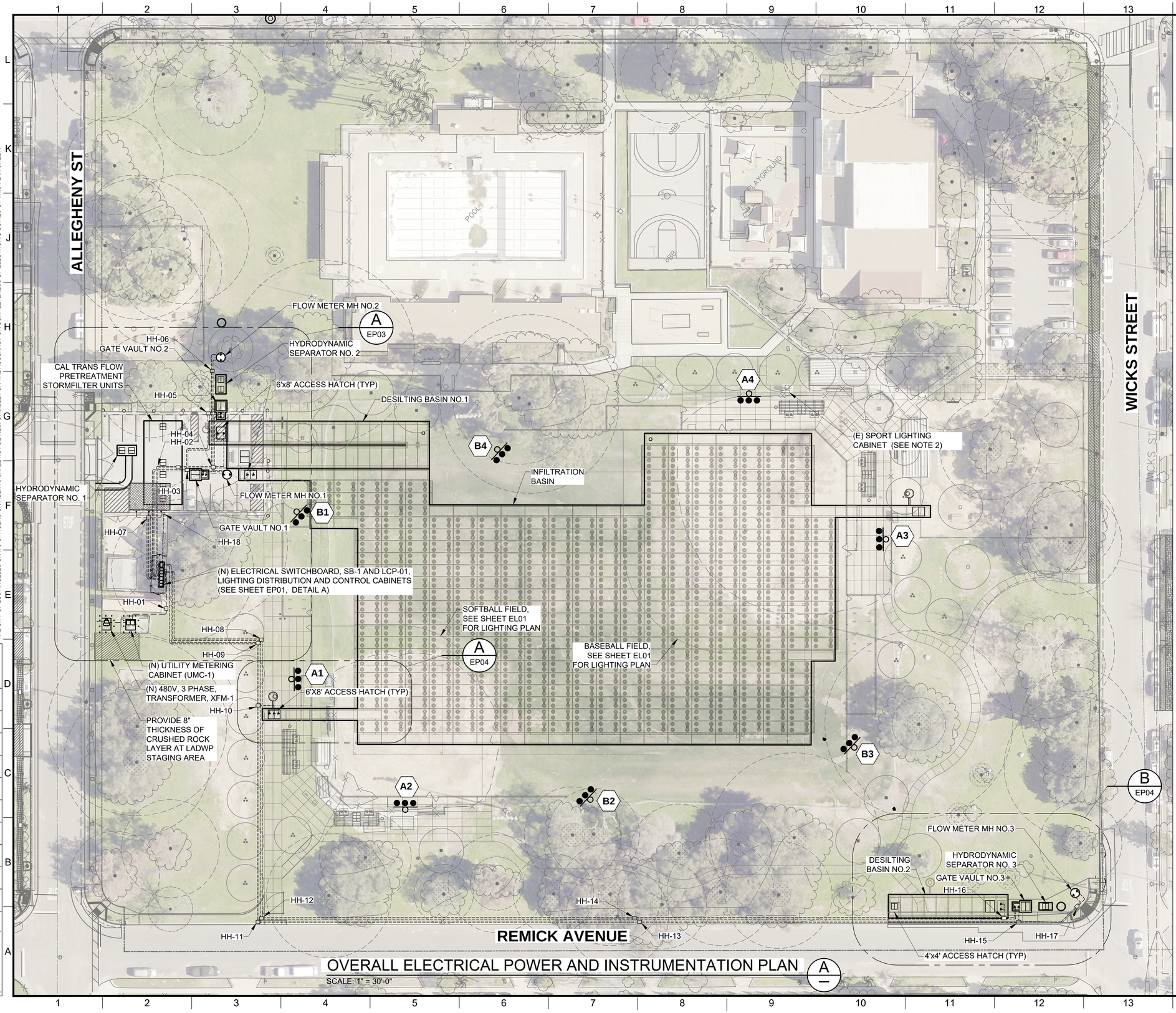

OVERALL ELECTRICAL POWER AND INSTRUMENTATION PLAN

SCALE: 1" = 30'-0"

A

LEGEND

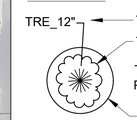

ELECTRICAL NOTES:

1. TREE PROTECTION ZONES ARE IDENTIFIED HEREIN ON THE PLANS WITH CIRCLES AROUND EXISTING TREES. CONTRACTOR SHALL AVOID CONSTRUCTION WITHIN TREE PROTECTION ZONES AS MUCH AS PRACTICAL, AND ASSIST THE CITY IN PROTECTING EXISTING TREES. CONDUIT ROUTING SHOWN HEREIN IS DIAGRAMMATIC, AND CONTRACTOR SHALL PREPARE DETAILED CONDUIT AND EQUIPMENT LOCATION PLANS FOR CITY REVIEW, INCLUDING PROPOSED CONDUIT ROUTING THAT PROTECTS TREES. WHERE REQUIRED TO ROUTE CONDUITS OUTSIDE TREE PROTECTION ZONES, CONTRACTOR SHALL PROVIDE UP TO 10 ADDED BURIED ELECTRICAL PULLBOXES, IN ADDITION TO THOSE SHOWN ON THE PLANS HEREIN, AT NO ADDED COST TO THE CITY.
2. CONTRACTOR SHALL COORDINATE FLOW METER INSTALLATION ARRANGEMENTS AND DETAILS WITH FLOW METER MANUFACTURER, AND SUBMIT MANUFACTURER'S CERTIFICATION IN WRITING THAT INSTALLATION ARRANGEMENTS ARE HYDRAULICALLY ACCEPTABLE FOR ALL FLOW METERS. MANUFACTURER SHALL PROVIDE UP TO ONE DAY OF FIELD INSTALLATION AND SUPPORT AS NEEDED TO REFINE FLOW METER INSTALLATION AND TUNING.
3. PROVIDE JUNCTION BOX INSIDE BASIN ABOVE WATER LEVEL & ACCESSIBLE FROM HATCH FOR BOTH INTRUSION SWITCH & LEVEL TRANSMITTER. SECURE LEVEL TX VENT TUBE IN JUNCTION BOX AS MANUFACTURERS INSTRUCTIONS.
4. PROVIDE JUNCTION BOX FOR FLOAT SWITCH INSIDE BASIN.
5. PROVIDE JUNCTION BOX INSIDE FLOW METER VAULT. CABLE AS SPECIFIED BY MANUFACTURER. SEE SHEET CI20 DETAIL A9 FOR FLOW METER MOUNTING DETAIL.
6. BURIED ELECTRICAL PULLBOXES AND HANDHOLES SHALL BE PRECAST CONCRETE WITH CAST IRON OR CORROSION RESISTANT STEEL LIDS ON METAL FRAMES, SUCH THAT THEY CAN BE WELDED SHUT AND COMPLY WITH NEC 314.30, AND BE UL LISTED. LID SHALL BE MARKED AS "POWER" OR "SIGNAL" AS APPROPRIATE AND TOP OF LID TO BE FLUSH WITH FINISHED GRADE. PROVIDE ALL PULLBOXES AND HANDHOLES MINIMUM SIZES AT 10" x17"x30" DEEP. PROVIDE LIDS WITH H20 TRAFFIC RATING. PULLBOXES AND HANDHOLES SHALL BE BY CHRISTY, OLDCASTLE, AND JENSEN OR EQUAL.

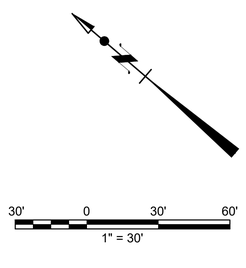

ENGINEERING
CITY OF LOS ANGELES

REGISTERED PROFESSIONAL ENGINEER
ROBERT D. GETTER
No. E 21884
Exp. 06-30-23
ELECTRICAL
STATE OF CALIFORNIA
01/27/2023

THIS PLAN WAS ELECTRONICALLY • SIGNED AND STAMPED

VERTICAL CONTROL: BENCH MARK 06-30460 (NAVD 88)
HORIZONTAL CONTROL: CALIFORNIA STATE PLANE ZONE V, 1983 NAD

SHEET TITLE: OVERALL ELECTRICAL POWER AND INSTRUMENTATION PLAN

PROJECT: FERNANGELES PARK STORMWATER CAPTURE PROJECT

ADDRESS: FERNANGELES RECREATION CENTER 8851 LAUREL CANYON BLVD, SUN VALEY, CA 91352

NO	REVISIONS	DATE	BY
		YY/MM/DD	
		YY/MM/DD	
		YY/MM/DD	
		YY/MM/DD	

CIP NO. SCP0002

INDEX NO.

CITY ENGINEER

DESIGN GROUP	DATE
ENGINEER: PROJECTLINE TECHNICAL SERVICES	01/27/2023
ARCHITECT: NA	01/27/2023
DESIGNED BY: J. CHIN	01/27/2023
DRAWN BY: J. CHIN	01/27/2023
CHECKED BY: A. CARRIE	01/27/2023
APPROVED BY: R. GETTER	01/27/2023

TED ALLEN, P.E.

CITY OF LOS ANGELES DEPARTMENT OF PUBLIC WORKS BUREAU OF ENGINEERING

WORK ORDER
EW40079F

SHEET NAME
EP02

SHEET 102 OF 125 SHEETS

THE CITY OF LOS ANGELES OR ITS OFFICERS OR AGENTS SHALL NOT BE RESPONSIBLE FOR THE ACCURACY OR COMPLETENESS OF ELECTRONIC COPIES OF THIS PLAN SHEET.

REVISION DATES (DESIGN STAGE ONLY)

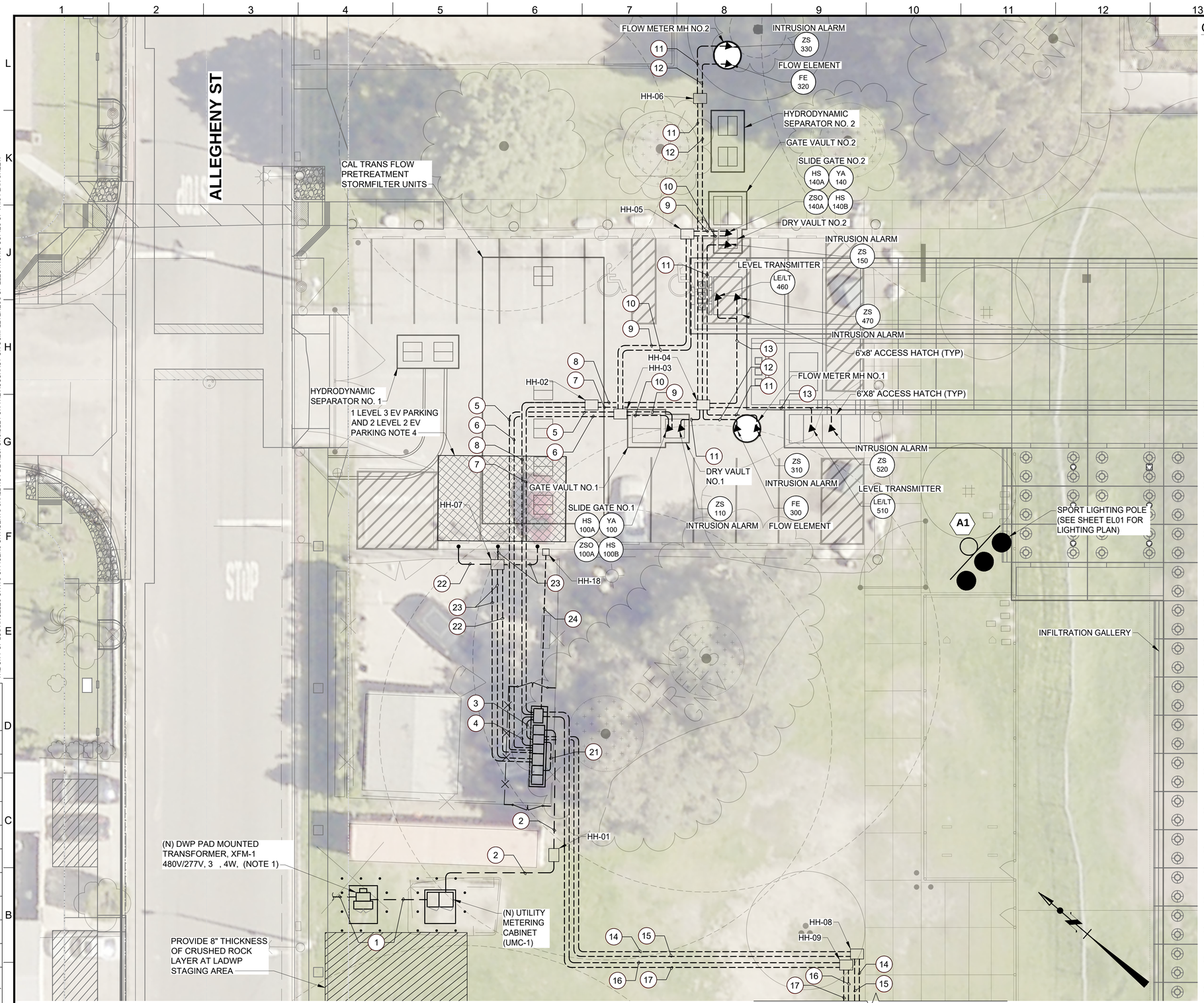

ELECTRICAL POWER AND INSTRUMENTATION PLAN

SCALE: 1" = 10'-0"

A / EP-02

10' 0 10' 20'

1" = 10'

GENERAL NOTES:

1. BURIED ELECTRICAL PULLBOXES AND HANDHOLES SHALL BE PRECAST CONCRETE WITH CAST IRON OR CORROSION RESISTANT STEEL LIDS ON METAL FRAMES, SUCH THAT THEY CAN BE WELDED SHUT AND COMPLY WITH NEC 314.30, AND BE UL LISTED. LID SHALL BE MARKED AS "POWER" OR "SIGNAL" AS APPROPRIATE AND TOP OF LID TO BE FLUSH WITH FINISHED GRADE. PROVIDE ALL PULLBOXES AND HANDHOLES MINIMUM SIZES AT 10" X17"X30" DEEP AND PENTA-HEAD BOLTS. PROVIDE LIDS WITH H20 TRAFFIC RATING. PULLBOXES AND HANDHOLES SHALL BE BY CHRISTY, OLDCASTLE, AND JENSEN OR EQUAL.

HANDHOLE -ID	SIZE	MIN. DEPTH
HH-01	30"X48"	44"
HH-06	10"X17"	34"
HH-02,03,04,05,07-18	20"X20"	34"

2. PROVIDE JUNCTION BOX INSIDE BASIN ABOVE WATER LEVEL & ACCESSIBLE FROM HATCH FOR BOTH INTRUSION LIGHT SWITCH & LEVEL TRANSMITTER. SECURE LEVEL TX VENT TUBE IN JUNCTION BOX AS MANUFACTURERS INSTRUCTIONS.

3. PROVIDE JUNCTION BOX FOR FLOAT SWITCH INSIDE BASIN.

4. PROVIDE PROTECTION FROM PHYSICAL DAMAGE FOR SWITCHBOARDS, PANELBOARDS, AND OTHER ELECTRICAL EQUIPMENT.

KEY NOTES:

1. 2-5" CONDUIT ONLY TO BE COORDINATED WITH LADWP REQUIREMENTS (480V, POWER TO AND FROM NEW PAD MOUNTED LADWP TRANSFORMER TO UTILITY METERING CABINET).
2. 2-5"C, 4C#3/0, 1C#4 GND (480V, 3 PHASE, POWER) FROM UTILITY METERING CABINET TO SB-1-2M.
3. 1"C, 1-2C#12, 1C#12 GND (120V, POWER) FROM DP-2, CKT NO 1 AT SB-1-3M TO LCP-01.
   1"C, 1-5C#14 (120VAC, CONTROL) FROM SG-3 AT SB-1-3F TO LCP-01.
   1"C, 1-8C#16 (24VDC, GATE STATUS) FROM SG-3 AT SB-1-3F TO LCP-01.
4. 1"C, 2-5C#14 (120VAC, CONTROL) FROM SG-1 & 2 TO LCP-01.
   1.5"C, 2-8C#16 (24VDC, GATE STATUS) FROM SG-1 & 2 TO LCP-01.
5. 1-1/2"C, 2-3C#12, 1C#12 GND (480V, POWER) FROM SG-1 & 2.
6. 2"C, 2-12C#14,(120V, CMD & STATUS) FROM SG-1 & 2.
7. 2"C, 5-4C#14 (24V, INTRUSION ALARMS).
8. 2"C, 2 MANUFACTURER'S CABLES (2 FLOW SIGNALS)
   - 2-2TSP #16 (4-20MA, LEVEL SIGNALS)
9. 1"C, 1-3C#12, 1C#12 GND (480V, POWER).
10. 1.5"C, 1-12C#14,(120V, CMD & STATUS).
11. 1"C, 1-4C#14 (24V, INTRUSION ALARM).
12. 1"C, 1 MANUFACTURER'S CABLES (1 FLOW SIGNAL)
13. 2"C, 1-4C#14 (24V, INTRUSION ALARMS).
    - 1-2TSP #16 (4-20MA, LEVEL SIGNAL).
14. 1"C, 1-3C#8, 1C#10 GND (480V, POWER).
15. 1.5"C, 1-12C#12,(120V, CMD & STATUS).
16. 2"C, 4-4C#14 (24V, INTRUSION ALARMS).
17. 2"C, 1 MANUFACTURER'S CABLES (1 FLOW SIGNAL)
    - 1-4TSP #16 (4-20MA, 1 LEVEL SIGNAL AND 1 FLOAT SIGNAL).
    - 1-2TSP #16 (4-20MA, 1 LEVEL SIGNAL).
18. 1.5"C, 1-4TSP#16 (24V, FLOAT AND LEVEL SIGNAL)
    - 1-4C#14 (24V, INTRUSION ALARM) FROM ACCESS HATCH AT INFILTRATION GALLERY TO LCP-01).
19. 2"C, 3-4C#14 (24V, INTRUSION ALARMS).
20. 2"C, 1 MANUFACTURER'S CABLES (1 FLOW SIGNAL)
    - 1-2TSP #16 (4-20MA, LEVEL SIGNAL).
21. 2"C, 1-4C#1, 1C#6 GND (480V, 3 PHASE, POWER) FROM LDC-1 BREAKER AT SB-1-3B TO LDC-1.
22. PROVIDE 1-1/2" CONDUIT WITH PULL WIRES FOR FUTURE INSTALLATION OF LEVEL 3, FAST EV CHARGER.
23. PROVIDE 1" CONDUITS WITH PULL WIRES FOR FUTURE INSTALLATION OF LEVEL 2 EV CHARGER.
24. PROVIDE 1.5" CONDUIT WITH PULL WIRES FOR FUTURE EV CHARGER DATA SIGNAL FROM HH-18 AT PARKING LOT TO LCP-01 PANEL.

THE CITY OF LOS ANGELES OR ITS OFFICERS OR AGENTS SHALL NOT BE RESPONSIBLE FOR THE ACCURACY OR COMPLETENESS OF ELECTRONIC COPIES OF THIS PLAN SHEET.

REVISION DATES (DESIGN STAGE ONLY)

CITY OF LOS ANGELES DEPARTMENT OF PUBLIC WORKS BUREAU OF ENGINEERING

ENGINEERING CITY OF LOS ANGELES

REGISTERED PROFESSIONAL ENGINEER ROBERT D. GETTER No. E 21884 Exp. 06-30-23 ELECTRICAL STATE OF CALIFORNIA

01/27/2023

THIS PLAN WAS ELECTRONICALLY • SIGNED AND STAMPED

VERTICAL CONTROL: BENCH MARK (08-30460) NAVD 88
HORIZONTAL CONTROL: CALIFORNIA STATE PLANE ZONE V, 1983 NAD

SHEET TITLE: ELECTRICAL POWER AND INSTRUMENTATION DETAIL PLAN 1 OF 2

PROJECT: FERNANGELES PARK STORMWATER CAPTURE PROJECT

ADDRESS: FERNANGELES RECREATION CENTER 8851 LAUREL CANYON BLVD, SUN VALEY, CA 91352

NO.	REVISIONS	DATE	BY
		YY/MM/DD	
		YY/MM/DD	
		YY/MM/DD	
		YY/MM/DD	

CIP NO. SCP0002

INDEX NO.

CITY ENGINEER: TED ALLEN, P.E.

DESIGN GROUP	DATE
PROJECT/LINE TECHNICAL SERVICES	01/27/2023
ENGINEER: NA	01/27/2023
ARCHITECT: NA	01/27/2023
DESIGNED BY: J. CHIN	01/27/2023
DRAWN BY: J. CHIN	01/27/2023
CHECKED BY: A. CARRIE	01/27/2023
APPROVED BY: R. GETTER	01/27/2023

WORK ORDER EW40079F

SHEET NAME EP03

SHEET 103 OF 125 SHEETS

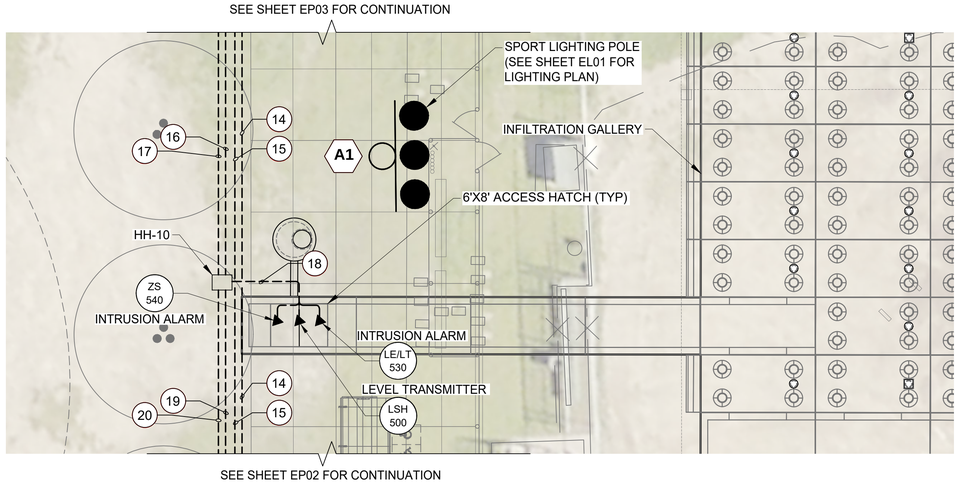

ELECTRICAL POWER AND INSTRUMENTATION PLAN

SCALE: 1" = 10'-0"

A / EP-02

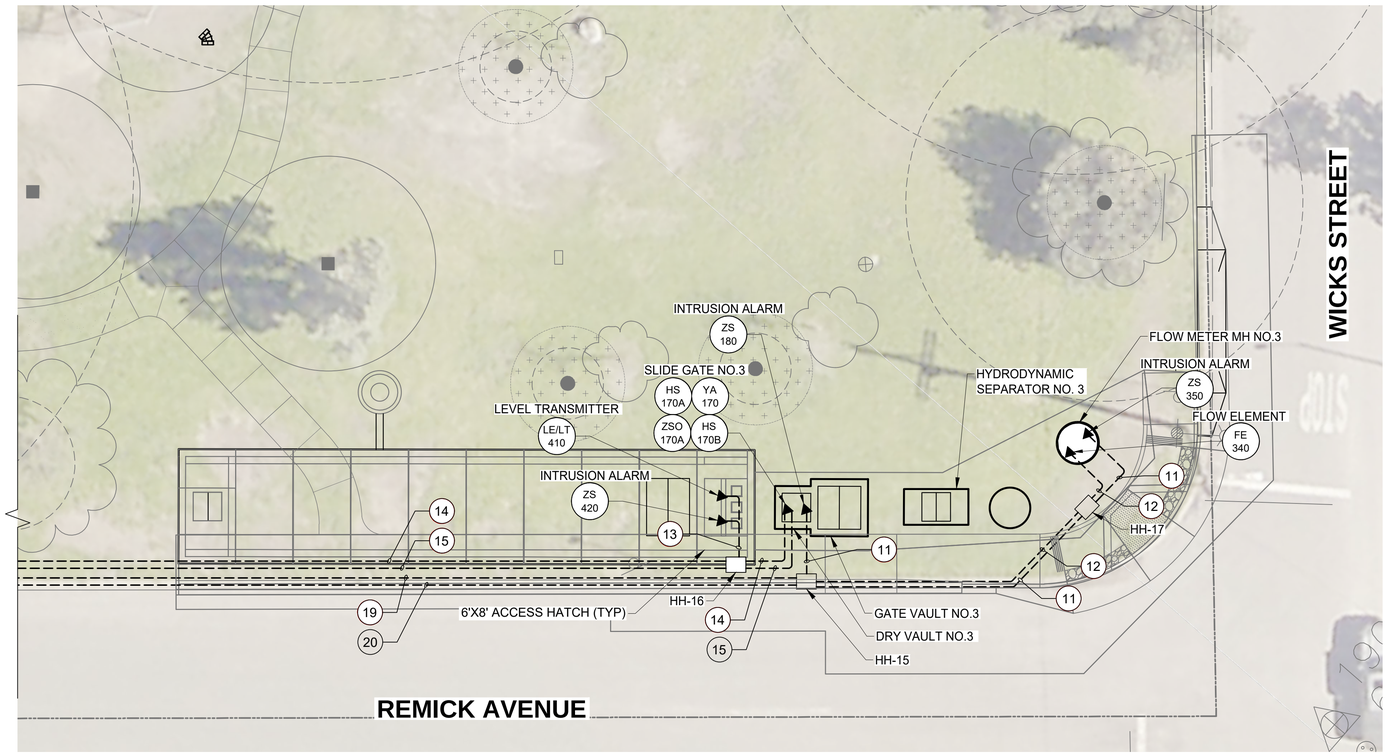

ELECTRICAL POWER AND INSTRUMENTATION PLAN

SCALE: 1" = 10'-0"

B / EP-02

GENERAL NOTES:

1. BURIED ELECTRICAL PULLBOXES AND HANDHOLES SHALL BE PRECAST CONCRETE WITH CAST IRON OR CORROSION RESISTANT STEEL LIDS ON METAL FRAMES, SUCH THAT THEY CAN BE WELDED SHUT AND COMPLY WITH NEC 314.30, AND BE UL LISTED. LID SHALL BE MARKED AS "POWER" OR "SIGNAL" AS APPROPRIATE AND TOP OF LID TO BE FLUSH WITH FINISHED GRADE. PROVIDE ALL PULLBOXES AND HANDHOLES MINIMUM SIZES AT 10" X17"X30" DEEP AND PENTA-HEAD BOLTS. PROVIDE LIDS WITH H20 TRAFFIC RATING. PULLBOXES AND HANDHOLES SHALL BE BY CHRISTY, OLDCASTLE, AND JENSEN OR EQUAL.

HANDHOLE -ID	SIZE	MIN. DEPTH
HH-01	30"X48"	44"
HH-06	10"X17"	34"
HH-02,03,04,05,07-18	20"X20"	34"

2. PROVIDE JUNCTION BOX INSIDE BASIN ABOVE WATER LEVEL & ACCESSIBLE FROM HATCH FOR BOTH INTRUSION LIGHT SWITCH & LEVEL TRANSMITTER. SECURE LEVEL TX VENT TUBE IN JUNCTION BOX AS MANUFACTURERS INSTRUCTIONS.

3. PROVIDE JUNCTION BOX FOR FLOAT SWITCH INSIDE BASIN.

4. PROVIDE PROTECTION FROM PHYSICAL DAMAGE FOR SWITCHBOARDS, PANELBOARDS, AND OTHER ELECTRICAL EQUIPMENT.

KEY NOTES:

1. 2-5" CONDUIT ONLY TO BE COORDINATED WITH LADWP REQUIREMENTS (480V, POWER TO AND FROM NEW PAD MOUNTED LADWP TRANSFORMER TO UTILITY METERING CABINET).
2. 2-5"C, 4C#3/0, 1C#4 GND (480V, 3 PHASE, POWER) FROM UTILITY METERING CABINET TO SB-1-2M.
3. 1"C, 1-2C#12, 1C#12 GND (120V, POWER) FROM DP-2, CKT NO 1 AT SB-1-3M TO LCP-01.
   1"C, 1-5C#14 (120VAC, CONTROL) FROM SG-3 AT SB-1-3F TO LCP-01.
   1"C, 1-8C#16 (24VDC, GATE STATUS) FROM SG-3 AT SB-1-3F TO LCP-01.
4. 1"C, 2-5C#14 (120VAC, CONTROL) FROM SG-1 & 2 TO LCP-01.
   1.5"C, 2-8C#16 (24VDC, GATE STATUS) FROM SG-1 & 2 TO LCP-01.
5. 1-1/2"C, 2-3C#12, 1C#12 GND (480V, POWER) FROM SG-1 & 2.
6. 2"C, 2-12C#14,(120V, CMD & STATUS) FROM SG-1 & 2.
7. 2"C, 5-4C#14 (24V, INTRUSION ALARMS).
8. 2"C, 2 MANUFACTURER'S CABLES (2 FLOW SIGNALS)
   - 2-2TSP #16 (4-20MA, LEVEL SIGNALS)
9. 1"C, 1-3C#12, 1C#12 GND (480V, POWER).
10. 1.5"C, 1-12C#14,(120V, CMD & STATUS).
11. 1"C, 1-4C#14 (24V, INTRUSION ALARM).
12. 1"C, 1 MANUFACTURER'S CABLES (1 FLOW SIGNAL)
13. 2"C, 1-4C#14 (24V, INTRUSION ALARMS).
    - 1-2TSP #16 (4-20MA, LEVEL SIGNAL).
14. 1"C, 1-3C#8, 1C#10 GND (480V, POWER).
15. 1.5"C, 1-12C#12,(120V, CMD & STATUS).
16. 2"C, 4-4C#14 (24V, INTRUSION ALARMS).
17. 2"C, 1 MANUFACTURER'S CABLES (1 FLOW SIGNAL)
    - 1-4TSP #16 (4-20MA, 1 LEVEL SIGNAL AND 1 FLOAT SIGNAL).
    - 1-2TSP #16 (4-20MA, 1 LEVEL SIGNAL).
18. 1.5"C, 1-4TSP#16 (24V, FLOAT AND LEVEL SIGNAL)
    - 1-4C#14 (24V, INTRUSION ALARM) FROM ACCESS HATCH AT INFILTRATION GALLERY TO LCP-01).
19. 2"C, 3-4C#14 (24V, INTRUSION ALARMS).
20. 2"C, 1 MANUFACTURER'S CABLES (1 FLOW SIGNAL)
    - 1-2TSP #16 (4-20MA, LEVEL SIGNAL).
21. 2"C, 1-4C#1, 1C#6 GND (480V, 3 PHASE, POWER) FROM LDC-1 BREAKER AT SB-1-3B TO LDC-1.
22. PROVIDE 1-1/2" CONDUIT WITH PULL WIRES FOR FUTURE INSTALLATION OF LEVEL 3, FAST EV CHARGER.
23. PROVIDE 1" CONDUITS WITH PULL WIRES FOR FUTURE INSTALLATION OF LEVEL 2 EV CHARGER.
24. PROVIDE 1.5" CONDUIT WITH PULL WIRES FOR FUTURE EV CHARGER DATA SIGNAL FROM HH-18 AT PARKING LOT TO LCP-01 PANEL.

ENGINEERING
CITY OF LOS ANGELES

REGISTERED PROFESSIONAL ENGINEER
ROBERT D. GETTER
No. E 21884
Exp. 06-30-23
ELECTRICAL
STATE OF CALIFORNIA
01/27/2023

THIS PLAN WAS ELECTRONICALLY • SIGNED AND STAMPED

CITY OF LOS ANGELES DEPARTMENT OF PUBLIC WORKS BUREAU OF ENGINEERING

VERTICAL CONTROL: BENCH MARK:08-30460 (NAVD 88)
HORIZONTAL CONTROL: CALIFORNIA STATE PLANE ZONE V, 1983 NAD

SHEET TITLE: ELECTRICAL POWER AND INSTRUMENTATION DETAIL PLAN 2 OF 2
PROJECT: FERNANGELES PARK STORMWATER CAPTURE PROJECT
ADDRESS: FERNANGELES RECREATION CENTER 8851 LAUREL CANYON BLVD, SUN VALEY, CA 91352

NO.	REVISIONS	DATE	BY
		YY/MM/DD	
		YY/MM/DD	
		YY/MM/DD	
		YY/MM/DD	

CIP NO. SCP0002

INDEX NO.

CITY ENGINEER

DESIGN GROUP		DATE
TED ALLEN, P.E.		01/27/2023
ENGINEER:	PROJECTLINE TECHNICAL SERVICES	01/27/2023
ARCHITECT:	NA	01/27/2023
DESIGNED BY:	J. CHIN	01/27/2023
DRAWN BY:	J. CHIN	01/27/2023
CHECKED BY:	A. CARRIE	01/27/2023
APPROVED BY:	R. GETTER	01/27/2023

WORK ORDER EW40079F

SHEET NAME EP04

SHEET 104 OF 125 SHEETS

THE CITY OF LOS ANGELES OR ITS OFFICERS OR AGENTS SHALL NOT BE RESPONSIBLE FOR THE ACCURACY OR COMPLETENESS OF ELECTRONIC COPIES OF THIS PLAN SHEET.

REVISION DATES (DESIGN STAGE ONLY)

THE CITY OF LOS ANGELES OR ITS OFFICERS OR AGENTS SHALL NOT BE RESPONSIBLE FOR THE ACCURACY OR COMPLETENESS OF ELECTRONIC COPIES OF THIS PLAN SHEET.

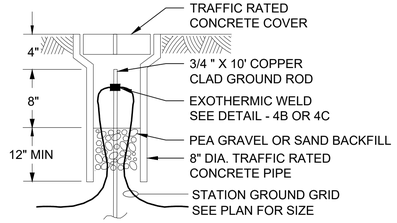

NOTE:
1. PROVIDE MINIMUM OF FOUR GROUND RODS IN GROUND WELLS.

GROUND WELL — E-01

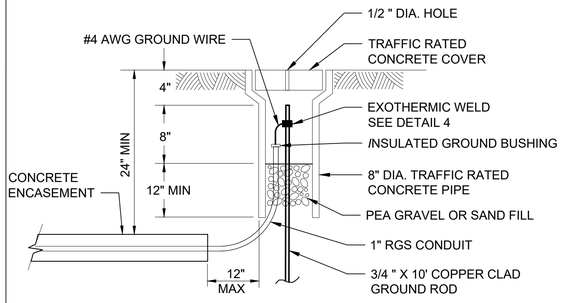

INSULATED GROUND CABLE MOUNTING IN GROUND WELL — E-02

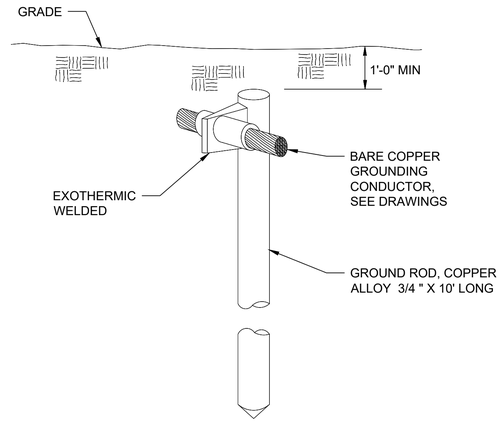

NOTE:
1. CONTRACTOR SHALL PROVIDE UP TO FOUR GROUND RODS CONNECTED TO GROUND LOOPS AROUND ELECTRICAL ENCLOSURE. CONTRACTOR SHALL SUBMIT PROPOSED GROUNDING PLAN FOR APPROVAL.

BURIED GROUND ROD — E-03

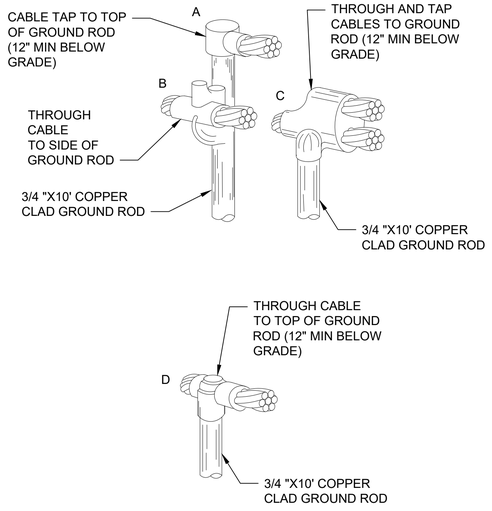

EXOTHERMIC WELDS CABLE TO GROUND ROD — E-04

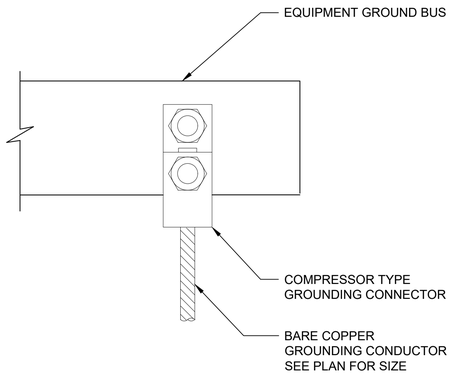

TYPICAL GROUND BUS CONNECTION — E-05

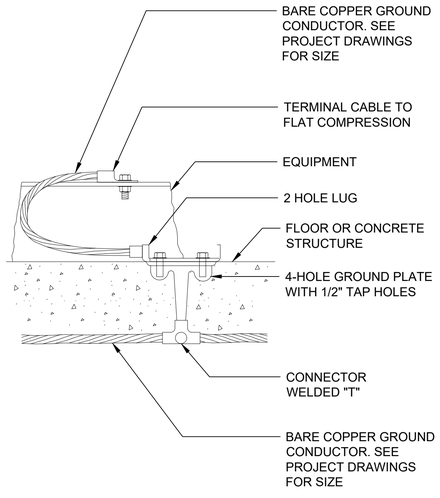

TYPICAL GROUND EQUIPMENT CONNECTION — E-06

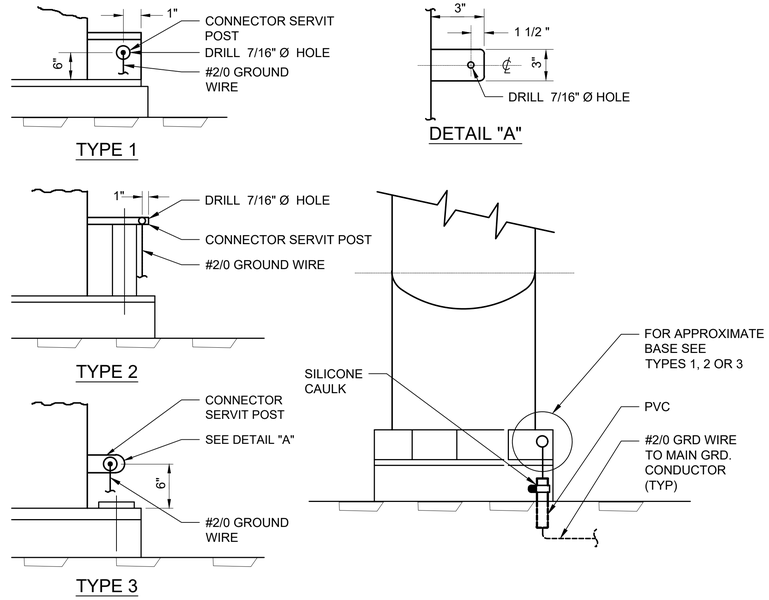

NOTE:
1. ALL TANKS, LADDERS AND HANDRAILS TO BE GROUNDED.

TYPICAL EQUIPMENT GROUNDING — E-07

REVISION DATES
(DESIGN STAGE ONLY)

CITY OF LOS ANGELES DEPARTMENT OF PUBLIC WORKS
BUREAU OF ENGINEERING
THIS PLAN WAS ELECTRONICALLY • SIGNED AND STAMPED

ENGINEERING
CITY OF LOS ANGELES

REGISTERED PROFESSIONAL ENGINEER
ROBERT D. GETTER
No. E 21884
Exp. 06-30-23
ELECTRICAL
STATE OF CALIFORNIA
01/27/2023

SHEET TITLE: ELECTRICAL GROUNDING DETAILS
PROJECT: FERNANGELES PARK STORMWATER CAPTURE PROJECT
ADDRESS: FERNANGELES RECREATION CENTER 8851 LAUREL CANYON BLVD, SUN VALEY, CA 91352
VERTICAL CONTROL: BENCH MARK (08-30460) NAVD 88
HORIZONTAL CONTROL: CALIFORNIA STATE PLANE ZONE V, 1983 NAD

CITY ENGINEER: TED ALLEN, P.E. — DATE: 01/27/2023

DESIGN GROUP	
ENGINEER:	PROJECTLINE TECHNICAL SERVICES
ARCHITECT:	NA
DESIGNED BY:	J. CHIN
DRAWN BY:	J. CHIN
CHECKED BY:	A. CARRIE
APPROVED BY:	R. GETTER

NO.	REVISIONS	DATE	BY
		YY/MM/DD	
		YY/MM/DD	
		YY/MM/DD	
		YY/MM/DD	

CIP NO. SCP0002

INDEX NO.

WORK ORDER
EW40079F

SHEET NAME
EP05
SHEET 105 OF 125 SHEETS

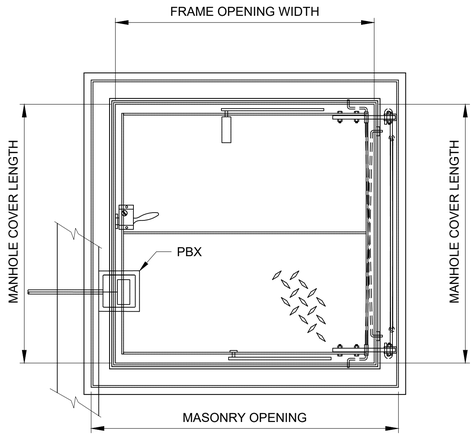

PLAN

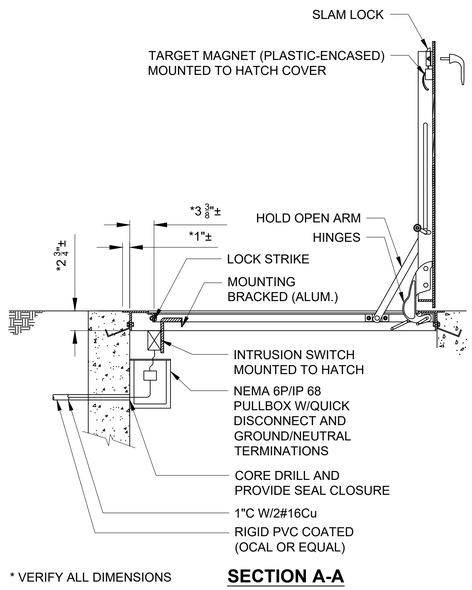

* VERIFY ALL DIMENSIONS

SECTION A-A

* VERIFY TYPICAL FRAME DIMENSIONS

NOTES:

1. PROVIDE SERIES II (SQUARE BODY) TOPWORX GO SWITCH BY EMERSON OR EQUAL (CLASS I, DIV 2). PROVIDE AMP3 TARGET MAGNET, NEMA 4X SST BODY, AND MINI QUICK DISCONNECT. INSTALL PER MANUFACTURER'S RECOMMENDATIONS.
2. FASTEN TARGET TO UNDERSIDE OF ACCESS HATCH. PROVIDE MOUNTING BRACKETS WHERE REQUIRED TO PLACE TARGET WITHIN RANGE OF SENSING AREA. MECHANICALLY FASTEN MOUNTING BRACKET TO HATCH COVER, AND SWITCH TO VAULT STRUCTURE.
3. ALL MOUNTING HARDWARE SHALL BE TYPE 316 SST. PROVIDE MIN. 1/4" DIA. BOLTS FOR ATTACHMENTS.
4. ADJUST DETAIL AS REQUIRED FOR FIELD INSTALLATION ARRANGEMENT
5. PROVIDE SEPARATION BETWEEN DISSIMILAR METALS TO PREVENT GALVANIC CORROSION.

DETAIL - VAULT HATCH COVER | E-11

SWITCH LOCATION	TAG
DIVERSION STRUCT	ZS-110
BAFFLE BOX	ZS-200
INFILTR BASIN	ZS-520 ZS-540

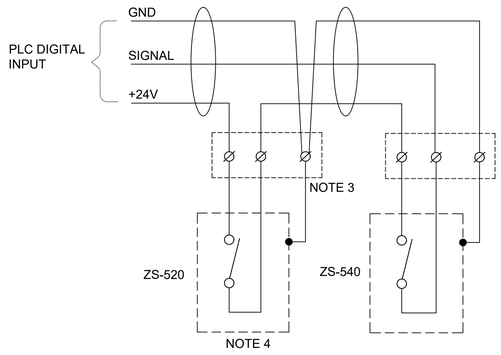

NOTES:

1. SEE PROXIMITY SWITCH INSTALLATION DETAIL E-11.
2. PROVIDE SEPARATE PLC DIGITAL INPUTS FOR DIVERSION STRUCTURE, BAFFLE BOX & INFILTRATION BASIN.
3. PROVIDE NEMA 4X, SS JUNCTION BOX LOCATED INSIDE BASIN/ BOX
4. INTRUSION SWITCH CONTACT CLOSED WHEN HATCH CLOSED.

DETAIL - HATCH INTRUSION ALARM TYPICAL WIRING DIAGRAM (WIRING FOR BASIN SHOWN) | E-08

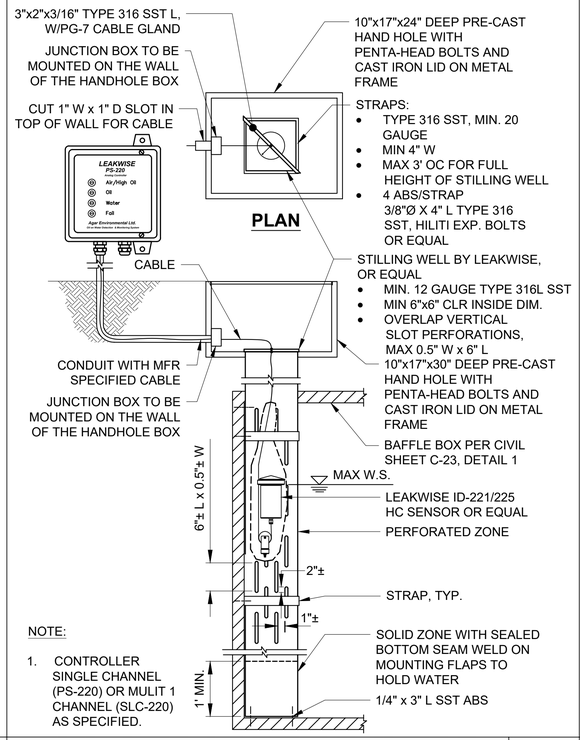

NOTE:

1. CONTROLLER SINGLE CHANNEL (PS-220) OR MULIT 1 CHANNEL (SLC-220) AS SPECIFIED.

HYDROCARBON SENSOR WITH STILLER DETAIL | E-12

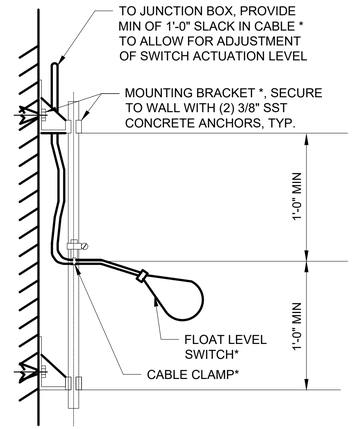

NOTE:

1. COMPONENTS DESIGNATED BY * ARE SUPPLIED BY INSTRUMENT MANUFACTURER.

TYPICAL FLOAT TYPE LEVEL SWITCH INSTALLATION | E-09

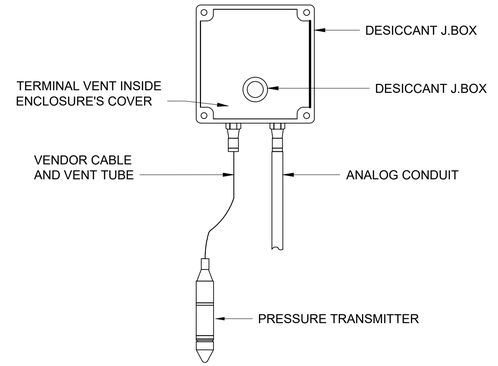

DROP-IN PRESSURE TRANSMITTER DESICCANT J-BOX DETAIL | E-10

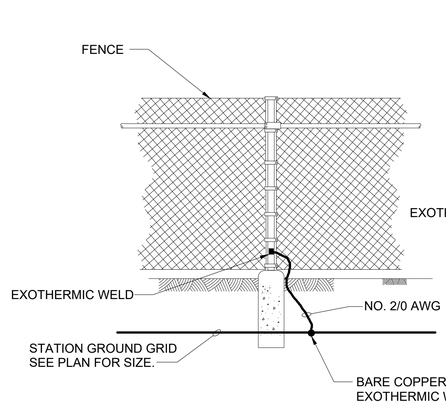

FENCE GROUNDING

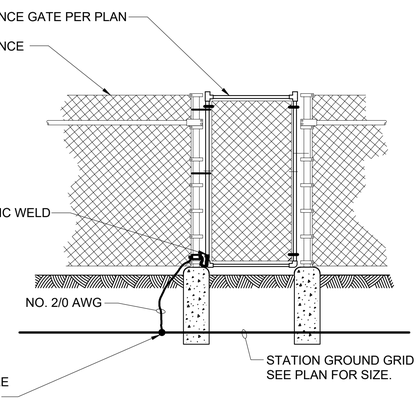

FENCE GROUNDING WITH GATE

FENCE GROUNDING WITH GATE | E-13

THE CITY OF LOS ANGELES OR ITS OFFICERS OR AGENTS SHALL NOT BE RESPONSIBLE FOR THE ACCURACY OR COMPLETENESS OF ELECTRONIC COPIES OF THIS PLAN SHEET.

REVISION DATES (DESIGN STAGE ONLY)

ENGINEERING
CITY OF LOS ANGELES

REGISTERED PROFESSIONAL ENGINEER
ROBERT D. GETTER
No. E 21884
Exp. 06-30-23
ELECTRICAL
STATE OF CALIFORNIA
01/27/2023

THIS PLAN WAS ELECTRONICALLY • SIGNED AND STAMPED

BUREAU OF ENGINEERING

VERTICAL CONTROL: BENCH MARK 08-30460 NAVD 88
HORIZONTAL CONTROL: CALIFORNIA STATE PLANE ZONE V, 1983 NAD

SHEET TITLE: ELECTRICAL SECTIONS AND DETAILS 1 OF 2
PROJECT: FERNANGELES PARK STORMWATER CAPTURE PROJECT
ADDRESS: FERNANGELES RECREATION CENTER 8851 LAUREL CANYON BLVD, SUN VALEY, CA 91352

NO.	REVISIONS	DATE	BY
		YY/MM/DD	
		YY/MM/DD	
		YY/MM/DD	
		YY/MM/DD	

CIP NO. SCP0002

INDEX NO.

CITY OF LOS ANGELES DEPARTMENT OF PUBLIC WORKS

CITY ENGINEER: TED ALLEN, P.E. — DATE: 01/27/2023

DESIGN GROUP	
ENGINEER:	PROJECTLINE TECHNICAL SERVICES
ARCHITECT:	NA
DESIGNED BY:	J. CHIN
DRAWN BY:	J. CHIN
CHECKED BY:	A. CARRIE
APPROVED BY:	R. GETTER

(all dates 01/27/2023)

WORK ORDER EW40079F

SHEET NAME EP06

SHEET 106 OF 125 SHEETS

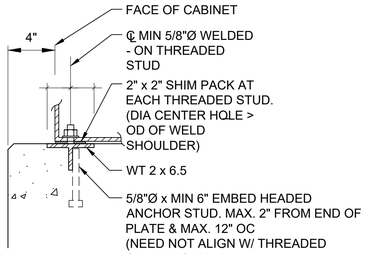

CAST-IN-ANCHOR A

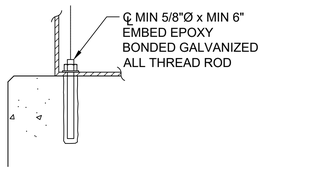

POST-INSTALLED ANCHOR B

NOTE: ANCHOR BOLTS AND MOUNTING HARDWARE SHALL BE HOT-DIP GALVANIZED.

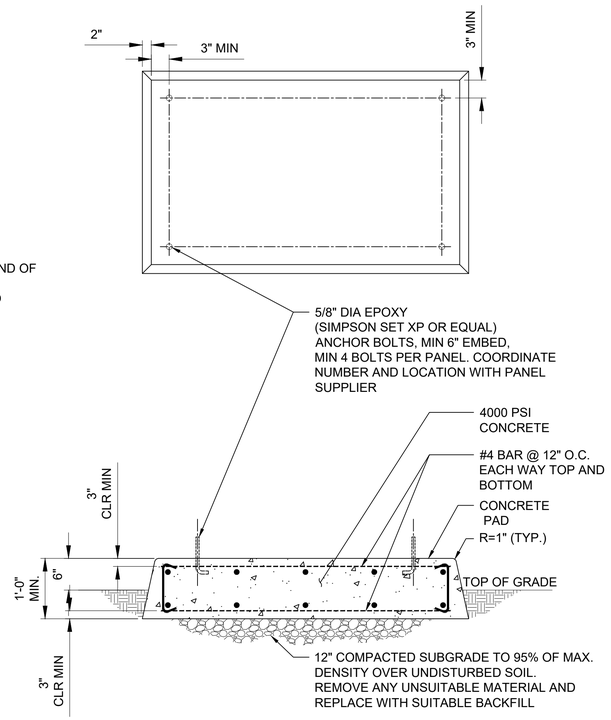

EQUIPMENT ENCLOSURE PAD E-14

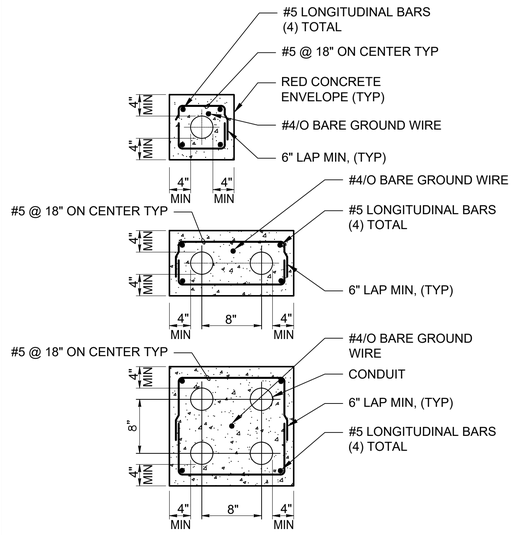

NOTES:
1. TYPICAL REINFORCEMENT DETAILS FOR ALL DUCT BANKS EVEN IF NUMBER OF CONDUITS AND CONFIGURATION VARIES.
2. ALL UNDERGROUND CONDUIT SHALL BE ENCASED IN CONCRETE DUCTS.

DUCT BANKS DETAIL E-15

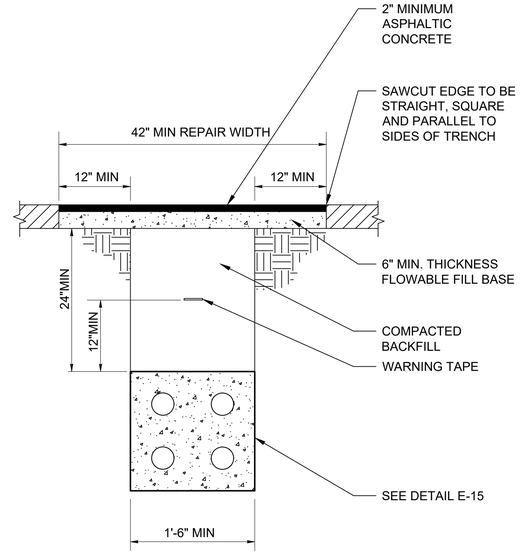

CONDUIT PLACEMENT IN TRENCH E-16

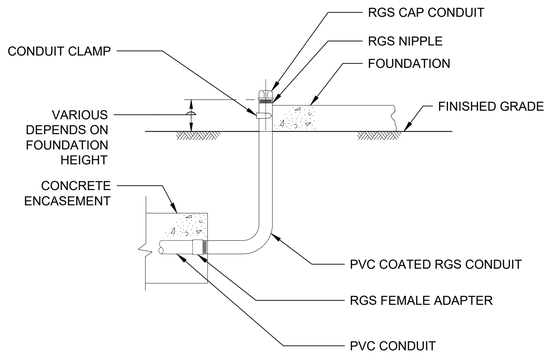

TYPICAL CONDUIT STUB-UP E-17

THE CITY OF LOS ANGELES OR ITS OFFICERS OR AGENTS SHALL NOT BE RESPONSIBLE FOR THE ACCURACY OR COMPLETENESS OF ELECTRONIC COPIES OF THIS PLAN SHEET.

REVISION DATES (DESIGN STAGE ONLY)

ENGINEERING
CITY OF LOS ANGELES

REGISTERED PROFESSIONAL ENGINEER
ROBERT D. GETTER
No. E 21884
Exp. 06-30-23
ELECTRICAL
STATE OF CALIFORNIA
01/27/2023

THIS PLAN WAS ELECTRONICALLY • SIGNED AND STAMPED

BUREAU OF ENGINEERING

VERTICAL CONTROL: BENCH MARK (08-03460) NAVD 88
HORIZONTAL CONTROL: CALIFORNIA STATE PLANE ZONE V, 1983 NAD

SHEET TITLE: ELECTRICAL SECTIONS AND DETAILS 2 OF 2
PROJECT: FERNANGELES PARK STORMWATER CAPTURE PROJECT
ADDRESS: FERNANGELES RECREATION CENTER 8851 LAUREL CANYON BLVD, SUN VALEY, CA 91352

BY	DATE
	YY/MM/DD
	YY/MM/DD
	YY/MM/DD
	YY/MM/DD

NO.	REVISIONS

CIP NO. SCP0002

INDEX NO.

CITY OF LOS ANGELES DEPARTMENT OF PUBLIC WORKS

CITY ENGINEER: TED ALLEN, P.E. — DATE: 01/27/2023

	DESIGN GROUP	DATE
ENGINEER:	PROJECTLINE TECHNICAL SERVICES	01/27/2023
ARCHITECT:	NA	01/27/2023
DESIGNED BY:	J. CHIN	01/27/2023
DRAWN BY:	J. CHIN	01/27/2023
CHECKED BY:	A. CARRIE	01/27/2023
APPROVED BY:	R. GETTER	01/27/2023

WORK ORDER EW40079F

SHEET NAME EP07

SHEET 107 OF 125 SHEETS

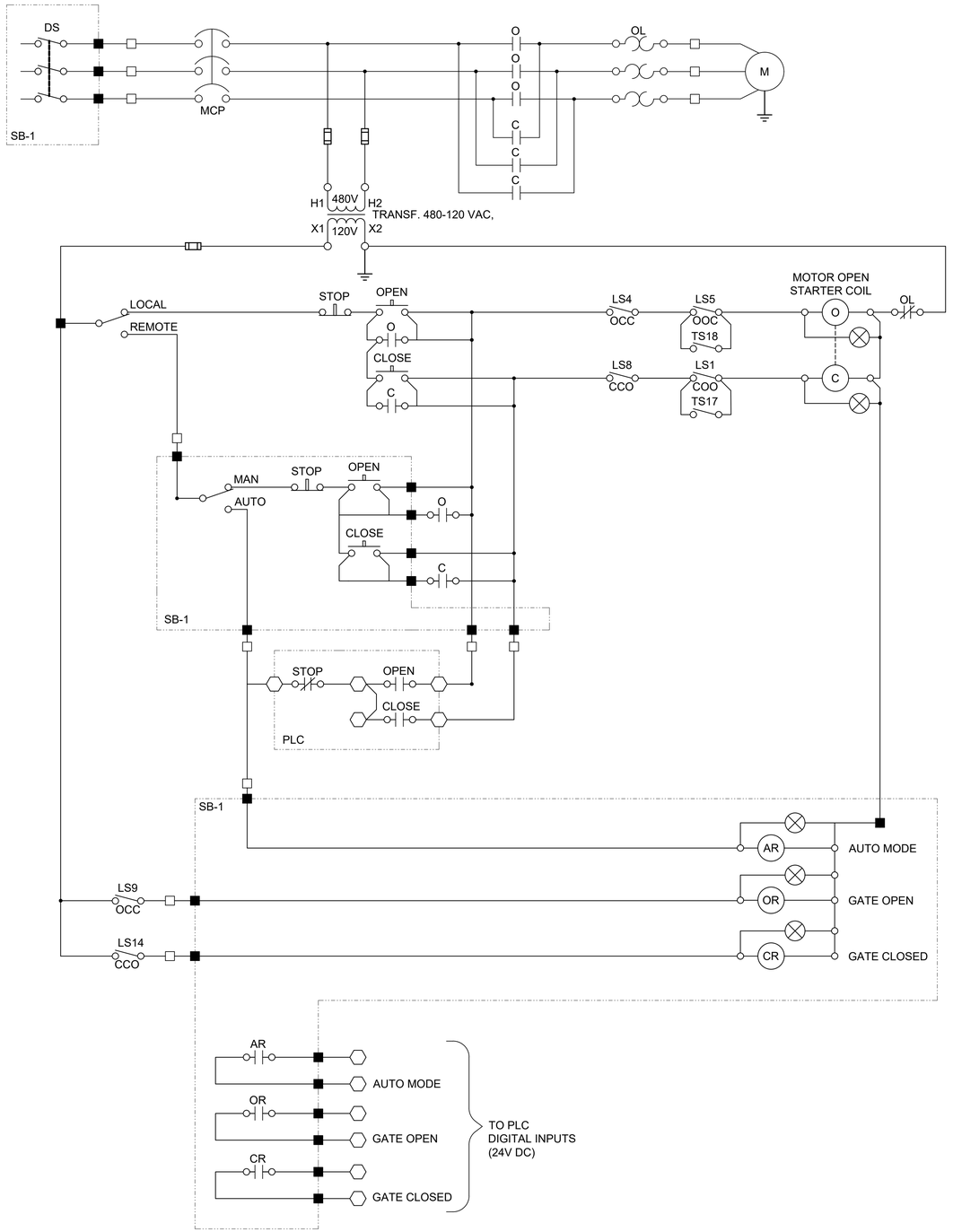

GATE OPERATOR CONTROL SCHEMATIC - INTEGRAL OPERATOR STARTER WITH REMOTE CONTROL

SCALE: N.T.S.

SLIDE GATE LIMIT SWITCH CONTACT DEVELOPMENT				
CONTACT	GATE FULLY OPEN	GATE INTERMEDIATE POSITION	GATE FULLY CLOSED	CONTACT FUNCTION
1	CLOSED	OPEN	OPEN	BYPASS CTRL
2	CLOSED	OPEN	OPEN	INDICATION
3	OPEN	CLOSED	CLOSED	INDICATION
4	OPEN	CLOSED	CLOSED	OPEN LIMIT
5	OPEN	OPEN	CLOSED	BYPASS CIR
6	OPEN	OPEN	CLOSED	INDICATION
7	CLOSED	CLOSED	OPEN	SPARE
8	CLOSED	CLOSED	OPEN	CLOSE LIMIT
9	CLOSED	OPEN	OPEN	INDICATION
10	CLOSED	OPEN	OPEN	SPARE
11	OPEN	CLOSED	CLOSED	SPARE
12	OPEN	CLOSED	CLOSED	SPARE
13	OPEN	OPEN	CLOSED	SPARE
14	OPEN	OPEN	CLOSED	INDICATION
15	CLOSED	CLOSED	OPEN	INDICATION
16	CLOSED	CLOSED	OPEN	SPARE
17	CLOSING THRUST SWITCH INTERRUPTS CONTROL CIRCUIT IF MECHANICAL OVERLOAD OCCURS DURING CLOSING CYCLE.			
18	OPENING THRUST SWITCH INTERRUPTS CONTROL CIRCUIT IF MECHANICAL OVERLOAD OCCURS DURING OPENING CYCLE.			

LEGEND

- ☐ TERMINAL BLOCK IN ELECTRIC ACTUATOR
- ■ TERMINAL BLOCK IN SB-1
- ⬡ TERMINAL BLOCK IN PLC

SB-1	SWITCHBOARD
PLC	PROGRAMMABLE LOGIC CONTROLLER
COO	CLOSED WHEN GATE IS FULLY OPENED
OOC	CLOSED WHEN GATE IS FULLY CLOSED
CCO	OPEN WHEN GATE IS FULLY CLOSED
OCC	OPEN WHEN GATE IS FULLY OPENED
LSX	LIMIT SWITCH IN GATE SWITCH COMPARTMENT
TSX	TORQUE SWITCH IN GATE SWITCH COMPARTMENT
X	SWITCH IDENTIFICATION NUMBER IN GATE SWITCH COMPARTMENT

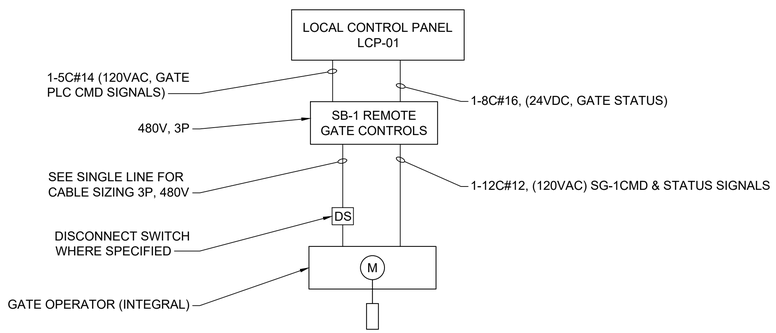

CABLE BLOCK DIAGRAM

THE CITY OF LOS ANGELES OR ITS OFFICERS OR AGENTS SHALL NOT BE RESPONSIBLE FOR THE ACCURACY OR COMPLETENESS OF ELECTRONIC COPIES OF THIS PLAN SHEET.

REVISION DATES (DESIGN STAGE ONLY)

ENGINEERING
CITY OF LOS ANGELES

REGISTERED PROFESSIONAL ENGINEER
ROBERT D. GETTER
No. E 21884
Exp. 06-30-23
ELECTRICAL
STATE OF CALIFORNIA
01/27/2023

THIS PLAN WAS ELECTRONICALLY • SIGNED AND STAMPED

BUREAU OF ENGINEERING

VERTICAL CONTROL: BENCH MARK 08-03460 NAVD 88
HORIZONTAL CONTROL: CALIFORNIA STATE PLANE ZONE V, 1983 NAD

SHEET TITLE: ELECTRICAL CONTROL SCHEMATIC DIAGRAM - SLIDE GATE

PROJECT: FERNANGELES PARK STORMWATER CAPTURE PROJECT

ADDRESS: FERNANGELES RECREATION CENTER 8851 LAUREL CANYON BLVD, SUN VALLEY, CA 91352

CITY OF LOS ANGELES DEPARTMENT OF PUBLIC WORKS

NO.	REVISIONS	DATE	BY
		YY/MM/DD	
		YY/MM/DD	
		YY/MM/DD	
		YY/MM/DD	

CIP NO. SCP0002

INDEX NO.

CITY ENGINEER

DESIGN GROUP	DATE
PROJECT/LINE TECHNICAL SERVICES	01/27/2023
ENGINEER: NA	01/27/2023
ARCHITECT:	01/27/2023
DESIGNED BY: J. CHIN	01/27/2023
DRAWN BY: J. CHIN	01/27/2023
CHECKED BY: A. CARRIE	01/27/2023
APPROVED BY: R. GETTER	01/27/2023

TED ALLEN, P.E.

WORK ORDER
EW40079F

SHEET NAME
EP08

SHEET 108 OF 125 SHEETS

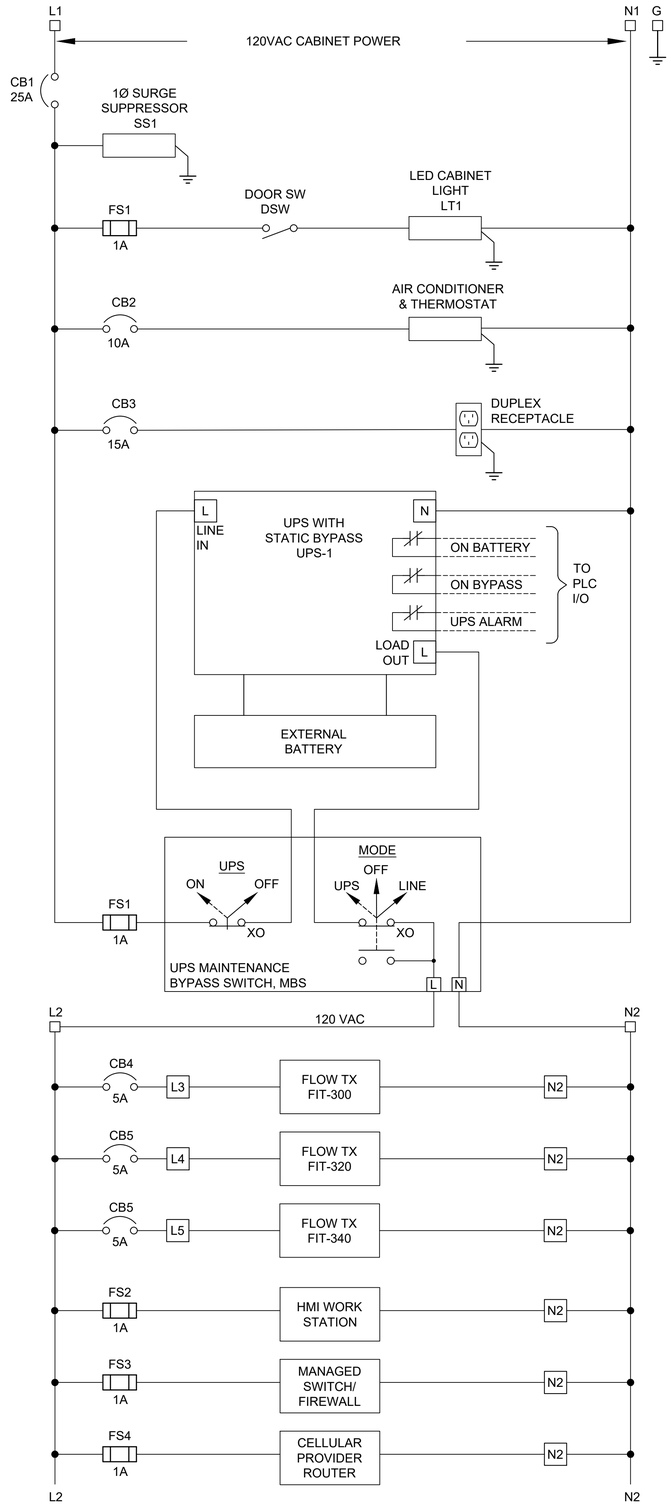

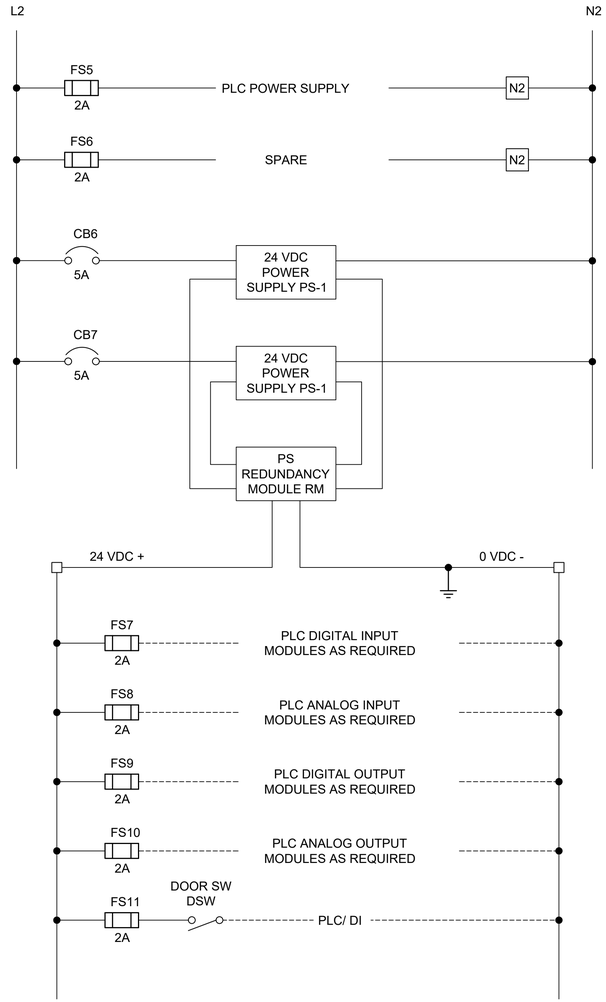

TYPICAL POWER DISTRIBUTION - LOCAL CONTROL PANEL

SCALE: N.T.S.

A

THE CITY OF LOS ANGELES OR ITS OFFICERS OR AGENTS SHALL NOT BE RESPONSIBLE FOR THE ACCURACY OR COMPLETENESS OF ELECTRONIC COPIES OF THIS PLAN SHEET.

REVISION DATES
(DESIGN STAGE ONLY)

ENGINEERING
CITY OF LOS ANGELES

REGISTERED PROFESSIONAL ENGINEER
ROBERT D. GETTER
No. E 21884
Exp. 06-30-23
ELECTRICAL
STATE OF CALIFORNIA
01/27/2023

THIS PLAN WAS ELECTRONICALLY
• SIGNED AND STAMPED •

BUREAU OF ENGINEERING

VERTICAL CONTROL: BENCH MARK 08-03460 NAVD 88
HORIZONTAL CONTROL: CALIFORNIA STATE PLANE ZONE V, 1983 NAD

SHEET TITLE: TYPICAL POWER DISTRIBUTION
SCHEMATIC DIAGRAM - LCP-01

PROJECT: FERNANGELES PARK STORMWATER
CAPTURE PROJECT

ADDRESS: FERNANGELES RECREATION CENTER
8851 LAUREL CANYON BLVD, SUN VALEY, CA 91352

CITY OF LOS ANGELES DEPARTMENT OF PUBLIC WORKS

NO.	REVISIONS	DATE	BY
		YY/MM/DD	
		YY/MM/DD	
		YY/MM/DD	
		YY/MM/DD	

CIP NO. SCP0002

INDEX NO.

CITY ENGINEER: TED ALLEN, P.E.

	DESIGN GROUP	DATE
ENGINEER:	PROJECTLINE TECHNICAL SERVICES	01/27/2023
ARCHITECT:	NA	01/27/2023
DESIGNED BY:	J. CHIN	01/27/2023
DRAWN BY:	J. CHIN	01/27/2023
CHECKED BY:	A. CARRIE	01/27/2023
APPROVED BY:	R. GETTER	01/27/2023

WORK ORDER
EW40079F

SHEET NAME
EP09

SHEET 109 OF 125 SHEETS

CUST	1
ENGR (DR)	2
ESR (112)	2
DDFT	1
FILE	1
TOTAL	7

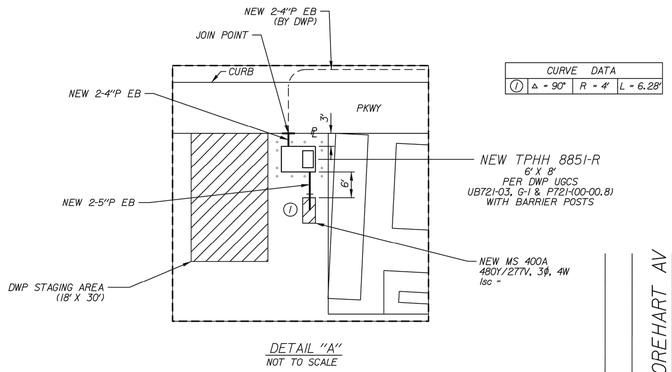

DETAIL "A"
NOT TO SCALE

CURVE DATA		
①	Δ = 90°	R = 4'	L = 6.28'

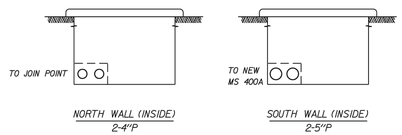

TPHH 885I-R

INSPECTION

1. FULL INSPECTION AND APPROVAL BY A DEPARTMENT OF WATER AND POWER (DWP) ELECTRIC SERVICE REPRESENTATIVE IS REQUIRED PRIOR TO THE INSTALLATION OF CABLE AND EQUIPMENT.
2. NOTIFY THE DWP ELECTRIC SERVICE REPRESENTATIVE FOR AREA 112, TELEPHONE NUMBER (818) 771-4032, FIVE (5) NORMAL WORKING DAYS IN ADVANCE OF CONSTRUCTION.
3. THE CUSTOMER SHALL ARRANGE FOR ELECTRICAL INSPECTION BY THE LOS ANGELES DEPARTMENT OF BUILDING AND SAFETY FOR HIS ELECTRICAL WORK. THE SERVICE WILL NOT BE ENERGIZED UNTIL NOTIFICATION OF APPROVAL HAS BEEN RECEIVED BY THE DWP.

GENERAL

1. ALL FACILITIES MUST BE PROVIDED AND INSTALLED IN ACCORDANCE WITH THE DWP'S ELECTRIC SERVICE REQUIREMENTS.
2. CONDUITS AND STRUCTURES SHALL BE INSTALLED PER DWP'S UNDERGROUND SPECIFICATION 104 AND APPENDIX I AS LAST REVISED.

SCHEDULE

1. IN ORDER TO AVOID SCHEDULING DELAYS IN THE INSTALLATION OF DWP EQUIPMENT FOR YOUR PROJECT, THE CUSTOMER MUST COMPLETE THE INSTALLATION AND DWP'S INSPECTION OF THE CONDUIT, TRANSFORMER PAD AND SWITCHBOARD A MINIMUM OF SIX (6) WEEKS PRIOR TO THE RELEASE FROM THE DEPARTMENT OF BUILDING AND SAFETY.
2. DWP WILL INSTALL ELECTRICAL METERS AND ENERGIZE THE ELECTRICAL SERVICE TYPICALLY WITHIN TEN (10) WORKING DAYS, AFTER ALL RELEASES HAVE BEEN OBTAINED FROM BOTH DWP AND THE DEPARTMENT OF BUILDING AND SAFETY.

CONDUIT

1. PRIMARY CONDUITS: 2-4" PLASTIC ENCASED BURIED TYPE (EB-35) CONDUITS ENCASED IN 3" OF CONCRETE. MINIMUM COVER FROM TOP OF CONCRETE ENVELOPE TO FINISHED GRADE, EXCEPT AT TRANSFORMER PAD, SHALL BE 30 INCHES IN PAVED AREAS AND 36 INCHES IN LANDSCAPED AREAS. WHEN TERMINATING CONDUIT FOR SUBSEQUENT CONNECTION BY THE DWP, THE DEPTH AT THE PROPERTY LINE MUST BE A MINIMUM 36 INCHES IN AREAS SUPPLIED FROM OVERHEAD DISTRIBUTION FACILITIES. DEPTH MEASUREMENTS AT PROPERTY LINE ARE TO BE TAKEN FROM GUTTER GRADE.
2. SECONDARY CONDUITS: 2-5" PLASTIC DIRECT BURIED TYPE (DB-120) CONDUITS. CONDUITS SHALL HAVE A MINIMUM COVER OF 24 INCHES.
3. WHEN THE PRIMARY CONDUITS ARE BEING INSTALLED ON FILLED GROUND, FOUR #4 REINFORCING BARS SHALL BE INSTALLED IN THE CONCRETE ENVELOPE.
4. ALL PLASTIC CONDUITS SHALL BE IN ACCORDANCE WITH RECOGNIZED STANDARDS. FOR PVC THE STANDARD IS ASTM F-512 AS LAST REVISED. CONDUIT MAY BE SUBJECTED TO TESTING BY THE DWP AT THE REQUEST OF THE DWP ELECTRIC SERVICE REPRESENTATIVE.
5. CONDUIT SHALL BE MANDRELLED WITH A MANDREL PROVIDED BY THE DWP. INSTALL A FLAT, WOVEN MULTI-FIBER POLYESTER RIBBON, MINIMUM 3/8-INCH NOMINAL WIDTH AND 1250 POUND MINIMUM TENSILE STRENGTH PULLING TAPE IN ALL DUCTS. THE PULLING TAPE SHALL BE PRINTED WITH THE RATED TENSILE STRENGTH AND SEQUENTIAL FOOTAGE MARKINGS WITH LEGIBLE AND STABLE PRINT. THE TAPE SHALL BE IN ONE CONTINUOUS LENGTH THROUGH EACH DUCT WITH NO CUTS, SPLICES OR TIES ALLOWED.

STRUCTURE

1. PROVIDE AND INSTALL ONE 6' X 8' TRANSFORMER PAD WITH HANDHOLE AND PROTECTIVE BARRIERS IN ACCORDANCE WITH DWP DRAWINGS PT2I-I00-00.8) AND UB72I-03 GROUP I AS LAST REVISED.
2. THE CONDUIT, STRUCTURE AND SERVICE POINT SHALL BE LOCATED AS SHOWN UNLESS CHANGES ARE APPROVED BY THE DWP DESIGN ENGINEER AND CONFIRMED BY THE CUSTOMER.

FAULT CURRENT

THE MAXIMUM AVAILABLE SYMMETRICAL FAULT CURRENT AT THE SERVICE POINT WILL BE:

SERVICE	AMPS	VOLTAGE	PHASE	WIRE	FAULT CURRENT
MS	400A	480Y/277V	3ϕ	4W	

SWITCHBOARD APPROVAL

PRIOR TO FABRICATION OF THE SWITCHBOARDS, THE MANUFACTURER MUST SUBMIT DRAWINGS SHOWING PROPOSED SERVICE AND METERING FACILITIES. MAIL FOUR COPIES OF SWITCHBOARD DRAWINGS TO:

VALLEY SERVICE PLANNING
ATTENTION: MR DANIEL RIVERA
7501 TYRONE AVENUE
VAN NUYS, CA 91405
(818) 771-4100
(818) 771-4066 FAX

CUSTOMER CHARGES

1. THE DWP WILL BILL THE CUSTOMER APPROXIMATELY $120,000.00 PLUS PERMIT FEES FOR CONDUIT CONSTRUCTION IN PUBLIC PROPERTY.
2. THE DWP WILL BILL THE CUSTOMER $20,000.00 FOR TRANSFORMER DEPOSIT FEE. DEPOSIT FEE ELIGIBLE FOR REFUND AFTER FIVE YEARS PER DWP RULE 16-E, ELECTRIC SYSTEM OF THE RULES GOVERNING WATER AND ELECTRIC SERVICE.
3. YOUR PAYMENT OF A STREET DAMAGE RESTORATION FEE (SDRF), PAID DIRECTLY TO THE DEPARTMENT OF PUBLIC WORKS, IS REQUIRED PRIOR TO ISSUING AN EXCAVATION PERMIT. CONTACT THE DWP ENGINEER REGARDING THIS FEE.

PERMIT NOTE

AN APPROVED TRAFFIC CONTROL PLAN MAY BE REQUIRED FOR LADWP TO OBTAIN A CONSTRUCTION PERMIT FROM LOS ANGELES DEPARTMENT OF PUBLIC WORKS. THE CUSTOMER MAY BE REQUIRED TO HIRE A CONTRACTOR TO DEVELOP A TRAFFIC CONTROL PLAN AND PROVIDE LABOR AND MATERIALS TO MANAGE TRAFFIC DURING CONSTRUCTION. THE CUSTOMER SHALL OBTAIN APPROVAL OF THE PLAN BY THE LOS ANGELES DEPARTMENT OF TRANSPORTATION AND PROVIDE A COPY TO LADWP IF REQUIRED.

PROPERTY LINES

PROPERTY LINES ARE TO BE LOCATED BY THE CUSTOMER'S SURVEYOR. ALL EASEMENTS WILL BE RECORDED ON THE TRACT MAP UNLESS OTHERWISE SPECIFIED.

THIS COMMITMENT IS VALID FOR SIX MONTHS ONLY, ANY CHANGE IN LOAD OR DESIGN WILL REQUIRE REVISED PLANS TO BE SUBMITTED FOR RE-EVALUATION

1"=30'

No.	DATE	INIT'L	REVISION	APP'V'D

CITY OF LOS ANGELES
DEPARTMENT OF
WATER AND POWER
POWER SYSTEM ENGINEERING

DESIGN	D. RIVERA	PHONE	(818) 771-4286
O.K.		DRAFTING	M. AUDUE
APPROVED		DATE	MAY 24, 2022

WR #	PROJECT #	TO #
2155146	P294483	502-F7

4.8KV CUSTOMER REQUIREMENTS
8851 LAUREL CANYON BL
FERNANGELES STORM WATER
CAPTURE PARK

22P0204 | SHEET 1 OF 1

ENGINEERING
CITY OF LOS ANGELES

REGISTERED PROFESSIONAL ENGINEER
ROBERT D. GETTER
No. E 21884
Exp. 06-30-23
ELECTRICAL
STATE OF CALIFORNIA
01/27/2023

THIS PLAN WAS ELECTRONICALLY SIGNED AND STAMPED

BUREAU OF ENGINEERING

VERTICAL CONTROL: BENCH MARK (08-03460) NAVD 88
HORIZONTAL CONTROL: CALIFORNIA STATE PLANE ZONE V. (1983 NAD

SHEET TITLE: LADWP TRANSFORMER REQUIREMENT AT FERNANGELES PARK

PROJECT: FERNANGELES PARK STORMWATER CAPTURE PROJECT

ADDRESS: FERNANGELES RECREATION CENTER 8851 LAUREL CANYON BLVD, SUN VALLEY, CA 91352

CITY OF LOS ANGELES DEPARTMENT OF PUBLIC WORKS

CITY ENGINEER: TED ALLEN, P.E.

DESIGN GROUP	DATE
ENGINEER: PROJECTLINE TECHNICAL SERVICES	01/27/2023
ARCHITECT: NA	01/27/2023
DESIGNED BY: J. CHIN	01/27/2023
DRAWN BY: J. CHIN	01/27/2023
CHECKED BY: A. CARRIE	01/27/2023
APPROVED BY: R. GETTER	01/27/2023

NO.	REVISIONS	DATE	BY
		YY/MM/DD	
		YY/MM/DD	
		YY/MM/DD	
		YY/MM/DD	

CIP NO. SCP0002

INDEX NO.

WORK ORDER
EW40079F

SHEET NAME
EP10
SHEET 110 OF 125 SHEETS

REVISION DATES (DESIGN STAGE ONLY)

THE CITY OF LOS ANGELES OR ITS OFFICERS OR AGENTS SHALL NOT BE RESPONSIBLE FOR THE ACCURACY OR COMPLETENESS OF ELECTRONIC COPIES OF THIS PLAN SHEET.

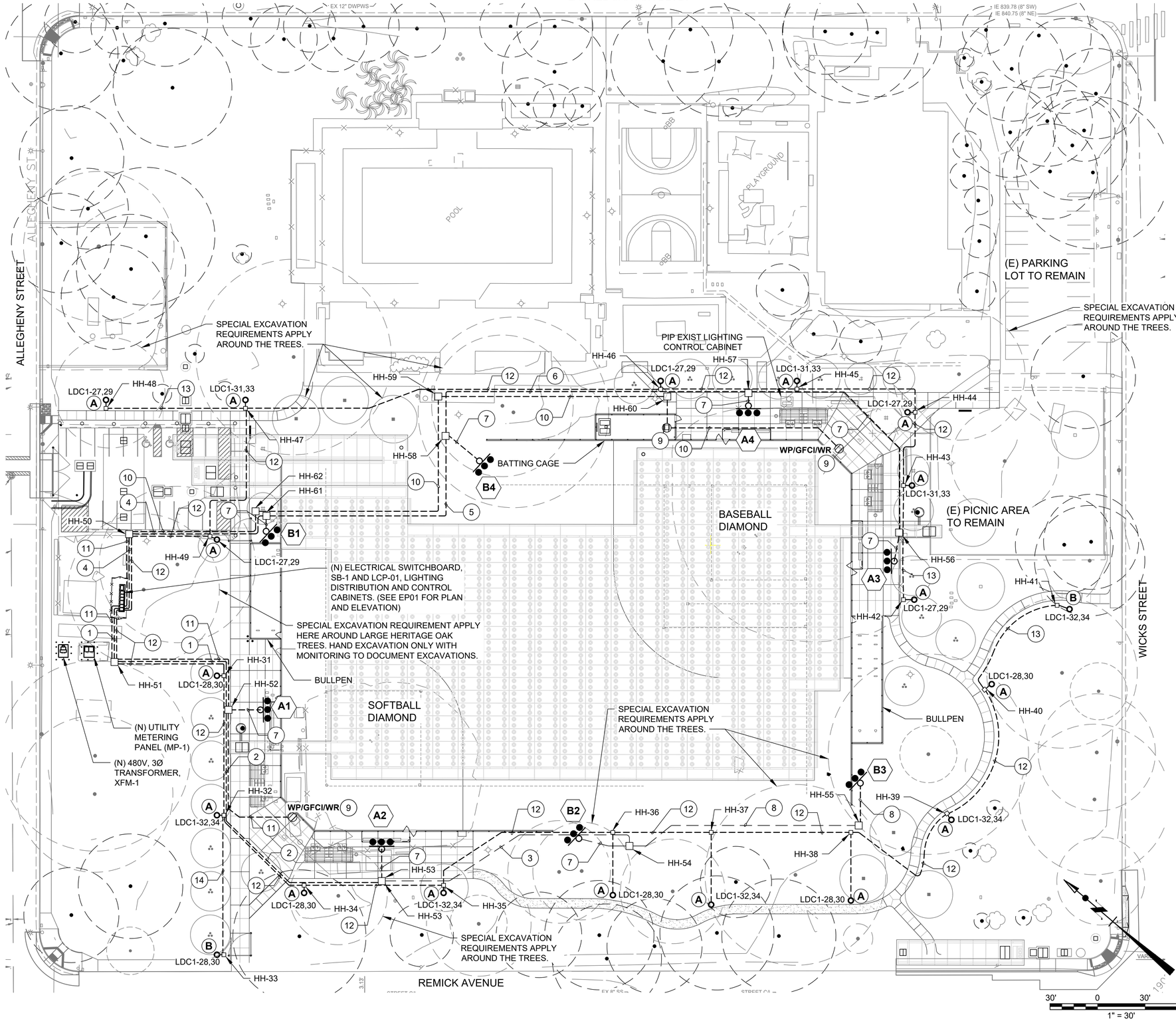

GENERAL NOTES:

1. BURIED ELECTRICAL PULLBOXES AND HANDHOLES SHALL BE PRECAST CONCRETE WITH CAST IRON OR CORROSION RESISTANT STEEL LIDS ON METAL FRAMES, SUCH THAT THEY CAN BE WELDED SHUT AND COMPLY WITH NEC 314.30, AND BE UL LISTED. LID SHALL BE MARKED AS "POWER" OR "SIGNAL" AS APPROPRIATE AND TOP OF LID TO BE FLUSH WITH FINISHED GRADE. PROVIDE ALL PULLBOXES AND HANDHOLES MINIMUM SIZES AT 10" X17"X30" DEEP AND PENTA-HEAD BOLTS. PROVIDE LIDS WITH H20 TRAFFIC RATING. PULLBOXES AND HANDHOLES SHALL BE BY CHRISTY, OLDCASTLE, AND JENSEN OR EQUAL.

HANDHOLE-ID	SIZE	DEPTH
HH-31 TO HH-48	10"X17"	34"
HH-50 TO HH-62	20"X20"	44"

KEY NOTES

(1) 1-2"C,12#8 & 4#10 GROUND (480V, 3 PHASE, POWER)
LIGHTING CIRCUIT:
POLE A1 - TO LCMS-C1 VIA LDC1- 1,3,5
POLE A2 - TO LCMS-C2 VIA LDC1- 2,4,6
POLE B2 - TO LCMS-C4 VIA LDC1- 7,9,11
POLE B3 - TO LCMS-C7 VIA LDC1- 8,10,12
1-1" C, 2#12 & 1#12 GROUND (277 V. POWER)
LIGHTING CIRCUIT:
SECURITY LIGHTS (CREE) ON POLE A1,A2,B2 & B3 TO LCMS-C9 VIA LDC1-25.

(2) 1-1.5"C, 9#8 & 3#10 GROUND (480V, 3 PHASE, POWER)
LIGHTING CIRCUIT:
POLE A2 - TO LCMS-C2 VIA LDC1- 2,4,6
POLE B2 - TO LCMS-C4 VIA LDC1- 7,9,11
POLE B3 - TO LCMS-C7 VIA LDC1- 8,10,12
1-1" C, 2#12 & 1#12 GROUND (277V, SINGLE PHASE, POWER)
LIGHTING CIRCUIT:
SECURITY LIGHTS (CREE) ON POLE A2,B2 & B3 TO LCMS-C9 VIA LDC1-25

(3) 1-1"C, 6#8 & 2#10 GROUND (480V, 3 PHASE, POWER)
LIGHTING CIRCUIT:
POLE B2 - TO LCMS-C4 VIA LDC1- 7,9,11
POLE B3 - TO LCMS-C7 VIA LDC1- 8,10,12
1-1" C, 2#12 & 1#12 GROUND (277V, SINGLE PHASE, POWER)
LIGHTING CIRCUIT:
SECURITY LIGHTS (CREE) ON POLE B2 & B3 TO LCMS-C9 VIA LDC1-25

(4) 1-2"C,12#8, & 4#10 GROUND (480V, 3 PHASE, POWER)
LIGHTING CIRCUIT:
POLE B1 - TO LCMS-C3 VIA LDC1- 13,15,17
POLE B4 - TO LCMS-C8 VIA LDC1- 14,16,18
POLE A4 - TO LCMS-C6 VIA LDC1- 19,21,23
POLE A3 - TO LCMS-C5 VIA LDC1- 20,22,24
1-1" C, 2#12 & 1#12 GROUND (277V, SINGLE PHASE, POWER)
LIGHTING CIRCUIT:
SECURITY LIGHTS (CREE) ON POLE B1,B4,A4 & A3 TO LCMS-C10 VIA LDC1-26

(5) 1-1.5"C, 9#8 & 3#10 GROUND (480V, 3 PHASE, POWER)
LIGHTING CIRCUIT:
POLE B4 - TO LCMS-C8 VIA LDC1- 14,16,18
POLE A4 - TO LCMS-C6 VIA LDC1- 19,21,23
POLE A3 - TO LCMS-C5 VIA LDC1- 20,22,24
1-1"C, 2#12 & 1#12 GROUND (277V, SINGLE PHASE, POWER)
LIGHTING CIRCUIT:
SECURITY LIGHTS (CREE) ON POLE B4,A4 & A3 TO LCMS-C10 VIA LDC1-26

(6) 1-1"C, 6#8 & 2#10 GROUND (480V, 3 PHASE, POWER)
LIGHTING CIRCUIT:
POLE A4 - TO LCMS-C6 VIA LDC1- 19,21,23
POLE A3 - TO LCMS-C5 VIA LDC1- 20,22,24
1-1"C, 2#12 & 1#12 GROUND (277 V, SINGLE PHASE, POWER)
LIGHTING CIRCUIT:
SECURITY LIGHTS (CREE) ON POLE A4 & A3 TO LCMS-C10 VIA LDC1-26

(7) 1-1"C, 3#8 & 1#10 GND. (480V, 3 PHASE, POWER)
2-1"C, 2#10 & 1#12 GND. (277V, SINGLE PHASE, POWER)

(8) 1-1"C, 2#10 & 1#12 GND. (277V, SINGLE PHASE, POWER)

(9) PEDESTAL MOUNT RECEPTACLE FOR PITCHING MACHINE AT BATTING CAGE AND PA SYSTEMS AT THE BASEBALL FIELD.

(10) 1.5"C, 2#1 & 1#6 GND. (120V, POWER) TO LP-1, CKT-3.

(11) 1.5"C, 2#4 & 1#8 GND. (120V, POWER) TO LP-1, CKT-2.

(12) 1"C, 4#12 & 2#12 GND. (480V, SINGLE PHASE, POWER).

(13) 1"C, 2#12 & 1#12 GND. (480V, SINGLE PHASE, POWER).

THE CITY OF LOS ANGELES OR ITS OFFICERS OR AGENTS SHALL NOT BE RESPONSIBLE FOR THE ACCURACY OR COMPLETENESS OF ELECTRONIC COPIES OF THIS PLAN SHEET.

REVISION DATES (DESIGN STAGE ONLY)

ENGINEERING
CITY OF LOS ANGELES

REGISTERED PROFESSIONAL ENGINEER
ROBERT D. GETTER
No. E 21884
Exp. 06-30-23
ELECTRICAL
STATE OF CALIFORNIA
01/27/2023

THIS PLAN WAS ELECTRONICALLY SIGNED AND STAMPED

BUREAU OF ENGINEERING

VERTICAL CONTROL: BENCH MARK 08-03460 (NAVD 88)
HORIZONTAL CONTROL: CALIFORNIA STATE PLANE ZONE V. 1983 NAD

SHEET TITLE: LIGHTING PLAN

PROJECT: FERNANGELES PARK STORMWATER CAPTURE PROJECT

ADDRESS: FERNANGELES RECREATION CENTER
8851 LAUREL CANYON BLVD, SUN VALEY, CA 91352

CITY OF LOS ANGELES DEPARTMENT OF PUBLIC WORKS

NO.	REVISIONS	DATE	BY
		YY/MM/DD	
		YY/MM/DD	
		YY/MM/DD	
		YY/MM/DD	

CIP NO. SCP0002

INDEX NO.

CITY ENGINEER: TED ALLEN, P.E.

DESIGN GROUP	DATE
ENGINEER: PROJECTLINE TECHNICAL SERVICES	01/27/2023
ARCHITECT: NA	01/27/2023
DESIGNED BY: J. CHIN	01/27/2023
DRAWN BY: J. CHIN	01/27/2023
CHECKED BY: A. CARRIE	01/27/2023
APPROVED BY: R. GETTER	01/27/2023

WORK ORDER
EW40079F

SHEET NAME
EL01
SHEET 111 OF 125 SHEETS

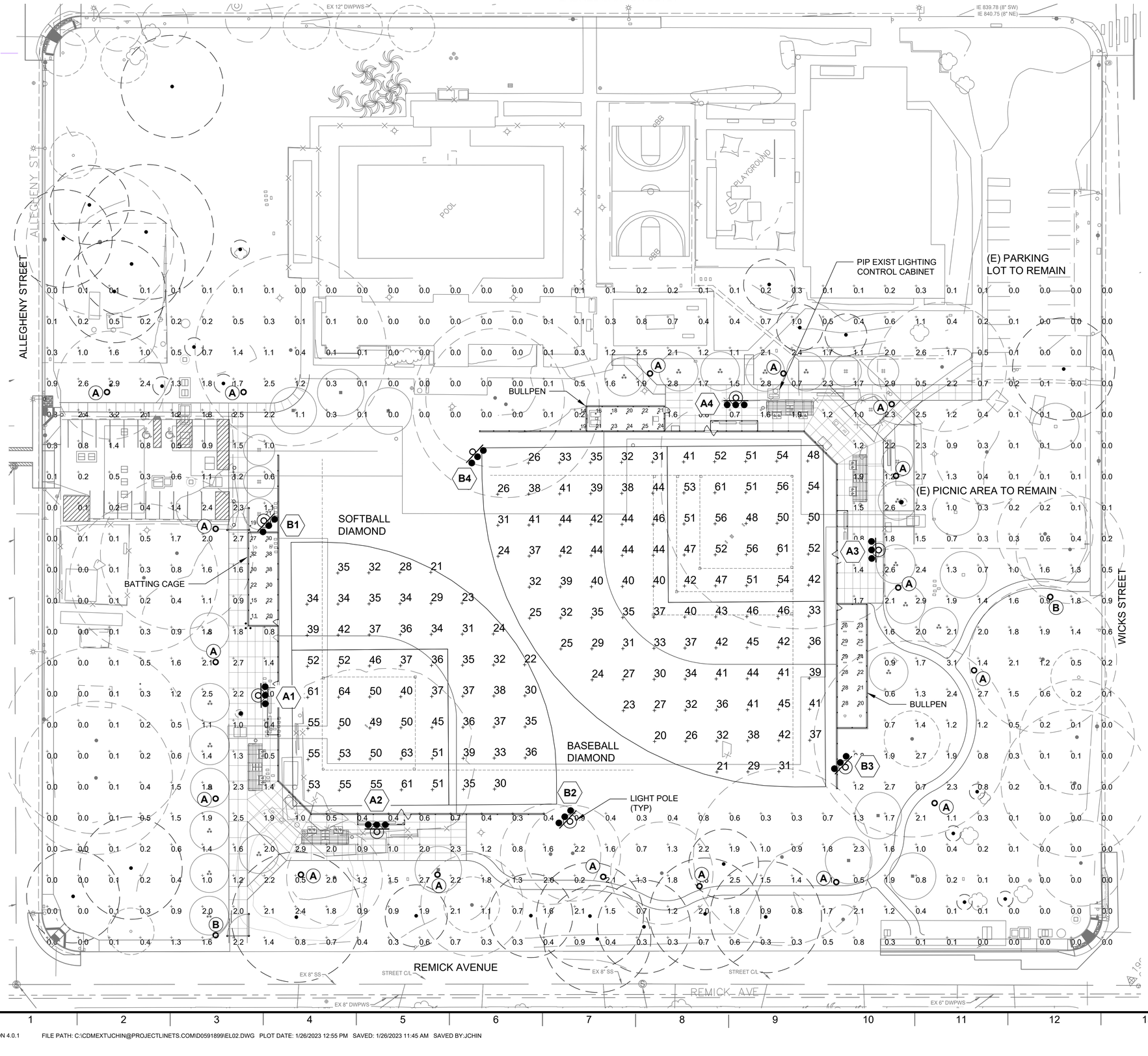

GENERAL NOTES

1. EXISTING SPORTS LIGHTING POWER DISTRIBUTION PANELS ARE LOCATED INSIDE EXISTING LIGHTING CONTROL PANEL AS SHOWN ON PLAN. NEW LIGHTING CONTROL AND POWER DISTRIBUTION PANELS WILL REPLACE EXISTING PANELS FOR BASEBALL DIAMONDS. CONTRACTOR SHALL COMPLETE THE FOLLOWING PRIOR TO DEMOLITION OF EXISTING LIGHTING SYSTEMS:
   - A. FIELD SURVEY EXISTING LIGHTING POWER DISTRIBUTION PANELS TO IDENTIFY CIRCUITS BEING REPLACED AND CIRCUITS THAT MAY BE DISTURBED BY CONSTRUCTION ACTIVITIES.
   - B. FIELD LOCATE BURIED LIGHTING WIRING FROM EXISTING LIGHTING PANEL TO IDENTIFY EXISTING CONDUITS THAT MAY BE DISTURBED BY CONSTRUCTION. EXCAVATE TEST PITS AS NEEDED TO LOCATE ALL BURIED ELECTRICAL CONDUITS WITHIN PROJECT WORK AREAS.
   - C. DISCONNECT WIRING TO LIGHT POLES AND FIXTURES BEING REPLACED, AND WIRING TO BE IMPACTED BY CONSTRUCTION, AND PULL WIRES OUT OF EXISTING ELECTRICAL CONDUITS, PRIOR TO CONSTRUCTION AND DEMOLITION OF EXISTING LIGHTING SYSTEMS.
   - D. PREPARE AND SUBMIT A DETAILED DEMOLITION PLAN, INCLUDING TEXT DESCRIPTION, DRAWINGS AND PHOTOS, TO EXPLAIN WHAT WILL BE DEMOLISHED, HOW IT WILL BE DEMOLISHED, AND PLANS TO INDICATE LOCATIONS OF CONDUITS TO BE DEMOLISHED AND THOSE TO BE PROTECTED IN-PLACE.
   - E. ABANDON IN-PLACE EXISTING LIGHTING DISTRIBUTION PANELS LOCATED IN EXISTING LIGHTING CONTROL PANEL, AND LABEL BREAKERS AS ABANDONED.
3. CONTRACTOR TO PROVIDE FEEDER POWER TO TWO BASEBALL DIAMONDS FROM NEW LIGHTING DISTRIBUTION PANEL PER LIGHTING SITE PLAN (EL01).

ENGINEERING
CITY OF LOS ANGELES

REGISTERED PROFESSIONAL ENGINEER
ROBERT D. GETTER
No. E 21884
Exp. 06-30-23
ELECTRICAL
STATE OF CALIFORNIA
01/27/2023

THIS PLAN WAS ELECTRONICALLY • SIGNED AND STAMPED

BUREAU OF ENGINEERING

VERTICAL CONTROL:	BENCH MARK (08-03460) NAVD 88
HORIZONTAL CONTROL:	CALIFORNIA STATE PLANE ZONE V, 1983 NAD
SHEET TITLE:	LIGHTING PHOTOMETRIC PLAN
PROJECT:	FERNANGELES PARK STORMWATER CAPTURE PROJECT
ADDRESS:	FERNANGELES RECREATION CENTER 8851 LAUREL CANYON BLVD, SUN VALEY, CA 91352

CITY OF LOS ANGELES DEPARTMENT OF PUBLIC WORKS

NO.	REVISIONS	DATE	BY
		YY/MMDD	
		YY/MMDD	
		YY/MMDD	
		YY/MMDD	

INDEX NO.

CIP NO. SCP0002

CITY ENGINEER:	DATE
TED ALLEN, P.E.	
DESIGN GROUP	
ENGINEER:	PROJECTLINE TECHNICAL SERVICES 01/27/2023
ARCHITECT:	NA 01/27/2023
DESIGNED BY:	J. CHIN 01/27/2023
DRAWN BY:	J. CHIN 01/27/2023
CHECKED BY:	A. CARRIE 01/27/2023
APPROVED BY:	R. GETTER 01/27/2023

WORK ORDER
EW40079F

SHEET NAME
EL02
SHEET 112 OF 125 SHEETS

THE CITY OF LOS ANGELES OR ITS OFFICERS OR AGENTS SHALL NOT BE RESPONSIBLE FOR THE ACCURACY OR COMPLETENESS OF ELECTRONIC COPIES OF THIS PLAN SHEET.

REVISION DATES (DESIGN STAGE ONLY)

SHEET VERSION 4.0.1 FILE PATH: C:\CDMEXT\JCHIN@PROJECTLINETS.COM\D0591899\EL02.DWG PLOT DATE: 1/26/2023 12:55 PM SAVED: 1/26/2023 11:45 AM SAVED BY:JCHIN

SPORT LIGHTING POLE/ FIXTURE SUMMARY					
POLE ID	POLE HEIGHT	MTG HEIGHT	FIXTURE QTY	LUMINAIRE TYPE	LOAD
A1-A2	60'	60'	3	TLC-LED-900	2.67 kW
		16'	1	TLC-BT-575	0.58 kW
		27'	1	CREE OSQ	0.13 kW
A3-A4	60'	60'	1	TLC-LED-400	0.40 kW
		60'	3	TLC-LED-900	2.67 kW
		16'	1	TLC BT 575	0.58 kW
		27'	1	CREE OSQ	0.13 kW
B1	60'	60'	3	TLC-LED-1200	3.51 kW
		60'	1	TLC-LED-400	0.40 kW
		16'	1	TLC-BT-575	0.58 kW
		27'	1	CREE OSQ	0.13 kW
B2	60'	60'	3	TLC-LED-1200	3.51 kW
		16'	1	TLC-BT-575	0.58 kW
		27'	1	CREE OSQ	0.13 kW
B3-B4	70'	70'	5	TLC-LED-1500	7.15 kW
		16'	1	TLC-BT-575	0.58 kW
		27'	1	CREE OSQ	0.13 kW
8			***47***		***38.84 kW***

PATHWAY LIGHTING CALCULATION SUMMARY									
SYMBOL	POLE HEIGHT	MTG HEIGHT	FIXTURE (QTY)	LUMINAIRE TYPE	AVG (FC)	MAX (FC)	MIN (FC)	AVG/MIN	MAX/MIN
Ⓐ	22'	22'	17	LEG-1-T5-48L-7-50K	1.92	3.2	0	2.13	3.56
Ⓑ	22'	22'	2	LEG-1-T5-48L-53-50K	1.92	3.2	0	2.13	3.56

ZONE SUMMARY FOR ELECTRICAL LOADS			
ZONE	DESCRIPTION	LOAD	FIXTURE QTY
1	SOFT BALL	15.06 kW	17
2	BASEBALL	22.74 kW	22
3	SECURITY	1.04 kW	8
4	PATHWAY	1.98 kW	19

FIXTURE TYPE SUMMARY							
TYPE	SOURCE	WATTAGE	LUMENS	L90	L80	L70	QUANTITY
TLC-LED-1200	LED 5700K - 75 CRI	1170W	136,000	>120,000	>120,000	>120,000	6
CREE OSQ	LED 5700K - 70 CRI	130W	16,599	--	--	--	8
TLC-LED-1500	LED 5700K - 75 CRI	1430W	160,000	>120,000	>120,000	>120,000	10
TLC-LED-900	LED 5700K - 75 CRI	890W	89,600	>120,000	>120,000	>120,000	12
TLC-LED-400	LED 5700K - 75 CRI	400W	46,500	>120,000	>120,000	>120,000	3
TLC-BT-575	LED 5700K - 75 CRI	575W	52,000	>120,000	>120,000	>120,000	8
LEG-1-48L-7-50K	LED 5000K	104W	12,272	--	--	--	17
LEG-1-48L-53-50K	LED 5000K	80W	9,440	--	--	--	2

LIGHT LEVEL SUMMARY

CALCULATION GRID SUMMARY								
		ILLUMINATION						
GRID NAME	CALCULATION METRIC	AVE	MIN	MAX	MAX/ MIN	AVE/ MIN	CIRCUITS	FIXTURE QTY
BB 1st Base Bullpen	Horizontal	20.6	14	25	1.78	1.47	B	22
BB 3rd Base Bullpen	Horizontal	25.2	20	29	1.43	1.26	B	22
Baseball (Infield)	Horizontal Illuminance	51.3	41	61	1.50	1.25	B	22
Baseball (Outfield)	Horizontal Illuminance	35.9	20	46	2.28	1.79	B	22
Batting Cage	Horizontal	25.2	11	38	3.54	2.29	A	17
Softball (Infield)	Horizontal Illuminance	50.8	36	64	1.78	1.41	A	17
Softball (Outfield)	Horizontal Illuminance	33	21	42	1.97	1.57	A	17
Security	Horizontal	0.41	0	4	4346.18		C	8
Spill	Horizontal	0.01	0	0.06	405.44		A,B,C,D	47
Spill	Max Candela (by Fixture)	1315	154	7238	46.89	8.52	A,B,C,D	47
Spill	Max Vertical Illuminance Metric	0.05	0	0.30	98.60		A,B,C,D	47

CIRCUIT SUMMARY BY ZONE							
POLE	CIRCUIT DESCRIPTION	# OF FIXTURES	# OF DRIVERS	*FULL LOAD AMPS	CONTACTOR SIZE (AMPS)	CONTACTOR ID	ZONE
A1	Softball	4	4	5.2	30	C1	1
A2	Softball	4	4	5.2	30	C2	1
B1	Softball	5	5	7.4	30	C3	1
B2	Softball	4	4	6.5	30	C4	1
A3	Baseball	5	5	6.1	30	C5	2
A4	Baseball	5	5	6.1	30	C6	2
B3	Baseball	6	6	12.8	30	C7	2
B4	Baseball	6	6	12.8	30	C8	2
A1, A2, B2, B3	Security	4	4	2.0	30	C9	3
A3, A4, B1, B4	Security	4	4	2.0	30	C10	3
	Pathway	8	8	2.0	30	C11	4
		11	11	2.7	30	C12	4

ZONE SCHEDULE				
			CIRCUIT DESCRIPTION	
ZONE	SELECTOR SWITCH	ZONE DESCRIPTION	POLE	CONTACTOR ID
ZONE 1	1	Softball	A1	C1
			A2	C2
			B1	C3
			B2	C4
ZONE 2	2	Baseball	A3	C5
			A4	C6
			B3	C7
			B4	C8
ZONE 3	3	Security	A1	C9
			A2	C9
			A3	C10
			A4	C10
			B1	C10
			B2	C9
			B3	C9
			B4	C10
ZONE 4	4	PATHWAY	8 POLES	C11
			11 POLES	C12

SINGLE LUMINAIRE AMPERAGE DRAW CHART							
BALLAST SPECIFICATIONS (.90 min power factor)	LINE AMPERAGE PER LUMINAIRE (max draw)						
Single Phase Voltage	208 (60)	220 (60)	240 (60)	277 (60)	347 (60)	380 (60)	480 (60)
TLC -LED -1200	7.0	6.6	6.1	5.2	4.2	4.0	3.0
CREE OSQ	-	-	-	-	0.4	-	0.3
TLC-LED-1500	8.5	8.1	7.4	6.4	5.1	4.7	3.7
TLC -LED -900	5.3	5.0	4.6	4.0	3.2	2.9	2.3
TLC -LED -400	2.3	2.2	2.0	1.7	1.4	1.3	1.0
TLC -BT -575	3.4	3.2	2.9	2.5	2.0	1.8	1.5

THE CITY OF LOS ANGELES OR ITS OFFICERS OR AGENTS SHALL NOT BE RESPONSIBLE FOR THE ACCURACY OR COMPLETENESS OF ELECTRONIC COPIES OF THIS PLAN SHEET.

REVISION DATES (DESIGN STAGE ONLY)

ENGINEERING
CITY OF LOS ANGELES

REGISTERED PROFESSIONAL ENGINEER
ROBERT D. GETTER
No. E 21884
Exp. 06-30-23
ELECTRICAL
STATE OF CALIFORNIA
01/27/2023

THIS PLAN WAS ELECTRONICALLY • SIGNED AND STAMPED

BUREAU OF ENGINEERING

VERTICAL CONTROL: BENCH MARK 08-30460 NAVD 88
HORIZONTAL CONTROL: CALIFORNIA STATE PLANE ZONE V. 1983 NAD

SHEET TITLE: LIGHTING CONTROL SPECIFICATIONS

PROJECT: FERNANGELES PARK STORMWATER CAPTURE PROJECT

ADDRESS: FERNANGELES RECREATION CENTER 8851 LAUREL CANYON BLVD, SUN VALLEY, CA 91352

CITY OF LOS ANGELES DEPARTMENT OF PUBLIC WORKS

NO.	REVISIONS	DATE	BY
		YY/MM/DD	
		YY/MM/DD	
		YY/MM/DD	
		YY/MM/DD	

CITY ENGINEER: TED ALLEN, P.E.

	DESIGN GROUP	DATE
ENGINEER:	PROJECTLINE TECHNICAL SERVICES	01/27/2023
ARCHITECT:	NA	01/27/2023
DESIGNED BY:	J. CHIN	01/27/2023
DRAWN BY:	J. CHIN	01/27/2023
CHECKED BY:	A. CARRIE	01/27/2023
APPROVED BY:	R. GETTER	01/27/2023

CIP NO. SCP0002

INDEX NO.

WORK ORDER EW40079F

SHEET NAME EL03

SHEET 113 OF 125 SHEETS

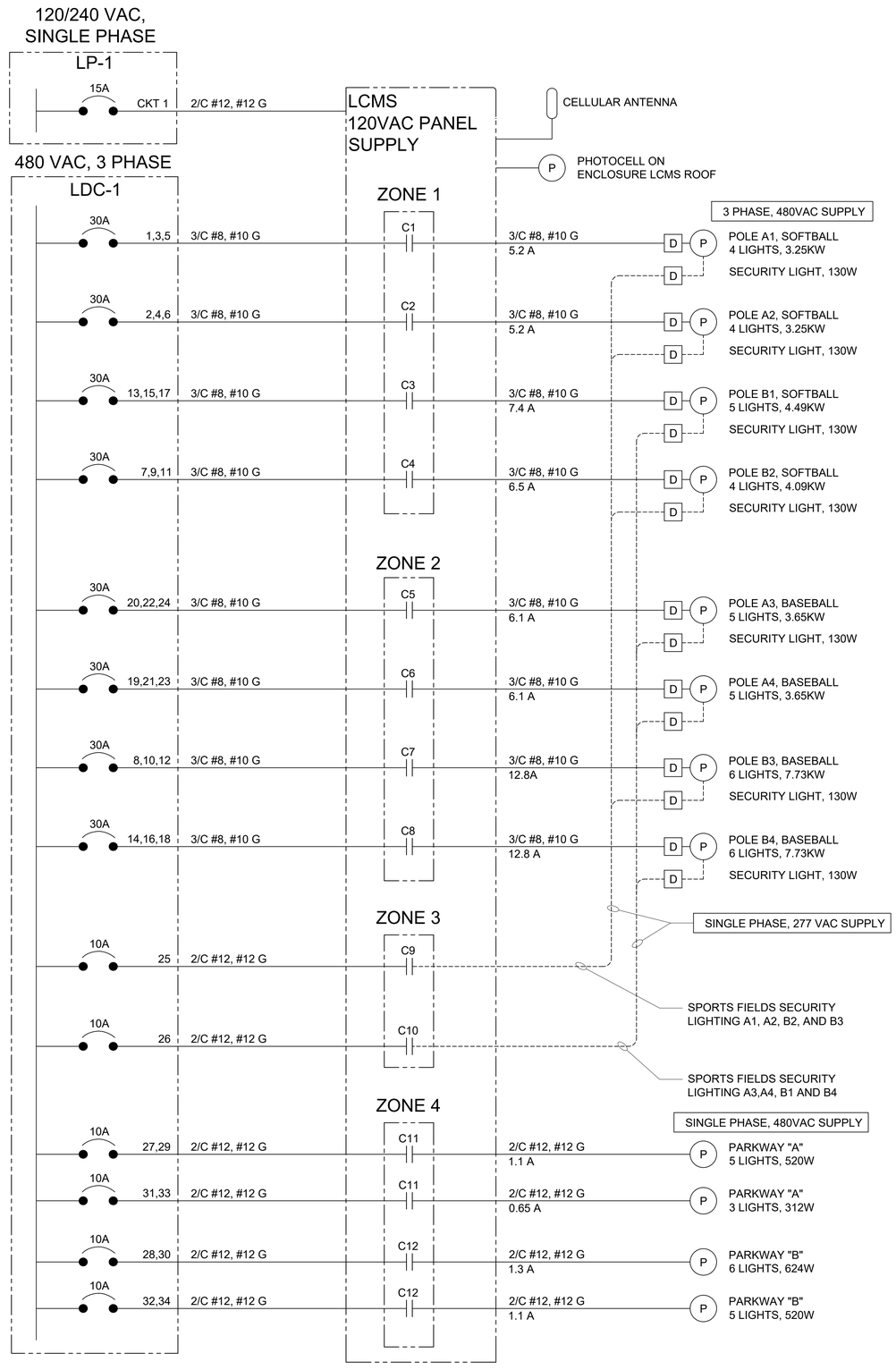

LEGENDS:

D — DRIVER PANEL REQUIRED BY MANUFACTURE AS RECOMMENDED

P — SINGLE POLE

NOTES:

1. SEE DRAWINGS EL01 AND EL02 FOR LIGHTING PLANS.
2. PROVIDE CONTROLS AT PANEL LCMS TO ALLOW OWNER TO DIM LIGHTS BY ZONE, EITHER MANUALLY AT LCMS OR REMOTELY VIA INTERNET CONNECTION.

THE CITY OF LOS ANGELES OR ITS OFFICERS OR AGENTS SHALL NOT BE RESPONSIBLE FOR THE ACCURACY OR COMPLETENESS OF ELECTRONIC COPIES OF THIS PLAN SHEET.

REVISION DATES (DESIGN STAGE ONLY)

ENGINEERING
CITY OF LOS ANGELES

REGISTERED PROFESSIONAL ENGINEER
ROBERT D. GETTER
No. E 21884
Exp. 06-30-23
ELECTRICAL
STATE OF CALIFORNIA
01/27/2023

THIS PLAN WAS ELECTRONICALLY SIGNED AND STAMPED

BUREAU OF ENGINEERING

VERTICAL CONTROL: BENCH MARK 08-30460 NAVD 88
HORIZONTAL CONTROL: CALIFORNIA STATE PLANE ZONE V, 1983 NAD

SHEET TITLE: LIGHTING POWER AND CONTROL DIAGRAM

PROJECT: FERNANGELES PARK STORMWATER CAPTURE PROJECT

ADDRESS: FERNANGELES RECREATION CENTER
8851 LAUREL CANYON BLVD, SUN VALEY, CA 91352

CITY OF LOS ANGELES DEPARTMENT OF PUBLIC WORKS

NO.	REVISIONS	DATE	BY
		YY/MM/DD	
		YY/MM/DD	
		YY/MM/DD	
		YY/MM/DD	

CIP NO. SCP0002

INDEX NO.

CITY ENGINEER
TED ALLEN, P.E.

DESIGN GROUP		DATE
ENGINEER:	PROJECTLINE TECHNICAL SERVICES	01/27/2023
ARCHITECT:	NA	01/27/2023
DESIGNED BY:	J. CHIN	01/27/2023
DRAWN BY:	J. CHIN	01/27/2023
CHECKED BY:	A. CARRIE	01/27/2023
APPROVED BY:	R. GETTER	01/27/2023

WORK ORDER
EW40079F

SHEET NAME
EL04

SHEET 114 OF 125 SHEETS

STATE OF CALIFORNIA
Outdoor Lighting
NRCC-LTO-E (Created 01/21) CALIFORNIA ENERGY COMMISSION

CERTIFICATE OF COMPLIANCE	NRCC-LTO-E
This document is used to demonstrate compliance with requirements in §110.9, §130.0, §130.2, §140.7, and §141.0(b)2L for outdoor lighting scopes using the prescriptive path.	
Project Name: Fernangeles Stormwater Capture Park Project	Report Page: Page 1 of 7
Project Address: 8851 LAUREL CANYON BLVD, SUN VALLEY, CA 91352	Date Prepared: May 5, 2022

A. GENERAL INFORMATION

01	Project Location (city)	SUN VALLEY	04 Total Illuminated Hardscape Area (ft²)	160,410
02	Climate Zone	9		
03	Outdoor Lighting Zone per Title 24, Part 1 §10-114 or as designated by Authority Having Jurisdiction (AHJ):			
☐ LZ-0: Very Low - Undeveloped Parkland	☐ LZ-2: Moderate - Rural Areas	☐ LZ-4: High - Must be reviewed by CA Energy Commission for Approval		
☐ LZ-1: Low - Developed Parkland	☑ LZ-3: Moderately High - Urban Areas			

B. PROJECT SCOPE

Table Instructions: Include any outdoor lighting systems that are within the scope of the permit application and are demonstrating compliance using the prescriptive path outlined in §140.7 or §141.0(b)2L for alterations.

My project consists of:

01	02
☑ New Lighting System	Must Comply with Allowances from §140.7.
☐ Altered Lighting System	Is your alteration increasing the connected lighting load (Watts)? ◯ Yes ◯ No

03	04	05
% of Existing Luminaires Being Altered[1]	Sum Total of Luminaires Being Added or Altered	Calculation Method

[1] FOOTNOTES: % of Existing Luminaires Being Altered = (Sum Total of Luminaires Being Added or Altered / Existing Luminaires within the Scope of the Permit Application) x 100

C. COMPLIANCE RESULTS

Table Instructions: If any cell on this table says "DOES NOT COMPLY" or "COMPLIES with Exceptional Conditions" refer to Table D. for guidance.

Calculation of Total Allowed Lighting Power (Watts) §140.7 or §141.0(b)2L										Compliance Results		
01		02		03		04		05		06		07		08		09
General Hardscape Allowance §140.7(d)1	+	Per Application §140.7(d)2	+	Sales Frontage §140.7(d)2	+	Ornamental §140.7(d)2	+	Per Specific Area §140.7(d)2	OR	Existing Power §141.0(b)2L	=	**Total Allowed** (Watts)	≥	**Total Actual** (Watts)	**07 Must be ≥ 08**
(See Table I)		(See Table J)		(See Table K)		(See Table L)		(See Table M)		(See Table N)				(See Table F)	
4,360.25	+		+		+		+		OR		=	4,360.25	≥	1,928	**COMPLIES**
Cutoff Compliance (See Table G for Details)														**COMPLIES**	
Controls Compliance (See Table H for Details)														**COMPLIES**	

STATE OF CALIFORNIA
Outdoor Lighting
NRCC-LTO-E (Created 01/21) CALIFORNIA ENERGY COMMISSI19

CERTIFICATE OF COMPLIANCE	NRCC-LTO-E
Project Name: Fernangeles Stormwater Capture Park Project	Report Page: Page 2 of 7
Project Address: 8851 LAUREL CANYON BLVD, SUN VALLEY, CA 91352	Date Prepared: May 5, 2022

D. EXCEPTIONAL CONDITIONS

This table is auto-filled with uneditable comments because of selections made or data entered in tables throughout the form.

Table F. Outdoor Lighting Fixture Schedule Permit Applicant Notes:
Sport: Sport Field Lightings are unregulated.
Sport: Sport Field Lightings are unregulated.
Sport: Sport Field Lightings are unregulated.
Sport: Sport Field Lightings are unregulated.
Sport: Sport Field Lightings are unregulated.
SECURITY: Sport Security Lightings are unregulated.

E. ADDITIONAL REMARKS

This table includes remarks made by the permit applicant to the Authority Having Jurisdiction.

F. OUTDOOR LIGHTING FIXTURE SCHEDULE

Table Instructions: For new or altered lighting systems demonstrating compliance with §140.7 (ie Table I has expanded for input), include all luminaires being installed and any existing luminaires remaining or being moved within the spaces covered by the permit application in the Table below. For altered lighting systems using the Existing Power method per §141.0(b)2L (ie Table N has expanded for input), include only new luminaires being installed and replacement luminaires being installed as part of the project scope (ie, do not include existing luminaires remaining or existing luminaires being moved).

Designed Wattage:

01 Name or Item Tag	02 Complete Luminaire Description		03 Watts per luminaire[1,2]	04 How Wattage is determined	05 Total number luminaires[2]	06 Luminaire Status[3]	07 Excluded per §140.7(a)	08 Design Watts	09 Cutoff Req. ≥ 6,200 initial lumen output §130.2(b)[4]	10 Field Inspector Pass	Fail
Path light	LEG-1TS-48L-7-50K	☐ Linear	104	Mfr. Spec[1]	17	New	☐	1,768	Yes	☐	☐
Path light	LEG-1TS-48L-7-50K	☐ Linear	80	Mfr. Spec[1]	2	New	☐	160	Yes	☐	☐
Sport	TLC-LED-1500	☐ Linear	1,430	Mfr. Spec[1]	10	New	☑		Exempt*	☐	☐
Sport	TLC-LED-400	☐ Linear	400	Mfr. Spec[1]	3	New	☑		Exempt*	☐	☐
Sport	TLC-LED-1200	☐ Linear	1,200	Mfr. Spec[1]	6	New	☑		Exempt*	☐	☐
Sport	TLC-LED-900	☐ Linear	900	Mfr. Spec[1]	12	New	☑		Exempt*	☐	☐
Sport	TLC-BT-575	☐ Linear	575	Mfr. Spec[1]	8	New	☑		Exempt*	☐	☐

Table Continued

STATE OF CALIFORNIA
Outdoor Lighting
NRCC-LTO-E (Created 01/21) CALIFORNIA ENERGY COMMISSI19

CERTIFICATE OF COMPLIANCE	NRCC-LTO-E
Project Name: Fernangeles Stormwater Capture Park Project	Report Page: Page 3 of 7
Project Address: 8851 LAUREL CANYON BLVD, SUN VALLEY, CA 91352	Date Prepared: May 5, 2022

01 Name or Item Tag	02 Complete Luminaire Description		03 Watts per luminaire[1,2]	04 How Wattage is determined	05 Total number luminaires[2]	06 Luminaire Status[3]	07 Excluded per §140.7(a)	08 Design Watts	09 Cutoff Req. ≥ 6,200 initial lumen output §130.2(b)[4]	10 Field Inspector Pass	Fail
SECURITY	CREE OSQ	☐ Linear	130	Mfr. Spec[1]	8	New	☑		Exempt*	☐	☐
		☐ Linear					☐	0		☐	☐
		☐ Linear					☐	0		☐	☐
		☐ Linear					☐	0		☐	☐
							Total Designed Watts:	**1,928**			

* NOTES: Selections with a * require a note in the space below explaining how compliance is achieved.
EX: Luminaire is lighting a statue; EXCEPTION 2 to §130.2(b).

Sport	Sport Field Lightings are unregulated.
Sport	Sport Field Lightings are unregulated.
Sport	Sport Field Lightings are unregulated.
Sport	Sport Field Lightings are unregulated.
Sport	Sport Field Lightings are unregulated.
SECURITY	Sport Security Lightings are unregulated.

[1] FOOTNOTES: Authority Having Jurisdiction may ask for Luminaire cut sheets to confirm wattage used for compliance per §130.0(c)
[2] For linear luminaires, wattage should be indicated as W/lf instead of Watts/luminaire. Total linear feet for the luminaire should be indicated in column 05 instead of number of luminaires.
[3] Select "New" for new luminaires in a new outdoor lighting project or for added luminaires in an alteration. Select "Altered" for replacement luminaires in an alteration. Select "Existing to Remain" for existing luminaires within the project scope that are not being altered and are remaining. Select "Existing Reinstalled" for existing luminaires which are being removed and reinstalled as part of the project scope
[4] Compliance with mandatory cutoff requirements is required for luminaires with initial lumen output ≥ 6,200 unless exempted by §130.2(b).

G. CUTOFF REQUIREMENTS (BUG)

Table Instructions: Complete this table for fixtures of ≥ 6,200 initial luminaire lumens indicated on Table F as needing to comply with Cutoff Requirements. Maximum lumens can be found in Title 24, Part 11, Section 5.106.8.

Table Continued

STATE OF CALIFORNIA
Outdoor Lighting
NRCC-LTO-E (Created 01/21) CALIFORNIA ENERGY COMMISSI19

CERTIFICATE OF COMPLIANCE	NRCC-LTO-E
Project Name: Fernangeles Stormwater Capture Park Project	Report Page: Page 4 of 7
Project Address: 8851 LAUREL CANYON BLVD, SUN VALLEY, CA 91352	Date Prepared: May 5, 2022

01 Name or Item Tag	02 Complete Luminaire Description	03 Backlight Rating[1] Mounting Height from Property Line[1]	04 Max Allowable Backlight Rating[3]	05 Backlight Rating Per Design	06 Uplight Rating[3] Lighting Type	07 Max Allowable Uplight Rating[3]	08 Uplight Rating Per Design	09 Glare Rating[3] Mounting Height from Property Line[1]	10 Max Allowable Glare Rating[3]	11 Glare Rating Per Design	12 Field Inspector Pass	Fail
Path light	LEG-1TS-48L-7	Back hemisphere 0.5-1 MH from prop line	B3	B3	Area Lighting	U0	U0	> 2 MH from property line	G3	G2	☐	☐
Path light	LEG-1TS-48L-7	Back hemisphere 0.5-1 MH from prop line	B3	B3	Area Lighting	U0	U0	Front hemisphere 0.5-1 MH from prop line	G1	G1	☐	☐

[1] FOOTNOTES: Mounting Height is labeled MH in this table
[2] Authority having jurisdiction may ask for luminaire cut sheets or other documentation to confirm luminaire type, uplight ratings and glare ratings used for compliance per §130.2(b).
[3] BUG ratings with a lower number than the 'Max Allowable' are compliant. Ex. If Max Allowable is Bug Rating is B4, then B0, B1, B2, B3 and B4 are all compliant.

H. OUTDOOR LIGHTING CONTROLS

Table Instructions: Complete this table demonstrating compliance with controls requirements for all new or altered luminaires installed as part of the permit application. For alteration projects, luminaires which are existing to remain (ie untouched) and luminaires which are removed and reinstalled (wiring only) do not need to be included in this table even if they are within the spaces covered by the permit application.
*When an option having a * is selected, the notes section of this table must be completed. The lighting controls section of the Compliance Summary Table on the first page will show "DOES NOT COMPLY" if the notes are left blank. For each requirement in columns 02 through 04, do not leave the field blank, instead select NA or Exempt* from the dropdown list to indicate not applicable or an exemption.*

Mandatory Controls

01 Area Description	02 Shut-Off §130.2(c)1	03 Auto-Schedule §130.2(c)2	04 Motion Sensor §130.2(c)3	05 Field Inspector Pass	Fail
Pathway Light	Photocontrol	Yes	Yes	☐	☐

*NOTES: Controls with a * require a note in the space below explaining how compliance is achieved.
EX: Not permitted by health & safety to be turned off; EXCEPTION 1 to §130.2(c).

Table Continued

STATE OF CALIFORNIA
Outdoor Lighting
NRCC-LTO-E (Created 01/21) CALIFORNIA ENERGY COMMISSI19

CERTIFICATE OF COMPLIANCE	NRCC-LTO-E
Project Name: Fernangeles Stormwater Capture Park Project	Report Page: Page 5 of 7
Project Address: 8851 LAUREL CANYON BLVD, SUN VALLEY, CA 91352	Date Prepared: May 5, 2022

01 Area Description	02 Shut-Off §130.2(c)1	03 Auto-Schedule §130.2(c)2	04 Motion Sensor §130.2(c)3	05 Field Inspector Pass	Fail

I. LIGHTING POWER ALLOWANCE (per §140.7)

Table Instructions: Please complete this table for areas using the allowance calculations per §140.7. General Hardscape Allowance is per Table 140.7-A while "Use it or lost it" Allowances are per Table 140.7-B. Indicate which allowances are being used to expand sections for user input. Luminaires that qualify for one of the "Use it or lose it" allowances shall not qualify for another "Use it or lose it" allowance.

01 "Use it or lose it" Allowances (select all that apply)				
☑ General Hardscape Allowance	☐ Per Application	☐ Sales Frontage	☐ Ornamental	☐ Per Specific Area
Table I (below)	Table J	Table K	Table L	Table M

Calculated General Hardscape Lighting Power Allowance per Table 140.7-A (LZ 2 & 3)

02 Area Description	03 Surface Type	04 Area Wattage Allowance (AWA) Illuminated Area (ft²)	05 Allowed Density (W/ft²)	06 Area Allowance (Watts)	07 Linear Wattage Allowance (LWA) Perimeter Length (lf)	08 Allowed Density (W/lf)	09 Linear Allowance (Watts)	10 Total General AWA + LWA (Watts)
Pathway Lighting	Asphalt	160,410	0.025	4,010.25		0.25	0	4,010.25
								0
							Initial Wattage Allowance for Entire Site (Watts):	**350**
							Total General Hardscape Allowance (Watts):	**4,360.25**

J. LIGHTING ALLOWANCE: PER APPLICATION

This Section Does Not Apply

K. LIGHTING ALLOWANCE: SALES FRONTAGE

This Section Does Not Apply

L. LIGHTING ALLOWANCE: ORNAMENTAL

This Section Does Not Apply

STATE OF CALIFORNIA
Outdoor Lighting
NRCC-LTO-E (Created 01/21) CALIFORNIA ENERGY COMMISSI19

CERTIFICATE OF COMPLIANCE	NRCC-LTO-E
Project Name: Fernangeles Stormwater Capture Park Project	Report Page: Page 6 of 7
Project Address: 8851 LAUREL CANYON BLVD, SUN VALLEY, CA 91352	Date Prepared: May 5, 2022

M. LIGHTING ALLOWANCE: PER SPECIFIC AREA

This Section Does Not Apply

N. EXISTING CONDITIONS POWER ALLOWANCE (alterations only)

This Section Does Not Apply

O. DECLARATION OF REQUIRED CERTIFICATES OF INSTALLATION

Table Instructions: Selections have been made based on information provided in previous tables of this document. If any selection needs to be changed, please explain why in Table E. Additional Remarks. These documents must be provided to the building inspector during construction and can be found online at https://www.energy.ca.gov/title24/2019standards/2019_compliance_documents/Nonresidential_Documents/NRCI/

YES	NO	Form/Title	Field Inspector Pass	Fail
◉	◯	NRCI-LTO-01-E - Must be submitted for all buildings.	☐	☐
◉	◯	NRCI-LTO-02-E - Must be submitted for a lighting control system; or for an Energy Management Control System (EMCS), to be recognized for compliance.	☐	☐

P. DECLARATION OF REQUIRED CERTIFICATES OF ACCEPTANCE

Table Instructions: Selections have been made based on information provided in previous tables of this document. If any selection needs to be changed, please explain why in Table E. Additional Remarks. These documents must be provided to the building inspector during construction and must be completed through an Acceptance Test Technician Certification Provider (ATTCP). For more information visit: http://www.energy.ca.gov/title24/attcp/providers.html

YES	NO	Form/Title	Field Inspector Pass	Fail
◉	◯	NRCA-LTO-02-A - Must be submitted for all outdoor lighting controls except for alterations where controls area added to ≤ 20 luminaires.	☐	☐

THE CITY OF LOS ANGELES OR ITS OFFICERS OR AGENTS SHALL NOT BE RESPONSIBLE FOR THE ACCURACY OR COMPLETENESS OF ELECTRONIC COPIES OF THIS PLAN SHEET.
REVISION DATES (DESIGN STAGE ONLY)
CITY OF LOS ANGELES DEPARTMENT OF PUBLIC WORKS
BUREAU OF ENGINEERING
THIS PLAN WAS ELECTRONICALLY SIGNED AND STAMPED
ENGINEERING CITY OF LOS ANGELES
REGISTERED PROFESSIONAL ENGINEER ROBERT D. GETTER No. E 21884 Exp. 06-30-23 ELECTRICAL STATE OF CALIFORNIA 01/27/2023
V NO. REVISIONS BY DATE
CITY ENGINEER TED ALLEN, P.E. DATE 01/27/2023
DESIGN GROUP PROJECT/LINE TECHNICAL SERVICES 01/27/2023
ENGINEER: NA 01/27/2023
ARCHITECT:
DESIGNED BY: J. CHIN 01/27/2023
DRAWN BY: J. CHIN 01/27/2023
CHECKED BY: A. CARRIE 01/27/2023
APPROVED BY: R. GETTER 01/27/2023
SHEET TITLE: TITLE 24 SHEETS 1 OF 2
PROJECT: FERNANGELES PARK STORMWATER CAPTURE PROJECT
ADDRESS: FERNANGELES RECREATION CENTER 8851 LAUREL CANYON BLVD, SUN VALLEY, CA 91352
VERTICAL CONTROL: BENCH MARK 08-03460 NAVD 88
HORIZONTAL CONTROL: CALIFORNIA STATE PLANE ZONE V - 1983 NAD
CIP NO. SCP0002
INDEX NO.
WORK ORDER EW40079F
SHEET NAME EL05
SHEET 115 OF 125 SHEETS

STATE OF CALIFORNIA

Outdoor Lighting

NRCC-LTO-E (Created 01/21) — CALIFORNIA ENERGY COMMISSION

CERTIFICATE OF COMPLIANCE		NRCC-LTO-E
Project Name: Fernangeles Stormwater Capture Park Project	Report Page:	Page 7 of 7
Project Address: 8851 LAUREL CANYON BLVD, SUN VALLEY, CA 91352	Date Prepared:	May 5, 2022

DOCUMENTATION AUTHOR'S DECLARATION STATEMENT

I certify that this Certificate of Compliance documentation is accurate and complete

Documentation Author Name:	Robert Getter	Documentation Author Signature:	
Company:	ProjectLine Technical Services	Signature Date:	May 5, 2022
Address:	2900 Bristol Street, D-103	CEA/ HERS Certification Identification (if applicable):	
City/State/Zip:	Costa Mesa, CA 92626	Phone:	949-351-9718

RESPONSIBLE PERSON'S DECLARATION STATEMENT

I certify the following under penalty of perjury, under the laws of the State of California:

1. **The information provided on this Certificate of Compliance is true and correct.**
2. **I am eligible under Division 3 of the Business and Professions Code to accept responsibility for the building design or system design identified on this Certificate of Compliance (responsible designer)**
3. **The energy features and performance specifications, materials, components, and manufactured devices for the building design or system design identified on this Certificate of Compliance conform to the requirements of Title 24, Part 1 and Part 6 of the California Code of Regulations.**
4. **The building design features or system design features identified on this Certificate of Compliance are consistent with the information provided on other applicable compliance documents, worksheets, calculations, plans and specifications submitted to the enforcement agency for approval with this building permit application.**
5. **I will ensure that a completed signed copy of this Certificate of Compliance shall be made available with the building permit(s) issued for the building, and made available to the enforcement agency for all applicable inspections. I understand that a completed signed copy of this Certificate of Compliance is required to be included with the documentation the builder provides to the building owner at occupancy.**

Responsible Designer Name:	Robert Getter	Responsible Designer Signature:	
Company :	ProjectLine Technical Services	Date Signed:	May 5, 2022
Address:	2900 Bristol Street, D-103	License:	E-21884
City/State/Zip:	Costa Mesa, CA 92626	Phone:	949-351-9718

CA Building Energy Efficiency Standards - 2019 Nonresidential Compliance: http://www.energy.ca.gov/title24/2019standards — January 2021

THE CITY OF LOS ANGELES OR ITS OFFICERS OR AGENTS SHALL NOT BE RESPONSIBLE FOR THE ACCURACY OR COMPLETENESS OF ELECTRONIC COPIES OF THIS PLAN SHEET.

REVISION DATES (DESIGN STAGE ONLY)

ENGINEERING — CITY OF LOS ANGELES

REGISTERED PROFESSIONAL ENGINEER — ROBERT D. GETTER — No. E 21884 — Exp. 06-30-23 — ELECTRICAL — STATE OF CALIFORNIA — 01/27/2023

THIS PLAN WAS ELECTRONICALLY SIGNED AND STAMPED

BUREAU OF ENGINEERING

VERTICAL CONTROL: BENCH MARK 08-30460 NAVD 88
HORIZONTAL CONTROL: CALIFORNIA STATE PLANE ZONE V. 1983 NAD

SHEET TITLE: TITLE 24 SHEETS 2 OF 2

PROJECT: FERNANGELES PARK STORMWATER CAPTURE PROJECT

ADDRESS: FERNANGELES RECREATION CENTER 8851 LAUREL CANYON BLVD, SUN VALLEY, CA 91352

CITY OF LOS ANGELES DEPARTMENT OF PUBLIC WORKS

CITY ENGINEER	DATE
TED ALLEN, P.E.	

DESIGN GROUP	
ENGINEER:	PROJECTLINE TECHNICAL SERVICES
ARCHITECT:	NA
DESIGNED BY:	J. CHIN
DRAWN BY:	J. CHIN
CHECKED BY:	A. CARRIE
APPROVED BY:	R. GETTER

DATE	BY
YY/MM/DD	
YY/MM/DD	
YY/MM/DD	
YY/MM/DD	

NO.	REVISIONS

CIP NO. SCP0002

INDEX NO.

WORK ORDER EW40079F

SHEET NAME EL06

SHEET 116 OF 125 SHEETS

INSTRUMENTATION CALL - OUT

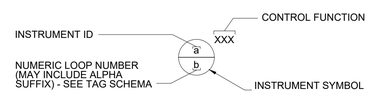

INSTRUMENT SYMBOLS

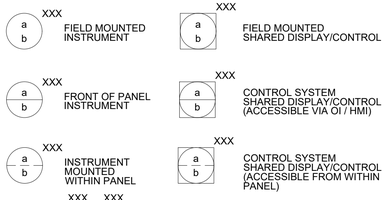

a INSTRUMENT IDENTIFICATION/TAG NUMBER (SEE MODIFIED ISA TABLE FOR MORE INFO)

b INSTRUMENT LOOP NUMBER

XXX CONTROL FUNCTION

XXXV PRIMARY ELECTRICAL POWER (e.g. 24VDC, 120VAC, 220VAC, 480VAC)

NOTE1: IF INSTRUMENT POWER NOT INDICATED, REFER TO INSTRUMENT SCHEDULE FOR CONFIRMATION.

* REFER TO PROJECT CONTROL PHILOSOPHY FOR DETAILS.

CONTROL FUNCTION DESIGNATIONS

AHC	AUTO / HOLD / CLOSE	OLH	OFF / LOW / HIGH
AM	AUTO / MANUAL	O/O	ON / OFF
AS	AIR SUPPLY	O/R	OVERRIDE
BEAR	BEARING	OOR	OUT OF RANGE
CLSD	CLOSED	OSC	OPEN / STOP / CLOSE
CV	CONTROL VARIABLE	PID	PROPORTIONAL / INTEGRAL / DERIVATIVE
DEV	DEVIATION	POT	POTENTIOMETER
E-STOP	EMERGENCY STOP	PV	PROCESS VARIABLE
ETM	ELAPSED TIME METER	RDY	READY
FOR	FORWARD / OFF / REVERSE	R/L	RAISE / LOWER
HML	HIGH / MID / LOW	RSL	RAISE / STOP / LOWER
HOA	HAND / OFF / AUTO	RST	RESET
HOR	HAND / OFF / REMOTE	RTD	RESISTANCE TEMPERATURE DETECTOR
LEAK	MOISTURE INSTRUSION	SD	SHUTDOWN
LOR	LOCAL / OFF / REMOTE	SEL	SELECT
L/R	LOCAL / REMOTE	SP	SET POINT
LSR	LOCAL / STOP / REMOTE	S/R	START / RESET
MOA	MANUAL / OFF / AUTO	S/S	START / STOP
MN	MAINTENANCE / NORMAL	STR	START
O/C	OPEN / CLOSE	STP	STOP
OCA	OPEN / CLOSE / AUTO	TMR	TIMER
OL	OVERLOAD	WIND	WINDING

NOTE:

1. REFER TO DRAWING GI-2 FOR ANALYTICAL INSTRUMENT DESIGNATIONS.

INSTRUMENT SYMBOLS - CONT

COMPUTING OR CONVERTING FUNCTIONS



SUMMING	DERIVATIVE	EXPONENTIAL
MULTIPLYING	AVERAGING	BIAS
DIVIDING	RATIO	HIGH LIMITING
SQ ROOT EXTRACTION	DIFFERENCE	LOW LIMITING
PROPORTIONAL	HIGH SELECTING	LINEARIZER
INTEGRAL	LOW SELECTING	



E	VOLTAGE	R	RESISTANCE (ELECT)	A	ANALOG
I	CURRENT	D	DIGITAL	B	BINARY
P	PNEUMATIC			H	HYDRAULIC

PLC / REMOTE I/O POINTS

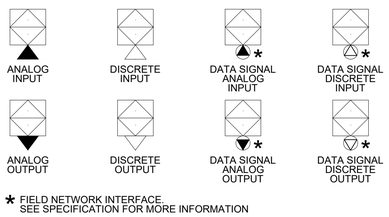

* FIELD NETWORK INTERFACE. SEE SPECIFICATION FOR MORE INFORMATION

INSTRUMENTATION LINE SYMBOLOGY

NEW WORK (UNSCREENED)

FUTURE EQUIPMENT (DASH)

VENDOR SKID LIMIT

INSTRUMENT LINE DEFINITIONS (UNLESS SPECIFICALLY NOTED OTHERWISE PER DRAWING LEGEND)

DATA LINK OR SYSTEM BUS BETWEEN DEVICES

ELECTRIC (PULSE SIGNAL)

ELECTRICAL SIGNAL

ULTRASONIC SIGNAL

HYDRAULIC SIGNAL

MECHANICAL LINK

PNEUMATIC SIGNAL

PROCESS

AS AIR SUPPLY

COMMUNICATION LINE DEFINITIONS (UNLESS SPECIFICALLY NOTED OTHERWISE PER DRAWING LEGEND)

UTP (CAT 5e OR CAT 6 AS NOTED)

PROFIBUS

F FOUNDATION FIELD BUS

M MODBUS (RS485)

SINGLE MODE FIBER

X MULTIMODE FIBER

VENDOR SIGNAL CABLE

D DEVICENET (THIN - DROP)

D DEVICENET (THICK - TRUNK)

SIGNAL AND PROCESS OFF-PAGE CONNECTORS

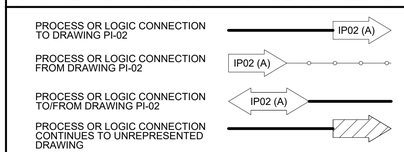

NOTE: REFER TO INSTRUMENTATION LINE SYMBOLOGY FOR PROCESS AND LOGIC LINESTYLE DEFINITION.

ISA TABLE (MODIFIED)

	FIRST LETTER		SUCCEEDING LETTER(S)		
	MEASURED OR INITIATING VARIABLE	MODIFIER	READOUT OR PASSIVE FUNCTION	OUTPUT FUNCTION	MODIFIER
A	ANALYSIS		ALARM		
B	BURNER, COMBUSTION				
C	CONDUCTIVITY			CONTROL	CLOSED
D	DENSITY	DIFFERENTIAL			
E	VOLTAGE		SENSOR (PRIMARY ELEMENT)		
F	FLOW RATE	RATIO (FRACTION)			FORWARD
G			GAUGE, GLASS, VIEWING DEVICE		
H	HAND				HIGH
I	CURRENT (ELECTRICAL)		INDICATE		
J	POWER	SCAN			
K	TIME, TIME SCHEDULE	TIME RATE OF CHANGE		CONTROL STATION	
L	LEVEL		LIGHT		LOW
M	MOISTURE	MOMENTARY			MIDDLE, INTERMEDIATE
N	TORQUE		ISOLATE	ISOLATOR	
O			ORIFICE, RESTRICTION		OPEN
P	PRESSURE, VACUUM		POINT (TEST) CONNECTION		
Q	QUANTITY	INTEGRATE, TOTALIZE			
R	RADIATION		RECORD		REVERSE
S	SPEED, FREQUENCY	SAFETY		SWITCH	
T	TEMPERATURE			TRANSMIT	
U	MULTIVARIABLE		MULTIFUNCTION	MULTIFUNCTION	MULTIFUNCTION
V	VIBRATION, MECHANICAL ANALYSIS			VALVE, DAMPER, LOUVER	
W	WEIGHT, FORCE		WELL		
X	INTRUSION	X AXIS			
Y	EVENT, STATE, OR PRESENCE	Y AXIS		COMPUTE, CONVERT	
Z	POSITION, DIMENSION	Z AXIS		DRIVER, ACTUATOR, FINAL CONTROL ELEMENT	

TAG SCHEMA

TYPICAL INSTRUMENT & CONTROL VALVE TAGGING

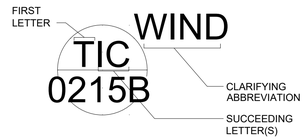

TYPICAL PIPE LINE TAG FORMAT

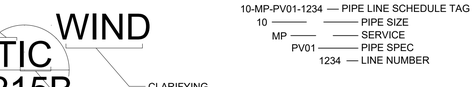

TYPICAL VALVE TAG / SPEC FORMAT



TYPICAL MANUAL VALVE TAG FORMAT

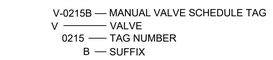

VALVE SPECIFICATION TAG FORMAT



ANALYTICAL INSTRUMENTS

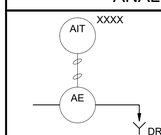

FLOW THROUGH ANALYZING ELEMENT WITH REMOTE TRANSMITTER

ALK	ALKALINITY
CL_2	CHLORINE CONCENTRATION
COMB	COMBUSTIBLE GAS
COND	CONDUCTIVITY
DO	DISSOLVED OXYGEN
TEMP	TEMPERATURE
NH_2CL	MONO-CHLORAMINE

LEL	LOWER EXPLOSIVE LIMIT
NO_3 / NO_2	NITRATE / NITRITE
NH_3 / NH_4	AMMONIA / AMMONIUM
O_2	OXYGEN CONCENTRATION
O_3	OZONE
ORP	OXIDATION - REDUCTION POTENTIAL
PC	PARTICLE COUNTER
pH	HYDROGEN ION CONCENTRATION
SCU	STREAMING CURRENT UNIT
SO_2	SULFUR DIOXIDE
TKN	TOTAL KJELDAHL NITROGEN
TN	TOTAL NITROGEN
TOC	TOTAL ORGANIC CARBON
TURB	TURBIDITY
TSS	TOTAL SUSPENDED SOLIDS
UVI	ULTRA VIOLET INTENSITY
UVT	ULTRA VIOLET TRANSMITTANCE

ABBREVIATIONS

ATM	ATMOSPHERE
APF	AWPF PROCESS FEED
ATC	AUTO TRANSFER CONTROLLER
CT	CONTACT TIME
CP	CONTROL PANEL
DCS	DISTRIBUTED CONTROL SYSTEM
DOL	DIRECT ONLINE STARTER
DR	DRAIN
FC	FAIL CLOSED
FOC	FIBER OPTIC CABLE
FOT	FIBER OPTIC TRANSCEIVER
FVNR	FULL VOLTAGE NON-REVERSING STARTER
HMI	HUMAN MACHINE INTERFACE
LC	LOCKED CLOSED
LCP	LOCAL CONTROL PANEL
LCS	LOCAL CONTROL STATION
LO	LOCKED OPEN
LSA	LIGHTNING SURGE ARRESTOR
MCC	MOTOR CONTROL CENTER
MCP	MAIN CONTROL PANEL
MFAS	MF AIR SCOUR
MFBWS	MF BACKWASH SUPPLY
MFBWW	MF BACKWASH WASTE
MFCIPR	MF CIP RETURN
MFCIPS	MF CIP SUPPLY
MFF	MF FILTRATE
MFS	MF SUPPLY
MS	MULTIMODE FIBER
MTR	MOTOR STARTER
MK##	MOTOR
N/A	MARK (MECH DETAIL REFERENCE)
NC	NOT APPLICABLE NORMALLY CLOSED
NIC	NOT IN CONTRACT
NO	NORMALLY OPEN
OI	OPERATOR INTERFACE
OIT	OPERATOR INTERFACE TERMINAL
PC	PERSONAL COMPUTER
PLC	PROGRAMMABLE LOGIC CONTROLLER
PCN	PLANT CONTROL NETWORK
PDU	POWER DISTRIBUTION UNIT
PW	PRODUCT WATER
RIO	REMOTE I/O
ROCIPF	RO CIP FEED
ROCIPP	RO CIP PERMEATE RETURN
ROCIPR	RO CIP RETURN
ROF	RO FEED
ROFL	RO FLUSH SUPPLY
ROI	RO INTERSTAGE
RVSS	REDUCED VOLTAGE SOLID-STATE STARTER
RTU	REMOTE TERMINAL UNIT
SAM	SAMPLE
SBWW	STRAINER BACKWASH WASTE
SCADA	SUPERVISORY CONTROL AND DATA ACQUISITION
SMF	SINGLE MODE FIBER
SSM	SOLID STATE METER
STP	SHIELDED TWISTED PAIR
TC	THERMOCOUPLE
UPS	UNINTERRUPTABLE POWER SUPPLY
UTP	UNSHIELDED TWISTED PAIR
UVE	UV EFFLUENT
UVF	UV FEED
VCP	VENDOR CONTROL PANEL
VFD	VARIABLE FREQUENCY DRIVE
VSD	VARIABLE SPEED DRIVE

THE CITY OF LOS ANGELES OR ITS OFFICERS OR AGENTS SHALL NOT BE RESPONSIBLE FOR THE ACCURACY OR COMPLETENESS OF ELECTRONIC COPIES OF THIS PLAN SHEET.

REVISION DATES (DESIGN STAGE ONLY)

ENGINEERING
CITY OF LOS ANGELES

THIS PLAN WAS ELECTRONICALLY • SIGNED AND STAMPED

REGISTERED PROFESSIONAL ENGINEER
ROBERT D. GETTER
No. E 21884
Exp. 06-30-23
ELECTRICAL
STATE OF CALIFORNIA
01/27/2023

BUREAU OF ENGINEERING

CITY OF LOS ANGELES DEPARTMENT OF PUBLIC WORKS

VERTICAL CONTROL:	BENCH MARK (08-30460) NAVD 88
HORIZONTAL CONTROL:	CALIFORNIA STATE PLANE ZONE V, 1983 NAD
SHEET TITLE:	INSTRUMENTATION LEGEND AND SYMBOLS 1 OF 2
PROJECT:	FERNANGELES PARK STORMWATER CAPTURE PROJECT
ADDRESS:	FERNANGELES RECREATION CENTER 8851 LAUREL CANYON BLVD, SUN VALLEY, CA 91352

NO.	REVISIONS	DATE	BY
		YY/MM/DD	
		YY/MM/DD	
		YY/MM/DD	
		YY/MM/DD	

CIP NO. SCP0002

INDEX NO.

CITY ENGINEER	DESIGN GROUP	DATE
TED ALLEN, P.E.	PROJECT/LINE TECHNICAL SERVICES	01/27/2023
ENGINEER:	NA	01/27/2023
ARCHITECT:	J. CHIN	01/27/2023
DESIGNED BY:	J. CHIN	01/27/2023
DRAWN BY:	A. CARRIE	01/27/2023
CHECKED BY:	R. GETTER	01/27/2023
APPROVED BY:		

WORK ORDER
EW40079F

SHEET NAME
IG01

SHEET 117 OF 125 SHEETS

PROCESS ABBREVIATIONS

ANTISCALANT	AS
AIR	A
AQUEOUS AMMONIA	AA
ALUM	AL
AIR VENT	AV
AUTOMATIC SPRINKER RISER	ASR
BLEND	B
BIOLOGICALLY ACTIVATED CARBON	BAC
BAC AIR SCOUR	BACAS
BAC BACKWASH SUPPLY	BACBWS
BAC BACKWASH WASTE	BACBWW
BAC EFFLUENT	BACE
BAC FEED	BACF
BYPASS	BP
BACKWASH WATER	BW
CONDENSATE	C
CALCIUM HYDROXIDE (HYDRATED LIME)	CAH
CALCIUM OXIDE (QUICK LIME)	CAO
CARBON SOURCE	CA
CHANNEL AGITATION WATER	CAW
CALCIUM CHLORIDE	CC
MEMBRANE CLEANING CONCENTRATE RETURN	CCR
CHEMICAL DRAIN	CD
CONDENSER WATER RETURN	CDR
CONDENSER WATER SUPPLY	CDS
CHILLED WATER RETURN	CHR
CHILLED WATER SUPPLY	CHS
CHILLED WATER	CHW
CHEMICAL INHIBITOR SOL	CIS
CHLORINE GAS	CLG
CHLORINE LIQUID	CLL
CHLORINE SOLUTION	CLS
COAGULANT	COA
CAUSTIC SODA	CS
CHEMICAL CONTAINMENT	CP
CLEANING PERMEATE RETURN	CPR
CIRCULATED SLUDGE	CSL
CITRIC ACID	CTA
CHLORINATOR VENT AND DETECTION	CV
CHEMICAL VENT	CVT
CHEMICAL VENT THRU ROOF	CVTR
COAGULATED WATER	CW
COOLING WATER RETURN	CWR
COOLING WATER SUPPLY	CWS
DEFOAMING CHEMICAL	DC
DOMESTIC COLD WATER	DCW
DIESEL FUEL OIL	DFO
DISINFECTED MEMBRANE FILTRATE	DMF
DEIONIZED WATER	DI
DEMINERALIZED WATER	DMW
DECANT	DN
DRY POLYMER SOLUTION	DPOL
DRAIN	DR
DIGESTED SLUDGE	DSL
DOMESTIC HOT WATER RETURN	DWR
DOMESTIC HOT WATER SUPPLY	DWS
ENGINE EXHAUST	EE
ENGINE COOLING WATER RETURN	EWR
ENGINE COOLING WATER SUPPLY	EWS
FLUOROSILICIC ACID	FA
FILTER AIR WASH	FAW
FILTER BACKWASH	FBW
FINAL EFFLUENT	FE
FERRIC CHLORIDE	FC
FERRIC SULFATE	FES
FUEL GAS	FG
FILTER INFLUENT	FI
FORCE MAIN	FM
FIRE PROTECTION	FP
FROTH	FR
FROTH SPRAY	FS
FILTER SURFACE WASHWATER	FSW
FILTER TO WASTE	FTW
FILTERED WATER	FW
FILTER WASTE WASHWATER	FWW
GRIT	G
GRANULAR ACTIVATED CARBON	GAC
GAC BACKWAS SUPPLY	GACBWS
GAC CONTACTED WATER	GACCW
GAC BACKWASH WASTE	GACWW
GASEOUS OXYGEN	GOX
GRAY WATER	GW
HYDROCHLORIC ACID	HCA
HYDROGEN PEROXIDE	HP
HYDROFLUROSILICIC ACID	HFA
POTABLE HOT WATER	HW
HOT WATER RETURN	HWR
HOT WATER SUPPLY	HWS
INSTRUMENT AIR	IA
IRRIGATION WATER	IRW
LIQUID AMMONIA SULPHATE	LAS
LANDFILL GAS	LFG
LUBE OIL	LO
LIQUID OXYGEN	LOX
LIQUEFIED PETROLEUM	LP
LIQUEFIED PETROLEUM GAS	LPG
LIQUID POLYMER	LPOL
MEMBRANE BACKWASH WASTE	MBW
MEMBRANE CONCENTRATE	MC
MEMBRANE CLEANING RETURN	MCR
MEMBRANE CLEANING SUPPLY	MCS
MEMBRANE CLEANING WASTE	MCW
MECHANICAL DEWATERING POLYMER	MDP
MEMBRANE FILTRATION	MF
MEMBRANE FILTRATION AIR SCOUR	MFAS
MEMBRANE FILTRATION BACKWASH SUPPLY	MFBWS
MEMBRANE FILTRATION BACKWASH WASTE	MFBWW
MEMBRANE FILTRATION CLEAN-IN-PLACE RETURN	MFCIPR
MEMBRANE FILTRATION CLEAN-IN-PLACE SUPPLY	MFCIPS
MEMBRANE FILTRATION CLEANING WASTE	MFCW
MEMBRANE FILTRATION EFFLUENT	MFE
MEMBRANE FILTRATION FEED	MFF
METHANE GAS	MG
MIXED LIQUOR	ML
MIXED LIQUOR RECYCLE	MLR
MEMBRANE PERMEATE	MP
MAKE-UP WATER	MW
NITROGEN	N
NATURAL GAS	NG
OZONE CONTACTOR	OC
OVERFLOW	OF
OFFGAS	OG
OXIDATION TOWER EFFLUENT	OTE
OXYGEN (GAS)	OX
OZONE	OZ
PLANT AIR	PA
POWDERED ACTIVATED CARBON	PAC
POLYALUMINUM CHLORIDE	PCL
PHOSPHORIC ACID	PHA
PROCESS DRAIN	PD
PLANT DRAIN	PDR
PRIMARY EFFLUENT	PE
PLANT INFLUENT	PI
PLANT EFFLUENT	PLE
PLANT OVERFLOW	PO
ANIONIC POLYMER	POA
CATIONIC POLYMER	POC
FILTER AID POLYMER	POF
NONIONIC POLYMER	PON
THICKENER POLYMER	POT
PRESSURIZED RECYCLE	PRR
PRESSATE	PRS
PRODUCT WATER	PRW
POTASSIUM PERMANGANATE	PTP
POTABLE WATER	PW

PROCESS ABBREVIATIONS

RETURN ACTIVATED SLUDGE	RAS
REVERSE OSMOSIS CLEAN-IN-PLACE FEED	RCIPF
REVERSE OSMOSIS CLEAN-IN-PLACE PERMEATE	RCIPP
REVERSE OSMOSIS CLEAN-IN-PLACE RETURN	RCIPR
RECLAIMED WATER	REW
REFRIGERANT LIQUID	RFL
REFRIGERANT SUCTION	RFS
RO CONCENTRATE	ROC
REVERSE OSMOSIS FEED	ROF
REVERSE OSMOSIS FLUSH	ROFL
REVERSE OSMOSIS FLUSH WASTE	ROFW
REVERSE OSMOSIS INTERSTAGE	ROI
REVERSE OSMOSIS PERMEATE	ROP
RETURN SECONDARY SLUDGE	RSS
RAW WATER	RW
RAW WATER RETURN	RWR
RAW WATER SUPPLY	RWS
RECLAIMED WASHWATER	RWW
SULPHURIC ACID	SA
SAMPLE LINE	SAM
SCUM	S
SCREENED EFFLUENT	SE
SCREENINGS	SC
SUBNATANT	SBN
SUBNATANT OVERFLOW	SBO
SANITARY DRAIN	SD
SODIUM BISULFITE	SDB
SODIUM HYDROXIDE (CAUSTIC SODA)	SDH
STORM DRAIN	SDR
SANITARY DRAIN VENT	SDV
SECONDARY EFFLUENT	SE
SLUDGE FILTRATE	SF
SULFURIC ACID	SFA
SOFT WATER	SFW
SLUDGE GAS	SG
SODIUM HYPOCHLORITE	SHC
SCALE INHIBITOR	SI
SLUDGE	SLG
SUPERNATANT	SN
SAND SLURRY	SND
SULFUR DIOXIDE (GAS OR LIQUID)	SO
SULFUR DIOXIDE SOLUTION	SOS
SULFUR DIOXIDE GAS UNDER VACUUM	SOV
SPARE	SP
SUMP PUMP DISCHARGE	SPD
SANITARY SEWER	SS
SODIUM SILICOFLUORIDE	SSF
STEAM	STM
SUBDRAIN	SUBD
STRUCTURE UNDERDRAIN	SU
STRUCTURE UNDERDRAIN COLLECTOR	SUC
SERVICE WATER	SW
TRICKLING FILTER EFFLUENT	TFE
TRICKLING FILTER INFLUENT	TFI
TRICKLING FILTER RECYCLE	TFR
THICKENED SLUDGE	TS
THICKENED SUPERNATANT	TSN
TREATED WATER	TW
UNDERDRAIN	UD
ULTRAVIOLET EFFLUENT	UVE
ULTRAVIOLET FEED	UVF
UTILITY WATER	UW
USED WASHWATER	UWW
VENT	VT
VACUUM	VC
WASTE ACTIVATED SLUDGE	WAS
WASTE LUBE OIL	WLO
WASTE SECONDARY SLUDGE	WSS

EQUIPMENT ABBREVIATIONS

AIR COMPRESSOR	ACP
AIR COMPRESSOR PACKAGE	ACPP
AIR DAMPER	AD
AIR DRYER	ADR
AIR FILTER	AF
AFTER COOLER	AFC
AIR HANDLING UNIT	AHU
AIR RELEASE VALVE	ARV
BACK FLOW PREVENTER	BFP
BACK PRESSURE VALVE	BPV
BLOWER	B
BULK STORAGE TANK	BTK
CARTRIDGE FILTER	CF
CLEAN IN PLACE	CIP
CONVEYOR	CN
DAY TANK	DTK
DEGASIFIER	DG
ELECTRIC FAN / EXHAUST	EF
EYE WASH	EW
FLOW CONTROL VALVE	FCV
FILTER (GENERAL)	FTR
SLIDE GATE / SLUICE GATE	G
HEATER	H
LINE FILTER (STRAINER)	LF
LEVEL CONTROL VALVE	LCV
MECHANICAL EQUIPMENT (GENERAL)	ME
MIXER	MX
MOTOR OPERATOR VALVE	MOV
PRESSURE CONTROL VALVE	PCV
PNEUMATIC OPERATOR VALVE	POV
PRESSURE REDUCING OR REGULATING VALVE	PRV
PRESSURE SAFETY VALVE	PSV
PUMP	P
RUPTURE DISK	RD
SLIDE GATE	SG
SOLENOID OPERATOR VALVE	SOV
TEMPERATURE CONTROL VALVE	TCV
TANK	TK
VALVE (MANUAL)	V
POSITION CONTROL VALVE	ZCV

VALVE ABBREVIATIONS

GATE VALVE	VG
BALL VALVE	VB
BUTTERFLY VALVE	VF
CHECK VALVE	VC
DIAPHRAGM VALVE	VD
GLOBE VALVE	VO
NEEDLE VALVE	VN
PLUG VALVE	VP
SPECIALITY VALVES	VX

VALVES

- 3 WAY MULTI-PORT VALVE
- 4 WAY MULTI-PORT VALVE
- AIR VACUUM, AIR RELEASE, OR COMBINATION AIR VACUUM AND AIR RELEASE ASSEMBLY
- ANGLE VALVE
- BACK-PRESSURE VALVE
- BACKFLOW PREVENTER VALVE
- BALL VALVE
- BUTTERFLY VALVE
- CHECK VALVE
- CONE VALVE
- DIAPHRAGM VALVE
- FLAP VALVE
- GATE VALVE
- GLOBE VALVE
- HOSE BIBB VALVE
- NEEDLE VALVE
- PINCH VALVE
- PLUG VALVE
- PRESSURE REGULATING VALVE
- PRESSURE RELIEF VALVE
- SLEEVE VALVE
- TELESCOPING VALVE
- FLOAT VALVE

VALVE AND GATE ACTUATORS

- DIAPHRAGM ACTUATOR
- E/H = ELECTROHYDRAULIC
P = PNEUMATIC
S = SOLENOID
- MOTOR ACTUATOR
- PISTON ACTUATOR
- WEIGHT BALANCED ACTUATOR

GATES

- SLIDE GATE
- STOP GATE OR SHEAR GATE

WASTEWATER EQUIPMENT

- BELT FILTER PRESS
- SHAFTLESS CONVEYOR
- SCREW CONVEYOR
- CENTRIFUGE
- GRAVITY BELT THICKENER
- BELT CONVEYOR
- SLUDGE GRINDER

PUMPS & COMPRESSORS

- SLUDGE DIAPHRAGM PUMP
- HORIZONTAL CENTRIFUGAL PUMP
- GENERIC PUMP
- CHEMICAL METERING PUMP
- DRUM PUMP
- ROTARY GEAR PUMP
- SPLIT-CASE PUMP
- HOSE / PERISTALTIC PUMP
- PLUNGER / PISTON PUMP
- PROGRESSIVE CAVITY PUMP
- ROTARY LOBE PUMP
- SUBMERSIBLE SUMP PUMP
- SUBMERSIBLE TURBINE PUMP
- VERTICAL TURBINE PUMP
- VERTICAL CENTRIFUGAL PUMP
- INCLINED ARCHIMEDES SCREW PUMP
- VERTICAL SUMP PUMP
- RECIPROCATING COMPRESSOR
- ROTARY SCREW COMPRESSOR

HVAC

- AIR CONDITIONING UNIT
- DUCT AIR FILTER
- AIR HANDLING UNIT
- NON-MOTORIZED DAMPER
- MOTORIZED DAMPER
- DEHUMIDIFIER
- DUCT SMOKE DETECTOR
- EVAPORATIVE COOLER
- HEATER
- HVAC BOILER
- HVAC FAN
- VENT FAN
- HVAC LOUVER
- THERMOSTAT
- STEAM GENERATOR
- UNIT HEATER
- WATER HEATER
- AFTER COOLER

PIPING ACCESSORIES

- ANNULAR SEAL
- ATMOSPHERIC VENT
- BLIND FLANGE
- CAP - BREATHER
- CAP - SCREW / THREADED
- CAP - WELDED
- CAP - QUICK DISCONNECT
- CHLORINE INJECTOR OR CHEMICAL EDUCTOR
- DIAPHRAGM SEAL
- DRAIN
- EXPANSION CHAMBER WITH RUPTURE DISK
- EDUCTOR
- FLANGED
- FLEXIBLE CONNECTION - BELLOWS TYPE
- FLAME ARRESTOR
- FLOOR CLEANOUT
- FILTER
- HUB DRAIN
- INLINE MIXER
- PIPE MATERIAL CHANGE
- PULSATION DAMPENER
- REDUCER - CONCENTRIC
- REDUCER - ECCENTRIC
- REMOVABLE SPOOL PIECE
- UNION
- RUPTURE DISK
- STRAINER - BASKET TYPE
- STRAINER - DUPLEX BASKET TYPE
- STRAINER - WYE TYPE
- SLOPE
- TRAP
- WALL CLEANOUT
- TIE-IN POINT

BLOWERS

- AERATOR
- BLOWER
- POSITIVE DISPLACEMENT BLOWER
- SINGLE STAGE CENTRIFUGAL BLOWER

MISCELLANEOUS

- BRIDGE CRANE
- CALIBRATION COLUMN
- CONTAINER SCALE
- CARTRIDGE FILTER
- DEMISTOR
- FIRE HYDRANT
- GAS BOTTLE
- HEAT EXCHANGER - PLATE TYPE
- HEAT EXCHANGER - STRAIGHT TYPE
- HEAT EXCHANGER - U TUBE
- HEATER
- HORN
- PANEL-MOUNTED HORN
- BEACON
- MISCELLANEOUS EQUIPMENT
- MIXER
- MOTOR SYMBOL
- HORIZONTAL PRESSURE VESSEL
- VERTICAL PRESSURE VESSEL
- RADIO ANTENNA
- REFRIGERATOR DRYER
- SAMPLE COOLER
- AUTO-BACKWASHING STRAINER
- TANK WITH CONE SHAPED ROOF
- TANK WITH DOME ROOF
- TANK WITH FLOATING COVER
- TANK, VESSEL, OR BIN
- TEMPERING TANK
- TOTE TANK
- WATER LEVEL
- GENERATOR
- PARTICULATE FILTER

THE CITY OF LOS ANGELES OR ITS OFFICERS OR AGENTS SHALL NOT BE RESPONSIBLE FOR THE ACCURACY OR COMPLETENESS OF ELECTRONIC COPIES OF THIS PLAN SHEET.

REVISION DATES (DESIGN STAGE ONLY)

ENGINEERING
CITY OF LOS ANGELES

REGISTERED PROFESSIONAL ENGINEER
ROBERT D. GETTER
No. E 21884
Exp. 06-30-23
ELECTRICAL
STATE OF CALIFORNIA
01/27/2023

THIS PLAN WAS ELECTRONICALLY
• SIGNED AND STAMPED

CITY OF LOS ANGELES DEPARTMENT OF PUBLIC WORKS
BUREAU OF ENGINEERING

VERTICAL CONTROL: BENCH MARK (06-30460) NAVD 88
HORIZONTAL CONTROL: CALIFORNIA STATE PLANE ZONE V, 1983 NAD

SHEET TITLE: INSTRUMENTATION SYMBOLS 2 OF 2
PROJECT: FERNANGELES PARK STORMWATER CAPTURE PROJECT
ADDRESS: FERNANGELES RECREATION CENTER 8851 LAUREL CANYON BLVD, SUN VALEY, CA 91352

NO.	REVISIONS	DATE	BY
		YY/MM/DD	
		YY/MM/DD	
		YY/MM/DD	
		YY/MM/DD	

CIP NO. SCP0002

INDEX NO.

CITY ENGINEER	DATE	
TED ALLEN, P.E.	01/27/2023	
DESIGN GROUP		
ENGINEER:	PROJECTLINE TECHNICAL SERVICES	01/27/2023
ARCHITECT:	NA	01/27/2023
DESIGNED BY:	J. CHIN	01/27/2023
DRAWN BY:	J. CHIN	01/27/2023
CHECKED BY:	A. CARRIE	01/27/2023
APPROVED BY:	R. GETTER	01/27/2023

WORK ORDER
EW40079F

SHEET NAME
IG02
SHEET 118 OF 125 SHEETS

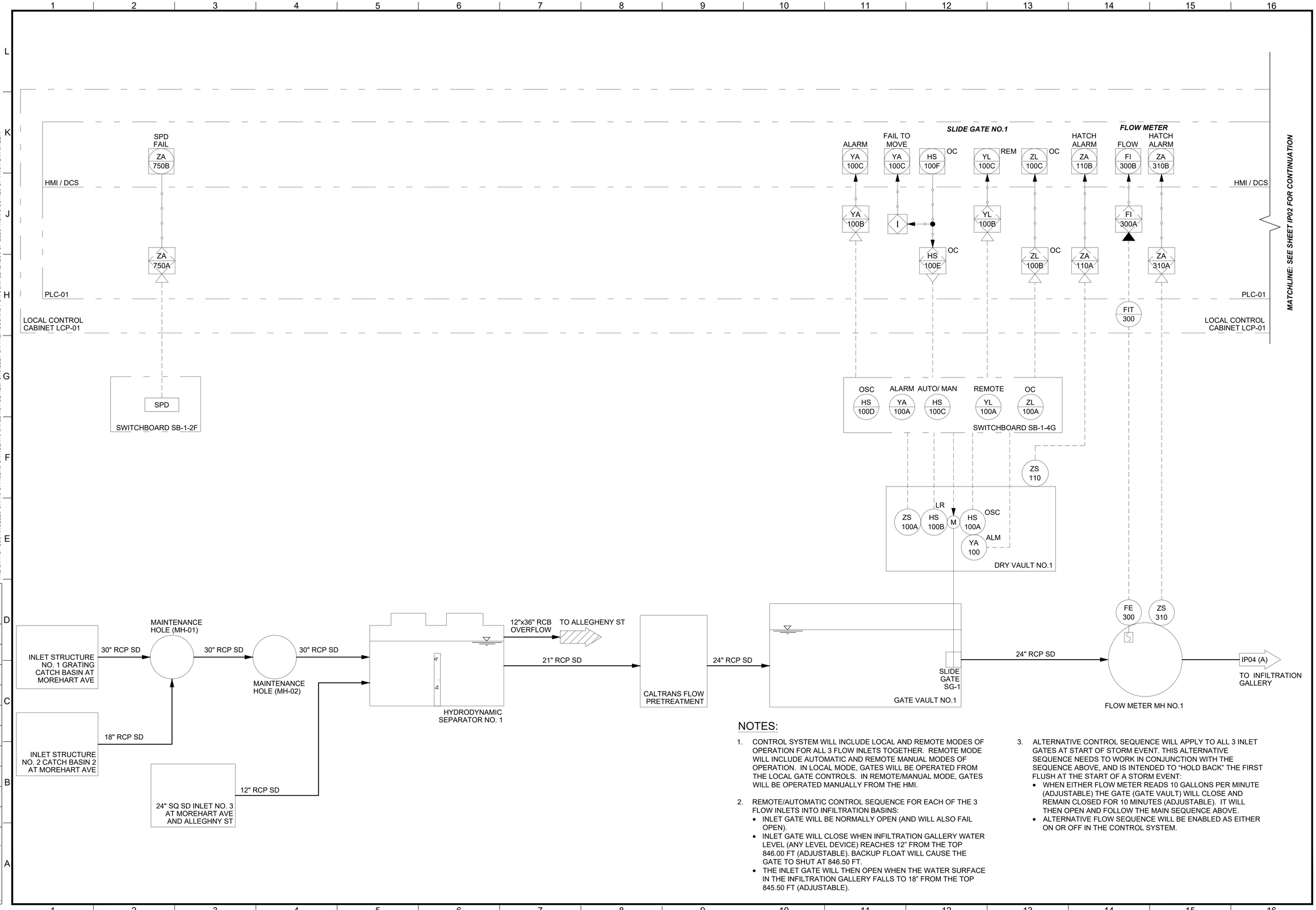

NOTES:

1. CONTROL SYSTEM WILL INCLUDE LOCAL AND REMOTE MODES OF OPERATION FOR ALL 3 FLOW INLETS TOGETHER. REMOTE MODE WILL INCLUDE AUTOMATIC AND REMOTE MANUAL MODES OF OPERATION. IN LOCAL MODE, GATES WILL BE OPERATED FROM THE LOCAL GATE CONTROLS. IN REMOTE/MANUAL MODE, GATES WILL BE OPERATED MANUALLY FROM THE HMI.
2. REMOTE/AUTOMATIC CONTROL SEQUENCE FOR EACH OF THE 3 FLOW INLETS INTO INFILTRATION BASINS:
   - INLET GATE WILL BE NORMALLY OPEN (AND WILL ALSO FAIL OPEN).
   - INLET GATE WILL CLOSE WHEN INFILTRATION GALLERY WATER LEVEL (ANY LEVEL DEVICE) REACHES 12" FROM THE TOP 846.00 FT (ADJUSTABLE). BACKUP FLOAT WILL CAUSE THE GATE TO SHUT AT 846.50 FT.
   - THE INLET GATE WILL THEN OPEN WHEN THE WATER SURFACE IN THE INFILTRATION GALLERY FALLS TO 18" FROM THE TOP 845.50 FT (ADJUSTABLE).
3. ALTERNATIVE CONTROL SEQUENCE WILL APPLY TO ALL 3 INLET GATES AT START OF STORM EVENT. THIS ALTERNATIVE SEQUENCE NEEDS TO WORK IN CONJUNCTION WITH THE SEQUENCE ABOVE, AND IS INTENDED TO "HOLD BACK" THE FIRST FLUSH AT THE START OF A STORM EVENT:
   - WHEN EITHER FLOW METER READS 10 GALLONS PER MINUTE (ADJUSTABLE) THE GATE (GATE VAULT) WILL CLOSE AND REMAIN CLOSED FOR 10 MINUTES (ADJUSTABLE). IT WILL THEN OPEN AND FOLLOW THE MAIN SEQUENCE ABOVE.
   - ALTERNATIVE FLOW SEQUENCE WILL BE ENABLED AS EITHER ON OR OFF IN THE CONTROL SYSTEM.

THE CITY OF LOS ANGELES OR ITS OFFICERS OR AGENTS SHALL NOT BE RESPONSIBLE FOR THE ACCURACY OR COMPLETENESS OF ELECTRONIC COPIES OF THIS PLAN SHEET.

REVISION DATES (DESIGN STAGE ONLY)

ENGINEERING
CITY OF LOS ANGELES

REGISTERED PROFESSIONAL ENGINEER
ROBERT D. GETTER
No. E 21884
Exp. 06-30-23
ELECTRICAL
STATE OF CALIFORNIA
01/27/2023

THIS PLAN WAS ELECTRONICALLY • SIGNED AND STAMPED

BUREAU OF ENGINEERING

VERTICAL CONTROL: BENCH MARK 08-03460 NAVD 88
HORIZONTAL CONTROL: CALIFORNIA STATE PLANE ZONE V, 1983 NAD

SHEET TITLE: INFILTRATION GALLERY - P&ID 1 OF 4

PROJECT: FERNANGELES PARK STORMWATER CAPTURE PROJECT

ADDRESS: FERNANGELES RECREATION CENTER
8851 LAUREL CANYON BLVD, SUN VALEY, CA 91352

CITY OF LOS ANGELES DEPARTMENT OF PUBLIC WORKS

CITY ENGINEER	DESIGN GROUP	DATE
TED ALLEN, P.E.		
	PROJECT/LINE TECHNICAL SERVICES	01/27/2023
ENGINEER:	NA	01/27/2023
ARCHITECT:	J. CHIN	01/27/2023
DESIGNED BY:	J. CHIN	01/27/2023
DRAWN BY:	A. CARRIE	01/27/2023
CHECKED BY:	R. GETTER	01/27/2023
APPROVED BY:		

NO.	REVISIONS	DATE	BY
		YY/MM/DD	
		YY/MM/DD	
		YY/MM/DD	
		YY/MM/DD	

CIP NO. SCP0002

INDEX NO.

WORK ORDER EW40079F

SHEET NAME IP01

SHEET 119 OF 125 SHEETS

THE CITY OF LOS ANGELES OR ITS OFFICERS OR AGENTS SHALL NOT BE RESPONSIBLE FOR THE ACCURACY OR COMPLETENESS OF ELECTRONIC COPIES OF THIS PLAN SHEET.

MATCHLINE: SEE SHEET IP02 FOR CONTINUATION

HMI / DCS

PLC-01

LOCAL CONTROL CABINET LCP-01

FLOW METER

FQI 320

FLOW FI 320B

HATCH ALARM ZA 330B

FQ 320

FI 320A

ZA 330A

FIT 320

SLIDE GATE NO.2

ALARM YA 140C

FAIL TO MOVE YA 140C

HS 140F OC

YL 140C REM

ZL 140C OC

HATCH ALARM ZA 150B

YA 140B

I

HS 140D OC

YL 140B

ZL 140B OC

ZA 150A

OSC HS 140D

ALARM YA 140A

AUTO/ MAN HS 140C

REMOTE YL 140A

OC ZL 140A

SWITCHBOARD SB-1-4J

ZS 150

OC ZS 140A

LR HS 140B M

OCS HS 140A

YA 140 ALM

DRY VAULT NO.2

MATCHLINE: SEE SHEET IP04 FOR CONTINUATION

HMI / DCS

PLC-01

LOCAL CONTROL CABINET LCP-01

INLET STRUCTURE NO. 5
14'x4' CATCH BASIN AT
LAUREL CANYON BLVD

15" RCP SD

INLET STRUCTURE NO. 6
14'x4' CATCH BASIN AT
LAUREL CANYON BLVD

18" RCP SD

MAINTENANCE HOLE (MH-05)

21" RCP SD

MAINTENANCE HOLE (MH-04)

21" RCP SD

FE 320

ZS 330

FLOW METER MH NO.2

21" RCP SD

HYDRODYNAMIC SEPARATOR NO. 2

21" RCP SD

SLIDE GATE SG-2

GATE VAULT NO.2

21" RCP SD

IP04 (B)

TO DESILTING BASIN AND INFILTRATION GALLERY

REVISION DATES (DESIGN STAGE ONLY)

SHEET VERSION 4.0.1 FILE PATH: C:\CDMEXT\JCHIN@PROJECTLINETS.COM\D0620267\IP02.DWG PLOT DATE: 1/26/2023 12:56 PM SAVED: 1/26/2023 9:38 AM SAVED BY:JCHIN

CITY OF LOS ANGELES DEPARTMENT OF PUBLIC WORKS
BUREAU OF ENGINEERING

ENGINEERING
CITY OF LOS ANGELES

REGISTERED PROFESSIONAL ENGINEER ROBERT D. GETTER No. E 21884 Exp. 06-30-23 ELECTRICAL STATE OF CALIFORNIA
01/27/2023

THIS PLAN WAS ELECTRONICALLY SIGNED AND STAMPED

SHEET TITLE: INFILTRATION GALLERY - P&ID 2 OF 4
PROJECT: FERNANGELES PARK STORMWATER CAPTURE PROJECT
ADDRESS: FERNANGELES RECREATION CENTER 8851 LAUREL CANYON BLVD, SUN VALEY, CA 91352
VERTICAL CONTROL: BENCH MARK 08-03460 NAVD 88
HORIZONTAL CONTROL: CALIFORNIA STATE PLANE ZONE V, 1983 NAD

NO.	REVISIONS	DATE	BY
		YY/MM/DD	
		YY/MM/DD	
		YY/MM/DD	
		YY/MM/DD	

CIP NO. SCP0002

INDEX NO.

CITY ENGINEER	DATE
TED ALLEN, P.E.	01/27/2023

DESIGN GROUP	
ENGINEER:	PROJECTLINE TECHNICAL SERVICES 01/27/2023
ARCHITECT:	NA 01/27/2023
DESIGNED BY:	J. CHIN 01/27/2023
DRAWN BY:	J. CHIN 01/27/2023
CHECKED BY:	A. CARRIE 01/27/2023
APPROVED BY:	R. GETTER 01/27/2023

WORK ORDER EW40079F

SHEET NAME IP02

SHEET 120 OF 125 SHEETS

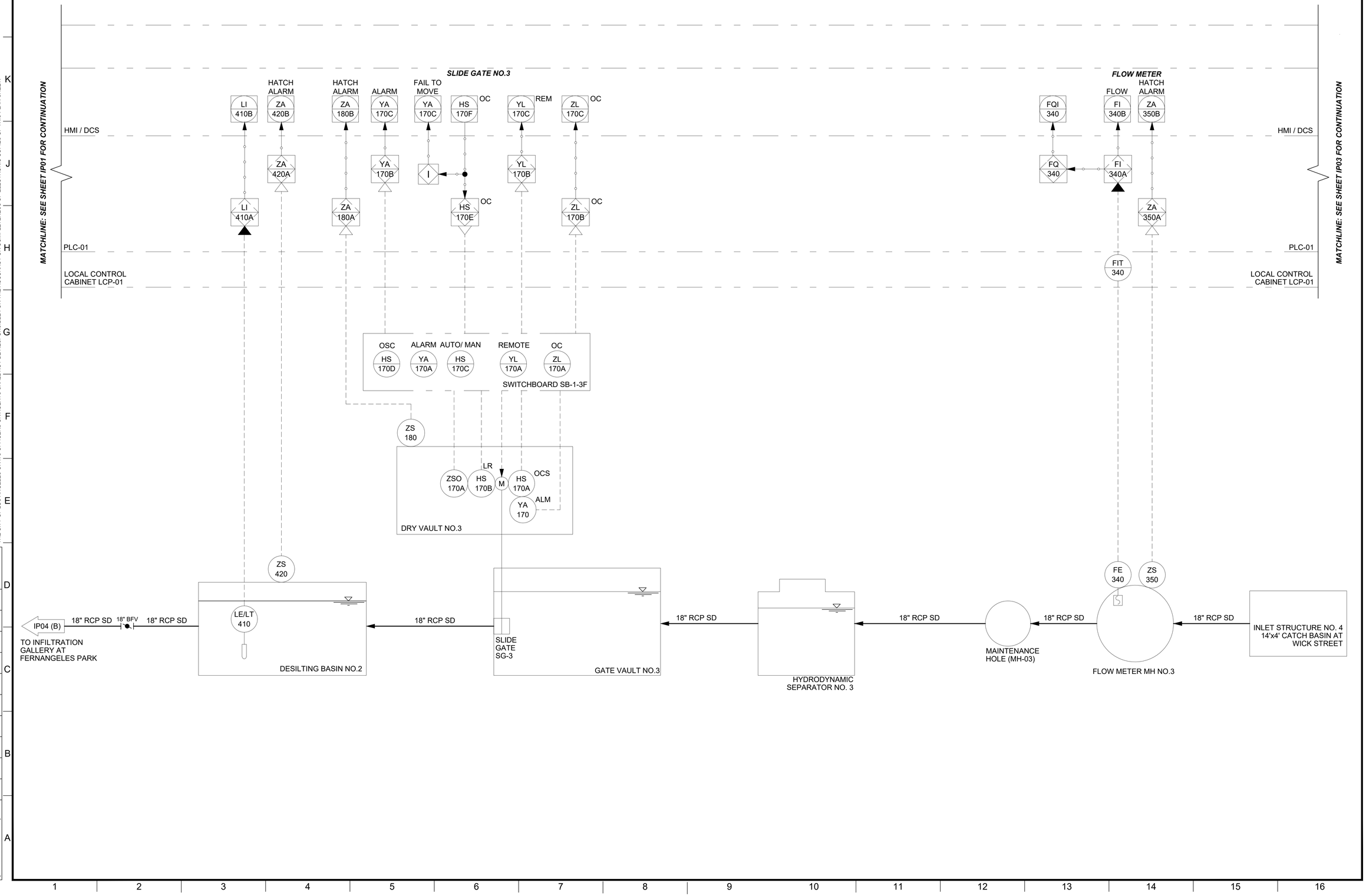

THE CITY OF LOS ANGELES OR ITS OFFICERS OR AGENTS SHALL NOT BE RESPONSIBLE FOR THE ACCURACY OR COMPLETENESS OF ELECTRONIC COPIES OF THIS PLAN SHEET.

REVISION DATES (DESIGN STAGE ONLY)

ENGINEERING
CITY OF LOS ANGELES

REGISTERED PROFESSIONAL ENGINEER
ROBERT D. GETTER
No. E 21884
Exp. 06-30-23
ELECTRICAL
STATE OF CALIFORNIA
01/27/2023

THIS PLAN WAS ELECTRONICALLY SIGNED AND STAMPED

BUREAU OF ENGINEERING

VERTICAL CONTROL: BENCH MARK 08-03460 NAVD 88
HORIZONTAL CONTROL: CALIFORNIA STATE PLANE ZONE V, 1983 NAD

SHEET TITLE: INFILTRATION GALLERY - P&ID 3 OF 4

PROJECT: FERNANGELES PARK STORMWATER CAPTURE PROJECT

ADDRESS: FERNANGELES RECREATION CENTER
8851 LAUREL CANYON BLVD, SUN VALEY, CA 91352

CITY OF LOS ANGELES DEPARTMENT OF PUBLIC WORKS

NO.	REVISIONS	DATE	BY
		YY/MM/DD	
		YY/MM/DD	
		YY/MM/DD	
		YY/MM/DD	

CIP NO. SCP0002

INDEX NO.

CITY ENGINEER	DATE
TED ALLEN, P.E.	01/27/2023

DESIGN GROUP	
ENGINEER:	PROJECTLINE TECHNICAL SERVICES
ARCHITECT:	NA
DESIGNED BY:	J. CHIN
DRAWN BY:	J. CHIN
CHECKED BY:	A. CARRIE
APPROVED BY:	R. GETTER

	DATE
	01/27/2023
	01/27/2023
	01/27/2023
	01/27/2023
	01/27/2023
	01/27/2023

WORK ORDER
EW40079F

SHEET NAME
IP03

SHEET 121 OF 125 SHEETS

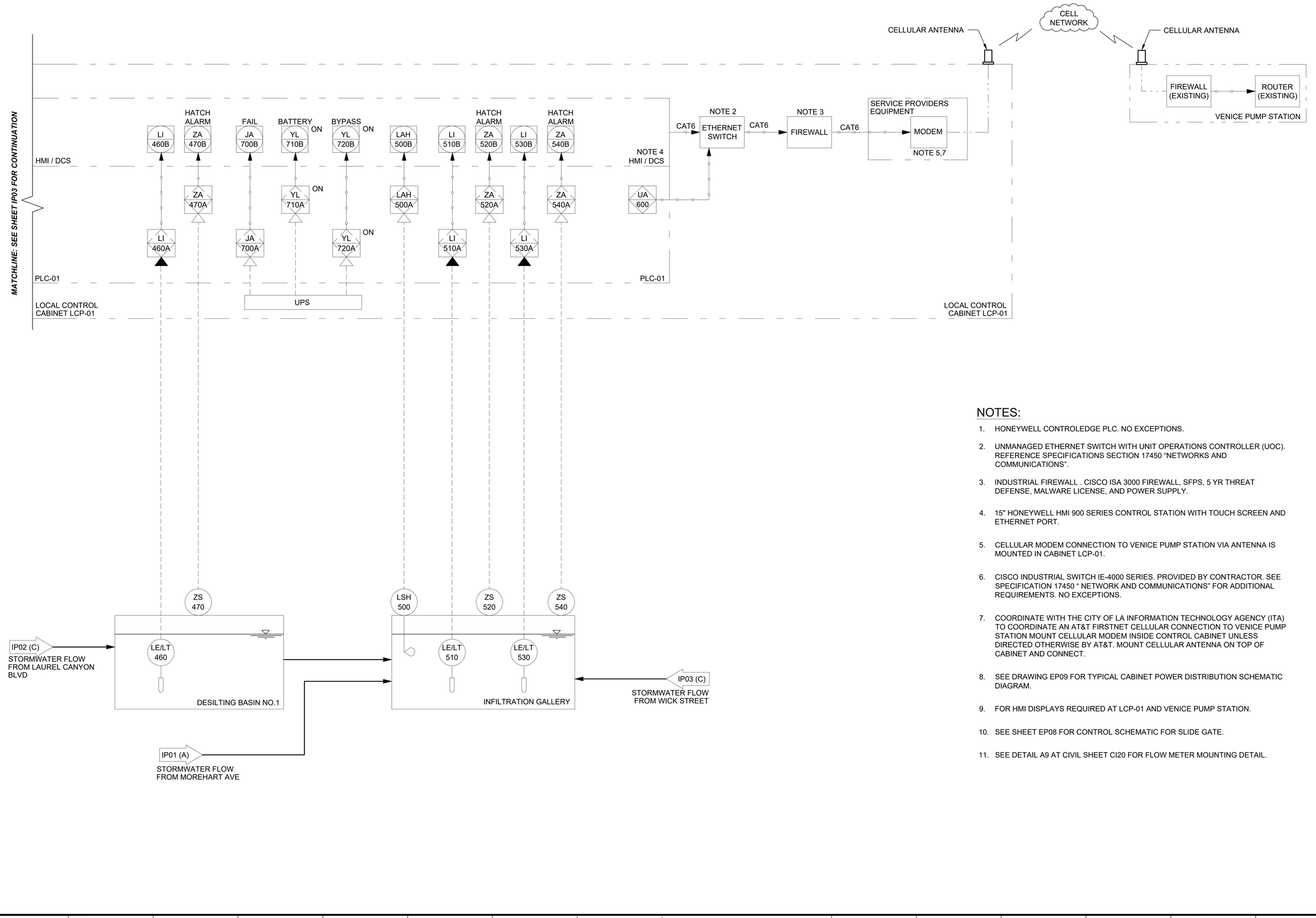

NOTES:

1. HONEYWELL CONTROLEDGE PLC. NO EXCEPTIONS.
2. UNMANAGED ETHERNET SWITCH WITH UNIT OPERATIONS CONTROLLER (UOC). REFERENCE SPECIFICATIONS SECTION 17450 “NETWORKS AND COMMUNICATIONS”.
3. INDUSTRIAL FIREWALL . CISCO ISA 3000 FIREWALL, SFPS, 5 YR THREAT DEFENSE, MALWARE LICENSE, AND POWER SUPPLY.
4. 15" HONEYWELL HMI 900 SERIES CONTROL STATION WITH TOUCH SCREEN AND ETHERNET PORT.
5. CELLULAR MODEM CONNECTION TO VENICE PUMP STATION VIA ANTENNA IS MOUNTED IN CABINET LCP-01.
6. CISCO INDUSTRIAL SWITCH IE-4000 SERIES. PROVIDED BY CONTRACTOR. SEE SPECIFICATION 17450 “ NETWORK AND COMMUNICATIONS” FOR ADDITIONAL REQUIREMENTS. NO EXCEPTIONS.
7. COORDINATE WITH THE CITY OF LA INFORMATION TECHNOLOGY AGENCY (ITA) TO COORDINATE AN AT&T FIRSTNET CELLULAR CONNECTION TO VENICE PUMP STATION MOUNT CELLULAR MODEM INSIDE CONTROL CABINET UNLESS DIRECTED OTHERWISE BY AT&T. MOUNT CELLULAR ANTENNA ON TOP OF CABINET AND CONNECT.
8. SEE DRAWING EP09 FOR TYPICAL CABINET POWER DISTRIBUTION SCHEMATIC DIAGRAM.
9. FOR HMI DISPLAYS REQUIRED AT LCP-01 AND VENICE PUMP STATION.
10. SEE SHEET EP08 FOR CONTROL SCHEMATIC FOR SLIDE GATE.
11. SEE DETAIL A9 AT CIVIL SHEET CI20 FOR FLOW METER MOUNTING DETAIL.

THE CITY OF LOS ANGELES OR ITS OFFICERS OR AGENTS SHALL NOT BE RESPONSIBLE FOR THE ACCURACY OR COMPLETENESS OF ELECTRONIC COPIES OF THIS PLAN SHEET.

REVISION DATES (DESIGN STAGE ONLY)

ENGINEERING
CITY OF LOS ANGELES

REGISTERED PROFESSIONAL ENGINEER ROBERT D. GETTER No. E 21884 Exp. 06-30-23 ELECTRICAL STATE OF CALIFORNIA
01/27/2023

THIS PLAN WAS ELECTRONICALLY SIGNED AND STAMPED

BUREAU OF ENGINEERING

VERTICAL CONTROL: BENCH MARK 08-03460 NAVD 88
HORIZONTAL CONTROL: CALIFORNIA STATE PLANE ZONE V, 1983 NAD

SHEET TITLE: INFILTRATION GALLERY - P&ID 4 OF 4
PROJECT: FERNANGELES PARK STORMWATER CAPTURE PROJECT
ADDRESS: FERNANGELES RECREATION CENTER 8851 LAUREL CANYON BLVD, SUN VALEY, CA 91352

CITY OF LOS ANGELES DEPARTMENT OF PUBLIC WORKS

NO.	REVISIONS	DATE	BY
		YY/MM/DD	
		YY/MM/DD	
		YY/MM/DD	
		YY/MM/DD	

CIP NO. SCP0002

INDEX NO.

CITY ENGINEER
TED ALLEN, P.E.

DESIGN GROUP	DATE
ENGINEER: PROJECTLINE TECHNICAL SERVICES	01/27/2023
ARCHITECT: NA	01/27/2023
DESIGNED BY: J. CHIN	01/27/2023
DRAWN BY: J. CHIN	01/27/2023
CHECKED BY: A. CARRIE	01/27/2023
APPROVED BY: R. GETTER	01/27/2023

WORK ORDER
EW40079F

SHEET NAME
IP04
SHEET 122 OF 125 SHEETS

LEVEL SWITCH - FLOAT

INSTRUMENT TAG	DESCRIPTION/ LOCATION	DWG NO.	SERVICE	TYPE	HEIGHT	CONTACT OPEN ON	REMARKS
LSH-500	FLOAT SWITCH/ INFILTRATION GALLERY	IP04	STORM WATER	FLOAT	EL. 845.50 FT	INCREASING LEVEL	CLOSED SLIDE GATE

FLOW METER

INSTRUMENT TAG	DESCRIPTION/ LOCATION	DWG NO.	SERVICE	TYPE	SENSOR HEIGHT	INSTRUMENT RANGE (CFS)	CALIBRATED SCALE (CFS)
FE-300	FLOW ELEMENT/ FLOW METER MH NO.1	IP01	STORM WATER	DOPPLER RADAR VELOCITY & ULTRASONIC	6" ABOVE TOP OF THE PIPE	0-30 CFS	-
FIT-300	FLOW TRANSMITTER/ LOCAL CONTROL PANEL (LCP-1)	IP01	STORM WATER	DOPPLER RADAR VELOCITY & ULTRASONIC	-	-	0-30 CFS
FE-320	FLOW ELEMENT/ FLOW METER MH NO.2	IP02	STORM WATER	DOPPLER RADAR VELOCITY & ULTRASONIC	6" ABOVE TOP OF THE PIPE	0-22.4 CFS	-
FIT-320	FLOW TRANSMITTER/ LOCAL CONTROL PANEL (LCP-1)	IP02	STORM WATER	DOPPLER RADAR VELOCITY & ULTRASONIC	-	-	0-22.4 CFS
FE-340	FLOW ELEMENT/ FLOW METER MH	IP03	STORM WATER	DOPPLER RADAR VELOCITY & ULTRASONIC	6" ABOVE TOP OF THE PIPE	0-7 CFS	-
FIT-340	FLOW TRANSMITTER/ LOCAL CONTROL PANEL (LCP-1)	IP03	STORM WATER	DOPPLER RADAR VELOCITY & ULTRASONIC	-	-	0-7 CFS

PROXIMITY SWITCH

INSTRUMENT TAG	DESCRIPTION/ LOCATION	DWG NO.	SERVICE	TYPE	SENSOR RANGE	REMARK
ZS-110	PROXIMITY SWITCH/ DRY VAULT NO.1	IP01	HATCH OPEN/ CLOSE	PROXIMITY SENSOR	0 TO 1"	2 WIRE, 24 VDC
ZS-150	PROXIMITY SWITCH/ DRY VAULT NO.2	IP02	HATCH OPEN/ CLOSE	PROXIMITY SENSOR	0 TO 1"	2 WIRE, 24 VDC
ZS-180	PROXIMITY SWITCH/ DRY VAULT NO.3	IP03	HATCH OPEN/ CLOSE	PROXIMITY SENSOR	0 TO 1"	2 WIRE, 24 VDC
ZS-200	PROXIMITY SWITCH/ GATE VAULT NO.1	IP01	HATCH OPEN/ CLOSE	PROXIMITY SENSOR	0 TO 1"	2 WIRE, 24 VDC
ZS-220	PROXIMITY SWITCH/ GATE VAULT NO.2	IP02	HATCH OPEN/ CLOSE	PROXIMITY SENSOR	0 TO 1"	2 WIRE, 24 VDC
ZS-240	PROXIMITY SWITCH/ GATE VAULT NO.3	IP03	HATCH OPEN/ CLOSE	PROXIMITY SENSOR	0 TO 1"	2 WIRE, 24 VDC
ZS-310	PROXIMITY SWITCH/ FLOW METER MH NO. 1	IP01	HATCH OPEN/ CLOSE	PROXIMITY SENSOR	0 TO 1"	2 WIRE, 24 VDC
ZS-330	PROXIMITY SWITCH/ FLOW METER MH NO.2	IP02	HATCH OPEN/ CLOSE	PROXIMITY SENSOR	0 TO 1"	2 WIRE, 24 VDC
ZS-350	PROXIMITY SWITCH/ FLOW METER MH NO.3	IP03	HATCH OPEN/ CLOSE	PROXIMITY SENSOR	0 TO 1"	2 WIRE, 24 VDC
ZS-420	PROXIMITY SWITCH/ DESILTING BASIN NO.2	IP03	HATCH OPEN/ CLOSE	PROXIMITY SENSOR	0 TO 1"	2 WIRE, 24 VDC
ZS-470	PROXIMITY SWITCH/ DESILTING BASIN NO.1	IP04	HATCH OPEN/ CLOSE	PROXIMITY SENSOR	0 TO 1"	2 WIRE, 24 VDC
ZS-540	PROXIMITY SWITCH/ INFILTRATION GALLERY	IP04	HATCH OPEN/ CLOSE	PROXIMITY SENSOR	0 TO 1"	2 WIRE, 24 VDC
ZS-540	PROXIMITY SWITCH/ INFILTRATION GALLERY	IP04	HATCH OPEN/ CLOSE	PROXIMITY SENSOR	0 TO 1"	2 WIRE, 24 VDC

LEVEL TRANSMITTER SCHEDULE

INSTRUMENT TAG	DESCRIPTION/ LOCATION	DWG NO.	SERVICE	TYPE	INSTRUMENT RANGE	CALIBRATED RANGE	REMARKS
LE/LT-410	LEVEL ELEMENT/ LEVEL TRANSMITTER AT DESILTING BASIN NO.2	IP03	STORM WATER	SUBMERSIBLE PRESSURE	0' TO 15'	0' TO 13'	MANUFACTURER CABLE
LE/LT-460	LEVEL ELEMENT/ LEVEL TRANSMITTER AT DESILTING BASIN NO.1	IP04	STORM WATER	SUBMERSIBLE PRESSURE	0' TO 15'	0' TO 13'	MANUFACTURER CABLE
LE/LT-510	LEVEL ELEMENT/ LEVEL TRANSMITTER AT INFILTRATION GALLERY	IP04	STORM WATER	SUBMERSIBLE PRESSURE	0' TO 15'	0' TO 13'	MANUFACTURER CABLE
LE/LT-530	LEVEL ELEMENT/ LEVEL TRANSMITTER AT INFILTRATION GALLERY	IP04	STORM WATER	SUBMERSIBLE PRESSURE	0' TO 15'	0' TO 13'	MANUFACTURER CABLE

THE CITY OF LOS ANGELES OR ITS OFFICERS OR AGENTS SHALL NOT BE RESPONSIBLE FOR THE ACCURACY OR COMPLETENESS OF ELECTRONIC COPIES OF THIS PLAN SHEET.

REVISION DATES (DESIGN STAGE ONLY)

ENGINEERING
CITY OF LOS ANGELES

REGISTERED PROFESSIONAL ENGINEER
ROBERT D. GETTER
No. E 21884
Exp. 06-30-23
ELECTRICAL
STATE OF CALIFORNIA
01/27/2023

THIS PLAN WAS ELECTRONICALLY • SIGNED AND STAMPED

BUREAU OF ENGINEERING

VERTICAL CONTROL: BENCH MARK 08-30460 NAVD 88
HORIZONTAL CONTROL: CALIFORNIA STATE PLANE ZONE V, 1983 NAD

SHEET TITLE: INSTRUMENTATION SCHEDULE
PROJECT: FERNANGELES PARK STORMWATER CAPTURE PROJECT
ADDRESS: FERNANGELES RECREATION CENTER 8851 LAUREL CANYON BLVD, SUN VALEY, CA 91352

CITY OF LOS ANGELES DEPARTMENT OF PUBLIC WORKS

NO.	REVISIONS	DATE	BY
		YY/MM/DD	
		YY/MM/DD	
		YY/MM/DD	
		YY/MM/DD	

CIP NO. SCP0002

INDEX NO.

CITY ENGINEER
TED ALLEN, P.E.

DESIGN GROUP	DATE
ENGINEER: PROJECTLINE TECHNICAL SERVICES	01/27/2023
ARCHITECT: NA	01/27/2023
DESIGNED BY: J. CHIN	01/27/2023
DRAWN BY: J. CHIN	01/27/2023
CHECKED BY: A. CARRIE	01/27/2023
APPROVED BY: R. GETTER	01/27/2023

WORK ORDER
EW40079F

SHEET NAME
IP05
SHEET 123 OF 125 SHEETS

PROGRAMMABLE LOGIC CONTROLLER (PLC) INPUT/OUTPUT LIST				
INSTRUMENT TAG	**P&ID DRAWING NO.**	**SERVICE DESCRIPTION**	**IO TYPE**	**LOCATION**
DISCRETE INPUTS				
ZA-110	IP01	SLIDE GATE NO.1 INTRUSION ALARM	DI	DRY VAULT NO.1
ZLO-100B	IP01	SLIDE GATE NO.1 OPEN STATUS	DI	DRY VAULT NO.1
ZLC-100C	IP01	SLIDE GATE NO.1 CLOSED STATUS	DI	DRY VAULT NO.1
YA-100B	IP01	SLIDE GATE NO. 1 COMMON TROUBLE ALARM	DI	DRY VAULT NO.1
YL-100B	IP01	SLIDE GATE NO.1 REMOTE MODE	DI	DRY VAULT NO.1
ZA-150	IP02	SLIDE GATE NO.2 INTRUSION ALARM	DI	DRY VAULT NO.2
ZLO-140B	IP02	SLIDE GATE NO.2 OPEN STATUS	DI	DRY VAULT NO.2
ZLC-140C	IP02	SLIDE GATE NO.2 CLOSED STATUS	DI	DRY VAULT NO.2
YA-140B	IP02	SLIDE GATE NO. 2 COMMON TROUBLE ALARM	DI	DRY VAULT NO.2
YL-140B	IP02	SLIDE GATE NO.2 REMOTE MODE	DI	DRY VAULT NO.2
ZA-180	IP03	SLIDE GATE NO.3 INTRUSION ALARM	DI	DRY VAULT NO.3
ZLO-170B	IP03	SLIDE GATE NO.3 OPEN STATUS	DI	DRY VAULT NO.3
ZLC-170C	IP03	SLIDE GATE NO.3 CLOSED STATUS	DI	DRY VAULT NO.3
YA-170B	IP03	SLIDE GATE NO. 3 COMMON TROUBLE ALARM	DI	DRY VAULT NO.3
YL-170B	IP03	SLIDE GATE NO.3 REMOTE MODE	DI	DRY VAULT NO.3
ZA-310	IP01	FLOW METER MH NO.1 INTRUSION ALARM	DI	FLOW METER MH NO.1
ZA-330	IP02	FLOW METER MH NO.2 INTRUSION ALARM	DI	FLOW METER MH NO.2
ZA-350	IP03	FLOW METER MH NO.3 INTRUSION ALARM	DI	FLOW METER MH NO.3
ZA-420	IP03	DESILTING BASIN NO.2 - INTRUSION ALARM	DI	DESILTING BASIN NO.2
ZA-470	IP04	DESILTING BASIN NO.1 - INTRUSION ALARM	DI	DESILTING BASIN NO.1
LAH-500	IP04	FLOAT SWITCH BASIN HI-HI LEVEL ALARM	DI	INFILTRATION GALLERY
ZA-520	IP04	INFILTRATION GALLERY - INTRUSION ALARM	DI	INFILTRATION GALLERY
ZA-540	IP04	INFILTRATION GALLERY - INTRUSION ALARM	DI	INFILTRATION GALLERY
JA-700	IP04	UPS POWER FAIL ALARM	DI	LOCAL CONTROL PANEL (LCP-01)
YL-710	IP04	UPS BATTERY ON	DI	LOCAL CONTROL PANEL (LCP-01)
YL-720	IP04	UPS BYPASS ON	DI	LOCAL CONTROL PANEL (LCP-01)
ZA-750	IP01	SURGE PROTECTIVE DEVICE - FAIL ALARM	DI	SWITCHBOARD SB-1
DISCRETE OUTPUTS				
HS-100D	IP01	SLIDE GATE NO.1 OPEN COMMAND	DO	DRY VAULT NO.1
HS-100E	IP01	SLIDE GATE NO.1 CLOSED COMMAND	DO	DRY VAULT NO.1
HS-140D	IP02	SLIDE GATE NO.2 OPEN COMMAND	DO	DRY VAULT NO.2
HS-140E	IP02	SLIDE GATE NO.2 CLOSED COMMAND	DO	DRY VAULT NO.2
HS-170D	IP03	SLIDE GATE NO.3 OPEN COMMAND	DO	DRY VAULT NO.3
HS-170E	IP03	SLIDE GATE NO.3 CLOSED COMMAND	DO	DRY VAULT NO.3

PROGRAMMABLE LOGIC CONTROLLER (PLC) INPUT/OUTPUT LIST				
INSTRUMENT TAG	**P&ID DRAWING NO.**	**SERVICE DESCRIPTION**	**IO TYPE**	**LOCATION**
ANALOG INPUTS				
FI-300	IP01	STORMWATER FLOW FROM MOHART AVE & ALLEGHNY STREET	AI	FLOW METER MH NO.1
FI-320	IP02	STORMWATER FLOW FROM LAUREL CANYON BLVD	AI	FLOW METER MH NO.2
FI-340	IP03	STORMWATER FLOW FROM WICK STREET	AI	FLOW METER MH NO.3
LI-410	IP03	DESILTING BASIN NO.2 - LEVEL	AI	DESILTING BASIN NO.2
LI-460	IP04	DESILTING BASIN NO.1 - LEVEL	AI	DESILTING BASIN NO.1
LI-510	IP04	INFILTRATION GALLERY LEVEL-1	AI	INFILTRATION GALLERY
LI-530	IP04	INFILTRATION GALLERY LEVEL-2	AI	INFILTRATION GALLERY

THE CITY OF LOS ANGELES OR ITS OFFICERS OR AGENTS SHALL NOT BE RESPONSIBLE FOR THE ACCURACY OR COMPLETENESS OF ELECTRONIC COPIES OF THIS PLAN SHEET.

REVISION DATES (DESIGN STAGE ONLY)

ENGINEERING
CITY OF LOS ANGELES

REGISTERED PROFESSIONAL ENGINEER
ROBERT D. GETTER
No. E 21884
Exp. 06-30-23
ELECTRICAL
STATE OF CALIFORNIA
01/27/2023

THIS PLAN WAS ELECTRONICALLY • SIGNED AND STAMPED

BUREAU OF ENGINEERING

VERTICAL CONTROL: BENCH MARK (08-03460) NAVD 88
HORIZONTAL CONTROL: CALIFORNIA STATE PLANE ZONE V. 1983 NAD

SHEET TITLE: PLC I/O LISTS

PROJECT: FERNANGELES PARK STORMWATER CAPTURE PROJECT

ADDRESS: FERNANGELES RECREATION CENTER 8851 LAUREL CANYON BLVD, SUN VALEY, CA 91352

CITY OF LOS ANGELES DEPARTMENT OF PUBLIC WORKS

BY	DATE	REVISIONS	NO.
	YY/MM/DD		
	YY/MM/DD		
	YY/MM/DD		
	YY/MM/DD		

CIP NO. SCP0002

INDEX NO.

CITY ENGINEER

		DATE
TED ALLEN, P.E.	CITY ENGINEER	
	DESIGN GROUP	
ENGINEER:	PROJECTLINE TECHNICAL SERVICES	01/27/2023
ARCHITECT:	NA	01/27/2023
DESIGNED BY:	J. CHIN	01/27/2023
DRAWN BY:	J. CHIN	01/27/2023
CHECKED BY:	A. CARRIE	01/27/2023
APPROVED BY:	R. GETTER	01/27/2023

WORK ORDER
EW40079F

SHEET NAME
IP06

SHEET 124 OF 125 SHEETS

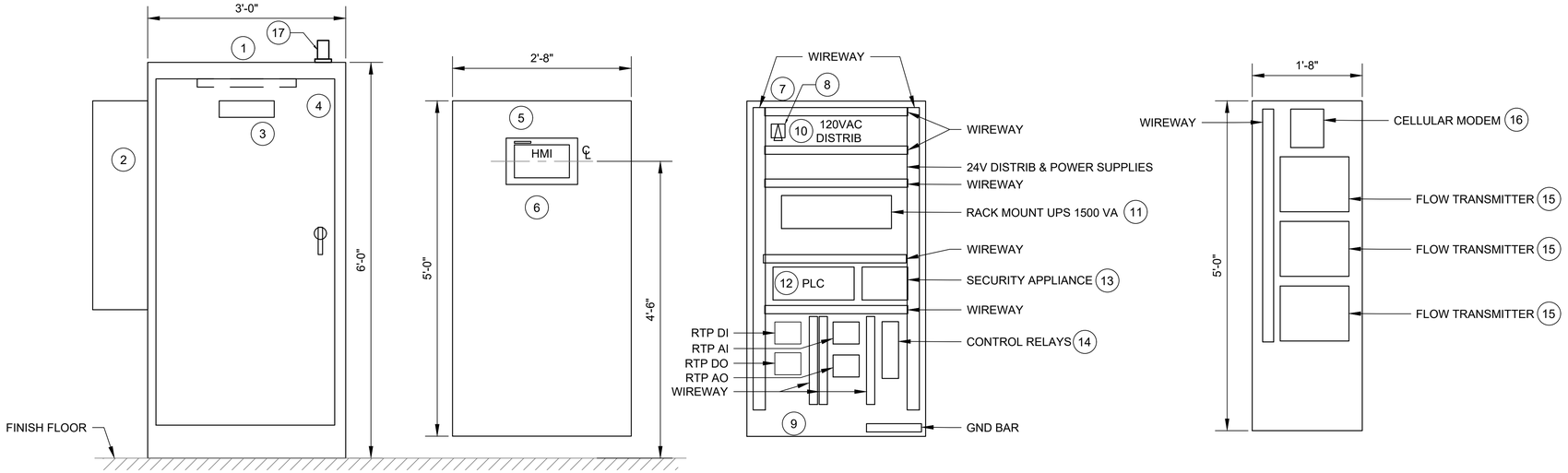

LOCAL CONTROL PANEL LCP-01 - ELEVATION

INNER DEADFRONT DOOR

REAR PANEL

RIGHT SIDE PANEL

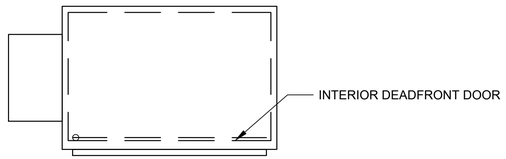

LOCAL CONTROL PANEL LCP-01 - PLAN

KEY NOTES:

ITEM	DESCRIPTION	REMARKS
1	NEMA 4X, 316 SS CABINET	72"(H) X 36"(W) X 24"(D). 3 POINT LATCHING
2	AIR CONDITIONER, OUTDOOR NEMA 4X, 316 SS	SIZE FOR MAXIMUM AMBIENT OF 110 DEG F
3	NAMEPLATE: LINE 1: " ELECTRICAL CONTROL". LINE 2: "WATER TREATMENT"	ENGRAVED TEXT 3/8" HIGH, BLACK LETTERING ON WHITE
4	CABINET INTERNAL LED LIGHT	WITH DOOR SWITCH
5	INNER DEADFRONT DOOR	STEEL. POWDER COATED WHITE
6	OPERATOR INTERFACE TERMINAL	HONEYWELL, 900 SERIES, 15" TOUCHSCREEN AND KEYPAD. ETHERNET PORT. 65 K COLOR DISPLAY
7	CABINET BACK PANEL	STEEL. POWDER COATED WHITE
8	CABINET 120VAC DISCONNECT	SEE SHEET ES01 FOR POWER CONNECTION FROM PANEL BOARD DP-2
9	GFCI RECEPTACLE	15 AMP WITH INDICATOR
10	120 VAC DISTRIBUTION	PROVIDE CIRCUIT BREAKERS FOR ALL SUBCIRCUITS SEE DRWG EP09.
11	RACK MOUNT UPS, 1500 VA MINIMUM.	SIZE TO MATCH LOAD WITH 60 MINUTE RUN TIME AT CALCULATED LOAD, EXCLUDING AIR CONDITIONER.
12	PROGRAMMABLE LOGIC CONTROLLER	HONEYWELL CONTROLEDGE PLC, NO EXCEPTIONS
		8 SLOT MAIN BASE MINIMUM, WITH CPU, COMMUNICATIONS AND I/O MODULES
13	INDUSTRIAL SECURITY APPLIANCE	CISCO 4000 SERIES.
14	REMOTE TERMINATION PANELS FOR I/O	HONEYWELL RTP MATCHING I/O MODULES PROVIDED
15	FLOW TRANSMITTERS	3 TRANSMITTERS PER SPEC 17240.
16	CELLULAR MODEM AT&T FIRSTNET	PROVIDED BY SERVICE PROVIDER & INSTALLED BY CONTRACTOR.
17	CELLULAR ANTENNA	PROVIDED BY SERVICE PROVIDER & INSTALLED BY CONTRACTOR.

THE CITY OF LOS ANGELES OR ITS OFFICERS OR AGENTS SHALL NOT BE RESPONSIBLE FOR THE ACCURACY OR COMPLETENESS OF ELECTRONIC COPIES OF THIS PLAN SHEET.

REVISION DATES (DESIGN STAGE ONLY)

ENGINEERING
CITY OF LOS ANGELES

REGISTERED PROFESSIONAL ENGINEER
ROBERT D. GETTER
No. E 21884
Exp. 06-30-23
ELECTRICAL
STATE OF CALIFORNIA
01/27/2023

THIS PLAN WAS ELECTRONICALLY • SIGNED AND STAMPED

BUREAU OF ENGINEERING

VERTICAL CONTROL: BENCH MARK 08-03460 NAVD 88
HORIZONTAL CONTROL: CALIFORNIA STATE PLANE ZONE V. 1983 NAD

SHEET TITLE: LOCAL CONTROL PANEL (LCP-01) LAYOUT

PROJECT: FERNANGELES PARK STORMWATER CAPTURE PROJECT

ADDRESS: FERNANGELES RECREATION CENTER
8851 LAUREL CANYON BLVD, SUN VALEY, CA 91352

CITY OF LOS ANGELES DEPARTMENT OF PUBLIC WORKS

BY	DATE	REVISIONS	NO.
	YY/MM/DD		
	YY/MM/DD		
	YY/MM/DD		
	YY/MM/DD		

CIP NO. SCP0002

INDEX NO.

CITY ENGINEER

	DESIGN GROUP	DATE
TED ALLEN, P.E.		01/27/2023
ENGINEER:	PROJECTLINE TECHNICAL SERVICES	01/27/2023
ARCHITECT:	NA	01/27/2023
DESIGNED BY:	J. CHIN	01/27/2023
DRAWN BY:	J. CHIN	01/27/2023
CHECKED BY:	A. CARRIE	01/27/2023
APPROVED BY:	R. GETTER	01/27/2023

WORK ORDER
EW40079F

SHEET NAME
IP07

SHEET 125 OF 125 SHEETS

BUREAU OF ENGINEERING

FERNANGELES PARK
STORMWATER CAPTURE PROJECT
WORK ORDER NO. EW40079F

GENERAL CONDITIONS
GENERAL REQUIREMENTS
TECHNICAL SPECIFICATIONS
APPENDICES

APRIL 14, 2025

City of Los Angeles
California

Department of Public Works
Bureau of Engineering

BUREAU OF ENGINEERING

FERNANGELES PARK
STORMWATER CAPTURE PROJECT
WORK ORDER NO. EW40079F

MASTER GENERAL CONDITIONS

APRIL 14, 2025

City of Los Angeles
California

Department of Public Works
Bureau of Engineering

MASTER TABLE OF CONTENTS

DIVISION 00 – GENERAL CONDITIONS

00001	Specifications Cover
00001A	Fernangeles Certification Pages
00002	Master Table of Contents
00010	General Conditions

DIVISION 01 - GENERAL REQUIREMENTS

01000	Master General Requirements Cover
01050	Table of Contents
01111	Abbreviations and Reference Standards
01112	Description of Work
01113	Divisions of Technical Sections of Project Manual
01114	Issuance of Drawings and the Project Manual
01115	Mandatory Provisions
01116	Electronic Document Control
01120	Interface Coordination Requirements
01140	Contractor’s Use of the Premises
01150	Storage of Materials and Equipment
01211	Allowance for Equipment Substitution for compatibility Purposes
01212	Fixed Cash Allowance Items
01251	Change Order Requests
01252	Construction Incentive Change Proposal
01253	Differing Site Conditions
01254	Change Orders
01255	Price Reduction for Defective Cost or Pricing Data
01280	Measurement and Payment
01291	Notice to Withhold and/or Stop Notice
01292	Payments
01298	Schedule of Values / Contract Price Breakdown
01311	Preconstruction Safety Conference
01312	Project Meetings
01313	Work by City or Others
01321	Contractor's Construction Schedule and Reports
01322	Construction Progress Photography
01323	Construction Status Reports
01330	Shop Drawings / Submittals
01350	Audit and Access to Records
01351	Escrow Bid Documents
01353	Opportunity to Partner
01410	Regulatory Requirements
01411	Confined Space Entry
01420	Units of Measure
01421	Symbols
01430	Manufacturer's Field Service

01452 Inspection of the Work
01453 Sampling, Testing and Fabrication Inspection
01454 Weighing and Metering Equipment
01455 Calibration of Testing Equipment
01561 Environmental Control
01562 Environmental Mitigation
01563 Pollution Control -Sewage Spill Prevention and Response Requirements
01571 Stormwater Pollution Control Measures for Construction Activities
01572 Construction and Demolition Waste Management
01573 Excavation Shoring, Forms and Falsework
01581 Project Signs
01601 Buy Clean California Act
01611 Guaranty / Warranty
01630 Substitutions and "Or Equal" Submittal
01711 Site Investigation
01712 Subsurface Data
01721 Mobilization
01722 Surveying
01723 Right of Way
01731 Cutting and Patching
01732 Additional Potholing
01740 Removal, Cleanup and Demobilization
01750 Startup Assistance
01770 Project Closeout
01781 Spare Parts
01782 Technical Manuals
01783 Project Record Documents
01810 Fundamental Commissioning Requirements
01820 Operations and Maintenance Training

DIVISION 02 – SITE WORK

02000 Technical Specifications Cover
02001 Table of Contents Technical Specifications
02210 Clearing, Grubbing and Stripping
02235 Dewatering
02240 Sheeting Shoring and Bracing Systems
02310 Earthwork
02545 Storm Drain System
02550 Lined Reinforced Concrete Pipe
02585 Maintenance Manhole and Precast Vault Construction
02600 Ductile Iron Piping
02710 Yard Work and Street Work
02752 Concrete Paving (Recreation and Parks)
02795 Ballfield Infield Surface (Recreation and Parks)
02810 Irrigation (Recreation and Parks)
02820 Chain Link Fencing and Gates (Recreation and Parks)
02840 Concrete Wheel Bumpers

02932 Landscape Planting

DIVISION 03 – CONCRETE
03100 Concrete Formwork
03200 Reinforcement Steel
03250 Concrete Accessories
03290 Joints In Concrete
03300 Cast-In-Place Concrete
03315 Grout
03370 Concrete Curing
03400 Precast Concrete
03740 Concrete Repair

DIVISION 04 - MASONRY
(Not used)

DIVISION 05 – METALS
05500 Miscellaneous Metal Work
05600 Floor Access Hatches

DIVISION 06 – WOOD AND PLASTICS
06100 Rough Carpentry

DIVISION 07 - THERMAL AND MOISTURE PROTECTION
07290 Waterproofing
07900 Joint Sealant
07920 Caulking and Sealants

DIVISION 08 – DOORS AND WINDOWS
(Not used)

DIVISION 09 – FINISHES
09800 Protective Coatings

DIVISION 10 - SPECIALTIES
10443 Disabled Accessibility Parking Signage

DIVISION 11 – EQUIPMENT
11815 Slide/Stop Gates

DIVISION 12 - FURNISHINGS
(Not used)

DIVISION 13 - SPECIAL CONSTRUCTION
13200 Modular Buried Stormwater Infiltration System and Desilting Basin System

DIVISION 14 - CONVEYING EQUIPMENT
(Not used)

DIVISION 15 – MECHANICAL/PLUMBING
15270 Mechanical Systems Commissioning
15280 Mechanical Testing Requirements
15320 Electrical Requirements for Mechanical Equipment

DIVISION 16 - ELECTRICAL
16020 Municipal Facilities General Electrical Requirements
16100 Basic Materials and Methods
16110 Raceways
16160 Conductors
16170 Cabinets and Racks
16180 Wiring Devices
16190 Electrical Identification
16200 Motor Control Centers
16210 Switches, Disconnect and Safety
16270 Service and Distribution Switchboard
16280 Short Circuit and Coordination Report
16290 Municipal Facilities Grounding Systems
16320 Transformers
16330 Panelboards
16340 Low Voltage Motor Control
16360 Municipal Facilities Lighting
16380 Municipal Facilities Uninterruptible Power System
16490 Electric Motors
16560 Municipal Facilities Electrical Systems Commissioning
16570 Municipal Facilities Electrical Testing Requirements

DIVISION 17 - INSTRUMENTATION
17100 Meters, General
17240 AV Flow Meters – Field Mounted
17400 Process Instrumentation and Control
17450 SCADA, PLCS, Network and Communications

APPENDICES

Geotechnical Evaluation Report Fernangeles Park
Methane Gas Survey for Fernangeles Park
DRAFT Stormwater Pollution Prevention Plan for Construction Activities
DRAFT Final Mitigated Negative Declaration Stormwater Capture Parks Program
Notice of Proposed Project First Notice
Summary of First Notice Replies
Water Distribution Engineering Estimate Request
Electric Power and Water Distribution Mapping
Fernangeles Transfer Agreement

END OF SECTION

GENERAL CONDITIONS
TABLE OF CONTENTS

ARTICLE Page

00100 DEFINITIONS (9/18/07) 4
00101 – 00199 NOT USED 9
00200 SCOPE (10/17/01) 9
00201 AUTHORITY OF THE BOARD, ENGINEER, AND INSPECTOR (5/2/02) 9
00202 INTENT OF CONTRACT DOCUMENTS (2/09/95) 10
00203 NOT USED (9/18/07) 10
00204 PLANS AND SPECIFICATIONS (9/18/07) 10
00205 PRECEDENCE OF CONTRACT DOCUMENTS (9/18/07) 10
00206 ACCURACY OF PLANS AND SPECIFICATIONS (12/6/01) 11
00207 EXAMINATION OF COVERED WORK (12/6/01) 11
00208 UNNOTICED DEFECTS (10/17/01) 11
00209 CODES AND REGULATIONS (10/17/01) 12
00210 LENGTH OF WORKDAY AND WORK WEEK (9/18/07) 12
00211 PAYMENT OF EMPLOYEES (12/6/01) 12
00212 CONVICT-MADE MATERIALS (12/6/01) 13
00213 SALES OR USE TAX / EXEMPTION FROM FEDERAL EXCISE TAX (10/17/01) 13
00214 NONDISCRIMINATION IN EMPLOYMENT (10/17/01) 13
00215 APPRENTICE UTILIZATION (4/12/95) 13
00216 LAWS AND REGULATIONS (9/18/07) 13
00217 PERMITS AND CONSTRUCTION EASEMENTS (9/18/07) 14
00218 PARTIES EXCLUDED FROM FEDERAL PROCUREMENT AND NON PROCUREMENT PROGRAMS (10/17/01) 14
00219 BUSINESS TAX REGISTRATION CERTIFICATES (11/21/01) 15
00220 CONTRACTOR PROPOSED ALTERNATES AND “OR EQUALS” (12/6/01) 15
00221 CONTRUCTION AND DEMOLITION WASTE MANAGEMENT (8/12/11) 15
00222 – 00299 NOT USED 16
00300 FINANCIAL LIABILITY (4/12/95) 16
00301 CONTRACTOR’S OBLIGATIONS (3/21/14) 16
00302 CONTRACTOR’S REPRESENTATIVE AT THE SITE (1/30/03) 16
00303 FAMILIARITY WITH PLANS AND SPECIFICATIONS (9/18/07) 17
00304 JOB CONDITIONS (9/18/07) 18
00305 JOB BULLETIN BOARD (11/27/01) 18

00306 RESPONSIBILITY FOR SITE (10/17/01) 19
00307 WORKMANSHIP AND MATERIALS (4/12/95) 19
00308 INJURY AND ILLNESS PREVENTION - SAFETY MEASURES (9/18/07) 19
00309 PROTECTION OF PERSONS AND PROPERTY AND RESTORATION OF EXISTING IMPROVEMENTS (9/18/07) 20
00310 NON-CONFORMING WORK (1/30/03) 22
00311 SUBCONTRACTORS AND SUB-SUBCONTRACTORS (10/28/14) 23
00312 RESPONSIBILITY OF CONTRACTOR TO ACT IN EMERGENCY (11/21/01) 28
00313 ASSIGNMENT (2/09/95) 28
00314 NOTIFICATION OF HAZARDOUS SUBSTANCES (10/17/01) 28
00315 INDEPENDENT CONTRACTOR (10/21/99) 29
00316 INDEMNIFICATION (10/17/01) 29
00317 INSURANCE (1/05/10) 30
00318 SERVICE OF NOTICE (2/09/94) 34
00319 AGENT TO ACCEPT SERVICE (10/21/99) 35
00320 – 00399 NOT USED 35
00400 TEMPORARY SUSPENSION OR DELAY OF WORK (9/18/07) 35
00401 UNAVOIDABLE DELAY (10/17/01) 36
00402 ARCHAEOLOGICAL AND PALEONTOLOGICAL DISCOVERIES (9/18/07) 36
00403 COORDINATION WITH OTHER CONTRACTS (1/30/03) 36
00404 TERMINATION OF CONTRACT BY CITY (CONTRACTOR NOT AT FAULT) (9/18/07) 37
00405 TERMINATION OF CONTRACT BY CITY (CONTRACTOR DEFAULT) (9/18/07) 40
00406 PARTIAL ACCEPTANCE (9/18/07) 40
00407 FINAL ACCEPTANCE (02/21/08) 41
00408 LIQUIDATED DAMAGES (9/18/07) 42
00409 – 00499 NOT USED 42
00500 CHANGES AND EXTRA WORK (9/18/07) 42
00501 DIFFERING SITE CONDITIONS (9/18/07) 43
00502 – 00599 NOT USED 44
00600 CLAIMS AND PROTESTS (9/18/07) 44
00601 COMMENCEMENT OF STATUTE OF LIMITATIONS (11/21/01) 46
00602 GOVERNING LAW (11/21/01) 46
00603 VENUE (2/09/95) 47
00604 NO WAIVER OF RIGHTS (4/12/95) 47
00605 ACCEPTANCE OF FINAL PAYMENT CONSTITUTES RELEASE (4/12/95) 47

00606 PATENTS AND COPYRIGHTS (10/17/01)..... 47
00607 PUBLIC RECORDS ACT (4/06/00) 48

00100 DEFINITIONS (9/18/07)

Unless otherwise stated, the words "directed, required, permitted, ordered, instructed, designated, considered necessary, prescribed, approved, acceptable, satisfactory," or words of like meaning, refer to actions, statements, judgments, conclusions, and decisions within the responsibility of the Engineer or the Inspector.

Addenda: Written documents issued during the Bidding Period which modify, supersede, or supplement the original Contract Documents.

Additions and Amendments to the Standard Specifications for Public Works Construction (SSPWC): Also known as the “Brownbook”. Previous editions of the document were titled Standard Plan S-610.

“as shown”, “as indicated”, or “as specified”: These words are understood to be followed by the phrase "in the Contract Documents."

Bid: The offer of the Bidder submitted on the prescribed forms setting forth the price(s) for the Work.

Bid Proposal: The notice that informs prospective Bidders of the opportunity to submit a Bid, bidding procedures and other requirements.

Bid Guaranty: The certified check or Bidder’s Surety Bond accompanying the Bid as a guaranty that the Bidder will enter into a contract with the Board for the performance of the Work.

Bidder: The person or persons, partnership, firm or corporation submitting a Bid or proposal for the Work defined in the Contract Documents.

Bidding Period: The time period allocated to the Bidder to enable preparation of a Bid.

Board: The Board of Public Works, of the City of Los Angeles.

Bond: Bid bond, performance and payment bond or other instrument of security.

“Brownbook”: City of Los Angeles, Department of Public Works, Additions and Amendments to the SSPWC.

Calendar day: All days beginning with the date specified in the Notice to Proceed, and ending with the date the City issues the Statement of Completion.

Change Order: A written order to the Contractor signed by the Engineer directing an addition, deletion or revision in the Work, or an adjustment in the Contract Price or time which is issued after the effective date of the Contract and effects less modification than is effected by a Supplemental Agreement. A Change Order may or may not also be signed by the Contractor.

County Sealer: The Director of Weights & Measures of the County of Los Angeles.

City: The City of Los Angeles, a municipal corporation.

Claim: A written demand or assertion by one of the parties seeking, as a matter of right, an interpretation of the Contract Documents, payment of money, extension of time or other

relief. The party asserting the Claim must set forth the facts and circumstances for which the other party is responsible.

Code: Codes of the State of California as well as any other Federal or local law, statute, ordinance, rule or regulation.

Contract: The agreement between the City and the Contractor for the Work described in the Contract Documents.

Contract Documents: Includes, but is not limited to, the Notice Inviting Bids, Bid Proposal, Notice(s) to Bidders, Contractor's Bid, Performance bond, Payment bond, General and Supplementary Conditions, Special Provisions, General Requirements, Federal and State Requirements, Standard and Reference Specifications, Technical and Nontechnical Specifications, Geotechnical Baseline Report, Geotechnical Design Summary Report, Soil Reports and Subsurface Investigation Reports, Standard Plans, Plans, Summary of First Notice Replies, and Addenda, Plan Clarifications, Request for Information, Supplemental Agreements, Change Orders issued after Contract award and other documents designated by the Engineer.

Contract Price: The total amount of money for which the Contract is awarded.

Contract Unit Price: The amount stated in the Bid for a single unit of an item of Work.

Contractor: A person or persons, partnership, firm or corporation licensed by the State of California as a general contractor. The terms "Prime Contractor" and Contractor are synonymous.

Contractor's Representative: A representative of the Contractor present at the site to supervise, organize, coordinate and direct daily construction activities and who is authorized to receive and fulfill instructions from the Engineer or Inspector.

"days": Consecutive calendar days unless otherwise specifically stated.

Drawings: See Plans.

"easement": Permission to access or utilize property not owned by the City.

Engineer: The City Engineer, head of the Bureau of Engineering, or an authorized representative.

Equal: See "or equal".

Final Field Acceptance: Verification by the Final Inspector that all physical corrections required by the Final Inspection Correction List have been completed. This verification will be evidenced by issuance of a Statement of Completion, which will establish the date of the completion of the Work.

GBR: See Geotechnical Baseline Report.

GDR: See Geotechnical Data Report.

General Conditions: Instructions to the Contractor setting forth its responsibilities and the City's responsibilities for proper execution of the Work indicated herein.

General Requirements: Division 1 of the Specifications.

Geotechnical Baseline Report: This report establishing the baselines for geotechnical conditions anticipated to be encountered during underground and subsurface construction. This report establishes the basis for identification of changed site/ground conditions.

Geotechnical Data Report: This report contains factual information gathered during exploration and design. It may include logs of exploratory borings, laboratory test data, and geologic, seismic or environmental data.

“Greenbook”: Standard Specifications for Public Works Construction (SSPWC) published by Public Works Standards, Inc, latest edition.

“holiday”: In reference to days, the holidays and dates as observed by the City. A list of such holidays is available from the Board office.

Illegal Subcontractor Substitution: Anyone other than the Bid-listed or approved subcontractor(s) performing any portion of the Work designated to be performed by said subcontractor without prior approval of the Inspector.

“immediately notify”: The obligation to cause verbal notification of Engineer and Inspector of some condition or event as soon as possible upon discovery or knowledge of the condition or event and in all instances, no more than two (2) hours.

Inspector: The Inspector of Public Works, (Director of the Bureau of Contract Administration), or an authorized representative designated by the Bureau of Contract Administration.

“jobsite”: The area upon or in which the Contractor’s operations are carried on and such other areas adjacent thereto as may be designated as such by the Contract Documents.

“law”: Any Federal, State or local law, statute, ordinance, rule, regulation or Code.

“liquidated damages”: The amount the Contractor shall pay to the City, as determined by rates and amounts as fixed in the Contract Documents, due to the Contractor’s failure to complete the Work within the time specified.

“non-conforming work”: Unapproved construction, defective work or damaged materials that does not fully comply with the Contract Documents.

Notice of Award: The written notice by the City to the successful Bidder stating that upon compliance by the successful Bidder of required conditions, the City will execute the Contract.

Notice to Proceed: The written notice by the City to the successful Bidder stating that the Work or portions of the Work shall commence.

Notice to Withhold: The written notice by the City to the Contractor advising that certain payments shall be withheld due to unacceptable execution of the Work by the Contractor.

“or equal”: In reference to products, equipment, or materials proposed by the Contractor for use in the Work.

Partial Acceptance: Any portion of the Work that has been completed in accordance with the plans and specifications and has been accepted in writing by the Inspector ("Statement of Partial Completion" form).

“person”: Any individual, firm, association, partnership, corporation, trust, joint venture, or other legal entity.

Plans: The drawings, profiles, cross sections, shop drawings, and supplemental drawings, or reproductions thereof, issued or approved by the Engineer, which show the location, character, dimensions or details of the Work.

Private Contract: Work subject to City inspection, control, and approval, involving private funds, not administered by the City.

Project: The Work and/or construction operations executed through the performance of this Contract.

Project Manual: See Contract Documents.

Protest: See Claim.

Reference Specifications: Those bulletins, standards, rules, methods of analysis or test, codes, and specifications of other agencies, engineering societies, or industrial associations referred to in the Contract Documents. These refer to the edition, including amendments in effect and published at the time of advertising the project, adopted by the Board, if applicable, unless specifically referred to by edition, volume, or date.

“right of entry”: Written permission from an owner of a facility or property to access the facility or property for a specific purpose.

Special Provisions: Any provision which supplements or modifies the Specifications.

Specifications: Written requirements describing the commercial, legal, technical and nontechnical aspects of the project. Specifications include but are not limited to Terms, Provisions, General Conditions, General Requirements, Technical Specifications, Equipment Schedules, and all revisions made to the specifications in Addenda, and Change Orders.

Standard Plans or “Std. Plan”: Details of standard structures, devices or instructions referred to on the Plans or in the Specifications by title or number.

State: The State of California.

Statement of Completion: A form issued by the Bureau of Contract Administration following Final Inspection and upon completion of all physical corrections required by the Final Inspection Correction List. This shall signify the acceptance of all field work and establish the date of completion of the Work.

Statement of Partial Completion: A form issued by the Bureau of Contract Administration following Partial Final Inspection and upon completion of all physical corrections required by the Partial Final Inspection Correction List. This shall signify the acceptance of a specific portion, or portions, of the Work to be so utilized or otherwise placed into service.

Subcontractor: Any individual, firm, or corporation, other than an employee of the Contractor, having a direct contract with the Contractor or with any other subcontractor for the performance of the Work. A Subcontractor is a contractor who is licensed pursuant to California Business and Professions Code, Section 7000 et. seq. A Subcontractor does not have any direct contract with the City related to the project.

Subcontractor Substitution: Anyone other than the Bid-listed or approved subcontractor(s), including the Contractor, performing any portion of the Work designated to be performed by said subcontractor.

Sub-subcontractor: A "Sub-Subcontractor" is a Subcontractor, within the definition of that term, who has a contract with a Subcontractor and has no Contract with the City related to the project.

Supervision: With reference to supervision by the Engineer, the performance of obligations, and the exercise of rights, specifically imposed upon and granted to the City in becoming a party to the Contract. Except as specifically stated herein, supervision by the City shall not mean active and direct superintendence of details of the Work.

Supplemental Agreement: A written amendment of the Contract Documents, signed by the Contractor and City.

Supplier: An individual, organization, or firm who may not be required for the purposes of the Work to be licensed pursuant to California Business and Professions Code as a contractor, or subcontractor, within the meanings of those terms as defined herein above, who provides equipment and/or materials for the Work, to the Contractor, a Subcontractor, or a Sub-Subcontractor, including that fabricated to a special design, but who does not perform labor at the site except for labor or labor supervision required by some manufacturers as part of their equipment installation for warranty or other purposes. The term "supplier" also includes fabricator, manufacturer, or vendor.

Surety: Any individual, firm or corporation bound with and for the Contractor for the acceptable performance, execution and completion of the Work, and for the satisfaction of all obligations incurred.

Unauthorized Subcontractor Substitution: Any reduction, increase, or other change to any Subcontractor dollar amount without written approval by the Inspector.

Unavoidable Delay: Delay arising from causes beyond the control and without the fault or negligence of the Contractor and its Subcontractors at all tiers, and solely due to acts of God, acts of government in its sovereign capacity, riots, insurrections, wars, fires, floods, earthquakes, tidal waves, epidemics, quarantine restrictions, industry-wide strikes, freight embargoes, or unusually severe weather.

Work: Includes all material, labor, utility services, tools, expendable equipment, and all appliances, machinery, transportation, appurtenances and specified services necessary to perform and complete the Contract; and such additional items not specifically indicated or described that can be reasonably inferred as belonging to the item described or indicated and as required by good practice to provide a complete and operable satisfactory system or structure. As used herein, "provide" shall be understood to mean "furnish and install, complete in place."

Workday: All days beginning with the date specified in the Notice to Proceed, and ending with the date the City issues the Statement of Completion, except for the following days:

A) Saturday,

B) Sunday,

C) any day designated as a holiday by the City,

D) any day designated as a holiday in a Master Labor Agreement binding the Contractor,

E) any day the Contractor is prevented from working for cause as established by “Unavoidable Delay” of these General Conditions; and

F) any day the Contractor is prevented from working during the first five (5) hours of the workday with at least sixty percent (60%) of the normal Work force for cause as established by “Unavoidable Delay” of these General Conditions.

Worksite: See "jobsite."

00101 – 00199 NOT USED

00200 SCOPE (10/17/01)

The work to be performed under this Contract shall consist of furnishing all tools, equipment, materials, supplies and manufactured articles, all transportation, services, including fuel, power and water, and essential communications, and the performance of all labor, Work, required calculations testing, inspections or operations, or operations required for the fulfillment of the Contract, in strict accordance with the specifications, schedules, and Plans, all of which are made a part hereof, and including such detail sketches as may be furnished by the Engineer from time to time during the construction in explanation of said Plans. The Work shall be complete and all material, and services incidentals, quality or not specifically called for quality and conditions noted, in the Specifications, or not shown on the Plans, which may be necessary for complete and proper construction to carry out the Contract in good faith and a satisfactory manner shall be performed, furnished, and installed by the Contractor at no increase in cost to the City.

00201 AUTHORITY OF THE BOARD, ENGINEER, AND INSPECTOR (5/2/02)

The Board has the final authority in all matters affecting the Work. The Contractor shall promptly comply with instructions from the Engineer or the Inspector.

The Engineer is authorized to require performance of the Work consistent with the meaning of the Plans and the Contract Documents. On all questions related to the interpretation of Plans or Specifications, the decision of the Engineer is final and binding. As authorized by the Board, the Engineer may issue Change Orders to increase, decrease or modify the scope of work.

The Inspector is authorized to enforce compliance with the Contract Documents, to determine the acceptability, quality and quantity of materials and workmanship, administer requirements with respect to subcontracts, and to prepare and process progress payment estimates. Unless otherwise ordered by the Board, the Inspector’s determination of satisfactory performance is a condition precedent to payment under this Contract. For such matters, the decision of the Inspector is final and binding. In the event of a dispute between the Contractor and the Inspector, the latter is authorized to reject materials or suspend

the Work until any questions at issue can be referred to and decided by the Board or, in engineering matters, by the Engineer.

The Inspector is authorized to sample and test all materials to be incorporated into the Work. The Inspector may delegate this authority to sample materials and perform tests to the Department of General Services, Standards Division, or other approved agencies.

The Engineer may delegate street lighting matters to the Director of the Bureau of Street Lighting.

00202 INTENT OF CONTRACT DOCUMENTS (2/09/95)

The Contract Documents are complementary, and what is called for by one part shall be as binding as if called for by all. The intent of the Documents is to include all Work consistent therewith and reasonably inferable therefrom as being necessary for completion of the contract. Materials or Work described in words that indicate the proper execution and a well known technical or trade designation shall be held to refer to such recognized standards.

It is understood and agreed that the written terms and provisions of the Contract Documents represent the entire and integrated agreement between the parties hereto and supersede all prior negotiations, representations, or agreements, either written or oral. The Contract Documents shall not be construed to create any contractual relationship of any kind between the Engineer (or the Inspector) and the Contractor.

00203 NOT USED (9/18/07)

00204 PLANS AND SPECIFICATIONS (9/18/07)

As shown on the Plans or described in the Specifications, each element of the Work must be furnished complete, finished and functional. Whether shown or not, include all materials and ancillary equipment necessary to provide a complete installation. The Plans, Specifications and other Contract Documents are intended to be complementary and cooperative to describe and provide for a complete project. Anything in the Specifications and not on the Plans, or on the Plans and not in the Specifications, shall be as though shown or mentioned in both. Details shown for an item of Work are typical and shall apply to similar items of Work.

Do not deviate from the Plans and Specifications without written authorization from the Engineer.

The Engineer does not warrant the accuracy of scaled dimensions. Dimensions indicated by figures or numerals shall govern. Larger scale drawings shall take precedence over smaller scale drawings. Detailed drawings will take precedence over general drawings.

The Engineer may furnish additional details pertaining to the Work and the same shall be considered part of the Contract.

References made to other specifications and codes refer to the edition including amendments in effect and published at the time of advertising the project, unless specifically referred to by edition, volume, or date as noted in the Contract Documents.

00205 PRECEDENCE OF CONTRACT DOCUMENTS (9/18/07)

In resolving inconsistencies or ambiguities among two (2) or more components of the Contract Documents, the more stringent requirements shall prevail. The secondary priority will be based upon the precedence of the documents. The precedence shall be:

1. Permits from other agencies as may be required by law.
2. Bid Proposal
3. General Conditions
4. General Requirements
5. Technical Specifications
6. Plans
7. Geotechnical Baseline Report
8. Geotechnical Data Report
9. Brownbook
10. Greenbook
11. Standard Plans
12. Reference Specifications
13. Reference Plans

Supplemental Agreements, Change Orders, Engineer's written interpretations and clarifications, and Addenda, will take precedence over all other components of the Contract Documents.

00206 ACCURACY OF PLANS AND SPECIFICATIONS (12/6/01)

Omissions from the Plans and Specifications shall not relieve the Contractor from the responsibility of furnishing, making, or installing all items required by law or usually furnished, made, or installed in a project of the scope and character indicated by the Plans and Specifications.

The Plans show conditions as they are supposed or believed by the Engineer to exist, but it is not intended or to be inferred that the conditions as shown thereon constitute a representation or warranty, expressed or implied, by the City or its officers, that such conditions are actually existent, nor shall the City, or any of its officers, be liable for any loss sustained by the Contractor as a result of any variance between conditions as shown on the Plans, and the actual conditions revealed during progress of the Work or otherwise, except as indicated in "Differing Site Conditions" of these General Conditions.

00207 EXAMINATION OF COVERED WORK (12/6/01)

If any Work is covered without inspection, approval or consent of the Inspector, an examination may be required by the Inspector. The cost for uncovering the work, inspection, testing required by the Inspector, remedial work and restoring the work is at the Contractor's expense.

00208 UNNOTICED DEFECTS (10/17/01)

The Contractor is responsible for ensuring that all Work complies with the Contract Documents. Upon discovery, all defective or noncompliant Work must be immediately repaired or replaced by the Contractor. Failure by the Engineer or the Inspector to condemn or reject non-conforming Work shall not constitute acceptance or implied acceptance of such Work.

00209 CODES AND REGULATIONS (10/17/01)

The Contractor shall perform the Work in accordance with all applicable regulations, laws, and ordinances, even though such requirements may not be specifically mentioned in the Specifications or shown on the Plans.

It is not the responsibility of the Contractor to ensure that the Contract Documents comply with applicable laws, statutes, codes and regulations. If the Contractor believes that any part of the Contract Documents does not comply, the Contractor shall promptly notify the Engineer in writing. Do not proceed with those affected Work items until the Engineer issues written instructions to the Contractor.

If the Contractor proceeds with those Work items without written instruction from the Engineer, the Contractor will bear the costs and impacts of any corrective work.

00210 LENGTH OF WORKDAY AND WORK WEEK (9/18/07)

Eight (8) hours of labor shall constitute a calendar day's work for employees of the Contractor under this Contract. Said employees shall be paid not less than the prevailing wage rate for the first eight (8) hours work of each day.

Unless noted elsewhere in the Contract documents, a working day shall be Monday through Friday, and work shall be between 7:00 a.m. and 4:00 p.m., unless otherwise approved by the Engineer or the Board or revised by City Ordinance.

When work in excess of eight (8) hours per day, or forty (40) hours during any one (1) week is performed, wages for all hours over eight (8) hours in any day or over forty (40) hours during any one (1) week shall be paid at the prevailing wage rate, as required by City, state and federal requirements.

00211 PAYMENT OF EMPLOYEES (12/6/01)

The Contractor and each Subcontractor shall pay each employee engaged in Work on the project under this Contract in compliance with the Federal and State wage provisions indicated on the appropriate page of the Bid Proposal (General Instruction and Information for Bidders), and “Length of Workday and Work Week” of these General Conditions.

The certified payroll and the Statement of Compliance shall be submitted to the Inspector by the Contractor and all Subcontractors performing Work on the project, regardless of dollar amount or type of contract.

If there is a difference between the Federal and State minimum wage rates for similar classifications of labor, the Contractor and its Subcontractors shall pay not less than the higher wage rate. When the Contractor intends to use a craft or classification not shown on the general prevailing wage determinations, it will be required to pay the wage rate of that craft or classification most closely related to it as shown in the general prevailing wage determinations. In case of disagreement between the Contractor and the City, the Inspector shall make the final determination as to the prevailing wages for the Work.

00212 CONVICT-MADE MATERIALS (12/6/01)

Unless otherwise noted, no materials manufactured or produced in a penal or correctional institution shall be incorporated in the project under this Contract.

00213 SALES OR USE TAX / EXEMPTION FROM FEDERAL EXCISE TAX (10/17/01)

Purchases of materials and equipment which will be incorporated or installed permanently in the Work, or which will be used in the operation of the Contractor or Subcontractors, and not incorporated in the Work, are not exempt from City of Los Angeles and California State Sales or Use Taxes as applicable.

Purchase of materials and equipment which will be incorporated or installed permanently in the Work are exempt from Federal excise tax in effect at the time of purchase, as applicable. Prices included in the Contract amount shall reflect such exemptions. A Federal Tax Exemption Certificate will be furnished by the City, on request, as acknowledgment that materials and equipment for which exemption is requested by the Contractor, is valid where provided for the exclusive use of the City. Lists of exempt articles provided by the Contractor and Subcontractor shall be submitted to the City by the Contractor. Purchases of materials and equipment which will be used in the operations of the Contractor or Subcontractors and not incorporated in the Work are not exempt from excise tax.

00214 NONDISCRIMINATION IN EMPLOYMENT (10/17/01)

The Contractor shall comply with all of the provisions of the Los Angeles Administrative Code, Mandatory Provision Pertaining to Nondiscrimination in Employment.

The Contractor shall submit Monthly Ethnic Composition of Work Force Reports to the Inspector indicating the number of employees in the various work categories and ethnic groups and gender on forms furnished by the City.

Nondiscrimination Clause: "The Contractor shall not discriminate during the performance of this Contract against any employee or applicant for employment because of employee's or applicant's race, religion, national origin, ancestry, sex, age, sexual orientation or physical handicap." The Contractor shall include the same Nondiscrimination Clause in all subcontracts awarded under this Contract.

If conflicts exist between these provisions and the Federal Rules and Regulations governing the same, the more stringent requirements shall prevail.

00215 APPRENTICE UTILIZATION (4/12/95)

Any Contract awarded hereunder will require the Contractor to comply with the provisions of the California Labor Code relating to apprentice employment and training; and will require the Contractor to assume full responsibility for compliance with said section with respect to all Apprenticing Occupations involved in the Project. (Compliance with said Apprentice Utilization provisions of the Labor Code is not required for Public Works contracts involving less than $30,000 or less than twenty (20) Working days in duration).

00216 LAWS AND REGULATIONS (9/18/07)

The Contractor shall observe and comply with all Federal, State, and local laws, ordinances, Codes, orders, and regulations which in any manner affect those engaged or employed on the Work, the materials used in the Work, or the conduct of the Work. If any discrepancy or inconsistency should be discovered in this Contract in relation to any such law, ordinance, Code, order, or regulation, the Contractor shall report the same in writing to the Engineer. The Contractor shall indemnify and hold harmless the City, and its officers, agents, and employees, against all claims or liability arising from

violation of any such law, ordinance, Code, order, or regulation, whether by itself or by its employees or Subcontractors as stated in these Contract Documents. Any particular law or regulation specified or referred to elsewhere in these specifications shall not in any way limit the obligation of the Contractor to comply with all other provisions of Federal, State, and local laws and regulations.

00217 PERMITS AND CONSTRUCTION EASEMENTS (9/18/07)

The Contractor shall obtain and pay for all permits necessary for performance of the Work. Within thirty (30) calendar days after the Notice to Proceed, the Contractor shall obtain and pay all costs incurred and submit to the Engineer copies of all permits required for the construction and installation of all Work called for on this project.

When the Bid Proposal provides an allowance for “Permits”, only certain types of permits and certain permit fees are reimbursable. The reimbursable permit must be exclusively for permanent Work shown on the Plans and reimbursement will be limited to the actual permit fee shown on the permit’s receipt. The allowance for “Permits” cannot be used for any other costs such as those necessary to physically obtain the permit. The allowance for “Permits” also cannot be used for contractor-designed items, annual permits, temporary construction, or general permits that are useable for other projects. The Contractor will only be reimbursed for those permits that are included in the list below, unless otherwise specified:

1) Night Work, overload, grading, excavation, demolition, foundation, and building permits.

2) Electrical permits.

3) Mechanical permits.

4) Plumbing permits.

5) South Coast Air Quality Management District permits.

6) Fire sprinkler permit.

7) All Federal, State, County and City issued permits.

Rights of ways, easements, or rights of entry for the Work will be provided by the City. The Contractor shall make arrangements, pay for, and assume all responsibility for acquiring, using, and disposing of Work areas and facilities temporarily required which are necessary in addition to those provided by the City. The Contractor shall indemnify and hold the City harmless for all claims for damages caused by such actions.

00218 PARTIES EXCLUDED FROM FEDERAL PROCUREMENT AND NON PROCUREMENT PROGRAMS (10/17/01)

A list of individuals, firms and organizations which have been debarred, suspended or have voluntarily excluded themselves from Federal Procurement and Non Procurement Program is maintained by US General Services Administration. A copy can be obtained from Superintendent of Documents, US Government Printing Office, Washington, DC 20402, Tel: (202) 783-3238.

The City will not conduct business with an individual, firm or organization, and the Contractor shall not employ or otherwise utilize any Subcontractor, supplier or equipment vendor at any tier which is on the U.S. General Services Administration "List of Parties Excluded from Federal Procurement and Non

Procurement Programs". The Contractor shall not utilize or otherwise employ any Subcontractors or suppliers on the list of nonresponsible bidders maintained by the City Bureau of Contract Administration.

00219 BUSINESS TAX REGISTRATION CERTIFICATES (11/21/01)

The Contractor represents that it has, or will obtain upon award, the Business Tax Registration Certificate(s) required by the Los Angeles City Business Tax Ordinance. The Contractor shall maintain, or obtain as necessary, all such Certificates required of it under said Ordinance and shall not cause or allow any such Certificate to be revoked or suspended.

The City requires all firms that have business activity within the City of Los Angeles to pay City business taxes.

Payments for goods or services will be withheld unless proof of tax compliance is provided to the City. All firms and individuals that do business with the City will be required to provide a Business Tax Registration Certificate number or an exemption number as proof of compliance with Los Angeles City business tax requirements in order to receive payment for goods or services.

The Tax and Permit Division of the City Office of Finance has the sole authority to determine whether a firm is covered by business tax requirements.

00220 CONTRACTOR PROPOSED ALTERNATES AND "OR EQUALS" (12/6/01)

Unless otherwise noted, the Contractor may propose products, equipment, or materials to be an "or equal" to those specified in the Contract. These proposals must be submitted within thirty (30) days after Notice to Proceed along with sufficient substantiating data for the Engineer to determine equivalence. The substantiating data must demonstrate equivalence in terms of function, performance, reliability, quality, and general configuration to the items specified in the Contract Documents. The Engineer will be the sole arbiter of equivalence. Proposals that are submitted late or with incomplete substantiation are "Not Equal" and subject to summary rejection.

Contractor-proposed "or equals" that are accepted by the Engineer shall be coordinated with other items of Work and incorporated into the Work without time extensions and at no additional cost to the City.

00221 CONTRUCTION AND DEMOLITION WASTE MANAGEMENT (8/12/11)

The Contractor shall divert all Construction and Demolition (C&D) waste generated from the project in accordance with the City's C&D Waste Recycling Ordinance. Los Angeles Municipal Code requires that all mixed C&D waste material generated within the City of Los Angeles be taken to a City Certified C&D Waste Processor. Further, mixed C&D waste can only be legally collected, removed, or transported by City of Los Angeles Permitted Solid Waste Haulers. If the Contractor plans on collecting, removing, or transporting its own waste, it must first apply for and obtain a Solid Waste Hauler Permit from the Solid Resources Citywide Recycling Division of the Bureau of Sanitation.

Failure to meet the C&D waste recycling requirements as detailed above will result in the assessment of penalties up to $5,000 per each load of C&D waste not taken to City Certified Processors. Further, collecting, removing or transporting C&D waste within the City without a valid Solid Waste Hauler Permit is a criminal misdemeanor subject to fines and/or imprisonment.

Other sections of the Specification may require specific recycling rates in addition to the Los Angeles Municipal Code requirements.

00222 – 00299 NOT USED

00300 FINANCIAL LIABILITY (4/12/95)

The City's liability under this Contract shall not exceed the City's appropriation to fund the Contract at the time of Contract award. However, if the City shall appropriate funds for any successive years, the City's maximum liability shall not exceed the extent of such appropriation, subject to the terms and conditions of this Contract.

00301 CONTRACTOR'S OBLIGATIONS (3/21/14)

Only competent workers shall be employed on the Work.

Any person employed who is found by the Engineer or the Inspector to be incompetent, disorderly or otherwise objectionable, or who fails or refuses to perform Work properly, acceptably and as directed shall be immediately removed from the Work by the Contractor and not be reemployed on the Work.

The Contractor, at its sole cost and expense, shall perform all labor and services and furnish all the materials, tools, and appliances, except as hereinafter otherwise definitely provided, necessary or proper for performing and completing the Work required, in the manner and within the time stipulated in these specifications. The Contractor shall furnish, erect, maintain, and remove the construction plant and such temporary works as may be required. If, at any time before the commencement or during the progress of the Work or any part of it, the Contractor's methods or appliances appear to the Engineer or the Inspector to be unsafe, inefficient, or inadequate for securing the safety of the workers, the quality of the Work required, or the rate of progress stipulated, the Engineer or the Inspector may order the Contractor to increase their safety and efficiency or to improve their character, and the Contractor shall comply with such orders at its own expense. Neither the making of such demands by the Engineer nor the failure to make such demands shall relieve the Contractor of its obligation to secure the safe conduct of the Work, the quality of Work required, and the rate of progress stipulated in the Contract. The Contractor shall be fully responsible for the safety, efficiency, and adequacy of its plant, appliances, and methods, and for any damage which may result from their failure or their improper construction, maintenance, or operation.

All of the labor shall be performed and materials furnished pursuant to and in strict conformance with the Contract Documents, and in accordance with approved shop drawings. The Contractor shall complete the entire Work to the satisfaction of the Inspector and in accordance with the Specifications and Plans herein mentioned, at the prices fixed in the Contract.

Where articles or materials are especially manufactured or fabricated for delivery under these specifications, the Contractor shall at all times employ such workforce, plant, materials, and tools as will be sufficient to complete the performance of the Contract and every part thereof within the time limits stipulated herein. If the Contractor fails to employ sufficient workforce, plant, materials, tools, or to maintain adequate progress, the Engineer may require an increase in progress at any point or points or a modification of Plans and procedure in such a manner as to accelerate the Work. Failure to adequately staff the project shall be just cause for the City to terminate the Contract.

00302 CONTRACTOR'S REPRESENTATIVE AT THE SITE (1/30/03)

A technically qualified and English-speaking project representative shall be designated in writing as the Contractor's Representative at the job site, who shall supervise the Work and shall provide competent supervision of the Work until its completion. The Contractor's Representative shall be assigned full time and exclusively to this project. Alternate representatives with qualifications equal to or better than the previous representative may be designated. The Contractor's Representatives shall have at least five (5)

years of verifiable experience as the person primarily responsible for supervision of the Work on projects of the same or similar size and nature as this project. Within five (5) days after the Notice of Award the Contractor shall provide a statement to the Engineer and the Inspector with the following:

1) Identification and resume, showing the qualifications and experience of the Contractor's Representative and the alternate appointed to act in the place of the Contractor's Representative.

2) References of not less than two (2) previous projects on which the Contractor's Representative and the alternate had supervisory responsibility on a project of a similar nature and at least one-half or more of the cost of this project. Such references shall include names, addresses, and telephone numbers of owner representatives who worked on the project as well as project information such as project type, size, location and duration.

The Engineer and the Inspector reserve the right to disapprove any candidate named as the Contractor's Representative or alternate who fails to meet the provisions set forth herein. The Engineer and the Inspector reserve the right to remove, without any right to work on the project, either the Contractor's Representative or alternate, who in the sole opinion of the Engineer or the Inspector, has demonstrated incompetence, lack of ability, or other unsuitability to perform supervision of the Work.

If the Contractor's Representative or alternate leave the employ of the Contractor, the Contractor will be required to replace the individual(s) and fulfill the requirements of this Article within fifteen (15) calendar days. In no event shall any Work proceed in the absence of an approved representative.

The Contractor's Representative or alternate shall have full authority to act on behalf of the Contractor, including, but not limited to final approval of Change Orders and Supplemental Agreements. All directions given by the Engineer or the Inspector to said representative or alternate shall be considered as having been given to the Contractor. Such instructions given by the Engineer or the Inspector to the Contractor's Representative or alternate will be confirmed in writing. All instructions and directions given by the Engineer or the Inspector will be limited to matters properly falling within the Engineer's or the Inspector's authority as specified in "Authority of the Board, Engineer and Inspector" of these General Conditions.

The Contractor's Representative or alternate shall be present at the worksite at all times while Work is in progress. Failure to observe this requirement constitutes a suspension of the Work by the Contractor, until such time the Contractor's Representative or alternate is again present at the worksite. All Work performed while the Contractor's Representative or alternate is absent from the worksite is ineligible for payment. Work performed in violation of these provisions shall be removed and reconstructed, refabricated, or reinstalled under the required supervision. The Contractor is ineligible for time extensions or additional payment for costs or impact that directly or indirectly are caused by said suspension. Those ineligible costs and impacts include what the Contractor may incur for slowdown, delays, idled equipment, removals, reconstruction, refabricating, reinstalling and other. During such periods of noncompliance when the Contractor's Representative is not on site, written instructions issued by the Engineer or the Inspector to *any* employee of the Contractor is considered adequate notice to the Contractor.

Whenever the Work is defined as being suspended under the provisions of this Article, any such suspension in excess of ten (10) calendar days shall constitute just cause for the City to terminate the Contract under the provisions of "Termination of Contract by City (Contractor Default)" of these General Conditions.

00303 FAMILIARITY WITH PLANS AND SPECIFICATIONS (9/18/07)

It shall be the responsibility of the Contractor to be thoroughly familiar with all details of the Project, including the work of the Contractor's forces and all Subcontractors. The Contractor shall call the

following to the attention of both the Engineer and the Inspector in writing within twenty-four (24) hours of discovery, before any Work is performed:

1) Errors and omissions in the Plans and Specifications, including, but not limited to, code violations, typographical errors and notational errors where ambiguity or inadequate description exists;

2) Work on the Plans or in the Specifications which, if so constructed, would result in a conflict or interference with other Work or the Work of other trades, including the location of fixtures and equipment;

3) Existing improvements visible at the job site, for which no existing disposition is made on the Plans or in the Specifications but which could reasonably be assumed to interfere with the satisfactory completion of the improvements contemplated by the Plans and Specifications.

Failure to notify shall constitute a waiver by the Contractor of any claim for delay or other damages occasioned by such defect. If the Contractor proceeds with the Work without instructions from the Engineer, the incorrect Work shall be removed and corrections made to comply with the Engineer's instructions, at no cost to the City.

00304 JOB CONDITIONS (9/18/07)

The Contractor shall determine the nature and types of work to be performed, ascertain all conditions affecting construction procedure and sequencing of Work operations in the execution of the Work, including condition of available roads and streets, or clearances, restrictions and other limitations affecting transportation and ingress and egress to the job site. This determination must be made during the Bidding Period with any costs and impact included within the Bid.

The Contractor shall observe any "Site Security" restrictions described in the General Requirements or the Plans.

Whenever the Work requires entry into an operating plant, occupied building, working facility or other secured location, observe the following unless otherwise noted:

1) No vehicles are allowed except delivery trucks and Contractor's identified vehicles and equipment.

2) It shall be the Contractor's sole responsibility to arrange and pay for offsite employee parking and to provide transportation from the parking area to the Work site.

3) The Contractor shall fully cooperate with all authorities on the job site and other contractors not related to the Work of this Contract who might be at the job site.

4) The Contractor shall fully comply with all regulations in force at the job site.

00305 JOB BULLETIN BOARD (11/27/01)

When a Field Office is required, the Contractor shall provide and mount a Job Bulletin Board at the field office in a location where it can be readily seen by all of the Contractor employees. The bulletin board shall be substantially built to a minimum size of 900 mm high x 1200 mm wide (3' x 4') shall be fitted with a framed safety glass door and lock. The glass on the outside shall be protected with a 12 mm x 12 mm (½" x ½") galvanized wire mesh screen permanently attached to the frame. The bulletin board shall be finished inside and outside with two (2) coats of an exterior paint.

00306 RESPONSIBILITY FOR SITE (10/17/01)

The Contractor is in full charge of and responsible for the job site and the Work. The “Interface/ Coordination Requirements” of the General Requirements describe interfaces with other contractors working on the job site. No other operations of any nature shall be performed except as specifically authorized in the Contract Documents or as authorized by the Engineer.

The Contractor shall exercise care not to damage improvements and adjacent land. The Contractor shall correct any damage caused within seventy-two (72) hours by restoring the land and improvements damaged to their original condition and shall indemnify and hold the City harmless for any such damage as specified in “Indemnification” of these General Conditions.

00307 WORKMANSHIP AND MATERIALS (4/12/95)

All materials, parts and equipment furnished by the Contractor for the Work shall be new, high grade and free from defects. Materials and work quality shall be subject to the Inspector’s approval.

00308 INJURY AND ILLNESS PREVENTION - SAFETY MEASURES (9/18/07)

Safety is the responsibility of the Contractor. The Contractor shall observe and comply with the safety provisions of all applicable laws, building and construction Codes, safety and health regulations of the California Code of Regulations, and with applicable City Safety Policies.

Every employer (Prime Contractor and/or Subcontractor) employed on the Project shall establish, implement, and maintain an effective Injury and Illness Prevention Program in accordance with Section 3203 of the General Industry Safety Orders.

Each Contractor/Subcontractor shall make the applicable Injury and Illness Prevention Program specific for site conditions and type of Work to be performed on the Project.

Each prime Contractor and Subcontractor working on the Project shall make its Injury and Illness Prevention Program available to the Inspector and the Engineer prior to beginning any Work on the Project.

If a work procedure or site condition exists that violates the Contractor’s/Subcontractor’s Injury and Illness Prevention Program or any other safety standard, the Engineer or Inspector may order the Contractor to immediately comply with said safety provisions, and the Contractor shall comply with such orders at its own expense. If the Contractor fails to act promptly, the Engineer or Inspector is authorized to suspend the Work. Failure of the Engineer or the Inspector to make such demands shall not relieve the Contractor of its obligations to secure the safe conduct of the Work.

If a work procedure or site condition creates an immediate hazard to the health or safety of the public, City employees, property, or a licensee, the City may suspend all work on the project. Without prior notice, the City may also correct such hazardous conditions using other forces or contractors, at the Contractor’s sole expense. Any delays or impacts arising on the Work as a result of such an emergency shall be at the sole expense of the Contractor with no time extension, additional reimbursement for extended overhead, or interest on monies due, allowed for the Contractor.

First aid facilities and supplies shall be kept and maintained by the Contractor at the site of the Work.

The Contractor shall cause all persons within the construction area to wear protective helmets. In addition, all employees of the Contractor and its Subcontractors shall be provided with, and required to

use, personal protective and life saving equipment set forth in California Construction Safety Orders and the OSHA Safety and Health Standards for Construction.

The Contractor shall provide safety equipment, material, and assistance to City personnel to properly inspect all phases of the Work, including final inspection. Such equipment, material and assistance shall include, but not be limited to testing for the presence of explosive or toxic gases and oxygen deficiency in confined spaces, blowers, ventilators, first aid supplies and equipment, ladders, scaffolds, shoring, and personnel for standby assistance as required. Personal safety devices such as harnesses, lanyards, and self-contained breathing apparatus will be provided by the Bureau of Contract Administration, unless otherwise noted. When the Work requires specialized safety equipment, the Contractor shall provide new sets of such equipment, the training deemed necessary by the Inspector, and maintenance of such equipment. When asbestos is being removed, the requirements of the CCR, Title 8, Div. 1, Chapter 4, Subchapter 4, “Construction Safety Orders,” and Subchapter 7, “General Industry Safety Orders,” shall be implemented.

In cases involving exposure of City personnel to toxic/hazardous materials and/or elements, the City Personnel Department, Occupational Safety Office, shall have field review authority over the Contractor’s operations.

For additional requirements, refer to “Safety and Preconstruction Safety Conference” of the General Requirements.

00309 PROTECTION OF PERSONS AND PROPERTY AND RESTORATION OF EXISTING IMPROVEMENTS (1/05/10)

The Contractor shall not destroy, remove, or otherwise disturb any existing survey monuments or reference points without authorization from the Engineer. No pavement breaking or excavation shall be started until all survey monuments or other reference points that will be disturbed by the construction operations have been properly referenced by the Engineer. It shall be the Contractor’s responsibility to notify the Engineer and the Inspector of the time and location that Work will be done. Such notification shall be sufficiently in advance of construction so that there will be no delay due to waiting for survey points to be satisfactorily referenced for restoration. All survey monuments or reference points disturbed, without authorization by the Engineer, shall be accurately restored by the City at the Contractor’s sole expense after all street or roadway resurfacing has been completed.

Unless otherwise noted, all construction operations shall preserve existing drainage paths, vehicular and pedestrian access. The Contractor shall also regularly attend to dust, mud, trash, noise, debris, and etceteras, caused by their construction operations to prevent a public nuisance.

All paved areas including asphalt concrete berms cut or damaged as a result of construction shall be replaced with similar materials and of equal thickness to match the existing adjacent undisturbed areas, except where specific resurfacing requirements have been called for in the Contract Documents or in the requirements of the agency issuing the permit. All temporary and permanent pavement shall conform to the requirements of the affected pavement owner. All pavement which is subject to partial removal shall be neatly saw cut in straight lines.

In order to obtain a satisfactory junction with adjacent surfaces, the Contractor shall saw cut back and trim the edge so as to provide a clean, sound, vertical joint before permanent replacement of an excavated or damaged portion of pavement. Damaged edges of pavement along excavations and elsewhere shall be trimmed back by saw cutting in straight lines. All pavement restoration and other facilities restoration shall be constructed to finish grades compatible with adjacent undisturbed pavement.

Where sidewalks have been removed for purposes of construction, the Contractor shall place suitable temporary sidewalks, properly protected, promptly after backfilling and shall maintain them in satisfactory condition until the final restoration thereof has been made.

When existing planted areas are regraded, or removed and replaced because of the Contractor's operations, the soil in these areas shall be prepared and the area replanted-in-kind. All landscape materials shall conform to the requirements of the owner of the affected planted area.

All utilities encountered along the line of the Work shall be maintained continuously in service during all the operations under the Contract, unless other arrangements satisfactory to the Engineer are made. Utilities shall include, but not be limited to, all above or below-ground conduit, pipes, ducts, cables, and appurtenances associated with oil, gas, water, steam, irrigation, process, sewer, storm drain, wastewater, air, electrical, power, instrumentation, communication, telephone, cable, TV, and lighting systems, whether or not owned by the City.

The Contractor shall protect all existing utilities and improvements not designated for removal. Potholing for utilities and structures shown or addressed on the drawings shall be accomplished at the Contractor's expense. The Contractor shall determine the exact locations and depths of all utilities indicated on the Drawings. The Contractor shall make exploratory excavations of all utilities. The Contractor, in conformance with City Ordinance No. 150,478, shall pothole existing subsurface installations carrying unstable substances to determine their locations and elevations before commencing excavation. All such exploratory excavations shall be performed as soon as practicable after award of the Contract and in any event, a sufficient time in advance of construction to avoid possible delays to the Contractor's Work. When such exploratory excavations show the utility location as indicated on the Drawings to be in error, the Contractor shall so notify the Inspector and the Engineer. The Contractor should not rely upon plan designation of location of underground utilities. The number of exploratory excavations and extent of potholing required shall be that number which is sufficient to determine the alignment and grade of the utility. These costs are a part of the Bid.

Prior to any excavation in the vicinity of any existing underground facilities, the Contractor shall notify the Inspector and the Engineer, and the respective authorities representing the owners or agencies responsible for such facilities, not less than three (3) Workdays, nor more than five (5) Workdays, of their intention to begin excavation. The Contractor shall make arrangements for and provide access such that a representative of said owners or agencies may be present during such Work. If the proposed excavation is within 10 feet of a high priority subsurface installation, as defined by Section 4216 of the California Government Code, the Contractor shall conduct an onsite meeting with the owner of the utility to determine actions or activities required to verify the location of the high priority subsurface installation before proceeding with any excavation activities.

Before commencing any excavation, the Contractor shall obtain an Underground Service Alert (USA) inquiry I.D. number. Two workdays, shall be allowed after the I.D. number is obtained and before the excavation work is started so that utility owners can be notified. If the utility owner is the City, a confirmation number indicating the City has been notified shall be obtained by USA and/or the Contractor from the appropriate City department. The I.D. number together with the date acquired shall be reported to the Inspector when calling for inspection. I.D. numbers will not be given more than ten (10) Workdays before starting excavation work.

Unless otherwise indicated on the Plans or Specifications, where the proper completion of the Work requires the temporary or permanent removal and/or relocation of an existing utility or other improvement, which is shown on the Plans, the Contractor shall, at its own expense, remove and, without unnecessary delay, temporarily replace or relocate such utility or improvement to a place and in a manner as directed by the Engineer, and the owner of the facility. In all cases of such temporary removal or relocation, restoration to former location shall be accomplished by the Contractor in a manner that will restore or

replace the utility or improvement as nearly as possible to its former locations and to as good or better condition than found prior to removal. When utilities that are to be removed are encountered within the area of operations, the Contractor shall notify the Engineer not less than fifteen (15) days in advance for necessary measures to be taken to prevent interruption of service.

The Contractor shall notify the Engineer thirty (30) calendar days in advance of any proposed connection, and shall notify the Engineer and the Inspector twenty-four (24) hours prior to the actual connection, to any existing utility.

Any utility or improvement which is damaged by the Contractor shall be immediately repaired at the Contractor's expense, to a condition equal to, or better than, the condition it was in prior to such damage or temporary relocation. If the Contractor fails or refuses to promptly repair the utility or improvement, the City may perform the necessary Work at the Contractor's expense. The Contractor will also not be entitled to any time extension, additional reimbursement, extended overhead, or interest on monies due. The Contractor is not relieved of provisions of this Article even in the event such damage occurs after backfilling or is not discovered until after completion of backfilling.

All repairs to a damaged improvement shall be inspected and approved by the Inspector and an authorized representative of the improvement owner before being concealed by backfill or other Work. In case of damage, which in the opinion of the Engineer or the Inspector, threatens the safety of persons or property, the Contractor shall immediately make all repairs necessary for removal of the hazard. Should the Contractor fail to promptly take all necessary action, the City has the option to remove any hazard resulting from damages caused by the Contractor at the Contractor's expense without waiving any other rights the City may have. The Contractor will also not be entitled to any time extension, additional reimbursement, extended overhead, or interest on monies due.

In the event that the Contractor damages any existing utilities that are not shown on the Plans or the locations of which are not made known to the Contractor prior to excavation, the Contractor shall immediately notify the Inspector and take all measures necessary to prevent further damage. The Contractor shall then immediately make a written report to the Engineer and shall make repairs as directed by the Engineer.

Notwithstanding that an existing utility or substructure is not shown on the original Plans and Specifications, if the existence and location thereof was made known to the Contractor prior to excavation, the utility or substructure constitutes an existing known condition, and the Contractor is responsible for protecting the utility or substructure.

Damage to a utility known to the Contractor shall be repaired at the Contractor's expense.

00310 NON-CONFORMING WORK (1/30/03)

Except as set forth in this Article, all non-conforming Work and materials, in place or not, shall be removed immediately from the site or corrected to conform to all requirements of the Contract Documents, by the Contractor, at the sole expense of the Contractor.

If the Contractor fails to remove, replace or correct any non-conforming Work or materials within seventy-two (72) hours of discovery, the Inspector or the Engineer may cause such Work or materials to be removed and replaced. Such removal and replacement shall be at the sole expense of the Contractor with no entitlement to time extensions, additional reimbursement, extended overhead, or interest on monies due. In addition, all such cost shall be deducted from any amounts that are due or may become due to the Contractor.

Failure of the Inspector or the Engineer to notify the Contractor of any non-conforming Work shall not constitute acceptance of any non-conforming Work. The Contractor's obligation to remove, replace or correct any non-conforming Work, whenever discovered, shall continue to the end of the guaranty-warranty period provided for in "Guaranty-Warranty" of the General Requirements. The City reserves and retains all rights and remedies at law against the Contractor and their Surety for correction of any and all latent defects discovered after the guaranty-warranty period.

Any delays or impacts arising on the Work as a result of construction, fabrication or delivery of non-conforming work or materials shall be at the Contractor's sole expense, with no time extension, additional reimbursement for extended overhead, or interest on monies due allowed.

Examination of covered Work may be ordered by the Engineer or the Inspector for any reason. The Work shall be uncovered by the Contractor and if such Work is found to be in accordance with the Contract Documents, the City will issue a Change Order authorizing payment for the cost of examination and replacement. If such Work is found to be not in conformance with the Contract Documents, the Contractor shall correct the non-conforming Work and the cost of examination and correction of the non-conforming Work shall be borne solely by the Contractor.

Failure of the Contractor to comply with the requirements of this Article shall constitute default of the Contract by the Contractor and the City may terminate the Contract as provided for in Termination of Contract by City (Contractor Default).

00311 SUBCONTRACTORS AND SUB-SUBCONTRACTORS (10/28/14)

The Contractor shall perform on the site and with its own organization not less than fifty percent (50%) of the total Contract Price, unless a different percentage is designated in the Bid Proposal. Any items designated "specialty items" in the Bid Proposal may be performed by subcontract and the amount of all such "specialty items" may be deducted from the Contract Price before computing the amount of Work required to be performed by the Contractor with its own organization. The dollar value included in the percentage performed by the Contractor shall include the value of labor, materials and equipment to be incorporated or used in the Work and directly purchased by the Contractor and shall not include the value of Work, including labor, materials and equipment, incorporated or used in the Work, performed or provided by Subcontractors.

To be eligible for award of this Project, the Board requires Bidders to subcontract a minimum of its total Bid to qualified Subcontractors, as discussed in the "Mandatory Subcontracting Minimum (MSM) Requirements" of the Bid Proposal. Failure to list Subcontractors and the subcontracted dollar amounts on the applicable pages of the Bid Proposal to satisfy the MSM is cause for the Bid to be declared nonresponsive and rejected by the Board.

Bidders must list all Subcontractors in the Bid, regardless of the dollar amount of the work to be performed, if the Bidder wishes to have the Subcontract amount credited toward meeting both the MSM and MBE/WBE levels of participation of the Project. Subcontractors added to the project following acceptance of the Bid and award of the Project will not be credited toward meeting the required MSM and/or MBE/WBE levels of participation for this Project.

MSM credit will not be given to a joint venture partner listed as a Subcontractor by a joint venture.

Listed vendors and/or Suppliers will be limited to 60% of their listed dollar value toward achieving both the MSM and the anticipated MBE/WBE levels of participation for this Project, unless the vendor and/or Supplier manufactures or substantially alters the materials/supplies.

The designated percentage of the total Contract Price the Contractor is to perform may not be reduced below that level by the addition of Subcontractor's added after Award of the Project.

The Inspector, acting on behalf of the Board, will be responsible for approval of all Subcontractors, whether Bid-listed or not, and all Sub-subcontractors, at any level, employed on the Project.

Each Subcontractor who will perform Work or render services in an amount in excess of one-half of 1 percent of the Contractor's total Bid or $10,000.00, whichever is greater, must be listed in the original Bid.

Subletting or Subcontracting of any portion of the Work in excess of one-half of 1 percent of the Contractor's original total Bid or $10,000.00, whichever is greater, for which no Subcontractor was designated in the original Bid shall only be permitted in cases of public emergency or necessity, and then only after a finding reduced to writing as a public record of the Inspector setting forth the facts constituting the emergency or necessity.

If the Contractor fails to specify a Subcontractor, or if the Contractor specifies more than one Subcontractor for the same portion of Work to be performed under the Contract in excess of one-half of 1 percent of the Contractor's total original Bid or $10,000.00, whichever is greater, the Contractor agrees that it is fully qualified to perform that portion of Work itself, and that it shall perform that portion itself.

The Contractor shall set forth in its Bid the following: The name, location of the place of business, telephone number, California State Contractor's License Number and dollar amount of each Subcontractor who will perform Work, labor, service, supply specifically fabricated materials or equipment in an amount in excess of one-half of 1 percent of the Contractor's total Bid, or $10,000.00, whichever is greater.

The Contractor shall list only one Subcontractor for each portion of Work as defined by the Contractor in its Bid.

Acceptance by the Board of its Bid is dependent upon each Bid listed Subcontractor, and all subsequently approved additional Subcontractors, performing the dollar value of Work listed or approved. Any reduction, increase, or other change to any Subcontract amount without prior approval is considered an Unauthorized Subcontractor Substitution and is subject to a penalty of ten (10) percent of the Subcontract amount, whether Bid-listed or not. A Subcontract dollar value increased or reduced as the result of a Change Order issued by the Engineer to add or delete from the original scope of Work shall not be subject to a penalty for an Unauthorized Subcontract Substitution.

Acceptance by the Board of its Bid shall not entitle Subcontractors to recognition for any direct or contractual relationship with the City, nor shall it constitute approval of the use of any materials other than those specified.

The Contractor shall be responsible for all acts of all Subcontractors at all tiers. The Contractor shall coordinate all work performed by subcontractors in the interest of the City.

All Subcontractors, at all tiers, who will be working on the Project shall be approved in writing by the Inspector prior to beginning Work, regardless of the dollar amount of Work to be performed, and whether or not they were listed in the original Bid.

Requests for approval of all Subcontractors, or request for substitution of a Subcontractor, shall be made in writing to the Inspector, and said request shall contain the following information for each Subcontractor:

1) Project Name

2) Project Work Order Number

3) Subcontractor's Name

4) Subcontractor's Address

5) Subcontractor's Phone Number

6) Subcontractor's Status (WBE, MBE, OBE)

7) Subcontractor's State of California Contractor License Number

8) Subcontractor's City Business Tax Registration Certificate Number (BTRC)

9) Dollar amount of Subcontract work to be performed

10) Description of Subcontract work to be performed

Failure to provide any of the information listed will result in denial of approval until such time as the information is provided.

Failure to obtain approval of the Inspector prior to each Subcontractor, at any level, performing Work on the Project may result in suspension of Work by that Subcontractor, removal of Work performed by unapproved Subcontractors, assessment of penalties, and possible sanctions against the Contractor. Failure to obtain approval of any Subcontractor or Sub-subcontractor at any level is subject to a penalty of ten (10) percent of the total amount of work performed by said Subcontractor.

Additional Subcontractors may be added after the time of original Bid. The value of Work to be performed by additional Subcontractors may not be greater than one-half of 1 percent of the Contractor's original total Bid or ten thousand dollars ($10,000.00), whichever is greater, unless the Subcontractor will be performing Work added by Change Order causing changes or deviations from the original Contract.

The Contractor shall provide the dollar amount of Work to be performed in all requests for additional Subcontractors and/or Sub-subcontractors. Failure to specify a dollar amount of Work to be performed will result in denial of additional Subcontractors until such time as the amount is provided.

Failure of the Contractor to request and obtain approval for a reduction in either a Bid-listed Subcontract amount or the Subcontract amount of a Subcontract added after the original Bid shall result in a penalty of ten percent of the Subcontract amount.

A Contractor whose Bid is accepted may not:

1) Substitute any person as Subcontractor in place of a Subcontractor listed in the original Bid, except that the Inspector, acting on behalf of the Board, may consent to the substitution of another Subcontractor for one of the following situations:

   A) When the Subcontractor listed in the original Bid or proposal after having had a reasonable opportunity to do so fails or refuses to execute a written contract, when that written contract, based upon the general terms, conditions, plans and specifications for the project involved or the terms of that Subcontractor's written bid, is presented to the subcontractor by the Contractor.

   B) When the listed Subcontractor becomes bankrupt or insolvent.

C) When the listed Subcontractor fails or refuses to perform its subcontract.

D) When the listed Subcontractor fails or refuses to meet the bond requirements of the Contractor as set forth herein.

E) When the Contractor demonstrates to the Inspector's satisfaction that the name of the Subcontractor was listed as a result of an inadvertent clerical error.

F) When the listed Subcontractor is not licensed pursuant to the State of California Contractor's License Law.

G) When the listed Subcontractor refuses to obtain a City of Los Angeles Business Tax Receipt Certificate (BTRC).

H) When the Inspector concurs with the Contractor that the Work being performed by the listed Subcontractor is unsatisfactory and not in substantial accordance with the Contract Documents, or the listed Subcontractor is delaying or disrupting the progress of the work.

I) When the listed Subcontractor fails to submit an Affirmative Action Plan acceptable to the Inspector.

J) When the Board determines that a listed Subcontractor is not a responsible contractor.

2) Permit a Subcontract to be voluntarily assigned or transferred or allow it to be performed by anyone other than the original Subcontractor listed in the original Bid, without the consent of the Inspector.

3) Other than in the performance of Change Orders causing changes or deviations from the original Contract, sublet or Subcontract any portion of the Work in excess of one half of 1 percent of the Contractor's total Bid as to which its original Bid did not designate a Subcontractor.

4) Reduce the dollar amount of a Bid-listed Subcontract without the written approval of the Inspector.

A request for substitution of any Subcontractor, at any level, whether Bid-listed or not, must be made in writing to the Inspector and must include letter(s) of explanation as to the reason for the requested substitution.

It is considered a substitution if anyone other than the Bid-listed and/or approved Subcontractor(s), including the Contractor, performs any portion of the Work designated to be performed by said Subcontractor.

Failure to obtain approval for a Subcontractor substitution may result in rejection of the affected Work, a penalty of ten (10) percent of the total amount of the Subcontract, and possible sanctions by the City.

All substitutions of Subcontractors, whether MBE/WBE or not, shall be approved in writing by the Board prior to any Work being performed by the substituting Subcontractor.

The Contractor shall conduct a Good Faith Effort prior to approval of any requested Subcontractor substitution, regardless of the status (WBE/MBE/OBE/DBE) of the contractor being substituted for. For MBE/WBE/OBE Subcontractor substitution requests, the Contractor shall comply with the Good Faith Effort requirements of Part III (F) (2) of the Bid Proposal. The Good Faith Effort for any requested

Subcontractor substitution must be reviewed and approved by the Special Research and Investigation Section of the General Services Division of the Bureau of Contract Administration, whether the Subcontractor was Bid listed or approved after the Award of the Project.

There shall be no decrease in dollar value of Work to be performed by Subcontractors approved as a substitute for a Bid-listed Subcontractor without a change in scope of the Work to be performed by the originally Bid-listed Subcontractor. Written evidence of a change of scope must be provided by the Engineer prior to approval of a change in dollar value of a Bid-listed Subcontractor.

Prior to approval of the Contractor's request for substitution, the Inspector shall give notice in writing to the Subcontractor affected by the Contractor's request to substitute and of the reasons for the request. The notice shall be served by certified or registered mail to the last known address of the Subcontractor. The listed Subcontractor who has been so notified shall have five (5) Workdays within which to submit written objections to the substitution. Failure to file these written objections within five (5) Workdays of notification shall constitute the listed Subcontractor's consent to the substitution. Notification by the Inspector may be made by phone in lieu of written notification via certified or registered mail if agreed to by the listed Subcontractor and followed by written request. Upon notification by phone, the listed Subcontractor may file written objections within five (5) days of notification.

If written objections are filed, the Inspector shall give notice of at least five (5) Workdays to the listed Subcontractor of a hearing on the Contractor's request for substitution.

The Contractor, as a condition to assert a claim of Inadvertent Clerical Error in the listing of a Subcontractor, shall within two Workdays after the time of the original Bid opening by the Board give written notice to the Inspector and copies of such notice to both the Subcontractor he claims to have listed in error and the intended Subcontractor who had bid to the Contractor prior to Bid opening.

Written notice of an Inadvertent Clerical Error shall be forwarded within two (2) days after the time of the original Bid opening by every Contractor claiming such an error. Failure to forward such notice within the time prescribed shall make any such subsequent claim of Inadvertent Clerical Error invalid.

Any listed Subcontractor who has been notified by the Contractor of an Inadvertent Clerical Error shall be allowed six (6) Workdays from the time of the Bid opening to submit to the Inspector and to the Contractor written objection to the Contractor's claim of Inadvertent Clerical Error. Failure of such listed Subcontractor to file such written notice within the six (6) Workdays shall constitute agreement that an advertent clerical error was made.

The Inspector shall, in the absence of compelling reasons to the contrary, consent to the requested substitution based on an Inadvertent Clerical Error if:

1) The Contractor, the Subcontractor listed in error, and the intended Subcontractor each submit an affidavit to the Inspector along any additional information as the parties may wish to submit that an Inadvertent Clerical Error was in fact made, provided that the affidavits from each of the three parties are filed within eight (8) Workdays from the time of the original Bid opening, or

2) If such affidavits are filed by both the Contractor and the intended Subcontractor within eight days of the original Bid opening but the Subcontractor whom the Contractor claims to have listed in error does not submit within six (6) Workdays, to the Inspector and to the Contractor, written objection to the Contractor's claim of Inadvertent Clerical Error as provided in this article.

If such affidavits are filed by both the Contractor and the intended Subcontractor but the listed Subcontractor has, within six (6) Workdays from the time of the original Bid opening, submitted to the Inspector and to the Contractor written objection to the Contractor's claim of Inadvertent Clerical Error, the

Inspector shall investigate the claims of all parties and schedule a public hearing before the Board to determine the validity of such claims. Any determination shall be based on the facts contained in the declarations submitted under penalty of perjury by all three parties and supported by testimony given to the Board. The Board may, on its motion or that of any other party, admit testimony of other Contractors, any Bid registries or depositories, or any other party in possession of facts, which may have a bearing on the decision of the Board. The findings of the Board shall be final.

The Contractor shall pay its Subcontractors, within seven (7) days of receipt of each progress payment, the respective amounts allowed the Contractor on account of the work performed by its Subcontractors, to the extent of each Subcontractor's interest therein. Payments to Subcontractors shall be made based on the payment estimate approved for payment by the Inspector.

The Contractor shall forward to the Inspector a monthly report indicating the date and amount of each payment made to its Subcontractors from the most recent progress payment. If the Contractor has a written agreement with any Subcontractor allowing for payment later than 7 days after receipt of each progress payment, the Contractor shall include the written agreement(s) in its monthly report.

00312 RESPONSIBILITY OF CONTRACTOR TO ACT IN EMERGENCY (11/21/01)

When an emergency arises creating an imminent hazard to persons or threatening the loss or damage to property, the Contractor shall take prudent action without instruction from the City. The Contractor shall immediately notify the Engineer and the Inspector of any emergency action taken. During such emergencies, if the Contractor fails to act, the Engineer or Inspector may instruct the Contractor to take action. Should the Contractor still fail to act, the Engineer or Inspector may respond to the emergency with other forces or contractors at the Contractor's sole expense. Claims for additional time, compensation or interest will be rejected if the Contractor's actions or inaction created the emergency. Similarly, any Claims will be offset by the amount that the Contractor's actions or inaction aggravated the emergency.

00313 ASSIGNMENT (2/09/95)

The Contractor shall not assign, transfer, convey or otherwise dispose of this Contract or any of the proceeds thereunder unless written consent of the City has been obtained. No right under this Contract or claim for any proceeds due or to become due hereunder shall be asserted against the City, or persons acting for the City, by reason of any so-called assignment, transfer or conveyance of this Contract or any part thereof unless such assignment, transfer or conveyance has been authorized by the written consent of the City. The instrument of assignment, transfer or conveyance shall contain a clause subordinating the claim of the assignee, transfer or conveyor to all prior liens for services rendered or materials supplied for the execution of the Work.

00314 NOTIFICATION OF HAZARDOUS SUBSTANCES (10/17/01)

The existing facilities or Jobsite may contain asbestos, PCBs, corrosives, carcinogens, or other hazardous materials. Should the Contractor or any of its Subcontractors, while performing Work on or in the vicinity of existing facilities, unexpectedly encounter any material identified in the California Code of Regulations, Title 8, as a hazardous material not shown on the Plans or addressed in the specifications, or have reason to believe that any other material encountered may be a hazard to human health and safety and/or the environment, the Contractor shall stop the Work, cordon off the affected area to secure entry, and shall immediately notify the Inspector and the Engineer. Removal and disposal of the hazardous material not shown on the Plans or addressed in the specifications, if the Engineer deems it necessary, will be done by and at the expense of the City. The City will provide the Contractor, upon request, with copies of Material Safety Data Sheets (MSDS) covering hazardous materials identified by

the Contractor that are encountered in existing facilities during the course of the Work and that are not removed by the City.

In the event that the Contractor is delayed in the completion of the Contract solely because of such hazardous materials or conditions not previously identified in the Contract Documents, the Contractor shall be entitled to an extension of time in accordance with “Unavoidable Delay” of these General Conditions.

For new construction Work and for all Contractor furnished supplies and equipment that may contain hazardous materials, the Contractor shall develop and implement a written Hazard Communication Program for its employees in accordance with the California Code of Regulations. The Contractor’s basic written Hazard Communication Program shall be submitted to the Engineer and the Inspector prior to the start of Work at the site, and shall be revised and kept current as required by the continuing progress of the Work. The Contractor’s Hazard Communication Program shall also include the MSDS for all hazardous materials the Contractor will be using at the facility. All provisions concerning MSDS for hazardous materials shall be met before the hazardous material is delivered to the site.

The Engineer shall be provided with three (3) copies and the Inspector with four (4) copies of the Contractor’s written Hazard Communication Program, Contractor provided MSDS, and all revisions and modifications thereto.

The Contractor and Subcontractors shall comply with all State and Federal statutes and regulations on training, handling, storage, public notification, and disposal of hazardous materials and hazardous wastes. In the event that the Contractor or its Subcontractors spills or releases hazardous materials, the Contractor shall immediately notify the Inspector and the Engineer and any required agencies of the spill or release and the Contractor shall stop the Work, and cordon off the affected area to secure entry. Removal and disposal of the hazardous material, if the Engineer deems it necessary, will be done by the City at the Contractor’s expense. Further, the Contractor shall notify the Engineer and the Inspector when hazardous materials are brought on-site and when hazardous materials and hazardous wastes are removed from the site. Hazardous Materials brought on site shall be accompanied by four (4) copies of MSDS, which shall be provided to the Inspector before such materials are unloaded.

00315 INDEPENDENT CONTRACTOR (10/21/99)

The Contractor represents that it is fully experienced and properly qualified to perform the class of Work required for the Contract and that it is properly licensed, equipped, organized and financed to perform the Work. The Contractor shall be an independent contractor. The Contractor is not an agent of the City in the performance of the Contract, and shall maintain complete control over its employees and its Subcontractors and Suppliers of any tier. Nothing contained in the Contract or any Subcontract awarded by the Contractor shall create any relationship between any Subcontractor and the City. The Contractor shall perform the Work in accordance with its own methods, in compliance with the terms of the Contract.

00316 INDEMNIFICATION (10/17/01)

Except for the active negligence or willful misconduct of the City, the Contractor undertakes and agrees to defend, indemnify and hold harmless, through legal counsel acceptable to the City, the City, and any and all of the City’s Boards, Officers, Agents, Employees, Assigns, and Successors in Interest from and against all suits and causes of action, claims, losses, demands and expenses, including, but not limited to, attorney's fees and cost of litigation, damage or liability of any nature whatsoever, arising out of or related to the performance or nonperformance by Contractor or its Subcontractors, Sub-Subcontractors, or Suppliers, of any tier, of any portion of the construction of the Project, including but not limited to Contractor’s negligent acts, errors, omissions, breach of contract, breach of warranty (express or implied), or willful misconduct.

It is agreed that such defense and indemnity shall extend to the City's Architect/Engineer or other Design Consultant providing services under written agreement with the City covering any portion of the Project. Provided, however, that the Design Consultant shall be solely responsible for the enforcement of any request made by said Consultant for indemnification or defense by the Contractor. It is further provided that the City shall have no liability whatsoever for any failure of the Contractor to comply with any request from the consultant for indemnity or defense.

It is further agreed that the defense and indemnity obligations of the Contractor under this Article shall not extend to the liability of the Design Consultant or its agents, employees or subconsultants, arising as a result of such indemnitee's own active negligence, errors or omissions or from (1) the preparation or approval of maps, Plans, opinions, reports, surveys, change orders, designs or Specifications, or (2) the giving of or failure to give directions or instructions by the indemnitee provided that such giving or failure to give is the primary cause of the damage or injury.

00317 INSURANCE (1/05/10)

These provisions apply unless otherwise noted in the General Requirements.

A) GENERAL

During the term of this Contract and without limiting the Contractor's indemnification of the City, the Contractor shall provide and maintain at its own expense, insurance having the limits customarily carried and actually arranged by the Contractor but not less than the amounts and types listed on the Insurance Requirements Form in these Contract Documents, covering its operations hereunder subject to the following conditions as they may variously apply:

1) ADDITIONAL INSURED/ADDITIONAL INTEREST/LOSS PAYEE

The City, its Boards, Officers, Agents, and Employees shall be included as:

a) Additional Insureds in all required General Liability and Automobile Liability insurance.

b) Named Insureds in all required Owners and Contractors Protective Liability and Builder's Risk insurance policies.

c) Loss Payee As Its Interest May Appear in all required property, fidelity or Surety coverages.

2) INSURANCE APPROVAL

All insurance required hereunder shall conform to the City requirements established by Charter, ordinance or policy. Evidence of insurance shall be approved by the Office of the City Administrative Officer, Risk Management prior to commencement of any Work or tenancy under this Contract in accordance with the Los Angeles Administrative Code.

3) ALTERNATIVE PROGRAMS/SELF-INSURANCE

Alternative Risk Financing mechanisms such as Risk Retention Groups, Risk Purchasing Groups, off-shore carriers, captive insurance programs and self-insurance programs are subject to separate approval after the City has reviewed their financial statements.

4) ADMITTED CARRIER/LICENSED CALIFORNIA BROKER

All Insurance must be provided by an insurer admitted to do business in California or written through a California-licensed surplus lines broker or through an insurer otherwise acceptable to the City.

Non-admitted coverage must also contain a Service of Suit provision whereby the underwriters will submit as necessary to any court of competent jurisdiction in California and agree that all matters arising thereunder will be determined in accordance with the law and practice of such court. It must further give the name and address of the underwriter's agent for service of process located within California or must nominate the California Insurance Commissioner as such agent.

5) CONTRIBUTION NOT REQUIRED

The Contractor's insurance shall be primary and will not require contribution or shall be endorsed to effect these provisions.

6) CANCELLATION/REDUCTION IN COVERAGE NOTICE

With respect to the interest of the City, if an insurance company elects to cancel insurance before the stated expiration date, or declines to renew in the case of a continuous policy, or materially reduces the coverage period by changing the retroactive date (if any), or the extended discovery period (if any), or reduces the stated limits other than by impairment of an aggregate limit, or materially reduces the scope of coverage which affects the City's interest, the company will provide the City at least thirty (30) calendar days (ten (10) calendar days for non-payment of premium) prior written notice of such election. Notice will be addressed as follows: CAO-RISK MANAGEMENT, MAIL STOP 132, CITY HALL EAST 1240, 200 NORTH MAIN STREET, LOS ANGELES, CA 90012-4190.

7) ACCEPTABLE EVIDENCE

Electronic submission via Track4LA™, the City's online insurance compliance system (http://track4la.lacity.org), is the preferred method for submitting evidence of insurance. Track4LA™ can be used by insurance brokers and agents to submit Contractor insurance certificates directly to the City using the ACORD 25 Certificate of Liability Insurance in electronic format. Insurance Industry Certificates of Insurance other than the ACORD 25 may also be accepted. However **all** Certificates must provide a thirty (30 days' notice provision (ten (10) days for non-payment of premium) AND an Additional Insured Endorsement naming the City an additional insured completed by Contractor's insurance company or its designee. If the policy includes an automatic or blanket additional insured endorsement, the Insurance Certificate must state that the City is an automatic or blanket additional insured. An endorsement naming the City as an insured is required on all Builder's Risk policies. An endorsement naming the City as Loss Payee as its Interest may appear is required on all property, fidelity or Surety coverages.

Alternatively, the Contractor may submit a copy of the full insurance policy containing language which complies with subparagraphs 1) through 6) above.

Additional Insured Endorsements DO NOT apply to the following:

- Indication of compliance with statute, such as Workers' Compensation Law.

- Professional Liability insurance.

8) SEPARATION OF INSUREDS

Except with respect to the insurance company's limits of liability, each liability insurance policy shall apply separately to each insured against whom a claim or suit is brought. The inclusion of any person or organization as an insured shall not affect any right which such person or organization would have as a claimant if not so included.

9) RENEWAL

Once the insurance has been approved by City, evidence of renewal of an expiring policy may be submitted on a manually signed renewal endorsement or certificate form. If the policy or carrier has changed, however, new evidence as specified in paragraphs 1) through 8) above, must be submitted.

B) AGGREGATE LIMITS/REDUCTION IN COVERAGE

If any of the required insurance coverages contain annual aggregate limits, the Contractor must give the City written notice of any pending claim or lawsuit which will materially diminish the aggregate within thirty (30) days of knowledge of same. Further, the Contractor must take appropriate steps to restore the impaired aggregate limits or provide replacement insurance protection within thirty (30) days of knowledge of same. The City may, at its option, specify a minimum acceptable aggregate for each line of coverage required.

The Contractor shall not make any substantial reductions in scope of coverage (e.g., elimination of contractual liability or reduction of discovery period) which may affect the City’s protection without the City’s prior written consent.

C) MODIFICATION OF COVERAGE

The City reserves the right at any time during the term of this Contract to change the amounts and types of insurance required hereunder by giving the Contractor ninety (90) calendar days advance written notice of such change. If such change should result in substantial additional cost to the Contractor, the City agrees to negotiate additional compensation.

D) FAILURE TO PROCURE INSURANCE

The Contractor’s failure to procure or maintain required insurance or a self-insurance program during the entire term of this Contract shall constitute a material breach of this Contract under which the City may immediately suspend or terminate this Contract or, at its discretion, procure or renew such insurance to protect the City’s interests and pay any and all premiums in connection therewith, and recover all monies so paid from the Contractor.

E) UNDERLYING INSURANCE

The Contractor shall be responsible for requiring indemnification and insurance as it deems appropriate from its consultants, agents and Subcontractors, if any, to protect the Contractor’s and the City’s interests, and for ensuring that such persons comply with any applicable insurance statutes. The Contractor should seek professional advice in this regard.

F) WORKERS' COMPENSATION

By signing this Contract, the Contractor hereby certifies that it is aware of the provisions of Section 3700 et seq., of the Labor Code which require every employer to be insured against liability for Workers' Compensation or to undertake self-insurance in accordance with the provisions of that Code, and that it will comply with such provisions at all such times as they may apply during the performance of the Work pursuant to this Contract.

A waiver of subrogation in favor of the City will be required when Work is performed on City premises under hazardous conditions. The Contractor's Workers' Compensation and Employer's Liability insurance shall be endorsed accordingly.

G) ALL RISK BUILDER'S RISK/INSTALLATION FLOATER

During the course of construction, the Contractor shall secure and maintain an All Risk Builder's Risk Insurance policy covering loss, damage or destruction of property, including materials in transit and stored on and off site, in an amount equal to the value of the construction and materials on hand.

An Installation Risk or "Floater" Policy, written to cover only specific types of equipment during construction, may be provided to cover damage to Work or high valued equipment or materials.

Coverage shall remain in force until the Work is completed and accepted by the City. Acceptable evidence of coverage shall be in the form of an endorsement to the policy which names the City as a Named Insured and as Loss Payee As Its Interest May Appear.

H) TYPICAL COVERAGES REQUIRED

The coverages required in A above shall be at least as broad as:

1) General Liability: Insurance Services Office Commercial General Liability coverage (Occurrence Form CG 00 01) with an edition date prior to 2004. Coverage shall include protection for the City as additional insured with regard to the completed operations hazard.

2) Automobile Liability: Insurance Services Office Form Number CA 00 01 covering Automobile Liability, code 1 (any auto).

3) Professional Liability: If applicable, errors and omissions liability appropriate to the consultant's profession, with a discovery period of not less than twelve (12) months after completion of Work or termination of Contract.

I) TYPICAL LIMITS OF LIABILITY

Unless otherwise specified in Form Gen. 146/IR, the Contractor shall maintain limits no less than:

1) General Liability: $1,000,000 per occurrence, $2,000,000 aggregate for bodily injury and property damage. A separate aggregate shall apply to completed operations.

2) Automobile Liability: $1,000,000 per accident for bodily injury and property damage.

3) Employer's Liability: $1,000,000 per accident for bodily injury or disease.

1) Professional Liability: $1,000,000 per claim.

K) CONTRACT BONDS

Before the execution of the Contract by the Board, the Bidder shall file with the Board Surety bonds satisfactory to the Board in the amounts and for purposes noted below. Bonds shall be duly executed by a responsible corporate Surety, authorized to issue such bonds in the State of California and secured through an authorized agent with an office in California. Bonds shall be issued by a Surety who is listed in the latest revision of U.S. Department of Treasury Circular 570, is authorized to issue bonds in California, and whose bonding limitation shown in said circular is sufficient to provide Bonds in the amount required by the Contract. The Bidder shall pay all Bond premiums, costs, and incidentals. On Contracts estimated by the Engineer to be less than $2 million, Bonds may be obtained from an insurance company with a Certificate of Authority from the California Insurance Commissioner authorizing the company to write Surety insurance within the State of California.

Each Bond shall be signed by both the Bidder and the Surety, and the signature of the authorized agent of the Surety shall be notarized.

The Bidder shall provide two good and sufficient surety bonds. The "Payment Bond" (Material and Labor Bond) shall be for not less than one hundred percent (100%) of the Contract Price, to satisfy claims of material suppliers and of mechanics and laborers employed by it on the Work. The bond shall be maintained by the Contractor in full force and effect until the Work is accepted by the Board, and until all claims for materials and labor are paid, and shall otherwise comply with the California Civil Code.

The "Performance Bond" shall be for one hundred percent (100%) of the Contract Price to guaranty faithful performance of all Work, within the time period prescribed, in a manner satisfactory to the Board, and that all materials and Workmanship will be free from original or developed defects, and comply with requirements and guaranty specified in “Guaranty-Warranty” of the General Requirements.

Should any Surety at any time be unsatisfactory to the Board, notice will be given the Contractor to that effect. No further payments shall be deemed due or will be made under the Contract until a new Surety shall qualify and be accepted by the Board.

Changes in the Work, or extensions of time, made pursuant to the Contract, shall in no way release the Contractor or Surety from its obligations. Notice of such changes or extensions shall be waived by the Surety. In addition to the bonds detailed above, the Contractor shall provide a guarantee bond as detailed in “Guaranty-Warranty” of the General Requirements.

Assistance in obtaining the City-required bid, payment and performance surety bonds is available through the City of Los Angeles Bond Assistance Program at (213) 258-3000 or http://cao.lacity.org/risk/BondAssistanceProgram.pdf.

00318 SERVICE OF NOTICE (2/09/94)

The delivering of any notice, instruction, claim or protest, or other written communication, personally to the Contractor or the Contractor’s Representative or to the Engineer, the Inspector, or to the City Clerk of the City shall constitute service therefore upon the Contractor, the Engineer, the Inspector, or the City, respectively.

The depositing of a post-paid (Registered Mail) wrapper directed to the official address of the Contractor, the Engineer, the Inspector, or the City in any post office, of any notice, instruction, claim or protest, or

written communication, shall be deemed sufficient service thereof upon the Contractor, the Engineer, the Inspector, or the City, respectively, and the date of said service shall be the day following the date of postmark.

The official address of the Contractor shall be the address given in the accepted Bid or such other address as the Contractor may subsequently designate in writing either to the Engineer or to the City. The official address of the Engineer, the Inspector, and the City will be supplied to the Contractor after the award.

00319 AGENT TO ACCEPT SERVICE (10/21/99)

The Contractor shall maintain within Los Angeles County a duly authorized agent as identified in the Article entitled Service of Notice to accept service of legal process on its behalf, and shall keep the City advised of such agent's name and address during the duration of the Contract and for three (3) years after the Final Payment, or as long as the Contractor has warranty obligations under the Article entitled "Guaranty-Warranty" of General Requirements, whichever period terminates later. In the event that no such duly authorized agent is on file with the City, the Contractor agrees that the Secretary of State of the State of California shall be the Contractor's agent for service of legal process.

00320 – 00399 NOT USED

00400 TEMPORARY SUSPENSION OR DELAY OF WORK (9/18/07)

If the Work of the Contract is suspended or delayed, the Contractor shall so notify the Engineer within twenty-four (24) hours after the start thereof. If the Contractor is entitled to reimbursement for such suspension or delay, as specified hereinafter, the Contractor shall submit a completely detailed statement of the costs thereof, to the Engineer, within twenty (20) calendar days after the termination thereof. Failure to submit such statement of costs or notification within the time specified shall be deemed a waiver of any claims for delay or damages or both by the Contractor.

If the Work of the Contract is suspended or delayed through no fault of the City, except as provided for in Unavoidable Delay of these General Conditions, all expenses and losses shall be borne by the Contractor with no time extension, additional reimbursement for extended overhead, or interest on monies due, allowed to the Contractor.

If the Work of the Contract is suspended or delayed by an act of the City, or by failure of the City to furnish required information, and the Contractor thereby incurs expenses or sustains losses which could not have been avoided by the judicious handling of forces and equipment, and if by a diligent prosecution of the Work the Contractor could not have completed the Work before such suspension, the Contractor will be paid such amount as the Engineer may find to be a fair and reasonable compensation for such part of the Contractor's actual loss. In no case shall any compensation be made to cover any loss other than actual cash paid for wages, rental of equipment, and materials used in protection of the Work, all of which must be supported by satisfactory written evidence. Such wages shall not include the wages or salary of any individual not necessary for protection of the Work. The Contractor shall not be entitled to any mark-up for overhead or profit on damages or for extended duration or for interest on monies due for work satisfactorily completed prior to the suspension or delay.

The Contractor shall maintain complete and accurate daily records of all costs due to delay, clearly distinguishing them from the costs of other portions of the Work, and shall submit a detailed written report of such costs to the Engineer and the Inspector within twenty (20) calendar days of incurring the delay. Failure to comply shall result in waiver by the Contractor to any claims for additional payment and schedule change. In addition, the Contractor shall submit evidence of any cause of delay specified herein if it has not already done so.

As soon as practicable, following receipt of such report and evidence, if required, the Engineer will determine the nature and extent of such costs and will, if the Engineer finds that payment is due, issue a Change Order therefor, subject to the provisions in “Change Orders” of the General Requirements. If the Engineer determines that payment is not due, the Contractor will be so advised in writing. Should the Contractor disagree with such finding, Contractor may submit a notice of protest to the Engineer as provided in Claims and Protests. The Contractor shall provide the Engineer with access to its daily cost records or certified copies thereof as requested. All such records shall be retained by the Contractor and open to inspection and audit by the City and the Engineer. Except for the additional compensation provided hereinbefore, the Contractor shall have no claim for damage or compensation for any delay or hindrance whether or not contemplated by the Contract.

00401 UNAVOIDABLE DELAY (10/17/01)

Should the Contractor be obstructed or delayed in the completion of the Work from causes beyond its control and without its fault or negligence, and solely due to acts of God, acts of government in its sovereign capacity, riots, insurrections, wars, fires, floods, earthquakes, tidal waves, epidemics, quarantine restrictions, industry-wide strikes, freight embargoes, or unusually severe weather, it shall be entitled to a noncompensable extension of time.

The Contractor shall only be entitled to a noncompensable extension of time for Unavoidable delay in the Work which negatively impacts the critical path of the approved project schedule, and causes the Work of the project to extend beyond the approved Contract Completion date.

The Contractor shall be entitled to a noncompensable time extension only if it notifies the Engineer and the Inspector immediately at the time the Contractor is prevented from proceeding with the Work and follows with written notification of the causes of the delay within five (5) calendar days from the beginning of any delay. Also, the Contractor shall notify the Engineer and the Inspector immediately at the end of the delay and follow up with written notification of the cessation of delay within five (5) calendar days from the end of the delay.

Any claim for a time extension shall be made in writing within twenty (20) calendar days after the conclusion of the delay. The Engineer and the Inspector shall ascertain the facts and the extent of the delay and extend the time for completing the Work if, in their judgement, the findings of fact justify such an extension. The Engineer’s decision shall be final and conclusive, subject only to appeal as provided by Claims and Protests.

00402 ARCHAEOLOGICAL AND PALEONTOLOGICAL DISCOVERIES (9/18/07)

If items of archaeological or paleontological interest are discovered, the Contractor shall immediately cease excavation in the area of discovery and shall not continue until ordered by the Engineer. When resumed, excavation operations within the area of discovery shall be as directed by the Engineer.

Such discoveries include antiquated dwelling sites, stone implements or other artifacts, animal bones, human bones, fossils and the like. The Contractor shall be entitled to an extension of time and compensation in accordance with the provisions of Temporary Suspension or Delay of Work.

00403 COORDINATION WITH OTHER CONTRACTS (1/30/03)

The Board may allow other work at the site by the City’s own forces, utility owners or other direct contracts. If such other work to be performed was not noted in the Contract Documents, written notice thereof will be given to the Contractor prior to starting any such other work; and, if the Contractor believes that such performance will involve additional expense to the Contractor or requires additional time and the

parties are unable to agree as the extent thereof, the Contractor may make a claim therefor as provided under Claims and Protests.

Paving of roadway areas shall be withheld until planned utility changes or installations have been made under City permits and until verifications of completion of all such changes or installations have been received by the Inspector. The Contractor is responsible for assuring that verifications are submitted by the utilities. Underground final inspection and acceptance of sewer and storm drain installations shall precede paving operations.

The Contractor shall afford each utility owner and other contractor who is a party to such a direct contract (or the City, if the City is performing the additional work with City employees) proper and safe access to the site and a reasonable opportunity for the introduction and storage of materials and equipment and the execution of such work, and shall properly connect and coordinate the Work with theirs. The Contractor shall do all cutting, fitting and patching of the Work that may be required to make its several parts come together properly and integrate with such other work. The Contractor shall not endanger any work of others by cutting, excavating or otherwise altering their work and will only cut or alter their work with the written consent of the Engineer and the others whose work will be affected. The duties and responsibilities of the Contractor under this Article are for the benefit of such utility owners and other contractors to the extent that there are comparable provisions for the benefit of the Contractor in said direct contracts between the City and such utility owners and other contractors.

If any part of the Contractor's work depends upon proper execution or results of the work of any such other contractor or utility owner or the City, the Contractor shall inspect and promptly report to the Engineer in writing any delays, defects or deficiencies in such work that renders it unavailable or unsuitable for such proper execution and results. The Contractor's failure to do so will constitute an acceptance of the other Work as fit and proper for integration with the Contractor's Work. The exception is latent defects in the other work.

00404 TERMINATION OF CONTRACT BY CITY (CONTRACTOR NOT AT FAULT) (9/18/07)

The Contract may be terminated, in whole or in part, at any time, by the City, at its sole discretion, without cause and for the City's convenience. Such termination will be accomplished by delivery of a written "Notice of Termination" to the Contractor, specifying the extent to which performance of the Work under the Contract or portion of the Contract shall be terminated and the date upon which such termination shall become effective.

After receipt of a Notice of Termination, except as otherwise directed by the City, the Contractor shall:

1) Stop Work under the Contract on the date and to the extent specified in the Notice of Termination.

2) Notify the City in writing of all outstanding orders, Subcontracts and contracts entered into by Contractor for performance of the Work, including the (I) name and address of the vendor, supplier or Subcontractor; (ii) a copy of the complete contract, order or Subcontract; (iii) an accounting of the Work performed and compensation earned by the vendor, supplier or Subcontractor, and (iv) such other information as the City may request to assist it in determining whether to terminate or accept assignment of the order, Subcontract or contract.

3) Upon written notice by City, terminate all Subcontracts, orders and contracts, of any tier, related to the performance of the Work that the City determines shall be terminated and not assigned. Place no further orders or Subcontracts for Goods or services, except as may be necessary for completion of that portion of the Work that has not been assigned.

4) Place no further orders or Subcontracts for Goods or services, except as may be necessary for completion of that portion of the Work that has not been terminated.

5) Settle outstanding liabilities and Claims arising out of such termination of orders and Subcontracts, with the Acceptance of the City if required (which Acceptance shall be final for the purposes of this Article).

6) Assign to the City in the manner, at the times, and to the extent directed by the City all of the rights, titles, and interests of the Contractor under such orders, contracts and Subcontracts so terminated.

7) Transfer title and deliver to the City in the manner, at the times and to the extent directed by it, the fabricated or unfabricated parts, Work in process, completed Work, supplies, and other Goods procured as a part of, or acquired in connection with the performance of the Work terminated; and completed or partially completed plans, drawings, information and other items that would have been required (per the Specifications) to be furnished to the City if the Contract had been completed.

8) Use its best efforts to sell the property of the types referred to above in the manner, at the times, to the extent, and at the price(s) directed or authorized by the City, providing that the:

   A) Contractor is not required to extend credit to any purchaser;

   B) Contractor may acquire any such property under the prescribed conditions; and/or proceeds of any such transfer or disposition are applied or otherwise credited to reduce payments made by the City to the Contractor under the Contract.

9) Take any action that may be necessary, or that the City may direct, for the protection and preservation of the property related to the Contract that is in the possession of the Contractor and in which the City has or may acquire an interest.

10) Complete performance of that portion of the Work that has not been terminated by the Notice of Termination, as applicable and in accordance with the Contract.

After receipt of a Notice of Termination for the City's convenience, the Contractor shall submit its termination Claim to the City requesting payment of such sums as are permitted under the terms of this Article, in the form and with the certification(s) prescribed by the City for Claims and Protests. Such Claim shall be submitted promptly but in no event later than thirty (30) days from the effective date of termination, unless one or more extensions are granted in writing by the City upon written request by the Contractor during such six-month period or authorized extension thereof. However, the City may receive and act upon any termination Claim at any time after the thirty (30) days period or any extension thereof, if it determines that the facts justify such action. Upon failure of the Contractor to submit its termination Claim within the time specified, the City will determine the amount due the Contractor, if any, on the basis of information available, and will pay the Contractor the amount so determined. Such determination shall be final and binding and payment shall be in full settlement for the Work performed under the Contract.

Subject to the provisions of this Article, the Contractor and the City may agree upon the total or partial amount to be paid to the Contractor by reason of the total or partial termination pursuant to this Article. The agreed upon amount shall under no circumstances include any sum for lost profits on the terminated portion of the Work or for consequential damages, of any kind. If agreement is reached, the Contract will be amended by Modification accordingly and the Contractor will be paid the agreed upon amount.

In the event of failure of the Contractor and the City to agree on the total amount to be paid the Contractor by reason of the termination of Work pursuant to this Article, the City will pay the Contractor the amounts determined by the City as follows, exclusive of any amounts agreed upon in accordance with the preceding Paragraph:

The Contractor's actual cost for the Work properly performed by the Contractor as of the date of termination, including a 5% allowance for profit on such costs; plus, the reasonable cost of preserving and protecting property; plus, other reasonable costs incidental to the termination of the Work under the Contract, including expense incurred to determine the amounts due; provided however, that the maximum payable or paid for any portion of the completed Work shall not exceed the values listed in the corresponding bid item of Schedule of Values.

The total sum to be payable or paid to the Contractor, exclusive of the settlement amounts described in the Paragraph immediately above, shall not exceed the total Contract Price less the:

1) Payments made previously by the City for the Work; plus

2) A prorated portion of the total Contract Price for the terminated portion of the Work as determined by the Engineer.

Except for normal spoilage and to the extent that the City will have otherwise expressly assumed the risk of loss, the fair value (as determined by the City) of property that is destroyed, lost, stolen, or damaged (so as to become undeliverable to the City or other buyer as described above) shall be excluded from the amounts paid to the Contractor.

In arriving at the amount due the Contractor under this Article, a deduction shall be made for the following:

1) Any claim that the City may have against the Contractor in connection with the Contract; and

2) The agreed upon price for and/or proceeds from the sale of goods or other items acquired or sold by the Contractor that have not been otherwise recovered by or credited to the City.

Under such terms and conditions as it may prescribe and at its sole discretion, the City may make partial payments against costs incurred by the Contractor in connection with terminated portion of the Contract whenever the City decides that the aggregate of such payments is within the amount to which the Contractor is entitled hereunder. If the total of such payments is in excess of the amount finally agreed upon or determined to be due under this Article, such excess shall be payable by the Contractor to the City upon demand together with interest at a rate equal to that set forth in California Code of Civil Procedure, Section 685.010.

Under no circumstances shall the Contractor be entitled to anticipatory or unearned profits or consequential damages as a result of a termination of partial termination under this Article, or for any other termination by the City. The payment to the Contractor determined in accordance with this Article shall constitute the exclusive remedy of the Contractor for termination hereunder.

Anything contained in the Contract to the contrary notwithstanding, a termination under this Article shall not waive any right or claim to damages that the City may have; the City may pursue any course of action that it may have by law or under the Contract; and shall not relieve Contractor of its warranty obligations with respect to any Work performed prior to such termination.

If the termination hereunder is only for a part of the Work, the Contract Price shall be reduced by the amount of the Contract Price applicable to the portion of the Work which is terminated, including overhead and profit, on the basis of one or more of the following:

1) Unit prices stated in the Contract or agreed upon by the City and the Contractor.

2) A lump sum determined by the Engineer, based on the estimate costs including overhead and profit of the terminated portions of the Work.

00405 TERMINATION OF CONTRACT BY CITY (CONTRACTOR DEFAULT) (9/18/07)

In the event of conduct by the Contractor which is determined by the Engineer or the Inspector to constitute default, the City may either suspend the Work under the provisions of Temporary Suspension or Delay of Work of these General Conditions or, upon ten (10) calendar days' written notice to the Contractor, terminate the Contract as provided herein. Default by the Contractor shall occur whenever it shall declare bankruptcy; become insolvent or assign its assets for the benefit of its creditors; fail to provide materials, equipment, or workmanship meeting the requirements of the Specifications; disregard or violate provisions of the Contract Documents or the Engineer's or the Inspector's instructions; cause a material breach of the Contract; fail to prosecute the Work according to the approved progress schedule; or fail to provide a qualified representative, competent workers or Subcontractors. Upon request, the Contractor will be provided a hearing by the Board to contest the recommendation of the Engineer or the Inspector as to default by the Contractor.

In the event the Contract is terminated pursuant to this Article, the City may take possession of the Work and of all materials, tools, equipment, and property of the Contractor, which have been provided in connection with the Work, and may complete the Work by whatever method or means the City may select. The unpaid balance of the Contract cost for completing the Contract Work shall be used to complete the Work in accordance with the Contract Documents. If cost of completing the Work exceeds the unpaid balance, the Contractor shall pay the excess amount to the City. If such cost is less than the unpaid balance, the Contractor shall not have claim to the difference except to such extent as may be necessary, in the opinion of the Engineer, to reimburse the Contractor or the Contractor's sureties for any unpaid expense properly incurred for materials, tools, equipment, property, and labor devoted to the prosecution of the Work, or which the City shall have received the benefit. In computing such expenses, as it relates to equipment and property, the salvage value at completion of Work shall be deducted from the salvage value at the time the Contract was terminated, and the difference shall be considered as an expense. If after termination for failure of the Contractor to fulfill contractual obligations (Contractor Default), it is determined by a Court of competent jurisdiction that the Contractor had not failed to fulfill contractual obligations, the termination shall be deemed to have been for the convenience of the City. In such an event, adjustment of the Contract Price shall be made as provided in Termination of Contract by City (Contractor Not at Fault)".

00406 PARTIAL ACCEPTANCE (9/18/07)

The City shall have the right to utilize or place into service any item of equipment or other usable portion of the Work prior to completion of the entire project. The Engineer will notify the Contractor in writing identifying the specific portion or portions of the Work to be so utilized or otherwise placed into service. Following inspection by the Bureau of Contract Administration's Final Inspector and completion of a Partial Final Inspection Correction List, a "Statement of Partial Completion" will be issued.

It shall be understood by the Contractor that until a "Statement of Partial Completion" is issued, all responsibility for care and maintenance of all items or portions of the Work to be placed in use shall be borne by the Contractor. Upon issuance of a "Statement of Partial Completion", the City will accept responsibility for the protection and maintenance of all such items or portions of the Work described in the

written notice, and it is further understood that the manufacturer's warranties of any affected equipment will commence not later than the date for commencement of the warranties indicated on the “Statement of Partial Completion”. However, the Contractor shall retain full responsibility for satisfactory operation of the total project and the Contractor’s guarantee period shall commence only after the issuance of the Statement of Completion. Such guarantee of total systems operation shall include that portion or portions of work covered by the “Statement of Partial Completion”.

The issuance of a “Statement of Partial Completion” for any part of the Work shall not relieve the Contractor of its obligation to promptly remedy any omissions and latent or unnoticed defects in the Work covered by the “Statement of Partial Completion”. The City shall have the right to restrict the Contractor’s use of the occupied portion of the Work but shall allow the Contractor reasonable access to complete or correct items required by the Contract Documents.

The City may, if the Work is progressing satisfactorily, release part of the retention on portions of the Work for which a “Statement of Partial Completion” has been issued, provided that the following conditions have been met:

1) Partial Final Inspection corrections have been completed to the satisfaction of the Inspector on the portions of work to be utilized or placed into service;

2) The Contractor submits a written request to the Inspector for release of retention which includes a verifiable valuation of the identified portions of the Work covered by the “Statement of Partial Completion”;

3) Impacted Subcontractors, major suppliers and the Contractor’s Surety all agree in writing to release of retention;

4) There are no Stop Notices on file with the Board against the Contractor involving any portion of the affected Work; and

5) Both the Engineer and Inspector agree that a portion of the retention should be released for the affected Work.

00407 FINAL ACCEPTANCE (02/21/08)

When all work has been completed to the satisfaction of the Inspector, the Inspector shall request in writing a Full Final Inspection be performed by the Final Inspector. The Full Final Inspection conducted by the Final Inspector may include the Contractor and the Engineer. A Final Inspection Correction List will be provided to the Contractor and the Engineer upon completion of the Final Inspection. All corrections listed on the Final Inspection Correction List shall be completed within thirty (30) days of issuance of the Final Inspection Correction List. Failure to complete all corrections within thirty (30) days of issuance of the Final Inspection Correction List shall result in the Final Inspection being performed again.

The date of completion of the Project shall be the date of Final Field Acceptance of the Project when all physical corrections have been completed. The Final Inspector will issue the Statement of Completion indicating the date of Final Field Acceptance of the Project.

If there are no physical corrections to be completed following the Full Final Inspection, the Final Inspector will issue the Statement of Completion indicating the date of Final Field Acceptance of the Project.

Final Field Acceptance of the Project shall establish the following:

1) Start date of the Contractor's material and workmanship Guaranty-Warranty for the total Project.

2) Start date of any equipment or material warranties which had not previously been started.

3) Date the City assumes responsibility for maintenance, security, and safety of the Project.

Upon issuance of the Statement of Completion by the Final Inspector and completion of all administrative requirements of the contract, the Inspector of Public Works and City Engineer shall prepare a Joint Report which contains the recommendation of the Inspector of Public Works that the Board accept the Project. The Board will formally accept the project based on the information contained in the Joint Report.

00408 LIQUIDATED DAMAGES (9/18/07)

Time is of the essence in completing the Work required by the Contract. If the Contractor fails or refuses to complete the Work or any part thereof within the time fixed by the terms of the Contract, or any approved extension thereof, the actual damage to the City due to the delay will be difficult or impossible to determine. In lieu thereof, the Contractor shall pay to the City, as fixed and agreed, liquidated damages for each day of delay in completion, the sum or sums as set forth in the Contract Documents. The Contractor shall be liable for the amount thereof. The City reserves the right, however, to terminate the Contractor's completion of the Work, charging against the Contractor and its sureties any excess cost occasioned the City thereby, together with liquidated damages accruing until such time as the City may reasonably complete the Work.

Permitting the Contractor to continue and complete the Work, or any portion thereof, after the time fixed herein for completion, or after the expiration of any extensions of said time, shall in no way operate as a waiver on the part of the City of any of its rights under the Contract.

00409 – 00499 NOT USED

00500 CHANGES AND EXTRA WORK (9/18/07)

The Engineer may, at any time, without notice to the Sureties, by written order designated or indicated to be a Change Order, order performance of extra work or make any change, addition or deletion in the Work, including but not limited to changes in the Specifications including Plans and designs; in the time, method or manner of performance of the Work; in the City furnished facilities, equipment, materials, services, or site; or directing acceleration in the performance of the Work.

Upon receipt of such Change Order, the Contractor shall promptly proceed with the Work covered thereby, which shall be performed in accordance with the provisions of the Contract Documents except as otherwise specifically provided.

In the event that Contractor receives any written order or direction by the Engineer or Inspector that is not so designated or indicated to be a Change Order, but which Contractor believes to constitute an extra, change, addition or deletion in the Work, then Contractor shall, prior to performance of any Work related thereto, give written notice to the Engineer and Inspector confirming Contractor's belief that such order or direction is believed to be a Change Order within one (1) working day of Contractor's receipt of such order

or direction. Compensation for the extra, change, addition, or deletion in the Work will be in accordance with the provisions of “Change Orders” of the General Requirements.

Contractor conclusively waives any right to additional compensation, costs, expenses, damages or extension of time associated with an extra, change, addition or deletion to the Work that is performed by Contractor without either (i) a written order signed by the Engineer designated or indicated to be a Change Order and any change, addition or deletion, or (ii) a written notice issued by Contractor in accordance with the provisions of this Article.

During the progress of the Work, it may be necessary for the Engineer to issue written field orders in the form of an Emergency Change Order. Upon receipt, The Contractor shall immediately proceed with the Engineer’s written directive to the limits described in Authority of the Board, Engineer, and Inspector.

Except as provided in this Article, no other order, statement, or conduct of the Engineer or Inspector shall be treated as a change under this Article or shall entitle the Contractor to an adjustment in the Contract Price or Contract Completion Date.

Except for claims based on defective Specifications, no Claim for any change under this Article shall be allowed for any costs incurred more than twenty (20) calendar days before the Contractor gives written notice as required. Except as otherwise provided in the Contract Documents, in the case of defective specifications for which the Engineer is responsible, the adjustment shall include any increased cost the Contractor reasonably incurred in attempting to comply with those defective specifications.

If the Contractor intends to assert a Claim for an adjustment in the Contract Price under this Article, it must, within twenty (20) calendar days after receipt of a written Change Order or the furnishing of a written confirmation notice as hereinbefore specified, submit a written statement to the Engineer setting forth the general nature and monetary extent of such claim and all factual grounds therefor, including documented actual costs. The Contractor may include the statement of claim in the written notice as hereinbefore specified. Failure to comply with the twenty (20) calendar day notice requirement shall be deemed a waiver of Claims by the Contractor.

No adjustment shall be made under this Article for any suspension, delay, interruption, change or any other cause, to the extent that an adjustment is provided for or excluded under any other provision of the Contract.

Recovery of compensation, costs, expenses or damages resulting from delay, disruption, hindrance, or interference in the performance of the Work (including without limitation interruption of schedules, extended, excess or extraordinary field overhead and indirect overhead costs, loss of productivity and the impact, ripple or cumulative effect on other Work), shall not be permitted, and all rights thereto are conclusively waived by Contractor.

No Claim by the Contractor shall be allowed if the Claim is made after final payment under this Contract.

00501 DIFFERING SITE CONDITIONS (9/18/07)

Upon discovery and before further disturbance of any differing site conditions, the Contractor shall immediately notify the Inspector and the Engineer, followed by a written notice to the Engineer within twenty-four (24) hours of subsurface or latent physical conditions at the site differing materially from those indicated in the Contract Documents; or unknown physical conditions at the site, of an unusual nature, differing materially from those ordinarily encountered and generally recognized as inherent in the Work of the character provided for in this Contract; or materially differing from that represented in the Contract Documents which the Contractor believes may be hazardous waste (as defined in the California Health

and Safety Code and is required to be removed to a Class I, Class II or Class III disposal site in accordance with provisions of existing law).

The Engineer will promptly investigate the conditions. If the Engineer finds that conditions materially differ and will cause an increase or decrease in the Contractor's cost or the time required to perform any part of the Work, the Engineer will adjust the Contract by Change Order.

If the Contractor disagrees with the Engineer's determination the Contractor may request an adjustment to the Contract Price or Contract Completion Date. Within twenty (20) calendar days after it first discovered, or should have discovered in the exercise of diligence and extreme care, the existence of such Differing Site Condition, submit a written statement setting forth a detailed cost breakdown described in "Change Orders" of the General Requirements. The statement must include the Contractor's basis and calculation of the costs saved or incurred, detailed information demonstrating the effect on the Contractor's schedule of performance (in the same manner as required by the Contract Documents for requesting an extension of time), identification of the Escrow Bid Documents that formed the basis of the Contractor's Bid to perform the Work affected by such conditions, and a complete and detailed explanation of the factual basis for the request.

Failure by the Contractor to strictly comply with the requirements of this Article concerning the timing and content of any notice of Differing Site Conditions or of any request for adjustment in Contract Price or Contract Completion Date based on Differing Site Conditions shall be deemed a waiver of any Claim by the Contractor for increase in the Contract Price or extension of the Contract Completion Date by reason of such conditions.

No Claim by the Contractor for an adjustment hereunder shall be allowed if asserted after final payment under this Contract.

00502 – 00599 NOT USED

00600 CLAIMS AND PROTESTS (9/18/07)

A Claim that involves an extra, change, addition or deletion to the Work as set forth in Changes and Extra Work shall arise upon issuance of a final decision of the Engineer denying, in whole or in part, a request for adjustment in the Contract Price or Contract Completion Date; provided however, that failure to comply with the requirements of the articles for Changes and Extra Work or Differing Site Conditions shall be conclusively deemed to constitute grounds to deny such Claim.

A Claim that does not involve an extra, change, addition or deletion to the Work may be asserted only if the Contractor shall immediately and prior to performing the Work affected thereby give written notice to the Engineer and the Inspector of such circumstances and of Contractor's intention to file a Claim based thereon. Unless otherwise directed by the Engineer, the Contractor shall proceed without delay to perform the Work and to conform to any order, instruction, or decision of the Engineer with respect thereto.

The Contractor shall, within twenty (20) calendar days after it first knew, or in the exercise of diligence and extreme care should have known, of the circumstances giving rise to the Claim, file a written Claim with the Engineer, stating in detail all objections, grounds and reasons therefor. The Contractor shall, upon instruction by the Engineer or the Inspector, provide, within ten (10) days or such other time as agreed to between the Engineer, and the Contractor, any and all documents, records or other materials identified by the Engineer or the Inspector as necessary for the resolution of the Contractor's Claim.

Claims seeking time extensions shall be accompanied by such documentation as is required by "Contractor's Construction Schedule and Reports" of the General Requirements. Claims seeking recovery of compensation or adjustments to the Contract Price, whether or not based on extras, changes, additions or deletions to the Work, shall be in the form of Change Order Cost Quotations prepared in accordance with and subject to all of the requirements of "Change Orders" of the General Requirements, including without limitation the prohibition on use of "total cost" and "modified total cost" methodologies.

Contractor waives all rights to assert any claims or seek any relief in the form of extensions of time or recovery of additional compensation, costs, expenses, damages from the City that are not presented as a Claim in the manner specified and within the time stated herein. Contractor further hereby agrees that in the interest of avoiding the additional expense and potential inequity of piecemeal resolution of Claims, all decisions by Engineer shall be final and binding not only as to all matters asserted in the Claim, but also as to all matters (including without limitation all rights to extensions of time and recovery of extra compensation, costs, expenses and damages) not asserted in the Claim that were known to Contractor, or that could have been reasonably discovered by Contractor in the exercise of diligence and extreme care, at the time of submission of the Claim and that are in any way related to the subject matter of the Claim. All orders, instructions and decisions of the Engineer or the Inspector will be limited to matters properly falling within their respective authority as specified in Authority of the Board, Engineer and Inspector.

The Contractor will be informed of the Engineer's or the Inspector's decision within thirty (30) days after the Contractor last submits data pertinent to the Claim previously mentioned. In the case of a Claim that involves an extra, change, addition or deletion to the Work as set forth in Changes and Extra Work, if the Contractor accepts the decision of the Engineer or Inspector, then the Contractor and City shall enter into a Change Order adjusting the Contract Price and Contract Completion Date in accordance with such decision. In case a Claim does not involve an extra, change, addition or deletion to the Work as set forth in Changes and Extra Work and the Contractor accepts the decision of the Engineer or Inspector, then the Contractor and City shall enter into a Change Order setting forth the terms of the decision and, if appropriate, its effect on the Contract Price or Contract Completion Date. If the Contractor does not accept the decision of the Engineer or Inspector, it is recommended that further appeal of the Engineer's decision be conducted in accordance with the Issue Resolution Ladder, as defined in "Opportunity to Partner" of the General Requirements. If the dispute cannot be settled, the Contractor must elevate the appeal to the Dispute Review Board (if provided for under the terms of the General Requirements) or to the Board of Public Works (if the Contract Documents do not provide for a Dispute Resolution Board) in writing within twenty (20) calendar days after receipt of the Engineer's decision. The Board shall afford the Contractor an opportunity to be heard and to offer evidence in support of its appeal. All determinations of the Board with respect to Claims shall be final and binding.

In all matters concerning the validity, interpretation, performance, effect or otherwise of the Contract, the Federal regulations (if and to the extent expressly incorporated by reference in the Contract Documents), the laws of the State of California, and the Charter of the City of Los Angeles shall govern and be applicable. Pending final disposition of a Claim, the Contractor shall proceed diligently with the performance of the Contract and in accordance with the previously mentioned decision.

Any Claim, including without limitation any Claim filed on behalf of or having its source in a claim by Subcontractor, Sub-Subcontractor, or Supplier, at any tier, which the Contractor chooses to make to the City, shall be accompanied by the certification language set forth below signed by a responsible managing officer of the Contractor's organization, who has the authority to sign Subcontracts or Purchase Orders on behalf of the Contractor, and who has personally investigated and confirmed the truth and accuracy of the matters set forth in such certification. Submission of certification in accordance herewith is a condition precedent to the City's consideration of or decision on the Claim and to the filing and maintenance of any legal action or proceeding to enforce or recover monies under such Claim. Failure to

submit such a certification along with the Claim shall result in the Claim being returned to the Contractor without any decision, and shall waive the Contractor's right to pursue the Claim either on its own behalf or on behalf of such Subcontractor or Supplier.

I hereby certify under penalty of perjury that I am a managing officer of_____(Contractor's name) and that I have reviewed the Claim presented herewith on Contractor's behalf and/or on behalf of (Subcontractor's/Supplier's name(s)) and that the following statements are true and correct:

1) The facts alleged in or that form the basis for the Claim are true and accurate; and,

2) Contractor does not know of any facts or circumstances, not alleged in the Claim, that by reason of their not being alleged render any fact or statement alleged in the Claim materially misleading; and,

3) Contractor has, with respect to any request for money or damages alleged in or that forms the basis for the Claim, reviewed the job cost records (including those maintained by Contractor and by any Subcontractor or Supplier, of any tier, that is asserting all or any portion of the Claim) and confirmed with mathematical certainty that the losses or damages suffered by Contractor and /or such Subcontractor or Supplier were in fact suffered in the amounts and for the reasons alleged in the Claim; and,

4) Contractor has, with respect to any request for extension of time or claim of delay, disruption, hindrance or interference alleged in or that forms the basis for the Claim, reviewed the job schedules (including those maintained by Contractor and by any Subcontractor or Supplier, of any tier, that is asserting all or any portion of the Claim) and confirmed on an event-by-event basis that the delays or disruption suffered by Contractor and /or such Subcontractor or Supplier were in fact experienced for the durations, in the manner, and with the consequent effects on the time and/or sequence of performance of the Work, as alleged in the Claim; and,

5) Contractor has not received payment from City for, nor has Contractor previously released City from, any portion of the Claim.

Signature: _____

Name: _____

Title: _____

Company: _____

Date: _____

No Claim by the Contractor shall be allowed if made after final payment under this Contract.

00601 COMMENCEMENT OF STATUTE OF LIMITATIONS (11/21/01)

Any applicable statute of limitations shall commence to run and any alleged cause of action by the Contractor against the City arising out of or related to the Project shall be deemed to have accrued in any and all events no later than 30 days after Contractor's submittal of its last application for progress payment of Contract or Change Order Work satisfactorily performed.

00602 GOVERNING LAW (11/21/01)

The terms and conditions of this Contract shall be construed and interpreted under, and all respective rights and duties shall be governed by, the laws of the State of California. Wherever applicable each provision of these Contract Documents shall be interpreted in such a manner as to be effective and valid under applicable law, but if any provision of these Contract Documents shall be prohibited by or invalid under applicable law, such provision shall be ineffective to the extent of such prohibition or invalidity, without invalidating the remainder of such provision or the remaining provisions of these Contract Documents.

Unless otherwise provided in this Contract, all claims, counterclaims, disputes and other matters in question between the City and the Contractor arising out of or relating to this Contract or the breach of it will be decided by a Court of competent jurisdiction. It is understood that this Contract is executed and to be performed within the City and County of Los Angeles.

00603 VENUE (2/09/95)

This Contract will be executed and performed within the City and County of Los Angeles, California.

00604 NO WAIVER OF RIGHTS (4/12/95)

Neither the inspection by the City, nor any order by the City for payment of money, nor any payment for or acceptance of the whole or any part of the Work by the City, nor any extension of time, nor any possession taken by the City, shall operate as a waiver of any provision of this Contract, or any power herein reserved to the City, or any right to damages herein provided, nor shall any waiver of any breach in this Contract be held to be a waiver of any other or subsequent breach.

00605 ACCEPTANCE OF FINAL PAYMENT CONSTITUTES RELEASE (4/12/95)

The acceptance by the Contractor of final payment shall release the City, the Engineer, the Inspector, their officers, agents, representatives, or employees, as representatives of the City, from all claims and all liability to the Contractor for all things done or furnished in connection with the Work and every act of the City relating to or arising out of the Work.

00606 PATENTS AND COPYRIGHTS (10/17/01)

The Contractor shall include in its Bid the patent fees or royalties on any patented article or process which may be furnished or used in the Work. The Contractor shall indemnify and hold the City harmless from any legal action that may be brought for infringement of patents. The Contractor’s attention is directed to "Notice of Patents, Data, and Copyright Regulations" of the Federal Labor Standards.

The Contractor shall bear all costs arising from the use of patented goods and /or processes used on and/or incorporated into the Work. When use of these goods and/or processes is judged to be an infringement and their use is banned, the Contractor, at its own expense, shall, with concurrence of the Engineer, do one of the following:

1) Secure for the City the right to continue using goods and/or processes by suspension of the injunction or by procuring a license(s);

2) Replace said goods and/or processes with non-infringing goods and /or processes;

3) Modify said goods and/or processes so that they become non-infringing; or

4) Remove said goods and/or processes and refund the sum paid therefor without prejudice to any other rights of the City.

The preceding shall not apply to any goods manufactured to the detailed design of the City contained in the Contract Documents.

00607 PUBLIC RECORDS ACT (4/06/00)

All records, documents, Plans, specifications and all other information relating to the conduct of the City's business, including information submitted by the Contractor, shall become the exclusive property of the City and except as provided by law shall be deemed public records. Said information shall be subject to the provisions of the California Public Records Act (Government Code Sections 6250 et seq.).

Under no circumstances will the City be responsible or liable to the Contractor, submitter or any other party for the disclosure of any records or information submitted to the City, regardless of whether such records or information are labeled "Trade Secret", "Confidential", or "Proprietary" (or words to similar effect) and regardless of whether the disclosure is required by law or a court order or occurs through inadvertence, mistake, or negligence on the part of the City or its officers, employees, and/or contractors.

The City will not advise as to the nature or content of documents entitled to protection from disclosure under the California Public Records Act", including interpretations of the Act or the definition of "Trade Secret". The submitting party shall be solely responsible for all determinations made under the Act, and where appropriate for clearly and prominently marking each and every page or sheet of information with "Trade Secret", "Confidential", or "Proprietary". Each submitting party is advised to contact its own legal counsel concerning the California Public Records Act and its applicability to the submitting party's own circumstances.

In the event of litigation concerning the disclosure of any information submitted by the submitting party, the City's sole involvement will be as a stakeholder, retaining the information until otherwise ordered by a court. The submitting party, at its sole expense and risk, shall be responsible for any and all fees and costs for prosecuting or defending any action concerning the information, and shall indemnify and hold the City harmless from all costs and expenses including attorneys' fees, in connection with such action.

END OF SECTION

BUREAU OF ENGINEERING

FERNANGELES PARK
STORMWATER CAPTURE PROJECT
WORK ORDER NO. EW40079F

MASTER GENERAL REQUIREMENTS

APRIL 14, 2025

City of Los Angeles
California

Department of Public Works
Bureau of Engineering

TABLE OF CONTENTS
DIVISION 01 – GENERAL REQUIREMENTS

01100 SUMMARY

01050 TABLE OF CONTENTS
01111 ABBREVIATIONS AND REFERENCE STANDARDS
01112 DESCRIPTION OF WORK
01113 DIVISIONS OF TECHNICAL SECTIONS OF PROJECT MANUAL
01114 ISSUANCE OF DRAWINGS AND THE PROJECT MANUAL
01115 MANDATORY PROVISIONS
01116 ELECTRONIC DOCUMENT CONTROL
01120 INTERFACE / COORDINATION REQUIREMENTS
01140 CONTRACTOR'S USE OF THE PREMISES
01150 STORAGE OF MATERIALS AND EQUIPMENT

01200 PRICE AND PAYMENT PROCEDURES

01211 ALLOWANCE FOR EQUIPMENT SUBSTITUTIONS FOR COMPATIBILITY PURPOSES
01212 FIXED CASH ALLOWANCE ITEMS
01251 CHANGE ORDER REQUESTS
01252 CONSTRUCTION INCENTIVE CHANGE PROPOSAL
01253 DIFFERING SITE CONDITION
01254 CHANGE ORDERS
01255 PRICE REDUCTION FOR DEFECTIVE COST OR PRICING DATA
01280 MEASUREMENT AND PAYMENT
01291 NOTICE TO WITHHOLD AND/OR STOP NOTICE
01292 PAYMENTS
01298 SCHEDULE OF VALUES / CONTRACT PRICE BREAKDOWN

01300 ADMINISTRATIVE REQUIREMENTS

01311 PRECONSTRUCTION SAFETY CONFERENCE
01312 PROJECT MEETINGS
01313 WORK BY CITY OR OTHERS
01321 CONTRACTOR'S CONSTRUCTION SCHEDULE AND REPORTS
01322 CONSTRUCTION PROGRESS PHOTOGRAPHY
01323 CONSTRUCTION STATUS REPORTS
01330 SHOP DRAWINGS / SUBMITTALS
01350 AUDIT AND ACCESS TO RECORDS
01351 ESCROW BID DOCUMENTS
01353 OPPORTUNITY TO PARTNER

01400 QUALITY REQUIREMENTS

01410 REGULATORY REQUIREMENTS
01411 CONFINED SPACE ENTRY
01420 UNITS OF MEASURE
01421 SYMBOLS
01430 MANUFACTURER'S FIELD SERVICE
01452 INSPECTION OF THE WORK
01453 SAMPLING, TESTING AND FABRICATION INSPECTION
01454 WEIGHING AND METERING EQUIPMENT
01455 CALIBRATION OF TESTING EQUIPMENT

01500 TEMPORARY FACILITIES AND CONTROLS

01561 ENVIRONMENTAL CONTROL
01562 ENVIRONMENTAL MITIGATION
01563 POLLUTION CONTROL -SEWAGE SPILL PREVENTION AND RESPONSE REQUIREMENTS
01571 STORMWATER POLLUTION CONTROL MEASURES FOR CONSTRUCTION ACTIVITIES
01572 CONSTRUCTION AND DEMOLITION WASTE MANAGEMENT
01573 EXCAVATION SHORING, FORMS, AND FALSEWORK
01581 PROJECT SIGNS

01600 PRODUCT REQUIREMENTS

01601 BUY CLEAN CALIFORNIA ACT
01611 GUARANTY / WARRANTY
01630 SUBSTITUTIONS AND "OR EQUAL" SUBMITTAL

01700 EXECUTION REQUIREMENTS

01711 SITE INVESTIGATION
01712 SUBSURFACE DATA
01721 MOBILIZATION
01722 SURVEYING
01723 RIGHT OF WAY
01731 CUTTING AND PATCHING
01732 ADDITIONAL POTHOLING
01740 REMOVAL, CLEANUP, AND DEMOBILIZATION
01750 STARTUP ASSISTANCE
01770 PROJECT CLOSEOUT
01781 SPARE PARTS
01782 TECHNICAL MANUALS
01783 PROJECT RECORD DOCUMENTS

01800 FACILITY OPERATION

01810 FUNDAMENTAL COMMISSIONING REQUIREMENTS
01820 OPERATIONS AND MAINTENANCE TRAINING

01900 FACILITY DECOMMISSIONING

None

SECTION 01111
ABBREVIATIONS AND REFERENCE STANDARDS

1.1 ABBREVIATIONS

A. The abbreviations herein, together with others in general use, are applicable to this Project Manual, Contract Drawings, and other Contract Documents.

All abbreviations and symbols used on Contract Drawings for structural steel construction shall conform to those given by the "Manual of Steel Construction" published by the American Institute of Steel Construction, Inc.

B. Common Usage: Whenever the following abbreviations are used, they shall have the meanings indicated:

ABAN	Abandon
ABAND	Abandoned
ABUT	Abutment
ABS	Acrylonitrile – butadiene – styrene
AC	Asphalt concrete
ACP	Asbestos cement pipe
ACWS	Asphalt concrete wearing surface
ADA	Americans with Disabilities Act
AGB	Alley grating basin
AL	Allowance
ALT	Alternate
AMER STD	American Standard
AQMD	Air Quality Management District
ARHM	Asphalt-rubber hot-mix
ATSAC	Automated Traffic Surveillance and Control System
AT&T	Local and long distance telephone company (formerly SBC and Pacific Bell)
AWG	American Wire Gage (nonferrous wire)
BAGR	Bridge approach guard railing
BB	Beginning of Bridge
BC	Beginning of curve
BCR	Beginning of curb return
BDRY	Boundary
BF	Bottom of footing
BM	Bench mark
BMP	Best Management Practice
BPW	Board of Public Works
BSJ	Bell and spigot joint
BSL	Bureau of Street Lighting
BVC	Beginning of vertical curve
B/W	Back of wall
C/C	Center to center
CAB	Crushed aggregate base
CAC	California Administrative Code
CAP	Corrugated aluminum pipe
CASQA	California Storm Water Quality Association
CB	Catch Basin
Cb	Curb
CBP	Catch Basin Connection Pipe

CBR	California Bearing Ratio
CCR	California Code of Regulations
CCTV	Closed Circuit TV
CF	Curb face or Cubic foot
C&G	Curb and gutter
CGB	Curbside grating basin
CFR	Code of Federal Regulations
CIDH	Cast-in-drilled-hole
CIP	Cast iron pipe or Cast-in-place
CIPP	Cast-in place pipe
CL	Clearance, center line
CLF	Chain link fence
CLSM	Controlled Low Strength Material
CMB	Crushed miscellaneous base
CMC	Cement mortar-coated
CML	Cement mortar-lined
CMP	Corrugated Metal Pipe
CO	Cleanout (sewer)
COL	Column
CONC	Concrete
CONN	Connection
CONST	Construct, Construction
COORD	Coordinate
CQC	Contractor Quality Control
CSP	Corrugated steel pipe
CTB	Cement treated base
CV	Check valve
CY	Cubic yard
D	Load of pipe
dB	Decibels
DBE	Disadvantaged Business Enterprise
DBL	Double
DF	Douglas fir
DFT	Dry Film Thickness
DIA	Diameter
DIP	Ductile iron pipe
DL	Dead load
DMBB	Double metal beam barrier
DT	Drain Tile
DWG	Drawing
DWPPS	Los Angeles Department of Water & Power, Power System
DWPWS	Los Angeles Department of Water & Power, Water System
DWY	Driveway
DWY APR	Driveway approach
EA	Each
EB	End of bridge
EC	End of curve
ECR	End of curb return
EF	Each face
EG	Edge of gutter
EGL	Energy grade line
El	Elevation
ELC	Electrolier lighting conduit
ELT	Extra long ton
ENGR	Engineer, Engineering

EP	Edge of pavement
EPA	Environmental Protection Agency
ESA	Environmentally Sensitive Area
ESAL	Equivalent Single Axle Load
ESRP	Emergency Spill Response Plan
ESMT	Easement
ETB	Emulsion-treated base
EVC	End of vertical curb
EXC	Excavation
EXP JT	Expansion joint
EXST	Existing
F	Fahrenheit
F&C	Frame and cover
F&I	Furnish and install
FAB	Fabricate
FAS	Flashing arrow sign
FD	Floor drain
FDN	Foundation
FED SPEC	Federal Specification
FG	Finished grade
FH	Fire hydrant
FL	Flow line
FRP	Fiberglass reinforced plastic
FRPM	Fiberglass reinforced plastic mortar
FS	Finished surface
FTA	Fully traffic actuated
FT-LB	Foot-pound
FTG	Footing
FW	Face of wall
GA	Gauge
GALV	Galvanized
GC	Grade change
GCASP	State General Construction Activity Stormwater Permit
GIP	Galvanized iron pipe
GL	Ground line or grade line
GM	Gas meter
GP	Guy pole
GR	Grade
GRTG	Grating
GSP	Galvanized steel pipe
GTE	General Telephone Company
H	High or height
HB	Hose bib
HC	House connection
HDPE	High density polyethylene
HDWL	Headwall
HGL	Hydraulic grade line
HORIZ	Horizontal
HP	Horsepower
HPG	High pressure gas
HPS	High pressure sodium (Light)
HS	High strength
HYDR	Hydraulic
ID	Inside diameter
INCL	Including

INSP	Inspection
INV	Invert
IP	Iron pipe
IPW	Inspector of Public Works
JC	Junction chamber
JCT	Junction
JS	Junction structure
JT	Joint
L	Length
LAAC	Los Angeles Administrative Code
LAB	Laboratory
LADBS	Los Angeles Department of Building and Safety
LADGS	Los Angeles Department of General Services
LADOT	Los Angeles Department of Transportation
LACDPW	Los Angeles County Department of Public Works
LAMC	Los Angeles Municipal Code
LARWQCB	Los Angeles Regional Water Quality Control Board
LAT	Lateral
LB	Pound
LD	Local depression
LF	Linear foot
LH	Lamp hole
LL	Live load
LOL	Layout line
LONG	Longitudinal
LP	Lamp post
LPS	Low pressure sodium (Light)
LS	Lump sum
LTS	Lime treated soil
MA	Mast Arm
MAINT	Maintenance
MAX	Maximum
MB	Metal beam
MBB	Metal beam barrier
MBGR	Metal beam guard railing
MBE	Minority Business Enterprise
MCR	Middle of curb return
MEAS	Measure
MED	Median
MH	Manhole, maintenance hole
MIL SPEC	Military Specification
MISC	Miscellaneous
MOD	Modified, modify
MON	Monument
MSM	Mandatory subcontracting minimum
MTA	Metropolitan Transportation Authority (of LA County)
MTH	Month
MTL	Material
MULT	Multiple
MUTCD	Manual on Uniform Traffic Control Devices
MVL	Mercury vapor light
MWD	Metropolitan Water district
NOI	Notice of Intent
NPDES	National Pollutant Discharge Elimination System
NRCP	Nonreinforced concrete pipe

OBE	Other Business Enterprise
OBS	Obsolete
OC	On center
OD	Outside diameter
OE	Outer edge
OH	Overhead
OPP	Opposite
ORIG	Original
OSA	Office of the State Architect
OSHA	Occupational Safety and Health Administration (Dept. Of Labor)
PACBELL	Pacific Bell (Pacific Telesis Group)
PAV	Pressure Aging Vessel
PB	Pull box
PC	Point of curvature
PCC	Portland cement concrete or Point of compound curvature
PCVC	Point of compound vertical curve
PE	Polyethylene
PG	Performance Graded
PI	Point of intersection
PL	Property line
PMB	Processed miscellaneous base
POC	Point on curve
POT	Point on tangent
PP	Power pole
PRC	Point of revere curve
PRVC	Point of reverse vertical curve
PSI	Pounds per square inch
PT	Point of tangency
PVC	Polyvinyl chloride
PVMT	Pavement
PVT R/W	Private right-of-way
Q	Rate of flow in cubic feet per second
QA	Quality Assurance
QC	Quality Control
QUAD	Quadrangle, Quadrant
R	Radius
R&O	Rock and oil
R/W	Right-of-way
RA	Recycling agent
RAC	Recycled asphalt concrete
RAP	Reclaimed asphalt pavement
RBAC	Rubberized asphalt concrete
RC	Reinforced concrete
RCB	Reinforced concrete box
RCC	Rail Construction Corporation
RCE	Registered civil engineer
RCP	Reinforced concrete pipe
RCV	Remote control valve
REAS	Rubberized Emulsion-Aggregate Slurry
REF	Reference
REINF	Reinforced or reinforcement
RES	Reservoir
RGE	Registered geotechnical engineer
RR	Railroad
RSE	Registered structural engineer

RTE	Registered traffic engineer
RTFO	Rolling Thin Film Oven
S	Slope
SCAQMD	South Coast Air Quality Management District
SCCP	Steel cylinder concrete pipe
SCG	Southern California Gas Company
SCHED	Schedule
SCRRA	Southern California Regional Rail Authority
SD	Storm drain
SDR	Standard thermoplastic pipe dimension ratio (ratio of pipe O.D. to minimum wall thickness)
SE	Sand Equivalent
SEC	Section
SF	Square foot
SI	International System of Units (Metric)
SOCB	Side opening catch basin
SPEC	Specifications
SPPWC	Standard Plans for Public Works Construction
SR	Standard ratio
SRJ	Steel ring joint (for RCP)
SS	Sanitary sewer
SSB	Select sub-base
SSPWC	Standard Specifications for Public Works Construction
ST HWY	State highway
STA	Station
STD	Standard
STR	Straight
STR GR	Straight grade
STRUC	Structural/Structure
SW	Sidewalk
SWD	Sidewalk drain
SWMP	Storm Water Management Plan
SWPPP	Storm Water Pollution Prevention Plan
SWRCB	State (of California) Water Resources Control Board
SY	Square yard
TAN	Tangent
TC	Top of curb
TCP	Traffic control plan
TEL	Telephone
TF or T/F	Top of footing
TH	Test hole
TOPO	Topography
TR	Tract
TRANS	Transition
TS	Traffic signal or transition structure
TSC	Traffic signal conduit
TSS	Traffic signal standard
TW	Top of wall
TYP	Typical
USA	Underground Service Alert
V	Volt
VAR	Varies, Variable
VB	Valve box
VC	vertical curve
VCP	Vitrified clay pipe

VECP	Value Engineering Change Proposal
VERT	Vertical
VOL	Volume
VT	Variable thickness
W	Wider or width
WATCH	Work Area Traffic Control Handbook
WBE	Women Business Enterprise
WDID	Waste Discharge Identification Number
WI	Wrought iron
WM	Water meter
WPCP	Water Pollution Control Plan
WPJ	Weakened plane joint
WUT	Western Union Telegraph
WWECP	Wet Weather Erosion Control Plan
XCONN	Cross connection
XSEC	Cross section

C. Institutions: Wherever the following abbreviations are used they shall have the meanings indicated:

AASHTO	American Association of State Highway and Transportation Officials
ACI	American Concrete Institute
ACRI	Air Conditioning and Refrigeration Institute
ADA	Americans with Disabilities Act
AGA	American Gas Association
AGMA	American Gear Manufacturers' Association
AI	Asphalt Institute
AISC	American Institute of Steel Construction
AISI	American Iron & Steel Institute
AITC	American Institute of Timber Construction
AAMA	American Architectural Manufacturer’s Association
AMCA	Air Movement and Control Association
ANSI	American National Standards Institute
APA	American Plywood Association
API	American Petroleum Institute
APWA	American Public Works Association
AQMD	Air Quality Management District
AREA	American Railway Engineering Association
ASCE	American Society of Civil Engineers
ASHRAE	American Society of Heating, Refrigerating, and Air Conditioning Engineers
ASME	American Society of Mechanical Engineers
ASQC	American Society for Quality Control
ASTM	American Society for Testing and Materials
AWPA	American Wood Preservers Association
AWPI	American Wood Preservers Institute
AWS	American Welding Society
AWWA	American Water Works Association
BHMA	Building Hardware Manufacturer’s Association
CAC	California Administrative Code
CAL/ABL	State of California/Architectural Barriers Laws
CAL/OSHA	State of California/Occupational Safety and Health Administration
CALTRANS	California Department of Transportation

CASQA	California Stormwater Quality Association
CBM	Certified Ballast Manufacturers
CITY	City of Los Angeles
CRSI	Concrete Reinforcing Steel Institute
CSI	Construction Specifications Institute
EIA/TIA	Electronic Industries Association
EPA	Environmental Protection Agency
ETL	Department of Building & Safety Electrical Test Laboratory
FCI	Fluid Control Institute, Inc.
FIA	Factory Insurance Association
FM	Factory Mutual Association
FS	Federal Specifications
GA	Gypsum Association
GRI	Geosynthetic Research Institute
ICBO	International Conference of Building Officials
ICEA	Insulated Cable Engineers Association
IEEE	Institute of Electrical and Electronics Engineers
ISA	Instrument Society of America
LA	City of Los Angeles
LABC	City of Los Angeles Building Code
LAMC	City of Los Angeles Municipal Code
NAAMM	National Architectural Association of Metal Manufacturers
NEC	National Electrical Code
NECA	National Electrical Contractors Association
NEMA	National Electrical Manufacturers Association
NFC	National Fire Code
NFPA	National Fire Protection Association
NWMA	National Wood Manufacturer's Association
NWWDA	National Wood Window and Door Association
NOAA	National Oceanic and Atmospheric Administration (Dept. of Commerce)
OSA	Office of the State Architect
OSHA	Occupational Safety and Health Administration (Dept. of Labor)
PCA	Portland Cement Association
RA	Rule of General Application – Department & Safety
RCSC	Research Council on Structural Connections of the Engineering Foundation
SAMA	Scientific Apparatus Manufacturer's Association
SDI	Steel Deck Institute
SMACNA	Sheet Metal and Air Conditioning Contractor's National Association
SSPC	Steel Structures Painting Council
SSPWC	Standard Specifications for Public Works Construction
SWRCB	State Water Resources Control Board
UBC	Uniform Building Code, International Conference of Building Officials
UL	Underwriters Laboratories, Inc.
USGS	United States Geological Survey
VERIZON	Verizon Communications (Formerly General Telephone & Electronics
WATCH	Work Area Traffic Control Handbook
WCLIB	West Coast Lumber Inspection Bureau
WCRSI	Western Concrete Reinforcing Steel Institute
WIC	Woodwork Institute of California
WRI	Wire Reinforcement Institute

WWPA Western Wood Products Association

1.2 REFERENCE STANDARDS

A. Applicable Publications: Whenever in these Specifications / Project Manual references are made to published specifications, codes, standards, or other requirements, it shall be understood that wherever no date is specified, only the latest specifications, standards, or requirements of the respective issuing agencies which have been published as of the date that the Work is advertised for bids shall apply; except to the extent that said standards or requirements may be in conflict with applicable laws, ordinances or governing codes. No requirements set forth herein or shown on the Drawings shall be waived because of any provision of, or omission from, said standards or requirements.

B. Specialists' Assignments: In certain instances, specification text requires (or implies) that specific work is to be assigned to specialists or expert entities, who must be engaged for the performance of that work. Such assignments shall be recognized as special requirements over which the CONTRACTOR has no choice or option. These requirements shall not be interpreted so as to conflict with the enforcement of building codes and similar regulations governing the Work; also they are not intended to interfere with local union jurisdiction settlements and similar conventions. Such assignments are intended to establish which party or entity involved in a specific unit of work is recognized as "expert" for the indicated construction processes or operations. Nevertheless, the final responsibility for fulfillment of the entire set of contract requirements remains with the CONTRACTOR.

C. Codes and Safety Standards: Without limiting the generality of other requirements of the Specifications, all work specified herein shall conform to or exceed the applicable requirements of the following Codes and Safety Standards.

1. Applicable Codes:

- City of Los Angeles Building Code
- City of Los Angeles Mechanical Code
- City of Los Angeles Plumbing Code
- City of Los Angeles Fire Code
- City of Los Angeles Electrical Code

References herein to "Building Code" shall mean City of Los Angeles Building Code. Similarly references to "Mechanical Code," "Plumbing Code," "Fire Code," and "Electric Code" shall mean City of Los Angeles Mechanical Code, City of Los Angeles Plumbing Code, City of Los Angeles Fire Code, and City of Los Angeles Electric Code respectively.

2. Applicable Safety Standards:

- OSHA Regulations for Construction
- OSHA Standard

- Cal-OSHA

References herein to "OSHA Regulations for Construction" shall mean Title 29, Part 1926, Construction Safety and Health Regulations, Code of Federal Regulations (OSHA), including all changes and amendments thereto.

References herein to "OSHA Standards" shall mean Title 29, Part 1910, Occupational Safety and Health Standards, Code of Federal Regulations (OSHA), including all changes and amendments thereto.

References herein to "Cal-OSHA" shall mean State of California, Department of Industrial Relations, as amended to date, and all changes and amendments there to which are effective as of the date of construction.

The latest edition of the codes as approved and adopted for use by the CITY as of the date of award shall apply to the Work herein, including all addenda, modifications, amendments, or other lawful changes thereto.

D. Standard Specifications: References in the Contract Documents to "Standard Specifications" shall mean the Standard Specifications for Public Works Construction, including all current supplements, addenda, and revisions thereof.

E. Standard Plans: References herein to "Standard Plans" shall mean the Standard Plans issued by the City of Los Angeles which drawings are hereby incorporated in and made a part of these Contract Documents, and copies of which are available for a fee.

F. Conflict between Codes, Safety Standards, Reference Standards, Drawings and other Contract Documents: In case of conflict between codes, reference standards, drawings and other Contract Documents, the most stringent requirements shall govern. All conflicts shall be brought to the attention of the ENGINEER for clarification and directions prior to ordering or providing any materials or labor. The CONTRACTOR shall bid for the most stringent requirements.

END OF SECTION 01111

SECTION 01113
DIVISIONS OF TECHNICAL SECTIONS OF PROJECT MANUAL

1.1 THE REQUIREMENT

A. The Technical Section of the Project Manual, including the General Conditions and General Requirements, are arranged into the Construction Specifications Institute (C.S.I.) sixteen (16) Divisions - Section format with an additional Division 17 for Instrumentation and Controls. Each "Section" constitutes a unit of work and related "Sections" are grouped under broad generic headings called Divisions.

B. The organization of the Technical Sections of the Project Manual into Division, Sections, and articles shall not control or limit the CONTRACTOR in dividing the work among Subcontractors, a Sub-subcontractor, or to establish the extent of work to be performed by any trade. The CONTRACTOR shall be solely responsible for all subcontract arrangements of work regardless of the Project Manual organization.

END OF SECTION 01113

SECTION 01114
ISSUANCE OF DRAWINGS AND THE PROJECT MANUAL

1.1 THE REQUIREMENT

A. Unless otherwise provided in the Contract Documents, the ENGINEER will furnish to the CONTRACTOR one (1) set and one (1) CD containing each of the Drawings, Project Manual and, where applicable, Geotechnical Data Report (GDR) without charge. Additional sets desired by the CONTRACTOR or Subcontractors will be furnished upon request, but at the CONTRACTOR'S expense.

B. All Drawings, Specifications, Special Provisions, and copies thereof are the property of the CITY. They are not to be used on other work. All necessary bid documents will be available to prospective bidders via the City of Los Angeles Regional Alliance Marketplace for Procurement (www.rampla.org/s/).

(END OF SECTION)

SECTION 01115
MANDATORY PROVISIONS

1.1 THE REQUIREMENT

A. Any mention in the Divisions of this Project Manual which follow the General Requirements or indication on drawings of articles, materials, operations, or methods requires that the CONTRACTOR provide each item mentioned or indicated, of quality or subject to qualifications noted; perform according to conditions stated, each operation the same prescribed; and provide therefore all necessary labor, equipment, and incidentals, even though such mention of articles, materials, operations, methods, quality, qualifications, or conditions is not expressed in complete sentences.

END OF SECTION 01115

SECTION 01116
ELECTRONIC DOCUMENT CONTROL

1.1 USE OF ELECTRONIC DOCUMENT CONTROL SYSTEM

A. The CONTRACTOR shall use a web based document control system to submit and receive all construction related documentation on this project. The system used is “e2020” and costs associated for the use of the software have been paid for by the City. The website address to be used will be provided by the ENGINEER after award of the contract. The CITY will provide training to the CONTRACTOR on the use of the system. The information to be generated, transmitted and tracked by the e2020 document control system shall include, but not be limited to the following:

1. Correspondence (including Engineer’s Communication).

2. Plan Clarifications.

3. Request for Information (RFI’s).

4. Shop Drawings.

5. Change Orders.

6. Allowance Orders.

7. Progress Photos.

8. Project Schedules.

9. Meeting Minutes.

10. Permits.

11. Partnering (Issue Resolution Ladder, Charter).

B. When large drawings or product samples are required to be submitted that cannot be submitted through e2020, the CONTRACTOR shall:

1. Upload a transmittal sheet for the submittal in e2020,

2. Submit six (6) full-size hard copies,

3. Submit one half-sized hard copy (not exceeding 11x17 inches),

4. Transmit electronic files to the ENGINEER in Adobe Acrobat (.PDF) format.

C. The CONTRACTOR shall be responsible for the installation of its own computer system, scanner, and the procurement of an Internet Service Provider (ISP) with a high speed broadband internet connection for its own and the ENGINEER/INSPECTOR site offices to access the document control system.

D. At the request of the ENGINEER, the CONTRACTOR must provide a hard copy of approved submittals to the INSPECTOR, at no additional cost to the CITY.

END OF SECTION 01116

SECTION 01120
INTERFACE / COORDINATION REQUIREMENTS

1.1 THE REQUIREMENT

A. Traffic and Access

1. The CONTRACTOR'S operations shall cause no unnecessary inconvenience. The access rights of the public shall be considered at all times. Unless otherwise authorized, traffic shall be permitted to pass through the Work, or an approved detour shall be provided.

2. Safe and adequate pedestrian and vehicular access shall be provided and maintained to: residences; fire hydrants; commercial and industrial establishments; churches, schools and parking lots; service stations and motels; hospitals; police and fire stations; and establishments of similar nature. Access to these facilities shall be continuous and unobstructed unless otherwise approved by the ENGINEER.

3. The CONTRACTOR shall provide and install steel plates to bridge any excavation in the public right-of-way. Such bridging shall be in accordance with the provisions of the latest edition of the Work Area Traffic Control Handbook (WATCH), and in addition, shall have a nonskid surface with coefficient of friction of 0.35 per California Test 342 for all steel plates within the traveled roadway of streets and alleys. When required by the INSPECTOR, the CONTRACTOR shall certify in writing to the INSPECTOR that steel plates to be used in the Work meet the required static coefficient of friction. Also, when required by the INSPECTOR, the CONTRACTOR shall have steel plates to be used in the Work tested in accordance with the above standards for the verification of required static coefficients of friction. Testing shall be done by an independent laboratory approved by the INSPECTOR. The CONTRACTOR shall pay for any costs associated with the testing of steel plates.

4. At least ten (10) days before the start of construction, the CONTRACTOR is required to notify, in writing, abutting property occupants of the proposed construction start date. A copy of said written notification shall be provided to the INSPECTOR.

5. The CONTRACTOR shall notify the MTA Special Events Desk at (213) 922-4632, (213) 922-4692(Fax) at least forty-eight (48) hours before any work that will affect normal bus operations. If no answer, call MTA Dispatch at any time, (213)-922-4634.

6. Safe and adequate pedestrian zones and public transportation stops, as well as pedestrian crossings of the Work at intervals not exceeding 90m (300 feet), shall be maintained unless otherwise approved by the ENGINEER. If required by the construction, the CONTRACTOR may close only one crosswalk at a time at intersections having four crosswalks. If construction requires closure of two or more crosswalks at an intersection, the CONTRACTOR shall obtain LADOT approval before implementation of the closure. LADOT approval is required prior to closing of any crosswalk at intersections having fewer than four crosswalks.

7. Vehicular access to residential driveways shall be maintained to the property line except when necessary construction precludes such access for reasonable periods of time. If backfill has been completed to the extent that safe access may be provided, and the street is opened to local traffic, the CONTRACTOR shall immediately clear the street and driveways and provide the maintained access.

8. The CONTRACTOR shall cooperate with the various parties involved in the delivery of mail and the collection and removal of trash and garbage to maintain existing schedules for these services.

9. Grading operations, roadway excavation and fill construction shall be conducted by the CONTRACTOR in a manner to provide a reasonably satisfactory surface for traffic. When rough grading is completed, the roadbed surface shall be brought to a smooth, even condition satisfactory for traffic.

10. Work shall be performed in only one-half of the roadway at one time. One-half of the roadway shall be kept open and unobstructed until the opposite side is ready for use by traffic. The CONTRACTOR shall phase the removal operations so as to maintain the specified traffic lanes on the existing pavement until sufficient new pavement is constructed to accommodate the traffic requirements. If one-half of a street is only being improved, a smooth, even surface and a condition satisfactory for traffic shall be maintained on the other one-half.

11. Where no pavement exists in a roadway, and traffic is to be maintained through the Worksite, the CONTRACTOR shall conduct its operations in a manner to provide a smooth, even surface satisfactory for traffic, reasonably free of mud and dirt.

12. The CONTRACTOR shall include in its Bid all costs for the above requirements.

B. Street Closures, Detours, Barricades

1. The CONTRACTOR shall comply with all applicable State, County and CITY requirements for closure of streets. The CONTRACTOR shall provide barriers, guards, lights, signs, temporary bridges, flagpersons, and watchpersons. The CONTRACTOR shall be responsible for compliance with additional public safety requirements that may arise. The CONTRACTOR shall furnish and install signs and warning devices and promptly remove them upon completion of the Work.

2. The CONTRACTOR shall obtain and pay for all permits for closure of streets, alleys or sidewalks, as required by the Bureau of Street Services (800) 996-2489 and LADOT (213) 972-4990.

3. At least forty-eight (48) hours in advance of closing, partially closing, or reopening any street, alley, or other public thoroughfare, the CONTRACTOR shall notify the Police, Fire, Traffic, and Engineering Departments, and comply with their requirements. Deviations must first be approved in writing by the ENGINEER.

4. When specified on the Plans or permit, the CONTRACTOR shall install advance construction notice signs per Standard Plan S-791, not less than seven (7) days before the start of construction. The CONTRACTOR shall maintain the signs for the duration of construction, removing them only after completion of the work. All costs incurred in furnishing, installing, maintaining and removing the signs shall be included in the CONTRACTOR'S Bid.

5. The CONTRACTOR shall secure approval, in advance, from authorities concerned with the use of temporary bridges proposed by the CONTRACTOR for public use. Temporary bridges shall be clearly posted as to load limit, with signs and posting conforming to current requirements covering "signs" as set forth in the California Manual of Uniform Traffic Control Devices (MUTCD). (The California MUTCD is available on the internet a https://dot.ca.gov/programs/safety-programs/camutcd. This manual shall also apply to street closures, barricades, detours, lights, and other safety devices that may be required.

6. The CONTRACTOR shall comply with the requirements of the latest adopted edition of the "Work Area Traffic Control Handbook", obtainable from Building News, Inc., 10801 National Blvd., Los Angeles, CA 90064, (800) 873-6397 or the LADOT Worksite Traffic Control Plan (S-488.0) available from LADOT, 100 S. Main Street, 9th Floor, Los Angeles, CA 90012.

7. A street with local traffic crossing a street in which Work is being performed may be closed to traffic, providing the adjacent cross streets are kept open. The CONTRACTOR shall notify the Police and Fire Departments whenever such a street is to be closed to traffic. A similar notification shall then be made at the time the street is again opened to traffic. If the closing is to be of short duration or different sections of the street are to be closed at different times, the notification to the Police and Fire Departments shall be on a day-by-day basis, giving information regarding the conditions expected to prevail on the next working day. The CONTRACTOR shall notify the INSPECTOR which streets are to be closed, duration of closures, and person(s) and telephone numbers contacted in the Fire and Police Department.

8. All signs, including offsite detour signs, lights, or devices installed by the CONTRACTOR shall conform to the California Manual of Uniform Traffic Control Devices (MUTCD), and be approved by LADOT before use. Offsite detour signs shall be installed, maintained, and removed by the CONTRACTOR. "No Parking" signs shall be posted and removed only by LADOT upon request from the CONTRACTOR. LADOT will charge and collect its actual cost for each temporary sign installed and for each sign replaced during the authorized period. To be enforceable, temporary "No Parking" signs shall be installed by LADOT twenty-four (24) hours before the time when needed. Their removal by LADOT shall take place as the Work progresses to restore parking spaces. See Section 01313 – WORK BY CITY OR OTHERS of the GENERAL REQUIREMENTS.

9. The CONTRACTOR shall include in its Bid all costs for the above requirements.

10. As approved by the ENGINEER, all or portions of the existing facility may be taken out of service for short periods of time corresponding with expected instances of minimum impact. The CONTRACTOR shall notify the ENGINEER on forms [(see Attachment [01120-A1 through 01120-A2)] provided by the ENGINEER not less than thirty calendar (30) days in advance to determine the feasibility of taking a utility/operation out of service. If the ENGINEER determines that the utility/operation can be taken out of service, the CONTRACTOR shall then request the shutdown on standard forms provided by the ENGINEER. Such requests shall be submitted to the ENGINEER not less than fifteen (15) calendar days before the requested date of the shutdown and shall include: dates, times, locations, procedures, and drawings showing materials proposed to be used and work to be performed. If any of the information changes, an additional fifteen (15) calendar days may be required after such changes are reported to the ENGINEER. Approval when granted will always be conditional. If granted, approval of the request, including date and time, will be given three (3) calendar days before the proposed shutdown. Additionally, all preparations outlined in the submitted procedures shall be demonstrated to the ENGINEER and shall be completed twenty-four (24) hours before the shutdown. This shall include, but not be limited to, all tools, equipment, materials, excavations, operation of fans, pumps, etc. Should the CONTRACTOR fail to meet this requirement, the ENGINEER shall reserve the right to cancel such scheduled shutdown at no cost to the CITY and, furthermore, the CONTRACTOR shall reimburse the CITY for preparation costs incurred.

11. Vehicular and pedestrian traffic adjacent to the laydown area and/or within the jobsite must be maintained. If an existing street in the CONTRACTOR'S Work area is to be demolished or obstructed, the CONTRACTOR shall be responsible for providing access through or around the effected area, including signs, barricades, and lights, as approved by the ENGINEER and any local agencies having jurisdiction over any public access areas. The CONTRACTOR shall follow WATCH standards and the California Manual of Uniform Traffic Control Devices (MUTCD), for all traffic, including a minimum traffic lane of ten (10) feet for vehicles and four (4) feet for pedestrians. (The California MUTCD is available on the internet at http://www.dot.ca.gov/hq/traffops/signtech/mutcdsupp/ca_mutcd.htm).

12. The CONTRACTOR shall not park any vehicles (including concrete, hauling and delivery trucks) in any facility street at any time unless approved by the ENGINEER. Access must be maintained at all times for emergencies, sampling, equipment operations, maintenance, and like items.

13. Before altering any vehicular or pedestrian access, the CONTRACTOR shall notify the ENGINEER thirty (30) calendar days in advance on forms provided by the ENGINEER. The CONTRACTOR shall then request the alteration on forms provided by the ENGINEER. Requests shall include reasons for the alteration, times, boundary limits, special safety measures, proposed traffic rerouting with widths of such route, and a map detailing the above. Such requests shall be submitted to the ENGINEER not less than fifteen (15) calendar days before the requested date of the access alteration. If any of the information changes, an additional fifteen (15) calendar days may be required after the changes

are brought to the attention of the ENGINEER. Approval when granted will always be conditional. Final approval of the request, including date and time, will be given three (3) calendar days in advance. The CITY retains the right to ticket and impound vehicles blocking traffic.

14. At no time shall security of the site be compromised. If for any reason the CONTRACTOR finds it necessary to breach any existing perimeter fences or walls, permission of the ENGINEER shall first be obtained. The CONTRACTOR shall then request the alteration on forms provided by the ENGINEER. Requests shall include reasons for the alteration, times, boundary limits, special safety measures, proposed traffic rerouting with widths of such route, and a map detailing the above. The request shall also set forth details of repair of the wall or fences and shall establish a timetable for completion of the repairs. The repaired wall or fence shall be the same height as, and of comparable quality and appearance to the previously existing construction. Such requests shall be submitted to the ENGINEER not less than fifteen (15) calendar days before the requested date of the access alteration. If any of the information changes, an additional fifteen (15) calendar days may be required after the changes are brought to the attention of the ENGINEER. Approval when granted will always be conditional. Final approval of the request, including date and time, will be given three (3) calendar days in advance. The CONTRACTOR shall provide interim security over the duration of the breach.

15. The following shall be taken into consideration in preparing the proposed schedule of construction operation:
    a. Impacts to storm drainage service through the existing 45” SOTMR DRAIN.
    b. Impacts to the electrical easement property being used as an active storage area for large vehicles.

(END OF SECTION)

(SEE ATTACHMENTS)

ATTACHMENTS TO SECTION 01120

Attachments to General Requirements Section 01120 consists of two (2) documents, as follows:

ATTACHMENT NUMBER	TITLE OF ATTACHMENT	NUMBER OF PAGES IN THIS ATTACHMENT
01120-A1	Request for Special Plan Accommodations (RESPA)	1

REQUEST FOR SPECIAL PLAN ACCOMMODATIONS (RESPA)

REQUEST #:_____

REQUESTOR:_____ PHONE#: (____) _____

SUBCONTRACTOR:_____ PHONE#: (____) _____

PROJECT:_____ ELEMENT:_____

REASON FOR REQUEST:_____

_____

_____

POTENTIAL FOR SPILL: ☐ YES ☐ NO **(If Yes, Attach Spill Prevention Plan)**
MATERIAL:_____
(Spill Prevention Plan should include type of material, containment procedures, discharged location and procedures, estimate of material to be handled, etc.)

STREET / LOCATION OF WORK:_____
(Street name, building, tunnel, MCC, etc.)

AFFECTED AREA:_____

PROCESS:_____

ELECTRICAL ACCESS:_____

OTHER:_____

(Attach drawing, sketch, map or plan detail showing work to be performed or affected area, etc.)

WORK TO BE PERFORMED:_____

_____

_____

ADDITIONAL INFORMATION: (Detour plan, confined space procedures, barricades, flagperson, etc.)

_____

_____

_____

DAY / START TIME:_____ DURATION:_____

DAY / FINISH TIME:_____

REQUESTOR SIGNATURE:_____ DATE:_____

PROJECT MANAGER SIGNATURE:_____ DATE:_____

TREATMENT PLANT
SPECIAL PLAN ACCOMMODATIONS (SPA)

DATE:_____ SPA #:_____

PROJECT:_____

SOPER REQUIRED:_____

START:_____ FINISH:_____ DURATION:_____

CLEARANCE REQUIRED:___ WORK PERMIT REQUIRED:___ ACCESS ALTERATION:___

POTENTIAL FOR SPILL: ☐ YES ☐ NO **(If Yes, Attach Spill Prevention Plan)**
MATERIAL:_____
PROJECT ENGINEER: _____ PHONE: _____

CONTRACTOR: _____ PHONE: _____

REASON FOR REQUEST: _____

_____

IMPACT: _____

_____

WORK TO BE PERFORMED BY CONTRACTOR: _____

_____

BY PLANT OPERATIONS: _____

_____

OPERATIONS: _____
SHIFT SUPERINTENDENT DATE

_____
LIAISON SHIFT SUPERINTENDENT DATE

MAINTENANCE: _____
TECHNICAL REVIEW DATE

ENGINEERING: _____
PROJECT ENGINEER DATE

OTHER: _____
ELECTRICIAN. PROC MAINT. MGR. DATE

cc: Plant Manager, Shift Superintendent, Liaison S.S., P.E., Plant Engr, CONTRACTOR, Con-Ad Inspec., Plant Security, Maint. Related, Liaison File/Engr.

SECTION 01140
CONTRACTOR'S USE OF THE PREMISES

1.1 THE REQUIREMENT

A. General

1. This Section applies to all situations in which the CONTRACTOR or his representatives, including but not necessarily limited to, suppliers, Subcontractors, employees and field engineers, who enter upon the CITY'S property.

2. CONTRACTOR shall commence the Contract Work and provide security and protection to existing facility and job site within 5 days from the issuance of Notice-To-Proceed letter, unless noted otherwise.

B. Access to the Job-site

1. As instructed by the ENGINEER, the CONTRACTOR shall restrict CONTRACTOR'S employees to the immediate Work areas on the job-site and in no way go beyond the Work limits noted on the Contract Drawings or as otherwise directed by the ENGINEER.

a. Deliver materials, tools and equipment to the Parking Lot, via the Alleghey Street and Remick Avenue entrances, as directed by the ENGINEER.

b. CONTRACTOR and his employees shall enter the Alleghey Street and Remick Avenue for access to Work areas as directed by the ENGINEER and shall not go beyond the Work area limits noted on the Contract Drawings.

2. CONTRACTOR shall in no way block such entrance(s) to the job-site when Contracted Work occurs at an existing CITY facility. At any time, the CONTRACTOR shall not block any other entrance/exit/fire doors, corridor or lobby door, etc. All fire and smoke doors, including the elevator/lobby doors, shall remain in operation at all times. CONTRACTOR shall provide all required exit at all times.

3. Use of such accesses to the job-site will only be for the purpose of parking, delivery and/or removal of materials equipment, tools, vehicles and removal of rubbish and debris, and shall be kept free of obstructions and in a safe condition at all times during extent of Contracted Work.

4. Use of crane, equipment and/or man lift, catwalk/platform to transport materials, equipment, supplies and the CONTRACTOR'S personnel to the Work area shall be in conformance with the requirements of the local governing agencies. The CONTRACTOR shall furnish the CITY with a duplicate copy of the operating permit of the equipment prior to its use.

5. If any of the crane, equipment and/or man lift, catwalk platform is attached to the existing structure specified to remain, CONTRACTOR shall provide shop drawings, including the equipment data, the attachment details, structural calculation and erection plans to the ENGINEER for approval.

6. For existing electrical transformer room or vault room, which are maintained by the Department of Water and Power, the CONTRACTOR shall arrange and obtain the permission for access and to do work from the Department of Water and Power.

7. The CONTRACTOR shall not change any existing occupied room or door key without the approval of the ENGINEER. The CONTRACTOR shall provide a duplicate key to the ENGINEER for CITY employee access.

C. City Occupation of the Premises

The CITY will occupy the existing premises (structures) at the Recreaton Center during construction operations, and will need periodic access to maintenance are adjacent Allegheny Street parking lot area as indicated in the GENERAL REQUIREMENTS Section 01313 – WORK BY CITY OR OTHERS, and in Section 00406 – PARTIAL ACCEPTANCE of the GENERAL CONDITIONS.

D. Contractor's Use of the Premises

1. Do not interfere with maintenance of the Recreation Center during Contracted Work operations, as directed by the ENGINEER.

2. Exercise care during Contracted Work operations not to interfere with or damage the following listed facilities:

   a. Recreation Center and Associated Parking Lot off Wicks Street

   b. Maintenance facility located adjacent to parking lot off Allegheny Street.

3. The CONTRACTOR shall carefully remove, salvage and protect the following listed items, as directed by the ENGINEER or the Consultant. The CONTRACTOR shall submit removal plans for review prior to start of work:

   a. None

4. All items, materials and equipment remaining in the existing structures and on the premises (job site), which are not specified to be salvaged in Item C above or elsewhere, shall become the property of the CONTRACTOR and shall be removed from the job site. The CITY makes no claims or assumes any value in any of these items, materials and/or equipment if they are removed from the structures or the job site or vandalized prior to and/or during the Contract period. The CITY assumes no responsibility for any additional operation or works as a result of the conditions described herein.

E. Parking

1. No parking of CONTRACTOR'S vehicles will be allowed on the job-site except for the purposes of unloading and/or loading as directed by the ENGINEER. CONTRACTOR shall not use new paved areas for loading or unloading. All traffic controls in the Work area shall conform to the

Work area Traffic Control Handbook (WATCH), latest edition, and the California Manual of Uniform Traffic Control Devices (MUTCD). (The California MUTCD is available on the internet at https://dot.ca.gov/programs/safety-programs/camutcd).

2. CONTRACTOR'S employees are advised to park on adjacent CITY streets and shall observe CITY parking restrictions posted on such streets.

3. CONTRACTOR shall obtain and pay for a "Street Use Permit" in order to park his vehicles, equipment and CONTRACTOR'S Field Office at Street Division, Bureau of Street Services, [1149 S. Broadway, Suite 400, (800) 996-2489]. Such "Street Use" shall be fenced off from street traffic as required. Upon completion of Contracted Work, such street area shall be left in a clean and safe condition ready for use by the public. Wherever CONTRACTOR and CONTRACTOR'S employees' vehicles are located on the street or "Street Use" area or on the job-site, all such vehicles shall be kept locked at all times.

4. The CONTRACTOR shall not park any vehicles, including concrete trucks, hauling and delivery trucks, in any street at any time unless approved by the ENGINEER. All vehicles used for shuttle purposes must be parked on the street and within the CONTRACTOR'S laydown area or off the [Hyperion Plant] site. Access must be maintained at all times for emergencies, sampling, equipment operations, maintenance and like items. The CITY retains the right to ticket and tow away at the CONTRACTOR'S expense vehicles blocking traffic if these vehicles are parked to altar or block traffic without an approved request.

5. Unless specified otherwise, the CONTRACTOR shall make arrangements with the CITY personnel and provide a locking device to be used over the existing parking entrance gate lock to allow dual access.

6. Unless specified otherwise, the CONTRACTOR is responsible to lock up all gates and opening at 6:00 P.M. and open all gates and opening at 7:00 A.M., Monday through Friday.

7. Unless specified otherwise, the existing parking area shall remain in operation as long as possible, if the existing building is occupied by CITY employees and existing parking area is being utilized, or if the INSPECTOR'S Job Office is located in existing parking area. Any new improvement in the parking shall be performed in the final phase of the Contract. CONTRACTOR shall coordinate and schedule their operations to allow sufficient time to notify the ENGINEER for parking relocation and to relocate the INSPECTOR'S temporary job office and complete the new improvements. Unless specified otherwise CONTRACTOR shall not perform any demolition or install any new paving or parking stripping [sixty (60)] days before the Contract completion date, with the exception of major utility installation. CONTRACTOR shall not use the newly paved area for parking, loading or unloading.

F. Security

1. Restrict the access of all persons entering upon the CITY'S property in connection with the Contracted Work to the Access Route and to the actual site of the work.

2. All employees of the CONTRACTOR who will be engaged in the construction of this project will be screened [by the CITY] for proper identification and good behavior. Candidates of good standing will be issued a temporary pass. CONTRACTOR shall furnish the CITY, a list of employees for approval prior to start of this project.

3. In addition to the responsibilities specified in other Sections of these GENERAL REQUIREMENTS, and the GENERAL CONDITIONS, the CONTRACTOR shall be responsible for the security of all its construction equipment, materials, tools, facilities, and vehicles (personal, private, or contractual) while performing the work of this Contract. This requirement shall be effective twenty-four (24) hours per day for the duration of the Contract.

4. CONTRACTOR shall furnish and maintain approved type site security protection between the Work areas and other areas. All such site security protection shall remain for the duration of this Contract.

5. The CONTRACTOR is responsible for the security of the parking lot or parking area and all CITY property that is stored in the parking lot or area.

6. CONTRACTOR shall furnish and maintain adequate site security protection, as directed by the ENGINEER, INSPECTOR or other authorities having jurisdiction, at no additional cost to the CITY.

G. Protections

1. Required: Where necessary for the safety of the public and the protection of the adjacent street improvements and adjacent properties, provide and maintain adequate protection, fences and gates and barricades to separate Work areas from areas outside the job-site limits**.** Such protections shall comply with provisions of Section 01120 – INTERFACE / COORDINATION REQUIREMENTS and Section 01721 – MOBILIZATION of the GENERAL REQUIREMENTS, and shall remain in place during extent of this Contract or as otherwise directed by the INSPECTOR.

2. CONTRACTOR shall provide protections, barricades, signs, etc., as necessary so that persons will be protected from the Work areas where trenching and excavations occur for foundation, underground utilities, underground fuel storage tanks etc. on the job-site. Upon completion of such work operations, such protections shall be removed.

3. All equipment, material, soil, debris and any heavy loaded object shall not be stock piled in adjacent area to create any surcharging to the trench or excavation.

4. Protection of Existing Building and Site Conditions:

a. Construct and maintain a suitable type partition, approved by the ENGINEER, to prevent dust, noise and any other nuisance to occupants within areas adjacent to the Work area(s) of this Project.

b. Protect existing surfaces in areas where work of this Contract is being performed or passed through for access to the Work areas from damage in a manner approved by the ENGINEER. Take all necessary precautions to protect and preserve the integrity of all existing work. Any damage will be subject to requirements hereinafter specified. Submit protection plans or details as required by the ENGINEER.

H. Repair of Damages

1. Required: Repair or replace any damage to existing Recreation Center and equipment located inside or outside the building under CONTRACTOR'S protection.

2. Methods: Repair or replace damaged work with new materials as necessary to restore the damaged areas or surfaces to a condition equal to and matching such conditions existing prior to damage or start of Work of this Contract, to the full satisfaction of the ENGINEER, and at no added cost to the CITY. Submit repair method for approval as required by the ENGINEER.

I. Interruption of Services

1. CONTRACTOR shall make all provisions to accomplish Contracted Work without undue interference with the CITY operations of the existing facilities on the job-site premises. Any necessary interruptions to existing elevator, plumbing, mechanical and/or electrical facilities shall be done only after 48 hours advance consultation with the ENGINEER and at such time and duration as instructed by the ENGINEER.] [Provide an uninterruptive power source if necessary to ensure that there is no power interruption. CONTRACTOR shall verify existing loading and any possible load increase during construction prior to ordering. Any required new circuit or repair of existing circuit in the CITY'S occupied area to maintain continuous operation shall be done by CONTRACTOR at no additional cost to the CITY.

J. Non-interference With Others

1. CONTRACTOR shall confine Contracted Work operations to the immediate boundaries of the job-site and shall execute work operations in a manner to minimize interference with CITY operations and/or work operations of other CONTRACTORS working on the premises; as directed by the ENGINEER.

2. CONTRACTOR shall provide and maintain adjacent pedestrian and vehicular accesses in accordance with Work area Traffic Control Handbook (W.A.T.C.H.), latest edition, and the California Manual of Uniform Traffic Control Devices (MUTCD).

3. CONTRACTOR shall obtain approval of ENGINEER and local authorities having jurisdiction such as Department of Transportation, Police Department, Bureau of Street Services, etc. prior to any street, alley or sidewalk closure.

K. Underground Service Alert

1. Before commencing any excavation, the CONTRACTOR shall obtain an underground service alert inquiry I.D. Number by calling 1 (800) 422-4133. Two (2) working days shall be allowed after the I.D. Number is obtained and before the excavation work starts so that utility owners can be notified. The I.D. Number must be reported to the Bureau of Contract Administration when calling for inspection. I.D. Numbers will not be given more than ten (10) calendar days prior to starting excavation work.

L. Job Safety

1. CONTRACTOR shall observe all safety rules and regulations of the Los Angeles City Building Code and CAL/OSHA as applicable to the safety of the CONTRACTOR, CONTRACTOR'S personnel and CITY employees during Contracted Work operations and especially during asbestos removal operations.

(END OF SECTION)

SECTION 01150
STORAGE OF MATERIALS AND EQUIPMENT

1.1 THE REQUIREMENT

A. All materials and equipment shall be stored and protected in accordance with the manufacturer's instructions, with seals and labels intact and legible. Store sensitive products in weatherproof, climate controlled enclosures. Where indoor storage is required, the equipment shall be stored inside a completely enclosed building, with the temperature controlled between 60 degrees Fahrenheit and 100 degrees Fahrenheit (60°F – 100°F) and a maximum relative humidity of ninety percent (90%) noncondensing.

B. For exterior storage of material or equipment, the materials or equipment shall be placed on sloped supports above ground. Material or equipment subject to deterioration shall be covered with an impervious covering. Where necessary ventilation and heating shall be provided to avoid condensation.

C. The CONTRACTOR shall exercise all measures necessary to ensure preservation of the quality, quantity, and fitness of the materials or equipment and shall perform the manufacturers recommended maintenance of the material or equipment.

D. The CONTRACTOR shall inspect the material and equipment, and submit a written monthly report to the INSPECTOR listing all the equipment stored, the results of their inspection, and the maintenance performed.

E. The materials and equipment shall not show signs of pitting, rust, decay or other deleterious effects of storage when incorporated in to the work.

F. Pumps, motors, electrical equipment, and other equipment with anti-friction or sleeve bearings shall be stored in weather tight structures maintained at a temperature above sixty degrees Fahrenheit (60°F). Electrical equipment, controls, and insulation shall be protected against moisture and water damage. All space heaters furnished in electrical equipment shall be immediately energized and operated continuously until the equipment is placed into service.

G. The CONTRACTOR shall grant the INSPECTOR and ENGINEER access to the storage facility at any time and assist the INSPECTOR and ENGINEER in conducting a full view, piece by piece, inventory of all such material or equipment.

H. The CONTRACTOR shall absorb any and all cost incurred to store, protect, and maintain the materials and equipment without modification to the Contract amount.

I. For CITY furnished equipment delivered to the site, the CONTRACTOR shall take all necessary measures to protect the equipment from damage due to the CONTRACTOR’s activities. The CONTRACTOR shall also ensure that all measures required by the CITY’s vendor to preserve and protect their equipment are maintained and are not disturbed including, but not limited to, providing for the continuous operation of space heaters furnished in electrical equipment.

END OF SECTION 01150

SECTION 01211
ALLOWANCE FOR EQUIPMENT SUBSTITUTIONS FOR COMPATIBILITY PURPOSES

1.1 THE REQUIREMENT

A. An allowance for equipment upgrade purposes has been established in the Proposal for this Contract. In the event that the CITY determines that items of equipment proposed for use by the CONTRACTOR do not meet the needs of the CITY, and the CITY directs the CONTRACTOR to substitute other pieces of equipment, then this allowance may be used. The substitution of equipment must be directed by the CITY in writing and must specifically be identified as substitutions due to compatibility of equipment. In this event, and provided that the CONTRACTOR can clearly document an increase in cost, then such cost increase may be paid for from this allowance through the issuance of an Allowance Order; provided that there is a specific written approval of the CITY. Any monies paid from this allowance shall not result in the need to issue a Change Order. It is agreed that this allowance shall only be used to pay for direct cost differences in the cost of equipment. If the CITY rejects a piece of equipment proposed for use by the CONTRACTOR because the equipment, in the sole judgment of the ENGINEER, does not meet the requirements of the Contract Documents, the CONTRACTOR shall not have any claim against this allowance. This bid item is an allowance and is subject to an upward or downward adjustment by a Change Order, at the end of the project, to reflect the actual costs expended. Such adjustment is not subject to markup (overhead, profit, bonds, insurance, etc.).

(END OF SECTION)

SECTION 01212
FIXED CASH ALLOWANCE ITEMS

1.1 THE REQUIREMENT

A. A fixed cash allowance has been allocated to each of the following items of the Bid Breakdown (see Bid Proposal). Requirements for each Fixed Cash Allowance Item are specified in the GENERAL REQUIREMENTS (GR) section referenced below. Overhead and Profit, at the rates listed below, shall be added to the actual invoiced amount.

Bid Item No.	Description	Overhead and Profit
1.	ALLOWANCE for Engineer's and Inspector's Field Office Supplies per the GR, Section 01212	5%
2.	ALLOWANCE for Differing Site Condition per the GR, Sections 01212, 01253 and 01254	Per Section 01254
3.	ALLOWANCE for Payment for Permits per the GR, Sections 01212, 01280, 01292 and 01721	0%
4.	ALLOWANCE for Opportunity to Partner per the GR, Sections 01212 and 01353	5%
5.	ALLOWANCE for Startup Assistance per General Requirements Section 01750	5%
6.	ALLOWANCE for Distributed Control System Integration (Honeywell)	5%

B. If these items are not executed, or are only partially executed, or the allowance for any item is not expended or partially expended, then a deductive Change Order shall be issued for the amount that is not expended. If, however, these items are over expended (with ENGINEER'S prior approval), then an appropriate Change Order shall be executed in accordance with the provisions of the GENERAL REQUIREMENTS Section 01254 –- CHANGE ORDERS, except for Overhead and Profit wherein the above listed rates shall apply.

C. The ENGINEER'S AND INSPECTOR'S field office supply allowance is to be used at the ENGINEER'S and/or INSPECTOR'S discretion to purchase office

supplies and/or office equipment, perform repairs to field offices or equipment owned or leased by the City, pay field office utility bills, purchase reference documents, etc. The items covered by this allowance are in addition to those required to be furnished by the CONTRACTOR under GR Section 01721-Mobilization. The CONTRACTOR shall be reimbursed the actual invoice amount plus the markup allowed by Section A, above.

END OF SECTION 01212

SECTION 01251
CHANGE ORDER REQUESTS

1.1 THE REQUIREMENT

A. All quotations for preliminary change orders for extras, changes, additions, or deletions to the Work as described in CHANGES AND EXTRA WORK of the GENERAL CONDITIONS shall be submitted to the ENGINEER, in writing, on the Change Order Cost Quotation Form provided by the ENGINEER, and in conformance with the requirements of CHANGE ORDERS of the GENERAL REQUIREMENTS (See Attachment 01251-A1). The quotation shall be firm for a period of not less than sixty (60) calendar days from the date of receipt of the quotation by the ENGINEER. The CONTRACTOR shall submit its written cost quotation and Time Impact Analysis not later than fifteen (15) days after being requested to provide such quotation, unless the ENGINEER allows more time. Delays in submitting quotations beyond the fifteen (15) days set forth herein, which cause a delay in the issuance of a Change Order or a delay to the completion date of the project, shall not be cause for a claim or a time extension under the Contract.

B. The ENGINEER'S request for quotation on a preliminary change shall not be considered authorization to proceed with the changed work prior to the issuance of a final Lump Sum or Time & Material Change Order, unless directed otherwise, in writing, by the ENGINEER, nor shall such request constitute justification for a delay to the existing Work or a time extension under the Contract.

END OF SECTION 01251

SEE ATTACHMENT

ATTACHMENT TO SECTION 01251

Attachments to General Requirements Section 01251 consists of one (1) document, as follows:

ATTACHMENT NUMBER	TITLE OF ATTACHMENT	NUMBER OF PAGES IN THIS ATTACHMENT
01251-A1	Change Order Cost Summary Form	1

Change Order Cost Summary Form

		Direct Labor	Direct Materials	Direct Equipment		Totals
(1):	Lump Sum Work by Prime Contractor	$	$	$		
(2):	"T&M" Work by Prime Contractor	$	$	$		
(3):	Subtotal - Direct Work (Prime Contractor)	$	$	$		
(4):	All Lump Sum Work by subcontractors (any tier)	$	$	$		
(5):	All "T&M" Work by subcontractors (any tier)	$	$	$		
(6):	Subtotal - Direct Work (all subcontractors)	$	$	$		$
					Add each of the three columns across and enter to the right.	
(3)+(6)=(7):	Total - Direct Costs	$	$	$		$
(8):	Markup	(20% of direct labor) $	(15% of direct mat'l) $	(15% of direct equip) $		$
(9):	Prime Contractor Markup for subcontractors				5% of line (6) direct sub work	$
(10):	Bonds & Insurance				1% of line (7) all direct work	$
(11):	Additional amount (if any) permitted by Contract					$
(12):	**GRAND TOTAL**				Add sums of lines) (7), (8), (9), (10) and (11)	$

SECTION 01252
CONSTRUCTION INCENTIVE CHANGE PROPOSAL

1.1 PURPOSE

A. This Article defines a "Construction Incentive Change Proposal" (CICP) and establishes policies and procedures for the application of CICP's.

1.2 DEFINITIONS

A. A CICP is a formally written proposal for a Change Order during the construction of this Project. A CICP shall be initiated, fully designed and developed, and identified as such by the CONTRACTOR. A CICP must result in a net capital savings of one-hundred-thousand dollars ($100,000) or more. However, if, in the sole judgement of the ENGINEER, a disproportionate amount of the net capital savings are offset due to the CITY's development and implementation costs, the ENGINEER will decline to approve and pursue the CICP.

B. Net capital savings are defined as the total savings proposed by the CONTRACTOR, and accepted by the ENGINEER, less the CITY's added development and implementation costs. The CONTRACTOR's development and implementation costs accepted or rejected, shall be borne solely by the CONTRACTOR and shall not be included in the calculation of savings herein.

C. A CICP must result in a net capital saving while causing no increase in the total life cycle cost of the Project and must also meet the following conditions.

1. The required quality, function, reliability, and safety of the Project shall be maintained.

2. There shall be no impact to cost or increase in difficulty of the facility/system operation and maintenance.

3. The proposed change will not result in any Contract rebidding.

4. The proposed change shall not be solely based on a reduction in end item quantities. Reductions in specified end item quantities or quantities necessary to complete the Work as specified or shown shall not be considered CICP's and shall be addressed as deductive Change Orders.

5. The proposed change shall not be solely based on a change in material quality. Reductions in specified material quality shall not be considered CICP's and shall be addressed as deductive Change Orders.

6. The proposed change shall not cause undue interruption of the Work of the Contract.

7. The proposed change shall be in full compliance with all applicable codes, permits, and regulations.

8. The proposed change shall not result in a substitution of material or equipment only.

1.3 CONTENT

A. A CICP shall contain all pertinent information and supporting documentation for evaluation by the ENGINEER. As a minimum, the following information shall be included.

1. Name(s) of the individual(s) associated with the development and preparation of the CICP.

2. A detailed description with duly signed Plans and Specifications of the present design and the proposed change(s).

3. A written discussion and clear identification of all advantages and disadvantages for each change proposed.

4. A detailed design, procedure, and schedule for implementing the proposed change. This shall include all necessary CONTRACT amendments, Plans, sketches, Drawings, design calculations, etc. (stamped by a California Registered Professional Engineer, as applicable) and the latest date the CICP must be approved for implementation without any impact to the construction progress. Such submittal shall be provided to the ENGINEER no later than ninety (90) calendar days prior to the proposed date of implementation.

5. A summary of the estimated costs shall include the following:

   a. Construction costs before and after the CICP for the proposed change. This shall be a detailed estimate identifying the following items for each trade involved in the CICP including:

      (1) Quantities of materials and equipment

      (2) Unit prices of materials and equipment

      (3) Labor hours and rates for installation

      (4) Subcontractor and CONTRACTOR mark-ups.

   b. If applicable, operation and maintenance costs before and after the CICP.

   c. CONTRACTOR’s share of the savings based on the paragraph entitled "Sharing Provisions" contained herein.

   d. Time required for executing the proposed change.

   e. Prices for items or products shown or specified shall form the basis for cost comparison for alternatives or equals that the CONTRACTOR may choose to employ under a CICP.

6. The CONTRACTOR may not restrict the CITY’s use of any CICP or the supporting data submitted.

1.4 SHARING PROVISIONS

A. Sharing of Net Capital Savings

1. Upon acceptance of a CICP, the CONTRACTOR shall share the net capital savings based on the Sharing Formula below.

2. Net Capital Savings = (Initial Construction Costs - Revised Construction Costs) -(CITY CICP Implementation Costs)

3. The CONTRACTOR's CICP development costs shall not be included in this formula. The CONTRACTOR shall bear such costs exclusively.

4. Sharing Formula

   a. When the total cumulative net savings based on the formula set forth above is $1 million ($1,000,000) or less, the CONTRACTOR shall receive fifty percent (50%) of the savings.

   b. When the total cumulative net savings based on the formula set forth above exceeds $1 million ($1,000,000) the CONTRACTOR's share will be computed based on the following formula:

      y = .2x + $300,000

      where:

      y = CONTRACTOR's share in dollars

      x = Total net savings in dollars

      For example, if the total net savings is $1,200,000

      y = .2($1,200,000) + $300,000 = $540,000

1.5 GENERAL PROVISIONS

A. Any CICP may be accepted, in whole or in part, by the ENGINEER's issuance of a Change Order to this CONTRACT citing this Article and referencing the CONTRACTOR's CICP. The ENGINEER may accept a CICP even though an agreement on price reduction has not been reached, by issuing a Notice-To-Proceed with the CICP to the CONTRACTOR. Until a Notice-To-Proceed is issued, or a Change Order applies a CICP to this CONTRACT, the CONTRACTOR shall perform in strict accordance with the existing CONTRACT requirements.

B. If the CICP is not accepted, the ENGINEER shall notify the CONTRACTOR, in writing, setting forth the reasons for rejection.

C. The ENGINEER's decision to accept or reject all or a part of any CICP shall be final and conclusive of the matter and shall not be subject to appeal under the CLAIMS AND PROTESTS Section of the GENERAL CONDITIONS.

D. In recognition of the fact that the CONTRACTOR is the originator and the designer of all CICP's, the CONTRACTOR shall be responsible for the installation, implementation, and performance of any CICP and shall guaranty and warranty the CICP in accordance with the provisions of the GUARANTY-WARRANTY Section of these GENERAL REQUIREMENTS. The

CONTRACTOR shall indemnify the ENGINEER and all its agents from any claims or damages arising directly or indirectly out of any CICP in accordance with the provisions of the INDEMNIFICATION of the GENERAL CONDITIONS. The CONTRACTOR shall be solely responsible for any and all impacts (both time and costs) and delays arising either directly or indirectly out of the implementation of any CICP.

(END OF SECTION)

SECTION 01253
DIFFERING SITE CONDITIONS

1.1 THE REQUIREMENT

A. The Geotechnical Evaluation Report (GER) presents the geotechnical basis for the effect of geologic and geotechnical conditions upon the construction. The GER is to be considered as establishing the only geotechnical baseline for all anticipated subsurface and physical conditions for the purposes of the construction. If actual subsurface or latent conditions physical conditions differ materially from those indicated in the GER, and are of such a nature as to cause an increase or decrease in the cost of performance of the Work, or a change in the construction methods required for performance of the Work, which results in an increase or decrease in the cost of the Work, the City shall make an adjustment in the Contract Price and Contract Completion Date and the Contract Documents shall be modified accordingly. It is understood by the parties hereto that the GBR is the only standard that is to be applied for determining CONTRACTOR'S rights to an adjustment of the Contract Price or Contract Completion Date by reason of unforeseen or unexpected subsurface or latent physical conditions. All other geotechnical data, reports, and other information provided to the CONTRACTOR are not included in or made a part of the Contract Documents, nor are such other data, reports or information warranted, impliedly or expressly, as to accuracy, completeness or use.

B. The CONTRACTOR shall notify the ENGINEER, in writing, within twenty-four (24) hours of any subsurface latent conditions or physical conditions encountered which CONTRACTOR believes, or should have suspected in the exercise of diligence and extreme care, to constitute Differing Site Conditions as described in this Section. Such written notice shall include a detailed statement of the following facts concerning such conditions: (i) their location; (ii) their nature and extent; (iii) the baseline conditions described the GER that formed the basis of the CONTRACTOR'S expectations regarding the conditions that would be encountered. The ENGINEER shall promptly investigate the conditions. If the ENGINEER finds that conditions materially differ and will cause an increase or decrease in the CONTRACTOR'S cost or the time required to perform any part of the Work under this Contract, whether or not changed as a result of such conditions, the ENGINEER shall, after receipt of the CONTRACTOR'S written statement, make an equitable adjustment and modify the Contract in writing.

C. If the CONTRACTOR intends to assert a claim for an adjustment in the Contract Price or Contract Completion Date under this Article, it must, within twenty (20) calendar days after receipt of such determination as to whether a Differing Site Condition exists, submit a written statement setting forth a detailed cost breakdown in the form required by GENERAL REQUIREMENTS Section 01254 (CHANGE ORDERS) setting forth the basis of CONTRACTOR'S calculation of the costs saved or incurred, detailed information demonstrating the effects on the Contractor's schedule of performance in the same manner as required by the Contract Documents for obtaining approval of extensions of time, identification of the portions of the Escrow Bid Documents (including without limitation the GBR baseline statements referred to in the Escrow Bid Documents as required by Section 01351 (Escrow Bid Documents) of the General Requirements) that formed the basis of CONTRACTOR'S bid estimate to perform the Work affected

by such conditions, and a complete and detailed explanation of the factual basis for the CONTRACTOR'S request.

D. Failure by CONTRACTOR to strictly comply with the notice requirements of this Section concerning the timing and content of any notice of Differing Site Conditions or of any request for equitable adjustment based on Differing Site Conditions or any failure to comply with the requirements of Section 01351 (Escrow Bid Documents) pertaining to clear identification of GBR baseline statements used in preparation of CONTRACTOR's bid shall be deemed waiver of any claim by the CONTRACTOR for increase in the Contract Price or extension of the Contract Completion Date by reason of such conditions.

E. CONTRACTOR'S rights to compensation for (i) delay, disruption, hindrance, interference, schedule compression, and the impact, ripple or cumulative effect thereof; or (ii) additional supervision, administration, excess, extended or extraordinary overhead, loss of productivity, or similar costs, expenses or damages incurred as a result of or related to any claim of Differing Site Conditions shall be limited to such sums as are allowable under TEMPORARY SUSPENSION OR DELAY OF WORK of the GENERAL CONDITIONS.

F. No claim by the CONTRACTOR for an adjustment hereunder shall be allowed if asserted after final payment under this Contract]

END OF SECTION 01253

SECTION 01254
CHANGE ORDERS

1.1 The Requirement

Payment to the Contractor, or credit to the City, for any change, addition, deletion or extra to the Work, or settlement of any Claim, covered by any Change Order, shall be determined by the methods set forth herein. The Engineer may change the Plans and Specifications, character of the Work, or quantity of Work provided the total net dollar value of all such changes, taking into consideration both additive and deductive changes, does not exceed twenty-five percent (25%) of the original Contract Price. (The total net dollar value requires that additive and deductive changes offset each other, and only after the total net dollar value of the changes exceeds 25% of the original Contract Price, will a Supplemental Agreement be required). Should it become necessary to exceed this limitation, the change shall be by written Supplemental Agreement between the Contractor and the City, which shall be executed by a Change Order.

Unless otherwise stipulated, “Unit Prices” and “Stipulated Prices” include all costs necessary to furnish, install and complete the Work. The “Unit Prices” and “Stipulated Prices” include all direct costs for labor, equipment and materials, all insurance and bond costs, all field and office supervisors and assistants, all onsite project administration, security costs, the cost of small tools and consumables, incidental job burdens, and all general home office expenses and no separate allowance will be made therefor. Assistants to field and office supervisors include all clerical, stenographic, and general office help. Incidental job burdens include, but is not limited to, office equipment and supplies, temporary toilets, telephone, utilities, safety equipment, warning devices, personal protective equipment, and conformance to OSHA requirements. Project administration includes, but is not limited to, review and coordination, estimating, engineering, scheduling, and expediting relative to Change Orders, and updating and furnishing Record Drawings to incorporate changes, schedule update, supervision not applied solely to the Work of the Change Order, home office salaries and expenses, and City of Los Angeles Business Tax.

A. Unit Prices

Unit prices stipulated in the Schedule of Work and Prices (Bid) or itemized in the approved Schedule of Values shall be utilized, where they are applicable and determined reasonable by the Engineer. In the event that the Change Order results in a change in the Bid quantity of more than twenty-five percent (25%), either increase or decrease, then either the Engineer or the Contractor may request a review of the unit price to determine if a new unit price shall be mutually determined by negotiation. Any new unit price mutually determined under this Subsection shall only apply to the units in excess of one hundred twenty five percent (125%) of the Bid quantity for overruns. In case of underruns, the new mutually determined unit price shall only apply to the units up to seventy-five percent (75%) of the Bid quantity. When the final quantity is less than 75% of the Bid quantity, the total payment for that item shall not be more than 75% of the Bid quantity times the Bid unit price.

At the City’s option, payment for Unit Price Work in excess of 125% of the Bid quantity, or less than 75% of the Bid quantity, will be made on a Time and Materials basis as provided in Subsection C if a new unit price cannot be agreed upon.

Renegotiated unit prices or unit prices for new items added to the Contract by Change Order shall be determined in accordance with Subsections B through G. Whether stipulated in the Bid, itemized in the approved Schedule of Values or renegotiated, the unit prices used for payment constitute the total adjustment with no further costs owed for overhead, impact, profit, delay or impact to unchanged portions of the Contract, or any

other reason. The unit price shall be full and final compensation as described in Subsection D.

The cost proposals for renegotiated unit prices shall be presented in accordance with the provisions of Subsections B through G. Should any Bid Item be deleted in its entirety, the amount bid for that Bid Item shall be subtracted from the total Contract amount. The Contractor shall be paid only for the actual cost incurred prior to the notification of such deletion for that Bid Item.

B. Lump Sum

The Engineer may initiate a change in the Work by issuing a Preliminary Change Order (PCO). A PCO will include a detailed description of the proposed additions, deletions, or revisions with supplementary sketches or revised Contract Drawings and/or Specifications and will request from the Contractor a lump sum cost quotation and time impact analysis for the proposed Change Order Work. The Contractor shall submit its PCO cost quotation and time impact analysis, if applicable, to the City within 14 calendar days after receipt of a PCO. The Contractor shall summarize the total cost and furnish a breakdown of the proposed lump sum costs satisfactory to the Engineer in accordance with Subsections B through G. Such lump sum costs shall be full and final compensation as described in Subsection D. The Contractor's quotation shall conform to the requirements of Section 01251- Change Order Requests and be submitted in the Change Order Cost Summary Form provided (see Attachment 01251-A1). The Change Order Cost Summary Form cannot be used to nullify or supersede any specification or contractual provision.

If the method or amount of payment cannot be agreed upon prior to performing the Change Order Work, the Engineer may issue a Unilateral Change Order in the amount determined reasonable by the Engineer for the Change Order Work and direct the Contractor to proceed immediately. The Engineer also has the option to issue a Time and Materials Change Order directing the Change Order Work be performed on a time and materials basis with the Contractor providing all labor, equipment, and materials necessary to complete the Change Order Work in a satisfactory manner and within a reasonable period of time. Estimates for lump sum quotations and accounting for Time and Materials Work shall be limited to direct expenditures necessitated specifically by the subject Change Order Work, and shall be segregated as follows:

1. Labor: The cost of labor shall include all employees of the Contractor or Subcontractor(s), up to and including working foremen, who are used in the actual and direct performance of the Change Order Work. Employees identified as superintendents or non-working foremen shall not be charged as labor on the Change Order Work. The labor rates used to price the Change Order Work shall be those listed on the Bureau of Engineering's website at http://eng.lacity.org/contractors/**.** The Change Order Labor Rates include State of California Prevailing Wages, Fringe Benefits (health & welfare, pension, vacation, training and other payments) as established by negotiated labor agreements, Payroll Taxes (FICA, Federal and State unemployment taxes) as established by law, and Insurance costs (Worker's Compensation and General Liability Insurance, but shall not include Automobile Liability Insurance, Umbrella or any other insurance costs). No other subcomponents of labor costs shall be considered, unless approved in writing by the Engineer.

   The Change Order Labor Rates are calculated using the most current published prevailing wage and fringe benefits determination, applicable to the Los Angeles County and the particular labor classification, from the State of California Director

of Industrial Relations. To the Total Base Hourly Wage Rate (Column D), will be added Payroll Taxes at 8.65% (Column E), and Worker's Compensation & General Liability Insurance at 13% (Column F) of the base wages (Columns A+B), respectively.

Copies of the prevailing wage and fringe benefit determinations are available on the internet at http://www.dir.ca.gov/OPRL/PWD/. Payment to a craft of classification not shown on the prevailing wage rate determinations shall comply with the rate of the craft or classification most closely related to it.

The Engineer may approve a higher markup for insurance by review of current invoice(s) of insurance premium, as prepared by insurance companies for the Contractor or its Subcontractors at all tiers, to be submitted by the Contractor within ten (10) working days after issuance of the Notice to Proceed.

Except when provided otherwise by specific labor agreements, the overtime compensation will be at 1.5 times for more than 8 hours per day and Saturday work (Column H) and 2 times for Sunday and Holiday work (Column I).

The labor cost is not allowed to be increased by using labor classifications with paygrades higher than necessary to accomplish the Change Order Work. Owners, business partners, stock holders, corporate officers, next of kin, relatives and other stake holders of the contracting company (whose classifications are directly chargeable to the project) may be chargeable to the Change Order Work, provided that these personnel/workers perform direct labor in accordance with their classification and have the approval of the Inspector. The rates shall not exceed the prevailing wage rate for the classification they are performing. Foreman/General Foreman classification shall include a premium not exceeding the allowable premium in the Master Labor Agreement over the highest prevailing wage he is supervising. All labor classifications considered for the work shall be presented to the City, via a submittal, for review and approval before change order work is performed.

Reimbursement at the computed Change Order Labor Rates is subject to verification by certified payroll.

2. Materials: The cost of materials used in performing the Change Order Work will be the direct cost, including sales tax and freight, to the purchaser, whether Contractor, Subcontractor or other forces, from the supplier thereof, except as follows:

   a. Cash or trade discounts available to the purchaser shall be credited to the City notwithstanding the fact that such discounts may not have been taken by the Contractor.

   b. For materials secured by other than a direct purchase and direct billing to the purchaser, the cost shall be deemed to be the price paid to the actual supplier as determined by the Engineer. Supplier markup, except for actual costs incurred in the handling of such materials, will not be allowed.

   c. Payment for materials from sources owned wholly or in part by the purchaser shall not exceed the price paid by the purchaser for similar materials from said sources on contract items or the current wholesale price for such materials delivered to the Jobsite, whichever price is lower.

d. If, in the opinion of the Engineer, the cost of materials is excessive, or the Contractor does not furnish satisfactory evidence of the cost of such materials, then the cost shall be deemed to be the lowest current wholesale price for the quantity concerned, delivered to the Jobsite less cash or trade discount. The City reserves the right to furnish materials for the Work and no claim shall be made by the Contractor for costs and profit on such materials.

e. For the purposes of this Section, a "Supplier" is defined as any person or persons, firm or business, who supplies materials of construction and/or permanent equipment, but who does not perform any portion of the Work of the Contract on site, for the Contractor, except that labor or labor supervision which may be required by some manufacturers as part of their equipment installation for warranty or other purposes.

3. Equipment: The cost of equipment shall include ownership, lease or rental costs, as well as operating costs, for individual equipment units whose replacement value is in excess of $1,000. Transportation and set up costs shall be included, but only if the equipment is imported to the worksite solely to perform work on the Changed/ Extra Work described in the Change Order and the Contractor can demonstrate that the changed work cannot or could not be performed economically with equipment already at the site. Equipment costs shall be determined in accordance with the requirements set forth in Subsection G.

4. Small tools, equipment, consumables and incidental costs: No separate payment will be made for the use of small tools or equipment with a replacement value of $1,000 or less. This applies to tools and equipment owned by the Contractor or its Subcontractors, at any tier. Also, no separate payment will be made for fuel, lubricants, tool or equipment repairs, tool or equipment maintenance, consumables, drinking water, sanitary facilities or other incidentals. These costs are already included as a part of Markup.

5. Subcontractor Costs, including their overhead and profit, provided that such costs are direct costs to the Contractor for performing the Change Order Work as set forth in Subsections B through G.

C. Time and Materials Work

The costs of all Changed/Extra Work submitted under the Time and Materials (T&M) method shall be formulated in accordance with the provisions of Subsections B through I.

Unless otherwise stipulated on the Change Order, the “Not-to-Exceed” amount for all T&M Change Orders is $25,000. The Contractor is responsible for tracking costs and for notifying the Engineer in writing when costs approach 50% and 75% of the “Not-to-Exceed” amount. In addition, if the Changed/Extra Work cannot be completed within the “Not-to-Exceed” limit, the Contractor shall notify the Engineer in writing, and in a timely manner, that the limit requires an increase. The City will only reimburse eligible costs up to the “Not-to-Exceed” amount.

The Contractor shall notify the Inspector at the beginning of each day when T&M Change Order Work is being performed. The Contractor shall notify the Inspector of the T&M Change Order Work being performed and describe the personnel involved, whether by Contractor forces or by its Subcontractors, at any tier. Failure to notify the Inspector prior

to the start of T&M Change Order Work serves as the Contractor's waiver to claim for compensation on that day.

For each day work is performed on the T&M Change Order, the Contractor shall submit a "Daily Report of Time and Material Work" to the Inspector. The "Daily Report" consists of Bureau of Contract Administration Form BCA-165 for labor supplied, and Form BCA-166 for equipment and materials supplied. The Inspector will only consider Forms that are properly completed as described below.

1. Separate forms must be used for labor and for equipment/materials.

2. Labor, equipment, material or expenditures that are not included on Bureau of Contract Administration Forms BCA-165 and/or BCA-166 are ineligible for payment. There will be no exceptions to this requirement. It is the responsibility of the Contractor to include any and all items of labor, equipment, or material for which it requests compensation for each day's work completed.

3. Information required on the Labor form shall include name of personnel, personnel classification, and only the number of hours worked on T&M Change Order Work for the day being reported. Since the overhead allowance already includes all necessary supervision, any hours for additional supervision or non-working foremen are ineligible for additional payment. The premium pay for a general foreman is eligible for payment only if the general foreman is a working foreman and a general foreman was required by a Union Labor Agreement or otherwise approved by the Inspector. The general foreman rate is eligible for payment only during the time that a general foreman was required for the T&M Change Order Work.

4. Information required on the Equipment/Material form shall include Contractor-owned equipment and/or tools, and rented equipment or tools for which compensation is requested. Information shall include the type of equipment, size of equipment, equipment identification number, appurtenances, and only the number of hours worked on the T&M Change Order Work.

5. The only allowable materials are materials delivered to the job site and/or incorporated only into the T&M Change Order Work. The allowable materials shall be listed on the Equipment/Material form for the day that they are delivered to the job site and/or incorporated into the T&M Change Order Work.

6. Delivery ticket(s) and/or bill(s) of lading for rental equipment and/or tools delivered to the site and/or material incorporated into the T&M Change Order Work for the day being reported must be attached with the T&M sheet for that day. No payment will be allowed for materials and/or rented equipment unless receipt(s) or bill(s) of lading is attached. If the request for payment is not substantiated by original vendor/supplier invoices, acceptable copies of original invoices, or other documentation acceptable to the Inspector, the City may establish the cost of the item(s) at the lowest possible wholesale price or rental rate applicable while the T&M Change Order Work was being performed.

7. Failure to submit the required "Daily Report of Time and Material Work" by the close of the next working day shall waive all rights for that day unless otherwise approved by the Inspector. Any T&M Change Order Work that cannot be substantiated by a "Daily Report", approved and signed by the Inspector, is ineligible for payment.

8. The Contractor is responsible for preparing the “Daily Report” for the T&M Change Order Work performed by its Subcontractors and submitting the forms to the Inspector on time.

9. The Contractor must have each “Daily Report” verified by the Inspector. After the “Daily Report” is approved by the Inspector, both the Contractor and Inspector sign the report. The original “Daily Report” is retained by the Inspector with a copy provided to the Contractor.

10. When the “Daily Report” is signed by the Inspector and the Contractor, it is binding on the Contractor and its Subcontractors.

11. When agreed to by the Inspector, the Contractor may submit a supplemental “Daily Report” for labor, materials, or equipment for which the Contractor requests compensation, but failed to list on the original daily report.

    a. These supplemental forms shall be marked “SUPPLEMENTAL”.

    b. Unless otherwise approved by the Inspector, the supplemental forms may only be submitted for approval up to two (2) working days following the date when the work was performed.

No payment will be allowed for labor, materials, or equipment included on T&M sheets not signed by the Contractor and the Inspector. Payment will not be allowed for labor, materials, or equipment included on T&M sheets signed by anyone other than the Inspector or the Inspector’s immediate supervisor.

D. General

It is the intent of the City to settle all Change Orders full and final at the time the Change Order is issued. Therefore, the following paragraph will be incorporated, in writing, on all Change Orders:

> “The compensation (time and cost) set forth in a Change Order comprises the total compensation due the Contractor, all Subcontractors, and all Suppliers, for the Work or change defined in the Change Order, including impact on unchanged work. By signing the Change Order, the Contractor acknowledges and agrees on behalf of himself, all Subcontractors, and all Suppliers, that the stipulated compensation includes payment for all work contained in the Change Order, plus all payment for the interruption of schedules, extended field overhead costs, delay, and all impact, ripple effect or cumulative impact on all other work under this Contract. The signing of the Change Order indicates that the Change Order constitutes full mutual accord and satisfaction for the change, and that the time and/or cost under the Change Order constitutes the total equitable adjustment owed the Contractor, all Subcontractors, and all Suppliers as a result of the change. The Contractor, on behalf of himself, all subcontractors, and all Suppliers, agrees to waive all rights, without exception or reservation of any kind whatsoever, to file any further claim related to this Change Order. No further claim or request for equitable adjustment of any type for any reasonably foreseeable cause shall arise out of or as a result of this Change Order or the impact of this Change Order on the remainder of the Work under this Contract.”

Costs which shall not be paid in Change Orders under this Contract include, but are not limited to, interest costs of any type; claim preparation or filing costs; legal expenses; the costs of preparing or reviewing proposed Change Orders or Change Order proposals;

lost revenue; lost profits; lost income or earnings; rescheduling costs; costs of idled equipment when such equipment is not at the site or has not yet been employed on the Work; lost earnings or interest on unpaid retainage; claims consulting costs; and the costs of corporate officer or staff visiting the site; any compensation due to the fluctuation of foreign currency conversion or exchange rates; loss of other business; changes in taxes or increased tax rates of any kind or any costs identified as unallowable under the provisions of the Federal Acquisition Regulations.

Extensions of time shall be based solely upon the effect of delays to the Work as a whole. Extensions of time shall not be granted for delays to the Work, unless the Contractor can clearly demonstrate, through analysis of the current updated schedule, that the delay to the Work as a whole arose or will arise from causes other than normal weather, beyond the control and without fault or negligence of the Contractor, or any Subcontractor, at any tier, and that such delays will, in fact, delay the progress of the Work as a whole. The Contractor shall not be entitled to a time extension unless it submits a Time Impact Analysis which is a calculation of the extent of the delay to the end date of the Work and which shows that the Work will be extended beyond the current Contract completion date. A Time Impact Analysis is a scheduling procedure which utilizes the networking techniques (fragnets) and a written analysis of the facts associated with the alleged delay to demonstrate the effect of the alleged delay on the critical path of the schedule. A "fragnet" is defined as a sequence of new activities and/or activity revisions that are proposed to be added to the existing current updated schedule to demonstrate (mathematically and graphically) the influence of the alleged delay on the end date of the Work and shall be the sole method for incorporating delays and impacts into the schedule. The objective of a Time Impact Analysis is to pinpoint, isolate, and quantify all time impact associated with a specific issue and determine its time relationship to current or future delays. Time extensions shall not be allowed for delays to parts of the Work that are not on the critical path of the currently approved monthly updated project schedule. Time extensions shall not be granted, nor delay damages of any kind whatsoever paid to the Contractor, until all available float, slack, or contingency time on the project is used and the end date of the Work is moved beyond the current, adjusted Contract completion date.

The cost summary, cost breakdowns and requests for cost reimbursement submitted by the Contractor (for delay, disruption, hindrance and interference associated with the changes, additions, deletions or extras) shall be itemized in a manner that, with mathematical certainty and without reliance upon probabilities or inferences, segregates the direct, actual reimbursable costs associated with each individual, change, addition, deletion, extra and (on an event-by-event basis) each individual delay or disruption event. Such cost summaries, breakdowns or requests shall not be based, in whole or in part, upon any methodology (such as “total cost” or “modified total cost” methodologies) that purports to calculate the Contractor’s additional costs of performance of the extra, change, addition or deletion (including without limitation the additional costs of delay, disruption or other impact) based on the difference between Contractor’s total actual Project or line item costs (with or without fee) and its original bid estimate for the Project or any original bid estimate line item. In connection with the foregoing, Contractor represents and warrants that it has the ability to generate and maintain complete and accurate cost accounting records that will reflect (i) the actual costs incurred or saved for each individual item of Extra Work, change, addition, deletion (including without limitation any costs of associated delay, disruption, interference, hindrance and the cumulative impact of each extra, change, addition, deletion on other parts of the Work); and, (ii) on an event-by-event basis, the effect of each delay or disruption that forms the basis of each request for extension of time, regardless of their scope, number, complexity, cumulative effect, or time of issuance or occurrence.

Except as provided in “Temporary Suspension or Delay of Work” of the General Conditions, Contractor shall have no right to recovery of any compensation, costs, expenses or damages resulting from delay, disruption, interference, or hindrance in the performance of the Work (including without limitation interruption of schedules, excess or extraordinary extended field and indirect overhead costs, loss of productivity and the impact, ripple or cumulative effect on other Work).

Contractor waives any claim or rights and remedies based on abandonment, quantum merit, rescission or other similar legal theory by reason of any of the following circumstances, which the Contractor acknowledges and agrees are within the reasonable contemplation of the parties: (i) changes, additions, deletions and extras to the Work after execution of the Contract and issued from time to time throughout the period of construction, regardless of their scope, number, cumulative value, or complexity, to correct errors, omissions, conflicts, and ambiguities in the Contract Documents, or to implement discretionary changes to the scope of Work requested by the City; (ii) the issuance and performance of changes, additions, deletions and extras in a manner that is not in sequence with the as-built or as-planned progress of the Work; (iii) changes due to Differing Site Conditions; (iv) suspensions of the Work or parts thereof, or limitations on access to portions or all of the Work, for the convenience of City or in the interests of the Project; (v) delay or disruption to the Work due to failure of the City, Engineer or Inspector to timely perform any contractual obligation.

E. Markups – Overhead and Profit

1. In addition to the direct expenditures specified for labor, materials and equipment in Subsection B, a fixed markup percentage will be paid for all overhead and profit, including: All insurance costs other than specifically mentioned in this Section, all field and office supervisors and assistants, all onsite project administration, security costs, the cost of small tools and consumables, incidental job burdens, and all general home office expenses and no separate allowance will be made therefor. Assistants to field and office supervisors include all clerical, stenographic, and general office help. Incidental job burdens include, but is not limited to, office equipment and supplies, temporary toilets, telephone, utilities, safety equipment, warning devices, personal protective equipment, and conformance to OSHA requirements. Project administration includes, but is not limited to, review and coordination, estimating, engineering, scheduling, and expediting relative to Change Orders, and updating and furnishing Record Drawings to incorporate changes, schedule update, supervision not applied solely to the Work of the Change Order, home office salaries and expenses, and City of Los Angeles Business Tax. The following maximum markup percentages shall be applied to the total amount of direct expenditures of the Contractor and Subcontractors, as noted in the Change Order Cost Summary Form.

Changed/Extra Work – Direct Costs	Markup Percentage
Contractor Direct Labor	20%
Contractor Direct Materials, Equipment, Other Items	15%
Subcontractor (of any tier) Direct Labor	20%
Subcontractor (of any tier) Direct Materials, Equipment, Other Items	15%
Contractor Administrative Fee for Subcontractor’s (of any tier) Direct Labor, Materials, Equipment, Retail Rental Equipment, Other Items	5%

2. Bonds and Insurance

An additional allowance of one percent (1%) of all direct costs (less markup) is allowed.

3. Add/ Deduct Changes

The overhead rates determined above shall be applied to all additive Change Orders, except those utilizing as-bid Unit Prices or Stipulated prices listed in the Bid Proposal.

Any change in the Work involving both extras and credits shall show a net total cost, including subcontracts. Allowances for overhead and profit to the net total cost, as specified herein above, shall be applied if the net total cost is an extra; overhead and profit allowances shall not be applied if the net total cost is a credit. When the credit is due to a reduction in unit price quantity, the Contractor shall not be entitled to retain the markups in E.1 above for the reduced quantity. The estimated cost of deductions shall be based on labor and material prices on the date the Contract was signed.

F. City Furnished Materials, Equipment and Services

The Engineer reserves the right to furnish materials, equipment and services deemed expedient for use on the Change Order Work. The Contractor shall have no claim for profit or overhead on the cost of such materials, equipment and services.

G. Equipment Costs

The rates for rental or leased equipment shall not exceed the rates listed in the Retail Rental Rates as listed in Equipment Watch, Randall Reilly Data Division, 1509 Orchard Lake Drive Charlotte, North Carolina 98270, as adjusted to the regional area of the Work under this Contract. For T&M Change Orders, the rates are established by the actual paid invoice(s) that comply with the requirements of Subsections G.1 and G.3. Owned equipment costs shall not exceed the rates established by Subsection G.2. The most recent published edition in effect at the commencement of actual equipment use on Change Order Work shall be used.

The rates paid for any rented or leased equipment or tools shall include, oil, lubrication, supplies, small tools, necessary attachments, repairs and maintenance of any kind, depreciation, storage, insurance, profit and all incidental costs associated with the operation of the equipment or tools.

It is the responsibility of the Contractor to include any appurtenances added to equipment which would increase the basic rate for said equipment (i.e., hoe-ram, oversize bucket, etc.) as established in the acceptable rental rate guide. All equipment and/ or tools shall be acceptable to the Inspector, in good working condition, suitable for the purpose for which it is to be used, and necessary to complete the Change Order Work. Payment will be based on the manner in which the equipment was actually powered, operated and modified per the equipment manufacturer’s recommendations.

1. Rented or Leased Equipment

For equipment rented or leased (including lease with purchase option) in arm's length transactions from outside vendors, the Contractor shall be paid the actual invoiced, rented or leased rates provided that the invoiced lease or rental rates

do not exceed the rates set forth in the Equipment Watch retail rental rates. Arm's length rental or lease transactions are those in which the firm involved in rental or lease of such equipment is not associated with, owned by, have common management, directorship, facilities, or stockholders with the firm renting the equipment. Submittal by a Contractor of a retail rental or leased invoice from the lessor will be prima facie proof of compliance with the above. However, such invoices are not conclusive proof; if questioned, the burden of proof remains with the Contractor. In no event shall the leased equipment rate billed to the City be at rates exceeding those prescribed in the following table:

Actual Usage (Change Order & Contract Work Combined)	Payment Category
Less than 8 hours	Hourly Rate
8 or more hours but less than 7 days	Daily Rate
7 or more days but less than 30 days	Weekly Rate
30 calendar days or more	Monthly Rate

a. When in Use:

Actual equipment use time documented by the Inspector shall be the basis that the equipment was utilized on the changed work and paid for under the T&M Change Order. In addition to the lease or rental rate, equipment-operating costs shall not exceed the estimated hourly operating rate as set forth in the Blue Book. The hours of operation shall be based upon actual equipment usage on the T&M Change Order Work as recorded by the Inspector. For multiple shift work sequences, the allowable equipment rate shall not exceed fifty percent (50%) of the base rate, for second or third shifts.

b. When Idle:

Idle equipment is equipment on site and necessary to perform the T&M Change Order Work, but periodically not in actual use due solely to the impact of the changed work. Equipment operating costs due to idle time, documented by the Inspector, shall be paid at the rate determined in “G” (1) above. The “ESTIMATED OPERATING COST $/HR” will not be paid when the equipment is idle. Idle time shall include a reasonable time allowance to and from the project site. Payment for equipment necessary to be on the site to complete the Work, but not in actual use due solely to the impact of the T&M Change Order Work, shall be paid per Caltrans Standard Specifications Section 8-1.07C, provided that its presence and necessity on the site has been documented by the Inspector, and further provided that the equipment was idled solely by actions of the City.

Payment for equipment or tools shall be limited to hours actually used on the T&M Change Order Work if the equipment or tool is already on site for Work under the original Contract. No “standby” time will be paid for equipment already on site for Work under the original Contract. Mark Up for retail rental equipment will be per Table A in Section E.1.

If equipment or tools are used intermittently and, when not in use, could be returned to the rental source at less expense than holding it at the work site, it

shall be returned, unless the Contractor elects to keep it at the work site at no expense to the City.

2. Owned and Other Equipment

Equipment rates for owned equipment or equipment provided in other than arm's length transactions shall not exceed the total hourly costs as set forth in the Caltrans “Labor Surcharge and Equipment Rental Rates” effective at the time the T&M Change Order Work is performed. (The Caltrans equipment rental rates are available on the internet at http://www.dot.ca.gov/hq/construc/equipmnt.html.) If the equipment is not listed in Caltrans, then the Owned Rental Rate in Equipment Watch shall be used. When using Equipment Watch, the hourly rate for any period less than 7 days shall be the weekly rate divided by 40, plus the Operating Cost. Except as noted herein below, this equipment hourly rate plus the estimated operating cost per hour from Equipment Watch will be paid for each hour the equipment actually performs the T&M Change Order Work. Daily records listing the equipment units and their respective operators, identification code, and actual usage on the T&M Change Order Work, as certified at the end of each work day (or work shift if the Work is being performed in multiple work shift sequence) by the Inspector shall be the record upon which actual equipment use shall be based. For multiple shift work sequences, the Caltrans overtime factor shall be applied. When using the Blue Book, one-half the Non-Operating Cost will be deducted for second and third shifts. The Non-Operating Costs are the Blue Book monthly or weekly/40 rates, as applicable. It is agreed that this rate shall represent payment in full for all the Contractor’s and Subcontractor’s direct costs.

a. When Idle:

Payment for equipment necessary to be on the site to complete the Work, but not in actual use due solely to the impact of the changed work, shall be paid per Caltrans Standard Specifications Section 8-1.07C, provided that its presence and necessity on the site has been documented by the Inspector, and further provided that the equipment was idled solely by actions of the City. (When using the Blue Book the payment for idle time shall not exceed fifty percent (50%) of the Non-Operating Cost.) Idle equipment time will only be paid as a function of delays specifically directed or caused by the City's actions. In no event shall the idle time claimed in a day for a particular piece of equipment exceed the normal work schedule established for the project - usually eight (8) hours per day or forty (40) hours per week, and excluding Saturdays, Sundays, and holidays. For multiple shift work sequence, the allowable idle equipment rate shall not be allowed, for second or third shifts. It is agreed that this rate shall represent payment in full for all the Contractor’s and Subcontractor’s direct costs.

3. Equipment Haulage and Set-up Costs

Documented and actual equipment haulage and set-up costs shall be paid for, if applicable as set forth in Subsection B.3.

4. Other Equipment Cost Guides

In the event that an owned piece of equipment used on a Change Order is not listed in Caltrans or Equipment Watch, costs may be derived from the Associated

General Contractor's of America Equipment Ownership Guide, the Associated Equipment Dealers Guide, or the Equipment Rate Guide published by the U.S. Army Corps of Engineers as adjusted appropriately for the type of work and use and the regional area of the Work under this Contract.

H. Records

At any time should the Contractor deviate substantially from the schedule, method and sequence of operation, equipment, cost or pricing data furnished by the Contractor and agreed to by the City in connection with the Change Order or should the City determine that any price negotiated in connection with the Change Order is defective due to such deviation or the fault of the Contractor, the City reserves the right to reduce the Change Order cost and reissue the Change Order at the amount in which the City determines to be the actual costs to complete the Change Order Work.

Whenever any material or process is indicated or specified by patent or a proprietary name, or by name of a manufacturer in the Change Order, such direction shall not relieve the Contractor's responsibility or obligation to perform Work in accordance with the Contract requirements. The Contractor shall be solely responsible for, and have control over construction means, methods, techniques, sequences and procedures, coordination of all portions of the Contract and Change Order Work.

The Contractor shall on a weekly basis submit an approximate accounting of the amount expended on the T&M Change Order Work to date and an estimate of the Impact to the time of performance of the Contract Work.

I. Partial Payments for Time and Materials Change Order Work.

Progress payments for T&M Change Order Work shall only be made if the anticipated cost of the changed work is in excess of $100,000 and/or the time to perform the changed work will exceed two (2) months duration. To receive payments for T&M Change Order Work, the Contractor shall submit to the Engineer an invoice of the daily reports which were verified by the Inspector, with details and documents, verifying the Contractor's and Subcontractor's actual costs incurred for the T&M Change Order Work as set forth in Subsections B through H. Costs shall be submitted within thirty (30) calendar days after the T&M Change Order Work has been satisfactorily completed unless an extension of time for submittal is authorized in writing by the Inspector.

J. Field Office Overhead - Rate Per Day:

Subject to the provisions of this Subsection and "Temporary Suspension or Delay of Work" of General Conditions, for each day of approved time extension due solely to extras, changes, and additions to the Work, Contractor shall be entitled to compensation for additional Daily Field Office Overhead as set forth herein. As a further condition to the Contractor's right to such additional compensation, the Contractor shall submit a detailed listing of the Daily Field Office Overhead cost components which are time related. The individual cost components shall represent costs which have been or will be incurred or increased as a sole or direct result of the time extension. This listing may include, but is not limited to, onsite project management, supervision, engineering, and clerical salaries; onsite office utilities and rent; onsite company vehicles and their operating expenses; site maintenance and security expenses. Daily Field Office Overhead costs which are unaffected by the increased time or time extension in the Change Order shall not be allowable costs of the Daily Field Office Overhead rates. These cost components include, but are not limited to, acquisition and installation of plant, stationary equipment, temporary construction facilities, utilities and office furnishings (unless such items are

rented or leased); the preparation of the site including clearing, grubbing, grading, and fencing; and mobilization and demobilization expenses. The listing of the Daily Field Office Overhead cost components described above must be based on the Contractor's actual Field Office Overhead costs. This listing must be submitted with the first Change Order proposal that includes a time extension request per Subsection D. If the Contractor's time related Daily Field Office Overhead cost changes for subsequent compensable delays, then the Contractor shall submit a new Daily Field Office Overhead rate based on the Contractor's time related Daily Field Office Overhead costs at the time of the subsequent delay. If change order work is performed during a compensable delay, any Daily Field Office Overhead costs paid by that change order shall be deducted from the compensation owed for additional Daily Field Office Overhead during the same time period.

The Daily Field Office Overhead rate shall be multiplied by the number of days the Contract is to be extended in the Change Order, and shall then be added to the agreed upon costs of the Change Order. No markup for overhead costs and no profit allowance shall be allowed on the Extended Daily Field Office Overhead cost component of the Change Order. The derivation of an extended home office overhead rate and its application to Contract time extensions shall not be allowed.

The information submitted above shall be submitted in sufficient detail to allow review and shall be prepared in accordance with generally accepted accounting principles and applicable portions of the Federal Acquisition Regulations. The Engineer shall have the right to have an audit of the Contractor's costs performed, at the Contractor's sole expense, if the costs submitted are considered by the Engineer to be excessive, questionable, or unsupported. The overhead rates determined above shall be applied to all additive Change Orders, except those utilizing original as-bid unit prices under Subsection A.

END OF SECTION

SECTION 01255
PRICE REDUCTION FOR DEFECTIVE COST OR PRICING DATA

1.1 THE REQUIREMENT

A. If the ENGINEER determines that any price, including profit or fee, negotiated in connection with any Change Order under this Contract, or any cost reimbursable under this Contract, was increased because:

1. the CONTRACTOR furnished cost or pricing data which was not accurate, complete, and current as certified in the CONTRACTOR'S Certificate of Current Cost or Pricing Data;

2. a Subcontractor or prospective Subcontractor furnished cost or pricing data was submitted in support of a subcontract cost estimate furnished by the CONTRACTOR but which was not accurate, complete, and/or current as of the date certified in the CONTRACTOR'S Certificate of Current Cost or Pricing Data; or,

3. the CONTRACTOR or a Subcontractor or prospective Subcontractor, at any tier, furnished any data not within subsection 1.1A(1) or 1.1A(2),above, which was not accurate as submitted;

then the price shall be reduced accordingly, and the Contract shall be modified in writing as may be necessary to reflect such reduction. However, any reduction in the Contract price due to defective subcontract data of a perspective Subcontractor, when the subcontract was not subsequently awarded to such Subcontractor, will be limited to the amount (plus applicable overhead and profit allowances) by which the actual subcontract or actual cost to the CONTRACTOR if there was no subcontract, was less than the prospective subcontract cost estimate submitted by the CONTRACTOR; provided that the actual subcontract price was not affected by defective cost or pricing data.

The following certification from the CONTRACTOR is required to be provided on all Change Order quotations or requests for equitable adjustment in excess of ten-thousand dollars ($10,000).

CERTIFICATION OF CURRENT COST
AND PRICING DATA

This is to certify that, to the best of my knowledge and belief, cost or pricing data submitted in writing, or specifically identified in writing if actual submission of the data is impracticable, to the CITY in support of **[CONTRACTOR is to insert appropriate identification such as Change Order quotation, proposal quotation, price adjustment, etc.]** are accurate, complete, and current as of **[CONTRACTOR to insert date].**

CONTRACT NO.: _____
PROPOSED CHANGE ORDER NO.: _____
FIRM: _____
NAME: _____
TITLE: _____
DATE: _____
SIGNATURE: _____

END OF SECTION 01255

SECTION 01280
MEASUREMENT AND PAYMENT

PART 1 - GENERAL

1.01 PAYMENT

A. Upon Contract award, the accepted Schedule of Work and Prices shall become the Payment Schedule. Payment for Work under the Contract shall be made at the unit prices listed in the Payment Schedule. For lump sum bid items, payment shall be made in accordance with Section 01298.

B. Payment for the measured quantities of Work performed shall be considered full compensation for all of the CONTRACTOR's costs associated with the performance of the Work. These costs comprise direct labor, materials, tools, equipment, transportation, supplies, incidentals, and subcontract Work; and indirect costs such as field and home office overhead, consulting and design services, establishment, operation and removal of general plant, taxes, insurance, permits, bond, profit, and contingencies for the performance of all Work specified.

C. The costs for conforming to the requirements for measuring quantities shall be considered included in the fixed, unit, or lump-sum prices paid for the quantities being measured, and no additional compensation will be made therefore.

D. Work specified or shown on the drawings for which the Payment Schedule does not provide a separate lump sum or unit price is considered incidental and is not separately paid. The cost for such Work is compensated in the prices bid for other Work items and no additional compensation shall be allowed.

1.02 REJECTED, EXCESS, AND WASTED MATERIALS

A. The following shall not be measured for payment:

1. Quantities of material wasted or otherwise disposed.

2. Rejected loads of material, including material rejected after it has been placed for failure to comply with specified requirements.

3. Material remaining on the transporting vehicle or in the pipeline.

4. Muck material not removed from designated location.

5. Material placed outside specified or indicated lines or limits.

6. Material not incorporated into the Work.

7. Material remaining on hand after completion of the Work.

B. No payment will be made for loading, hauling, and disposing of rejected material.

1.03 PAYMENT SCHEDULE FOR FERNANGELES PARK

A. **BID ITEM 1: Mobilization**

1. The amount payable under this item is fixed at the bid price. This bid price for costs of work in advance of construction operations. This Bid Item is not included and attributable directly to any other specific Bid Items. For progress payments, the amount payable under this item shall be determined in accordance with Section 01292.

2. The Work shall include:

   a. The movement of personnel, equipment, supplies and incidentals to the project sites.

   b. Temporary laydown area and obtaining all permits and clearance requirements to secure and utilize the laydown area

   c. The establishment of field offices, parking, utilities and other facilities at the Work Area Sites for the CITY and the CONTRACTOR, as specified in Section 01721.

   d. Work, such as engineering designs and submittals, must be performed and expended in advance of actual construction. This Work shall include any additional investigations of the condition of the NOS that the CONTRACTOR deems necessary to conduct the Work in compliance with applicable safety and other regulatory requirements.

   e. Applying for permits and coordinating work with other agencies such as USACE, LADOT, AQMD, LADBS, LADWP, SCG and other utility companies and public agencies.

   f. Work, such as handling homeless encampment within and/or adjacent to work site (if applicable) & community outreach regarding disruption to the Los Angeles River Bike Path and Recreational Parks (if applicable) at pit locations and bypass locations must be performed and resolved during mobilization. This work shall be, but is not limited to, installation 12 feet chain link and gates per S-691 around the pit(s) and/or at field office locations.

      CONTRACTOR shall coordinate with Public Affair Office (PAO) of BOS for any related issues mentioned above:

      Tonya Durrell
      (213) 978-0333 (office)
      (213) 798-6085 (cell)
      Tonya.Durrel@lacity.org

      In addition, contact LA – Homeless Services Authority at (213) 225-6581 to handle any homeless issues

CONTRACTOR shall comply with all instructions and requirements of the PAO and the Mayor's office regarding homeless encampment issues. In addition, the CONTRACTOR shall comply with all instructions and requirements by the PAO, LADOT, LA County, and Mayor's office regarding any construction/bypass activities. All the costs related and associated with these issues shall be included in the Bid Item 1 "Mobilization".

B. **BID ITEMS 2 through 9: Allowance Items**

1. Allowance items have been established in the Bid Schedule to compensate the CONTRACTOR for the cost of performing such items as the CITY may require for the

construction of the Work, but for which it is impracticable to ascertain the scope prior to bid. If the total cost compensable under each allowance item differs from the amount set forth in the SCHEDULE OF WORK AND PRICES, the Contract Price shall be adjusted by a Change Order for the difference between the total actual costs and the allowance amount as an additional amount due the CONTRACTOR or a credit to the CITY, as appropriate.

2. Reimbursement for all allowance items shall be as determined by GR-Section 01212.

3. The allowance items are as follows:

   a. **Bid Item 2: Allowance for Engineer's and Inspector's Field Office Supplies per the GR, Section 01212**

      This bid item allows compensation for the expenses for supplies for the Engineer's and Inspector's Field Office Supplies to support the facilities during construction to be provided by the CONTRACTOR in Section 01280. This allowance shall be used to reimburse the CONTRACTOR for this work per Section 01212.

   b. **Bid Item 3: Allowance for Differing Site Conditions per the GR, Sections 01212, 01253, and 01254**

      This allowance will compensate the CONTRACTOR the additional expenses and measures taken to address and to mitigate Differing Site Condition(s) as defined and approved by the CITY per conditions set forth in Section 01253 of the specification in addition to abandoning and/or relocation of site utilities encountered during construction but not shown on the current project plans as directed by the CITY or the ENGINEER.

      This allowance will compensate CONTRACTOR in the event of an omission of an existing utility in the contract, or if an existing utility needs to be relocated due to its location in the field differing significantly from that shown in the contract drawings, and in the opinion of the ENGINEER that the utility relocation is necessary to avoid impacting the Work. If actual utilities are within 2 feet off location shown on the drawings (centerline to centerline), there will be no compensation provided under this bid item. This allowance shall not compensate the CONTRACTOR to relocate existing utilities shown on the contract drawings proposed or specified for relocation by others.

   c. **Bid Item 4: Allowance for Payment for Permits per the GR, Sections 01212, 01280, 01292 and 01721**

      Reimbursement for CONTRACTOR's expenses for permits fees without compensation for any mark-ups. The CONTRACTOR shall include in the Bid the amount stipulated under PERMITS in the SCHEDULE OF WORK AND PRICES in the Bid Proposal as ana allowance for the costs of all required permits.

      Costs shall be limited to the actual fees paid to the agencies and will be reimbursed based on original receipts only. No overhead, profit, or mark-ups shall be added to the cost of the permits. The CONTRACTOR shall deliver to the ENGINEER with each permit the original receipt. After all permits have been obtained and delivered, the actual costs of all permits shall be reviewed by the CONTRACTOR and the ENGINEER.

   d. **Bid Item 5: Allowance for Opportunity to Partner per the GR, Sections 01212 and 01353**

Reimbursement of 100 percent of the expenses for partnering, as determined by Section 0153 of these GENERAL REQUIREMENTS. There shall be no mark-ups for overhead or profit.

e. **Bid Item 6: Allowance for Startup Assistamce per the General Requirements Section 01750**

This bid item allows compensation for startup assistance per GR Section 01750. This allowance shall be used to reimburse the CONTRACTOR for this work per section 01212.

f. **Bid Item 8: Allowance for Distributed Control System Integration**

This bid item allows compensation for the additional expenses for the distributed control system integration to be performed by Honeywell per Section 17400. This allowance shall be used to reimburse the CONTRACTOR for this work per Section 01212.

g. **Bid Item 9: Allowance for Community Impact Mitigation**

This allowance bid item shall be used solely to reimburse any/all CONTRACTOR's costs associated with performance of extra work related to community relations at the direction of the ENGINEER.

Reimbursement shall be determined by Section 01254, "Change Orders" of the General Requirements

(1) Compensation for noise, vibration and other mitigation measures beyond the requirements indicated and specified in Sections 01561, "Environmental Control" and 01562, "Environmental Mitigation or Conditions" of these GENERAL REQUIREMENTS.

This allowance shall not compensate CONTRACTOR for costs associated with applying for or complying with requirements established because of any CONTRACTOR request for nighttime work hours beyond the allowable working hours. This allowance shall not compensate CONTRACTOR for any means or methods or required change to its means and methods to comply with Sections 01561, "Environmental Control" and 01562, "Environmental Mitigation or Conditions" of the GENERAL REQUIREMENTS.

(2) Compensation for any community mitigation measures performed for the surrounding neighborhood.

C. **Bid Item 10: Demolition**

This lump sum price bid shall compensate the CONTRACTOR for:

a. The cost of furnishing all labor, materials, equipment and disposal fees for the demolition and disposal required including clearing and grubbing, trees, partial; excavation and removal of subsurface construction debris and other wastes, fence removal for rolling gates, etc. as defined on the Contract Drawings. Refer to Section 01572.

D. **Bid Item 11: Stormwater Pollution Prevention Plan (SWPPP), Spec Section 01571**

This lump sum price bid shall compensate the CONTRACTOR for the cost of furnishing all labor, materials and equipment to prepare the permit to implement the Stormwater Pollution Prevention Plan (SWPPP), obtain the permit approval and implement the Plan throughout construction.

E. **Bid Item 12: Earthwork**

This lump sum price shall compensate the CONTRACTOR for the cost of furnishing all labor, materials, and equipment to prepare got excavation, shoring, soil export, soil import, backfill, compaction, etc. Refer to Section 02310.

F. **Bid Item 13: Underground Infrastructure**

This lump sum price bid shall compensate the CONTRACTOR for the cost of furnishing all labor, materials, and equipment for constructing the underground infrastructure including the storm drain piping, flow meter manholes, side gate structures, desilting basins, infiltration gallery, ventilation manholes and piping, etc. and all remaining underground infrastructure included in the Contract Drawings and Specifications that are not included in other Bid Items.

G. **Bid Item 14: Landscaping**

This lump sum price bid shall compensate the CONTRACTOR for the cost of furnishing all labor, materials and equipment for landscaping including planting, soil preparation, trees, shrubs, groundcovers, bioswales, boulders and irrigation, and all remaining landscape facilities and requirements included in the Contract Drawings and Specifications that are not included in other Bid Items. Additionally, there will be a designated maintenance period for the landscaping to ensure the proper establishment and care of all installed plants and materials.

H. **Bid Item 15: Lighting**

This lump sum price bid shall compensate the CONTRACTOR for the cost of furnishing all labor, materials, and equipment for the site lighting including MUSCO sports lighting, path lighting, security lighting, electrical wiring and conduits, etc.

I. **Bid Item 16: Electrical Service & Components**

This lump sum price bid shall compensate the CONTRACTOR for the cost of furnishing all labor, materials and equipment for the electrical service and components, all remaining electrical facilities and requirements included in the Contract Drawings and Specifications that ae not included in other Bid Items.

J. **Bid Item 17: Instrumentation**

This lump sum price bid shall compensate the CONTRACTOR for the cost of furnishing **all** labor, materials and equipment for site furnishings including flow meter, level sensors, intrusion alarms, and Programmable Logic Controller cabinets, and all remaining instrumentation facilities and requirements included in the Contract Drawings and Specifications that are not included in other Bid Items that are onsite.

K. **Bid Item 18: Site Furnishings**

This lump sum price bid shall compensate the CONTRACTOR for the cost of furnishing all labor, materials, and equipment for site furnishings the including bollards, rhino gates, benches, hydration stations, trach/recycling receptacles, educational signage and all remaining site furnishings included in the Contract Drawings and Specifications that are not included in other Bid Items.

L. **Bid Item 19: Maintenance Access Road**

This lump sum price bid shall compensate the CONTRACTOR for the cost of furnishing all labor, materials and equipment for maintenance access road including asphalt paving for new roadway and subsurface layers.

M. **Bid Items 20: Baseball Field and Appurtenances**

This lump sum price bid shall compensate the CONTRACTOR for the cost of furnishing all labor, materials and equipment for the baseball fields and appurtenances including fencing, dugout, equipment, storage, bleachers, pitching areas, batting cages, and all remaining baseball field and appurtenances included in the Contract Drawings and Specifications that are not included in other Bid Items.

N. **Bid Items 21: Pavement Parking Lot**

This lump sum price bid shall compensate the CONTRACTOR for the cost of furnishing all labor, material and equipment for the parking lot within the Recreation Center including asphalt paving, concrete paving, pavement striping, marking, stop signs, and wheel stops.

O. **Bid Items 22: Traffic Control**

This lump sum price shall compensate the CONTRACTOR for the cost of furnishing, implementing, monitoring and removing the temporary traffic control requirements on Drawings TR-1 through TR-15.

P. **Bid Items 23: Street Improvements**

This lump sum price bid shall compensate the CONTRACTOR for the cost of furnishing all labor, material and equipment for the street improvements on Morehart Avenue, east side of Allegheny Street, Remick Avenue, Wicks Street and Laurel Canyon Boulevard including sidewalks, curbing, driveways, ramps, paving, porous paving, subsurface box culvert, and all other street improvements included in the Contract Drawings and Specifications that are not included in other Bid Items.

Q. **Bid Items 24: West Side of Allegheny Street – ADDITIVE ALTERNATE**

This BID ALTERNATE lump sum price bid shall compensate the CONTRACTOR for the cost of furnishing all labor, material and equipment for the street improvements on the west side of Allegheny Street including sidewalks, curbing, driveways, ramps, paving, subsurface box culvert, and all other street improvements included in the Contract Drawings and Specifications that are not included in other Bid Items.

(END OF SECTION)

SECTION 1291
NOTICE TO WITHHOLD AND/OR STOP NOTICE

1.1 THE REQUIREMENT

A. When a "Notice to Withhold" or "Stop Notice" is served upon the CITY, or the Board, pursuant to the lien statutes of the State of California, to withhold sufficient funds from payments to the CONTRACTOR in support of a claim resulting from default by the CONTRACTOR in payment for labor or materials used in prosecution of the Contract, the CITY shall withhold from payment due the CONTRACTOR an amount of money equal to the amount of the claim stated in the "Notice to Withhold" or "Stop Notice," and an additional amount equal to twenty-five percent (25%) of the amount of said claim, to defray the costs of litigation in the event of court action on the claim, for a total withholding of one and one quarter (1-1/4) times the stated amount of the claim. At the discretion of the CITY, the CITY may allow the CONTRACTOR to file with the CITY the bond referred to in the Civil Code of the State of California after which said monies will not be withheld on account of such "Notice to Withhold" or "Stop Notice."

B. In the event the Contract is terminated for CONTRACTOR default, any funds due the CONTRACTOR and retained by the CITY in accordance with SECTION 01292 -PAYMENTS of these GENERAL REQUIREMENTS, shall become the property of the CITY to the extent necessary to repay to the CITY any excess in the Contract Price above the cost of the Work completed at the time of termination. After issuance of Notice To Discontinue Work, no further payments will be made to the CONTRACTOR for the Work covered by the notice until completion of work and final settlement has been made.

END OF SECTION 01291

SECTION 1292
PAYMENTS

1.1 PAYMENT FOR MOBILIZATION

A. Payment for mobilization shall be limited to those items of work described in MOBILIZATION of these GENERAL REQUIREMENTS. Whether Mobilization is included as a Contract Bid Item in the Bid Proposal Form or specified as part of the lump sum in the Contract Documents, the amount shall include full compensation for furnishing the labor, materials, tools, equipment and incidentals for all of the Work involved in mobilization in advance of construction operations. The CONTRACTOR shall submit to the ENGINEER for approval the Contract Price Breakdown with the amount established for mobilization.

B. The CONTRACTOR shall submit to the INSPECTOR for approval a breakdown of the amount established for mobilization. Total payment (100%) for obtaining insurance and bonds will be made upon proof of payment for those items. The payment for all other items of mobilization will be made when those items of mobilization have been completed and as specified below:

1. When the monthly partial payment estimate of the amount earned, not including the amount earned for mobilization, is five percent (5%) or more of the original Contract amount, the total amount earned for mobilization may be up to fifty percent (50%) of the Contract item price for mobilization. This amount will be included in the said estimate for payment.

2. When the monthly partial payment estimate of the amount earned, not including the amount earned for mobilization, is ten percent (10%) or more of the original Contract amount, the total amount earned for mobilization may be up to seventy-five (75%) of the Contract item price for mobilization. This amount will be included in the said estimate for payment.

3. When the monthly partial payment estimate of the amount earned, not including the amount earned for mobilization, is twenty percent (20%) or more of the original Contract amount, the total amount earned for mobilization may be up to ninety-five percent (95%) of the Contract item price for mobilization. This amount will be included in the said estimate for payment.

4. When the monthly partial payment estimate of the amount earned, not including the amount earned for mobilization, is fifty percent (50%) or more of the original Contract amount, the total amount earned for mobilization may be up to one hundred percent (100%) of the Contract item price for mobilization. This amount will be included in the said estimate for payment.

C. The adjustment provisions in CHANGE ORDERS of these GENERAL REQUIREMENTS, and the retention of funds provisions in this Section, shall not apply to the Contract lump sum item for Mobilization.

SECTION 01292
PAYMENTS

1.1 PAYMENT FOR MOBILIZATION

A. Payment for mobilization shall be limited to those items of work described in MOBILIZATION of these GENERAL REQUIREMENTS. Whether Mobilization is included as a Contract Bid Item in the Bid Proposal Form or specified as part of the lump sum in the Contract Documents, the amount shall include full compensation for furnishing the labor, materials, tools, equipment and incidentals for all of the Work involved in mobilization in advance of construction operations. The CONTRACTOR shall submit to the ENGINEER for approval the Contract Price Breakdown with the amount established for mobilization.

B. The CONTRACTOR shall submit to the INSPECTOR for approval a breakdown of the amount established for mobilization. Total payment (100%) for obtaining insurance and bonds will be made upon proof of payment for those items. The payment for all other items of mobilization will be made when those items of mobilization have been completed and as specified below:

1. When the monthly partial payment estimate of the amount earned, not including the amount earned for mobilization, is five percent (5%) or more of the original Contract amount, the total amount earned for mobilization may be up to fifty percent (50%) of the Contract item price for mobilization. This amount will be included in the said estimate for payment.

2. When the monthly partial payment estimate of the amount earned, not including the amount earned for mobilization, is ten percent (10%) or more of the original Contract amount, the total amount earned for mobilization may be up to seventy-five (75%) of the Contract item price for mobilization. This amount will be included in the said estimate for payment.

3. When the monthly partial payment estimate of the amount earned, not including the amount earned for mobilization, is twenty percent (20%) or more of the original Contract amount, the total amount earned for mobilization may be up to ninety-five percent (95%) of the Contract item price for mobilization. This amount will be included in the said estimate for payment.

4. When the monthly partial payment estimate of the amount earned, not including the amount earned for mobilization, is fifty percent (50%) or more of the original Contract amount, the total amount earned for mobilization may be up to one hundred percent (100%) of the Contract item price for mobilization. This amount will be included in the said estimate for payment.

C. The adjustment provisions in CHANGE ORDERS of these GENERAL REQUIREMENTS, and the retention of funds provisions in this Section, shall not apply to the Contract lump sum item for Mobilization.

D. When other Contract items are adjusted as provided in CHANGE ORDERS of these GENERAL REQUIREMENTS, if the costs applicable to such item of work include mobilization costs, such mobilization costs will be deemed to have been recovered by the CONTRACTOR by the payments made for mobilization and will be excluded from consideration in determining compensation under said Article.

E. When the Contract does not include a Contract pay item for mobilization as specified above, full compensation for any necessary mobilization required shall be considered as included in the prices paid for the various Contract items of work involved and no additional compensation will be allowed.

1.2 PAYMENT FOR PERMITS

A. The Contractor shall obtain and pay for all permits necessary for performance of the Work in accordance with the provisions of PERMITS AND CONSTRUCTION EASEMENTS of the GENERAL CONDITIONS. If the Bid Proposal provides an allowance for Permits, the CONTRACTOR shall include in the Bid the amount stipulated under PERMITS in the SCHEDULE OF WORK AND PRICES in the Bid Proposal as an allowance for the costs of all required permits. Costs shall be limited to the actual fees paid to the agencies and will be reimbursed based on original receipts only and no overhead or profit shall be added to the cost of the permits. The CONTRACTOR shall deliver to the ENGINEER with each permit the original receipt. After all permits have been obtained and delivered, the actual costs of all permits shall be reviewed by the CONTRACTOR and the ENGINEER. If the total costs differ from the amount set forth in the SCHEDULE OF WORK AND PRICES, the Contract Price shall be adjusted by a Change Order for the difference between the total actual costs and the amount included in the Bid, as an additional amount due the CONTRACTOR or a credit to the CITY, as appropriate.

1.3 MONTHLY PROGRESS PAYMENTS

A. General

1. The quantities listed in the Bid schedule will not govern final payment. Payment to the CONTRACTOR will be made only for actual quantities of Contract items constructed in accordance with the Plans and Specifications. Upon completion of construction, if the actual quantities show either an increase or decrease from the quantities given in the Bid schedule, the Contract Unit Prices will prevail subject to the provisions of CHANGE ORDERS of these GENERAL REQUIREMENTS.

2. The unit and/or lump sum prices to be paid shall be full compensation for the items of work and all appurtenant work, including furnishing all materials, labor, equipment, tools, and incidentals.

3. Payment will not be made for materials wasted or disposed of in a manner not called for under the Contract. This includes rejected material not unloaded from vehicles, material rejected after it has been placed, and material placed outside of the Plan lines. No compensation will be allowed for disposing of rejected or excess material.

4. Payment for work performed or materials furnished under an Assessment Act Contract will be made as provided in particular proceedings or legislative act under which such Contract was awarded.

5. Whenever any portion of the Work is performed by the CITY at the CONTRACTOR'S request, the cost thereof shall be charged against the CONTRACTOR, and may be deducted from any amount due or becoming due from the CITY.

6. Whenever immediate action is required to prevent injury, death, or property damage, and precautions which are the CONTRACTOR'S responsibility have not been taken and are not reasonably expected to be taken, the CITY may, after reasonable attempt to notify the CONTRACTOR, cause such precautions to be taken and shall charge the cost thereof against the CONTRACTOR, or may deduct such cost from any amount due or becoming due from the CITY. CITY action or inaction under such circumstances shall not be construed as relieving the CONTRACTOR or its Surety from liability.

7. Guarantee periods shall not be affected by any payment, but shall commence on the date equipment or material is placed into service at the direction of the CITY. In the event such items are not placed into service, prior to partial or final completion of the project, the guarantee period will commence on the date of completion.

8. If the Contract comprises two or more major units of work readily separable and divisible, and for which separate prices are stipulated in the Contract, the CONTRACTOR may make separate requests for progress payment on each such unit, and the CITY will make such progress payments, statement of completion, acceptance, retention, and final payment in accordance with the procedure specified above for the entire Contract.

9. The making of any payment to the CONTRACTOR under this Contract shall not relieve the CONTRACTOR of any obligations hereunder. The CONTRACTOR is obligated to complete the Contract in its entirety and to deliver to the CITY such acceptably completed work, finished product or structure as is specified in the Contract, at the time or times specified. Until this Contract is fully performed by the CONTRACTOR, and the Work, product, or structure produced thereby is accepted by the CITY, the CONTRACTOR shall also be obligated to repair, replace, restore, or rebuild any fully or partially completed work or structure, or any materials or equipment required to be provided under the Contract which may be damaged, lost, stolen, or otherwise injured in any way. This particular obligation of the CONTRACTOR, with respect to any major unit of the type mentioned in this Section, will terminate upon the completion by the CONTRACTOR and acceptance by the CITY of such major unit.

B. Monthly Request for Payment

1. Unless otherwise prescribed by law, three (3) working days prior to the last work day of each month, or other such date mutually agreed upon by the CONTRACTOR and the INSPECTOR, the CONTRACTOR shall prepare and submit to the INSPECTOR, an estimate of the cumulative

amount and value of acceptable Work performed by the CONTRACTOR at the Jobsite up to that date. The value of the completed Work shall be based on the approved Schedule of Values in accordance with the provisions of SCHEDULE OF VALUES/CONTRACT PRICE BREAKDOWN of these GENERAL REQUIREMENTS. Said amount shall also include the value of all acceptable materials and equipment for the Contract that have been delivered and suitably stored but not yet used in the Work, subject to the requirements of this Section.

2. The CONTRACTOR will be required to make all monthly requests for payment on the CITY'S Contract Payment Request Form. CONTRACTOR shall submit Contract Payment Request Form with the approved Payment Request estimate of work to the INSPECTOR. That form requires that the CONTRACTOR certify, under penalty of perjury, to the following:

   a. No workers were required or permitted to work more than eight (8) hours in any one calendar day, except in cases of emergency, and except as provided by law.

   b. Not less than the prevailing rates of wages, as set forth in the Contract for this Work, have been paid all laborers, workers, and mechanics employed to perform this Work.

   c. There were no substitutions of Subcontractors, no assignment or transferences of Subcontractors or Sub-Subcontractors, except as approved by the Board of Public Works.

   d. All of the provisions of Los Angeles Administrative Code, Section 10.8, pertaining to non-discrimination in employment have been complied with.

.

C. On lump-sum Contracts the INSPECTOR'S estimate of the monthly payment due the CONTRACTOR is an estimate of work acceptably completed and will not be required to be made by strict measurement.

D. Upon verification and approval by the INSPECTOR, the progress payment estimate shall be forwarded to the Payment Section of the Bureau of Contract Administration for processing.

E. Payment to the CONTRACTOR shall be made within 30 days after an undisputed and properly submitted payment request is received from the CONTRACTOR by the Bureau of Contract Administration Payment Section.

F. The CITY shall retain a portion of the amount otherwise due to the CONTRACTOR, as follows:

   1. Retention of five percent (5%) will be held on the original Contract value on each approved payment claim until the amount paid of the original Contract equals fifty percent (50%). The INSPECTOR may then, at its sole discretion, discontinue further retention on the original Contract value for all subsequently approved payment claims.

2. At any time during the course of the Contract, the INSPECTOR may, at its sole discretion, reinstate the five percent (5%) retention.

3. In the event the Contract is terminated for CONTRACTOR default, any funds due the CONTRACTOR and retained by the CITY in accordance with these provisions, shall become the property of the CITY to the extent necessary to repay to the CITY any excess in the Contract Price above the cost of the Work completed at the time of termination. After issuance of Notice To Discontinue Work, no further payments will be made to the CONTRACTOR for the Work covered by the notice until completion of work and final settlement has been made.

G. Additional deductions will be made from each monthly payment request for amounts due the CITY as follows:

1. Equipment or materials furnished by the CITY.

2. Services rendered to the CONTRACTOR by the CITY.

3. Amounts due the CITY for liquidated damages under the terms of the Contract.

4. Amounts required to be deducted by federal, state, or local governmental authority or other provisions of these Contract Documents.

H. From the balance thus determined will be deducted the amount of all previous payments, and the remainder shall constitute the monthly payment due the CONTRACTOR.

I. The monthly payments may be withheld or reduced, for the following reasons:

1. If the CONTRACTOR is not diligently or efficiently complying with the express intent of the Contract;

2. If there are unresolved Notices of Non-Compliance;

3. If Technical Manuals are not submitted;

4. If Record Drawings are not kept up-to-date;

5. If progress photographs are not submitted;

6. If construction schedules are not submitted in accordance with these General Requirements; or

7. If the Solid Waste Diversion and Disposal Report is not submitted with progress payment estimate.

8. Failure of the CONTRACTOR to maintain insurance as required by the CONTRACT.

9. Upon written request of the ENGINEER.

J. The CONTRACTOR shall promptly submit the following in response to requests by the INSPECTOR:

1. All information and records necessary to determine the cost of the Work for purposes of estimating monthly payment.

2. All itemized statements, in a form satisfactory to the INSPECTOR, of the actual cost of all acceptable materials delivered by the CONTRACTOR to the site.

K. The making of any payment to the CONTRACTOR shall not relieve the CONTRACTOR from Contractual obligations. These payments shall not be construed as the transfer of ownership of any equipment or materials to the CITY.

L. Responsibility of ownership shall remain with the CONTRACTOR who shall be obligated to store, protect, repair, replace, rebuild or otherwise restore any fully or partially completed work or structure for which payment has been made. The CONTRACTOR shall replace any materials or equipment required to be provided under the Contract which may be damaged, lost, stolen, or otherwise degraded in any way prior to acceptance of the Work under the Contract.

M. Escrow Account for Retention Payments

1. Under Section 22300 of the Public Contract Code, the CONTRACTOR has the option to deposit securities with an Escrow Agent as a substitute for the CITY withholding the required five percent (5%) retention from progress payments to ensure performance of any contract entered into between the CITY and the CONTRACTOR. Provided adequate value of securities is on deposit with the Escrow Agent, retention payments are then made directly to the CONTRACTOR by the CITY. As an option, Section 22300 also permits the CONTRACTOR to have retention payments made directly to the Escrow Agent, with no requirement for the CONTRACTOR to deposit securities with the Escrow Agent. If the CONTRACTOR requests neither of the above alternatives, the retention funds will be retained by the CITY and invested by the City Treasurer, in which case, interest earned will accrue to the benefit of the CITY.

2. Under the terms of the Escrow agreement, the CONTRACTOR has the option to arrange to deposit securities up front for up to the full five percent (5%) of the total amount of the Contract **(Option "A")**, or to have the CITY make payments directly to the Escrow Agent for the amount the CITY withholds for the required retentions with no requirement for the CONTRACTOR to deposit securities in advance **(Option "B")**. These arrangements are set forth in the Escrow Agreement.

3. At the CONTRACTOR'S request, the Bureau of Accounting will provide the necessary paperwork to establish the Escrow Account. For information contact:

City of Los Angeles
Office of Accounting
200 N. Spring Street
9th Floor, City Hall
Los Angeles, CA 90012
(213) 978-0994

1.4 PAYMENT FOR MATERIALS OR EQUIPMENT DELIVERED AND STORED ON THE JOBSITE

A. Materials and/or equipment are eligible for partial payment when delivered and stored at the Worksite as follows:

1. Each individual piece of the material or equipment must be valued at $5,000 minimum.

2. The materials and equipment are intended for permanent installation.

3. The materials or equipment are specifically delineated in the Contract, specially manufactured for this project and not readily useable on other projects.

4. The CONTRACTOR shall store the materials and equipment as required in STORAGE OF MATERIALS AND EQUIPMENT in these GENERAL REQUIREMENTS.

5. Living, perishable, degradable or standard stocked items are ineligible.

B. The partial payment is limited to the lesser of 1) Ninety-five percent (95%) of the invoice cost, or 2) The bid item amount less an estimate by the City for installation.

C. The CONTRACTOR shall include cost-loaded scheduling activities for items of material and equipment that the CONTRACTOR intends to request “Partial Payment for Materials or Equipment Delivered and Stored on the Job Site”.

D. The CONTRACTOR shall provide all documentation necessary to establish the cost of such materials and equipment for the “Schedule of Values”.

E. Prior to start of Work, the CONTRACTOR shall provide the INSPECTOR with a list of all materials or equipment proposed to receive partial payment under the provisions of this Article, along with its supplier, fabricator or manufacturer.

F. Change orders and/or time extensions will not be issued for any costs or impacts related to compliance with this section, including documentation, special handling, or special storage.

1.5 PAYMENT FOR MATERIALS OR EQUIPMENT STORED OFF THE JOBSITE

A. Partial payment for materials or equipment stored off the Jobsite shall be subject to the following conditions:

3. Payment will not be made for any materials or equipment unless each individual piece of the material or equipment becomes a permanent part of the Work and has a value of more than $5,000.

4. The materials and/or equipment are required by the Specifications, and are specifically manufactured for the Project and could not readily be utilized or diverted to another job.

5. No payment will be made for living or perishable plant material, or for degradable materials such as rock, sand, cement, or for reinforcing steel, miscellaneous piping, off the shelf and catalog items, or similar items, until they are incorporated into the Work.

6. Payment for the materials or equipment stored shall not exceed sixty percent (60%) of the invoice cost of the materials or equipment. Percent of the invoice paid shall be at the discretion of the CITY. The amount paid shall not exceed the total amount of the Bid item less an amount estimated for installation.

B. The CONTRACTOR shall include cost loaded activities for the materials and equipment, for which payment will be requested, in the Schedule of Values. The CONTRACTOR shall provide all documentation necessary to establish the cost of the materials or equipment.

C. All suppliers, fabricators, or manufacturers who intend to furnish materials or equipment to the CITY must file a notice with the CITY in accordance with the State of California lien laws.

D. Each supplier, fabricator or manufacturer shall file a list, with the INSPECTOR, indicating the materials or equipment to be furnished to the Project. They shall also provide a notarized declaration from their company indicating the employees authorized to sign an unconditional release for the company. The persons signing the declaration and the unconditional release shall be identified by name and title.

E. Each request for payment shall include a notarized Unconditional Release that conforms to the California Civil Code for no less than 60% of the invoice cost of the materials or equipment. The release shall be signed by an authorized employee identified in the corporate declaration. The request shall include the suppliers invoice for the materials or equipment.

F. The CONTRACTOR shall store the materials and equipment as required in STORAGE OF MATERIALS AND EQUIPMENT of these GENERAL REQUIREMENTS, in a bonded warehouse or facility approved by the INSPECTOR. The storage site shall be located within fifty (50) miles of the geographic limits of the CITY. The materials and equipment shall be physically segregated from all other materials or equipment within the facility and shall be identified as being the "PROPERTY OF THE CITY OF LOS ANGELES". The CONTRACTOR shall exercise all measures necessary to ensure preservation of the quality, quantity, and fitness of such materials or equipment and shall perform

the manufacturers' recommended maintenance of the materials or equipment. The CONTRACTOR shall inspect the materials and equipment, and submit a monthly written report to the INSPECTOR listing all the equipment stored, results of their inspection, and the maintenance performed.

G. The CONTRACTOR shall grant the INSPECTOR and the ENGINEER access to the storage facility at any time and assist the INSPECTOR and the ENGINEER in conducting a full view, piece by piece, inventory of all such material or equipment.

H. The CONTRACTOR shall provide all additional insurance necessary to insure the materials or equipment against loss of damage. The insurance provided shall be provided as stated in INSURANCE of the GENERAL CONDITIONS. The insurance shall cover the material or equipment, while stored at the approved site, while in transit to the Jobsite, while being off-loaded at the site and until the material or equipment is incorporated into the Work and the CONTRACT is accepted by the BOARD.

I. The CONTRACTOR shall be responsible for any damage to, defects therein, mis-fabrication thereof, or loss of the materials or equipment.

J. The CONTRACTOR shall be responsible for any resulting project delays or consequential damages as if the CONTRACTOR were the owner of the material or equipment until it is incorporated in the Work and accepted by the CITY.

K. The CONTRACTOR shall absorb any and all cost incurred to meet the requirements of this article without modification in the Contract amount.

L. The CONTRACTOR shall present the storage arrangements in writing and sign a Security Agreement, which shall be submitted to the INSPECTOR for approval by the City Attorney. This agreement shall set forth the terms of ownership, storage and insurance necessary to insure the material or equipment against damage or loss.

1.6 FINAL PAYMENT

A. Final Payment of all monies owed the CONTRACTOR shall be made within 60 days of the date of Final Field Acceptance by the Final Inspector after deducting all prior payments and all amounts to be withheld under the provisions of the Contract, including the following items:

1. Liquidated damages, as applicable;

2. "Disputed Funds" including, but not limited to, the following:

a. Penalty and/or restitution for failure of the CONTRACTOR to pay prevailing wages as required by the contract.

b. Penalty for failure of the CONTRACTOR to receive approval of all Subcontractor(s) prior to said Subcontractor working on the project.

c. Penalty for failure of the contractor to receive approval for Subcontractor substitution(s).

d. Penalty for failure of the contractor to receive approval for a reduction in the dollar amount paid a bid-listed and/or approved Subcontractor;

3. Lien claims or Stop Notices filed on behalf of suppliers, Subcontractors, and labor performed in connection with the project; except, that upon submittal of a Stop Notice Release Bond issued by an approved Surety Company executed in favor of the CONTRACTOR, the CITY will release such portion of the retained funds to said CONTRACTOR that is being held solely to cover Stop Notice Claims.

B. No claim of the CONTRACTOR under this Article shall be allowed unless the CONTRACTOR has given the required written notice. Nor shall a claim by the CONTRACTOR for an equitable adjustment hereunder be allowed if asserted after final payment under this Contract.

C. The acceptance by the CONTRACTOR of final payment and retention shall release the CITY, its officers, agents, representatives or employees, as representatives of the CITY, from all claims and all liability to the CONTRACTOR for all matter in connection with the Work and all acts of the CITY relating to or arising out of the Work.

END OF SECTION 01292

SECTION 01298
SCHEDULE OF VALUES / CONTRACT PRICE BREAKDOWN

1.1 THE REQUIREMENT

A. The Schedule of Values shall be used as a basis for determining progress payments on a lump sum contract or any designated lump sum bid item. The Schedule of Values shall be a schedule of cost loaded construction activities equal, in total, to the lump sum bid and shall be in such form and sufficient detail to correctly represent a reasonable apportionment of the lump sum. Prior to submitting an invoice for payment, the CONTRACTOR shall have submitted a detailed Schedule of Values and obtained approval from the INSPECTOR.

B. Each lump sum bid item on the Schedule of Work and Prices, as set forth in the Bid must be broken down separately. The breakdown of each lump sum bid item must cover the cost of construction required by the Drawings and Project Manual for that item. The sum of the values for the construction activities, within a bid item, must equal the total bid amount for that item. The breakdown shall include subcontract amounts which shall not deviate from the amounts submitted in the Bid Proposal. The CONTRACTOR shall provide certification from the Subcontractors certifying the subcontract amounts.

C. Each activity in the Schedule of Values shall delineate one construction activity. For example, the placement of concrete between construction joints, the construction of an electrical duct bank or pipeline between points A & B. The costing for each activity should include all costs for the labor and materials or equipment required to complete the activity. For example, concrete construction activities should include all costs for the forming, placing of reinforcement, placing concrete and curing. The cost for pipeline construction activities should include materials, equipment and installation including pipeline supports or thrust blocks. The excavation and backfill for a pipeline or structure may be separate activities. The Contract Price breakdown shall include the itemized costs for the plant establishment and any maintenance services to be performed before the final project acceptance is made. No non-construction activity shall be cost loaded.

D. The CONTRACTOR shall use cost loaded construction activities from the Construction Schedule as a Schedule of Values. Each construction activity shall be encoded to its bid item and a sort provided for each bid item totaling the cost loaded amount. The total of the Cost Loaded amounts for each bid item shall equal the amount bid for that item. The total of the Schedule of Values shall equal the current Contract value at all times. At any time during the progress of the Work of the Contract the INSPECTOR reserves the right to review the cost loading of the Schedules of Values and direct necessary revisions. When requested by the INSPECTOR, the CONTRACTOR shall provide all information necessary to substantiate the cost loading.

END OF SECTION 01298

SECTION 01311
PRE-CONSTRUCTION SAFETY CONFERENCE

1.1 THE REQUIREMENT

A. The CONTRACTOR's Project Manager, Project Engineer, Safety Coordinator and Superintendent(s) shall attend a Pre-Construction Safety Conference conducted by the INSPECTOR and the ENGINEER. The CONTRACTOR will be informed of the date, time, and location of the Pre-Construction Safety Conference by the ENGINEER. The Pre-Construction Safety Conference shall take place within twenty-one (21) calendar days after Notice of Award and prior to the start of any Work at the site. The CONTRACTOR shall select additional personnel from its field staff, vendors, suppliers, and manufacturers, and from every Subcontractor, at any tier, to attend the Pre-Construction Safety Conference.

B. The CONTRACTOR shall provide to the ENGINEER and the INSPECTOR, at the Pre-Construction Safety Conference, the following documents.

1. Injury and Illness Prevention Program (IIPP) which shall address site specific concerns and shall also Include the following, as a minimum:

a. Occupational Injury and Illness Investigation and Reporting System, including a system for providing all injury reports to the INSPECTOR and the ENGINEER.

b. Safety Inspection System

c. Hazard Communication Program.

d. Methods of identifying hazards including a procedure for notifying the INSPECTOR and the ENGINEER when a hazard is identified.

e. Training Documentation System.

f. Safety Communication and Remediation Procedures.

g. Other specific safety activities which pertain to the Work

2. During periods of Pandemic/Epidemic of infectious diseases, as declared by the local and/or State health officials, the Contractor may be required to modify his/her attendance to the Pre-Construction Safety Conference and all other meetings by teleconference.

a. Following the guidelines from local and/or State health officials, the Contractor shall modify the IIPP to include these additional requirements:
   i. Personal Protective Equipment (PPE) for all workers.
   ii. Social distancing.
   iii. Hygiene maintenance.
   iv. Quarantine of infected workers and those who have come in contact.

v. Testing requirements as prescribed by the State/Local health officials.
vi. Any other requirements as prescribed by State/Local health officials as they become available.

b. Additionally, the Contractor shall follow these guidelines as required for construction inspection:
i. Los Angeles Department of Building and Safety Announcement No. 5 “Covid-19 Safety Guidance for Construction Sites”.
ii. Bureau of Contract Administration Job Memorandum “Covid-19 Safety Guidelines for Construction Sites”.

3. Identification of person(s) responsible for safety of this site, who will be assigned to the site during the performance of the work, for the CONTRACTOR and all Subcontractors at any tier.

4. Emergency Action and Fire Prevention Plan.

5. Hazardous Materials Procurement, Storage, Handling, Waste Control and Disposal Procedures.

a. The CONTRACTOR’s Lock Out/Tag Out, Confined Space Entry, Hazardous Materials/Waste Control and all other site specific safety programs shall meet or exceed the Bureau of Sanitation’s standards for this site. These standards are available to the CONTRACTOR upon request from the ENGINEER.

6. It shall be the CONTRACTOR’s responsibility to assure that all field forces know and obey all safety and emergency procedures to be maintained at the job site. The CONTRACTOR shall further assure that a supervisor is present at all times during any field work who is knowledgeable of and responsible for the enforcement of the CONTRACTOR’s required safety procedures.

(END OF SECTION)

SECTION 01312
PROJECT MEETINGS

PART ONE - GENERAL

1.1 DESCRIPTION

A. Work Included:

1. Required to enable orderly review during pre-installation conference and progress of Contracted Work, and to provide for systematic discussion of installation problems and other construction problems arisen, the ENGINEER will conduct project meetings throughout the construction period. Conform to the Pre-Construction Scheduling Conference and Project Schedule Review Meeting provisions in Section 01321 – CONTRACTOR'S CONSTRUCTION SCHEDULE AND REPORTS of the GENERAL REQUIREMENTS.

B. Related Work:

1. Documents affecting work of this Section include, but are not necessarily limited to, GENERAL CONDITIONS, DIVISION 1 - GENERAL REQUIREMENTS

2. The CONTRACTOR'S relations with his Subcontractors and materials suppliers, and discussions relative thereto, are the CONTRACTOR'S responsibility and normally are not part of project meetings content.

3. Pretesting Procedural Conference in Section 01453 – SAMPLING, TESTING AND FABRICATION INSPECTION of the GENERAL REQUIREMENTS.

4. CONTRACTOR'S CONSTRUCTION SCHEDULE AND REPORTS in Section 01321 of the GENERAL REQUIREMENTS.

1.2 SUBMITTALS

A. Conform to provisions of Section 01330 – SHOP DRAWINGS / SUBMITTALS of GENERAL REQUIREMENTS.

B. Agenda Items:

1. To the maximum extent practicable, advise the ENGINEER at least twenty-four (24) hours in advance of project meetings regarding items to be added to the agenda or requesting the cancellation of any Meeting.

C. Minutes:

1. The ENGINEER will compile minutes of each project meeting and will furnish one copy to the CONTRACTOR, INSPECTOR and all other involved parties.

2. Recipients of copies may make and distribute such other copies as they wish.

3. Special denotation mutually agreed by all parties shall be used in Meeting Minutes to identify old and new business, to distinguished new discussion/statement made in subsequent meeting from previous meetings, or any revision to any part of the minutes.

1.3 QUALITY ASSURANCE

A. For those persons designated by the CONTRACTOR to attend and participate in project meetings, provide required authority to commit the CONTRACTOR to solutions agreed upon in the project meetings. Refer to provisions indicated in Section 00302 - CONTRACTOR'S REPRESENTATIVE AT THE SITE of the GENERAL CONDITIONS.

PART TWO - PRODUCTS (NOT APPLICABLE)

PART THREE - EXECUTION

3.1 MEETING SCHEDULE

A. Except as noted below for Preconstruction Meeting, project meetings will be held bi-weekly or as otherwise directed by the ENGINEER.

B. Coordinate as necessary to establish mutually acceptable schedule for additional meetings.

3.2 MEETING LOCATION

A. The ENGINEER will establish the meeting location. To the maximum extent practicable, meetings will be held in CONTRACTOR'S job office at the Jobsite.

3.3 PRECONSTRUCTION MEETING

A. Preconstruction Meeting will be scheduled to be held within fifteen (15) working days after the City has issued the Notice to Proceed.

1. Provide attendance by authorized representatives of the CONTRACTOR and major Subcontractors.

2. The ENGINEER will advise other interested parties.

B. Minimum Agenda: Data will be distributed and discussed on at least the following items.

1. Organizational arrangement of CONTRACTOR'S forces and personnel, and those of the subcontractors, and materials suppliers.

2. Organizational arrangement of the CITY'S forces and personnel, such as the User's Agency, Project Manager, ENGINEER, CITY'S Scheduler, CITY'S Abatement Consultant, Soil Engineer, CITY'S Surveyor, INSPECTOR and other authorized representatives.

3. Channels and procedures for communication.

4. Construction schedule, including sequence of critical work.

5. Contract Documents, including distribution of required copies of original Documents and revisions.

6. Processing of Shop Drawings and other data submitted to the ENGINEER for review.

7. Processing of Bulletin, addenda, field decisions, Requests for Information and Change Orders.

8. Rules and regulations governing performance of the Work.

9. Procedures for site security, Project quality control, housekeeping, and related matters.

10. It is the responsibility of the CONTRACTOR for Job Site Safety & First Aid, however, it shall be on the agenda.

11. Procedures to request air monitoring services, soil inspection, survey, etc. if specified, shall be provided by the CITY.

12. Emergency Information: The name, addresses, telephone and fax numbers of the CONTRACTOR, and Subcontractors, or their representatives, shall be filed with the ENGINEER prior to start of Contracted Work.

3.4 PROJECT MEETINGS

A. Attendance:

1. To the maximum extent practicable, the Project Superintendent and other representatives who have full knowledge of the project and full authority to act for the CONTRACTOR shall represent the CONTRACTOR at Project Meetings throughout the progress of the Work. All representatives must conform to the provisions indicated in Section 00302 - CONTRACTOR'S REPRESENTATIVE AT THE SITE of the GENERAL CONDITIONS.

2. Subcontractors, materials suppliers, and others may be invited to attend these Project Meetings in which their aspect of the Work is involved.

3. CONTRACTOR may not cancel or be absent from any meeting without advanced approval from the ENGINEER. The CONTRACTOR must submit a written request with reason to the ENGINEER twenty-four (24) hours before the scheduled meeting. If approved, the CONTRACTOR shall notify all parties of the cancellation.

B. Minimum Agenda:

1. Review, revise as necessary, and approve minutes of previous meeting.

2. Review progress of the Work since last meeting. Review actual starts and finish dates of activities.

3. Review status (total complete and outstanding) of submittal for approval, Request-for-Information and Change Orders.

4. Identify old and new problems, which impede planned progress**,** identify responsible party for the follow-up actions. Mutually agree to a common solution and date of correction.

5. Develop corrective measures and procedures to regain lost time on the planned schedule.

6. Review Weekly Progress Reports including the forecasts as required in Section 01321 – CONTRACTOR'S CONSTRUCTION SCHEDULE AND REPORTS of the GENERAL REQUIREMENTS.

7. Status of Record drawings and the Record Project Manual.

8. Jobsite Walk-Through. Record all discussion and follow-up actions.

9. Any Jobsite health and/or accident or safety issues.

C. Revisions to Minutes:

1. Unless published minutes are challenged in writing prior to the next regularly scheduled progress meeting, they will be accepted as properly stating the activities and decisions of the meeting.

2. Persons challenging published minutes shall reproduce and distribute copies of the challenge to all indicated recipients of the particular set of minutes.

3. Challenge to minutes shall be settled as priority portion of "old business" at the next regularly scheduled meeting.

3.5 SITE MEETINGS

A. Required when necessary to enable orderly review and discussion of site conditions and problems requiring solution during the progress of the contracted work. Notify the ENGINEER of the need for additional site meetings as early as possible to resolve the problem without any impact to the Project Schedule.

B. Provide necessary labor, tools, and equipment such as shoring, scaffolding, ladder, etc. to gain access to the site.

C. CONTRACTOR or CONTRACTOR'S authorized representative shall be present at all times.

D. All discussion and follow-up actions shall be recorded by ENGINEER and the minutes shall be distributed at the next meeting or at earliest time.

END OF SECTION 01312

SECTION 01313
WORK BY CITY OR OTHERS

1.1 THE REQUIREMENT

A. The CONTRACTOR shall be responsible for ascertaining the nature and extent of any simultaneous, collateral and essential work by others. The CITY, its employees and contractors, and others, shall have the right to operate within or adjacent to the worksite to perform such work.

B. The CITY, the CONTRACTOR, their employees, Subcontractors and others, shall coordinate their operations and cooperate to hold interference to a minimum.

C. The CONTRACTOR shall include in its Bid and schedule all costs and time involved as a result of coordinating its work with others. The CONTRACTOR shall not be entitled to additional compensation from the CITY for damages resulting from such simultaneous, collateral and essential work. The CONTRACTOR'S coordinating efforts shall include redeployment of his work forces to other parts of the Work.

D. Should the CONTRACTOR be delayed by the CITY, and such delay could not reasonably have been foreseen and prevented by the CONTRACTOR, the ENGINEER will determine the extent of the delay, the effect of the delay on the project as a whole, and any commensurate extension of time.

E. The CONTRACTOR is required to notify affected CITY offices of Work to be done as specified in the following table:

Item	Office of LADOT to be notified	Cost to be borne by	Required Notice (working days)
Work on signal – controlled intersection	Traffic Signal Inspector: Central Area: (213) 485-1071 Western Area: (213) 485-6834 Valley Area: (818) 779-9433 ATSAC Project Engineer: (213) 972-8664	Contractor	3
Traffic Signal and Interconnect damage	Signal Superintendent: Daytime: (213) 473-8465 After Hours: (818) 374-4823		Immediate
Parking meter damage	Parking Meter Supervisor: (213) 473-0644		
Parking meter removal and replacement	Parking Meter Planning Supervisor: (213) 473-0644	City**	5
Material and labor by LADOT	For Scheduling of: Sign/Striping: (213) 485-9331 Signal: (213) 485-6818		
Traffic Sign removal, relocation and replacement	Appropriate District Transportation Engineer*: Central District: (213) 972-4990 East Valley District: (818) 374-4688 Hollywood District: (323) 957-6843 West Valley District: (818) 774-4306 Western District (310) 575-8138 Southern District: (310) 732-4599		
Parking restrictions, changes relating to temporary striping			10
Final traffic striping and pavement marking		Contractor	5
Temporary Traffic Control Plan			30
Temporary striping installation mark out			2
Offsite Detour Signs			5
Placement of temporary “No Parking” signs	Special Traffic Control Section: (213) 485-2298		4

***** For B-Permit projects, notify citywide investigations (213) 972-8687.

******On B-Permit projects, the costs shall be charged to the permittee as required by Section 62.110 of the Los Angeles Municipal Code.

END OF SECTION 01313

SECTION 01321
CONTRACTOR'S CONSTRUCTION SCHEDULE AND REPORTS

1. THE REQUIREMENT

A. Progress of the Work

1. It is expressly understood and agreed that the time of beginning, the rate of progress, and the time of completion of the Work are of the essence of this Contract. The Work shall be executed with such progress as required to prevent any delay to other CONTRACTORS that may be working on other contracts at the site, the Contract milestones, and the general completion of the Contract.

B. CONTRACTOR'S Construction Scheduler

1. The CONTRACTOR shall continuously employ or retain the services of a Construction Scheduler. The Construction Scheduler shall have at least three (3) years of verifiable experience as the person primarily responsible for preparing and maintaining detailed project schedules on projects of the same or similar size and nature as this project. The Construction Scheduler is required to attend all meetings pertaining to scheduling and progress of the Work. If the Construction Scheduler leaves employment of the CONTRACTOR, the CONTRACTOR must fulfill the requirements of B.2 a and b within thirty (30) days.

2. Within five (5) calendar days after the Notice of Award the CONTRACTOR shall provide a statement to the ENGINEER with the following:

a. Identification, qualifications, and experience of the CONTRACTOR’S Construction Scheduler and all other members of the CONTRACTOR’S scheduling staff.

b. References of not less than two (2) previous projects on which the CONTRACTOR’S Construction Scheduler has utilized CPM scheduling.

(As used in this Section, "days" mean consecutive calendar days unless otherwise noted.)

The ENGINEER and the INSPECTOR reserve the right to disapprove any scheduling candidate or scheduling system proposed for the project. The ENGINEER and the INSPECTOR reserve the right to remove, without rights to work on the project, any member of the CONTRACTOR’S scheduling staff, that is, in the ENGINEER’S or INSPECTOR’S opinion, incompetent in scheduling.

C. General

1. Schedule Methodology

The scheduling method to be used shall be a Critical Path Method schedule in the form of an activity on node Precedence Diagram Network (PDN) with capabilities of identifying the critical path. The principles and definitions of the terms used herein shall be as set forth in the Associated General CONTRACTOR’S publication "CPM in Construction", latest

edition. To the extent there are any conflicts between the Associated General CONTRACTOR'S publication and the Specifications, the Specifications shall govern.

2. Work Breakdown Structure

   a. The CONTRACTOR shall submit to the ENGINEER for approval, at the Preconstruction Scheduling Conference, the following:

      (1) A Work breakdown structure.

      (2) The associated alphanumeric coding structure to implement the Work breakdown structure.

      (3) The activity identification system for labeling all Work activities.

3. The first code field shall designate the bid item. The second code field shall identify the type of activity. (Types of activities shall be defined as "submittal", "review/approval", "procurement/fabrication", "delivery", and "construction/installation" or "Change Order".) The third code field shall identify which Specification section the activity shall be paid under. The fourth code field shall identify who is responsible to perform the activity (i.e., CONTRACTOR, Subcontractor(s), Supplier, etc.). The fifth code field shall identify the area being worked in or the facility, if appropriate. The sixth code field shall identify the construction phase or project element (if phasing of Work or project elements are identified in the Contract.) All Change Orders and Notices of Non-Compliance shall be included as separate code fields.

4. Scheduling System

   The CONTRACTOR shall use Primavera P6 (latest edition) and a hardware system commensurate with the size of the program. This shall be referred to as the Scheduling System. The Scheduling System shall be capable of handling, processing, printing, and plotting data to satisfy all requirements of this Section.

D. Preconstruction Scheduling Conference

1. The ENGINEER will schedule and conduct a Preconstruction Scheduling Conference with the CONTRACTOR'S Project Manager and Construction Scheduler within seven (7) calendar days after Notice of Award, to commence development of the required Schedule. At this meeting, the requirements of this Section, as they apply to the Contract, will be reviewed with the CONTRACTOR. The CONTRACTOR shall be prepared to review and discuss its methodology for developing the Schedule, its proposed sequence of operations, and cost, manpower, and equipment loading methodology.

   The Contractor shall include the effects of adverse weather in the Schedule in terms of working days (wds). The number of wds, Monday through Friday, excluding any day designated as a holiday by the City or in a Master Labor Agreement binding the Contractor, of normal adverse weather per month is as follows: January-3 wds, February-2 wds, March-

3 wds, April-1 wd, October-1 wd, November-2 wds, December-2 wds. Unusually severe weather (see GC 00401 – Unavoidable Delay) is defined as the number of working days over what is normal adverse weather, as defined in the previous sentence. For partial months, the aforementioned numbers shall be prorated and rounded to the nearest whole number. There shall be no extension of time for adverse weather unless the Contractor is prevented from working during the first five (5) hours of a workday with at least sixty percent (60%) of the normal work force on more days per month than listed above. Even if there is unusually severe weather, a non-compensable extension of time will not be granted unless the other conditions required by GC 00401 are met, including negative impact to the critical path and delay beyond the current Contract Completion Date.

E. CONTRACTOR'S Construction Schedules

1. CONTRACTOR'S Preliminary Schedule

a. Within fifteen (15) calendar days after the Preconstruction Scheduling Conference, the CONTRACTOR shall submit to the ENGINEER the detailed plan of operations for the first ninety (90) calendar days of Work after Notice to Proceed, as well as a general approach for the remainder of the Work. The initial submittal of the Preliminary Schedule shall include the time scaled network diagram covering at least the first 90 days after Notice to Proceed. The network diagram shall be based on the "early" schedule dates. The network diagram shall list activity I.D. number, description, original duration and early dates. The submittal shall include a predecessor/successor report which matches the network diagram. The predecessor/successor report (sorted by activity ID) shall list (as a minimum) activity ID number, original duration, description, early dates and detailed predecessor/successor listing. The Preliminary Schedule submittal shall include electronic files uploaded to e2020 containing the CPM file matching the network diagram and predecessor/successor report. Any resubmittals of the Preliminary Schedule shall be the same detail and quantity as the initial submittal.

b. The ENGINEER, the INSPECTOR, and the CONTRACTOR shall meet within seven (7) calendar days after submittal of the Preliminary Schedule to review and make any necessary adjustments or revisions. The Preliminary Schedule, when revised, will represent the CONTRACTOR'S planned means, methods, and sequences for performance of the Work during the first ninety (90) calendar days after Notice to Proceed and is to be incorporated as the first ninety (90) calendar days of the CONTRACTOR'S Construction Baseline Schedule (the Schedule).

c. The CONTRACTOR shall submit the revised Preliminary Schedule within seven (7) calendar days after the meeting, for approval by the ENGINEER and the INSPECTOR.

d. At the same time, and as part of the submittal of the Preliminary Schedule, the CONTRACTOR shall submit to the ENGINEER and the INSPECTOR, for approval, a schedule of manpower and costs assigned to each activity on the Preliminary Schedule. Costs assigned will generally conform to the CONTRACTOR'S bid item unit prices and such lump sum bid item breakdowns as the INSPECTOR shall approve. The schedule of manpower and costs shall be realistic and level so as to not have any unusual manpower requirements.

e. The resultant Preliminary Schedule, when approved by the ENGINEER and the INSPECTOR, shall be the sole basis of partial or progress payments made for Work performed during the first ninety (90) calendar days after Notice to Proceed.

f. Submittal and approval of the Preliminary Schedule is a condition precedent to the issuance and payment of progress payments. Therefore, no progress payments will be made until the Preliminary Schedule has been approved by the ENGINEER and the INSPECTOR.

g. The Preliminary Schedule shall be updated monthly during the first ninety (90) calendar days after Notice to Proceed as a part of the payment application process. All appropriate reports and network diagrams required by H of this Section shall be submitted, as agreed upon between the ENGINEER, the INSPECTOR, and the CONTRACTOR.

2. CONTRACTOR'S Construction Baseline Schedule

a. Fifteen (15) calendar days after approval of the Preliminary Schedule, the CONTRACTOR shall provide to the ENGINEER an update on the progress in the development of the Schedule. The CONTRACTOR shall prepare and submit to the ENGINEER the Contractor's Construction Baseline Schedule (the Schedule) within forty-five (45) calendar days after approval of the Preliminary Schedule.

b. The Schedule shall show the sequence and interdependence of activities required for complete performance of the Work, beginning with the date of the Notice to Proceed and concluding with the Contract Completion Date based on the completion time (calendar days) allowed in the Contract.

c. Pursuant to the float sharing requirements of the Contract, use of float suppression techniques such as preferential sequencing, special lead/lag logic restraints, extended activity times or imposed dates shall be cause for rejection of the Schedule and any revisions or updates. The use of float time disclosed or implied by the use of alternative float suppression techniques shall be shared as directed by the ENGINEER.

d. If the CONTRACTOR submits a Baseline Schedule showing completion of the Work more than thirty (30) calendar days in advance of the Contract Completion Date, the Schedule shall

show the time between the early completion date and the current Contract Completion Date as "project float". The CONTRACTOR agrees that the ENGINEER may, at no cost to the CITY, decrease the Contract duration by issuance of a Change Order which will change the appropriate Milestone Date(s) and the Contract Completion Date to the completion date reflected on the Schedule. Any approved Schedule, revision, or update having an early completion date shall show the time between the early completion date and the current Contract Completion Date as “project float”.

e. The ENGINEER will review and make comments on the Schedule. Meetings will be held between the ENGINEER, the CONTRACTOR, and all Subcontractors and Suppliers whom the CONTRACTOR may desire to invite or whom the ENGINEER may request be present.

f. Comments made by the ENGINEER on the Schedule, during review, will not relieve the CONTRACTOR from compliance with requirements of the Contract Documents. To the extent that there are any conflicts between the approved Schedule and the requirements of the Contract Documents, the Contract Documents shall govern.

g. If requested by the ENGINEER at any time during the project, the CONTRACTOR shall provide highly detailed, a short-term schedule for specific crucial items (work-around, start-up, etc.).

F. Network Details

1. The Schedule shall include time-scaled network diagrams, based on calendar days, as well as computer tabulations. It shall be constructed to show the order in which the CONTRACTOR proposes to carry out the Work, to indicate restrictions of access and to show availability of Work areas, and availability and use of manpower, materials and equipment. The CONTRACTOR shall utilize the Schedule in planning, scheduling, coordinating, and performing the Work under the Contract (including all activities of Subcontractors, equipment vendors, and Suppliers). The CONTRACTOR will provide the ENGINEER with written confirmation of the concurrence of all major trade Subcontractors and Suppliers with the Schedule. (The term "major Subcontractors and Suppliers" as used in this Section, shall include any Subcontractor or Supplier with five (5) percent or more of the value of the Contract.) The logic shall be determined by which activity must be completed before a successor can start; maximum concurrent work; and manpower or equipment constraints which prevent concurrent work.

2. The Schedule shall provide the ENGINEER with a tool to monitor and follow the progress of all phases of the Work. The Schedule submitted to the ENGINEER shall comply with all limits imposed by the scope of Work, with all contractually specified intermediate milestone and completion dates, and with all constraints, restraints or sequences included in the Contract. The degree of detail shall include factors to the satisfaction of the ENGINEER, including, but not limited to:

a. Physical breakdown of the project.

b. Contract milestones and completion dates, substantial completion dates, constraints, restraints, sequences of Work shown in the Contract, the planned substantial completion date, and the final completion date.

c. Type of Work to be performed, the sequences, and the labor trades involved.

d. All purchases, submittals, submittal reviews, manufacturing, tests, delivery, and installation activities for all major materials and equipment, and a separate list of all major material items or items of equipment for which the CONTRACTOR intends to seek payment prior to installation.

e. Deliveries of CITY furnished equipment and/or materials in accordance with the dates or schedule windows of such items set forth in the Contract or furnished by the ENGINEER, or items to be salvaged and delivered to the CITY.

f. Preparation, submittal and approval of Shop and/or Working Drawings and material samples showing Twenty-one (21) day minimum time specified for the ENGINEER'S review of normal or routine submittals and a forty five (45) day review time for all major submittals, so identified in the technical specifications, and the same time frame shall be allowed for at least one (1) resubmittal on all major submittals so identified in the Contract Documents.

g. Approvals required by regulatory agencies or other third parties notifications to utility companies, and request of services.

h. Plans for all subcontract Work, concrete placement sequence, structural steel, plumbing, electrical, etc.

i. Assignment of responsibility for performing specific activities, notifications to utility companies and request of services.

j. Access to and availability of Work areas including all anticipated plant shutdowns, if applicable.

k. Identification of interfaces and dependencies with preceding, concurrent and follow-on CONTRACTORS and utilities as shown on the Plans or called out in the Specifications.

l. Resource loading for cost, manpower, material, and equipment.

m. Actual tests by the CONTRACTOR and the CITY, submission of test reports, and approval of test results.

n. All start up, testing, training, and assistance required under the Contract.

o. Planning for phased or total takeover by the CITY.

p. Punchlist and final cleanup.

q. Identification of any manpower, material, or equipment restrictions, as well as any activity requiring unusual shift work, such as two shifts, six (6) day weeks, specified overtime, or work at times other than regular days or hours, shall be clearly identified in the Schedule.

3. The activities included in the Schedule shall be analyzed in detail to determine activity durations in units of project working days. Durations shall be based on the labor, equipment, and materials required to perform each activity on a normal Workday basis. No on-site activity shall have a duration over fifteen (15) working days except non-construction activities such as submittals, submittal reviews, procurement and delivery of materials or equipment, and concrete curing. Only on-site construction activities will be shown in their resource loaded state to reflect cost, manpower, materials and equipment except for those activities specifically identified under 1.1F.2d of this Section. The manpower and equipment, by item designation, shall be shown for each construction activity for the network on a tabular listing, and in information furnished in accordance with O and P of this Section.

4. Critical or near critical paths resulting from the use of manpower or equipment restraints shall be kept to a minimum. Near critical paths shall be defined as those paths having fifteen (15) working days or less of total float at the time of initial submission. Restraints related to resource loading must be identified as “For resource loading only”.

5. The estimated cost to perform each work activity shall be noted for each activity in the network on a tabular listing. The sum of the costs assigned to all activities shall equal the Contract value. No activity costs shall be assigned to submittals or submittal reviews. The accepted cost loaded Project Schedule shall constitute the Schedule of Values in accordance with the SCHEDULE OF VALUES / CONTRACT PRICE BREAKDOWN of these GENERAL REQUIREMENTS, from which monthly progress payments will be made in accordance with the provisions of PARTIAL PAYMENTS in these GENERAL REQUIREMENTS. Acceptance of the Cost Loaded Schedule by the CITY does not relieve the CONTRACTOR’S responsibility to submit any cost information or data as requested by the ENGINEER for verification of cost.

6. The network diagram shall be prepared on (E) size sheets (28 inches by 40 inches), shall have a title block in the lower right-hand corner, and a timeline on each page. Exceptions to the size of the network sheets and the use of computer graphics to generate the networks shall be subject to the approval of the ENGINEER.

7. All networks shall be drafted time scaled to show a continuous flow of information from left to right. The primary path(s) of criticality shall be clearly and graphically identified on the network(s).

G. Schedule Reports

1. The Schedule submitted to the ENGINEER shall include the time scaled network diagram. Network diagrams shall be based on early start and early finish dates of activities shown. The network diagrams submitted to

the ENGINEER shall also be accompanied by a computer-generated mathematical analysis for each activity included in the Schedule. Such mathematical analysis shall be submitted to the ENGINEER and shall include at a minimum, the following:

a. A list of all activities sorted by Activity I.D. Number with predecessor and successor activity numbers and descriptions;

b. Activity number and description.

c. Activity code(s).

d. Schedule and actual/remaining duration for each activity.

e. Earliest start date (by calendar date).

f. Earliest finish date (by calendar date).

g. Actual start date (by calendar date).

h. Actual finish date (by calendar date).

i. Latest start date (by calendar date).

j. Latest finish date (by calendar date).

k. Float in work days.

l. Monetary value and cost-to-date of each activity.

m. Percentage of activity complete and remaining duration for incomplete activities.

n. Cumulative value of Work completed based on the CONTRACTOR'S reported portion of activities complete and accepted.

o. Imposed constraints.

2. The following printed computer outputs shall be required as part of the Schedule submittal and each revision or update thereafter as a condition precedent to receipt of progress payments:

a. Activity listing sorted by I.D. number showing predecessor and successor activities in numerical order, with original and remaining duration, early start, early completion, late start, late completion and total float.

b. A sublisting of materials and equipment sorted by Specification Section number. The sublisting of materials and equipment shall include the following activities: preparation of Shop Drawings, submittal to the ENGINEER, review by the ENGINEER, and fabrication, testing, and/or delivery of material and equipment which shall be interfaced with the earliest start date that the material or equipment is to be installed on the project.

c. Activity sort(s) by organizational responsibility, including submittals to the ENGINEER for all major items or material and equipment, the number of shifts, crew sizes of each craft and construction equipment to accomplish the activity;

3. Outputs 1 and 2, above, shall show all activities, including restraints, for the duration of the project.

4. The CONTRACTOR shall also prepare and submit a time-scaled Master Bar Chart Summary Schedule on a single sheet that shows the total project in approximately 25-100 activities, as agreed to by the CONTRACTOR and the ENGINEER. This schedule will accurately summarize the current Project Schedule and shall have common events for correlating the two levels of schedule indenture. All Contract milestones shall be shown. The Master Summary Schedule shall be updated monthly.

H. Approval Of The Baseline Schedule

1. The Schedule network diagram and computer tabulations, the Cash Flow Projection, and the Manpower and Equipment Requirements Forecast shall be submitted to the ENGINEER for approval on e2020:

a. The Network Diagram and Master Bar Chart Summary Schedule.

b. Computer tabulations, Predecessor/Successor Report.

c. Manpower Requirements.

d. Cash Flow Projection.

e. All required reports specified in F and G of this Section.

f. Written confirmation of concurrence of all major trade Subcontractors and Suppliers.

2. Approval Process:

a. The ENGINEER shall approve or disapprove, in writing, the CONTRACTOR'S submission within twenty-one (21) calendar days after receipt of all required information. The Schedule, once approved, becomes the Baseline Schedule which shall be used for monitoring and evaluating all facets of Contract performance including, but not limited to, progress, changes, and delays.

b. The CONTRACTOR, the CONTRACTOR'S Construction Scheduler, and those major trade Subcontractors and Suppliers, as required by the ENGINEER, shall be required to participate in all meetings necessary to reach mutual agreement and approval of the Baseline Schedule, the Manpower Requirements Forecast, and the Cash Flow Projection.

c. The CONTRACTOR shall revise the Baseline Schedule, as required by the ENGINEER, to reflect project construction. If any of the required submissions are returned to the CONTRACTOR

for corrections or revisions, they shall be resubmitted along with a new CD and a hard copy listing of each change (Claim Digger report) for approval within seven (7) calendar days after receipt. Resubmittals shall be as required in H.1 and H.2 of this Section. Review and response by the ENGINEER shall be given within seven (7) calendar days after receipt of each new submission.

d. Should the Baseline Schedule, submitted for approval, show variances from the requirements of the Contract, the CONTRACTOR shall make specific mention of such variations in the letter of transmittal, in order that, if accepted, proper adjustments to the Baseline Schedule can be made. Otherwise, the CONTRACTOR will not be relieved of the responsibility for executing the Work in strict accordance with the requirements of the Contract Documents.

e. Submittal and approval of the Baseline Schedule, the Manpower Requirements Forecast, the Cash Flow Projection, major trade Subcontractor and Supplier confirmation in writing, or CD(s), within the time prescribed, or revisions thereof within the required time, is a condition precedent to the issuance and payment of progress payments.

f. Failure of the CONTRACTOR to submit the Baseline Schedule, or any required resubmittals, in a timely, accurate manner and in accordance with the requirements of this Section will result in costs to the CITY which are difficult if not impossible to determine; therefore, the CONTRACTOR shall pay the CITY liquidated damages in the amount of $1,000.00 per calendar day, for every work day the schedule submittal, revision, or resubmittal is late. This amount shall be subtracted from any monies due and shall be forfeited by the CONTRACTOR.

I. Revisions To Approved Baseline Schedule

1. The CONTRACTOR shall execute the Work in accordance with the approved Baseline Schedule. Out of sequence construction, defined as a change in the Baseline Schedule, requires prior approval of the ENGINEER as defined below.

2. Upon approval of a Time Impact Analysis the change shall be reflected in the next schedule submittal by the CONTRACTOR.

3. No change (except for resubmittals) to the approved Baseline Schedule shall be made without the prior written approval of the ENGINEER. If the CONTRACTOR desires to make a change to the approved Baseline Schedule, the CONTRACTOR shall request permission from the ENGINEER in writing, stating the reasons for the change as well as the specifics, such as revisions to activities, logic, durations, etc. The ENGINEER will provide a response within five (5) calendar days. Actual status and/or forecast dates for revised submittals shall be added without prior acceptance by the ENGINEER. They are still subject to review by the ENGINEER.

4. If the ENGINEER considers a change to the Baseline Schedule to be of a major nature, the ENGINEER may require the CONTRACTOR to revise and submit for acceptance all of the affected portion(s) of the Baseline Schedule including an analysis to show the effect on the entire project. The proposed revision and analysis shall be submitted to the ENGINEER within fifteen (15) calendar days after the ENGINEER notifies the CONTRACTOR the revision is of a major nature. A change will be considered to be of a major nature if the time estimated for an activity or sequence of activities is varied from the original plan to the degree that there is reasonable doubt that the Contract completion date will be met, or if the change impacts the Work of other CONTRACTORS at the Jobsite. Changes to activities having adequate float shall be considered as minor changes, except that an accumulation of minor changes may be considered a major change when such changes affect the Contract completion date. (Activities having adequate float are activities which are not critical after the change is made.).

5. Only upon approval of a change by the ENGINEER shall it be reflected in the next Schedule update submitted by the CONTRACTOR.

J. Updates To Approved Baseline Schedule And Progress Payments

1. Monthly Updates:

a. All updated or revised Schedules shall be submitted in the same detail as the original submittal, unless modified in writing by the ENGINEER. Written confirmation of the major trade Subcontractors and Suppliers shall be required quarterly.

b. The initial Schedule update shall be submitted within fourteen (14) calendar days after approval of the Baseline Schedule. The Schedule update shall be cost loaded. Subsequent Schedule updates shall be submitted at the beginning of each month thereafter for the duration of the Contract. The data date shall be the first working day of the month unless otherwise directed by the ENGINEER. The Schedule and computer tabulations shall be reviewed by the CONTRACTOR'S Construction Scheduler at a joint update meeting with the ENGINEER and the INSPECTOR.

2. Monthly Schedule Updates:

a. The CONTRACTOR shall submit the Monthly Schedule Update to the ENGINEER each month, on a date assigned by the ENGINEER. The proposed Monthly Schedule Update prepared by the CONTRACTOR shall include all information available as of the cutoff date established by the ENGINEER. A detailed list of all proposed schedule changes (logic, duration, status, additions, and deletions) shall be submitted with the update (Claim Digger report). Prior to the monthly update review meeting, the CONTRACTOR shall obtain from his Subcontractors, Suppliers, and staff the necessary information as required to reflect progress to date. A proposed Monthly Schedule Update containing the information set forth below shall be available for review at the meeting.

(1) For activities started and/or completed during the previous period: Actual start and actual completion dates, and number of shifts used to accomplish the activity.

(2) For activities begun but not yet complete to date: Remaining duration of the Work, estimated percent complete, and estimated completion date. The schedule shall be calculated using remaining durations and retained logic.

(3) For activities not yet started: Estimated start dates, revised durations, and estimated completion dates, as necessary.

(4) For authorized Change Orders, including Emergency Change Orders, Time and Material Change Orders, and Unilateral Change Orders: Revised and original activities, number of shifts, crew sizes by craft, construction equipment required, cost, and durations, and status of all outstanding Notices of Non-Compliance, where required.

(5) The monthly update of the Network Diagram shall be for the whole project. The previous month's activities shall be reported as they actually took place and designated as complete, if actually completed, on the network diagram update.

(6) The electronic file of the submitted Network Diagrams and the related reports shall constitute a clear record of progress of the Work from Notice to Proceed to final completion.

(7) The monthly submittal to the ENGINEER shall be accompanied by the Schedule Narrative Report. The Schedule Narrative Report shall describe the physical progress during the report period. Plans for continuing the Work during the forthcoming report period, actions planned to correct any negative float predictions, and an explanation of potential delays and/or problems and their estimated impact on performance and the overall project completion date. In addition, alternatives for possible schedule recovery to mitigate any potential delay and/or cost increases shall be included for consideration by the ENGINEER. The report shall follow the outline set forth below:

CONTRACTOR'S Schedule Narrative Report Outline:

a) CONTRACTOR'S Transmittal Letter.

b) Description of problem areas.

c) Current and anticipated delays:
    1) -Cause of the delay.

2) -Corrective action and schedule adjustments to correct the delay.
3) -Impact of the delay on other activities, milestones, and completion dates.

d) Changes in construction sequences.

e) Pending items and status thereof:
1) -Permits.
2) -Change Orders.
3) -Time extensions.
4) -Non-Compliance Notices.

f) Contract Completion Date(s) status:
1) Ahead of schedule and number of working days.
2) Behind schedule and number of working days.

g) Other project or scheduling concerns including any plant shutdowns, duration of each shutdown, and analysis of any Work to be performed during the shutdown period.

h) Include reviewed and updated Network Diagram and Reports.

i) Include revised Cost Loading and Cash Flow Information of this Section.

j) Include substantial revisions to manpower and equipment requirements

(8) The CONTRACTOR shall provide to the ENGINEER, the Network Diagram, the Predecessor/Successor Report sorted by activity number, the list of all changes made to the previously approved Schedule, and the Schedule Narrative Report. The data required to provide all other scheduling reports called for in of this Section shall be provided on e2020.

3. The CONTRACTOR'S Construction Scheduler and representatives from major Subcontractors and Suppliers (as requested by the ENGINEER shall attend the monthly update meetings with the above data prepared in advance for each meeting to provide, as of the end of the updating period, a complete and accurate report of the current procurement schedule (in accordance with the requirements of CONSTRUCTION STATUS REPORTS of the GENERAL REQUIREMENTS), construction progress, and a depiction of how the CONTRACTOR plans to continue the Work of the project to meet all Contract Completion Dates. All network changes and status dates agreed to during each update meeting shall be considered as acceptable by all parties unless written notice of exception is given by an objecting party within five (5) calendar days after the update meeting. For major network changes that cannot be agreed to during an update meeting, the CONTRACTOR shall submit, in writing, such

revisions for the ENGINEER'S approval prior to inserting such changes into the network. Submissions may be in the form of marked-up networks, fragnets, or schedule abstracts provided they are submitted with a letter of transmittal. The submission and approval procedures for this information shall follow the same timetable described in H.2 of this Section.

4. Predicated on the results of the ENGINEER'S review of Monthly Schedule Update submittals and accompanying reports, the CONTRACTOR may be required to revise the Monthly Schedule Update. Conditions under which a revision will be made are as follows:

   a. When a delay in the completion of any Work item or sequence of Work items results in an indicated extension of the project completion or interim milestone dates detailed herein by thirty (30) calendar days.

   b. When delays in submittals or deliveries or Work stoppages are encountered, which make replanning, rescheduling, or resequencing of the Work necessary.

   c. When the schedule does not represent the actual execution and progress of the project.

5. Required revisions of the Monthly Schedule Update are due within five (5) calendar days of notice by the ENGINEER that a revision is required. All revisions and additions to the Schedule are subject to the review of the ENGINEER. No changes (except resubmittal cycles) are to be implemented in the Schedule by the CONTRACTOR without the prior approval of the ENGINEER. When the Monthly Schedule Update or its required revision is approved by the ENGINEER, it then becomes the Current Schedule Update. The Current Schedule Update will be used for the period from which it is approved until its successor is submitted and approved.

6. The Schedule Narrative Report, the updated Project Schedule (networks, and computer computations), the Cash Flow Projection, the updated network diagram, and one (1) copy of the updated CD reflecting the status of the project agreed to at the updating meeting, shall be submitted to the ENGINEER within five (5) calendar days after each updating meeting.

7. The update report shall show the activities or portions of activities completed during the reporting period and their total value as the basis for the CONTRACTOR'S request for partial payment. Payments made pursuant to PARTIAL PAYMENTS of these GENERAL REQUIREMENTS will be based on the total value of such activities completed or partially completed after verification by the INSPECTOR. The report shall state the percentage of the Work actually complete as of the report date. If the project is behind schedule, progress along other paths with negative float shall also be reported.

8. Failure of the CONTRACTOR to submit the Monthly Schedule Updates in a timely, accurate manner and in accordance with the requirements of this Section will result in costs to the CITY which are difficult, if not impossible to determine; therefore, the CONTRACTOR shall pay the CITY liquidated damages in the amount of $1,000.00 per calendar day for every work day

the submittal is late or not in full compliance with the requirements of this Section. This amount shall be deducted from any monies due and forfeited by the CONTRACTOR. In addition to the liquidated damages, if the CONTRACTOR fails to submit any of the Monthly Schedule Update deliverables, or to meet any of the other updating requirements, progress payments will be withheld until such time as the required update information is submitted.

K. Weekly Progress Reports

1. Once each week, on a day established by the ENGINEER, the CONTRACTOR shall submit:

   a. A progress schedule listing the activities completed and in progress for the previous week and the activities scheduled for the succeeding two (2) weeks. The activity designations shall be consistent with the activity designations in the Current Schedule Update. A bar chart shall be used to display the information in pictorial form. The appropriate schedule activity number shall be listed for each bar.

L. Cost Loading and Cash Flow

1. With the initial Baseline Schedule submittal, each Monthly Schedule Update, and each revision, the CONTRACTOR shall also submit a schedule of cost loading and cash flow to the ENGINEER. There shall be a strict correlation between the sum of individual activity costs and the total values indicated for bid items. That is, each individual activity within the Schedule shall employ a code, which in summary, attaches its cost, if any, to the appropriate bid items. The sum of activity costs within a specific code shall equal the cost of its corresponding bid items and approved Change Orders.

2. Expected payment requests for each month shall be included with proposed updates. The cash flow shall show the net payment requests for each month. The cumulative payment requests to date shall also be shown after deducting retainage and any other monies withheld. The cash flow shall be shown in tabular format and in graphic format.

3. The CONTRACTOR, at the Preconstruction Scheduling Conference, shall explain in detail the procedure to be used to develop the Schedule activity cost loading and cash flow. This procedure is subject to the review and approval of the ENGINEER and the INSPECTOR. Receipt and approval of the Schedule Cost Loading and Cash Flow Summary is a condition precedent to the making of any payments under the Contract. Therefore, failure to submit an acceptable schedule cost loading and cash flow summary shall be cause for withholding any progress payments due or that may become due under this Contract, until such time as an acceptable cost loading and cash flow summary is received.

4. In accordance with the updating procedures, when an activity is deemed substantially complete by the ENGINEER, then such activity will no longer be treated as an activity affecting the critical path or successor activities on the project. The cost of correction of any punchlist items associated with substantially completed activities will be covered by amounts deemed

by the ENGINEER and the INSPECTOR to be adequate to cover such costs.

M. Responsibility For Completion

1. Whenever it becomes apparent from the current Monthly Schedule Update that phasing, milestone, constraint, restraint, or Contract Completion Date will not be met, the CONTRACTOR shall submit a plan to recover the delay using some or all of the following remedial actions;

   a. Increase construction manpower in such quantities and crafts as necessary to eliminate the backlog of work and meet the current Contract Completion Date.

   b. Increase the number of working hours per shift, shifts per working day, working days per week, the amount of construction equipment, or any combination thereof to eliminate the backlog of Work.

   c. Reschedule the Work in conformance with the Specification requirements.

2. Prior to implementing any of the above actions, the CONTRACTOR shall notify the ENGINEER and obtain approval from the ENGINEER. If such actions are approved, the Schedule revisions shall be incorporated by the CONTRACTOR into the Network Diagram before the next Monthly Schedule Update is due.

3. Under no circumstances will the addition of equipment or construction forces, increasing the Working hours or any other method, manner, or procedure to return to the contractually required Contract Completion Date be considered justification for a Change Order or be treated as acceleration where the need for a recovery schedule has been caused by the CONTRACTOR and/or its Subcontractors or Suppliers, at any tier.

4. The ENGINEER may elect to withhold progress payments until the CONTRACTOR'S progress indicates that the milestone date(s) and/or the Contract Completion Date will be met.

N. Schedule Time Extensions

1. When Change Orders or delays are experienced by the CONTRACTOR and a time extension is requested, the CONTRACTOR shall submit to the ENGINEER, a written Time Impact Analysis illustrating the influence of all changes or all delays on the current Contract Completion Date. The Time Impact Analysis shall be based on an As-Built Schedule Analysis approach. The As-Built Schedule that will be created will incorporate all Actual Start and Finish dates, actual durations of activities, and actual sequences of construction. This Time Impact Analysis shall incorporate all delays (including CITY, CONTRACTOR, and Third Party delays without exception) in the time frame they occurred with actual logic ties. The As-Built Schedule data shall be obtained from the most recent accepted Baseline Schedule or Monthly Schedule Update as of the time the Preliminary Change Order, Emergency Change Order, Unilateral Change Order, or Allowance Order was issued to the CONTRACTOR. The As-Built

Schedule shall be created as an early start schedule. The As-Built Schedule shall use the original activity durations for all incomplete work and the actual logic driving all activities. All requests for time extensions shall be based upon an analysis of this As-Built Schedule. The critical path will be established, and all CITY caused delays on the critical path will be identified. The time extension will be based solely upon the cumulative duration of all CITY and Third Party caused delays (as set forth in UNAVOIDABLE DELAY of the GENERAL CONDITIONS) which are on the critical path. Any time extensions to the project Interim Milestone Dates shall be non-compensable time extensions only.

2. Time extensions will be granted only to the extent that equitable time adjustments for the activity or activities affected exceed the total or remaining float along the critical path of activities at the time of actual delay, or at the time the Preliminary Change Order, the Emergency Change Order, the Unilateral Change Order, or the Allowance Order was issued to the CONTRACTOR. Float or slack time is not for the exclusive use or benefit of the ENGINEER or the CONTRACTOR but is an expiring resource available to all parties as needed to meet Contract milestones and the Contract Completion Date. Time extensions shall not be granted nor delay damages paid until;

    a. A delay occurs which is beyond the control and without the fault or negligence of the CONTRACTOR and its Subcontractors or Suppliers, at any tier; and

    b. Which extends actual performance of the Work beyond the applicable current Contract Completion Date and the most recent date predicted for completion of the project on the approved Monthly Schedule Update, current as of the time of the delay or as of the time of issuance of the Preliminary Change Order, the Emergency Change Order, the Unilateral Change Order, or the Allowance Order was issued to the CONTRACTOR.

3. Each Time Impact Analysis shall be submitted in triplicate, within fifteen (15) calendar days after a delay occurs, or issuance of the Preliminary Change Order, Emergency Change Order, Time and Materials Change Order, or Unilateral Change Order. <u>If the CONTRACTOR does not submit a Time Impact Analysis for a specific Change Order or delay within the specified period of time, the CONTRACTOR shall be deemed to have irrevocably waived any rights to additional time and cost.</u>

4. Since float time within the Schedule is jointly owned, it is acknowledged and agreed by the CONTRACTOR that CITY caused delays on the project may be offset by CITY caused time savings (including, but not limited to: critical path submittals returned in less time than allowed for in the Contract, approval of substitution requests which result in a savings of time along the critical path for the CONTRACTOR, etc.). In such an event the CONTRACTOR shall not be entitled to receive an extension of time or delay damages until all CITY caused time savings are exceeded and the Contract Completion Date is also exceeded.

5. Approval or rejection of each Time Impact Analysis by the ENGINEER shall be made within fifteen (15) calendar days after receipt of each Time Impact Analysis, unless subsequent meetings and negotiations are

necessary. Upon approval, a copy of a Time Impact Analysis signed by the ENGINEER shall be returned to the CONTRACTOR for incorporation into the next Monthly Schedule Update.

6. Upon mutual agreement by both parties, fragnets illustrating the influence of Change Orders and delays shall be incorporated into the Schedule during the first update after agreement is reached.

7. In the event the CONTRACTOR does not agree with the decision of the ENGINEER regarding the impact of a change or delay, it shall be resolved in accordance with CLAIMS AND PROTESTS of the GENERAL CONDITIONS.

O. Manpower

The CONTRACTOR shall submit with the initial Baseline Schedule a histogram depicting total project manpower for its own forces and for each of its Subcontractors for each month. The histogram shall be based upon and shall be in substantive agreement with the number of shifts and crew sizes in the Schedule and shall be updated monthly and submitted with the Monthly progress report. The update shall show actual manpower for each month during the construction period to date and required manpower for both base scope and Change Order Work each month, necessary to complete all remaining activities to insure timely project completion.

P. Construction Equipment

1. The CONTRACTOR shall submit with the initial Baseline Schedule a tabular report listing each major piece of construction equipment for itself and each of its Subcontractors for each month. This major equipment is the equipment that is or will be used at the Worksite. Each major piece of the CONTRACTOR'S and the Subcontractor's equipment shall be separately described, identified, and numbered in the report. The tabular report shall be based upon and in substantive agreement with the number of shifts and crew sizes by craft in the Schedule and shall be updated monthly and submitted with the monthly progress report. The update shall show actual construction equipment for each month during the construction period to date and the required construction equipment for each month necessary to complete all remaining activities including the Change Order Work, on the early finish date.

Q. Submittal Of "As-Built" Schedule

1. As a condition precedent to any release of retention, the last update to the Schedule submitted shall be identified by the CONTRACTOR as the "As-Built Schedule". The "As-Built Schedule" shall reflect the exact manner in which the project was actually constructed (including start and completion dates, activities, sequences, and logic) and shall be signed and certified by the CONTRACTOR'S Project Manager and Construction Scheduler as being a true reflection of the way in which the project was actually constructed.

(END OF SECTION)

SECTION 01322
CONSTRUCTION PROGRESS PHOTOGRAPHY

PART ONE - GENERAL

1.1 SUMMARY

A. Required**:** Provide photographs taken at the Jobsite at the specified stages of Contracted Work in accordance with provisions of this Section.

1. Take three views of each structure and other major improvement; and three views of each 1,000 sq ft of desilting and infiltration gallery or other feature being constructed as directed by the ENGINEER at thirty (30) day intervals during the period of Contracted Work.

2. Take first photographs just before CONTRACTOR starts any work operations at the Jobsite.

3. Take final photographs when all Contracted Work has been completed, regardless of time interval since previous photographs were taken. These photographs shall be suitable for use in City presentations and publications.

B. Related Work:

1. Documents affecting work of this Section include, but are not necessarily limited to, GENERAL CONDITIONS, DIVISION 1 - GENERAL REQUIREMENTS and other Sections of the Project Manual.

1.2 SUBMITTALS

A. Comply with pertinent provisions of Section 01330 **–** SHOP DRAWINGS / SUBMITTALS of the GENERAL REQUIREMENTS.

B. Except as otherwise directed by the ENGINEER, submit three color prints of each view.

1.3 QUALITY ASSURANCE

A. Secure the services of a full-time professional photographer who is skilled and experienced in construction photography and whose work samples are acceptable to the ENGINEER.

B. Do not replace the photographer without the ENGINEER'S written approval.

C. Do not permit prints to be issued for any other purpose without specific written approval from the ENGINEER.

D. Photographs and prints to be of professional quality; clear, in focus, with high resolution and sharpness, and with minimum distortion. Prints to be with contrast, detail and finish for acceptable reproduction by half-tone cut.

PART TWO - PRODUCTS

2.1 CONSTRUCTION PHOTOGRAPHS

A. Provide Color digital files at a minimum of 8 megapixels and upload to e2020.

B. Identify the following upon upload to the project e2020 website:

1. Job name and address;

2. Location from which photographed;

3. Date of photograph;

4. Photographer's name and address, and the photograph number.

PART THREE - EXECUTION

3.1 CONSTRUCTION PHOTOGRAPHY

A. View Locations: As directed by the ENGINEER**.** Location(s) to provide diversified overall view of the Work from a position that is expected to remain accessible throughout progress of the Contracted Work for added photography.

Continue to take photographs at same view position of the Works to show continuous progress of the Works until the Works are completed or as directed by the ENGINEER**.**

B. Notifications: Notify the ENGINEER seven (7) days in advance of proposed day of photography.

C. Weather Conditions: When inclement weather is anticipated, consult with the ENGINEER to determine acceptable alternate arrangements.

D. Timing of Photography: To the maximum extent practicable, take photographs at the same time of day throughout progress of the Contracted Work. Timing shall be approved by the ENGINEER**.**

E. On Contract Drawing: Photographer to identify each photograph location or by such other means as acceptable to the ENGINEER, to enable future photographs to be taken from the same location and position.

F. Change of Locations: When so directed by the ENGINEER because of construction, change one or more of the locations inside or outside of the building(s).

END OF SECTION 01322

SECTION 01323
CONSTRUCTION STATUS REPORTS

1.1 THE REQUIREMENT

A. Weekly Status Report

During the construction phase of the Work, the CONTRACTOR shall submit weekly written status reports to the ENGINEER and the INSPECTOR. The report shall contain a record of inspections and tests, not performed by CITY forces, for all Work accomplished subsequent to the previous report and shall include the following information:

1. Type of work under way during the time frame of the report (e.g., earthwork, concrete work, structural steel erection, equipment manufacturing, component installation).

2. Inspections and tests, and location of inspections and tests that were made.

3. Results of inspections.

4. Reports of tests performed, including those specified, with the results of the tests, and acceptance criteria, including failures and remedial action to be taken. Test results, including all computations, shall be attached to the report form. Where test results cannot be completed by the time the report is submitted, a notation shall be made that the test was performed, including the approximate expected date that test results will be reported.

5. Report of any nonconforming items/activities. Nonconformance report forms designed solely for this purpose shall be utilized.

6. Results of inspections of material and equipment done upon their arrival at the Jobsite and prior to their incorporation into the Work. This includes, but is not limited to, compliance with approved submittals, damage, and proper storage requirements.

7. Offsite quality control activities.

8. Instructions received from the ENGINEER or INSPECTOR.

9. In all cases, the report must be verified and signed by the CONTRACTOR'S representative. The verification is to contain the statement that all supplies and materials incorporated in the Work are in compliance with the terms of the Contract except where noted.

B. Monthly Procurement and Delivery Status Report

1. The CONTRACTOR shall prepare and submit to the INSPECTOR and the ENGINEER a comprehensive Monthly Procurement and Delivery Status Report covering the procurement and delivery of equipment and materials to the Jobsite. This report shall outline the purchasing status of

all material, equipment and contracts. The purchasing status report shall include the following information:

a. Specification, purchase order, and Contract number;

b. Submittal Number;

c. Item or service description;

d. Required job site date; and

e. Project Delivery Date.

In addition, this report shall contain a three (3) month "Look Ahead Projection" of all factory tests, shipments to be inspected, or any other supplier activity which the CONTRACTOR, the ENGINEER, or the INSPECTOR, has the right to witness and accept. The report shall detail arrangements which are planned for meeting the witnessing and acceptance requirements, and for recording tests passed.

2. The CONTRACTOR shall obtain a submittal schedule for technical data, Shop Drawings, material and test certificates, O&M manuals, spare parts lists, and other submittals, from each supplier. This schedule shall be monitored and updated on a monthly basis and shall be submitted to the INSPECTOR and the ENGINEER with the Monthly Procurement and Delivery Status Report.

C. Miscellaneous Submittals

Required: CONTRACTOR shall prepare a Daily Construction Report recording the following information concerning events at the job-site and submit duplicate copies to the Consultant or ENGINEER at weekly intervals:

1. List of Subcontractors and Sub-Subcontractors at the site**,** types of works and job location.

2. Approximate count of CONTRACTOR'S personnel at the site**,** name, type of work and job location.

3. Construction equipments at the site.

4. High and low temperatures, general weather conditions.

5. Accidents and unusual events.

6. Meetings and significant decisions.

7. Stoppages, delays, shortages, losses.

8. Meter readings and similar recordings.

9. Emergency procedures.

10. Inspection, Orders and requests of governing authorities, type of work.

11. Change Orders received, implemented.

12. Services connected, disconnected.

13. Notice of Non-Compliance, Notice-To-Correct, and Job-Memorandum received.

14. Equipment or system tests and start-ups.

15. Preparation of Record Drawings and Project Manual.

16. Equipment or material delivered to site.

17. Partial completions, occupancies

18. Substantial completions authorized.

END OF SECTION 01323

SECTION 01330
SHOP DRAWINGS / SUBMITTALS

1.1 THE REQUIREMENT

A. The CONTRACTOR shall prepare, approve, sign and submit to the ENGINEER any and all Shop Drawings, Manufacturers' Project Data, Job References, Certificates, Wiring Diagrams, Operation and Maintenance Manuals and Samples required by the Contract Documents on “e2020” (the City’s web-based construction management application.)

NOTE: All references in the Technical Sections under "Shop Drawings" or “Submittal” to the words "approval of" shall mean "reviewed by".

B. The CONTRACTOR, by preparing, reviewing, approving and submitting the Shop Drawings, Manufacturers' Product Data, Job References, Certifications, Wiring Diagrams, Operation and Maintenance Manuals and Samples, represents that the CONTRACTOR has determined and verified all materials, field measurements and filed construction criteria related thereto, and has checked and coordinated the information contained within such submittals with the requirements of the Work, the Project and the Contract Documents.

C. The CONTRACTOR shall inform the ENGINEER, in writing, of any and all deviations and/or questions regarding the Contract Documents, and shall properly identify these areas of concern in the transmittal of the Shop Drawings, Manufacturers' Product Data, Job References, Certification, Wiring Diagram and Samples for proper written disposition respectively by the ENGINEER. The CONTRACTOR shall provide Shop Drawings in accordance with Specification Section 01116 of the General Requirements.

D. Transmittal sheets for all Shop Drawings, Manufacturers' Product Data, Wiring Diagrams, Job References, Certifications, Operation and Maintenance Manuals and Samples shall be uploaded in e2020 in accordance with Specification Section 01116 of the General Requirements.

E. The CONTRACTOR is not relieved of the responsibility for any deviation from the requirements of the Contract Documents, by virtue of CONTRACTOR’S approval and submittal of the Shop Drawings, Manufacturers' Product Data, Wiring Diagrams, Operation and Maintenance Manuals and Samples to the ENGINEER. All deviations and/or interpretations of the Contract Documents must be approved in writing by the ENGINEER.

F. The review of the Shop Drawings, Manufacturers' Product Data, Job References, Certifications, Wiring Diagrams, Operation and Maintenance Manuals; and Samples by the ENGINEER does not relieve the CONTRACTOR of its responsibility from any requirements of the Contract Document, or any errors or omissions in such submittals, or for any failure to perform the requirements and intent of Contract Documents.

G. The Shop Drawings shall include such fabrication, erection, and setting drawings; manufacturer's standard drawings or catalog cuts, performance and test data; Job References, Certifications, wiring and control diagrams; schedules; samples; and descriptive data pertaining to material, machinery and methods of construction as may be necessary to carry out the intent of contract Drawings and Project Manual and shall not relieve the CONTRACTOR from the responsibility for proper fitting and construction of the Work, nor from furnishing materials and Work required by the Contract, which may or may not be indicated on the Shop Drawings.

The CONTRACTOR shall perform no portion of the Work requiring submittal and review of Shop Drawings, Product Data, Job References, Certifications**,** samples, etc. until such submittals have been reviewed by the ENGINEER.

H. Shop Drawings shall show in detail the size, sections and dimensions of all the members, the arrangement and construction of all connections and joints and other pertinent details; also, all holes, straps and other fittings required by other CONTRACTORS for attaching their work. When required, by the ENGINEER or by Standard Practice of the CONTRACTOR, engineering computations shall be submitted for the record. The CONTRACTOR shall be responsible to coordinate with other trades, collect all necessary data or information for preparation of shop Drawings and deliver approved copies of Shop Drawings to all others whose work is dependent thereon.

I. At all times, the CONTRACTOR shall maintain at the site of the project, a complete file of Shop Drawings and Manufacturers' Data of its own and all Subcontractors. All Shop Drawings and Manufacturers' Data shall be reviewed and by the CONTRACTOR.

J. Submittals shall be made within the times specified in the various Divisions, of the Project Manual. If time is not specified, they shall be made within a period which will cause no delay in the work. The CONTRACTOR shall allow twenty-one (21) calendar days on the project construction schedule for each item submitted for the review by the ENGINEER.

K. In the event the ENGINEER finds the submittal to be incomplete, it will be returned to the CONTRACTOR for required revised drawings. The CONTRACTOR will revise the drawings and resubmit as directed on original submittals. Any delay resulting from the need for resubmittals shall be the CONTRACTOR'S responsibility.

L. In the event, the Contract Documents are prepared by a Consultant Architect or ENGINEER, the pertinent requirements of this Section will be effective, except as follows or as otherwise modified in the Divisions that follow:

1. All references in the Contract Documents to the Consultant shall mean the Consultant Architect or Consultant Engineer

2. Submittals shall be uploaded in e2020 in accordance with Specification Section 01116 of the General Requirements.

3. If submittal is found to be incomplete and revised drawings are required, CONTRACTOR will be notified by the ENGINEER.

4. When Shop Drawings are required in accordance with the Contract, due to “substitutions” or for "or equal" determination or review as indicated hereinbefore, after final check, said drawings, reviewed and signed by Consultant shall be forwarded to the ENGINEER, Bureau of Engineering for final review and distribution electronically, through e2020.

5. Unless otherwise specified for Operation and Maintenance Manuals, four (4) copies are required and all copies should be delivered to the Consultant Architect for review. After reviewed and signed by the Consultant, scan and electronically upload in e2020 for final review.. Once approved by the ENGINEER on e2020, four (4) copies shall be forwarded to the ENGINEER for distribution to the CITY maintenance staff. The CONTRACTOR will receive a transmittal of acceptance of Operation and Maintenance Manual Submittal.

M. In the event the Contract Documents are prepared by CITY personnel, four (4) copies of each Operation and Maintenance Manuals, shall be sent to the ENGINEER by the CONTRACTOR for review and final distribution. Distribution requirements described in Items K(4) and K(5) hereinbefore remain effective.

N. CONTRACTOR’S Coordination:

1. The ENGINEER will return and will not review unrelated submittals.

2. The CONTRACTOR may be required to provide drawings, setting diagrams and similar information necessary for proper coordination of Contracted Work. Such data shall remain between the CONTRACTOR and CONTRACTOR’S Subcontractor and will not be reviewed by the Consultant or ENGINEER unless specifically called for in the Contract Documents.

3. Consultant or ENGINEER will not review any required Structural Shop Drawings, Structural Calculations, etc., not prepared or signed by a State of California licensed ENGINEER.

4. The ENGINEER will return and will not review any submittal requiring coordination with other submittals until such other submittals or required information are received by the ENGINEER.

O. CONTRACTOR’S Submittals: CONTRACTOR’S submittals required for performance of Contracted Work shall be electronically submitted in e2020 construction subsections 8.1 through 8.22, and shall include, but are not limited to, the following:

1. Contract Price (Cost Breakdown)

2. Construction Schedule and Notification to ENGINEER of completion of each milestone or percentage increment of the Work as required.

3. Submittal Schedule

4. Daily Construction Reports

5. Shop Drawings and Structural Calculations.

6. Manufacturer's Data and Specifications.

7. Samples

8. Templates

9. Certificate of Compliance

10. Construction Photographs

11. Substitutions

12. Record Drawings and Record Project Manual

13. Operation & Maintenance Manuals

14. Stock Materials, Spare parts, tools

15. Material Testing Results

16. Daily Statements of cost-plus percentage Change Order

17. Survey grade sheets

18. Copies of Notice-To-Correction or Notice of Non-Compliance from governing authorities.

19. Maintenance Logs and Maintenance Schedule.

P. Administrative Submittals include, but are not limited to the following:

1. Permits

2. Request for Payments

3. Performance and Payment Bonds

4. Insurance Certificates

5. List of Subcontractors and proof of qualifications

6. Hazardous Communication Program.

7. Certified weekly payroll records.

8. Ethnic Composition of Work Force Report.

9. Third Party Testing Agency

Q. CONTRACTOR shall conform to the provisions of the Contract Document and may be specifically directed by the Consultant or ENGINEER.

1. Preparation and processing of submittals shall be coordinated with Contracted Work operations, which includes fabrication, purchasing and delivery of work items so as not to delay Contracted Work operations.

2. In each Submittal, mark every applicable material, product, equipment, manufacturer's data, product information, color samples, rating or values, part and model numbers, etc. by red color circle. Each of the submittal items must be clearly distinguishable from other unrelated or similar items listed in the Manufacturer's Catalog or Technical Specifications, Manuals, etc.

R. Coordination and Submittals:

1. Carefully review and coordinate all aspects of each item being submitted.

2. Carefully review contract drawings and technical sections, verify all work as laid out or indicated meeting the applicable codes and standards.

3. Ensure ample time for reviewing and processing of the submittals by the CITY or other authorized agencies, delays resulting from improper and untimely submittals shall be the responsibility of the CONTRACTOR.

4. Verify that all such submittal items conform to the Project Manual requirements noted in the Technical Sections.

5. Verify all site conditions and provide all required dimensions and measurements in Shop Drawings.

6. Where necessary, review the CITY'S comments, make changes and resubmit to local governing agencies for approval. Upload the approved plans or drawings for review on e2020 and furnish copies of said drawings at the ENGINEER'S request.

S. CONTRACTOR shall affix to each submittal, the CONTRACTOR'S electronic signature certifying that required coordination has been performed and include on an attached label for processing and recording action taken, noting the following:

1. Name and address of the Subcontractor(s)

2. Name and address of the Supplier

3. Name and address of the Manufacturer

4. Reference to Specification Section Number and Title

5. Reference to Drawing Sheet Number and detail(s)

6. Priority Number and expected return date.

T. CONTRACTOR shall, verify on e2020 that the CONTRACTOR has met the following CITY requirements:

1. Conformance in all respect to the Contract Document requirements.

2. Has reviewed and coordinated all aspects of each submitted item relative to manufacturer's product data, Specifications, etc.

3. Has verified with site conditions and all dimensions.

4. That all questions and/or comments prepared by the Consultant or ENGINEER have been reviewed and answered.

5. CONTRACTOR is not relieved from responsibilities for errors, omissions and any deviation in the required submittals as revealed resulting from the CITY'S or Consultant's review of such submittals.

6. In each Section of the Project Manual, all required lists of material, product or equipment; manufacturer's data; and etc., shall be appropriately grouped and submitted to the CITY for review as one submittal. Piece meal submittals will not be accepted.

   Any submittal with outstanding product data, manufacturer's specification or any required information shall deem to be incomplete and subject for rejection without any review. Subsequent submittal shall be considered as second submission.

7. All Shop Drawings shall be provided with dimensions and measurements verified at the site as stated hereinbefore. If the CONTRACTOR decides to submit the dimensions and measurements at a later time, the CONTRACTOR must state the reason, for the ENGINEER'S approval, why the dimensions and measurements cannot be taken. If approval is granted, the CONTRACTOR shall re-submit the approved submittal with the final dimensions and measurements after the Works are completed. The CONTRACTOR is not relieved from the responsibilities of error and omission, or any problem that may arise during the fabrication or installation.

8. It is considered reasonable that the CONTRACTOR shall make a complete and acceptable submittal to the ENGINEER or Consultant by the second submission of a submittal item. The CITY reserves the right to withhold moneys due to the CONTRACTOR to cover additional costs of the ENGINEER or Consultant's review beyond the second submittal. On the third submittal by CONTRACTOR, the CONTRACTOR will be charged $150 per hour of CITY'S or Consultant's review time and no additional Contract time shall be allowed.

U. Comply with pertinent provisions of the GENERAL CONDITIONS and GENERAL REQUIREMENTS as applicable**,** but not limited**,** to the following:

1. Record Drawings, Record Project Manual, Record Product Data, Record Sample and Record Submittals.

2. Operation and Maintenance Manuals.

3. Manufacturer's Reference Data.

4. Qualification of CONTRACTOR.

5. Certification of Warranty and Guarantee.

6. Manufacturer's Recommended Installation Procedures.

7. Materials List of items proposed to be provided as specified in the Technical Sections of the Project Manual.

8. Samples, illustrating assembly details, workmanship, fabrication techniques, connections, color selection to be submitted as specified in the Technical Sections of the Project Manual.

9. Regarding Concrete Work, submit Portland Cement Mill Certificates, Concrete Mix and Curing Designs, Load Tickets and Product Data.

10. Regarding shop-Inspected fabricated items, submit Shop INSPECTOR Tag, copy of the billing of lading, delivery receipt for materials or equipment.

V. The CONTRACTOR shall comply with all submittal requirements in the Contract Documents. For convenience, a checklist of submittals required in all the Technical Sections is included, but is not necessarily limited to the following:

SECTION OF PROJECT MANUAL	SUBMITTAL
02810 – IRRIGATION, 02932 LANDSCAPE PLANTING	• Product Data • Materials List • Written evidence that Landscape Irrigation System has been inspected • Soils Agriculture Suitability Test Report
03100 – CONCRETE FORMWORK	• Shop Drawing]
03300 – CAST-IN-PLACE-CONCRETE	• Product Data • Samples • Laboratory Test Reports • Portland Cement Mill Certificates • Concrete Mix and Curing Design • Load Tickets • (ETC.)

W. CONTRACTOR shall submit requests for changes in products, materials, equipment and methods of construction required by the Contract Documents, and all submittals shall conform to the provisions of Section 01630 – SUBSTITUTIONS AND “OR EQUAL” SUBMITTAL of the GENERAL

REQUIREMENTS of the Project Manual immediately after the issuance of Notice-To-Proceed.

1. All substitution requests shall be made by the CONTRACTOR and shall imply the CONTRACTOR'S approval of such substitutions.

X. The Following Are Not Considered As Substitutions:

1. Substitutions requested by Bidders during the bidding period or prior to award of contract will not be considered or accepted.

2. Revisions to Contract Documents requested by the ENGINEER or the Consultant.

3. Specified options of products and construction methods included in Contract Documents.

4. The CONTRACTOR'S determination of and compliance with governing regulations and orders issued by governing authorities.

Y. CONTRACTOR shall perform no portion of the Contracted Work requiring submittal and review of Shop Drawings, Product Data, Samples, etc. until such submittals have been reviewed by the Consultant or ENGINEER. All work not shown on Shop Drawings or not conforming to Contract shall be removed without additional cost to the CITY.

Z. CONTRACTOR shall be responsible for procurement and installation of equipment or material without deviation upon receipt of the reviewed submittal from the ENGINEER or Consultant bearing the designation of "A" No Exception Taken". Be responsible for the coordination with other trade, proper fitting and construction of the work, furnishing other material and work required which may not be indicated on the Contract Drawings or Submittals. All submittals shall be reviewed by the CITY for general design or compliance. CONTRACTOR will be responsible for deviation from the drawings or Project Manual, and for errors or omissions of any sort in the Submittals.

AA. CONTRACTOR shall review and attend to all "Note Markings" and/or "Comments Attached" as noted by the ENGINEER or the Consultant on the Submittal. Make corrections or modifications to equipment or material as required.

AB. CONTRACTOR shall omit any article disapproved or noted "Reject" by the ENGINEER, or any article not conforming to the contract, or not of proper quality or grade and provide suitable articles, in lieu thereof in conforming with the Contract.

AC. CONTRACTOR shall resubmit all submittals with corrections as noted by the ENGINEER or the Consultant or as required in timely manner without delay or impact to the contract.

END OF SECTION 01330

SECTION 01350
AUDIT AND ACCESS TO RECORDS

1.1 THE REQUIREMENT

A. The CONTRACTOR shall maintain books, records, estimates, communications, payroll documents and other evidence directly pertinent to performance of Work under this Contract in accordance with generally accepted accounting principles and practices consistently applied for a period of no less than four (4) years from the date of the Project acceptance by the Board of Public Works. The CONTRACTOR shall also maintain the financial information and data used by the CONTRACTOR in the preparation or support of any cost submissions required for this Contract, or any Modifications or claims, and a copy of the cost summary submitted to the CITY. The CITY authorized representatives shall have access, at all times during normal business hours, to such books, records, documents and other evidence for the purpose of inspection, audit and copying. The CONTRACTOR will provide proper facilities for such access and inspection.

B. The CONTRACTOR agrees to make A through G of this Article applicable to this Contract and all Modifications or claims affecting the Contract price. The CONTRACTOR agrees to include A through G of this Article in all his contracts and all tier subcontracts in excess of $10,000, and to make A through G of this Article applicable to all Modifications and claims related to project performance.

C. Audits conducted under this Article shall be in accordance with generally accepted auditing standards and established procedures and guidelines of the reviewing or audit agency.

D. The CONTRACTOR agrees to the disclosure of all information and reports resulting from access to records under A and B of this Article, to the CITY and affected agencies.

E. Records under A and B of this Article shall be maintained and made available during performance of Work under this Contract within the time period specified in A of the Article. In addition, those records which relate to any portion of this Contract, to any Modification, to any dispute, to litigation, to the settlement of claims arising out of such performance, or to costs or items to which an audit exception has been taken, shall be maintained and made available within the time period specified in A of the Article.

F. This right of access Article applies to financial records pertaining to this Contract and all Contract Modifications. In addition this right of access applies to all records pertaining to all contracts, contract modifications, and contract amendments:

1. To the extent the records pertain directly to Contract performance;

2. If there is any indication that fraud, gross abuse or corrupt practices may be involved; or

3. If the Contract is terminated for default or for convenience.

G. Access to records is not limited to the required retention periods. The authorized representatives designated in A of this Article shall have access to records at any reasonable time for as long as the records are maintained.

H. Provided that CITY has made demand for access or audit, pursuant to this Section, CONTRACTOR'S compliance with provisions A through G of this Section shall be a condition precedent to maintenance of any legal action or proceeding by the CONTRACTOR against the CITY and to CONTRACTOR'S right to Progress or Final Payment. Without limitation to the foregoing, or to any other provisions for withholding set forth in the Contract Documents, CITY shall have the right, in its sole discretion and in addition to any right of withholding of retention, to further withhold from any payment to CONTRACTOR a sum of up to ten percent (10%) of the total amount set forth in CONTRACTOR'S current, unpaid Application(s) for Payment, until CONTRACTOR has complied with any outstanding and unsatisfied request by CITY for audits under this Section. Upon CONTRACTOR'S compliance with this Section, any monies withheld pursuant to this Paragraph solely due to CONTRACTOR'S failure to permit an audit requested by CITY shall be released to CONTRACTOR.

I. CONTRACTOR hereby consents and agrees that any failure by CONTRACTOR to provide access to records as provided in A through G of this Section shall be specifically enforceable by issuance of a preliminary and/or permanent mandatory injunction by a court of competent jurisdiction based on affidavits submitted to such court, without the necessity of oral testimony, to compel CONTRACTOR to permit access and inspection of the records or to require delivery of the records to CITY for inspection.

END OF SECTION 01350

SECTION 01351
ESCROW BID DOCUMENTS

1.1 THE REQUIREMENT

A. Scope

1. This Article requires that the three (3) low bidders submit, within the specified time after receipt of bids, one (1) copy of all documentary information including, but not limited to, electronic files generated in preparation of bid prices for this project. This material is hereinafter referred to as "Escrow Bid Documents". The Escrow Bid Documents of the CONTRACTOR will be held in escrow for the duration of the Contract.

2. The successful Bidder agrees, as a condition of the award of the Contract, that the Escrow Bid Documents constitute all of the information used in preparation of the Bid, and that no other bid preparation information shall be considered in resolving disputes or claims. The successful bidder also agrees that nothing in the Escrow Bid Documents shall change or modify the terms or conditions of the Contract Documents.

B. Ownership

1. The Escrow Bid Documents are, and shall always remain, the property of the CONTRACTOR, subject to joint review by the CITY and the CONTRACTOR as provided herein. The Escrow Bid Documents are proprietary and secret information belonging to the CONTRACTOR and exempt from the Federal Freedom of Information Act, California Public Records Act, and the Los Angeles CITY Freedom of Information Act.

2. The CITY stipulates and expressly acknowledges that the Escrow Bid Documents, as defined herein, constitute trade secrets. This acknowledgment is based on the CITY'S express understanding that the information contained in the Escrow Bid Documents is not known outside the Bidder's business, is known only to a limited extent and only to a limited number of employees of the Bidder, is safeguarded while in the Bidder's possession, is extremely valuable to the Bidder and could be extremely valuable to the Bidder's competitors by virtue of it reflecting the Bidder's contemplated techniques of construction. The CITY acknowledges that the Bidder expended substantial sums of money in developing the information included in the Escrow Bid Documents and further acknowledges that it would be difficult for a competitor to replicate the information contained therein. The CITY further acknowledges that the Escrow Bid Documents and the information contained therein are made available to the CITY only because such action is an express prerequisite to award of the Contract. The CITY acknowledges that the Escrow Bid Documents include a compilation of information used in the Bidder's business, intended to give the Bidder an opportunity to obtain an advantage over competitors who do not know of or use the contents of the documentation. The CITY further agrees to safeguard the Escrow

Bid Documents, and all information contained therein, against disclosure to the fullest extent permitted by law.

C. Purpose

1. The purpose of the Escrow Bid Documents procedure is intended to create a spirit of cooperation in an atmosphere of honesty and candor between the CITY and the CONTRACTOR.

2. Escrow Bid Documents will be used to assist in the negotiation of price adjustments and Change Orders and in the settlement of disputes and claims. They will not be used for pre-award evaluation of the CONTRACTOR'S anticipated methods of construction or to assess the CONTRACTOR'S qualifications for performing the WORK.

D. Format and Contents

1. Bidders may submit Escrow Bid documents in their usual cost estimation format; a standard format is not required. It is not the intention of this Article to cause the Bidder extra work during the preparation of the Bid, but to ensure that the Escrow Bid Documents will be adequate to enable complete understanding and proper interpretation for their intended use. The Escrow Bid Documents shall be in English.

2. It is required that the Escrow Bid Documents clearly itemize the estimated costs of performing the WORK of each Bid item contained in the Bid schedule. Bid items should be separated into sub-items as required to present a complete and detailed cost estimate and allow a detailed cost review. The Escrow Bid Documents shall include all quantity takeoffs, crew, equipment, calculations of rates of production and progress, copies of quotations from Subcontractors and Suppliers, and memoranda, narratives, add/deduct sheets, and all other information used by the Bidder to arrive at the prices contained in the Bid. Estimated costs should be broken down into the Bidder's usual estimate categories such as direct labor, repair labor, equipment ownership and operation, expendable materials, permanent materials, and subcontract cost, as appropriate. Plant and equipment and indirect costs should be detailed in the Bidder's usual format. The CONTRACTOR'S reallocation of indirect costs, contingencies, markup and other items to each bid item shall be identified.

3. All estimates for items of Work that are based in whole or in part upon any baseline statements or information in the Geotechnical Baseline Report (GBR), shall clearly reference the baseline statements used. CONTRCTOR shall have no right to an adjustment in the Contract Price or the Contract Completion Date (due to Differing Site Conditions of the General Conditions) unless such baseline statements have been clearly identified in the Escrow Bid Documents.

4. All cost shall be identified. For bid items amounting to less than $10,000, estimated units costs are acceptable without a detailed cost estimate, provided that labor, equipment, materials, and subcontracts, as applicable, are included and provided that indirect costs, contingencies,

and markups, as applicable, are allocated. Bid documents provided by the CITY need not be included in the Escrow Bid Documents unless needed to comply with the following requirements.

E. Submittal

1. The Escrow Bid Documents shall be submitted to the Board of Public Works Office, by the three (3) low Bidders, in sealed containers, within forty-eight (48) hours after the time for receipt of Bids. The containers shall be clearly marked on the outside with the Bidder's name, date of submittal, project name and the words "Escrow Bid Documents".

2. The Escrow Bid Documents shall be accompanied with the certification (a sample is included), signed by an individual authorized by the Bidder to execute Bids, stating that the material in the Escrow Bid Documents constitutes all the documentary information used in preparation of the Bid and that the Bidder has personally examined the contents of the Escrow Bid Documents container and has found that the documents in the container are complete.

BID DOCUMENTATION CERTIFICATION

THE UNDERSIGNED HEREBY CERTIFIES THAT THE BID DOCUMENTATION CONTAINED HEREIN CONSTITUTES ALL OF THE INFORMATION USED IN PREPARATION OF THE BID AND THAT I HAVE PERSONALLY EXAMINED THESE CONTENTS AND HAVE FOUND THAT THIS BID DOCUMENTATION IS COMPLETE.

SIGNATURE: _____

NAME: _____

TITLE: _____

FIRM: _____

DATE: _____

3. Within 14 Calendar days following the receipt of bids, the Escrow Bid Documents of the apparent successful Bidder will be examined, organized and inventoried by representatives of the CITY, together with members of the CONTRACTOR'S staff who are knowledgeable of how the Bid was prepared. This examination is to ensure that the Escrow Bid Documents are legible and complete. It will not constitute approval of proposed construction methods, estimating assumptions, or interpretations of Contract Documents. Examination will not alter any condition or term of the Contract.

4. If all the documentation required in Section D, "Format and Contents", has not been included in the original submittal, additional documentation shall be submitted, at the CITY'S sole discretion, within twenty four (24) hours after the original inventory and examination of the Escrow Bid

Documents and prior to award of the Contract. The detailed breakdown of estimated costs shall be reconciled and revised, if appropriate, by agreement between the CONTRACTOR and the CITY before making the award. If the Contract is not awarded to the apparent successful Bidder, the Escrow Bid Documents of the Bidder next to be considered for award shall be processed as described above.

5. Submission of complete Escrow Bid Documents is an essential element of the Bidder's responsiveness and a prerequisite to a Contract award. Failure to provide the necessary Escrow Bid Documents within the forty-eight (48) hour time limit, may render the Bid non-responsive. Escrow Bid Documents of the unsuccessful Bidders will be returned following award of the Contract.

6. If any Bidder's Bid is based on subcontracting any part of the WORK, each Subcontractor, whose total subcontract price exceeds five percent (5%) of the total Contract price bid by the Bidder, shall provide separate Escrow Bid Documents to be included with those of the Bidder. Such documents shall be opened and examined in the same manner and at the same time as the examination described above for the apparent successful Bidder.

7. If the CONTRACTOR wishes to subcontract any portion of the WORK after award, the CITY retains the right to require the CONTRACTOR to submit Escrow Bid Documents from the Subcontractor before the subcontract is approved.

F. Storage

1. The Escrow Bid Documents will be placed in lockable container, with provisions for the Contractor and the City to provide separate locks,, for the life of the Contract, and stored in a mutually agreeable location at or near the jobsite. The cost of storage will be paid by the CITY.

G. Examination

1. The Escrow Bid Documents shall be examined by both the CITY and the CONTRACTOR, at any time deemed necessary by either the CITY or the CONTRACTOR, to assist in the negotiation of price adjustments and Change Orders or the settlement of disputes and claims.

2. Examination of the Escrow Bid Documents is subject to the following conditions:

a. As trade secrets, the Escrow Bid Documents are proprietary and confidential.

b. The CITY and the CONTRACTOR shall each designate, in writing to the other party and within ten (10) days after execution of the Contract, representatives who are authorized to examine the Escrow Bid Documents, with the exception of the initial reviewers as specified in section 1.1.E.3 above. No other person shall have access to the Escrow Bid Documents.

c. Access to the Escrow Bid Documents may take place only in the presence of duly designated representatives of both the CITY and the CONTRACTOR.

3. The Escrow Bid Documents at all times remain the property of the CONTRACTOR and the CITY will take all reasonable steps necessary to protect confidentiality.

H. Final Disposition

1. The Escrow Bid Documents will be returned to the CONTRACTOR at such time as the following conditions have been satisfied.

a. The Contract has been completed.

b. Final payment has been issued by the CITY.

c. All litigation has been completed, and a written agreement has been executed between the CITY and the CONTRACTOR that no further litigation will be made.

d. The Board of Public Works has accepted the project.

2. The Escrow Bid Documents will be sealed and promptly returned to the CONTRACTOR by the party in charge of the Escrow Bid Documents. Reproduction of any portion of the Escrow Bid Documents will not be permitted at any time without the written permission of the CONTRACTOR.

END OF SECTION 01351

SECTION 01353
OPPORTUNITY TO PARTNER

1.1 THE REQUIREMENT

A. The successful bidder will have the opportunity to enter into a cooperative partnership agreement with the CITY for the contract. Participation in Partnering is highly encouraged. Partnering will create a framework for conflict resolution, improved communications, reduced litigation, and cost containment. During the partnering session, all parties will participate in developing an Issue Resolution Ladder, which will help establish and communicate the chain of command in each organization (See Attachment 01353–A1). Each level of the organization is expected to work cooperatively to resolve issues. However, if issues cannot be resolved in a timely manner or are beyond the authority granted that level, each party understands that the issue must be elevated to the next level.

B. The objective of this Partnering agreement would be effective completion of the Work on time and to achieve a standard of quality that would be a source of pride to both the CITY and the CONTRACTOR. Partnering is intended only to establish an environment of cooperation between the parties and will not affect the terms of this contract.

C. An initial one (1) day training session is recommended to initiate the partnership agreement. The cost of this training, excluding staff labor charges, will be paid from a fixed cash allowance that has been allocated as the bid item Opportunity to Partner in the SCHEDULE OF WORK AND PRICES. No Overhead and Profit shall be added to the cost of the training. If the total cost of the partnering training differs from the amount set forth in the SCHEDULE OF WORK AND PRICES, the Contract Price shall be adjusted by a Change Order for the difference between the total actual cost and the amount included in the Bid, as an additional amount due the CONTRACTOR or a credit to the CITY, as appropriate.

D. The third party partnering moderator shall be chosen jointly by the Engineer and the Contractor. The City or Contractor may suggest the use of certain moderator, however each party shall have the right to agree or deny the use of the suggested moderator.

END OF SECTION 01353

(SEE ATTACHMENT)

ATTACHMENT TO SECTION 01353

Attachments to General Requirements Section 01353 consists of one (1) document, as follows:

ATTACHMENT NUMBER	TITLE OF ATTACHMENT	NUMBER OF PAGES IN THIS ATTACHMENT
01353-A1	Issue Resolution Ladder – Line Management Form	1

City of Los Angeles, Department of Public Works
Bureaus of Engineering and Contract Administration

Contractor: **{name}**

Project Title: **{title}**

Issue Resolution Ladder – Line Management

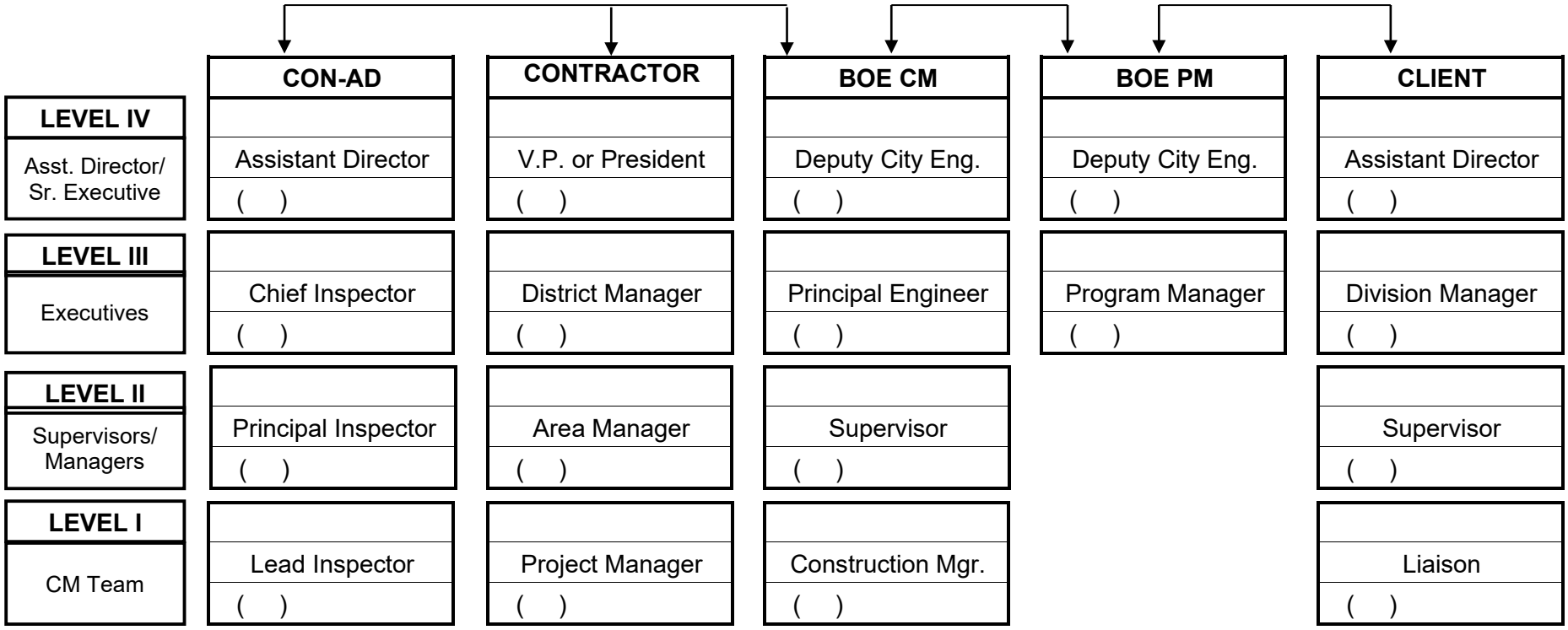

SECTION 01410
REGULATORY REQUIREMENTS

PART ONE - GENERAL

1.1 SUMMARY OF WORK

A. Building Codes and Regulations:

1. The CONTRACTOR shall perform the Contracted Work in accordance with the requirements of **the latest edition of the** Los Angeles City Building Codes and Amendments and all other regulations, laws, and ordinances, even though such requirements are not specifically mentioned in the Project Manual or shown on the Contract Drawings.

2. When the Work required by the Drawings and Project Manual are in conflict with any such law or ordinance, the CONTRACTOR shall notify the ENGINEER. The CONTRACTOR shall comply with the more stringent requirements, unless notified by the ENGINEER and the CONTRACTOR shall not proceed with the Work until the ENGINEER has so ordered.

3. This Section specifies procedural and administrative requirements for compliance with governing regulations, codes, and standards imposed upon the Contracted Work. These requirements include obtaining permits, licenses, inspections, releases, and similar documentation, as well as payments, statements, and similar requirements associated with the regulations, codes, and standards.

B. Related Documents:

1. Contract Documents: Work of this Section shall comply with all the Contract Documents, including General Conditions and Supplementary Conditions and other Sections, DIVISION 1 - GENERAL REQUIREMENTS.

1.2 CODES AND REGULATIONS

A. The design and construction of this Project have been selected and depicted on the Contract Documents in compliance with all applicable codes, which govern the various work, materials, devices, equipment, systems, and procedures in effect at the time the permits for the Projects are issued by the governing agencies. These include, but are not limited to, the following:

1. CITY of Los Angeles Building Code and Amendments, latest edition.

2. Los Angeles CITY "Standard Specifications for Public Works Construction", (The Green Book).

3. CAC Title 24.

4. California Building Code (CBC).

5. CAL/OSHA (Occupational and Safety Code).

6. California State Architectural Barrier's Law (CAL/ABL).

7. California State Fire Marshall requirements.

8. California Electrical, Plumbing and Mechanical Codes.

9. Los Angeles CITY Fire Code.

10. State Energy Standards Title 24.

11. Americans with Disabilities Act (ADA).

12. Los Angeles CITY Electrical, Plumbing and Mechanical Codes and Amendments, latest editions.

13. Los Angeles CITY Elevator Code, C.A.C. 3041 and Barclay's California Code of Regulation (Sub-article E620)

14. Los Angeles CITY Municipal Code, latest edition.

15. Uniform Building Code (UBC).

16. All other Codes and Regulations that may be noted in the Technical Sections of the Project Manual.

B. The procedure followed by the ENGINEER has been to contact governing authorities, where necessary, to obtain information needed for the purpose of preparing Contract Documents, recognizing that such information may or may not be of significance in relation to the CONTRACTOR'S responsibilities for performing the Work. Direct contact, by the CONTRACTOR, with such governing authorities can be made for necessary information and decisions that have a bearing on the performance of the Work, if necessary.

C. CONTRACTOR shall be familiar with all codes, regulations and all necessary procedures to obtain and pay for all permits, arrange all inspections, and secure necessary releases or sign-offs, which are prerequisite to any utility service connection work.

D. When conflict or violation of law or codes are found during any inspection by the governing agencies, the CONTRACTOR shall request such allegation of code conflict or violation, or Request of Correction to be on a written form from the governing agencies. The CONTRACTOR shall furnish the ENGINEER and the INSPECTOR each a duplicate copy of such written notice for review.

PART TWO - PRODUCTS (NOT APPLICABLE)

PART THREE - EXECUTION

3.1 PERMIT INFORMATION

A. CONTRACTOR shall contact the ENGINEER to obtain the proper CITY **(**owner**)** information to be used in the manifest or notification prior to start of any abatement work.

B. All information used by the CONTRACTOR including the CITY'S (Owner's) and CITY authorized representative's names, addresses and telephone numbers shall be consistent with the information shown on the building permit and plan-check applications obtained by the CITY.

END OF SECTION 01410

SECTION 01411
CONFINED SPACE ENTRY

1.1 THE REQUIREMENT

A. Confined Space Entry Program

1. The CONTRACTOR shall be responsible for implementing, administering and maintaining a confined space entry program (CSEP) in accordance with Sections 5156, 5157 and 5158, Title 8, CCR.

2. Prior to starting the Work, the CONTRACTOR shall prepare and submit its comprehensive CSEP to the ENGINEER. The CSEP shall address all potential physical and environmental hazards and contain procedure for safe entry into confined spaces, including, but not limited to, the following:

a. Training of personnel

b. Purging and cleaning the space of materials and residue

c. Potential isolation and control of energy and material inflow

d. Controlled access to the space

e. Atmospheric testing of the space

f. Ventilation of the space

g. Special hazards consideration

h. Personal protective equipment

i. Rescue plan provisions.

3. The CONTRACTOR'S submittal shall include the names of its personnel, including Subcontractor personnel, assigned to the project, who will have CSEP responsibilities, their CSEP training, and their specific assignment and responsibility in carrying out the CSEP.

B. Permit-Required Confined Spaces

1. Entry into permit-required confined spaces, as defined in Section 5157, Title 8, CCR, may be required as a part of the Work. All maintenance holes, tanks, vaults, pipelines, excavations, or other enclosed or partially enclosed spaces shall be considered permit-required confined spaces until the pre-entry procedures demonstrate otherwise. The CONTRACTOR shall implement a permit space program prior to performing any Work in a permit-required confined space. A copy of the permit shall be available at all times for review by CONTRACTOR and CITY personnel at the Worksite.

C. Payment

1. Payment for implementing, administering, and providing all equipment and personnel to perform the CSEP shall be included in the bid items for which the CSEP is required.

END OF SECTION 01411

SECTION 01712
SUBSURFACE DATA

1.1 THE REQUIREMENT

A. All soil and test hole data, water table elevation, and soil analyses shown on the Drawings or included in the Geotechnical Evaluation Report in the Specification Appendix apply only at the location of the test holes and to the depth indicated. Any additional subsurface exploration shall be done by the CONTRACTOR at their own expense. The indicated elevation of the water table is that level at the date the test hole data was obtained. It is the CONTRACTOR'S responsibility to determine and allow for the elevation of groundwater at the date of Project construction. A difference in elevation between the ground water shown in soil boring logs and groundwater actually encountered during construction will not be considered as a basis for extra work.

END OF SECTION 01712

SECTION 01420
UNITS OF MEASURE

1.1 THE REQUIREMENT

A. General

1. The International System of Units, also referred to as SI or the metric system, is the principal measurement system in these specifications and shall be used for construction, unless otherwise stated in the Contract documents. U.S. Standard Measures, also called U.S. Customary System, are included in parenthesis. SI units and U.S. Standard Measures in parenthesis may or may not be exactly equivalent. If U.S. Standard Measures are specified for ~~us~~ use in the contract documents, then all values used for construction shall be U.S. Standard Measures shown in parenthesis. However, certain material specifications and test requirements contained herein use SI units specifically and conversions to U.S. Standard Measure have not been included in these circumstances. When U.S. Standard Measures are not included in parenthesis, then the SI units shall control.

2. Reference is also made to ASTM E 380 for definitions of various units of the SI system and a more extensive set of conversion factors.

B. Units of Measure and Their Abbreviations (abbreviations noted within parentheses):

U.S. Customary Unit (Abbreviations)	Equal to	SI Unit (Abbreviations)
1 mil (= 0.001 in)	=	25.4 micrometer (µm)
1 inch (in)	=	25.4 millimeter (mm)
1 inch (in)	=	2.54 centimeter (cm)
1 foot (ft)	=	0.3048 meter (m)
1 yard (yd)	=	0.9144 meter (m)
1 mile (mi)	=	1.6093 kilometer (km)
1 square foot (ft^2)	=	0.0929 square meter (m^2)
1 square yard (yd^2)	=	0.8361 square meter (m^2)
1 cubic foot (ft^3)	=	0.0283 cubic meter (m^3)
1 cubic yard (yd^3)	=	0.7646 cubic meter (m^3)
1 acre	=	0.4047 hectare (ha)
1 U.S. gallon (gal)	=	3.7854 Liter (L)
1 fluid ounce (fl. oz.)	=	29.5735 milliliter (mL)
1 pound mass (lb) (avoirdupois)	=	0.4536 kilogram (kg)
1 ounce mass (oz)	=	0.0283495 kilogram (kg)
1 Ton (= 2,000 lb avoirdupois)	=	0.9072 Tonne (= 1,000 kg)
1 Poise	=	0.1 pascal · second (Pa · s)
1 centistoke (cs)	=	1 square millimeters per second (mm^2/s)
1 pound force (lbf)	=	4.4482 Newton (N)
1 pound per square inch (psi)	=	6.8948 Kilopascal (kPa)
1 pound force per foot (lbf/ft)	=	1.4594 Newton per meter (N/m)
1 foot-pound force (ft-lbf)	=	1.3558 Joules (J)
1 foot-pound force per second ([ft-lbf]/s)	=	1.3558 Watt (W)
1 part per million (ppm)	=	1 milligram/liter (mg/L)

C. Temperature Units and Their Abbreviations (abbreviations noted within parentheses):

Degree Fahrenheit (Abbreviation: °F)	Degree Celsius (Abbreviation: °C)
°F = (1.8 x °C) + 32	°C = (°F – 32)/1.8

D. SI Units Commonly Used in Both Systems and their Abbreviations (abbreviations noted within parentheses):

1 Ampere (A)
1 Volt (V)
1 Candela (cd)
1 Lumen (lm)
1 second (s)

E. Common Metric Prefixes and Their Abbreviations (abbreviations noted within parentheses):

kilo (k)	10^{3}
centi (c)	10^{-2}
milli (m)	10^{-3}
micro (μ)	10^{-6}
nano (n)	10^{-9}
pico (p)	10^{-12}

END OF SECTION 01420

SECTION 01421
SYMBOLS

1.1 THE REQUIREMENT

A. The symbols as shown shall mean:

Symbol	Definition
Δ	Delta, the central angle or angle between tangents
∠	Angle
%	Percent
'	Feet or minutes
"	Inches or seconds
#	Number
/	Per or (between words)
°	Degree
℄	Property line
℄	Centerline
℄	Survey line or station line

END OF SECTION 01421

SECTION 01430
MANUFACTURER'S FIELD SERVICES

1.1 THE REQUIREMENT

A. Prior to the startup of the facility, an experienced, competent, and authorized representative of the manufacturer of each item of equipment incorporated into the Work, for which field services are indicated in specified equipment sections, shall visit the site of the Work and inspect, check, adjust if necessary, and approve the equipment installation. In each case, the representative shall revisit the Jobsite as often as necessary until all trouble is corrected and the equipment installation and operation are satisfactory in the opinion of the ENGINEER. Each manufacturer's representative shall furnish to the ENGINEER and the INSPECTOR a written report certifying that the equipment has been properly installed, and lubricated; is in accurate alignment; is free from any undue stress imposed by connecting piping or anchor bolts; and has been operated under full load conditions and that it operated satisfactorily. All costs for these services shall be included in the CONTRACTOR'S Bid.

END OF SECTION 01430

SECTION 01452
INSPECTION OF THE WORK

1.1 THE REQUIREMENT

A. Whenever the CONTRACTOR intends to carry on the Work of this Contract on a Saturday, Sunday, or holiday, or more than eight (8) hours a day on Monday through Friday, or any variation in the time of the workday as set forth in the GENERAL CONDITIONS, length of the workday and work week, notification shall be given to the INSPECTOR and the ENGINEER of such intention at least forty-eight (48) hours in advance so that inspection may be arranged. No Work shall be allowed during these times without the approval of the INSPECTOR and no demolition will be permitted on Saturdays, Sundays, or holidays without the prior approval of the Board. All CITY inspection required by the CONTRACTOR on holidays, weekends and overtime for the sole convenience of the CONTRACTOR shall be accomplished at the sole expense of the CONTRACTOR by issuance of a deductive Change Order.

B. The Work shall be conducted under the general observation of the ENGINEER and shall be subject to inspection by the INSPECTOR to ensure compliance with the requirements of the Contract Documents. Such inspection may include mill, plant, shop or field inspection, as required. The INSPECTOR shall be permitted access to all parts of the Work, including plants where materials or equipment are manufactured or fabricated. All materials and articles furnished by the CONTRACTOR shall be subject to inspection and no materials or articles shall be used in the Work until they have been inspected and accepted by the INSPECTOR.

C. No Work shall be backfilled, buried, cast in concrete, hidden or otherwise covered until it has been inspected by the INSPECTOR, and other Agencies for which a permit is required. Whenever the CONTRACTOR is ready to backfill, bury, cast in concrete, hide, or otherwise cover any Work under the Contract, the CONTRACTOR shall notify the INSPECTOR not less than forty-eight (48) hours in advance to request inspection before beginning any such Work of covering. Failure of the CONTRACTOR to notify the INSPECTOR at least forty-eight (48) hours in advance of any such inspections shall be cause for the INSPECTOR to require a sufficient delay in the progress of Work to allow time for such inspections and any remedial or corrective work required, and all costs of such delays, including its effect upon other portions of the work, shall be borne by the CONTRACTOR. Any Work so covered in the absence of inspection shall be subject to uncovering at the sole expense of the CONTRACTOR. Where uninspected Work cannot be uncovered, such as in concrete cast over reinforcing steel, all such Work shall be subject to demolition, removal, and reconstruction under proper inspection, and no additional payment will be allowed therefor.

D. The presence of the ENGINEER or the INSPECTOR shall not relieve the CONTRACTOR of the responsibility for the proper execution of the Work in accordance with all requirements of the Contract Documents. Compliance is a duty of the CONTRACTOR, and said duty shall not be avoided by any act or omission on the part of the ENGINEER or the INSPECTOR. If the

CONTRACTOR fails to replace any defective or damaged Work or material after reasonable notice, the ENGINEER may withhold progress payment for the Work or material, reserve the right to notify the CONTRACTOR'S Bond and Insurance Companies, and/or may cause such Work or materials to be replaced. The replacement shall be deducted from the amount to be paid to the CONTRACTOR, otherwise the CONTRACTOR shall pay the CITY if there remains insufficient or no amount to be paid by the CITY to the CONTRACTOR.

E. The INSPECTOR shall have the right, at all times and places, to reject any articles or materials to be furnished hereunder which, in any respect, fail to meet the requirements of these specifications, regardless of whether the defect in such articles or materials are detected at the point of manufacture or after completion of the Work at the site. If the ENGINEER or the INSPECTOR, through an oversight or otherwise, has not rejected materials or work which is defective or which is contrary to the specifications, such material, no matter in what stage or condition of manufacture, delivery, or erection, may be rejected by the INSPECTOR upon discovery. The CONTRACTOR shall promptly remove rejected articles or materials from the site of the Work after notification of rejection. All costs of removal and replacement of rejected articles or materials as specified herein shall be borne by the CONTRACTOR.

F. At the completion of Work, after completion of all corrections, a final inspection will be made by the INSPECTOR, the ENGINEER, and the CONTRACTOR, as applicable. The INSPECTOR will provide a Final Inspection Correction List itemizing all work necessary to complete the Project satisfactorily.

G. When the correction work is found to be in compliance with the Contract Documents, the construction Work will be considered complete and the Contract time will stop. The CONTRACTOR shall proceed with the maintenance work if required by the Contract. If the correction work is found to be non-compliant with the Contract Documents, the Contract time shall be continued to be assessed until the correction is satisfactorily made and accepted by the CITY.

END OF SECTION 01452

SECTION 01453
SAMPLING, TESTING AND FABRICATION INSPECTION

1.1 THE REQUIREMENT

A. General

1. All materials and fabricated articles furnished by the CONTRACTOR shall be subject to inspection and testing and no materials or fabricated articles shall be incorporated into the Work until they have been inspected and accepted by the INSPECTOR. The CONTRACTOR shall ensure that all items requiring shop inspection are inspected at their source by the INSPECTOR or by an independent inspection or testing laboratory (IITL) that has been approved by the INSPECTOR.

2. Fabrication shall be subject to inspection by the INSPECTOR, to ensure strict compliance with the requirements of the Contract Documents. Such inspection shall include mill, plant, shop or field inspection, as required. The INSPECTOR shall be permitted access to all parts of the Work, including plants where materials or equipment are manufactured or fabricated. When a third party INSPECTOR is approved, monthly meetings may be scheduled with the INSPECTOR at the manufacturing facility to review the progress of the Work and the inspection activities. The INSPECTOR will determine the number of trips based on the manufacturing schedule for the material or fabricated article(s). The CONTRACTOR shall include in the Bid all costs associated with these inspections, except for the costs for CITY personnel as set forth herein which shall be reimbursed under the Bid Item ALLOWANCE FOR CITY INSPECTION, if provided in the SCHEDULE OF WORK AND PRICES.

3. All fabricated items shall be fabricated from Shop Drawings, which have been submitted to the ENGINEER and approved in accordance with SUBMITTALS of the GENERAL REQUIREMENTS. Shop inspection shall be provided on all materials and/or equipment so designated on the CONTRACTOR'S approved Shop Drawings or Contract Documents. The CONTRACTOR shall provide approved Shop Drawings and the corresponding Contract Specification to the INSPECTOR or IITL for use in the inspection and testing of the items to be fabricated.

4. Any item requiring inspection that is delivered to the job site without having been inspected and approved by the Bureau of Contract Administration or an approved third party inspection agency will be rejected by the Project Inspector. The BCA Materials Control Group will not perform any inspection at the job site. It is the Prime CONTRACTOR'S responsibility to ensure that all items requiring shop inspection are inspected at their source by the BCA Materials Control Group, or by an inspection or testing laboratory that has been approved by the BCA Materials Control Group. The City shall be held harmless for any delays resulting from the CONTRACTOR'S or fabricator's failure to obtain the required inspections.

5. Prior to any fabrication, there shall be a Prefabrication Meeting either at the fabricator's location or via telephonic conference. A representative of the CITY and the IITL, if retained, the Prime CONTRACTOR, the fabricator's plant superintendent and the fabricator's quality control person, shall be present at the Prefabrication Meeting. The items to be discussed are the required inspections, tests and reports, based on the approved Shop Drawings and the corresponding Contract Specifications. The IITL shall take minutes of the pre-fabrication meeting and distribute the same to the individuals in attendance. The IITL shall submit an inspection plan to the INSPECTOR for approval two (2) weeks prior to the Prefabrication Meeting. The CONTRACTOR is directed to notify the INSPECTOR and the ENGINEER three (3) weeks in advance of the date and time of the Prefabrication Meeting. The CONTRACTOR shall include in the Bid all costs associated with these meetings except for the costs for CITY personnel as set forth herein which shall be reimbursed under the Bid Item ALLOWANCE FOR CITY INSPECTION, if provided in the SCHEDULE OF WORK AND PRICES.

6. If a Bid Item ALLOWANCE FOR CITY INSPECTION has been included in the SCHEDULE OF WORK AND PRICES in the Bid Proposal, this allowance shall only be used to reimburse the CONTRACTOR for the cost of CITY inspection and travel requirements, as set forth herein, and shall not be used for any portion of the costs of the CONTRACTOR'S independent third party INSPECTOR or inspection laboratory. Reimbursement of approved expenses shall be made on the basis of original invoices and are not subject to markup for overhead and profit. If at the end of the Project, the total costs differ from the amount set forth in the SCHEDULE OF WORK AND PRICES, the Contract Price shall be adjusted by a Change Order for the difference between the total actual costs and the amount included in the Bid, as an additional amount due the CONTRACTOR or a credit to the CITY, as appropriate.

7. The CONTRACTOR shall coordinate all sampling, testing and fabrication inspections with the INSPECTOR and is responsible for maintaining the inspection schedules. Subject to the terms contained herein, costs for CITY personnel travel will be paid from the Bid item ALLOWANCE FOR CITY INSPECTION. In the event that the scheduled inspection is postponed or delayed by the CONTRACTOR, through no fault of the CITY, and CITY personnel are required to extend their travel duration resulting in additional travel costs, these increased costs, including per diem travel allowances, shall be borne by the CONTRACTOR and are not eligible for payment from the Bid item ALLOWANCE FOR CITY INSPECTION.

8. In addition to the approval of the Bureau of Contract Administration, approval may be required from the Department of Building and Safety, Materials Control Section, for certification of both the manufacturer of structural items/materials and/or the testing laboratory/inspection company. For certification information, contact:

Senior Building Inspector
Materials Control section
Dept. of Building and Safety
Telephone: (213) 482-0388

B. Samples And Test Specimens

1. Samples and test specimens required under these Specifications shall be furnished, prepared for testing, and delivered, at no cost to the CITY, in ample time for the completion of the necessary tests and analysis before said article or materials are to be used. The time and location of the delivery shall be designated by the INSPECTOR.

2. In addition to any other inspection or quality assurance provisions that may be specified, the ENGINEER or the INSPECTOR shall have the right to independently select, test, and analyze, at the expense of the CITY, additional test specimens of any or all of the materials to be used. Whenever any portion of the Work fails to meet the requirements of the Specifications, as shown by the results of independent testing or investigation, all costs of such independent inspection and investigation, and all costs of removal, correction, and reconstruction or repair of any such Work, shall be borne solely by the CONTRACTOR.

3. The INSPECTOR may allow the manufacturer, fabricator, supplier, or Subcontractor to provide the results of tests from samples taken at the mill, factory, or warehouse. The INSPECTOR will accept the test reports provided that the following conditions are met:

   a. The Testing Agency was approved by the INSPECTOR prior to performing the tests, and that all necessary certifications were valid at the time the tests were performed.

   b. The tests were performed in conformity with the Specifications for the specified materials or items.

   c. The reports are made in the form of an affidavit specified hereinafter.

4. Whenever the approved independent testing laboratory or INSPECTOR takes samples of materials other than at the site, the deliveries to the site of materials represented by such samples shall be identified as specified for the specific material. The results of such tests shall be reported to the INSPECTOR in the form of affidavits attested to by the testing agency. Such affidavits shall furnish the following information with respect to the material sampled:

   a. Manufacturer's name and brand.

   b. Place of sampling.

c. Sufficient information to identify the lot, group, bin, or silo from which the samples were taken.

d. Amount of material in the lot sampled.

e. Statement that the material has passed the requirements.

f. Notarized signature and title of the person making the affidavit and the date of execution of the affidavit.

C. Shop Inspection And Testing

1. Shop Inspection and/or Material Sampling and Testing are the sole jurisdiction and responsibility of the Inspector of Public Works through the Bureau of Contract Administration's Materials Control Group. Shop Inspection and/or Material Sampling and Testing cannot be approved, waived, or otherwise altered by any other City Department, Bureau, Division, or individual. Shop Inspection required by this section is in addition to any inspections required by applicable building codes.

2. The CONTRACTOR is responsible for coordinating shop inspection with the INSPECTOR. The CONTRACTOR is to estimate the time required for Shop testing of the fabricated article(s) or equipment, and so inform the INSPECTOR. The Contractor is responsible for contacting the Bureau of Contract Administration, Materials Control Group, regarding scheduling for all Shop Inspection and/or Material Sampling and Testing. Please contact the Materials Control Supervisor at (213) 847-2442.

3. A final inspection by the INSPECTOR may be required prior to shipment. No fabricator or CONTRACTOR shall deliver fabricated materials to the project site without the approval of the BCA Materials Control Group.

4. Where the CONTRACTOR is specifically required by the Technical Specifications to demonstrate performance of major equipment prior to delivery, a testing procedure must be developed by the manufacturer and approved by the ENGINEER prior to scheduling the shop performance testing. Both the INSPECTOR and the ENGINEER are required to witness the performance testing. The ENGINEER will evaluate performance-testing data and notify the INSPECTOR whether the equipment meets the performance requirements of the Contract. The INSPECTOR will be responsible for releasing the equipment for delivery to the Jobsite. This procedure will also apply to field performance testing required as a condition precedent to acceptance of the equipment as described under the PARTIAL ACCEPTANCE and FINAL ACCEPTANCE provision of the Contract.

5. Inspection at Locations Within Thirty (30) Miles from CITY

a. When the CONTRACTOR intends to purchase materials, fabricated products, or manufactured equipment from sources located within thirty (30) miles (48 km) of the geographical limits

of the CITY, the CONTRACTOR shall notify the INSPECTOR at least 24 hours prior to the scheduled date of tests at all stages of manufacture to allow for arrangements specified herein.

b. Except as otherwise provided in these Specifications, performance of the required sampling and tests will be under the direction of the INSPECTOR, from samples provided by the CONTRACTOR, and the cost of performing the test(s) will be borne by the CITY, except for the costs of any retests which show unsatisfactory results which shall be borne by the CONTRACTOR.

6. Inspection at Locations More Than Thirty (30) Miles From the CITY

a. When the CONTRACTOR intends to purchase materials, fabricated products, or equipment from sources located more than thirty (30) miles (48 km) outside the geographical limits of the CITY, an IITL approved by the INSPECTOR, shall be engaged by the CONTRACTOR, at the CONTRACTOR'S sole expense, to inspect the materials, equipment and/or process, unless the City elects to perform the inspection with BCA Materials Control Personnel. Approval of the IITL shall be obtained from the BCA Materials Control Group before producing any material or equipment. The IITL shall judge the materials and fabricated articles by the requirements of the Plans and Specifications and approved submittals. The IITL shall be accountable to the BCA Materials Control Group and shall provide written records of all inspections performed to the Group in a format approved by that Group. No equipment or material shall be shipped nor shall any processing, fabrication and/or treatment of such equipment or materials be done without the required inspection and approval by IITL. Approval by IITL shall not relieve the CONTRACTOR of its responsibility to comply with the Contract requirements. The City retains the right to perform inspection or testing at any remote site with City personnel. If the City exercises this right, the contractor will be required to pay for all costs associated with this inspection and testing, except the Inspectors' wages, unless reimbursement is provided under the bid item ALLOWANCE FOR CITY INSPECTION as listed in the SCHEDULE OF WORK AND PRICES.

b. The CITY retains the right to perform inspection or testing at such remote sites with CITY personnel in lieu of a third party inspector. In the event the CITY exercises this right, the CONTRACTOR shall administer travel arrangements as specified herein Paragraph C.10, CITY PERSONNEL TRAVEL REQUIREMENTS.

7. Inspection Outside Continental United States

a. Requirements and procedures for inspection and testing of materials, fabrication of products and equipment from sources

outside the continental United States shall be the same (including the requirement for an accredited inspection agency and/or testing laboratory pre-qualified by the CITY Department of Building and Safety and approved by the INSPECTOR) as provided in the Paragraph C.7 SHOP INSPECTION & TESTING of this Section. In addition to the requirements of Paragraph C.10, City Personnel Travel Requirements, of this Section, the CONTRACTOR shall provide the following, the cost of which shall be reimbursed out of the ALLOWANCE FOR CITY INSPECTION item, if provided in the SCHEDULE OF WORK AND PRICES.

(1) A minimum of five (5) calendar days hotel accommodation shall be required for each shop inspection visit made by the INSPECTOR.

(2) A minimum advance notice of ten (10) working days shall be required for all hold points (mandatory) inspection.

(3) The approximate rates for allowances given as a guideline in Paragraph C.10, City Personnel Travel Requirements, of this Section, shall be adjusted to match the rates in the foreign locality for similar types of facilities and amenities.

8. Third Party Inspection Requirements

a. The proposed third party inspection and/or testing company must gain approval by the INSPECTOR after award. This approval shall be obtained before producing any material or manufacturing any product or equipment. The approved inspection and/or testing agency shall not sublet or assign its work to any other agency.

b. The approved third party inspection and/or testing agency shall take direction from, and be responsible to, the INSPECTOR.

c. The CONTRACTOR shall also comply with requirements regarding the Prefabrication Meeting as contained herein.

d. The Work and activities of the third party inspection and/or testing agency shall be monitored by the INSPECTOR during monthly meetings to ensure compliance with the Contract Documents.

9. Third Party Testing and Inspection Laboratory Approval Procedures

a. The INSPECTOR will approve third party inspection and/or testing agencies/laboratories. The City of Los Angeles has a contract only with the Prime CONTRACTOR. The City of Los

Angeles has no Third Party agreement with any subcontractor, plant, manufacturer, or fabricator. All are considered employees of the Prime CONTRACTOR and the Prime CONTRACTOR shall be responsible for their work. The Supervisor of the Materials Control Group of the Bureau of Contract Administration acts on behalf of the INSPECTOR of Public Works Therefore, all requests for the approval of a third party inspection or testing company shall be from the Prime CONTRACTOR, typewritten on the Prime CONTRACTOR'S letterhead, addressed to the Supervisor of the BCA Materials Control Group (213) 847-2442 as follows:

Bureau of Contract Administration
General Services Division
Materials Control Group
1149 S. Broadway, Suite 300
Los Angeles, CA 90015

One (1) duplicate copy of the request shall be sent to the ENGINEER.

b. The letter requesting approval of a third party test lab or private inspection company shall contain all of the following information:

PROJECT DATA

(1) Complete title of the project.
(2) The project work order number.
(3) The approved submittal number(s) and a brief description of the item(s) to be inspected tested with their Specification Division and Section number.

PROPOSED INSPECTION

(1) Names of two (2) proposed testing laboratories or inspection companies.
(2) Addresses and telephone numbers of the proposed test labs/inspection companies.
(3) Contact person at the proposed test labs/ inspection companies.
(4) Description and history of the proposed test laboratories/inspection companies.
(5) Resumes of at least two (2) or more inspectors (primary and alternate) who will perform the physical inspections.
(6) Samples of all inspection reporting documents utilized by the provider and a written description of the reporting methodology.

FABRICATOR DATA

(1) Company name, address, and telephone number of the actual production site for each fabricator.
(2) Contact person at each fabricator.
(3) Fabrication schedule.

c. The INSPECTOR will notify the CONTRACTOR by letter if the testing laboratory/inspection agency has been approved.

d. The Materials Control Group may order modifications of the inspection reporting procedure utilized by the provider prior to approval.

10. CITY Personnel Travel Requirements

a. The CONTRACTOR shall administer the travel and furnish the following services for CITY personnel who are attending Prefabrication Meetings and performing inspection services.

(1) Purchase airline tickets (Coach Class only).
(2) Make hotel reservations and prepay for the planned number of nights. (Three Star or American Automobile Association (AAA) Three Star approved.)
(3) Make rental car reservations and prepay for the planned number of days if the manufacturer's or fabricator's facility is greater than one (1) mile from the departing and arrival airport or hotel.
(4) The estimated per diem travel allowance will be at least fifty U.S. dollars ($50.00) per day for meals, en route expenses, and other miscellaneous expenses. CITY personnel will submit an expense statement to the CITY for approval of actual expenses incurred.
(5) For CITY paid advances, the CONTRACTOR shall reimburse the CITY for these actual expenses by deductive Change Order to be deducted from the Bid item, ALLOWANCE FOR CITY INSPECTION.
(6) When requested by the ENGINEER or the INSPECTOR, the CONTRACTOR shall provide an advance check, for the estimated costs of all travel allowance costs, to the ENGINEER or the INSPECTOR, no later than forty eight (48) hours prior to the departure time. Failure to provide all accommodations described herein in such a manner to adequately facilitate the travel activity will cause the inspection visit to be canceled, and any costs or delays owing to such rescheduling shall be born by the contractor.

b. As the basis for cost reimbursement under SCHEDULE OF WORK AND PRICES of the Bid Proposal, the CONTRACTOR shall submit receipts or invoices for payment to the ENGINEER with a cover letter referencing the following:

(1) INSPECTOR'S or ENGINEER'S name.
(2) Project title.
(3) Project Work Order Number.
(4) CONTRACTOR'S:

(a) Name
(b) Address
(c) Telephone Number.
(d) CONTRACTOR'S contact person and telephone number(s)

(5) Reference Technical Specification and submittal number.
(6) Purpose of inspection.
(7) Address and location of inspection:
(8) Country
(9) State
(10) City.
(11) Date(s) of inspection.
(12) Description of items enclosed as set forth herein

11. Shop Inspected Equipment/Materials:

a. Without waiving any specific requirement of the Contract Documents, the following items of equipment and/or material are examples of, but not limited to those items that are subject to shop inspection as noted herein below.

Equipment/ Materials	Spec. Sect.	Insp. Req'd	Product Identification	See Notes
Aluminum Fabrication	05530/08410/08416/08520	YES	Inspector Witness – Yellow Tag	G.N.1
Aluminum Railings	05520	YES	Yellow Tag	G.N.5
Anodizing	05035/09800	YES	Yellow Tag	G.N.18
Asphalt Material	02710	YES	Batch Plant Insp. Report #1101	G.N.8
Base Material	02310	NO	Standards Div. Approves Source	
Bearing Pads	05120	YES	Yellow Tag	G.N.31
Bolting	05120	YES	Inspector Witness - Yellow Tag	G.N.2
Bitumen	07160	YES	Insp. Witness & meas. thickness	G.N.18
Boilers	11915	YES	Yellow Tag	G.N.7
Castings	05530	YES	Stamped **"L.A. City Approved"**	G.N.4
Coatings	Div. 9/05530	YES	Insp. Witness & meas. thickness	G.N.18
Cabinets – Wood	06200/06400	NO		G.N.17
Compressors	11870/11875/11880	YES	Yellow Tag	G.N.20
Crane Systems	14320/14600/14630	YES	Yellow Tag	G.N.19
Conveyors	14605	YES	Yellow Tag	G.N.19
Concrete	03300	YES	Batch Plant Insp. Report # 1101	G.N.8
Concrete-Fiberglass Reinf.	03400	YES	Batch Plant Insp. Report # 1101	G.N.12
Concrete – mix Designs	03300	YES	Batch Plant Insp. Report # 1101	G.N.8
Concrete – Precast	03400	YES	Stamped **"LA City Approved"**	G.N.9
Concrete – Prestressed	02465/03400	YES	Yellow Tag or Stamped	G.N.9
Concrete Vaults	02585	YES	Stamped "**LA City Approved**"	G.N.11
Catch Basins	02545	YES	Yellow tag for bulb Angle & Grating	G.N.11
Chain Link Fabric	02820	YES	Yellow Tag	G.N.18
Doors – Metal	08110	YES	Yellow Tag	G.N.6
Door Frames - Metal	08110	YES	Yellow Tag	G.N.6
Ductwork – Fiberglass	13390/15170	YES	Yellow Tag	G.N.27
Ductwork – Flexible	15170	NO		G.N.27
Ductwork – Metal	15210	NO		G.N.27
Ductwork – Stainless steel	15210	YES	Yellow Tag	G.N.27
Electrical - Controls	17400	YES		G.N.24
Electrical Motors	16490	YES	Yellow Tag	G.N.20
Electrical Panels	16330	YES	Yellow Tag	G.N.22
Electrical Switchgear	16200	YES	Yellow Tag	G.N.22
Electrical Testing	16570	YES	Inspector Witness	G.N.25

TABLE *Continued*

Equipment/ Materials	Spec. Sect.	Insp. Req'd	Product Identification	See Notes
Electrical Units	Div 16	YES	Yellow Tag	G.N.25
Electrical Wiring	16150/16160	YES	Inspector Witness	G.N.24
Escalators	Div 14	YES	Yellow Tag	G.N.19
Elevators	14200/14241	NO		G.N.19
Fiberglass	06610	YES	Yellow Tag	G.N.30
Frames – Metal	05500	YES	Yellow Tag	G.N.6
Forgings	Div. 5	YES	Stamped **"LA City Approved"**	G.N.4
Galvanizing	Div. 5	YES	Inspector Witness – Yellow Tag	G.N.18
Gratings	Div. 5	YES	Yellow Tag	G.N.4
Gaskets	07900	YES	Yellow Tag	G.N.11
Generators	16410	YES	Yellow Tag	G.N.22
Glue-Laminated Beams	06181	NO	Certificate of Compliance (Forestry)	G.N.16
Grout	04230	YES	Batch Plant Insp. Report #1101	G.N.13
Gypsum	09200	YES	Batch Plant Insp. Report #1101	G.N.13
Gypsum –Fiberglass Reinf	03520	YES	Batch Plant Insp. Report #1101	G.N.12
Hoists	14320/14600	YES	Yellow Tag	G.N.19
HVAC	15130	NO		G.N.26
Linings – Pipe	09800	YES	Inspector Witness – Yellow Tag	G.N.18
Lumber	06100	NO	Treated Lumber Stamped "LA"	G.N.16
Lighting Fixtures	16360/16370	NO		G.N.23
Lamps	16360/16370	NO		G.N.23
Motors	16490	YES	Yellow Tag	G.N.20
M.H. –Frames/Covers Cast Iron	02585	YES	Stamped "LA" on Cover & Frame	G.N.4
M.H. –Frames/Covers Steel	02585	YES	Stamped "LA" on Inner-Cover only	G.N.4
M.H. –Precast w/Epoxy Coating	02585	YES	Stamped "LA" or Yellow Tag	
M.H. –Shafts/Grade Rings	02585	YES	Stamped "LA" or Yellow Tag	G.N.11
Masonry	04230	NO		G.N.14
Mechanical Equipment	Div. 15	YES	Yellow Tag	G.N.20
Millwork	06200	NO		G.N.17
Misc. Metal Fabrication	05500	YES	Yellow Tag	G.N.1
Mortar	04230	YES	Batch Plant Insp. Report #1101	G.N.13
Non-Destructive Testing	05120	YES	Inspector Witness	G.N.1
Electrical Transformers	16320	YES	Yellow Tag	G.N.22

Equipment/ Materials	Spec. Sect.	Insp. Req'd	Product Identification	See Notes
Pressure Vessels	Div. 13	YES	Yellow Tag	G.N.7
Painting (Coating Systems)	09900/ 09905	YES	Yellow Tag	G.N.18
Pilings	02465/ 02460/ 02470	YES	Yellow Tag	G.N.9
Pipe – Fiberglass		YES	Yellow Tag	G.N.15
Pipe - Plastic	02510	NO	Standards Div will issue a batch #	G.N.29
Pipe – Reinf. Concrete	02250/ 2560/0 2565	YES	**LA City Approved** stamp w/ a 3 digit # if approved and a 5 digit number if not approved	G.N.11
Pipe - Steel	Div 15	YES	Yellow Tag	G.N.15
Pipe Supports	15770	YES		G.N.15
Pipe – Vitrified Clay	GB	NO	Standards Division will stamp 3-digit number and **"LA City Approved DPW"** inside full lengths of pipe	G.N.15
Pipe Welding	15610	YES		G.N.15
Plastic Liner Plate	09800	YES		G.N.29 (a)
Pullbox – Street Light & Traffic Signal.		YES	Stamped **"LA City Approved"** on the inside of the box	
Pre-Engineered Metal Buildings		YES		G.N.1
Pumps	Div. 11	YES	Yellow Tag	G.N.20
PVC Liner	09800	YES		G.N.29 (a)
Railings	05520	YES	Yellow Tag	G.N.5
Rebar	03200	YES	Yellow Tag	G.N.3
Sandblasted Steel Items	Div. 5	YES		
Slide Gates	11815	YES	Yellow Tag	G.N.21
Sluice Gates	11182 0	YES	Yellow Tag	G.N.21
Steel Doors	08110	YES	Yellow Tag	G.N.6
Steel – Stainless	05500	YES		G.N.1
Steel Structural	05120	YES	Yellow Tag	G.N.1
Steel Supports	05120	YES	Yellow Tag	G.N.1
Store Fronts	08410/ 08416	YES	Yellow Tag	G.N.28
Street Lgt. Standards	03400	YES	Stamped **"LA City Approved"** or **"Third Party Insp. Agency"** at the bottom of the base	G.N.10
T-Lock Liner Plate		YES	Yellow Tag	

TABLE *Continued*

Equipment/ Materials	Spec. Sect.	Insp. Req'd	Product Identification	See Notes
Tanks – Storage	Div. 13	YES	Yellow Tag	G.N.7
Tanks – Steel	13310	YES	Yellow Tag	G.N.7
Tree Well – Cast Iron		YES	Stamped **"LA"** or Yellow Tag	
Tree Well – Architectural		YES	Stamped **"LA"** or Yellow Tag	
Tree Well – Per Std. Plans		NO		
Vessels	Div. 13	YES	Yellow Tag	G.N.7
Vaults	02585	YES	Stamped **"LA"** or Yellow Tag	G.N.11
Valves	1Div. 15	YES	Yellow Tag	G.N.20
Welding	Div. 5	YES	Inspector Witness – Yellow Tag	G.N.1
Wire Rope		YES	Yellow Tag	
Wood Paneling	06200	NO		G.N.17
Wood Trusses-Engineered		NO	Provide Manufacturer's Certification	

NOTES:

1. Fabrication of ferrous materials, which may include welding, high strength bolting or non-destructive testing shall be shop inspected.
2. Bolting with ASTM A-325 bolts, ASTM A-490 bolts or other alternate fasteners shall require shop inspection. Bolting with ASTM A-307 bolts does not require shop inspection.
3. Reinforcing steel is normally sampled at the Jobsite, but for expediency, the sampling will be performed at the point of fabrication by the CITY'S Standards Division.
4. All forging and castings made at the foundry shall be shop inspected, approved and stamped prior to delivery to the Jobsite.
5. Steel stairways and handrails (ferrous) require shop inspection for welding and specified coatings.
6. Metal door and frame fabrication requires shop inspection.
7. Pressure vessels, tanks, boilers and related equipment do require inspection of fabrication, welding, and testing.
8. Concrete, asphalt concrete and mix designs are inspected at the batch plant. These products are shop inspected for conformance to Specifications and verification by the INSPECTOR.
9. Both pre-cast and pre-stressed concrete are subject to shop inspection and approval before delivery to the Jobsite.
10. Street lighting standards of either steel, aluminum or concrete are required to be shop inspected.
11. Reinforced concrete vaults catch basins, and reinforced pipe are required to be shop inspected. (See Note 9.) Maintenance hole shafts and grade rings without reinforcement or linings do not require shop inspection. Gaskets used for reinforced concrete pipe require testing.
12. FGRC and FGRG (Fiberglass Reinforced Concrete and Fiberglass Reinforced Gypsum) should be manufactured in an approved shop and be shop inspected.

13. Mortar, grout and gypsum shall be inspected at the batch plant, unless the products are mixed at the Jobsite from approved packages under the inspection of the INSPECTOR.
14. Concrete Masonry Units (CMU) shall be inspected and sampled at the Jobsite.
15. Lining and coating of ductile iron pipe and fiberglass pipe, as well as welded supports, are subject to shop inspection. Vitrified Clay Pipe (VCP) is exempt, as are non-welded pipe supports which can be classified as standard or catalog items. The CITY'S Standards Division will provide the inspection and testing for VCP.
16. Shop inspection is not required for lumber, unless it is treated lumber. Glue-laminated products do not require shop inspection. Each "Glue Lam" shall come with an individual Certificate of Compliance.
17. Millwork and wood products are not required to be shop inspected, unless the Specifications call for equivalency or inspection by the Woodworking Institute of California (W.I.C.).
18. Specified coatings including, but not limited to, anodizing, bitumen, epoxy, galvanizing, polyvinylidene fluoride, and pipe linings and coatings shall be shop inspected.
19. Conveying equipment, such as elevators, escalators, or conveyors are exempt from shop inspection. However, the structural framework of the escalators, hoists, cranes and lifts do require inspection.
20. Mechanical equipment, such as compressors, pumps, motors and valves, require shop inspection for fabrication, tests of windings, and any specified coating. Pumps, valves and motors may be exempt if they are standard or catalog items.
21. Fabrications of sluice gates and slide gates are subject to shop inspection for fabrication, welding and coating.
22. Transformers rated at 600 volts and higher, transformers rated at 100 KVA and higher, generators, switchgear motor drives and complex wired panel boards require shop inspection.
23. Lighting fixtures and lamps are considered standard or catalog items and are exempt from shop inspection.
24. Electrical wiring and testing, performed in the shop, requires inspection to verify conformance with applicable Specifications.
25. Shop tests specified in the Specifications including, but not limited to, voltage, grounding, loads, performance, installation, temperature, or noise levels will require shop inspection.
26. HVAC (heating, ventilation and air conditioning) are subject to shop inspection for fabrication and welding. Each component will be evaluated for possible inspection.
27. Sheet metal ductwork is not shop inspected. Flexible ductwork is considered a standard or catalog item and no shop inspection is required. Ductwork made of aluminum, stainless steel, or fiberglass will require shop inspection.
28. Storefronts and wall systems are shop inspected. Fixed windows are standard items and have no need of inspection.
29. Plastic pipe, such as ABS or PVC does not require shop inspection. The pipe will be inspected and sampled for testing at the Jobsite. (a) Extruded plastic liner plate and PVC Liner will require shop inspection.
30. Fiberglass products, because of the resins and the fiber reinforcement, do require shop inspection.
31. Elastomeric bearing pads shall be tested according to Cal-Trans Standard Specification Section 51-1.12H. Sampling will be done by the INSPECTOR.

END OF SECTION 01453

SECTION 01454
WEIGHING AND METERING EQUIPMENT

1.1 THE REQUIREMENT

A. It is the CONTRACTOR'S responsibility to ensure that all scales and metering equipment used for proportioning materials shall be inspected for accuracy and certified within the past twelve (12) months by the State of California Bureau of Weights and Measures, by the County Director or Sealer of Weights and Measures, or by a scale mechanic registered with or licensed by the County.

B. The accuracy of the work of a scale service agency, except as stated herein, shall meet the standards of the California Business and Professions Code and the California Code of Regulations pertaining to weighing devices. A certificate of compliance shall be presented, prior to operation, to the ENGINEER for approval and shall be renewed whenever required by the ENGINEER at no cost to the CITY.

C. All scales shall be arranged so they may be read easily from the operator's platform or area. They shall indicate the true net weight without the application of any factor. The figures of the scales shall be clearly legible. Scales shall be accurate to within one percent (1%) when tested with the plant shut down. Weighing equipment shall be so insulated against vibration or moving of other operating equipment in the plant area that the error in weighing with the entire plant running will not exceed two percent (2%) for any setting nor one-and-one-half percent (1.5%) for any batch.

END OF SECTION 01454

SECTION 01455
CALIBRATION OF TESTING EQUIPMENT

1.1 THE REQUIREMENT

A. It is the CONTRACTOR'S responsibility to ensure that testing equipment such as, but not limited to, pressure gages, metering devices, hydraulic systems, force (load) measuring instruments, and strain-measuring devices shall be calibrated by a testing agency acceptable to the ENGINEER at intervals not to exceed twelve (12) months and following repairs, modification, or relocation of the equipment. Calibration certificates shall be provided when requested by the ENGINEER.

END OF SECTION 01455

SECTION 01561
ENVIRONMENTAL CONTROL

1.1 THE REQUIREMENT

A. Explosives for Blasting

1. The use of explosives for blasting purposes on the work shall not be permitted.

B. Fugitive Dust and Smoke Control

1. The CONTRACTOR shall furnish all labor, equipment, and means required and shall carry out effective measures wherever and as often as necessary to prevent its operation from producing dust in amounts damaging to property, cultivated vegetation, or domestic animals, or causing a nuisance as defined by the ENGINEER. The CONTRACTOR shall be responsible for any damage resulting from any dust originating from its operations. The dust abatement measures shall be continued until the CONTRACTOR is relieved of further responsibility by the ENGINEER. No separate payment shall be allowed for dust abatement measures and all costs thereof shall be included in the CONTRACTOR's Bid. The use of water resulting in mud on streets, sidewalks, driveways, shall not be permitted as a substitute for sweeping or other methods of dust control.

2. The CONTRACTOR shall not discharge smoke, dust, or any other air contaminants into the atmosphere in such quantity as will violate the regulations of any legally constituted authority.

3. The CONTRACTOR shall comply with the requirements of Title 8, California Code of Regulations, concerning handling of asbestos dust.

C. Rubbish Control

1. Through all phases of construction, including suspension of Work and until final acceptance of the Project, the CONTRACTOR shall keep the Worksite and other areas used by it in a neat and clean condition, and free from any accumulation of rubbish and debris. The CONTRACTOR shall dispose of all rubbish and waste materials of any nature occurring at the Worksite and shall establish regular intervals of collection and disposal of such materials and waste. The CONTRACTOR shall also keep its haul roads free from dirt, rubbish, and unnecessary obstructions resulting from its operations. Care shall be taken to prevent spillage on haul routes. Any such spillage shall be removed immediately and the area cleaned by the CONTRACTOR. Equipment and material storage shall be confined to areas approved by the ENGINEER. Disposal of all rubbish and surplus materials shall be off the site of construction, at the CONTRACTOR's expense, all in accordance with local codes and ordinances governing locations and methods of disposal, and in conformance with all applicable safety laws, and the requirements of the OSHA Safety and Health Standards for Construction. All cleanup cost shall be included in the CONTRACTOR's Bid.

D. Sanitation

1. Fixed or portable chemical toilets shall be provided for the use of the CONTRACTOR's employees. These accommodations shall be maintained in a neat and sanitary condition. Toilets at construction sites shall conform to the requirements of Title 8, California Code of Regulations.

2. Wastewater conveyance and disposal shall not be interrupted. Should the CONTRACTOR disrupt existing sewer facilities, sewage shall be conveyed in closed conduits and disposed of in a sanitary sewer system. Sewage shall not be permitted to flow in trenches or be covered by backfill.

3. The CONTRACTOR shall establish a regular schedule for collection of all sanitary and organic waste. All wastes and refuse from sanitary facilities provided by the CONTRACTOR or organic material wastes from any other source related to the CONTRACTOR's operations shall be disposed of away from the site in a manner satisfactory to the INSPECTOR and in accordance with all laws and regulations pertaining thereto. Disposal of all such wastes shall be at the CONTRACTOR's expense.

E. Chemicals

1. The following paragraph does not relieve the CONTRACTOR from its responsibility for obtaining prior approval from the ENGINEER for chemical usage when otherwise required.

2. The CONTRACTOR shall provide four (4) copies of the MSDS to the INSPECTOR for all chemicals used during project construction or furnished for project operation, prior to bringing them on site, whether defoliant, soil sterilant, herbicide, pesticide, disinfectant, polymer, reactant, or of other classification, which shall show approval of either the U.S. Environmental Protection Agency or the U.S. Department of Agriculture. Use of all such chemicals and disposal of residues shall be in strict accordance with the printed instructions of the manufacturer and with all other applicable laws and regulations.

F. Lead paint notification

1. The CONTRACTOR is hereby notified that the facility under this Contract may contain Lead (Pb), Chromium (Cr) and Molybdenum (Mo).

2. If any paints containing Lead or Chromium are to be physically disturbed or made airborne during the progress of the Work by activities such as abrasive blasting, welding, cutting or torch burning, the CONTRACTOR shall provide appropriate worker protection in accordance with OSHA Lead in Construction Standard and in any other applicable regulations.

3. All paint which is removed or disturbed during the progress of the Work or any demolition debris which contains these paints, either of which contains in excess of 5 ppm (mg/l) Lead or Hexavalent Chromium when tested in accordance with the Waste Extraction Test (WET) method of the California Code of Regulations, Title 22, shall be disposed of as

hazardous waste. The CONTRACTOR shall be responsible for such disposal in accordance with all applicable laws and regulations.

G. Hazardous Waste

1. Hazardous waste generated by the CONTRACTOR at the site shall be disposed of in accordance with NOTIFICATION OF HAZARDOUS SUBSTANCES of the General Conditions.

H. Odor Control

1. The CONTRACTOR shall furnish all labor, materials, and equipment required and shall carry out effective measures whenever and as often as necessary to prevent the discharge of a nuisance odor from its operation into the atmosphere in such quantity as will violate the regulations of any legally constituted authority. During construction, the CONTRACTOR shall notify the ENGINEER and the INSPECTOR at least forty-eight (48) hours in advance when potential odor-causing activities are scheduled for construction.

I. Drainage Control

1. The CONTRACTOR shall maintain drainage within and through the Work areas. Earth dams will not be permitted in paved areas. Temporary dams of sandbags, asphaltic concrete, or other acceptable material will be permitted when necessary. Such dams shall be removed from the site as soon as their use is no longer necessary.

J. Graffiti Control

1. Throughout all phases of Work, including suspension of work, and until final acceptance, the CONTRACTOR shall keep all equipment, field offices, storage facilities and other facilities free of graffiti. Graffiti shall be painted over, masked or cleaned off within twenty-four (24) hours after notification by the INSPECTOR

K. Vermin Control

1. At the time of acceptance, structures entirely constructed under the Contract shall be free of rodents, insects, vermin, and pests. Necessary extermination work shall be arranged and paid for by the CONTRACTOR as part of the work within the contract time, and shall be performed by a licensed exterminator in accordance with requirements of governing authorities. The CONTRACTOR shall be liable for injury to persons or property and responsible for the elimination of offensive odors resulting from extermination operations.

L. Pre- and Post-Construction Assessment and Survey Documentation (PCASD)

1. The CONTRACTOR shall be responsible for any damages to the adjacent properties caused by the CONTRACTOR or its Subcontractors. This includes damage to the onsite structure Fernangeles Recreation Center at 8851 Laurel Canyon Blvd, Sun Valley, CA, and two additional structures onsite.

2. The CONTRACTOR shall implement assessment damage prevention and measures as necessary. As a minimum, the CONTRACTOR shall secure the services of a property assessment company to prepare a PCASD report for adjacent premises and structures at addresses and locations listed below to differentiate the existing conditions from post constructions:

   A. Recreation Center Structures and Buildings located onsite

   B. Two additional properties/structures as requested by the Engineer.

3. The property assessment company shall have a minimum experience of 10 years performing similar work including have establish forms and procedures for petitioning right-of-entry from property owners and renters. The lead investigator/assessor of the property assessment company shall have a minimum of 5 years experiences in conducting this type of work on over 30 similar properties and / or structures

4. Report shall be in color, minimum three (3) hard copies, and an electronic (pdf) copy. Each property/structure shall have its own separate report. The interior and exterior survey includes, but is not limited to, visual observation of: the interior ceilings, walls, floors, windows, doors, basement, stairs, the exterior walls, roof, walkways, driveways, retaining walls, perimeter walls, and other special features currently on the properties, with accompanying photographs. All reports shall be signed by both the lead assessor and executive level representatives. Property owners shall be provided with a hard copy of each report.

5. Each photograph shall include date, time, location and direction of view. The PCASD report includes attached “Notification Letter” to be signed by the property or/and rental owners. Also, any observed existing damage shall be identified as “low”,” medium”, or of “high” severity, or similar rating system.

6. The pre-construction assessment survey and report shall be conducted and prepared just prior to implementing any work adjacent to identified addresses and locations. However, ample time shall be scheduled to secure right-of-entry in advance of actual survey.

7. The post-construction assessment survey and report shall be conducted and prepared immediately after substantial completion of work at each address and/or location, or as directed in writing by the ENGINEER.

8. The CONTRACTOR shall be responsible for all the repair costs if the damages to existing facilities are caused by CONTRACTOR.

9. All costs for performing the PCASD report shall be included in Bid Items. The City has the option to cancel the need for conducting the post-construction survey and related report for any identified item and receive corresponding credit

(END OF SECTION)

ATTACHMENT 01562-A1

REQUIREMENTS FOR MITIGATION MONITORING

See the following sections of the SWPPP (Appendix):

7.2 Monitoring and Reporting Requirements
- 7.2 (a) Construction Site Monitoring (CSMP) Requirements
- 7.2 (b) CSMP Monitoring Description
- 7.2 (c) Objectives
- 7.2 (d) Visual Observation and Sample Collection Exemptions

7.3 Visual Monitoring (Inspection) Requirements for Qualifying Rain Events

7.4 Water Quality Sampling and Analysis
- 7.4 (a) Effluent Analysis Requirement
- 7.4 (b) Effluent Sampling Schedule
- 7.4 (c) Number of Effluent Samples
- 7.4 (d) Effluent Sampling Locations
- 7.4 (e) Storm Water Sample Collection and Handling Instructions
- 7.4 (f) Monitoring Methods
- 7.4 (g) Analytical Methods
- 7.4 (h) Non-Storm Water Discharge Monitoring Requirements
- 7.4 (i) Non-Visible Pollutant Monitoring Requirements
- 7.4 (j) Watershed Monitoring Option

7.5 Particle Size Analysis for Project Justification

7.6 Records

7.7 NAL Exceedance Report

SECTION 01562
ENVIRONMENTAL MITIGATION OR CONDITIONS

1.1 THE REQUIREMENT

A. The CONTRACTOR shall mitigate the adverse environmental impacts associated with the Work of the Contract. The CONTRACTOR shall indemnify and hold harmless the CITY from any and all fines, penalties or damages incurred by the CITY for violation of any environmental mitigation measures or permit caused by the CONTRACTOR's failure to comply with environmental Mitigation Measures (MM) and/or Best Management Practices (BMPs) of this Article. The measures that the CONTRACTOR shall take to mitigate environmental impacts include, but are not limited to the following:

1. Implement a Fugitive Dust and Erosion Control Plan (FDECP) that meets or exceeds SCAQMD requirements and the CITY'S FDECP for this site.

2. Comply with the General Construction Activity Storm Water Permit and the Storm Water Pollution Prevention Plan for this site.

3. Comply with the requirements of NOTIFICATION OF HAZARDOUS SUBSTANCES of the General Conditions.

4. Comply with all MM and BMPs contained in the Initial Study/Mitigated Negative Declaration (IS/MND). Note specific requirement for Fernangeles is sections NOI-2 of the MMRP.

5. Protect sensitive habitats and species through the use of fencing, to prohibit construction personnel access to adjacent habitat areas, and with dust control measures of the FDECP.

6. Comply with the following emission control measures to minimize construction activity emissions, at no additional cost to the CITY:

   a. Stop construction activities during Stage II smog alerts which will be announced to the CONTRACTOR by the ENGINEER;

   b. Reduce construction equipment emissions by shutting off all equipment not in actual use;

   c. Reduce construction-related traffic congestion;

   d. Provide rideshare incentives for construction personnel;

   e. Tune and maintain construction equipment properly;

   f. Use low-sulfur/low nitrogen fuel for construction equipment, if available;

   g. Provide transit incentives for construction personnel;

   h. Configure construction parking to minimize traffic interference;

   i. Minimize obstruction of through-traffic lanes;

j. Provide a flagperson to facilitate traffic flow and prevent traffic congestion;

k. Schedule operations affecting roadways for off-peak traffic hours.

l. The Contractor shall notify the LABOE Project Inspector and Construction Manager twenty-one (21) calendar days in advance of any vegetation disturbance or ground-disturbing activities during the avian season, February 1st to September 1st.

7. Comply with the Mitigation Monitoring Program (see Section 5 of "Draft Final Mitigated Negative Declaration Stormwater Capture Parks Program.") Mitigation measures and best management practices include, but are not limited to, the following:

a. AQ-1:

(1) The program shall use off-road diesel-powered construction equipment that meets or exceeds the CARB and USEPA Tier 4 off road emissions standards for equipment rated at 50 horsepower or greater and not identified under (2) or (3) below. Such equipment will be outfitted with Best Available Control Technology (BACT) devices, including CARB-certified Level 3 Diesel Particulate Filter or equivalent. These requirements shall be included in applicable bid documents and successful contractor(s) must demonstrate the ability to supply each equipment.

(2) All dumpers/tenders, used on site shall either be certified Tier 3 with a CARB-certified Level 3 Diesel Particulate Filter or equivalent; certified Tier 4 with a CARB-certified Level 3 Diesel Particulate Filter or equivalent or equivalent, or alternatively fueled (e.g., gasoline, electric, CNG).

(3) At the minimum, the following equipment shall be electric: air compressors, cement and mortar mixers, concrete saws, forklifts, pumps. Diesel generators shall be placed with electricity from the grid either permanent or temporary, or replaced with alternative (non-diesel) fuels.

(4) Equipment requirements identified under (1), (2), and (3) above all be included in applicable bid documents and successful contractor(s) must demonstrate the ability to supply such equipment. A copy of each unit's certified tier specification or model year specification and CARB or SCAQMD operating permit (if applicable) shall be available upon request at time of mobilization of each applicable unit of equipment.

(5) During the site clearing and preparation, grading and excavation, and soil filling, revegetation, and park

improvement phases, watering must be conducted a minimum of 4 times per day during dry weather.

(6) The fleet shall be composed of a mix of 2014 or newer trucks. The contractor shall provide documentation as specified by LABOE Project Inspector and/or Construction Manager specifying the year/make/model of the trucks. The city shall ensure that on-road haul trucks including delivery and those conveying excavated material do not exceed the following daily truck limits:

The daily truck limit for this project shall not exceed 27 trucks per day.

(a) If the procurement of 2014 or newer trucks is unfeasible, the contractor shall provide a statement specifying why it is unfeasible. If the procurement of 2014 or newer trucks is unfeasible, the contractor may use older trucks, but the daily truck limits are the following:

The daily truck limit for this project shall not exceed 20 trucks per day.

b. BIO-1: Special-Status Wildlife Species. Construction activities at any of the nine project sites could result in impacts to the Cooper's Hawk (*Accipiter cooperii*), a California Species of Special Concern, where mature trees are present. Similarly, construction activities may also impact other nesting bird species that may nest in a variety of vegetation as well as man-made structures. Construction activities should occur outside of the avian nesting season. If the avian nesting season cannot be avoided and construction or vegetation removal occurs from February 1 to September 1, the City shall implement the following to avoid and minimize impacts to nesting birds and raptors:

(a) During the avian breeding season, a qualified biologist shall conduct a preconstruction avian nesting survey no more than 7 days prior to vegetation disturbance or ground-disturbing activities. If construction begins in the non-breeding season and proceeds continuously into the avian nesting season, no surveys are required. However, if there is a break of 7 days or more in construction activities during the nesting season, a new nesting bird survey shall be conducted before construction begins again.

(b) The preconstruction survey shall cover all reasonably potential nesting locations on and within 100 feet of the construction areas. A 300-foot radius shall be surveyed in areas containing suitable habitat for nesting raptors, such as trees and utility poles.

(c) If an active nest is found during the preconstruction avian nesting survey, a qualified biologist shall designate a suitable buffer for all passerine birds and raptor species. The nest site area shall not be disturbed until the nest becomes inactive, the young have fledged, the young are no longer being fed by the parents, the young have left the area, and the young will no longer be impacted by the Program. Buffer areas may be increased upon recommendation of a qualified biologist if any endangered, threatened, California Fully Protected, or California Species of Special Concern are identified during the preconstruction surveys.

(d) If the nest(s) are found in an area where ground disturbance is scheduled to occur, the City or its contractor shall avoid the area by delaying aground disturbance in the area until a qualified biologist has determined that the birds have fledged and are no longer reliant upon the nest or parental care for survival.

(e) Prior to removal of trees in any parks, the City shall retain a qualified bat specialist to conduct bat surveys to confirm whether bats are using the trees as roosting sites. The surveys should encompass a minimum buffer area of 100 feet around the parks. The results of the surveys will be provided to CDFW. In the event that bat roots are identified, an additional bat species survey will be conducted using acoustic survey techniques necessary to confirm the species of bat using the area. If the species survey concludes that sensitive bat species are present, the City shall consult with CDFW pursuant to the California Fish and Game Code section 2081. Removal of special status bats would not be conducted without prior approval from CDFW.

c. CUL-2: Prior to the start of ground-disturbing activities, the City shall retain a qualified archaeologist meeting the Secretary of the Interior's Professional Qualifications Standards for archaeology (U.S. Department of the Interior, 2008) to carry out the following cultural resources mitigation measures.

d. CUL-3: Prior to start of ground-disturbing activities, the qualified archaeologist shall prepare a cultural resources sensitivity training. All construction personnel shall receive sensitivity training prior to beginning work onsite. Construction personnel should be informed of the types of archaeological resources that may be encountered, and of the proper procedures to be enacted om the event of an inadvertent discovery of

archaeological resources or human remains. The City should ensure that construction personnel are made available for and attend the training and retain documentation demonstrating attendance.

e. CUL-4: Prior to the start of any project-related ground-disturbing activities, LADWP will provide a qualified archaeologist shall prepare a Cultural Resources Monitoring Plan (CRMP) in consultation with Tribes that requested consultation under AB52. Native American monitoring, which shall include all ground-disturbing activities The CRMP shall include monitoring protocols to be carried out during Program-related construction. The CRMP shall stipulate that Native American monitors associated with any of the Tribes that have been consulted with under AB52 be retained to monitor Program-related ground disturbance stipulated in the CRMP.

f. CUL-5: In the event of the unanticipated discovery of archaeological materials, paleontological materials, and/or human remains during the Program implementation, all work shall immediately cease in the area (within approximately 100 feet) of the discovery until it can be evaluated by the qualified archaeologist. Construction shall not resume until the qualified archaeologist has conferred with the City and the Native American monitors on the significance of the resource.

   If it is determined that the discovered archaeological resource constitutes a significant resource, avoidance and preservation in place is the preferred manner of mitigation. Preservation in place may be accomplished by, but is not limited to, avoidance, incorporating the resource into open space, capping, or deeding the site into a permanent conservation easement. In event that preservation in place is demonstrated to be infeasible and data recovery through excavation is the only feasible mitigation available, a Cultural Resources Treatment Plan shall be prepared and implemented by the qualified archaeologist in consultation with the City and Native American monitors that provides for adequate recovery of the scientifically consequential information contained in the archaeological resource. The City shall consult the appropriate Native American representatives in determining treatment and disposition for prehistoric or Native American resources for prehistoric or Native American resources to ensure cultural values ascribed to the resource beyond those that are scientifically important are considered.

g. GEO-1: In the event that the depth to groundwater rises to less than 50 feet bgs as measured in nearby wells, the stormwater infiltration process shall be stopped and the stormwater routed to the surface storm drain system until groundwater depths decrease to below 50 bgs.

h. GEO-3: Prior to start of any ground-disturbing activities, the Qualified Paleontologist shall contribute to any construction worker cultural resources sensitivity WEAP training (Worker Environmental Awareness Program), a program that educates

project managers and workers about regulatory compliance and responsibilities for conserving environmental resources, materials outlined in Mitigation Measure CUL-2, either in person or via a training module provided to the Qualified Archaeologist. This training shall include information on what types of paleontological resources could be encountered during excavations, what to do in case an unanticipated discovery is made by a worker, and laws protecting paleontological resources. All construction personnel shall be informed of the possibility of encountering fossils and instructed to immediately inform the construction foreman or supervisor if any fossils are unexpectedly unearthed in an area where a paleontological monitor is not present. The Contractor shall ensure that construction personnel are made available for and attend the training and retain documentation demonstrating attendance. Such documentation shall be made available to the City, whenever requested.

i. NOI-1: For construction activities adjacent to noise-sensitive receptors (e.g., residences and schools), the contractor shall ensure that all construction equipment, fixed or mobile, are equipped with properly operating and maintained noise shielding and muffing devices consistent with manufactures' standards. The contractor shall use muffler systems (e.g., absorptive mufflers) that provide a minimum reduction of 5 dBA compared to the same equipment without installed muffler system, reducing maximum construction noise levels. The contractor shall keep documentation on-site demonstrating that the equipment has been maintained in accordance with the manufacturers' specifications. The contactor shall also keep documentation on-site verifying compliance with this measure.

j. NOI-2: For construction activities adjacent to noise-sensitive receptors (e.g., residences and schools), where physically and technically feasible, the contractor shall provide an 8-foot-tall to 20-foot-tall temporary fence or other barrier placed between the project construction area and the sensitive receptor with a performance standard of achieving a 15 dBA noise level reduction at the sensitive receptor. The temporary fence or barrier shall be used during peak noise-generating construction phases when the use of heavy equipment is prevalent. A noise barrier is not required if it would pose a safety risk or unreasonably prevent access to the construction area as deemed by the on-site construction manager, such as in areas that have limited equipment maneuvering space or access.

k. NOI-3: Limit engine idling of construction equipment (e.g., haul trucks, loaders) to a minimum of 200 feet from any boundary of the nearest sensitive receptors.

l. NOI-4: Prior to commencement of construction activities, the City shall notify in writing adjacent residents, schools and businesses near the various park project sites, of proposed construction activities and the tentative schedule.

The notices shall also provide a contact person and hotline where local residents, schools, or business owners can call during active construction with questions or comments. The City shall respond to inquiries regarding construction noise and vibration. Notices and construction signs will include a website address which will be updated quarterly and will include Program-related information.

m. TR-1: For parks where construction would occur outside of park facilities or that may impact roadways surrounding park areas, a CTMP shall be developed by the City or its contractor and approved by LADOT prior to the start of construction. The CTMP may include, but is not limited to the following:

(1) Work area traffic control plans for all in-street construction sites to the satisfaction of LADOT, appropriate prior to the start of any construction work. The plans shall include such elements as the location of any lane closures, restricted hours during which lane closures would not be allowed, local traffic detours, protective devices and traffic controls (such as pavement markings, barricades, cones, flagmen, lights, warning beacons, temporary traffic signals, turning movement restrictions, warning signs), access to abutting properties, and provisions to maintain emergency access through construction work areas.

(2) The dates and locations where in-street and off-street construction activities are planned.

(3) If any street segments will be limited to one-way traffic, prepare detour plans over parallel routes.

(4) Require signage indicated alternative routes when construction will occur.

(5) Identify and consolidate staging areas for equipment and materials, as feasible.

(6) Consolidate truck trips, such that multiple worksites can be served, as feasible.

(7) Promote carpooling among workers.

(8) Contact emergency service providers in the project vicinity to notify of the location, hours, and duration of in-street construction. Provide advance notice of any lane closures and changes to local access and identify alternative routes where appropriate.

B. Comply with the more stringent requirements of the current CITY or local noise ordinances, which may include:

1. Construction of noise barriers;

2. Use of low-noise-generating construction equipment;

3. Maintenance of mufflers and ancillary noise abatement equipment;

4. Use of vibration pile drivers and other techniques that result in less noise than impact pile drivers;

5. Scheduling high noise producing activities during periods that are least sensitive;

6. Routing construction related truck traffic away from noise-sensitive areas;

7. Reducing construction vehicle speeds.

C. The CONTRACTOR, a minimum of thirty (30) days prior to beginning work on each new major activity, shall submit a written plan to the ENGINEER, for approval, detailing how the environmental impacts for the activity shall be mitigated in accordance with the Mitigation Monitoring and Reporting Program. The plan shall include, at a minimum:

1. Anticipated site conditions;

2. Equipment to be utilized;

3. Means and methods of construction.

4. Impacts likely to occur;

5. Mitigation methods to be employed.

6. Best Management Practices to be employed.

END OF SECTION

(SEE ATTACHMENT)

ATTACHMENTS TO SECTION 01562

Attachments to General Requirements Section 001562 consists of one (1) document, as follows:

ATTACHMENT NUMBER	TITLE OF ATTACHMENT	NUMBER OF PAGES IN THIS ATTACHMENT
01562-A1	Internal Roles and Responsibilities for the Mitigation Monitoring and Reporting Program	1

ATTACHMENT 01562-A1

REQUIREMENTS FOR MITIGATION MONITORING

See the following sections of the SWPPP (Appendix):

7.2 Monitoring and Reporting Requirements
- 7.2 (a) Construction Site Monitoring (CSMP) Requirements
- 7.2 (b) CSMP Monitoring Description
- 7.2 (c) Objectives
- 7.2 (d) Visual Observation and Sample Collection Exemptions

7.3 Visual Monitoring (Inspection) Requirements for Qualifying Rain Events

7.4 Water Quality Sampling and Analysis
- 7.4 (a) Effluent Analysis Requirement
- 7.4 (b) Effluent Sampling Schedule
- 7.4 (c) Number of Effluent Samples
- 7.4 (d) Effluent Sampling Locations
- 7.4 (e) Storm Water Sample Collection and Handling Instructions
- 7.4 (f) Monitoring Methods
- 7.4 (g) Analytical Methods
- 7.4 (h) Non-Storm Water Discharge Monitoring Requirements
- 7.4 (i) Non-Visible Pollutant Monitoring Requirements
- 7.4 (j) Watershed Monitoring Option

7.5 Particle Size Analysis for Project Justification

7.6 Records

7.7 NAL Exceedance Report

SECTION 01563
POLLUTION CONTROL - SEWAGE SPILL PREVENTION AND RESPONSE REQUIREMENTS

1.1 THE REQUIREMENT

A. General

1. The CONTRACTOR shall observe and comply with the CITY's policy of "ZERO SANITARY SEWER OVERFLOWS".

2. The CONTRACTOR shall be in full charge and be responsible for the Jobsite, the construction Work of this Contract, and subject to the directions of the ENGINEER or the INSPECTOR.

3. The CONTRACTOR shall observe and comply with all Federal, State, and local laws, ordinances, codes, orders, and regulations which in any manner affect the conduct of the work, specifically as it relates to sewage spills.

4. The CONTRACTOR shall be fully responsible for preventing sewage spillage, containing any sewage spillage, recovery and legal disposal of any spilled sewage, any and all fines, penalties, claims and liability arising from negligently causing a sewage spillage and any violation of any law, ordinance, code, order, or regulation as a result of the spillage.

5. The CONTRACTOR shall exercise care not to damage existing public and private improvements, interrupt existing services and/or facility operations which may cause a sewage spill. Any reasonably anticipated utility and/or improvement which is damaged by the CONTRACTOR shall be immediately repaired at the CONTRACTOR's expense. In the event that the CONTRACTOR damages an existing utility, interrupts an existing service which causes a sewage spill, the CONTRACTOR shall immediately notify the CITY representatives. The CONTRACTOR shall request and obtain from the ENGINEER an emergency roster of the designated CITY representatives with their respective telephone numbers, pager numbers, and cellular phone numbers. The CONTRACTOR shall take all measures necessary to prevent further damage or service interruption, and to control, contain and clean up the resultant impacts of the damage, service interruption and any resulting sewage spill(s) as mentioned in Section 1.1.A. 6, below.

6. Prior to the start of construction, the CONTRACTOR shall develop and submit to the ENGINEER, for review and approval, a written Spill Response Plan. The Spill Response Plan shall be developed to respond to any construction related sewage spill. This shall include, but is not limited to:

   a. The CONTRACTOR shall identify all nearby waterways, channels, catch basins and entrances to underground existing storm drains and furnishing all of the necessary materials, supplies, tools equipment, labor and other services.

b. The CONTRACTOR shall make arrangements for an emergency response unit comprised of emergency response equipment and trained personnel to be immediately dispatched to the Jobsite in the event of a sewage spill(s).

c. The CONTRACTOR shall develop and include an emergency notification procedure, which includes an emergency response roster with telephone numbers and arrangements for backup personnel and equipment and an emergency notification roster of the design CITY representatives. The CONTRACTOR shall designate a primary and secondary representative and include their respective phone numbers, pager numbers, and cellular phone numbers. The CONTRACTOR's representatives shall be accessible and available at all times to respond immediately to any construction related emergency.

7. If called for in the Plans and/or Specifications, or if sewer bypass is needed to construct the Project, the CONTRACTOR shall continuously monitor the flow levels downstream and upstream of the construction location to detect and possible failure that may cause a sewage backup and spill. The CONTRACTOR shall include the means and methods of monitoring the flow in their Spill Response Plan.

a. In case of sewage spill, the CONTRACTOR shall act immediately without instructions from the CITY, to control the spill and take all appropriate steps to contain it in accordance with their Spill Response Plan. The CONTRACTOR shall immediately notify the CITY representatives of the spill and all actions taken. The CONTRACTOR shall, within three (3) working days from the occurrence of the spill, submit to the ENGINEER a written confirmation describing the following information related to the spill: the location on a current Thomas Bros. guide map; the nature and volume; the date and time; the duration; the cause; the type of remedial and/or preventive action taken; and the water body impacted and results of any necessary monitoring. Requests for additional compensation for the handling of the spill shall be submitted to the ENGINEER as a construction claim. The CONTRACTOR shall assure the validity, accuracy, and correctness of the claim under penalty of perjury. The ENGINEER may institute further corrective actions, as deemed necessary, to fully comply with existing law, ordinance, code, order or regulation. The CONTRACTOR shall be responsible for all costs incurred for the corrective actions.

b. It shall be the CONTRACTOR's responsibility to assure that all field forces, including Subcontractors, know and obey all safety and emergency procedures, including the Spill Response Plan, to be maintained and followed at the Jobsite.

B. Sewer Bypass

1. The CONTRACTOR shall provide temporary means to maintain and handle the sewage flow in the existing system as required to complete the necessary construction.

2. The CONTRACTOR shall prepare and submit a detailed bypass plan to the ENGINEER for approval of the ENGINEER and the facility OWNER before the bypass is installed.

3. The CONTRACTOR shall size the bypass system to handle the peak flow of the system. The CONTRACTOR shall include a one-hundred percent (100%) backup in the bypass system. The CONTRACTOR shall utilize the backup system to mitigate any additional wet weather flows, perform the necessary maintenance and repairs on the bypass system, and exercise and ensure the operability of the backup system. Each pump, including the backup pumps, shall be a complete unit with its own suction and discharging pumping. The CONTRACTOR shall operate the backup bypass system for a minimum of twenty-five percent (25%) of the time on a weekly basis. The backup bypass system shall be fully installed and operational.

4. Prior to the full operation of the bypass system, the CONTRACTOR shall demonstrate, to the satisfaction of the ENGINEER and INSPECTOR, that both the primary and backup bypass systems are fully functional and adequate, and shall certify the same, in writing, to the ENGINEER in a manner acceptable to the ENGINEER.

5. The CONTRACTOR shall provide one dedicated fuel tank for every single pump/generator, if fuel/generator driven pumps are used. The CONTRACTOR shall provide a fuel level indictor outside each fuel tank. The CONTRACTOR shall continuously (while in use) monitor the fuel level in the tanks and ensure that the fuel level does not drop below a level equivalent to two (2) hours of continuous bypass system operation. The CONTRACTOR shall take the necessary measures to ensure the fuel supply is protected against contamination. This includes, but is not limited to, fuel line water traps, fuel line filters, and protecting fuel stores from precipitation.

6. The CONTRACTOR shall provide an emergency standby power generator, if electric power driven pumps are used.

7. The CONTRACTOR shall continuously (while in use) monitor the operation of the bypass system and all impacted facilities. The CONTRACTOR shall submit, as part of their bypass plan, their monitoring procedure and frequency. The CONTRACTOR shall maintain a log of the monitoring in a manner acceptable to the ENGINEER and INSPECTOR.

8. The CONTRACTOR shall continuously monitor the flow levels downstream and upstream of the bypass to detect any possible failure that may cause a sewage backup and/or spill. The CONTRACTOR shall include the means and methods of monitoring the flow in their Spill Response Plan.

9. The CONTRACTOR shall routinely inspect and maintain the bypass system, including the backup system. The CONTRACTOR shall submit as part of their bypass plans their maintenance procedures and frequency. The CONTRACTOR shall maintain a log of all pertinent

inspection, maintenance and repair records in a manner acceptable to the ENGINEER and INSPECTOR.

10. All costs associated with sewer bypass requirements listed above (Section B-1 through 9) shall be included in the Bid Item “Sewer bypass system”.

C. Additional Insurance Requirements

1. The CONTRACTOR shall obtain and maintain an additional insurance coverage for Pollution Liability with limits and requirements set forth in Part III of the Proposal for Federal Funded projects, or Part IV of the Proposal for City funded projects. The limits and requirements for Pollution Liability shall be in an amount sufficient to cover potential losses from sudden and accidental pollution. All costs associated with the requirements for “Sewage Spill Prevention and Response Requirements”, including additional insurance, shall be included in the prices bid for other related bid items. However, CONTRACTORS will be required to submit, with their bid, a cost breakdown for the items required by the “Sewage Spill Prevention and Response Requirements”.

END OF SECTION 01563

SECTION 01571
STORMWATER POLLUTION CONTROL
MEASURES FOR CONSTRUCTION ACTIVITIES

1.1 THE REQUIREMENT

A. General

1. The Contractor shall exercise every reasonable precaution to protect channels, storm drains, and bodies of water from pollution.

2. Conduct and schedule operations to minimize or avoid muddying and silting channels, drains, and waters.

3. As required, obtain permits for erosion and water pollution control from the appropriate jurisdictional agency before starting Work. All costs for work required for compliance with this Section shall be included within the Bid Prices.

.

4. Provide any necessary water pollution control devices to prevent, control, and abate water pollution, and implement good housekeeping pollution control measures to reduce the discharge of pollutants from work sites to the maximum extent practicable. These water pollution control devices include drains, gutters, slope protection blankets and retention basins and shall be constructed concurrently with other Work at the earliest practicable time.

5. Exercise care in preserving vegetation and protecting property, to avoid disturbing areas beyond the limits of the Work. Promptly repair any damage caused by Contractor operations.

6. Comply with the specific requirements based on acreage of disturbed soil.

7. Penalties: Failure to comply with this Section may result in significant fines and possible imprisonment. The RWQCB or other prosecuting authority may assess fines of up to $32,500 per day for each violation. Should the City be fined or penalized as a result of the Contractor failing to comply with this Section, the Contractor shall reimburse the City for any and all fines, penalties and related costs.

8. Notification and Report: If pollution occurs in the work area for any reason or when the Contractor becomes aware of any violation of this Section, correct the problem and immediately notify the Inspector and also notify the LADWP Wastewater Quality and Compliance Group. In addition, submit a written report to the Engineer within seven (7) calendar days describing the incident and the corrective actions taken. If either the Inspector or Engineer is first to observe pollution or a violation, the Contractor shall also explain in the written report why the Work was inadequately monitored.

9. The provisions of this Section describe minimum compliance and do not preclude other more stringent stormwater pollution control measures that may be required in the Contract.

B. Definition

1. Construction Activity: Includes clearing, grading, excavation, stockpiling, and reconstruction of existing facilities involving removal and replacement. Construction activity does not include routine maintenance such as, maintenance of original line and grade, hydraulic capacity, or original purpose of the facility. If construction activity is part of a larger common plan of development, the amount of disturbed soil is the total land area of disturbed soil that results under the common plan.

C. Projects Having Less Than One Acre of Disturbed Soil

Projects with construction activity that will result in less than one acre of disturbed soil, the Contractor shall comply with the following minimum water quality protection requirements:

1. Retain eroded sediments and other pollutants on-site and do not allow transportation from the site by sheet flow, swales, area drains, natural drainage, or wind. Control slope and channel erosion by implementing an effective combination of best management practices (BMPs). Such BMPs include scheduling grading during non-rainy seasons, planting and maintaining vegetation on slopes and covering erosion-susceptible slopes.

2. Protect stockpiles of earth and other construction-related materials from being transported from the site by wind or water.

3. Properly store and handle fuels, oils, solvents, and other toxic materials to not contaminate the soil or surface waters, enter the groundwater, or be placed where they may enter a live stream, channel, drain, or other water conveyance facility. Protect all approved toxic storage containers from weather. Clean spills immediately and properly dispose of cleanup materials. Spills shall not be washed into live streams, channels, drains, or other water conveyance facilities.

4. Do not wash excess or waste concrete into the public way or any drainage system. Retain concrete wastes on-site until they can be appropriately disposed of or recycled.

5. Deposit trash and construction-related solid wastes in covered receptacles to prevent contamination of rainwater and dispersal by wind.

6. Do not allow sediments and other materials to be tracked from the site by vehicle traffic. Stabilize construction entrance roadways to inhibit sediments from being deposited onto public ways. Immediately sweep up accidental depositions. Do not allow depositions to be washed away by rain or by any other means.

7. Contain non-stormwater runoff from equipment or vehicle washing and any other activity at the work site.

8. At completion of the Work, clear the worksite of debris and restore to a condition at least equal to or better than prior to construction.

9. When construction activity with grading is likely to occur during the rainy season from October 1 through April 15, prepare a Wet Weather Erosion Control Plan (WWECP) per LAMC Section 61.02. The WWECP must be submitted to the Engineer for approval within thirty (30) calendar days after Notice to Proceed.

Guidance on preparing the WWECP can be found in "Development Best Management Practices Handbook - Part A, Construction Activities", adopted by the Board and as authorized by LAMC Section 64.72. The handbook can be viewed at or obtained at cost at Bureau of Engineering public counters.

10. When working in live streams, these are additional water pollution control requirements.

11. Erect barriers sufficient to prevent muddying or polluting streams.

12. Prior to removing materials from a flowing stream, use a stream bypass or other equivalent means to keep the flow in the stream free of the mud or silt from the removal operations.

13. Avoid transporting materials across live streams. If not possible, the transportation operation must be designed to prevent materials from falling into the stream and cannot muddy the stream.

14. Equipment may not be operated in a live stream or channel unless the Contractor can demonstrate to the Engineer's satisfaction that no other practical alternatives exist. The equipment must be designed to prevent materials from falling into the stream and cannot muddy the stream.

15. Do not allow fresh portland cement or fresh portland cement concrete to enter the water flowing in streams, channels or drains.

16. Do not allow material derived from the Work to be deposited in a live stream, channel or drain.

D. Projects Having One Acre or More of Disturbed Soil

Projects, including Linear Underground Projects (LUPS), with construction activity that will result in one acre or more of disturbed soil, or less than one acre but part of a larger common plan of development, the Contractor shall comply with the requirements included in Section 1.1.C above, and the following requirements:

1. The Contractor shall comply with General Permit 2009-0009-DWQ for Discharges of Storm Water Associated with Construction Activities (General Permit). A copy of the General Permit may be downloaded from the California State Water Resources Control Board (SWRCB) website using the following link: https://www.waterboards.ca.gov/water_issues/programs/stormwater/construction.html

2. The Contractor shall provide a Qualified Storm Water Pollution Prevention Plan (SWPPP) Developer (QSD) to prepare all Permit Registration Documents (PRDs), as defined in the General Permit. All PRDs must be uploaded to the SWRCB's General Permit web application called the Storm Water Multiple Application Report Tracking System (SMARTS) prior to commencement of construction activities. The SMARTS website link is: http://smarts.waterboards.ca.gov/smarts/faces/SwSmartsLogin.jsp. The PRDs include the Notice of Intent, Risk Assessment, Post-Construction Calculations, Site Map, SWPPP, and the first annual fee. The annual fee for this project is estimated to be $**509.00.** The Contractor must submit the prepared SWPPP to the City for review and approval prior to uploading it to the SMARTS system. Upon City approval, the SWPPP shall be uploaded by the Contractor and certified by the City's Legally Responsible

Person (LRP). At that time, the actual fee invoice will be provided by the City to the Contractor and the Contractor will submit payment to the State for the first annual fee. The Contractor is also responsible for all subsequent annual fees for this project.

3. This project has been determined to be a Risk Level 2. The Contractor shall comply with all visual monitoring, effluent water quality sampling, reporting, and record keeping requirements associated with this Risk Level, in accordance with the General Permit. For projects with Risk Level 2 or Risk Level 3, the Contractor must prepare and implement a Rain Event Action Plan, as described in the General Permit. The Contractor to submit all SWPPP related documents to the LADWP Wastewater Quality and Compliance Group to complete, certify, and submit the Annual Report in SMARTS.

4. The Contractor shall provide a Qualified SWPPP Practitioner (QSP) to implement all SWPPP requirements at the project site and monitor the effectiveness of the SWPPP, in accordance with the General Permit.

5. The Contractor shall prepare the Annual Report required by the General Permit and submit it to LADWP for review and approval by August 1st of each year. LADWP will prepare, certify and submit the annual report in SMARTS.

6. The Contractor shall provide and submit all reports and data necessary to LADWP for review and approval to complete the Notice of Termination (NOT) at the Completion of the Work, in accordance with the General Permit. LADWP will prepare, certify, and submit the NOT in SMARTS.

END OF SECTION

SECTION 01572
CONSTRUCTION AND DEMOLITION WASTE MANAGEMENT

1.1 The Requirement

A. The Construction and Demolition Waste Management (CMDW) Specification includes procedures for ensuring optimal diversion of construction and demolition waste generated by the project, and documentation procedures for tracking waste generation and diversion.
B. Each construction and/or demolition project shall reuse or recycle a minimum of 75% of the inert debris and 50% of the remaining construction and demolition debris generated by the project.
C. The project shall promote the City's sustainable building efforts by creating a resource-efficient and environmentally sensitive project and maintaining optimum control of the construction and demolition waste generated during the project.
D. The project shall use products with post-consumer recycled content to the greatest extent feasible. Refer to the California Integrated Waste Management Board's website for information about recycled content construction products.

1.2 Abbreviations

A. CalMAX: California Materials Exchange
B. C&D: Construction and Demolition
C. CCR: California Code of Regulations
D. CDRG: Construction and Demolition Recycling Guide
E. CIWMB: California Integrated Waste Management Board
F. LEA: Local Enforcement Agency
G. SWDD: Solid Waste Diversion and Disposal
H. WMP: Waste Management Plan

1.3 Definitions

A. "Certified Mixed Debris Processing Facility": A solid waste processing facility that accepts loads of mixed debris for the purpose of recovering re-usable and recyclable materials and disposing of the non-recyclable residual material. A Certified Mixed Debris Processing Facility has been certified by the City of Los Angeles to have a facility specific recycling rate for C&D waste and/or another facility specific recycling rate for municipal solid waste. See CDRG Section VII G for information on the current list of certified processors.
B. "Class III landfill": A landfill that accepts non-hazardous solid waste such as household, commercial, and industrial solid waste. A Class III landfill must have a CIWMB solid waste facilities permit and is regulated by the LEA.
C. "Construction and Demolition Recycling Guide": a publication by the Bureau of Sanitation's Solid Resources Citywide Recycling Division available at https://www.lacitysan.org/san/faces/home/portal/s-lsh-wwd/s-lsh-wwd-s/s-lsh-wwd-s-r/s-lsh-wwd-s-r-cdr?_adf.ctrl-state=1c96z0ucsc_5&_afrLoop=11601439069213214#!, or Solid Resources Citywide Recycling Division,1149 S. Broadway, 10th Floor, Los Angeles, CA 90015, (213) 485-2260; FAX (213) 485-3671.
D. "C&D Debris": Solid waste and recyclable materials that result directly from construction, remodeling, repair, demolition, or deconstruction of buildings and other structures, do not contain hazardous waste (as defined in CCR Title 22,

Section 66621.3, *et seq*.), and contain no more than one percent (1%) putrescible wastes by volume, calculated on a monthly basis. C&D debris includes, but is not limited to: asphalt, concrete, Portland cement, brick, lumber, wallboard, roofing material, ceramic tile, pipe, glass, carpet and associated packaging.

E. "Deconstruction": The process of taking apart a structure with the primary goal of preserving the value of all useful building materials, so that they may be reused or recycled.

F. "Disposal": Acceptance of solid waste at a legally operating facility for the purpose of landfilling.

G. "Diversion": Activities that result in reducing the amount of waste disposed at a landfill. This can include source reduction activities, composting, recycling, and reuse.

H. "Inert Backfill Site": A location, other than inert fill or other disposal facility, to which inert waste is taken for the purpose of filling an excavation, shoring, or another soils engineering operation.

I. "Inert Fill": A facility that can legally accept inert waste such as asphalt and concrete exclusively for the purpose of disposal.

J. "Inert Debris/Inert Waste": Solid waste and recyclable materials that are source separated or separated for reuse, do not contain hazardous waste (as defined in CCR, Title 22, section 66261.3 et. seq.) or soluble pollutants at concentrations in excess of applicable water quality objectives, and do not contain significant quantities of decomposable waste. Inert debris may not contain more than 1% putrescible wastes by volume calculated on a monthly basis. Gravel, rock, soil, sand and similar materials, whether processed or not, that have never been used in connection with any structure, development, or other human purpose are not inert debris.

K. "Mixed Debris": Material that includes commingled recyclable and non-recyclable construction and demolition debris.

L. "Mixed Debris Processing Facility": A solid waste processing facility that accepts loads of mixed debris for the purpose of recovering re-usable and recyclable materials and disposing of the non-recyclable residual materials. See also Certified Mixed Debris Processing Facility.

M. "Permitted Waste Hauler": A company that possesses a valid and current permit from the City of Los Angeles to collect and transport solid waste from individuals or businesses in the City of Los Angeles.

N. "Recycling": The process of sorting, cleaning, treating and reconstituting materials for the purpose of using the altered form in the manufacture of a new product. Recycling does not include burning, incinerating, or thermally destroying solid waste.

   1. On-site Recycling Materials that are sorted and processed for use in an altered form in the project, (e.g. concrete is crushed for use as base for a parking lot on the site)
   2. Off-site Recycling Source-separated materials hauled to another location and used in an altered form in the manufacture of a new product.

O. "Recycling Facility": An operation that can legally accept materials for the purpose of processing the materials into an altered form for the manufacture of a new product. Depending on the types of materials accepted and operating procedures, a recycling facility may or may not be required to have a Solid Waste Facilities permit from the CIWMB or be regulated by the LEA.

P. "Reuse": Materials that are recovered for use in the same form. This includes materials that are reused on-site or off-site.

Q. "Salvage": Materials recovered for reuse or sale or donation to a third party.

R. "Source Reduction": Any action causing a net reduction in the generation of solid waste. Source reduction includes, but is not limited to, reducing the use of

nonrecyclable materials, replacing disposable materials and products with reusable materials and products, reducing packaging, and reducing the amount of yard waste generated.

S. "Source-Separated Materials (Construction and Demolition Debris)": Material that is sorted at the site of generation by individual material type for the purpose of reuse or recycling, i.e., loads of concrete that are source-separated for delivery to a base course recycling facility to be crushed into road base material. Note: The Contractor may be able to save money on collection fees for source-separated material. Source-separated material is not subject to the City's 10% AB939 fee.

T. "Solid Waste": shall mean waste that the CIWMB has deemed acceptable for disposal at a Class III Landfill and shall not include source-separated material.

U. "Transfer Station": A facility that can legally accept solid waste for the purpose of temporarily storing the materials for re-loading onto other trucks and transporting them to a landfill for disposal, or recovering some materials for reuse or recycling. Transfer stations must be permitted by the CIWMB and regulated by the LEA.

1.4 DIVERSION REQUIREMENTS

A. The construction and demolition project shall reuse or recycle a minimum of 75% of the inert debris and 50% of the remaining construction and demolition debris generated by the project.

1.5 SUBMITTALS

A. Waste Management Plan (WMP): The Contractor shall conduct a site assessment and estimate the types and quantities of materials, under the project, that are anticipated for on-site or off-site processing, recycling, reuse, or disposal. See CDRG Section VII G, for a partial list of facilities that accept these materials for recycling.

1. After the contract is awarded and prior to the commencement of the project, the City project manager will schedule and attend a meeting with the Contractor to discuss the Contractor's proposed WMP. This plan shall be submitted to allow the City and the Contractor an opportunity to develop a mutual understanding regarding the recycling and reuse requirements and programs.
2. Not more than 20 working days after the meeting, and before the commencement of the project, the Contractor shall prepare and submit to the City project manager a written WMP, Attachment A. The plan shall show a minimum 75% recycling for inert debris expected from the project and 50% recycling for the remaining C&D debris expected from the project. The Contractor shall submit the plan in the format provided herein as Attachment A, Parts I and II. Instructions for filling out the form are in Attachment A, 'Instruction Sheet'. Work shall not begin until the project Engineer approves the WMP for the project.
3. If the Contractor expects a circumstance that the Contractor believes make it infeasible to comply with the Diversion Requirement, the Contractor may submit a written request for an exemption at the time the WMP is submitted. If the exemption request is not approved by the Engineer, the Contractor shall revise and resubmit a WMP.
4. If the City determines that it is infeasible for the Contractor to meet the Diversion Requirement due to unique circumstances, the City shall determine the maximum feasible diversion rate for each material and shall indicate this rate on the WMP submitted by the Contractor. The City shall return a copy of the WMP to the Contractor marked "Approved

for Infeasible Exemption". The Contractor will be required to meet the maximum feasible diversion rates as approved by the City. If the Contractor fails to meet the revised rates the Contractor will be subject to the stipulated penalties. Exempt projects are required to keep and submit all documentation for the project. This includes receipts, the WMP, SWDD Reports, and all supporting documentation as required herein.

5. The City's approval of the Contractor's WMP will not otherwise relieve the Contractor of responsibility for adequate and continuing control of pollutants and other environmental protection measures.

B. Solid Waste Diversion and Disposal Report (SWDD Report): With each submittal of the Contractor's application for progress payment, the Contractor shall prepare and submit to the inspector a written SWDD Report quantifying all material generated in the project which was either disposed, or diverted from disposal through reuse or recycling during the time period covered by the SWDD Report and progress payment. Part III of each SWDD Report is a cumulative history of the diversion and disposal for the project. The Contractor shall submit the report in the format provided herein as shown in Attachment B. Failure to submit the report and the supporting documentation shall render the application for progress payment incomplete and delay payment until the proper documentation is submitted. The supporting documentation includes manifests, weight tickets, receipts, reports, invoices, and other supporting documents specifically identifying the projects, the recyclables and solid waste generated by the project, and where the material was sent. Instructions for filling out the forms are in Attachment B, 'Instruction Sheet'. The final SWDD Report shall cover the complete time period of the project and shall contain, in Part III, a list of the total waste disposed and/or diverted for each reporting period. The final SWDD and supporting documentation must be submitted within 30 days of the end of the project.

C. Substitutions: Should the Contractor desire to use materials, equipment, or products that meet the requirements of these specifications but are more environmentally responsive, the Contractor shall submit these substitutions in accordance with "Substitutions and "Or Equal" Submittals" of the General Requirements.

1.6 PENALTY

A. If the diversion requirement has not been met, a per ton penalty will be applied to the disposed material over that allowed in the approved WMP.

B. The penalty will be calculated as follows: Tons over that allowed in the approved WMP times the per-ton penalty in effect at the time the contract was awarded. The penalty may not exceed the total payment retention for the project.

C. The penalty is $100 per ton.

D. The recommended penalty will be determined by the Bureau of Contract Administration and shall be considered by the Board of Public Works at the time of the project closeout.

E. The Contractor who has been assessed a penalty may submit a written request for a hearing. Upon receipt of the written request the awarding authority shall set the matter for hearing and notify the Contractor.

1.7 REUSE, SALVAGE, AND RECYCLING OPTIONS

A. Construction projects shall make use of as many reuse and salvage options as is feasible. One option is the California Materials Exchange (CalMAX), a free program sponsored by the CIWMB. The most recent issues of CDRG Section VII G, contains contact information for non-profit organizations, salvage facilities

and other reuse organizations.

B. Recycling shall include both on-site and off-site recycling of source-separated materials, as well as mixed debris recycling efforts.

C. On-site recycling program shall produce a quality product to meet the specifications identified in the contract documents, subject to approval. The Contractor shall estimate the amount of material to be used in the project and include a program for off-site recycling of any excess material that cannot be used in the project.

D. The Contractor shall develop and implement a program to include source separation of solid waste, to the greatest extent feasible, of the following types:
   1. Asphalt
   2. Concrete, concrete block, slump stone (decorative concrete block)
   3. Rock
   4. Wood (lumber)
   5. Green material (i.e. tree trimmings)
   6. Other materials, as appropriate, such as red clay brick, building fixtures, architectural details, dry wall, carpet, carpet padding, and corrugated cardboard

E. Mixed Debris Recycling: The Contractor should develop and implement a program to transport loads of commingled construction and demolition materials that cannot be feasibly source separated to a mixed debris recycling facility. A list of these facilities and their recycling rates is in the most recent issue of CDRG Section VII G.

F. Certified Processors: These facilities have facility recycling rates, established by the City of Los Angeles for each mixed debris waste stream. Mixed construction and demolition debris taken to these facilities are considered to have been recycled at the rate of the certified processing facility. For example, 100 tons of material taken to a facility with a recycling rate of 60% gives the project credit for 60 tons of recycling. A list of these facilities and their recycling rates is in the most recent issue of CDRG Section VII G.

G. Recycling, Reuse, Mixed Waste Processing and Salvage Facilities: The CDRG is incorporated herein by reference and contains information about processing, recycling, reuse and salvage facilities.

H. Revenue: Revenue or savings obtained from recycled, reused, or salvaged materials shall accrue to the Contractor unless otherwise noted in the Contract Documents. Note: The Contractor may be able to save money on collection fees for source-separated material. Source-separated material is not subject to the City's 10% AB939 fee. Permitted waste haulers that take mixed C&D debris to certified processors may be eligible for a rebate on part of the AB 939 fee.

I. AB 939 Fee: The AB 939 fee is assessed on all solid waste hauled within the City of Los Angeles in accordance with Section 66.32 of the Los Angeles Municipal Code.
   1. All solid waste haulers hauling material from City of Los Angeles locations must be permitted in accordance with Section 66.32 of the Los Angeles Municipal Code.
   2. Source-separated material is not assessed this fee.
   3. Permitted solid waste haulers may apply for a rebate for the recycled portion of the mixed waste taken to certified mixed debris processing facilities.

1.8 HAULING AND DISPOSAL OPERATIONS

A. Hauling: The Contractor is responsible for arranging the collection and hauling of C&D debris by a waste hauler that is permitted by the City of Los Angeles in accordance with Section 66.32 of the Los Angeles Municipal Code.

B. Recycling And Processing Facilities: The Contractor shall be responsible for transporting C&D debris to recycling or processing facilities. The Contractor shall be familiar with the requirements for acceptance of C&D materials at the recycling and processing facilities before the material is delivered. The most recent issue of CDRG Section VII G, includes a partial list of these facilities. Always call facilities in advance.

C. Disposal Facilities: The Contractor shall be responsible for transporting C&D debris that cannot be delivered to a recycling or processing facility, to a transfer station or disposal facility that can legally accept the materials for the purpose of disposal.

D. Site Disposal: The Contractor may not burn, bury, or otherwise dispose of solid waste on the project job-site.

END OF SECTION 01572

Attachment A

WASTE MANAGEMENT PLAN (Part I-Inert Materials)

Project Title:	W. O. Number:	Date Submitted:
Name & Title of Responsible Person:	Signature:	

Methods

1) Hand-wrecking to recover salvageable materials to be used on - site
2) Hand-wrecking to recover salvageable materials to be taken off - site
3) Other (please describe)
4) Hauling inerts to an engineered fill
5) On-site concrete and asphalt crushing for use on - site
6) On-site concrete and asphalt crushing for use off - site
7) Source separating materials and hauling to recyclers

Material	Facility and Location	Method	Tons Diverted	Tons Disposed
RECYCLING/REUSE				
Asphalt				
Concrete				
Brick				
Other (Describe)				
Other (Describe)				
DISPOSAL				
Mixed inerts				
Other (Describe)				
Other (Describe)				
Other (Describe)				
CERTIFIED PROCESSING**				
Mixed inerts				
Mixed inerts				
Mixed inerts				
Mixed inerts				
DIVERSION AND DISPOSAL TOTALS =				

$$\text{Percent Recycling} = \frac{\text{Total diversion}}{\text{Total diversion} + \text{Total disposed}} \times 100 =$$

$$\text{Percent Recycling} = \frac{\qquad\qquad}{+} \times 100 =$$

**Recycling tonnages for debris taken to a certified processor = total tonnage taken to facility X recycling rate. Remaining tonnage counts as disposal. Example: 200 tons taken to a certified processor with a recycling rate of 0.63 (63%) yields 126 tons of diversion and 74 tons of disposal.

Attachment A

WASTE MANAGEMENT PLAN (Part II-All Other Materials)

W. O. No.:	Index No.:	Date Submitted:

Contractors Name:

Street address:

City, State, Zip:

Phone: Fax: Email:

Methods

1) Hand - wrecking to recover salvageable materials to be used on - site
2) Other (please describe)
3) Hand - wrecking to recover salvageable materials to be taken off - site
4) Source separating materials and hauling to recyclers

Material	Facility and Location	Method	Tons Diverted	Tons Disposed
RECYCLING/REUSE				
Glass				
Wood / Greenwaste				
Metal				
Cardboard				
Other (Describe)				
Other (Describe)				
DISPOSAL				
Mixed Waste				
Other (Describe)				
Other (Describe)				
CERTIFIED PROCESSING**				
Mixed Waste				
Mixed Waste				
Mixed Waste				
Mixed Waste				
DIVERSION AND DISPOSAL TOTALS =				

$$\text{Percent Recycling} = \frac{\text{Total diverted}}{\text{Total diverted} + \text{Total disposed}} \times 100$$

$$\text{Percent Recycling} = \frac{\quad}{+} \times 100 =$$

**Recycling tonnages for debris taken to a certified processor = total tonnage taken to facility X recycling rate. Remaining tonnage counts as disposal. Example: 200 tons taken to a certified processor with a recycling rate of 0.63 (63%) yields 126 tons of diversion and 74 tons of disposal.

Attachment A - INSTRUCTION SHEET

1. **Please print very clearly or type.**
2. Attachment A includes**: Part I-**Inert Materials and **Part II**-Metal, Wood, and Other Material
3. The information required includes but is not limited to, the following:
   a. Contractor and project identification information
   b. Methods to be used for recycling, reusing, salvaging and disposing of materials. The method number should be chosen from the list at the top of Part I and Part II.
   c. Estimated quantities of **all** materials listed, in tons;
4. **Calculating recycling and disposal for mixed material taken to a certified processor: the total tons to be taken to certified processor times the recycling rate = amount to be recycled. Total to be taken to facility minus amount to be recycled = amount for disposal.
5. **Sample**

Project Title: Big St. Overcrossing	W. O. Number: 12341-0230709	Date Submitted: 09/09/99

Contractors Name: Acme Construction
Street address: 33333 Some St.
City, State, Zip: Anytown Ca. 90000
Phone: 213-555-5555 Fax: 213-555-1111 Email:

Methods

1) Hand - wrecking to recover salvageable materials to be used on - site
2) Hand - wrecking to recover salvageable materials to be taken off - site
3) Other (please describe)
4) Source separating materials and hauling to recyclers
5) Hauling inerts to an engineered fill

Material	Facility and Location	Method	Tons Diverted	Tons Disposed
	RECYCLING/REUSE			
Asphalt	BBB Crushing	4	200	
Concrete	BBB Crushing	4	55	
Brick	Joe's Salvage	2	6	
Other(Describe) Clean Gravel	The Best Landscaping	4	600	
	DISPOSAL			
Mixed waste	Joe's Landfill			1000
Other				
	CERTIFIED PROCESSING**			
Mixed Waste	Ben's Processing (Recycling Rate .81 or 81%)		8100	1900
Mixed Waste				
	DIVERSION AND DISPOSAL TOTALS =		8961	2900

$$\text{Percent Recycling} = \frac{\text{Total diverted}}{\text{Total diverted} + \text{Total disposed}} \times 100 =$$

$$\text{Percent Recycling} = \frac{8961}{8961 + 2900} \times 100 = 75.5\ \%$$

Attachment B

CITY OF LOS ANGELES/DEPARTMENT OF PUBLIC WORKS

SOLID WASTE DIVERSION AND DISPOSAL REPORT
PART I OF III - INERT WASTE MATERIAL

Project Title:	W. O. Number:	Date Submitted:	Progress Payment #
Company Name:		Daytime Phone Number:	
Index Number:		Department:	
Period Covered In This Report: From:		To:	

Material	Facility and Location	Tons diverted	Tons Disposed
RECYCLING/REUSE			
Asphalt			
Concrete			
Brick			
Other (Describe)			
Other (Describe)			
DISPOSAL			
Mixed inerts			
Other (Describe)			
Other (Describe)			
Other (Describe)			
CERTIFIED PROCESSING**			
Mixed inerts			
Mixed inerts			
Mixed inerts			
Mixed inerts			
=	**DIVERSION AND DISPOSAL TOTALS ***		

*Copy the Diversion and Disposal Totals to Part III Cumulative Project Recycling Report. Each Report needs to have the totals from every previous Disposal And Diversion Report listed on it, as well as the totals from this report.

**Recycling tonnages for debris taken to a certified processor = total tonnage taken to facility X recycling rate. Remaining tonnage counts as disposal. Example: 200 tons taken to a certified processor with a recycling rate of 0.63 (63%) yields 126 tons of diversion and 74 tons of disposal.

Attachment B

SOLID WASTE DIVERSION AND DISPOSAL REPORT
PART II OF III - ALL OTHER WASTE MATERIAL

W. O. Number:	Date Submitted:

Material	Facility and Location	Tons Recycled	Tons Disposed
RECYCLING/REUSE			
Metal			
Wood / Lumber			
Greenwaste / Landscaping			
Glass			
Cardboard			
Other (Describe)			
Other (Describe)			
DISPOSAL			
Mixed waste			
Other (Describe)			
Other (Describe)			
Other (Describe)			
CERTIFIED PROCESSING**			
Mixed waste			
Mixed waste			
Mixed waste			
Mixed waste			
=	**DIVERSION AND DISPOSAL TOTALS***		

*Copy the Diversion and Disposal Totals to Part III Cumulative Project Recycling Report. Each Report needs to have the totals from every previous Disposal And Diversion Report listed on it, as well as the totals from this report.

**Recycling tonnages for debris taken to a certified processor = total tonnage taken to facility X recycling rate. Remaining tonnage counts as disposal. Example: 200 tons taken to a certified processor with a recycling rate of 0.63 (63%) yields 126 tons of diversion and 74 tons of disposal.

Attachment B

INERT SOLID WASTE DIVERSION AND DISPOSAL REPORT
PART III OF III - PROJECT CUMULATIVE TOTAL

W. O. Number:				Date Submitted:			
Period Beginning	Period Ending	*Period Disposal	Cumulative Project **D**isposal	*Period Diversion	Cumulative Project Diversion,**R**	Cumulative Waste **G**enerated **D + R**	Cumulative Recycling % (**R/G**)100
INERT WASTE MATERIAL CUMULATIVE PROJECT HISTORY							
ALL OTHER WASTE MATERIAL CUMULATIVE PROJECT HISTORY							
Name & title of person responsible for the information in this form:					Signature:		

*From appropriate Part I or II during each period.
Each Attachment B Part III Report needs to have the Diversion and Disposal Totals from every previous Disposal And Diversion Report listed in it, as well as the totals from this report.
Attach another Part III form and continue information if more rows are needed

ATTACHMENT B - INSTRUCTION SHEET

Contractor may contact the Solid Resources Citywide Recycling Division of the Bureau of Sanitation at (213) 485-2260 for information about recycling construction and demolition materials.

Reporting Disposal and Diversion of Solid Waste. With each submittal of Contractor's application for progress payment, the Contractor shall prepare and submit to the inspector a written Solid Waste Diversion and Disposal Report quantifying all material generated in the project that was either disposed in landfills or diverted from disposal through recycling or reuse. Submit the report in the format provided as Attachment B. The report contains three sections. All three sections must be submitted each time. As indicated on the Solid Waste Diversion and Disposal Report:

PART I

1. Report disposal, reuse, or recycling in tons. Indicate zero (0) if there is no quantity to report for a type of material.

2. Indicate all locations to which materials are delivered for reuse, recycling, or disposal. These locations can include:

    a. Source Separated Recycling Facilities
    b. Mixed Debris Recycling Facilities
    c. Class III Landfills
    d. Inert Backfill Sites
    e. Salvage yards
    f. Transfer Stations

3. The Solid Waste Diversion and Disposal Report must be accompanied by: legible copies of weigh tickets, receipts, or invoices that specifically identify the project generating the material. Said documents must be from recyclers and/or disposal site operators that can legally accept the materials.

4. Indicate the Project title; City Work Order Number; Progress Payment Number; Item Number, the City Department for which the work in being done; the name of the company completing the ‘Solid Waste Diversion and Disposal Report’ and compiling supporting documentation; the printed name, title signature, and daytime phone number of the person responsible for the information on the form; the beginning and ending dates of the period covered; and the date that the ‘Solid Waste Diversion and Disposal Report’ is completed.

5. If materials are taken to a facility for which weigh tickets, receipts, or invoices are not available, Contractor shall provide documentation *on company letterhead* identifying the address to which materials were taken, name of owner/operator, type of materials, tons disposed, and the specific project generating the materials.

6. If materials are used on site, Contractor shall provide documentation *on company letterhead* identifying the type and tons of materials being reused or recycled on site and the specific project generating the materials.

SECTION 01573
EXCAVATION SHORING, FORMS, AND FALSEWORK

1.1 THE REQUIREMENT

A. The CONTRACTOR shall have at the Worksite, copies or suitable extracts of: Construction Safety Orders, Tunnel Safety Orders and General Industry Safety Orders issued by the State Division of Industrial Safety. The CONTRACTOR shall comply with provisions of these and all other applicable laws, ordinances, and regulations.

B. Before excavating any trench 1.5m (5 feet) or more in depth, the CONTRACTOR shall submit a detailed plan to the CITY showing the design of shoring, bracing, sloping, or other revisions to be made for the Workers' protection from the hazard of caving ground during the excavation of such trench. The plan and calculations shall be prepared by a California registered Civil or Structural ENGINEER. No excavation shall start until the ENGINEER has accepted the plan and the CONTRACTOR has obtained a permit from the State Division of Industrial Safety. A copy of the permit shall be submitted to the ENGINEER and INSPECTOR.

C. Whenever work under the Contract involves trench excavation five (5) feet or more in depth, or any kind of shoring, the CONTRACTOR shall design and prepare plans for the required shoring, bracing, and sloping. The shoring plans and calculations shall also be submitted to the City of Los Angeles Department of Building and Safety to obtain required plan check and permit, in advance of excavation to ensure workers' protection from the hazard of caving ground during the excavation and to support adjacent private property with zero lateral and vertical deflection of the shoring system. All costs therefore shall be included in the price named in the Contract for completion of the Work as set forth in the Contract Documents.

D. Nothing in this Section shall be deemed to allow the use of a shoring, sloping, or other protective system less effective than that required by the CAL/OSHA Construction Safety Orders.

E. Nothing in this Article shall be construed to impose liability on the CITY, ENGINEER, INSPECTOR, or any of their officers, agents, representatives, or employees.

F. The CONTRACTOR shall secure approval, in advance, from authorities concerned for the use of any bridges proposed by it for public use. Temporary bridges shall be clearly posted as to load limit and speed limits, with signs and posting conforming to current requirements set forth in the Traffic Manual published by the California Department of Transportation, covering "signs". This manual shall also apply to the street closures, barricades, detours, lights, and other safety devices required.

G. The INSPECTOR will provide a competent person trench/excavation certification form to the CONTRACTOR. It shall be completely filled out before any worker has access to trench or excavation and returned to the INSPECTOR before the end of the first working day. The CONTRACTOR shall certify by this form the

name of the competent person administering the Work, the soil classification, and the type of excavation protective system provided and/or installed.

H. The CONTRACTOR shall completely fence all excavations to provided protection against anyone falling into the excavation and to the satisfaction of the INSPECTOR. The fencing shall be in place at all times except when workers are present and actual construction operations are in progress.

I. The CONTRACTOR shall comply fully with the requirements of the CAL/OSHA Construction Safety Orders, regarding the design of forms, false work, and shoring for concrete placement, and the inspection of same prior to placement of concrete. Where the Construction Safety Orders requires the services of a Civil or Structural Engineer registered in the State of California to approve design calculations and Working Drawings of the false work or shoring system, to inspect such system prior to placement of concrete, the CONTRACTOR shall employ such engineer for these purposes, and all costs therefore shall be included in the price named in the Contract for completion of the Work as set forth in the Contract Documents.

J. No Work under this Section shall start until the ENGINEER has accepted the plans and the CONTRACTOR has obtained all permits required and furnished a copy to the ENGINEER and the INSPECTOR.

1.2 THE REQUIREMENT

A. The CONTRACTOR shall have at the Worksite, copies or suitable extracts of: Construction Safety Orders, Tunnel Safety Orders and General Industry Safety Orders issued by the State Division of Industrial Safety. The CONTRACTOR shall comply with provisions of these and all other applicable laws, ordinances, and regulations.

B. Before excavating any trench 1.5m (5 feet) or more in depth, the CONTRACTOR shall submit a detailed plan to the CITY showing the design of shoring, bracing, sloping, or other revisions to be made for the Workers' protection from the hazard of caving ground during the excavation of such trench. The plan and calculations shall be prepared by a California registered Civil or Structural ENGINEER. No excavation shall start until the ENGINEER has accepted the plan and the CONTRACTOR has obtained a permit from the State Division of Industrial Safety. A copy of the permit shall be submitted to the ENGINEER.

C. The INSPECTOR will provide a competent person trench/excavation certification form to the CONTRACTOR. It shall be completely filled out before any worker has access to trench or excavation and returned to the INSPECTOR before the end of the first working day. The CONTRACTOR shall certify by this form the name of the competent person administering the Work, the soil classification, and the type of excavation protective system provided and/or installed.

D. The CONTRACTOR shall completely fence all excavations to provided protection against anyone falling into the excavation and to the satisfaction of the INSPECTOR. The fencing shall be in place at all times except when workers are present and actual construction operations are in progress.

E. The fencing material shall be chain link fabric or welded wire fabric (6x6-W9xW9 minimum) and 1.5 m (5 feet) high, constructed according to one of the following:

1. Tensioned fencing material and have top and bottom tension wires securely fastened to driven steel posts or other equally rigid elements at a maximum spacing of 3.6m (12 feet); or

2. Untensioned fencing materials securely fastened to extended trench shoring elements at a maximum spacing of 2.4m (8 feet) and fastened to continuous top and bottom rails constructed of nominal 50mm x 100mm (2 in x 4 in) lumber or equally rigid material. Framed panels with suitable supporting elements fastened together to form a continuous fence may also be used.

F. Payment for performing all Work necessary to provide safety measures shall be included in the prices bid for other items of work except where separate bid items for excavation safety are provided, or required by law.

END OF SECTION 01573

SECTION 01581
PROJECT SIGNS

1.1 THE REQUIREMENT

A. The Recipient shall include appropriate acknowledgement of credit to the District for its support when promoting the Funded Activity or using any data and/or information developed under this Agreement. When the Funded Activity involves the construction phase of an Infrastructure Program Project, signage shall be posted in a prominent location at Project site(s) or at the Recipients headquarters and shall include the Safe, Clean Water Program color logo and the following disclosure statement: “Funding for this project has been provided in full or in part from the Los Angeles County Flood Control District’s Safe, Clean Water Program.” At a minimum the sign shall be 2’ x 3’ in size. The Recipient shall also include in each of its contracts for work under this Agreement a provision that incorporates the requirements stated within this paragraph.

B. The names, addresses, and specialties of CONTRACTORS, Subcontractors, architects, or engineers may be displayed on removable signs. The size and location shall be subject to the ENGINEER’S approval. Commercial advertising matter shall not be attached to painted on the surfaces of buildings, fences, canopies, or barricades.

C. TIME and INFORMATION type construction notice signs (4 each) per Standard Plan S-791-1 are required. The Inspector will determine appropriate location(s). The time for the TIME sign and the telephone number for the INFORMATION sign will be furnished by the ENGINEER at the time of construction.3

D. C-18 and C-13 ADVANCE CONSTRUCTION NOTICE SIGNS per Standard Plan S-791-1 are required. The INSPECTOR will determine the appropriate locations.

E. Additional project sign shall be provided during construction. The information for the sign will be furnished by the ENGINEER at the time of construction.
   1. Signage shall be posted in a prominent location at the project site.
   2. CONTRACTOR shall submit a shop drawing of the logo(s) for approval. The sign shall be at least 4’ tall by 8’ wide, mounted on two 4”x4” posts.
   3. The construction signs shall include:
      a. Credit to the Safe, Clean Water Program.
      b. The Safe, Clean Water Program logo.
      c. The following disclosure statement: “Funding for this project has been provided in full or in part from the Los Angeles County Flood Control District’s Safe, Clean Water Program.”

(END OF SECTION)

SECTION 01601
BUY CLEAN CALIFORNIA ACT

1.1 THE REQUIREMENT

A. For projects with bid due dates on or after 7/1/2021 that include eligible materials, CONTRACTOR shall provide current facility-specific Environmental Product Declarations (EPDs) of eligible materials **and** meet the State of California maximum limits for Global Warming Potential (GWP) as listed by the State's Department of General Services after project award. Additional information regarding GWP limits may be found at the following website:
https://www.dgs.ca.gov/PD/Resources/Page-Content/Procurement-Division-Resources-List-Folder/Buy-Clean-California-Act

B. Eligible Materials:

1. Steel: This includes structural steel (hot-rolled sections, hollow structural sections, and plates) and carbon steel reinforcement used in concrete or masonry.
2. Flat glass
3. Mineral wool board insulation

C. A submitted facility-specific Environmental Product Declaration (EPD) must be a current Type III as defined by the International Organization for Standardization (ISO) Standard 14025, and has been 3rd Party verified following applicable Product Category Rules (PCRs). Credentials of 3rd Party showing them to be subject matter experts must be provided by the CONTRACTOR upon request. Minimum stage of coverage for EPDs shall consist of the production life cycle (i.e. product stage) or "cradle to gate". PCR shall be as identified by California Department of General Services for the Buy Clean California Act (BCCA).

D. The EPDs shall be submitted with each eligible material submittal for the product(s) under the technical specification sections for approval by the ENGINEER. Depending on the number of facilities, and product types, more than one (1) eligible material submittal may be required. Once approved, the CONTRACTOR must also provide a copy of the approved EPDs with the payment request to the INSPECTOR. Where a submittal is conditionally approved, pending submission of required EPD, the applicable restrictions as noted below shall apply.

E. Restrictions:

1. For projects with bid due dates on or after 7/1/2021, the CONTRACTOR shall not install any eligible materials or incorporate into the work in any way until the required facility-specific EPDs have been provided and approved, unless otherwise agreed upon by the ENGINEER. Payment for specific eligible material will be withheld until the EPDs for these materials are approved by the ENGINEER and submitted along with the progress payment requests.
2. The CONTRACTOR may be assessed liquidated damages for failure to

complete the project within the time fixed by the terms of the contract resulting from Contractor delays associated with submission and approval of the required EPDs.

F. Optional Eligible Materials:
The following materials are being considered for addition to future Eligible Materials list by the City of Los Angeles. As such, Article E above does not apply to these materials at this time. Furthermore, when using one of the Optional Eligible Materials listed in this Article F below, the CONTRACTOR may submit either facility-specific EPDs as noted on Article C above or an industry average EPD. The Optional Eligible Materials are as follows:

1. Concrete (i.e. corresponding mix designs).

END OF SECTION 01601

SECTION 01611
GUARANTY / WARRANTY

1.1 THE REQUIREMENT

A. The CONTRACTOR shall and does hereby warrant and guaranty that all work executed under this Contract will be free from defects of materials and workmanship for a period of one (1) year from the date of Final Field Acceptance of the project as evidenced by the issuance of a “Statement of Completion” by the Inspector, except for certain specific items of Work, materials and equipment requiring a guaranty or warranty for a greater period of time as may be required elsewhere in the Contract Documents. In the event, however, that portions of the Work are sufficiently complete to allow use or occupancy by the CITY in the manner and for the purposes intended prior to final completion and acceptance of the project, the guarantee period will commence on the date shown on the “Statement of Partial Completion.”

B. The CONTRACTOR hereby agrees to indemnify and save harmless the CITY, and their officers, agents and employees against and from all claims and liability arising from damage and injury due to said defects. The CONTRACTOR shall repair or replace, at no cost to the CITY, any and all such defective Work and all other Work damaged thereby, which becomes defective during the term of the above-mentioned guaranties and warranties.

C. Within thirty (30) calendar days prior to completion of all Work, the CONTRACTOR shall submit to the CITY original copies of all manufacturers’ product guaranties and warranties covering all supplied and installed equipment and, where applicable, systems.

D. In addition to the requirements of INSURANCE, Contract Bonds, of the GENERAL CONDITIONS, it shall be understood that the Surety for the faithful performance bond, submitted in conformance with the terms of the Contract for this project, is liable on its bond for all obligations of the CONTRACTOR including guaranty provisions. The “Performance Bond” shall remain in effect until the end of the guarantee period.

E. The CONTRACTOR shall, within twenty-four (24) hours of notice from the ENGINEER of any Work not in accordance with the requirements of the Contract, or any defects in the Work, commence and prosecute with due diligence all work necessary to fulfill the terms of this Section and to complete the Work within a period of time as approved by the ENGINEER. The CONTRACTOR shall notify the ENGINEER of the repair schedule before commencing the repairs and notify the ENGINEER to arrange for inspection. The CONTRACTOR shall submit a written report of the defect and methods of correction. In the event of failure by the CONTRACTOR and/or its Surety to respond to the notice or to complete the Work required by this Section within the time specified, the CITY shall proceed to have such Work done at the CONTRACTOR's expense. The CONTRACTOR or its Surety shall promptly reimburse the CITY all direct and indirect cost associated with performing this Work.

F. Repairs, replacements or changes made under the requirements of this Section shall be warranted for the specified guarantee period, but no less than one year, beginning on the date of acceptance of the repairs, replacements or changes.

END OF SECTION 01611

SECTION 01630
SUBSTITUTIONS AND "OR EQUAL" SUBMITTAL

1.1 THE REQUIREMENT

A. The CONTRACTOR may supply any of the materials specified or offer an equivalent. The ENGINEER shall determine whether the material offered is equivalent to that specified. The CONTRACTOR shall make all "Or Equal" submittals within thirty (30) calendar days after issuance of Notice to Proceed. Any request or submittal received after the specified period will be considered as NOT EQUAL to that so specified and will be processed as a substitution described hereinafter.

B. Whenever any particular material, process, or equipment is indicated by patent, proprietary or brand name, or by name of manufacturer, such wording is used for the purpose of facilitating its description and shall be deemed to be followed by the words ‘or equal.’ A listing of materials is not intended to be comprehensive, or in order of preference. The CONTRACTOR may offer any material, process, or equipment considered to be equivalent to that indicated. The substantiation of offers shall be submitted as provided in the Contract Documents.

C. The CONTRACTOR shall, at its expense, furnish data concerning items offered by it as equivalent to those specified. The CONTRACTOR shall have the material tested as required by the ENGINEER to determine that the quality, strength, physical, chemical, or other characteristics, including durability, finish, efficiency, dimensions, service, and suitability are such that the items will fulfill its intended function.

D. Test methods shall be subject to the approval of the ENGINEER. Test results shall be reported promptly to the ENGINEER, who will evaluate the results and determine if the substituted items are equivalent. The ENGINEER’S findings shall be final. Installation and use of substituted items shall not be made until approved by the ENGINEER.

E. All manufacturers' data submitted to the ENGINEER for review and acceptance shall clearly identify each proposed substitute with the corresponding Contract Drawing detail and Specification Section. If the ENGINEER decides to accept for use in the Project a material, process or article which is not the equal of that specified, substitution shall be made in the manner described in CHANGES AND EXTRA WORK of the GENERAL CONDITIONS, with a credit to the CITY for the difference in value.

F. The ENGINEER shall determine whether the material offered is equivalent to that specified. Any revision to structures, piping, mechanical, electrical, instrumentation, or any other work made necessary by such substitution must be approved by the ENGINEER, and the entire cost both direct and indirect of these revisions shall be borne by the CONTRACTOR.

G. Any materials, process, or article may be requested as a substitution by the CONTRACTOR, in lieu of that specified, under the following conditions:

1. Requests must be submitted in writing and in the manner described in SHOP DRAWINGS / SUBMITTALS of these GENERAL REQUIREMENTS.

2. Requests must be submitted thirty (30) calendar days prior to starting the work, as established by the ENGINEER, so as not to cause any delay in completion of the Project. No other request will be considered after expiration of the period specified, except that in exceptional cases where it is determined to be in the best interest of the CITY, as approved by the ENGINEER.

3. The CONTRACTOR agrees to pay for all Engineering and design services, if required, to make all changes and adjustments in material and work of all trades directly or indirectly affected by the substitute, to the satisfaction of the ENGINEER, at no cost to the CITY.

4. All requests for substitution shall be made through the CONTRACTOR. Submissions by the CONTRACTOR shall imply the CONTRACTOR'S approval of such substitution.

5. No requests for substitutions will be considered during the bidding period.

6. The CONTRACTOR shall furnish adequate data with each request for approval of a substitute to enable the ENGINEER to evaluate the proposed substitution.

7. If a substitute offered by the CONTRACTOR is not found to be equal to the specified material, then CONTRACTOR shall furnish and install the specified material.

8. The specified Contract completion time shall not be affected by any circumstance developing from the provisions of this Section.

END OF SECTION 01630

SECTION 01711
SITE INVESTIGATION

1.1 THE REQUIREMENT

A. CONTRACTOR shall investigate the Jobsite prior to Bid and during construction to ascertain all conditions affecting necessary procedures and sequencing of the Work operations in the execution of the Contracted Work in accordance with the requirements shown in Section 01731 – CUTTING AND PATCHING of the GENERAL REQUIREMENTS, herein and elsewhere.

1. Utilities in Abandoned Streets, Easements, and/or Alleys: CONTRACTOR is responsible for verifying and satisfying himself as to conditions under which work on such utilities will be done, such as what lines will be left in place, removed or rerouted. CONTRACTOR shall verify with Utility Map, Substructure Maps, District Maps & Street Lighting Map, etc., which are available at the Public Works Counter and in the Utility Companies. Should existing inactive utility lines (not shown or noted on the Drawings) be encountered, they shall be left-in-place and properly capped if not in way of new construction or if sufficiently below finish grade; as directed by the CITY ENGINEER. CONTRACTOR shall bear all costs involved in removing, rerouting or capping of such lines. CONTRACTOR shall contact the interested utility agencies as necessary to determine the Work operations involved.

2. CONTRACTOR shall report to the ENGINEER, prior to the Bid, any adverse condition(s), which would affect the proper execution of the Contracted Work and shall not proceed until instructed by the ENGINEER. Except as provided in GENERAL REQUIREMENTS Section 01253 – DIFFERING SITE CONDITION, failure to report any such conditions shall constitute acceptance of all site conditions, and any required removal, repair, or replacement caused by unsuitable conditions shall be performed by the CONTRACTOR at its sole cost and expense.

3. Start of Contracted Work at the Jobsite shall imply CONTRACTOR'S acceptance of job conditions.

B. Work Determination: CONTRACTOR shall satisfy itself regarding job/site conditions, the nature and types of work to be performed and shall be responsible for the determination of all classes of work to be accomplished at the Jobsite or at the manufacturer's plant.

C. Allotted Working Space: CONTRACTOR shall limit work operations to the "working site" or "Jobsite" or "Worksite," and areas immediately adjacent thereto, as shown on the Contract Drawings, specified or authorized by the CITY ENGINEER.

1.2 UTILITY LOCATION

A. General

1. The Permittee (in the case of Private Contracts) and the CITY (in the case of Cash or Assessment act contracts), will search known substructure records and furnish the CONTRACTOR with copies of

documents which describe the location of utility substructures, or will indicate on the Plans for the Project those substructures (except for service connections) which may affect the Work. Information regarding removal, relocation, abandonment, or installation of new utilities will be furnished to prospective Bidders.

2. As provided in Section 4216 of the California Government Code, at least two (2) working days prior to commencing any excavation, the CONTRACTOR shall contact the regional notification center (Underground Service Alert of Southern California) and obtain an inquiry identification number. Refer to PROTECTION OF PERSONS AND PROPERTY AND RESTORATION OF EXISTING IMPROVEMENTS of the GENERAL CONDITIONS.

3. The California Department of Transportation is not required by Section 4216 of the California Government Code to become a member of the regional notification center. The CONTRACTOR shall contact it for location of its subsurface installation.

4. The CONTRACTOR shall determine the location and depth of all utilities, including service connections, which have been marked by the respective owners and which may affect or be affected by its operations. If no pay item is provided in the Contract for this work, full compensation for such work shall be considered as included in the prices bid for other items of work.

B. Coordination

1. The CONTRACTOR is advised that the Drawings usually depict the location of substructures as they existed when the project was designed. Present-day information may indicate that new facilities may have been added, or are going to be added, or that some of those substructures are now, or will be, relocated, abandoned, removed, lowered, raised, blanketed, encased, enlarged, protected, or altered in some other way. The CONTRACTOR shall carefully examine the proposed construction site prior to Bid and during construction for any evidence of recent surfacing of excavations, or the possible conflict with surface or aerial installations, and the latest substructure maps, and bid accordingly. If further information or clarification is desired, CONTRACTOR is urged to immediately contact the following:

   a. The appropriate utility companies;

   b. The appropriate District Office of the Bureau of Engineering; and/or

   c. City of Los Angeles, Utility Coordination Section of the Project Award and Control Division
   1149 S. Broadway, Suite 140,
   Los Angeles, CA 90015
   (213) 847-0624.

2. Review and verify with the information indicated on the Contract Drawings the Summary of First Notice Replies (see Attachment

No. 01711-A1) and the information provided in the GENERAL REQUIREMENTS Section 01112 - DESCRIPTION OF WORK.

1.3 Utility Protection

A. The CONTRACTOR shall not interrupt the service function or disturb the support of any utility without authority from the owner or order from the CITY. All valves, switches, vaults, and meters shall be maintained readily accessible for emergency shutoff.

B. Where protection is required to ensure support of utilities located as shown on the Plans or in accordance with Subsection 1.2 – Utility Location, above, the CONTRACTOR shall, unless otherwise provided, furnish and place the necessary protection at its expense.

C. Upon learning of the existence and location of any utility omitted from or shown incorrectly on the Plans, the CONTRACTOR shall immediately notify the ENGINEER in writing. When authorized by the ENGINEER, support or protection of the utility will be paid for as provided in SECTION 01254 – CHANGE ORDERS of the GENERAL REQUIREMENTS.

D. The CONTRACTOR shall immediately notify the ENGINEER and the utility owner if any utility is disturbed or damaged. The CONTRACTOR shall bear the costs of repair or replacement of any utility damaged if located as noted above, in Subsection 1.2 – Utility Location.

E. When placing concrete around or contiguous to any non-metallic utility installation, the CONTRACTOR shall, at its expense:

1. Furnish and install a 50mm (2 inch) cushion of expansion joint material or other similar resilient material; or

2. Provide a sleeve or other opening which will result in a 50mm (2 inch) minimum-clear annular space between the concrete and the utility; or

3. Provide other acceptable means to prevent embedment in or bonding to the concrete.

1.4 Utility Removal

A. Unless otherwise specified, the CONTRACTOR shall remove all interfering portions of utilities shown on the Plans or indicated in the Bid documents as “abandoned” or “to be abandoned in place”. Before starting removal operations, the CONTRACTOR shall ascertain from the CITY whether the abandonment is complete, and the costs involved in the removal and disposal shall be included in the Bid for the items of work necessitating such removals.

1.5 Utility Relocation

A. When feasible, the owners responsible for utilities within the area affected by the Work will complete their necessary installations, relocations, repairs, or replacements before commencement of work by the CONTRACTOR. When the Plans or Specifications indicate that a utility installation is to be relocated, altered, or constructed by others, the CITY will conduct all negotiations with the owners

and work will be done at no cost to the CONTRACTOR, except as provided in SSPWC Section 301-1.6. Utilities which are relocated in order to avoid interference shall be protected in their position and the cost of such protection shall be included in the Bid for the items of Work necessitating such relocation.

B. After award of the Contract, portions of utilities which are found to interfere with the Work will be relocated, altered or reconstructed by the owners, or the ENGINEER may order changes to the Work to avoid interference. Such changes will be paid for in accordance with SECTION 01254 – CHANGE ORDERS of the GENERAL REQUIREMENTS. However, for interfering City owned utilities identified on the Plans including but not limited to sewers, storm-drains, traffic signal or streetlight conduits and appurtenances, their restoration, alteration, or reconstruction shall be performed by the CONTRACTOR and the associated cost shall be included in the CONTRACTOR's bid.

C. When the Plans or Specifications provide for the CONTRACTOR to alter, relocate, or reconstruct a utility, all costs for such work shall be included in the Bid for the items of work necessitating such work. Temporary or permanent relocation or alteration of utilities requested by the CONTRACTOR for its convenience shall be its responsibility and it shall make all arrangements and bear all costs.

D. The utility owner will relocate service connections as necessary within the limits of the Work or within temporary construction or slope easements. When directed by the ENGINEER, the CONTRACTOR shall arrange for the relocation of service connections as necessary between the meter and property line, or between a meter and the limits of temporary construction or slope easements. The relocation of such service connections will be paid for in accordance with the provisions of SECTION 01254 – CHANGE ORDERS of the GENERAL REQUIREMENTS. Payment will include the restoration of all existing improvements which may be affected thereby. The CONTRACTOR may agree with the owner of any utility to disconnect and reconnect interfering service connections. The CITY will not be involved in any such agreement.

1.6 Utility Delays

A. The CONTRACTOR shall notify the ENGINEER of its construction schedule insofar as it affects the protection, removal, or relocation of utilities. Said notification shall be included as part of the construction schedule required in SECTION 01321 - CONTRACTOR'S CONSTRUCTION SCHEDULE AND REPORTS OF THE GENERAL REQUIREMENTS. The CONTRACTOR shall notify ENGINEER in writing of any subsequent changes in the construction schedule which will affect the time available for protection, removal, or relocation of utilities.

B. The CONTRACTOR will not be entitled to damages or additional payment for delays attributable to the utility relocations or alterations if correctly located, noted, and completed in accordance with 1.2 Utility Location, above.

C. The CONTRACTOR may be given an extension of time for unforeseen delays attributable to the unreasonably protracted interference by utilities in performing Work correctly shown on the Plans

D. The CITY will assume responsibility for the timely removal, relocation, or protection of existing main or trunkline utility facilities within the area affected by the Work if such utilities are not identified in the Contract Documents. The CONTRACTOR will not be assessed liquidated damages for any delay caused by failure of CITY to provide for the timely removal, relocation, or protection of such existing facilities.

E. If the CONTRACTOR sustains loss due to delays attributable to interferences, relocations, or alterations not covered by Subsection 1.2 - Utility Location, above, which could not have been avoided by the judicious handling of forces, equipment, or plant, there shall be paid to the CONTRACTOR such amounts as the ENGINEER may find to be fair and reasonable compensation for such part of the CONTRACTOR'S actual loss as was unavoidable and the CONTRACTOR may be granted an extension of time.

F. Payment to the CONTRACTOR for actual loss due to a protracted utility delay shall be calculated based on wage increases, price increases of material and equipment, additional insurance costs and actual direct costs of maintaining the Worksite incurred because of the utility delay.

1.7 Utility Cooperation.

A. When necessary, the CONTRACTOR shall so conduct its operations as to permit access to the Worksite and provide time for utility work to be accomplished during the progress of the Work.

(END OF SECTION)

(SEE ATTACHMENT)

ATTACHMENT TO SECTION 01711

NTS: SPECIFIER SHALL OBTAIN THE SUMMARY OF FIRST NOTICE FROM THE UTILITY COORDINATING SECTION OF THE PROJECT AWARD AND CONTROL DIVISION AND INCLUDE IT AS THE ATTACHMENT TO THIS SECTION. FOR FURTHER DETAILS, SEE NTS BOX UNDER I.2 B.

Attachment to General Requirements Section 01711 consists of one (1) document, as follows:

ATTACHMENT NUMBER	TITLE OF ATTACHMENT	NUMBER OF PAGES IN THIS ATTACHMENT
01711-A1	Summary of First Notice	2

Date: December 6, 2021

CITY OF LOS ANGELES
DEPARTMENT OF PUBLIC WORKS
BUREAU OF ENGINEERING

SUMMARY OF FIRST NOTICE REPLIES

W.O. No.:	Job ID.:	Project Title:
EW40079D	**1455**	**FERNANGELES RECREATION CENTER STORMWATER CAPTURE PROJECT**

Bidders are advised that project plans usually depict the location of substructures as they existed when the project was designed. Present-day information may indicate that new facilities may have been added or are going to be added. Some of those substructures may now be or will be relocated, abandoned, removed, lowered, raised, blanketed, encased, enlarged, protected, or altered in some other way. Bidders are urged to carefully examine the proposed construction site for any evidence of recent surfacing of excavations, or the possible conflict with surface or aerial installations. Contractor should use the latest substructure maps and prepare their bid accordingly. If further information or clarification is desired, bidders are urged to immediately contact the appropriate utility company or the appropriate District Office of the Bureau of Engineering. Contractors may also contact the Utility Coordination Group, 1149 S. Broadway Street, Suite 140, Los Angeles, CA 90015, naajia.jami@lacity.org. The contractor will need to coordinate work with utility companies during construction if necessary.

Based on the confirmation from the following utility companies, they have facilities within the improvement area that will definitely be affected.

LADOT	Max Eftekhari	(213) 972 – 8684

Based on the confirmation from the following utility companies, they have facilities within the improvement area that may not require relocation but will mark them upon request. Notify Underground Service Alert at 1-800-227-2600 two working days prior to excavation to have facilities marked:

BUREAU OF STREET LIGHTING	Daniel Ordonia	(213) 847 – 1568
SOUTHERN CALIFORNIA GAS – DISTRIBUTION	Art Alfaro	(213) 231 – 7808

Based on the confirmation from the following utility companies, there are no facilities within the improvement area that will be affected:

INFORMATION TECHNOLOGY AGENCY	Frank Gonzalez	(213) 978 – 4032
SOUTHERN CALIFORNIA GAS – TRANSMISSION	Ron Silver	(818) 701 – 4536

The following utility companies have not responded to the First Utility Notice, but they may have facilities within the improvement area.

LADWP – POWER	Gibson Phan	(213) 367 – 2715

LADWP – WATER – EAST VALLEY	Glenn Micko	(213) 367 – 1211
ANDEAVOR LOGISTICS CORP.	Cynthia A. Smith	(714) 880 – 1687
AT&T CALIFORNIA	Cathy Hurtado	(626) 817 – 4263
CHARTER COMMUNICATIONS	Lisa N. Law Patrick Houston	(972) 537 – 5323 (972) 537 – 5394

Gregg Vandergriff, PE
Division Engineer
Project Award and Control Division
Bureau of Engineering
Department of Public Works

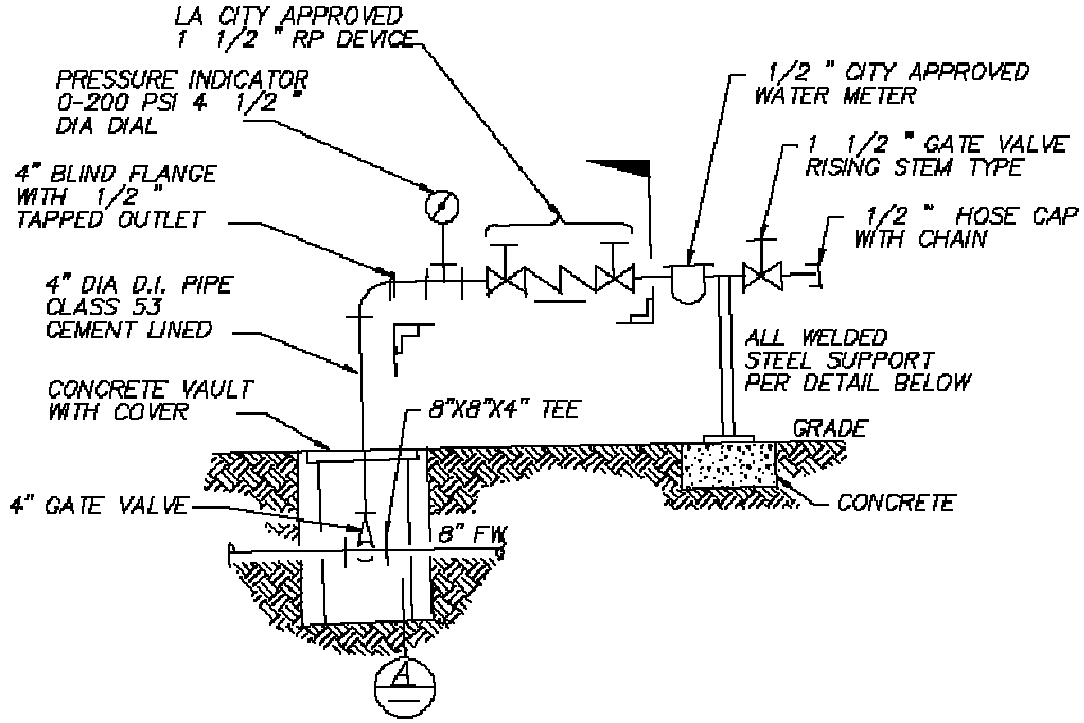

CONSTRUCTION WATER SUPPLY DETAIL
NTS

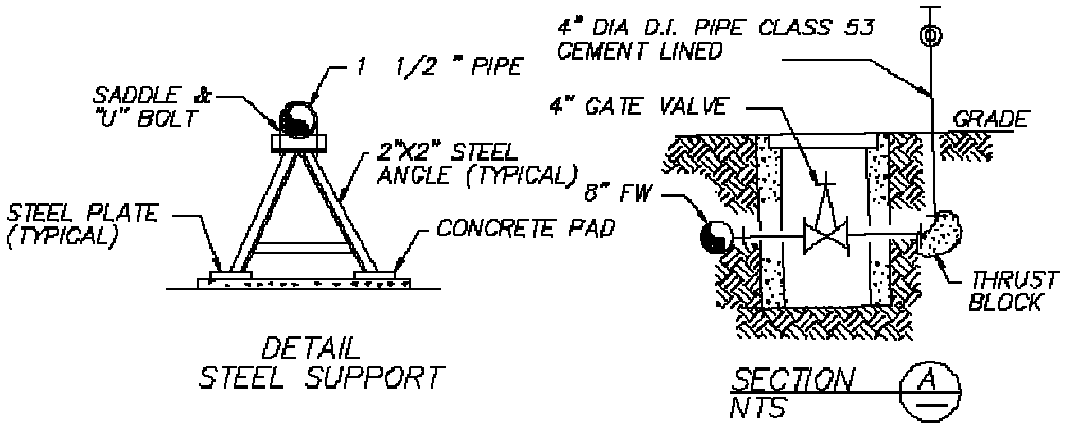

CONSTRUCTION WATER SUPPLY SCHEMATICS
NTS

SECTION 01721
MOBILIZATION

1.1 THE REQUIREMENT

A. General

Whether Mobilization is included as a Contract Bid Item in the Bid Proposal Form or specified as part of the lump sum in the Contract Documents, the cost of labor, equipment, materials and incidentals for doing all the work in mobilization (in advance of construction operations and not directly attributable to any specific bid item) shall be included in the Contract Price Breakdown and progress payment estimate. If there is no mobilization bid item, the CONTRACTOR shall submit to the INSPECTOR for approval the Contract Price Breakdown with the amount established for mobilization.

Mobilization shall include, but not be limited to, the following items, all as required for the proper performance and completion of the Work:

1. Obtaining all permits, licenses, insurance, and bonds. Providing copies to the ENGINEER.

2. Moving onto the Jobsite all of CONTRACTOR'S plant and equipment as required.

3. Erecting temporary buildings and other construction facilities.

4. Installing temporary construction power and wiring.

5. Establishing fire protection system for its temporary facilities.

6. Developing construction water supply.

7. Providing field office trailers for the CONTRACTOR, complete with all specified equipment, furnishings and utility services.

8. Providing sanitary facilities or connecting to onsite sanitary facilities as specified.

9. Providing potable water facilities as specified. This includes a means by which all on site CONTRACTOR, Subcontractor or supplier personnel can wash their hands with soap.

10. Arranging for, and erection of, CONTRACTOR'S work and storage yards and sheds.

11. Submitting all required Subcontractor insurance certificates and bonds.

12. Posting all CAL/OSHA required notices and establishment of safety programs.

13. Having the CONTRACTOR'S representative at the Jobsite full time.

14. Furnishing of Construction Schedule, Contract Price Breakdown and Submittal Schedule.

15. Erecting all temporary fencing.

16. Erecting CONTRACTOR signs. The names, addresses, and specialties of CONTRACTORS, subcontractors, engineers or architects may be displayed on removable signs. The size and location shall be subject to the ENGINEER'S approval. Commercial advertising matter shall not be attached to or painted on the surfaces of buildings, fences, canopies or barricades.

17. Installing Building Credit signs and Advance Construction Notice signs. The Building Credit sign shall be submitted to the ENGINEER for approval prior to installation. Refer to GENERAL REQUIREMENTS Section 01581 – Project Signs, for additional requirements.

18. Providing an air-conditioned meeting room with a conference table, a minimum of [10] chairs and utilities for construction meetings within the CONTRACTOR'S field office.

19. Furnishing and set-up of field office(s) for the ENGINEER and INSPECTOR. If it is necessary to relocate the INSPECTOR'S job office to a new facility or relocation during the course of the Contract provide the required labor and equipment. The new facility shall be properly equipped and conform to the requirements shown in Subsection B.2, Field Offices herein. The CONTRACTOR shall obtain the ENGINEER'S approval of the new location thirty (30) days in advance.

B. Field Offices For The Inspector And The Engineer

1. Unless specified otherwise, the CONTRACTOR shall, at no cost to the CITY, furnish, install, maintain, and remove all temporary light, telephone, power and water (including piping, wiring, lamps and other equipment necessary for the field offices).

2. The CONTRACTOR shall furnish the ENGINEER and the INSPECTOR, for the duration of the Contract, and through the STARTUP ASSISTANCE period, at no additional cost to the CITY, a furnished field office with janitorial services and maintenance agreements for all equipment provided under this Section. This office shall have a minimum floor space of 300 square feet, at least 2 door(s), and window area of not less than 10 square feet. All exterior doors and windows shall be provided with screens. All exterior doors shall be provided with door handles with double deadbolt locks and the CONTRACTOR shall provide the INSPECTOR 3 keys as requested by the INSPECTOR. This field office shall be furnished as follows:

   a. 2 plan table(s), 2 standard 5-foot double pedestal desk with a drawer suitable for holding files, 2 chairs, 1 drafting stool, 1 plan racks, 3 - 4 drawer filing cabinet suitable to hold legal or letter size hanging file folders, 2 storage cabinet with a minimum of 4 adjustable shelves.

b. Heating and air conditioning of sufficient capacity shall be provided at no expense to the CITY to adequately control the temperature at all times.

c. Bottled drinking water shall be provided within the office. Sanitary facilities shall be provided directly adjoining the office for the sole use of the ENGINEER and the INSPECTOR. [Sanitary facilities shall include a toilet and wash basin with hot and cold running water.]

d. One console type, dry, indirect electrophotographic process network-capable copier/printer/scanner capable of 60 letter size copies per minute. Copier shall be able to copy 11" X 17" ledger size paper and be able to reduce to 65% and enlarge to 154%. Copier shall have a sorter/finisher with a staple cartridge and have additional cassettes for letter, legal, ledger-size paper. The copier's primary paper supply shall be 8.5" X 11" size. The copier shall be installed new or like new in good working order and the CONTRACTOR shall maintain the unit in operating condition throughout the life of the Project.

e. One Color inkjet all-in-one machine capable of printing, copying, and scanning up to 11” X 17”. Printing shall be a minimum of 35 pages per minute in black and 28 pages per minute in color. Resolution shall be a minimum of 6000 x 1200 dpi. A 50-sheet document feeder shall be included. All toner cartridges shall be provided by the contractor for the duration of the project.]

f. Eight Duplex convenience outlets for electrical power [a minimum of four per staff person].

g. Three Outdoor lighting fixture with 300-Watt bulb to effectively light the area around the office facility.

h. One Maintenance and service agreements for all office equipment during the contract period.

i. The CONTRACTOR shall provide janitorial services twice-a-week for the field offices for the duration of the Contract Work.

j. Any computer equipment or software furnished under this section or under an Allowance for City Field Offices shall be the property of the City at the end of the project.

k. The CONTRACTOR shall provide a high-speed internet connection for the duration of the Contract and through the start up assistance period.

C. Temporary Construction Utilities

1. Construction Water:

a. Potable water will be made available for the CONTRACTOR’S use from the existing fire hydrant system, as located on the

Plans, or as directed by the ENGINEER. The CONTRACTOR shall meter water usage and pay for the cost of water consumption. The CONTRACTOR shall make arrangements with the servicing water utility company. A backflow preventer shall be provided as per the Plumbing Code.

2. Construction Power:

   a. The CONTRACTOR shall provide all electrical power required in performance of the Work and shall pay all installation charges and monthly bills in connection therewith. The CONTRACTOR shall provide and maintain all temporary and permanent power. The CONTRACTOR shall pay for all permits. All temporary connections for electricity shall be subject to approval of the ENGINEER and the power company representative, and shall be removed in like manner at the CONTRACTOR'S expense prior to final acceptance of the Work.

3. Telephones:

   a. The CONTRACTOR shall provide and maintain at all times during the progress of the Work, at its own expense, not less than three (3) telephones in good working order, at its own field construction office. Each such telephone shall be connected to an established exchange for toll service and with all other telephones utilized by the CONTRACTOR.

4. Temporary Ventilation:

   a. The CONTRACTOR shall provide adequate means to furnish temporary ventilation within Work areas at CONTRACTOR'S own expense and conforming to applicable requirements and standards of Federal, State, County and the 2020 Los Angeles CITY Building Codes and Amendments.

D. Contractor's Temporary Storage Facilities

1. The CONTRACTOR shall provide an adequate temporary shed on the site in a location designated by the ENGINEER for the safe storage of material and equipment. The shed shall be weathertight with a wood floor above grade. The shed shall be removed upon completion of the Work, or when so ordered by the ENGINEER.

E. Sanitary Facilities

1. The CONTRACTOR shall provide adequate sanitary conveniences of an approved type for the use of persons employed on the Work, and properly secluded from public observation, shall be provided and maintained by the CONTRACTOR in such a manner and at such points as shall be required or approved by the INSPECTOR. These conveniences shall be maintained at all times without nuisances and their use shall be strictly enforced. Upon completion of the Contracted Work, they shall be removed from the premises, leaving the premises clean and free from a nuisance.

F. Job Bulletin Board

1. The CONTRACTOR shall provide and mount on the CONTRACTOR'S Field Office, where it can be readily seen by the CONTRACTOR'S employees, a substantially built 3-feet high x 4-feet wide bulletin board, with a framed glass door protected on the outside with a 2-inch x 2-inch galvanized mesh and lock.

G. Protection Enclosures

1. Precautions shall be exercised by the CONTRACTOR at all times for the protection of persons and property.

2. CONTRACTOR shall furnish (or cause to be furnished) and maintain for the duration of Contracted Work, all scaffolds, covers, tarpaulins, canopies, warning signs, steps, bridges and other temporary construction and other protective devices as required by the INSPECTOR and the Local and State Rules, Ordinances and/or Regulations necessary for protection of public and private property and public safety.

3. Such enclosures shall be of reasonably good appearance and shall be maintained free of signs, posters, writing, markings and any other thing which would detract from a reasonably good appearance.

H. Temporary Fencing and Gates

1. Provide and maintain for the duration of the Contracted Work temporary chain link fencing of design and type needed to prevent entry onto the Jobsite and exterior Work area by the public.

I. Plan Box

1. CONTRACTOR shall provide a plan box to store a full set of contract drawings and the project manual for the duration of the project. The box shall be of the appropriate size to contain the contract drawings and the project manual, and shall be temporary, weather tight, and include a cover, lock, and proper identification.

J. Construction Sign

1. Materials:

a. Posts: 4-inch x 6-inch redwood, C.R.A. Foundation grade.

b. Frame: Douglas fir solid stock, W.C.L.B., and Better, V.G. Finish.

c. Metal Panel: No. 22 gauge sheet steel.

d. CITY Seal: Provided by ENGINEER.

2. Fabrication:

a. Securely attach frame to posts with adequate fasteners.

b. Miter and nail frames, conceal fastenings and set nails.

c. Secure a sheet metal panel to frame with wood stops.

3. Painting:

a. By sign painters.

b. On all surfaces of posts, panel and frame, 1 coat of primer and 1 coat of finish paint on concealed surfaces not glued; 1 coat of primer and 2 coats of finish paint on exposed surfaces, and anti-graffiti coating.

c. With exterior wood primer and exterior oil paint**.**

d. White finish on all surfaces; black letters and black frames reveal.

4. Installation:

a. Set posts into natural ground; location as directed by the ENGINEER or where indicated on the Contract Drawings.

5. Removal:

a. Upon completion of Contracted Work or when directed by the ENGINEER.

6. Modifications:

a. During the course of the Contract, the CONTRACTOR may be required to make changes to lettering, as directed by the ENGINEER, up to forty (40) letters regardless of the letter size, without additional cost to the CITY.

b. Repair and recoat the modified area in a manner that will eliminate the evidence of the changes.

K. Permits

1. The CONTRACTOR shall be responsible for obtaining and paying for all permits, licenses and fees in a timely manner, in accordance with Section 00217 of the General Conditions. The CONTRACTOR shall be aware of the expiration date of all building permits, plan checks and/or extensions when the ENGINEER turns over such documents to the CONTRACTOR for construction use. If the CONTRACTOR does not obtain the permits in a timely manner, the CONTRACTOR shall be responsible for the delay, and the additional cost incurred as a result of the delay, in obtaining and paying for the permits or licenses (such as costs to re-plan check, plan modification due to code changes, etc).

2. The CONTRACTOR shall be familiar with all aspects of the Project. For the Project which requires a haul route hearing and haul route bonding as part of the Grading Permit approval process, CONTRACTOR shall

prepare and secure the Grading Permit as soon as the construction contract is awarded in order to mitigate any possible delays due to the haul route hearing, The haul route map preparations shall be as required by the Los Angeles CITY Department of Building and Safety, Grading Division, and Section 02220 – EARTHWORK of the Project Manual.

3. The CONTRACTOR shall obtain and pay for the following:

   a. Building Permit for each structure

   b. Permits to Use Street Space and Deposit Building Materials

   c. Sewer Connection Permit

   d. Storm Drain Permit

   e. Grading Permit

   f. Sidewalk/Driveway – "A" Permit

   g. Street Work – "B" Permit

   h. Excavation in the Public Right-of-Way – "U" Permit

   i. Plumbing Permit

   j. Demolition Permit

   k. Electrical Permit

   l. Los Angeles County Flood District

   m. Shoring Permit

   n. Sign Permit

   o. Stormwater Pollution Prevention Plan (SWPPP) for stormwater pollution control measures for construction activities

   p. California Department of Transportation Permits (CITY will submit for plan check and pay for owner's permit. CONTRACTOR shall submit and pay for work permit.)

L. Utility Services Connections

1. Within five (5) days after the Notice-to-Proceed, notify the serving utilities that the Project is under construction and furnish them dates on which the services will be required. Furnish the ENGINEER a duplicate copy of all service requests.

2. Should any major changes to the Work indicated be necessary to complete the utility installation, notify the ENGINEER in writing at once

and cease all the Work affected until approval for the required modifications has been obtained from the ENGINEER.

3. Water Service Connections: Make all arrangements with the proper authorities for the domestic water service. The CONTRACTOR will pay for all fees and charges. Construction water is to be separately arranged and paid for by the CONTRACTOR. If the CONTRACTOR uses an existing water supply for construction the billing shall be transferred to the CONTRACTOR prior to the start of construction. A duplicate of the transfer documentation shall be provided to the ENGINEER.

4. Power Service Connections: Make all arrangements with the proper authorities for the new power service connections and testing of electrical equipment and control and removal of existing power service connections as part of the contract. **See Sheet [Sheet Number], Sheet E `-_____]** and attached information from **[Name of Power Company] (Attachment No.__)]** for coordination. The CONTRACTOR will pay for all fees and charges. Power for construction and testing equipment to be separately arranged and paid for by the CONTRACTOR. The CONTRACTOR shall contact **[Name]** of **[Name of Power Company]** at **[Telephone Number].**

5. If the CONTRACTOR is delayed during the inspections by local authorized agencies or work by utility companies, not the fault of the CONTRACTOR and a critical path is impacted, the CONTRACTOR shall be entitled to a non-compensable time extension and shall have no claim for any other compensation for such delay.

6. If the CONTRACTOR is delayed during the inspections by local authorized agencies or work by utility companies, not the fault of the CONTRACTOR and a critical path is impacted, the CONTRACTOR shall be entitled to a non-compensable time extension and shall have no claim for any other compensation for such delay.

1.1 Mobilization shall consist of preparatory work and operations including, but not limited to, those necessary for the movement of personnel, equipment, supplies and incidentals to the Project site for all other work and operations that must be performed or costs incurred before beginning work on the various Contract items on the Project site

1.2 SIGNS

The names, addresses and specialties of CONTRACTORS, subcontractors, engineers or architects may be displayed on removable signs. The size and location shall be subject to the ENGINEER'S approval. Commercial advertising matter shall not be attached to or painted on the surfaces of buildings, fences, canopies or barricades. Refer to GR Section 01581 – Project Signs, for additional requirements.

A. Removal Facilities

1. Field offices shall be removed upon completion of the Work. Buildings and equipment furnished by the CONTRACTOR at the Project site under the provisions of this Section are the property of the CONTRACTOR.

B. Basis of Payment

1. All costs incurred in furnishing, maintaining, servicing, and removing field offices, laboratories, or bathhouse facilities required at the Project site shall be included in the Bid item for furnishing such facilities. If such facilities are required by the Plans or Specifications and no bid item is provided in the proposal, the costs shall be included in other items for which bids are entered. Such costs incurred in connection with offices and laboratories at plants shall be borne by the plant owners. Payment for office facilities will be made as follows: twenty-five percent (25%) when completely installed, seventy-five (75%) prorated over the remainder of the Contract duration.

1.3 THE REQUIREMENT

A. Mobilization shall consist of preparatory work and operations including, but not limited to, those necessary for the movement of personnel, equipment, supplies, and incidentals to (each) Project site for all other work and operations that must be performed or costs incurred before beginning work on the various Contract items on the Project site(s).

1. All furnishings, computer, printer, and related equipment shall be returned to the CONTRACTOR at the end of the Contract Work.

B. Temporary Construction Utilities

1. Construction Water:

a. Potable water will be made available for the CONTRACTOR's use from the existing fire hydrant system, as directed by the ENGINEER. The CONTRACTOR shall meter water usage and pay for the cost of water consumption. The CONTRACTOR shall make arrangements with the servicing water utility company. A backflow preventer shall be provided as per the Plumbing Code.

2. Construction Power:

a. The CONTRACTOR shall provide and maintain all electrical power in performance of the Work and shall pay all installation charges and monthly bills in connection therewith. The CONTRACTOR shall pay for all necessary permits. All temporary connections for electricity shall be subject to approval of the ENGINEER and the power company representative, and shall be removed in like manner at the CONTRACTOR's expense prior to final acceptance of the Work.

C. Contractor's Temporary Storage Facilities

1. The CONTRACTOR shall locate and secure an adequate temporary area near the project site for the safe storage of material and equipment. The temporary area shall be subject to approval of the ENGINEER and the INSPECTOR. All materials associated with the temporary area shall

be removed upon completion of the Work, or when so ordered by the ENGINEER.

D. Sanitary Facilities

1. The CONTRACTOR shall provide adequate sanitary conveniences of an approved type for the use of persons employed on the Work and properly secluded from public observation. The facility shall be provided and maintained by the CONTRACTOR in such a manner and at such points as shall be required or approved by the INSPECTOR. These conveniences shall be maintained at all times without nuisances and their use shall be strictly enforced. Upon completion of the Contracted Work, they shall be removed from the premises, leaving the premises clean and free from nuisance.

E. Job Bulletin Board

1. The CONTRACTOR shall provide and mount on the CONTRACTOR's Field Office, where it can be readily seen by the CONTRACTOR's employees, a substantially built 3' high x 4' wide bulletin board, with a framed glass door protected on the outside with a 2-inch x 2-inch galvanized mesh and lock.

F. Protection Enclosures

1. Precautions shall be exercised by the CONTRACTOR at all times for the protection of persons and property.

2. CONTRACTOR shall furnish (or cause to be furnished) and maintain for the duration of Contracted Work, all scaffolds, covers, tarpaulins, canopies, warning signs, steps, bridges and other temporary construction and other protective devices as required by the INSPECTOR and the Local and State Rules, Ordinances and/or Regulations necessary for protection of public and private property and public safety.

3. Such enclosures shall be of reasonably good appearance and shall be maintained free of signs, posters, writing, markings and any other thing which would detract from a reasonably good appearance.

G. Permits

1. The CONTRACTOR shall be responsible for obtaining and paying for all permits, licenses and fees in a timely manner, in accordance with Section 00217 of the General Conditions. The CONTRACTOR shall be aware of the expiration date of all building permits, plan checks and/or extensions when the ENGINEER turns over such documents to the CONTRACTOR for construction use. If the CONTRACTOR does not obtain the permits in a timely manner, the CONTRACTOR shall be responsible for the delay, and the additional cost incurred as a result of the delay, in obtaining and paying for the permits or licenses (such as costs to re-plan check, plan modification due to code changes, etc).

H. Utility Services Connections

1. Within five (5) days after the Notice-to-Proceed, notify the serving utilities that the Project is under construction and furnish the representatives with dates on which services will be required. Furnish the ENGINEER with a duplicate copy of all service requests.

2. Should any major changes to the Work indicated be necessary to complete the utility installation, notify the ENGINEER in writing at once and cease all the Work affected until approval for the required modifications has been obtained from the ENGINEER.

END OF SECTION

(SEE ATTACHMENT)

ATTACHMENTS TO SECTION 01721

Attachments to General Requirements Section 01721 consists of one (1) document, as follows:

ATTACHMENT NUMBER	TITLE OF ATTACHMENT	NUMBER OF PAGES IN THIS ATTACHMENT
01721-A1	Construction Water Supply Schematic	1

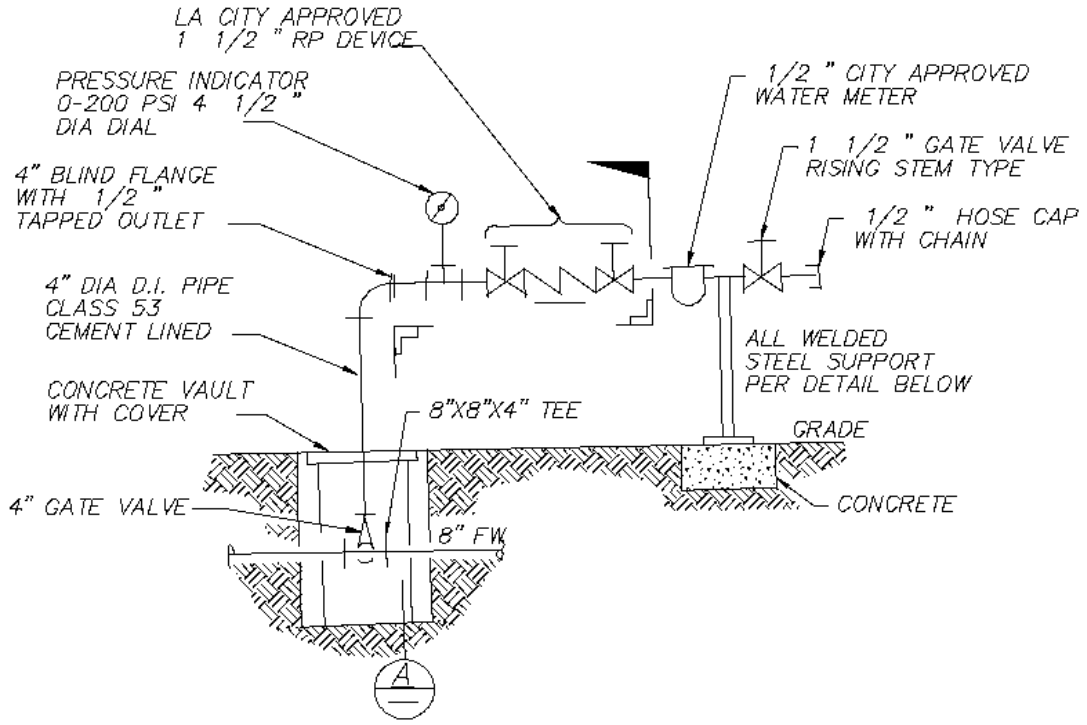

CONSTRUCTION WATER SUPPLY DETAIL

NTS

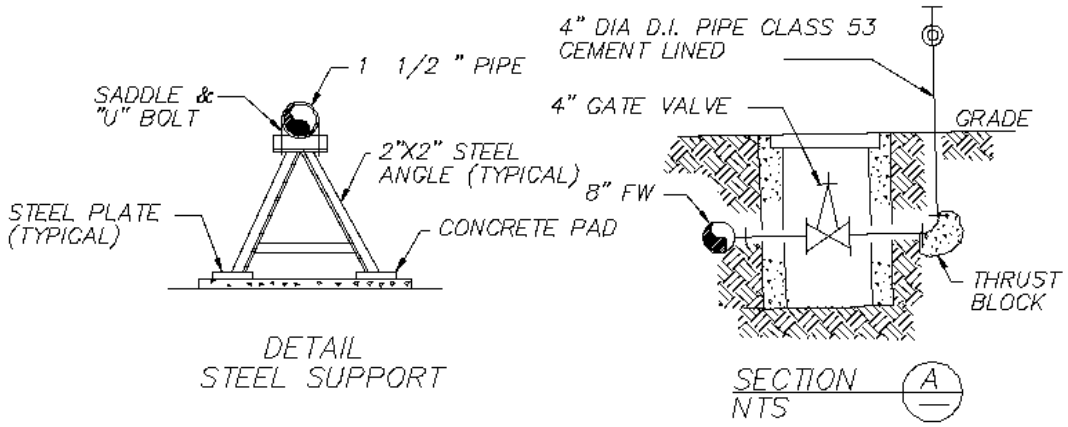

DETAIL
STEEL SUPPORT

SECTION A

NTS

CONSTRUCTION WATER SUPPLY SCHEMATICS

NTS

SECTION 01722
SURVEYING

1.1 THE REQUIREMENT

A. Permanent Survey Control Network Markers

1. The CITY Surveyor will establish horizontal and vertical control by recovering or reestablishing city centerline control monuments and identifying city benchmarks. The CONTRACTOR shall be responsible to protect all preconstruction control network reference points. In the case, where the monuments are to be removed or damaged by the CONTRACTOR, the CONTRACTOR shall notify the ENGINEER / CITY Surveyor in writing seven (7) calendar days before starting the Work. There will be a charge to the CONTRACTOR for replacing monuments and benchmarks that are disturbed by the CONTRACTOR prior to the CITY Surveyor establishing adequate reference points.

   The CONTRACTOR shall furnish all additional surveying necessary for project and shall protect the CITY monuments from damage for the duration of the Project. The CONTRACTOR will be back charged for any CONTRACTOR damaged or destroyed survey control that has to be replaced by the CITY. For pipeline or street projects there shall be control points with coordinates at a maximum ¼ mile spacing. For all projects, at least two elevation benchmarks shall be provided. For projects greater than ½ mile in length, the elevation benchmarks shall be no more than ½ mile apart.

   The CONTRACTOR shall complete a survey request form at least seven (7) full working in advance by contacting the appropriate District Survey Office in the list below. Additional lead time will facilitate service. The form shall state exactly what and when the services are needed. A copy of the request can be faxed to the appropriate District Survey Office and a copy sent to the Engineer.

   West L.A. District Survey Office **(310) 575-8493**
   1828 Sawtelle Blvd., Room 105 ~~**Fax (310) 575-8866**~~
   West Los Angeles 90025
   Email Address: Eng.surdivisionwr@lacity.org

   San Pedro District Survey Office **(310) 732-4661**
   638 S. Beacon Street, Room 406 ~~**Fax (310) 732-4670**~~
   San Pedro, CA 90731
   Email Address: Eng.surdivisionwr@lacity.org

   Valley District Survey Office **(818) 374-4660**
   6262 Van Nuys Blvd. Suite 350
   Van Nuys, CA 91401
   Email Address: Eng.surdivisionwr@lacity.org

   Central District Survey Office **(213) 473-0608**
   555 Ramirez St, Space 250 ~~**Fax (213) 482-7175**~~
   Los Angeles, CA 90012
   Email Address: Eng.surdivisionwr@lacity.org

B. Layout of Contracted Work:

1. The CONTRACTOR shall be responsible for all surveys required to layout Work and for the accuracy of all survey work for construction. The CONTRACTOR shall include the cost of all such survey work in their Bid. The CONTRACTOR shall have all construction surveying performed by a 'Licensed Land Surveyor' or a 'Civil Engineer' registered by the State of California to perform such work. The ENGINEER reserves the right to verify all survey work done by the CONTRACTOR.

C. Construction Surveying Services

1. Construction Surveys shall conform to Chapter J 600 of the Bureau of Engineering Survey Manual, Part J. This manual may be purchased through the Bureau of Engineering Public Reference Center.

2. The CONTRACTOR shall provide all reference stakes and form checks necessary for construction and inspection of improvements. All construction staking shall be documented in survey field notes. This staking may include but is not limited to: removals, joins, rough grade, slope, utilities, storm drains, sewers, curbs, walks, paving, wall and building stakes; and any other staking necessary for construction and inspection.

D. Reference or Grade Stakes

1. A reference or grade stake shall be set for each grade change or angle point shown on the plan, standard plan, and shop drawing, in addition to the normal staking interval.

E. Form Checks

1. Forms shall be checked when durable points may be disturbed, removed, or are impractical to be used to verify the design location. The measured location shall be recorded in the survey field notes. All variations from the plan location shall be brought to the attention of the ENGINEER.

F. Staking Intervals and Offset Stake Lines

1. All staking intervals shall be in accordance with the Survey Manual, Figures J 615.224A&Am, J 615.225A, and J615.225Am. Stake lines shall be set at an offset distance from the improvement to ensure proper grade, station, and alignment.

G. Utility Stakes

1. The CONTRACTOR shall provide stakes for all utilities, public or private, that require location or relocation, unless otherwise stated.

H. Additional Survey Work

1. The CONTRACTOR may be required to furnish additional survey work, such as profiles, restakes, Change Orders, etc., at the request of the ENGINEER or the INSPECTOR.

I. Accuracy

1. The CONTRACTOR shall use appropriate surveying methods to obtain the following standards: For fixed works (i.e. cast-in-place concrete; asphalt pavement, pipes and drains; and other items determined by the ENGINEER) the following survey standards shall be used. The absolute horizontal accuracy, in relationship to the Engineer's control, shall be such that the semimajor axis of its 95% error ellipse is ±0.015 foot or less. The absolute vertical accuracy, in relationship to the Engineer's control, shall be such that its standard deviation is ±0.015 foot or less. The relative horizontal accuracy of survey points within the Project shall be such that the semimajor axis of its 95% error ellipse is ±0.015 foot or less. The relative vertical accuracy of survey points within the Project shall be such that its standard deviation is ±0.015 foot or less.

2. For excavation purposes, the following survey standards shall be used. The absolute horizontal accuracy, in relationship to the Engineer's control, shall be such that the semimajor axis of its 95% error ellipse is ±0.1 foot or less. The absolute vertical accuracy, in relationship to the Engineer's control, shall be such that its standard deviation is ±0.1 foot or less. The relative horizontal accuracy of survey points within the Project shall be such that semimajor axis of the 95% error ellipse is ±0.1 foot or less. The relative vertical accuracy of survey points within the Project shall be such that its standard deviation is ±0.1 foot or less.

J. Survey/Inspector

1. The CONTRACTOR shall provide to the INSPECTOR those measurements and control points necessary to determine the location and conformance to the plan, line, and grade of the improvements necessary for inspection purposes.

K. Survey/Engineer

1. The CONTRACTOR shall provide to the ENGINEER those measurements necessary for the expedient completion of the Project.

L. Survey Plan of Operations

1. Prior to construction, the CONTRACTOR shall submit to the ENGINEER for approval a survey plan describing methods and instrumentation to be used on the Project. The survey plan must be approved prior to any construction.

M. Survey Notes

1. The CONTRACTOR shall supply and keep notes on CITY standard format note sheets in conformance with Chapter J 600 of the Bureau of Engineering Survey Manual, Part J. The ENGINEER may request copies of, and otherwise review, survey notes at any time during the construction phase of the Project. Upon completion of the Project, the original survey notes shall become the property of the CITY and shall be delivered to the ENGINEER

(END OF SECTION)

SECTION 01723
RIGHT OF WAY

1.1 THE REQUIREMENT

A. The CONTRACTOR shall not allow its employees to use private property for any reason, or to use water or electricity from such property without written permission from the owner. The CONTRACTOR shall provide evidence of such permission, in writing, to the ENGINEER, before entering upon such lands.

END OF SECTION 01723

SECTION 1731
CUTTING AND PATCHING

PART ONE - GENERAL

1.1 SUMMARY

A. This Section establishes general requirements pertaining to cutting (including excavating,) coring, fitting, and patching of the Contracted Work in existing or new CITY facilities (structures) required to:

1. Make the several parts fit properly;

2. Uncover work to provide for removal, installing, inspecting, or both, of ill-timed work;

3. Remove and replace work not conforming to requirements of the Contract Documents; and

4. Remove and replace defective work.

B. Related Work:

1. Documents affecting Works of this Contract include, but are not necessarily limited to, the GENERAL CONDITIONS, DIVISION 1 - GENERAL REQUIREMENTS and other Sections of the Project Manual.

2. In addition to other specified requirements, the CONTRACTOR shall, upon the Consultant's or ENGINEER'S request, uncover work to provide for inspection by the Consultant or ENGINEER of uncovered work and remove samples of installed materials for testing.

3. Do not cut or alter Work performed under separate Contracts without the Consultant's or ENGINEER'S written permission.

4. Shoring in Section 02240.

5. Waterproofing in Section 07290.

6. Joint Sealant in Section 07900.

7. Electrical in Division 16.

1.2 SUBMITTALS

A. Request For Consultant's or ENGINEER'S Consent:

1. Prior to cutting which effects structural safety, submit written request to the Consultant or ENGINEER for permission to proceed with cutting.

2. Submit, to the ENGINEER, for approval, the method(s) of cutting and patching, and protection plan for each. Submit structural calculation,

prepared by a California State licensed Engineer, as directed by the ENGINEER.

3. Should conditions of the Work or schedule indicate a required change of materials or methods for cutting and patching, so notify the Consultant or ENGINEER and secure written permission prior to proceeding.

1.3 QUALITY ASSURANCE

A. Use adequate numbers of skilled workers who are thoroughly trained and experienced in the necessary crafts, and who are completely familiar with the specified requirements and the methods needed for proper performance of the Work of this Section.

B. The safety provisions of applicable laws, building and construction codes shall be observed.

C. Field Mock Up: For each finish surface condition prepare a representative mock-up area which shall be completely cleaned and finished for review by ENGINEER. ENGINEER'S approval shall be obtained before proceeding with additional cutting and patching work.

D. Requirements for Structural Work: Do not cut and patch structural elements in a manner that would reduce their load-carrying capacity.

1. Obtain approval of the cutting and patching proposal before cutting and patching any structural elements.

E. Operational and Safety Limitations: Do not cut and patch operating elements or safety related components in a manner that would result in reducing their capacity to perform as intended, or result in increased maintenance, or decreased operational life or safety.

1. Obtain approval of the cutting and patching proposal before cutting and patching any operating elements.

F. If no deposition of existing detail of existing improvements or conditions is made on the Drawings or in the Project Manual, it shall be the CONTRACTOR'S responsibilities to provide necessary site investigations including testing, potholes, exposure, etc. to obtain site information at no additional cost to the CITY. CONTRACTOR shall submit site information as part of the submittal. CONTRACTOR shall repair all potholes, exposures, etc. as part of the Contract.

G. Visual Requirements: Do not cut and patch construction exposed on the exterior or in occupied spaces, in a manner that would, in the ENGINEER'S or Consultant's opinion, reduce the building's aesthetic qualities, or result in visual evidence of cutting and patching. Remove and replace work cut and patched in a visually unsatisfactory manner.

PART TWO - PRODUCTS

2.1 MATERIALS

A. General**:** Use materials that are identical to existing materials. If identical materials are not available, or existing materials do not meet codes or cannot be used where exposed surfaces are involved, use materials that match existing adjacent surfaces to the fullest extent possible with regard to visual effect. Use materials whose installed performance will equal or surpass that of existing materials. Submit method of repair including lapping, splicing and joining of new and existing materials.

B. For replacement of items removed, use materials complying with pertinent Sections this Project Manual.

C. All cut concrete shall be provided with steel dowels filled with non-shrink grout prior to patching or placement of new concrete.

PART THREE - EXECUTION

3.1 SURFACE CONDITIONS

A. Inspection:

1. Inspect existing conditions, including elements subject to movement or damage prior to the Bid, during cutting, excavating, patching, and backfilling.

2. Identify all existing utilities, protect and maintain service to occupied areas in accordance with GENERAL REQUIREMENTS Section 01140 –- CONTRACTOR'S USE OF THE PREMISES, and GENERAL REQUIREMENTS Section 01711 – SITE INVESTIGATION.

3. Unless specified otherwise, inspect and determine location of existing rebars in masonry and/or concrete walls or flooring prior to cutting.

4. After uncovering the work, inspect conditions affecting installation of new work.

B. Discrepancies:

1. If uncovered conditions are not as anticipated, immediately notify in writing the Consultant or the ENGINEER and secure needed directions.

2. Do not proceed until unsatisfactory conditions are corrected.

3.2 PREPARATION PRIOR TO CUTTING

Provide required protection including, but not necessarily limited to, shoring, bracing, and support to maintain structural integrity of the work. Provide duplicate copy of shoring permit and plan to the ENGINEER prior to start of Contracted Work.

3.3 PERFORMANCE

A. Perform required excavating and backfilling as required under other pertinent Sections of the Project Manual.

1. Perform cutting and demolition by methods, which will prevent damage to other portions of the Contracted Work and provide proper surfaces to receive a proper installation of repair and new work.

2. Perform cutting (excavating) in accordance with recommendations described in Soil Investigation Report. Over cutting (excavating) is prohibited.

3. Perform fitting and adjusting of products to provide finished installation complying with the specified tolerances and finishes noted in the Technical Sections of the Project Manual.

B. Cutting: Cut existing construction using methods least likely to damage elements to be retained or adjoining construction. Where possible, review proposed procedures with the original installer. If CONTRACTOR does not concur with the original installer's recommendations, CONTRACTOR shall notify the ENGINEER and request instructions.

1. In general, where cutting is required, use hand or small power tools designed for sawing or grinding, not hammering and chopping. Impact tools are not to be used in the building. Cut holes and slots neatly to size required with minimum disturbance of adjacent surfaces. Temporarily cover openings when not in use.

2. To avoid marring existing finished surfaces, cut or drill from the exposed or finished side into concealed surfaces, or spaces.

3. Cut through concrete and masonry using a cutting machine such as a carborundum saw or diamond core drill. Use methods or locations that could avoid cutting the rebars. All cut rebars, approved by the ENGINEER, shall be rounded off any sharp edges and dabbed with a coat of protective coating against rusting.

4. Comply with requirements of applicable Sections of DIVISION 2 where cutting and patching requires excavating and backfilling.

5. By-pass utility services such as pipe or conduit, before cutting, where services are shown or required to be removed, relocated or abandoned. Cut-off pipe or conduit in walls, partitions or floor slabs to be removed. Cap, valve or plug and seal the remaining portion of pipe or conduit to prevent entrance of moisture or other foreign matter after bypassing and cutting. No existing service shall be interrupted, in accordance with

Section 01140 – CONTRACTOR'S USE OF THE PREMISES of the GENERAL REQUIREMENTS.

6. Unless specified otherwise, all cut floor or roof wooden ledgers and blockings shall be repaired, spliced and installed with approved steel connectors. If necessary, install new double wooden ledgers or blocking without additional cost to the CITY.

7. Unless specified otherwise, all cut ceiling framing members shall be repaired or replaced with new framing members to the satisfaction of the ENGINEER. Re-install all ceiling, mechanical grills, and lighting fixtures affected by the cutting and repairs.

8. Unless specified otherwise, all existing masonry walls shall be removed to the nearest grout joint. All removed masonry units shall be protected, salvaged and reused.

C. Patching: Patch with durable seams that are as invisible as possible. Comply with specified tolerances.

1. Where feasible, inspect and test patched areas to demonstrate integrity of the installation.

2. Restore exposed finishes of patched areas and extend finish restoration into retained adjoining construction in a manner that will eliminate evidence of patching and refinishing.

3. All existing masonry wall shall be repointed and regrouted to the nearest wythe joint to match existing.

4. Restore all building insulation and fireproofing to match existing thickness and conditions.

5. Restore complete caulking, sealer, waterproofing, etc. to achieve maximum performance as required at no additional cost to the CITY.

3.4 CLEANING

Thoroughly clean areas and spaces where cutting and patching is performed or used as access. Remove completely paint, mortar, oils, putty and items of similar nature. Thoroughly clean piping, conduit and similar features before painting or other finishing is applied. Restore damaged pipe covering to its original condition.

3.5 TESTING

Demonstrate by appropriate water testing that repaired **caulking, sealer, waterproofing**, etc. are completely water tight and weather tight.

END OF SECTION 01731

SECTION 1731
CUTTING AND PATCHING

PART ONE - GENERAL

1.1 SUMMARY

A. This Section establishes general requirements pertaining to cutting (including excavating,) coring, fitting, and patching of the Contracted Work in existing or new CITY facilities (structures) required to:

1. Make the several parts fit properly;

2. Uncover work to provide for removal, installing, inspecting, or both, of ill-timed work;

3. Remove and replace work not conforming to requirements of the Contract Documents; and

4. Remove and replace defective work.

B. Related Work:

1. Documents affecting Works of this Contract include, but are not necessarily limited to, the GENERAL CONDITIONS, DIVISION 1 - GENERAL REQUIREMENTS and other Sections of the Project Manual.

2. In addition to other specified requirements, the CONTRACTOR shall, upon the Consultant's or ENGINEER'S request, uncover work to provide for inspection by the Consultant or ENGINEER of uncovered work and remove samples of installed materials for testing.

3. Do not cut or alter Work performed under separate Contracts without the Consultant's or ENGINEER'S written permission.

4. Shoring in Section 02240.

5. Waterproofing in Section 07290.

6. Joint Sealant in Section 07900.

7. Electrical in Division 16.

1.2 SUBMITTALS

A. Request For Consultant's or ENGINEER'S Consent:

1. Prior to cutting which effects structural safety, submit written request to the Consultant or ENGINEER for permission to proceed with cutting.

2. Submit, to the ENGINEER, for approval, the method(s) of cutting and patching, and protection plan for each. Submit structural calculation,

prepared by a California State licensed Engineer, as directed by the ENGINEER.

3. Should conditions of the Work or schedule indicate a required change of materials or methods for cutting and patching, so notify the Consultant or ENGINEER and secure written permission prior to proceeding.

1.3 QUALITY ASSURANCE

A. Use adequate numbers of skilled workers who are thoroughly trained and experienced in the necessary crafts, and who are completely familiar with the specified requirements and the methods needed for proper performance of the Work of this Section.

B. The safety provisions of applicable laws, building and construction codes shall be observed.

C. Field Mock Up: For each finish surface condition prepare a representative mock-up area which shall be completely cleaned and finished for review by ENGINEER. ENGINEER'S approval shall be obtained before proceeding with additional cutting and patching work.

D. Requirements for Structural Work: Do not cut and patch structural elements in a manner that would reduce their load-carrying capacity.

1. Obtain approval of the cutting and patching proposal before cutting and patching any structural elements.

E. Operational and Safety Limitations: Do not cut and patch operating elements or safety related components in a manner that would result in reducing their capacity to perform as intended, or result in increased maintenance, or decreased operational life or safety.

1. Obtain approval of the cutting and patching proposal before cutting and patching any operating elements.

F. If no deposition of existing detail of existing improvements or conditions is made on the Drawings or in the Project Manual, it shall be the CONTRACTOR'S responsibilities to provide necessary site investigations including testing, potholes, exposure, etc. to obtain site information at no additional cost to the CITY. CONTRACTOR shall submit site information as part of the submittal. CONTRACTOR shall repair all potholes, exposures, etc. as part of the Contract.

G. Visual Requirements: Do not cut and patch construction exposed on the exterior or in occupied spaces, in a manner that would, in the ENGINEER'S or Consultant's opinion, reduce the building's aesthetic qualities, or result in visual evidence of cutting and patching. Remove and replace work cut and patched in a visually unsatisfactory manner.

PART TWO - PRODUCTS

2.1 MATERIALS

A. General**:** Use materials that are identical to existing materials. If identical materials are not available, or existing materials do not meet codes or cannot be used where exposed surfaces are involved, use materials that match existing adjacent surfaces to the fullest extent possible with regard to visual effect. Use materials whose installed performance will equal or surpass that of existing materials. Submit method of repair including lapping, splicing and joining of new and existing materials.

B. For replacement of items removed, use materials complying with pertinent Sections this Project Manual.

C. All cut concrete shall be provided with steel dowels filled with non-shrink grout prior to patching or placement of new concrete.

PART THREE - EXECUTION

3.1 SURFACE CONDITIONS

A. Inspection:

1. Inspect existing conditions, including elements subject to movement or damage prior to the Bid, during cutting, excavating, patching, and backfilling.

2. Identify all existing utilities, protect and maintain service to occupied areas in accordance with GENERAL REQUIREMENTS Section 01140 –- CONTRACTOR'S USE OF THE PREMISES, and GENERAL REQUIREMENTS Section 01711 – SITE INVESTIGATION.

3. Unless specified otherwise, inspect and determine location of existing rebars in masonry and/or concrete walls or flooring prior to cutting.

4. After uncovering the work, inspect conditions affecting installation of new work.

B. Discrepancies:

1. If uncovered conditions are not as anticipated, immediately notify in writing the Consultant or the ENGINEER and secure needed directions.

2. Do not proceed until unsatisfactory conditions are corrected.

3.2 PREPARATION PRIOR TO CUTTING

Provide required protection including, but not necessarily limited to, shoring, bracing, and support to maintain structural integrity of the work. Provide duplicate copy of shoring permit and plan to the ENGINEER prior to start of Contracted Work.

3.3 PERFORMANCE

A. Perform required excavating and backfilling as required under other pertinent Sections of the Project Manual.

1. Perform cutting and demolition by methods, which will prevent damage to other portions of the Contracted Work and provide proper surfaces to receive a proper installation of repair and new work.

2. Perform cutting (excavating) in accordance with recommendations described in Soil Investigation Report. Over cutting (excavating) is prohibited.

3. Perform fitting and adjusting of products to provide finished installation complying with the specified tolerances and finishes noted in the Technical Sections of the Project Manual.

B. Cutting: Cut existing construction using methods least likely to damage elements to be retained or adjoining construction. Where possible, review proposed procedures with the original installer. If CONTRACTOR does not concur with the original installer's recommendations, CONTRACTOR shall notify the ENGINEER and request instructions.

1. In general, where cutting is required, use hand or small power tools designed for sawing or grinding, not hammering and chopping. Impact tools are not to be used in the building. Cut holes and slots neatly to size required with minimum disturbance of adjacent surfaces. Temporarily cover openings when not in use.

2. To avoid marring existing finished surfaces, cut or drill from the exposed or finished side into concealed surfaces, or spaces.

3. Cut through concrete and masonry using a cutting machine such as a carborundum saw or diamond core drill. Use methods or locations that could avoid cutting the rebars. All cut rebars, approved by the ENGINEER, shall be rounded off any sharp edges and dabbed with a coat of protective coating against rusting.

4. Comply with requirements of applicable Sections of DIVISION 2 where cutting and patching requires excavating and backfilling.

5. By-pass utility services such as pipe or conduit, before cutting, where services are shown or required to be removed, relocated or abandoned. Cut-off pipe or conduit in walls, partitions or floor slabs to be removed. Cap, valve or plug and seal the remaining portion of pipe or conduit to prevent entrance of moisture or other foreign matter after bypassing and cutting. No existing service shall be interrupted, in accordance with

Section 01140 – CONTRACTOR'S USE OF THE PREMISES of the GENERAL REQUIREMENTS.

6. Unless specified otherwise, all cut floor or roof wooden ledgers and blockings shall be repaired, spliced and installed with approved steel connectors. If necessary, install new double wooden ledgers or blocking without additional cost to the CITY.

7. Unless specified otherwise, all cut ceiling framing members shall be repaired or replaced with new framing members to the satisfaction of the ENGINEER. Re-install all ceiling, mechanical grills, and lighting fixtures affected by the cutting and repairs.

8. Unless specified otherwise, all existing masonry walls shall be removed to the nearest grout joint. All removed masonry units shall be protected, salvaged and reused.

C. Patching: Patch with durable seams that are as invisible as possible. Comply with specified tolerances.

1. Where feasible, inspect and test patched areas to demonstrate integrity of the installation.

2. Restore exposed finishes of patched areas and extend finish restoration into retained adjoining construction in a manner that will eliminate evidence of patching and refinishing.

3. All existing masonry wall shall be repointed and regrouted to the nearest wythe joint to match existing.

4. Restore all building insulation and fireproofing to match existing thickness and conditions.

5. Restore complete caulking, sealer, waterproofing, etc. to achieve maximum performance as required at no additional cost to the CITY.

3.4 CLEANING

Thoroughly clean areas and spaces where cutting and patching is performed or used as access. Remove completely paint, mortar, oils, putty and items of similar nature. Thoroughly clean piping, conduit and similar features before painting or other finishing is applied. Restore damaged pipe covering to its original condition.

3.5 TESTING

Demonstrate by appropriate water testing that repaired **caulking, sealer, waterproofing**, etc. are completely water tight and weather tight.

END OF SECTION 01731

SECTION 01732
ADDITIONAL POTHOLING

1.1 THE REQUIREMENT

A. The CONTRACTOR shall conduct exploratory excavations by potholing to verify or to discover the actual locations and the size of existing underground utilities and improvements. The CONTRACTOR shall take care not to damage existing facilities during potholing operations. Any utility or existing facility (including those located by Underground Service Alert - USA) within 3 feet of any trench or excavation shall be potholed prior to starting the contract work in the vicinity. Potholing shall be done in each given area where excavation work is to occur at least fourteen (14) calendar days in advance of any excavation or construction in that area, to avoid possible delay in the progress of the Work.

B. Potholing shall consist of excavations at the locations of utilities or other underground facilities indicated on the Drawings, located by USA, or as directed by the ENGINEER. All costs of potholing operations for the utilities indicated on the Drawings shall be included in the CONTRACTOR'S Bid.

C. If an allowance for Additional Potholing has been established and included in the SCHEDULE OF WORK AND PRICES, this allowance shall only be used to reimburse the CONTRACTOR for potholing utilities not shown or otherwise referenced on the drawings, or as directed by the ENGINEER. If the total cost of the Work directed under the Additional Potholing allowance differ from the amount set forth in the SCHEDULE OF WORK AND PRICES, the Contract Price shall be adjusted by a Change Order. The adjustment shall be the difference between the total actual costs and the amount included in the Bid, as an additional amount due to the CONTRACTOR or a credit to the CITY, as appropriate.

D. In addition to the potholes indicated on the Drawings, or directed by the ENGINEER, the CONTRACTOR may opt to do further potholing deemed necessary at no additional cost to the CITY.

E. Potholing operations shall conform to all applicable requirements of INJURY AND ILLNESS PREVENTION - SAFETY MEASURES of the GENERAL CONDITIONS, as to sidewall slopes, sheeting and shoring, and all other excavation and trenching provisions specified herein.

F. Potholing operations shall be conducted in accordance with the requirements of PROTECTION OF PERSONS AND PROPERTY AND RESTORATION OF EXISTING IMPROVEMENTS of the GENERAL CONDITIONS, in order to ensure that the existing facilities will remain in operation with minimum interruptions. Attention is specifically directed to the limitations on street closures, altering of vehicular and pedestrian access in accordance with INTERFACE / COORDINATION REQUIREMENTS of these GENERAL REQUIREMENTS. Potholes shall be identified and protected in accordance with the City of LA Brown Book, the California Manual on Uniform Traffic Control Devices (MUTCD) and Work Area Traffic Control Handbook (WATCH) Standards.

G. The CONTRACTOR'S proposed method of potholing and schedule for potholing shall be submitted to the ENGINEER for approval, at least thirty (30) days prior to

the commencement of operation. Any utilities damaged during potholing shall be immediately reported to the ENGINEER and INSPECTOR and repairs made immediately in accordance with the requirements of PROTECTION OF PERSONS AND PROPERTY AND RESTORATION OF EXISTING IMPROVEMENTS of the GENERAL CONDITIONS.

H. A complete log of all potholes shall be kept by the CONTRACTOR, showing specific locations and dimensions of trenches. The log shall be verified by the INSPECTOR prior to the backfilling of the potholes. The verified log will be submitted to the ENGINEER and the INSPECTOR within two (2) working days after completion of potholing in each area. Payment for potholing utilities not shown or otherwise referenced on the drawings, or as directed by the ENGINEER will not be made unless these potholes are listed on the verified log.

I. The CONTRACTOR shall record the coordinates, elevations and dimensions of all utilities and improvements verified or discovered by potholing. The records shall be submitted to the ENGINEER within two (2) working days after the completion of potholing in each area. The records shall also include dates of the potholing operations and any additional discovered information or pertinent data.

J. Upon completion of potholing in each area, and after verification of the logs by the INSPECTOR, potholes shall be immediately backfilled and compacted in accordance with the specifications, or restored as directed by the ENGINEER.

END OF SECTION 01732

SECTION 01740
REMOVAL, CLEANUP, AND DEMOBILIZATION

1.1 THE REQUIREMENT

A. Throughout all phases of construction, including suspension of work, and until the Final Acceptance, the CONTRACTOR shall keep the site clean and free from rubbish and debris. The CONTRACTOR shall also abate dust nuisance by cleaning, sweeping and sprinkling with water, or other means as necessary. The use of water resulting in mud on public streets will not be permitted as a substitute for sweeping or other methods.

B. The road(s) on the construction site shall be paved immediately after the installation of planned utilities and the constructions and underground/final inspection of SS, SD, curbs, and gutters. The exit road on the construction site shall be paved first.

C. Vehicles exiting the construction site shall have all dirt clods and mud removed from their tires.

D. When required by the Plans or Specifications, the CONTRACTOR shall furnish and operate a self-loading motor sweeper with spray nozzles at least once each working day for the purpose of keeping paved areas acceptably clean whenever construction, including restoration, is incomplete.

E. Materials and equipment shall be removed from the site as soon as they are no longer necessary. Before the final inspection, the site shall be cleared of equipment, unused materials and rubbish so as to present a satisfactory clean and neat appearance. All cleanup costs shall be included in the CONTRACTOR'S Bid.

F. Care shall be taken to prevent spillage on haul routes. Any such spillage shall be removed immediately and the area cleaned.

G. Excess excavated material from catch basins or similar structures shall be removed from the site immediately. Sufficient material may remain for use as backfill if permitted by the Specifications. Forms and form lumber shall be removed from the site as soon as practicable after stripping.

H. Failure of the CONTRACTOR to comply with the ENGINEER'S cleanup orders may result in an order to suspend work until the condition is corrected. No additional compensation will be allowed as a result of such suspension.

END OF SECTION 01740

SECTION 01750
STARTUP ASSISTANCE

1.1 THE REQUIREMENT

A. To satisfy the requirements of the ENGINEER during the startup of the facility, the CONTRACTOR may be required to provide STARTUP ASSISTANCE. Startup assistance shall commence immediately after a Statement Of Partial Completion or a Statement Of Completion is issued as specified in PARTIAL ACCEPTANCE and FINAL ACCEPTANCE of the GENERAL CONDITIONS and shall continue for a period of three months. Such services shall include the services of craft personnel supplied by the CONTRACTOR to satisfy the requirements of the ENGINEER during Startup. Such services shall be available for at least one (1) eight (8) hour shift per day until startup activities are concluded, and may also include the availability of said craft personnel on a twenty-four (24) hour on-call basis.

B. Such startup assistance shall include such modifications to the Work as deemed necessary by the ENGINEER to provide a complete and functional facility.

C. Commencing on the first day of startup assistance, and upon written notice by the ENGINEER, the CONTRACTOR shall provide the INSPECTOR with daily labor timesheets, material invoices, and rented equipment invoices required for startup assistance activities.

D. Direct costs of startup assistance activities shall be in strict accordance with the Cost Reimbursement (Time and Materials) portions of the GENERAL REQUIREMENTS Section 01254, CHANGE ORDERS. However, Part 1.1.E, MARKUPS – OVERHEAD AND PROFIT, shall not be applicable to the direct costs of startup assistance. Instead, provisions for overhead and profit applied to the direct costs of startup assistance are included below:

DIRECT COST PERFORMED IN ONE MONTH	% OVERHEAD[2] AND PROFIT WHEN PRIME CONTRACTOR PERFORMS WORK	% OVERHEAD[2] & PROFIT PAID TO PRIME CONTRACTOR FOR WORK DONE BY ITS SUBCONTRACTORS[1]
Under $20,000	24%	11%
$20,000 - $50,000	22%	9%
$50,000 - $100,000	20%	7%
Over $100,000	18%	5%

[1] Subcontractors will mark up[2] their direct costs for startup assistance in accordance with the SSPWC available at the time of the Bid. Subcontractors at all tiers shall not be paid overhead and profit on their Subcontractor's work.

[2] Overhead for CONTRACTOR or Subcontractor shall consist of the following, but is not limited to:

1. Home office overhead expenses

2. All insurance requirements

3. Other needed insurance

4. Field office overhead including, but not limited to:

    a. Bookkeeping, accounting, estimating (whether done at the field or home office);

    b. Photocopying and/or office automation (whether done at the field or home office);

    c. Salaried superintendent or any other person with superintendent duties during the course of the Work;

    d. Any salaried staff and/or temporary office services;

    e. Trailers, electricity, water, telephone, etc.;

    f. Vehicles assigned to any salaried staff and/or temporary office services;

    g. Small tools and consumables. Small tools are defined as any equipment or tool, which has a replacement value of $1,000 or less;

    h. Travel of home office or field office staff, including transportation and expenses.

E. All items included in overhead shall not be billed as direct costs. The derivation of an extended overhead (field and/or office) rate and its application to contract time extensions shall not be applicable to startup assistance activities for this Contract. The duration of startup assistance will not be considered in the determination of the completion date for liquidated damages. That date will be determined by the completion of other work. Likewise, the duration of startup assistance will not be the basis in whole or in part for any claims for delay or extended overhead.

F. Each month the amount billed by the CONTRACTOR for startup assistance will be deducted from the amount stipulated in the SCHEDULE OF WORK AND PRICES of Bid Proposal. In the event that the stipulated amount is exhausted, the CITY will continue to approve payment via Change Orders. The cost of these Change Orders will be calculated in the manner described hereinbefore in this Article. In the event that the stipulated amount is not exhausted when the startup activities are concluded, the balance of the stipulated amount will not be due the

CONTRACTOR and a deductive Change Order will be issued for the remaining balance.

END OF SECTION 01750

SECTION 01770
PROJECT CLOSEOUT

PART ONE - GENERAL

1.1 RELATED DOCUMENTS

A. Drawings and General Provisions of Contract, including GENERAL CONDITIONS, DIVISION 1 - GENERAL REQUIREMENTS and other Sections of the Project Manual, applies to this Section.

1. SHOP DRAWINGS / SUBMITTALS in Section 01330.

2. Section 01140 – CONTRACTOR'S USE OF THE PREMISES.

3. MOBILIZATION in Section 01721.

4. REMOVAL, CLEAN-UP AND DEMOBILIZATION in Section 01740.

5. RECORD DRAWINGS AND RECORD PROJECT MANUAL in Section 01783.

1.2 SUMMARY

A. This Section specifies administrative and procedural requirements for a Project Closeout, including but not limited to:

1. Inspection procedures.

2. Project record document submittals.

3. Operation and Maintenance Manual submittal.

4. Submittal of warranties.

5. Final cleaning.

B. Closeout requirements for specific construction activities are included in the appropriate Technical Sections in Divisions 2 through 16 of the Project Manual.

1.3 FINAL INSPECTION

A. Preliminary Procedures: Before requesting final inspection for the Contracted Works, the CONTRACTOR shall complete the following.

1. In the "Request for Payment" that coincides with, or first follows, the date the final inspection is requested, show one-hundred percent (100%) completion for the portion of the Contracted Work claimed as complete. Include supporting documentation for completion as indicated in these Contract Documents and a statement showing an accounting of changes to the Contract Sum.

a. Include a list of incomplete or outstanding works established during a Pre-final walk-thru as required in Section 01452 - INSPECTION OF THE WORK of the GENERAL REQUIREMENTS, and all supporting evidence or documentation for completion.

b. If one-hundred percent (100%) completions cannot be shown, include a list of incomplete items and all correction notices, the value of incomplete construction, and reasons as to why the Work is not complete.

2. Advise CITY of pending insurance changeover requirements.

3. Submit specific warranties, reduced faithful performance bonds for guarantee work, maintenance agreements, final certifications and similar documents.

4. Obtain and submit releases from local authorized agencies enabling the CITY unrestricted use of the Work and access to services and utilities; include the certificate of occupancy, permits or operating certificates and similar releases. Return all Building & Safety's sign-off sheet and Inspection Records to the CITY.

5. Submit Record Drawings and Record Project Manual, maintenance manuals, final Project photographs, damage or settlement survey, property survey, and similar final record information.

6. Deliver tools, spare parts, extra stock, and similar items.

7. Make a final changeover of permanent locks and transmit keys to the ENGINEER. Advise the CITY'S personnel of the changeover in security provisions.

8. Complete start-up testing of systems, and instruction**/**training of the CITY'S operating and maintenance personnel. Discontinue or change over and remove temporary facilities from the Jobsite, along with construction tools, mockups, and similar elements.

9. Complete all required testing including balancing test, bacteriological analysis, etc. Submit all test reports.

10. Return all original permits and manifests to the ENGINEER.

11. Advise the CITY of pending change over of the utility services upon start-up testing of the systems and completion of final inspection.

12. Complete final clean up requirements, including touch-up painting. Touch-up and otherwise repair and restore marred exposed finishes.

13. Make ready to proceed with the 90 day plant establishment period. Submit the maintenance schedules and logs.

B. Inspection Procedures: The INSPECTOR, with cooperation from the Consultant and the ENGINEER, will prepare a Final Inspection Correction list to that effect following inspection, or advise the CONTRACTOR of construction that must be

completed or corrected before the construction work can be considered complete**.** The Contract time shall continue to be assessed.

1. The INSPECTOR, Consultant and ENGINEER will repeat the inspection when requested and assured that the Contracted Work has been satisfactorily completed.

2. The INSPECTOR, Consultant and ENGINEER will inspect the Work of the plant establishment period upon completion.

3. Results of the completed inspection will form the basis of requirements for Final Acceptance. The Contract time shall stop when all corrections are considered complete by the CITY.

C. Reinspection Fees: Should the Consultant and the CITY'S personnel perform reinspection due to failure of the Work to comply with CONTRACTOR'S claim of completion, the CONTRACTOR will compensate the CITY for such additional services. The CITY will deduct the amount of such compensation from the Final Payment to the CONTRACTOR.

1.4 FINAL ACCEPTANCE

A. Preliminary Procedures: Before requesting Final Acceptance and Final Payment, the CONTRACTOR shall complete the following and list exceptions in the request.

1. Submit the Final Payment request with releases and supporting documentation not previously submitted and accepted. Include certificates of guarantee for products and completed operations where required.

2. Submit an updated final statement, accounting for final additional changes to the Contract Sum.

3. Submit a certified copy of the INSPECTOR'S (combined with Consultant's and ENGINEER'S) final inspection list of items to be completed or corrected, stating that each item has been completed or otherwise resolved for acceptance, and the list has been endorsed and dated by the INSPECTOR, the Consultant or ENGINEER.

4. Submit a certified copy of the INSPECTOR'S, Consultant's and ENGINEER'S final inspection correction list for the maintenance services and items to be completed or corrected.

5. Submit final meter readings for utilities, a measured record of stored fuel, and similar data as of the date of Final Acceptance, or when the CITY took possession of and responsibility for corresponding elements of the Work.

6. Submit consent of surety to Final Payment.

7. Submit a final liquidated damages settlement statement.

8. Submit evidence of final, continuing insurance coverage complying with insurance requirements.

9. Submit all required certified weekly payroll records, ethnic composition of work force reports.

B. Reinspection Procedure: The INSPECTOR**,** Consultant and ENGINEER will reinspect the Contracted Work upon receipt of notice that the Work, including inspection list items from earlier inspections, has been completed, except items whose completion has been delayed because of circumstances acceptable to the INSPECTOR**,** Consultant or ENGINEER.

1. After all correction works are completed and inspected, ENGINEER and INSPECTOR of Bureau of Contract Administration shall establish the construction completion date.

1.5 RECORD DOCUMENTS SUBMITTALS

A. General: Do not use Record Documents for construction purposes; protect from deterioration and loss in a secure, fire-resistive location; provide access to record documents for the Consultant's or ENGINEER'S reference during normal working hours.

B. Record Drawings: Maintain a clean, undamaged set of blue or black line white-prints of Contract Drawings and Shop Drawings. Mark the set to show the actual installation where the installation varies substantially from the Contracted Work as originally shown. Mark whichever drawing is most capable of showing conditions fully and accurately; where Shop Drawings are used, record a cross-reference at the corresponding location on the Contract Drawings. All Record Drawings, Record Project Manual and new markings shall be submitted to the ENGINEER for review prior to the approval of the Progress Payments. Give particular attention to concealed elements that would be difficult to measure and record at a later date. Upon completion of the Work, submit Record Drawings, Record Project Manual etc, to the Consultant or ENGINEER for review and for the CITY'S records.

1. Mark Record Sets with a red erasable pencil; use other colors to distinguish between variations in separate categories of the Work.

2. Mark new information that is important to the CITY, including detail from "Request-for-Information" which was not shown on Contract Drawings or Shop Drawings, as soon as it is made available**.** Any subsequent revision or changes, to the details from an earlier "Request-for-Information", shall also be marked immediately on the Record Drawings.

3. Note related finalized or pending "Change Order" numbers where applicable**.**

4. Note all addenda, drawing modification, etc. on Record Drawings.

5. Where Shop Drawings are used for actual performance of the Contract Work and are most capable of showing actual details, conditions, and dimensions fully and accurately, record all the Shop Drawings and place them in good order with the Record Drawings. Properly identified and bound of field, and ready for continued use and reference.

6. Organize Record Drawing sheets into manageable sets, bind with durable paper cover sheets, and print suitable titles, dates and other identification on the cover of each set.

C. Record Project Manual: Maintain one complete copy of the Project Manual, including addenda, and one copy of other written construction documents such as "Change Orders" and modifications issued in printed form during construction. Mark these documents to show the variations in actual Contracted Work performed in comparison with the text of the Project Manual and modifications. Give particular attention to substitutions, selection of options and similar information on elements that are concealed or cannot otherwise be readily discerned later by direct observation. Note related Record Drawing information and Product Data.

1. Upon completion of the Work, submit record Project Manual to the Consultant or ENGINEER for review and for the CITY'S record.

D. Record Schedule: Provide one (1) copy of a computer diskette of the Construction Schedule. Record this document to show the actual schedules and sequences the actual Works were performed in comparison with Baseline Construction Schedule approval in accordance with GENERAL REQUIREMENTS Section 01321 – CONTRACTOR'S CONSTRUCTION SCHEDULE AND REPORTS.

E. Record Product Data: Maintain one (1)copy of each Product Data submittal. Mark these documents to show significant variations in actual Work performed in comparison with information submitted. Include variations in products delivered to the site, and from the manufacturer's installation instructions and recommendations. Give particular attention to concealed products and portions of the Work, which cannot otherwise be readily discerned later by direct observation. Note related Change Orders and markup of Record Drawings and Project Manual.

1. Upon completion of a markup, submit a complete set of Record Product Data to the Consultant or ENGINEER for review and for the CITY'S records.

F. Record Sample Submitted: Immediately prior to the date or dates of Substantial Completion, the CONTRACTOR will meet at the Jobsite with the Consultant or ENGINEER and the CITY'S personnel to determine which of the submitted Samples that have been maintained during progress of the Work are to be transmitted to the CITY for record purposes. Comply with delivery to the CITY'S Sample storage area.

G. Miscellaneous Record Submittals: Refer to other Sections of the Project Manual for requirements of miscellaneous record-keeping and submittals in connection with actual performance of the Contract Work. Submit to the Consultant or the ENGINEER miscellaneous records for the CITY'S records.

H. Maintenance Manuals: Organize operating and maintenance data into suitable sets of manageable size. Bind properly indexed data in individual heavy-duty 2-inch, 3-ring vinyl-covered binders, with pocket folders for folded sheet information. Mark appropriate identification on front and spine of each binder. Include the following types of information:

1. Emergency instructions.

2. Spare parts list with model/part numbers.

3. Copies of work permits and warranties.

4. Wiring diagrams.

5. Recommended "turn around" cycles.

6. Inspection procedures; Operation and Maintenance Instructions.

7. Shop Drawings and Product Data.

8. Small scale of "Record" Drawings of such operating equipment.

9. Fixture lamping schedules.

PART TWO - PRODUCTS (NOT APPLICABLE)

PART THREE - EXECUTION

3.1 CLOSEOUT PROCEDURES

A. Operation and Maintenance Instructions: Unless specified otherwise, in addition to the maintenance manuals described hereinabove, arrange for each installer of equipment that requires regular maintenance to meet with the CITY'S personnel to provide instruction in proper operation and maintenance. If installers are not experienced in procedures, provide instruction by manufacturer's representatives. Include a detailed review of the following items:

1. Maintenance Manuals.

2. Permit and Record Documents.

3. Spare parts and materials.

4. Tools.

5. Lubricants.

6. Fuels.

7. Identification systems.

8. Control sequences.

9. Hazards.

10. Cleaning.

11. Warranties and bonds.

12. Maintenance agreements and similar continuing commitments.

B. As Part of Instruction for Operating Equipment, Demonstrate the Following Procedures:

1. Start-up.

2. Shutdown.

3. Emergency operations.

4. Noise and vibration adjustments.

5. Safety procedures.

6. Economy and efficiency adjustments.

7. Effective energy utilization.

3.2 FINAL CLEANING

A. General: General cleaning during construction is required by the GENERAL CONDITIONS and GENERAL REQUIREMENTS.

B. Cleaning: Employ experienced workers or professional cleaners for final cleaning. Clean each surface or unit to the condition expected in a normal, commercial building cleaning and maintenance program. Comply with manufacturer's instructions.

1. Complete the following cleaning operations before requesting inspection prior to CITY'S acceptance of Contracted Work.

a. Remove labels that are not permanent labels.

b. Clean transparent materials, including mirrors and glass in doors and windows. Remove glazing compound and other substances that are noticeable vision-obscuring materials. Replace chipped or broken glass and other damaged transparent materials at no added cost to the CITY.

c. Clean exposed exterior and interior hard-surfaced finishes to a dust-free condition, free of stains, films and similar foreign substances. Restore reflective surfaces to their original reflective condition. Leave concrete floors broom clean. Vacuum carpeted surfaces.

d. Wipe surfaces of mechanical and electrical equipment. Remove excess lubrication and other substances. Clean plumbing fixtures to a sanitary condition. Clean light fixtures and lamps.

e. Clean the site, including landscape development areas of rubbish, litter and other foreign substances. Sweep paved areas broom clean; remove stains, spills and other foreign deposits. Rake grounds that are neither paved nor planted, to a smooth even-textures surface.

f. Remove all temporary detour stripping by the wet sandblasting method.

C. Pest Control: Engage an experienced exterminator to make a final inspection, and rid the Project of rodents, insects and other pests.

D. Removal of Protection: Remove temporary protection and facilities installed for protection of the Contracted Work during construction.

E. Compliance: Comply with regulations of authorities having jurisdiction and safety standards for cleaning. Do not burn waste materials. Do not bury debris or excess materials on the CITY'S property. Do not discharge volatile, harmful or dangerous materials into drainage systems. Remove waste materials from the site and dispose of in a lawful manner.

1. Where extra materials of value remaining after completions of associated Work have become the CITY'S property, arrange for disposition of these materials as directed.

END OF SECTION 01770

SECTION 01781
SPARE PARTS

1.1 THE REQUIREMENT

A. General

1. The Spare Parts supplier must be the manufacturer or a factory authorized representative of the manufacturer. The manufacturer will be responsible for any default of the representative that is not corrected by the representative in a timely and efficient manner. This responsibility includes replacing incorrect or defective parts, trouble shooting, and correcting problems that are traceable to the manufacturer's parts. The supplier shall provide, along with the Spare Parts List, a formal letter of certification from the manufacturer that the supplier is an authorized representative of the manufacturer.

2. The supplier shall be a stocking facility of the manufacturer of the proposed parts, or the manufacturer must maintain a stocking facility of these parts on the West Coast, or the supplier can guarantee delivery of spare parts within seventy-two (72) hours.

3. Spare Parts should be supplied in the manufacturer's original packaging and shall be new and unused. A statement shall be included to clearly indicate that the Spare Parts are new and unused.

4. The Spare Parts list shall be in addition to any other lists required under any other sections of these Specifications. This list shall include but is not limited to the following:

a. Current prices including delivery to the Jobsite.

b. Original Equipment Manufacturer (OEM) part numbers, which identify interchangeability.

c. Make and type of equipment as well as Model number.

d. Size.

e. Supplier's address and telephone number.

f. Letter of certification from the manufacturer.

g. Materials.

h. Special tools.

i. Estimated delivery lead times.

j. Warranty: State terms of warranty of spare parts offered.

k. Cross-sectional, exploded view or assembly-type drawing with part numbers.

l. Manufacturer’s price list catalog.

m. Applicable trade discount (for budget purposes)

5. Delivery of all required Spare Parts shall be a condition precedent to receipt of Partial Completion or a Statement of Completion.

6. The CONTRACTOR shall be responsible for proper storage and protection of the Spare Parts until delivered to the CITY.

7. To ensure proper tracking of the Spare Parts the CONTRACTOR shall fill out and submit required information, on the forms provided by the ENGINEER, to the INSPECTOR with the delivery of Spare Parts. The CONTRACTOR'S cost of preparing and submitting the Spare Parts List(s), procuring, and inspection of the Spare Parts shall be included in the CONTRACTOR'S lump sum bid, and therefore, no overhead or profit shall be added to the cost of the Spare Parts.

B. Required Spare Parts

1. The Required Spare Parts lists shall be included with the equipment submittal to the ENGINEER.

2. The CONTRACTOR shall include in the Bid the cost of providing the Required Spare Parts described under individual equipment Specifications.

C. Recommended Spare Parts

1. The CONTRACTOR shall submit with each equipment submittal a list from the manufacturer of the Recommended Spare Parts adequate to ensure two (2) continuous years of normal operation after expiration of the equipment warranty. The cost of preparing and submitting the Spare Parts List(s) shall be included in the CONTRACTOR'S lump sum bid.

2. The Recommended Spare Parts List(s) shall include items requiring replacement under the following conditions:

a. Wear, corrosion, or erosion during normal operation.

b. Failure which causes a shutdown of equipment or systems.

c. Damage or breakage during routine maintenance or inspections of equipment.

d. Custom or specially fabricated parts, and

e. Long lead items.

3. If an allowance for RECOMMENDED SPARE PARTS has been included as a bid item in the SCHEDULE OF WORK AND PRICES in Vol. 1 of the Proposal, the CONTRACTOR shall procure such Recommended Spare Parts as directed by the ENGINEER. The ENGINEER will compile, from the CONTRACTOR’S submittal, a list identifying which recommended Spare Parts are approved for purchase. The CITY will pay, from the

RECOMMENDED SPARE PARTS allowance, the vendor-invoiced prices plus delivery cost only, without markup for overhead or profit. If the total cost differs from the amount set forth in the SCHEDULE OF WORK AND PRICES, the Contract Price shall be adjusted by a Change Order for the difference as an additional amount due the CONTRACTOR, or a credit to the CITY, as appropriate.

4. Approval of the individual equipment submittal does not constitute authorization to procure the Recommended Spare Parts.

D. Prices charged to the CITY are based on a percentage discount from the manufacturer's published price list(s) shall not be subject to change for a period of sixty (60) calendar days after bid opening. If prices on the price list(s) are raised, the CITY reserves the right to accept the raise or to cancel such items from the contract. The CITY is to be given benefit of any decline in prices immediately upon the manufacturer's effective date of such decline. Changes in price list(s) shall be effective on the date of the manufacturer's effective date of change. Increase in prices shall not be retroactive.

END OF SECTION 01781

SECTION 01783
PROJECT RECORD DOCUMENTS

PART 1 - GENERAL

1.1 THE REQUIREMENT

A. The CONTRACTOR shall maintain at the Jobsite a current record copy of all Contract Documents including, but not limited to, Contract Drawings and Project Manual which are marked up during construction to delineate the actual in-place constructed conditions. Project Record Documents including Record Drawings (also known as “As-Built” Plans), Record Project Manual, Record Schedule, Record Product Data, Record Samples, and Miscellaneous Record Submittals shall be provided by the CONTRACTOR for this Project. Requirements for Record Documents, as specified elsewhere, shall supplement the requirements specified herein.

B. Record Documents, particularly the Record Drawings and Record Project Manual, shall include a copy of all changes including those issued as Change Orders, Plan Clarifications, Addenda, Notice to Bidders, responses to Requests for Information (RFI’s), Jobsite Memos, and any additional details needed for the construction of the Project, but not shown on the Contract Drawings or included in the Project Manual.

C. Record Drawings and Record Project Manual shall be marked with red ink on one (1) set of full size prints to produce a record of the complete installation. Any additional drawings that may be required to indicate record conditions shall be prepared on 24" x 36" paper. All additions to Contract Drawings shall employ and use drafting standards which are consistent with the drafting standards used in the Contract Drawings.

D. The Record Drawings and Record Project Manual, including those of all Subcontractors, shall be kept by the CONTRACTOR in the CONTRACTOR’S Jobsite office, shall be updated during construction, and shall be available for the ENGINEER'S inspection and copying at all times. The ENGINEER will review the Record Drawings and Record Project Manual prior to submittal of all Monthly Payment Requests. If, in the opinion of the ENGINEER, the Record Drawings and/or Record Project Manual are not current, approval of the Monthly Payment may be withheld until the Record Drawings and the Record Project Manual are made current. In addition, the CONTRACTOR shall submit a signed certification with each Monthly Payment Request stating that all Record Drawings and record Project Manual are complete and accurate as of the date of the payment request.

1.2 PROJECT RECORD DOCUMENTS

A. This Section includes administrative and procedural requirements for Project Record Documents, including the following:

1. Record Drawings
2. Record Project Manual
3. Record Schedule
4. Record Product Data
5. Record Samples
8. Miscellaneous Record Submittals

B. Related Sections:

1. Section 01321 – Contractor's Construction Schedule and Reports
2. Section 01330 – Shop Drawings/Submittals
3. Section 01770 – Project Closeout
4. Section 01782 – Technical Manuals
5. Section 01810 – Fundamental Commissioning Requirements

1.3 CLOSEOUT SUBMITTALS

C. Required Documents: GENERAL REQUIREMENTS Section 01770 – PROJECT CLOSEOUT, describes administrative requirements for submission, number and type of copies required for Contract closeout requirements.

PART 2 – PRODUCTS

2.1 RECORD DRAWINGS

A. GENERAL: Maintain one set of marked-up paper copies of the Contract Drawings and Shop Drawings onsite, incorporating new and revised Drawings as modifications are issued. Review Record Drawings and Shop Drawings monthly with the Engineer and/or Inspector, for approval.

1. Preparation: Mark the Record Drawings and Shop Drawings to show the actual installation where installation varies from that shown originally. Require individual or entity who obtained record data, whether individual or entity is Installer, subcontractor, or similar entity, to provide information for preparation of corresponding marked-up Record Drawings.

a. Give particular attention to information on concealed elements that would be difficult to identify or measure and record later.
b. Accurately record information in an acceptable drawing technique.
c. Record data as soon as possible after obtaining it.
d. Record and check the markup before enclosing concealed installations.

2. Content: Types of items requiring marking include, but are not limited to, the following:

a. Dimensional changes to Contract Drawings.
b. Revisions to details shown on Contract Drawings.
c. Depths of foundations below first floor.
d. Locations and depths of underground utilities.
e. Revisions to routing of piping and conduits.
f. Revisions to electrical circuitry.
g. Actual equipment locations.
h. Duct size and routing.
i. Locations of concealed internal utilities.
j. Changes made by Change Order.
k. Details not on the original Contract Drawings.
l. Field records for variable and concealed conditions.
m. Record information on the Work that is shown only schematically.

3. Mark the Record Drawings and Record Shop Drawings completely and accurately. Use personnel proficient at recording graphic information in production of marked-up as-built prints.

4. Mark Record Drawings set using red-colored ink. Use other colors to distinguish between changes for different categories of the Work at same location.

5. Mark important additional information that was either shown schematically or omitted from original Contract Drawings.

6. Note Change Order numbers, and similar identification, where applicable.

2.2 RECORD PROJECT MANUAL

A. Preparation: Mark Specifications to indicate the actual product installation where installation varies from that indicated in the Specifications, Addenda, and Contract modifications.

1. Give particular attention to information on concealed products and installations that cannot be readily identified and recorded later.

2. Mark copy with the proprietary name and model number of products, materials, and equipment furnished, including substitutions and product options selected.

3. Record the name of manufacturer, supplier, Installer, and other information necessary to provide a record of selections made.

4. For each principal product, indicate whether record Product Data has been submitted in operation and maintenance manuals instead of submitted as record Product Data.

5. Note related Change Orders**,** Record Product Data**,** and Record Drawings where applicable.

2.3 RECORD SCHEDULE

A. Final Schedule: Submit to the Engineer a final schedule update. The “As-Built” Schedule shall reflect the exact manner in which the project was actually constructed including actual start and finish dates, activities, sequences and logic.

1. The Contractor shall certify the final schedule update as being a true reflection of the way the project was actually constructed.

2.4 RECORD PRODUCT DATA

A. Preparation: Mark Product Data to indicate the actual product installation where installation varies substantially from that indicated in Product Data submittal.

1. Give particular attention to information on concealed products and installations that cannot be readily identified and recorded later.

2. Include significant changes in the product delivered to the Project site and changes in manufacturer's written instructions for installation.

3. Note related Change Orders**,** Record Specifications, and Record Drawings, where applicable.

2.5 MISCELLANEOUS RECORD SUBMITTALS

A. Assemble miscellaneous records required by Individual Specification Sections for miscellaneous record keeping and submittal in connection with actual performance of the Work. Bind or file miscellaneous records and identify each, ready for continued use and reference.

B. Format: Submit miscellaneous record submittals.

1. Include miscellaneous record submittals directory organized by specification section number and title, electronically linked to each item of miscellaneous record submittals.

PART 3 - EXECUTION

3.1 RECORDING AND MAINTENANCE

A. Maintain Change Log: Maintain and submit a written change log to the Engineer, monthly for review, indicating items incorporated in the Project Record Documents concurrent with progress of the Work, including modifications, concealed conditions, field changes, product selections, and other notations incorporated.

B. Recording: Maintain one copy of each submittal during the construction period for Project Record Document purposes. Post changes and modifications to the Project Record Documents as they occur; do not wait until the end of the Project.

C. Maintenance of Record Documents and Samples: Store Record Documents and Samples in the field office apart from the Contract Documents used for construction. Project Record Documents are not to be used for construction purposes. Maintain Project Record Documents in good order and in a clean, dry, legible condition, protected from deterioration and loss. Provide access to Project Record Documents for the Engineer’s reference during normal working hours during performance of Contract.

END OF SECTION 01783

SECTION 01810
FUNDAMENTAL COMMISSIONING REQUIREMENTS

PART 1 - GENERAL

1.1 DESCRIPTION

A. This section includes administrative and procedural requirements as well as a detailed description of the commissioning process. This section supplements other Division 1 Commissioning Sections and applies to Sections in Divisions 15 and 16 that specify testing of components and systems.

B. Basic Commissioning is intended to achieve the following objectives:

1. Verify that applicable equipment and systems are installed according to the manufacturer's recommendations and to industry accepted minimum standards and that they receive adequate operational checkout by installation contractors.

2. Verify and document proper performance of equipment and systems.

3. Verify that Operations and Maintenance (O&M) data is complete.

4. Verify that the City's operating and maintenance personnel are trained in accordance with the specifications.

C. Related Work:

1. 01330 Shop Drawings / Submittals

2. 01770 Project Closeout

3. 15270 Mechanical Systems Commissioning

4. 15280 Mechanical Testing Requirements

5. 16100 Basic Electrical Materials and Methods

6. 16560 Electrical Systems Commissioning

7. 16570 Electrical Testing Requirements

1.2 SUBMITTALS

A. Provide submittal documentation relative to commissioning as described in Section 01330 Shop Drawings/Submittals.

B. Contractor to submit the names of three independent Los Angeles City Fire Department certified testers to the Engineer. The Engineer will select one of the submitted testers to schedule and perform Regulation No. 4 testing

1.3 DEFINITIONS

A. Commissioning Process: A systematic process which verifies that the building systems perform interactively according to the Design Intent Document. The commissioning process coordinates system documentation, equipment startup, control system calibration, testing and balancing, performance testing and training.

B. Commissioning Authority (CA): An entity contracted by the City that plans, schedules, and coordinates the Commissioning Team to implement the Commissioning Process.

C. Commissioning Plan: A document that provides the structure, schedule, and coordination for the commissioning process.

D. Design Intent Document: A written document that details functional requirements of the Project including expectations of how the Project will be used and operated. The Design Intent Document includes design goals, measurable performance criteria, success criteria, and supporting information.

E. Functional Test (FT): A documented test of the dynamic functioning and operation of equipment and systems with the goal of verifying that the Design Intent is met. Test requirements are included in these specifications. Test procedures are developed and results documented by the Commissioning Authority. Test procedures are completed by the Contractor.

F. Prefunctional Checklist (PC): A written checklist that includes checks and tests prerequisite to the equipment's Functional Test. Draft checklists are included in the specifications. The Commissioning Authority assists the Contractor in finalizing the checklists. The Checklists are completed by the Contractor and verified by the Commissioning Authority.

1.4 COORDINATION

Items listed below require the Contractor to coordinate between the sub-contractors, INSPECTOR, GSD building maintenance representative, and the Commissioning Authority. Details regarding each item are given elsewhere in this Section and/or other commissioning sections of the specifications.

A. Pre-Commissioning Meeting: Conducted by the City's Project Manager during which the CA reviews the commissioning process with the commissioning team members.

B. Coordination Meetings: Attend meetings throughout construction, scheduled by the ENGINEER, to plan, coordinate, schedule future activities, and resolve problems.

C. Start-up Plans: Work with the CA to develop startup plans and startup documentation formats, including prefunctional checklists.

D. Equipment Start-up: Utilize start-up plans to coordinate equipment start-up, manufacturers' testing, and other required testing to minimize duplication of work.

E. Testing, Adjusting, and Balancing: Coordinate testing, adjusting, and balancing with the Commissioning Authority so that the CA can witness the processes.

F. Functional Testing: Coordinate functional testing with the Commissioning Authority so that they can witness testing.

G. Training: Coordinate training of owner's staff with Commissioning Authority so that the CA can verify that training is conducted per commissioning requirements.

1.5 SYSTEMS TO BE COMMISSIONED

A. The following systems will be commissioned in this project.

1. Irrigation System and Controls

a. Irrigation System

2. Infiltration Gallery System and Controls

a. Gate Vault and level indicator control system

3. Electrical Systems

a. Lighting System and Controls

b. Automatic gate operators and control

c. Baseball scoreboard systems

PART 2 - PRODUCTS

2.1 TEST EQUIPMENT

A. Provide all testing equipment required by the Commissioning Process except data logging equipment. Data logging equipment is provided by the CA.

B. Provide any special equipment, tools, and instruments that are only available from the equipment supplier, which are specific to the equipment, and which are required for testing.

PART 3 - EXECUTION

3.1 MEETINGS

A. Commissioning Pre-Construction Meeting: Within 60 days of commencement of construction, the ENGINEER will schedule a commissioning pre-construction meeting with the commissioning team in attendance. Commissioning Authority shall distribute meeting minutes to commissioning team. Attendance is mandatory for the following team members:

1. Commissioning Authority

2. Contractor's Site Supervisor

3. Contractor's Project Scheduling personnel

4. Mechanical sub-contractor

5. Electrical sub-contractor

6. Air Balance sub-contractor

7. GSD Building Maintenance Division representative

8. INSPECTOR

B. Miscellaneous Meetings. The ENGINEER will schedule other meetings, generally in conjunction with regularly scheduled site meetings as construction progresses. Meetings will cover coordination, deficiency resolution, and planning issues with particular subcontractors.

3.2 START-UP AND PREFUNCTIONAL CHECKLISTS

A. Perform a full pre-functional checkout of each piece of equipment. The pre-functional testing for a given system must be successfully completed prior to formal functional testing.

B. Equipment shall not be “temporarily” started (for heating and cooling) until the Start-Up Plan is completed.

C. The Contractor shall prepare start-up plans for equipment to be commissioned. Subcontractors responsible for pre-functional checklists and startup will be identified at the pre-commissioning meeting. Submit start-up plans to the Engineer for review and approval; start-up plans shall consist of, but not be limited to:

1. The manufacturer’s standard written start-up procedures copied from the installation manuals, with check boxes by each procedure and a signature block at the end.

2. Field checkout sheets normally used by the sub-contractor.

3. Forms normally issued by the sub-contractor to document tests required in the specifications.

4. Final pre-functional checklists (drafts are included in the specifications). The checklists for mechanical systems include sensor and actuator calibration as described in Section 01811.

5. Schedule that includes equipment installation, contractor start-up, manufacturer start-up, and other tests required by the specifications. Schedule shall state when documents in the start-up plan will be completed.

D. At least 90 days prior to the start of commissioning, the Contractor shall submit a commissioning package for the equipment to be commissioned. This package shall include the following information:

1. Equipment manufacturer’s operating & maintenance instructions.

2. Equipment manufacturer’s installation and start-up manual.

3. Start-up plans as required in this section.

3.3 REQUIREMENTS FOR FUNCTIONAL TESTING

A. Complete the following prior to functional testing:

1. Arrange for commissioning observations to be performed by the Commissioning Authority, and GSD Building Maintenance Division representative.

2. Complete and approve the Start-up Plan.

3. Correct deficiencies identified during start-up.

4. Record pretest set points.

3.4 FUNCTIONAL TESTING

A. Perform functional testing after the testing requirements listed in Paragraph 3.3 are completed.

B. Perform functional testing under the observation of the commissioning authority who will record the results of the functional test procedures.

C. Perform all specified tests according to approved testing procedures.

1. Verify and test performance using actual conditions whenever possible.

2. Simulate conditions by imposing an artificial load when it is not practical to test under actual conditions and when written approval for simulated conditions is received from Commissioning Authority. Before simulating conditions, calibrate testing instruments. Set and document simulated conditions and methods of simulation. After test, return settings to normal operating conditions.

3. Alter set points when simulating conditions is not practical and when written approval to do so is received from Commissioning Authority.

4. Overwrite sensor values with a signal generator when actual or simulated conditions and altering set points are not practical. Do not use the sensor to act as the signal generator to simulate conditions or overwrite values.

D. The Commissioning Authority will review and approve functional testing results. Deficiencies found during testing shall be corrected by the Contractor and retested. Where there is a dispute over a deficiency, the ENGINEER shall be the final authority.

E. Problem Solving: The CA will recommend solutions to problems found, however, the burden of responsibility to solve, correct and retest problems is with the contractor and the design team.

3.5 COST OF RETESTING

A. Costs for retesting beyond one retest will be the responsibility of the Contractor, if the ENGINEER determines that the contractor is responsible for the deficiency. These costs shall include charges for the CA's time, Engineer and Inspector.

B. For a deficiency identified during functional testing but not included in the approved Start-up Plan: The CA will direct the retesting of the equipment once the deficiencies are corrected.

C. Retesting will not be considered a reason for a claim of delay or for a time extension by the contractor.

3.6 DEFERRED TESTING

A. Unforeseen Deferred Tests: Checks or tests not completed due to the building structure, required occupancy condition, or other condition may be delayed upon approval of the ENGINEER. These tests will be conducted in the same manner as the seasonal tests as soon as possible.

B. Seasonal Testing: Complete seasonal testing (tests delayed until weather conditions are closer to the system's design conditions) during the warranty period, as part of this contract. The CA will coordinate this activity. Tests shall be executed, documented and deficiencies corrected by the appropriate Subs, with facilities staff and the CA witnessing. The Contractor shall make adjustments to the Operations and Maintenance Data, as necessary.

3.7 WRITTEN WORK PRODUCTS

A. The commissioning process generates a number of written work products described in the Specifications. A summary of the written products follows. Where the product is developed by the subcontractors, the contractor shall be responsible for their production.

Product	Developed By
1. Design Intent Document	A/E
2. Commissioning Plan	CA
3. Commissioning schedules	CA, Contractor and Subcontractors
4. Equipment & commissioning submittals	Subcontractors
5. Draft prefunctional checklists	CA with specifications
6. Startup Plan	Subcontractors
7. Completed Startup Plan	Subcontractors
8. Issues log (deficiencies)	CA
9. Deficiency reports	CA
10. Blank functional test forms	CA
11. Completed functional test forms	CA
12. O&M manuals	Subcontractors
13. Overall training plan	CA and Subcontractors
14. Specific training agendas	Subcontractors
15. Commissioning report	CA
17. Commissioning meeting minutes	CA or A/E consultants
18. Warranty Documents	Subcontractor

END OF SECTION 01810

SECTION 01820
OPERATIONS AND MAINTENANCE TRAINING

1.1 THE REQUIREMENT

A. General

1. This section covers the development and implementation of training programs that will identify skills and knowledge necessary to safely and efficiently operate and maintain the Project Facilities.

2. The CONTRACTOR shall furnish all tools, equipment, materials, and supplies, and shall perform all functions and services required to complete the Work as specified herein. With the exception of safety and overview training, training shall be divided into separate categories for operations training and maintenance training with maintenance training further broken down to specific crafts.

3. The training requirements specified in other Sections of the Specifications shall be in addition to those specified in this Section.

4. No actual operations training of a piece of equipment will be permitted until the equipment is properly installed and is operational.

5. Operations training shall be a prerequisite to the beneficial use of the facility or any portion thereof and be completed a minimum of one week prior to the beneficial use of the Project Facilities. Maintenance training shall occur after and within thirty (30) days of the beneficial use of the facility.

B. Related Work Specified Elsewhere

1. LIQUIDATED DAMAGES of the GENERAL CONDITIONS.

2. SUBMITTALS of the GENERAL REQUIREMENTS.

3. CONTRACTOR'S CONSTRUCTION SCHEDULE AND REPORTS of the GENERAL REQUIREMENTS.

4. DIVISIONS 11, 16, and 17 as applicable.

C. Training Scope

1. Manufacturer/Vendor Training

a. Manufacturer supplied (VENDOR) equipment training for all major plant equipment and subsystems shall be provided for the Operations and Maintenance groups as outlined in this section. The VENDOR training shall be provided by qualified instructors of the equipment manufacturers, i.e.: equipment field startup technician or their representative, as approved by the ENGINEER and may include both on and off-site training

venues. Generally, manufacturer sales representatives will not be acceptable.

b. Classroom training shall be structured to develop a basic understanding of the design, function and capabilities of the equipment and the interrelationship with the process. In addition, routine operational and preventive maintenance, safety considerations, responses to abnormalities and startup, shutdown and troubleshooting will be covered.

c. Field training shall be scheduled to commence immediately following the classroom training and shall stress hands-on, performance based application of the classroom training. Equipment shall be started and relevant systems and components shall be demonstrated.

d. Off-site training, primarily for the technical crafts including Electricians, Instrument Technicians and Mechanics, shall focus on specialized, technical training and shall be provided by the manufacturer at their factory or training facility. In the event, the CITY requests specialized factory training on a particular piece of plant equipment, the contractor shall make arrangements with the applicable equipment manufacturer to provide such training.

2. Process Overview, Operations and Safety Training

a. Process overview and safety training for the Operations group, if deemed necessary, will be prepared and conducted by the CITY utilizing approved material supplied by the equipment vendors. In the event the CITY is unable to provide the process training, the CONTRACTOR shall enter into an agreement with a training specialist approved by the ENGINEER. Any and all work performed by the training specialist will be paid as stated in Paragraph I, “Fixed Cash Allowance,” herein. The CONTRACTOR shall submit invoices for payment from the training specialist, which have been previously approved by the ENGINEER and paid by the CONTRACTOR.

3. General

a. Training Material: Sections of the manufacturers O&M manuals, selected by the CITY for the installed equipment, shall be used as classroom training material. The CONTRACTOR shall then reproduce the selected text for each piece of plant equipment and compile the training material to be used in the classroom by the manufacturer’s field technician.

b. Training schedule: The CONTRACTOR shall provide an operation and maintenance training schedule to be conducted immediately following vendor equipment startup of the equipment. All training shall be scheduled for Tuesday through Thursday only.

D. Training Requirements

1. The technical position titles of trainees for the Operational and Maintenance groups are listed below:

   a. Operations Group

      (1) Shift Superintendents and Process Control Engineers

   b. Maintenance Group

      (1) Mechanics/Plumbers

      (2) Electricians

      (3) Instrument Technicians

2. Major equipment and plant subsystems for the various crafts which require training include, but are not limited to the following:

   a. Instrumentation and Controls (I&C)

      (1) Distributed Control Systems (DCS)

      (2) Programmable Logic Controllers (PLC)

      (3) Local Control Panels (LCP)

      (4) Loop Descriptions and Drawings

      (5) Instrument Installation and Calibration

   b. Electrical Systems:

      (1) Transformers and Substations

      (2) Motor Control Centers (MCC)

      (3) High and Low Voltage Systems

      (4) Wiring Diagrams/Schematics

      (5) Lighting and Power Panels

      (6) Starters and Controllers

   c. Operating Systems

      (1) Gate actuator

      (2) Level indicators

(3) Local and Remote Control Devices

E. Operation Training

1. The VENDOR shall conduct **5** courses as described herein for the General Operations Group. Each course shall consist of both classroom and field training as specified herein. Each class size shall consist of 12 trainees. The courses shall not be conducted concurrently.

2. The classroom training shall consist of 10 hours of instruction and include, but not be limited to, the following subjects. This training shall be conducted by qualified representatives of the equipment manufacturers as follows:

a. Safety precautions and procedures for 2 hours
b. Equipment description and function for 2 hours
c. Operating procedure for 2 hours
d. Operational Maintenance for 2 hours
e. Emergency procedures for 2 hours

F. Maintenance Training

1. The maintenance training shall include the function, adjustment, repair, and replacement of all components related to the trainee's trade. Emphasis shall be placed on those areas listed in item number 3, below. Safety aspects shall also be stressed.

2. The field training shall stress hands-on instruction.

3. The training shall include, but not be limited to, the following:

a. Preventive and corrective maintenance procedures, including replacement of parts; lubrication quantities, types, frequencies, and application points; and an estimate of time to perform such procedures.

b. Special tools, techniques, or procedures required for either preventive or corrective maintenance of equipment, or its auxiliary or support systems.

c. Procedures to perform adjustments required for alignment, wear and calibration for all preventive and corrective maintenance, and an estimate of time required to perform such procedures.

d. Assembly and disassembly procedures, including parts lists required for appropriate preventive and/or corrective maintenance. Models, "exploded" views, and/or audiovisual materials shall be used for this training. These materials shall be turned over to the ENGINEER upon completion of training. Hands-on field training shall be provided, subject to the approval of the ENGINEER.

e. Maintenance, overhauls, troubleshooting of equipment, and auxiliary or support systems.

4. Maintenance training shall be conducted as described in the following subsections.

a. Mechanic Training

(1) Conduct 8 hours of both classroom and field training for the Mechanics Group. The class size consist of 12 trainees.

(2) The training shall consist of hours of instruction, including but not limited to, the following topics for each major equipment system:

(a) Equipment Description and Function for 0.5 hours

(b) Corrective and Preventive Maintenance Procedures for 1 hour

(c) Disassembly and Assembly 1 hour

(d) Spare Parts for 0.5 hours

(e) Troubleshooting for 1 hour

(3) The field training shall consist of 4 hours of hands-on instruction.

b. Electrician Training

(1) Conduct 8 hours of both classroom and field training for the Electrician Group. The class size will consist of 12 trainees.

(2) The classroom training shall consist of 8 hours of instruction, including but not limited to, the following:

(a) Transformers and Unit Substations for 1 hour

(b) High and Low voltage Systems for 1 hour

(c) Motor Control Centers for 1 hour

(d) Control Panel Wiring Diagrams/Schematics for 1 hour

(3) The field training shall consist of 4 hours of hands-on instruction.

c. Instrument Technician Training

(1) Conduct 8 hours of both classroom and field training for the Instrument Technicians Group. The class size will consist of 12 trainees.

(2) The classroom training shall consist of 8 hours of instruction, including but not limited to, the following subjects:

(a) PLC and/or DCS for 1 hour

(b) Loop and PID Drawings, Schematics **for 1 hour**

(c) Programming for 1 hour

(d) Operator Interface for 1 hour

(3) The field training shall consist of 4 hours of hands-on instruction.

G. Execution

1. The training specified herein shall be provided at the "**To Be Determined Location"**. The CITY will make available one room for the training.

2. Due to limitations of plant manpower available for dedicated training purposes, no more than one group course shall be taught at a time for any individual trade discipline.

3. Training shall be conducted so that home study will not be required. The training shall include courses, which combine classroom and field hands-on training that is structured and scheduled to facilitate trainee comprehension of the subject material. Courses shall be continuous, and the field training shall immediately follow the classroom instruction.

4. The CITY reserves the right to videotape any and all training materials and presentations, except for proprietary material, and retain all rights for usage of such recorded material to train CITY personnel.

H. Evaluation

1. All training sessions will be monitored and approved by the ENGINEER. Any session or portion thereof deemed unsatisfactory, based on evaluation of the training, shall be repeated by the manufacturer or manufacturer's representative at no additional cost to the CITY.

2. When deemed appropriate by the ENGINEER, field instruction to CITY personnel designated to receive training may be acceptable as a training session. The instruction shall be provided by a field service technician qualified to perform corrective or preventive maintenance, troubleshooting, or related field services.

I. Fixed Cash Allowance

1. A fixed cash allowance has been allocated for the Facility Overview and Operations/Safety training and is included as an item of the bid breakdown. Overhead and profit shall be as per Section 01212 – FIXED CASH ALLOWANCE ITEMS of the GENERAL REQUIREMENTS.

2. However, if Facility Overview and Operations/Safety training are not executed or partially executed or partially expended, or over expended (with the ENGINEER'S prior approval), then an appropriate change order shall be executed in accordance with the provisions the GENERAL REQUIREMENTS Section 01254 -- PAYMENT FOR CHANGES AND EXTRA WORK.

J. Submittals

1. The CONTRACTOR shall submit training packages for the ENGINEER'S review and approval. The training submittal shall be tied into the CONTRACTOR'S overall submittal process.

2. The CONTRACTOR shall provide the training submittals in the following order for review and approval by the ENGINEER.

   a. First draft sixty (60) days prior to proposed instruction date.

   b. Final draft thirty (30) days prior to proposed instruction date.

3. The "first draft" of the training material shall, as a minimum, contain the following:

   a. Instructional text that details the specific topics of training for the system. These topics are detailed previously in the training submittal. All text must be complete. Incomplete sections, paragraphs, etc., shall not be acceptable.

   b. Clean legible photocopies of all overhead transparencies to be used in the delivery of the lesson plan.

   c. Slides, videos (Digital Media), and any other type of visual training aid that will be used in conjunction with the training plan.

   d. Reference materials as detailed in the lesson plan (e.g. handout, manufacturer catalogues, brochures, and pamphlets). All material shall be reviewed by the ENGINEER to determine applicability and functionality. Reference materials that do not pass this review shall be modified and resubmitted within two weeks for approval.

   e. No actual classroom or field training shall be scheduled unless this material is approved.

f. The CONTRACTOR shall not proceed to the "final draft" stage of training material until the ENGINEER has approved the "first draft".

4. With the final draft of the training material, the CONTRACTOR shall submit a Training Agenda that provides the following information:

   a. Company name, address, and telephone number(s) for the vendor.

   b. Name and telephone number(s) of the vendor training representative.

   c. Duration of class (total hours).

   d. Breakdown of class and duration in hours of each training activity.

   e. Target audience (e.g. operators, maintenance personnel etc).

   f. Audiovisual requirements (i.e. slide projector, television, VCR, overhead projector, etc.).

5. After the CONTRACTOR has received approval of the "final draft" of the training material and the training agenda from the ENGINEER, only then can the actual training be scheduled. CONTRACTOR shall submit his proposed training schedule to the ENGINEER for approval. The proposed training schedule shall be submitted a minimum of sixty (60) calendar days prior to the start of the training. If the proposed training schedule is approved, then it becomes the final training schedule.

6. Any compensation that is paid to CITY personnel as a result of class cancellations of classes that begin more than thirty (30) minutes after the scheduled start time shall be reimbursed to the CITY by the CONTRACTOR. An exception is when a class is canceled or delayed due to actions by the CITY. The ENGINEER, or his/her representative, will monitor the starting times of scheduled classes.

7. The review of the training material does not constitute its approval unless specifically stated so. The training material submittal shall contain, but not be limited to, the following:

   a. Sufficient background information on each instructor for various sessions shall be provided to allow evaluation of the proposed instructor's qualifications and his capability of training the specific discipline.

   b. At the completion of the training, the CONTRACTOR shall forward to the ENGINEER three (3) complete sets of training materials and support material for each defined training category. This forwarding of materials is to take place at a closeout meeting between the CONTRACTOR and the ENGINEER.

8. Failure to submit training schedule or changes made to the final training schedule, that are not due to actions by the CITY, shall subject the CONTRACTOR to liquidated damages. Liquidated damages shall be assessed at the rate of **$500** per day should the CONTRACTOR fail to meet the schedule's submittal requirements.

END OF SECTION 01820

BUREAU OF ENGINEERING

FERNANGELES PARK
STORMWATER CAPTURE PROJECT
WORK ORDER NO. EW40079F

TECHNICAL SPECIFICATIONS

APRIL 14, 2025

City of Los Angeles
California

Department of Public Works
Bureau of Engineering

TABLE OF CONTENTS

TECHNICAL SPECIFICATIONS

02001 Table of Contents Technical Specifications

DIVISION 02 – SITE WORK

02210 Clearing, Grubbing and Stripping (BOE)
02235 Dewatering (BOE)
02240 Sheeting Shoring and Bracing Systems (BOE)
02310 Earthwork (BOE)
02545 Storm Drain System (BOE)
02550 Lined Reinforced Concrete Pipe (BOE)
02585 Maintenance Manhole and Precast Vault Construction (BOE)
02600 Ductile Iron Vent Piping
02710 Yard Work and Street Work (BOE)
02752 Concrete Paving (Recreation and Parks)
02795 Ballfield Infield Surface (Recreation and Parks)
02810 Irrigation (Recreation and Parks)
02820 Chain Link Fencing and Gates (Recreation and Parks)
02932 Landscape Planting (BOE)

DIVISION 03 – CONCRETE

03100 Concrete Formwork (BOE)
03200 Reinforcement Steel (BOE)
03250 Concrete Accessories (BOE)
03290 Joints In Concrete (BOE)
03300 Cast-In-Place Concrete (BOE)
03315 Grout (BOE)
03370 Concrete Curing (BOE)
03400 Precast Concrete (BOE)
03740 Concrete Repair (BOE)

DIVISION 04 - MASONRY

(Not used)

DIVISION 05 – METALS

05500 Miscellaneous Metalwork
05600 Floor Access Hatches

DIVISION 06 – WOOD AND PLASTICS

06100 Rough Carpentry

DIVISION 07 - THERMAL AND MOISTURE PROTECTION

07290 Waterproofing (BOE)
07900 Joint Sealant (BOE)

07920 Caulking and Sealants (BOE)

DIVISION 08 – DOORS AND WINDOWS
(Not used)

DIVISION 09 - FINISHES
09800 Protective Coating (BOE)

DIVISION 10 - SPECIALTIES
10443 Disabled Accessibility Parking Signage (BOE)

DIVISION 11 – EQUIPMENT
11815 Slide/Stop Gates (BOE)

DIVISION 12 - FURNISHINGS
(Not used)

DIVISION 13 - SPECIAL CONSTRUCTION
13200 Modular Buried Stormwater Infiltration System and Desilting Basin System

DIVISION 14 - CONVEYING EQUIPMENT
(Not used)

DIVISION 15 – MECHANICAL/PLUMBING
15270 Mechanical Systems Commissioning (BOE)
15280 Mechanical Testing Requirements (BOE)
15320 Electrical Requirements for Mechanical Equipment (BOE)

DIVISION 16 - ELECTRICAL
16020 Municipal Facilities General Electrical Requirements (BOE)
16100 Basic Materials and Methods (BOE)
16110 Raceways (BOE)
16160 Conductors (BOE)
16170 Cabinets and Racks (BOE)
16180 Wiring Devices (BOE)
16190 Electrical Identification (BOE)
16200 Motor Control Centers (BOE)
16210 Switches, Disconnect and Safety (BOE)
16270 Service and Distribution Switchboard (BOE)
16280 Short Circuit and Coordination Report (BOE)
16290 Municipal Facilities Grounding Systems (BOE)
16320 Transformers (BOE)
16330 Panelboards (BOE)
16340 Low Voltage Motor Control (BOE)
16360 Municipal Facilities Lighting (BOE)
16380 Municipal Facilities Uninterruptible Power System (BOE)
16490 Electric Motors (BOE)
16560 Municipal Facilities Electrical Systems Commissioning (BOE)

16570 Municipal Facilities Electrical Testing Requirements (BOE)

DIVISION 17 - INSTRUMENTATION
17100 Meters, General (BOE)
17240 AV Flow Meters – Field Mounted (BOE)
17400 Process Instrumentation and Control (BOE)
17450 SCADA, PLCS, Network and Communications

APPENDICES
Geotechnical Evaluation Report Fernangeles Park
Methane Gas Survey for Fernangeles Park
DRAFT Stormwater Pollution Prevention Plan for Construction Activities
DRAFT Final Mitigated Negative Declaration Stormwater Capture Parks Program
Notice of Proposed Project First Notice
Summary of First Notice Replies
Water Distribution Engineering Estimate Request
Electric Power and Water Distribution Mapping
Fernangeles Transfer Agreement

END OF SECTION

SECTION 02210
CLEARING, GRUBBING AND STRIPPING

PART ONE - GENERAL

1.1 DESCRIPTION

A. All site clearing and grubbing on the job-site.

B. Site clearing shall consist of removing all vegetable growth such as trees, roots, stumps, shrubs, brush, limbs; and stone, boulders, clods, wood and other vegetative growth from the growth surface. Clearing shall also include the removal and disposal of trash piles, rubbish, etc.

C. Grubbing shall consist of the removal and disposal of wood roots, stumps, shrubs, brush, stone, boulders, clods, vegetable growth, etc. below the ground or subgrade surface.

D. CONTRACTOR shall furnish all tools, equipment materials and supplies and shall perform all labor to complete the work associated with removal of all natural and artificial objectionable material from the designated areas of work as indicated in the Contract Documents.

E. This work shall also include the protection from injury and preservation of existing improvements, adjacent property, utility, vegetation and existing objects designated to remain.

F. Prior to commencing the work, obtain acceptance from the ENGINEER regarding methods to be used and disposal of removed materials.

G. Related Sections:

1. Documents affecting work of this Section included, but are not necessarily limited to the GENERAL CONDITIONS, SUPPLEMENTARY CONDITIONS, DIVISION 1 - GENERAL REQUIREMENTS and other Sections of the Project Manual.

2. Earthwork in Section 02310.

3. Irrigation System in Section 02810.

4. Concrete work in Section 03300.

1.2 QUALITY ASSURANCE

A. Labor: Use adequate numbers of skilled laborers thoroughly trained in site-clearing operations and experienced in the necessary crafts and completely familiar with the specified requirements and methods needed for the proper performance of the work of this Section.

Codes and Regulations: Perform all work of this Section in strict accordance with applicable Government Codes and Regulations especially meeting all safety standards and requirements of CAL/OSHA, County and 2019 Los Angeles City Building Code and applicable Amendments. Conform to all storm water pollution control measures as required and provided in Section 02310 - EARTHWORK of the Project Manual. Provide additional measures, added materials and devices as may be needed as directed by the City Engineer or the Consultant at no added cost to the City.

B. Miscellaneous Requirements:

1. Erection and maintenance of protections.

2. Dust Control.

3. Repair of Damages.

4. Cleaning and Removal of Rubbish.

C. Permits and Licenses: Procure all City, County and State Permits and Licenses, including Municipal Business License and pay all charges and fees for the same.

D. Contractor Submittals - Submit schedule of clearing, grubbing, and erosion control measures to be put in place for all work scheduled during the rainy season (October - April).

PART TWO - PRODUCTS

2.1 MATERIALS

A. Soil Sterilant: As specified in Section 02310 - EARTHWORK.

B. Soil Treatment for Termite Control: As specified in Section 02310 - EARTHWORK

C. Provide Materials not specifically described but required for completion of the work of this Section as selected by the Contractor subject to the approval of the City Engineer or the Consultant.

PART THREE - EXECUTION

3.1 SITE CONDITIONS

Examine the job-site and conditions under which work of this Section will be performed. Correct conditions detrimental to timely and proper site-clearing operations, as directed by the City Engineer or the Consultant. Do not proceed until such detrimental conditions have been corrected.

3.2 PROTECTION

A. Protect Existing Structures and Site Improvements indicated to remain from damage by approved methods and/or as authorized by the City Engineer. Removal of all protections shall be when work of this Section is completed or when so authorized by the City Engineer or the Consultant. Apply protections to adjacent properties as required and directed by the City Engineer.

B. Protect Existing Utilities Indicated on Plans traversing the job-site and serving existing adjacent facilities.

C. Protect Existing Trees and Shrubs indicated on Plan by providing temporary surrounding fencing so located a sufficient distance away so that trees and shrubs will not be damaged by site-clearing operations.

D. Protection of Persons and Property (existing structures and site improvements).

1. Provide barricades, warning signs at open depressions and holes on adjacent property and public accesses.

2. Provide operating warning lights during hours from dusk to dawn each day or as otherwise required.

3. Protect existing remaining structures, utilities, sidewalks, pavements other facilities from damage as caused by settlement, undermining, washout or other hazards created by site-clearing operations of this Section.

4. Provide and maintain pedestrian and vehicular access in accordance with Work Area Traffic Control Handbook (WATCH), latest edition.

E. Use means necessary to prevent air pollution or dust from becoming a nuisance to the public, to neighbors and to others performing work on or near the job-site. Comply with governing regulations.

E. Maintain access to the job-site, other neighboring property, street and alley at all times.

F. The project site shall be maintained in conformance with Section 7-8 - PROJECT SITE MAINTENANCE of the Standard Specifications for Public Works Construction (SSPWC) and the requirements of this Project Manual.

G. Contractor shall comply and remain compliant with the Storm Water Pollution Prevention Plan Construction Activities.

3.3 SITE CLEARING AND GRUBBING

A. General:

1. For drawing clarity, not all trees, shrubs, brush, grass, weeds, or exact amount of trash or debris are shown on the drawings. Contractor shall carefully study the Contract Drawings, Geotechnical Report, Phase 2 Environmental Site Assessment Report, , visit the job site and verify the extent of the work to be done prior to the Bid.

2. Prior to starting job-site clearing operations in the company of the City Engineer or Consultant Architect, Soil Engineer and Inspector; visit the job site and verify the extent of the work.

3. Site clearing and grubbing shall conform to Section 300-1 - CLEARING AND GRUBBING of SSPWC and applicable requirements of the Project Manual.

4. Site clearing and grubbing shall be done in the presence of the Soil Engineer. Contractor shall notify the City Engineer 72 hours prior to clearing operation.

B. Site Clearing and Grubbing Operations

1. To a depth of at least 12 inches below existing ground surfaces or new graded surfaces, whichever is lower, Clean out all vegetable growth, roots, stomps, clods

and other objective materials.

2. Treat roots remaining in the soil with a weed killer approved and as directed by the City Engineer or the Consultant.

3. Remove all concrete and masonry debris. Remove stones, boulders, clods which are one (1) inch or larger. Remove stones, boulders, clods which are one (1) inch or larger from all utility trenches.

4. Remove all existing rubbish and debris or those resulting from work operations of this Section as soon as possible, do not allow to pile up. Do not burn rubbish and debris on the job-site.

5. Remove all growths including trees and shrubs on the job-site within property lines including trees in tree wells and elsewhere as noted on the Contract Drawings.

6. Where active utility lines need to be capped or plugged, perform such work in accordance with requirements of the Utility Company or government agency having jurisdiction and conform to provisions of Section 01140 – CONTRACTOR'S USE OF THE PREMISES, and Subsection 3.2B of this Section.

7. Existing Services to remaining structures are to be maintained at all times.

3.4 STRIPPING

A. Stripping shall include the removal and disposal of all organic sod, topsoil, grass and grass roots, and other objectionable material remaining after clearing and grubbing from the areas designated to be stripped. The depth of stripping shall be as shown on the Drawings and specified herein.

B. Topsoil from the strippings shall be stockpiled and used for the finished site grading. Excess topsoil will be placed in the waste disposal areas designated by the ENGINEER.

C. Prior to beginning any excavation or fill, strip the topsoil to a depth sufficient to remove all organic material **and stockpile for future use.** In general, topsoil shall be removed where structures are to be built, trenches dug, and roads, parking lots, walks, and similar improvements constructed within the areas presently covered with topsoil. Topsoil shall be stored clear of the construction area. Take reasonable care to prevent the topsoil from becoming mixed with subsoil. In lieu of reusing stockpiled, use imported topsoil as required for final grading.

3.5 TOPSOIL

A. Strip and remove existing sod, and stock pile existing sod if specified for reuse in the Contract Works.

B. After proposed planting area(s) has been cleared of vegetation and grubbed, strip the existing topsoil to a depth needed to allow the top 24" of fill as "Class A" topsoil in accordance with Earthwork, Section 02310 and Landscape Planting, Section 02932.

C. If on site topsoil is specified for reuse, stock pile topsoil in an area clear of new

construction or where directed by the City Engineer or the Consultant.

D. Remove and dispose of the stock pile topsoil prior to the delivery of any new imported top soil.

3.6 REMOVAL AND DISPOSAL OF CLEARING AND GRUBBING DEBRIS

A. General: All materials removed shall be disposed of outside of the right-of-way. No accumulation of flammable material shall remain on or adjacent to the right-of-way. The roadway and adjacent areas shall be left with a neat and finished appearance.

B. Bituminous Pavement: Bituminous pavement removal shall be in conformance with SSPWC Section 300-1.3.2.

C. Concrete Pavement: Concrete pavement removal shall be in conformance with SSPWC Section 300-1.3.2.

D. Concrete Curb, Walk, Gutters, Cross Gutters, Driveways, and Alley Intersections: Concrete removal shall be in conformance with SSPWC Section 300-1.3.2.

3.7 STORAGE OF MATERIALS AT THE JOB-SITE

Storage not permitted beyond brief accumulation awaiting pick up by removal trucks. Delays in the removal of site-clearing materials from the job-site shall be subject to the approval of the City Engineer or the Consultant.

END OF SECTION 02210

SECTION 02235
DEWATERING

PART 1 – GENERAL

1.1 Related Documents

A. Drawings and general provisions of the Contract, including General and Supplementary Conditions and Division 1 Specification Sections, apply to this Section.

1.2 Summary

A. This Section includes construction dewatering.

B. Related Sections include the following:

1. Division 2 Section "Earthwork" for excavating, backfilling, and site grading.

1.3 Performance Requirements

A. Dewatering Performance: Design, provide, test, operate, monitor, and maintain a dewatering system of sufficient scope, size, and capacity to control ground-water flow into excavations and permit construction to proceed on dry, stable subgrades.

1. Work includes removing dewatering system when no longer needed.

2. Maintain dewatering operations to ensure erosion is controlled, stability of excavations and constructed slopes is maintained, and flooding of excavation and damage to structures and utilities are prevented.

3. Prevent surface water from entering excavations by grading, dikes, or other means.

4. Accomplish dewatering without damaging existing buildings and utilities adjacent to excavation.

5. Identify steps to minimize the volume, monitor and pre-treat dewatering effluent to improve its quality prior to disposal.

1.4 Submittals

A. Shop Drawings: For dewatering system. Show arrangement, locations, and details of wells and well points; locations of headers and discharge lines; and means of discharge and disposal of water.

1. Include a written report outlining control procedures to be adopted if dewatering problems arise.

2. If retaining "Performance Requirements" Article, retain subparagraph below to meet requirements of authorities having jurisdiction or to follow

customary practice in Project's location.

3. Include Shop Drawings signed and sealed by a California registered professional engineer responsible for their preparation.

B. Dewatering Plan: The dewatering plan shall include all the requirements of Bureau of Engineering Special Order No. 001-0204. Submit Dewatering Plan to the Bureau of Sanitation (BOS), Regional Water Quality Control Board and National Pollutant Discharge Elimination System (NPDES) for plan check review, approval and permit. Steps shall be identified to minimize the volume, to monitor and pre-treated to improve the quality of dewatering effluent prior to disposal.

C. BOS Industrial Waste Permit: Obtain a BOS Industrial Waste Permit for disposing dewatering effluent into sanitary sewers. Sewers are primary disposal sites for dewatering effluent. Disposal into storm drains may only be used as a last resort and will be heavily regulated.

D. Qualification Data: For firms and persons specified in "Quality Assurance" Article to demonstrate their capabilities and experience. Include lists of completed projects with project names and addresses, names and addresses of architects and owners, and other information specified.

E. Photographs or videotape, sufficiently detailed, of existing conditions of adjoining construction and site improvements that might be misconstrued as damage caused by dewatering operations.

F. Record drawings at Project closeout identifying and locating capped utilities and other subsurface structural, electrical, or mechanical conditions.

1.5 Quality Assurance

A. Installer Qualifications: Engage an experienced installer to assume engineering responsibility and perform dewatering who has specialized in installing dewatering systems similar to those required for this Project and with a record of successful in-service performance.

B. Professional Engineer Qualifications: A California registered profesional engineer who is experienced in providing engineering services for designing dewatering systems that are similar to those indicated for this Project in material, design, and extent.

1. Engineering Responsibility: Engage a qualified professional engineer to prepare or supervise the preparation of data for the dewatering system including drawings, testing program, test result interpretation, and comprehensive engineering analysis that shows the system's compliance with specified requirements.

C. Regulatory Requirements: Comply with water disposal requirements of authorities having jurisdiction.

1.6 Project Conditions

A. Existing Utilities: Do not interrupt utilities serving facilities occupied by the Owner or others unless permitted in writing by the Engineer and then only after

arranging to provide temporary utility services according to requirements indicated.

B. Project Site Information: A geotechnical report has been prepared for this Project and is attached to the Project Specifications for information only. The opinions expressed in this report are those of the geotechnical engineer and represent interpretations of the subsoil conditions, tests, and results of analyses conducted by the geotechnical engineer. Owner will not be responsible for interpretations or conclusions drawn from this data by Contractor.

1. Make additional test borings and conduct other exploratory operations as necessary.

C. Survey adjacent structures and improvements, employing a qualified professional engineer or surveyor, establishing exact elevations at fixed points to act as benchmarks. Clearly identify benchmarks and record existing elevations.

1. During dewatering, resurvey benchmarks weekly, maintaining an accurate log of surveyed elevations for comparison with original elevations. Promptly notify Architect if changes in elevations occur or if cracks, sags, or other damage is evident in adjacent construction.

PART 2 – PRODUCTS

NOT USED

PART 3 - EXECUTION

3.1 Preparation

A. Protect structures, utilities, sidewalks, pavements, and other facilities from damage caused by settlement, lateral movement, undermining, washout, and other hazards created by earthwork operations.

1. Prevent surface water and subsurface or ground water from entering excavations, from ponding on prepared subgrades, and from flooding site and surrounding area.

2. Protect subgrades and foundation soils from softening and damage by rain or water accumulation.

B. Install dewatering system to ensure minimum interference with roads, streets, walks, and other adjacent occupied and used facilities.

1. Do not close or obstruct streets, walks, or other adjacent occupied or used facilities without permission from Owner and authorities having jurisdiction. Provide alternate routes around closed or obstructed traffic ways if required by governing regulations.

3.2 Dewatering

A. Install dewatering system utilizing wells, well points, or similar methods complete with pump equipment, standby power and pumps, filter material gradation, valves, appurtenances, water disposal, and surface-water controls.

B. Before excavation below ground-water level, place system into operation to lower water to specified level, a minimum of three feet below the bottom of planned excavations, and then operate it continuously until drains, sewers, and structures have been constructed and fill materials have been placed, or until dewatering is no longer required.

C. Provide an adequate system to lower and control ground water to permit excavation, construction of structures, and placement of fill materials on dry subgrades. Install sufficient dewatering equipment to drain water-bearing strata above and below bottom of foundations, drains, sewers, and other excavations.

1. Do not permit open-sump pumping that leads to loss of fines, soil piping, subgrade softening, and slope instability.

D. Dispose of water removed from excavations in a manner to avoid endangering public health, property, and portions of work under construction or completed. Dispose of water in a manner to avoid inconvenience to others. Provide sumps, sedimentation tanks, and other flow-control devices as required by authorities having jurisdiction.

E. Provide standby equipment on-site, installed and available for immediate operation, to maintain dewatering on a continuous basis if any part of system becomes inadequate or fails. If dewatering requirements are not satisfied due to inadequacy or failure of dewatering system, restore damaged structures and foundation soils at no additional expense.

1. Remove dewatering system from Project site on completion of dewatering. Plug or fill well holes per the current requirements of City of Los Angeles.

F. Damages: Promptly repair damages to adjacent facilities caused by dewatering operations.

END OF SECTION 02235

SECTION 02240
SHEETING, SHORING AND BRACING SYSTEMS

PART 1 – GENERAL

1.1 SUMMARY

The Contractor shall provide shoring at open excavations and elsewhere where greater than 5-feet in depth, or as needed to ensure a stable excavation at less than 5 feet depth. Shoring shall be furnished, placed, maintained and removed by the Contractor, as needed to protect workers, materials, other properties and the public.

1.2 SYSTEM DESCRIPTION

A. General:

1. Shoring systems are not fully detailed on the Drawings, which are diagrammatic and show design intent of finished profiles, shapes and forms.

2. Specifications are of the performance type and include the minimum requirements of the excavation support system without limiting the Contractor to methods of achieving such performance.

B. Survey of existing conditions:

1. Employ California licensed surveyor or civil engineer to make a survey of existing adjacent structures and improvements.

   a. Establish precise elevations at fixed points to act as benchmarks.

   b. Clearly identify benchmarks and record existing elevations.

2. Photograph conditions encountered to highlight defects in existing construction. Notify the Engineer and registered owners of adjacent properties in writing when the survey is to be made and photographs taken so they may have representatives present.

   a. Have those representatives present sign the survey and photographs as witnesses.
   b. Upon completion of this work, make a similar examination of the properties originally surveyed, giving similar notice to all interested parties so they may be present during the final examination of the properties. Send a record of the original and final examinations to all concerned parties.

C. Design Requirements:

1. Shoring: Design shoring in accordance with all applicable codes, and in accordance with the specific requirements shown on the Contract Drawings and specified in the Soil Report. All wood components of the shoring system shall be constructed of pressure treated wood in conformance with the code requirements.

2 Loading: Design and construct shoring to withstand all soil and hydrostatic loading that might occur during the various stages of construction and for any surcharging loading caused by equipment loads, loads from material or soil stockpiles, and earthquake-induced loads.

a. Determine the soil, surcharge, and hydrostatic loading, but in no case shall the loading be less than the earth and minimum equipment surcharge pressures.

b. Determine the proper load distributions caused by such activities and assure that those conditions are not exceeded in the field during construction.

c. Design the shoring for lateral earth and water pressures and surcharge loads that could result from construction methods and dewatering activities.

d. Consider the intermediate stages during sequence of excavation and backfilling, including placement and removal of the lateral support elements, in the shoring design.

3 Allowable deflection: Refer to paragraph 3.4B of this Specification Section.

4 Existing pipes or structures shall not be used to support any portion of the open excavation unless approved by the Engineer in writing.

5 The design of shoring shall conform to accepted engineering practice in this field. Approval of the Contractor's plans and methods of construction by the Engineer or the authorized agencies does not relieve the Contractor of his responsibility for the adequacy of the shoring system.

D. Performance Criteria:

1. The Contractor shall be solely responsible for and bear the sole burden of cost for any and all damages resulting from improper shoring or failure to shore.

2. The safety of workers, the protection of adjacent structures, property and utilities, and the installation of adequate supports for all excavations shall be the sole responsibility of the Contractor.

3. The design, planning, installation, and removal of all shoring shall be accomplished in such a manner as to maintain stability of the required excavation, or trench section, and to prevent any movement of soil that may cause damage to adjacent structures and utilities, damage or delay the work, or endanger life and health.

1.3 RELATED WORK SPECIFIED ELSEWHERE

A. Section 02310 Earthwork

B. Section 02550 Lined Reinforced Concrete Pipe

C. Section 02585 Maintenance Manhole and Precast Vault Construction

D. Section 02810 Irrigation System

E. Section 03300 Cast-in-Place Concrete

F. Section 03400 Precast Concrete

G. Section 07290 Waterproofing

H. Section 13200 Modular Stormwater Infiltration System

I. Division 15 Mechanical

J. Division 16 Electrical

1.4 CONTRACTOR SUBMITTALS

A. Comply with pertinent provisions of Section 01330 - SUBMITTALS of DIVISION 1 - GENERAL REQUIREMENTS.

B. Design and Calculations: The Contractor shall design and prepare shoring drawings and make calculations of materials used structurally in excavations, footings and foundation in accordance with the code requirements.

C. Shop Drawings: After submitting drawings for shoring to the Engineer for review, the Contractor shall incorporate all comments or corrections in the drawings, and submit to the authorized governing agencies for approval, at least three (3) weeks prior to commencement of work. After the approval is obtained, the Contractor shall submit [seven (7)] duplicate copies of the approved drawings to the Engineer. No excavations shall start until all the reviews and approval of the shoring design, which includes the following minimum items, have been obtained from the authorized agencies, or the Engineer:

1. Design assumptions, analysis calculations, and information on Contractor's proposed method of installation and removal of all shoring.

2. The maximum design load to be carried by the various members of the support system.

3. Detailed excavation support drawings, showing all pertinent dimensions, spacing, and relationships among the components of the shoring, as well as construction sequence and scheduling. Drawings shall show adjacent existing improvements including utilities within a lateral distance equal to the depth of excavation.

4. The method of bracing and preloading, if any.

5. Detailed utility and structure support drawings, where necessary.

6. The full excavation depth and depth(s) below the main excavation to which the support system will be installed.

7. Detailed sequence of construction and loads for various stages of bracing installation and removal.

8. Detailed drawings and descriptions of the method to be used by the Contractor to monitor shoring movements.

9. Types of construction equipment intended to be used in this Project.

10. Method of removing the soil from the trench or excavation.

11. Backfill materials and method of backfill and compaction.

12. Dewatering Plans (if applicable).

D. Quality Control Submittals:

1. Design Data: All the design and calculations and shop drawings shall be sealed and signed by a Civil or Structural Engineer licensed in the State of California and experienced in the design of earth retaining structures. The professional engineer shall be obtained and paid for by the Contractor.

E. Permits:

1. Submit in accordance with provisions in Section 01112 – DESCRIPTION OF WORK in DIVISION 1 - GENERAL REQUIREMENTS and other Sections of the Project Manual.

2. Obtain permit(s) as required by Title 8, Division 1-DEPT. OF INDUSTRIAL RELATIONS, Chapter 4 –DIVISION OF INDUSTRIAL SAFETY of the California Code Of Regulation, and pursuant to Subsection 7-10.4.1 - SAFETY ORDERS of SSPWC, prior to excavating to the depth of 5-feet or greater. A duplicate copy of the permit shall be submitted to the Engineer for review prior to the start of excavation.

F. Certification Form: Contractor shall completely fill out a Competent Person Trench/Excavation Certification Form provided by Inspector of Bureau of Contract Administration prior to any worker access to trench or excavations, and return it to the Inspector. Contractor shall certify by this form: the name of the competent person administering the work, the soil classification, and the type of excavation protective system provided/installed.

G. Shoring Monitoring Data: As Specified herein.

[H. Notification: As required by Section 3301.2 of the Los Angeles City Building Code, before commencing any excavation of 12 feet below the grade, the Contractor shall notify in writing the owners of adjoining buildings not less than 10 days before such excavation is to be made and that the adjoining buildings should be protected.

1.5 QUALITY ASSURANCE

A. Use adequate numbers of skilled workers who are thoroughly trained and experienced in the necessary crafts and who are completely familiar with the specified requirements and the methods needed for proper performance of the work of this Section.

B. Employ a qualified registered engineer having at least five (5) year experience to design the shoring system and to inspect and report on the quality of its construction.

C. Comply with pertinent requirements of governmental agencies having jurisdiction.

D. Coordinate the shoring design and construction with:

1. Soil Investigation Report prepared for this Work;

2. Structural system established for the Work, including location of columns, pilasters, walls, and other features.

3. Utilities established in the site.

E. Regulatory Requirements:

1. Conform to provisions of Section 01410 - REGULATORY REQUIREMENTS in the GENERAL REQUIREMENTS.

2. Comply with applicable requirements, including but not limited to, those shown on the Contract Drawings; latest adopted version of the Los Angeles City Building Code, Section 1802 – QUALITY AND DESIGN and Section 3301 – EXCAVATION AND FILLS; State of California, Code of Regulations, Title 8 – INDUSTRIAL RELATIONS, Division 1- DEPARTMENT OF INDUSTRIAL RELATIONS, Chapter 4 – DIVISION OF INDUSTRIAL SAFETY, Subchapter 4 – CONSTRUCTION SAFETY ORDERS, Section 1539, 1540, and 1541.

1.6 PROTECTIONS

A. Protect adjacent existing improvements against damage by the Contractor's operations. Protect all excavation so that the soil of adjoining property will not cave in or settle. Repair or replace damaged items to the full satisfaction of the Engineer, at no extra cost to the City.

B. Shore, crib or lag excavations and earthbanks, as necessary, to prevent caving in, erosion or gullying of the sides.

C. Divert or pump water out of all excavations and trenches until all installation work and backfilling are completed and inspected.

1.7 INSPECTIONS

A. Excavation of existing fills, reworking of natural soils and compaction of all required fills will be inspected and tested by the City of Los Angeles Building and Safety Inspector and the Soils Engineer **[who will be responsible to the Engineer and will be paid for by the City].**

B. Place all such backfill under the full supervision of the Soils Engineer.

PART 2 – PRODUCTS (NOT USED)

PART 3 -- EXECUTION

3.1 SURFACE CONDITIONS

A. Examine the areas and conditions under which the work of this Section will be performed. Correct conditions detrimental to timely and proper completion of the work. Do not proceed until detrimental conditions are corrected.

B. Existing Utilities: Contract Drawings show major utilities, but all utilities may not be shown. The Contractor will obtain all as-built records of existing utilities from local government authorities or Utility Companies and field check locations of utilities with representatives of the Utility Company. Protect from damage and provide utility trench support to any sewer, storm drain, water, gas, electric or other pipelines or conduits uncovered during work.

1. Excavate by hand or other excavation methods acceptable to the utility owner.

2. If existing utilities interfere with Contractor's proposed method of support, any required modification to the shoring system or relocation of interfering utilities shall be performed at no additional cost to the City.

3. Contact Underground Service Alert, (800) 422-4133, and obtain underground service alert inquiry I.D. Number 48 hours prior to digging. Report the I.D. Number to the Bureau of Contract Administration when calling for inspection.

C. Provisions for Contingencies:

1. Provide a contingency plan or alternative procedures to be implemented, if unfavorable performance is evidenced from the shoring monitoring program.

   a. Keep on hand the necessary materials and equipment to implement the contingency plan.

2. If support elements project beyond the vertical projection of the right-of-way shown on the Contract Drawings onto adjoining property, **[the City] [the Contractor]** shall obtain permission of the adjoining property owner in writing. **[The Contractor shall bear the cost required to obtain such permission]**.

3. Subsurface Conditions: Evaluate subsurface conditions as excavation occurs.

4. Differing Conditions: Notify the Engineer of differing conditions that could affect the shoring design assumptions.

5. Acceptance: Proceeding with work means acceptance of existing conditions.

6. Notifications: The Contractor shall make all the necessary notifications to the adjacent properties, as described herein.

3.2 PREPARATION

A. Protection:

1. Protect or repair utilities damaged by operations of this Section.

2. Protect adjacent structures and property from damage and disfiguration.

B. Dewatering:

1. Where applicable, no excavation shall commence until the Contractor has demonstrated to the satisfaction of the Engineer that the groundwater has been lowered to the required level and that the soils inside the excavation are in the dewatered condition that was assumed in the Contractor's shoring design and submittal.

3.3 INSTALLATION

A. All trench and excavation openings shall be illuminated and fenced or barricaded during nights, weekends, and other times, as necessary, and meet CAL/OSHA safety requirements.

B. All shoring shall be installed to the lines and elevations shown on the Contractor's approved Construction Drawings. No component of the shoring system shall infringe on the minimum dimensions of any permanent structure shown in the Contract Drawings.

C. The excavation shall be staged as shown in the Construction Drawings or on required work documents and in such a manner as to provide a stable system of support at all times.

D. Should the shoring system utilize steel H-beams, piles, or other similar vertical supports, driving of said vertical supports will not be permitted in proximity of existing structures or sensitive utilities, except for the last 4-feet. The vertical supports shall be placed in holes drilled to a depth of 4-feet above the proposed bottom of the pile, except where this procedure is impracticable. The vertical support may then be driven to the required depth, not to exceed 4-feet. During the drilling and driving operations, the Contractor shall take care to avoid damage to utilities.

At locations where the drilling of such holes is impracticable despite reasonable mitigation methods because of the existence of obstructions or rocks, running sand, or other adverse condition, and provided said impracticability is demonstrated to the satisfaction of the Engineer by actual drilling operations by the Contractor, the Engineer may, upon request of the Contractor, approve the use of means other than drilling for the purpose of placing the vertical support. Such other means, however, must be of a nature which will accomplish, as nearly as possible, the purpose of the drilling, namely, the prevention of damage to existing surface or subsurface improvements, both public and private.

3.4 MONITORING

A. Employ a California-licensed surveyor or civil engineer to design, construct and maintain an on-going monitoring system of the horizontal and vertical deflections of the excavation support systems and the settlement of the adjacent ground and structures.

1. Regularly resurvey benchmarks specified during installation of excavation support systems.

2. Monitor excavation support and protection systems daily during excavation progress and for as long as the excavation remains open.

3. Regularly survey adjacent ground and structures to verify that no settlement is occurring or has occurred as a result of the construction activities.

4. Maintain an accurate log of surveyed elevations and positions for comparison with original elevations and positions. Maintain accuracy within 1/100 of a foot and keep records in a readily understandable form, such as a tabular form of both the net and total deflections (both horizontal and vertical) of each soldier pile.

B. Submit a copy of all the daily readings to the Engineer at the end of each week. Notify the Inspector or the Engineer immediately of any excessive movements or deflection.

1. If changes in elevations or positions occur or if cracks, sags, or other damage is evident in adjacent construction, promptly notify the Engineer and immediately take steps to remedy the situation.

2. Horizontal and lateral deflections into the excavation at any location on the shoring shall be limited to a maximum of 1 inch, or to a maximum of 0.5 inch within the influence zone of an existing structure, adjacent to a utility sensitive to deflection, or other special circumstances as determined by the Engineer for work in or affecting the public right-of-way. Deflection in private property not affecting the public right-of-way shall be limited to 0.5 inch.

3. The total of the allowable calculated deflection for secondary members (lagging or sheeting) added to the calculated deflection for primary members may be 50 percent greater than the limits identified when struts are placed no more than 5 feet apart on center, or piles are spaced no more than 8 feet apart on center.

4. If at any time the measured deflection exceeds the allowable maximum deflection, immediate corrective measures shall be taken by the Contractor to prevent any further deflections.

5. The Contractor shall stop the excavation work until corrective measures have been taken and the deflections have been reduced to acceptable limits, as specified.

3.5 REMOVAL OF SHORING

A. Shoring shall be designed to be gradually removed as necessary to allow backfill to be placed and compacted. All voids existing behind the shoring which remains in place shall be backfilled with structural concrete, as specified in Section 02310 - EARTHWORK.

B. Shoring shall be removed as backfilling progresses. Removal shall be conducted in such a manner so as to avoid any damage to adjacent facilities, or to other members of the shoring system. Impact loading or in members of the shoring system will not be allowed. All wood forms, loose or casual wood and debris shall be removed. Areas that cannot be accessed or achieve adequate compaction shall be backfilled with structural backfill at no additional cost to the City.

C. During backfilling, temporary support elements shall not be removed until alternative support is available, such as substituted struts, backfill, or ability of the support system to act as a cantilever without detrimental deflection.

D. Portions of shoring used to support excavations for installation of sanitary sewer and storm drain facilities shall be [removed] [left in place, with permission of the Engineer] or the pipe bedding and side support shall be recompacted to the satisfaction of the Engineer.

(END OF SECTION)

SECTION 02310
EARTHWORK

PART ONE - GENERAL

1.1 SUMMARY

A. Provided and executed earthwork, **as indicated on the Contract Drawings or** in the Project Manual including, but not limited to the following:

1. General excavating and trenching for various trades.

2. General exterior grading and cutting.

3. General excavating for site improvements.

4. Select base materials for under concrete slab and under paving.

5. Filling and Backfilling.

6. Structure excavation, unclassified fill and borrow excavation defined in Section 300 – EARTHWORK of the "Standard Specifications for Public Works Construction (SSPWC)".

B. RELATED WORK SPECIFIED ELSEWHERE

1. Documents affecting the work of this Section include, but are not necessarily limited to the GENERAL CONDITIONS, SUPPLEMENTARY CONDITIONS, DIVISION 1 - GENERAL REQUIREMENTS and other applicable Sections of the Project Manual.

2. Drawing Sheets GI02 and GI03 for additional requirements for structure subgrade preparation, fill material, placement and compaction

3. Demolition in Division 2

4. Clearing, Grubbing and Stripping in Section 02210.

5. Shoring in Section 02240.

6. Yard and Street Work in Section 02710.

7. Storm Drain System in Section 02545.

8. Irrigation and Landscaping Work in Division 2.

9. Concrete Work in Division 3.

10. Disabled Accessibility Parking Signage in Section 10443.

11. Electrical Work in Division 16.

12. Geotechnical Evaluation Report in Appendix

1.2 QUALITY ASSURANCE

A. Labor: Use adequate numbers of skilled laborers who are thoroughly trained and experienced in the necessary crafts and who are completely familiar with specified requirements and the methods needed for proper performance of the Work of this Section.

B. Equipment: Use equipment adequate in size, capacity, and numbers to accomplish the work of this Section in a timely manner.

C. Codes and Standards: Perform excavation work in compliance with applicable ordinance of governing authorities having jurisdiction including, but not limited to, the 2022 or latest edition L. A. City Building Code and applicable Amendments; Division 1-DEPARTMENT OF INDUSTRIAL RELATIONS of Title 8 of the California Code of Regulations; Section 300 - EARTHWORK of SSPWC, as amended by the Brownbook.

1. In addition to complying with Codes and Standards having jurisdiction, comply with directions of the Soil Engineer.

D. The Contractor shall provide necessary measures for storm water pollution control and water quality protection. The Contractor shall meet the standards of good housekeeping at all times.

E. Testing and Inspection Services**:** The City will engage a qualified soil testing and inspection service for quality control testing during earthwork operations. Testing shall be performed in accordance with the soil investigation reports and testing standards, the instructions of the Soil Engineer and the applicable Sections of General Conditions.

F. Soil Engineer: The City will retain the services of a Soil Engineer for the purpose of soil investigations and testing, all the necessary inspections and observations, and certifications.

G. Survey: The Contractor shall employ the services of a California licensed surveyor for the purposes of survey control, layout, grade and cross-sections required to control work. Survey work shall conform to Section 01722-SURVEYING.

1.3 SUBMITTALS

Conform to provisions of Section 01330 of DIVISION 1 - GENERAL REQUIREMENTS.

A. Shop Drawing of the Shoring System in Section 02240.

B. Sources of imported materials.

C. Method of Back-Filling and Compaction.

D. Dewatering Plans.

E. California General Construction Activity Stormwater Permit, Waste Discharge Identification Number, Wet Weather Erosion Control Plan or Stormwater Pollution Prevention Plan.

F. Competent Person Trench/Excavation Certification Form in Section 02240 –

SHORING.

G. Test Reports-Excavating: Contractor shall submit the following reports directly to the Los Angeles City Department of Building & Safety, prepared by the Soil Engineer and the testing service, with a copy to the Engineer.

1. Test reports on borrow material.

2. Verification of each footing subgrade.

3. Field density test reports.

4. One optimum moisture-maximum density curve for each type of soil encountered.

5. Other test reports as required by the Soil Engineer and the local cognizant agency.

1.4 PERMITS

A. Required: In addition to the requirements specified herein, and in applicable Section 01112 – DESCRIPTION OF WORK of DIVISION 1 - GENERAL REQUIREMENTS of the Project Manual.

B. The Contractor shall perform all work in accordance with the permit requirements of the Los Angeles City Department of Building and Safety, including obtaining the grading permit, hauling permit and bond, and making the notification to the adjacent property owners; no additional compensation will be allowed therefore.

C. The Contractor shall furnish to the Engineer a duplicate copy of the OSHA excavation permit, and all other required permits prior to the start of the excavation work.

D. The Contractor shall obtain and pay for the Bureau of Engineering's Shoring (Lateral Support) Permit.

E. The Contractor shall obtain and pay for the California State Regional Water Quality Control Board (LARWQCB) Construction Water Discharge Permit. The Los Angeles Department of Water and Power (LADWP) will submit and obtain the Ground Water Dewatering Permit. The Contractor shall work with LADWP to provide necessary information to complete the application process.

F. The LADWP will submit and obtain and pay for Calif General Construction Activity Stormwater Permit. The Contractor shall work with LADWP to provide necessary information to complete the application process. The Contractor shall obtain Waste Discharge Identification Number after submitting Wet Weather Erosion Control Plan (WWECP) pursuant to Section 61.02 and 64.72 of L.A.M.C. Stormwater Pollution Prevention Plan (SWPPP) pursuant to Section 91.106 of L.A.M.C. to the Los Angeles City Dept. Building and Safety for reviews.

G. The Contractor shall make all necessary notifications, obtain and pay for required permits and file manifests with the South Coast Air Quality Management District (SCAQMD).

1.5 JOB CONDITIONS

A. Required Work Coordination: The Contractor shall fully coordinate the work operations of this Section with that of other trades involved and with the Engineer to assure proper sequence of work, limitations, methods and time of work so as to minimize or avoid interference with the existing utilities as well as performance of work by the other Contractors. Contractor shall include minimum two weeks in its Construction Schedule to allow the Soil Engineer to prepare final Soil Report to be submitted to the Los Angeles City Department of Building and Safety Grading Division for final approval if the Soil Engineer is obtained by the City. The Contractor shall coordinate and arrange for all the inspections with the local authorized agencies and the Bureau of Contract Administration.

B. Trench Safety: Attention is directed to the provisions of Section 6705 of the Labor Code and Section 02240 – SHORING of the Project Manual concerning trench excavation safety plans.

C. Air Pollution Control: The Contractor shall comply with all air pollution control rules, regulations, ordinances and statutes which apply to work performed pursuant to the Contract, including any air pollution control rules, regulations, ordinances and statutes, specified in Section 1107 of the Government Code.

D. Use of Pesticides: The Contractor shall comply with all rules and regulations of the Department of Food and Agriculture, the Department of Health, the Department of Industrial Relations and all other agencies which govern the use of pesticides required in the performance of the Work on the Contract.

1. Pesticides shall include, but shall not be limited to herbicides, insecticides, fungicides, rodenticides, germicides, menatocides, bactericides, inhibitors, fumigants, defoliants, soil sterilants, and repellents.

2. Any substance or mixture of substances intended for preventing, repelling, mitigating or destroying weeds, insects, diseases, rodents, or nematodes and any substance of mixture for substances intended for use as a plant regulator, defoliant shall be considered as a pesticide.

E. Sound Control Requirements: The Contractor shall comply with all local sound control and noise level rules, regulations and ordinances which apply to any work performed pursuant to the Contract.

Each combustion engine, used for any purpose on the job or related to the job, shall be equipped with a muffler of a type recommended by the manufacturer. No internal combustion engine shall be operated on the project without said muffler.

F. Use of Explosives: The use of explosives is not permitted.

1.6 PROTECTIONS

A. General: Comply with provisions of Section 00309 - PROTECTION OF PERSONS AND PROPERTY AND RESTORATION OF EXISTING IMPROVEMENTS in GENERAL CONDITIONS. Protect and guard all excavations against damage to life, limb and property as prescribed by Los Angeles City Department of Building and Safety.

B. Protections of Persons and Property: Provide and install signs, lights and

barricades at danger points on and off the job-site to guard against accidents, etc.

1. Barricade open excavations occurring as part of this work and post with warning lights.

2. Operate and maintain warning lights as recommended by authorities having jurisdiction.

3. Protect structures, utilities, sidewalks, pavements and other facilities from damage caused by settlement, lateral movement, undermining, washout and other hazards created by earthwork operations.

4. Perform excavation within drip-line of large trees to remain by hand, and protect the root system from drainage or dry out to the greatest extent possible. Maintain moist condition for root system and cover exposed roots with burlap. Paint root cuts of 1" diameter and larger with emulsified asphalt tree paint.

C. Existing Improvements (including trees and shrubs Indicated to Remain): Protect against damage resulting from Contractor's operations. Repair or replace damaged items to the full satisfaction of the City at no added cost to the City.

D. Shoring, Cribbing and Lagging: Required of excavations and earth banks as necessary to prevent caving in, erosion or gullying of sides. Conform to applicable provisions in Section 02240 – SHORING of the Project Manual.

1. Design and calculations of shoring, etc. shall be in accordance with requirements of with the latest Los Angeles City Building Code, Section 2811 and Safety Orders of State of California, Division of Industrial Safety, Title 8, Subchapter 4, Article 6, Sections 1540 and 1541.

2. Upon completion of the project or when no longer needed or otherwise directed by the authority having jurisdiction, remove all such shoring from the job-site.

E. Water: Divert or pump out of all excavations until concrete and other items are placed therein, forms are removed, and backfilling is completed. The Contractor shall provide a means for solids removal before discharging the water.

F. Existing Utilities: Utilities shown on the drawings are shown pursuant to a search of available records and are shown as a matter of information and not as a matter of fact. Conforming with Section 01112 - SUMMARY OF THE WORK, Section 01140 – CONTRACTOR'S USE OF THE PREMISES and other Sections of the Project Manual, the Contractor shall locate existing underground utilities in areas of work. If utilities are to remain in place, provide adequate means of support and protection during earthwork operations.

1. Should uncharted or incorrectly charted piping or other utilities be encountered during excavation, consult City immediately for directions. Cooperate with City and utility companies in keeping respective services and facilities in operation. Repair damaged utilities to the satisfaction of the utility company.

2. Do not interrupt existing utilities serving facilities occupied and used by City and others, during occupied hours, except when permitted in writing

by the Engineer and then only after acceptable temporary utility services have been provided.

3. Provide a minimum of 48-hour notice to the Engineer, and receive written notice to proceed before interrupting any utility. Obtain clearance and notify all utility companies in the area and contact Underground Service Alert by calling (800) 422-4133. Deliver utility clearance ticket number to the Engineer prior to the start of any work.

4. Demolish and completely remove from site existing underground utilities indicated to be removed. Coordinate with utility companies for shut-off of service if lines are active.

1.7 INSPECTION

A. Required: All excavations and trenches shall be inspected by the Los Angeles City Building and Safety Inspector, and the Soil Engineer before filling, backfilling and/or other subsequent work is placed therein.

1. Earthwork backfill for structures shall comply with requirements of Section 300-3.5 - STRUCTURAL BACKFILL of SSPWC and/or requirements in the Project Manual.

1.8 SOILS INFORMATION

Available soils information include *Geotechnical Evaluation LABOE TOS No. 25 Stormwater Capture Parks Program Fernangeles Park Stormwater capture project* dated August 31, 2020.

Contractor shall comply with all Soil Report recommendations specified and other instruction directed by the Engineer. In case of conflicts between other parts of the Project Manual and the Soils Report, the most restrictive condition shall govern unless otherwise approved by the Soil Engineer.

1.9 MATERIAL HANDLING

A. Delivery: All materials, tools, equipment, etc. to be delivered to the job-site, in such a manner that it is coordinated with progress of work of this Section.

B. Material Storage: Stockpile satisfactory excavated materials where directed, until required for backfill or dispose of in accordance with Section 300-2.6 - SURPLUS MATERIALS of SSPWC. Place, grade and shape stockpiles for proper drainage.

1. Locate and retain soil materials away from edge of excavations. Do not store within drip line of trees indicated to remain.

2. Dispose of excess soil material and waste materials as herein specified.

PART TWO – PRODUCTS

2.1 SOIL MATERIALS

A. Dav Excavated Material: Suitable materials from excavations for use in fill and embankments shall be free from shale, sod, large clods or hard lumps of earth,

roots, trash or other debris; that has a liquid limit of less than 30 and a plasticity index of less than 9; and is readily compatible to specified density. No rock, cobbles or broken concrete exceeding 2 inches in maximum dimension shall be placed in compacted fill without the specified approval of the Engineer. No rock, cobbles or broken concrete exceeding 1 inch in maximum dimension shall be placed in compacted fill of a utility trench.

B. Fill Material: Furnish imported earth material as necessary; if specified in the contract requirements or if the amount of suitable earth materials obtained from the job-site excavations is not sufficient to properly construct the required fill, subject to the approval of the Engineer or the Soil Engineer prior to use.

1. Submit imported fill material samples and testing results for the Engineer's approval prior to importing to the job site in accordance with Section 300-5 BORROW EXCAVATION of SSPWC.

2. Imported fill material shall be free of foreign materials, vegetable growths, sod, rocks, expansive soils and all debris.

3. Lime for Treatment of Imported Fill Material: As hereafter specified in accordance with Section 301-5 - LIME-TREATED SOIL of SSPWC.

4. Where fill material exhibits a wide variation in consistency, the Engineer may require blending to stabilize and upgrade the material as directed by the Engineer.

5. In landscape (planting area), fill shall not be saline or contain anything that would prevent normal plant growth: See LANDSCAPING, Section 02900 of the Project Manual for verification of required or approved fill material.

C. Base Material: "Crushed Aggregate Base", or "Crushed Miscellaneous Base", 1-1/2-inch maximum size aggregate, as specified in Section 200-2 - UNTREATED BASE MATERIALS of SSPWC.

D Pipe Bedding and Trench Backfill Material:

1. For all pipe bedding follow CASE 4 per COLA STD Plan S-251-1.

2. Use clean earth materials previously removed from job-site excavations or use imported fill materials as above specified free from clay, rock or gravel larger than 1-inches for utility trenches, clay, rock or gravel larger than 2" inches in an area other than utility trench subject to the Soil Engineer's approval prior to use.

3. For sanitary sewer pipe, use Case I bedding material and extend 12-inch above said pipe, the balance of backfill to be approved clean earth materials.

4. For storm drain pipe, use approved washed sand and extend 12 inches above said pipe, the balance of backfill to be approved clean earth materials. For storm drain pipe section located beneath the sidewalk paving and connected to concrete curb outlet, sand bedding and backfill are not applicable.

5. For water pipe or pipe rise**,** use approved washed sand and extend 12-

inches above said pipe, the balance of backfill to be approved clean earth materials.

6. For electrical conduits, use approved washed sand and extend 4 inches above said conduits, the balance of backfill to be approved clean earth materials. For utility service connection, provide bedding and backfill material in accordance with utility company's instructions.

7. For the landscape irrigation piping, use approved washed sand and extend 4-inches above said pipe, the balance of backfill to be an approved clean earth materials.

8. Conforming to applicable Sections of the Project Manual for the pipe bedding widths and depths.

E. Soil Cement: Use soil-cement to form a dense, uniform mass conforming to the lines, grades and cross sections [shown on the Contract Drawings.] The soil cement shall be mixed, placed and compacted at least 95% of the relative compaction, in accordance with Section 301-3 of SSPWC and the instructions of the Soil Engineer.

F. Structural Backfill: The structural backfill shall have a sand equivalent of not less than 20 in accordance with Section 300-3.5 - STRUCTURAL BACKFILL and Section 300-4.5 - PLACING MATERIALS FOR FILLS of SSPWC and placed and compacted to 90% of relative compaction.

G. Slurry Backfill: Slurry backfill shall be 60 E 0.7 (Class 100-E-100) and placed in accordance with Section 306-1.3.1 - BACKFILL AND DENSIFICATIONS of SSPWC.

2.2 WEED KILLER/SOIL STERILANT

Provide a dry, free-flowing, dust-free chemical compound, soluble in water, capable of inhibiting growth of vegetation, and approved for use on this Work by governmental agencies having jurisdiction.

A. Tinted for visual identification, shall be as follow:

1. United States Borax Corp. "Polyborchlorate" or equal.

2. Pacific Coast Borax Co. "Polyborchlorate".

3. Amspray Corp. "Pavex".

4. Elanco "Spike 801".

2.3 TOPSOIL

A. Where required by [and shown on the Landscape Drawings or otherwise required], provide topsoil consisting of friable, fertile soil of loamy character, containing an amount of organic matter normal to the region, capable of sustaining healthy plant life, and reasonably free from subsoil, roots, heavy or stiff clay, stones larger than 2 inches in greatest dimension, noxious weeds, sticks, brush, litter, and other deleterious matter.

B. Obtain topsoil from sources within the project limits, provide imported topsoil from

approved sources outside the project limits, or from both sources.

2.4 OTHER MATERIALS

Provide other materials, not specifically described but required for a complete and proper installation, as selected by the Contractor subject to the approval of the Engineer.

PART THREE - EXECUTION

3.1 SURFACE CONDITIONS

Examine the areas and conditions under which the Work of this Section will be performed. Correct conditions detrimental to timely and proper completion of the Work. Do not proceed until detrimental conditions are corrected.

3.2 WATER QUALITY PROTECTION

A. Eroded sediments and other pollutants must be retained on site and may not be transported from the site via sheet flow, swales, area drains, natural drainage, or wind.

B. Stockpiles of earth and other construction-related materials must be protected from being transported from the site by wind or water.

C. Fuels, oils, solvents, and other toxic materials must be stored in accordance with their listing and are not to contaminate the soil ~~n~~or the surface waters. All approved toxic storage containers are to be protected from the weather. Spills must be cleaned up immediately and disposed of in a proper manner. Spills may not be washed into the drainage system.

D. Excess or waste concrete may not be washed into the public right-of-way or any drainage system. Provisions shall be made to retain concrete waste on-site until they can be appropriately disposed of or recycled.

E. Trash and construction-related solid waste must be deposited into a covered receptacle to prevent contamination of rainwater and dispersal by wind.

F. Sediments and other materials may not be tracked from the site by vehicle traffic. The construction entrance roadways must be stabilized so as to inhibit sediments from being deposited into the public right-of-way. Accidental deposits must be swept up immediately and may not be washed down by rain or by any other means.

G. Comply with requirements shown in Wet Weather Erosion Control Plan (WWECP).

3.3 SITE PREPARATION

A. Remove the existing soil including fill material, debris, roots and foreign materials to natural soil at the proposed building site. Removal shall be continued to at least 5 feet beyond the exterior faces of the exterior foundation. Removal shall be done in accordance with Section 02210 - SITE CLEARING and Grubbing of the Project Manual.

B. Remove the upper 6 inches of existing soil including debris, roots and foreign materials under the landscape.

C. Subgrades: Scarify for recompaction to a depth of 6-inches, bring to optimum moisture content and then recompact to at least 95% maximum density for subgrade as per ASTM D1557 - TESTED METHOD FOR LABORATORY COMPACTION CHARACTERISTICS OF SOIL USING MODIFIED EFFORT (56,000 FT - LBF/FT^3.). Prepare subgrade in accordance with Section 301-1 - SUBGRADE PREPARATION of SSPWC.

E. Holes and trenches existing on the jobsite or resulting from Contractor's operations shall be filled with clean existing or imported earth materials (free of large clods and stone).

Unless indicated otherwise, construct fill in accordance with Section 300-4.5 - PLACING MATERIALS FOR FILLS of SSPWC in 8-inch layers and each layer compacted to 95% relative compaction and finished to elevations necessary to require cutting by fine grading. Inspection by Los Angeles City Building and Safety Inspector and the Soil Engineer are required prior to filling. Obtain minimum one compaction test for each layer or volume specified by Code.

F. Grading: To elevations of existing adjoining street surfaces, private property and surfaces immediately adjacent to the job-site limits indicated on the Contract Drawings; make all grades in a straight line from any point to any other perimeter point.

G. Dewatering:

1. Remove all water, including rainwater, encountered during trench and sub-structure work to an approved location by pumps, drains, and other approved methods.

2. Keep excavations and site construction area free from water.

H. Dust Control: Use means necessary to prevent dust becoming a nuisance to the public, to neighbors, and to other work being performed on or near the job-site.

I. Moisture Control: Where subgrade or layer of soil material must be moisture conditioned before compaction, uniformly apply water to surface of subgrade, or layer of soil material. Apply water in manner to prevent free water appearing on surface during or subsequent to compaction operations.

1. Remove and replace, or scarify and air dry, soil material that is too wet to permit compaction to specified density.

2. Soil material that has been removed because it is too wet to permit compaction may be stockpiled or spread and allowed to dry. Assist drying by discing, harrowing, or pulverizing until moisture content is reduced to a satisfactory value.

J. Rework: Any previously compacted or tested subgrade and fill material, which are affected or disturbed, in the opinion of the Soil Engineer, by the inclemency of the weather such as rains, floods, earthquake or others shall be reworked, retested and re-inspected at no additional cost to the City.

K. Approval of Subgrade**:** By the Soil Engineer and the Los Angeles City Building and Safety Inspector prior to placing any fill.

L. Subgrade Preparation Where Extensive Fills Will Occur:

1. Remove disturbed existing soils and stockpile materials approved by the Soil Engineer for use in fills and as backfill materials. Dispose unsuitable materials off the jobsite.

2. Subgrade to be approved by the City of Los Angeles Building and Safety Inspector and the Soil Engineer.

3. Scarify the upper 6 inches of the soil over the entire rough grade site and recompact to a minimum relative compaction of 95%.

4. Bring to designated rough grades, using existing on-site imported materials, as approved by Soil Engineer, regrade by removing and replacing materials in loose lifts and bringing to optimum moisture content and compacting to 90% relative compaction as above specified for exposed soils to receive fills. The lifts should not generally exceed 8 inches in loose thickness depending on the type of compaction equipment. Use granular material for fills behind retaining walls.

5. Testing of Fills: Test the fill for conformance with code requirements; under continuous control supervision of a qualified representative of the City. The City's representative shall keep a log of the tests performed which will be filed with the Engineer upon completion of the work. Contractor to bear the costs of rework, retesting and re-inspection because of non-conformance.

3.4 GRUBBING AND GRADING

A. Remove entire roots under the footings and elsewhere to three feet below the subgrade of each surface.

B. Rough: Leave cut and fill sufficiently high to require cutting by fine grading.

C. Fine: To elevations required to ensure proper drainage or finished elevations indicated on drawings; finish elevations for planting areas as specified for top soil fill in Section 02900 – LANDSCAPING.

D. Subgrade Preparation: Required for all areas, other than filled or backfill areas, over which moisture barrier material, slabs, walks or pavement will be placed; in accordance with provision specified herein and Section 301-1 - SUBGRADE PREPARATION of SSPWC.

E. Inspection Required: Prior to placing base material, concrete or other materials.

F. Grading for Demolition Jobs: To specified elevations or elevations of existing sidewalks, adjacent property lines or surfaces immediately adjacent to the sites. Make all grades straight-line from any point to any other perimeter point.

G. Grading for New Asphalt Concrete Paving:

1. Rough: Cut and fill to be left sufficiently high to require cutting by fine grading and preparation of the surface for placement of the required select base material to thickness noted on the Contract Drawings or matching that of adjacent existing select base materials.

2. Fine: To exact elevations necessary for required new paving and paving repairs.

3. Testing and Inspection Required: Prior to placing of select base and asphalt paving materials.

3.5 EXCAVATING

A. General:

1. Excavation consists of the removal and disposal of materials necessary to establish required grade elevations and certified compacted fill for new construction pursuant to Section 300-2 UNCLASSIFIED EXCAVATION of SSPWC.

2. Excavated materials suitable for use as fill and/or backfill to be stockpiled where directed by the Engineer.

3. Non-approved and excess excavated materials to be legally removed and disposed of from the jobsite.

4. Shoring, Bracing and Bulkheading of Trenches: All to be provided, installed and maintained where required to support trenches, See Subsection 1.6 of this Section. Conform to the requirements prescribed by the Los Angeles City Department of Building and Safety, CAL/OSHA, Section 02240 - SHORING and other Sections of the Project Manual.

5. Access to Trenches: Conform to Section 306-1.1.4 - ACCESS TO TRENCHES of SSPWC. Provide safe and suitable ladders, which project 2 feet above the top of the trench. It shall be provided for all trenches over 4 feet in depth. A minimum one ladder shall be provided for each 50 feet of open trench or fraction thereof and be so located that the workers in the trench need not move more than 25 feet to a ladder.

6. Encountered Existing Underground Piping or Conduits: Immediately stop the trench operations at the point of encounter, notify the Engineer of such condition and submit support drawings to the Engineer for approval. The support drawings shall be in conformance with the Los Angeles City Bureau of Engineering Standard Plans S-253, SUPPORTS FOR STORM DRAIN AND SEWER PIPES ACROSS TRENCHES, latest edition; CAL/OSHA and the utility company's requirements.

B. For Substructure Concrete:

1. When Earth Banks are Stable: To net sizes of concrete, except as otherwise specified or indicated on the Contract Drawings.

2. When Earth Banks are not Stable: Sufficiently wider than concrete to allow for forms and inspection thereof.

3. Where Rock Occurs: Surface to be leveled to a clean, even hard surface.

4. Depth: As indicated on Contract Drawings.

5. Excessive Width and Depth: Where excavation is made wider and deeper than required, fill with concrete specified in Section 03300 of the Project Manual, at Contractor's expense.

6. Inspection Required: After excavation and before placing concrete and before backfilling, the exposed soil or subgrade will be carefully inspected by the City of Los Angeles Building and Safety Inspector and the Soil Engineer to verify removal of additional unsuitable soil.

7. Protections and Shorings: See Subsection 1.6 of this Section.

8. Excavation for Grade Beams: Omit forms when sides will stand to a cut face, make such excavation 1-inch wider on each side.

9. When excavating adjacent to existing remaining structures, do so in a sequence as required and approved by the Engineer to avoid displacement or damage to the existing adjacent structure.

C. For Site Improvements:

1. Masonry Yard Walls: As necessary for required footing and setting of forms for concrete work, to depth indicated.

2. For Planter Curbs: To exact curb limit, without excessive removal of adjacent paving or subgrade for new paving.

3. Planter Areas: Remove the upper 6 inches of existing sub-soils as necessary to receive topsoil fill as specified in Section 02900 - LANDSCAPING.

4. For Bumper Posts: To dimensions and depths noted on the Contract Drawings.

5. For Flagpole, to exact size and depth for concrete foundation.

6. For Concrete and Asphaltic Site Improvements such as concrete and/or asphalt pavements, concrete walkways, driveways aprons, concrete curb and gutter: Excavate to exact limits of such work without excessive removal of existing subgrade. Scarify and compact top 6 inches of subgrade and compact at 95% relative density.

D. For Walls (including wall footings): Width not less than 18-in. from face of wall and sufficient for necessary forms, cribbing, bracing, inspection, and application for watering on walls, where required.

E. Conduit and Piping: Conforming to the requirements as specified on the drawings, Los Angeles City Plumbing Code, SSPWC and other sections of the Project Manual. Any piping with 8 feet or less cover or backfill, Case 1 Bedding Installations of Los Angeles City Bureau of Engineering Standard Plan S-251, latest edition, shall be used for all piping laying unless otherwise specified on the drawings or noted.

1. Depth and Width of Trench For Storm Drainage Piping: To depth necessary for installation of piping and construction of catch basin in accordance with requirements of Section 02545 - STORM DRAIN SYSTEM, PLUMBING Section in Division 15 of the Project Manual and

as noted on the Contract Drawings. Provide minimum 7-½ inches side clearance from side of the piping. Make the sides vertical and the bottoms smooth, firm, level or uniformly sloped as required, slope to not exceed a downward slope of two horizontal to one vertical in a manner to prevent formation of water pockets in the pipe. For backfill or earth cover exceeded 8 feet, refer to Los Angeles City Bureau of Engineering Standard Plan S-251, latest edition, for maximum allowable trench width and bedding material. Unless specified otherwise, provide minimum 2 inches washed sand bedding below the pipe barrel.

2. Depth and Width of Trench for Plumbing Piping: As necessary for complete installations of the piping, fixtures and controls; provide minimum 7-1/2 inches side clearance from side of the piping; make the sides vertical and bottoms smooth, firm, level or slopes, as required by the code for proper drainage. Final elevations shown on Contract Drawings shall mean the invented pipe elevations. Pipe thickness and bedding thickness shall be used in determining trench depths. Conform to the requirements as specified in the Los Angeles City Plumbing Code and in Division 15 of the Project Manual. For backfill or earth cover exceeded 8 feet, refer to Los Angeles City Bureau of Engineering Standard Plan S-251, latest edition, for maximum allowable trench width and bedding material. Unless specified otherwise, provide minimum 4 inches washed sand bedding below the pipe barrel.

   If final elevation is not shown on contract drawings, place all piping to a depth no less than 24 inches.

3. Depth and Width of Trench for Electrical Conduit and Pull Box: As necessary for complete installation of the electrical conduits and pull box, unless specified otherwise, provide minimum 7-1/2 inches side clearance from the side of the conduit and pull box and 2 inches sand bedding in accordance with the Contract Drawings and requirements of the Utility Company.

   Conduit shall be placed to a depth of not less than 24 inches and 36 inches under the driveway.

4. Depth and Width of Trench for Landscape Irrigation Piping: As necessary for complete installations of the piping fixtures and controls; provide a minimum of 7-1/2 inches side clearance from the side of the piping and 4 inches washed sand bedding. Depth of piping shall be conformance with Section 02810 – IRRIGATION SYSTEMS of the Project Manual. All trenches for electrical conduit and wiring shall be in accordance with requirements listed hereinbefore.

F. Corrections: Required of all unauthorized excavations made below indicated depths, as recommended by the Soil Engineer at no added cost to the City.

3.6 FILLING

A. General: Construct in accordance with Section 300-4- UNCLASSIFIED FILL of SSPWC and place in layers not exceeding 8-inches thickness, compacted to a relative compaction of not less than 95% when tested in accordance with Section 211-2 - COMPACTION TESTS of SSPWC, except that fill in planting areas may be compacted to 90% relative compaction.

B. In Planting Areas and Tree Wells: If flooding method is specified for fill material, place saturated fill (exclusive of topsoil fill) prior to construction of adjacent improvements to minimize settlement as follows:

1. Planting Areas and Holes: Cultivate and soak the specified backfill mix for a minimum of two days using a common lawn soaker.

2. Tree Wells: Excavate a sump approximately 3-feet square by 3-feet deep and flood each sump for about 3 days.

C. Fill all holes on the existing job-site or resulting from site-clearing or demolition operations.

D. Topsoil Fill: Specified in Section 02900 - LANDSCAPING of the Project Manual.

E. Inspection Required: Prior to placement of fill materials. See Subsection 1.7A of this Section.

F. Concrete and Asphalt Site Improvements Walkways: Compact top 6 inches of existing subgrade and each 8" layer of backfill or fill material at 95% relative density.

3.7 BACKFILLING

A. Prior to Backfilling: Remove debris, trash and form materials from excavations.

B. Inspection Required: Prior to backfilling operations.

C. Placement of Backfill: In layers not exceeding 8-inches thickness, moisten to optimum moisture content and tamp until required 95% relative compaction is secured and finish to suitable elevations to provide for anticipated settlement and shrinkage.

D. Pipe Bedding And Backfill Over Underground Piping And Conduit: Place bedding and backfill material in conformance with provisions specified Subsection 2.1 (D) herein and in Section 02545 - STORM DRAIN SYSTEM, Division 15 - PLUMBING and Division 16 – ELECTRICAL of the Project Manual. Do not place backfill materials until the Inspector has inspected and approved the pipe installation. The bedding shall be compacted and shaped to form a firm base for the pipe and conduit. The initial backfill shall be placed in two lifts. The first lift shall be to the spring line of the pipe or conduit. The initial backfill shall be lightly compacted by light tamping compacted by water densification method. The balance of backfill shall be placed in accordance with Subsection 3.8 (C) herein.

E. For Parking Lot or Demolition Jobs: Use clean material previously removed from excavations or use imported materials as hereinbefore specified subject to approval by the Inspector or Engineer.

F. For Backfill Against Basement Walls: Do not place until such walls have gained sufficient strength to resist backfill loads and backside of such walls have been properly waterproofed without prior approval of the Inspector. Bring backfill up to finish grade or to subgrade for paving as indicated on the drawings.

G. In Planting Areas Holes and Tree Wells: After planting, cultivate and soak the specified backfill mix for a minimum of two days using a common lawn soaker if

specified.

H. For Voids Left by the Removal of Sheeting, Piles and Similar Shoring Supports: Immediately backfill with structural backfill of clean sand which shall be jetted into place to ensure a dense and complete filling of the voids.

I. Slurry Backfill: In areas where specified and/or around the utilities, vaults or other structures where the Soil Engineer determines that it is not practical to attain the required compaction by the mechanical methods or water densification, provide a trench slurry backfill 60-E0.7 (Class 100-E-100).

3.8 SELECT BASE

A. Place in accordance with Section 301-2 - UNTREATED BASE of SSPWC and "Soil Report" recommendations.

B. Locations: Place select base beneath concrete and asphalt concrete yard paving, beneath concrete driveway aprons and concrete gutters in yard areas, building floor slab on grade and elsewhere to thickness noted on the Contract Drawings.

C. Thickness: At least 4 inches under yard concrete paving, at least 4-inches under yard asphalt concrete paving, and at least 4-inches under all structure slabs on grade or as otherwise indicated on the Contract Drawings.

NOTE: Place to thickness matching that of original thickness of select base under existing removed concrete or asphalt concrete paving and make ready to receive paving repair materials. Aggregate base shall be compacted to 95% relative density in accordance with Section 301-2 - UNTREATED BASE of SSPWC.

3.9 SOIL STERILIZATION

Apply specified soil sterilization material to areas to receive select base materials and all exterior area including concrete and asphalt paving, concrete walkway, concrete curb and gutter, by methods recommended by the manufacturer. Certify in writing that the material has been applied.

3.12 DISPOSAL OF EXCESS AND WASTE MATERIALS

A. Removal from City's Property: Remove waste materials, including unacceptable excavated material, trash and debris, and dispose of it off City's property in a legal manner and to conform with the requirements shown in Section 01572 – CONSTRUCTION AND DEMOLITION WASTE MANAGEMENT of Division 1 - General Requirements.

B. Provide written consent of the owner of the property upon which the surplus material is to be deposited, pursuant to Section 01572 – CONSTRUCTION AND DEMOLITION WASTE MANAGEMENT specified above and Section 300-26 - SURPLUS MATERIAL of SSPWC.

END OF SECTION

This page intentionally left blank.

SECTION 02310
EARTHWORK

PART ONE - GENERAL

1.1 SUMMARY

A. Provided and executed earthwork, **as indicated on the Contract Drawings or** in the Project Manual including, but not limited to the following:

1. General excavating and trenching for various trades.

2. General exterior grading and cutting.

3. General excavating for site improvements.

4. Select base materials for under concrete slab and under paving.

5. Filling and Backfilling.

6. Structure excavation, unclassified fill and borrow excavation defined in Section 300 – EARTHWORK of the "Standard Specifications for Public Works Construction (SSPWC)".

B. RELATED WORK SPECIFIED ELSEWHERE

1. Documents affecting the work of this Section include, but are not necessarily limited to the GENERAL CONDITIONS, SUPPLEMENTARY CONDITIONS, DIVISION 1 - GENERAL REQUIREMENTS and other applicable Sections of the Project Manual.

2. Drawing Sheets GI02 and GI03 for additional requirements for structure subgrade preparation, fill material, placement and compaction

3. Demolition in Division 2

4. Clearing, Grubbing and Stripping in Section 02210.

5. Shoring in Section 02240.

6. Yard and Street Work in Section 02710.

7. Storm Drain System in Section 02545.

8. Irrigation and Landscaping Work in Division 2.

9. Concrete Work in Division 3.

10. Disabled Accessibility Parking Signage in Section 10443.

11. Electrical Work in Division 16.

12. Geotechnical Evaluation Report in Appendix

1.2 QUALITY ASSURANCE

A. Labor: Use adequate numbers of skilled laborers who are thoroughly trained and experienced in the necessary crafts and who are completely familiar with specified requirements and the methods needed for proper performance of the Work of this Section.

B. Equipment: Use equipment adequate in size, capacity, and numbers to accomplish the work of this Section in a timely manner.

C. Codes and Standards: Perform excavation work in compliance with applicable ordinance of governing authorities having jurisdiction including, but not limited to, the 2022 or latest edition L. A. City Building Code and applicable Amendments; Division 1-DEPARTMENT OF INDUSTRIAL RELATIONS of Title 8 of the California Code of Regulations; Section 300 - EARTHWORK of SSPWC, as amended by the Brownbook.

1. In addition to complying with Codes and Standards having jurisdiction, comply with directions of the Soil Engineer.

D. The Contractor shall provide necessary measures for storm water pollution control and water quality protection. The Contractor shall meet the standards of good housekeeping at all times.

E. Testing and Inspection Services**:** The City will engage a qualified soil testing and inspection service for quality control testing during earthwork operations. Testing shall be performed in accordance with the soil investigation reports and testing standards, the instructions of the Soil Engineer and the applicable Sections of General Conditions.

F. Soil Engineer: The City will retain the services of a Soil Engineer for the purpose of soil investigations and testing, all the necessary inspections and observations, and certifications.

G. Survey: The Contractor shall employ the services of a California licensed surveyor for the purposes of survey control, layout, grade and cross-sections required to control work. Survey work shall conform to Section 01722-SURVEYING.

1.3 SUBMITTALS

Conform to provisions of Section 01330 of DIVISION 1 - GENERAL REQUIREMENTS.

A. Shop Drawing of the Shoring System in Section 02240.

B. Sources of imported materials.

C. Method of Back-Filling and Compaction.

D. Dewatering Plans.

E. California General Construction Activity Stormwater Permit, Waste Discharge Identification Number, Wet Weather Erosion Control Plan or Stormwater Pollution Prevention Plan.

F. Competent Person Trench/Excavation Certification Form in Section 02240 – SHORING.

G. Test Reports-Excavating: Contractor shall submit the following reports directly to the Los Angeles City Department of Building & Safety, prepared by the Soil Engineer and the testing service, with a copy to the Engineer.

1. Test reports on borrow material.

2. Verification of each footing subgrade.

3. Field density test reports.

4. One optimum moisture-maximum density curve for each type of soil encountered.

5. Other test reports as required by the Soil Engineer and the local cognizant agency.

1.4 PERMITS

A. Required: In addition to the requirements specified herein, and in applicable Section 01112 – DESCRIPTION OF WORK of DIVISION 1 - GENERAL REQUIREMENTS of the Project Manual.

B. The Contractor shall perform all work in accordance with the permit requirements of the Los Angeles City Department of Building and Safety, including obtaining the grading permit, hauling permit and bond, and making the notification to the adjacent property owners; no additional compensation will be allowed therefore.

C. The Contractor shall furnish to the Engineer a duplicate copy of the OSHA excavation permit, and all other required permits prior to the start of the excavation work.

D. The Contractor shall obtain and pay for the Bureau of Engineering's Shoring (Lateral Support) Permit.

E. The Contractor shall obtain and pay for the California State Regional Water Quality Control Board (LARWQCB) Construction Water Discharge Permit. The Los Angeles Department of Water and Power (LADWP) will submit and obtain the Ground Water Dewatering Permit. The Contractor shall work with LADWP to provide necessary information to complete the application process.

F. The LADWP will submit and obtain and pay for Calif General Construction Activity Stormwater Permit. The Contractor shall work with LADWP to provide necessary information to complete the application process. The Contractor shall obtain Waste Discharge Identification Number after submitting Wet Weather Erosion Control Plan (WWECP) pursuant to Section 61.02 and 64.72 of L.A.M.C. Stormwater Pollution Prevention Plan (SWPPP) pursuant to Section 91.106 of L.A.M.C. to the Los Angeles City Dept. Building and Safety for reviews.

G. The Contractor shall make all necessary notifications, obtain and pay for required permits and file manifests with the South Coast Air Quality Management District (SCAQMD).

1.5 JOB CONDITIONS

A. Required Work Coordination: The Contractor shall fully coordinate the work operations of this Section with that of other trades involved and with the Engineer to assure proper sequence of work, limitations, methods and time of work so as to minimize or avoid interference with the existing utilities as well as performance of work by the other Contractors. Contractor shall include minimum two weeks in its Construction Schedule to allow the Soil Engineer to prepare final Soil Report to be submitted to the Los Angeles City Department of Building and Safety Grading Division for final approval if the Soil Engineer is obtained by the City. The Contractor shall coordinate and arrange for all the inspections with the local authorized agencies and the Bureau of Contract Administration.

B. Trench Safety: Attention is directed to the provisions of Section 6705 of the Labor Code and Section 02240 – SHORING of the Project Manual concerning trench excavation safety plans.

C. Air Pollution Control: The Contractor shall comply with all air pollution control rules, regulations, ordinances and statutes which apply to work performed pursuant to the Contract, including any air pollution control rules, regulations, ordinances and statutes, specified in Section 1107 of the Government Code.

D. Use of Pesticides: The Contractor shall comply with all rules and regulations of the Department of Food and Agriculture, the Department of Health, the Department of Industrial Relations and all other agencies which govern the use of pesticides required in the performance of the Work on the Contract.

1. Pesticides shall include, but shall not be limited to herbicides, insecticides, fungicides, rodenticides, germicides, menatocides, bactericides, inhibitors, fumigants, defoliants, soil sterilants, and repellents.

2. Any substance or mixture of substances intended for preventing, repelling, mitigating or destroying weeds, insects, diseases, rodents, or nematodes and any substance of mixture for substances intended for use as a plant regulator, defoliant shall be considered as a pesticide.

E. Sound Control Requirements: The Contractor shall comply with all local sound control and noise level rules, regulations and ordinances which apply to any work performed pursuant to the Contract.

Each combustion engine, used for any purpose on the job or related to the job, shall be equipped with a muffler of a type recommended by the manufacturer. No internal combustion engine shall be operated on the project without said muffler.

F. Use of Explosives: The use of explosives is not permitted.

1.6 PROTECTIONS

A. General: Comply with provisions of Section 00309 - PROTECTION OF PERSONS AND PROPERTY AND RESTORATION OF EXISTING IMPROVEMENTS in GENERAL CONDITIONS. Protect and guard all

excavations against damage to life, limb and property as prescribed by Los Angeles City Department of Building and Safety.

B. Protections of Persons and Property: Provide and install signs, lights and barricades at danger points on and off the job-site to guard against accidents, etc.

1. Barricade open excavations occurring as part of this work and post with warning lights.

2. Operate and maintain warning lights as recommended by authorities having jurisdiction.

3. Protect structures, utilities, sidewalks, pavements and other facilities from damage caused by settlement, lateral movement, undermining, washout and other hazards created by earthwork operations.

4. Perform excavation within drip-line of large trees to remain by hand, and protect the root system from drainage or dry out to the greatest extent possible. Maintain moist condition for root system and cover exposed roots with burlap. Paint root cuts of 1" diameter and larger with emulsified asphalt tree paint.

C. Existing Improvements (including trees and shrubs Indicated to Remain): Protect against damage resulting from Contractor's operations. Repair or replace damaged items to the full satisfaction of the City at no added cost to the City.

D. Shoring, Cribbing and Lagging: Required of excavations and earth banks as necessary to prevent caving in, erosion or gullying of sides. Conform to applicable provisions in Section 02240 – SHORING of the Project Manual.

1. Design and calculations of shoring, etc. shall be in accordance with requirements of with the latest Los Angeles City Building Code, Section 2811 and Safety Orders of State of California, Division of Industrial Safety, Title 8, Subchapter 4, Article 6, Sections 1540 and 1541.

2. Upon completion of the project or when no longer needed or otherwise directed by the authority having jurisdiction, remove all such shoring from the job-site.

E. Water: Divert or pump out of all excavations until concrete and other items are placed therein, forms are removed, and backfilling is completed. The Contractor shall provide a means for solids removal before discharging the water.

F. Existing Utilities: Utilities shown on the drawings are shown pursuant to a search of available records and are shown as a matter of information and not as a matter of fact. Conforming with Section 01112 - SUMMARY OF THE WORK, Section 01140 – CONTRACTOR'S USE OF THE PREMISES and other Sections of the Project Manual, the Contractor shall locate existing underground utilities in areas of work. If utilities are to remain in place, provide adequate means of support and protection during earthwork operations.

1. Should uncharted or incorrectly charted piping or other utilities be encountered during excavation, consult City immediately for directions. Cooperate with City and utility companies in keeping respective services and facilities in operation. Repair damaged utilities to the satisfaction of

the utility company.

2. Do not interrupt existing utilities serving facilities occupied and used by City and others, during occupied hours, except when permitted in writing by the Engineer and then only after acceptable temporary utility services have been provided.

3. Provide a minimum of 48-hour notice to the Engineer, and receive written notice to proceed before interrupting any utility. Obtain clearance and notify all utility companies in the area and contact Underground Service Alert by calling (800) 422-4133. Deliver utility clearance ticket number to the Engineer prior to the start of any work.

4. Demolish and completely remove from site existing underground utilities indicated to be removed. Coordinate with utility companies for shut-off of service if lines are active.

1.7 INSPECTION

A. Required: All excavations and trenches shall be inspected by the Los Angeles City Building and Safety Inspector, and the Soil Engineer before filling, backfilling and/or other subsequent work is placed therein.

1. Earthwork backfill for structures shall comply with requirements of Section 300-3.5 - STRUCTURAL BACKFILL of SSPWC and/or requirements in the Project Manual.

1.8 SOILS INFORMATION

Available soils information include *Geotechnical Evaluation LABOE TOS No. 25 Stormwater Capture Parks Program Fernangeles Park Stormwater capture project* dated August 31, 2020.

Contractor shall comply with all Soil Report recommendations specified and other instruction directed by the Engineer. In case of conflicts between other parts of the Project Manual and the Soils Report, the most restrictive condition shall govern unless otherwise approved by the Soil Engineer.

1.9 MATERIAL HANDLING

A. Delivery: All materials, tools, equipment, etc. to be delivered to the job-site, in such a manner that it is coordinated with progress of work of this Section.

B. Material Storage: Stockpile satisfactory excavated materials where directed, until required for backfill or dispose of in accordance with Section 300-2.6 - SURPLUS MATERIALS of SSPWC. Place, grade and shape stockpiles for proper drainage.

1. Locate and retain soil materials away from edge of excavations. Do not store within drip line of trees indicated to remain.

2. Dispose of excess soil material and waste materials as herein specified.

PART TWO – PRODUCTS

2.1 SOIL MATERIALS

A. Dav Excavated Material: Suitable materials from excavations for use in fill and embankments shall be free from shale, sod, large clods or hard lumps of earth, roots, trash or other debris; that has a liquid limit of less than 30 and a plasticity index of less than 9; and is readily compatible to specified density. No rock, cobbles or broken concrete exceeding 2 inches in maximum dimension shall be placed in compacted fill without the specified approval of the Engineer. No rock, cobbles or broken concrete exceeding 1 inch in maximum dimension shall be placed in compacted fill of a utility trench.

B. Fill Material: Furnish imported earth material as necessary; if specified in the contract requirements or if the amount of suitable earth materials obtained from the job-site excavations is not sufficient to properly construct the required fill, subject to the approval of the Engineer or the Soil Engineer prior to use.

1. Submit imported fill material samples and testing results for the Engineer's approval prior to importing to the job site in accordance with Section 300-5 BORROW EXCAVATION of SSPWC.

2. Imported fill material shall be free of foreign materials, vegetable growths, sod, rocks, expansive soils and all debris.

3. Lime for Treatment of Imported Fill Material: As hereafter specified in accordance with Section 301-5 - LIME-TREATED SOIL of SSPWC.

4. Where fill material exhibits a wide variation in consistency, the Engineer may require blending to stabilize and upgrade the material as directed by the Engineer.

5. In landscape (planting area), fill shall not be saline or contain anything that would prevent normal plant growth: See LANDSCAPING, Section 02900 of the Project Manual for verification of required or approved fill material.

C. Base Material: "Crushed Aggregate Base", or "Crushed Miscellaneous Base", 1-1/2-inch maximum size aggregate, as specified in Section 200-2 - UNTREATED BASE MATERIALS of SSPWC.

D Pipe Bedding and Trench Backfill Material:

1. For all pipe bedding follow CASE 4 per COLA STD Plan S-251-1.

2. Use clean earth materials previously removed from job-site excavations or use imported fill materials as above specified free from clay, rock or gravel larger than 1-inches for utility trenches, clay, rock or gravel larger than 2" inches in an area other than utility trench subject to the Soil Engineer's approval prior to use.

3. For sanitary sewer pipe, use Case I bedding material and extend 12-inch above said pipe, the balance of backfill to be approved clean earth materials.

4. For storm drain pipe, use approved washed sand and extend 12 inches

above said pipe, the balance of backfill to be approved clean earth materials. For storm drain pipe section located beneath the sidewalk paving and connected to concrete curb outlet, sand bedding and backfill are not applicable.

5. For water pipe or pipe rise**,** use approved washed sand and extend 12-inches above said pipe, the balance of backfill to be approved clean earth materials.

6. For electrical conduits, use approved washed sand and extend 4 inches above said conduits, the balance of backfill to be approved clean earth materials. For utility service connection, provide bedding and backfill material in accordance with utility company's instructions.

7. For the landscape irrigation piping, use approved washed sand and extend 4-inches above said pipe, the balance of backfill to be an approved clean earth materials.

8. Conforming to applicable Sections of the Project Manual for the pipe bedding widths and depths.

E. Soil Cement: Use soil-cement to form a dense, uniform mass conforming to the lines, grades and cross sections [shown on the Contract Drawings.] The soil cement shall be mixed, placed and compacted at least 95% of the relative compaction, in accordance with Section 301-3 of SSPWC and the instructions of the Soil Engineer.

F. Structural Backfill: The structural backfill shall have a sand equivalent of not less than 20 in accordance with Section 300-3.5 - STRUCTURAL BACKFILL and Section 300-4.5 - PLACING MATERIALS FOR FILLS of SSPWC and placed and compacted to 90% of relative compaction.

G. Slurry Backfill: Slurry backfill shall be 60 E 0.7 (Class 100-E-100) and placed in accordance with Section 306-1.3.1 - BACKFILL AND DENSIFICATIONS of SSPWC.

2.2 WEED KILLER/SOIL STERILANT

Provide a dry, free-flowing, dust-free chemical compound, soluble in water, capable of inhibiting growth of vegetation, and approved for use on this Work by governmental agencies having jurisdiction.

A. Tinted for visual identification, shall be as follow:

1. United States Borax Corp. "Polyborchlorate" or equal.

2. Pacific Coast Borax Co. "Polyborchlorate".

3. Amspray Corp. "Pavex".

4. Elanco "Spike 801".

2.3 TOPSOIL

A. Where required by [and shown on the Landscape Drawings or otherwise required], provide topsoil consisting of friable, fertile soil of loamy character, containing an amount of organic matter normal to the region, capable of sustaining healthy plant life, and reasonably free from subsoil, roots, heavy or stiff clay, stones larger than 2 inches in greatest dimension, noxious weeds, sticks, brush, litter, and other deleterious matter.

B. Obtain topsoil from sources within the project limits, provide imported topsoil from approved sources outside the project limits, or from both sources.

2.4 OTHER MATERIALS

Provide other materials, not specifically described but required for a complete and proper installation, as selected by the Contractor subject to the approval of the Engineer.

PART THREE - EXECUTION

3.1 SURFACE CONDITIONS

Examine the areas and conditions under which the Work of this Section will be performed. Correct conditions detrimental to timely and proper completion of the Work. Do not proceed until detrimental conditions are corrected.

3.2 WATER QUALITY PROTECTION

A. Eroded sediments and other pollutants must be retained on site and may not be transported from the site via sheet flow, swales, area drains, natural drainage, or wind.

B. Stockpiles of earth and other construction-related materials must be protected from being transported from the site by wind or water.

C. Fuels, oils, solvents, and other toxic materials must be stored in accordance with their listing and are not to contaminate the soil ~~n~~or the surface waters. All approved toxic storage containers are to be protected from the weather. Spills must be cleaned up immediately and disposed of in a proper manner. Spills may not be washed into the drainage system.

D. Excess or waste concrete may not be washed into the public right-of-way or any drainage system. Provisions shall be made to retain concrete waste on-site until they can be appropriately disposed of or recycled.

E. Trash and construction-related solid waste must be deposited into a covered receptacle to prevent contamination of rainwater and dispersal by wind.

F. Sediments and other materials may not be tracked from the site by vehicle traffic. The construction entrance roadways must be stabilized so as to inhibit sediments from being deposited into the public right-of-way. Accidental deposits must be swept up immediately and may not be washed down by rain or by any other means.

G. Comply with requirements shown in Wet Weather Erosion Control Plan (WWECP).

3.3 SITE PREPARATION

A. Remove the existing soil including fill material, debris, roots and foreign materials to natural soil at the proposed building site. Removal shall be continued to at least 5 feet beyond the exterior faces of the exterior foundation. Removal shall be done in accordance with Section 02210 - SITE CLEARING and Grubbing of the Project Manual.

B. Remove the upper 6 inches of existing soil including debris, roots and foreign materials under the landscape.

C. Subgrades: Scarify for recompaction to a depth of 6-inches, bring to optimum moisture content and then recompact to at least 95% maximum density for subgrade as per ASTM D1557 - TESTED METHOD FOR LABORATORY COMPACTION CHARACTERISTICS OF SOIL USING MODIFIED EFFORT (56,000 FT - LBF/FT^3.). Prepare subgrade in accordance with Section 301-1 - SUBGRADE PREPARATION of SSPWC.

E. Holes and trenches existing on the jobsite or resulting from Contractor's operations shall be filled with clean existing or imported earth materials (free of large clods and stone).

Unless indicated otherwise, construct fill in accordance with Section 300-4.5 - PLACING MATERIALS FOR FILLS of SSPWC in 8-inch layers and each layer compacted to 95% relative compaction and finished to elevations necessary to require cutting by fine grading. Inspection by Los Angeles City Building and Safety Inspector and the Soil Engineer are required prior to filling. Obtain minimum one compaction test for each layer or volume specified by Code.

F. Grading: To elevations of existing adjoining street surfaces, private property and surfaces immediately adjacent to the job-site limits indicated on the Contract Drawings; make all grades in a straight line from any point to any other perimeter point.

G. Dewatering:

1. Remove all water, including rainwater, encountered during trench and sub-structure work to an approved location by pumps, drains, and other approved methods.

2. Keep excavations and site construction area free from water.

H. Dust Control: Use means necessary to prevent dust becoming a nuisance to the public, to neighbors, and to other work being performed on or near the job-site.

I. Moisture Control: Where subgrade or layer of soil material must be moisture conditioned before compaction, uniformly apply water to surface of subgrade, or layer of soil material. Apply water in manner to prevent free water appearing on surface during or subsequent to compaction operations.

1. Remove and replace, or scarify and air dry, soil material that is too wet to permit compaction to specified density.

2. Soil material that has been removed because it is too wet to permit compaction may be stockpiled or spread and allowed to dry. Assist drying by discing, harrowing, or pulverizing until moisture content is reduced to a satisfactory value.

J. Rework: Any previously compacted or tested subgrade and fill material, which are affected or disturbed, in the opinion of the Soil Engineer, by the inclemency of the weather such as rains, floods, earthquake or others shall be reworked, retested and re-inspected at no additional cost to the City.

K. Approval of Subgrade**:** By the Soil Engineer and the Los Angeles City Building and Safety Inspector prior to placing any fill.

L. Subgrade Preparation Where Extensive Fills Will Occur:

1. Remove disturbed existing soils and stockpile materials approved by the Soil Engineer for use in fills and as backfill materials. Dispose unsuitable materials off the jobsite.

2. Subgrade to be approved by the City of Los Angeles Building and Safety Inspector and the Soil Engineer.

3. Scarify the upper 6 inches of the soil over the entire rough grade site and recompact to a minimum relative compaction of 95%.

4. Bring to designated rough grades, using existing on-site imported materials, as approved by Soil Engineer, regrade by removing and replacing materials in loose lifts and bringing to optimum moisture content and compacting to 90% relative compaction as above specified for exposed soils to receive fills. The lifts should not generally exceed 8 inches in loose thickness depending on the type of compaction equipment. Use granular material for fills behind retaining walls.

5. Testing of Fills: Test the fill for conformance with code requirements; under continuous control supervision of a qualified representative of the City. The City's representative shall keep a log of the tests performed which will be filed with the Engineer upon completion of the work. Contractor to bear the costs of rework, retesting and re-inspection because of non-conformance.

3.4 GRUBBING AND GRADING

A. Remove entire roots under the footings and elsewhere to three feet below the subgrade of each surface.

B. Rough: Leave cut and fill sufficiently high to require cutting by fine grading.

C. Fine: To elevations required to ensure proper drainage or finished elevations indicated on drawings; finish elevations for planting areas as specified for top soil fill in Section 02900 – LANDSCAPING.

D. Subgrade Preparation: Required for all areas, other than filled or backfill areas,

over which moisture barrier material, slabs, walks or pavement will be placed; in accordance with provision specified herein and Section 301-1 - SUBGRADE PREPARATION of SSPWC.

E. Inspection Required: Prior to placing base material, concrete or other materials.

F. Grading for Demolition Jobs: To specified elevations or elevations of existing sidewalks, adjacent property lines or surfaces immediately adjacent to the sites. Make all grades straight-line from any point to any other perimeter point.

G. Grading for New Asphalt Concrete Paving:

1. Rough: Cut and fill to be left sufficiently high to require cutting by fine grading and preparation of the surface for placement of the required select base material to thickness noted on the Contract Drawings or matching that of adjacent existing select base materials.

2. Fine: To exact elevations necessary for required new paving and paving repairs.

3. Testing and Inspection Required: Prior to placing of select base and asphalt paving materials.

3.5 EXCAVATING

A. General:

1. Excavation consists of the removal and disposal of materials necessary to establish required grade elevations and certified compacted fill for new construction pursuant to Section 300-2 UNCLASSIFIED EXCAVATION of SSPWC.

2. Excavated materials suitable for use as fill and/or backfill to be stockpiled where directed by the Engineer.

3. Non-approved and excess excavated materials to be legally removed and disposed of from the jobsite.

4. Shoring, Bracing and Bulkheading of Trenches: All to be provided, installed and maintained where required to support trenches, See Subsection 1.6 of this Section. Conform to the requirements prescribed by the Los Angeles City Department of Building and Safety, CAL/OSHA, Section 02240 - SHORING and other Sections of the Project Manual.

5. Access to Trenches: Conform to Section 306-1.1.4 - ACCESS TO TRENCHES of SSPWC. Provide safe and suitable ladders, which project 2 feet above the top of the trench. It shall be provided for all trenches over 4 feet in depth. A minimum one ladder shall be provided for each 50 feet of open trench or fraction thereof and be so located that the workers in the trench need not move more than 25 feet to a ladder.

6. Encountered Existing Underground Piping or Conduits: Immediately stop the trench operations at the point of encounter, notify the Engineer of such condition and submit support drawings to the Engineer for approval. The support drawings shall be in conformance with the Los

Angeles City Bureau of Engineering Standard Plans S-253, SUPPORTS FOR STORM DRAIN AND SEWER PIPES ACROSS TRENCHES, latest edition; CAL/OSHA and the utility company's requirements.

B. For Substructure Concrete:

1. When Earth Banks are Stable: To net sizes of concrete, except as otherwise specified or indicated on the Contract Drawings.

2. When Earth Banks are not Stable: Sufficiently wider than concrete to allow for forms and inspection thereof.

3. Where Rock Occurs: Surface to be leveled to a clean, even hard surface.

4. Depth: As indicated on Contract Drawings.

5. Excessive Width and Depth: Where excavation is made wider and deeper than required, fill with concrete specified in Section 03300 of the Project Manual, at Contractor's expense.

6. Inspection Required: After excavation and before placing concrete and before backfilling, the exposed soil or subgrade will be carefully inspected by the City of Los Angeles Building and Safety Inspector and the Soil Engineer to verify removal of additional unsuitable soil.

7. Protections and Shorings: See Subsection 1.6 of this Section.

8. Excavation for Grade Beams: Omit forms when sides will stand to a cut face, make such excavation 1-inch wider on each side.

9. When excavating adjacent to existing remaining structures, do so in a sequence as required and approved by the Engineer to avoid displacement or damage to the existing adjacent structure.

C. For Site Improvements:

1. Masonry Yard Walls: As necessary for required footing and setting of forms for concrete work, to depth indicated.

2. For Planter Curbs: To exact curb limit, without excessive removal of adjacent paving or subgrade for new paving.

3. Planter Areas: Remove the upper 6 inches of existing sub-soils as necessary to receive topsoil fill as specified in Section 02900 - LANDSCAPING.

4. For Bumper Posts: To dimensions and depths noted on the Contract Drawings.

5. For Flagpole, to exact size and depth for concrete foundation.

6. For Concrete and Asphaltic Site Improvements such as concrete and/or asphalt pavements, concrete walkways, driveways aprons, concrete curb

and gutter: Excavate to exact limits of such work without excessive removal of existing subgrade. Scarify and compact top 6 inches of subgrade and compact at 95% relative density.

D. For Walls (including wall footings): Width not less than 18-in. from face of wall and sufficient for necessary forms, cribbing, bracing, inspection, and application for watering on walls, where required.

E. Conduit and Piping: Conforming to the requirements as specified on the drawings, Los Angeles City Plumbing Code, SSPWC and other sections of the Project Manual. Any piping with 8 feet or less cover or backfill, Case 1 Bedding Installations of Los Angeles City Bureau of Engineering Standard Plan S-251, latest edition, shall be used for all piping laying unless otherwise specified on the drawings or noted.

1. Depth and Width of Trench For Storm Drainage Piping: To depth necessary for installation of piping and construction of catch basin in accordance with requirements of Section 02545 - STORM DRAIN SYSTEM, PLUMBING Section in Division 15 of the Project Manual and as noted on the Contract Drawings. Provide minimum 7-½ inches side clearance from side of the piping. Make the sides vertical and the bottoms smooth, firm, level or uniformly sloped as required, slope to not exceed a downward slope of two horizontal to one vertical in a manner to prevent formation of water pockets in the pipe. For backfill or earth cover exceeded 8 feet, refer to Los Angeles City Bureau of Engineering Standard Plan S-251, latest edition, for maximum allowable trench width and bedding material. Unless specified otherwise, provide minimum 2 inches washed sand bedding below the pipe barrel.

2. Depth and Width of Trench for Plumbing Piping: As necessary for complete installations of the piping, fixtures and controls; provide minimum 7-1/2 inches side clearance from side of the piping; make the sides vertical and bottoms smooth, firm, level or slopes, as required by the code for proper drainage. Final elevations shown on Contract Drawings shall mean the invented pipe elevations. Pipe thickness and bedding thickness shall be used in determining trench depths. Conform to the requirements as specified in the Los Angeles City Plumbing Code and in Division 15 of the Project Manual. For backfill or earth cover exceeded 8 feet, refer to Los Angeles City Bureau of Engineering Standard Plan S-251, latest edition, for maximum allowable trench width and bedding material. Unless specified otherwise, provide minimum 4 inches washed sand bedding below the pipe barrel.

   If final elevation is not shown on contract drawings, place all piping to a depth no less than 24 inches.

3. Depth and Width of Trench for Electrical Conduit and Pull Box: As necessary for complete installation of the electrical conduits and pull box, unless specified otherwise, provide minimum 7-1/2 inches side clearance from the side of the conduit and pull box and 2 inches sand bedding in accordance with the Contract Drawings and requirements of the Utility Company.

   Conduit shall be placed to a depth of not less than 24 inches and 36 inches under the driveway.

4. Depth and Width of Trench for Landscape Irrigation Piping: As necessary for complete installations of the piping fixtures and controls; provide a minimum of 7-1/2 inches side clearance from the side of the piping and 4 inches washed sand bedding. Depth of piping shall be conformance with Section 02810 – IRRIGATION SYSTEMS of the Project Manual. All trenches for electrical conduit and wiring shall be in accordance with requirements listed hereinbefore.

F. Corrections: Required of all unauthorized excavations made below indicated depths, as recommended by the Soil Engineer at no added cost to the City.

3.6 FILLING

A. General: Construct in accordance with Section 300-4- UNCLASSIFIED FILL of SSPWC and place in layers not exceeding 8-inches thickness, compacted to a relative compaction of not less than 95% when tested in accordance with Section 211-2 - COMPACTION TESTS of SSPWC, except that fill in planting areas may be compacted to 90% relative compaction.

B. In Planting Areas and Tree Wells: If flooding method is specified for fill material, place saturated fill (exclusive of topsoil fill) prior to construction of adjacent improvements to minimize settlement as follows:

1. Planting Areas and Holes: Cultivate and soak the specified backfill mix for a minimum of two days using a common lawn soaker.

2. Tree Wells: Excavate a sump approximately 3-feet square by 3-feet deep and flood each sump for about 3 days.

C. Fill all holes on the existing job-site or resulting from site-clearing or demolition operations.

D. Topsoil Fill: Specified in Section 02900 - LANDSCAPING of the Project Manual.

E. Inspection Required: Prior to placement of fill materials. See Subsection 1.7A of this Section.

F. Concrete and Asphalt Site Improvements Walkways: Compact top 6 inches of existing subgrade and each 8" layer of backfill or fill material at 95% relative density.

3.7 BACKFILLING

A. Prior to Backfilling: Remove debris, trash and form materials from excavations.

B. Inspection Required: Prior to backfilling operations.

C. Placement of Backfill: In layers not exceeding 8-inches thickness, moisten to optimum moisture content and tamp until required 95% relative compaction is secured and finish to suitable elevations to provide for anticipated settlement and shrinkage.

D. Pipe Bedding And Backfill Over Underground Piping And Conduit: Place

bedding and backfill material in conformance with provisions specified Subsection 2.1 (D) herein and in Section 02545 - STORM DRAIN SYSTEM, Division 15 - PLUMBING and Division 16 – ELECTRICAL of the Project Manual. Do not place backfill materials until the Inspector has inspected and approved the pipe installation. The bedding shall be compacted and shaped to form a firm base for the pipe and conduit. The initial backfill shall be placed in two lifts. The first lift shall be to the spring line of the pipe or conduit. The initial backfill shall be lightly compacted by light tamping compacted by water densification method. The balance of backfill shall be placed in accordance with Subsection 3.8 (C) herein.

E. For Parking Lot or Demolition Jobs: Use clean material previously removed from excavations or use imported materials as hereinbefore specified subject to approval by the Inspector or Engineer.

F. For Backfill Against Basement Walls: Do not place until such walls have gained sufficient strength to resist backfill loads and backside of such walls have been properly waterproofed without prior approval of the Inspector. Bring backfill up to finish grade or to subgrade for paving as indicated on the drawings.

G. In Planting Areas Holes and Tree Wells: After planting, cultivate and soak the specified backfill mix for a minimum of two days using a common lawn soaker if specified.

H. For Voids Left by the Removal of Sheeting, Piles and Similar Shoring Supports: Immediately backfill with structural backfill of clean sand which shall be jetted into place to ensure a dense and complete filling of the voids.

I. Slurry Backfill: In areas where specified and/or around the utilities, vaults or other structures where the Soil Engineer determines that it is not practical to attain the required compaction by the mechanical methods or water densification, provide a trench slurry backfill 60-E0.7 (Class 100-E-100).

3.8 SELECT BASE

A. Place in accordance with Section 301-2 - UNTREATED BASE of SSPWC and "Soil Report" recommendations.

B. Locations: Place select base beneath concrete and asphalt concrete yard paving, beneath concrete driveway aprons and concrete gutters in yard areas, building floor slab on grade and elsewhere to thickness noted on the Contract Drawings.

C. Thickness: At least 4 inches under yard concrete paving, at least 4-inches under yard asphalt concrete paving, and at least 4-inches under all structure slabs on grade or as otherwise indicated on the Contract Drawings.

NOTE: Place to thickness matching that of original thickness of select base under existing removed concrete or asphalt concrete paving and make ready to receive paving repair materials. Aggregate base shall be compacted to 95% relative density in accordance with Section 301-2 - UNTREATED BASE of SSPWC.

3.9 SOIL STERILIZATION

Apply specified soil sterilization material to areas to receive select base materials and all exterior area including concrete and asphalt paving, concrete walkway, concrete curb and gutter, by methods recommended by the manufacturer. Certify in writing that the material has been applied.

3.12 DISPOSAL OF EXCESS AND WASTE MATERIALS

A. Removal from City's Property: Remove waste materials, including unacceptable excavated material, trash and debris, and dispose of it off City's property in a legal manner and to conform with the requirements shown in Section 01572 – CONSTRUCTION AND DEMOLITION WASTE MANAGEMENT of Division 1 - General Requirements.

B. Provide written consent of the owner of the property upon which the surplus material is to be deposited, pursuant to Section 01572 – CONSTRUCTION AND DEMOLITION WASTE MANAGEMENT specified above and Section 300-26 - SURPLUS MATERIAL of SSPWC.

END OF SECTION

SECTION 02545
STORM DRAIN SYSTEM

PART ONE - GENERAL

1.1 DESCRIPTION

A. Furnish all labor, materials and equipment necessary to provide "on-site" Storm Drain System as shown on the Contract Drawing and specified herein, including:

1. Catch basin
2. Maintenance Holes
3. Diversion Structure
4. Valve Structure
5. Hydrodynamics Separator (HDS)
6. Connection to storm drain main line and/or to street gutters.

B. Repair and construct paving and bases after installation of Storm System.

C. Related Sections:

1. Documents affecting work of this Section include, but are not necessarily limited to the GENERAL CONDITIONS, SUPPLEMENTARY CONDITIONS and DIVISION 1 - GENERAL REQUIREMENTS and applicable section of the Project Manual.
2. Shoring in Section 02240.
3. Earthwork in Section 02310.
4. Irrigation System in Section 32 80 00.
5. Cast-In-Place Concrete Work in Section 03300.
6. Precast Concrete Work in Section 03400.

1.2 QUALITY ASSURANCE

A. **Bonded Contractor:** For connection to City's Storm Drain System including any catch basin or structure, Contractor specializing in the Storm Drain System connection work of this section shall be preapproved, bonded, and certified by Los Angeles City Bureau of Engineering. Submit certificates verifying Contractor's qualifications prior to start of work.

B. **Labor:** Use adequate numbers of skilled laborers who are thoroughly trained and

experienced in the necessary crafts and who are completely familiar with the specified requirements and the methods needed for proper performance of the work of this Section.

C. **Codes and Regulations:** Conform to the applicable Los Angeles City Building Code and Amendments, Los Angeles City Bureau of Engineering Standard Plans, and the Standard Specifications for Public Works Construction (SSPWC), latest edition.

1.3 SUBMITTALS

A. Comply with applicable provisions in the Section 01330 - SUBMITTALS of DIVISION 1 - GENERAL REQUIREMENTS of the Project Manual.

B. **Product Data:** Within 35 calendar days after the Contractor has received the City's "Notice to Proceed", submit:

1. Materials list of items proposed to be provided under this Section and other related Sections;

2. Manufacturer's Specifications and other data needed to prove compliance with the specified requirements;

3. Manufacturer's recommended installation procedures which, when approved by the City Engineer or the Consultant, will become the basis for accepting or rejecting actual installation procedures used on the Work.

C. Contractor’s proof of qualification.

D. Shop Drawings:

1. Shoring Drawings.

   a. The hydrodynamic separator units will require a long lead time for shop drawing review and shop inspection. It is recommended that the Contractor submit the shop drawings as early as possible to prevent delays.

2. Submit complete shop fabrication drawings of all pipe, pipe specials, hydrodynamic separators, and joint details. Contractor shall also submit a schedule of pipe marks accompanied by a plan showing the field location of each mark.

E. Testing Data and Reports.

1.4 DELIVERY, STORAGE AND HANDLING

A. Deliver material and products with certified delivery tickets to the job-site where directed by the City Engineer or the Consultant.

B. Store materials on the job located where directed by the City Engineer or the Consultant and not interfering with work operations of this Section.

C. Handle materials safely in a manner avoiding damage prior to and during installation and not damaging work of other trades.

1.5 PROTECTION

A. Required:

Furnish, erect and maintain barriers, lights and signs as necessary to protect the public, Contractor's and City's personnel and work under this Contract in accordance with Work Area Traffic Control Handbook until such time for backfilling of trenches and subsequent Contracted Site and "Street Work" operations.

1.6 PERMIT

A. Required:

1. Obtain Storm Drain Connection permit for connecting and discharging storm water into City street storm drain system as noted on the Contract Drawing and as noted in Sections of GENERAL CONDITIONS and Section 01112 – DESCRIPTION OF THE WORK in GENERAL REQUIREMENTS of the Project Manual or as otherwise directed by the City Engineer or the Consultant.

1.7 INSPECTION

A. Required:

1. All work outside the property lines regarding storm drain line connections to the street storm drain or gutters through sidewalk and curbs or as called for on the Contract Drawings, by the Storm Drain Connection Inspector of the Bureau of Contract Administration. Contractor shall make necessary arrangement in accordance with the permit requirements.

2. All work inside the property lines regarding storm drain lines shall be inspected by the Los Angeles City Department of Building and Safety.

3. Test pipes shall be selected from the lot and tested in accordance with the requirements specified in SSPWC, but not necessary limited to. At the place of manufacture, the City Engineer or Inspector will indicate tentative acceptance of the pipe for delivery by marking with the Agency stamp. Final acceptance will be made only when the project has been completed.

4. All pipe penetration and required fire stopping shall be inspected prior to any wall closure.

B. **Notification:** Contractor shall notify all local governing agencies and arrange for required inspection.

1.8 COORDINATION

A. **Required:** All on-site storm drain work shall be fully coordinated with other Contracted Work operations as per approved work scheduled.

PART TWO-PRODUCTS

2.1 PIPE MATERIAL (As applicable)

A. **Reinforced Concrete Pipe:** Cast Pipe wall type, As per Section 207-2 - REINFORCED CONCRETE PIPE of the Standard Specifications for Public Works Construction (SSPWC), sizes as indicated on the Contract Drawings.

2.2 CONCRETE MATERIALS

A. **Required for Catch Basins:** Concrete having a compressive strength of 3250 psi at 28 days as per Section 303 of the SSPWC and in Section 03300 - CAST-IN-PLACE CONCRETE of the Project Manual.

2.3 CATCH BASIN GRATE AND FRAME

A. Alhambra Foundry Ltd., Alhambra, California, No. A-2012 Standard Heavy Weight Traffic Cast Iron (square or rectangular grate and frame), size as indicated on the Contract Drawings, or equal.

2.4 CURB DRAIN PIPE

A. Rectangular in shape conforming to Los Angeles City Bureau of Engineering Standard Plan S-503, latest edition. Material shall be Alhambra Foundry Rectangular Cast Iron Pipes and adaptors, Part A-470 (Rectangular Cast Iron Pipe and Adaptors) and A-480 (Cast Iron Pipe Adaptors, round to rectangular pipe).

2.5 MISCELLANEOUS MATERIALS (As Applicable)

A. **Miscellaneous Metals:** See Section 05500 - METAL FABRICATIONS of the Project Manual.

B. **Grout:** See Section 03300 - CAST-IN-PLACE CONCRETE of the Project Manual.

C. **Mortar:** Comply with requirements of ASTM C270 - SPECIFICATION FOR MORTAR FOR UNIT MASONRY, Type "M" except the maximum placement time shall be one hour. No mortar shall be used which has begun to set; retempering not permitted.

D. **Pipe Bedding and Backfill Materials:** See Sub-Section 3.3 hereinafter, Section 02310-EARTHWORK of SSPWC and other Sections of the Project Manual.

1. Sand shall be graded as follow:

Sieve size	Percentage Passing Sieves
3/8"	100%
No. 4	60-100%
No. 8	65 - 90%
No. 16	45 - 70%
No. 30	25 - 45%
No. 50	10 - 20%
No. 100	2 - 8%
No. 200	0 - 4%
No. 220	0 - 3%

2. Concrete shall be in accordance with the Los Angeles City Bureau of Engineering Standard Plan S-251, latest edition.

2.6 HYDRODYNAMIC SEPARATORS

A. General:

1. Hydrodynamic separators shall be constructed of precast concrete and designed to remove oil and sediment from stormwater.

2. Hydrodynamic separators shall be designed with bypass capability such that flows in excess of the maximum treatment flow rate are routed around the treatment gallery and not allowed to contact the area of sediment storage in order to prevent scour and re-suspension of captured sediment.

3. One City of Los Angeles storm drain message marker or placard shall be placed on each hydrodynamic separator. Consult with the City for specific requirements for placard types and methods of application.

B. Materials:

1. Concrete for hydrodynamic separator shall conform to ASTM A478 or ASTM C890 and C913.

2. Cement shall be Type I, II, III Portland cement conforming to ASTM C150 with a minimum compressive strength of 4,000 psi.

3. Pipe openings shall be sized to accept pipes of the specified sizes and materials and shall be sealed by the Contractor with hydraulic cement conforming to ASTM C595M or ASTM C1107.

4. The screen system structure to be a welded aluminum framework spanned by the stainless steel screen. It shall be generally rectangular and the inflow end shall remain open to allow water to enter the screen system. All the panels, access doors, and lids that make up the screen system shall be stainless steel.

5. The stormwater treatment system to have a floating skimmer apparatus for preventing floatable debris from entering the treatment vault outlet. A rubber seal

at the face of the skimmer shall prevent the passage of oils, floating chemicals and debris.

6. Access maintenance hole to be constructed of Cast Iron and shall bear the words “Storm Drain”.

C. Performance:

1. The hydrodynamic separators should be able to treat a minimum flow rate of 35 cfs with full trash capture.

2. Total Suspended Solids (TSS) removal of at least 80% average annual reduction with a mean particle size of 150 microns.

3. The combination of installed components shall be designed to withstand AASHTO HS20 loads.

4. The hydrodynamic separators shall have the capacity to store at least 190 cubic feet of sediment without affecting the performance of the unit.

D. Manufacturer:

1. Old Castle Infrastructure, NSBB-1020-TC

2. Or Approved Equal

PART THREE - EXECUTION

3.1 SURFACE CONDITIONS

Examine the areas and conditions under which work of this Section will be performed. Correct conditions detrimental to timely and proper completions of the Work. Do not proceed until detrimental conditions are corrected as directed by the City Engineer or the Consultant.

3.2 EXCAVATING AND TRENCHING

A. General:

1. Conform to the requirements as specified on the drawings, Los Angeles City Plumbing Code, Standard Specifications for Public Works Construction and other sections of the Project Manual. Case 1 Bedding installation of Los Angeles City Bureau of Engineering Standard Plan S-251, latest edition shall be used for all piping laying. Any piping with 8 feet or more cover or backfill, trench width shall not exceed the maximum allowable trench width as shown in Standard Plan S-251.

2. Excavate trenches to provide for a minimum 6-inch thickness of bedding sand below bottom of pipe couplings. There shall be a minimum side clearance of 6 inches on each side.

B. Provide excavation and trenches for storm drain piping systems, concrete catch basins indicated on the Contract Drawings in accordance with applicable requirements specified in Section 02310 - EARTHWORK.

3.3 STORM DRAIN SYSTEM CONSTRUCTION

A. **General:** In strict accordance with pipe manufacturers recommendations and the Los Angeles City Plumbing Code and the SSPWC.

B. **Installation of Pipe:** In accordance with Sec. 306-1.2 INSTALLATION OF PIPE of the SSPWS on unyielding bedding foundations with uniform bearing under full length of pipe barrels; walking on or disturbing pipe in any manner after joints have been made, not permitted; at close of each day's work or whenever work is stopped for any reason, protect ends of pipe with temporary tight fitting closures. Slope as per Contract Drawings.

C. Seal all wall and flooring penetrations and sleeves with applicable fire stopping or sealant material. Obtain inspection prior to wall closure or trench backfill.

D. Bedding:

1. Provide for a minimum 6-inch thickness of bedding sand below bottom of pipe barrels; any over-excavations may require concrete pipe bedding and to be filled with slurry backfill or structural backfill in accordance with Standard Plan S-251, latest edition, at Contractor's expense; bedding sand to be tamped and compacted and accurately graded and shaped to support bottom quadrant of pipe, with coupling holes dug prior to placement of pipe.

2. Backfill: Provide sand backfill to an elevation of 12 inches over the top of the pipe and floor in accordance with Section 306-1.3.3 – WATER DENSIFIED BACKFILL. Use clean earth material for remainder of backfill to required finish grade and compact for yard paving.

E. **Pipe Juncture with Concrete Structures:** Set pipe ends as necessary for casting-in-place or grouting-in-place after construction of such structures. Junctures with existing storm drain channels to be in accordance with the standards and specifications of the Los Angeles County Flood Control District.

F. **Fill Joints:** (Other than wedge-lock type) with mortar troweled smooth on inside of pipe; keep mortar joints damp until backfill is placed.

G. **Pipe Juncture with Concrete Structures:** Set pipe ends as necessary for casting-in-place or grouting-in-place after construction of such structures.

3.4 CONCRETE STRUCTURES

A. **General:** Catch basins, gutters, maintenance holes, hydrodynamic separators, etc. as indicated on the Contract Drawings.

B. Materials:

1. Concrete: As specified in Sections 03300 CAST-IN-PLACE CONCRETE.

2. Grates, Frames and Covers: As hereinbefore specified.

3. Miscellaneous Metals: As specified in Section 05500 - METAL FABRICATIONS.

C. **Construction:** As indicated on the Drawings and specified in Section 03300 - CAST-IN-PLACE CONCRETE.

D. **Catch Basins:** Section 303-1- CONCRETE STRUCTURE and 303-1.4.4(b) - STANDARD CATCH BASIN of the SSPWC as applicable. Forms to be of 1-inch minimum thick plywood; remove forms minimum 24-hours after concrete pour; top surface of catch basins to conform to drawing details or paving grades and as directed by the City Engineer or the Consultant; steel trowel finish and lightly brushed with bristle brush all exposed surfaces; gratings and frames to be set flush and level with top surface of basin or as otherwise indicated on the Contract Drawings.

E. **Maintenance Holes, Hydrodynamic Separators, Diversion Structure:** Construct at location and to elevations indicated on the Contract Drawings, in accordance with details and materials noted thereon; set precast concrete segments with full mortar joints troweled smooth on interior of maintenance hole; set cover frames in full mortar bed and accurately to meet paving grades.

3.5 BACKFILL

A. As specified in "Sand and Backfill" subsections of Sections 02310 - EARTHWORK and provisions herein, including approval, place approved washed sand 12-inches above top of pipe and the balance of backfill shall be approved clean earth material free from waste material, rock or large clods larger than 1-inch in size. If excavated material is unsuitable or rejected; Contractor shall provide approved imported materials as necessary to complete the work.

B. No backfill material shall be deposited against the concrete structure until the concrete has developed not less than the specified 28 - day compressive strength.

3.6 TESTING (As Applicable)

A. **Required:** Provide personnel and equipment necessary, and perform tests required to demonstrate that the work of this Section has been completed in accordance with the specified requirements.

B. Hydrostatic Test on Watertight Joints:

1. Make a hydrostatic test on each watertight joint. Test one sample of each type watertight joint used. If one sample fails because of faulty workmanship, test an additional joint.

2. Demonstrate that joints in reinforced and unreinforced concrete pipe comply with ASTM C443 - SPECIFICATION FOR JOINTS FOR CIRCULAR CONCRETE SEWER AND CULVERT PIPE, USING RUBBER GASKETS.

3. Make tests in concrete pipe and clay pipe at an internal hydrostatic pressure of 10 psi for 24-hours.

4. Replace or repair joints found to be faulty. Repeat the test and repair cycle until joints are demonstrated to meet the specified requirements.

END OF SECTION 02545

SECTION 02550
LINED REINFORCED CONCRETE PIPE

PART 1 -- GENERAL

1.1 THE REQUIREMENT

A. The CONTRACTOR shall furnish all tools, equipment, materials, and supplies and shall perform all labor required to complete the work as indicated in the Contract Documents.

B. This Section covers lined reinforced concrete pipe intended to be used for the construction of sewers, and related structures.

1.2 RELATED WORK SPECIFIED ELSEWHERE

A. Section 02310 Earthwork.

B. Section 02585 Maintenance Hole and Precast Vault Construction.

C. Section 03300 Cast-in-Place Concrete.

1.3 REFERENCE SPECIFICATIONS, CODES, AND STANDARDS

A. Comply with the applicable reference specifications as specified in the GENERAL REQUIREMENTS.

B. Comply with the current provisions of the following Codes and Standards.

1. Commercial Standards:

ASTM C76	Specification for Reinforced Concrete Culvert, Storm Drain, and Sewer Pipe.
ASTM C596	Test Method for Drying Shrinkage of Mortar Containing Portland Cement.
ASTM D 412	Test method for tensile strength and elongation.
ASTM D 2240	Test method for indentation hardness.

2. Standard Specifications SSPWC Sections 207 - 3, 210 - 2, and 311 - 1.

1.4 CONTRACTOR SUBMITTALS

A. Shop drawing submittals shall be made in accordance with the GENERAL REQUIREMENTS and SSPWC Section 2-5.3.2.

PART 2 -- PRODUCTS

2.1 GENERAL

A. Except as modified herein, reinforced concrete pipe shall conform to the requirements of ASTM Designation C 76 for Class II, Wall B, and Type II cement. Unless otherwise specified, pipe shall have tongue and groove joints designed to be self-centering and to leave a recess on the inside of the pipe for pointing with mortar after jointing. Pipe shall be designed for an internal pressure of 26 feet of water, and an external D load as labelled on the Drawings.

B. The size, type, and D-load of the concrete pipe to be furnished shall be as shown on the Drawings, as specified under the bid item of work for the project, or as stated above.

C When pipe joints of the reinforced concrete collar type or of rubber-gasketed type are specified or indicated on the Drawings, joint details shall be submitted to the ENGINEER for acceptance before commencing pipe manufacture.

2.2 MATERIALS

A. Except when otherwise permitted by the ENGINEER, no materials shall be used in manufacturing of the pipe other than water, Portland cement, mineral aggregates and steel conforming to ASTM C 76, with the following exceptions:

1. All cement to be used or furnished shall be Type II low alkali Portland cement conforming to ASTM C 150 or Type IP (MS) Portland-pozzolan cement conforming to ASTM C 595, unless otherwise specified. Either cement shall conform to the low alkali requirements of Table IA of ASTM C150. Type IP (MS) cement shall contain no more than 20 percent pozzolan, which shall be interground with the clinker.

2. Aggregates shall be nonreactive when tested in accordance with ASTM C 289 and evaluated in accordance with Appendix A-1 of ASTM C 33. Aggregates found to be potentially reactive may be used only upon written acceptance of the ENGINEER.

B. All pipe manufactured under the provisions of this Specification shall contain a minimum of 560 lb of cement per cubic yard of concrete unless mix designs with a lower cement content meet the requirements of this Specification and approved by the ENGINEER prior to use.

C. Cement Mortar: Cement mortar shall consist of a mixture of Portland cement, sand, and water. Cement and sand shall first be combined in the proper proportions, and then thoroughly mixed with the required amount of water. Cement mortar shall be proportioned by loose volume in the proportion of 1 part cement to 2 parts sand. The quantity of water to be used in the preparation of mortar shall be only that required to produce a mixture sufficiently workable for the purpose intended. Mortar shall be used as soon as possible after mixing and shall show no visible signs of setting prior to use. Retempering of mortar will not be permitted. Cement, sand, and water for cement mortar shall conform to Section 03300 Cast-in-Place Concrete.

D. Admixtures: No admixtures shall be used in mortar unless otherwise specified or accepted by the ENGINEER.

E. Quick Setting Grout: Quick setting grout shall be high strength, non-staining grout accepted by the ENGINEER prior to use. It shall reach an initial set within 90 minutes at 70 degrees F and shall

reach minimum compressive strength of 2,500 psi within 24 hours. Shrinkage shall be less than 0.1 percent when tested, using the test procedures of ASTM C 596. The grout shall be mixed, handled, and placed in accordance with the manufacturer's written instructions.

F. Gaskets for Concrete Pipe: Unless otherwise specified, gaskets shall be manufactured from a synthetic elastomer conforming to SSPWC Section 208-3.

G. Plastic liner shall be in accordance with SSPWC Section 210-2.

PART 3 -- EXECUTION

3.1 INSTALLATION OF LINED REINFORCED CONCRETE PIPE

A. Liner shall be installed accordance with Standard Plan No. S-121, and SSPWC Section 311-1.

3.2 Pipe shall be laid to plan line and grade, with uniform bearing under the full length of the barrel of the pipe. Pipe shall be installed in accordance with SSPWC Section 306 1.2 as modified by Standard Plan S-251. Suitable excavation shall be made to receive the socket or collar, which shall not bear upon the subgrade or bedding. Any pipe which is not in true alignment or shows any undue settlement after laying shall be taken up and relaid at the CONTRACTOR's expense. Pipe shall be laid up-grade with the socket or collar ends of the pipe upgrade unless otherwise authorized by the ENGINEER. Concrete pipe with elliptical reinforcement shall be laid with the minor axis of the reinforcement cage in a vertical position.

3.3 FIELD JOINTING OF LINED REINFORCED CONCRETE PIPE

A. Field jointing shall be in conformance with SSPWC Section 306 -1.2.4.

END OF SECTION 02550

SECTION 02585
MAINTENANCE HOLE AND PRECAST VAULT CONSTRUCTION

PART 1 -- GENERAL

1.1 THE REQUIREMENT

A. The CONTRACTOR shall furnish all tools, equipment, materials, and supplies and shall perform all labor required to complete the work as indicated on the Drawings and specified herein.

B. This section covers the work necessary for the construction of maintenance holes and precast vaults. General maintenance hole and vault details are as shown on the Drawings.

1.2 RELATED WORK SPECIFIED ELSEWHERE

A. Section 01330 Shop Drawings/Submittals

B. Section 01453, Sampling, Testing, and Fabrication Inspection.

C. Section 02310 Earthwork

D. Section 03300 Cast-in-Place Concrete.

E. Section 03400 Precast Concrete for hydrodynamic separator and Stormfilter treatment vaults.

F. Section 13200 for Precast Concrete for Modular Buried Stormwater Infiltration System.

1.3 REFERENCE SPECIFICATIONS, CODES AND STANDARDS

A. Comply with the applicable reference specifications as specified in the GENERAL REQUIREMENTS.

B. Comply with the current provisions of the following Codes and Standards.

1. Commercial Standards:

ASTM A 48	Specification for Gray Iron Castings.
ASTM C 14	Standard Specification for Nonreinforced Concrete Sewer, Storm Drain, and Culvert Pipe.
ASTM C 150	Specification for Portland Cement.
ASTM C 387	Standard Specification for Packaged, Dry, Combined Materials for Concrete and High Strength Mortar.
ASTM C 478	Standard Specifications for Circular Precast Reinforced Concrete Manhole Sections.

AASHTO LRFD with version and modifications per Caltrans's latest Addendum.

2. Standard Specifications: SSPWC Section 206 -3 Gray Iron Casting

1.4 CONTRACTOR SUBMITTALS

A. Submittals shall be made in accordance with the GENERAL REQUIREMENTS.

B. Shop Drawings: The CONTRACTOR shall furnish complete shop drawings for all precast maintenance hole sections, cast iron frames and covers, and appurtenances for review by the ENGINEER in accordance with **SUBMITTALS** of the GENERAL REQUIREMENTS. This shall include

1. Concrete mix design and structural calculations of non-standard elements, signed and sealed by a California Registered Civil or Structural Engineer.

2. Joint details of all precast sections and jointing between cast-in-place and precast segments.

3. Method of weathertightness, and watertight joints, when groundwater is within five (5) feet from the lowest joint, and associated test reports

4. Joint materials and products including mortars, o-rings, gaskets, etc.

5. Lifting anchor and all other anchor information.

6. Details, products, and appurtenances for all lateral connections, and particular locations.

C. Non-Preapproved Products: For products which are not listed on the online approved products list (http://boe.lacity.org/apm/menu.cfm), the Contractor shall secure the services of a precaster to design, and fabricate the required precast reinforced concrete products, including the preparation of all associated plans, calculations, and documentation of associated appurtenances such as joints, gaskets, sealants, protective liners Type I, etc., to the full satisfaction of the ENGINEER. Calculations and plans shall be signed and sealed by a California registered Civil and/or Structural Engineer. Joints, gaskets, and sealants shall be tested to meet the requirements of the Contract. Non-approved maintenance hole products will not be considered unless there are none listed in the online approved products list.

1.5 DESIGN CRITERIA

A. Design of precast structures and maintenance holes shall conform to S-601-3, including cumulative supplements, and ASTM C478, including AASHTO LRFD with version and modifications per Caltrans' latest addendum.

B. For structures used as part of a sanitary sewer system, surfaces exposed to a corrosive environment shall be lined with an approved Type I liner System. Mortar bed just below frame and cover shall be sealed with approved epoxy sealant.

1.6. QUALITY ASSURANCE

A. Fabrication: Contractor shall coordinate with the Bureau of Contract Administration Materials Control Inspection for required inspection prior to fabrication. See Section 01453 for detail requirements.

B. Field Inspection: All work is subject to inspection including excavation, placement, backfill, and finishing. The CONTRACTOR shall demonstrate that all maintenance holes and precast vault segments have been properly installed, level, with tight joints, at the correct elevations and orientations, and that the backfilling has been carried out in accordance with the Contract Documents. Coordinate with Inspector prior to start of work.

PART 2 -- PRODUCTS

2.1 GENERAL

A. Products used shall be pre-approved products, up to date and in good standing, as listed in the online approved products list (http://boe.lacity.org/apm/menu.cfm), including maintenance holes and frame & covers. Where no acceptable pre-approved product exists, the CONTRACTOR shall retain the services of a precaster to design and fabricate a project specific structure. Plant approval shall be required.

2.2 GRANULAR BASE

A. Granular base shall conform to Section 02310"Earthwork."

2.3 CONCRETE

A. Ready-mixed, conforming to ASTM C 94, Alternate B.

B. Mix design shall conform to SSPWC.

C. The concrete class for maintenance hole bases shall be 660-CW-4000, or 560-B-3250.

D. The concrete class for maintenance holes and precast structures shall be by strength, with a minimum compressive strength of 4,000 psi.

2.4 FORMS

A. Exterior exposed surfaces shall be plywood. Others shall be matched boards, plywood, or other approved material. Provide forms on all vertical surfaces. Trench walls, large rock, or earth will not be approved as form material.

2.5 REINFORCING STEEL

A. For maintenance holes, conform to ASTM A 615, Grade 40, or greater.

B. For precast vaults or structures, conform to ASTM A615 Grade 60, deformed bar.

C. All bars intended to be welded shall conform to ASTM A706 and AWS D1.4.

2.6 POURED-IN-PLACE MAINTENANCE HOLES

A. Poured-in-place type maintenance holes may be used provided all details of construction are accepted by the ENGINEER.

2.7 PRECAST MAINTENANCE HOLE SECTIONS

A. Precast maintenance hole sections shall be minimum 60 inches in diameter, conforming to

Standard Plan S-387, S-142, S-150 and to ASTM C 478. Minimum wall thickness shall be 5 inches for reinforced sections. Provide eccentric cones for all maintenance holes. Cones shall have same wall thickness and reinforcement as maintenance hole section. Top and bottom of all sections shall be parallel. Maintenance hole steps shall be cast in the Precast Sections by the manufacturer of the maintenance hole sections.

B. Joints shall be tongue-and-groove with rubber gaskets conforming to ASTM C 443. The CONTRACTOR's attention is directed to specification for MORTAR hereinafter.

C. Prior to the delivery of any size of precast maintenance hole section on the jobsite, yard tests will be conducted at the point of manufacture. The precast sections to be tested will be selected at random from the stockpiled material which is to be supplied for the job. All test specimens will be mat tested, and shall meet the permeability test requirements of ASTM C 14.

2.8 PRECAST BASE SECTIONS AND BASES

A. At the option of the CONTRACTOR, precast base sections or maintenance hole bases may be used provided all details of construction are approved by the ENGINEER. Base sections shall have the base slab integral with sidewalls. Base slab shall be constructed in accordance with Standard Plan S-140. Tie reinforcing steel to wall steel.

2.9 MAINTENANCE HOLE EXTENSIONS

A. Concrete grade rings for extensions shall be a maximum of 6 inches high and shall be approved by The INSPECTOR before installation.

B. In general, maintenance hole extensions will be used on all maintenance holes in roads or streets or in other locations where a subsequent change in existing grade may be likely. Extensions will be limited to a minimum of 12 inches and a maximum height of 2 feet 6 inches. Finish grade for maintenance hole covers shall conform to finished ground or street surface level, unless otherwise directed by the ENGINEER.

C. For raising of maintenance hole, conform to S-137.

2.10 MORTAR

A. Standard premixed mortar conforming to ASTM C 387 or proportion 1 part Portland cement to 2 parts clean, well-graded sand which will pass a 1/8-inch screen. Admixtures may be used not exceeding the following percentages of weight of cement: Hydrated lime, 10 percent; diatomaceous earth or other inert materials, 5 percent. Consistency of mortar shall be such that it will readily adhere to the pipe when using the standard tongue-and-groove type joint. Mortar mixed for longer than 30 minutes shall not be used.

2.11 PREFORMED SEALANTS

A. Preformed sealants may be used in lieu of mortar type joints and shall be Kent-Seal No. 2 manufactured by Hamilton Kent Manufacturing Company, Kent, OH**;** Ram-Nek, manufactured by K. T. Snyder Company, Inc., Houston, TX; or equal, meeting all requirements of Federal Specification SS-S-00210.

2.12 PIPE STUBOUTS FOR FUTURE SEWER CONNECTIONS

A. Pipe stubouts shall be the same type as approved for use in lateral, main, or trunk sewer

construction. Strength classifications shall be the same class as in adjacent trenches. Where there are two different classes of pipe at a maintenance hole, the higher strength pipe will govern strength classification. Rubber gasketed watertight plugs shall be furnished with each stubout adequately braced against all hydrostatic or air test pressures.

2.13 PRECAST CONCRETE VAULT

A. The precast concrete vault shall be precast with a 28-day, 3,250 psi minimum compressive strength concrete and designed for AASHTO H-20 loading. Minimum dimensions are shown on the Drawings. Provide openings for pipes and grating as shown on the Drawings.

2.14 MAINTENANCE HOLE STEPS

A. Maintenance hole steps shall be made of minimum 3/4-inch stainless steel bar Type 316. Steps shall be 12-inch wide minimum, center-to-center of legs, and shall be drop pattern with a 2 1/2-inch drop. Bends shall be made around a 1-inch radius minimum, 2-inch radius maximum mandrel. There shall be 3-inch minimum embedment in precast concrete maintenance hole sections and 4-1/2-inch minimum projection from the face of concrete at point of embedment to the center of the step. There shall be a 2-inch hook on the embedment end.

B. The installed steps shall be located so as to provide a continuous ladder with steps equally spaced vertically in the assembled maintenance hole at 12 inches ± 3/4-inch. They shall be capable of withstanding a force of 350 pounds, applied at any place on the step and in any direction which projects from the point of application through a diameter of the step cross-section at that point, with no permanent deformation resulting. Steps shall be cast in manhole sections by the manufacturer.

2.15 MAINTENANCE HOLE FRAMES AND COVERS

A. Cast iron of size and shape detailed on the Drawings. Covers shall have the letter “S” or “D” fitted tight in a 3-inch diameter circle in the center of the cover. Frame and cover shall conform to applicable City of Los Angeles Standard Plans. Test per S-601. Frames shall have a minimum clear opening of 30 inches.

B. Non-preapproved products shall conform to Standard Plan S-601 and the following requirements. The more stringent shall apply: Castings shall be tough, close-grained gray iron, sound, smooth, clean, free from blisters, blowholes, shrinkage, cold shuts, and all defects, and shall conform to ASTM A 48, Class 35B. Plane or grind bearing surfaces to ensure flat, true surfaces. Covers shall be true and seat within ring at all points.

PART 3 -- EXECUTION

3.1 EXCAVATION AND BACKFILL

A. Conform to applicable portions of Section 02310 “Earthwork”. Backfill around maintenance holes shall be of the highest quality of trench backfill immediately adjacent, as shown on the Drawings.

3.2 GRANULAR BASE

A. Remove water from the excavation. Place a minimum of 6 - inches of granular base and thoroughly compact with a mechanical or power vibrating tamper to a minimum of 90%

relative compaction.

3.3 CONCRETE BASE

A. Construct concrete base in conformance with the details shown on the Drawings. Vibrate to densify the concrete and screed so that the first precast maintenance hole section to be placed has a level, uniform bearing for the full circumference.

B. Deposit sufficient mortar on base to assure watertight seal between base and maintenance hole wall or place the first precast section of maintenance hole in concrete base before concrete has set, if preferred. First section shall be properly located and plumb.

C. If material in bottom of trench is unsuitable for maintenance hole, excavate below the flow line as directed by ENGINEER, and backfill to required grade with granular base per geotechnical recommendations.

3.4 PLACING PRECAST MAINTENANCE HOLE SECTIONS

A. Clean ends of sections of foreign materials. Thoroughly wet joint with water prior to placing mortar. Place mortar on groove of lower section. Set next section in place. Fill joint completely with mortar of the proper consistency. Trowel interior and exterior surfaces smooth on standard tongue-and-groove joints. Wipe or otherwise clean the excess mortar from the inside of the Keylock joint.

B. When a **Keylock** joint is used, it is the intent that the void between the tongue-and-groove be completely filled with mortar, and that the interior and exterior end faces of the section to be placed seat fully on the previously placed section.

C. Prevent mortar from drying out and cure by applying an approved curing compound or comparable approved method. Chip out and replace all cracked or defective mortar. Completed maintenance holes shall be rigid and watertight.

3.5 PREFORMED PLASTIC GASKETS

A. Carefully inspect precast maintenance hole sections to be joined. Sections with chips or cracks in the tongue shall not be used. Preformed plastic gaskets shall be installed in strict conformance with the manufacturer's recommendations. Only pipe primer furnished by the gasket manufacturer will be approved.

3.6 MAINTENANCE HOLE INVERT

A. Construct maintenance hole inverts in conformance with details shown on the Drawings, and with smooth transitions to ensure an unobstructed flow through maintenance hole. Remove all sharp edges or rough sections which tend to obstruct flow. Where a full section of pipe is laid through a maintenance hole, break out the top section as indicated and cover exposed edge of pipe completely with mortar. Trowel all mortar surfaces smooth.

B. For benches of maintenance holes greater than 48 inches in diameter, line the surface and make it non-skid per SSPWC 311-1.7.

3.7 FLEXIBLE JOINTS

A. Provide joints in all pipe not more than 1.5 feet from maintenance hole walls. Lay pipes entering maintenance holes on firmly compacted granular base. Granular base shall be as specified hereinbefore.

B. Where the last joint of the line laid up to the maintenance hole is more than 1.5 feet from the maintenance hole base, a 6-inch concrete encasement shall be constructed around the entire pipe from the maintenance hole base to within 1.5 feet of the pipe joint. The pipe encasement shall be constructed monolithically with the maintenance hole base. Pipes laid out of the maintenance hole shall be shortened to ensure the first joint is no more than 1.5 feet from the maintenance hole base.

3.8 PIPE STUBOUTS FOR FUTURE SEWER CONNECTIONS

A. Install stubouts in maintenance holes for future sewer connections as shown or as required by the ENGINEER. Maximum length shall be 1.5 feet outside the maintenance hole wall. Grout pipes in precast walls or maintenance hole base to provide watertight seal around pipes. Construct invert channels in accordance with details shown on the Drawings. Provide compacted granular base as specified herein before to undisturbed earth under all stubouts.

B. Install semi-permanent plugs at the end of stubouts with gasket joints similar to sewer pipe being used. Plugs shall be capable of withstanding all internal or external pressures without leakage. All plugs to be braced to prevent blowoffs.

3.9 PERMANENT PLUGS

A. Clean interior contact surfaces of all pipes to be cut off or abandoned as shown. Construct concrete plugs at the end at of all pipes 18 inches or less in diameter. Minimum length of concrete plugs shall be 8 inches. For pipe 21 inches and larger, the plugs may be constructed of common brick or concrete block. Plaster the exposed face of block or brick plugs with mortar. All plugs shall be watertight and capable of withstanding all internal and external pressures without leakage.

3.10 MAINTENANCE HOLE EXTENSIONS

A. Install extensions in conformance with the details shown on the Drawings, and to height determined by the ENGINEER. Lay grade rings in mortar with sides plumb and tops level. Seal joints with mortar as specified for maintenance hole sections. Extensions shall be watertight.

3.11 MAINTENANCE HOLE FRAMES AND COVERS

A. Install frames and covers on top of maintenance holes to positively prevent all infiltration of surface or groundwater into maintenance holes. Frames shall be set in a bed of mortar with the mortar carried over the flange of the ring as shown in the Maintenance Hole Details on the Drawings. Set frames so that tops of covers are flush with surface of adjoining pavement or ground surface, unless otherwise shown or directed.

3.12 MAINTENANCE HOLES OVER EXISTING SEWERS

A. Construct maintenance holes over existing operating sewer lines at locations shown. Perform necessary excavation as specified above, break into existing line, and construct

maintenance hole.

B. Maintain flow through existing sewer lines at all times, and protect new concrete and mortar work for a period of 7 days after concrete has been placed. Advise ENGINEER of plans for diverting sewage flow and obtain ENGINEER's approval before starting. ENGINEER's approval will not relieve CONTRACTOR of responsibility for maintaining adequate capacity for flow at all times and adequately protecting new and existing work.

C. Construct the new base under the existing sewer and the precast sections as specified herein.

D. Break out the existing pipe within the new maintenance hole, cover the edges with mortar, and trowel smooth.

3.13 PRECAST CONCRETE VAULT

A. Install precast concrete vault at the locations shown on the Drawings. Provide necessary excavation and backfill as specified herein.

3.14 HYDROSTATIC TESTING

A. All sewer maintenance holes shall be hydrostatically tested for leakage after installation, but prior to being backfilled. Prior to hydrostatic testing, all maintenance holes shall be visually inspected for leaks. All leaks or cracks shall be repaired by the CONTRACTOR, prior to hydrostatic testing, to the satisfaction of the ENGINEER and the INSPECTOR. All pipes entering the maintenance hole shall be sealed at a point outside the maintenance hole walls so as to include testing of the pipe/maintenance hole joints. Maintenance holes may be filled 24 hours prior to time of testing, if desired, to permit normal absorption into the pipe walls to take place. The maintenance hole shall be filled with water to a level 2 inches below the top of the frame. Safety lines shall be secured to all plugs utilized. After a period of at least one hour to allow the water level to stabilize, the maintenance hole shall be refilled and the water level shall be checked. The water level shall again be checked after a period of 4 hours. If the water level is reduced by more than 1/4-inch, the leakage shall be considered excessive, and the CONTRACTOR shall be required to make all necessary repairs and retest the maintenance hole. The exterior of the maintenance hole shall be inspected during this period for visible evidence of leakage. Visible moisture, sweating, or beads of water on the exterior of the maintenance hole shall not be considered leakage, but any water running across the surface will be considered leakage and shall be repaired to the satisfaction of the ENGINEER and the INSPECTOR regardless of the volume of water lost.

END OF SECTION 02585

SECTION 02600
DUCTILE-IRON VENT PIPING

PART 1 - GENERAL

1.1 RELATED DOCUMENTS

A. Drawings and general provisions of the Contract, including General and Supplementary Conditions and Division 01 Specification Sections, apply to this Section.

1.2 SUMMARY

A. Section Includes:

1. Materials, equipment and incidentals required to install and test ductile iron pipe and fittings for yard vent piping as shown on Drawings and as specified.

a. The word "pipe" is used to refer to pipe, fittings, or appurtenances unless otherwise noted.

2. Yard Piping: Includes piping and fittings extending outward, upward and downward into the ground from the outside face of structures.

3. Locate piping as shown on the Drawings. The Engineer reserves the right to make modifications in locations as may be found desirable to avoid interference between pipes or for other reasons.

B. Related Requirements:

1. Section 2310 Earthwork

1.3 ACTION SUBMITTALS

A. Section 013300 “Submittal Procedures” for submittals requirements.

B. Shop Drawings and Product Data:

1. Including piping layouts, design calculations, warranty information, test reports, in accordance with Section 01330 Shop Drawing Submittals.

1.4 INFORMATIONAL SUBMITTALS

A. Prior to Pipe Shipment:

1. Certified copies of mill tests confirming type of materials used in pipe, and shop testing of pipe to show compliance with requirements of applicable standards, along with a sworn affidavit of compliance that pipe complies with referenced standards.
2. Certified affidavit of compliance from manufacturer stating that pipe, fittings, gaskets, linings and exterior coatings for project have been manufactured and tested in accordance with AWWA and ASTM standards and requirements specified herein.

1.5 QUALIFICATIONS

A. Manufacturer shall meet the following criteria and furnish necessary project information, which demonstrates required experience:

1. Experience that includes successful fabrication (followed by installation, acceptance and service) to AWWA C151 standards of at least 50,000 lineal feet of largest specified diameter or larger ductile iron pipe with similar linings/coatings within the past 5 years.
2. Experience to include successful fabrication of at least 50 fittings in compliance with AWWA C110 or C153 of largest specified diameter or larger with similar lining/coatings within the past 5 years.

1.6 DELIVERY, STORAGE, AND HANDLING

A. Delivery: Per AWWA C600 and referenced AWWA Standards for shipping, handling and storage procedures.

1. Deliver materials in manufacturer's packaging including application instructions.
2. Handle to prevent injury to pipe, pipe linings and pipe coatings.

    a. Examine pipe and fittings as noted in Division 01. Damage to linings or coatings discovered during examination to be repaired to the satisfaction of Engineer before proceeding with work.

3. Transport pipe to job site on padded bunks or oak timbers and secured with steel banding or nylon tie down straps adequately protecting pipe and coating.

    a. Handle pipe using slings, hooks, pipe tongs or other devices acceptable to Engineer.
    b. Do not use non-cushioned ropes, chairs, wedges, cables or levers when handling finished pipe, fittings or couplings.
    c. Do not drop pipe or fittings.
    d. Do not skid pipe or fittings against each other.
    e. Do not mark pipe or fitting coatings.

f. Utilize padded wooden pipe cradles, or chocks suitable for protecting coatings between and beneath finished pipes when pipes are placed upon rough surfaces.

B. Storage:

1. Do not store pipe on bare ground unless soft sand berms are used to support pipe and is approved by Engineer.
2. Keep materials safe from damage if stored. Interior of pipe, fittings and other appurtenances to be kept free from dirt, excessive corrosion or foreign matter.
3. Do not stack pipe higher than limits recommended by manufacturer. Keep bottom tier off ground using timbers, rails, or concrete. Stacking to conform to manufacturer's recommendations and/or AWWA C600.
4. Store gaskets for mechanical and push-on joints in a cool location out of direct sunlight; not in contact with petroleum products. Use gaskets on a first-in, first-out basis.

C. Protection:

1. Lined and coated pipe: Suitably protected from exposure and heating from sun. Follow procedures recommended by coating and lining system manufacturer.

a. Exposure will not be allowed except for short periods such as installation, assembly and repairs.

2. Metal tools or heavy objects are not permitted to come in contact unnecessarily with finished coating.

a. Workers may walk on coated pipe only when necessary, and only when wearing footwear with rubber or composition soles and heels sufficiently free of dirt and mud so coating remains undamaged.

3. Prevent damage to linings and coatings caused by handling, onsite storage, and exposure to low temperatures (due to embrittlement), high temperatures, or direct sunlight.

1.7 EXISTING CONDITIONS

A. Field Measurements: Verify field locations and sizes of connections to existing piping and equipment prior to submitting pipe lay drawings.

1. Indicate field measurements on Shop Drawings.

1.8 WARRANTY

A. Furnish two year manufacturer's warranty for ductile iron pipe and fittings.

PART 2 - PRODUCTS

2.1 SYSTEMS

A. Assure compatibility between joints of all items supplied.

2.2 DUCTILE IRON PIPE

A. Manufacturers: Provide pipe and fittings supplied by:

1. American Cast Iron Pipe Co.
2. U.S. Pipe and Foundry.
3. Griffin Pipe Products.
4. McWane Company; all pipe divisions.
5. An approved equivalent member of the Ductile Iron Pipe Research Association (DIPRA).

B. Ductile Iron Pipe: Per AWWA C151. Provide in standard lengths as much as possible.

C. Thickness Design: Per AWWA C150, except as follows:

1. Piping 12 inches and Smaller: Minimum Class 350.

2.3 FITTINGS

1. Pipe Fittings: Ductile iron per AWWA C110 or AWWA C153 as applicable. Fittings to have the same pressure rating, as a minimum, of the connecting pipe.

2.4 LININGS, COATINGS & CORROSION PROTECTION

A. Interior Lining:

1. Cement Mortar Lining: Per AWWA C104 double thickness. Cement type per ASTM C150.

B. Exterior Coating

1. Buried pipe installed with bituminous coating per AWWA C151 and C110 respectively.
2. Install buried pipe with polyethylene encasement.

a. Polyethylene Encasement: 8 mils thickness meeting standards per AWWA C105.

1) Three layers of co-extruded linear low-density polyethylene (LLDPE), fused into a single thickness not less than eight mils. Infuse inside surface in contact with pipe exterior with an antimicrobial compound and volatile corrosion inhibitor blend, mitigating microbiologically influenced corrosion galvanic corrosion.
2) Polyethylene encasement shall be V-Bio, as patented by DIPRA.

b. Manufacturers:

1) North Town Company.
2) AA Thread and Seal Tape, Inc.
3) Sigma Corp.

PART 3 - EXECUTION

3.1 EXAMINATION

A. Section 017300 “Execution” for installation examination requirements.

3.2 PREPARATION

A. Section 017300 “Execution” for installation preparation requirements.

B. Handle piping and fittings per “Delivery, Storage, and Handling” Article in Part 1 of this specification.

C. Examine pipe and fittings before laying. Repair any damage to pipe, lining or coatings per manufacturer's recommendations prior to installation.

D. Interior of all pipe, fittings and other appurtenances shall be kept free from dirt, excessive corrosion or foreign matter at all times.

3.3 INSTALLATION

A. Installed per requirements of laying schedule and AWWA C600, unless otherwise specified.

1. Provide firm, even bearing length of pipe. Dig bell holes at each joint. Tamp backfill materials on pipe sides to springline per details on Drawings.
2. Blocking is not permitted.
3. Replace with sound pipe or fitting, defective pipe or fitting discovered after having been laid.
4. When laid, pipe and fittings shall perform to lines and grades required. When laying is not in progress, close open ends of pipe with watertight plug or other approved means.
5. Place sufficient backfill to prevent flotation. Joint deflection not to exceed manufacturer’s recommendation.
6. Pipe Laid Underground: 3 feet cover unless Drawings show otherwise or otherwise specified.
7. Lay pipe such that invert elevations shown on Drawings are not exceeded.
8. Provide fittings, in addition to those shown on Drawings, where required, in crossing utilities which may be encountered upon opening trench. Install solid sleeve closures at locations approved by Engineer.
9. Pipe Interior: Maintain dry and broom clean throughout construction period.

10. Field Cutting Pipe: When required, smooth cut by machine perpendicular to pipe axis. Bevel cut pipe ends per manufacturer's recommendations for spigot end.

    a. Repair coating removed from cut per manufacturer's recommendation and/or coating and lining paragraphs of Part 2 above (whichever method is more stringent in opinion of Engineer).
    b. Cement lining shall be undamaged.
    c. Cutting of restrained joint pipe will not be allowed, unless approved at specific joints in conjunction with use of restrainer glands by EBAA Iron or field adaptable restrained joints.
    d. Where Field Cuts are Permitted" Pipe supplied by factory as "gauged full length".

        1) Gauged Full Length Pipe is Unavailable: Pipe to be field gauged at location of new spigot using a measuring tape, or other means approved by manufacturer, to verify that diameter is within tolerances permitted in Table 1 of AWWA C151.

B. Jointing Ductile-Iron Pipe:

1. Push-On Joints: Install per manufacturer's instructions, AWWA C600 and Appendix B of AWWA C111. If there is conflict, manufacturer's instructions take precedence.

    a. Lay pipe with bell ends looking ahead.
    b. Insert rubber gasket in groove of bell end of pipe.
    c. Clean and lubricate joint surfaces
    d. Align plain end of pipe with bell of pipe to which it is to be joined and pushed home.
    e. Metal feeler shall be used to make certain that rubber gasket is properly seated.

2. Flanged Joints (Non-Buried): Assembled per manufacturer's instructions and Appendix C of AWWA C111. If there is conflict, manufacturer's instructions take precedence.

    a. Ensure there is no restraint on opposite ends of pipe or fitting, which would prevent uniform gasket compression, cause unnecessary stress, bending or torsional strains, or distortion of flanges or flanged fittings.
    b. Adjoining push-on joints are not to be assembled until flanged joints have been tightened.
    c. Tighten flange bolts for uniform gasket compression and sealing.

        1) Leave flange bolts with approximately 1/2 inch projection beyond nut face after tightening.

    d. Encapsulate bolts and nuts using wax sealing tape per AWWA Standard C217.

C. Polyethylene Encasement:

1. Install polyethylene encasement around ductile iron pipe to limits shown on Drawings and in accordance with pipe manufacturer's recommendations.

a. Installed per ANSI/ AWWA C105/A21.5, Method 'A' in accordance with section 2.15 of DIPRA's Installation Guide for Ductile Iron Pipe.

2. Use a fabric type or padded sling when handling pipe to prevent damage to encasement.
3. Seal seams with approved 2 inch wide plastic adhesive tape.
4. Repair encasement rips or tears with tape and film per ANSI/AWWA C105/A21.5.
5. When backfilling do not damage polyethylene encasement.

D. Cathodic Protection Systems:

3.4 CONNECTIONS TO STRUCTURES

A. Where pipe 3 inch diameter or larger horizontally passes from concrete to earth, install two flexible joints spaced 4 feet apart depending on pipe size within 2 feet of exterior wall face, whether shown on Drawings or not.

B. Utilize wall sleeves for pipes passing through walls designed to pass through wall via restrained piping unless otherwise specified.

C. Encase piping underneath structures in reinforced concrete as shown in Drawings.

3.5 FIELD QUALITY CONTROL

A. Replace with sound pipe or fitting, defective pipe or fitting discovered after having been laid.

B. Thoroughly clean pipe and fittings before laying. Keep clean until used in Work.

C. Pipe and fittings, when installed or laid, shall conform to lines and grades required.

3.6 EXHIBIT A

Use as a reference

INTERIOR LININGS AVAILABLE FOR DUCTILE IRON PIPE

Description	Max./ Service (1) Temp. (Degrees F)	Common Uses	Thickness
CEMENT MORTAR (AWWA C104			
With Sealcoat	150 degrees	Salt water	
Without Sealcoat	212 degrees	Drinking Water Non-Septic Gravity Sewers Sanitary sewers Force Mains	Standard per AWWA C104 or double
GLASS		Scum	10 Mil (nominal)
PETROLEUM ASPHALT COATING	150 degrees	Air	1 Mil
PROTECTOR 401 (CERAMIC-FILLED AMINE-CURED EPOXY)	120-150 degrees (2)	Septic sewers Acids (3) Alkali Waste Pickling brine	40 Mil (nominal)
EPOXIES SUITABLE FOR DRINKING WATER (4)	120-150 degrees (2)	Drinking Water Food Processing	24 Mil (minimum)
POLYETHYLENE	120-150 degrees (5)	Septic Sewers Acids (3) Alkali Waste Pickling Brine	40 Mil (nominal)

(1) Maximum service temperatures listed are intended as general guidelines. For higher service temperatures, consult manufacturer for specific recommendations.
(2) Maximum service temperatures for epoxies depends on service conditions and specific formulation. Consult manufacturer for recommendations for elevated temperature service.
(3) Consult manufacturer for specific acid service use.
(4) All epoxies are not suitable for conveying drinking water. Consult manufacturer for recommendations. Many jurisdictions require NSF 61 certifications for linings in contact with drinking water."
(5) Maximum service temperature for polyethylene for acids and alkali waste depends on specific acid or alkali waste and service condition(s). consult manufacturer for recommendations for elevated temperature service.

3.7 EXHIBIT B

EXHIBIT B

Use as a Reference

GASKET MATERIALS USED FOR DUCTILE IRON PIPE IN WATER AND SEWERAGE SERVICE

Description	Maximum Service(1,2) Temperature (Degrees F)		Common Uses(3)
	Push-On Gaskets	Mechanical Joint Gaskets	
SBR (Styrene Butadiene)	150 Degrees	120 Degrees	Fresh Water Salt Water Sanitary Sewage
EPDM (Ethylene Propylene)	250 Degrees	225 Degrees	Fresh Water Salt Water Sanitary Sewage Hot Water
Nitrile (NBR) (Acrylonitrile Butadiene)	150 Degrees	120 Degrees Fats, Oils Greases Chemicals	Hydrocarbons
Neoprene(R) (CR) (Polychloroprene)	200 Degrees	200 Degrees Salt Water Sanitary Sewage	Fresh Water
Viton(R); Fluorel(R) (FPM) (4) (Fluorocarbon)	300 Degrees	225 Degrees Acids Petroleum Vegetable Oils	Hydrocarbons

(1) Maximum service temperatures listed are intended as general guidelines for ductile iron pipe gaskets. For service temperatures greater than those listed, consult manufacturers for specific recommendations.

(2) Minimum service temperature is not usually a meaningful parameter for piping gaskets; however, low temperatures during pipeline installation may necessitate precautions. Consult manufacturer for pertinent recommendations.

(3) Water, including sanitary sewage, with low levels of the listed contaminants.

END OF SECTION 02600

SECTION 02710
YARD WORK AND STREET WORK

PART 1 -- GENERAL

1.1 DESCRIPTION

A. Provide all yard and street work indicated on the Drawings and in other Sections of the Project Manual; including but not limited to:

1. Asphalt concrete paving.

2. Asphalt concrete paving repairs.

3. Fog seal coating.

4. Portland cement concrete paving, sidewalk and driveways.

5. Concrete wheel bumpers.

6. Joint sealant and caulking.

7. Parking lot striping and disabled symbol marking.

8. Street Work: Curbs, gutters, tree guards and gratings.

9. Street paving repairs.

10. Disabled Parking Accessible Signage.

B. Related Sections:

1. Documents affecting work of this Section include but are not necessarily limited to the GENERAL CONDITIONS, SUPPLEMENTARY CONDITIONS, DIVISION 1 - GENERAL REQUIREMENTS and other Sections of the Project Manual.

2. Contractor's Use of the Premises in Section 01140.

3. Storage or Materials and Equipment in Section 01150.

4. Earthwork including excavating, grading and filling and select base materials in Section 02310.

5. Storm Drain System in Section 02545

6. Irrigation System in Sections 02810.

7. Landscape Planting 02932.

8. Cast-in-place Concrete Section 03300.

9. Concrete Paving in Section 02752.

10. Concrete Formwork in Section 03100.

11. Concrete Reinforcement in Section 03200.

12. Joint Sealant in Section 07900.

1.2 QUALITY ASSURANCE

A. Labor: Use adequate number of skilled laborers who are thoroughly trained and experienced in the necessary crafts and who are completely familiar with the specified requirements and the methods needed for proper performance of the work of this Section.

B. Codes and Regulations

1. Conform to the applicable 2020 Los Angeles City Building Code and Amendments, the Standard Specifications for Public Works Construction (SSPWC), State of California Department of Transportation Standard Specifications, Los Angeles City Bureau of Engineering Brown Book, latest edition and provisions hereinafter specified in the Project Manual.

C. Permits: Submit inspection/acceptance certificates required by the governing authorities and pay for all the required permits, plan check, inspections, and fees. Arrange for and make required inspections and tests.

D. Survey: According to Section 01112 - SUMMARY OF THE WORK, the Contractor shall furnish all surveying necessarily for the work. All work shall conform to the lines, elevations, and grades shown on the drawings. The Contractor shall submit the grade sheets to the City Engineer for review.

1.3 ALTERATIONS, REPAIRS AND REPLACEMENTS

A. As required for complete construction of a project; materials and construction to match existing adjacent work where occur in quality and appearance and conform to applicable provisions of the Project Manual.

B. Maintain vehicular and pedestrian traffic in accordance with W.A.T.C.H. (Work Area Traffic Control Handbook, latest edition)

1.4 PROTECTION

A. Required: Furnish, erect and maintain fences, barriers, lights and signs as necessary, in order to protect the public, City personnel, Contractor's personnel, existing work and work of this Section under this Contract.

B. All existing structures beneath the pavement shall be protected from any operation. No impact tool shall be allowed in the demolition of the existing pavement which may affect the existing structure. All sewerage and storm drain structures, utility vault, etc. extending two (2) inches or more above the new subgrade shall be removed by the Contractor to the new subgrade before paving. Structures projecting less than 2 inches above the subgrade may be paved over and later adjusted to grade.

1.5 DELIVERY, STORAGE AND HANDLING

A. Delivery: Deliver materials, and products and equipment to the job-site where directed by the City Engineer.

B. Storage: Store materials where located on the job-site not interfering with work operations of this Section as directed by the City Engineer and easily accessible when needed to be installed or used.

C. Handling: Handle materials, etc. safely and avoiding damage to such materials prior to installation.

1.6 SUBMITTALS (As Applicable)

A. General: Comply with provisions of SECTION 01330 - SUBMITTALS of DIVISION 1 - GENERAL REQUIREMENTS of the Project Manual.

B. Concrete:

1. Portland Cement Mill Certificate: Submit to the City Engineer of each load showing conformance with the requirements and applicable Section of the SSPWC or otherwise the Testing Laboratory shall test the cement as per ASTM C150 - SPECIFICATION FOR PORTLAND CEMENT.

2. Design Mix and Curing Methods.

C. Asphaltic Concrete:

1. Submit a mix design for asphaltic concrete prepared by a material laboratory under the direction of a California Registered Engineer.

2. Certificates: Submit certificates signed by the materials producer and the asphalt paving Subcontractor, stating that materials meet or exceed the specified requirements prior to any fabrication. Submit the certified delivery tickets for each truckload of asphaltic material delivered to the job site.

D. Product Data: Submit to the City Engineer the data on all proprietary items, materials, etc. to be used in the work of this Section, as conforming to the specified requirements of this Section.

E. Shop Drawings:

1. Submit material, testing reports, mix designs, and other pertinent information for the asphalt concrete pavements.

2. Submit the joint layouts in concrete pavements.

F. Spreading Schedule: At least five (5) working days prior to commencing work, the Contractor shall submit its spreading schedule to the City Engineer for approval. The schedule shall allow residents on the street to be sealed ample “on street” parking within a reasonable distance from their homes. The Contractor shall notify the residents and businesses of the work and shall post temporary “No Parking” signs.

1.7 RECORD DRAWINGS

A. Required: Clearly mark changes, deletions and/or additions to the work of this Section conforming to provisions of Section 30 - RECORD DRAWINGS AND RECORD PROJECT MANUAL of the GENERAL CONDITIONS of the Project Manual.

1.8 REMOVAL AND CLEAN UP

Remove and recycle all surplus materials, debris and rubbish resulting from work of this Section conforming to provisions of Section 01572 - SOLID RESOURCE MANAGEMENT and Section 01740 - CLEANING of DIVISION 1 - GENERAL REQUIREMENTS of the Project Manual.

PART 2 -- PRODUCTS

2.1 CONCRETE MATERIALS

A. Furnish concrete material, form work and reinforcing in accordance with applicable requirements specified in the drawings and Section 03300 - CAST-IN-PLACE CONCRETE, Section 03100 - CONCRETE FORM WORK, Section 03200 - REINFORCEMENT, and Section 03345 - CONCRETE FINISHING, respectively.

B. Form work conforming to Section 03100 – CONCRETE FORM WORK.

C. Concrete conforming to Section 03300 – CAST-IN-PLACE CONCRETE.

D. Reinforcement steel or wire mesh conforming to Section 03200 - REINFORCEMENT.

E. Caulking for Expansion and Control Joints: As specified in Section 07920.

2.2 ASPHALT CONCRETE MATERIALS

A. In accordance with Section 203-6 - ASPHALT CONCRETE and mix in accordance with Section 203-6.5 - PROPORTIONING of the SSPWC. Unless otherwise specified, reclaimed asphalt pavement (RAP), RAP Bituminous material or mixture shall not be used without City Engineer’s approval and payment adjustment.

B. Asphalt: PG64-10-75 Viscosity grades conforming to State of California Department of Transportations, Standard Specifications Section 92-1.02(B).

C. For 4-Inch and Thicker A.C. Paving, and for Parking Lot Projects: Two course applications, Class B – PG64-10-75 with 3/4-inch (maximum) size aggregates for first course. Top course (second course) shall be 2" inches thick wearing surface course, Class C2 – PG64-10-75 with ½-inch maximum size aggregates.

2.3 MISCELLANEOUS MATERIALS

A. Aggregate Base (Select Base): As specified in Section 02310 - EARTHWORK.

B. Soil Sterilant: As specified in Section 02310 - EARTHWORK.

C. Asphalt Fog Seal Coating: A fog sealant, slow setting type emulsified asphalt (Grade SS-1) of Section 203 - EMULSIFIED ASPHALT, and Section 203-9 - SEAL COAT ASPHALT BASED of the SSPWC; diluted with equal parts of water.

D. Slurry Coating Materials: Material shall be a mixture of asphalt emulsion, quick setting type, CRS-1slow-set type, SS-1h or CCS-1h conforming to the requirements of Section 203-3 EMULSIFIED ASPHALT, a Type I Fine Basic Aggregate graduation using No. 8 maximum nominal size aggregate, conforming to the requirements of Section 37-2 of the State of California Department of Transportation Standard Specifications or Rock Dust, conforming to the requirements of Section 200-1.2 - CRUSHED ROCK AND ROCK DUST of SSPWC, and water shall be potable and compatible with the other ingredients

of the slurry. Additive shall be a type approved by the City Engineer.

E. Prime Coat: Consisting of Grade SC-250 liquid asphalt, applied at a rate between 0.45 L/m^2 and 1.15 L/m^2 (0.10 and 0.25 gallon per square yard), conforming to Section 302-5.3 - PRIME COAT of the SSPWC.

F. Tack Coat/Paint Binder: Grade SS-1h emulsified asphalt at an approximate rate of 0.25 L/m5 to 0.45 L/m5 (0.05 to 0.10-gallon per square yard), conforming to Section 302-5.4 - TACK COAT of the SSPWC.

G. Adhesive for Securing of Concrete Wheel Bumpers to Concrete Paving: An epoxy two-component type, long curing, manufactured by Edeco, Furance, Andrew Brown or Adhesive Engineering Company.

H. Parking Lot Striping Material: Fuller "Traffic Line Paint" or J. E. Bauer Co. "Zonelac Traffic Paint" or other colors as otherwise noted on drawings. Color shall be white except that accessible be parking emblem and adjacent parking stall lines shall be blue color. The coating shall be minimum 15 mils thick.

I. Wood Headers: In accordance with Section 302-5.5 - DISTRIBUTION AND SPREADING of the SSPWC 2" x 6” inch size (within 2” inches of the thickness of the pavement) edging with 2" x 4" stakes or as otherwise noted or detailed on the drawings. Construction Heart Grade Redwood (S1S1E).

J. Grout: Non-shrink grout; Embeco by Master Builders, Inc., 8978 Haven Ave. #A, Rancho Cucamonga, CA 91730 (800) 228-3315 or equal.

K. Disabled Accessibility Parking Signage: As specified in Section 10442 - DISABLED ACCESSIBILITY PARKING SIGNAGE.

2.4 CONCRETE WHEEL BUMPERS

A. Units: Precast reinforced concrete bumpers**;** manufactured by Consley and Montigney, El Monte, California, phone (626) 283-2771, or equal. Provide two bumpers of each specified size for testing by the Inspector to verify conformance with the requirements.

B. Size: Four feet long, 5-3/8" high x 7-5/8" wide with a side chamfered to produce a top side 2-1/8" wide as otherwise detailed on the Drawings.

C. Materials:

1. Minimum 3250 psi concrete at 28 days.

2. Two 3/4" diameter x 24" long steel drift pins or pipes by length indicated on the Drawings.

3. Two ½ inch reinforcing bars x length of unit with minimum 1 inch cover.

D. Construction:

1. Forms and Reinforcement: In accordance with requirements of Section 03300 - CAST-IN-PLACE CONCRETE.

2. Form holes for drift pins or pipe, locate 9" from each end of unit. Reinforcing to run full length of the unit.

3. Finish the units for simulate poured-in-place concrete without rock pockets, broken corners and other defects.

E. Curing: Allow units to cure fully 28 days before installation.

PART THREE - EXECUTION

3.1 JOB-SITE CONDITIONS

A. Examine the areas and conditions under which work of this Section will be performed.

1. Correct conditions detrimental to timely and proper completion of the work, as directed by the City Engineer.

2. Do not proceed until such detrimental conditions are corrected.

B. Comply with stormwater pollution control measures as indicated in Section 02310 - EARTHWORK of the Project Manual.

3.2 ASPHALT CONCRETE PAVING

A. Materials: As hereinbefore specified.

B. Subgrade Preparation: Prior to placing the selected base materials, compact the upper 6" of subgrade to 95% relative compaction, as per Section 301-1 - SUBGRADE PREPARATION of SSPWC. Suitably roll subgrade to provide a smooth surface to a tolerance of plus or minus 0.04 ft. in accordance with Section 301-1.2 - PREPARATION OF SUBGRADE of the SSPWC.

C. Soil Sterilization: Apply specified soil sterilant to areas to be paved, by method recommended by the manufacturer. Certify in writing that the material has been applied.

D. Select Base: Place the Select Base materials to thickness [indicated on the drawings], in accordance with Section 301-2 - UNTREATED BASE of the SSPWC, after the subgrade preparation is completed.

E. Asphalt Paving Thickness and Courses:

1. Thickness as indicated on the Drawings.

2. Course; Construct a pavement in 2 course(s) unless indicated otherwise.

G. Construction:

1. General: In accordance with Section 302-5.5 - DISTRIBUTION AND SPREADING of the SSPWC thereto.

2. Prime Coat: Apply to the subgrade or aggregate base prior to placing the asphalt concrete and subbase; and to other surfaces designated by the City Engineer.

3. Tack Coat: Apply to concrete surfaces abutting new A. C. paving at least 24 hours prior to laying new work; apply to the surface of any course before the succeeding course or all cold pavement joints, curbs, gutters, manholes and the like. All the surfaces shall be free of water, foreign material or duct when the tack cold is applied.

4. Laying and Compaction: In accordance with Section 302-5.5 DISTRIBUTION AND SPREADING and Section 302.5.6 - ROLLING of the SSPWC.

   If the asphalt concrete base course is 6" inches or thicker, the Contractor may at its option, construct the base course in one paving operation, in accordance with the Los Angeles City Standard Plan S-610, latest edition and the SSPWC.

5. Finish asphalt concrete surfaces smooth and even, to indicated elevations without low spots, hollow or irregularities and properly sloped for drainage.

H. Testing:

1. Upon completion, the pavement shall be true to grade and cross section. When a straight edge is laid on the finished surface, the surface shall not vary from the edge of the straightedge no more than ⅛" inches, except at the intersection or at the change of grade.

2. Flood Tests: In the presence of the Inspector or City Engineer and prior to acceptance of the work, water flood tests by water tank truck. All depressions where water ponds shall not exceed a depth of more than ⅛" fill.

3. Any area that is not within this tolerance shall be brought to grade by removing the paving material in the area to be repaired by an approved. Provide a minimum laying depth of 1" inches of the new pavement material at the joint line. Repairs shall not be made to the pavement surface by feather edging at the joints.

I. After the bituminous surfacing has passed the tests, including the flood test, clear and allow to dry, then apply one coat of a seal coat to the surface, in accordance with Subsection 37-4.04 of the California State Department of Transportation Standard Specifications. The seal coat shall not be applied to the newly constructed asphalt concrete surface until thirty (30) days after spreading and compacting the new asphalt concrete. After 30 days, the surface of the newly constructed asphalt concrete shall be washed with a strong detergent such as trisodium phosphate and rinsed before the application of the seal coat.

3.3. ASPHALT SEAL COATING

A. Required: Over existing repaired new asphalt concrete paving where noted on the Drawings.

B. Material: As hereinbefore specified for fog seal coating. A representative sample of the aggregate shall be taken in accordance with the requirements.

C. Surface Preparation:

1. Repairs: As hereinbefore specified but not necessarily limited to.

2. Clean all existing asphalt concrete surfaces of oil, grease, and foreign materials. Remove existing striping by approved methods and leave surfaces dry.

D. Weather Limitations: Execute work when pavement and atmosphere are about 60 degrees Fahrenheit and when no precipitations are expected within 24 hours. The Contractor shall not apply any seal coat if the weather is not suitable for the application. The Contractor shall notify the City Engineer and the Inspector minimum 24 hours in advance of the date the Contractor intends to begin work.

E. Protection: Provide as required to avoid getting seal coat materials on exposed concrete, masonry and/or miscellaneous building surfaces and fixed equipment and yard improvements.

F. Application: Single application by spray method at a rate of 0.15 to 0.30 gallons/square yards of surface depending on dryness and texture of the asphalt concrete surface, will conveniently seal small cracks and surface voids.

Asphaltic emulsion shall not be applied a greater distance than can be immediately covered by screenings. The cut off of the asphaltic emulsion shall be made on building paper or a similar material spread over the surface, which shall then be removed and disposed in a manner satisfactory to the City Engineer. Immediately following the application of the asphaltic emulsion, it shall be covered with screenings spread within 10% of the required rate per square yard.

G. Curing: Maintain coated surfaces free from traffic for at least four (4) days. Maintenance includes the distribution of screenings over the surface to absorb any free bituminous material, to cover any area deficient in cover coat material, to prevent formation of corrugation, and perform light brooming.

3.4 "STREET WORK" ASPHALTIC CONCRETE REPAIRS

A. Required: As necessary to accommodate construction of new storm and sewerage pipings, curbs, gutters and driveways as indicated on drawings; as necessary due to excavation, trenching and utility connections. Provide a minimum laying depth of 1" inches of the new pavement material at the join line. Repairs shall not be made to pavement surfaces by feather-edging at the joints.

B. Application: Upon completion of all work within existing asphalt concrete paved areas, Contractor shall repair the existing asphalt concrete paving conforming to requirements of the SSPWC and the Los Angeles City Bureau of Engineering standards as follow:

1. Properly remove and repair subgrade, sub-base and aggregate base as approved by the City Engineer or Inspector to match existing adjoining work. Identify the mixture or density of existing adjoining work and submit the proposed mix design to the City Engineer for approval.

2. Soil Sterilization: Apply weed killers (soil sterilant) on areas to be paved with asphalt concrete; soil sterilant to be applied as recommended by the manufacturer; The Contractor shall certify in writing that material has been applied.

3. Tack coat surfaces of existing asphalt concrete surfaces as per 302-5.4 - TACK COAT of the SSPWC over which new materials will be laid of edges of existing saw cut asphalt concrete and/or concrete, and other structures against which new asphalt concrete will be placed, terminate tack coats on concrete surfaces at top of asphalt concrete paving.

4. Lay new asphalt concrete paving conforming to Section 302-5.6.2 - DENSITY AND SMOOTHNESS of the to match adjoining work [using material of a heavier density than the "in-place" adjacent work. Use hot smoothing iron to obtain inconspicuous, straight and flush joint lines. Properly grade to provide the desired drainage as indicated on the Drawings. When a ten-foot straightedge is laid on the finish surface parallel to the centerline of the roadway, the surface shall not vary from the edge of the straightedge more than ⅛” inch, except at intersections

or at changes of grade.

3.5 "ON-SITE" ASPHALT CONCRETE PAVING REPAIRS

A. Required: To remove and replace defective asphalt concrete paving, base, holes, cracks and other defects, etc. Provide a minimum laying depth of 1" inches of the new pavement material at the join line. Repairs shall not be made to the pavement surfaces by featheredging at the joins.

B. Materials: As hereinbefore specified.

C. Subgrade Preparation:

1. Properly remove all damaged paving and base, compact existing subgrade top 6" to 95% relative compaction in accordance with Section 301-1.3 of the SSPWC.

2. Properly roll subgrade to a smoothness tolerance of plus or minus 0.04 ft.

3. Place select base materials to thickness matching existing adjacent materials in accordance with Section 301-2 - UNTREATED BASE of the SSPWC.

D. Asphalt Concrete Paving Repairs:

1. General: In accordance with Section 302-5 - ASPHALT CONCRETE PAVEMENT of the SSPWC.

2. Tack coat cut surfaces of existing saw-cut asphalt concrete and/or concrete against which new asphalt materials will be placed at least 24 hours prior to laying new asphalt materials. Terminate tack coating on concrete surfaces at level with top of new asphalt concrete paving.

3. Lay asphalt concrete paving materials to thickness matching that of adjacent asphalt concrete surfaces. Make smooth, even and flush with adjacent surfaces without low-spots, hollows or irregularities. Use hot smoothing irons to obtain straight and flush joint lines. Properly grade paving repairs to provide desired drainage as indicated on the Drawing. When a straight edge is laid on the finish surface it shall not vary from the straight edge more than 1/8 inch except at intersections or at changes of grade.

3.6 CONCRETE SIDEWALK, CURB AND GUTTER

A. General: In accordance with the requirements in the SSPWC, Section 03300 - CAST-IN-PLACE CONCRETE, and Section 07920 - CAULKING AND SEALANT.

B. Locations: Where indicated on the Drawings.

C. Materials: As hereinbefore specified.

D. Preparation:

1. Concrete shall be removed and disposed off, in accordance with Section 300-1.3 REMOVAL AND DISPOSAL OF THE MATERIALS of the SSPWC.

2. Compact existing subgrade and [4" inches thick] base material, in accordance with Section 301-2 - UNTREATED BASE of the SSPWC.

3. Concrete shall be placed on the subbase to the required depth. The surface of concrete shall be floated by [finishing machine method] [transverse float method] and dragged on by burlap.

4. Concrete driveway shall be [Case 1] [Case 2] [Case 3] [Case 4], 4" inches thick, and constructed per [locations and details], [as indicated on the drawings] and conform to the Los Angeles City Bureau of Engineering Standard Plan S-440, latest edition.

8. Type C Integral Curb and Concrete pavement shall be constructed per locations and details, as indicated on the drawings and conforms to the Los Angeles City Bureau of Engineering Standard Plan S-410, latest edition.

3.7 INSTALLATION OF CONCRETE WHEEL BUMPERS

A. Locations: Where indicated on the Drawings.

B. On Asphalt Concrete: secure in place with steel drift pins or pipe driven to at least 1/4" below top of a surface of the bumper unit. Fill holes with non-shrink grout to top surface of unit.

3.8 PARKING LOT STRIPING, LETTERS, ARROWS [AND/OR HELIPORT MARKINGS**]**

A. Materials: As hereinbefore specified.

B. Lines: 4" wide or as indicated on the Drawings.

C. Letters: Sizes and strokes as indicated on the Drawings**.** Minimum dry paint thickness shall be 15 mils.

D. Arrows: 10" stroke with proportionate head.

E. Handicapped Parking Striping: Sizes and colors are in conformance with the State of California, Code of Regulations, Title 24. An International Symbol of Accessibility symbol shall be stenciled at the rear of the parking space. Each accessible parking unloading zone shall be marked.

F. Traffic Striping**:** As indicated on the drawings and in conformance with Section 310-5.6.5 - TRAFFIC STRIPES AND MARKINGS of SSPWC.

G. Preparation: All surfaces to be free of dirt, grease or other foreign materials. Remove existing markings by sandblasting or other approved methods.

H. Application: Apply one heavy undiluted coat with traffic line painting equipment in locations indicated on the Drawings in uniform coverage, free from light spots and with all edges clean-cut and true. Paint by spray can shall not be allowed. Minimum dry paint thickness shall be 15 mils.

3.9 DISABLED ACCESSIBILITY PARKING SIGN

A. Required: On walls and where indicated on the Contract Drawings and specified in Section 10443 - DISABLED ACCESSIBILITY PARKING SIGNAGE complying with State of California, Code of Regulation, Title 24.

B. Materials and Fabrications: Constructed of 3M Scotchlite Brand reflective sheeting laminated to 18-gage heavy duty sheet steel and silkscreened in transparent blue with "Disabled Symbol" and/or the appropriate message in white. Sign to have a weather-resistant finish.

C. Size: Not less than 18-inches wide x 27-inches high with lettering not less than 1" inch in height.

D. Installation: Provide a sign in a conspicuous space at each entrance to off-street parking facilities and immediately adjacent to and visible from each stall or space. Install concrete footing and post, in accordance with the detail and requirement as shown on the Contract Drawings, Section 10443 - DISABLED ACCESSIBILITY PARKING SIGNAGE and Section 03300 - CAST-IN-PLACE CONCRETE of the Project Manual. Mount on a wall on a post on a fence at height noted on the Contract Drawing in plumb and level position and secured in place. Construct concrete paving over construct asphaltic concrete paving around backfill around the concrete footing in accordance with the details shown on the drawings.

END OF SECTION

SECTION 02752
CONCRETE PAVING

PART 1 – GENERAL

1.1 SUMMARY

A. Section includes cast-in-place concrete, including formwork, reinforcement, concrete materials, mixture design, placement procedures, joints and finishes.

1.2 SUBMITTALS

A. Mix designs: submit to the ENGINEER for review and approval. Mix design shall be signed by a licensed California Structural or Civil Engineer. Indicate amounts of mixing water to be withheld for later addition at project site, if any.

B. Material information: for each of the following, as provided by manufacturers:

1. Admixtures.
2. Form release agents.
3. Steel reinforcement and accessories.
4. Joint filler products.

C. Load tickets: in addition to the CONTRACTOR's copy, deliver a legible copy of each load ticket from the producer to the BCA inspector. Load ticket shall state quantities of all material in each load and shall be signed by weigh master. The BCA inspector shall record on each copy, the slump and location where placed on the job. Maintain tickets at jobsite.

D. Material test reports: for the following, from a qualified testing agency:

1. Aggregates: include service record data indicating absence of deleterious expansion of concrete due to alkali aggregate reactivity.

1.3 QUALITY ASSURANCE

A. Installer qualifications: CONTRACTOR shall employ on the project an installer qualified as ACI-Certified Flatwork Technician and Finisher and a supervisor who is an ACI-certified Concrete Flatwork Technician.

B. Quality control: do not commence placement of concrete until mix designs have been reviewed and approved by the PROJECT MANAGER or ENGINEER, and until copies are at the jobsite.

C. Batch plant inspections: required for all structural concrete. Inspection shall be by a CITY BCA material control inspector. The CONTRACTOR shall notify the inspector at least 24 hours in advance of mixing time. The BCA materials inspector shall be present at the beginning of each day of batching and shall perform the following:

1. Check plant and equipment quality.
2. Check identity of materials.
3. Check aggregate grading, characteristics, and water content.
4. Verify mix designs being used.
5. Check proportioning and loading of concrete materials.
6. Issue certifications of quality and quantity of materials as batched.
7. After verification of above, return to the jobsite for placement inspection.

D. Continuous placement inspection: required for all structural concrete and to be performed by an LADBS certified deputy inspector approved by the PROJECT MANAGER. The BCA inspector shall perform the following procedures:

1. Verify condition and adequacy of forms and reinforcement placement.
2. Ensure that concrete is of required quality and consistency.
3. Ensure that all requirements and conditions of concrete placement are met.
4. Make slump tests and secure cylinders.
5. Provide written reports at regular intervals reporting concrete practices.

E. Mockups: provide approx. 4-foot by 4-foot mockups to adequately portray the specified finishes, reveals, formwork, joints, etc. For each concrete finish indicated on the plans and listed below for the ENGINEER's approval prior to commencing concrete work. CONTRACTOR shall continue to construct mock-ups until an approved mock-up for each specified finish is produced at no additional cost to the CITY. Acceptable mock-ups shall be made the job standard for each finish, and workmanship. Protect accepted mock-ups from damage until completion and acceptance of the work represented by the mock-ups. Remove mock-up panel(s) from the site at completion of the project, unless otherwise instructed by PROJECT MANAGER.

1. Specified finishes to be mocked up:

    a. Concrete paving: medium broom finish, unless otherwise noted.

1.4 DELIVERY, STORAGE, AND HANDLING

A. Steel reinforcement: deliver, store, and handle steel reinforcement to prevent bending and damage. Avoid damaging coatings on steel reinforcement.

1.5 FIELD CONDITIONS

A. Hot-weather placement: comply with ACI301 and as follows:

1. Maintain concrete temperature below 90 deg F at time of placement. Chilled mixing water or chopped ice may be used to control temperature, provided water equivalent of ice is calculated to total amount of mixing water.

2. Fog-spray forms, steel reinforcement, and subgrade just before placing concrete. Keep subgrade uniformly moist without standing water, soft spots, or dry areas.

PART 2 – PRODUCTS

2.1 STEEL REINFORCEMENT

A. Reinforcing bars: shall be ASTM A615/A615m, Grade 60, deformed.

B. Plain-steel wire: shall be ASTM A1064a/A1064m, as drawn.

2.2 REINFORCEMENT ACCESSORIES

A. Joint dowel bars: ASTM A615/A615m, Grade 60, plain-steel bars, cut true to length with ends square and free of burrs.

B. Bar supports: bolsters, chairs, spacers, and other devices for spacing, supporting, and fastening reinforcing bars and welded-wire reinforcement in place. Manufacture bar supports from steel wire, plastic, or precast concrete and of greater compressive strength than concrete.

2.3 CONCRETE MATERIALS

A. Cementitious materials:

1. Portland Cement: all cement shall be Type II, low alkali Portland Cement conforming to ASTM C150 (201-1.2).

2. Fly ash: ASTM C618, class F.

B. Normal-weight aggregates: the aggregates for all concrete construction shall be fractured face aggregates obtained from a quarry that is certified non-reactive by an approved testing laboratory as approved by the Bureau of Contract Administration, (201-1.2.2). Unless otherwise noted.

1. Maximum coarse-aggregate size: 3/4-inch nominal.

C. Water: ASTM C94/C94m and potable.

2.4 CONCRETE MIXTURES

A. Concrete specified by class: placed concrete shall be Class 520-C-2500, maximum 4-inch slump unless otherwise noted on Contract Drawings. Pumped concrete shall be Class 560-E-2500, maximum 6-inch slump unless otherwise noted on Contract Drawings. A complete delivery receipt shall be required for each truckload of concrete delivered. The receipt shall be given to the BCA Inspector, (201-1.1.2).

1. Minimum compressive strength: 2,500 PSI at 28 days.

2. Slump limit: 4-inches, plus or minus 1-inch.

2.5 CONCRETE MIXING

A. Ready-mixed concrete: measure, batch, mix, and deliver concrete according to ASTM C94/C94m and ASTM C1116/C1116m and furnish batch ticket information to BCA inspector.

1. When air temperature is between 85 and 90 deg F, reduce mixing and delivery time from 1-1/2 hours to 75 minutes; when air temperature is above 90 deg F, reduce mixing and delivery time to 60 minutes.

2.6 CONCRETE JOINT MATERIALS

A. Expansion joint material: expansion joint material shall be min. 3/8-inch-thick closed-cell, polyethylene low resistance joint filler, by Celltex Ltd., or approved equal.

B. End of pour joints: end of pour joints shall be min. 3/8-inch-thick closed-cell, polyethylene low resistance joint filler, by Celltex Ltd., or approved equal.

C. Joint urethane sealant: expansion and isolation joint sealant material shall be a urethane elastomeric sealant for concrete pavement shall be Sikaflex®-1A
By Sika Corporation, or an approved equal, (201-3). Color to match concrete.

PART 3 – EXECUTION

3.1 STEEL REINFORCEMENT INSTALLATION

A. General: comply with CRSI's "Manual of Standard Practice" for fabricating, placing, and supporting reinforcement.

B. Clean reinforcement of loose rust and mill scale, earth, ice, and other foreign materials that reduce bond to concrete.

C. Accurately position, support, and secure reinforcement against displacement. Locate and support reinforcement with bar supports to maintain minimum concrete cover. Do not tack weld crossing reinforcing bars.

D. Securely fasten steel reinforcement and wire ties against shifting during concrete placement. Set wire ties with ends directed into concrete, not toward exposed concrete surfaces.

3.2 JOINTS IN CONCRETE

A. General: construct joints true to line with faces perpendicular to surface plane of concrete.

B. Construction joints: install so strength and appearance of concrete are not impaired, at locations indicated or as approved by ENGINEER.

1. Place joints perpendicular to main reinforcement. Continue reinforcement across construction joints unless otherwise indicated.

2. Form keyed joints where indicated. Embed keys at least 1-1/2 inches into concrete.

3. Space vertical joints in walls as indicated. Locate joints beside piers integral with walls, near corners, and in concealed locations where possible

C. Contraction joints in slabs-on-grade: form weakened-plane contraction joints, sectioning concrete into areas as indicated. Construct contraction joints for a depth equal to at minimum one-fourth of the concrete thickness as follows:

1. Tooled joints: form contraction joints after initial floating by grooving and finishing each edge of joint to a radius of 1/8-inch. Repeat tooling of contraction joints after applying surface finishes. Eliminate tool marks on concrete surfaces.

2. Saw-cut joints: form contraction joints with power saws equipped with shatterproof abrasive or diamond-rimmed blades. Cut 1/8-inch-wide joints into concrete when cutting action does not tear, abrade, or otherwise damage surface and before concrete develops random contraction cracks.

D. Isolation joints in slabs-on-grade: after removing formwork, install joint-filler strips at slab junctions with vertical surfaces, such as column pedestals, foundation walls, grade beams, and other locations, as indicated.

1. Extend joint-filler strips full width and depth of joint, terminating not less than 1/2-inch or more than 1-inch below finished concrete surface where joint sealants are indicated.

E. Doweled expansion joints: shall be placed against previously constructed concrete structures or as indicated in the plans (303-5.4.2) and the applicable details. Install dowel bars and support assemblies at joints where indicated. Lubricate one-half of dowel length to prevent concrete bonding to one side of joint. Install per details.

3.3 CONCRETE PLACEMENT

A. Before placing concrete, verify that installation of formwork, reinforcement, and embedded items is complete and that required inspections are completed.

B. Deposit concrete continuously in such thickness that no new concrete is placed on concrete that has hardened enough to cause seams or planes of weakness. If a section cannot be placed continuously, provide construction joints as indicated.

1. Deposit concrete in horizontal layers of depth not to exceed formwork design pressures.

2. Maintain reinforcement in position on chairs during concrete placement.

3. Screed slab surfaces with a straight-edge and strike off to correct elevations.

4. Slope surfaces uniformly to drains where required, and as indicated on Contract Drawings.

3.4 FINISHING FLOORS AND SLABS

A. General: comply with ACI 302.1R recommendations for screeding, re-straightening, and finishing operations for concrete surfaces. Do not wet concrete surfaces.

B. Rotary float finish: consolidate surface with power-driven floats or by hand floating if area is small or inaccessible to power-driven floats. Re-straighten, cut down high spots, and fill low spots. Repeat float passes and re-straightening until surface is left with a uniform, smooth, granular texture. Apply rotary float finish only to surfaces indicated.

C. Broom finish: apply a broom finish to exterior concrete platforms, steps, ramps, and elsewhere as indicated.

1. Immediately after float finishing, slightly roughen the trafficked surface with fiber-bristle broom perpendicular to main traffic route. Match finish(es) in approved mock-up for each finish type.

3.5 MISCELLANEOUS CONCRETE ITEM INSTALLATION

A. Repairs and filling: fill in holes and openings left in concrete structures after work of other trades is in place unless otherwise indicated. Mix, place, and cure concrete, as specified, to blend with in-place construction. Provide other miscellaneous concrete filling indicated or required to complete the work.

3.6 CONCRETE PROTECTION AND CURING

A. General: protect freshly placed concrete from premature drying and excessive cold or hot temperatures. Comply with ACI 301 for hot-weather protection during curing. Cure formed concrete according to ACI 308.1.

B. Exposed un-formed surfaces: begin curing slabs, sidewalks, driveway approaches, walkways and other exposed surfaces immediately after finishing concrete.

3.7 JOINT SEALING

A. For expansion and isolation joints in concrete: remove dirt, debris, saw cuttings, curing compounds, etc. From joints; leave contact faces of joints clean and dry.

B. Install approved joint sealer according to manufacturer's written instructions and applicable details.

3.8 CONCRETE SURFACE REPAIRS

A. Defective concrete: repair and patch defective areas when directed by BCA Inspector. Remove and replace concrete that cannot be repaired and patched to ENGINEER's approval.

B. Repairing un-formed surfaces: test un-formed surfaces, such as floors and slabs, for finish and verify surface tolerances specified for each surface. Correct low and high areas. Test surfaces sloped to drain for trueness of slope and smoothness; use a sloped template.

1. Repair finished surfaces containing defects. Surface defects include spalls, pop-outs, honeycombs, rock pockets, crazing and cracks in excess of 0.01 inch wide or that penetrate to reinforcement or completely through unreinforced sections regardless of width, and other objectionable conditions.

2. Repair defective areas, except random cracks and single holes 1 inch or less in diameter, by cutting out to the nearest control joints and replacing with fresh concrete. Remove defective areas with clean, square cuts and expose steel reinforcement with at least a 3/4-inch clearance all around. Dampen concrete surfaces in contact with patching concrete and apply bonding agent. Mix patching concrete of same materials and mixture as original concrete, except without coarse aggregate. Place, compact, and finish to blend with

adjacent finished concrete. Cure in same manner as adjacent concrete.

3. Repair random cracks and single holes 1-inch or less in diameter with patching mortar. Groove top of cracks and cut out holes to sound concrete and clean off dust, dirt, and loose particles. Dampen cleaned concrete surfaces and apply bonding agent. Place patching mortar before bonding agent has dried. Compact patching mortar and finish to match adjacent concrete. Keep patched area continuously moist for at least 72 hours.

3.9 FIELD QUALITY CONTROL

A. Special inspections: engage a LADBS Deputy Special Inspector and qualified testing to perform field tests and inspections and prepare test reports when required by Codes or Contract Drawings.

B. Required inspections. BCA Inspector shall inspect the following prior to concrete placement:

1. Steel reinforcement placement.
2. Verification of use of required design mixture.
3. Concrete placement, including conveying and depositing.

C. Samples: BCA Inspector will select and take samples for testing during the course of the work as considered necessary. Cost of testing will be paid for by the CITY.

D. Rejected materials: CONTRACTOR shall remove off the site all concrete below specified strength.

E. Cost of removal and retesting: CONTRACTOR shall pay for full cost of removal of rejected concrete and its replacement with concrete if specified strength and retesting.

END OF SECTION 02752

SECTION 02795
BALLFIELD INFIELD SURFACE

1.1 SECTION INCLUDES

A. This section includes the supply and installation of stabilized crushed aggregate infield surface mix, as indicated in the Contract Documents.

1.2 SUBMITTALS

A. The CONTRACTOR shall make all required materials submittals in accordance with the General Requirements.

B. The CONTRACTOR shall make substitution submittals in accordance with the General Requirements.

C. CONTRACTOR shall submit following in accordance with material submittal procedures:

1. Manufacturer's product data sheet.

2. Physical sample of infield surface material (1-quart minimum).

1.3 MOCK-UP

A. All work and materials are subject to inspection and approval by the Bureau of Contract Administration (BCA) Inspector and the ENGINEER. Any work done without proper inspection will be subject to rejection per Section 2-11 of the Standard Specifications for Public Works Construction. The CONTRACTOR shall notify the Bureau of Contract Administration (BCA) Inspector and PROJECT MANAGER three (3) days prior to requested inspection of the following for approvals:

1. Approval of sub-grade preparation by BCA Inspector of ENGINEER prior to installation of infield surface material.

2. Upon completion, CONTRACTOR shall request inspection and approval of installation by ENGINEER.

B. Mock-Up: CONTRACTOR shall install 20 square feet minimum of stabilized crushed aggregate infield surface mix including subgrade preparation, at a location approved by the ENGINEER.

1. ENGINEER shall review and approve mock-up before proceeding with rest of stabilized crushed aggregate paving.

2. Approved mock-up may remain as part of completed Work, subject to approval by ENGINEER.

1.4 DELIVERY AND HANDLING

Material shall be delivered to the site pre-mixed by supplier. CONTRACTOR shall protect the stabilized crushed aggregate infield surface mix from contamination.

1.5 SEQUENCING

A. Do not install work specified in this section prior to approval of sub-grade preparation per Section 310000 - EARTHWORK.

B. Do not install stabilized crushed aggregate surfacing when base material is wet or saturated to field capacity.

C. CONTRACTOR shall coordinate work specified in this Section with work specified in other Sections to minimize disturbance of, and operation of heavy equipment over, installed stabilized crushed aggregate surface.

PART 2: PRODUCTS

2.1 MATERIALS

A. For ballfields with NO GRASS INFIELD: The Stabilized Crushed Aggregate Infield Surface Mix: The infield surface shall be “Pro-Gold Softball Mix” as distributed by Gail Materials (951) 667-6106 or an approved equal. The infield material shall be a minimum 4” thick profile.

B. For ballfields WITH GRASS INFIELD: The Stabilized Crushed Aggregate Infield Surface Mix: The infield surface shall be “Pro-Gold Infield Mix Plus” as distributed by Gail Materials (951) 667-6106 or an approved equal. The infield material shall be a minimum 4” thick profile.

PART 3: EXECUTION

3.1 METHODS

A. The stabilized crushed aggregate infield surface mix shall be premixed by the distributor before delivery to the site. The subgrade for areas beneath the infield surface shall be compacted to 90% relative compaction – *do not compact adjacent turf areas*.

3.2 PLACEMENT

A. Place the infield mix on prepared sub-grade compacted to 90% relative compaction. Level to desired grade and cross section of 4” minimum depth. A 10’ by 10’ area centered over each future base pad location shall be six (6) inches deep in lieu of the standard four (4) inches depth for the rest of the infield. Grade infield area so that all areas achieve a .5% minimum slope, and no depressions are created that can retain water.

3.3 WATERING

A. Water thoroughly to achieve full depth moisture penetration of the entire stabilized infield mix profile. Stabilizer is water-activated: to achieve adequate saturation of stabilized infield mix profile, a minimum of 25 to 45 gallons of water per ton must be applied. During water application randomly test for penetration depth using a probing device until the entire profile is adequately wetted.

B. *Do not begin compaction for minimum of 6 hours after completion of wetting*. Compaction must be completed within 24 hours of wetting.

3.4 COMPACTION

A. Upon full moisture penetration, compact the infield surface material to 85% relative compaction with a min. 1,000 lb. Static drum roller. *Do not use a vibratory compactor or vibratory setting on the drum roller.*

B. Take care in compacting stabilized infield mix when adjacent to planting and irrigation systems. Hand tamping with 8” or 10” hand tamp is recommended in areas where large equipment could damage irrigation or hardscape.

3.5 INSPECTION

A. The finished surface of stabilized infield mix shall be smooth, uniform and solid. There shall be no evidence of chipping or cracking. Cured and compacted infield shall be firm throughout profile with no spongy areas. Loose material shall not be present on or below the surface. Any significant irregularities in the surface shall be repaired to the uniformity of entire installation.

3.6 REPAIR

A. To repair, excavate damaged area to a depth of 2” minimum, and scarify exposed stabilized crushed aggregate surface. Apply replacement material to the excavated area and compact. Thoroughly water the material and allow the material to cure, but not completely dry out. Re-compact the material, ensuring that the final grade and crown are maintained. Do not use a vibratory compactor.

END OF SECTION 02795

SECTION 02810
IRRIGATION

PART ONE – GENERAL

1.1 DESCRIPTION

A. Work Included:

1. All labor, materials, equipment, appliances, fixtures and tests necessary for complete demolition of existing irrigation system and a new operating irrigation system as indicated on the Contract Drawings.

B. Related Work:

1. Documents affecting work of this Section include, but are not necessarily limited to the GENERAL CONDITIONS, SUPPLEMENTARY CONDITIONS in DIVISION 1 - GENERAL REQUIREMENTS and other Sections of the Project Manual.

2. Site Clearing and Grubbing in Section 02210.

1.2 SUBMITTALS

A. The Contractor shall make all required materials submittals in accordance with Article 10 of the General Requirements. For all materials not approved upon the first submittal, Contractor is responsible to promptly resubmit for approval**,** necessary data concerning a substitution for a disapproved item or piece of equipment.

B. The Contractor shall make substitution submittals in accordance with Article 11 of the General Requirements.

C. Submit copies of the following:

1. Complete list of irrigation materials and miscellaneous hardware complete with descriptions and/or photographs and manufacturer’s literature. Clearly mark or underline proposed items.

1.3 QUALITY ASSURANCE

A. Codes and Regulations: Contractor shall obtain and pay for all required permits. Deliver all permits and submit certifications of compliance to the BCA Inspector and the Project Manager.

1.4 GENERAL REQUIREMENTS

A. Approvals by the Engineer: Before commencement of irrigation installation, Contractor shall obtain:

1. All approvals on required submittals hereinafter specified.

2. Approval of all re-submittals requested by the City Engineer.

3. Contractor shall make a detailed staked layout on the work site of the proposed trenching locations for all mainline, control wire conduit, and valve manifolds for approval by City Engineer prior to trenching.

4. Contractor shall make a detailed staked layout on the work site of the proposed head locations for approval by City Engineer prior to lateral line trenching.

B. Required Inspections: Notify the City Inspector at least 72 hours prior to time of required inspection.

1. IRRIGATION MAINLINE PRESSURE TEST: The pressure test shall take place under the direction of the BCA Inspector.

2. IRRIGATION COVERAGE TEST: After installation of heads and lateral lines etc., entire irrigation system shall be tested for coverage. Contractor shall notify the BCA Inspector, Project Manager, Landscape Architect and designated Recreation and Parks Regional maintenance staff three (3) days before the scheduled test.

C. Existing Utilities and Plant Materials: Protect utilities and/or plant materials not designated for removal or modification in place against damage resulting from work of this Contract. Perform any removal and/or modifications only on approval or instruction from the City Engineer or in accordance with applicable provisions noted or

specified.

D. Verification of Dimensions and Quantities: Verify site conditions, contract drawings, all dimensions and quantities prior to the bid. Furnish the quantities as necessary to do the specified work. Notify the Project Manager of any discrepancies between the Contract Drawings and the site conditions prior to beginning work. Do not work in areas where such discrepancies occur until further instruction by the City Engineer.

E. Record Drawings: Comply with provisions of the General Requirements. Contractor shall accurately dimension the location and depths of all piping, valves, and control equipment as installed. Indicate with suitable colored ink on one set of prints of the Contract Drawings to produce a record of complete installations to be kept on the job and up-to-date at all times during construction. At the completion of the work and prior to Final Inspection, the Contractor shall copy his record "as installed" data, using red ink, onto a set of clean prints. The Contractor shall certify to the completeness and accuracy of the "as installed" information indicated on the prints with his signature and deliver the signed prints to the Project Manager for review prior to the completion of the Plant Establishment Period.

Dimension from two permanent points of reference, building corners, sidewalk, or road intersections, the location of the following items:

1. Connection to existing water lines.
2. Connection to existing electrical power.
3. Gate valves.
4. Routing of all pressure lines. Indicate dimensional location at 100' intervals.
5. Irrigation control valves.
6. Routing of control wiring.
7. Quick coupling valves.
8. Controller.
9. Other related equipment as directed by the Architect.
10. Sleeve locations.

F. Water and Power Services: Upon award of contract, the Contractor shall contact the Department of Water and Power to arrange and pay

for the installation of all required water [and electrical] meters and services. Service connections shall be as shown on the Contract Drawings or as designated by the utility company. Upon final acceptance of the project, the Contractor shall transfer billing to the City of Los Angeles, Department of Recreation and Parks as directed by the Project Manager.

G. Guarantee: In accordance with provisions of the GENERAL CONDITIONS, contractor shall guarantee the entire irrigation system against defects in materials and workmanship for a period of one year from the date of final acceptance of the Project.

1. The entire irrigation system shall be warranted to be free from defects in materials and workmanship, and installed in accordance with the irrigation plans, specifications and the SSPWC. The Contractor shall be required to repair or replace any defects in material or workmanship which may develop within one (1) calendar year from the date of acceptance, excepting ordinary wear and tear and unusual abuse or neglect. Further, the Contractor shall be required to make any necessary repairs within 48 hours of notification at no cost to the City. If the Contractor or his agent fail to make such repairs within the stipulated time, the City shall make such repairs or have repairs made by a third party and bill the Contractor for all expenses that accrue from making such repairs.

2. The City reserves the right to make temporary repairs as necessary to keep the irrigation system equipment in operating condition. The exercise of this right by the City will not relieve the Contractor of his responsibilities under the terms of the guarantee.

3. Contractor shall repair any settlement of backfilled trenches which may occur during a one year period after final acceptance by the City Engineer, to the City Engineer's satisfaction, without expense to the City, including the complete restoration of all damaged planting, paving, or other improvements of any kind.

1.5 DELIVERY, STORAGE AND HANDLING

A. Delivery: Deliver products to the job-site in their manufacturer's original containers, with labels intact and legible.

B. Storage: Store piping, materials, fitting, etc. at the job-site where directed by the City Engineer until such time for installation.

C. Handling: Promptly remove damaged materials and unsuitable items from the job-site and promptly replace with materials meeting the specified requirements, at no added cost to the City.

PART TWO - PRODUCTS

2.1 MATERIALS

A. General: Provide recently manufactured materials of the best grade of each respective kind.

B. Pipe and Fittings: The type of pipe material and fittings designated on the Contract Drawings, or as hereinafter specified shall be:

1. Steel Pipe: Galvanized standard weight Schedule 40 steel water pipe complying with ASTM A53 - SPECIFICATION FOR PIPE, STEEL, BLACK AND HOT-DIPPED, ZINCH-COATED, WELDED AND SEAMLESS; jointed with galvanized, threaded, standard weight malleable iron fittings, and/or couplings.

2. Plastic Irrigation Pipe: High impact rigid polyvinyl chloride PVC 1220 (Type I, Grade 2), conforming to ASTM D1785 - SPECIFICATION FOR POLY (VINYL CHLORIDE) (PVC) PLASTIC PIPE, SCHEDULES 40 & 80 and CLASS 200. The minimum pressure rating to be not less than indicated therein for the schedule and size listed.

3. DOMESTIC WATER LINES FOR DRINKING FOUNTAINS: Install water piping in accordance with the latest edition of the Uniform Building Code and all local ordinances. Prior to allowing human consumption of water from newly installed drinking fountains the contractor shall perform domestic sterilization procedures as indicated in applicable details and provide testing results to document compliance with the standards indicated. New drinking fountains shall be turned off or otherwise made inoperable until this testing is successfully completed and approved.

a. Domestic Cold Water Piping ABOVE GRADE: Piping shall

be ASTM B88 Type “L” seamless hard drawn copper tubing with ANSI B 16.22 wrought copper fittings. Joints shall be made up with lead-free, nickel bearing alloy solder such as Harris Bridget.

b. Domestic Cold Water Piping BELOW GRADE: Piping shall be ASTM B88 Type “K” seamless hard drawn copper tubing with ANSI B 16.22 wrought copper fittings. Joints shall be made up with lead-free, nickel bearing alloy solder such as Harris Bridget.

4. All Pipes: Shall be homogeneous throughout and free from cracks, holes, foreign materials, blisters, deleterious wrinkles, and dents.

5. Solvent-welded Schedule 40 PVC plastic pipe and fittings shall be used for pipe sizes up to and including 2½ inch for installation of irrigation pressure lines and lateral lines.

6. Class 200 PVC gasketed pipe with ductile iron fittings and restraints as detailed on Contract Drawings shall be used for continuously pressurized pipe of sizes of 3-inch up to and including 6-inch diameter.

7. Schedule 80 PVC plastic pipe and threaded fittings shall be used only when threaded joints are specified, or otherwise permitted by the City Engineer.

8. All piping shall be permanently marked with the following: Manufacturer's name or trademark, size, schedule, and type of pipe, working pressure at 73 degrees F. and National Sanitation Foundation (N.S.F.) approval.

9. Ductile iron fittings for restrained plastic pipe shall be manufactured of ductile iron, Grade 65-45-12 in accordance with ASTM A536. Fittings shall have deep bell push-on joints with gaskets meeting ASTM F477. All ductile iron fittings shall be manufactured by HARCO Fittings, or approved equal. http://www.harcofittings.com

   a. Valve to pipe restraints shall consist of ductile iron (ASTM A536) grip rings with machined serrations and ductile iron restraint rods. The ring that grips the pipe shall meet the requirements of UNI-B-13-94. The restraint rod nuts shall be

made from low alloy steel to AWWA/ANSI C111/A21.11 or ductile iron to ASTM A536.

b. Fitting to pipe restraints shall allow the full rating of the pipe on which it is used. Grip rings and restraint structures shall be made of ductile iron to ASTM A536. Grip ring serrations (gripping features) shall be fully machined or cast. Clamp bolts and nuts shall meet or exceed ASTM A307.

c. Pipe to pipe restraints shall allow the full rating of the pipe on which it is used. Grip rings and bell rings shall be made of ductile iron to ASTM A536. Grip ring serrations (gripping features) shall be fully machined or cast. Restraint rod nuts shall be of low alloy steel to AWWA/ANSI C111/A21.11. Clamp bolts and nuts shall meet or exceed ASTM A307. Pipe to pipe restraint shall meet or exceed the full rating of the pipe on which it is used.

9. Gasket lubricant for push on fittings shall be non-toxic, odorless, tasteless and shall not support bacteria. Use ‘Seal Lube”, SK#87710 by IPS Weldon Corp. or equal.

C. Valves and Valve Boxes:

1. General: Provide valves of the type and capacity designated on the Contract Drawings and with the requirements specified herein. All valves shall be capable of continuous performance at a working pressure of 200 psi or less.

2. Gate Valves and mainline isolation Valves: *in sizes 2.5-inch and smaller* shall be *bronze* type, non-rising stem, solid wedge gate valve; Nibco T-113-LF or approved equal.

3. Mainline isolation Valves: *in sizes 3-inch and larger* shall be Nibco #P-619-RW IPS PVC push-on type resilient wedge cast iron gate valve with electrostatically applied fusion-bonded epoxy 8-20 mil. thick inside and outside, or approved equal.

4. Automatic Control Valves: Electrically operated, cast brass or bronze normally closed globe valve, capable of with manual flow control adjustment and manual operation capability, readily disassembled for servicing, slow opening and closing, and self-flushing. Reclaimed water compatible. Rainbird EFB-CP Series or Toro 220 series, or approved equal.

5. Quick-Coupling Valves: shall be 1” type with two-piece red brass construction with a locking thermoplastic rubber cover. The Contractor shall provide one quick coupler key with hose swivel for each five quick couplers installed. Rainbird model #44LRC or approved equal.

6. Valve Boxes shall be constructed of polypropylene or equivalent material for maximum durability, UV protection and corrosion resistance. The plastic body, excluding extensions, shall have pipe slots on each end and the plastic body shall have two (2) resting points for the lid to sit securely and flush. The plastic lid shall have molded diamond tread-pattern for skid resistance. Valve boxes shall have a lockable lid using a hex-bolt to secure the cover.

   For Remote Control Valves:
   The dimensions of the box shall be 14.5" L x 9.4" W, Model VB-STD-H by Rainbird, or approved equal. The lid shall be permanently heat-embossed with station number for each valve.

   For Quick Couplers and Gate Valves:
   The dimensions of the box shall be 13.75 inches bottom diameter and 10" top diameter. Model VB-10RND-H by Rainbird, or approved equal.

   Boxes are to be installed per the applicable details. The lid shall be permanently heat-embossed as follows (paint is not acceptable):

Gate Valve	GV
Remote Control Valve	RCV
Quick Coupler Valve	QC
Master Valve	MV
Flow Meter	FM

D. Backflow Prevention - Reduced Pressure Zone Assembly and Wye Strainer:

1. The Reduced Pressure Zone Assembly shall consist of two independently operating, spring loaded, “Y” pattern check valves and one hydraulically dependent differential relief valve. Mainline valve body and caps including relief valve body and cover shall be ductile iron with Fusion epoxy coated internal and

external AWWA C550. Check valve and relief valve components shall be constructed so they may be serviced without removing the valve body from the line. Shutoff valves shall be flange-mounted ductile iron NRS resilient wedge gate valve AWWA C509 (Standard) with Fusion epoxy coating.

The assembly shall be rated to 175psi working pressure and water temperature range from 33°F to 140°F. The lead-free Reduced Pressure Zone Assemblies shall comply with state codes and standards, where applicable, requiring reduced lead content. The assembly shall meet the requirements of AWWA Standard Code C511; and approved by the Foundation for Cross-Connection Control and Hydraulic Research at the University of Southern California. The Reduced Pressure Zone Assembly shall be Febco LF860-NRS, or approved equal.

2. Wye-Strainer: The main body shall be flange-mounted ductile iron with fusion epoxy coating inside and outside, the strainer screen shall be 300 series stainless steel #225 mesh. Screens shall be accessible for cleaning without removing the device from the line. The “Y” type strainer shall be a Zurn Wilkins Model FSC type, or approved equal.

3. Backflow Device Enclosure: shall be of a vandal resistant nature manufactured of formed cold rolled steel tubing and rod, coated with a performance polymer alloy. All locking and mounting hardware shall be manufactured entirely of stainless steel. Each enclosure shall have amounting pad which shall be used as installation frame. Enclosure hardware on the mounting frame shall be stainless steel. The backflow cage enclosure shall remain bolted to frame in open and closed positions. Enclosure and door shall close with concealed locking tab with hole to accept padlock. Enclosure shall be powder-coated dark green. By Strongbox, SBBC-CR series or approved equal. https://strongbox.com

E. Irrigation Heads:

1. Pop-up spray head: bodies shall have a 4”, 6” or 12” pop-up stroke. The body of the spray head shall be constructed of corrosion and UV-resistant, heavy-duty A.B.S. The spray head body shall have a factory-installed drain check valve capable of checking up to 10 feet in elevation change. The spray head body shall have a standard pressure-regulating device as an

integral part of the pop-up riser maintaining a constant nozzle outlet pressure of 30 or 45 PSI with inlet pressures of up to 100 PSI. Nozzles shall be matched precipitation rate, fixed spray or multiple-stream, rotating type or other as noted on Contract Drawings. As manufactured by Rainbird Corporation, Toro Company or approved equal, models # 1804, 1806, 1812, or 1845.

2. Pop-up Gear Driven Rotor Head: The body of the rotor head shall be constructed of corrosion and UV-resistant, heavy-duty A.B.S. The rotor head body shall have a factory-installed drain check valve capable of checking up to 10 feet in elevation change. The full or part-circle rotor head shall be a single stream, water lubricated, gear drive type capable of both full circle and/or part circle operation in the same unit as noted on Contract Drawings. The rotor head shall have a screen attached to the drive housing to filter inlet water, protect the drive from clogging and simplify its removal for cleaning and flushing of the system. The rotor head body shall have a 1” (26/34) female (NPT or BSP) bottom inlet. The rotor head shall have a standard rubber cover which designates each adjustment opening from the top. Pop-up height as measured from the top of the cover to the centerline of the nozzle orifice shall be at least 5 inches. The rotor shall have a stainless steel covered nozzle turret and riser stem. As manufactured by Rainbird Corporation or the Toro Company or approved equal.

3. Root Watering System: The RWS assembly shall consist of a perforated polyethylene rigid mesh cylinder 18” long x 4” diameter or 10” long x 2” diameter with an integrated pressure compensating bubbler and optional check valve. The assembly shall be preconfigured with swing joint assembly or spiral barbed fittings to enable the RWS to be directly connected to PVC or polyethylene lateral drip lines, and shall have a plastic locking grate cover. Manufactured by Rainbird Corporation, or approved equal.

4. SA Swing Joint Assemblies: The Swing Assemblies shall be used as a flexible swing joint assembly for 1/2” inlet sprinklers. The pipe shall be flexible black tubing constructed of linear low density polyethylene material with a wall thickness of 0.090”and an inside diameter of 0.490”. The fittings shall be constructed of UV-resistant, thermoplastic material. The Swing Assembly shall

have an operating pressure rating of 80 psi at 110° F. As manufactured by Rain Bird Corporation, Glendora, California or approved equal.

5. TSJ (PRS) Swing Joint Assemblies: The swing joints shall be used as a height adjustable connector between lateral lines and 3⁄4" or 1" sprinklers or quick coupler valves. The swing joint shall be molded from rigid PVC, Type 1, cell classification 12454-B, conforming to ASTM D1784, with a pressure rating of 315 psi at 73° F when tested in accordance with ASTM D3139, including 60 minutes at 790 psi, and short term exposure of 1000 psi without leakage. All NPT threads, sockets, and spigots shall be Schedule 80 per ASTM D2464 and D2467. All components shall be factory preassembled, available with 3⁄4" or 1" inlet/outlet and in lengths of 12" and 18". All rotating joints shall be modified stub ACME threads. All rotating joints shall have two EPDM rubber O-rings for positive sealing and thread protection.

   The pressure regulating system (PRS) shall consist of the outlet elbow of a Rain Bird Turf Swing Joint (TSJ). The TSJ-PRS shall allow pressure to increase uniformly within the rotor up to the preset regulation pressure before regulation occurs. Pressure regulation shall be provided to rotors with 3⁄4" and 1" inlets by means of a spring-loaded diaphragm attached to a flow tube. The regulator housing shall be constructed of high strength PVC. All metal components shall be made of stainless steel. The diaphragm shall be a fabric reinforced elastomer.

F. Automatic Controller Unit: The Controller shall be capable of fully automatic or manual operation with an interface to a two-wire path for decoder-based irrigation control. The controller shall provide flow sensing capability and management and a station capacity expandable to 200 stations. Controller shall include: automatic Et calculations and The ability to use any of four different Et sources as the basis for Et calculations; Cycle-and-Soak or conventional start times; Four independently controlled programs with 5 selectable start times for a total of 20 possible cycles per day or Cycle-and-Soak with unlimited start times; Flow sensing capability to monitor system flow and responds to high, low, unscheduled and no-flow conditions; Detection of valve wiring faults and automatic field wire detection enabling the controller to sense a short in the field wire and instantly turn off that station; Optional internet control via wireless cellular communication; manufactured by Rain Master Control Systems or approved equal.

1. The automatic controller shall be enclosed in a Heavy Duty Stainless Steel Top Entry Enclosure model SB-22SS by Strongbox or approved equal.

2. Valve decoders: shall be Rainmaster TW-D-1 Single valve AC decoder, TW-D-2 Dual valve AC decoder, TW-D-4 Quad valve AC decoder, TW-LA-1 Lightning arrestor (every 600 feet) as indicated in the Contract Drawings. Install and connect to 2-wire path per manufacturer's instructions and as indicated in the Contract Drawings. All decoders must be manufactured by SAME manufacturer and compatible with the 2-wire controller system specified.

3. Sensor wire: provide per manufacturer's requirements, and install in conduit per below.

G. Control Wire:

1. Connection between the automatic controller and the valve decoders shall be made with polyethylene double-jacketed or UF-B UL PVC double-jacketed two-conductor solid core wire designed for direct burial with insulation 3/16 inch (.060") thick, high density, sunlight resistant incased in an outer jacket of Polyethylene or PVC conforming to ICEA S-GL-402 or NEMA WC5, having a minimum wall thickness of .045 inches. Two-wire Polyethylene 'twisted' cable and single strand 14 gauge PVC coated irrigation wire are not acceptable.

2. 2-WIRE Conductor SIZING**:** Standard wire lengths for straight line installation i.e. wire distance to the furthest device without any loop:

Wire Size(gauge)	#14	#12
Total loop Length	10,000'	14,800'
Distance to furthest valve	5,000'	7,400'

3. All 2-wire conductors shall be installed in a 1-1/4" diameter sch. 80 PVC conduit per details. Distance between pull boxes shall not exceed 200'.

4. Low voltage control wire conductors between the 2-wire decoders and the valves shall be U.L. approved direct burial Type U.F., 600 volt, No. 14 AWG solid copper. Use a different

color wire for each valve in the manifold grouping.

H. Wire Connectors: Control wire connections shall be made with 3-M brand of DBY or DBR Direct Burial Splice kits, or approved equal. The splice kit shall consist of a one-piece malleable plastic bulb body with internal locking fingers, filled with re-enterable gel sealant and a Scotchlok Electrical Spring Connector. Materials shall be as follows:

1. Connector shall be a flame retardant PVC insulator with a steel spring and shell within. Connector shall be a non-crimping system.

2. Tube material shall be clear see-through polypropylene.

3. Gel material shall be hixotropic calcium organic complex.

4. Wire sizes and numbers of wires per connector shall be as follows:

Connector:	Color:	No. and Size of Wires:
3M Model DBY	Yellow	Max. 4-12 gage UF wires
3M Model DBR	Red	Max. 3-14 gage UF wires

I. Concrete Thrust Blocks: Provide concrete thrust blocks per details where applicable for plastic pipes with 3" inch diameter or larger, and all backflow preventer assemblies. The portland cement concrete used for concrete thrust blocks shall be 470-B-2000 concrete.

PART THREE - EXECUTION

3.1 SURFACE CONDITIONS

Examine the area of work and conditions under which work of this Section will be performed. Correct any conditions detrimental to timely and proper completion of the work prior to commencing installation of irrigation equipment.

3.2 IRRIGATION SYSTEM INSTALLATION:

A. General:

1. The Irrigation system layout shown on the Contract Drawings shall be considered as diagrammatic. The Contractor shall make adjustments where necessary to conform to actual field conditions unless otherwise noted or as directed by the City Engineer at no additional cost to the City.

2. All piping shown on the Contract Drawings in paved areas but running parallel and adjacent to planted areas, is done for clarity only and is to be installed inside the planting area whenever possible.

3. Specimen trees (24-inch or larger size box) may be planted before installing the irrigation system upon written approval from the Project Manager. Contractor shall re-route irrigation lines conflicting with specimen plant locations to clear the root ball by twenty-four (24) inches minimum at no additional cost to the City. Watering of all specimen trees planted before completion of the irrigation system shall be the Contractor's responsibility.

4. Contractor shall make all required water and utility connections as shown on the Contract Drawings or as required by the utility company. Replace all sidewalks, curbs or paving removed or damaged by the installation of required utilities to the satisfaction of the BCA Inspector.

B. Trench Excavating and Backfilling: Size trenches and other excavations to accommodate the irrigation system components, conduits, pipe bedding material and other required elements indicated on Contract Drawings. Provide a minimum of 6" of side clearance on outside of the piping or conduit to assure proper installation and access for inspections.

1. See TREE PROTECTION REQUIREMENTS in the Landscape Planting Specifications for all trenching within the protected root zone of an existing tree.

2. Unless otherwise specified, the minimum depth of cover over pipelines and conduits shall be as follows:

a. Control wire conduit - 30-inches (36-inches under roadways and parking lots).

b. Other Control Wiring - Depth of mainline, or a minimum

of 24-inches cover if without any mainline.

c. Irrigation Mainline: 24-inches for piping 3” and smaller; 30-inches for piping 4” and larger.

d. Lateral lines - 12-inches.

3. Make the bottom of trenches true to grade and free of protruding stones, roots or other matter which would prevent proper bedding of pipe or other facilities.

4. All trench backfill shall be performed in accordance with approved soils report. Pipe bedding shall be clean site soil, free of all rocks, debris, etc. over 1/2" diameter. Bed pipe in at least 4-inches of finely divided material to provide a firm, uniform bearing. Surround the pipe with additional finely divided material to at least 6-inches over the top of the pipe. Bedding shall be placed in 6-inch maximum lifts. Backfill shall be site soil placed above the bedding to finish grade. There shall be no rocks over 2" in greatest dimension or organic matter in the backfill. All bedding and backfill shall be properly moisture conditioned and compacted at each lift. All trenches shall have a minimum relative compaction of 90%. Compaction shall be tested by the City at locations to be determined by the Geotechnical Engineer.

5. Finished trenches shall be flush with adjacent finish grades. The Contractor shall be responsible for maintaining the trenches flush and smooth with adjacent surface grade until final acceptance of the project. After compaction has been approved, trenches in existing turf areas shall be re-planted per "Method A" lawn repair of the Landscape Planting Specifications, unless otherwise noted.

C. Irrigation Pipeline Installation - General: Execute trench excavating and backfilling, including the depth of cover over the pipeline, in accordance with requirements above.

1. Pipe layout as shown on irrigation plan is diagrammatic. Contractor shall route piping in planted areas in the most expedient manner consistent with the requirements set forth herein, including avoidance of tree roots.

2. When two or more pipelines are installed in the same trench,

separate the pipelines by a minimum horizontal clear distance of 12-inches. Install piping such that each pipe, valve, or other component may be serviced or replaced without disturbing the others.

2. During installation of pipe, fittings, valves, and other components, prevent soil or foreign matter from entering the system. Temporarily cap or plug all open ends at completion of installation operations.

3. All changes in pipe size shall be made with reducer fittings. No close nipples or bushings shall be used.

4. Where irrigation piping crosses a vehicular roadway or other paving, sleeve all pipe and conduit inside a Schedule 40 PVC sleeve of a minimum of two pipe sizes larger than the piping to pass through it under the paving at the depth of the mainline or 30 inches minimum. All sleeves shall extend a minimum of 3 feet beyond the edges of paving.

5. Pipe or irrigation components of dissimilar metals shall be separated by an approved "Dielectric" coupling.

D. Steel Pipe:

1. Square cut and ream pipe ends to full size with a long taper reamer.

2. Cut threads with clean sharp dies.

3. Make joints with a non-toxic, non-hardening joint compound applied to the male threads only.

4. Wrap steel pipe embedded in the ground with seamless 10 mil F.D.S. Safe-T-clad tape. Spiral wrap pipe with uniform laps. Apply the second layer of wrap in the reverse direction of the first layer of wrap.

5. Joints and any remaining unwrapped portion of the pipeline shall be similarly wrapped after pressure testing.

E. Solvent Welded Plastic Pipeline:

1. Join plastic pipe with slip type solvent welded fittings, threaded

fittings as specified. Install steel pipe first when plastic pipe is joined to steel pipe.

2. Cut pipe square, externally chamfer approximately 10-15 degrees, and remove all burrs and fins.

3. Prior to the application of the P.V.C. solvent cement, prepare all surfaces to be solvent welded with tetrahydrofuran primer tinted purple. Make solvent welded joints in accordance with ASTM D2855 - PRACTICE FOR MAKING - SOLVENT - CEMENTED JOINTS WITH POLY (VINYL CHLORIDE) (PVC) PIPE AND FITTINGS. Use a solvent approved by the pipe manufacturer.

4. Install plastic pipe in accordance with ASTM D2774 - PRACTICE FOR UNDERGROUND INSTALLATION OF THERMOPLASTIC PRESSURE PIPING and the requirements herein. Exercise care in assembling a pipeline with solvent welded joints so that stress on previously made joints is avoided. Handling of the pipe following jointing, such as lowering the assembled pipeline into the trench, shall not occur prior to the set times specified by the manufacturer.

5. Apply solvent to pipe ends in such a manner that no material is deposited on the interior surface of the pipe or extruded into the interior of the pipe during jointing. Wipe off excess cement on the exterior of the joint immediately after assembly.

6. Make threaded pipe joints using Teflon tape or other approved jointing material. Do not use solvent with threaded joints. Protect pipe from tool damage during assembly. Use vises with padded jaws and strap wrenches for installation of fittings and nipples. Remove and replace any plastic pipe which has been nicked, scarred, or otherwise damaged.

7. Snake plastic pipe from side to side in the trench to allow 1-foot of expansion and contraction per 100 feet of straight run.

8. Do not expose the pipeline to water for 24 hours after the last solvent welded joint is made.

F. Bell and Spigot Gasketed Pipeline:

1. Join plastic pipe with “push-on” type gasketed fittings with mechanical restraints as detailed and specified.

2. Cut pipe square, externally chamfer approximately 10-15 degrees, and remove all burrs and fins. Remove and replace any plastic pipe which has been nicked, scarred, or otherwise damaged.

3. Align pipe sections straight. Clean all debris from the bell areas of the fitting and install gasket so that it is completely seated in the groove with no raised areas.

4. Apply lubricant to the installed gasket and to beveled end of the cut pipe or to the spigot end of the pipe or fitting. Align the pipe with fitting and push together by hand or with pry bars on the end of the fitting or with two pry bars using the lugs on the fitting. Insert until the reference line mark is even with edge of the fitting bell.

5. Install mechanical restraints per details and manufacturer's instructions.

6. Snake plastic pipe from side to side in the trench to allow 1-foot of expansion and contraction per 1000 feet of straight run.

G. Installation of Valves, Valve Boxes, and Special Equipment:

1. General: Install all valves and other equipment in strict accordance with the details, and make readily accessible for manual operation, maintenance or replacement.

2. Install isolation or gate valves of the same size as the pipeline in which they are installed, unless otherwise indicated.

3. Install all valves below ground housed in a covered valve box with a securable lid that will permit access for field servicing. Boxes shall be set flush with existing grade, including sloped areas, and all soil within 12 inches of the perimeter of the box shall be compacted per the trench repair section of this specification. Boxes are to be positioned per details.

4. Set valve boxes per applicable details and set valves at sufficient depth to provide clearance between the cover and valve handle or key when the valve is in the fully open position. Do not cover valve with pea gravel.

5. Install backflow preventers per applicable details with pipe supports and the accessories necessary to properly secure the assembly where required. Install backflow preventers per prevailing codes. All Backflow devices shall be certified by a licensed inspector as required by the County Health Department Test Instructions, Water Pollution Control Section after installation at the Contractor's expense.

6. No equipment shall be installed closer than 12 inches to any paved surface, unless separated from the paved surface by a wall, fence, curb, or similar barrier, or installed underground.

H. Irrigation Head Installation and Adjustment:

1. General: In accordance with the requirements of Subsection 3.2 of this Section, flush and pressure test all mains and flush lateral lines before installing irrigation heads.

2. Irrigation Head Placement and Spacing:

a. Irrigation plans are designed, as a minimum standard, for head-to-head coverage on all spray heads. Head locations shall be determined by referencing the irrigation plan and using the head spacing listed in the irrigation head legend. Accuracy of final installation shall be within plus or minus 12 inches for all rotary heads having a throw of 30 feet or greater; within plus or minus 4 inches for all head types with a throw of under 30 feet. Do not exceed the maximum irrigation head spacing shown on the Contract Drawings.

b. Prior to head installation, Contractor shall mark the proposed locations of all irrigation heads in the field for review and approval by the Engineer. Contractor shall make any adjustments to head locations requested by the Engineer at that time at no additional expense to the City. Contractor shall provide minimum 48 hours notice prior to the requested time of inspection.

3. Head Installation:

a. Do not exceed the maximum irrigation head spacing shown on the Contract Drawings.

b. Install all irrigation heads 3-inches clear of adjacent walks, curbs, paving, headers, and similar improvements. Adjust all heads to flush with the final finish grade - adjusting for depth of sod in turf areas if needed.

c. All soil within 12 inches of the perimeter of the head shall be compacted as indicated in applicable details.

d. All irrigation heads shall be installed on swing joint assemblies as shown on details.

4. Irrigation Head Adjustment:

a. When all irrigation heads are installed and the irrigation system is operating, adjust and balance each section or unit with all section control valves fully open to obtain uniform 100% head to head coverage.

b. Adjust irrigation heads having adjustable pin nozzles, screws or orifices to provide optimum distribution of water over the coverage pattern. Without additional cost to the City, Contractor shall substitute larger or smaller nozzles in irrigation heads and/or add or omit sprinkler heads as necessary to obtain uniform coverage to meet MWELO requirements. Any requested modification shall not alter the total GPM to a degree to require a major revision of pipe sizing.

c. At no time is the irrigation system to cause excessive overspray on adjacent paved areas, or cause any erosion to the site.

d. Low Head Drainage: The Contractor shall install in-line drainage swing check valves where necessary to prevent low head drainage or as indicated on contract drawings.

I. Automatic Control System Installation:

1. General: Install a complete automatic irrigation 2-wire control system, including the automatic controller, automatic control valves, decoders and wiring, and all necessary accessories and utility service connections.

2. Install the automatic controller outside of the coverage pattern of the irrigation system at the location designated on the Contract Drawings. Verify location with City Engineer prior to installation.

3. Install a separate disconnect switch between the source of power and the controller inside the controller enclosure per details. Provide grounding per details and manufacturer's instructions.

4. Install all electrical service wiring per Electrical Code in galvanized steel electrical conduit from the service point to the controller. The minimum service wire shall be No. 12 AWG copper 600 volt, Type THW or THWN or larger, as required by the controller manufacturer. Locate splices only in specified pull boxes and make splices with a waterproof packaged kit approved for underground use. Set pull boxes to finish grade on a 12-inch deep layer of one (1) inch crushed rock.

5. All 2-wire control wire shall be installed in 1-1/4" SCH 80 PVC conduit per details, with a maximum run of 200' between pull boxes. Install conduit in the same trench as irrigation mainline per trenching detail where possible. Low voltage control wire conductors between the 2-wire decoders and the valves shall be installed in 1/2" SCH 80 PVC conduit per details.

6. Wire connectors shall be DBY or DBR as manufactured by 3M Corp. Control wires shall be stripped of 1/2 inch of insulation USING A WIRE-STRIPPING TOOL SPECIFICALLY MADE FOR THAT PURPOSE, inserted into the electrical spring connector, and the connector twisted in a clockwise direction until the wires are tight. Insert the completed splice into the gel-filled tube, and check visually to confirm that the wire nut has been pushed past the fingers and is seated in the bottom of the tube. Position wires in wire channels and close insulator cover. Make splices in control wire in accordance with the requirements for service wire. Leave at least 2-feet of coiled slack at each splice and point of connection inside of valve boxes.

7. Testing Electrical Components: Field tests shall be performed by the Contractor on all irrigation system conductors in accordance with the requirements specified herein prior to performing the functional tests. Where conductors are installed by trenching and backfilling, such tests shall be performed after

at least six (6) inches of backfill material has been placed over the conductors and backfill material has been compacted.

a. Prior to the start of the functional testing, the Contractor shall perform the following tests on all irrigation system electrical conductors in the presence of the BCA Inspector.

b. Each circuit shall be tested for continuity and open circuits.

c. Each circuit shall be tested for grounds.

d. An insulation resistance test at 500-volts DC shall be made on each circuit between the circuit and the ground. The insulation resistance shall not be less than 10-megohms on all circuits.

e. The functional test for all the electric automatic irrigation system(s) shall consists of a minimum of fifteen (15) working days of operation during which time the controller shall complete at least three (3) complete cycles automatically for each station. The lengths and frequencies of the cycles will be determined by the City's representative. If unsatisfactory performance of the system develops, the condition shall be corrected and the test repeated until fifteen (15) working days of continuous, satisfactory operation is obtained.

f. The functional test shall be satisfactorily completed prior to the start of the plant establishment period.

g. Repair to the irrigation system wiring shall be made within five (5) working days of a malfunction or damage to any portion of the system.

8. Contractor shall leave the control system in operating condition with an operational chart mounted within the controller cabinet upon completion of the work.

3.3 FLUSHING AND TESTING

A. After completion, and prior to the installation of any terminal fittings, thoroughly flush the entire pipeline system to remove dirt, scale, or other material. After flushing, conduct the following tests in the sequence listed below. Provide all equipment, materials, and labor

necessary to perform the tests. Conduct all tests in the presence of the City Inspector.

1. The irrigation system mainlines shall be pressure tested for 24 hours at 125 p.s.i. with all control valves in place and closed. During the test, the Contractor shall provide pressure gauges downstream from the backflow device and upstream from the farthest remote control valve in the system. Air pressure testing of the irrigation system is acceptable if approved by the BCA inspector. Placement of control wires shall be verified before mainline trenches are backfilled after pressure test.

2. After installation, the irrigation lateral lines shall be thoroughly flushed in the presence of the BCA inspector. Each valve and lateral system shall be flushed commencing with the head closest to the valve and proceeding to the farthest head.

3. Irrigation Coverage Test: After installation of heads and lateral lines etc., entire irrigation system shall be tested for coverage. The BCA Inspector, Project Manager, Contractor and Recreation and Parks Regional maintenance staff shall be notified three (3) days before the scheduled test. Perform the coverage test for each zone after irrigation heads have been installed and demonstrated that each section or unit in the irrigation system is balanced to provide uniform and adequate coverage of the areas serviced. Correct deficiencies in the system in accordance with the requirements of Subsection 3.2(G)4.

4. Operational Test: Evaluate the performance of all components of the automatic control system for manual and automatic operation. During the maintenance period, and at least 15 days prior to final inspection, set the controller on automatic operation so that the system will operate satisfactorily during such period. Make all necessary repairs, replacements, and adjustments until all equipment, electrical work, controls, and instrumentation are functioning in accordance with the Contract Documents.

3.4 OPERATING MANUALS AND EQUIPMENT

A. Furnish the City with 2 bound copies of operating and maintenance manuals for all irrigation system equipment such as automatic controller, valves, heads, etc.

B. Explain in detail all irrigation equipment operations, watering schedule and maintenance procedures to the City personnel as directed by the Project Manager before completion of the project.

C. Provide the City with a reduced legible copy of the "As-Installed" Irrigation Plan hermetically sealed in a plastic cover to be affixed inside the controller cover.

3.5 RECORD DRAWINGS

Irrigation record drawings shall include the following: Dimension the following locations from two permanent points of reference (building corners, sidewalks, road intersections, etc.):

a. Connection to existing water lines
b. Connection to existing electrical power
c. Gate valves
d. Mainline routing and/or directional turns (dimension maximum 100 feet along routing).
e. Remote control valves
f. Air and pressure relief valves
g. Master valves/flow sensors
h. Control wire routing
i. Quick coupling valves
j. Lightning protection (rod, plate, etc.)
k. Pull boxes
l. Irrigation controllers
m. Backflow prevention units

END OF SECTION 02810

SECTION 02820
CHAIN LINK FENCING AND GATES

PART ONE - GENERAL

1.1 SUMMARY

A. All permanent chain link fencing, gates and appurtenances as indicated on the Contract Drawings and as specified herein, and as needed for complete and proper installation.

B. Related Work Sections:

1. Concrete Work in Section 03300.

1.2 QUALITY ASSURANCE

A. Labor: Use adequate number laborer's who are thoroughly trained and skilled in the fencing trade and who are completely familiar with the specified requirements and methods needed for the proper executions of the work of this Section.

B. Codes and Regulations: Perform all work in strict accordance with applicable Government Codes and Regulations, meeting all "Safety Standards" of CAL/OSHA, County and the current Los Angeles City Building Code and applicable Amendments.

C. Qualification of Fabricators: Provide adequate number of fabricators who are thoroughly familiar with the specified requirements regarding fabrication of fencing fabrics, posts and gates.

D. Quality of All Materials and Accessories: All materials and accessories shall conform with the requirements of the Standard Specifications for Public Works Construction (SSPWC) and specified herein.

1.3 SUBMITTALS

A. General: Comply with applicable provisions the GENERAL REQUIREMENTS and other Sections of the Project Manual.

B. Product Data:

1. CONTRACTOR shall provide Shop drawings in sufficient detail to show layout of fence and gate, elevation details, fabrication, assembly, hardware, installation, anchorages and interface of work of this Section with work of adjacent trades.

2. Manufacturer's Specifications and other data needed to prove compliance with the specified requirements for chain link fabric, posts and rails.

3. Manufacturer's recommended installation procedures which when reviewed and approved by the ENGINEER, will become the basis for accepting or rejecting actual installation procedures used on the Work.

4. Vinyl coating and color for chain link fabric. Note: For special post coating, use section 206-6.1 of SSPWC.

1.4 PRODUCT HANDLING

A. Protection: Protect fencing fabric, posts and gate assemblies before, during and after installation. Properly package and identify and note location of unassembled items (hardware, etc.) for protection against damage.

B. Delivery: Deliver all items to be built into concrete or masonry work in time, so as not to delay construction and installation operations.

PART TWO - PRODUCTS AND FABRICATION

2.1 MATERIALS

A. General: All materials for fencing, posts and gates and fasteners to be new and hot-dipped galvanized.

B. Galvanizing: Where noted on drawings or Specified herein, metal products shall be hot-dipped galvanized, and comply with requirements of Section 210-3 - GALVANIZING of SSPWC, except as modified herein.

C. Fabric:

1. Galvanized steel chain link fabric shall conform to ASTM A392 - SPECIFICATION FOR ZINC COATED STEEL CHAIN LINK FENCE

FABRIC and A817 - SPECIFICATION FOR METALLIC - COAT STEEL WIRE FOR CHAIN LINK FENCE FABRIC. Fabric shall be 2-inch mesh of 9-gage steel wire (minimum 75,000 psi tensile strength) galvanized with 1.2 oz/ft^2 zinc, in single fabric width for the entire height. Top and bottom selvedges shall be knuckled.

Vinyl coated galvanized steel fabric, when specified, shall conform to ASTM F 668, Class 2b, "fused and adhered", and meet the galvanizing requirements contained in this section, (206-6.3).

2. Fabric Tie: 11 gage galvanized steel used to fasten the fabric to posts, rails and gate frame.

D. Posts:

1. Schedule 40 Standard weight pipe conforming to ASTM F-1083 - SPECIFICATION FOR PIPE, STEEL, HOT-DIPPED ZINC - COATED (GALVANIZED) WELDED, FOR FENCE STRUCTURES.

2. Line Posts: 2 3/8-inch O.D. complete with malleable iron eye-top of suitable design to provide moisture-proof cap.

3. Terminal (End) and/or Corner Posts: 2 7/8-inch O.D. with malleable iron moisture-proof cap.

4. Gate Posts: 4-inch O.D. complete with malleable iron moisture-proof cap.

E. Top and Bottom Rails: 1-5/8 inch O.D. standard weight steel pipe complete with end caps and end clamps for attachment to posts.

F. Horizontal and Diagonal Bracing:

1. Horizontal Rails with Diagonal Bracing to all end sections: Intermediate horizontal rail, 1-5/8-inch O.D. standard weight steel pipe complete with end caps and clamps for attachment to posts.

2. Diagonal: 3/8-inch diameter steel truss rods complete with turn buckles and attachments to post.

G. Tension Wire: For fabric of 9-gage and heavier use 6-gage galvanized coiled spring steel wire.

H. Galvanizing Repair Material: Galvanized surfaces which have been

damaged in transport or during installation shall be re-coated using the metalizing process or zinc oxide, zinc dust paint per Section 210-3.5 of the SSPWC.

I. Galvanized Steel Brace Bands, Tension Bands or Bars and Tension Rods: Brace bands shall be galvanized**,** minimum of 3/16 inch x 3/4-inch wide; tension bands or bars shall be 3/16 inch x 3/4-inch wide and tension rods shall be 3/8 inch diameter galvanized steel rod with galvanized turnbuckles or other suitable tightener or tightening devices.

2.2 GATE HARDWARE

A. Swinging Gate:

1. Hinges: Heavy-duty ball and socket, industrial service**,** offset type**,** minimum 3 inch in width.

2. Latch for Single Swing Gate: Heavy malleable iron, fork type with provisions for padlocking.

3. Latch for Double Swing Gate: Heavy center drop rod latch assembly with provisions for padlocking. For hold-back sleeves provide steel pipe of diameter greater than of drop rod diameter and of length indicated on the Drawing.

2.3 GATE CONSTRUCTION

A. Swinging Gate Frame Construction:

1. All welded, fabricated of 1-7/8 inch O.D., galvanized steel pipe; all welded joints ground smooth and coated with a galvanizing repair material; all in accordance with reviewed Shop Drawings.

2. Frame Bracing: Use galvanized steel truss rods with galvanized turn buckles as hereinbefore specified.

3. Fabric: Same as hereinbefore specified for fencing, placed on exterior side of gate frame, as indicated, in same manner as specified for fencing.

PART THREE - EXECUTION

3.1 SURFACE CONDITIONS

A. Examine the areas and conditions under which work of this Section will be performed. Correct conditions detrimental to timely and proper completion of the work. Do not proceed until detrimental conditions are corrected.

3.2 CHAIN LINK FENCE INSTALLATION

A. Post Setting: In concrete foundations per applicable detail/s; set plumb, at specified height and spacing, in straight alignment for uniform installation as indicated on the Drawings.

1. Excavating and Backfilling: Neatly and accurately excavate foundation holes for posts as indicated. Compact subgrade or any loose material. Solidly and firmly backfill around completed concrete foundations with excavated earth materials to finish grade or to proper elevation, as necessary for required paving as applicable.

2. Concrete Footings: Minimum 2500 psi concrete or as otherwise specified on drawings and conforming to the most recent edition of Los Angeles City Building Code and applicable Amendments. Finish top of footing smooth and even, sloped to shed water and with edges at finish grade of adjoining ground or adjusted for paved surfaces. Allow concrete to attain at least 75% of its 28-day strength before installation of fencing components.

C. Top Rail: Extend through post eye-top caps and attach ends to corner, gate, and/or terminal (end) posts.

D. Horizontal and Diagonal Bracing:

1. Horizontal Rail: Locate mid-height in fencing panels adjacent to gates, corner, and terminal (end) posts.

2. Diagonal Bracing: Extend from the joint of horizontal brace (with

adjacent post) diagonally to the base of gate, corner, or terminal post.

E. Chain Link Fabric:

1. The fabric shall be installed so that the edge extends beyond the top rail and the bottom rail by 1 inch. The bottom of the fabric shall extend to within 1 inch maximum of the natural ground or final grade. High points of ground shall be excavated to clear the bottom of the fabric and depression shall be filled and compacted to within 2 inches of the bottom of fabric. Secure fabric to tension wire with galvanized clip rings or wire ties spaced not more than 18 inches apart.

2. Tightly stretch and secure to line posts, with adequate tie wires, space maximum 18-inches apart or as recommended by manufacturer.

3. Secure fabric to top rail, terminal (end) and gate posts by means of heavy, galvanized steel bands bolted to 1/4-inch x 3/4-inch tension bars passing vertically through full height of fabric 16 inches interval.

3.3 SWINGING GATE INSTALLATION

A. Properly hang or set gate(s) in plumb and level position for full opening without interference and adjust the hardware for smooth and trouble-free operation and inspect latching and locking hardware for proper alignment and function.

3.4 MISCELLANEOUS

A. Use U-shaped tie wires, conforming to diameter of pipe to which attached, clasping pipe and fabric firmly with ends twisted at least two full turns.

B. Bend ends of wire to minimize hazards to persons and clothing.

C. Fasteners:

1. Install galvanized nuts for tension band and hardware bolts on side of fence opposite fabric side.

2. Peen the ends of bolts to prevent removal of the nuts.

D. Repairs: Repair fencing coatings damaged in the shop or during field erection using a hot-applied repair compound applied in accordance with repair compound manufacturer's recommendations as approved by the City Engineer; at no added cost to the City.

E. Cleanup: Comply with provisions of the GENERAL REQUIREMENTS regarding removal from the jobsite; rubbish, all equipment, unused materials, temporary structures and/or facilities no longer required.

END OF SECTION 02820

SECTION 02840
CONCRETE WHEEL BUMPERS

PART 1 GENERAL

1.1 SUMMARY

A. Furnish and install concrete wheel bumpers (wheel stops) as indicated on the drawings and specified.

B. Product Data: Submit information describing the materials used in the manufacture of the wheel bumpers.

PART 2 PRODUCTS

2.1 MATERIALS

A. Concrete shall conform to the following:

1. Minimum compressive strength: 4,000 pounds per square inch (psi) minimum at 28 days.

2. Air content: 5 to 8 percent.

3. Size of bumpers shall be as indicated on the drawings.

B. Reinforcing bars shall be deformed billet steel conforming to ASTM A615, Grade 60.

C. Anchor stakes for driving into the ground shall be No. 4 reinforcing bars or steel pipe conforming to ASTM A53.

D. Adhesive for Securing of Concrete Wheel Bumpers: An epoxy two-component type, long curing, manufactured by Edeco, Furance, Andrew Brown, Adhesive Engineering Company, or equal.

PART 3 EXECUTION

3.1 INSTALLATION ON ASPHALT PAVEMENTS

A. Secure bumpers in place with steel stakes, two per bumper, driven to at least 1/4-inch below top surface of the bumper, through the pavement and not less than 12 inches into the subgrade.

3.2 INSTALLATION ON PORTLAND CEMENT CONCRETE PAVEMENTS

A. Secure bumpers in place with 2-component epoxy adhesive. Surfaces to receive adhesive to be free of laitance, dirt, loose particles or other foreign matter and shall be completely cured and dry.

B. Slightly roughen the smooth surfaces as recommended by the adhesive manufacturer to provide for proper bond. Properly cure the adhesive after placing of bumper unit.

END OF SECTION 02840

SECTION 02932
LANDSCAPE PLANTING

PART ONE - GENERAL

1.1 DESCRIPTION

A. Work Included:

1. All labor, materials, equipment, and tools necessary to provide and execute: soil preparation and amendments; planting of new trees, plants, shrubs, ground cover and sod; all required testing and inspections; maintenance and establishment of new landscape plantings as indicated on the Contract Drawings, specified herein and as needed for complete and proper installation and maintenance.

1.2 SUBMITTALS

A. The CONTRACTOR shall make all required materials submittals in accordance with the General Requirements.

B. The CONTRACTOR shall make substitution submittals in accordance with the General Requirements.

C. Submit copies of the following:

1. Complete list of landscape plant materials soil amendments, fertilizers, herbicides, and miscellaneous hardware complete with descriptions and/or photographs and manufacturer's literature. Clearly mark or underline proposed items.

1.3 QUALITY ASSURANCE

A. Codes and Regulations: CONTRACTOR to obtain and pay for all required permits. Deliver all permits and submit certifications of compliance to the CITY ENGINEER.

1.4 GENERAL REQUIREMENTS

A. Required Approvals by the ENGINEER: No work included in this Section shall be commenced until the following are completed and approved:

1. Any required agricultural suitability and fertility analysis or testing and weed/pest control prior to placing topsoil or soil amendments.

2. All work on irrigation system prior to start of landscape planting work.

3. All reviews on required submittals and re-submittals requested by the ENGINEER for materials included in this section.

B. Inspection: All work and materials are subject to inspection and approval by the Bureau of Contract Administration (BCA) Inspector and the PROJECT MANAGER. Any work done without proper inspection will be subject to rejection per Section 2-11 of the Standard Specifications for Public Works Construction. The CONTRACTOR shall notify the Bureau of Contract Administration (BCA) Inspector and PROJECT MANAGER three (3) days prior to requested inspection of the following for approvals:

1. For all finish grades in planting areas following all weed/pest control, soil fertilizing and conditioning, prior to landscape container planting, and after rolling in turf areas.

2. Inspection of all plant materials under 24" box size shall be at the time of delivery to the job site. This inspection will be for compliance with the caliper, height and spread requirements if given on the plant legend and for the general health, structure and appearance of plants. The CONTRACTOR shall also stake all tree planting locations at this time for review and approval by the ENGINEER.

3. Tagging of 24" box or larger trees at the grower with Recreation and Parks tags. This inspection will be for compliance with the caliper, height and spread requirements if given on the plant legend and general health, structure and appearance of plants. All trees shall be tagged by the ENGINEER or authorized representative.

4. All completed landscape planting and irrigation work for approval to begin the plant maintenance and plant establishment period.

C. Existing Plant Materials: Protect all existing plant materials, not designated for removal or modification, in place against damage resulting from work of this Contract. Perform any removal and/or trimming only on approval or instructions from the CITY ENGINEER or in accordance with applicable provisions noted or specified on the Contract Drawings. CONTRACTOR shall replace all damaged existing plant

material with like type and size material. If an acceptable replacement is not available, CONTRACTOR shall pay damages to the CITY for the value of the damaged tree as assessed by the tree value formula in the ISA Guide for Establishing Value of Trees and Other Plants.

D. Tree Protection Requirements: See sheet LP03 and LP04.

1.5 DELIVERY, STORAGE AND HANDLING

A. Delivery:

1. Delivery of plant material shall begin only when it is ready for plant installation and after the inspections are made and any required soil samples and tests have been reviewed by the PROJECT MANAGER. All materials furnished for the work shall be not less than the approved submittal. Upon delivery, CONTRACTOR shall tag one plant of each variety for identifying purposes.

2. Notify the ENGINEER of a scheduled delivery a minimum of 48 hours in advance so the plant materials may be inspected upon arrival at the jobsite. All plant material judged by the ENGINEER at the time of delivery as unacceptable shall be removed immediately from the jobsite by the CONTRACTOR. All trees not accompanied with the tags signed placed the ENGINEER or the authorized representative**,** or plants not correspondent with contract requirements shall be rejected and immediately removed from the job site.

3. Protect plants during delivery against damage to root balls or desiccation of leaves. Protect trees during transport by tying in the branches and covering all exposed branches.

4. Deliver fertilizer to the jobsite in the original and unopened containers bearing manufacturer's guarantee chemical analysis, name, trademark or trade name in conformance with Federal and Local law. In lieu of containers, fertilizer may be furnished in bulk and a certificate indicating the above information shall accompany each delivery.

B. Storage:

1. Store plants, trees, etc. at the jobsite where directed by the PROJECT MANAGER.

2. Keep fertilizer in dry storage away from contaminants. Loose fertilizers and soil amendments shall be kept covered with a tarp.

3. Store plants not installed on the day of arrival at the jobsite as follows:

   a. Outside storage to be protected from wind.

   b. Keep plants in containers in a moist condition until planted by watering with fine mist spray.

C. Handling: Transport and handle plants with care to ensure protection against injury.

PART TWO - PRODUCTS

2.1 MATERIALS

A. Topsoil: The type and thickness of topsoil shall be as shown on the plans. If not shown, the topsoil shall be the existing class "C" on-site topsoil and amended as indicated.

B. Fertilizers and Conditioning Materials: Comply with the applicable requirements of the State Agricultural Code. All fertilizing materials shall be packaged, first grade, commercial quality products identified by source, type of material, weight and manufacturer's guaranteed analysis. Fertilizing material shall not contain toxic ingredients or fillers in quantities harmful to human, animal, or plant life.

1. Agricultural Gypsum: Hydrated calcium sulfate product containing 23 percent calcium and 18 percent sulfur with a guaranteed analysis of 84 percent calcium sulfate.

2. General Purpose Fertilizer: Shall be Gro-Power Plus fertilizer, having a minimum analysis of 5-3-1 (N-P-K) derived from ammonium phosphate, urea, sulfate of potash, compost and sulfides and oxides of iron, manganese and zinc, with 1.00% Alkyl Naphthalene Sodium Sulfonate soil penetrant as manufactured by Gro-Power Inc., 5065 Telephone Avenue, Chino, CA 91710 (909) 393-3744, or an approved equal. https://www.gropower.com

3. Fertilizer Tablets**:** Fertilizer tablets shall be Tri-C Myco Tabs planting tablets, 1.7 gram 17-9-5 (N-P-K) as manufactured by TRi-C Organics

Inc., (800) 590-3301, or an approved equal.
https://www.tricorganics.com

4. Non-Selective Herbicide**:** Shall be Finale™, by BASF, or an approved equal. All herbicides, when required, shall be specified and applied by a licensed Pest Control Advisor in a manner consistent with the manufacturer's product labelling. Prior to application, CONTRACTOR shall submit proposed herbicide and a diagram showing the area of application for approval to the PROJECT MANAGER.

5. Pre-Emergent Herbicide**:** Shall be Specticle G Pre Emergent Granular Herbicide, by Bayer Environmental Sciences, or an approved equal applied at the rate of 2.3 lb./1000 sf. All pre-emergent herbicides, when required, shall be specified and applied by a licensed Pest Control Advisor per the manufacturer's recommendations.

6. Granular Humic Acid Soil Conditioner: Shall be LIVE EARTH HUMATE SOIL CONDITIONER [PLUS GYPSUM] or Tri-C Humate [Tri-C Humate Plus with Gypsum] or approved equal. Contact Todd Burns, Live Earth Products, Inc. (661) 978-7307 for availability, or TRi-C Organics Inc., (800) 590-3301 https://www.tricorganics.com, or an approved equal. Apply per manufacturer's instructions.

7. Soil Penetrant**:** Shall be "Ground Breaker" by Green As it Gets, Inc. or approved equal. Soil penetrant shall contain organic yucca and kelp extracts. Soil penetrant MAY NOT contain alcohol. Apply soil penetrant per manufacturer's instructions. Contact: Green As It Gets Inc., 300 Morning Drive, Bakersfield, CA 93306 Phone: 1-800-476-0034. https://www.greenasitgets.com

8. Organic Soil Amendment**:** "Type 1" organic soil amendment shall be a relatively dry and friable fine-textured organic composite that is well-composted and nitrogen stabilized, derived from composted greenwaste or processed wood products, and free of foreign matter including animal waste and any viable plant, tree or weed seed. 99% of material shall pass through a 1/2" screen. CONTRACTOR shall submit a sample of the organic soil amendment to the PROJECT MANAGER for approval prior to installation.

   All Organic Soil Amendment shall conform with the following criteria:

a. The pH of the material shall be between 6 to 7.5.

b. Salinity: material shall have a maximum saturation extract conductivity of 2.50 millisiemens per centimeter.

c. Boron content of the saturated extract shall be less than 1.0 parts per million.

d. Sludge-based or animal waste materials are not allowed.

e. Carbon:Nitrogen ratio is less than 25:1.

f. All compost shall be aerobic without malodorous presence of decomposition products.

g. Maximum total permissible pollutant concentrations in amendment in parts per million on a dry weight basis:

Arsenic	20	Copper	150	Selenium	50
Cadmium	15	Lead	200	Silver	10
Chromium	300	Mercury	10	Vanadium	50
Cobalt	50	Molybdenum	60	Zinc	300
Nickel	100				

9. Top Dress Mulch**:** Shall be well-seasoned composted tree chip mulch, free all foreign matter including weed and tree seeds. Mulch chip size shall be minimum one (1) inch in diameter and not more than four (4) inches in diameter. Submit a sample of mulch and source to the PROJECT MANAGER for approval prior to application.

C. Plant Materials:

1. Availability & substitutions: No substitutions of plant species, type, cultivar, size etc. will be accepted without prior approval of PROJECT MANAGER. CONTRACTOR is expected to utilize all reasonable nursery resources in the Southern California region before determining if a specified material is unavailable. When plants of a specified kind or size are determined by PROJECT MANAGER to be not available, substitution may be made upon approval by the ENGINEER, in accordance with the General Conditions. CONTRACTOR shall provide information regarding his attempts to locate such material.

2. All Plants: The plant names shown or listed on the Contract Drawings

shall conform to the “Sunset Western Garden Book”, latest edition unless otherwise specified. In all cases, botanical names take precedence over common names. One plant of each variety shall be tagged for identifying purposes.

3. Quality: All plants shall have a growth habit normal to the species in accordance with U.S.A. Standards for Nursery Stocks, latest editions; shall be sound, healthy, vigorous and free from insect pests, plant disease, sun scalds, weeds, fresh bark abrasions, excessive abrasions or other objectionable disfigurements. Tree trunks shall have normal well-developed branch systems. All plant materials shall have vigorous and fibrous root system, not root bound and shall be free of kinked or girdling roots. The CONTRACTOR shall be responsible for the condition of all plants, planted or otherwise, until final acceptance by the CITY and termination of maintenance period

4. Sod: Shall be of the type designated on the planting plan, or an approved equal. Sod shall be delivered to the job site within 24 hours of being cut at the nursery, and COMPLETELY installed within 12 hours of delivery to the job site. The sod shall be machine cut to between 3/8” and 5/8” thick, not including top growth or thatch.

5. All plants shall be inspected and approved prior to planting as per provisions of Subsection 1.4(B) specified above

D. Tree Stakes:

1. Wood tree stakes 2-inches in diameter by 8-feet long, lodgepole grade, pressure-treated, capable of standing in the ground at least two years.

   a. All trees in non-turf areas as indicated on the Contract Drawings shall be *double staked* per detail.

   b. All trees in turf areas as indicated on the Contract Drawings shall be *triple staked* per detail.

E. Slope Stabilization and Erosion Control Material: Jute Mesh material shall be light weight, brown color, fire retardant, open weave construction and shall have a minimum 4-year longevity. Material shall handle maximum water flow of 8 feet per second.

PART THREE - EXECUTION

3.1 GENERAL

A. The Landscape work shall not be performed at any time when it may be subject to damage by climatic conditions.

B. The CONTRACTOR shall verify all dimensions shown on the Contract Documents and at the site.

C. In case of conflict between the plant schedule totals and total plant count of the contract documents, the CONTRACTOR shall provide the higher number of plants.

D. Delivery of material shall begin only when it is ready for the work and after the inspections are made and the required samples and tests have been reviewed by the ENGINEER. All materials furnished for the work shall be not less than the reviewed sample.

E. The CONTRACTOR shall provide temporary fencing, barricades, covering, or other protection to preserve existing landscaping items indicated to remain and to protect the adjacent properties and other structures from damages by the landscape and other contract work.

F. The CONTRACTOR shall abide by the Tree Preservation Guidelines, Section 1.4.D herein for all trees indicated to remain.

G. The CONTRACTOR shall remove and/or relocate landscape items such as trees, shrubs, grass, other vegetation, improvements, and obstructions as shown on Drawings or specified otherwise. All plant material to be removed shall be disposed of off the site in a legal and proper manner.

3.2 SURFACE CONDITIONS

A. Examine the areas and conditions under which work of this Section will be performed. Correct conditions detrimental to timely and proper completion of the work. Do not proceed until detrimental conditions are corrected.

3.3 AGRICULTURAL SUITABILITY AND FERTILITY ANALYSIS TESTS

A. General**:** CONTRACTOR shall submit the existing Class C Topsoil for Agricultural Suitability and Fertility Analysis. CONTRACTOR shall sample a minimum of three typical locations of existing on-site soil proposed to be used for topsoil and submit them to a certified soil laboratory for required soil analysis. The location of the soil sample and intent of the soil analysis are to provide the following:

1. Accurate soil amendment and fertilizer recommendations with regards to type, quantity and procedure to create suitable planting soil for plant material which includes trees, shrubs, ground covers and turf.

2. Identify any potential problems in the relationship between specified of plant materials and existing soil conditions that may ultimately affect plant growth.

3. For on-site soil, use a soil probe or soil auger to remove soil core samples. Otherwise use a shovel to dig a hole to the desired depth. Sample the soil from the side of the hole by scraping it with a trowel. The tools need to be clean and not rusty. Avoid sampling when the soil is too wet.

B. CONTRACTOR shall provide the ENGINEER with a copy of the completed report with recommendations for soil amendments and fertilization for initial planting, as well as any measures to be taken during the plant establishment period. on laboratory letterhead for review prior to commencement of soil preparation.

C. Agricultural Suitability and Fertility Analysis:

1. Must include pH measurement in the Saturation Extract, Electrical Conductivity of the saturation extract and Sodium Adsorption Ratio of the saturation extract.

2. The following nutrients and elements must be determined with an approved extraction method. Interpretation data must be given citing concentrations which are considered to be low, medium and high: Boron, Calcium, Copper, Iron, Magnesium, Manganese, Molybdenum, Phosphorus, Potassium, Sodium, Sulfur, and Zinc

a. The saturation extract must be analyzed for Calcium, Magnesium, Sodium, Boron, Chloride, Nitrate and Sulfate.

b. The following trace metals must be measured by the DTPA extract: Aluminum, Arsenic, Cadmium, Chromium, Cobalt, Lead, Lithium, Nickel, Selenium, Silver, Strontium, Tin and Vanadium.

c. The presence of Calcium Carbonate and/or Magnesium Carbonate must be determined.

d. Soil Texture and Organic Matter content may be estimated or determined by commonly used methods.

e. Interpretation of nutritional deficiencies or excesses and potential toxicities must be given.

3.4 GRADING AND SITE PREPARATION:

A. Rough Grading:

1. Earthwork and Topsoil Placement: Shall include excavation and backfilling for the irrigation system and the preparation for the spreading, densification, cultivation and raking of topsoil, including fertilization and conditioning.

B. Topsoil Preparation and Amendment:

1. After completion of *all necessary trenching and backfill* for electrical, irrigation, or drainage piping and conduit, bring planting areas to approximate finish grade, including construction of landscape mounds, before performing soil amendment. CONTRACTOR shall account for the amount of fertilizer and soil amendments to determine the appropriate grade.

2. Turf Areas: For all TURF planting areas *outside of tree protection zones,* Class "C" on-site ("native") topsoil shall be scarified and cultivated to a uniform, finely divided condition to a depth of 12 inches. Soil shall not be worked when it is so wet as to cause excessive compaction to cause the formation of large clods; or so dry as to create excessive dust. All soil amendments shall then be broadcast evenly at the rate as specified below (or per the recommendations of the approved agricultural suitability and fertility analysis if directed by the PROJECT MANAGER)**,** and then

thoroughly and uniformly incorporated to the depth of 12 inches**.** Prior to planting, the top 3 inches of all planting areas (including slopes) shall be free of weeds, stones and other deleterious matter 1-inch diameter and larger.

a. All turf planting areas shall receive the following soil amendments per 1,000 square feet:

4 cubic yards, Type I organic soil amendment
15 lbs. Agricultural Gypsum
50 lbs. Gro-Power Plus fertilizer

a. Topsoil shall be restored to a smooth finish grade after amendment process is complete and irrigated thoroughly to activate amendments and fertilizers.

2. Non-Turf Area Bulk Amendment**:** For all continuous areas designated on plans for tree, shrub and groundcover planting areas *outside of tree protection zones*, the Class "C" on-site ("native") topsoil shall be scarified to a depth of 1 inch, taking care not to damage surface roots.

a. After scarification, apply “GROUND BREAKER” soil penetrant to all planting areas at a rate of 1 gallon per 1,000 square feet per manufacturer’s instructions.

b. 2 hours minimum after applying soil penetrant, all planting areas shall receive the following soil amendment per 1,000 square feet:
   - 50 lb. GRANULAR HUMIC ACID SOIL CONDITIONER

c. Soil amendment shall be evenly broadcast on the surface and uniformly cultivated into the top 6” of the soil and *thoroughly irrigated*. Soil shall not be worked when it is so wet as to cause excessive compaction or to cause the formation of large clods; or so dry as to create excessive dust. Prior to planting, the top 3 inches of soil (including slopes) shall be free of weeds, stones and other deleterious matter 1-inch diameter and larger.

3. For all planting areas *inside of tree protection zones*, the Class "C" on-site ("native") topsoil shall be scarified to a depth of 1 inch, taking care not to damage surface roots.

a. After scarification, apply “GROUND BREAKER” soil penetrant to all planting areas at a rate of 1 gallon per 1,000 square feet per

manufacturer’s instructions.

b. 12 hours minimum after applying soil penetrant, all planting areas shall receive the following soil amendment per 1,000 square feet:
   - 20 lb. GRANULAR HUMIC ACID SOIL CONDITIONER

c. Soil amendment shall be evenly broadcast on the surface and uniformly cultivated into the top 1” of the soil and *thoroughly irrigated*. Soil shall not be worked when it is so wet as to cause excessive compaction or to cause the formation of large clods; or so dry as to create excessive dust. Prior to planting, the top 3 inches of soil (including slopes) shall be free of weeds, stones and other deleterious matter 1-inch diameter and larger.

4. For individual tree and shrub planting outside of designated bulk soil amendment areas, backfill shall be 100% Class "C" on-site ("native") topsoil uniformly amended with GRANULAR HUMIC ACID SOIL CONDITIONER at the rate specified below:

   15 gallon: 1/2 cup (US) per plant
   24" box: 2 cups (US) per plant
   36" box: 6 cups (US) per plant
   48" box: 10 cups (US) per plant

5. Incorporation of all soil amendments shall be performed in the presence of the BCA Inspector, and at that time CONTRACTOR shall furnish the BCA Inspector with delivery tickets to verify the source, kind and quantities delivered and applied. Furnish PROJECT MANAGER duplicate copies of the material invoices as required in Subsection 1.2 (C).

B. Finish Grading:

1. Make finish grade smooth, uniform and free of abrupt grade changes and depressions to insure proper surface drainage.

2. Finish grade below adjacent paving, curbs or headers shall be 1.5 inches in shrub or ground cover areas and 3/4 inch in sodded lawn areas.

3. Water soil after spreading of fertilizer and/or soil conditioning materials and allow it to settle to provide a stable surface. After the soil has dried out to a workable condition, regrade, rake and smooth

to the required grades and contours, eliminating any erosion scars. Finished surfaces shall be clean and suitable for planting.

4. Finish grading shall insure proper drainage of site. Surface drainage shall be away from all building foundations at a minimum of 2% or in accordance grades shown on Contract Drawings.

5. Turf Areas**:** Finish grading of turf areas shall take place after the soil has dried out to a workable condition following the soil preparation operations. The soil shall be remodeled and smoothed to the required grades and contours, then rolled in two directions at right angles with a water ballast roller weighing 200 to 300 pounds maximum. Any resulting irregularities in the grade after the initial rolling shall be re-raked, cut or filled, then re-rolled until the grade is free from irregularities. No trucks, tractors or other heavy objects shall be taken over the areas at any time. The final finish grade shall be smooth, uniform, without abrupt changes in grade, within one-tenth of a foot of the grades shown on the plan. No turf areas shall exceed 5:1 slope. Final grade must be approved by the CITY ENGINEER or BCA Inspector prior to seeding or sodding. (801-2.3).

3.5 WEED ABATEMENT

A. General: Unless specified otherwise, weed abatement shall apply to all planting areas. The abatement operation shall commence before planting but only after removals, grading, hardscape construction, installation of irrigation system, soil preparation, and fine grading of planting areas have been completed.

B. All herbicides for weed control shall be applied with a photosensitive dye which will produce a contrasting color when sprayed upon the ground. The dye shall be applied in a manner so as not to leave any stain upon finished surfaces.

C. The following precautions shall be observed in handling and applying herbicides:

1. Before applying, the CONTRACTOR shall read and understand all instructions provided by the manufacturer.

2. Herbicide product shall not be used when winds are gusty or in excess of 8 miles per hour, or when any other conditions exist which would result in drift.

3. DO NOT USE any combinations of pressure and nozzle type or adjustment that result in misting.

4. Do not apply during rain, or if rain is forecast within twelve hours. If rain occurs within a twelve-hour period after application, material must be reapplied after application area has sufficiently dried out.

5. CONTRACTOR shall observe extreme care not to allow spray to contact plant material designated to remain, or in adjacent areas. Use cardboard, plywood, or other appropriate material to shield plant materials outside of the treatment area from overspray.

6. Do not apply to bare ground.

D. Herbicide Application: Pesticides must be applied by a licensed Pest Control Applicator in accordance with the requirements of the California Food and Agricultural Code and specified herein. The CONTRACTOR shall abide by all laws and codes governing weed abatement operations including but not limited to CAL-OSHA requirements and The Healthy School Act of 2000 (AB2260). Prior to herbicide application CONTRACTOR shall:

1. Notify the PROJECT MANAGER a minimum of 72 hours in advance of each application of pesticide/herbicide and shall indicate the hours during which the application will occur. No applications shall be made on Saturdays, Sundays, or legal holidays, unless otherwise prior approval by the PROJECT MANAGER in writing.

2. Notify the Pest Management Supervisor of the RAP Forestry Division at (213) 485-4826. Do not add other products to any herbicide mix, including spreader, stickers, or surfactants, unless required by the label directions and approved by the RAP Pest Management Supervisor.

3. Prior to any approved pesticide applications at any RAP facility with a Recreation Center or Child Care Center, the CONTRACTOR is required to notify the Recreation Center Director a minimum of 72 hours in advance of each application.

4. Submit to the BCA Inspector and to RAP Forestry a “Pest Control Recommendation Form” prepared by a licensed Pest Control Advisor, and a provide completed and accurate SDS (Safety Data Sheet) to be kept at the site of application. The area of application

shall be posted as such and barricaded for public safety and information (site construction fencing is deemed adequate for this purpose when present).

5. Any questions regarding pesticide application and procedures at Recreation and Parks facilities shall be directed to the PROJECT MANAGER/BCA Inspector and the RAP Forestry group, Vegetative Management at (213) 485-4826.

E. "Grow and Kill" method: The CONTRACTOR shall adhere to the following steps:

1. Clear and grub the surface of the designated planting area by mechanical means or by hand, removing all surface vegetation (excepting any trees, shrubs or turf designated to remain per plans and notes), rocks, debris, etc. Do not disturb the roots or compact soil around any existing vegetation to remain or within designated Tree Protection Zones, and do not remove any topsoil during clearing work.

2. "Grow Period": Water all planting areas daily or as needed to keep soil evenly moist and promote weed germination and growth for a period of a minimum of *three weeks*. If, in the opinion of the ENGINEER the "Grow Period" irrigation was insufficient to achieve adequate germination, the "Grow Period" may be extended in minimum 7-day intervals at no additional expense to the CITY.

3. "Kill Period": At the conclusion of the grow period and approval by the ENGINEER, treat all emergent weeds within the planting area with approved herbicide per the submitted and approved "Pest Control Recommendation Form" following the manufacturer's instructions and labelling - *taking care to protect all trees, shrubs, turf etc. designated to remain*. If nutsedge (nutgrass) is determined to be present in any of the planting areas by the ENGINEER during the "Grow Period", CONTRACTOR will be required to apply a separate selective herbicide manufactured specifically for the control of nutsedge at no additional cost to the CITY until nutsedge is completely eradicated.

4. After spraying, do not water or otherwise disturb treated areas for a minimum period of two (2) weeks.

5. After the two-week kill period, remove all dead vegetation. If any living plants are observed, the entire plant, including roots, shall be

removed by hand, minimizing physical disturbance of the soil.

F. Herbicide Damage: New and/or existing plants which in the opinion of the ENGINEER have been damaged, disfigured, or stunted by the application of herbicide shall be replaced in kind (type, size, and age) by the CONTRACTOR at their expense.

3.6 PLANTING

A. General: All plant materials, including plants previously approved at the nursery, shall be inspected by the ENGINEER prior to planting. The CONTRACTOR shall be responsible for the condition of all plants, planted or otherwise, until final acceptance by the CITY and termination of maintenance and establishment period. CONTRACTOR shall be obligated to honor all requirements of warranty as indicated herein.

1. Perform planting with materials and equipment according to procedures favorable to the optimum growth of the plant. Do not plant during high wind conditions.

2. Except as noted for specimen planting, do not start planting operations until the completion of weed suppression and completion and acceptance of the irrigation system

3. Large boxed trees may be planted prior to hardscape installation or irrigation completion to facilitate construction and avoid damage to completed work with written approval from the PROJECT MANAGER. CONTRACTOR shall re-route irrigation lines in conflict with boxed tree locations to clear the root ball by 24” minimum at no additional cost to CITY.

B. Protection and Storage:

1. Keep all plant materials delivered to the jobsite in a healthy condition for planting. Do not crowd containers together in a manner that adversely affects plant foliage or growing conditions.

2. Do not allow plants to dry out or suffer physical damage from other construction activities. Protect from heavy winds.

C. Layout and Plant Locations:

1. Plant locations indicated on the Contract Drawings are approximate.

2. CONTRACTOR shall lay out each plant in its intended planting location as shown on the plan while the plant is still in the container and obtain approval of the layout from the ENGINEER *prior to installation*.

3. Prior to planting, the CONTRACTOR may be directed to alter the layout of plants by direction of the ENGINEER, without additional compensation to the CONTRACTOR.

4. For “on center” plant spacing, locate the first row of plants in areas designated at one-half the specified spacing from the edge. Do not stretch the maximum specified spacing for each species as shown on the plans.

D. Container Plants Backfill Mix:

1. Unless specified otherwise or recommended by the approved agricultural suitability and fertility analysis and approved by the PROJECT MANAGER, container plants shall be backfilled with 100% amended site soil.

   a. Each plant pit shall also receive Tri-C Myco Tabs 1.7 gram 17-9-5 (N-P-K) planting tablets as shown in the relevant planting details, and as follows:

      Container Size
      1 gallon = 2 tablet
      5 gallon = 8 tablets
      15 gallon = 16 tablets
      Boxed Trees = 10 tablets per inch of trunk diameter, with a minimum of 20 tablets per tree.

   b. Some plant species may be designated not to receive any planting tablets. Refer to legend on Planting Plan.

E. Tree and Shrub Planting:

1. Prior to planting, irrigation system installation and soil amendment shall be completed and approved. Soil shall be thoroughly irrigated beforehand, and suitably moist for planting. *Do not plant in dry soil*.

2. Make planting holes approximately square with vertical sides *no greater than the depth of the plant container* (or such depth as needed so that the root crown has the correct relationship to adjacent finished grade per the planting details) and approximately twice the width of the plant container or rootball and larger if necessary to permit handling and planting without injury to the root system. Lightly scarify native soil at the bottom of planting holes.

3. Do not plant plants with a broken or cracked rootball. Such plants shall be considered defective and rejected. Rejected plants shall be removed promptly from the job site.

4. Open and remove plant containers in such a manner that the plant roots are not injured. Do not pull plants out of the pot by the stalk.

5. Scarify native soil at the bottom of planting holes.

6. If soil is not adequately moist, apply water to planting hole and allow to drain. Set the plant approximately in the center of the planting hole and add backfill under rootball if needed to adjust the root crown to correct grade.

7. Backfill the balance of the planting hole with moist, amended site soil; firming the backfill by hand or with tools to assure all air pockets have been removed, and settlement will be minimized. After planting, all plants shall be plumb with the root crown at its natural depth with respect to finish grade.

8. Prune or remove any broken or damaged minor limbs. Any major damage to plant material shall be brought to the attention the ENGINEER for evaluation. Trees or shrubs with major broken limbs shall be considered defective and rejected. Rejected plants shall be removed promptly from the job site.

9. For any trees installed prior to completion of irrigation system: form a circular watering basin 6-inches high and slightly larger than the planting hole to accommodate temporary hand watering. Make the bottom of the basin level with surrounding finish grade. Watering basin berms shall be removed during fine grading process and before application of top-dress mulch.

10. Tree Edging: Where trees are planted in lawn area, a minimum 4-foot diameter circle around each tree shall be maintained free of lawn area to avoid the growth-reducing effects of lawn area on trees.

Mulch shall be placed in the circle. This circle shall be kept clear of lawn area by the CONTRACTOR for the duration of the maintenance period.

11. Install vines per planting detail. Remove nursery stakes and affix all branches to walls or fences per notes and details on Contract Drawings.

F. Turf Planting: Soil amendment, irrigation installation, weed abatement, and fine grading shall be completed and approved before seeding or sod installation.

1. Hydro-Seeded Turf Planting: The seed, fertilizer, fiber and other materials in the slurry mixture shall be as specified on Contract Drawings and other applicable sections of these Specifications. All material shall be of appropriate type that will disperse into a uniform slurry when mixed with water. The mixture shall form an absorbent porous mat after placement. Do not apply when the wind velocity exceeds five miles per hour or is detrimental to the uniform distribution of the slurry.

a. The lawn seed mix for lawn planting shall contain the following materials at the rates specified:

1. Mulch Fiber Eco-Fiber Wood Fiber, 2000 lbs./acre
2. Stabilizer – Environ-Mend , 150 lbs./acre. Add slowly to tank to avoid clumping
3. Fertilizer – Starter Fertilizer (15-15-15) , # 400 lbs./acre. Incorporate additional elements as needed by soil test.

b. If seeding of turf areas is done during cool-season (between October 1st and March 1st) mix shall be 6/lbs / 1000 SF

50% Stovers ‘Grand Slam FS’ perennialryegrass blend
40% Stovers ‘Arden 15’ hybrid bermuda grass
10% Stovers ‘365SS’ Kentucky Bluegrass blend

c. If seeding of turf areas is done during warm-season (between March 1st and October 1st) mix shall be 6/lbs 1000 SF

50% Stovers ‘Grand Slam FS’ perennial ryegrass blend

30% Stovers ‘Arden 15’ hybrid bermuda grass
20% Stovers ‘365SS’ Kentucky Bluegrass blend

d. The CONTRACTOR shall supply a delivery receipt to the BCA Inspector certifying conformance with the specified hydroseed mix and indicating that the slurry has not been mixed for longer than two hours. Slurry which has been mixed longer than two hours shall be recharged with 50 percent more of the specified seed mix, at the CONTRACTOR's expense, (801-4.8.2(b)). Delivery tickets shall be forwarded to the PROJECT MANAGER/BCA Inspector.

f. Use a green coloring additive in the slurry for the visual inspection purposes during application. Apply the slurry under pressure at the specified rates indicated in the Contract Drawings. Moisten areas to be seeded with irrigation beforehand, but not surface wet at the time of application. Keep the hydraulically seeded areas moist during the germination period and avoid puddling.

g. See additional information in Section 22 HYDROSEEDING

1. Sod Planting: The type of sod and the area to be sodded shall be in accordance with the Contract Drawings. Sod shall be machine cut to between 3/8” and 5/8” thick, not including top growth or thatch.

    a. Site shall be fine graded to the specified thickness of the sod below finish grades. Soil conditioning and fine grading shall be completed before sodding. No heavy equipment shall operate over the site after grading is completed.

    b. The site shall be moist but not wet when sod is laid. Sod shall be laid with closely fitted joints, and the ends of the strips shall be staggered forming a running bond pattern. Openings shall be plugged with sod or topsoil. Within 2 hours after installing sod and before rolling, the sod shall be lightly irrigated. All seams and joints shall then be rolled with a 200-300 lb. water ballast roller until the sod is well bonded to the soil below.

    c. The sodded areas shall then be watered thoroughly to penetrate the subsoil at least 8 inches. Watering shall be repeated as necessary to keep the sod moist until rooted into the subgrade. Sodded areas shall be protected against

all traffic until the sod is well established.

2. Turf Repair: All trenches shall be fully compacted, and the grade brought flush with the adjacent undisturbed finish grade. This repair shall include areas of irrigation or other piping trenches, conduit trenches or where vehicles or equipment has damaged the existing turf. Turf repair shall be accomplished using “Method A” hand seeding; or existing sod shall be carefully cut, removed, and reused to re-sod trenches after backfilling and compaction. CONTRACTOR shall use seed/sod to match existing turf type in areas being repaired unless directed otherwise by the ENGINEER.

3.7 TREE STAKING AND GUYING

A. Tree Staking: See planting legend for what type of staking shall be used for each tree type, if any shall be used. Stake trees with 2” diameter x 10’ long lodgepole pine stakes as indicated on the Drawings and details.

1. After planting, all trees shall be re-staked promptly per details.

2. Remove any existing nursery stakes first before installing new lodgepole stakes.

3. All trees in turf areas shall be triple staked unless noted otherwise. Stakes shall be placed in a circular pattern around tree, evenly spaced 1/3 circle apart.

4. All trees in non-turf areas shall be double staked, unless noted otherwise. Align stakes with the direction of strongest seasonal winds.

5. DO NOT drive stakes into the rootball of any newly planted trees.

3.8 MAINTENANCE AND PLANT ESTABLISHMENT

A. General Maintenance: Maintain all areas Inside of work on a continuous basis as they are completed *during the progress of the work and during the plant establishment period*.

1. CONTRACTOR shall maintain the entire area of work until final acceptance of the Contract by the CITY. Maintenance activities shall

include continuous operations of picking up trash, watering, weeding (including all broadleaf weeds in lawn areas), mowing, rolling, edging, fertilization, spraying & pest control of insects and rodents, reseeding & plant replacement (irrespective of cause), or any other operations necessary to provide normal healthy plant growth.

2. Any malfunctions of, or damage to the irrigation system due to workmanship or materials or as caused by the CONTRACTOR in the execution of his work shall be repaired by the CONTRACTOR within 24 hours at his own expense. The CONTRACTOR is responsible for keeping all plant material sufficiently watered during any irrigation failures.

B. Plant Establishment Period:

1. The Plant Establishment Period shall be for a minimum period of 90 days unless extended as described in this section. The Plant Establishment Period shall be started when all planting and irrigation related work has been completed in accordance with the contract documents and approved by the PROJECT MANAGER. CONTRACTOR shall request a review of completed work by the PROJECT MANAGER at the appropriate time to determine if the Plant Establishment period may begin. A field notification will be issued to the CONTRACTOR to establish the effective beginning date of the plant establishment period.

2. The designated plant establishment period is part of the total contract time. The plant establishment period will be extended at fourteen (14) day intervals if, at the end of the plant establishment period, the planting, irrigation and other improvements do not reflect the intent of the plans and specifications. All extensions of the plant establishment period shall be subject to the assessment of liquidated damages, (801-6).

3. All lawns shall be of the grass seed or sod specified and shall be free from all broadleaf weeds. The lawn shall not be allowed to grow higher than three (3) inches and shall be mowed to a 1½” - 2” inch height. The lawn shall be mowed at least weekly during the Plant Establishment Period. All lawn areas shall have 95 percent coverage with bare areas not exceeding three square inches at the end of the Plant Establishment Period. 60 days after commencement of Plant

Establishment Period, CONTRACTOR shall apply a slow release 38-0-0 granular fertilizer at a rate of 15 pounds per 1000 sq. ft. to all lawn areas and irrigate immediately afterwards. The fertilizer shall be applied in the presence of the BCA Inspector.

4. All trees and shrubs shall be healthy and vigorous in appearance throughout the duration of the Plant Establishment Period. Upon notice from the PROJECT MANAGER, the CONTRACTOR shall replace within seven (7) days of such notice at his own expense, any and all plant materials and/or sod which, for any reason dies or is damaged while under the CONTRACTORS care, or does not meet or exceed the quality of appearance and growth condition at the time of planting. Replacement shall be made with the same plant species and varieties as indicated or specified for the original planting. All replacement plants are subject to the same inspection requirements set forth in these specification for the original plant installation.

5. During the plant establishment period, all damage caused by erosion shall be repaired by the CONTRACTOR at his own expense within three (3) working days.

6. Broken or vandalized tree stakes shall be repaired or replaced by the CONTRACTOR at his own expense within seven (7) days.

7. During the plant establishment period, the irrigation system shall be operated in the automatic mode, unless otherwise permitted by the ENGINEER. No hand watering or manual station operations should be performed without notifying the ENGINEER. CONTRACTOR shall be responsible for setting an appropriate watering schedule for all irrigation zones, such as to provide adequate watering for each plant type, but not so much as to create any wasteful or unhealthful growing conditions. CONTRACTOR shall be responsible for modifying the watering schedule as needed to accommodate changing weather conditions.

C. Final Inspection/Final Acceptance:

1. Upon completion of the plant establishment period, a final inspection for acceptance will be performed by the BCA Inspector and ENGINEER or authorized representative. The CONTRACTOR shall request for inspection at least three (3) working days prior to the anticipated date. For this inspection, the site must be thoroughly cleared of all debris and excess material removed. If work fails to pass final inspection, any subsequent inspection must be

rescheduled as per above, and will be charged to the CONTRACTOR.

2. If the plant establishment period is satisfactorily completed ahead of other work included in the Contract, the plants establishment shall be extended and shall be the responsibility of the CONTRACTOR until all other work has been completed and accepted by the CITY.

3.9 GUARANTEE

A. General: All shrubs and ground covers shall be guaranteed for a period of ninety (90) days from the end of the Plant Establishment Period. All trees and shrubs 15-gallon size or larger shall be guaranteed for a period of one (1) year from the end of the Plant Establishment Period. CONTRACTOR shall provide a written guarantee for the above materials as a part of the final close out package.

B. Deficiencies: Should any deficiencies develop within the specified guarantee period, CONTRACTOR shall correct such deficiencies to the full satisfaction of the ENGINEER without added expense to the CITY. All replacement plants shall be subject to a new guarantee for a period as described herein above.

END OF SECTION 02932

SECTION 03100
CONCRETE FORMWORK

PART 1 -- GENERAL

1.1 THE REQUIREMENT

A. The CONTRACTOR shall furnish all materials for concrete formwork, bracing, shoring, and supports and shall design and construct all falsework and scaffolding, all in accordance with the provisions of the Contract Documents.

B. DEFINITIONS

1. Exposed Concrete: All concrete that is visible in the finished work, including concrete to be painted.

2. Unexposed Concrete: All other concrete that is concealed in the finished work, including plastered surfaces and attic and utility spaces.

1.2 RELATED WORK SPECIFIED ELSEWHERE

A. Section 02310 Earthwork.

B. Section 03200 Reinforcement Steel.

C. Section 03250 Concrete Accessories.

D. Section 03300 Cast-in-Place Concrete.

E. Section 03315 Grout.

F. Section 03370 Concrete Curing.

G. Section 07900 Joint Sealants.

1.3 REFERENCE SPECIFICATIONS, CODES, AND STANDARDS

A. Comply with the reference standards and Standard Specifications as specified in the GENERAL REQUIREMENTS.

B. Comply with the current provisions of the following Codes and Standards, as applicable:

1. Government Standards:

PS 1	U.S. Product Standard for Concrete Forms, Class I
PS 20	American Lumber Softwood Standard
CSS	Caltrans Standard Specifications

2. Commercial Standards:

ACI 350.5	Specification for Environmental Structural Concrete
ACI 347R-14	Guide to Formwork for Concrete
ACI 117	Standard Tolerances for Concrete Construction and Materials

1.4 CONTRACTOR SUBMITTALS

A. Submittals shall be made in accordance with the GENERAL REQUIREMENTS.

B. The following submittals and specific information shall be provided.

1. Formwork and shoring Calculations and Drawings: The CONTRACTOR shall comply with all the latest applicable Sections of the Division of Industrial Safety, Construction Safety Orders. In addition, formwork and shoring must be designed, fabricated, erected, supported, braced, and maintained so that it will be capable of supporting without failure all vertical and lateral loads that might be applied to the formwork. Drawings and plans, including all revisions for the jack layout, formwork (including shoring equipment), working decks, and scaffolds, must be available at the jobsite. All shoring equipment (including equipment used in reshoring operations) must be inspected prior to erection to determine that the equipment meets the requirements specified in the formwork drawings. **Plans and Calculations shall be prepared and signed by a Civil Engineer, registered in the State of California.** A copy of the falsework plan or shoring layout shall be available on the job site at all times. The Engineer who designed the formwork or vertical shoring shall personally inspect such work and provide a written certification that the work conforms to the design.

2. The CONTRACTOR shall file with the City detailed plans of the formwork and shoring to be used. Such plans and calculations shall be in sufficient detail to indicate the general layout, pattern layout, dimensioned to precisely locate grooves, form panel jointing, and similar features. The submittal shall also include sizes of members, anticipated stresses, grade of materials to be used, and typical soil conditions.

3. The CONTRACTOR shall provide shop drawings of the following:

   a. Form Release Compound

   b. Form Ties and Spreaders

   c. Pertinent dimensions, openings, details of construction, types of connections, materials, joint arrangement and details, ties and shores, location of framing, studding and bracing, and temporary supports.

   d. Joint Locations

   e. Notes to formwork erector showing size and location of conduits and piping embedded in concrete.

   f. Procedure and schedule for removal of shores and installation and removal of reshores.

   g. Installation Instructions

4. Review of submittals will be for appearance, performance, and strength of completed

structure only. Approval by the Engineer will not relieve Contractor of responsibility for the strength, safety, or correctness of methods used, the adequacy of equipment, or from carrying out the work as shown on Contract Documents.

1.5 QUALITY ASSURANCE

A. Tolerances: The variation from established grade or lines shall be in accordance with ACI 350.5and ACI 117, unless noted otherwise.

B. Laborers: Use adequate number of skilled laborers who are thoroughly trained and experienced in the necessary crafts and who are completely familiar with the specified requirements and the methods needed for proper performance of the work of this Section.

C. Prior to construction of formwork for concrete beams and slabs above grade, Contractor shall conduct a meeting at the site to determine and define all cambers required for the project. ENGINEER, Contractor and Contractor's formwork installer shall be in attendance at this meeting.

D. Engage a licensed surveyor to verify that work is within specified tolerances. Surveyor shall report in writing to the ENGINEER, with copy to Contractor, certifying work as acceptable or indicating deviations from allowable tolerances.

1.6 DELIVERY, STORAGE, AND HANDLING

A. Deliver materials for forms in timely manner to ensure uninterrupted progress.

B. Store materials by methods that prevent damage and permit ready access for inspection and identification.

PART 2 -- PRODUCTS

2.1 GENERAL

A. Except as otherwise expressly accepted by the ENGINEER, all lumber brought on the job site for use as forms, shoring, or bracing shall be new material. All forms shall be smooth surface forms and shall be of the following materials:

Walls	-	Steel or plywood panel
Columns	-	Steel, plywood or fiber glass
Roof, floor, deck and soffit	-	Plywood, Steel Panels
All other work	-	Steel panels, plywood or tongue and groove lumber

2.2 FORM AND FALSEWORK MATERIALS

A. Materials for concrete forms, formwork, and falsework shall conform to the following requirements:

1. Lumber shall be Douglas Fir or Southern Pine, construction grade or better, in conformance with U.S. Product Standard PS20.

2. Plywood for concrete formwork shall be new, waterproof, synthetic resin bonded, exterior type Douglas Fir or Southern Pine plywood manufactured especially for concrete formwork and shall

conform to the requirements of PS 1 for Concrete Forms, Class I, and shall be edge sealed.

3. Form materials shall be metal, wood, plywood, or other material approved by the ENGINEER that will not adversely affect the concrete and will facilitate placement of concrete to the shape, form, line, and grade shown. Metal forms shall be an approved type that will accomplish such results.

   Forms for exposed exterior concrete surfaces shall be American Plywood Association (APA) High Density Overlay (HDO) Plyform Class I Ext. 48" X 96" X 3/4" minimum thickness.

   Forms for other concrete surfaces shall be American Plywood Association (APA) Douglas Fir B-B Plyform Class I Exterior PS 1, 3/4-inch minimum thickness.

4. Tube forms: Sonoco “Seamless Sonotubes”, Alton Building Products “Sleek Seamless Standard Wall”, or equal, type leaving no marks in concrete, 1-piece lengths for full required height.

B. Unless otherwise shown, exterior corners in exposed concrete members shall be provided with 3/4-inch chamfers. Re-entrant corners in concrete members shall not have fillets unless otherwise shown.

C. Forms and falsework to support the roof and elevated floor slabs shall be designed for the total dead load, and a minimum construction live load of 30 psf.

2.3 FORM TIES

A. Form ties with integral waterstops shall be provided with a plastic cone or other suitable means for forming a conical hole to insure that the form tie may be broken off back of the face of the concrete. The maximum diameter of removable cones for rod ties, or of other removable form-tie fasteners having a circular cross-section, shall not exceed 1-1/2-inches; and all such fasteners shall be such as to leave holes of regular shape for reaming.

B. Form ties for water-retaining structures shall have integral waterstops. Alternate form ties consisting of tapered through-bolts at least 1 inch (25 mm) in diameter at smallest end or through-bolts that utilize a removable tapered sleeve of same minimum size may be used. Install in forms so that large end is, where applicable, on liquid or backfilled side of the wall. Clean, fill, and seal form tie hole with rubber plug installed from the liquid or backfilled side and non-shrink cement grout to provide watertight form tie holes. Make repairs needed to make watertight.

2.4. FORM RELEASE COMPOUND

A. Form release compound shall be water based, non-staining clear coating free from oil, bond-breaking form coating, and not grain-raising. Provide form release compound that is VOC compliant for the area used.

2.5 EARTH FORMS

Unless otherwise approved by ENGINEER concrete for footings may NOT be placed directly against vertical excavated surfaces.

PART 3 -- EXECUTION

3.1 GENERAL

A. Erect formwork, shoring and bracing according to ACI 350.5. Forms to confine the concrete and shape it to the required lines shall be used wherever necessary. The CONTRACTOR shall assume full responsibility for the adequate design of all forms, and any forms which are unsafe or inadequate in any respect shall promptly be removed from the WORK and replaced at the CONTRACTOR's expense. A sufficient number of forms of each kind shall be provided to permit the required rate of progress to be maintained. The design and inspection of concrete forms, falsework, and shoring shall comply with applicable local, state and Federal regulations. Plumb and string lines shall be properly installed before concrete placement and shall be maintained during placement. Such lines shall be used by CONTRACTOR's personnel and by the INSPECTOR and shall be in sufficient number and properly installed. During concrete placement, the CONTRACTOR shall continually monitor plumb and string line form positions and immediately correct deficiencies.

B. Concrete forms shall conform to the shape, lines, and dimensions of members as called for on the Drawings, and shall be substantial, free from surface defects, and sufficiently tight to prevent leakage. Forms shall be properly braced or tied together to maintain their position and shape under a load of freshly-placed concrete. If adequate foundation for shores cannot be secured, trussed supports shall be provided.

C. Camber: Place suitable jacks, wedges, or similar means to induce camber and to correct settlement in forms before and during concrete placing. Camber shall be as determined in pre-installation meeting specified above. In general, formwork shall be capable of accommodating camber of 1/8" per 10' of span plus 1/4".

3.2 FORM DESIGN

A. All forms shall be true in every respect to the required shape and size, shall conform to the established alignment and grade, and shall be of sufficient strength and rigidity to maintain their position and shape under the loads and operations incident to placing and vibrating the concrete. Suitable and effective means shall be provided on all forms for holding adjacent edges and ends of panels and sections tightly together and in accurate alignment so as to prevent the formation of ridges, fins, offsets, or similar surface defects in the finished concrete. Plywood, 3/4-inch and greater in thickness, may be fastened directly to studding if the studs are spaced close enough to prevent visible deflection marks in the concrete. The forms shall be tight so as to prevent the loss of water, cement and fines during placing and vibrating of the concrete. Specifically, the bottom of wall forms that rest on concrete footings or slabs shall be provided with a gasket to prevent loss of fines and paste during placement and vibration of concrete. Such gasket may be a 1- to 1-1/2-inch diameter polyethylene rod held in position to the underside of the wall form. Forms shall be cleaned of debris prior to concrete placement.

B. Actual form design shall conform to ACI 347R-14.

C. For concrete mixes characterized as self-consolidating concrete, high performance concrete, or known to contain components that can potentially extend the plastic state of the concrete, the forms shall be designed to sustain the resulting hydrostatic pressure for the total pour height or pressure head for that day of pour, whichever is more. For such mixes, appropriate set-time tests shall be conducted in preparation of the mix design and this information made available to the form designer.

3.3 CONSTRUCTION

A. Vertical Surfaces: All vertical surfaces of concrete members shall be formed.

B. Construction Joints: Concrete construction joints will not be permitted at locations other than those shown or specified, except as may be acceptable to the ENGINEER. When a second lift is placed on hardened concrete, special precautions shall be taken in the way of the number, location, and tightening of ties at the top of the old lift and bottom of the new to prevent any unsatisfactory effect whatsoever on the concrete. Pipe stubs and anchor bolts shall be set in the forms where required.

C. Provide for openings, offsets, keyways, recesses, moldings, reglets, chamfers, blocking, screeds, bulkheads, anchorages, inserts and other features as required. Fill form joints to produce smooth surfaces, intersections, and arrises. Use polymer foam or equivalent fillers at joints and where forms abut or overlap existing concrete to prevent leakage of mortar.

D. Set embedded piping and rough hardware in forms to be embedded in concrete in a manner so that the required strength of the structure will not be reduced. Do not cut any reinforcement.

D. Apply form release compound on formwork in accordance with manufacturer's instructions prior to placing of reinforcing steel, anchorages, and embedded items.

E. Construct forms suitable for removal without hammering or prying against and damaging the concrete.

F. Openings in Forms: Provide as required to facilitate cleaning and inspection. Close such openings immediately after cleaning and before placement of concrete. Provide air relief holes in formed top surfaces of concrete elements as required.

H. Form Ties:

1. Embedded Ties: Holes left by the removal of form tie cones shall be clean and rough before being filled with mortar as specified for "Finish of Concrete Surfaces" in Section 03300, "Cast-in-Place Concrete". Wire ties for holding forms will not be permitted. No form-tying device or part thereof, other than metal, shall be left embedded in the concrete. Ties shall not be removed in such manner as to leave a hole extending through the interior of the concrete members. The use of snap-ties which cause spalling of the concrete upon form stripping or tie removal will not be permitted. If steel panel forms are used, rubber grommets shall be provided where the ties pass through the form in order to prevent loss of cement paste. Where metal rods extending through the concrete are used to support or to strengthen forms, the rods shall remain embedded and shall terminate not less than 1-inch back from the formed face or faces of the concrete.

2. Removable Ties: Where taper ties are approved for use in non water bearing structures, the larger end of the taper tie shall be on the wet side of walls in water retaining structures. After the taper tie is removed, the hole shall be thoroughly cleaned and roughened for bond. A precast neoprene or polyurethane tapered plug shall be located at the wall centerline. The hole shall be completely filled with non-shrink grout for water bearing and below-grade walls. The hole shall be completely filled with non-shrink or regular cement grout for above-grade walls which are dry on both sides. Exposed faces of walls shall have the outer 2-inches of the exposed face filled with a cement grout which shall match the color and texture of the surrounding wall surface.

I. Coordination:

1. Provide slots, openings, chases, recesses, grounds, nailers and screeds required by other trades and subsequent work.

2. Ensure that conduit, pipes, sleeves, anchors, hangers and ties are secured in forms before

concrete is placed.

3.4 REUSE OF FORMS

Forms may be reused only if in good condition and only if acceptable to the INSPECTOR. Light sanding between uses will be required wherever necessary to obtain uniform surface texture on all exposed concrete surfaces. Exposed concrete surfaces are defined as surfaces which are permanently exposed to view. In the case of forms for the inside wall surfaces of water retaining structures, unused tie rod holes in forms shall be covered with metal caps or shall be filled by other methods acceptable to the INSPECTOR.

3.5 REMOVAL OF FORMS

Careful procedures for the removal of forms shall be strictly followed, and this work shall be done with care so as to avoid damage the concrete. No heavy loading on green concrete will be permitted.

1. Do not remove formwork until concrete has attained sufficient strength to support its own weight and all superimposed loads including construction loads and to permit form and falsework removal with complete safety.

2. In the case of concrete members subject to bending stresses, where the member relies upon forms for vertical support, forms shall remain in place until test cylinders attain a minimum comprehensive strength of 75 percent of the 28-day strength specified in Section 03300, "Cast in-Place Concrete", provided, that no forms shall be disturbed or removed under individual panel or unit before the concrete in the adjacent panel or unit has attained 75 percent of the specified 28-day strength and has been in place for a minimum of 7 days.

3. Forms for roofs and elevated slabs shall remain in place a minimum of 10 days after concrete has been placed.

4. Forms for all vertical walls and columns shall remain in place at least 3 days after the concrete has been placed.

5. Formwork removal shall also be subject to the curing requirements of section 3370 of these specifications and as authorized by the ENGINEER.

6. Reshore structural members as specified below because of design requirements or construction conditions to permit successive construction.

The time required to establish concrete strength shall be determined by the ENGINEER based on test cylinders made for this purpose from the concrete placed and in accordance with ACI 301 and the curing requirements of section 3300. If the time so determined is more than the minimum time specified above, then that time shall be used as the minimum length of time. Forms for all parts of the WORK not specifically mentioned herein shall remain in place for periods of time as determined by the ENGINEER.

3.6 FORMWORK TOLERANCES

A. Deflection: Limit deflection of forming surfaces from concrete pressure to L/240.

B. Finish Lines: Position formwork to maintain hardened concrete finish lines within following permissible deviations.

1. Variation from Plumb:

In 10'-0"	1/4” max.
In any story or 20'-0"	3/8” max.
In 40'-0" or more	3/4” max.

2. Variation from Level or Grades Indicated

In 10'-0"	1/4” max.
In any bay or 20'-0" maximum	3/8”
In 40'-0" or more	3/4” max.

C. Building Lines: Variation of linear building lines from established position in plan and related position of columns, walls and partitions:

1. In any bay or 10'-0" maximum	1/2”
2. In 40'-0" or more	1”

D. Slab Openings: Variations in size and location of sleeves and slab openings shall not exceed 1/4”.

3.7 MAINTENANCE OF FORMS

Forms shall be maintained at all times in good condition, particularly as to size, shape, strength, rigidity, tightness, and smoothness of surface. Forms, when in place, shall conform to the established alignment and grades. Before concrete is placed, the forms shall be thoroughly cleaned. The form surfaces shall be treated with a nonstaining mineral oil or other lubricant acceptable to the ENGINEER. Any excess lubricant shall be satisfactorily removed before placing the concrete. Where field oiling of forms is required, the CONTRACTOR shall perform the oiling at least two weeks in advance of their use. Care shall be exercised to keep oil off the surfaces of steel reinforcement and other metal items to be embedded in concrete.

3.8 FALSEWORK

A. The CONTRACTOR shall be responsible for the design, engineering, construction, maintenance, and safety of all falsework, including staging, walkways, forms, ladders, and similar appurtenances, which shall equal or exceed the applicable requirements of the provisions of the OSHA Safety and Health Standards for Construction, the requirements of the Construction Safety Orders of the California Division of Industrial Safety, and the requirements specified herein.

B. All falsework shall be designed and constructed to provide the necessary rigidity and to support the loads. Falsework for the support of a superstructure shall be designed to support the loads that would be imposed if the entire superstructure were placed at one time.

C. Falsework shall be placed upon a solid footing, safe against undermining, and protected from softening. When the falsework is supported on timber piles, the maximum calculated pile loading shall not exceed 20 tons. When falsework is supported on any portion of the structure which is already constructed, the load imposed by the falsework shall be spread, distributed, and braced in such a way as to avoid any possibility of damage to the structure.

D. Reshoring:

1. Minimum reshoring with falsework shall consist of not less than half the full required falsework added under the last placed floor over which full falsework is to be placed for the next floor above. Leave reshoring in place for at least 10 days after the floor above is placed, but in no case remove falsework until the next concrete placing has attained a compressive strength equal to 75% of that required for the 28 days age as determined by controlled test cylinders.

2. Maintain a form and falsework removal record.

END OF SECTION 03100

SECTION 03200
REINFORCEMENT STEEL

PART 1 -- GENERAL

1.1 THE REQUIREMENT

A. The CONTRACTOR shall furnish, fabricate, and place all concrete reinforcement steel, welded wire fabric, couplers, and concrete inserts for use in reinforced concrete and masonry construction and shall perform all appurtenant work, including all the wires, clips, supports, chairs, spacers, and other accessories, all in accordance with the Contract Documents.

1.2 RELATED WORK SPECIFIED ELSEWHERE

A. Section 03100 Concrete Formwork.

B. Section 03250 Concrete Accessories.

C. Section 03300 Cast-in-Place Concrete.

1.3 REFERENCE SPECIFICATIONS, CODES, AND STANDARDS

A. Comply with the reference standards of the GENERAL REQUIREMENTS.

B. Comply with the current provisions of the following Codes and Standards, as applicable:

1. Commercial Standards:

ACI 350.5	Specification for Environmental Structural Concrete
ACI 315	Details and Detailing of Concrete Reinforcement.
ACI 318	Building Code Requirements for Reinforced Concrete.
ACI 350	Code Requirements for Environmental Engineering Concrete Structures.
ACI 530	Building Code Requirements & Specifications for Masonry Structures
WRI	Manual of Standard Practice for Welded Wire Fabric.
AWS D1.4	Structural Welding Code - Reinforcing Steel.
ASTM A 82	Specification for Steel Wire, Plain, for Concrete Reinforcement.
ASTM A 1064	Specification for Carbon-Steel Wire and Welded Wire Reinforcement.
ASTM A 615	Specification for Deformed and Plain Billet-Steel Bars for Concrete Reinforcement.
ASTM A 706	Low-alloy Deformed Steel Bars for Concrete Reinforcement
CRSI	Manual of Standard Practice
CRSI	Recommended Practice for Placing Bar Supports, Specifications and Nomenclature

1.4 CONTRACTOR SUBMITTALS

A. Submittals shall be made in accordance with the GENERAL REQUIREMENTS (GR).

B. Buy Clean California Act.

a. For project specifications that include GR Section 1601, Buy Clean California Act, bidders shall submit current Environmental Product Declarations (EPDs) for each type of reinforcing steel material (A615, A706) from the originating mill used in the project as well as corresponding mill certifications. When material comes from different mills, an EPD and mill certification will be required for each mill from which the material has been obtained.

b. An EPD must conform to the following:
   1) Shall be facility-specific manufacturer/mill EPD.
   2) Be independently verified in accordance with ISO 14025 (Type III).
   3) Be developed according to the guidelines of the applicable Product Category Rule (PCR), as identified by the Department of General Services, State of California.
   4) Have a valid date that has not expired.
   5) Shall not exceed the Global Warming Potential (GWP) limit as required by GR Section 1601.

c. EPD shall be submitted concurrently with the product's submittal for review and approval.

d. Specified epoxy-coated or other specified coated reinforcing steel are exempt from having an associated EPD.

C. The following submittals and specific information shall be provided.

1. The CONTRACTOR shall furnish shop bending diagrams, placing lists, splice lengths and location, and drawings of all reinforcement steel prior to fabrication.

2. Details of the concrete reinforcement steel and concrete inserts shall be submitted by the CONTRACTOR at the earliest possible date after receipt by the CONTRACTOR of the Notice to Proceed. Details of reinforcement steel for fabrication and erection shall conform to ACI 315 and the requirements specified and shown. The shop bending diagrams shall show the actual lengths of bars, to the nearest inch measured to the intersection of the extensions (tangents for bars of circular cross section) of the outside surface. The shop drawings shall include bar placement diagrams which clearly indicate the dimensions of each bar splice.

3. Where mechanical couplers are required or permitted to splice reinforcement steel, the CONTRACTOR shall submit Los Angeles City Department of Building and Safety's Research Report approval and manufacturer's literature which contains instructions and recommendations for installation for each type of coupler used; certified test reports which verify the load capacity of each type and size of coupler used; and shop drawings which show the location of each coupler with details of how it is to be installed in the formwork.

4. If reinforcement steel is required or permitted to be spliced by welding at any location, the CONTRACTOR shall submit mill test reports which shall contain the information necessary for the determination of the carbon equivalent as specified in AWS D1.4. The CONTRACTOR shall submit a written welding procedure for each type of weld for each size of bar which is to be spliced by welding; merely a statement that AWS procedures will be followed is not acceptable.

1.5 QUALITY ASSURANCE

A. The CONTRACTOR shall make provisions for sampling reinforcing steel delivered to the job site. Two sampling bars, cut from different bars and 3 feet in length for bar sizes # 3 through # 5 and 5 feet in length for bars sizes # 6 and larger, shall be taken from each 25 tons or fraction thereof, of each size and heat number delivered to the job site. When the name of the manufacturer, heat identification number, or chemical analysis is not known, the sampling interval shall be each 2.5 tons or fraction thereof, of each bar size and heat number. Tests shall consist of 2 bent tests and 2 tensile tests. Costs of initial tests will be paid by the CITY. Additional tests due to material failing initial tests shall be paid by the CONTRACTOR.

B. If reinforcement steel is welded at any location, the CONTRACTOR shall submit certifications of procedure qualifications for each welding procedure used and certification of welder qualifications, for each welding procedure, and for each welder performing the work. Such certification and qualifications shall be as required by the Los Angeles Department of Building and Safety.

C. The CONTRACTOR shall provide samples of each type of weld used in the work in a quantity and of dimensions adequate for testing. At the discretion of the INSPECTOR, radiographic testing of direct butt welds will be performed. The CONTRACTOR shall provide assistance necessary to facilitate testing. The CONTRACTOR shall repair any weld which fails to meet the requirements of AWS D1.4. The costs of testing will be paid by the CITY; except, the costs of all tests which fail to meet specified requirements shall be paid by the CONTRACTOR.

D. The CONTRACTOR shall provide to the INSPECTOR written identification of reinforcement steel by manufacturer's heat number and mil certification, and the fabricator's release number and type from the point of fabrication to the place of final incorporation of the rebar into the work.

1.6 MARKING AND SHIPPING

A. Tag bundled bars with identification, and transport and store so as not to damage any material. Use metal tags indicating size, length and other marking shown on placement drawings. Maintain tags after bundles are broken.

PART 2 -- PRODUCTS

2.1 REINFORCEMENT STEEL

A. All reinforcement steel for all cast-in-place reinforced concrete construction shall conform to the following requirements:

1. Bar reinforcement shall conform to the requirements of ASTM A615, Grade 60 Billet Steel Reinforcement with supplementary requirement S-1, and ASTM A706 for rebars subject to welding, or as otherwise shown.

2. Bar reinforcement for wall boundary elements, special moment frames, or when subject to welding, shall conform to ASTM A706, unless noted otherwise.

3. Welded wire fabric reinforcement shall conform to the requirements of ASTM A1064 and the details shown; provided, that welded wire fabric with longitudinal wire of W9.5 size wire shall be either furnished in flat sheets or in rolls with a core diameter of not less than 10 inches; and provided further, that welded wire fabric with longitudinal wires larger than W9.5 size shall be furnished in flat sheets only.

4. Spiral reinforcement may be cold-drawn steel wire conforming to the requirements of ASTM

A82, when approved by the ENGINEER.

5. All reinforcements shall be shop fabricated. Bending of reinforcing in the field will not be allowed.

7. Reinforcement with any of the following defects will not be acceptable and be immediately removed from the site:

   a. Bar lengths, depths, and/or bends exceeding the specified fabrication tolerances.

   b. Bends or kinks not shown on the Drawings

   c. Bars with reduced cross-section due to excessive rusting or other cause.

B. Accessories:

1. Accessories shall include all necessary chairs, slab bolsters, concrete blocks, tie wires, dips, supports, spacers, and other devices to position reinforcement during concrete placement. Slab bolsters shall have gray plastic-coated legs.

2. Concrete blocks (dobies), used to support and position reinforcement steel, shall have the same or higher compressive strength as specified for the concrete in which it is located. Where the concrete blocks are used on concrete surfaces exposed to view, the color and texture of the concrete blocks shall match that required for the finished surface. Wire ties shall be embedded in concrete block bar supports.

3. Use bar supports complying with CRSI recommendations, unless otherwise shown on the Contract Drawings.

4. Do not use wood, brick, or other non-complying material.

5. For slabs on grade, use supports with sand plates or horizontal runners where base material will not support chair legs.

6. For exposed-to-view completed concrete surfaces, where legs of supports are in contact with forms, provide supports with either hot-dip galvanized or plastic-protected legs. CONTRACTOR's selection subject to the ENGINEER's approval.

2.2 MECHANICAL COUPLERS

A. Mechanical couplers shall comply with the applicable Department of Building and Safety's Research Report. Location of the Mechanical Couplers shall be approved by the ENGINEER. The couplers shall develop a tensile strength which exceeds 125 percent of the yield strength of the reinforcement bars being spliced at each splice. CONTRACTOR to provide the required number of couplers and bars for testing in accordance with the Report

B. Where the type of coupler used is composed of more than one component, all components required for a complete splice shall be supplied. This shall apply to all mechanical splices, including those splices intended for future connections.

C. The reinforcement steel and coupler used shall be compatible for obtaining the required strength of the connection. Clearance and coverage requirements shall be maintained at all times.

D. Couplers which are located at a joint face shall be a type which can be set either flush or recessed from the face as shown. The couplers shall be sealed during concrete placement to completely eliminate concrete or cement paste from entering. After the concrete is placed, couplers intended for future connections shall be plugged and sealed to prevent any contact with water or other corrosive materials. Threaded couplers shall be plugged with plastic plugs which have an O-ring seal.

E. Hot-forged sleeve-type couplers shall not be used.

2.3 WELDED SPLICES

A. Welded splices shall be provided where shown and where approved by the ENGINEER. All welded splices of reinforcement steel shall develop a tensile strength which exceeds 125 percent of the yield strength of the reinforcement bars which are connected. Provide two samples of each bar size for testing. When welding is to be done in the field, provide field prepared samples. Preparation shall be made by welder actually preparing the production run.

B. All materials required to conform the welded splices to the requirements of AWS D1.4 shall be provided.

C. All welding shall be performed by City of Los Angeles certified welders. All shop welding shall be performed at shops of a City of Los Angeles approved fabricator.

PART 3 -- EXECUTION

3.1 GENERAL

A. All reinforcement steel, welded wire fabric, couplers, and accessories shall be fabricated, and placed in accordance with the requirements of the City of Los Angeles Building Code, CRSI Recommended Practices and Manual, and WRI, and the supplementary requirements specified herein.

3.2 FABRICATION

A. General: Reinforcement steel shall be accurately formed to the dimensions and shapes shown, and the fabricating details shall be prepared in accordance with ACI 315, ACI 117 and ACI 350.5 (as applicable), except as modified by the Drawings. Bars shall be bent cold.

B. The CONTRACTOR shall fabricate reinforcement bars for structures in accordance with bending diagrams, placing lists, and placing drawings. Said drawings, diagrams, and lists shall be prepared by the CONTRACTOR as specified under GENERAL REQUIREMENTS.

C. Fabricating Tolerances: Bars used for concrete reinforcement shall meet the following requirements for fabricating tolerances:

1. Sheared length: ± 1 inch

2. Depth of truss bars: + 0, - 1/2 inch

3. Stirrups, ties, and spirals: ± 1/2 inch

4. All other bends: ± 1 inch

3.3 PLACING

A. Placing: Reinforcement steel shall be accurately positioned as shown and shall be supported and wired together to prevent displacement, using annealed iron wire ties or suitable clips at intersections. All reinforcement steel shall be supported using approved accessories and chairs which are strong and rigid enough to prevent any displacement of the reinforcement steel and shall comply with the applicable Department of Building and Safety's Research Report. Where concrete is to be placed on the ground, supporting concrete blocks (or dobies) shall be used, in sufficient

numbers to support the bars without settlement, but in no case shall such support be continuous. All concrete blocks used to support reinforcement steel shall be tied to the steel with wire ties which are embedded in the blocks. Use care not to damage vapor barriers where they occur.

B. The portions of all accessories in contact with the formwork shall be made of concrete, plastic, or steel coated with a 1/8-inch minimum thickness of plastic which extends at least 1/2-inch from the concrete surface. Plastic shall be gray in color.

C. Tie wires shall be bent away from the forms in order to provide the specified concrete coverage.

D. Bars additional to those shown which may be found necessary or desirable by the CONTRACTOR for the purpose of securing reinforcement in position shall be provided by the CONTRACTOR at its own expense.

E. Placing Tolerances: Unless otherwise specified, reinforcement placing tolerances shall be within the limits specified in ACI 117 except where in conflict with the requirements of the City of Los Angeles Building Code.

F. Bars may be moved as necessary to avoid interference with other reinforcement steel, conduits, or embedded items. If bars are moved more than one bar diameter, or enough to exceed the above tolerances, the resulting arrangement of bars shall be reviewed and accepted by the ENGINEER.

G. Welded wire fabric reinforcement placed over horizontal forms shall be supported on slab bolsters having gray, plastic-coated standard type legs as specified in Paragraph B herein. Slab bolsters shall be spaced not less than 30 inches on centers, shall extend continuously across the entire width of the reinforcement mat, and shall support the reinforcement mat in the plane shown.

H. Welded wire fabric placed over the ground shall be supported on wired concrete blocks (dobies) spaced not more than 3 feet on centers in any direction. The construction practice of placing welded wire fabric on the ground and hooking into place in the freshly placed concrete shall not be used.

3.4 SPACING OF BARS

A. Spacing of reinforcement shall comply with ACI 350.5 requirements.

3.5 SPLICING

A. General: Reinforcement bar splices shall only be used at locations shown. When it is necessary to splice reinforcement at points other than where shown, the character of the splice and location shall be as acceptable to the ENGINEER.

B. Splices of Reinforcement: The length of lap for reinforcement bars per standard details on structural drawings. Stagger splices in horizontal wall bars at least 48” longitudinal in alternate bars and opposite faces.

C. Splices in column spiral reinforcement, when necessary, shall be made by welding or by a lap of 1-1/2 turns.

D. Field welding of bars: In accordance with the approved submittal. Continuous inspection required.

E. Mechanical couplers: Install in accordance with the approved submittal.

F. Bending or Straightening: Reinforcement shall not be straightened or rebent in a manner which will injure the material. Bars with kinks or bends not shown shall not be used. All bars shall be bent cold, unless otherwise permitted by the ENGINEER. No bars partially embedded in concrete shall be field-bent except as shown or specifically permitted by the ENGINEER.

3.6 CLEANING AND PROTECTION

The surfaces of all reinforcement steel and other metalwork to be in contact with concrete shall be thoroughly cleaned of all dirt, grease, loose scale and rust, grout, mortar and other foreign substances immediately before the concrete is placed. Where there is delay in depositing concrete, reinforcement shall be reinspected and, if necessary recleaned. Bars with reduced cross-section due to excessive rusting or other cause will not be acceptable for use and shall be replaced by the CONTRACTOR at no additional cost to the CITY.

3.7 FIELD QUALITY CONTROL

A. Inspection: Secure inspection and acceptance from INSPECTOR before concrete is placed. Make arrangements in advance for geotechnical inspection of foundations, continuous inspection as required, and/or structural observation by the designated registered design professional prior to concrete placement.

END OF SECTION 03200

SECTION 03250
CONCRETE ACCESSORIES

PART 1 -- GENERAL

1.1 THE REQUIREMENT

A. The CONTRACTOR shall furnish all tools, equipment, materials, and supplies to install all concrete accessories to complete the Work including cast-in-place anchor bolts (also known as anchor rods), epoxy grouted anchor bolts or dowels and, expansion or adhesive anchors, in accordance with the requirements of the Contract Documents.

1.2 RELATED WORK SPECIFIED ELSEWHERE

A. Section 03300 Cast-in-Place Concrete.

B. Section 03315 Grout.

1.3 REFERENCE SPECIFICATIONS, CODES, AND STANDARDS

A. Comply with the reference standards and Standard Specifications of the GENERAL REQUIREMENTS.

B. Comply with the current provisions of the following Codes and Standards, as applicable.

1. Commercial Standards:

AISC Code of Standard Practice for Steel Buildings and Bridges

AISC Specifications for the Design, Fabrication and Erection of Structural Steel for Buildings

ASTM A 36	Specifications for Carbon Structural Steel
ASTM A 153	Specifications for Zinc Coating (Hot Dip) on Iron and Steel Hardware
ASTM A 193	Specifications for Alloy-Steel and Stainless Steel Bolting Materials for High-Temperature Service
ASTM A 194	Specifications for Carbon and Alloy Steel Nuts for Bolts for High-Pressure and High-Temperature Service
ASTM A 307	Specifications for Carbon Steel Bolts and Studs, 60,000 PSI Tensile Strength
ASTM A 449	Specifications for Quenched and Tempered Steel Bolts and Studs
ASTM A 615	Specifications for Deformed and Plain Billet-Steel Bars for Concrete Reinforcement
ASTM B 633	Specifications for Electrodeposited Coatings of Zinc on Iron and Steel

ASTM B 695	Specifications for Coatings of Zinc Mechanically Deposited on Iron and Steel
ASTM F 436	Specifications for Hardened Steel Washers
ASTM F 1554	Standard Specification for Anchor Bolts, Steel, 36, 55, and 105-ksi Yield Strength

1.4 CONTRACTOR SUBMITTALS

A. Submittals shall be made in accordance with the GENERAL REQUIREMENTS.

B. The following submittals and specific information shall be provided.

1. High Strength Anchor Bolts: The CONTRACTOR shall provide mill certificates and certified compliance with ASTM [F 1554; A 449 with F 436].

2. The CONTRACTOR shall submit shop drawings for all welded or fabricated items for use as anchors.

3. The CONTRACTOR shall submit catalog cuts and manufacturer's recommendations, with applicable City of Los Angeles Research Reports, for all expansion and adhesive anchors, and anti-seize thread lubricants.

PART 2 -- PRODUCTS

2.1 GENERAL

A. Anchor Size: Anchor size shall be as specified or shown on plans.

B. Anchor Material:

1. Water-containment or sanitary structures, immersion service, or exposed exterior locations: Stainless steel.

2. Other locations: Galvanized steel as permitted by the corresponding ASTM except as listed in the contract drawings.

C. Anchor Length: Sufficient to extend through the nut(s) and not more than 1/4 inch beyond the nut when exposed while meeting the required embedment as indicated on the contract drawings or as required by the associated Los Angeles Department of Building and Safety's Research Report.

2.2 ANCHOR GRADES

A. Anchor Bolts and Nuts:

1. High Strength: ASTM F 1554 Grade 105, galvanized. Provide with corresponding galvanized hardened washers.

2. Stainless steel: ASTM A 193 and A 194, Type 316N, Grade 8MN.

3. Unspecified: ASTM F 1554 Grade 36, galvanized.

4. Galvanizing: Hot dipped as required per ASTM F 1554 When protected from the atmosphere, moisture and sewage gases, ASTM B 695 is also acceptable.

5. Other Coatings: As specified in the contract drawings.

B. Flat Washers: Same material and finish as nut and bolt. For high strength bolts, use ASTM F 1554.

C. Anti-Seize Thread Lubricant for use with stainless steel anchors:

1. Jet-Lube "Nikal"
2. Never-Seez "Pure Nickel Special"
3. Permatex "Nickel Anti-Seize"
4. Or an approved equal.

D. Reinforcing Steel Dowels: ASTM A 615, Grade 60. Same diameter as spliced rebar, or #4 minimum.

E. Expansion and Adhesive Anchors: Use only anchor types and styles with Research Report approval by the Los Angeles Department of Building and Safety.

1. Simpson Strong-tie “Strong-Bolt 2”
2. Hilti "Kwik-Bolt TZ"
3. Or an approved equal.

PART 3 -- EXECUTION

3.1 PROJECT CONDITIONS

A. Examine the areas and conditions under which the work will be performed. Correct conditions detrimental to timely and proper completion of the Work. Do not proceed until detrimental conditions are corrected.

3.2 CAST-IN-PLACE ANCHOR BOLTS

A. Provide templates or other means to ensure accurate placement. Provide sufficient threads to allow for a nut to be placed on the concrete side of the template.

B. Anchor bolts shall be clean and free of all coatings which may impair bonding with concrete.

C. Provide two nuts and a washer with each anchor bolt. Provide an additional locknut when indicated on the Drawings.

D. High Strength Bolts: Install such that ASTM Grade markings are visible after casting into concrete.

3.3 EPOXY-GROUTED ANCHOR BOLTS OR DOWELS

A. Provide templates or other means to ensure accurate placement.

B. Anchor bolts or dowels shall be clean and free of all coatings which may impair bonding with epoxy.

C. Provide two nuts and a washer with each anchor bolt. Provide an additional locknut when indicated on the Drawings.

D. High Strength Bolts: Install such that ASTM Grade markings are visible after casting into concrete.

E. Do not disturb bolt or dowel until epoxy grout has cured and reached full strength.

3.4 EXPANSION AND ADHESIVE ANCHORS: Install per Los Angeles Department of Building and Safety Approved Research Report and manufacturer's recommendations, whichever is more restrictive. Provide nuts and washers of same material and finish as anchor body.

3.5 STAINLESS STEEL ANCHORS. After installation of stainless steel anchor bolts or expansion anchors, lubricate threads before fastening.

END OF SECTION 03250

SECTION 03290
JOINTS IN CONCRETE

PART 1 -- GENERAL

1.1 THE REQUIREMENT

A. The CONTRACTOR shall construct all joints and bearing pads in concrete at the locations shown. Joints required in concrete structures are of various types and will be permitted only where shown, unless specifically accepted by the ENGINEER.

1.2 RELATED WORK SPECIFIED ELSEWHERE

A. Section 03100 Concrete Formwork.

B. Section 03200 Reinforcement Steel.

C. Section 03300 Cast-in-Place Concrete.

D. Section 07900 Joint Sealants.

1.3 REFERENCE SPECIFICATIONS, CODES, AND STANDARDS

A. Comply with the reference standards of the GENERAL REQUIREMENTS.

B. Comply with the current provisions of the following Codes and Standards, as applicable:

1. Federal Specifications:

TT-S-0227E(3)	Sealing Compound, elastomeric type, Multi-component for Caulking, Sealing, and Glazing Buildings and Other Structures).

2. U.S. Army Corps of Engineers Specifications:

CRD-C572	Corps of Engineers Specification for Polyvinylchloride Waterstop

3. Other Government Standards:

CSS	Caltrans Standard Specifications.

4. Commercial Standards:

ASTM C 920	Standard Specification for Elastomeric Joint Sealants.
ASTM D 624	Standard Test Method for Tear Strength of Conventional Vulcanized Rubber and Thermoplastic Elastomers.
ASTM D 638	Standard Test Method for Tensile Properties of Plastics.
ASTM D 746	Standard Test Method for Brittleness Temperature of Plastics and Elastomers by Impact.

ASTM D 1751	Standard Specification for Preformed Expansion Joint Filler for Concrete Paving and Structural Construction (Nonextruding and Resilient Bituminous Types).
ASTM D 1752	Standard Specification for Preformed Sponge Rubber, Cork and Recycled PVC Expansion Joint Fillers for Concrete Paving and Structural Construction.
ASTM D 2240	Test Method for Rubber Property -- Durometer Hardness.

1.4 TYPES OF JOINTS

A. Construction Joints: When fresh concrete is placed against a hardened concrete surface, the joint between the two pours is called a construction joint. Unless otherwise specified, all joints in water bearing members shall be provided with a waterstop and sealant groove of the shape specified and as shown on the plans.

B. Control Joints (Weakened Plane): The function of the control joint is to provide a weaker plane in the concrete, where shrinkage cracks will probably occur. A groove, of the shape and dimensions as shown on the plans, is formed or saw-cut in the concrete and shall be filled with a joint sealant material as specified in the Paragraph in Part 2 entitled "Joint Sealant."

1.4 CONTRACTOR SUBMITTALS

A. Submittals shall be made in accordance with GENERAL REQUIREMENTS.

B. The following submittals and specific information shall be provided.

1. Waterstops: Prior to use of the material required under this contract, qualification samples shall be submitted. Such samples shall consist of extruded or molded sections of each size or shape to be used. The material sample shall be representative of the material to be furnished under this contract. The balance of the material to be used under this contract shall not be produced until after the ENGINEER has reviewed and approved the qualification samples.

2. Joint Sealant: Prior to ordering the sealant material, the CONTRACTOR shall submit to the ENGINEER for review and approval, data to show compliance with the requirements of the Contract Documents. Certified test reports from the sealant manufacturer on the actual batch of material being supplied indicating compliance with the above requirements shall be furnished the ENGINEER before the sealant is used on the job.

3. Shipping Certification: The CONTRACTOR shall provide written certification from the manufacturer as an integral part of the shipping form, to show that all of the material shipped to this project meets or exceeds the physical property requirements of the Contract Documents. Supplier certificates are not acceptable.

4. The CONTRACTOR shall submit placement shop drawings showing the location and type of all joints for each structure.

1.5 QUALITY ASSURANCE

A. Waterstop manufacturer shall demonstrate five years (minimum) continuous, successful experience in production of waterstops.

B. Waterstop Inspection: It is required that all waterstop field joints shall be subject to inspection, and no such work shall be scheduled or started without having made prior arrangements with the INSPECTOR to provide for the required inspections. Not less than 24 hours notice shall be provided to the INSPECTOR for scheduling such inspections.

C. All field joints in waterstops shall be free of misalignment, bubbles, inadequate bond, porosity, cracks, offsets, and other defects which would reduce the potential resistance of the material to water pressure at any point. All defective joints shall be replaced with material which shall pass said inspection, and all faulty material shall be removed from the site and disposed of by the CONTRACTOR at its own expense.

D. The following waterstop defects represent a partial list of defects which shall be grounds for rejection:

1. Offsets at joints greater than 1/16-inch or 15 percent of material thickness, at any point, whichever is less.

2. Exterior crack at joint, due to incomplete bond, which is deeper than 1/16-inch or 15 percent of material thickness, at any point, whichever is less.

3. Any combination of offset or exterior crack which will result in a net reduction in the cross section of the waterstop in excess of 1/16-inch or 15 percent of material thickness at any point, whichever is less.

4. Misalignment of joint which result in misalignment of the waterstop in excess of 1/2-inch in 10 feet.

5. Porosity in the welded joint as evidenced by visual inspection.

6. Bubbles or inadequate bonding.

E. Waterstop Samples: Prior to use of the waterstop material in the field, a sample of a fabricated metered cross and a tee constructed of each size or shape of material to be used shall be submitted to the ENGINEER for approval. These samples shall be fabricated so that the material and workmanship represent in all respects the fittings to be furnished under this contract. Field samples of fabricated fittings (crosses, tees, etc.) will be selected at random by the INSPECTOR for testing. When tested, they shall have a tensile strength across the joints equal to at least 600 psi.

F. Construction Joint Sealant: The CONTRACTOR shall prepare adhesion and cohesion test specimens as specified herein, at intervals of 5 working days while sealants are being installed.

G. The sealant material shall show no signs of adhesive or cohesive failure when tested in accordance with the following procedure in laboratory and field tests:

1. Sealant specimen shall be prepared between 2 concrete blocks (1-inch by 2-inch by 3-inch). Spacing between the blocks shall be 1/2-inch. Coated spacers (2-inch by 1-1/2-inch by 1/2-inch) shall be used to insure sealant cross-sections of 1/2-inch by 2 inches with a width of 1/2-inch.

2. Sealant shall be cast and cured according to manufacturer's recommendations except that curing period shall not exceed 24 hours.

3. Following curing period, the gap between blocks shall be widened to one inch. Spacers shall be used to maintain this gap for 24 hours prior to inspection for failure.

H. Store waterstops under tarps to protect from oil, dirt, and sunlight.

1.6 GUARANTEE

A. The CONTRACTOR shall provide a 5-year written guarantee of the entire sealant installation against faulty and/or incompatible materials and workmanship, together with a statement that it agrees to repair or replace, to the satisfaction of the CITY, at no additional cost to the CITY, any such defective areas which become evident within said 5-year guarantee period.

PART 2 -- PRODUCTS

2.1 PVC WATERSTOPS

A. General: Waterstops shall be extruded from an elastomeric polyvinyl chloride compound containing the plasticizers, resins, stabilizers, and other materials necessary to meet the requirements of these Specifications. No reclaimed or scrap material shall be used. The CONTRACTOR shall obtain from the waterstop manufacturer and shall furnish to the ENGINEER for review, current test reports and a written certification of the manufacturer that the material to be shipped to the job meets the physical requirements as outlined in the U.S. Army Corps of Engineers Specification CRD-C572 and those listed herein.

B. Flatstrip and Center-Bulb Waterstops: Flatstrip and center-bulb waterstops shall be as detailed and as manufactured by: Kirkhill Rubber Co., Brea, California; Greenstreak, St. Louis, MO; Progress Unlimited, Inc., New York, New York; or an approved equal; provided, that at no place shall the thickness of flat strip waterstops, including the center bulb type, be less than 3/8-inch.

C. Multi-Rib Waterstops: Multi-rib waterstops, where required, shall be as detailed and as manufactured by Progress Unlimited, Inc., New York, New York; Greenstreak, St. Louis, MO, or an approved equal. Prefabricated joint fittings shall be used at all intersections of the ribbed-type waterstops.

D. Other Types of Waterstops: When other types of waterstops, not listed above are required and shown, they shall be subjected to the same requirements as those listed herein.

E. Waterstop Testing Requirements: When tested in accordance with the specified test standards, the waterstop material shall meet or exceed the following requirements:

Physical Property, Sheet Material	Value	ASTM Std.
Tensile Strength-min (psi)	1750	D 638, Type IV
Ultimate Elongation-min (percent)	350	D 638, Type IV
Low Temp Brittleness-max (degrees F)	-35	D 746
100 Percent Modulus (psi)	1000	D 638
Accelerated Extraction (CRD-C572)		
Tensile Strength-min (psi)	1500	D 638, Type IV
Ultimate Elongation-min (percent)	300	D 638, Type IV
Effect of Alkalies (CRD-C572)		
Change in Weight (percent)	+0.25/-0.10	------
Change in Durometer, Shore A	+5	D 2240
Finish Waterstop		
Tensile Strength-min (psi)	1400	D 638, Type IV
Ultimate Elongation-min (percent)	280	D 638, Type IV

F. Accessories

1. Provide factory made waterstop fabrications for all changes of direction, intersections, and transitions leaving only straight butt joint splices for the field.

2. Provide hog rings or grommets spaced at 12 inches on center along length of waterstop.

3. Provide Teflon coated thermostatically controlled waterstop splicing irons for field butt splices.

2.2. HYDROPHILIC WATERSTOP:

A. Installation Adhesives: Use with expansive waterstops as recommended by waterstop manufacturer.

B. Acceptable Manufacturers: Provide products manufactured by one of the following or equal:

1. Greenstreak Plastic Products: Hydrotite CJ-1020-2K.

2. Mitsubishi: Adeka Ultraseal MC-2010MN.

2.3 JOINT SEALANT

A. Joint sealant shall be polyurethane polymer designed for bonding to concrete which is continuously submerged in water.

B. Joint sealant material shall meet the following requirements:

Work Life	45 - 90 minutes
Time to Reach 20 Shore "A" Hardness (at 77 degrees F, 200 gr quantity)	24 hours, maximum
Ultimate Hardness	30 - 40 Shore "A"
Tensile Strength	250 psi, minimum
Ultimate Elongation	400 percent, minimum
Tear Resistance (Die C ASTM D 624)	75 pounds per inch of thickness, minimum
Color	Light Gray

For bridge structures, additional requirements of CSS Section 51 shall also apply.

C. All polyurethane sealants for waterstop joints in concrete shall conform to the following requirements:

1. Sealant shall be 2-part polyurethane with the physical properties of the cured sealant conforming to or exceeding the requirements of ASTM C 920 or Federal Specification TT-S-00227 E(3) for 2-part material, as applicable.

2. For vertical joints and overhead horizontal joints, only "non-sag" compounds shall be used; all such compounds shall conform to the requirements of ASTM C 920 Class B, or Federal Specification TT-S-0027 E(3), Type II.

3. For plane horizontal joints, the self-leveling compounds which meet the requirements of ASTM C 920 Class A, or Federal Specification TT-S-0027 E(3), Type I shall be used. For joints subject to either pedestrian or vehicular traffic, a compound providing non-tracking characteristics, and having a Shore "A" hardness range of 25 to 35, shall be used.

4. Primer materials, if recommended by the sealant manufacturer, shall conform to the printed recommendations of the sealant manufacturer.

D. All sealants, wherever shown, or required hereunder shall be Rubbercalk 2101-I or 270 as manufactured by Products Research Company; GS 102 or GS 1102 as manufactured by General Sealants Corp; or an approved equal. For sanitary structures mastic/sealant material shall be Ram Nek Sealant by Henry Co.; Sika Flex 1A, Sikadur 51 NS by Sika Corp.

E. Sealants for non-waterstop joints in concrete shall conform to the requirements of Section 07900, "Joint Sealants". Mastic joint sealer shall be a material that does not contain evaporating solvents; that will tenaciously adhere to concrete surfaces; that will remain permanently resilient and pliable; that will not be affected by continuous presence of water and will not in any way contaminate potable water; and that will effectively seal the joints against moisture infiltration even when the joints are subject to movement due to expansion and contraction. The sealer shall be composed of special asphalts or similar materials blended with lubricating and plasticizing agents to form a tough, durable mastic substance containing no volatile oils or lubricants and shall be capable of meeting the test requirements set forth hereinafter, if testing is required by the ENGINEER.

2.4 PREFORMED JOINT FILLER

A. Preformed joint filler material shall be of the preformed non-extruding type joint filler constructed of cellular neoprene sponge rubber or polyurethane of firm texture. Bituminous fiber type will not be permitted. All non-extruding and resilient-type preformed expansion joint fillers shall conform to the requirements and tests set forth in ASTM D 1752 for Type I, except as otherwise specified herein.

B. Unless otherwise noted, preformed joint filler shall be a non-extruding, resilient, bituminous type conforming to the requirements of ASTM D 1751.

2.5 BACKING ROD

A. Backing rod shall be an extruded closed-cell, polyethylene foam rod. The material shall be compatible with the joint sealant material used and shall have a tensile strength of not less than 40 psi and a compression deflection of approximately 25 percent at 8 psi. The rod shall be 1/8-inch larger in diameter than the joint width except that a one-inch diameter rod shall be used for a 3/4-inch wide joint.

2.6 BOND BREAKER

A. Bond breaker shall be Super Bond Breaker as manufactured by Burke Company, San Mateo, California; Hunt Process 225-TU as manufactured by Hunt Process Co., Santa Fe Springs, California; Select Cure CRB as manufactured by Select Products Co., Upland, California; or an approved equal. It shall contain a fugitive dye so that areas of application will be readily distinguishable.

PART 3 -- EXECUTION

3.1 GENERAL

A. Unless otherwise shown, waterstops of the type specified herein shall be embedded in the concrete across joints as shown. All waterstops shall be fully continuous for the extent of the joint. Splices necessary to provide such continuity shall be accomplished in conformance to printed instructions of manufacturer of the waterstops. The CONTRACTOR shall take suitable precautions and means to support and protect the waterstops during the progress of the work and shall repair or replace at its own expense any waterstops damaged during the progress of the work. All waterstops shall be stored so as to permit free circulation of air around the waterstop material.

B. When any waterstop is installed in the concrete on one side of a joint, while the other half or portion of the waterstop remains exposed to the atmosphere for more than 2 days, suitable precautions shall be taken to shade and protect the exposed waterstop from direct rays of the sun during the entire exposure and until the exposed portion of the waterstop is embedded in concrete.

3.2 SPLICES IN WATERSTOPS

A. Splices in waterstops shall be performed by heat sealing the adjacent waterstop sections in accordance with the manufacturer's printed recommendations and the following requirements:

1. The material not be damaged by heat sealing.

2. The splices have a tensile strength of not less than 60 percent of the unspliced materials tensile strength.

3. The continuity of the waterstop ribs and of its tubular center axis be maintained.

B. Butt joints of the ends of two identical waterstop sections may be made while the material is in the forms.

C. All joints with waterstops involving more than 2 ends to be jointed together, and all joints which involve an angle cut, alignment change, or the joining of 2 dissimilar waterstop sections shall be prefabricated by the CONTRACTOR prior to placement in the forms, allowing not less than 24-inch long strips of waterstop material beyond the joint. Upon being inspected and approved, such prefabricated waterstop joint assemblies shall be installed in the forms and the ends of the 24-inch strips shall be butt welded to the straight run portions of waterstop in place in the forms.

3.3 JOINT CONSTRUCTION

A. Setting Waterstops:

1. In order to eliminate faulty installation that may result in joint leakage, particular care shall be taken of the correct positioning of the waterstops during installation. Adequate provisions must be made to support the waterstops during the progress of the WORK and to insure the proper embedment in the concrete. The symmetrical halves of the waterstops shall be equally divided between the concrete pours at the joints. The center axis of the waterstops shall be coincident with the joint openings. Maximum density and imperviousness of the concrete shall be insured by thoroughly working it in the vicinity of all joints

2. In placing flat-strip waterstops in the forms, means shall be provided to prevent them from being folded over by the concrete as it is placed. Unless otherwise shown, all waterstops shall be held in place with light wire ties on 12-inch centers which shall be passed through the edge of the waterstop and tied to the curtain of reinforcing steel. Horizontal waterstops, with their flat face in a vertical plane, shall be held in place with continuous supports to which the top edge of the waterstop shall be tacked. In placing concrete around horizontal waterstops, with their flat face in a horizontal plane, concrete shall be worked under the waterstops by hand so as to avoid the formation of air and rock pockets.

3. Adequate means shall be provided for anchoring the waterstop in concrete. Waterstops shall be positioned so that they are equally embedded in the concrete on each side of the joint.

4. Hydrophilic Waterstops:

a. Clean and prepare joint surfaces, install primers or adhesives, and install expansive waterstops on dry surfaces in accordance with manufacturer's instructions, including concrete cure, temperature conditions, and splices.

b. Use mechanical fasteners to secure expansive waterstops to previously placed vertical and overhead concrete surfaces and other locations, as recommended by manufacturer. Protect installed waterstops from moisture and keep dry until subsequent placement of concrete.

B. Joint Location:

Construction joints, and other types of joints, shall be provided where shown. When not shown, construction joints shall be provided at 25-foot maximum spacing for all concrete construction, subject to the approval of the ENGINEER, unless noted otherwise. Where joints are shown spaced greater than 25 feet apart, additional joints shall be provided to maintain the 25-foot maximum spacing. The location of all joints, of any type, shall be submitted for acceptance by the ENGINEER.

C. Joint Preparation:

Special care shall be used in preparing concrete surfaces at joints where bonding between two sections of concrete is required. Unless otherwise shown, such bonding will be required at all horizontal joints in walls. Surfaces shall be prepared in accordance with the requirements of Section 03300, "Cast-in-Place Concrete." Except on horizontal wall construction joints, wall to slab joints or where otherwise shown or specified, at all joints where waterstops are required, the joint face of the first pour shall be coated with a bond breaker as specified herein.

D. Construction Joint Sealant:

1. Construction joints in water-bearing floor slabs, and elsewhere as shown, shall be provided with tapered grooves which will be filled with construction joint sealant. The material used for forming the tapered grooves shall be left in the grooves until just before the grooves are cleaned and filled with joint sealant. After removing the forms from the grooves, all laitance and fins shall be removed, and the grooves shall be sand-blasted. The grooves shall be allowed to become thoroughly dry, after which they shall be blown out; immediately thereafter, they shall be primed and filled with the construction joint sealant. The primer used shall be supplied by the same manufacturer supplying the sealant. No sealant will be permitted to be used without a primer. Care shall be used to completely fill the sealant grooves. Areas designated to receive a sealant filler shall be thoroughly cleaned, as outlined for the tapered grooves, prior to application of the sealant.

2. Sealant application shall be in accordance with the manufacturer's printed instructions. The surfaces of the groove for the sealant shall not be coated. Concrete next to waterstops shall be placed in accordance with the requirements of Section 03300, Cast-in-Place Concrete.

3. The primer and sealant shall be placed strictly in accordance with the printed recommendations of the manufacturer, taking special care to properly mix the sealant prior to application. All sealant shall cure at least 7 days before the structure is filled with water.

4. All sealant shall be installed by a competent waterproofing specialty contractor who has a successful record of performance in similar installations. Before work is commenced, the crew doing the WORK shall be instructed as to the proper method of application by a representative of the sealant manufacturer.

5. Thorough, uniform mixing of 2-part, catalyst-cured materials is essential; special care shall be taken to properly mix the sealer before its application. Before any sealer is placed, the CONTRACTOR shall arrange to have the crew doing the WORK carefully instructed as to the proper method of mixing and application by a representative of the sealant manufacturer.

5. Any joint sealant which after the manufacturer's recommended curing time for the job conditions of the WORK hereunder, fails to fully and properly cure shall be completely removed; the groove shall be thoroughly sandblasted to remove all traces of the uncured or partially cured sealant and primer, and shall be re-sealed with the specified joint sealant. All costs of such removal, joint treatment, re-sealing, and appurtenant work shall be at the expense of the CONTRACTOR.

END OF SECTION 03290

SECTION 03300
CAST-IN-PLACE CONCRETE

PART 1 -- GENERAL

1.1 THE REQUIREMENT

A. The CONTRACTOR shall furnish all materials for concrete in accordance with the provisions of this Section and shall form, mix, place, cure, repair, finish, and do all other work as required to produce finished concrete, in accordance with the requirements of the Contract Documents.

B. The following types of concrete shall be covered in this Section:

1. Structural Concrete: Concrete to be used in all cases except where noted otherwise in the Contract Documents.

2. Sitework Concrete: Concrete to be used for curbs, gutters, sidewalks, pavements, fence and guard post embedment, and underground duct bank encasement unless otherwise shown.

1.2 RELATED WORK SPECIFIED ELSEWHERE

A. Section 03100 Concrete Formwork

B. Section 03200 Reinforcement Steel

C. Section 03250 Concrete Accessories

D. Section 03290 Joints in Concrete

E. Section 03315 Grout

F. Section 03370 Concrete Curing

G. Section 07900 Joint Sealants

1.3 REFERENCE SPECIFICATIONS, CODES, AND STANDARDS

A. Comply with the reference standards and the Standard Specifications of the GENERAL REQUIREMENTS.

B. Comply with the current provisions of the following Codes and Standards, as applicable.

1. Commercial Standards:

ACI 117	Specification for Tolerances for Concrete Construction and Materials
ACI 305.1	Specification for Hot Weather Concreting
ACI 306.1	Standard Specification for Cold Weather Concreting
ACI 318	Building Code Requirements for Structural Concrete
ACI 347R	Guide to Formwork for Concrete
ACI 350	Code Requirements for Environmental Engineering Concrete Structures

ACI 350.5	Specification for Environmental Concrete Structures
ASTM C 31	Standard Practice for Making and Curing Concrete Test Specimens in the Field
ASTM C 33	Standard Specification for Concrete Aggregates
ASTM C 39	Standard Test Method for Compressive Strength of Cylindrical Concrete Specimens
ASTM C 40	Standard Test Method for Organic Impurities in Fine Aggregates for Concrete
ASTM C 42	Standard Test Method for Obtaining and Testing Drilled Cores and Sawed Beams of Concrete
ASTM C 88	Standard Test Method for Soundness of Aggregates by Use of Sodium Sulfate or Magnesium Sulfate
ASTM C 94	Standard Specification for Ready-Mixed Concrete
ASTM C 109	Standard Test Method for Compressive Strength of Hydraulic Cement Mortars (Using 2-in Cube Specimens)
ASTM C 117	Standard Test Method for Materials Finer than No. 200 Sieve in Mineral Aggregates by Washing
ASTM C 131	Standard Test Method for Resistance to Degradation of Small-Sized Coarse Aggregate by Abrasion and Impact in the Los Angeles Machine
ASTM C 136	Standard Test Method for Sieve Analysis of Fine and Coarse Aggregates
ASTM C 143	Standard Test Method for Slump of Hydraulic-Cement Concrete
ASTM C 150	Standard Specification for Portland Cement
ASTM C 157	Standard Test Method for Length Change of Hardened Hydraulic-Cement Mortar and Concrete
ASTM C 192	Standard Practice for Making and Curing Concrete Test Specimens in the Laboratory
ASTM C 260	Standard Specification for Air-Entraining Admixtures for Concrete
ASTM C 311	Standard Test Methods for Sampling and Testing Fly Ash or Natural Pozzolans for Use in Portland-Cement Concrete
ASTM C 494	Standard Specification for Chemical Admixtures for Concrete
ASTM C 595	Standard Specification for Blended Hydraulic Cements
ASTM C 596	Standard Test Method for Drying Shrinkage of Mortar Containing Hydraulic Cement

ASTM C 618	Standard Specification for Coal Fly Ash and Raw or Calcined Natural Pozzolan for Use in Concrete
ASTM C 989	Standard Specification for Slag Cement for Use in Concrete and Mortars
ASTM C 1157	Standard Performance Specification for Hydraulic Cement
ASTM C 1293	Standard Test Method for Determination of Length Change of Concrete Due to Alkali-Silica Reaction
ASTM C 1567	Standard Test Method for Determining the Potential Alkali-Salica Reactivity of Combinations of Cementitious Materials and Aggregate (Accelerated Mortar-Bar Method)
ASTM C 1602	Standard Specification for Mixing Water Used in the Production of Hydraulic Cement Concrete
ASTM C 1603	Standard Test Method for Measurement of Solids in Water-Suggest you add as it relates to ASTM C1602
ASTM D 2419	Standard Test Method for Sand Equivalent Value of Soils and Fine Aggregate

2. Government Standards:

CSS	Caltrans Standard Specifications

1.4 CONTRACTOR SUBMITTALS

A. Submittals shall be made in accordance with GENERAL REQUIREMENTS.

B. The following submittals and specific information shall be provided.

1. Mix Designs: Prior to beginning the WORK, the CONTRACTOR shall submit to the ENGINEER, for review, and acceptance, preliminary concrete mix designs for each class and type of concrete specified herein. The mix designs shall be designed by an independent testing laboratory acceptable to the ENGINEER. All costs related to such mix design shall be borne by the CONTRACTOR.

Each concrete mix submittal shall contain the following information, as applicable:

a. Location and purpose of the mix.
b. Slump on which the design is based.
c. Total gallons of water per cubic yard, and the water/cementitious materials ratio (w/cm).
d. Brand, type, composition and quantity of cement.
e. Brand type, composition and quantity of fly ash, slag cement, silica fume.
f. Specific Gravity, source and gradation of each aggregate.
g. Ratio of fine to total aggregate per cubic yard.
h. Weight (surface dry) of each aggregate per cubic yard.
i. Brand, type, and ASTM designation, active chemical ingredients and quantity of each admixture.
j. Copy of the Building and Safety Research Report Approval for each concrete admixture.
k. Air content.
l. Compressive strength based on 7-day and 28-day compression tests, including standard deviation calculations, corroborative data (if applicable), and required average comprehensive strength per ACI 318.
m. Time of initial and final set.

n. Certification stamp and signature by a Civil or Structural engineer registered in the State of California, experienced in concrete mix design.
o. Certificate of Compliance for Cement.
p. Concrete pour sequence.
q. Buy Clean California Act
1.) For project specifications that include GR Section 1601, Buy Clean California Act, bidders shall submit current Environmental Product Declarations (EPDs) for each concrete mix design, from the originating ready-mix plant used in the project. When material comes from different plants, an EPD will be required for each plant from which the material will be obtained.

2.) An EPD must conform to the following:
a) Shall be facility-specific manufacturer/plant EPD.
b) Be independently verified in accordance with ISO 14025 (Type III).
c) Be developed according to the guidelines of the applicable Product Category Rule (PCR), as identified by the Department of General Services, State of California.
d) Have a valid date that has not expired.
e) Shall not exceed the Global Warming Potential (GWP) as required by GR Section 1601.

3.) EPD shall be submitted concurrently with each mix submittal for review and approval.

2. Certified Delivery Tickets: Where ready-mix concrete is used, the CONTRACTOR shall provide certified weighmaster delivery tickets at the time of delivery of each load of concrete. Each certificate shall show the public weighmaster's signature, and the total quantities, by weight of cement, sand, each class of aggregate, admixtures, and the amounts of water in the aggregate and added at the batching plant as well as the amount of water allowed to be added at the site for the specific design mix. Each certificate shall, in addition, state the mix number, total yield in cubic yards, and the time of day, to the nearest minute, corresponding to when the batch was dispatched, when it left the plant, when it arrived at the job, the time that unloading began, and the time that unloading was finished.

3. When a water reducing admixture is to be used, the CONTRACTOR shall furnish mix designs for concrete both with and without the admixture.

4. The CONTRACTOR shall furnish a Certificate of Compliance signed by the supplier identifying the type of fly ash and stating that the fly ash complies with ASTM C 618 and these Specifications, together with all supporting test data prior to the use of the fly ash the sample represents. The supporting data shall also contain test results confirming that the fly ash in combination with the cement and water to be used meets all strength requirements and is compatible with air-entraining agents and other admixtures.

5. The CONTRACTOR shall submit to the ENGINEER for review the design mix for fly ash concrete together with the design mix for Portland cement (non-fly ash) concrete as specified in this Section.

1.5 QUALITY ASSURANCE

A. Laborers: Use adequate number of skilled laborers who are thoroughly trained and experienced in the necessary crafts and completely familiar with the specified requirements and the methods needed for proper performance of the Work of this Section.

B. Compliance with Regulations: All materials shall comply with the current rules and regulations of the local air quality management district, with the rules regarding volatile organic compounds, and with FDA rules and regulations for dangerous substances in construction products.

C. Concrete Manufacturer: Furnish concrete from licensed commercial ready-mix concrete plants conforming to ASTM C94 and approved by City of Los Angeles Department of Building and Safety. Requirements herein govern when exceeding ASTM C94.

D. Continuous Inspection: Construct structural concrete exceeding 2,500 psi compressive strength under continuous inspection of DEPUTY INSPECTOR. Obtain inspection and approval of forms and reinforcing by CONTRACTOR's Independent Testing/Inspection Laboratory three (3) working days before placing structural concrete in order to be verified by ENGINEER.

E. Tests on component materials and for compressive strength and shrinkage of concrete will be performed as specified herein. Test for determining slump will be in accordance with the requirements of ASTM C 143.

F. The cost of all laboratory tests on cement, aggregates, and concrete compressive strength, will be borne by the CITY. However, the CONTRACTOR shall be responsible for all other required tests and shall be charged for the cost of any additional tests and investigation on work performed which does not meet the specifications.

G. Concrete for testing shall be supplied by the CONTRACTOR at no cost to the CITY, and the CONTRACTOR shall provide assistance and facilities to the INSPECTOR in obtaining samples, and disposal and cleanup of excess material.

H. Field Compression Tests:

1. Compression test specimens will be taken during construction from the first placement of each concrete mix used and at intervals thereafter as selected by the INSPECTOR to insure continued compliance with these specifications. Each set of test specimens will be a minimum of 4 cylinders.

2. Compression test specimens for concrete shall be made in accordance with ASTM C 31. Specimens shall be 6-inch diameter by 12-inch high cylinders.

3. Compression tests shall be performed in accordance with ASTM C 39. Two 6"x12" test cylinders will be tested at 7 days as necessary and two at 28 days. Any remaining cylinders will be held to verify test results, if needed.

I. Evaluation and acceptance of Compressive Strength Concrete shall be based on the following criteria:

1. Concrete shall be sampled and tested in accordance with the ACI 350.5.

2. Acceptance of concrete placed shall be based on 28-day compressive strength test results. A 28-day compressive strength test shall consist of the average compressive strength of two 6"x12" concrete test cylinders fabricated from a single load of fresh concrete except that, if a cylinder should show evidence of improper handling, molding, or testing, said cylinder shall be discarded and the compressive strength test shall then consist of the remaining cylinder.

3. Concrete compressive strength tests representing concrete poured-in-place, shall attain the 28-day compressive strength specified in the specifications or as shown on the plans.

4. In-place concrete represented by a compressive cylinder strength test failing to meet the specified 28-day compressive strength shall be removed from the work at no cost to the CITY. Also, the CONTRACTOR shall at its own expense make any corrective changes in the mix deemed necessary by the ENGINEER. The changes in the mix proportions or placement procedures shall be approved by the ENGINEER prior to the placement of any additional concrete subsequent to a failing compressive strength test.

5. As an alternative to the removal of concrete represented by a failed cylinder compressive strength test and subject to the approval of the ENGINEER, the concrete represented by the failed compressive strength cylinder test or tests may be cored in place. The corings shall be completed no later than 10 days from notification of failure by the ENGINEER. The cores shall be taken by the CONTRACTOR in the presence of the INSPECTOR and tested at the CONTRACTOR's expense in accordance with ASTM C 42 by a certified laboratory acceptable to the INSPECTOR. The cores shall be 4 inch diameter (min.) unless otherwise directed by the ENGINEER. At least three cores shall be taken in each area represented by a failed 28-day concrete compressive strength cylinder test. Unless otherwise directed by the ENGINEER, the cores shall be tested wet following a 40-hour submergence. If each core tests at least 85 percent of the specified 28-day compressive strength or greater, the concrete represented may be accepted provided the CONTRACTOR accepts the payment provisions stated below. Concrete represented by failing core tests shall not be paid for and shall be removed by the CONTRACTOR from the work at no cost to the CITY.

6. Payment to the CONTRACTOR for concrete accepted by the ENGINEER based on core test results but represented by failing compressive cylinder test results shall be reduced as follows:

   a. When the result of a single compressive cylinder strength test is less than the specified 28-day compressive strength but 95 percent or more of the 28-day compressive strength, the CONTRACTOR shall pay the CITY per cubic yard for each in-place cubic yard of concrete represented by the deficient compressive strength cylinder test as determined by the actual sampling interval; and.

   b. When the result of a single compressive strength cylinder test is less than 95 percent of the specified 28-day compressive strength but is acceptable based on core test results taken in accordance with Subsection 1.5.I.5, the CONTRACTOR shall pay the CITY contract amount per cubic yard for each in-place cubic yard of concrete represented by the deficient compressive strength cylinder test as determined by the actual sampling interval.

J. Shrinkage Tests:

1. Perform Shrinkage tests on the design mix for Structural Concrete. The tests shall conform to ASTM C157 as modified by SASTM C 596 for curing, storage, and comparator readings. Use concrete specimens. Do not use mortar specimens.

2. Allowable shrinkage limitations shall be as specified in Part 2, herein.

K. Construction Tolerances: The CONTRACTOR shall set and maintain concrete forms and perform finishing operations so as to ensure that the completed work is within the tolerances specified in Section [03100] “Concrete Formwork”. Surface defects and irregularities are defined as finishes and are to be distinguished from tolerances.

L. For each class of fly ash, all testing and sampling procedures shall conform with these Specifications and ASTM C 311, including the restriction that one sample weighing 4 pounds shall be taken from at least each 200 tons of fly ash supplied.

M. Separate storage facilities shall be provided for fly ash and other supplementary cementitious materials (SCM). All SCM shall be stored in such a manner as to permit ready access for the purpose of inspection and sampling and suitably protected against contamination or moisture. Should any SCM show evidence of contamination or moisture or be otherwise unsuitable, the INSPECTOR may reject it and require that it be removed from the site. Each SCM used in concrete for this project shall be from the same source.

PART 2 -- PRODUCTS

2.1 CONCRETE MATERIALS

A. Materials shall be delivered, stored, and handled so as to prevent damage by water or breakage. Only one brand of cement shall be used. Cement reclaimed from cleaning bags or leaking containers shall not be used. All cement shall be used in the sequence of receipt of shipments.

B. All materials furnished for the work shall comply with the requirements of ACI 350.5, as applicable.

C. Storage of materials shall conform to the requirements of ACI 350.5.

D. Materials for concrete shall conform to the Standard Specifications and the following requirements.

1. Concurrent with strength design criteria, concrete shall also be proportioned to provide the requisite durability to satisfy the exposure conditions imposed by either environment and/or service. Durability, in this context, refers to the ability of the concrete to resist deterioration from the environment or service in which it is placed. Concrete proportioned in accordance with ACI 318, or ACI 350 for sanitary structures, chapter 4, Durability Requirements, will meet this criteria.

2. Cementitious Materials:

    a. Portland Cement shall conform to ASTM C 150, Type II.
    b. Supplementary Cementitious Materials:
        i. Fly ash shall conform to ASTM C 618, Class F.
        ii. Slag cement shall conform to ASTM C 989, Grade 100 or 120.

3. Aggregates shall be obtained from pits acceptable to the INSPECTOR, shall be non-reactive, and shall conform to ASTM C 33. Lightweight sand for fine aggregate will not be permitted.

    a. When tested in accordance with ASTM C 40, the fine aggregate shall produce a color in the supernatant liquid no darker than the reference standard color solution.

    b. When tested in accordance with ASTM C 131, the coarse aggregate shall show a loss not exceeding 42 percent after 500 revolutions, or 10.5 percent after 100 revolutions.

    c. When tested in accordance with ASTM C 88, the loss resulting after five cycles shall not exceed 10 percent for fine or coarse aggregate when using sodium sulfate.

    d. When tested in accordance with ASTM C 117, materials finer than No. 200 sieve shall not exceed 1% for gravel, and 1.5% for crushed aggregate.

    e. When tested in accordance with ASTM D 2419, the California sand equivalent values operating range shall not be below 71%.

    f. Fine and coarse aggregates used shall not cause expansion of mortar bars greater than 0.1 percent in 16 days when tested in accordance with ASTM C 1567 using project proposed cement or expansion result of the concrete prisms greater than 0.4 percent at 1 year when tested in accordance with ASTM C 1293. If aggregates proposed do not meet this requirement, then satisfy either subparagraph below:

        i. Total equivalent Akali content of the cement: DO not exceed 0.60 percent as provided in the optional chemical requirements of ASTM C 150.

        ii. Fine and coarse aggregates used shall not cause expansion of mortar bars greater than 0.1 percent in 16 days when tested in accordance with ASTM C 15678 and using the cement and fly ash proposed for the project. Proportions of cement-fly ash mix shall be the same as those proposed for the project.

4. Ready-mixed concrete shall conform to the requirements of ASTM C 94.

5. Water for mixing shall conform to ASTM C 1602 and be clean and free from objectionable quantities of silty organic matter, alkali, salts, and other impurities. The use of qualifying recycled water is encouraged**.** Mixing water that contains non-potable water should comply with ASTM C1602 Section 4 and Section 5 including Table 1 and Table 2.

6. Admixtures: The ENGINEER may require the use of admixtures or the CONTRACTOR may propose to use admixtures to control the set, effect water reduction, increase workability or enhance durability. In either case, the addition of an admixture shall be at the CONTRACTOR's expense. The use and continued use of an admixture shall be approved by the ENGINEER. Admixtures specified herein, other than calcium chloride, shall conform to the requirements of ASTM C 494 or other standards specified in this Section. The required quantity of cement shall be used in the mix regardless of whether or not an admixture is used. Admixtures shall contain no free chloride ions, be non-toxic after 30 days, and shall be compatible with and made by the same manufacturer as the air entraining admixture.

   These admixtures shall not be used in greater doses than those recommended by the manufacturer or permitted by the ENGINEER. The permitted dosage of the admixture shall not exceed that which will result in an increase in the drying shrinkage of the concrete in excess of 20 percent when used in precast or prestressed concrete, or 10 percent when used in any other structural concrete. The strength of concrete containing the admixture in the amount proposed shall, at the age of 48 hours and longer be not less than that of similar concrete without the admixture. The admixture shall not adversely affect the specified air content, unless permitted by the ENGINEER.

   a. Set controlling admixture shall be either with or without water-reducing properties. Where the air temperature at the time of placement is expected to be consistently over 80 degrees F, a set retarding admixture conforming to ASTM C 494, Type B or D, such as Sika Corporation's Plastiment, BASF Corporation’s MasterSet R Series or MasterSet DELVO Series, GCP applied Technologies (formerly W. R. Grace), Recover or Daratard 17 or an approved equal shall be used. Where the air temperature at the time of placement is expected to be consistently under 40 degrees F, a set accelerating admixture conforming to ASTM C 494 Type C or E, such as Sika Corporation's Plastocrete 161FL, BASF Corporation’s MasterSet AC 534 or MasterSet FP 20, GCP applied Technologies (formerly W. R. Grace), Daraset 400 or Polarset or an approved equal shall be used.

   b. Normal and mid-range water reducing admixtures shall conform to ASTM C 494, Type A, and shall be BASF Corporation’s MasterPozzolith Series, MasterPolyheed series, GCP applied Technologies (formerly W. R. Grace), ADVA series, Zyla series, WRDA series or approved equal. The quantity of admixture used, and the method of mixing shall be in accordance with the manufacturer's instructions and recommendations.

   c. High range water reducer shall conform to ASTM C 494, Type F or G.

      If the high range water reducing admixture is added to the concrete at the batch plant, it shall be, ADVA series ADVA 190, ADVA 198, ADVA 140M as manufactured by GCP Applied Technologies (formerly W. R. Grace) MasterRheobuild 1000, MasterGlenium Series, or PS 1466 as manufactured by BASF Corporation; or an approved equal. High range water reducer shall be added to the concrete after all other ingredients have been mixed and initial slump has been verified.

      If the high range water reducer is added to the concrete at the job site, it shall be used in conjunction with a normal water reducer and shall be MasterPozzolith 700 or MasterPozzolith 322 and MasterGlenium 7500 or MasterGlenium 3030, as manufactured by BASF Corporation; ADVA series ADVA 190, ADVA 198, ADVA 140M and Zyla Series, Zyla 625 or WRDA series, WRDA 64 as manufactured by GCP Applied technologies (formerly W. R. Grace**);** or an approved equal. Concrete shall have a

slump of 3-inches ± 1/2-inch prior to adding the high range water reducing admixture at the job site. Slump shall not exceed 9 inches for concrete after addition of high-range water-reducing admixture. The high range water reducing admixture shall be accurately measured and pressure injected into the mixer as a single dose by an experienced technician. A standby system shall be provided and tested prior to each day's operation of the job site system.

Concrete shall be mixed at mixing speed for a minimum of 30 mixer revolutions after the addition of the high range water reducer.

d. Air-entraining admixture meeting the requirements of ASTM C 260, such as BASF Corporation's MasterAir Series or, GCP Applied Technologies (formerly W. R. Grace Daravair or Darex series**,** approved equal, shall be used. Sufficient air-entraining agent shall be used to provide a total air content of 3 to 4 percent; provided that, when the mean daily temperature in the vicinity of the worksite falls below 40 degrees F for more than one day, the total air content provided shall be 5 to 6 percent. The CITY reserves the right, at any time, to sample and test the air-entraining agent received on the job by the CONTRACTOR. The air-entraining agent shall be added to the batch in a portion of the mixing water. The solution shall be batched by means of a mechanical batcher capable of accurate measurement.

e. Shrinkage-reducing admixture shall conform to ASTM C 494, Type S, and shall be BASF Corporation's MasterLife SRA 20, MasterLife CRA 007, GCP Applied Technologies (formerly W. R. Grace) Eclipse series or approved equal.

f. Calcium Chloride: Except as otherwise provided herein, calcium chloride will not be permitted to be used in concrete.

2.2 CURING MATERIALS

A. Materials for curing concrete shall conform to Section 03370 "Curing Concrete", Part 2.

2.3 NON-WATERSTOP JOINT MATERIALS

A. Materials for non-waterstop joints in concrete shall conform to Section [03290] "Joints In Concrete", Part 2.

2.4 MISCELLANEOUS MATERIALS

A. Dampproofing agent shall be an asphalt emulsion, such as [MasterSeal 610, MasterSeal 614 or MasterSeal 615 (formerly Hydrocide 600, Hydrocide 700 & Hydrocide 700B) by BASF Corporation], GCP Applied Technologies (formerly W. R. Grace) Darapel, [Flintkote C-13-E Foundation Coating], or an approved equal.

B. Epoxy adhesives shall be per the following products for the applications specified:

1 For bonding freshly-mixed, plastic concrete to hardened concrete, Sikadur Hi-Mod Epoxy Adhesive, as manufactured by Sika Corporation; MasterEmaco ADH 326 (formerly Concresive Liquid LPL) as manufactured by BASF Corporation; or an approved equal.

2 For bonding hardened concrete or masonry to steel, MasterEmaco ADH 327RS (formerly Concresive Paste SPL), Colma-Dur Gel, Sikadur Hi-Mod Gel, or an approved equal.

C. Drypack: Field mixture of 1 part Portland cement to 2 parts fine aggregate mixed to a damp consistency such that a ball molded in the hands will stick together and hold its shape. At CONTRACTOR's option, the specified admixture may be added for increased workability at lower water/cement ratio. In lieu of field mixing, CONTRACTOR may use factory mixed drypack material, such as BASF Corporation "MasterFlow 100" or Euclid "Euco Dry Pack Grout", or an approved equal.

D. Expansion Joint Filler: Asphalt impregnated fiber or non-extruding foam type, conforming to ASTM D994 and D1751, or D1752.

E. Construction Joint Materials: “Key-Kold”, “Kwik-Joint” of profiles indicated, or an approved equal.

F. Bonding Agent: “Weld-Crete”, manufactured by Larsen Products Co. or ”MasterEmaco ADH” Series (formerly Concresive Series), as manufactured by BASF Corporation, or an approved equal.

2.5 CONCRETE DESIGN REQUIREMENTS

A. General: Concrete shall be composed of cement, SCM, admixtures, aggregates and water. These materials shall be of the qualities specified. The exact proportions in which these materials are to be used for different parts of the work will be determined during the trial batch. In general, the mix shall be designed to produce a concrete capable of being deposited so as to obtain maximum density and minimum shrinkage and, where deposited in forms, to have good consolidation properties and maximum smoothness of surface. Mix designs with more than 41 percent of sand of the total weight of fine and coarse aggregate shall not be used. The aggregate gradations shall be formulated to provide fresh concrete that will not promote rock pockets around reinforcing steel or embedded items. The proportions shall be changed whenever necessary or desirable to meet the required results at no additional cost to the CITY. All changes shall be subject to review by the ENGINEER.

B. W/cm and Compressive Strength: The minimum compressive strength and cement content of concrete shall be not less than that specified in the following tabulation.

Type of Work	Min. 28-Day Compressive Strength (psi)	Aggregate Gradation	Cement per cu yd (sacks)	Max w/cm (by weight)
Structural Concrete *:	4,000	C	7.0	0.42
Sitework concrete:	3,000	C	5.5	0.54

Note: One sack of cement equals 94 lb.
* Use “B” Aggregate gradation when placing conditions permit.

C Adjustments to Mix Design: The mixes used shall be changed whenever such change is necessary or desirable to secure the required strength, density, workability, and surface finish and the CONTRACTOR shall be entitled to no additional compensation because of such changes.

D. Fly ash/pozzolan/ground granulated blast furnace slag may be used per requirements of the Standard Specifications, when approved by the ENGINEER as a partial cement replacement in concrete as follows:

1 Fly ash shall replace not more than 20 percent by weight of the Portland cement in the design mix. The design mix shall contain a minimum of 7 sacks of cement per cubic yard before the replacement is made.

2 Fly ash for hydraulic/liquid containing structures shall be Class F fly ash only. Fly ash for all other structures shall be Class C or F fly ash.

3 If ground granulated blast furnace slag is used in lieu of fly ash, the content of ground granulated blast furnace slag shall be in the range of 25-45 percent of total cement plus ground granulated blast furnace slag content, by weight.

2.6 CONSISTENCY

The quantity of water entering into a batch of concrete shall be just sufficient, with a normal mixing period, to produce a concrete which can be worked properly into place without segregation, and which can be compacted by the vibratory methods herein specified to give the desired density, impermeability and smoothness of surface. Subject to the w/c ratio requirements of section 2.5, the quantity of water shall be changed as necessary, with variations in the nature or moisture content of the aggregates, to maintain uniform production of a desired consistency. The consistency of the concrete in successive batches shall be determined by slump tests in accordance with ASTM C 143. The slumps shall be as follows:

Part of Work	Slump (in)
With high range water reducer added	9-inches max
Other work	per Standard Specifications

2.7 TRIAL BATCH AND LABORATORY TESTS

A. Before placing any concrete, a Department of Building and Safety certified testing laboratory approved by the ENGINEER shall prepare, within 30 calendar days after the date of the Notice to Proceed, a trial batch of each concrete mix, based on the preliminary concrete mixes submitted by the CONTRACTOR. During the trial batch the aggregate proportions may be adjusted by the testing laboratory using the two coarse aggregate size ranges to obtain the required properties. If one size range produces an acceptable mix, a second size range need not be used. Such adjustments shall be considered refinements to the mix design and shall not be the basis for extra compensation to the CONTRACTOR. All concrete shall conform to the requirements of this Section, whether the aggregate proportions are from the CONTRACTOR's preliminary mix design, or whether the proportions have been adjusted during the trial batch process. The trial batch shall be prepared using the aggregates, cement and admixture proposed for the project. The trial batch materials shall be of a quantity such that the testing laboratory can obtain 3 drying shrinkage, and 10 compression test specimens from each batch. The cost of not more than 3 laboratory trial batch tests for each specified concrete strength shall be borne by the CONTRACTOR. Any additional trial batch testing required shall be performed at the expense of the CONTRACTOR.

The trial batch procedure may be waived when test data of prior performance of the proposed mix design, performed by a Department of Building and Safety certified testing laboratory, is presented by the CONTRACTOR and approved by the ENGINEER.

The requirements of this section may be waived for concrete mixes specified by the Class per the Standard Specifications.

B. The determination of compressive strength will be made by testing 6-inch diameter by 12-inch high cylinders; made, cured and tested in accordance with ASTM C 192 and ASTM C 39. Five compression test cylinders shall be tested at 7 days and 5 at 28 days. The average compressive strength for the 5 cylinders tested at 28 days for any given trial batch shall not be less than the appropriate sections of ACI 318 of the specified compressive strength.

C. A sieve analysis of the combined aggregate for each trial batch shall be performed according to the requirements of ASTM C 136. Values shall be given for percent passing each sieve.

2.8 SHRINKAGE LIMITATION

A. The maximum concrete shrinkage for specimens cast in the laboratory from the trial batch, as measured at 25-day drying age shall be 0.036 percent. The CONTRACTOR shall only use a mix design for construction that has first met the trial batch shrinkage requirements.

2.9 MEASUREMENT OF CEMENT AND AGGREGATE

The amount of cement and of each separate size of aggregate entering into each batch of concrete shall be determined by direct weighing equipment furnished by the CONTRACTOR and acceptable to the ENGINEER; provided that, where batches are so proportioned as to contain an integral number

of conventional sacks of cement, and the cement is delivered at the mixer in the original unbroken sacks, the weight of the cement contained in each sack may be taken without weighing as 94 pounds.

2.10 MEASUREMENT OF WATER

The quantity of water entering the mixer shall be measured by a suitable water meter or other measuring device of a type acceptable to the ENGINEER and capable of measuring the water in variable amounts within a tolerance of one percent. The water feed control mechanism shall be capable of being locked in position so as to deliver constantly any specified amount of water to each batch of concrete, and the meter shall include a set-back register with a readily visible vertical face and double hands indicating in cubic feet and decimals thereof. A positive quick-acting valve shall be used for a cut-off in the water line to the mixer. The operating mechanism must be such that leakage will not occur when the valves are closed

2.11 READY-MIXED CONCRETE

A. At the CONTRACTOR's option, ready-mixed concrete may be used meeting the requirements as to materials, batching, mixing, transporting, and placing as specified herein and in accordance with ASTM C 94, including the following supplementary requirements.

B. Ready-mixed concrete shall be delivered to the site of the work, and discharge shall be completed within 90 minutes after the addition of the cement to the aggregates or before the drum has been revolved 250 revolutions, whichever is first. In hot weather, or under conditions contributing to quick stiffening of the concrete, the ready-mixed concrete shall be discharged before the temperature of the concrete exceeds 90 degrees F.

C. Truck mixers shall be equipped with electrically-actuated counters by which the number of revolutions of the drum or blades may be readily verified. The counter shall be of the re-settable, recording type, and shall be mounted in the driver's cab. The counters shall be actuated at the time of starting mixers at mixing speeds.

D. Each batch of concrete shall be mixed in a truck mixer for not less than 70 revolutions of the drum or blades at the rate of rotation designated by the manufacturer of equipment. Additional mixing, if any, shall be at the speed designated by the manufacturer of the equipment as agitating speed. All materials including mixing water shall be in the mixer drum before actuating the revolution counter for determining the number of revolutions of mixing.

E. Truck mixers and their operation shall be such that the concrete throughout the mixed batch as discharged is within acceptable limits of uniformity with respect to consistency, mix, and grading. If slump tests taken at approximately the 1/4 and 3/4 points of the load during discharge give slumps differing by more than 2-inches when the specified slump is more than 3-inches, the mixer shall not be used on the work unless the causing condition is corrected and satisfactory performance is verified by additional slump tests. All mechanical details of the mixer, such as water measuring and discharge apparatus, condition of the blades, speed of rotation, general mechanical condition of the unit, and clearance of the drum, shall be checked before a further attempt to use the unit will be permitted.

F. Each batch of ready-mixed concrete delivered at the job site shall be accompanied by a certified weighmaster delivery ticket furnished to the INSPECTOR in accordance with the Paragraph in Part 1 entitled "Certified Delivery Tickets".

G. The use of non-agitating equipment for transporting ready-mixed concrete will not be permitted. Combination truck and trailer equipment for transporting ready-mixed concrete will not be permitted. The quality and quantity of materials used in ready-mixed concrete and in batch aggregates shall be subject to continuous inspection at the batching plant by the INSPECTOR.

PART 3 -- EXECUTION

3.1 PROPORTIONING AND MIXING

A. Proportioning: Proportioning of the concrete mix shall conform to the requirements of Chapter 3 "Proportioning" of ACI 350.5; provided that the maximum slump for any concrete shall not exceed 4-inches except when the use of high range water reducer is permitted which increases the maximum slump to 9-inches.

B. Mixing: Mixing of concrete shall conform to the requirements of Chapter 7 of said ACI 350.5 Specifications and SSPWC. Whichever is most stringent shall apply.

C. Slump: Maximum slumps shall be as specified herein in Section 2.6.

D. Retempering: Retempering of concrete or mortar which has partially hardened will not be permitted.

3.2 PREPARATION OF SURFACES FOR CONCRETING

A. General: Wet wood forms sufficiently to tighten up cracks. Wet other materials sufficiently to reduce adsorption and to help maintain concrete workability. Earth surfaces shall be thoroughly wetted by sprinkling, 24 hours prior to the placing of any concrete, and these surfaces shall be kept moist by frequent sprinkling up to the time of placing concrete thereon. The surface shall be free from standing water, mud, and debris at the time of placing concrete.

B. Screeds: Set screeds at walls and maximum 8’ centers between. Set to provide level floor. Check with an instrument level, transit, or laser during placing operation to maintain level floor.

C. Expansion Joint Filler: Install where slabs abut buildings and elsewhere as indicated. Install full depth of concrete with top level with finished surface of concrete.

D. Joints in Concrete: Concrete surfaces upon or against which concrete is to be placed, where the placement of the old concrete has been stopped or interrupted so that, as determined by the ENGINEER, the new concrete cannot be incorporated integrally with that previously placed, are defined as construction joints. The surfaces of horizontal joints shall be given a compacted, roughened surface for good bond. Except where the Drawings call for joint surfaces to be coated, the joint surfaces shall be cleaned of all laitance, loose or defective concrete, and foreign material. Such cleaning shall be accomplished by sandblasting followed by thorough washing. All pools of water shall be removed from the surface of construction joints before the new concrete is placed.

E. After the surfaces have been prepared all approximately horizontal construction joints shall be covered with a layer of mortar approximately two-inch thick, or as shown on the plans. The mortar shall have the same proportions of cement and sand as the regular concrete mixture. The water-cement ratio of the mortar in place shall not exceed that of the concrete to be placed upon it, and the consistency of the mortar shall be suitable for placing and working in the manner hereinafter specified. The mortar shall be spread uniformly and shall be worked thoroughly into all irregularities of the surface. Wire brooms shall be used where possible to scrub the mortar into the surface. Concrete shall be placed immediately upon the fresh mortar. When casting deep walls (more than 6 feet high) over slabs or footings, in lieu of the two-inch thick mortar, a 6-inch lift of a rich pea gravel mix with the same water-cement ratio as the wall concrete shall be placed and spread uniformly. Wall concrete shall follow immediately and shall be placed upon the fresh pea gravel mix.

F. Embedded Items: No concrete shall be placed until all formwork, installation of parts to be embedded, reinforcement steel, and preparation of surfaces involved in the placing have been completed and ACCEPTED by the INSPECTOR at least 24 hours before placement of concrete. All surfaces of forms and embedded items that have become encrusted with dried grout from concrete previously placed shall be cleaned of all such grout before the surrounding or adjacent concrete is placed.

G. Conduits and Sleeves:

1. Locate so as not to reduce the strength of construction. Do not place pipes, except conduits in a slab of less than 3-1/2" thickness.

2. In supported concrete slabs, do not bury conduit having any outside diameter greater than 33% of the thickness of the slab. Increase slab thickness locally to meet this requirement.

3. Do not place conduit between the bottom of reinforcing steel and the bottom of supported slab.

4. In placing conduits at slabs on earth, place below the reinforcement, and encase in concrete by increasing thickness of the slab locally to at least 3" of concrete around the conduit on all sides.

H. All inserts or other embedded items shall conform to the requirements herein.

I. All reinforcement, anchor bolts, sleeves, inserts, and similar items shall be set and secured in the forms where shown or by shop drawings and shall be acceptable to the INSPECTOR before any concrete is placed. Accuracy of placement is the responsibility of the CONTRACTOR.

J. Where concrete is to be cast against old concrete, (greater than 60 days of age), the surface of the old concrete shall be thoroughly cleaned and roughened by sand-blasting, exposing the aggregate. In concrete shear-walls, suspended slabs and roof slabs, the interface surface at construction joints shall be roughened to a full amplitude of one quarter inch. The hardened surface shall be cleaned of all latent foreign material and washed clean, prior to the application of an epoxy bonding agent.

K. Concrete shall not be placed in any structure until all water entering the space to be filled with concrete has been properly cut off or has been diverted by pipes, or other means, and carried out of the forms, clear of the work. Concrete shall not be deposited underwater nor shall the CONTRACTOR allow still water to rise on any concrete until the concrete has attained its initial set. Water shall not be permitted to flow over the surface of any concrete in such manner and at such velocity as will injure the surface finish of the concrete. Pumping or other necessary dewatering operations for removing ground water, if required, will be subject to the review of the ENGINEER.

L. Corrosion Protection: Pipe, conduit, dowels, and other ferrous items required to be embedded in concrete construction shall be so positioned and supported prior to placement of concrete that there will be a minimum of 2-inches clearance between said items and any part of the concrete reinforcement. Securing such items in position by wiring or welding them to the reinforcement will not be permitted.

M. Openings for pipes, inserts for pipe hangers and brackets, and the setting of anchors shall, where practicable, be provided for during the placing of concrete.

N. Anchor bolts shall be accurately set, and shall be maintained in position by templates while being embedded in concrete.

O. Cleaning: The surfaces of all metalwork to be in contact with concrete shall be thoroughly cleaned of all dirt, grease, loose scale and rust, grout, mortar, and other foreign substances immediately before the concrete is placed.

3.3 HANDLING, TRANSPORTING, AND PLACING

A. General: Do not place concrete during rain or adverse weather conditions without means to prevent all damage. Conform to requirements specified hereinafter whenever concrete placement is required during cold or hot weather. Placing of concrete shall conform to the applicable requirements of ACI 350.5 and the requirements of this Section.

B. Non-Conforming Work or Materials: Concrete which upon or before placing is found not to conform to the requirements specified herein shall be rejected and immediately removed from the work.

Concrete which is not placed in accordance with these Specifications, or which is of inferior quality, shall be removed and replaced by and at the expense of the CONTRACTOR.

C. Concrete shall not be placed except in the presence of duly authorized representative of the INSPECTOR. The CONTRACTOR shall notify the INSPECTOR in writing at least 48 hours in advance of placement of any concrete.

D. Placement in Wall Forms: Concrete shall not be dropped through reinforcement steel or into any deep form, whether reinforcement is present or not, causing separation of the coarse aggregate from the mortar on account of repeatedly hitting rods or the sides of the form as it falls, nor shall concrete be placed in any form in such a manner as to leave accumulation of mortar on the form surfaces above the placed concrete. In such cases, some means such as the use of hoppers and, if necessary, vertical ducts of canvas, rubber, or metal shall be used for placing concrete in the forms in a manner that it may reach the place of final deposit without separation. In no case shall the free fall of concrete exceed 4 feet below the ends of ducts, chutes, or buggies. Concrete shall be uniformly distributed during the process of depositing and in no case after depositing shall any portion be displaced in the forms more than 6 feet in horizontal direction. Concrete in forms shall be deposited in uniform horizontal layers not deeper than 2 feet; and care shall be taken to avoid inclined layers or inclined construction joints except where such are required for sloping members. Each layer shall be placed while the previous layer is still soft. The rate of placing concrete in forms shall not exceed 5 feet of vertical rise per hour.

E. Casting New Concrete Against Old: An approved epoxy adhesive bonding agent shall be applied to the old surfaces according to the manufacturer's written recommendations. This provision shall not apply to joints where waterstop is installed, see Section [03290], "Joints in Concrete".

F. Conveyor Belts and Chutes: All ends of chutes, hopper gates, and all other points of concrete discharge throughout the CONTRACTOR'S conveying, hoisting and placing system shall be so designed and arranged that concrete passing from them will not fall separated into whatever receptacle immediately receives it. Conveyor belts, if used, shall be of a type acceptable to the ENGINEER. Chutes longer than 50 feet will not be permitted. Minimum slopes of chutes shall be such that concrete of the specified consistency will readily flow in them. If a conveyor belt is used, it shall be wiped clean by a device operated in such a manner that none of the mortar adhering to the belt will be wasted. All conveyor belts and chutes shall be covered. Sufficient illumination shall be provided in the interior of all forms so that the concrete at the places of deposit is visible from the deck or runway.

G. Placement in Slabs: Concrete placed in sloping slabs shall proceed uniformly from the bottom of the slab to the top, for the full width of the pour. As the work progresses, the concrete shall be vibrated and carefully worked around the slab reinforcement, and the surface of the slab shall be screeded in an up-slope direction.

H. Temperature of Concrete: The temperature of concrete when it is being placed shall be not more than 90 degrees F nor less than 40 degrees F in moderate weather, and not less than 50 degrees F in weather during which the mean daily temperature drops below 40 degrees F. Concrete ingredients shall not be heated to a temperature higher than that necessary to keep the temperature of the mixed concrete, as placed, from falling below the specified minimum temperature. If concrete is placed when the weather is such that the temperature of the concrete would exceed 90 degrees F, the CONTRACTOR shall employ effective means, such as precooling of aggregates and mixing water using ice or placing at night, as necessary to maintain the temperature of the concrete, as it is placed, below 90 degrees F. The CONTRACTOR shall be entitled to no additional compensation on account of the foregoing requirements.

I. Cold Weather Placement:

1. Earth foundations shall be free from frost or ice when concrete is placed upon or against them. Fly ash concrete shall not be placed when the air temperature falls below 50 degrees F.

2. Normal Concrete: When the temperature is below 40 degrees F, the temperature of the concrete placed in the forms shall be at least 60 degrees F. When the temperature is below 30 degrees F, the temperature of the concrete as mixed shall be 65°F. In all cases, when the daily average temperature is below 40 degrees F, the concrete shall be kept at 55 degrees F for the 72 hours, and then allowed to drop uniformly to the air temperature over the next 24 hours. Concrete temperature shall be measured by placing a thermometer 2" below the top of the concrete being placed.

3. Air-entrained concrete shall be kept at the above temperature for 27 hours and above freezing for an additional 72 hours.

4. No calcium chloride shall be used to accelerate hardening of concrete. CONTRACTOR to certify that any additive used does not contain calcium chloride.

5. If low temperature accelerating admixture is proposed, adjust concrete mix as required and obtain approval of the ENGINEER.

6. All concrete materials, reinforcement, forming materials and ground with which concrete is to come in contact shall be free of frost.

7. The covering or other protection used in connection with the curing shall remain in place and intact for at least 24 hours.

8. The work shall be protected from the elements, flowing water, and defacements of any nature during the construction operations.

9. Conform to the provisions of ACI 306.1R-16, except as modified herein.

J. Hot Weather Placement:

Conform to ACI 305.1 and the following requirements:

1. Take extra care to reduce the temperature of the concrete being placed, and to prevent rapid drying of newly placed concrete. When the outdoor ambient temperature is more than 90 degrees F, shade the fresh concrete as soon as possible after placing, use an evaporation reducer or fogging to minimize rapid drying. and start curing as soon as the surface of the fresh concrete is sufficiently hard to permit it without damage.

2. Concrete placement temperatures shall be controlled by the CONTRACTOR and shall not be limited to:

   a. Shading and cooling the aggregate;

   b. Avoiding use of hot cement;

   c. Cooling mixing water by additions of ice;

   d. Insulating water supply lines and tanks; and

   e. Insulating mixer drums or cooling them with sprays or wet burlap.

K. Cast-in-place concrete shall be homogeneous throughout the structural element. The methods used to place shall prevent segregation. Placement of concrete for bridge structures shall conform to Section 51-1 of the CSS.

3.4 PUMPING OF CONCRETE

A. General: If the pumped concrete does not produce satisfactory end results, the CONTRACTOR shall discontinue the pumping operation and proceed with the placing of concrete using conventional methods.

B. Pumping Equipment: The pumping equipment must have 2 cylinders and be designed to operate with one cylinder only in case the other one is not functioning. In lieu of this requirement, the CONTRACTOR may have a standby pump on the site during pumping.

C. The minimum diameter of the hose (conduits) shall be 4-inches.

D. Pumping equipment and hoses (conduits) that are not functioning properly, shall be replaced.

E. Aluminum conduits for conveying the concrete will not be permitted.

F. Gradation of coarse aggregates shall conform to ASTM C 33 and shall be as close to the middle range as possible.

G. Gradation of fine aggregate shall conform to ASTM C 33, with 15 to 30 percent passing the number 50 screen and 5 to 10 percent passing the number 100 screen. The fineness modulus of sand used shall not be over 3.00.

H. Field Control: Concrete samples for slump per ASTM C 143 and test cylinders per ASTM C 31 and C 39.

3.5 ORDER OF PLACING CONCRETE

A. The order of placing concrete in all parts of the work shall be acceptable to the ENGINEER. In order to minimize the effects of shrinkage, the concrete shall be placed in units as bounded by construction joints shown. The placing of units shall be done by placing alternate units in a manner such that each unit placed shall have cured at least 7 days before the contiguous unit or units are placed, except that the corner sections of vertical walls shall not be placed until the 2 adjacent wall panels have cured at least 14 days.

B. The surface of the concrete shall be level whenever a run of concrete is stopped. To insure a level, straight joint on the exposed surface of walls, a wood strip at least 3/4-inch thick shall be tacked to the forms on these surfaces. The concrete shall be carried about 1/2-inch above the underside of the strip. About one hour after the concrete is placed, the strip shall be removed and any irregularities in the edge formed by the strip shall be leveled with a trowel and all laitance shall be removed.

3.6 TAMPING AND VIBRATING

A. As concrete is placed in the forms or in excavations, it shall be thoroughly settled and compacted, throughout the entire depth of the layer which is being consolidated, into a dense, homogeneous mass, filling all corners and angles, thoroughly embedding the reinforcement, eliminating rock pockets, and bringing only a slight excess of water to the exposed surface of concrete during placement. Vibrators shall be high speed power vibrators (8,000 to 10,000 rpm) of an immersion type in sufficient number and with (at least one) standby units as required.

B. Operation of Vibrators: Do not horizontally transport concrete in forms with vibrators nor allow vibrators to contact forms or reinforcing. Push vibrators vertically into the preceding layers that are still plastic and slowly withdraw, producing maximum obtainable density in concrete without creating voids or segregation. In no case disturb concrete that has partially set. Vibrate at intervals not exceeding two-thirds the effective visible vibration diameter of the submerged vibrator. Avoid excessive vibration that causes segregation. Use and type of vibrators shall conform to ACI 309 "Recommended Practice for Consolidation of Concrete".

C. Correction of Segregation: Before placing next layer of concrete, and at the top of last placement for vertical elements, remove concrete containing excess water or fine aggregate or showing deficiency of coarse aggregate and fill the space with compacted concrete of correct proportions.

D. Care shall be used in placing concrete around waterstops. The concrete shall be carefully worked by rodding and vibrating to make sure that all air and rock pockets have been eliminated. Where flat-strip type waterstops are placed horizontally, the concrete shall be worked under the waterstops by hand, making sure that all air and rock pockets have been eliminated. Concrete surrounding the waterstops shall be given additional vibration, over and above that used for adjacent concrete placement to assure complete embedment of the waterstops in the concrete.

E. Concrete in walls shall be internally vibrated and at the same time rammed, stirred, or worked with suitable appliances, tamping bars, shovels, or forked tools until it completely fills the forms or excavations and closes snugly against all surfaces. Subsequent layers of concrete shall not be placed until the layers previously placed have been worked thoroughly as specified. Vibrators shall be provided in sufficient numbers, with standby units as required, to accomplish the results herein specified within 15 minutes after concrete of the prescribed consistency is placed in the forms. The vibrating head shall be kept from contact with the surfaces of the forms. Care shall be taken not to vibrate concrete excessively or to work it in any manner that causes segregation of its constituents.

3.7 FINISHING CONCRETE SURFACES

A. General: Surfaces shall be free from fins, bulges, ridges, offsets, honeycombing, or roughness of any kind, and shall present a finished, smooth, continuous hard surface. Allowable deviations from plumb or level and from the alignment, profiles, and dimensions shown are defined as tolerances and are specified in Part 1, herein. These tolerances are to be distinguished from irregularities in finish as described herein. Aluminum finishing tools shall not be used.

B. Formed Surfaces: Formed surfaces for all structures other than building structures and bridge decks, shall be finished per Section 303-1.9 of Standard Specifications. Concrete for bridge decks shall be finished per CSS Section 51-1.17. Concrete for building and retaining wall structures shall be finished per architectural finish as specified hereon, or as shown on Drawings.

C. Finishing of Formed Surfaces (As Applicable):

1. General: After removal of forms, give the concrete surfaces one or more of the finishes specified below where so indicated on the Contract Drawings. Revise the finishes as needed to secure the approval of the ENGINEER.

C. Finishing of Unformed Top Surfaces of slabs, floors, walls, and curbs in accordance with Aci 350.5.

1. Unspecified Finish: In accordance with ACI 350.5, unless otherwise stated below:

a. Light Troweled Finish: For top slabs or floors intended as walking surfaces.

3.8 CURING AND DAMPPROOFING

Curing and Dampproofing shall conform to Section 03370 “Curing Concrete”, Part 3.

3.9 PROTECTION

The CONTRACTOR shall protect all concrete against injury until final acceptance by the CITY. Fresh concrete shall be protected from damage due to rain, hail, sleet, or snow. The CONTRACTOR shall provide such protection while the concrete is still plastic and whenever such precipitation is imminent or occurring. Immediately following the first frost in the fall, the CONTRACTOR shall be prepared to protect all concrete against freezing. After the first frost, and until the mean daily temperature in the vicinity of the worksite falls below 40 degrees F for more than one day, the concrete shall be maintained at a temperature not lower than 50 degrees F for at least 72 hours after it is placed.

The CONTRACTOR shall protect all concrete against injury or damage from excessive heat, lack of moisture, overstress, or any other cause until final acceptance by the CITY. Particular care shall be taken to prevent the drying of concrete and to avoid roughening or otherwise damaging the surface. Any concrete found to be damaged, or which may have been originally defective, or which becomes defective at any time prior to the final acceptance of the completed work, or which departs from the established line or grade, or which, for any other reason, does not conform to the requirements of the Contract Documents, shall be satisfactorily repaired or removed and replaced with acceptable concrete at the CONTRACTOR'S expense.

3.10 TREATMENT OF SURFACE DEFECTS

A. As soon as forms are removed, all exposed surfaces shall be carefully examined, and any irregularities shall be immediately rubbed or ground in a satisfactory manner in order to secure a smooth, uniform, and continuous surface. Plastering or coating of surfaces to be smoothed will not be permitted. No repairs shall be made until after inspection by the ENGINEER. In no case will extensive patching of honeycombed concrete be permitted. Concrete containing minor voids, holes, honeycombing, or similar depression defects shall be repaired as specified herein. Concrete containing extensive voids, holes, honeycombing, or similar depression defects, shall be completely removed and replaced. All repairs and replacements herein specified shall be promptly executed by the CONTRACTOR at its own expense.

B. Defective surfaces to be repaired shall be cut back from true line a minimum depth of 1/2-inch over the entire area. Feathered edges will not be permitted. Where chipping or cutting tools are not required in order to deepen the area properly, the surface shall be prepared for bonding by the removal of all laitance or soft material, and not less than 1/32-inch depth of the surface film from all hard portions, by means of an efficient sandblast. After cutting and sandblasting, the surface shall be wetted sufficiently in advance of shooting with shotcrete or with cement mortar so that while the repair material is being applied, the surfaces under repair will remain moist, but not so wet as to overcome the suction upon which a good bond depends. The material used for repair purposes shall consist of a mixture of one sack of cement to 3 cubic feet of sand. For exposed walls, the cement shall contain such a proportion of Atlas white Portland cement as is required to make the color of the patch match the color of the surrounding concrete.

C. Holes left by tie-rod cones shall be reamed so as to leave the surfaces of the holes clean and rough. These holes then shall be repaired in an approved manner with non-shrink grout. Holes left by form-tying devices having a rectangular cross-section, and other imperfections having a depth greater than their least surface dimension, shall not be reamed but shall be repaired in an approved manner with non-shrink grout.

D. All repairs shall be built up and shaped in such a manner that the completed work will conform to the requirements of this Section, as applicable, using approved methods which will not disturb the bond, cause sagging, or cause horizontal fractures. Surfaces of said repairs shall receive the same kind and amount of curing treatment as required for the concrete in the repaired section.

E. Prior to filling any structure with water, all cracks that may have developed shall be repaired to the satisfaction of the ENGINEER. This repair method shall be done on the water bearing face of members. Prior to backfilling, faces of members in contact with fill, which are not covered with a waterproofing membrane, shall also have cracks repaired as specified herein.

END OF SECTION

SECTION 03315
GROUT

PART 1 -- GENERAL

1.1 THE REQUIREMENT

A. The CONTRACTOR shall furnish all materials for grout in accordance with the provisions of this Section and shall form, mix, place, cure, repair, finish, and do all other work as required to produce finished grout, in accordance with the requirements of the Contract Documents.

B. All grouts shall be City of Los Angeles approved product. The CONTRACTOR shall submit a copy of the Los Angeles Research Report with submittals.

C. The following types of grout shall be covered in this Section:

1. Non-Shrink Grout: This type of grout is to be used wherever grout is shown in the Contract Documents, unless another type is specifically referenced.

2. Concrete (Cement) Grout.

1.2 RELATED WORK SPECIFIED ELSEWHERE

A. Section 03250 Concrete Accessories.

B. Section 03300 Cast-in-Place Concrete.

C. Section 03400 Precast Concrete.

D. Section 03740 Concrete Repair.

1.3 REFERENCE SPECIFICATIONS, CODES, AND STANDARDS

A. Comply with the reference standards of the GENERAL REQUIREMENTS.

B. Comply with the current provisions of the following Codes and Standards, as applicable.

1. Commercial Standards:

CRD-C 621	Corps of Engineers Specification for Non-shrink Grout
ASTM C 109	Standard Test Method for Compressive Strength of Hydraulic Cement Mortars (Using 2-in or 50-mm Cube Specimens)
ASTM C 531	Standard Test Method for Linear Shrinkage and Coefficient of Thermal Expansion of Chemical- Resistant Mortars, Grouts, Monolithic Surfacings, and Polymer Concretes
ASTM C 579	Standard Test Methods for Compressive Strength of Chemical-Resistant Mortars, Monolithic Surfacings, and Polymer Concretes
ASTM C 827	Standard Test Method for Change in Height at Early Ages of Cylindrical Specimens of Cementitious Mixtures

ASTM C 1107	Standard Specification for Packaged Dry, Hydraulic-Cement Grout (Non-Shrink)
ASTM D 696	Standard Test Method for Coefficient of Linear Thermal Expansion of Plastics Between -30°C and 30°C with a Vitreous Silica Dilatometer

2. Other Government Standards:

CSS	Caltrans Standard Specifications.

1.4 CONTRACTOR SUBMITTALS

A. Submittals shall be made in accordance with GENERAL REQUIREMENTS.

B. The following submittals and specific information shall be provided.

1. The CONTRACTOR shall submit certified test results verifying the compressive strength, shrinkage, and expansion requirements specified herein; and manufacturer's literature containing instructions and recommendations on the mixing, handling, placement and appropriate uses for each type of non-shrink and epoxy grout used in the work.

1.5 QUALITY ASSURANCE

A. Field Tests:

1. Compression test specimens will be taken during construction from the first placement of each type of grout, and at intervals thereafter as selected by the ENGINEER to insure continued compliance with these specifications. The specimens will be made by the INSPECTOR

2. Compression tests and fabrication of specimens for concrete (cement) grout and non-shrink grout will be performed as specified in ASTM C 109 at intervals during construction as selected by the ENGINEER. A set of three specimens will be made for testing at 7 days, 28 days, and each additional time period as appropriate.

3. All grout, already placed, which fails to meet the requirements of these specifications, is subject to removal and replacement at the cost of the CONTRACTOR.

4. The cost of all laboratory tests on grout will be borne by the CITY, but the CONTRACTOR shall assist the INSPECTOR in obtaining specimens for testing. However, the CONTRACTOR shall be charged for the cost of any additional tests and investigation on work performed which does not meet the specifications. The CONTRACTOR shall supply all materials necessary for fabricating and containing the test specimens.

B. Construction Tolerances: Construction tolerances shall be as specified in the Section 03300, "Cast-in-Place Concrete," except as modified herein and elsewhere in the Contract Documents.

PART 2 -- PRODUCTS

2.1 CONCRETE (CEMENT) GROUT

A. Concrete (Cement) Grout: Cement grout shall be composed of one part cement, three parts sand, and the minimum amount of water necessary for the mixture to flow under its own weight. Where needed to match the color of adjacent concrete, white Portland cement shall be blended with regular cement as needed. In addition, where needed, an approved admixture may be added to increase

workability at a low water/cement ratio. The minimum compressive strength at 28 days shall be 4000 psi.

B. Concrete (cement) grout materials shall be as specified in Section 03300, "Cast-in-Place Concrete".

2.2 PREPACKAGED GROUTS

A. Non-Shrink Grout:

1. Non-shrink grout shall be a prepackaged, inorganic, non-gas-liberating when tested in accordance with C1107, non-metallic, cement-based grout requiring only the addition of water. Manufacturer's instructions shall be printed on each bag or other container in which the materials are packaged. The specific formulation for each class of non-shrink grout specified herein shall be that recommended by the manufacturer for the particular application.

2. Class A non-shrink grouts shall have a minimum 28 day compressive strength of 5,000 psi; shall have no shrinkage (0.0 percent) and a maximum 4.0 percent expansion in the plastic state when tested in accordance with ASTM C 827; and shall have no shrinkage (0.0 percent) and a maximum of 0.2 percent expansion in the hardened state when tested in accordance with CRD C 621.

3. Class B non-shrink grouts shall have a minimum 28 day compressive strength of 5,000 psi and shall meet the requirements of CRD C 621.

4. Application:

a. Class A non-shrink grout shall be used for the repair of all holes and defects in concrete members which are water bearing or in contact with soil or other fill material, grouting under all equipment base plates, and at all locations where grout is specified in the contract documents; except, for those applications for Class B non-shrink grout and epoxy grout specified herein. Class A non-shrink grout may be used in place of Class B non-shrink grout for all applications.

b. Class B non-shrink grout shall be used for the repair of all holes and defects in concrete members which are not water-bearing and not in contact with soil or other fill material, grouting under all base plates for structural steel members, and grouting railing posts in place.

2.3 CURING MATERIALS

Curing materials shall be as specified in Section 03300, "Cast-in-Place Concrete" for cement grout and as recommended by the manufacturer of prepackaged grouts.

2.4 CONSISTENCY

The consistency of grouts shall be that necessary to completely fill the space to be grouted for the particular application. Dry pack consistency is such that the grout is plastic and moldable but will not flow. Where "dry pack" is called for in the Contract Documents, it shall mean a grout of that consistency; the type of grout to be used shall be as specified herein for the particular application.

2.5 MEASUREMENT OF INGREDIENTS

A. Measurements for cement grout shall be made accurately by volume using containers. Shovel measurement shall not be allowed.

B. Prepackaged grouts shall have ingredients measured by means recommended by the manufacturer.

PART 3 -- EXECUTION

3.1 GENERAL

A. All surface preparation, curing, and protection of cement grout shall be as specified in Section 03300, "Cast-in-Place Concrete". The finish of the grout surface shall match that of the adjacent concrete.

B. The manufacturer of Class A non-shrink grout and epoxy grout shall provide on-site technical assistance upon request. All costs related to this requirement shall be borne by the CONTRACTOR.

C. All mixing, surface preparation, handling, placing, consolidation, and other means of execution for prepackaged grouts shall be done according to the instructions and recommendations of the manufacturer.

3.2 CONSOLIDATION

Grout shall be placed in such a manner, for the consistency necessary for each application, so as to assure that the space to be grouted is completely filled.

END OF SECTION 03315

SECTION 03370
CONCRETE CURING

PART 1 -- GENERAL

1.1 THE REQUIREMENT

A. The Contractor shall furnish all tools, equipment, materials, and supplies and shall perform all labor required to complete the work as indicated on the Drawings and specified herein.

B. This section covers the work necessary for the concrete curing requirements.

1.2 RELATED WORK SPECIFIED ELSEWHERE

A. Section 03100 Concrete Formwork.

B. Section 03300 Cast-In-Place Concrete.

D. Section 03400 Precast Concrete.

1.3 REFERENCE SPECIFICATIONS, CODES AND STANDARDS

A. Comply with the reference standards and Standard Specifications of the GENERAL REQUIREMENTS.

B. Comply with the current provisions of the following Codes and Standards, as applicable.

1. Federal Specifications:

   UU-B-790A (Int.Amd. 1) Building Paper, Vegetable Fiber (Kraft, Waterproofed, Waterproofed, water Repellant and Fire Resistant)

2. Commercial Standards:

ACI 308	Standard Practice for Curing Concrete
ASTM C 156	Standard Test Method for Water Loss [from a Mortar Specimen] Through Liquid Membrane-Forming Curing Compounds for Concrete
ASTM C 171	Specifications for Sheet Materials for Concrete Curing
ASTM C 309	Standard Specification for Liquid Membrane-Forming Compounds for Curing Concrete

3. Government Standards:

CSS	Caltrans Standard Specifications

1.4 CONTRACTOR SUBMITTALS

A. Submittals shall be made in accordance with the GENERAL REQUIREMENTS.

1.5 QUALITY ASSURANCE

A. Quality Control Data:

1. Curing Compound: Manufacturer's Certification of Compliance, to include statement that product meets ASTM C 309 additional permeability requirement, and coverage.

2. Retardant For Exposed Aggregate Finish on Formed Surface: Manufacturer's Certification of Compliance including statement that product is suitable for and will meet job requirements.

3. Curing method, procedures and method of application to be used shall be in compliance with the requirements as specified herein.

PART 2 -- PRODUCTS

2.1 CURING MATERIALS

A. Materials for curing concrete as specified herein shall conform to the Standard Specifications and the following requirements:

1. Polyethylene sheet for use as concrete curing blanket shall be white and conform to ASTM C 171. The loss of moisture when determined in accordance with the requirements of ASTM C 156 shall not exceed 0.055 grams per square centimeter of surface.

2. Polyethylene-coated waterproof paper sheeting for use as concrete curing blanket shall consist of white polyethylene sheeting free of visible defects, uniform in appearance, having a nominal thickness of 2 mils and permanently bonded to waterproof paper conforming to the requirements of Federal Specification UU-B-790A (Int. Amd. 1). The loss of moisture, when determined in accordance with the requirements of ASTM C 156, shall not exceed 0.055 gram per square centimeter of surface.

3. Polyethylene-coated burlap for use as concrete curing blanket shall conform to ASTM C 171. The loss of moisture, when determined in accordance with the requirements of ASTM C 156, shall not exceed 0.055 grams per square centimeter of surface.

4. Curing mats for use in Curing Method 6 as specified herein, shall be heavy shag rugs or carpets or cotton mats quilted at 4-inches on center. Curing mats shall weigh a minimum of 12 ounces per square yard when dry.

5. Evaporation retardant shall be a material such as MasterKure ER 50 (formerly Confilm) as manufactured by Masterbuilders, Cleveland, OH; or an approved equal**.**

B. Curing Compound:

1. Curing compound shall consist of a liquid which, when applied to fresh concrete by means of a spray gun, will form an impervious membrane over the exposed surfaces of the concrete.

2. Concrete curing compounds shall be designated by type as follows:

Type 1-D - Clear or translucent with red fugitive dye.

3. Provide curing compound meeting requirements of ASTM C 309, with additional requirement that permeability not exceed 0.039 gm/square cm/72 hours, when tested in accordance with ASTM C 156 standards.

4. Provide evaporation retardant where required to prevent rapid evaporation of water from fresh exposed concrete.

5. When pigmented curing compounds are used, at the time of use, the compound shall be thoroughly mixed, with the pigment uniformly dispensed throughout the mixture.

PART 3 -- EXECUTION

3.1 CURING AND DAMPPROOFING METHODS

General: All concrete shall be cured for not less than 10 days after placing, in accordance with the methods specified herein for the different parts of the work and described in detail in the following paragraphs.

Surface to be Cured or Dampproofed	Method
Unstripped forms	1
Wall sections with forms removed	6
Construction joints between footings and walls, and between floor slab and columns	2
Encasement concrete and thrust blocks	3
All concrete surfaces not specifically provided for elsewhere in this Paragraph	4
Floor slabs on grade	5
Roof and slabs not on grade	6
Exterior buried surfaces of roof slabs and basement walls	7
All liquid and water retaining structures	2

Method 1: Wooden forms shall be wetted immediately after concrete has been placed and shall be kept wet with water until removed. If steel forms are used the exposed concrete surfaces shall be kept continuously wet until the forms are removed. If forms are removed within 10 days of placing the concrete, curing shall be continued in accordance with Method 6, herein.

Method 2: The surface shall be covered with burlap mats which shall be kept wet with water for the duration of the curing period, until the concrete in the walls has been placed. No curing compound shall be applied to surfaces cured under Method 2.

Method 3: The surface shall be covered with moist earth not less than 4 hours, nor more than 24 hours, after the concrete is placed. Earthwork operations that may damage the concrete shall not begin until at least 7 days after placement of concrete.

Method 4: The surface shall be sprayed with a liquid curing compound.

1 Curing compound shall be applied in 2 coats according to the manufacturer's printed instructions. The direction of application of the second coat shall be perpendicular to the first. The second coat shall be applied when the first coat is dry to touch, but not to exceed 4 hours. Each coat shall be applied at a rate not more than 200 square feet per gallon and in such a manner as to cover the surface with a uniform film which will seal thoroughly.

2 Where the curing compound method is used, care shall be exercised to avoid damage to the seal during the curing period. The CONTRACTOR shall maintain and monitor the curing compound membrane for a minimum of 10 days. Should the seal be damaged or broken before the expiration of this curing period, the break shall be repaired immediately by the application of additional curing compound over the damaged portion.

3 Wherever curing compound may have been applied by mistake to surfaces against which concrete subsequently is to be placed and to which it is to adhere, said compound shall be entirely removed by wet sandblasting just prior to the placing of new concrete.

4 Application of the curing compound to the concrete shall commence as soon as the finished surface of the concrete reaches a uniformly damp appearance with no free water on the surface. Curing compound shall also be applied no later than 2 hours after removal of forms from contact with formed surfaces or after the placement of concrete on the subgrade. At any point, the application rate shall be within 50 square feet per gallon of the nominal rate and the average application rate shall be within 25 square feet per gallon of the nominal rate specified when tested in accordance with California Test 535.

5 Repairs required to be made to formed surfaces shall be made within the said 2-hour period; provided, however, that any such repairs which cannot be made within the said 2-hour period shall be delayed until after the curing compound has been applied. When repairs are to be made to an area on which curing compound has been applied, the area involved shall first be wet-sandblasted to remove the curing compound, following which repairs shall be made as specified herein.

6 At the time of use, pigmented curing compounds shall be maintained in a thoroughly mixed condition. Containers of curing compound shall remain air-tight when not in use.

7 The CONTRACTOR shall apply curing compound in the presence of the INSPECTOR. Curing compound shall be applied to form a continuous and uniform membrane.

Method 5: Immediately after the concrete has been screeded, it shall be treated with a liquid evaporation retardant. The retardant shall be used again after each work operation as necessary to prevent drying shrinkage cracks.

1. Immediately after each square foot of the concrete has been finished, it shall be given a coat of curing compound in accordance with Method 4, herein. Not less than one hour nor more than 4 hours after the coat of curing compound has been applied, the surface shall be wetted with water delivered through a fog nozzle, and concrete-curing blankets shall be placed on the slabs. The curing blankets shall be polyethylene sheet, polyethylene-coated waterproof paper sheeting or polyethylene-coated burlap. The blankets shall be laid with the edges butted together and with the joints between strips sealed with 2-inch wide strips of sealing tape or with edges

lapped not less than 3-inches and fastened together with a waterproof cement to form a continuous watertight joint.

2. The curing blankets shall be left in place during the 10-day curing period and shall not be removed until after concrete for adjacent work has been placed. Should the curing blankets become torn or otherwise ineffective, the CONTRACTOR shall replace damaged sections. During the first 3 days of the curing period, no traffic of any nature and no depositing, temporary or otherwise, of any materials shall be permitted on the curing blankets. During the remainder of the curing period, foot traffic and temporary depositing of materials that impose light pressure will be permitted only on top of plywood sheets 5/8-inch minimum thickness, laid over the curing blanket. The CONTRACTOR shall add water under the curing blanket as often as necessary to maintain damp concrete surfaces at all times.

Method 6: Concrete slabs shall be treated with an evaporation retardant as specified in Method 5. The concrete shall be kept continuously wet by the application of water for a minimum period of at least 10 consecutive days beginning immediately after the concrete has been placed or forms removed. Heavy curing mats shall be used as a curing medium to retain the moisture during the curing period. The curing medium shall be weighted or otherwise held in place to prevent being dislodged by wind or any other causes. Until the concrete surface is covered with the curing medium the entire surface shall be kept damp by applying water using nozzles that atomize the flow so that the surface is not marred or washed. The curing blankets and concrete shall be kept continuously wet by the use of sprinklers or other means both during and after normal working hours. Immediately after the application of water has terminated at the end of the curing period, the curing medium shall be removed and curing compound immediately applied in accordance with Method 4, herein. The CONTRACTOR shall dispose of excess water from the curing operation to avoid damage to the work.

Method 7:

1. Method 6 shall be used for curing.

2. Immediately after completion of curing the surface shall be sprayed with a dampproofing agent consisting of an asphalt emulsion. Application shall be in 2 coats. The first coat shall be diluted to 1/2 strength by the addition of water and shall be sprayed on so as to provide a maximum coverage rate of 100 square feet per gallon of dilute solution. The second coat shall consist of an application of the specified material, undiluted, and shall be sprayed on so as to provide a maximum coverage rate of 100 square feet per gallon. Dampproofing material shall be as specified herein.

3. As soon as the asphalt emulsion, applied as specified herein, has taken an initial set, the entire area thus coated shall be coated with whitewash. Any formula for mixing the whitewash may be used which produces a uniformly coated white surface and which so remains until placing of the backfill. Should the whitewash fail to remain on the surface until the backfill is placed, the CONTRACTOR shall apply additional whitewash.

3.2 EVAPORATION RETARDANT APPLICATION PROTECTION

A. Spray onto surface of fresh concrete immediately after screeding to react with surface moisture.

B. Reapply after smoothing surface with a bull float to ensure continuous, compacted monomolecular layer until final finishing is completed.

C. After finishing, apply water curing as specified.

3.3 CURING AND PROTECTION IN COLD WEATHER

A. Concrete shall not be placed during cold weather where conditions would require procedures as specified in ACI 306.

B. The Engineer, at his option, may allow cold weather placement of concrete if an extended period of cold weather is anticipated.

C. Water curing of concrete may be reduced to 6 days during periods when the mean daily temperature in the vicinity of the worksite is less than 40 degrees F; provided that, during the prescribed period of water curing, when temperatures are such that concrete surfaces may freeze, water curing shall be temporarily discontinued.

D. Concrete cured by an application of curing compound will require no additional protection from freezing if the protection at 50 degrees F for 72 hours is obtained by means of approved insulation in contact with the forms or concrete surfaces; otherwise, the concrete shall be protected against freezing temperatures for 72 hours immediately following 72 hours protection at 50 degrees F. Concrete cured by water curing shall be protected against freezing temperatures for 3 days immediately following the 72 hours of protection at 50 degrees F.

E. Discontinuance of protection against freezing temperatures shall be such that the drop in temperature of any portion of the concrete will be gradual and will not exceed 40 degrees F in 24 hours. In the spring, when the mean daily temperature rises above 40 degrees F for more than 3 successive days, the specified 72-hour protection at a temperature not lower than 50 degrees F may be discontinued for as long as the mean daily temperature remains above 40 degrees F; provided, that the concrete shall be protected against freezing temperatures for not less than 48 hours after placement.

F. Where artificial heat is employed, special care shall be taken to prevent the concrete from drying. Use of unvented heaters will be permitted only when unformed surfaces of concrete adjacent to the heaters are protected for the first 24 hours from an excessive carbon dioxide atmosphere by application of curing compound; provided, that the use of curing compound for such surfaces is otherwise permitted by these Specifications.

END OF SECTION 03370

SECTION 03400
PRECAST CONCRETE

PART 1 -- GENERAL

1.1 THE REQUIREMENT

A. The CONTRACTOR shall furnish all tools, equipment, materials, and supplies and shall perform all labor required to complete the precast concrete work in accordance with the Contract Documents.

B. This Section covers the design, fabrication, delivery and installation of all plant precast concrete units, including connections, complete, in place, as shown and specified.

1.2 RELATED WORK SPECIFIED ELSEWHERE

A. Section 03315 Grout.

B. Section 07900 Joint Sealants.

C. Section 13200 Modular Buried Stormwater Infiltration System

1.3 REFERENCE SPECIFICATIONS, CODES AND STANDARDS

A. Comply with reference standards of the GENERAL REQUIREMENTS.

B. Comply with the current provisions of the following Codes and Standards, ~~of~~ as applicable:

1. Commercial Standards:

ACI 301	Specifications for Structural Concrete
ACI 304	Guide for Measuring, Mixing, Transporting and Placing Concrete
ACI 311	Guide for Concrete Plant Inspection and Testing of Ready-Mixed Concrete
ACI 315	Details and Detailing of Concrete Reinforcement
ACI 318	Building Code Requirements for Reinforced Concrete
ACI 347	Guide to Formwork for Concrete
AWS A5.4	Welding Rods and Electrodes
AWS D1.1	Welding and Cutting
AWS D1.4	Structural Welding Code – Reinforcing Steel
ASTM A 184	Standard Specification for Welded Deformed Steel Bar Mats for Concrete Reinforcement

ASTM A 193	Standard Specification for Alloy-Steel and Stainless Steel Bolting for High Temperature or High Pressure Service and Other Special Purpose Applications
ASTM A 194	Standard Specification for Carbon Steel, Alloy Steel, and Stainless Steel Nuts for Bolts for High-Pressure and High-Temperature Service, or Both
ASTM A 351	Standard Specification for Castings, Austenitic, for Pressure-Containing Parts
ASTM A 580	Standard Specification for Stainless Steel Wire
ASTM A 615	Standard Specification for Deformed and Plain Carbon-Steel Bars for Concrete Reinforcement
ASTM A 666	Standard Specification for Annealed or Cold-Worked Austenitic Stainless Steel Sheet, Strip, Plate, and Flat Bar
ASTM A 775	Standard Specifications for Epoxy-Coated Reinforcing Steel Bars
ASTM A 1064	Standard Specification for Carbon-Steel Wire and Welded Wire Reinforcement, Plain and Deformed, for Concrete
ASTM C 33	Standard Specification for Concrete Aggregates
ASTM C 67	Standard Test Methods for Sampling and Testing Brick and Structural Clay Tile
ASTM C 127	Standard Test Method for Relative Density (Specific Gravity) and Absorption of Coarse Aggregate
ASTM C 128	Standard Test Method for Relative Density (Specific Gravity) and Absorption of Fine Aggregate
ASTM C 150	Specification for Portland Cement
ASTM C 173	Standard Test Method for Air Content of Freshly Mixed Concrete by the Volumetric Method
ASTM C 204	Standard Test Method for Fineness of Hydraulic Cement by Air-Permeability Apparatus
ASTM C 231	Standard Test Method for Air Content of Freshly Mixed Concrete by the Pressure Method
ASTM C 260	Standard Specification for Air-Entraining Admixtures for Concrete
ASTM C 311	Standard Test Methods for Sampling and Testing Fly Ash or Natural Pozzolans for Use in Portland Cement Concrete

ASTM C 494	Standard Specification for Chemical Admixtures for Concrete
ASTM D 2240	Test Method for Rubber Property -- Durometer Hardness
AWS B2.1	Specification for Welding Procedure and Performance Qualification
AWS D1.4	Structural Welding Code - Reinforced Steel
PCI MNL-116	Manual for Quality Control for Plants and Production of Structural Precast Concrete Products
PCI MNL-117	Manual for Quality Control for Plants and Production of Architectural Precast Concrete Products
PCI MNL-121	Manual for Structural Design of Architectural Precast Concrete

2. Government Standards:

CSS	Caltrans Standard Specifications.

1.4 CONTRACTOR SUBMITTALS

A. Submittals shall be made in accordance with the GENERAL REQUIREMENTS.

B. Shop Drawings:

1. Shop drawings shall provide details in accordance with ACI 315 and ACI 318 including installation details.

2. Shop drawings, including design computations, shall be stamped and signed by a civil or structural engineer registered in the State of California and shall be approved by the ENGINEER.

3. Shop drawings shall indicate precast unit identification marks, location of units in the WORK, elevations, fabrication details, welding details, reinforcement, connections, dimensions, interface with adjacent members, and special handling instructions in sufficient detail to cover manufacture, handling, and erection. Shop drawings shall include erection drawings. Shop drawings shall also include design computations for above mentioned drawings.

4. Shop drawings shall be divided into complete separate submittals for each structure. Each complete submittal shall consist of a schedule and shop drawings.

a. Schedule: Showing all exterior elevations of the structure, including all precast concrete enclosure faces exposed to view, in its associated shop drawing submittal. Elevations at a minimum scale of 1/8" = 1'-0" shall be drawn, identifying the type and location of each segment by a number which corresponds to the segment number appearing on an associated shop drawing; this same number shall be permanently marked on the back of each segment as they are fabricated.

b. Shop Drawings: Showing all elevations, dimensions, horizontal and vertical sections, openings, inserts, reinforcing, anchorage devices, pick-up points, details, design computations, and other requirements for each different type of panel to be incorporated into the portion of the project covered by the submittal. Drawings shall be 24 inches x 36 inches maximum.

C. Mix Proportions: Prior to commencing operations, including fabrications of the precast concrete for any mock-up, a statement shall be submitted giving the nominal maximum aggregate size and proportions of all ingredients that will be used in the manufacture of concrete. The statement shall include test results from an approved testing laboratory, with certification stamp and signature by a Civil or Structural Engineer registered in the State of California. No substitutions shall be made in materials used in the concrete mix without approval and additional tests to verify that the concrete properties are satisfactory. A copy shall be submitted of concrete mix with each set of samples.

D. Test Reports: Tests for compressive strength of concrete shall be performed by an approved independent commercial testing laboratory at no cost to the CITY. Copies of test reports including all test data and all test results shall be submitted for review and approval of the ENGINEER.

E. Certificates of Compliance: Certificates of compliance shall be submitted attesting that materials and products meet or exceed specified requirements.

F. Manufacturer's Qualifications: Prior to commencing operations, a statement shall be submitted giving the qualifications of the precast concrete Manufacturer, and evidence that the Manufacturer and plant are PCI certified.

1.5 QUALITY ASSURANCE

A. General Requirements: Design precast members under direct supervision of a professional structural engineer experienced in design of precast concrete units, registered in the State and conforming to requirements of PCI MNL-121 and to ACI 318.

1. Precast Manufacturer and erectors shall be qualified in accordance with PCI MNL-117 and MNL-116.

2. Welding shall be in accordance with AWS D1.1, AWS D12.1, AWS B2.1, and AWS A5.4.

3. Manufacture, Transportation and Installation: The Manufacturer shall specialize in providing precast products and services normally associated with precast concrete construction with high quality architectural finishes similar to that indicated on drawings, using procedures complying with PCI MNL-116 and MNL-117, and PCI plant certified for at least 5 years.

4. Use adequate number of skilled workers who are thoroughly trained and experienced in the necessary crafts and who are completely familiar with the specified requirements and methods needed for proper performance of the work of this Section.

B. CONTRACTOR is responsible for all damage that may occur while installing precast concrete structures after delivery. Repair procedures are to be submitted for approval by the ENGINEER.

1.6 DESIGN REQUIREMENTS

A. General: The precast concrete panel and connection designs shown hereon represent minimum precast construction requirements. The Manufacturer shall verify the panel and connection designs for all handling, erection, and service conditions, and shall provide any additional materials necessary to meet the design conditions.

B. Standards and Loads (Building structures only): The precast panel and connection design and construction shall conform to all applicable codes and AISC Specification for the Design, Fabrication and Erection of Structural Steel for Buildings. The precast or prefabricated, nonbearing, nonshear wall panels and connections which are attached to or enclose the exterior, shall resist, in addition to initial handling and erection loads and dead loads, the following forces:

1. Wind pressure and load combinations relative to panel design in accordance with the latest edition of LABC.

2. Seismic loads relative to panel design in accordance with the latest edition of Los Angeles Building Code.

3. The design shall be based on a differential temperature of 50 degrees F between interior and exterior faces of the units and an 80 degrees (40 degrees from erected temperature) average panel temperature differential.

4. Stresses due to restrained volume changes caused by shrinkage and temperature differentials shall be accounted for.

C. Connections (Building structures only): Prior to submitting shop drawings, the CONTRACTOR shall verify the precast connection designs shown against the aforementioned and following design criteria and provide any additional materials necessary to meet the design conditions.

1. The panel joints shall be designed to accommodate an in-plane movement between stories of 0.005 times the story height in inches but not less than 3/4-inch.

2. Panel connections shall accommodate building movement and permit panels to move freely so as not to resist in plane deformation of the main frame structural system. Adjustment shall be provided to accommodate misalignment of structure without permanent distortion, damage to components, racking of joint connection, breakage of seals, or moisture penetration.

D. Concrete Mix: The concrete mix shall be designed by the Manufacturer, with certification stamp and signature by a Civil or Structural Engineer registered in the State of California, and approved by the ENGINEER, using the materials and quantities specified to meet all of the requirements of this specification.

1. Proportioning of Concrete Mixes: Mixes shall be proportioned by weight except water and admixtures may be batched by volume if desired. Trial mixes and testing to meet requirements of the strengths of concrete specified is the CONTRACTOR's responsibility. Design mix shall contain similar materials as those proposed for use in the WORK.

2. Admixtures: Concrete shall contain an air entraining admixture in proportion so as to provide 4 percent plus or minus 1 percent total air in the concrete as determined by ASTM C 173 or C 231. Set retarding admixtures may be used provided cement content is not reduced. Water reducing admixtures may be used provided they are

used in the mix design studies. High-range water reducers (superplasticizers) shall be used only where specifically called for in this Section, otherwise superplasticizers shall not be used without written approval from the ENGINEER. No admixture may contain chlorides, bromides, or fluorides.

3. Water: Clean, potable water. The CONTRACTOR shall provide tests to assure that no more than 200 parts per million total aggregated content of chlorides, bromides, and fluorides are present.

4. If a variance from the Local Authority is required for the precast concrete mix design, the CONTRACTOR shall be responsible for submitting and obtaining the 5,000 psi precast concrete mix variance. The admixtures used in the mix design shall be used in approved combinations and proportions in accordance with the local requirements.

E. Formwork: Formwork shall be designed to withstand high-frequency vibration and to ensure finished units.

F. Pickup Points and Boxouts: Pickup points, boxouts, and inserts on panel faces and surfaces to be exposed are prohibited except as approved by the ENGINEER.

1.7 DELIVERY, STORAGE AND HANDLING

A. General: Deliver precast concrete units to the job-site in such quantities and at such times as to assure the continuity of construction. Precast members shall be handled to position consistent with their shape and design; they shall be lifted and supported from design incorporated support points and provided with strong backs and other devices as required. Lifting or handling equipment shall be capable of maintaining units during manufacture, storage, transportation, erection, and in position for fastening.

B. Blocking and supports, lateral restraints and protective materials during transport and storage shall be clean, nonstaining, without causing harm to exposed surfaces, including temporary support to prevent bowing and warping. Lateral restraints shall be provided to prevent undesirable horizontal movement. Edges and exposed faces of members shall be protected to prevent straining, chipping, or spalling of concrete.

C. Units shall be marked with date of production and final position in structure in location not visible after erection.

D. Precast units shall be stored off the ground in a manner to keep markings visible, and to prevent cracking, distortion, warping, staining or other physical damage, and they shall be protected from weather, marring, and overload.

E. Stainless Steel Hardware: Stainless steel hardware shall be transported, handled, stored, and protected in wood crates.

PART 2 -- PRODUCTS

2.1 CONCRETE MATERIALS

A. Cement: ASTM C 150, Type II, "low alkali," white color. "Low alkali" requirement may be waived if not reactive as defined in Appendix to ASTM C 33. Submit laboratory test reports.

B. Aggregate: ASTM C 33, 1/2-inch maximum coarse aggregate size fine aggregate ratio to total aggregate volume = 0.35 min, 0.55 max.

1. Water Absorption, Coarse Aggregate: ASTM C 127.

2. Water Absorption, Fine Aggregate: ASTM C 128.

C. Reinforcing Steel: ASTM A 615, Grade 60, deformed epoxy coated in accordance with ASTM A 775.

D. Welded Wire Fabric:

1. Plain: ASTM A 1064, epoxy coated.

2. Deformed Steel: ASTM A 1064, epoxy coated.

3. Fabricated Steel Bar or Rod Mats: ASTM A 184, epoxy coated.

E. Tie Wire: ASTM A 580, Type 316L, cold finished annealed, Huntington Alloy Co. "Monel", "Inconel", or an approved equal.

F. Air Entrainment Admixture: ASTM C 260.

G. Water Reducing or Retarding Admixtures: ASTM C 494, Type C, D, or F/G, with no chloride, bromide, and fluoride ingredients. Use MasterPozzolith R 300 manufactured by Master Builders, Plastiment manufactured by Sika Chemical Corp., or an approved equal.

H. Silica Fume Slurry Admixture: 45 to 50 percent silica fume, water, and superplasticizer as dispersant. Silica Fume: 85 percent amorphous silicon dioxide in accordance with ASTM C 311; loss on ignition shall not exceed 6 percent and moisture shall not exceed 3 percent in accordance with ASTM C 311. Surface area not less than 10,000 square meters per kilogram at bed porosity of 0.50 in accordance with ASTM C 204.

Reduce water in mix by 5.6 to 9.5 lbs for each gallon of slurry added to mix, as recommended by slurry Manufacturer used.

Add Los Angeles City approved slurry to concrete mix to achieve 7.5 percent dry silica fume by weight of cement. Mixing procedures as recommended by silica fume slurry manufacturer. Sika "Sikacrete-950 DP"; GCP Applied Technologies (formerly W.R. Grace) "Force 10,000 D" or approved equal. Submit applicable Los Angeles Research Report with shop drawing submittal.

I. Pigment: Pure mineral type, color-resistant to alkalis, nonfading. Color as required to produce finished concrete matching color and appearance of prebid sample and the 72-inch by 72-inch sample at the ENGINEER's field office.

2.2 SUPPORT DEVICES

Unless otherwise specified on the project plans, the following requirements shall apply:

A. Connecting and support devices, bolts, nuts, washers, inserts, and anchorage devices exposed to view, moisture, or weather shall be hot-dipped galvanized steel.

B. Anchorage devices shall be fabricated from ASTM A 36, and shall be hot-dip galvanized in accordance with ASTM A 123.

2.3 ACCESSORIES

Unless otherwise specified on the project plans, the following requirements shall apply:

A. Plates, Angles, Anchors, studs, and other metal accessories exposed to view, moisture, or weather shall be hot-dipped galvanized steel.

B. Reglets: Plastic, shaped and flanged to remain in place once cast; tape closed to prevent concrete intrusion.

C. Bearing Pads: Neoprene, molded to size or cut from molded sheet, 70-80 Type A durometer, ASTM D 2240.

D. Sealant: Specified in Section 07900, "Joint Sealants."

E. Gaskets: ASTM C 509, preformed, firm, cellular, neoprene, sized to be under constant compression at the joints, and manufactured in lengths to minimize field splices.

F. For bridge structures, expansion and fixed joints and bearings shall conform with CSS Section 51-1.12.

2.4 FORMS AND MOLDS

A. Forms: Manufacturer's standard with smooth, hard, dense, and rigid casting surface; without bow, warpage, oil canning, or other imperfections. Comply with PCI MNL 117, Division V, Section 2, Article 5.2.1.

B. Form Release Agent: Manufacturer's standard, nonstaining, nonpetroleum based; compatible with concrete surface sealer.

C. Surface Sealer: Clear, flat, penetrating, nonyellowing, nonclouding solution; high concentration of organosilane in an aqueous alcoholic vehicle which is designed to provide water repellent concrete surfaces from which graffiti can be easily removed. Oil-type silicones, paraffins, waxes, vinyls, modified urethanes, or acrylics shall not be used. Sealant shall be tested by Manufacturer and proved compatible with surface sealer.

D. Molds: Fabricate using steel, concrete, fiberglass, reinforced plastic or wood.

   a. Selection of materials for molds shall be at manufacturer's option, except that wood shall not be use without specific prior approval of the ENGINEER.

   b. Cast elements in molds of rigid construction, accurate in detail with precise corners and arises, and designed to provide close control of dimensions, radii, and details as indicated on the Contract Drawings.

c. Prior to casting of precast elements, molds shall have surface joints, radii, and corners filled, ground, filed, straightened, or otherwise removed to provide finished concrete surface that is smooth and dense, free of honeycombing, air pockets, offsets, sinkages, or other irregularities.

d. Mold Release Agents: Synthetic resin or organic compound containing no wax, oil, silicates, or varnish, and compatible with specified coatings, sealants, fresh concrete, curing process, and adhesives.

e. Cast molds with release agents to facilitate removal of elements from molds.

2.5 MIX

Silica Fume Concrete: Minimum 5,000 psi (unless noted otherwise on the project plans), 28-day compressive strength; aggregate 3/8-inch max; water - 305 lbs per cu yd; cement - 750 lbs per cu yd; w/c ratio 0.40 max; slump range 3 inches to 5 inches with silica fume slurry; air entrainment 4 percent plus or minus 1 percent; 7.5 percent dry silica fume by weight of cement, provided through specified silica fume slurry; add superplasticizer to achieve desired working slump for precast concrete as may be required by silica fume slurry Manufacturer. Add colorant as required to achieve match with ENGINEER's sample. Moist cure by spray mist.

2.6 FABRICATION

A. General: Precast concrete units shall be fabricated by a licensed shop in accordance with ACI 318, PCI MNL-116 (structural features), PCI MNL-117 (nonstructural features, surface treatments, patching, and tolerances). Plant records and quality control program shall be maintained during production of precast units. Records and access to plant shall be available to the ENGINEER upon request.

Rigid molds shall be used, constructed to maintain precast unit uniform in shape, size, and finish, free from castings and dents, gouges, oil canning, or other irregularities that will adversely affect appearance or strength of units. Consistent quality shall be maintained during manufacture.

Equipment for handling epoxy-coated reinforcing bars shall have protected contact areas. Bundles of coated bars shall be lifted at multiple pickup points to prevent bar-to-bar abrasion from sags in the bundles. Coated bars or bundles of coated bars shall not be dropped or dragged. Coated bars shall be stored on protective cribbing. The maximum amount of damage shall not exceed 2 percent of the surface area of each bar.

Reinforcing steel, anchors, inserts, plates, angles, and other cast-in-place items shall be embedded as indicated on shop drawings. Reinforcement shall be fabricated and placed in conformance with ACI 318. No tack welding of or to reinforcement permitted. Welding when allowed shall conform to AWS D1.4 requirements. No carbon steel chairs, spacers, nails or tie wire shall be used in positioning reinforcing and embedments.

Adequate reinforcing steel shall be provided to control cracking. Maximum permissible crack width:

Surfaces exposed to weather:	0.005 inch.
Surfaces exposed to view but not weather:	0.01 inch

Connecting devices, plates, angles, items fit to steel framing members, inserts, bolts, and accessories shall be fabricated to permit initial placement and final attachment.

Anchors, inserts, lifting devices, and other accessories shall be placed and embedded in accordance with approved shop drawings, accurately positioned in their designed location and anchored to prevent dislocation during panel construction. Do not use powder actuated fasteners for surface attachment of accessory items except as specifically approved by the ENGINEER and specifically accepted by the precast unit manufacturer. Flashing reglets shall be placed and embedded continuous and straight, with lifting devices to permit removal after erection.

Units shall be moist cured with water mist to develop concrete quality and to minimize surface drying and appearance blemishes such as nonuniformity, staining, or surface cracking.

Precast units shall be removed from formwork using procedures conforming to PCI MNL-117. Minor patching in plant acceptable, providing structural adequacy and appearance of units are not impaired. Each precast unit shall be identified with corresponding code on erection drawings, in location not visible to finished work.

Repair of damaged epoxy coating, when required, shall be made with patching material conforming to ASTM A 775. Repair shall be in accordance with the material Manufacturer's recommendations.

B. Fabrication and Tooling of Stainless Steel Connections and Embedments: All tools used during fabrication shall be made of stainless steel. Use of carbon steel tools is prohibited.

Welding of stainless steel shall conform to AWS A5.4, AWS B2.1 and AWS D1.1, using tungsten inert gas procedures and 316L filler metal for stainless steel to stainless steel and 309 filler metal for stainless steel to carbon steel. Surfaces shall be sanded smooth (do not grind), and oxidized discoloration removed (blue heat tint). Threaded parts of stainless steel bolts shall be lubricated with graphite suspended in alcohol (Neo-Lube) every time that nut is run on or off the threads. No other lubricant is acceptable.

Erection slings, cables, blocking, hardware and restraints shall be nonmetallic or stainless steel. Cribbing or crating shall be wood.

2.7 FINISH OF PRECAST UNITS

A. Backs and Sides (Unexposed Edges): Smooth, dense, uniform surface free from blemishes. Defects in backs and sides (unexposed edges) shall be repaired as approved.

B. Faces: Appearance, color, and texture finish of all panels shall match appearance, color and texture of the approved sample panels constructed by the CONTRACTOR. Panels that do not match shall be rejected. Repairs will be acceptable only if structural adequacy and appearance of product are not impaired and the repair and surrounding area match the approved sample panels at the ENGINEER's field office.

Mechanical finishing of panels at precast plant shall be at essentially the same age (or strength) of concrete to assure finished appearance is uniform from panel to panel.

To reduce possibility of stains occurring during transportation and erection, sealer shall be applied at the plant as recommended by Manufacturer and the precaster and shall be guaranteed in writing that sealer will not alter or yellow the original precast concrete color in

any way and that it is compatible with the joint sealants to be used on the project. Seal finish surfaces of precast units to be exposed in completed work as follows: apply a uniform coat of surface sealer in accordance with Manufacturer's written instructions. Apply sealer by method and in quantity required to provide coverage specified by sealer Manufacturer. Forty-eight hours after application of sealer, apply water to face of each panel in sufficient quantity to determine if full sealer coverage was achieved. Panels not fully sealed shall be resealed and retested. A second coat shall be applied at the jobsite after erection and cleanup in accordance with the Manufacturer's instructions.

PART 3 – EXECUTION

3.1 INSTALLATION

A. Examination: The CONTRACTOR shall verify that the structure, anchors, devices, and openings are ready to receive work of this Section. Beginning of installation means acceptance of existing condition.

B. Preparation: The CONTRACTOR shall provide for erection procedures and induced loads, during erection, maintain temporary bracing in place until final support is provided, provide necessary hoisting equipment and safety and protective devices.

C. Erection: The units shall be erected in accordance with approved shop/erection drawings without damage to shape or finish or adjacent work. Damaged panels shall be replaced or repaired. Unless otherwise shown, members shall be erected level and plumb within allowable tolerances.

The CONTRACTOR shall align and maintain uniform horizontal and vertical joints as erection progresses, provide approved shims and wedges as required, and when members required adjustment beyond design or tolerance criteria, discontinue affected work. Units shall be secured in place and field welded, scratches and otherwise damaged steel surfaces shall be touched up.

Field fabrication and erection of stainless steel shall conform to the procedures outlined in the paragraph entitled "Fabrication and Tooling of Stainless Steel Connectors and Embedments."

The vertical units shall be set dry, without grout, attaining joint dimension with lead or plastic shims and spacers.

Pickup points, boxouts, inserts, bearing surfaces, and open spaces at connections and joints shown shall be grouted with non-shrink grout system(s) recommended by the manufacturer of the precast units, in accordance with Section 03315, "Grout". The color and texture of concrete surfaces of adjacent areas shall be finished to match in the same plane. Provide forms or other acceptable method to retain the grout in place until it is sufficiently hard to support itself. Pack spaces with stiff grout material, tamping voids completely full. Place the grout in a manner to finish smooth, plumb, and level with adjacent concrete surfaces. Keep grouted surfaces damp for not less than 24-hours after grout has taken its initial set. Promptly remove grout material from exposed surfaces before its hardens.

D. Tolerances: In accordance with requirements of PCI MNL-117 unless otherwise indicated.

1. Variation from Plane of Location: 1/4-inch in 10 feet and 3/8-inch in 100 feet maximum, compensating not cumulative.

2. Offset from True Alignment between Two Connecting Members: 1/4-inch maximum.

3. Out of Square: 1/8-inch in 10 feet maximum, noncumulative.

4. Variation in Dimensions Indicated in Shop Drawings: Plus or minus 1/8-inch.

5. Misalignment of Anchors, Inserts, Openings: 1/8-inch, maximum.

6. Bowing or Warpage of Units: 1/700 of panel dimension.

7. Exposed Joint Dimension: 3/4-inch plus or minus 1/8-inch.

8. Location of Reglets: 1/4-inch from true position.

E. Joint Sealing: Specified in Section 07900, Joint Sealants.

3.2 CLEANING

A. Not sooner than 72 hours after joints are sealed, faces and other exposed surfaces of precast units shall be cleaned using a cleaning detergent recommended by the sealer manufacturer and water applied with a soft bristle brush, and thoroughly rinsed using clean water or other approved procedures.

B. Units shall be cleaned when temperature and humidity conditions are such that surfaces dry rapidly (e.g., 70 degrees F and rising, 50 percent Relative Humidity or less).

C. Discolorations which cannot be removed by these procedures shall be considered defective work and repaired or replaced as directed by ENGINEER.

D. Just before final acceptance by the ENGINEER, clean precast units to remove dirt and stains.

3.3 PROTECTION

Adjacent surfaces shall be protected from damage during sealing and cleaning operations and against damage, disfiguration or discoloration from subsequent operations. Noncombustible shielding shall be used during welding operations.

END OF SECTION 03400

SECTION 03740
CONCRETE REPAIR

PART 1 -- GENERAL

1.1 THE REQUIREMENT

This section covers the work, including materials, testing, and workmanship necessary to structurally repair cracks and damaged surface areas (or spalls) in the concrete of the structures stated herein. Cracks shall be repaired by the injection of an epoxy resin adhesive. Spalls shall be repaired using an epoxy mortar as specified. Cracks and spalls requiring repair will be field located and identified by the CONTRACTOR during leak testing. Some cracks regardless of size may not be designated by the ENGINEER for repair.

1.2 RELATED WORK SPECIFIED ELSEWHERE

A. Section 03300 Cast-In-Place Concrete.

B. Section 03315 Grout.

1.3 REFERENCE SPECIFICATIONS, CODES AND STANDARDS

A. Comply with the reference standards of the GENERAL REQUIREMENTS.

B. Comply with the current provisions of the following Codes and Standards.

1. Commercial Standards:

ASTM C 579	Standard Test Methods for Compressive Strength of Chemical-Resistant Mortars, Grouts, Monolithic Surfacings and Polymer Concretes
ASTM D 482	Standard Test Method for Ash from Petroleum Products
ASTM D 638	Standard Test Method for Tensile Properties of Plastics
ASTM D 648	Standard Test Method for Deflection Temperature of Plastics Under Flexural Load in the Edgewise Position
ASTM D 664	Standard Test Method for Acid Number of Petroleum Products by Potentiometric Titration
ASTM D 695	Standard Test Method for Compressive Properties of Rigid Plastics
ASTM D 790	Standard Test Methods for Flexural Properties of Unreinforced and Reinforced Plastics and Electrical Insulating Materials
ASTM C 881	Standard Specification for Epoxy-Resin-Base Bonding Systems for Concrete
ASTM C 882	Standard Test Method for Bond Strength of Epoxy-Resin Systems Used With Concrete By Slant Shear
ASTM D 1652	Standard Test Methods for Epoxy Content of Epoxy Resins

2. Government Standards:

CSS Caltrans Standard Specifications.

1.4 CONTRACTOR SUBMITTALS

A. Submittals shall be made in accordance with the GENERAL REQUIREMENTS.

B. The CONTRACTOR shall submit certified test results verifying the compressive strength, shrinkage, and expansion requirements specified herein; and manufacturer's literature containing instructions and recommendations on the mixing, handling, placement and appropriate uses for each type of non-shrink and epoxy grout used in the work.

C. The CONTRACTOR shall submit detailed written description of the epoxy injection procedures, including desired injection pressures, the proposed procedures when a crack appears to be taking no epoxy or the epoxy does not exude from the adjacent port, and the proposed procedures if the desired injection pressures cannot be attained or the crack appears to be taking an excessive amount of epoxy.

D. The CONTRACTOR shall prepare mock-ups at locations in the job site where directed by the ENGINEER. The approved mock- ups will be used as data for comparison of works installed under this Section and for acceptance or rejection of same work. The mock-ups shall remain on site during the construction

1.5 QUALITY ASSURANCE

A. The following quality control test and certificate is required under this Specification:

1. Test Requirements: Compression tests and fabrication of specimens for epoxy grout will be performed as specified in ASTM C 579, Method B, at intervals during construction as selected by the ENGINEER but no less than after every 200 sq. ft. of applied grout. A set of three specimens will be made for testing at 7 days, and each earlier time period as appropriate. Tests shall be conducted by a qualified testing laboratory approved by the City of Los Angeles and acceptable to the ENGINEER at the CONTRACTOR’s expense.

2. Certification and Test Report: Manufacturer shall certify that every batch of material supplied meets the Specifications and shall furnish copies of actual test reports on each batch.

B. Labor: Use adequate number of skilled works who are thoroughly trained and experienced in the necessary crafts and who are completely familiar with the specified requirements and methods needed for the proper performance of the work of this Section.

1.6 PACKAGING, LABELING, STORAGE

A. Packaging: The adhesive material shall be packaged in new, sealed containers. Each container will be clearly labeled.

B. Label Information: The label shall include, in a clear and distinct manner, the following information:

1. Manufacturer name.

2. Product name and lot number.

3. ANSI Hazard Classification and appropriate recommended ANSI precautions for handling.

4. Mix ratio by volume.

C. Storage: The adhesive shall be stored at ambient temperatures between 32 and 120 degrees F. If stored at temperatures outside these limits, the adhesive material shall be tested at the CONTRACTOR's expense prior to use to determine if the adhesive material meets the requirements of this Specification.

PART 2 -- PRODUCTS

2.1 GENERAL

A. The use of a manufacturer's name and model or catalog number is for the purpose of establishing the standard of quality and general configuration desired only. Products of other manufacturers will be considered in accordance with the GENERAL REQUIREMENTS.

B. Like items of materials provided hereunder shall be the end products of one manufacturer in order to achieve structural compatibility, singular responsibility, and standardization for appearance, maintenance, and replacement.

C. Epoxy products shall be as manufactured by Sika Corp., Lyndhurst, NJ; or an approved equal, meeting the requirements specified hereinafter.

2.2 CRACK WIDTH

Large cracks are defined as being wider than 0.015 inch. Small cracks are defined as cracks with width equal to 0.015 inch or less.

2.3 ADHESIVE FOR INJECTION

A. Unless otherwise specified hereon, the epoxy adhesive used for injection for concrete structures shall comply with the following material specification. For non-sanitary structures, in lieu of the requirements of this section, the CONTRACTOR may submit Los Angeles Department of Building and Safety approved Research Reports on products intended for use, subject to review and approval by the ENGINEER.

1. This Specification defines a two-component structural epoxy adhesive to be processed through continuous positive displacement in-line metering and in-line mixing equipment for injection into cracks or other voids in concrete structures for bonding or grouting. Batch mix pumps shall not be allowed.

2. Properties of the two-component epoxy adhesive:

a. Part A shall be a blend of modified epoxy resins:

		Specification Requirements	
	Test Method	Large Cracks	Small Cracks**
Color	Visual	Clear Amber Liquid	Light Amber Liquid
Viscosity @ 40 ± 3 deg F, cps	Brookfield RVT Spindle No. 4 @ 20 rpm	6,000-8,000	

Viscosity @ 77 ± 3 deg F, cps	Brookfield RVT Spindle No. 4 @ 20 rpm	400-700	375 cps max. @ 50 rpm
Epoxide Equivalent Weight	ASTM D 1652* See Appendix C	160-176	
Ash Content, %	ASTM D 482	1 max.	

* Method modified to use perchloric acid in acetic acid.
** The specified requirements for the epoxy blend for small cracks shall meet the requirements for large cracks except as shown.

b. Part B shall be a modified amine curing agent:

		Specification Requirements	
	Test Method	Large Cracks	Small Cracks**
Color	Visual	Black Liquid	Dark Amber Liquid
Viscosity @ 40, ± 3 deg F, cps	Brookfield RVT Spindle No. 4 @ 20 rpm	700-1,400	
Viscosity @ 77, ± 3 deg F, cps	Brookfield RVT Spindle No. 2 @ 20 rpm	105-240	150 cps max. Using Spindle No. 1 @ 50 rpm
Amine Value, mg KOH/g	ASTM D 664*	490-560	
Ash Content, %	ASTM D 482	1 max.	

* Method modified to use perchloric acid in acetic acid.
** The specified requirements for the epoxy blend for small cracks shall meet the requirements for large cracks except as shown.

3. Properties of the Uncured Adhesive: When mixed in the mix ratio specified on the label on the adhesive, containers shall be:

		Specification Requirements	
	Test Method	Large Cracks	Small Cracks**
Pot Life (60-gram mass) @ 77 ± 4 deg F	(As hereinafter specified)	13-25 minutes minimum	15-30 minutes minimum
Pot Life (60-gram mass) @100 ± 3 deg F	(As hereinafter specified)	5 minutes minimum	N/A
Viscosity @ 40, ± 3 deg F	Brookfield RVT Spindle No. 4 @ 20 rpm	4,400 cps	600 cps
Viscosity @ 75-77 deg F	Brookfield RVT Spindle No. 2 @ 20 rpm	375-350 cps	175-140 cps

4. Properties of the Adhesive: When cured for 7 days at 77 ∀ 3 degrees F and conditioned at test temperature 12 hours prior to test, unless otherwise specified, shall be:

		Specification Requirements	
	Test Method	Large Cracks	Small Cracks**
Ultimate Tensile Strength, psi	ASTM D 638	8,000 min.	5,000 min.
Tensile Elongation @ Break, %	ASTM D 638	4.2 max.	3.0 max.
Flexural Strength, psi	ASTM D 790	10,000 min.	10,000 min.
Flexural Modulus, psi	ASTM D 790	$5.5x10^5$ min.	$4.5x10^5$ min.
Compressive Yield Strength, psi	ASTM D 695*	15,000 min.	12,000 min.
Compressive Modulus psi	ASTM D 695*	$4.0x10^5$ min.	$2x10^5$ min.
Heat Deflection Temperature	ASTM D 648*	127 deg F min.	140 deg F min.
Slant Shear Strength (5,000 psi Compressive Strength Conc.)	AASHTO T 237**		
Cured 3 days @ 40 40 deg F – Wet Conc.		3,500 psi min.	
Cured 1 day @ 77 deg F - Dry Conc.		5,000 psi min.	
Cured 3 days @ 77 deg ± 3 deg F		5,000 psi min.	

* Test specimens must be cured in a manner such that the peak exothermic temperature of the adhesive does not exceed 100 degrees F.

** See referenced specifications for method of preparation of test specimens.

B. Epoxy for injection shall conform to ASTM C 881 and shall be Los Angeles City Department of Building and Safety approved epoxy. The epoxy shall be Sikadur 35 Hi-Mod LV or Sikadur 52, manufactured by Sika Corporation, or an approved equal.

2.4 POT LIFE TEST

A. Pot life test for components A and B, as described in Section 2.3, shall conform to the following:

1. Condition both A and B Components (as defined in Section 2.3) to required temperature.

2. Measure components in ratio of Component B as stated on the manufacturer's label into a 2 ounce (fluid) paper cup.

3. Start stopwatch immediately and mix the components for 60 seconds using a wooden tongue depressor and taking care to scrape the sides and bottom of cup periodically.

4 Probe the mixture once with the tongue depressor every 30 seconds, starting 2 minutes prior to the minimum specified pot life.

5. The time at which a soft stringy mass forms in the center of the cup is the pot life.

2.5 FABRICATION OF SLANT SHEAR SPECIMENS

A. Fabrication of slant shear specimens for testing bond of injectable adhesives to wet concrete at 40 degrees F, as required by Section 2.3, shall conform to the following:

1. Scope: This method of test is intended for the preparation of diagonal concrete mortar blocks used in determining the slant shear strength of low viscosity injectable adhesives according to AASHTO T 237 when the concrete is wet.

B. Materials:

1. Diagonal concrete mortar blocks prepared in accordance with AASHTO Test Method T 237 and cured to produce a mortar with compressive strength of 5,000 psi or greater.

2. Paraffin wax.

3. Masking Tape: 3/4-inch wide.

4. Suitable 20-mil thick shim stock.

C. Preparation:

1. Place a 20-mil shim between the diagonal faces of two blocks and align them so that the ends and sides are square. Bind the block in this position with masking tape covering the gap between the blocks. Leave only enough of the gap between the blocks on one face uncovered for the removal of the shim and the application of the adhesive. Paint melted paraffin wax over the masking tape. A shallow dam may be built up around the opening using paraffin wax or modeling clay to help retain the adhesive.

2. Apply a suitable capping compound to each end of the specimen to produce smooth surfaces perpendicular to the longitudinal axis of the block.

3. Remove the shim stock from the gap opening. Soak the specimen in water at 40 degrees, ∀3 degrees F for at least 24 hours.

4. After soaking, remove the specimen and shake the water from the surface and out of the crack.

5. Prepare the liquid adhesive. Within 5 minutes after removing specimen from water, start to flow adhesive into the crack so that no air bubbles are entrapped. Place specimen in 40 ∀ 3 degrees F ambient for curing within 15 minutes after it has been removed from water for bonding. At no time during the 15 minutes should the specimen be exposed to an environment above 77 degrees F.

6. Cure the specimen for 72 ∀4 hours at 40 ∀ 3 degrees F.

2.6 SURFACE SEAL

A. Physical Properties: The material used as a surface seal must have adequate strength and adhesion to confine the injection adhesive in the crack being repaired until the injected adhesive has cured. The surface seal material shall have adequate strength to hold the injection fittings firmly in place and to resist injection pressures adequately to prevent leakage during injection.

B. Appearance: After the injection adhesive has cured, the surface seal must be capable of being removed.

C. Epoxy paste sealer for caulking cracks and installing injection port devices. The epoxy paste sealer shall be Sikadur 33, manufactured by Sika Corporation, or an approved equal.

2.7 EQUIPMENT FOR METERING, MIXING, AND INJECTING

A. Type: The equipment used to meter and mix the two injection adhesive components and to inject the mixed adhesive into the crack shall be portable, positive displacement type pumps with in-line metering. The equipment used shall be manufactured by the epoxy manufacturer and/or approved in writing by the epoxy manufacturer. Pumps shall have interlocks to provide positive ratio control of exact proportions of the two components at the nozzle. The pumps shall be electric or air powered.

B. Discharge Pressure: The injection equipment shall have automatic pressure controls and the capability of discharging the mixed adhesive at pressures up to 200 psi, +5 percent, and maintaining that pressure.

C. Automatic Shutoff Control:

1. The injection equipment shall be equipped with sensors on both the Component A and B reservoirs that will automatically stop the machine when only one component is being pumped to the mixing head.

2. CONTRACTOR shall provide a standby injection pump of the same ratio, setting forth each primary injection pump used on the project. Each material of different mix ratio shall have its own primary injection pump as well as standby backup pump.

3. All pumps of dual resin system epoxy resins shall be manufactured by the epoxy resin suppliers or shall be approved in writing by the epoxy resin manufacturer so as to immediately compensate for any changes in resins.

D. Pressure Check Test:

1. Method: The mixing head of the injection equipment shall be disconnected and the two adhesive component delivery lines shall be attached to the pressure check device. The pressure check device shall consist of two independent valved nozzles capable of controlling flow rate and pressure by opening or closing the valve. There shall be a pressure gauge capable of sensing the pressure buildup behind each valve. The valves on the pressure check device shall be closed and the equipment operated until the gauge pressure on each line reads 160 psi. The pumps shall be stopped and the gauge pressure shall not drop below 150 psi within 3 minutes.

2. Frequency of Pressure Check Test: The pressure check test shall be run for each injection equipment unit, as a minimum, at the beginning and at the end of every day that the unit is used in the work of crack repair to verify. A pressure test shall also be run at the start of any injection work when the equipment has been out of use for more than 45 minutes at any time during the day.

2.8 EPOXY MORTAR REPAIR

A. The manufacturer shall certify, in writing, its applicability in bonding to damp concrete surfaces and to the uses intended in this project. Submit applicable City of Los Angeles Department of Building and Safety Research Report for ENGINEER's review and approval.

B. The mortar mix design shall be Concresive 1470 mortar, Adhesive Ownering Co., San Carlos, CA; Sika Top, 123 Plus, for hand-applied method, manufactured by Sika Corporation, or an approved equal. The actual mix design shall be submitted by the manufacturer using the specified resin, Sand

#1 and Sand #2, or a pre-engineered sand blended especially for stated products by the manufacturer.

C. Anti-Corrosion Coating for reinforcement shall conform to ASTM C 882 and shall be Los Angeles City Department of Building and Safety approved. The coating shall be Sika Armatic 110 EpoCem, manufactured by Sika Corporation, or an approved equal.

D. The finished repair shall have a color which matches the surrounding concrete's color as best as possible.

E. Submit technical data (physical and chemical properties) available on the repair agent for review. Also submit data (client name, location, and description of work) on at least two similar jobs that the applicator has used the surface repair agent in the last 2 years.

PART 3 -- EXECUTION

3.1 GENERAL

A. CONTRACTOR is responsible for all cracks in concrete that occur in the field. Crack repair procedures are to be followed as specified herein.

3.1 QUALIFICATIONS OF ADHESIVE APPLICATORS

A. All adhesive injection shall be performed by an applicator who has demonstrated the capability to inject concrete cracks, repairing them to the quality specified.

B. All applicators shall submit evidence of experience in injecting concrete cracks with epoxy resin.

C. Evidence of experience shall include a complete list of adhesive injection work accomplished in the last 3 years for at least 10,000 lineal feet of crack injection experience including the following information:

1. Name of Owner.
2. Name of person to contact and telephone number.
3. Address of completed work.
4. Lineal footage of crack injection repair.
5. Type of structure.
6. Description of work including materials and equipment used.

D. Epoxy injection shall be performed by a licensed certified applicator of the manufacturer of the epoxy meeting these Specifications and the applicator shall be approved by the epoxy manufacturer.

E. The applicator shall submit to the ENGINEER a statement in addition to applicator's previous experience in performing comparable work, business and technical organization and plant available to be used in performing work; along with proposed technique, material, and equipment for review prior to startup.

3.2 WORKMAN'S QUALIFICATION

A. The applicator's foreman engaged in the epoxy injection process shall have satisfactorily completed a program of instruction in the methods of restoring concrete structures utilizing the specific epoxy injection process indicated. The curriculum shall include theory on the nature and causes of cracking in concrete, methods for permanently repairing damaged concrete structures, the technical aspects of correct material selection and use, and the operation, maintenance, and troubleshooting of equipment. Foreman must prove certification and approval of the manufacturer.

B. Superintendent shall have at least 3 years' experience in injection work consisting of a minimum of

5,000 LF of crack injection in the last 3 years.

C. Any technician operating the injection pump shall have at least 1 year's experience consisting of a minimum of 3,000 LF of crack injection.

D. Equipment, material, and training must originate from same source.

E. Qualification of an applicator may be denied, and will be based upon the aforementioned evidence of experience along with any additional investigational information acquired by the ENGINEER.

3.3 PROPORTIONING THE ADHESIVE COMPONENTS

A. Ratio Tolerance: The equipment shall have the capability of maintaining the mix ratio for the injection adhesive prescribed by the manufacturer of the adhesive within a tolerance of ±5 percent by volume at any discharge pressure up to 160 psi.

B. Tests for Proper Ratio:

1. Method:

a. The mixing head of the injection equipment shall be disconnected and the two adhesive components shall be pumped simultaneously through the ratio check device. The ratio check device shall consist of two independent valved nozzles capable of controlling flow rate and back pressure by opening or closing the valve to restrict material flow. There shall be a pressure gauge capable of sensing the back pressure behind each valve. The discharge pressure shall be adjusted to 160 psi for both adhesive components. Both adhesive components shall be simultaneously discharged into separate calibrated containers. The amounts discharged into the calibrated containers simultaneously during the same time period shall be compared to determine the mix ratio.

b. After the test has been completed at a 160 psi discharge pressure, the procedure shall be repeated for 0 psi discharge pressure.

2. Frequency of Test for Proper Ratio: The ratio test shall be run for each injection unit at the beginning of every day, and at the beginning of every work period wherever an hour break has occurred, and at the end of every day that unit is used in the work of crack repair.

3.4 PROOF OF RATIO AND PRESSURE CHECK

A. At all times during the course of the work, the CONTRACTOR must keep complete and accurate records available to the ENGINEER of the ratio check tests.

B. In addition, the ENGINEER at any time without prior notification of the CONTRACTOR, may request the CONTRACTOR to conduct the tests described in the presence of the ENGINEER or the INSPECTOR.

3.5 CRACK REPAIR PROCEDURE

A. Initial Condition (for Sanitary Structures): Each water-holding structure to be repaired will be drained by the plant staff on a schedule to allow the work to proceed in that one structure and at the same time to keep the remainder of the plant in operation. All cleaning and the amount of cleaning shall be the responsibility of the CONTRACTOR.

B. Repair Procedures: Cracks 0.005 inch or wider that are designated by the CITY to be injected shall be cleaned and pressure injected with epoxy as specified. All spalled areas or areas with damaged surface, after being designated by the ENGINEER to be repaired, shall be repaired with epoxy grout

as specified herein. Some cracks and damaged areas may be excluded from repair by the ENGINEER. Repair only those specifically identified by the ENGINEER.

C. Crack Preparation:

1. The licensed applicator shall be responsible for crack preparation. All cracks must be free from loose matter such as dirt or laitance and free from oil, grease, salt, or any other contaminants. Cracks shall be cleaned in accordance with the instructions of the injection adhesive manufacturer. The manufacturer's written instructions shall govern.

2. Examine the areas and conditions at the job site under which work of the Section will be performed. Correct conditions detrimental to timely and proper completion of the work. Do not proceed until detrimental conditions are corrected. Coordinate with other trades as required to assure proper and adequate provisions in the work of those trades for interface with the work of this section.

3. Surfaces adjacent to cracks or other areas of application shall be cleaned of dirt, dust, grease, oil, efflorescence, or other foreign matter detrimental to bond of epoxy injection surface seal system. Acids and corrosives shall not be permitted for cleaning, unless neutralized. If necessary, cracks shall receive three-step acid flushing technique.

D. Crack Sealing: A surface seal adhesive as specified shall be applied to the face of the crack to be repaired prior to adhesive injection. The surface seal shall seal the crack and not allow injection adhesive to escape. The seal shall be applied in accordance with the instructions of the surface seal manufacturer.

E. Backfilled Walls: At locations where walls have backfill on one side and where it will not be possible to excavate and seal both crack surfaces, and where cracks extend entirely through the wall, entry ports as specified below shall be spaced closer together in addition to adjusting injecting pressure so that only a minimum amount of injection adhesive is lost to the soil.

F. Entry Ports: Openings in the surface seal shall be established along the crack for the purpose of adhesive entry. The distance between entry ports shall be determined by the adhesive applicator and, in general, shall be spaced approximately equal to the thickness of the concrete member. The spacing of ports may be increased or decreased as required to insure maximum penetration of the injection epoxy. For through cracks, CONTRACTOR shall seal both sides of cracked member. The repair work for each through crack shall be paid for as a single crack. Special consideration to entry port location must be given when cracks occur in a backfilled wall to ensure minimum adhesive is lost to the soil.

G. Injection: The injection of the adhesive into each crack shall begin at the entry port at the lowest port along a radial crack and at the end of a circumferential or horizontal crack. Injection shall continue at the first port until the injection adhesive begins to flow out of the port at the next highest elevation. The first port shall be plugged and injection started at the second port until the adhesive flows from the next port. The entire crack shall be injected with the same sequence. It is required that a manufacturer’s representative or factory trained qualified applicators with past experience be present on the job at all times.

Injection at the last port shall continue for approximately one minute after the rise in gauge pressure. Once injection has been started on a crack, it shall be continued and uninterrupted until the crack has been completely injected.

H. Finishing:

1. After the injection adhesive has cured, the surface seal shall be removed. The face of the crack shall be finished flush with the adjacent concrete. There shall be no indentations or protrusions caused by placement of entry ports.

2. When cracks are completely filled, epoxy adhesive shall be cured for sufficient time to allow removal of surface seal without any draining or runback of epoxy material from cracks.

3. Surface seal material and injection adhesive runs or spills shall be removed from concrete surfaces.

4. Finish Coating: Provide new paint system over concrete surface to match existing adjacent surface and to conform with requirements as specified.

3.6 TESTING OF INJECTION REPAIR

A. Initial Cores: The CONTRACTOR shall obtain three 4-inch diameter initial core samples in the first 100 lineal feet of crack repaired and one core for each 500 lineal feet thereafter. The cores shall be for full crack depth and taken from locations as selected by the ENGINEER. If any reinforcing steel is contacted during the core drilling, the CONTRACTOR shall cease drilling and relocate the core drill to clear the reinforcing steel. Additionally, the CONTRACTOR shall provide, at no additional expense to the CITY the following labor, materials, and services required for core sampling and testing as directed by the ENGINEER including, but not limited to:

1 Preparation, handling, storage, and transportation of epoxy injection concrete core test specimens as directed by the ENGINEER.

2 Providing suitable containers for the storage, curing, and transportation of test specimens.

3 Providing suitable storage for supply of test equipment and other items required for sampling and testing.

B. Initial cores will be tested to determine degree of epoxy penetration and bond strength.

C. Testing of initial core samples will be performed by the ENGINEER at the CITY's expense.

D. Additional cores, called verification cores, required as indicated in G. Evaluation and Acceptance of Tests, specified hereinafter, will be tested by the CITY.

E. Methods of Testing Initial and Verifying Cores:

1 Penetration: Visual examination.

2 Bond Strength/Compression Test: Concrete failure prior to adhesive failure.

F. Test Requirements:

1 Penetration: A minimum of 90 percent of the crack shall be full of epoxy adhesive.

2 Bond Strength: Concrete failure before adhesive failure, or 6,500 psi with no failure of either concrete or adhesive.

G. Evaluation and Acceptance of Tests:

1 If the initial cores pass tests as specified above, epoxy adhesive injection work at the area represented by the cores will be accepted.

2 If initial cores fail either by lack of penetration or bond strength, the work shall not proceed further until the area represented by the cores are reinjected and retested for acceptance.

3 After rework of areas represented by failed initial cores is complete, the CONTRACTOR shall obtain verifying cores, the number and location to be determined by the ENGINEER. Verifying

cores shall be tested in accordance with Paragraphs E and F for compliance.

H. Correction of Work As Result of Testing: Upon notification from the ENGINEER, refill initial and verifying core holes in accordance with requirements specified hereinafter.

I. Repair of Core Holes: The CONTRACTOR shall fill the core holes with an epoxy grout tamped and rodded in place to form a dense fill and finish the surface to blend with the adjacent concrete. The epoxy grout and placement techniques shall be accepted by the ENGINEER and as specified herein.

3.7 CONCRETE SPALL REPAIR

A. The following types of areas are known to require repair:

1. Spalled wall surfaces designated by the ENGINEER.

2. Spalled slab surfaces designated by the ENGINEER.

3. Other specific areas shown on contract drawings.

B. Surface Preparation: The CONTRACTOR shall be responsible for preparing the surfaces of damaged concrete in accordance with the repair adhesive manufacturer's recommendations. The area shall be chipped to remove all loose materials and materials that would prevent bond. The edges shall be left sharp and square with the adjacent concrete surfaces.

C. Application: All concrete spall repair adhesive shall be applied in strict conformance with manufacturer's instructions.

D. Avoid having a joint between new material and old materials right at the planes of the reinforcing steel. Expose the steel completely or at least ¾ inch all around and encase them fully in a new concrete patch.

E. After chipping of the existing concrete has been completed, all reinforcing bars shall be completely exposed or at lease ¾ inch all around, thoroughly cleaned of rust or other deleterious substances by power wire brushing, sandblasting, or other approved means. All remaining fines or dust shall be removed from the chipped surfaces by air jet or vacuum. If an air jet is used, care shall be taken to insure that no oil is in the air system. A suitable oil trap shall be in service during the air cleaning

Before applying the concrete patch/repair mortar; all cracks, exposed damaged or rusted reinforcing steel within the spalled areas shall be cleaned and repaired. All damaged reinforcing steel shall be removed and welded with new. When corrosion has occurred due to presence of chlorides, the reinforcing steel should be high-pressure washed with clean water after mechanical cleaning. Prime all reinforcing steel by using approved anti-corrosion coating per Subsection 2.8.E herein.

The existing concrete surface to be patched must be clean and dry before applying the epoxy bonding agent. The epoxy to be used for bonding the concrete patches shall conform to Subsection 2.8.B herein.

Evaluate moisture content for concrete by determining if moisture will collect at bond lines between existing concrete surface and epoxy bonding agent before epoxy had cured, this may be accomplished by taping a 4’x4’ polyethylene sheet to concrete surface. If moisture collects on underside of polyethylene sheet before epoxy would cure, then allow concrete to dry sufficiently to prevent the possibility of moisture between old concrete and new epoxy.

H. A uniform coat of the epoxy bonding agent and anti-corrosion coating shall be applied to entire chipped areas of the existing concrete and all exposed surfaces of both existing and new reinforcing steel. When the epoxy becomes dry before the concrete patch/repair mortar has been applied, the epoxy shall be completely removed and re-applied.

After the concrete patches/repair mortars have cured for a minimum time of 3 days, the CONTRACTOR shall remove the forms, any irregularities or departures from a plane surface by grinding, rubbing with a carborundum stone or other means approved by the ENGINEER.

l. Color and Finish: The finished surface repair shall have a color that matches best as possible the surrounding concrete. Repaired surface finish shall be roughened to a degree to match surrounding concrete.

END OF SECTION 03740

SECTION 05500
MISCELLANEOUS METALWORK

PART 1 -- GENERAL

1.1 THE REQUIREMENT

The CONTRACTOR shall furnish, fabricate, and install miscellaneous metalwork and appurtenances, complete, in accordance with the requirements of the Contract Documents.

1.2 RELATED WORK SPECIFIED ELSEWHERE

A. Section 03300 Cast-In-Place Concrete.

1.3 REFERENCE SPECIFICATIONS, CODES, AND STANDARDS

A. Comply with the reference specifications of the GENERAL REQUIREMENTS and the specifications and standards listed below.

B. Federal Specifications:

QQ-F-461 C (1)	Floor Plate, Steel, Rolled.
MIL-6-18015	(Ships) Aluminum Planks. (6063-T6)

C. Commercial Standards:

Aluminum Assn. AA-M32	C22A41.
AASHTO HS-20	Truck Loading.
AISC	Steel Construction Manual
AISI	Standards for Stainless Steel
ASTM A 36	Standard Specification for Carbon Structural Steel.
ASTM A 48	Standard Specification for Gray Iron Castings.
ASTM A 53	Standard Specification for Pipe, Steel, Black and Hot-Dipped, Zinc-Coated Welded and Seamless.
ASTM A 123	Standard Specification for Zinc (Hot-Dip Galvanized) Coatings on Iron and Steel Products.
ASTM A 125	Standard Specification for Steel Springs, Helical, Heat Treated.

ASTM A 153	Standard Specification for Zinc Coating (Hot-Dip) on Iron and Steel Hardware.
ASTM A 307	Standard Specification for Carbon Steel Bolts, Studs, and Threaded Rod 60,000 psi Tensile.
ASTM A 563	Standard Specification for Carbon and Alloy Steel Nuts.
ASTM A 575	Standard Specifications for Steel Bars, Carbon, Merchant Quality, M-Grades.
ASTM B 98	Standard Specification for Copper-Silicon Alloy Rod, Bar, and Shapes.
ASTM B 438	Standard Specification for Bronze-Base Powder Metallurgy Bearings (Oil-Impregnated).
ANSI/AWS D1.1	Structural Welding Code - Steel.
NFPA 101	Life Safety Code.
NAAMM	Metal Stairs Manual.

1.4 CONTRACTOR SUBMITTALS

A. Shop Drawings: Shop drawings of all miscellaneous metalwork shall be submitted to the ENGINEER for review in accordance with SUBMITTALS of the GENERAL REQUIREMENTS.

B. Delegated-Design Submittal: For stairs and railing include calculation analysis signed and sealed by a Civil or Structural Engineer registered in the State of California.

1. Include plans, elevations, sections, details, and attachment to other Work.

2. Indicate sizes of metal sections, thickness of metals, profiles, holes, and field joints.

3. Include plan at each level

4. Indicate locations of anchors, weld plates, and blocking for attachment of wall-mounted handrails

C. Anchors: Wherever power-driven pins will be utilized for anchorage or support, complete information describing pin capacity, connections, and proposed use locations shall be furnished to the ENGINEER.

PART 2 -- PRODUCTS

2.1 GENERAL REQUIREMENTS

A. Standard: All structural steel shapes, plates, bars, and their products shall conform to the requirements of ASTM A 36.

B. Corrosion Protection: All miscellaneous steel metalwork shall be hot-dip galvanized after fabrication as specified herein.

C. Stainless Steel: Unless otherwise shown, stainless steel metalwork and bolts shall be of Type 316 stainless steel and shall not be galvanized. Where anaerobic conditions are anticipated, Type 304 stainless steel shall be used.

D. Delegated Design: Engage a Civil or Structural Engineer registered in the State of California to design stairs and railings, including attachment to building construction.

E. Structural Performance of Stairs: Metal stairs shall withstand the effects of gravity loads and the following loads and stresses within limits and under conditions indicated:

1. Uniform Load: 100 lbf/sq. ft.

2. Concentrated Load: 300 lbf applied on an area of 4 sq. in.

3. Uniform and concentrated loads need not be assumed to act concurrently.

4. Stair Framing: Capable of withstanding stresses resulting from railing loads in addition to loads specified above.

5. Limit deflection of treads, platforms, and framing members to L/360.

F. Seismic Performance of Stairs: Metal stairs shall withstand the effects of earthquake motions determined according to ASCE/SEI 7.

1. Component Importance Factor: 1.0.

G. Structural Performance of Railings: Railings, including attachment to structure construction, shall withstand the effects of gravity loads and the following loads and stresses within limits and under conditions indicated:

1. Uniform Load: 50 lbf/ft applied in any direction along the top rail.

2. Concentrated Load: 200 lbf applied in any direction on the top rail.

3. Uniform and concentrated loads need not be assumed to act concurrently.

H. Thermal Movements: Allow for movements from ambient and surface temperature changes.

2.2 ALUMINUM RAILINGS

A. General: All aluminum handrails and railings shall be component systems complete with all anchors, attachments, balusters, brackets, caps, fasteners, gates (swing with self-latching hardware or removable), posts, sleeves, trim, and any other related items required or necessary for a complete installation. All gates and removable rail sections shall be complete with all hardware such as self-closing hinges, self-latching latches, hasps, etc. Railings shall conform to the Building Code and OSHA General Industry Occupational Safety and Health Standards (29CFR1910).

B. Materials: All materials for miscellaneous metalwork shall conform to the following requirements:

1. Aluminum: Aluminum shall be U.S. Alloy 6063 T-5 or T-6. Aluminum pipe rail shall not be less than 1-1/2-inch diameter Schedule 40 pipe.

2. Electrolysis Protection: Electrolysis protective material shall be alkali-resistant asphaltum base paint, Koppers "Bitumastic 50," Texaco "Cement 1401," or equal.

3. Sleeves: Sleeves shall be of galvanized steel or PVC.

4. Grout: Grout for hand rail posts shall consist of an inorganic, non-shrink, non-metallic premised grout with a minimum 28-day compressive strength of 4,000 psi.

5. Fasteners: Fasteners, screws, and bolts shall be concealed and shall be of stainless steel or aluminum.

6. Welding Rods: Aluminum welding rods shall be of a type recommended by the aluminum manufacturer for anodized finished products.

C. Finishes: Pipe railing system including handrails, railings, tube caps, and other miscellaneous parts of rails shall be provided with a clear anodized finish, AA-M32 C22A41.

D. Manufacturers or Equal:

1. C-V Pipe Rail, by Crane Veyor Corp..

2.3 METAL GRATING AND FLOOR HATCHES

A. General: Metal grating and floor hatches shall be of the design, sizes and types shown. Aluminum in contact with other metal or concrete shall be shop-painted in accordance with Section 2.5 of this specification.

B. Metal Grating: Metal grating shall be of aluminum or stainless steel as shown. No single piece of grating shall weigh more than 80 lb unless otherwise specified or shown. Aluminum shall be 6061-T6 Alloy Bearing Bars and 6063-T5 Alloy Cross Bars. Stainless steel shall be Type 316. All grating shall be completely banded. Do not notch bearing bars at supports to maintain elevation. For openings 2 inches or greater in diameter or dimension, band grating edges with a bar of same depth and thickness as bearing bars. Weld cut bearing bars or cross bars to banding bar. Provide trench grating with symmetrical cross bar arrangement. Fabricate metal frames and supports for grating of same material as grating, unless otherwise indicated.

Anchor grating to supporting system using saddle clips.

Provide stainless-steel fasteners for fastening aluminum.

C. Floor Hatches: Floor hatches shall be of 1/4" thick diamond-pattern mill-finish aluminum plate with mill finish aluminum angle frames as shown. Hatches shall be either single or double leaf per Contract Drawings, and shall be furnished with adjustable counterbalancing springs, heavy-duty hold-open arm that automatically locks door open at 90 degrees, release handle with vinyl grip that allows for one-handed closure, and recessed lift handle. Hinges shall be heavy-duty butt hinges with

stainless steel pins. Latches shall be stainless steel slam latches. Hatches shall be load rated for AASHTO HS-20 concentrated wheel load, with impact.

2.4 SEAT ANGLES, SUPPORTS, AND GUIDES

A. Seat angles for grating shall be aluminum or steel as shown and of a size as shown. Guides for slide gates shall be steel, of a size shown, hot-dip galvanized after fabrication.

2.5 BOLTS AND ANCHORS

A. Standard Service Bolts (Not Buried or Submerged): Except where otherwise shown or specified, all bolts, anchor bolts, and nuts shall be steel, galvanized after fabrication as specified herein. Threads on galvanized bolts and nuts shall be formed with suitable taps and dies such that they retain their normal clearance after hot-dip galvanizing. Except as otherwise specified herein, steel for bolts, anchor bolts and cap screws shall be in accordance with the requirements of ASTM A 307 Grade A or B, or threaded parts of ASTM A 36.

B. Buried or Submerged Bolts: Unless other corrosion-resistant bolts are shown, all bolts, anchor bolts and washers which are buried, submerged, or below the top of the wall inside any hydraulic structure shall be of Type 316 stainless steel, with bronze nuts, or cap screws (where screwed into stainless steel), of copper-silicon alloy, conforming to ASTM B 98, alloy C 65100, designation H04, or alloy C 65500, designation H04. Wherever stainless steel bolts and nuts are specified, it shall refer to the above material combination, unless specifically excluded. Where anaerobic conditions are anticipated, Type 304 stainless steel shall be used.

C. Bolt Requirements:

1. The bolt and nut material shall be free-cutting steel.

2. The nuts shall be capable of developing the full strength of the bolts. Threads shall be Coarse Thread Series conforming to the requirements of the American Standard for Screw Threads. All bolts and cap screws shall have hexagon heads and nuts shall be Heavy Hexagon Series.

3. The length of all bolts shall be such that after joints are made up, each bolt shall extend through the entire nut, but in no case more than 1/2-inch beyond the nut.

D. Adhesive Anchors: Unless otherwise shown or specified, all drilled, concrete or masonry anchors shall be adhesive anchors. No material substitutions will be considered unless accompanied with ICBO report verifying strength and material equivalency.

1. Epoxy adhesive anchors are required for drilled anchors where exposed to weather, in submerged, wet, splash, overhead, and corrosive conditions, and for anchoring handrails, pumps, mechanical equipment, and reinforcing bars. Epoxy systems shall be HILTI HIT-HY 200 or approved equal. Threaded rod shall be stainless steel Type 316.

E. Expanding-Type Anchors: Expanding-type anchors if shown or permitted, shall be steel expansion type HILTI "Kwik-Bolt;" or equal. Lead calking anchors will not be permitted. Size shall be as shown.

Expansion type anchors which are to be embedded in grout may be steel. Non-embedded buried or submerged anchors shall be stainless steel.

2.6 COATINGS

A. Primer: Use "10-99 Tnemec Primer" or "Rustoleum Number 5769 Primer.

B. For Repair of Galvanizing: Use a high zinc-dust content paint complying with MIL-P-21035.

C. Galvanizing: Provide a zinc coating for those items shown or specified to be galvanized as follows and as applicable:

1. ASTM A153 for galvanized iron or steel hardware.

2. ASTM A123 for galvanized rolled, pressed or forged steel shapes, plates, bars and strip 1/8-inch thick and heavier.

D. Field Galvanizing:

1. Required: For repair of protective coating of damaged galvanized surfaces resulting from welding or other construction operations in the shop or at the job-site at no added cost to the City.

2. Method: By "galvalloy" methods, in accordance with manufacturer's directions.

E. Shop Painting:

1. Required: On all uncoated ferrous metals; galvanized ferrous metal not to be shop coated.

2. Paint: Specified paint primer.

3. Painting: Full prime coating, completely covering the metal surfaces; at least 1 coat on all surfaces which will be accessible after fabrication and erection; at least 2 coats on all surfaces which will be inaccessible after fabrication and erection.

4. Remove scale, rust and other deleterious materials before application of Shop Coating.

5. Clean off heavy rust and loose mill scale in accordance with SSPC-SP-2 or SSPC-SP-3 before coating.

6. Remove oil, grease and similar contaminants in accordance with SSPC-SP-1.

F. Aluminum Finishes:

1. Anodized Finish: Give an anodic oxide treatment in accordance with AA M31C22A41 where indicated.

2. Mill Finish: Have a cleaned and degreased mill finish on other aluminum items.

2.7 FABRICATION OF FRAMED STAIRS

A. NAAMM Stair Standard: Comply with NAAMM AMP 510, “Metal Stairs Manual,” for Industrial Class,

unless more stringent requirements are indicated.

B. Provide Aluminum Stair Framing:

1. Fabricate stringers of channels.

a. Framing Size (Stringers, post, beams, etc): As required to comply with "General Requirements" Article.

b. Provide closures for exposed ends of channel stringers.

c. Aluminum Finish: Anodized

2. Construct platforms and tread supports of channel headers and miscellaneous framing members as required to comply with "Performance Requirements" Article.

a. Provide closures for exposed ends of channel framing.

3. Weld or bolt stringers to headers; weld or bolt framing members to stringers and headers.

C. Metal Bar-Grating Stairs: Form treads and platforms to configurations shown from metal bar grating; fabricate to comply with NAAMM MBG 531 Type P-19-4, “Metal Bar Grating Manual.”

1. Fabricate treads and platforms from welded grating with opening in gratings no more than 3/4 inch in least dimension.

a. Surface: Plain

2. Fabricate grating treads with cast-abrasive nosing and with aluminum angle or plate carrier at each end for stringer connections.

a. Secure treads to stringers with bolts.

D. Extruded Bars and Shapes: ASTM B 221, alloys as follows:

1. Grating Bearing Bars: 6061-T6 or 6063-T6.

2. Grating Crossbars: 6061-T6.

3. Extruded Shapes: 6061-T6.

4. Aluminum Sheet: ASTM B 209, Alloy 5052-H32.

5. Welding electrode, aluminum: 5356 filler alloy.

E. Risers: Open.

F. General Fabrication Requirements:

1. Provide complete stair assemblies, including metal framing, hangers, railings, clips, brackets, bearing plates, and other components necessary to support and anchor stairs and platforms on supporting structure.

a. Join components by welding unless otherwise indicated.

b. Use connections that maintain structural value of joined pieces.

2. Assemble stairs and railings in shop to greatest extent possible.

   a. Disassemble units only as necessary for shipping and handling limitations.

   b. Clearly mark units for reassembly and coordinated installation.

3. Cut, drill, and punch metals cleanly and accurately.

   a. Remove burrs and ease edges to a radius of approximately 1/32 inch unless otherwise indicated.

   b. Remove sharp or rough areas on exposed surfaces.

4. Form bent-metal corners to smallest radius possible without causing grain separation or otherwise impairing work.

5. Form exposed work with accurate angles and surfaces and straight edges.

6. Weld connections to comply with the following:

   a. Use materials and methods that minimize distortion and develop strength and corrosion resistance of base metals.

   b. Obtain fusion without undercut or overlap.

   c. Remove welding flux immediately.

   d. Weld exposed corners and seams continuously unless otherwise indicated.

   e. At exposed connections, finish exposed welds to comply with NOMMA's "Voluntary Joint Finish Standards" for Finish # 3 - Partially dressed weld with spatter removed.

7. Form exposed connections with hairline joints, flush and smooth, using concealed fasteners where possible.

   a. Where exposed fasteners are required, use Phillips flat-head (countersunk) screws or bolts unless otherwise indicated.

   b. Locate joints where least conspicuous.

   c. Fabricate joints that are exposed to weather in a manner to exclude water.

   d. Provide weep holes where water may accumulate internally.

PART 3 -- EXECUTION

3.1 FABRICATION AND INSTALLATION REQUIREMENTS

A. Fabrication and Erection: Except as otherwise shown, the fabrication and erection of structural steel shall conform to the requirements of the American Institute of Steel Construction "Manual of Steel Construction."

B. Aluminum Railings: Aluminum railing fabrication and installation shall be performed by craftsmen experienced in the fabrication of architectural metalwork. Exposed surfaces shall be free from defects or other surface blemishes. Dimensions and conditions shall be verified in the field. All joints, junctions, miters and butting sections shall be precision fitted with no gaps occurring between sections, and with all surfaces flush and aligned. Electrolysis protection of materials shall be provided.

C. Metal Stairs:

1. Fastening to In-Place Construction: Provide anchorage devices and fasteners where necessary for securing metal stairs to in-place construction.

   a. Include threaded fasteners for concrete and masonry inserts, through-bolts, lag bolts, and other connectors.

2. Cutting, Fitting, and Placement: Perform cutting, drilling, and fitting required for installing metal stairs. Set units accurately in location, alignment, and elevation, measured from established lines and levels and free of rack.

3. Install metal stairs by welding stair framing to steel structure or to weld plates cast into concrete unless otherwise indicated.

4. Fit exposed connections accurately together to form hairline joints.

   a. Weld connections that are not to be left as exposed joints but cannot be shop welded because of shipping size limitations.

   b. Do not weld, cut, or abrade surfaces of exterior units that have been hot-dip galvanized after fabrication and are for bolted or screwed field connections.

   c. Comply with requirements for welding in "General Fabrication" Article.

D. Floor Hatches: Unless otherwise shown, the CONTRACTOR shall furnish and install a 1/2-inch drain line to the nearest floor drain for all floor hatches.

E. Power-Driven Pins: Power-driven pins shall be installed by a craftsman who is certified by the manufacturer as being qualified to install the manufacturer's pins. Pins shall be driven in one initial movement by an instantaneous force that has been carefully selected to attain the required penetration. Driven pins shall conform to the following requirements where "D" = Pin's shank diameter:

Material Penetrated by Pin	Material's Minimum Thickness	Pin's Shank Penetration in Supporting Material	Minimum Space From Pin's CL to Edge of Penetrated Material	Minimum Pin Spacing
Concrete	16D	6D minimum	14D	20D
Steel	1/4-inch	Steel thickness	4D	7D

3.2 WELDING

A. Method: All welding shall be by the metal-arc method or gas-shielded arc method as described in the American Welding Society's "Welding Handbook" as supplemented by other pertinent standards of the AWS. Qualification of welders shall be in accordance with the AWS Standards governing same.

B. Quality: In assembly and during welding, the component parts shall be adequately clamped, supported and restrained to minimize distortion and for control of dimensions. Weld reinforcement shall be as specified by the AWS Code. Upon completion of welding, all weld splatter, flux, slag, and burrs left by attachments shall be removed. Welds shall be repaired to produce a workmanlike appearance, with uniform weld contours and dimensions. All sharp corners of material which is to be painted or coated shall be ground to a minimum of 1/32-inch on the flat.

3.3 GALVANIZING

A. All structural steel plates shapes, bars and fabricated assemblies required to be galvanized shall, after the steel has been thoroughly cleaned of rust and scale, be galvanized in accordance with the requirements of ASTM A 123. Any galvanized part that becomes warped during the galvanizing operation shall be straightened. Bolts, anchor bolts, nuts and similar threaded fasteners, after being properly cleaned, shall be galvanized in accordance with the requirements of ASTM A 153. Field repairs to galvanizing shall be made using "Galvinox", or equal.

3.4 DRILLED ANCHORS

A. Drilled anchors and reinforcing bars shall be installed in strict accordance with the manufacturer's instructions. Holes shall be roughened with a brush on a power drill, cleaned and dry. Drilled anchors shall not be installed until the concrete has reached the specified 28-day compressive strength. Adhesive anchors shall not be loaded until the adhesive has reached its specified strength in accordance with the manufacturer's instructions.

END OF SECTION 05500

SECTION 05600

FLOOR ACCESS HATCHES

PART 1 - GENERAL

1.1 SUMMARY

A. Work Included: Provide factory-fabricated floor access doors.

1.2 SUBMITTALS

A. Product Data: Submit manufacturer's product data.

B. Shop Drawings: Submit shop drawings including profiles, accessories, location, adjacent construction interface, and dimensions.

C. Warranty: Submit executed copy of manufacturer's standard warranty.

1.3 QUALITY ASSURANCE

A. Manufacturer: A minimum of 5 years experience manufacturing similar products.

B. Installer: A minimum of 2 years experience installing similar products.

C. Manufacturer's Quality System: Registered to ISO 9001 Quality Standards including in-house engineering for product design activities.

1.4 DELIVERY, STORAGE AND HANDLING

A. Deliver products in manufacturer's original packaging. Store materials in a dry, protected, well-vented area. Inspect product upon receipt and report damaged material immediately to delivering carrier and note such damage on the carrier's freight bill of lading.

1.5 WARRANTY

A. Manufacturer's Warranty: Provide 5 year warranty. Materials shall be free of defects in material and workmanship for a period of five years from the date of purchase. Should a part fail to function in normal use within this period, manufacturer shall furnish a new part at no charge.

PART 2 - PRODUCTS

2.1 MANUFACTURER

A. Basis-of-Design Manufacturer: Type JAL-H20 Single Leaf Floor Access Door or Type JDAL-H20 Double Leaf by The BILCO Company, P.O. Box 1203, New Haven, CT 06505, 1-800-366-6530, Fax: 1-203-535-1582, Web: www.BILCO.com, or approved equal.

2.2 ACCESS HATCHES

A. Furnish and install where indicated on plans vault access door Type J-AL H20, in sizes shown on the Drawings including hinge locations. The floor access door shall be double leaf and pre-assembled from the manufacturer.

B. Performance characteristics:

1. Covers: Shall be reinforced to support AASHTO HS-20 wheel load with a maximum deflection of 1/150th of the span. Manufacturer to provide structural calculations stamped by a registered professional engineer upon request. (Note: For installation in an off-street location where not subject to high density, fast moving traffic.)
2. Operation of the covers shall be smooth and easy with controlled operation throughout the entire arc of opening and closing.
3. Operation of the covers shall not be affected by temperature.

C. Covers: Shall be 1/4” aluminum cover and extruded aluminum frame.

D. Frame: Channel frame shall be aluminum with full anchor flange around the perimeter.

E. Hinges: Shall be specifically designed for horizontal installation and shall be through bolted to the covers with tamperproof Type 316 stainless steel lock bolts and shall be through bolted to the frame with Type 316 stainless steel bolts and locknuts.

F. Drain Coupling: Provide a 1-1/2” (38mm) drain coupling located in the right front corner of the channel frame (note: can be placed at a different location if specified).

G. Lifting mechanisms: Manufacturer shall provide the required number and size of compression spring operators enclosed in telescopic tubes to provide, smooth, easy, and controlled cover operation throughout the entire arc of opening and to act as a check in retarding downward motion of the covers when closing. The upper tube shall be the outer tube to prevent accumulation of moisture, grit, and debris inside the lower tube assembly. The lower tube shall interlock with a flanged support shoe fastened to a formed 1/4” gusset support plate.

H. A removable exterior turn/lift handle with a spring loaded ball detent shall be provided to open the covers and the latch release shall be protected by a flush, gasketed, removable screw plug.

I. Hardware

1. Hinges: Hinges: Heavy forged Type 316 stainless steel hinges, each having a minimum 1/4” (6mm) diameter Type 316 stainless steel pin, shall be provided and shall pivot so the covers do not protrude into the channel frame.
2. Covers shall be equipped with a hold open arm that automatically locks the cover in the open position.
3. Covers shall be fitted with the required number and size of compression spring operators.
4. A Type 316 stainless steel snap lock with fixed handle shall be mounted on the underside of the cover.
5. All hardware shall be zinc plated and chromate sealed with type 316 stainless steel fasteners. [For installation in highly corrosive environments or when prolonged exposure to hot water or steam is anticipated, specify Type 316 stainless steel hardware.

J. Finishes: Mill finish aluminum with a bituminous coating applied to the exterior of the frame.

2.3 FALL PROTECTION GRATING

A. All hatches both single and double leaf shall have a fall protection grating system meeting OSHA 29 CFR1926.502(c) requirements for fall protection. The grating shall be aluminum with powder coat paint finish that is safety yellow in color. The system is to be factory installed and allow the grating to open to the full 90 degree position.

PART 3 - EXECUTION

3.1 EXAMINATION

A. Examine substrates and openings for compliance with requirements for installation tolerances and other conditions affecting performance. Proceed with installation only after unsatisfactory conditions have been corrected.

3.2 INSTALLATION

A. Install products in strict accordance with manufacturer's instructions and approved submittals. Locate units level, plumb, and in proper alignment with adjacent work.

1. Test units for proper function and adjust until proper operation is achieved.
2. Repair finishes damaged during installation.
3. Restore finishes so no evidence remains of corrective work.

3.3 ADJUSTING AND CLEANING

A. Clean exposed surfaces using methods acceptable to the manufacturer which will not damage finish.

END OF SECTION 05600

SECTION 06100
ROUGH CARPENTRY

PART ONE - GENERAL

1.1 DESCRIPTION

*A. All rough carpentry work indicated on the Contract Drawings and as hereinafter specified, including:

1. Blocking and nailers and framing anchors.

2. Miscellaneous wood, nails, screws and other rough hardware indicated on the Drawings and required for complete and proper installation.

*B. Related Sections:

1. Documents affecting work of this Section include, but are not necessarily limited to the GENERAL CONDITIONS, SUPPLEMENTARY CONDITIONS and Sections in DIVISION 1 - GENERAL REQUIREMENTS of these Specifications.

2. Concrete Formwork in Section 03100.

3. Finish Carpentry in Section 06200.

4. Architectural Woodwork in Section 06400.

5. Custom Casework in Section 06410.

1.2 QUALITY ASSURANCE

A. Use adequate numbers of skilled workers who are thoroughly trained and experienced in the necessary crafts and who are completely familiar with the specified requirements and the methods needed for the proper performance of the work of this Section.

B. Codes and Standards:

1. In addition to complying with the pertinent codes and regulations of the Uniform Building Code with the City of Los Angeles 1992 Amendments, comply with the following:

a. "Product Use Manual" of the Western Wood Products Association for selection and use of products included in that manual;

b. "Plywood Specification and Grade Guide" of the American Plywood Association;

c. "Standard Specifications for Grades of California Redwood Lumber" of the Redwood Inspection Bureau for Redwood, when used.

1.3 GENERAL REQUIREMENTS

A. Verification of Job Conditions: Required and take field measurements as may be required. Report to the City Engineer or Consultant any discrepancies between the Drawings and job-site conditions, for further instructions.

B. Coordination and Cooperation: Do work of this Section in a fully coordinated and cooperative manner with work of other trades to provide complete and proper installation and to expedite the job without delays.

C. Defective Work: All work of this Section that is not set true to line, plane and elevation or is damaged or marred or is not in a condition to receive other trade work will not be accepted. Remedy remove or replace defective work to a first class condition as approved by the City Engineer or Consultant, at no added cost to the City.

D. Clean-Up: During the progress of the work of this Section, conform to provisions of Section 01710 in GENERAL REQUIREMENTS, keep the premises free of debris and waste resulting from the work of this Section. Upon completion, all surplus materials and debris shall be removed from the job-site.

1.4 SUBMITTALS

A. Comply with pertinent provisions of Section 01340 - SUBMITTAL in DIVISION 1 - GENERAL REQUIREMENTS.

B. Contractor shall submit Shop Drawings indicating location of backing, furring, nailers, blocking, etc. to the City Engineer for approval prior to start of Contracted Work. Contractor shall coordinate work of this Section with work of other trades if necessary.

1.5 PRODUCT HANDLING

A. Delivery: Deliver the rough carpentry materials to the job-site and store in a safe area, out of way of traffic and shored up off the ground surface, where directed by the City Engineer.

1. Identify framing lumber as to grades and store each grade separately from other grades.

2. Protect metal items with adequate waterproof outer wrapping and properly identify or label such items.

3. Use extreme care in off loading of lumber to prevent damage, splitting and breaking of materials.

B. Protection: Stack lumber to prevent warping and keep dry.

PART TWO - PRODUCTS

2.1 GRADE STAMPS

A. Identify framing lumber by the grade stamp of the West Coast Lumber Inspection Bureau, or such other grade stamp as is approved in advance by the City Engineer or Consultant.

B. Identify plywood as to species, grade, and glue type by the stamp of the American Plywood Association.

C. Identify other materials of this Section by the appropriate stamp of the agency approved in advance by the City Engineer or Consultant.

D. Conform to the Uniform Building Code with the Los Angeles City 1992 Amendment, Section 2505.

*2.2 MATERIALS (As Applicable)

A. Provide materials in the quantities needed for the work shown on the Drawings and meeting or exceeding the following standards of quality at the time of delivery:

1. Furnish lumber manufactured to comply with PS20 "American Softwood Lumber Standards" and with applicable grading rules of

Inspection Agencies certified by the American Lumber Standards Committee (ALSC) Board of Review.

B. Seasoning:

1. Rough lumber to be air dried and well seasoned to have average moisture content not to exceed 19 percent.

2. Finish lumber to be kiln dried as closely as practicable to have an average moisture content not exceeding 12 percent.

*2.3 PRODUCTS

A. Blocking and Nailers: Douglas Fir, "Construction" grade, pressure treat with chromate zinc chloride.

B. Plywood: Conform to U.S. Product Standard P.S. 1-83 and U.B.C. Standard 25-9. Plywood shall be grade-marked by the American Plywood Association (APA), Pittsburgh Testing Laboratories (PTL) or Timber Engineering Company (TECO). Plywood shall be exterior grade, structural.

C. Nails, Screws, and Lag Screws: Commercial Standard.

D. Bolts and Washers: American Standard and U.B.C. Standard 25-17.

E. Treated Lumber: Cut surfaces in treated lumber shall be given a brush coat of approved type preservative.

F. Fire Retardant: All wood shall be treated with Baxter "Pyresote", Barnard "Bar Flame" or equal.

G. Building Paper: Kraft paper complying with Fed. Spec. UU-B-7902.

H. Joist Hangers: Simpson, Teco or equal as approved by the City Engineer or Architect.

I. Exterior Gypsum Sheathing: Butt edge, 2-inch thick, complying with ASTM C630.

J. Load Bearing Studs: 2-inch x 4-inch, Douglas Fir W.C.L.I.B. No. 1 grade.

K. Beams and Stringers: 5-inch and thicker, width more than 2-inch greater than thickness, Douglas Fire W.C.L.I.B. No. 1 structural beams and stringers.

L. Wall Sills: Treated Douglas Fir of W.C.L.I.B. grade for wall framing or Redwood C.R.A. Foundation grade as market or branded by an approved

agency of the Los Angeles City Department of Building and Safety.

2.4 MINIMUM SURFACING: (As Applicable)

A. General: All faces required to be left exposed; where specifically indicated on the Drawings or specified; where necessary to achieve proper connections to other members.

B. S1E: Blocking, studs, joists, rafters, purlins, bridging and other members in which uniform width must be maintained.

C. S1S1E: Plates, sills and other members in which uniform width and thickness must be maintained.

D. S4S: Exposed wood except where noted to have "Resawn" finish.

*2.5 OTHER MATERIALS

A. Provide other materials not specifically described but required for a complete and proper installation, as selected by the Contractor subject to the approval of the City Engineer or Architect.

1. Glue: As suitable for required joining; water-resistant where subject to moisture conditions.

2. Stock Framing Connectors and Brackets: "Simpson", "Teco" or "Trimfast", galvanized metal of types and sizes indicated or required. Use nails furnished by the connector manufacturer.

PART THREE - EXECUTION

3.1 SURFACE CONDITIONS

Examine the areas and conditions under which work of this Section will be performed. Correct conditions detrimental to timely and proper completion of the Work. Do not proceed until detrimental conditions are corrected.

3.2 COMPLIANCE

A. Do not permit materials not complying with the provisions of this Section to be brought onto or to be stored at the job-site.

B. Promptly remove non-complying materials from the job-site and replace with materials meeting the requirements of this Section.

3.3 WORKMANSHIP

A. Produce joints which are tight, true and well nailed, with members assembled in accordance with the Contract Drawings and with pertinent Codes and Regulations.

B. Selection of Lumber Pieces:

1. Carefully select the members.

2. Select individual pieces to that knots and obvious defects will not interfere with placing bolts or proper nailing, and will allow making of proper connections.

3. Cut out and discard defects which render a piece unable to serve its intended function.

4. Lumber may be rejected by the City Engineer or Consultant, whether or not it has been installed, for excessive warp, twist, bow, crook, mildew, fungus or mold, as well as for improper cutting and fitting.

*3.4 GENERAL FRAMING

A. General: Execute rough carpentry in accordance with the Uniform Building Code wit the Los Angeles City 1992 Amendments, Divisions 25 and 48 as applicable.

1. In addition to framing operations normal to the fabrication and erection indicated on the Drawings, install wood blocking and backing required for the work of other trades.

2. Set horizontal and sloped members with crown up.

3. Do not notch, cut, or bore members for pipes, ducts, or conduits, or for other reasons except as shown on the Drawings or as specifically approved in advance by the Consultant or City Engineer.

4. Make proper allowances for shrinkage where possible.

5. Splicing between bearings not permitted.

6. The contact surfaces of any member coming in contact with an exterior concrete floor slab or footing or masonry wall regardless of height above ground shall be treated wood or shall be painted with two coats of an approved preservative.

B. Bearings:

1. Make bearings full unless otherwise indicated on the Drawings.

2. Finish bearing surfaces on which structural members are to rest as to give sure and even support.

3. Where framing members slope, cut or notch the ends as required to give uniform bearing surface.

C. Wall Sills and/or Ledgers:

1. Set level and in straight alignment.

2. All sills on uneven concrete bases to be set in beds of dry pack mortar as specified in Cast-In-Place Concrete in Section 03300.

3. Anchor to concrete as indicated on the Drawings.

*D. Stud Framing: (As Applicable)

1. Space studs 16-inches on center except where closer spacing is indicated or noted on the Drawings or is necessary at wall corners and openings. Space studs 12-inches on center behind ceramic tile wall surfacing.

2. Double studs at openings with inside studs cut to take headers.

3. Double top plate with joints lapped, at least 4-feet.

4. Place double headers on edge.

5. Lintels to be one piece full thickness of studs.

6. Strap studs together with substantial metal straps where sills or plates are cut to accommodate piping.

7. End studs of partitions adjoining masonry walls to be suitably bolted to masonry, as approved by the City Engineer or the Consultant.

E. Rafters and Ceiling Joists:

1. Space as indicated on the Drawings.

2. Splice only as indicated on the Drawings.

3. Tightly nail joints as indicated or as necessary.

4. Accurately set in place and nail securely to wall framing, beams and to hangers.

5. Level or slope bottom ceiling joists carefully.

6. Properly frame all openings in roof sheathing as indicated on the Drawings.

F. Wood Grounds:

1. Required: Continuous wood grounds for casings, base and other finish and as necessary for attachment of wood finish and millwork specified in Finish Carpentry and Custom Casework Sections.

2. Material: Douglas Fir, S4S.

3. Size: Not less than 1-1/4-inches wide, unless otherwise indicated on the Drawings of proper thickness for exact finish of plaster.

4. Install plumb, level, true to line and grade. Solidly wedged in positions to assure true planes of finished work. Securely nail to framing or to nailers set in masonry, as approved by the City Engineer.

G. Furring and/or Stripping (Where Occur):

1. Material: Douglas Fir Boards, S4S, sizes as noted on the Drawings.

2. Application:

a. Accurate spacing and straight alignment.

b. At right angles to framing or as otherwise indicated on the Drawings.

c. Securely nail to framing at every bearing with suitable box nails to masonry or concrete as indicated on Drawings or other fastening as approved by the City Engineer.

H. Parapet Walls: Construct to uniform height as indicated, make rigid, plumb and straight-line complete with block as necessary to receive sloping framing for eaves. Top surface of top plate shall slope towards flat roof area for drainage and make ready to receive subsequent work.

I. Eave Framing:

1. Size and spacing of joists shall be as indicated on the Drawings.

2. Joists shall be set in place with bottom surfaces carefully leveled and shall be securely anchored to exterior wall framing and to tile roof framing and make ready for lathing and plastering as indicated on the Drawings.

J. Roof Crickets and Saddles:

1. Materials: Douglas Fir Boards S4S for framing; softwood plywood Structural I C-C Exterior DFPA, 2-inch thick for sheathing.

2. Installation: As indicated on the Drawings to the established lines and grades or elevations to assure proper roof drainage. See Roof Plan and "Roof Sheathing" as hereinafter specified.

K. Roof Sheathing:

1. Material: Softwood plywood, Structural I C-C Exterior DFPA, size and of thickness indicated on the Contract Drawings.

2. Installation:

a. As indicated on the Contract Drawings.

b. Nail panels securely to supports in accordance with Nailing Schedule on the Drawings.

c. End Joints: Over and parallel to supports; stagger as indicated on the Drawings.

d. Nailing: As indicated in Nailing Schedule on Drawings. Nail plywood sheets tight and drive nails flush.

e. Cracks and Holes: Cover with sheet metal as necessary for application of roofing and waterproofing.

L. Roof Platforms for Mechanical and/or Electrical Equipment: Construct as indicated on the Drawings on top of the roof sheathing; make top plywood

surface level and ready to receive waterproofing felts, sheet metal covering and mechanical and/or other equipment.

M. Wood Curbs: Construct as detailed on the Drawings; make top of curb level, unless otherwise detailed.

N. First or Second Floor Sheathing: (As Applicable)

1. Material: Softwood plywood Structural I C-D, Interior DFPA (exterior glue).

2. Installation: Securely nail to supports in accordance with nailing schedule indicated on the Drawings. Drive nails tight and flush. Securely butt plywood edges to allow for proper installation of moisture barrier material and lightweight concrete fill.

O. Hose Tower Sheathing (Ladder Rest): (on Fire Department Projects)

1. Material: Softwood plywood, Structural I C-C Exterior DFPA, 3/4-inch thickness.

2. Installation: As indicated on the Drawings.

P. Wood Nailers:

1. Required: For cap of building masonry walls and elsewhere as noted on the Drawings.

2. Materials: Pressure treated lumber, sizes, and shapes as indicated on the Drawings.

3. Installation: In level position, tightly bolt in place with nuts or heads countersunk and make ready for receiving sheet metal copings; as indicated on the Drawings.

Q. Support Beams:

1. Required: As necessary and as indicated for support of steel and other items.

2. Material: Douglas Fir beams, sizes as indicated on the Drawings.

3. Fabrication and Installation: As indicated on the Drawings, securely anchor in place to floor or ceiling framing, and make ready to receive and support steel items.

R. Plywood Backing:

1. Required: For supports for Mechanical and/or Electrical equipment on walls.

2. Material: 3/4-inch plywood "B-D" grade; sizes as noted or indicated on the Drawings.

3. Installation: At location indicated on the Drawings; bolt to structural framing so as to bear weight of equipment; countersink all fasteners.

S. Wall Diaphragm Sheathing:

1. Required on inside surfaces of exterior wall framing and on interior partition framing where indicated on the Structural Drawings for lateral stability of walls.

2. Material: Plywood panels of size and thickness as noted on the Structural Drawings and specified in Paragraph 2.03 of this Section.

3. Installation: Panels shall be applied directly to stud framing with long dimension of panels horizontal and with all edges bearing against wood studs and blocking extending from floor up height as indicated. Panels shall be staggered. Nailing shall be as noted. Where panels contact intermediate studs nail panels thereto with nails at 10" O.C. or as otherwise directed by the City Engineer.

T. Attic Partitions:

1. Shall conform to the Uniform Building Code with the Los Angeles City 1992 Amendments, Section 3201.

2. Frame Partitions with 2-inch x 4-inch studs spaced not over 24-inches on center.

3. Solidly sheath partition, extending from ceiling below to underside of roof sheathing with 2-inch thick plasterboard or plywood, 24-inches on center securely nailed in place, or as otherwise detailed on the Drawings.

4. Each partition to have a self-closing door of the same construction as the partition, top hinged and latched at bottom with a screen door catch. Locate door at center of partition or as otherwise located on the Drawings.

5. Provide continuous catwalks along full length of attic spaces; shall be

two (2) 2-inch x 12-inch boards and secure to ceiling framing.

3.5 BLOCKING AND BRIDGING

A. Install blocking as required to support items of finish and to cut off concealed draft openings, both vertical and horizontal, between ceiling and floor areas.

B. Bridging:

1. Install wood cross bridging (not less than 2" x 3" nominal), metal cross bridging of equal strength, or solid blocking between joists where the span exceeds 8'-0".

2. Provide maximum distance of 8"-0" between a line of bridging and a bearing.
3. Cross bridging may be omitted for roof and ceiling joists where the omission is permitted by code, except where otherwise indicated on the Drawings.

4. Install solid blocking between joists at points of support and wherever sheathing is discontinuous. Blocking may be omitted where joists are supported on metal hangers.

3.6 ALIGNMENT

On framing members to receive a finished surface, align the finish subsurface to vary not more than 1/8" from the plane of surfaces of adjacent furring and framing members.

3.7 INSTALLATION OF PLYWOOD SHEATHING

A. Placement:

1. Place plywood with face grain perpendicular to supports and continuously over at least two supports, except where otherwise shown on the Drawings.

2. Center joints accurately over supports, unless otherwise shown on the Drawings.

B. Protect Plywood from moisture by use of waterproof coverings until the plywood in turn has been covered with the next succeeding component or finish.

3.8 FASTENING

A. General: Comply with provisions of the Uniform Building Code with the Los Angeles City 1992 Amendments, Table 25-Q in Division 25 and Table 48-C in Division 48 as applicable to Rough Carpentry.

B. Nailing:

1. Use only common wire nails or spikes of the dimension shown on the Nailing Schedule, except where otherwise specifically noted on the Drawings. Replacement or sinker nail is not allowed.

2. For conditions not covered in the Nailing Schedule, provide penetration into the piece receiving the point of not less than 2 the length of the nail or spike, provided, however, that 16d nails may be used to connect two pieces of 2" (nominal) thickness.

3. Nail without splitting wood.

4. Prebore as required.

5. Remove split members and replace with members complying with the specified requirements.

C. Bolting:

1. Drill holes 1/16" larger in diameter than the bolts being used.

2. Drill straight and true from one side only.

3. Do not bear bolt threads on wood, but use washers under head and nut where both bear on wood, and use washers under all nuts.

D. Screws:

1. For lag screws and wood screws, prebore holes same diameter as root of threads, enlarging holes to shank diameter for length of shank.

END OF SECTION 06100

SECTION 07290
WATERPROOFING

PART ONE - GENERAL

1.1 SUMMARY

A. Provide all waterproofing where indicated or noted on the Contract Drawings and specified hereinafter, not limited to the following:

1. Waterproofing exterior concrete block walls below grade (hydrostatic pressure of 6-foot head).

2. Waterproofing exterior concrete block walls below grade (hydrostatic pressure of 12-foot head).

3. Waterproofing exterior building walls below grade (hydrostatic pressure of 6-foot head).

4. Waterproofing site retaining walls.

5. Dampproofing planter boxes at masonry walls below grade.

6. Waterproofing shower and drying room floors over slab on grade.

7. Waterproofing concrete entry canopies.

8. Waterproofing on parking deck.

9. Waterproofing membrane under all toilet rooms, shower stalls and drying rooms, and under mop drain troughs.

10. Waterproofing membrane over wood subfloors of drying and toilet rooms (except shower stalls).

B. Related Sections:

1. Documents affecting work of this Section include, but are not necessarily limited to the GENERAL CONDITIONS, SUPPLEMENTARY CONDITIONS and Sections of GENERAL REQUIREMENTS in DIVISION 1 of these Specifications.

2. Moisture Barrier Over Wood Subfloor to Receive Lightweight Concrete Fill in DIVISION 3.

3. Preparation of Concrete Surfaces to Receive Work of this Section in Section 03300.

4. Wood Nailers in Section 06100.

5. Built-up Roofing in DIVISION 7.

6. Above grade Waterproofing Sealer Treatment of Masonry Walls in Section 07210.

7. Sheet Metal Work in Section 07600.

8. Caulking and Sealants in Section 07920.

1.2 QUALITY ASSURANCE

A. Use adequate numbers of skilled applicators who are thoroughly trained and experienced in the necessary crafts and who are completely familiar with the specified requirements and the methods needed for proper performance of the work of this Section.

B. Use an applicator currently approved in writing by the manufacturer of the waterproofing system.

C. **Technical Services:** Contractor shall notify the manufacturer at least 72 hours prior to start of work to provide required technical services. Equipment used to apply the waterproofing material to be as prescribed by or meeting approval of the material manufacturer.

D. **Manufacturer's Certification:** Prior to start of waterproofing operations of this Section and during work progress, the manufacturer of the waterproofing material shall visit the job-site to inspect and shall certify the following:

1. That the surfaces to which the material was applied were in a condition suitable to receive the waterproofing materials.

2. That materials applied conform to the specified requirements.

3. That materials were applied in accordance with manufacturer's current recommendations.

1.3 SUBMITTALS

A. **General:** Comply with provisions in SUBMITTALS SECTION 01340 in DIVISION 1 - GENERAL REQUIREMENTS of these Specifications.

B. **Certification:** Upon completion of the work of this Section and as a condition of its acceptance, deliver to the City Engineer the certification required under the above paragraph 1.2D.

C. **Applicator:** Submit letter to the City Engineer or Consultant stating that the applicator is approved by the material manufacturer and that the work has been installed or applied in accordance with manufacturer's instructions, as shown or noted on the Contract Drawings and as hereinafter specified.

D. **Manufacturer's Recommended Installation Procedures:** When approved by the City Engineer, will become the basis for accepting or rejecting actual installation procedures used on the work.

E. **Manufacturer's Specifications** and other data needed to prove compliance with specified requirements.

F. **Materials List** of items to be provided under this Section.

1.4 EXTENDED GUARANTEES

A. **Guarantee Period:** Specified in Section 28 in GENERAL CONDITIONS shall be extended to two (2) years. Obtain written guarantees from each of the several applicators and file five (5) copies of same with the City Engineer or the Consultant as a prerequisite for final acceptance of the work.

1. Guarantee to be prepared by both the material manufacturer and the applicator.

2. Manufacturer shall further guarantee the material to perform as specified and in case of failure to perform within the guarantee period shall agree to furnish sufficient material to correct the failure without added cost to the City.

1.5 INSPECTION

A. Each applicator hereunder, in the company of the City Engineer's representative, before starting work, shall inspect and verify surfaces that are to receive waterproofing materials are in the following condition to receive work of this Section:

1. Concrete to be dry, smooth, free from loose material, rough spots, sharp projections and lumpy places, and that all pits, holes or cracks in concrete surfaces are filled with cement mortar to provide solid surface.

2. Should any deficiency appear, the City Engineer representative shall file a written report of same to the Contractor for correction before such waterproofing work commences.

1.6 PRODUCT HANDLING

A. Delivery and Storage:

1. Deliver waterproofing materials to the job-site in their unopened, sealed and original containers with all labels intact and legible at time of use, with manufacturer's name, brand name and batch number.

2. Store material where directed by the City Engineer in a safe, clean and dry and orderly area free from oily rags, waste and empty containers. Such materials shall be handled and stored in a manner to prevent damage or contamination.

B. Protection: Use all means necessary to protect the materials of this Section before, during and after installation and to protect the work and materials of all other trades.

C. Replacements: In the event of damage or contamination, immediately make all repairs and replacements necessary to the City Engineer's approval, at no added cost to the City.

1.7 CLEANING AND CLEAN-UP

A. Contractor shall not permit applicators to allow waste or debris to accumulate and shall have same removed from the job-site at frequent intervals. Comply with provisions of Section 01710 - CLEANING of the GENERAL REQUIREMENTS in DIVISION 1 of these Specifications.

B. Upon completion of work of this Section, thoroughly clean all non-related surfaces of any material splashed onto adjacent surfaces during work operations of this Section. Use cleaning materials and methods recommended by the waterproofing or damproofing material manufacturer. Remove all waste, debris, surplus materials, equipment, and tools co-incident with the specified work. Leave the premises and the job-site in a clean and

orderly condition.

PART TWO - PRODUCTS

2.1 GENERAL

*** A. Types (As applicable)**

1. Primer: Fed Spec. SS-A-710B, ASTM D41-73 Genstar Roofing Products Co. (Flintkote) No. 810-01 asphalt primer.

2. Waterproofing Asphalt: Fed. Spec. SS-A-666 Class A, temperature range 165 degree Fahrenheit to 175 degree Fahrenheit.

3. Protection Board: Fed. Spec. LLL-I-535A, minimum 2-inch thick, integrally asphalt treated cane fiber board as recommended by the waterproofing material manufacturer.

4. Reinforcement Felts: Fed. Spec. HH-R-595B, Type 15A, Style A, plain, asphalt saturated, 15-lb. weight, Genstar Roofing Products Co. "Saturated Felt".

5. Elastomeric Sheeting: 40 mil thick chlorinated polyethylene (CPE), "Chloraloy 240" manufactured by the Noble Co., Grand Haven, Michigan (local representatives phone (213) 981-8660).

6. Bonding Liquid (for Elastomeric Sheeting): Chlorinated polyethylene (CPE) solvent bonding liquid or Xylen.

7. Reinforcing Fabric: Fed. Spec. HH-C-466B, glass fabric.

8. Waterproofing Asphalt: ASTM D449.

9. Asphalt Emulsion: ASTM D1187-66, marine type asphalt-clay fibered emulsion, Genstar Roofing Products Co. (Flintkote) No. C-113-E.

10. Protective Sheet: 70-lb. similar and equal to Genstar Roofing Products Co. (Flintkote) "New Method Protective Sheet".

11. Reinforcing Paper: Sisalkraft building paper by Sisalkraft Building Paper Co., Chicago, Illinois.

12. Protection Panels: Maximum 2-inch X 4-foot X 8-foot panels of a ductile air blown asphalt fortified with inorganic mineral fibers heat pressure molded to specified thickness manufactured by Asphalt

Products Oil Corp. (A.P.O.C.), Long Beach, California.

a. Primer (A.P.O.C.) hot applied water repelling asphalt.

b. Asphalt (A.P.O.C.) hot applied water repelling asphalt.

13. Nails: 12-gage galvanized steel with 5/8-inch diameter head, length sufficient to penetrate wood minimum 3/4-inch.

2.2 SUMMARIES OF WATERPROOFING ASSEMBLIES

A. For Waterproofing Exterior Concrete Block Yard Walls Below Grade (Hydrostatic Pressure of 6-Foot Head):

1. 1 coat of primer (1 gal.) .....8 lbs./100 sq. ft.

2. First course of waterproofing.....25 lbs./100 sq. ft.

3. 2 layers of felt.....30 lbs./100 sq. ft.

4. Asphalt mopping between layers of felt and on top.....50 lbs./100 sq. ft.

5. Protection board.....57 lbs./100 sq. ft.
   TOTAL: 170 lbs./100 sq. ft.

B. For Waterproofing Exterior Concrete Block Yard Walls and Exterior Building Walls Below Grade (Hydrostatic Pressure of 12-Foot Head):

1. 1 coat of primer (1-1/2-gal.).....15 lbs./100 sq. ft.

2. First course of waterproofing
   (2 coats @ 3 gal. each coat) .....60 lbs./100 sq. ft.

3. 2 layers of reinforcement.....2 lbs./100 sq. ft.

4. Second course of waterproofing
   (2 coats @ 3 gal. each coat) .....60 lbs./100 sq. ft.

5. Protection board.....57 lbs./100 sq. ft.
   TOTAL: 187 lbs./100 sq. ft.

NOTE: Use cold applied method in tight spaces as may be governed by CAL/OSHA.

C. Waterproofing site retaining walls:

1. Asphalt emulsion primer (1-1/2-gallons).....15 lbs./100 sq. ft.

2. Course of emulsion .....40 lbs./100 sq. ft.
   TOTAL: 55 lbs./100 sq. ft.

D. Waterproofing Building Exterior Walls and Yard Walls Below Grade (Hydrostatic Pressure of 6-Foot Head):

Cold Applied Method:

1. Asphalt Emulsion (2 strength) as primer .....15 lbs./100 sq. ft.

2. First course of asphalt emulsion (3 gallons).....30 lbs./100 sq. ft.

3. Layer of reinforcement fabric .....1 lbs./100 sq. ft.

4. Second course of asphalt emulsion (3 gallons).....30 lbs./100 sq. ft.

5. Layer of reinforcement fabric ..... 1 lb./100 sq. ft.

6. Third course of asphalt emulsion (3 gallons)..... 30 lbs./100 sq. ft.
   TOTAL: 107 lbs./100 sq. ft.

Or

Hot Applied Method

1. 1 coat of primer (1-1/2 gal.).....15 lbs./100 sq. ft.

2. First course of waterproofing (3 gallons) .....30 lbs./100 sq. ft.

3. Layer of reinforcement fabric ..... 1 lb./100 sq. ft.

4. Second course of waterproofing (3 gallons).....30 lbs./100 sq. ft.

5. Second Course of Reinforcement Fabric ..... 1 lb./ sq. ft.

6. Third Course of waterproofing (3 gallons) ..... 30 lbs./100 sq. ft.
   TOTAL: 107 lbs./100 sq. ft.

E. Dampproofing Planter Boxes at Masonry or Concrete Walls Below Grade:

1. Asphalt Emulsion Primer.....15 lbs./100 sq. ft.

2. Course of Emulsion..... 40 lbs./100 sq. ft.
55 lbs./100 sq. ft.

F. Waterproofing Membrane Under Toilet Rooms Shower Stalls, Drying Rooms and Under Mop Drain Troughs:

1. One layer of 15-lbs. asphalt saturated felt.

2. Layer of elastomeric sheeting (CPE)

***NOTE**: Use cold applied method in tight spaces as may be governed by CAL/OSHA.

G. Waterproofing Membrane Over Wood Subfloor in Drying and Toilet Rooms (Except in Shower Stalls):

1. Two layers of felt.

2. Asphalt mopping between layer of felt and fabric.

3. Layer of fabric.

4. Asphalt mopping.

5. Layer of reinforcing felt.

PART THREE - EXECUTION

3.1 SURFACE CONDITIONS

A. Examinations Required: All surfaces to receive waterproofing materials by the material applicator, to be clean, free of dirt, foreign materials and surface defects which would impair the proper application of materials. Comply with provisions hereinbefore specified in Subsection 1.5 - INSPECTION of this Section.

B. Preparation of Surfaces: Perform or arrange for all remedial work to be executed prior to start of work of this Section. Start of work of this Section shall imply Contractor's acceptance of surface conditions as meeting requirements for the specified work.

3.2 COORDINATION

A. **Required:** Work of this Section shall be coordinated with other trades to assure proper and adequate provisions in the work of those trades for interface with work of this Section.

3.3 PROTECTION

A. **Required:** Below grade waterproof concrete and/or masonry wall surfaces prior to backfilling operations.

B. **Material:** Install specified protection board against such vertical wall surfaces.

3.4 WATERPROOFING EXTERIOR CONCRETE BLOCK YARD WALLS BELOW GRADE

A. **Required:** Below finish grade on block surfaces down to concrete foundation against which backfill will be placed.

NOTE: Where working in tight spaces use cold applied method as governed by CAL/OSHA.

* **B.** **Application:**

1. By an applicator authorized by waterproofing manufacturer, in accordance with manufacturer's specifications.

2. Extend waterproofing from bottom of footing to finish grade; not to be exposed above finish grade.

3. Prime concrete foundation and concrete block wall surfaces with asphalt emulsion primer at rate of 1 2 gallon per 100 square foot of surface; allow to dry thoroughly.

4. Brush apply cold asphalt emulsion to surfaces at rate of three gallons per 100 square foot.

   or

   Hot-mop-prime surfaces with asphalt at temperature of not less than 375 degrees F. or not more than 450 degrees F.

5. On vertical wall angles, angles at footings, and/or offsets embed in

emulsion or hot asphalt 12-inch-wide layer of reinforcing fabric extending 6-inches from the angle or corner.

6. Embed two layers of felt in hot asphalt or cold asphalt emulsion with sheets lapped 19-inches leaving 17-inches exposure, begin at top of footing and extend to within 6-inches of finish grade. Secure top edge of felt to wall with concrete nails through tin discs spaced 6-inches on center.

   NOTE: Where there is a 12 ft. hydrostatic pressure head, apply 3 layers of feet in lieu of 2 layers.

7. Seal perimeter edges of felts with three layers of glass fabric embedded in 1/4-inch thick layers of troweled on flashing compound (roofing cement). Coat the third layer with 1/8-inch thick layer of flashing compound. Extend seal 6-inches onto reinforcing felts and 6-inches out on block wall surfaces, as directed by the waterproofing material manufacturer.

8. Hot-mop-in-place specified protection board with smooth surface against the wall surface, extend the protection board from top of footing up to finish grade, embed in coat of asphalt emulsion. Protection board shall not be exposed above grade.

3.5 WATERPROOFING SITE RETAINING WALLS

A. Required: Where noted on the Contract Drawings.

B. Materials: As hereinbefore specified.

C. Application:

1. Primer: Brush or spray apply asphalt emulsion primer at rate of 1-1/2 gallons per 100 square foot, thinned with not more than 20 percent cool, clean water, and allow to thoroughly dry.

2. Emulsion course: Brush or spray apply emulsion at rate of four gallons per 100 square foot in uniform manner and allow to dry thoroughly before backfill is placed.

3. All applied in accordance with material manufacturer's printed directions.

3.6 DAMPPROOFING PLANTER BOXES AT MASONRY OR CONCRETE WALLS BELOW GRADE

A. **Required:** Where noted on the Drawings.

B. **Materials:** As hereinbefore specified.

C. **Application:** Butt installation method in accordance with manufacturer's instructions.

1. Extend waterproofing from top of footing to finish grade, not to be exposed above finish grade.

2. Prime top of footing and vertical wall surfaces with specified primer at rate of one (1) gallon per 100 to 150 square feet maximum, then hot mop with specified waterproofing asphalt at rate of 20-lbs. per 100 sq. ft. of surface.

3. Prime back side of protection panel and footing angles and while asphalt primer is still hot set footing angles in place followed by an application of protection panel and butt edges squarely up to adjacent footing angles and protection panels edges.

4. Back mop at joints of protection panels and at corners with a minimum 10-inch wide strip of hot asphalt and embed therein 8-inch wide batten strips (protective panels) over all joints and corners.

3.7 WATERPROOFING MEMBRANE UNDER TOILET ROOM, SHOWER STALLS, DRYING ROOMS AND UNDER MOP DRAIN TROUGHS

***NOTE:** This can be used for janitor slop sink construction.

A. **Required:** Where noted on the Drawings.

B. **Materials:** Felt, Elastomeric Sheeting and Bonding Liquids as hereinbefore specified.

C. **Application:** By an applicator authorized by the material manufacturer, in accordance with the manufacturer's specifications.

1. Apply a single layer of 15-lbs. asphalt-saturated felt, shingle method with 4-inch side and end laps and turn up felt 9-inches on vertical surfaces.

2. Install the CPE sheet liner over the felt and turn the sheet 9-inches up on all side walls. Use folded corner on all interior corners and prefab corner on all exterior corners. Secure the liner to the side walls with nails or staples 2-inch from the top edge.

3. Where necessary to nail the elastomeric sheet liner below the water line or in any critical area, cut a 2-inch x 2-inch piece of elastomeric sheeting and weld it to the elastomeric sheeting over the nail head as hereinafter specified for the welding of the seams of the elastomeric sheeting material.

4. Bond lapped joints of elastomeric sheeting material with application of specified liquid bonding material on both surfaces to be joined and press together while bonding material is still moist, lap joints in direction of watershed towards floor drain(s). End and side laps shall be minimum 2-inches.4

5. Fit the floor drain clamping ring in place by pressing on top of the elastomeric sheeting material to indicate the outline of the drain opening. Cut an opening in the membrane materials to expose the drain opening. Bolt the drain opening clamping ring in place firmly over the membrane material to make a waterproof seal.

D. Test: Test the completed waterproofing membrane by plugging the drains and filling the shower stall or mop drain trough with water to height of finish floor, shower stall curb, or drain trough curb or finish floor level. There shall be no evidence of leakage during a four hour period with waterproofed areas remaining full of water.

E. Protection: Upon completion of the waterproofing membrane, completion of testing, temporarily protect such surfaces with a covering of 15-lb. asphalt saturated felt loosely laid in place until such time subsequent tile work is applied.

***NOTE:** Specified, waterproofing membrane not required for toilet rooms over slabs on grade.

3.8 WATERPROOFING MEMBRANE ON PARKING DECKS

A. Required: Between structural parking deck slab and concrete wearing course from line.

B. Materials: As hereinbefore specified.

C. Application:

1. Concrete Surface: Smooth and free from rough spots and sharp projections, dry and swept clean.

2. Drains: Properly seal membrane around drains; fill base of ring with plastic cement; install ring over membrane and tighten while asphalt is warm.

3. Reinforcing Strips: Coat the walls and 12-inches out on deck with asphalt primer and allow to dry. Coat the primed area with flashing compound and apply two layers of membrane dampcourse; the first layer shall start 12-inches out on roof surface and 10-inches for second layer extending up full height of recess; apply the membrane assembly over these strips of dampcourse. After membrane is laid, apply two additional strips of membrane dampcourse starting 10-inches out on membrane for first layer, 8-inches for second layer, and extending the full height of recess. Apply each strip in flashing compound 1/8-inch thick. Nail strips 18-inches on centers on upper edge with concrete nails driven through tin discs to wall in recess. Coat the top and bottom of membrane in contact with reinforcing strips with flashing compound and exposed surface of strips 1/8-inches thick.

4. Membrane Assembly: Apply each layer separately over the roof deck surface, roll, and broom into place. Do not allow asphalt to remain on either the outside surfaces of top or bottom layers or the assembly. Mop the membrane solid and even with asphalt between layer starting with two layers of membrane dampcourse, follow with one layer of No. 30 asphalt felt, and two layers of dampcourse. Lap all layers 2-inches on sides and 4-inches on ends, with end laps not less than 2-feet apart; trim all layers flush with vertical surfaces.

5. Protective Sheet: After the finished membrane is approved and accepted, apply the protective sheet dry with mica surfaced side down lapped 4-inches on sides and 8-inches on ends; seal laps only with hot asphalt.

6. Expansion Joints: As indicated on the Drawings.

3.9 WATERPROOFING MEMBRANE OVER WOOD SURFACES

A. Required: Under tile floors in Drying and Toilet Rooms and elsewhere noted (except in shower stalls).

B. Materials: As hereinbefore specified.

C. Application:

1. Clean wood subfloors of dirt, loose and foreign materials and properly set all nail heads.

2. Spot mop and shower nail (at 12-inches on center) first layer of felt, lay shingle fashion with 4-inch side and end laps embedded in hot asphalt.

3. Hot mop in place 2nd layer of felt, lay as above specified, stagger side and end laps in relationship to that of previous layer of felt.

4. Hot mop in place one layer of fabric specified for felts with side and end laps staggered.

5. Hot mopping: Each mopping shall use not less than 25 lbs. of asphalt per 100 sq. ft. of floor and wall area and applied at temperatures between 375 degrees F. and 450 degrees F.

6. Turn up waterproofing onto walls and/or up and over curb surfaces, secure to wood plate at 12-inch centers with nails through tin caps; make corners watertight by folding of felts, fabrics and reinforcing paper.

3.10 WATERPROOFING CONCRETE ENTRY CANOPY

A. Required: Complete waterproofing over the entire roof area of the concrete entry canopy and as indicated on the Drawings, including flashing to the steel support members.

B. Application: By the manufacturer of the product or by an approved applicator authorized by the manufacturer, in accordance with the manufacturer's printed instructions on properly prepared, clean, dry surfaces; 40 mil. thickness minimum. Color shall be white. Make complete application, smooth and even in surface and color.

END OF SECTION 07290

SECTION 07900
JOINT SEALANTS

PART 1 - GENERAL

1.1 THE REQUIREMENT

A. The CONTRACTOR shall furnish all tools, equipment, materials, and supplies and shall perform all labor required to complete the work as indicated on the Drawings and specified herein.

B. This section covers all joint sealant as specified herein and shown on Drawings.

1.2 RELATED WORK SPECIFIED ELSEWHERE

A. Section 03290 Joints in Concrete

1.3 REFERENCE SPECIFICATIONS, CODES AND STANDARDS

A. Comply with the reference specifications of the GENERAL REQUIREMENTS.

B. Federal Specifications:

TT-S-001543A	Sealing Compound, Silicone Rubber Base, (Calking, Sealing and Glazing in Buildings and Other Structures).
TT-S-00230C(2)	Sealing Compound, Elastomeric Type, Single Component, (For Calking, Sealing, and Glazing in Buildings and Other Structures).

1.4 CONTRACTOR SUBMITTALS

A. Submittals shall be made in accordance with the GENERAL REQUIREMENTS.

B. The following submittals and specific information shall be provided.

1. Product Data: Surface preparation and installation instructions.

2. Samples: Material proposed for use showing color range available, and marked with the manufacturer's name and product identification.

3. Quality Control Submittals:

C. Applicator Qualification: Documentation showing minimum of 5 years experience installing sealants in projects of similar scope.

D. Certificates of Compliance: Proposed materials meet Specification requirements.

1. Contract Closeout Submittals: Guarantee.

1.5 QUALITY ASSURANCE (NOT USED)

1.6 PRODUCT HANDLING

A. Deliver sealants to the jobsite in sealed containers, each bearing manufacturer's name and product designation.

B. Store and protect sealant products from damage, deterioration, and contamination in accordance with manufacturer's written recommendations.

1.7 ENVIRONMENTAL CONDITIONS

A. Ambient Temperature: Between 40 and 80 degrees F (4 and 27 degrees C) when sealant is applied.

1.8 GUARANTEE

A. Sealed Joints: Against adhesive and cohesive failure of sealant and for watertightness of sealed joints for a period of 5 years after date of final completion of sealants.

PART 2 -- PRODUCTS

2.1 MATERIALS

A. Like Items of Materials: End products of one manufacturer to achieve standardization for appearance, maintenance, and replacement.

B. CONTRACTOR Option: Immersible sealant may be substituted for nonimmersible sealant of the same material.

C. Characteristics:

1. Uniform, homogeneous.

2. Free from lumps, skins, and coarse particles when mixed.

3. Nonstaining, nonbleeding.

4. Hardness of 15 minimum and 50 maximum, measured by Method ASTM C 661.

2.2 SEALANT MATERIALS

A. Type 1 - Silicone, Nonsag, Not Immersible:

1. Silicone base, single-component, chemical curing; ASTM C 920, Type S, Grade NS, Class 25; Federal Specification TT-S-001543, nonsag type, Class A;

2. Capable of withstanding movement up to 50 percent of joint width.

3. Manufacturer: Dow Corning Corp. No. 790; General Electric Silpruf; or equal.

B. Type 2 - Multi-Part Polyurethane, Self-Leveling, Immersible:

1. Polyurethane base, multi-component, chemical curing; ASTM C 920, Type M, Grade P, Class 25 and Federal Specification TT-S-00227, self-leveling Type I, Class A.

2. Capable of being continuously immersed in water.

3. Manufacturer: Pecora Corp. Urexpan NR-200; Lym Tal Iso-Flex 880GB; or equal.

C. Type 3 - Multi-Part Polyurethane, Nonsag, Immersible:

1. Polyurethane base, multi-component, chemical curing; ASTM C 920, Type M, Grade NS, Class 25 and Federal Specification TT-S-00227, nonsag Type II, Class A.

2. Capable of being continuously immersed in water.

3. Manufacturer: LymTal Iso-Flex 881; or equal.

D. Type 4 - Multi-Part Polyurethane, Nonsag, Not Immersible:

1. Polyurethane base, multi-component, chemical curing; ASTM C 920, Type M, Grade NS, Class 25 and Federal Specification TT-S-00227, nonsag Type II, Class A.

2. Manufacturer: Pecora Corp. Dynatrol II; Tremco Dymeric; LymTal Isoflex 2000; or equal.

E. Type 5 - One-Part Polyurethane, Immersible:

1. Polyurethane base, single-component, chemical curing; Federal Specification TT-S-00230, Type I or II, Class A.

2. Capable of being continuously immersed in water, withstand movement of up to 25 percent of joint width.

3. Manufacturer for Nonsag: Sika Chemical Corp., Sikaflex-1A; equal.

4. Manufacturer for Self-Leveling: Sika Chemical Corp. Sikaflex-1C SL; or equal.

F. Type 6 - One-Part Polyurethane, Not Immersible:

1. Polyurethane base, single-component, chemical curing; ASTM C 920, Type S, Grade NS, Class 25 and Federal Specification TT-S-00230, nonsag Type II, Class A.

2. Manufacturer: Pecora Corp. Dynatrol I; Tremco Dymonic; or equal.

G. Type 7 - Multi-Part Polysulfide, Immersible:

1. Polysulfide base, two-component, chemical curing; ASTM C 920, Type M, Grade P or NS, Class 25 and Federal Specification TT-S-00227, Type I self-leveling, Type II nonsagging, Class A, uniform, homogeneous and free from lumps, skins, and coarse particles when mixed.

2. Capable of being continuously immersed in water.

H. Type 8 - One-Part Polysulfide, Nonsag, Not Immersible:

1. Polysulfide base, single-component, chemical curing; ASTM C 920, Type S, Grade NS, Class 12 1/2; Federal Specification TT-S-00230, Type II nonsag, Class A;

2. Capable of withstanding movement up to 20 percent of joint width.

3. Manufacturer: Sika Chemical Corp. Sikaflex 440; or equal.

I. Type 9 - One-Part Acrylic Terpolymer, Nonsag, Not Immersible:

1. Acrylic base, single-component, solvent curing; Federal Specification TT-S-00230, Type I nonsag, Class B.

2. Capable of withstanding movement up to 7.5 percent of joint width; Shore "A" hardness of 55 maximum.

3. Manufacturer: Tremco Mono; or equal.

2.3 BACKUP MATERIAL

A. Nongassing, extruded, closed-cell round polyethylene foam rod, compatible with sealant used, and as recommended by sealant manufacturer.

B. Size: As shown or as recommended by sealant material manufacturer. Provide for joints greater than 3/16-inch wide.

C. Manufacturer: Haveg Industries Minice; Dow Corning Ethafoam SB; or equal.

2.4 BOND BREAKER

A. Pressure Sensitive Tape: Recommended by sealant manufacturer to suit application.

2.5 JOINT CLEANER

A. Noncorrosive and nonstaining type, recommended by sealant manufacturer; compatible with joint forming materials.

2.6 PRIMER

A. Nonstaining type recommended by sealant manufacturer to suit application.

2.7 SEALANT COLOR

A. Unless specifically noted, match the color of the principal wall material adjoining the area of application.

2.8 TAPE SEALANT

A. Closed cell polyvinyl chloride (PVC) foam coated on both sides with a modified acrylic pressure-sensitive adhesive.

B. Color: Black.

C. Size: 3/4-inch width by length as required by thickness as recommended by manufacturer, for particular application.

D. Properties:

1. Tensile Strength (ASTM D 412, Die C): 80 psi.

2. Elongation (ASTM D 412, Die C): 125 percent.

3. Compression Set (ASTM D 1056): 30 percent max.

4. Compression Deflection (ASTM D 1056) at 25 Percent Deflection: 2.5 psi.

5. Low Temperature Flexibility, 5 Hours at -40 Degrees F: No cracking.

6. Heat Resistance/Maximum Shrinkage, 70 Hours at 212 Degrees F: 1.5 percent.

7. Staining (ASTM D 925) on Most Substrates: None.

8. Water Absorption by Weight at 30 Percent Compression: 24 percent.

9. Density per Cubic Foot (ASTM D 3574): 10 pounds.

10. Thermal Conductivity (k factor): 0.24.

2.9 PREFORMED SEALS

A. Preformed Compressible Joint Seals:

1. Widths Up to 5-Inches: Watson-Bowman Acme, Inc., Buffalo, NY, Wabo-Series; LymTal Isoflex Neoprene Seal, LS-Series, Pontiac, MI; or equal.

2. Other Widths: Series or model recommended by seal manufacturer.

PART 3 -- EXECUTION

3.1 GENERAL

A. Use of more than one material for the same joint is not allowed unless approved by the sealant manufacturer.

B. Install joint sealants in accordance with ASTM C 962.

C. Horizontal and Sloping Joints of 1 Percent Maximum Slope: Use self-leveling (Grade P) joint sealant.

D. Steeper Sloped Joints, Vertical Joints, and Overhead Joints: Use nonsag (Grade NS) joint sealant.

E. Use joint sealant as required for the appropriate application and as follows:

Joint Size	Sealant Type
Less than 1-inch	1,2,3,4,5,6,7,8, or 9
Less than 2-inch	1,2,3,4, or 7
Over 2-inch	As per manufacturer's recommendation

3.2 PREPARATION

A. Verify that joint dimensions and physical and environmental conditions are acceptable to receive sealant.

B. All surfaces to be sealed shall be dry, sound, and free of dust, loose mortar, and other foreign materials.

1. Mask adjacent surfaces where necessary to maintain neat edge.

2. Starting of work will be construed as acceptance of all subsurfaces.

C. Verify that joint shaping materials and release tapes are compatible with sealant.

D. Examine joint dimensions and size materials to achieve required width/depth ratios.

3.3 INSTALLATION

A. Use joint filler to achieve required joint depths, to allow sealants to perform intended function.

1. Install backup material as recommended by sealant manufacturer.

2. Where possible, provide full length sections without splices; minimize number of splices.

B. Use bond breaker where recommended by sealant manufacturer.

C. Apply sealant within environmental conditions stated above.

1. Consult manufacturer when sealant cannot be applied within these temperature ranges.

D. Seal all joints around window, door and louver frames, expansion joints, and elsewhere as indicated.

E. Joint Sealant Materials: Follow manufacturer's recommendation and instructions, filling joint completely from bottom to top, without voids.

F. Joints: Tool slightly concave after sealant is installed.

1. When tooling white or light color sealant, use a water wet tool.

2. Finish joints free of air pockets, foreign embedded matter, ridges, and sags.

G. Tape Sealant: Locate where indicated and install in accordance with manufacturer's instructions.

3.4 PREFORMED SEALS

A. Prepare joint surfaces clean and dry, free from oil, rust, laitance, and other foreign material.

B. Construct joints straight and parallel to each other and at the proper width and depth.

C. Install within environmental conditions stated above.

D. Apply joint sealant manufacturer's approved primer and adhesive in accordance with manufacturer's instructions.

E. Install seal in accordance with manufacturer's instructions.

3.5 CLEANING

A. Clean surfaces next to the sealed joints of smears or other soiling resultant of sealing application.

B. Replace any damaged surfaces resulting from joint sealing or cleaning activities.

C. Clean up and dispose of all waste materials and debris resulting from this operation off the site.

3.6 JOINT SEALANT SCHEDULE

A. This schedule lists the sealant types acceptable for each joint location. Use as few different sealant types as possible to meet the requirements of this project.

Joint Location	Sealant Type(s)
1. Expansion/Contraction and control Joints at:	
Concrete Walls	1,3,4,5,6,7
Concrete Floor Slabs	2,5
2. Other Joints:	
Threshold Sealant Bed	5
Immersed Concrete (Vertical and Sloped)	3,5
Immersed Concrete (Horizontal)	2,5
Concrete Form Snap-Tie Holes	1,4,6

END OF SECTION 07900

SECTION 07920
CAULKING AND SEALANTS

PART 1 -- GENERAL

1.1 SUMMARY

A. Throughout the Contracted Work furnish all tools, equipment, materials, and supplies and perform all labor to provide a positive barrier against passage of air or moisture from the exterior.

1. Caulk and Seal around entire exposed perimeters of all penetrations and openings through walls and for slabs on grade where any item is installed in the opening or through the penetrations.

2. Caulk and seal the sheet metal flashings and other items penetrating through the roof.

B. Related Sections:

1. Documents affecting work of this Section include, but are not necessarily limited to the GENERAL CONDITIONS, SUPPLEMENTARY CONDITIONS and Sections in DIVISION 1 - GENERAL REQUIREMENTS of these Specifications.

1.2 QUALITY ASSURANCE

A. Reference Standards:

1. All materials specified herein shall conform to the requirements of the publications hereinafter listed, to the extent that the requirements therein specified are not in conflict with the provisions of this Section.

2. References to "ANSI Standards" shall mean the American National Standards Institute Publication A116.1-1967 "Two Component Elastomeric Sealing Components for the Building Trade".

B. Qualifications of Manufacturers: Products used in the work of this Section shall be produced by manufacturers regularly engaged in the manufacture of similar items and with a history of successful production acceptable to the

City Engineer or the Consultant. Manufacturer shall have been on business of manufacturing the specified types of Sealants for not less than 10 years.

C. Qualification of Installers:

1. Installers shall be thoroughly trained and experienced in the necessary skills and be thoroughly familiar with the specified requirements and shall have a minimum of 5 years experience installing caulking and sealants.

2. Installers shall be completely familiar with the joint details shown on the Contract Drawings and installation requirement hereinafter specified in this Section.

1.3 SUBMITTALS

A. Manufacturer's Data: Comply with provisions in the SUBMITTALS SECTION 01340 in DIVISION 1-GENERAL REQUIREMENTS of these Specifications.

1. Submit within 45 days after execution of the Contract:

a. A complete materials list showing all items specified to be furnished and installed under this Section.

b. Sufficient data to demonstrate that all materials meet or exceed the specified requirements.

c. Specification, installation instructions and general recommendations from manufacturer showing procedures under which it is proposed that materials will be installed.

d. Upon approval by the City Engineer or the Consultant, the proposed installation procedures will become the basis for inspection and acceptance or rejection of actual installation procedures used on the work.

B. Samples: Submit separate samples for each type of caulking or sealant material, together with manufacturer's data, all as necessary to fully demonstrate functional and service ability characteristics that comply with the specified requirements. Obtain approval prior to delivery of materials to the job-site for material substitutions. Samples of the sealant in concrete construction expansion joints shall be applied between 1-inch thick concrete blocks to the full size and shape of sealant in the joints indicated. Conform to the provisions of MATERIALS, SAMPLING AND TESTING of Section 31 in

the GENERAL CONDITIONS of these Specifications.

1.4 GUARANTEE

A. Guarantee: The guarantee period specified in Section 28 of the GENERAL CONDITIONS of these Specifications shall hereby be extended to two (2) years. Contractor shall provide the City Engineer with a written guarantee against any inherent or developed defects in material or in installation and file five (5) copies of same with the City Engineer or the Consultant as a prerequisite for final acceptance of the work.

B. Warranty shall further state that installed sealants are warranted against the following:

1. Water leakage through sealed joints.

2. Adhesive or co-adhesive failure of sealant.

3. Staining of adjacent surfaces caused by migration of sealant or primer.

4. Chalking or visible color changes of the cured sealant.

1.5 DEFECTIVE WORK

A. Work will be adjudged defective by the City Engineer or the Consultant if leakage results from failure of sealant or caulking to bond to adjacent work or if it hardens, cracks, shrinks, or runs or stains adjacent work.

B. Remove defective work, clean joints and install new caulking and/or sealant materials as approved by the City Engineer or the Consultant at no added cost to the City.

1.6 PRODUCT HANDLING

A. Delivery and Storage: Deliver all materials of this Section to the job-site in their original unopened or unbroken containers with all labels intact and legible at time of use. Store only under conditions recommended by the manufacturer concerning shelf life, temperature humidity, ensuring the fitness of the material when installed. Do not retain on the job-site any material which has exceeded the manufacturer's recommended shelf life.

B. Protection: Use all means necessary to protect the materials of this Section before, during and after installation and to protect work and materials of other trades.

C. Replacements: In the event of damage, immediately make all repairs and replacements necessary to the approval of the City Engineer or the Consultant, at no added cost to the City.

PART TWO - PRODUCTS

2.1 SEALANTS

A. Type of Sealants:

1. Asphalt Sealant shall conform to Federal Specifications SS-S-1614 (1), EDOCO Technical Product No. 3060 or Burke's No. 400 Sealing Compound.

2. Elastomeric Joint Sealant: Federal Specification TT-S-00227E (3) for 2-part rubber base sealant or Federal Specification TT-S-230A for 1-part synthetic rubber base sealant.

a. Use "Class A" sealant for non-traffic bearing horizontal surfaces.

b. Use "Class B" sealant for vertical surfaces.

B. Sealant Colors:

1. Colors for each sealant installation will be selected by the City Engineer or the Consultant from standards colors normally available from the manufacturer. Should such standard color is not available from the approved manufacturer except at additional charge, provide all such colors at no additional cost to the City.

2. In concealed installations and in partially or full exposed installations, where so approved by the City Engineer or the Consultant, use standard gray or black sealant.

2.2 CAULKING MATERIALS

A. Caulking Compound: W.R. Grace & Co. "Hornflex Standard Gun Grade" or "Thiokol" approved polysulfide sealant for all other joints including

miscellaneous vertical joints, exterior door, window and louver frames, etc.

B. Caulking Stop: Polyurethane for open joints of size 1-1/2 times the joint width opening and depth no more than 3/8 inch for sealant bite.

C. Oakum: Untarred, picked (loose), fine hemp fibers.

*2.3 BACKUP MATERIALS FOR SEALANTS

A. Primers and Bond Breakers: As recommended by the sealant manufacturer in their published instructions.

B. Backer Rods and Other Backing Materials: Type as recommended by the Sealant manufacturer.

1. Closed-cell resilient urethane or polyvinyl chloride foam;

2. Closed-cell polyethylene foam;

3. Closed-cell sponge of vinyl or rubber;

4. Polychoroprene tubes or beads;

5. Polyisobuthlene extrusion;

6. Oil-less dry jute.

C. Filler for Use with Asphalt Sealant: Asphalt impregnated, as per ASTM D 1715.

D. Filler of Use with Elastomeric Sealer: Plain type as per ASTM D 1752 Type II or Type III.

E. Surface Covers: (Where Simple bond-prevention is necessary).

1. Polyethelene Tape, pressure-sensitive adhesive, required only to hold tape to the construction material.

2. Aluminum foil conforming to MIL-SPEC-MIL-A-148E

3. Heavy wax paper conforming to Fed. Spec. UU-P-270

F. Other Materials: All other materials, not specifically described but required for complete and proper caulking and installation of sealants, shall be first

quality of their respective kinds as selected by the Contractor subject to the approval of the City Engineer or the Consultant.

PART THREE - EXECUTION

*3.1 INSPECTION AND INSTRUCTIONS

A. Manufacturer's Inspection: Just prior to start of application of each type sealant, provide initial instructions at start of work in order to verify if physical conditions are proper in order to properly instruct applicators and that supervision provided is by qualified personnel handling such materials.

B. Examine the areas and conditions under which work of this Section will be performed. Correct conditions detrimental to the proper and timely completion of the work. Do not proceed until detrimental conditions have been corrected.

C. Contractor to notify the manufacturer at least 72 hours prior to time inspection is required.

D. Failure or refusal of manufacturer to provide inspection and supervision shall constitute grounds for non-acceptability of materials manufactured, even though specified hereinafter in this Section.

E. Applicator shall report to the Contractor any detrimental conditions impairing the proper installation of such materials. Contractor shall correct all such detrimental conditions to the full satisfaction of the City Engineer or the Consultant or the Inspector at no added cost to the City.

3.2 WORKMANSHIP

A. Application: In strict accordance with ASTM C-962 and ASTM C-1193 and manufacturer's instructions and supervised by the manufacturer's approved applicator. Manufacturer to provide field assistance to insure proper mixing of sealants, cleaning of surfaces, and application of materials.

B. Cleaning: Immediately remove caulking and/or sealant materials from adjacent surfaces not specified to receive sealant, and/or caulking materials. Leave work in a condition satisfactory to the City Engineer or the Consultant.

C. Protection: Carefully protect adjoining surfaces from staining. Carefully provide necessary strippable masking where required to limit extent of

caulking and sealant material application.

3.3 PREPARATION (As Applicable)

A. Joint Cleaning: Joints shall be free of foreign materials full depth of joint. Joint surfaces to be clean, dry and free from grease, oil, wax or other foreign matter, which would tend to destroy or impair adhesion. Clean surfaces in accordance with manufacturer's instructions.

B. Priming: Joint surfaces to be primed in accordance with sealant manufacturer's instructions.

C. Steel Surfaces:

1. Steel surfaces in contact with sealant shall be sandblasted or scraped or wire-brushed to remove mill scale.

2. Use solvent to remove oil and grease, wiping the surfaces with clean rags.

3. Remove protective coatings on steel by sandblasting or by a solvent that leaves no residue.

*D. Aluminum Surfaces:

1. Surfaces in contact with sealant shall be cleaned of temporary protective coatings, dirt, oil and grease.

2. When masking tape is used as a protective cover, remove tape just prior to application of sealant.

3. Use only such solvents to remove protective coatings as recommended for that purpose by the aluminum manufacturer, and which are non-staining.

*E. Concrete and Ceramic Tile Surfaces:

1. All contact surfaces shall be dry, sound, well brushed and wiped free from dust.

2. Use solvent to remove oil and grease, wiping the surfaces with clean rags.

3. Treated surfaces shall have the surface treatment removed by

sandblasting or wire brushing.

4. Remove all laitance and mortar from the joint cavity.

5. Where backstop is required, insert an approved backup material into the joint cavity to required depth.

3.4 INSTALLATION OF BACKUP MATERIAL

Use only the backup materials recommended by the Sealant manufacturer and approved by the City Engineer or the Consultant for the particular installation, compressing the backup material 25% to 50% to secure a positive and secure fit. When using backup of tube or rod stock, avoid lengthwise stretching of material. Do not twist or braid hose or rod backup stock.

1. Sealant bite 1/8" to 2" but never more than 2 to 1/4 of joint width.

2. Use foam backup rod or bond breaker tape to minimize joint configuration.

3.5 PRIMING

Use only the primer recommended by the Sealant Manufacturer and approved by the City Engineer or the Consultant for the particular installation. Apply primer in strict accordance with manufacturer's recommendations as approved by the City Engineer or the Consultant.

3.6 SCHEDULE

A. Elastomeric Caulking Joint Compound: Use in expansion and contraction joints where limited movement is anticipated and areas where general caulking is required.

B. Multi-Part Sealant: Use in expansion and construction joints and all joints in all concrete walking surfaces where indicated or noted on the Contract Drawings and/or specified in the Specifications.

3.7 INSTALLATION SEALANTS

A. General: Prior to start of installation in each joint, verify the joint type according to Contract Drawing Details and that the required proportion of width to depth of joint has been secured.

B. Equipment: Apply sealants under pressure with hand or power actuated gun or other appropriate means. Guns shall have nozzle of proper size and shall provide sufficient pressure to completely fill joints as designed.

*C. Application:

1. Caulking performed under other Sections of these Specifications shall comply with all of the following requirements unless specific changes are specified in those other Specification Sections.

2. Fill all joints where no backing exists partially with filler material (that is compatible with specified caulking or sealant material).

   a. Metal to Metal Joints: Minimum joint width of 1/4-inch.

   b. All Other Joints: Maximum 3/4-inch, unless otherwise detailed.

   c. Minimum joint depth shall be 1/4-inch, for metal joints; 2-inch for concrete, masonry, and plaster work joints.

3. Apply sealants under sufficient pressure to completely fill all voids.

4. Apply non-sagging type sealants in vertical joints.

5. Apply self-leveling type sealants in horizontal joints.

6. Apply non-tracking sealants, having a shore hardness range of 40 to 55, to concrete, masonry or tile expansion joints, subject to foot or vehicular traffic.

7. Finish all exposed joints smooth, flush with surfaces, or recessed as shown.

8. Provide strippable masking for factory applied sealing materials to prevent dirt contamination until parts are assembled.

9. Tool all joints to the profile shown on the Contract Drawing Details.

10. Caulk and seal open joints left between openings and both sides of frames on the exterior of building and all other joints between building units or materials where Contract Drawings call for caulking and/or sealants, interior and exterior or where necessary to completely seal off joints against passage of water, air or dust.

D. Cleaning Up:

1. Remove masking tape immediately after joints have been tooled.

2. Clean adjacent surfaces free from sealants as the installation progresses. Use solvent or cleaning agent as recommended by the sealant manufacturer.

3. Remove excess caulking and sealants from adjacent surfaces of joints, leaving the work in a neat and clean condition.

E. Concrete Expansion and/or Contraction Joints: Construct such joints as indicated on the Contract Drawings and specified in DIVISION 3 - CONCRETE.

END OF SECTION 07920

SECTION 09800
PROTECTIVE COATING

PART 1 -- GENERAL

1.1 THE REQUIREMENT

A. The Contractor shall furnish all tools, equipment, materials, and supplies and shall perform all labor required to complete the protective coating of all specified surfaces not specifically included under the requirements of Section [09905] "Architectural Paint Finishes," including all surface preparation, pretreatment, coating application, touch-up of factory-coated surfaces, protection of surfaces not to be coated, cleanup, and appurtenant work, all in accordance with the requirements of the Contract Documents.

B. The following surfaces shall not be protective coated hereunder unless shown or specified herein, or elsewhere in the Contract Documents.

1. Concrete.

2. Stainless steel.

3. Machined surfaces.

4. Grease fittings.

5. Glass.

6. Equipment nameplates.

7. Maintenance hole frames and covers.

8. Platform gratings, stair treads, door thresholds, and other walk surfaces.

C. The coating system schedules summarize the surfaces to be coated, the required surface preparation, and the coating systems to be applied. Coating notes on the drawings are used to show exceptions to the schedules, to show or extend the limits of coating systems, or to clarify or show details for application of the coating systems.

1.2 RELATED WORK SPECIFIED ELSEWHERE (Not Used)

1.3 REFERENCE SPECIFICATIONS, CODES AND STANDARDS

A. References herein to "SSPC Specifications" or "SSPC" shall mean the published standards of the Steel Structures Painting Council, 4400 Fifth Avenue, Pittsburgh, PA 15213.

B. References herein to "NACE" shall mean the published standards of the National Association of Corrosion Engineers, P.O. Box 986, Katy, TX 77450.

C. Comply with the reference specifications of the GENERAL REQUIREMENTS.

D. Comply with the current provisions of the following Codes and Standards.

1. Commercial Standards:

ANSI A13.	Scheme for Identification of Piping Systems.
ANSI/AWWA C105	Polyethylene Encasement for Ductile Iron Piping for Water and Other Liquids.

ANSI/AWWA C203	Coal-Tar Protective Coatings and Linings for Steel Water Pipelines - Enamel and Tape-Hot-Applied.
ANSI/AWWA D102	Painting Steel Water-Storage Tanks

2. Federal Specifications:

TT-P-28F	Paint, Aluminum, Heat Resisting (1200F)

1.4 CONTRACTOR SUBMITTALS

A. Submittals shall be made in accordance with the GENERAL REQUIREMENTS.

B. Samples: The Contractor shall submit samples of all paint, finishes, and other coating materials specified herein, in accordance with the GENERAL REQUIREMENTS. Paint or coating samples shall be submitted on 8-1/2-inch by 11-inch sheet metal. Each sample shall be completely coated over its entire surface with one protective coating material, type, and color.

C. Coating Materials List: The Contractor shall provide 8 copies of a coating materials list which indicates the manufacturer and the coating number, keyed to the coating systems herein, prior to or at the time of submittal of samples.

D. Paint Manufacturer's Information: For each paint system to be used the Contractor shall submit the following listed data at least 30 days prior to painting.

1. Paint manufacturer's data sheet for each product used, including statements on the suitability of the material for the intended use.

2. Paint manufacturer's instructions and recommendations on surface preparation and application.

3. Colors available for each product (where applicable).

4. Compatibility of shop and field applied coatings (where applicable).

5. Material safety data sheet for each product used.

6. Two sets of color samples to match each color selected by the Engineer from the manufacturer's standard color sheets. If custom mixed colors are required by this Section, the color samples shall be made using color formulations prepared to match the color samples furnished by the Engineer. The color formula shall be shown on the back of each color sample.

E. Manufacturer's Certification: For submerged and severe service coating systems, the Contractor shall require the paint manufacturer to certify to the following:

1. The manufacturer's representative has provided at least 6 hours of on-site instruction in the proper surface preparation, use, mixing, application, and curing of the coating systems.

2. The manufacturer's representative has personally observed the start of surface preparation, mixing, and application of the coating materials.

F. The Contractor shall submit all such certificates to the Engineer within 7 days of completion of each paint system.

G. Applicator's Certificate and Report: For submerged and severe service coating systems, the Contractor shall require the applicator of the protective paint coatings to certify to the following:

1. Immediately before painting, surfaces conformed to the specified preparation; they were in the specified condition; and were clean, dry, and free of dust, rust, and mill scale.

2. Surface preparation and coating use, mixing, application, and curing were done in accordance with the current printed instructions and recommendations of the protective coating manufacturer, and these Specifications.

3. The products specified were used and a listing of the names of the products and their manufacturer.

4. The products were used within the shelf-life dates, stating the shelf-life dates of each container of each product used.

5. The specified dry film thickness of coatings are on the items.

6. The quantities of each product used with copies of paint manufacturer's invoice.

7. Compatible paints were used where shop or field applied coatings are applied over previously-applied coatings.

8. The applicator's certificate shall list the dates and locations that the coating work was completed for the various surfaces coated and shall also list the dry film thickness obtained for each coat. The Contractor shall submit said paint applicator's certificates to the Engineer within 7 days after completion of each paint system.

1.5 QUALITY ASSURANCE

A. General: The Contractor shall give the Engineer a minimum of 3 days advance notice of the start of any field surface preparation work of coating application work, and a minimum of 7 days advance notice of the start of any shop surface preparation work.

B. All such work shall be performed only in the presence of the Engineer, unless the Engineer has granted prior approval to perform such work in its absence.

C. Inspection by the Engineer, or the waiver of inspection of any particular portion of the work, shall not relieve the Contractor of its responsibility to perform the work in accordance with these Specifications.

D. Where protective coatings are to be performed by a subcontractor, said subcontractor [must possess a valid state license as required for performance of the painting and coating work called for in this specification and] must provide 5 references which show that the painting subcontractor has previous successful experience with the specified or comparable coating systems. Include the name, address, and the telephone number for the owner of each installation for which the painting subcontractor provided the protective coating.

E. Scaffolding shall be erected and moved to locations where requested by the Engineer to facilitate inspection. Additional illumination shall be provided to cover all areas to be inspected.

F. Inspection Devices: The Contractor shall furnish, until final acceptance of such coatings, inspection devices in good working condition for the detection of holidays and measurement of dry-film thicknesses of protective coatings. Dry-film thickness gages shall be made available for the Engineer's use at all times while coating is being done, until final acceptance of such coatings. The Contractor shall provide the services of a trained operator of the holiday detection devices until the final acceptance of such coatings. Holiday detection devices shall be operated only in the presence of the Engineer.

G. Holiday Testing: The Contractor shall holiday test all coated ferrous surfaces inside a steel

reservoir, or other surfaces which will be submerged in water or other liquids, or surfaces which are enclosed in a vapor space in such structures and surfaces coated with any of the submerged and severe service coating systems. Areas which contain holidays shall be marked and repaired or recoated in accordance with the coating manufacturer's printed instructions and then retested.

1. Coatings With Thickness Exceeding 20 Mils: For surfaces having a total dry film coating thickness exceeding 20 mils: pulse-type holiday detector such as [Tinker & Rasor Model AP-W], [D.E. Stearns Co. Model 14/20], or equal shall be used. The unit shall be adjusted to operate at the voltage required to cause a spark jump across an air gap equal to twice the specified coating thickness.

2. Coatings With Thickness of 20 Mils or Less: For surfaces having a total dry film coating thickness of 20 mils or less: [Tinker & Rasor Model M1 non-destructive type holiday detector], [K-D Bird Dog], or equal shall be used. The unit shall operate at less than 75 volts. For thicknesses between 10 and 20 mils, a non-sudsing type wetting agent, such as [Kodak Photo-Flo], or equal, shall be added to the water prior to wetting the detector sponge.

H. Film Thickness Testing: On ferrous metals, the dry film coating thickness shall be measured in accordance with the SSPC "Paint Application Specification No. 2" using a magnetic-type dry film thickness gage such as Mikrotest model FM, Elcometer model 111/1EZ, or equal. Each coat shall be tested for the correct thickness. No measurements shall be made until at least 8 hours after application of the coating. On non-ferrous metals and other substrates, the coating thicknesses shall be measured at the time of application using a wet film gage.

I. Surface Preparation: Evaluation of blast cleaned surface preparation work will be based upon comparison of the blasted surfaces with the standard samples available from the NACE, using NACE standard TM-01-70.

1.6 MANUFACTURER REPRESENTATIVE

A. The Contractor shall require the protective coating manufacturer to furnish a qualified technical representative to visit the project site for technical support as specified in the paragraph entitled "Manufacturer's Certification", herein, and as may be necessary to resolve field problems attributable or associated with the manufacturer's products furnished under this Contract or the application thereof.

1.7 MAINTENANCE

A. Warranty Inspection: A warranty inspection may be conducted during the eleventh month following completion of all coating and painting work. The Contractor and a representative of the coating material manufacturer shall attend this inspection. All defective work shall be repaired in accordance with these specifications and to the satisfaction of the City. The City may, by written notice to the Contractor, reschedule the warranty inspection, or may cancel the warranty inspection altogether. If a warranty inspection is not held the Contractor is not relieved of its responsibilities under the Contract Documents.

PART 2 -- PRODUCTS

2.1 GENERAL

A. Definitions: The term "paint", "coatings", or "finishes" as used herein, shall include surface treatments, emulsions, enamels, paints, epoxy resins, and all other protective coatings, excepting galvanizing or anodizing, whether used as a pretreatment, primer, intermediate coat, or finish coat. The term "DFT" means minimum dry film thickness.

B. General: Coating materials shall be sealed in containers that plainly show the designated name, formula or specification number, batch number, color, date of manufacture, manufacturer's

directions, and name of manufacturer, all of which shall be plainly legible at the time of use.

C. The Contractor shall use coating materials suitable for the intended use and recommended by their manufacturer for the intended service.

D. Compatibility: In any coating system only compatible materials from a single manufacturer shall be used in the work. Particular attention shall be directed to compatibility of primers and finish coats. If necessary, subject to the approval of the Engineer, a barrier coat shall be applied between existing prime coat and subsequent field coats to ensure compatibility.

E. Colors: All colors and shades of colors of all coats of paint shall be as selected or specified by the Engineer. Each coat shall be of a slightly different shade, to facilitate inspection of surface coverage of each coat. [Finish colors shall be as selected from the manufacturer's standard color samples by the Engineer.] [Finish colors shall be custom mixed to match color samples furnished by the Engineer.]

F. Protective Coating Materials: Products shall be standard products produced by recognized manufacturers who are regularly engaged in production of such materials for essentially identical service conditions. Where requested, the Contractor shall provide the Engineer with the names of not less than 10 successful applications of the proposed manufacturer's products demonstrating compliance with this specification requirement.

G. Substitute or "Or-Equal" Submittals: Unless otherwise specified, materials are from the catalogs of the companies listed herein. Materials by other manufacturers are acceptable provided that they are established as being compatible with and of equal quality to the coatings of the companies listed. The Contractor shall provide satisfactory documentation from the firm manufacturing the proposed substitute or "or-equal" material that said material meets the specified requirements and is equivalent or better than the listed materials in the following properties:

1. Quality
2. Durability
3. Resistance to abrasion and physical damage
4. Life expectancy
5. Ability to recoat in future
6. Solids content by volume
7. Dry film thickness per coat
8. Compatibility with other coatings
9. Suitability for the intended service
10. Resistance to chemical attack
11. Temperature limitations in service and during application
12. Type and quality of recommended undercoats and topcoats
13. Ease of application
14. Ease of repairing damaged areas

15. Stability of colors

H. The cost of all testing and analyzing of the proposed substitute materials that may be required by the Engineer shall be paid by the Contractor. If the proposed substitution requires changes in the contract work, the Contractor shall bear all such costs involved and the costs of allied trades affected by the substitution.

2.2 INDUSTRIAL COATING SYSTEMS

A. Material Sources: Each of the following manufacturers is capable of supplying many of the industrial coating materials specified herein. Where manufacturers and paint numbers are listed, it is to show the type and quality of coatings that are required. Proposed substitute materials must be shown to satisfy the material descriptions and to equal or exceed the properties of the listed materials as required in the paragraph entitled "Substitute or `Or-Equal' Submittals" herein.

1. Carboline Coatings Company

2. PPG Paints, Ameron

3. Sherwin Williams Company

4. Tnemec Company

B. System 1 – Not Used

C. System 2 - Not Used

D. System 3 – Not Used

E. System 4 - Aliphatic Polyurethane: Two component aliphatic acrylic or polyester polyurethane coating material shall provide superior color and gloss retention, resistance to splash from acid and alkaline chemicals, resistance to chemical fumes and severe weathering and with a minimum solids content of 58 percent by volume. Primer shall be a rust inhibitive two component epoxy coating with a minimum solids content of 70 percent by volume.
If this coating system is to be used on Galvanized Ferrous Metal; provide surface treatment (or approved equal) for the prime coat as per the Coating Manufacturers product data sheet.

1. Prime coat (Min DFT = 4 mils), Amerlock 400, Carboguard 890, SW Macropoxy 646-100, [Tnemec L69 Epoxoline], or equal.

2. Finish coat (one or more, Min DFT = 3 mils), Amershield, Carboline 133 MC, SW Sherloxane 800, Tnemec 740 EverThane, or equal.

3. Total system Min DFT = 7 mils.

4. More than one finish coat shall be applied as necessary to produce a finish with uniform color and texture.

F. System 5 - Inorganic Zinc/Epoxy/Polyurethane: The inorganic zinc primer shall be a water or solvent based, self-curing, zinc silicate 2-component inorganic coating which contains at least 85 percent of metallic zinc by weight in the dried film,and is recommended by the coating manufacturer as a primer for this system. The intermediate coat shall be a high-build two component epoxy with a solids content of at least 70 percent by volume. Finish coats shall be a 2-component aliphatic acrylic or polyester polyurethane coating material that provides superior color and gloss retention, resistance to chemical fumes and severe weathering, and a minimum solids content of 58 percent by volume.

1. Prime coat (Min DFT = 2 mil), Dimetcote 21-5/4A, Carbo Zinc 11 WB, SW Corothane

Galvapac 2k 100, Tnemec 94H2O Hydro- Zinc, or equal.

2. Intermediate coat (Min DFT = 4 mils), Amerlock 400, Carboline 890, SW Macropoxy 646-100, Tnemec L69 Epoxoline, or equal.

3. Finish coats (one or more, Min DFT = 3 mils), Amershield, Carboline 133 MC, SW Sherloxane 800, Tnemec 740 EverThane, or equal.

4. Total system DFT = 9 mils.

5. Intermediate coat shall be applied in excess of 4 mils DFT or in more than one coat as necessary to completely cover the inorganic zinc primer and prevent application bubbling of the polyurethane finish coat.

6. More than one finish coat shall be applied as necessary to produce a finish with uniform color and texture.

G. System 6 - Inorganic Zinc, Water Based: Water based, self-curing, ethyl silicate shall be a two-component inorganic coating material that contains at least 85 percent of metallic zinc by weight in the dried film.

1. Prime coat and finish coat (one, Min DFT = 3 mils), Dimetcote 21- 5/4 A, Carbozinc 11 WB, SW Zinc Clad XI, or equal.

2. Total system DFT = 3 mils.

H. System 7 – Acrylic Enamel: Single component, water based acrylic coating with a fungicide additive shall have a minimum solids content of 35 percent by volume. Prime coat shall be as recommended by manufacturer. The coating material shall be available in the ANSI safety colors.

1. Prime coat (Min DFT = 2 mils), as recommended by manufacturer.

2. Finish coats (2 or more, Min DFT = 6 mils), Amercoat 2104, Carboline 3359 MC, SW Pro Industrial Acrylic, Tnemec 1028 Enduratone, or equal.

3. Total system DFT = 8 mils.

I. System 8 - Not Used

J. System 9 - Not Used

K. System 10 – Acrylic Enamel, Concrete: High molecular weight acrylic coating material shall have a minimum solids content of 35 percent by volume. Prime coat shall be an acrylic filler and sealer for concrete surfaces.

1. Prime coat (Filler/sealer)(Min DFT = 12 mils), Tnemec 180 Tneme-Crete, Sanitile 100, SW Heavy Duty Block Filler, or equal.

2. Finish coats (2 or more, Min DFT = 4 mils), Tnemec 180 Tneme- Crete, Carbocrylic 3359 MC, SW Pro Industrial Acrylic (DFT = 6 mils) or equal.

L. System 11 - Aliphatic Polyurethane, Concrete: Two component aliphatic polyester polyurethane coating material shall provide superior color and gloss retention, resistance to splash from acid and alkaline chemicals, and resistance to chemical fumes and severe weathering, and with a minimum solids content of 58 percent by volume. Filler-sealer compound shall be a two component epoxy material used to provide a smooth surface for the epoxy intermediate coat. The filler-surfacer is applied to the entire concrete surface and worked into the concrete surface

with a wide blade putty knife or squeegee. The intermediate coat shall be a high-build polyamide epoxy coating with a minimum solids content of 70 percent by volume.

1. Prime coat (Filler-sealer), [NU-Klad 114A, Carboguard 501. SW Steel Seam FT 910, Tnemec 215 Surfacing Epoxy, or equal.

2. Intermediate coat (Min DFT = 4 mils), Amerlock 400, Carboguard 60, Macropoxy 646-100, Tnemec L69 Epoxoline, or equal.

3. Finish coats (1 or more, Min DFT = 3 mils), Amershield, Carbothane 133 MC, SW Sherloxane 800, Tnemec 740 Everthane, or equal.

M. System 12 - Aliphatic Polyurethane, Fiberglass: Two-component aliphatic polyurethane coating material shall provide superior color and gloss retention, resistance to splash from acid and alkaline chemicals, and resistance to chemical fumes and severe weathering. A primer, tie coat, or mist coat shall be used as recommended by the manufacturer.

1. Prime coat (Tie coat) (Min DFT= 2 mils), Sanitile 120, SW Macropoxy 646-100, Tnemec P69 Epoxoline, or equal.

2. Finish coats (1 or more, Min DFT = 3 mils), Amershield, Carbothane 133 MC, SW Sherloxane 800, Tnemec 740 Everthane, or equal.

N. Max VOC levels per SCQAMD noted in Section 2.5

2.3 SUBMERGED AND SEVERE SERVICE COATING SYSTEMS

A. Materials Sources: The manufacturers' products listed in this paragraph are materials which satisfy the material descriptions of this paragraph and have a documented successful record for long term submerged or severe service conditions. If proposed materials are not listed below, the requirements of the paragraph entitled "Substitute or `Or-Equal' Submittals" apply. In addition, the Contractor shall submit for consideration a list of at least 10 installations with similar service conditions for which the proposed substitute or "or-equal" products have shown satisfactory performance for at least several years including the name, address, and phone number of the owner of each installation.

B. System 100 - Amine Cured Epoxy Lining: High build, amine cured, straight epoxy resin shall have a solids content of at least 80 percent by volume, manufactured in accordance with ANSI 61 Standards as test by NSF, and shall be suitable for long-term immersion service in potable water, raw water, and non-potable water. The material shall conform to Food and Drug Administration regulations for food additives.

1. Prime coat and finish coats (1 or more, Minimum DFT = 20 mils), Phenoline 341, Amercoat 133, SW Duraplate UHS, Sherplate PW, Tnemec 22 Pota-Pox, or equal.

C. System 101 – Epoxy: High-build, amine or polyamide cured, epoxy resin shall have a solids content of at least 70 percent by volume, comply with local VOC regulations, and shall be suitable for exposures to chlorine vapors, fumes, and incidental splash or spill of chemicals. Total thickness 8- 12 mills DFT.

1. Prime Coat (DFT= 4-6 mils) Carboguard 890, SW Macropoxy 646-100, Tnemec L140F Pota-Pox, or equal.

2. Topcoat (DFT = 4-6 mils) Carboguard 890, SW Macropoxy 646-100, Tnemec l140F Pota-Pox, or equal.

D. System 102 – Epoxy Mortar: High-build, 3-component amine cured epoxy mortar, shall have a solids content of 100 percent by volume, suitable for long-term immersion and atmospheric

exposure to wastewater. Filler-resurfacing compound shall be a 3-component epoxy cementitious thin overlay material used to fill voids and rough areas and must feather-edge capable. Epoxy Glaze (finish) coat shall bea 100 percent solids epoxy suitable for long-term immersion and atmospheric exposure to wastewater.

1. Filler / Resurfacing Overlay (Thickness = minimum 1/16”), SW Duraplate 2300, Tnemec 218 MortarClad, or equal.

2. Epoxy Mortar (Minimum DFT = 125 mils) SW Duraplate 6100, Tnemec 434 Perma-Shield, or equal.

3. Finish coat (DFT = 15-20 mils), SW Duraplate 6100, Tnemec 435 Perma-Glaze, or equal.

E. System 103 - Coal Tar Epoxy: High build, 2-component amine cured coal tar epoxy shall have a solids content of at least 68 percent by volume, suitable for coating of buried surfaces, and conforming to DOD-P-23236, Class 2, or to SSPC Paint 16. Prime coats are for use as a shop primer only. Prime coat shall be omitted when both surface preparation and coating are to be performed in the field.

1. Prime coat (Min DFT = 1.5 mils).

2. Finish coats (2 or more, Min DFT = 16 mils), SW Targuard CTE 100, Carboguard 888 or 330M, or equal

3. Total system DFT = 17.5 mils.

F. System 104 - Coal Tar Epoxy Substitute, Concrete: High build, 2-component amine cured epoxy, shall have a solids content of at least 80 percent by volume, suitable for long term immersion for coating of buried surfaces. Product performance shall be equivalent to DOD-P-23236, Class 2, or to SSPC Paint 16. Filler-surfacin compound shall be a 2-component epoxy material used to fill voids and rough areas. The seal coat provides a smooth surface for the application of the amine cured epoxy. The seal coat is a two-component epoxy material with 100 percent solids and is applied to the entire concrete surface and worked into the concrete surface with a wide blade putty knife or a squeegee.

1. Seal coat, Carboguard 501, SW Steel Seam FT910, Tnemec Series 215, or equal.

2. Finish coats (1 or more, Min DFT = 25 mils) Phenoline 341 or Plascite 4500, Amercoat 133, SW Duraplate UHS, Tnemec Series 22 or equal.

G. System 105 - Inorganic Zinc/Epoxy:

1. Inorganic Zinc Primer: Water or solvent based, self-curing 2-component inorganic coating shall contain a minimum of 85 percent metallic zinc by weight in the dried film and is recommended by the coating manufacturer as a primer for the epoxy material.

2. Polyamide Cured Epoxy: High build polyamide cured epoxy coating shall have a solids content of at least 70 percent by volume and a finish coat color of white. The material shall be capable of achieving at least 4 mils dry film thickness per coat.

3. Amine Cured Epoxy: High build amine cured epoxy coating shall have a solids content of at least 80 percent by volume and with a finish coat color of white or ivory. The material shall be capable of achieving at least 5 mils dry film thickness per coat.

4. The epoxy coating material shall be a straight epoxy resin and shall be either a polyamide-cured epoxy or an amine-cured epoxy suitable for long-term immersion service in potable water. The material shall conform to Food and Drug Administration regulations for food additives and state and local health regulations and policies for service in potable water

reservoirs. The Contractor shall submit a written certification that the proposed materials meet the above regulatory agency standards and policies. The material shall be applied with a primer if recommended by the coating manufacturer.

5. Part A: Products shall be as listed, or equal:

a.	Pre-coating, prior to erection. (DFT = 3 mils) See Note (1) under Paragraph f.		Dimetcote 9, Carboline Zinc, SW Corothane Galvapac, Tnemec 94-H2O Hydro-Zinc
	Touch up, following erection. (DFT = 3 mils) See Note (2) under Paragraph f		SW Corothane Galvapac, Tnemec 94-H2O Hydro-Zinc
b.	Difficult-to-coat areas, following erection. See Note (3) underline Paragraph f .		Amercoat 395, Macropoxy 5500LT, Carbo-859, Tnemec L140F Pota-Pox.
c.	Finish Coats (2 or more)	(DFT = 8 mils)	Amercoat 395, Macropoxy 5500LT, Carbo-859 Tnemec L140F Pota-Pox.

d. Total system DFT = 7 mils

e. Notes:

(1) All lap roof plate edges are to be pre-coated. If necessary, zinc primer exposed on exterior of roof may be removed prior to welding.

(2) Touch-up coating shall be done for areas damaged during erection, or areas not pre-coated. The Contractor shall spot sandblast to SSPC-SP-5 before application of coating. Material used for touch-up shall be a compatible solvent based inorganic or organic zinc primer recommended by the manufacturer.

(3) All edges, nuts, bolts, lap joints, weld seams and the roof rim angle shall receive one brush-applied coat prior to the application of the complete spray coat.

6. Part B: Products shall be as listed, or equal:

a.	Difficult-to-coat areas. See Note (1) under Paragraph d.		Amercoat 395, Phenoline 341, SW Macropoxy 5500LT, Tnemec L140F Pota-Pox.
b.	Finish coats (2 or more). See Note (1) under Paragraph d.	(DFT = 12 mils)	Amercoat 395, Phenoline 341, SW Macropoxy 5500LT, Tnemec L140F Pota-Pox.

c. Total system DFT = 12 mils

d. Notes:

(1) All edges, nuts, bolts, lap joints, and weld seams shall receive one brush-applied coat prior to the application of the first complete spray coat.

7. Curing Period: Prior to immersion, the completed system shall be subjected to at least 240 hours of curing time with the metal temperature at a minimum of 70 degrees F, or 480

hours at a minimum of 60 degrees F, both conditions at a maximum relative humidity of 50 percent and under the forced ventilation conditions required by the paragraph entitled "Curing of Coatings, herein. More curing time or a higher temperature shall be provided if recommended by the epoxy coating manufacturer. If the environmental conditions do not provide the necessary minimum temperature, use heated air to provide the necessary heat for curing. Other combinations of curing time and temperature may be used if the coating manufacturer presents satisfactory documentation and test results to substantiate that the degree of curing is equal or greater than curing for 240 hours at 70 degrees F.

8. Volatile Organic Compound Testing: The completed interior reservoir coating system shall be tested for volatile organic compounds as specified herein.

H. System 106 - Fusion Bonded Epoxy: The coating material shall be a 100 percent powder epoxy applied in accordance with the ANSI/AWWA C213 "AWWA Standard for Fusion-Bonded Epoxy Coating for the Interior and Exterior of Steel Water Pipelines", except that the surface preparation shall be as specified in the coating system schedule of this Section. The coating shall be applied using the fluidized bed process.

1. Liquid Epoxy: For field repairs or where, as confirmed by the Engineer, it would be impossible to use the powder epoxy method without causing damage to the item, the use of a liquid epoxy will be permitted, applied in not less than 3 coats to provide a DFT of 15 mils. The liquid epoxy shall be a 100 percent solids epoxy recommended by the powder epoxy manufacturer.

2. Coating (Min DFT = 16 mils), Scotchkote 206N, SW Pipeclad 2000, or equal.

3. Total system DFT = 16 mils.

I. System 107 – Not Used

J. System 108 - Not Used

K. System 109 – Epoxy - Amine, Epoxy-amine cured resin with a solids content of at least 100 percent by volume, and suitable for long-term immersion in wastewater and exposure to the effects of hydrogen sulfide gas where there is the probability of sulfuric acid formation on the surfaces

1. Prime coat and finish coats (1 or more, Minimum DFT 20 mils), Tnemec 435 Perma-Glaze, SW Duraplate 6100, or equal

L. System 110 - Epoxy - Amine, Concrete: Epoxy- amine cured resin with a solids content of at least 55 percent by volume, and suitable for long-term immersion in wastewater and exposure to the effects of hydrogen sulfide gas where there is the probability of sulfuric acid formation on the surfaces. The filler-sealer shall be a 100 percent solids amine cured epoxy material with silica and inert fillers. A 100 percent solids epoxy surfacer shall be used to fill holes and patch the concrete surfaces after abrasive blasting.

1. Prime coat (filler-sealer)(1 or more, applied to the entire surface using a squeegee to achieve a smooth, void-free surface), Carboguard 501, Nu-Klad 114A, SW Steel Seam FT910, Tnemec 218 MortarClad, or equal.

2. Finish coats, manholes, (1 or more, Minimum DFT = 120 mils), Plasite 4500-S, Sigma Novoguard 840, SW Duraplate 6100, Tnemec 435 PermaGlaze or equal.

3. Finish coats, wastewater, (1 or more, Minimum DFT = 30 mils), Plasite 4500-S, Sigma Novoguard 840, SW Duraplate 6100, Tnemec 435 PermaGlaze or equal.

4. Finish coats, stairways and walkways, (2 or more, Minimum DFT = 15 mils per coat)(provide aluminum oxide, non-skid broadcast between coats), Plasite 4500-S, Sigma

Novoguard 840, Plascite 4500-S, SW Duraplate 6100, Tnemec 435 Permaglaze, or equal.

M. System 111 – Not Used

N. System 112 - Vinyl Ester-Concrete: Vinyl ester resin coating material with an inert flake pigment suitable for immersion service in hydrochloric acid and sulfuric acid solutions. The filler-sealer shall be a 100 percent solids amine-cured epoxy or vinyl ester material with silica and inert fillers. The filler-sealer is applied to the entire concrete surface. A 100 percent solids epoxy or vinyl ester surfacer shall be used to fill holes and patch the concrete surface after abrasive blasting.

1. Prime coat (filler-sealer), applied to achieve a smooth void-free surface.

2. Finish coats (two or more, Minimum DFT = 40 mils), SW Cor Cote VEN, Tnemec 120 Vinester, or equal.

O. Max VOC levels per SCQAMD noted in Section 2.5

2.4 SPECIAL COATING SYSTEMS

A. System 200 - PVC Tape: Prior to wrapping the pipe with PVC tape, the pipe and fittings first shall be primed using a primer recommended by the PVC tape manufacturer. After being primed, the pipe shall be wrapped with a 20-mil adhesive PVC tape, half-lapped, to a total thickness of 40 mils.

B. System 201 - Rich Portland Cement Mortar: Rich portland cement mortar coating shall have a minimum thickness of 1/8-inch, followed by enclosure in an 8-mil thick polyethylene sheet with all joints and edges lapped and sealed with tape.

C. System 203 - Epoxy Surfacing: Two-component epoxy floor surfacing mortar shall be formulated to resist many acids, alkalies, and solvents. Novolac finish material shall be resistant to liquid alum, sodium hydroxide, and 50 percent sulphuric acid. Finish coats shall be a minimum 20 mils dry film thickness over mortar surfacing. Products shall be as follows, or equal:

1. Ameron Alternative: Prime coat Amerlock Sealer; finish coat Nu-Klad 110A, (1/4-inch thick).

2. SW Alternative: Prime coat TPM 115; finish coat GP 3741 Novoflo (1/4-inch thick).

3. Carboline Alternative: Prime coat Carboguard 501, finish coat Semstone 140 (¼ inch thick, 250 mils DFT).

4. Tnemec Alternative: Prime coat Tnemec 237 Power- Tread; finish Tnemec 282 Tneme-Glaze (1/4-inch thick).

D. System 204 - Waterproofing: Two coats of a clear, non-staining, silane-modified-siloxane masonry waterproofing material. The waterproofing system 204 after application shall be provided with not less than a five-year warranty on the performance of the product.

1. Where EPA Allows Solvents: Chemstop, "WB Heavy Duty "; Rainguard, "XS", Chemprobe / Prime a Pell H2O; or equal.

2. Where EPA Prohibits Solvents: Chemstop, "WB Regular / Heavy Duty"; Rainguard's "Blok-Lok"; Rainproof's "Chem-Trete #45", Chemprobe / Prime A Pell H2O; or equal.

Surfaces shall be cleaned with a chemical (approved by waterproofing manufacturer) cleaner and power wash. Surfaces shall be clean and dry before application of waterproofing. Method and rate of application shall be in accordance with manufacturer's published instructions. A manufacturer's representative shall be present during applications if necessary for warranty.

E. System 205 - Polyethylene Encasement: Application of polyethylene encasement shall be in accordance with ANSI/AWWA C105 using Method C.

F. System 206 - Cement Mortar Coating: A 1-1/2-inch minimum thickness mortar coating reinforced with 3/4-inch galvanized welded wire fabric shall be provided. The cement mortar shall contain no less than one part Type V cement to 3 parts sand. The cement mortar shall be cured by a curing compound meeting the requirements of "Liquid Membrane-Forming Compounds for Curing Concrete" ASTM C 309-81, Type II, white pigmented, or by enclosure in an 8-mil thick polyethylene sheet with all joints and edges lapped by at least 6-inches.

G. System 207 - Non-Slip Surfacing: Coating shall have one coat of Semstone 140 W/ aluminum oxide additive, AS 150 as manufactured by Amstep Products or one coat of Ameron Nu-Klad 100A with Amercoat 886 additive, or one coat SW Fastop TC with AO, or one coat Tnemec 280 Tneme-Glaze with Series 211 additive or equal. The coating shall be gray in color. Application shall be by means of a roller and not more than 60 sq ft per gallon of non-slip coating shall be applied. Primer shall be as recommended by the coating manufacturer.

H. System 208 - Aluminum Metal Isolation: A wash primer (0.5 mils) shall be applied, followed by one coat of heavy bodied bituminous paint, such as SW Macropoxy 646-100, Tnemec L69 Epoxoline, or equal (8 mils). Total thickness of system (8.5 mils).

I. Max VOC levels per SCQAMD noted in Section 2.5

2.5 MAXIMUM VOLATILE ORGANIC COMPOUND LIMITS (SCQAMD - 2016)

TABLE OF STANDARDS 1
VOC LIMITS

Grams of VOC Per Liter of Coating,
Less Water and Less Exempt Compounds

COATING CATEGORY	Category Codes	Current Limit[1]	Effective Date			Small Container Exemption
			1/1/14	2/5/16	1/1/19	
Bond Breakers	5	350				✓
Building Envelope Coating	62	100			50	✓
Concrete-Curing Compounds	7	100				✓
Concrete-Curing Compounds For Roadways and Bridges[2]	7	350				✓[3]
Concrete Surface Retarder	58	50	50			✓
Default	51	50	50			✓
Driveway Sealer	52	50				✓
Dry-Fog Coatings	8	50	50			✓
Faux Finishing Coatings						
Clear Topcoat	9a	100	100			✓
Decorative Coatings	9	350				✓
Glazes	9b	350				✓
Japan	9c	350				✓
Trowel Applied Coatings	9d	50	50			✓
Fire-Proofing Coatings	10	150	150			✓
Flats	13	50				✓[5]
Floor Coatings	14	50				✓
Form Release Compound	16	100	100			✓
Graphic Arts (Sign) Coatings	17	200	150	200		✓
Industrial Maintenance (IM) Coatings	19	100				✓[5]
Color Indicating Safety Coatings		480				✓[5]
High Temperature IM Coatings	18	420				✓[5]
Non-Sacrificial Anti-Graffiti Coatings	19a	100				✓[5]
Zinc-Rich IM Primers	56	100				✓[5]
Magnesite Cement Coatings	22	450				✓[3]
Mastic Coatings	23	100	100			✓
Metallic Pigmented Coatings	24	150	150			✓
Multi-Color Coatings	25	250				✓[3]
Nonflat Coatings	26, 27, 28	50				✓[5]
Pre-Treatment Wash Primers	29	420				✓[3]
Primers, Sealers, and Undercoaters	30	100				✓
Reactive Penetrating Sealers	59	350				✓[4]
Recycled Coatings	33	250			150	✓
Roof Coatings	34	50				✓
Roof Coatings, Aluminum	53	100				✓
Roof Primers, Bituminous	4	350				✓[3]
Rust Preventative Coatings	35	100				✓[6]
Sacrificial Anti-Graffiti Coatings	60	50				✓[3]
Shellac						

COATING CATEGORY	Category Codes	Current Limit[1]	Effective Date			Small Container Exemption
			1/1/14	2/5/16	1/1/19	
Stains, Interior	40	250				✓
Stone Consolidants	61	450				✓[3]
Swimming Pool Coatings						
Repair	43	340				✓[3]
Other	42	340				✓[3]
Tile and Stone Sealers	63	100				✓
Traffic Coatings	45	100				✓
Tub and Tile Refinishing Coatings	64	420				✓[4]
Waterproofing Sealers	48	100				✓
Waterproofing Concrete/Masonry Sealers	49	100				✓
Wood Coatings		275				
Varnish	46, 47	275				
Sanding Sealers	36	275				
Lacquer	20	275				
Wood Conditioners	65	100				
Wood Preservatives						
Below-Ground	50	350				✓[3]
Other	55	350				✓[3]

1. The specified limits remain in effect unless revised limits are listed in subsequent columns in the Table of Standards.
2. Does not include compounds used for curbs and gutters, sidewalks, islands, driveways and other miscellaneous concrete areas.
3. Effective 02/05/2016, the small container exemption no longer applies per (f)(1).
4. Effective 01/01/2018, the small container exemption no longer applies per (f)(1).
5. Effective 01/01/2019, the small container exemption is further restricted per (f)(1).
6. Effective 01/01/2020, the small container exemption is further restricted per (f)(1).

TABLE OF STANDARDS 1 (cont.)
VOC LIMITS

Grams of VOC Per Liter of Material

COATING	Limit
Low-Solids Coating	120

TABLE OF STANDARDS 2
VOC LIMITS FOR COLORANTS

Grams of VOC Per Liter of Colorant
Less Water and Less Exempt Compounds

COLORANT ADDED TO	Limit
Architectural Coatings, excluding IM Coatings	50
Solvent-Based IM	600
Waterborne IM	50

PART 3 -- EXECUTION

3.1 STORAGE, MIXING, AND THINNING OF MATERIALS

A. Manufacturer's Recommendations: Unless otherwise specified herein, the coating manufacturer's printed recommendations and instructions for thinning, mixing, handling, applying, and protecting its coating materials, for preparation of surfaces for coating, and for all other procedures relative to coating shall be strictly observed. The Contractor shall supply the Engineer with copies of each manufacturer's instructions in accordance with the GENERAL REQUIREMENTS.

B. All protective coating materials shall be used within the manufacturer's recommended shelf life.

C. Storage and Mixing: Coating materials shall be protected from exposure to cold weather, and shall be thoroughly stirred, strained, and kept at a uniform consistency during application. Coatings of different manufacturers shall not be mixed together.

3.2 PREPARATION FOR COATING

A. General: All surfaces to receive protective coatings shall be cleaned as specified herein prior to application of said coatings. The Contractor shall examine all surfaces to be coated and shall correct all surface defects before application of any coating material. All marred or abraded spots on shop-primed and on factory-finished surfaces shall receive touch-up restoration prior to any coating application.

B. Protection of Surfaces Not to be Coated: Surfaces which are not to receive protective coatings shall be protected during surface preparation, cleaning, and coating operations.

C. All hardware, lighting fixtures, switch plates, machined surfaces, couplings, shafts, bearings, nameplates on machinery, and other surfaces not to be painted shall be removed, masked or otherwise protected. Drop cloths shall be provided to prevent coating materials from falling on or marring adjacent surfaces. The working parts of all mechanical and electrical equipment shall be protected from damage during surface preparation and coating operations. Openings in motors shall be masked to prevent entry of coating or other materials.

D. Care shall be exercised not to damage adjacent work during blast cleaning operations. Spray painting shall be conducted under carefully controlled conditions. The Contractor shall be fully responsible for and shall promptly repair any and all damage to adjacent work or adjoining property occurring from blast cleaning or coating operations.

E. Protection of Painted Surfaces: Cleaning and coating shall be so programmed that dust and other contaminants from the cleaning process will not fall on wet, newly-coated surfaces.

3.3 SURFACE PREPARATION STANDARDS

A. The following referenced surface preparation specifications of the Steel Structures Painting Council shall form a part of this specification:

1. Solvent Cleaning (SSPC-SP1): Removal of oil, grease, dirt, soil, salts, and contaminants by cleaning with solvent, vapor, alkali, emulsion, or steam.

2. Hand Tool Cleaning (SSPC-SP2): Removal of loose rust, loose mill scale, and loose paint to degree specified, by hand chipping, scraping, sanding, and wire brushing.

3. Power Tool Cleaning (SSPC-SP3): Removal of loose rust, loose mill scale, and loose paint to degree specified by power tool chipping, descaling, sanding, wire brushing, and grinding.

4. White Metal Blast Cleaning (SSPC-SP5/NACE1): Removal of all visible rust, mill scale, paint, and foreign matter by blast cleaning by wheel or nozzle (dry or wet) using sand, grit, or shot.

5. Commercial Blast Cleaning (SSPC-SP6/NACE3): Blast cleaning until at least two-thirds of each element of surface area is free of all visible residues.

6. Brush-Off Blast Cleaning (SSPC-SP7/NACE4): Blast cleaning of all except tightly adhering residues of mill scale, rust, and coatings, exposing numerous evenly distributed flecks of underlying metal.

B. The other surface preparation standards shall be the most recent versions published by the SSPC and NACE.

3.4 METAL SURFACE PREPARATION (UNGALVANIZED)

A. The minimum abrasive blasting surface preparation shall be as specified in the coating system schedules included at the end of this Section. Where there is a conflict between these specifications and the coating manufacturer's printed recommendations for the intended service, the higher degree of cleaning shall apply.

B. Workmanship for metal surface preparation shall be in conformance with the current SSPC Standards and this Section. Blast cleaned surfaces shall match the standard samples available from the National Association of Corrosion Engineers, NACE Standard TM-01-70.

C. All oil, grease, welding fluxes and other surface contaminants shall be removed by solvent cleaning per SSPC-SP1 prior to blast cleaning.

D. All sharp edges shall be rounded or chamfered and all burrs, and surface defects and weld splatter shall be ground smooth prior to blast cleaning.

E. The type and size of abrasive shall be selected to produce a surface profile that meets the coating manufacturer's recommendation for the particular coating and service conditions.

F. The abrasive shall not be reused unless otherwise approved by the Engineer. For automated shop blasting systems, clean oil-free abrasives shall be maintained.

G. The Contractor shall comply with the applicable federal, state, and local air pollution control regulations for blast cleaning.

H. Compressed air for air blast cleaning shall be supplied at adequate pressure from well maintained compressors equipped with oil/moisture separators which remove at least 95 percent of the contaminants.

I. Surfaces shall be cleaned of all dust and residual particles of the cleaning operation by dry air blast cleaning, vacuuming or another approved method prior to painting.

J. Enclosed areas and other areas where dust settling is a problem shall be vacuum cleaned and wiped with a tack cloth.

K. Damaged or defective coating shall be removed by the specified blast cleaning to meet the clean surface requirements before recoating.

L. If the specified abrasive blast cleaning will damage adjacent work, the area to be cleaned is less than 100 square feet, and the coated surface will not be submerged in service, then SSPC-SP2, hand tool cleaning or SSPC-SP3, power tool cleaning, may be used.

M. Shop applied coatings of unknown composition shall be completely removed before the specified

coatings are applied. Valves, castings, ductile or cast iron pipe, and fabricated pipe or equipment shall be examined for the presence of shop-applied temporary coatings. Temporary coatings shall be completely removed by solvent cleaning per SSPC-SP1 before the abrasive blast cleaning work has been started.

N. Shop primed equipment shall be solvent cleaned in the field before finish coats are applied.

O. Ferrous metal surfaces in severe or immersion service shall conform to the following.

1. Solvent Cleaning (SSPC-SP1) shall be performed over all surfaces prior to abrasive blast cleaning. : Removal of oil, grease, dirt, soil, salts, and contaminants by cleaning with solvent, vapor, alkali, emulsion, or steam as required.

2. All ferrous metal and non ferrous metal surfaces to be cleaned in accordance with SSPC-SP5/NACE 1. White Metal Blast Clean with a 3.0 mil minimum anchor profile.

3. Where the coating is specified to be terminated, the Contractor shall prepare and apply materials as outlined in coating manufacturer recommendations.

4. Where the coating is specified to be terminated at a metal embedment, the Contractor shall prepare and apply materials as outlined or as recommended by the manufacturer.

5. The Contractor shall notify the Engineer should jobsite conditions prevent the above operations and/or applications

3.5 SURFACE PREPARATION FOR GALVANIZED FERROUS METAL

A. Galvanized ferrous metal shall be alkaline cleaned per SSPC-SP1 to remove oil, grease, and other contaminants detrimental to adhesion of the protective coating system to be used.

B. Abrasive brush blasting or uniform scarification of cleaned surfaces is required. Perform surface preparation according to SSPC-SP16, Brush of Blast Cleaning of Coated and Uncoated Galvanized steel, Stainless Steel, and Non-Ferrous Metals.

C. Abrasive brush blasting is required for all non-ferrous metals in severe or immersion service.

D. Pretreatment coatings, white rust staining, passivation treatments such as chromating shall be completely removed. Perform successful test to confirm removal of passivating treatments according to SSPC-Sp16 prior to the application of any coatings.

3.6 SURFACE PREPARATION OF FERROUS SURFACES WITH EXISTING COATINGS

A. General: All grease, oil, heavy chalk, dirt, or other contaminants shall be removed by solvent or detergent cleaning prior to abrasive blast cleaning. The generic type of the existing coatings shall be determined by laboratory testing.

B. Abrasive Blast Cleaning: The Contractor shall provide the degree of cleaning specified in the coating system schedule for the entire surface to be coated. If the degree of cleaning is not specified in the schedule, deteriorated coatings shall be removed by abrasive blast cleaning to SSPC-SP6, Commercial Blast Cleaning. Areas of tightly adhering coatings shall be cleaned to SSPC-SP7, Brush-off Blast Cleaning, with the remaining thickness of existing coating not to exceed 3 mils.

C. Incompatible Coatings: If coatings to be applied are not compatible with existing coatings the Contractor shall apply intermediate coatings per the paint manufacturer's recommendation for the specified coating system or shall completely remove the existing coating prior to abrasive blast cleaning. A small trial application shall be conducted for compatibility prior to painting large areas.

D. Unknown Coatings: Coatings of unknown composition shall be completely removed prior to application of new coatings.

E. Water Abrasive or Wet Abrasive Blast Cleaning: Where specified or where job site conditions do not permit dry abrasive blasting for industrial coating systems due to dust or air pollution considerations, water abrasive blasting or wet abrasive blasting may be used. In both methods, paint-compatible corrosion inhibitors shall be used, and coating application shall begin as soon as the surfaces are dry. Water abrasive blasting shall be done using high pressure water with sand injection. In both methods, the equipment used shall be commercially produced equipment with a successful service record. Wet blasting methods shall not be used for submerged and severe service coating systems unless specified.

3.7 CONCRETE AND CONCRETE BLOCK MASONRY SURFACE PREPARATION

A. Surface preparation shall not begin until at least 30 days after the concrete or masonry has been placed.

B. All oil, grease, and form release and curing compounds shall be removed by detergent cleaning per SSPC-SP1 before abrasive blast cleaning.

C. Concrete, concrete block masonry surfaces and deteriorated concrete surfaces to be coated shall be abrasive blast cleaned to remove existing coatings, laitance, deteriorated concrete, and to roughen the surface equivalent to the surface of the No. 80 grit flint sandpaper.

D. If acid etching is required by the coating application instructions the treatment shall be made after abrasive blasting. After etching, rinse surfaces with water and test the pH. The pH shall be between neutral and 8.

E. Surfaces shall be clean and as recommended by the coating manufacturer before coating is started.

F. Unless required for proper adhesion, surfaces shall be dry prior to coating. The presence of moisture shall be determined with a moisture detection device such as [Delmhorst Model DB], or equal.

G. Concrete, Concrete Masonry Unit surfaces in sever or immersion service shall conform to the following.

1. Remove all release agents, curing compounds, efflorescence, chalk, grease, and foreign material from the surface. Surfaces shall be decontaminated to remove all microorganisms, acid constituents, grease, oil, and other contaminants prior to commencement of surface preparation (Reference ASTM D4258, SSPC-SP13/NACE No. 6).

2. Verify that the pH of the cleaned and prepared concrete surfaces to be coated is within the range of to 9 to 11. Application of coating materials outside this range will not be permitted without written approval from the Engineer. ASTM D 4262 should be used to determine pH.

3. Allow new concrete to cure for a minimum of 28 days or shall be prepared and treated according to the coating manufacturer’s recommendations.

4. Test concrete for moisture following the 28 day curing period in accordance with ASTM D4263 and/or F1869. Test results shall be reviewed by the coating manufacturer’s technical representative to determine if any special treatments are required prior to the application of coating.

5. Concrete surfaces shall be prepared in accordance with SSPC-SP13/NACE No. 6, Severe Service, and shall produce a minimum surface profile of a CSP-5 as noted in ICRI Technical Guideline No. 310.2 and ASTM D4259, SSPC-SP13/NACE No. 6.

6. Fill all bug holes, honeycombs, cracks, and surface imperfections with surface fillers to the specified thickness in a uniform and consistent fashion. .

7. Where the coating is specified to be terminated, the contractor shall prepare and apply materials as outlined by the coating manufacturer. Detailed drawings shall provided for review with contractor submittals.

8. Repair of spalling, corroded concrete, exposed rebar shall be performed according to the specified process and manufacturer's recommendation.

3.8 PLASTIC, FIBERGLASS AND NONFERROUS METALS SURFACE PREPARATION

A. Plastic and fiberglass surfaces shall be sanded or brush off blast cleaned prior to solvent cleaning with a chemical compatible with the coating system primer.

B. Non-ferrous metal surfaces shall be solvent-cleaned SSPC-SP1 followed by sanding or brush-off blast cleaning SSPC-SP7/NACE4.

C. All surfaces shall be clean and dry prior to coating application.

3.9 ARCHITECTURAL CONCRETE BLOCK MASONRY SURFACE PREPARATION

A. The mortar surfaces shall be cured at least 14 days before surface preparation work is started.

B. Dust, dirt, grease, and other foreign matter shall be removed prior to abrasive blasting.

C. The masonry surfaces shall be prepared in accordance with the material manufacturer's printed instructions.

3.10 WORKMANSHIP

A. Skilled craftsmen and experienced supervision shall be used on all work.

B. Clean drop cloths shall be used. All damage to surfaces resulting from the work hereunder shall be cleaned, repaired, and refinished to their original condition.

C. All coatings shall be applied under dry and dust-free conditions. Coating shall be done in a workmanlike manner so as to produce an even film of uniform thickness. Edges, corners, crevices, and joints shall receive special attention to insure that they have been thoroughly cleaned and that they receive an adequate thickness of coating material. The finished surfaces shall be free from runs, drops, ridges, waves, laps, brush marks, and variations in color, texture, and finish. The hiding shall be so complete that the addition of another coat would not increase the hiding. Special attention shall be given to insure that edges, corners, crevices, welds, and similar areas receive a film thickness equivalent to adjacent areas, and installations shall be protected by the use of drop cloths or other approved precautionary measures.

3.11 SHOP COATING REQUIREMENTS

A. All items of equipment, or parts of equipment which are not submerged in service, shall be shop primed and then finish coated in the field after installation with the specified or approved color. The methods, materials, application equipment and all other details of shop painting shall comply with this section. If the shop primer requires topcoating within a specified period of time, the equipment shall be finish coated in the shop and then touch-up painted after installation.

B. All items of equipment, or parts and surfaces of equipment which are submerged or inside an enclosed hydraulic structure when in service, with the exception of pumps and valves, shall have all surface preparation and coating work performed in the field.

C. The interior surfaces of steel reservoirs shall have all surface preparation and coating work performed in the field.

D. For certain pieces of equipment it may be undesirable or impractical to apply finish coatings in the field. Such equipment may include engine generator sets, equipment such as electrical control panels, switchgear or main control boards, submerged parts of pumps, ferrous metal passages in valves, or other items where it is not possible to obtain the specified quality in the field. Such equipment shall be shop primed and finish coated and touched up in the field with the identical material after installation. The Contractor shall require the manufacturer of each such piece of equipment to certify as part of its shop drawings that the surface preparation is in accordance with these specifications. The coating material data sheet shall be submitted with the shop drawings for the equipment.

E. For certain small pieces of equipment the manufacturer may have a standard coating system which is suitable for the intended service conditions. In such cases, the final determination of suitability will be made during review of the shop drawing submittals. Equipment of this type generally includes only indoor equipment such as instruments, small compressors, and chemical metering pumps.

F. Shop painted surfaces shall be protected during shipment and handling by suitable provisions including padding, blocking, and the use of canvas or nylon slings. Primed surfaces shall not be exposed to the weather for more than 6 months before topcoated, or less time if recommended by the coating manufacturer.

G. Damage to shop-applied coatings shall be repaired in accordance with this Section and the coating manufacturers printed instructions.

H. The Contractor shall make certain that the shop primers and field topcoats are compatible and meet the requirements of this Section. Copies of applicable coating manufacturer's data sheets shall be submitted with equipment shop drawings.

3.12 APPLICATION OF COATINGS

A. The application of protective coatings to steel substrates shall be in accordance with "Paint Specification No. 1, (SSPC-A-1)", Steel Structures Painting Council.

B. Cleaned surfaces and all coats shall be inspected prior to each succeeding coat. The Contractor shall schedule such inspection with the Engineer in advance.

C. Blast cleaned ferrous metal surfaces shall be painted before any rusting or other deterioration of the surface occurs. Blast cleaning shall be limited to only those surfaces that can be coated in the same working day.

D. Coatings shall be applied in accordance with the manufacturer's instructions and recommendations, and this Section, whichever has the most stringent requirements.

E. Special attention shall be given to edges, angles, weld seams, flanges, nuts and bolts, and other places where insufficient film thicknesses are likely to be present. Use stripe painting for these areas.

F. Special attention shall be given to materials which will be joined so closely that proper surface preparation and application are not possible. Such contact surfaces shall be coated prior to assembly or installation.

G. Finish coats, including touch-up and damage repair coats shall be applied in a manner which will present a uniform texture and color matched appearance.

H. Coatings shall not be applied under the following conditions:

1. Temperature exceeding the manufacturer's recommended maximum and minimum allowable.

2. Dust or smoke laden atmosphere.

3. Damp or humid weather.

4. When the substrate or air temperature is less than 5 degrees F above dewpoint.

5. When air temperature is expected to drop below 40 degrees F or less than 5 degrees F above the dewpoint within 8 hours after application of coating.

I. Dewpoint shall be determined by use of a sling psychrometer in conjunction with U.S. Dept. of Commerce, Weather Bureau psychrometric tables.

J. Steel piping shall be abrasive blast cleaned and primed before installation.

K. The finish coat on all work shall be applied after all concrete, masonry, and equipment installation is complete and the work areas are clean and dust free.

3.13 CURING OF COATINGS

A. The Contractor shall provide curing conditions in accordance with the conditions recommended by the coating material manufacturer or by this Section, whichever is the highest requirement, prior to placing the completed coating system into service.

B. In the case of enclosed areas, forced air ventilation, using heated air if necessary, may be required until the coatings have fully cured.

C. Forced Air Ventilation of Steel Reservoirs and Enclosed Hydraulic Structures: Forced air ventilation is required for the application and curing of coatings on the interior surfaces of steel reservoirs and enclosed hydraulic structures. During curing periods continuously exhaust air from a maintenance hole in the lowest shell ring, or in the case of an enclosed hydraulic structure, from the lowest level of the structure using portable ducting. After all interior coating operations have been completed provide a final curing period for a minimum of 10 days, during which the forced ventilation system shall operate continuously. For additional requirements, refer to the specific coating system being used in the paragraph entitled "Submerged and Severe Service Coating Systems" herein.

3.14 TESTING FOR VOLATILE ORGANIC COMPOUNDS IN POTABLE WATER RESERVOIRS

A. General: The Contractor shall provide the following services to ensure that the interior reservoir coatings or linings do not convey volatile organic compounds to the potable water.

B. Selection of Coating or Lining Material: The Contractor shall provide a coating or lining system that has a successful record in meeting the national, regional, and local regulations and policies pertaining to leaching of volatile organic compounds into potable water.

C. Before the coating or lining materials are used, the Contractor shall by letter notify the regulatory agency having jurisdiction. The letter shall describe the proposed materials, including brand names, catalog numbers, catalog technical data, application and curing instructions, and material safety data sheets.

D. The Contractor shall provide curing time, temperature and ventilations as specified by the manufacturer or this Section, whichever is the highest requirement. In some cases, the Contractor may find it necessary to extend the curing time or ventilation time beyond the requirements in order to comply with the regulatory agency requirements or to reduce the leached

organic compounds to the required levels. All costs in connection with any extended curing times shall be borne by the Contractor.

E. Following the curing or ventilation period, the Contractor shall clean, disinfect and fill the reservoir as specified.

F. A 7-day soaking period shall follow initial filling to determine the presence of any leached organics. Before the tank is placed into service, samples of the water in the tank will be taken by the Engineer and analyzed by a laboratory approved by the State or the EPA. Analyses will be for volatile organic compounds by EPA Method 624 or equivalent (this test includes TCE, PCE, xylenes, toluene, ketones, carbon tetrachloride, and similar compounds).

G. If the tests results are above either (1) 0.005 mg/l for TCE, 0.004 mg/l for PCE, 0.62 mg/l for xylenes, 0.10 mg/l for toluene, 0.75 mg/l for methyl-ethyl ketone (to be used as representative for all ketone compounds), 0.005 mg/l for carbon tetrachloride, or (2) the regulatory agency's recommended Action Level Limits, whichever is less, the Contractor shall drain the water from the tank and flush, refill, and retest at no additional cost to the City. The Contractor shall provide as many curing, soaking, and flushing cycles as necessary to reduce the leached volatile organic compounds to levels below the requirements.

3.15 IDENTIFICATION OF PIPING

A. Identification of piping shall be in accordance with Section [15780] "Treatment Plant Piping Identification Systems."

B. Every valve or connection, where it may be possible for a worker to be exposed to a hazardous substance, shall be labeled per [General Industry Safety Orders, Article 112] OSHA Occupational Safety and Health Standards 29CFR1910.

C. [All unburied pipe in structures and in chemical pipe trenches shall be color-code painted. Colors shall be as specified in Section [15780] "Treatment Plant Piping Identification Systems," as selected by the Engineer, or as shown.]

D. [All unburied chemical pipes, including chemical pipes in structures and chemical pipe trenches shall be color-code painted. Colors shall be as specified in Section [15780] "Treatment Plant Piping Identification Systems," as selected by the Engineer, or as shown.]

3.16 COATING SYSTEM SCHEDULES - FERROUS METALS

A. Coating System Schedule, Ferrous Metal - Not Galvanized:

	Item	Surface Prep.	System No.
FM-1	All exposed surfaces indoors and outdoors, except those included below.	Commercial blast cleaning SSPC-SP6/NACE3	(7) acrylic enamel
FM-1	All exposed surfaces indoors and outdoors, except those included below.	Commercial blast cleaning SSPC-SP6/NACE3	(4) aliphatic polyurethane
FM-1	All exposed surfaces indoors and outdoors, except those included below.	White metal blast cleaning SSPC-SP5/NACE1	(5) zinc-rich / polyurethane
FM-2	Surfaces in chlorination room, chlorine storage room.	Commercial blast cleaning SSPC-SP6/NACE3	(101) epoxy
FM-3	Surfaces of equipment and	White metal blast cleaning	(100)

	ferrous surfaces submerged or intermittently submerged in potable water or utility water, including all surfaces lower than 2-feet above high water level and all surfaces inside enclosed hydraulic structures and vents (excluding shop-coated valves, couplings, pumps).	SSPC-SP5/NACE1	amine cured epoxy
FM-4	Surfaces of equipment and ferrous surfaces submerged or intermittently submerged in wastewater, including all surfaces lower than 2-feet above high water level and all surfaces inside enclosed hydraulic structures (excluding shop-coated valves, couplings, pumps).	White metal blast cleaning SSPC-SP5/NACE1	(109) epoxy amine
FM-5	Surfaces exposed to high temperature (between 150 and 600 degrees F).	White metal blast cleaning SSPC-SP10/NACE1	(6) inorganic zinc,water-based
FM-6	Surfaces exposed to high temperature (between 600 and 1000 degrees F).	white metal blast cleaning SSPC-SP5/NACE1	(3) aluminum silicone resin
FM-7	Buried small steel pipe.	Removal of dirt, grease, oil	(200) PVC tape
FM-8	Buried pipe couplings, valves, and flanged joints (where piping is plastic).	Removal of dirt, grease, oil	(201) rich portland cement mortar
FM-9	Buried pipe couplings, valves, and flanged joints (where piping is not plastic, or tape-coated, or mortar-coated steel), including epoxy-coated surfaces.	As specified by reference specification	(205) polyethylene encasement
FM-10	Buried pipe couplings, valves, and flanged joints (where piping is mortar-coated steel or reinforced concrete), including epoxy-coated surfaces.	Removal of dirt, grease, oil	(206) cement-mortar coating
FM-11	Ferrous surfaces in water passagaes of all valves 4-inch size and larger, exterior surfaces of submerged valves.	White metal blast cleaning SSPC-SP5/NACE1	(100) amine-cured epoxy
FM-12	Where shown or specified, ferrous surfaces in water passages and submerged	White metal blast cleaning SSPC-SP5/NACE1	(100) amine-cured epoxy

surfaces of all pumps which have discharge size of 4-inches or larger.

[FM-12	Where shown or specified, ferrous surfaces in water passages and submerged surfaces of all pumps which have discharge size of 4-inches or larger.	White metal blast cleaning SSPC-SP5/NACE1	(106) fusion-bonded epoxy]
FM-13	Ferrous surfaces of sleeve-couplings	White metal blast cleaning SSPC-SP5/NACE1	(100) amine-cured epoxy
[FM-14	All ferrous surfaces of sluice gates, flap gates, and shear gates, including wall thimbles.	White metal blast cleaning SSPC-SP5/NACE1	(106) fusion-bonded epoxy
FM-15	Buried surfaces that are not specified to be coated	White metal blast cleaning SSPC-SP5/NACE1	(103) coal tar epoxy
FM-16	Indoor sheet metal, flashings, exposed ducts.	Commercial blast cleaning SSPC-SP6/NACE3	(7) acrylic enamel
FM-17	Interior surfaces of all chemical tanks, except caustic soda tanks, including tank nozzles, manholes, nozzle necks, flange faces.	White metal blast cleaning SSPC-SP5/NACE1	(107) chemical-resistant sheet lining
FM-18	Surfaces of indoor equipment.	[Specifier enter]	[Specifier enter]
FM-19	[Specifier list of existing ferrous equipment or surfaces which are required to be re-coated as part of this work.]	[Specifier enter]	[Specifier enter]

B. Coating System Schedule, Ferrous Metal - Galvanized: Pretreatment coatings, barrier coatings, or washes shall be applied as recommended by the coating manufacturer. [All galvanized surfaces shall be coated] [All galvanized surfaces except for the following items shall be coated unless coating is required by other Sections: (1) Floor gratings and frames, (2) Handrails, (3) Stair treads, (4) Chain link fencing and appurtenances, (5) Specifier selected items].

	Item	Surface Prep.	System No.
[FMG-1	All exposed surfaces indoors and outdoors, except those included below.	Galvanized Metal	(3) acrylic enamel]
[FMG-1	All exposed surfaces indoors and outdoors, except those below.	Galvanized Metal	(4) aliphatic polyurethane
FMG-2	Surfaces in chlorinator room, chlorine storage room.	Galvanized Metal	(101) amine-cured epoxy
FMG-3	Buried small steel pipe.	Galvanized Metal	(200) PVC tape
FMG-4	Surfaces buried or submerged in wastewater.	Galvanized Metal	(109) epoxy-amine
FMG-5	Buried miscellaneous surfaces, couplings, valves, and flanged joints.	Galvanized Metal	(201) rich portland cement mortar
FMG-6	Indoor sheet metal flashings, exposed ducts.	Galvanized Metal	(3) acrylic enamel
FMG-7	[Specifier list of existing galvanized equipment or surfaces which are required to be recoated as part of this work.]	[Specifier enter]	[specifier enter]

C. Coating System Schedule, Steel Reservoir Interior: For steel reservoir exterior coating system, see "Coating System Schedule, Ferrous Metal-Not Galvanized". The interior surfaces of steel reservoirs shall have all surface preparation and coating work performed in the field.

	Item	Surface Prep.	System No.
SR-1	All interior surfaces beginning one foot above high water level, including all plates, roof structural members, fittings, and vents.	White metal blast cleaning SSPC-SP5/NACE1	(105) Part A, inorganic zinc/epoxy
SR-2	Underside of column bases, floor under column bases before columns set in place, submerged contact surfaces that are not accessible after erection.	White metal blast cleaning SSPC-SP5/NACE1	(105) Part B, inorganic zinc/epoxy
SR-3	Interior surfaces exclusive of surfaces in SR-1 and SR-2 above, including overflow, drain and other piping out to the first valve or coupling.	White metal blast cleaning SSPC-SP5/NACE1	(105) Part B, inorganic zinc/ epoxy]

D. Coating System Schedule, Steel Digester Floating Covers and Digester Gasholders:

	Item	Surface Prep.	System No.
SD-1	All ferrous surfaces submerged in water or sludge, including rim plate.	White metal blast cleaning SSPC-SP5/NACE1	(109) epoxy amine
SD-2	All ferrous surfaces exposed to digester gas.	White metal blast cleaning SSPC-SP5/NACE1	(109) epoxy amine
SD-3	All interior ferrous surfaces of gasholder shell, including top angle.	White metal blast cleaning SSPC-SP5/NACE1	(109) epoxy amine
SD-4	All ungalvanized interior surfaces inside digester roof, between and including the ceiling plate and the roof deck.	White metal blast cleaning SSPC-SP5/NACE1	(109) epoxy amine
SD-5	Exposed, outdoors.	Commercial blast cleaning SSPC-SP6/NACE3	(5) Zinc rich, aliphatic polyurethane

3.17 COATING SYSTEM SCHEDULE, NON-FERROUS METAL, PLASTIC, FIBERGLASS

A. Where isolated non-ferrous parts are associated with equipment or piping, the Contractor shall use the coating system for the adjacent connected surfaces. Do not coat handrails, gratings, frames or hatches. Only primers recommended by the coating manufacturer shall be used.

	Item	Surface Prep.	System No.
NFM-1	All exposed surfaces, indoors and outdoors, except those included below.	Solvent cleaned SSPC-P1	(3) acrylic enamel
NFM-1	All exposed surfaces, indoors and outdoors, except those included below.	Solvent cleaned SSPC-P1	(4) aliphatic polyurethane
NFM-2	Chlorination room, chlorine storage room.	Solvent cleaned SSPC-SP1	(101) amine-cured epoxy
NFM-3	Aluminum surfaces in contact with concrete, or with any other metal except galvanized ferrous metal.	Solvent cleaned SSPC-SP1	(208) aluminum metal isolation
NFM-4	Polyvinyl chloride plastic piping, indoors and outdoors, or in structures, not submerged.	Solvent cleaned SSPC-SP1	(7) acrylic enamel
NFM-5	Fiber glass surfaces.	Per Paragraph [3.8]	(12) aliphatic polyurethane fiberglass
NFM-6	Buried non-ferrous metal pipe.	Removal of dirt, grease, oil	(200) PVC tape
NFM-7	[Specifier list of existing equipment or surfaces which are required to be recoated as part of this work.]	[Specifier enter]	[Specifier enter]

3.18 COATING SYSTEM SCHEDULE-CONCRETE

	Item	Surface Prep.	System No.
C-1	Exposed indoors and outdoors, as shown.	Per Paragraph [3.7]	(10) acrylic, concrete
C-2	Submerged in wastewater including surfaces up to 2-feet above high water line and down to 2-feet below low water line and all surfaces in an enclosed structure, as shown.	Per Paragraph [3.7]	New surface:(110) epoxy amine, concrete Existing surface: (102) epoxy mortar
C-2	Submerged in wastewater including surfaces up to 2-feet above high water line and down to 2-feet below low water line and all surfaces in an enclosed structure, as shown.	Per Paragraph [3.7]	(110) epoxy amine, concrete
C-3	Floor slab, exposure to chemicals, as shown.	Per Paragraph [3.7]	(203) epoxy surfacing
C-4	Floor slab, non-slip surface, as shown.	Per Paragraph [3.7]	(207) non-slip surfacing
C-5	Interior surfaces of sewer manholes, including sidewalls, bottom, and metal appurtenances, for manholes shown.	Per Paragraph [3.7]	New surface:(110) epoxy amine, concrete Existing surface: (102) epoxy mortar
C-5	Interior surfaces of sewer manholes, including sidewalls, bottom, and metal appurtenances, for manholes shown.	Per Paragraph [3.7]	New surface:(110) epoxy amine, concrete Existing surface: (102) epoxy mortar
C-6	Walls, exposure to chemical splash, washdown, as shown.	Per Paragraph [3.7]	(11) aliphatic polyurethane, concrete
C-7	[Specifier list of existing concrete surfaces which are required to be recoated as part of this work and as shown.]	[Specifier enter]	[Specifier enter]

3.19 COATING SYSTEM SCHEDULE-CONCRETE BLOCK MASONRY

	Item	Surface Prep.	System No.
CBM-1	Exposed, indoors and outdoors, as shown.	Per Paragraph [3.9]	(10) acrylic, concrete
CBM-2	Submerged in wastewater, including all vertical masonry surfaces above waterline as shown.	Per Paragraph [3.9]	New surface:(110) epoxy amine, concrete Existing surface: (102) epoxy mortar
CBM-2	Submerged in wastewater, including all vertical masonry surfaces above waterline as shown.	Per Paragraph [3.9]	New surface:(110) epoxy amine, concrete Existing surface: (102) epoxy mortar
CBM-3	Exterior surfaces, above grade.	Per Paragraph [3.9]	(204) waterproofing
CBM-4	[Specifier list of existing masonry surfaces which are required to be recoated as part of this work, and as shown.]	[Specifier enter]	[Specifier enter]

* * * * * *

END OF SECTION

SECTION 10443

DISABLED ACCESSIBILITY PARKING SIGNAGE

PART ONE - GENERAL

*1.1 DESCRIPTION

A. Furnish and install disabled accessibility signage as indicated on the drawings and specified herein.

B. Related Work Sections:

1. Documents affecting work of this Section include, but are not necessarily limited to the GENERAL CONDITIONS, SUPPLEMENTARY CONDITIONS, GENERAL REQUIREMENTS in Division 1 and other Section of the Project Manual.

2. Earthwork in Section 02310.

3. Porous Paving in Section 02731.

4. Concrete Work in Section 03300.

1.2 QUALITY ASSURANCE

A. Labor: Use adequate number laborer's who are thoroughly trained and experienced in the necessary crafts and who are completely familiar with the specified requirements and the methods needed for the proper performance of the work of this section.

B. Codes and Regulations: In accordance with the following documents:

1. American National Standards Institute (ANSI), ANSI A117.1, latest edition - Providing Accessibility and Usability for Physically Disabled People.

2. State of California, Code of Regulations, Title 24, Chapter 11B – Accessibility to Public Buildings, Public Accommodations, Commercial Buildings and Publicly Funded Housing, Section 1129B.5 – Identification of Parking Spaces for Off-Street Parking Facilities.

3. Los Angeles City Building Code and Amendment.

1.3 SUBMITTALS

A. Comply with pertinent provisions of Section 01340 – SUBMITTALS of Division 1 GENERAL REQUIREMENTS of the Project Manual.

B. Product Data: Within 35 calendar days after the Contractor has received the City's Notice-To-Proceed, submit list of material, product data of items proposed to be provided under this Section.

C. Shop Drawings: Submit drawings including elevations of each type of sign; dimensions, details, and methods of mounting; shape and thickness of materials; and details of construction.

1.4 PRODUCT HANDLING

A. Protection: Protect the concrete footing, the posts and signs before, during and after installation. Protect from the paving operations.

B. Delivery: Deliver all items to be built into concrete footing in time so as not to delay construction and installation operations.

C. Storage: Properly store all material until time for installation.

PART TWO - PRODUCTS

*2.1 STANDARD PRODUCTS

A. Signs shall be as manufactured by Western Highway Products Inc., Stanton, CA. (714-761-4811) or equal.

B. Signs shall be complete with lettering, framing, and related components for a complete installation. Materials and equipment shall be the standard product of a manufacturer regularly engaged in the manufacture of the products. Items of equipment shall essentially duplicate equipment that has been in satisfactory use at least 2 years prior to bid opening.

*2.2 MATERIAL AND FABRICATION

A. Posts: Provide two-piece, 2 inches x 2 inches x 1/9 inch thick x9 feet high galvanized steel tabular post and sleeve. Post shall be designed to accept panel framing system and shall be designed to permit attachment of panel

framing system without exposed fasteners. Caps shall be provided for each post.

B. Panel Framing System: Panel framing consisting of galvanized steel sections and interlocking track components shall be designed to interlock with posts with concealed fasteners. Top and bottom framing members shall be removable to permit panel removal.

C. Panels: Modular message panels shall be provided in sizes, [not less than 18 inches wide x 27 inches high], [as shown on contract drawings]. Constructed of reflective sheeting laminated to 18-gage heavy duty sheet steel and silk screened in transparent blue with “Disabled Symbol” and the appropriate message in white. Panels shall be designed to be interchangeable. Panels with metal return sheeting shall have welded corners, ground smooth.

2.3 FINISHES

A. Post finish shall be semi-gloss baked enamel or two-component acrylic polyurethane.

B. Metal panel framing system finish shall be baked enamel or two-component acrylic polyurethane, as standard with the sign manufacturer.

*2.4 GRAPHICS

A. Graphics and message shall be applied to panel using the silkscreen process. Silkscreened images shall be executed with photo screens prepared from original art. No handcut screens will be accepted. Original art shall be defined as artwork that is a first generation stencil of the original specified art. Edges and corners shall be clean. Rounded corners, cut or ragged edges, edge buildup, bleeding or surfaces pinholes will not be accepted.

At least one parking sign with “Disabled Symbol” plus the message “Van Accessible” shall be provided. Other accessible parking signs shall be provided with “Disabled Symbol”.

An additional sign shall also be posted in a conspicuous place at the entrance and it shall state the following:

> “Unauthorized vehicles parked in designated handicapped space not displaying distinguishing placards or license plates issued for physically disabled persons may be towed away at owner’s expense. Towed vehicles may be reclaimed at (address) or by telephone (number)”.

The blank spaces are to be filled in with appropriate information as a permanent part of the sign by the Contractor.

B. Graphics, message, and colors shall be in accordance with ANSI A117.1. The type face shall be Helvetica medium. All lettering shall not less than one (1) inch in height.

*3.1 INSTALLATION

A. Signs shall be installed at locations shown on the drawings, plumb and true. Bottom of the sign shall be 80 inches above the finish grade of the parking lot or floor.

B. Permanent mounting shall be provided by fastening to 12 inch post sleeve embedded in concrete foundations. Foundations shall be not less than 12 inches in diameter and 24 inches deep with the top one inch above the paving. The top of the foundation shall be shaped/sloped to drain water away from the post. Concrete shall have a minimum compressive strength of 2500 psi at 28 days. Metal sleeve shall be installed 2 inches in the concrete foundation above about the top of concrete and secured with the post; all subgrade, base course and paving shall be compacted and placed around the foundation.

3.2 PROTECTION AND CLEANING

A. The work shall be protected against damage during construction. Keep the signage clean until final acceptance of the work.

END OF SECTION 10443

SECTION 11815
SLIDE/STOP GATES

PART 1 -- GENERAL

1.1 THE REQUIREMENT

A. The CONTRACTOR shall furnish and install slide/stop gates in the sizes and locations shown, complete and operable, including manual and electric operators, bracing, frame, mountings, etc., as specified herein, in accordance with the requirements of the Contract Documents.

1.2 REFERENCE SPECIFICATIONS, CODES AND STANDARDS

A. Comply with the applicable reference specifications as specified in the GENERAL REQUIREMENTS.

B. Comply with the current provisions of the following Codes and Standards.

ASTM A193A	Specification for Alloy-Steel and Stainless Steel Bolting Materials for High-Temperature Service.
ASTM A194A	Specification for Carbon and Alloy Steel Nuts for Bolts for High Pressure and High-Temperature Service.
ASTM A240	Chromium and Chromium-Nickel Stainless Steel.
ASTM A283	Low and Intermediate Tensile Strength Carbon Steel Plates.
ASTM A380	Standard Practice for Cleaning, De-scaling and Passivation of Stainless Steel Parts, Equipment and Systems.
ASTM D638	Test Method for Tensile Properties of Plastics.
ASTM D790	Test Methods for Flexural Properties of Unreinforced and Reinforced Plastics and Electrical Insulating Materials.
ASTM D2240	Test Method for Rubber Property-Durometer Hardness.
ASTM E 84-91A	Surface Burning Characteristics
ASTM D3982-92	Standard Specifications for Contact Molded “Fiberglass” Glass Fiber Reinforced Thermosetting Resin Duct and Hoods.
ASTM C582	Standard Specifications for Contact Molded Reinforced Thermosetting Plastic (RTP).
ASTM D5241-93	Standard Specifications for Contact Molded Glass-Fiber-Reinforced Thermosetting Resin Flanges.
ASTH D4024-00	Standard Specifications for Reinforced Thermosetting Resin (RTR) Flanges.
NBS PS 15-69	Custom Contact-Molded Reinforced-Polyester Chemical-Resistant Process Equipment.

UL 181 Standard for Factory Made Air Ducts and Air Connectors.

* When two or more of the above regulations are applicable, the more stringent requirement shall be met.

1.3 CONTRACTOR SUBMITTALS

A. Submittals shall be made in accordance with the GENERAL REQUIREMENTS.

B. Shop Drawings: The CONTRACTOR shall submit complete shop drawings of all gates, frames, slides, and operators, as well as design load calculations for deflection at the maximum expected head, and calculations for the lifting force required to lift the gate with 40 pounds effort on the handwheel or crank.

1.4 QUALITY ASSURANCE

A. Comply with Section 11000 "Equipment General Provisions."

B. The leakage allowance for slide gates shall not exceed 0.1 gpm/ft of seating perimeter under 20 ft of seating head, and 0.2 gpm/ft under 20 ft of unseating head, to meet ANSI/AWWA C-501.

PART 2 -- PRODUCTS

2.1 GENERAL REQUIREMENTS

A. All plastic and fiberglass items shall be manufactured with the "matched die-molded method," of material suitable for potable water, and shall be certified for such use on the shop drawings. Bolts, anchor bolts, nuts, washers, and supports shall be provided for all plastic and fiberglass items in accordance with the requirements of the manufacturers of the plastic and fiberglass items. All bolts, anchor bolts, washers, and supports required in connection with the plastic or fiberglass items shall be of Type 316 stainless steel.

B. All gates shall be new and of current manufacture, and adequately braced to prevent warpage and bending under the intended use. Where designated, gates shall be furnished with electric operators provided by the gate manufacturer. All operators of a given type shall be furnished by the same manufacturer.

C. All gates shall be furnished with a handwheel, crank-operated or electrically operated floor stand, having a 2:1 gear ratio, or 2-inch square operating nut, as shown on drawings, and shall conform to ANSI/AWWA C501, except as otherwise specified herein.

D. Operating Mechanism: Operators shall be weatherproof, equipped with stem covers, and shall be mounted on cast-iron or fabricated steel pedestals. Actuator shall be placed in an adjacent dry vault as shown on the drawings. The pedestal shall have an ample base or bracket area to evenly distribute the load to the supporting structure. The center line of the manual operator shall be approximately 3-feet above the base of the pedestal. The unit shall be designed so that a maximum of 40 pounds effort on the crank will operate the gate. Clockwise movement of the handwheel shall close the gate. The operating crank shall be easily removable to facilitate the use of a portable power operator.

E. Coating: Each gate and all accessories shall be epoxy-coated as specified in Section 09800 Protective Coating. Care shall be exercised to protect all machined surfaces during sandblasting and coating.

1. Cleaning and Finishing stainless steel welded fabrication:

a. Cleaning of weld joints and weld joint areas both before and after welding, shall

conform to ASTM A380. Use only stainless steel brushes or stainless steel wool.

b. Finishing: All weld areas following fabrication shall be pickled to remove all mill scale, weld inclusions, and color, and passivated in conformance to ASTM A380.

c. Contractor shall submit the cleaning and passivation procedure in compliance with the above requirements for ENGINEER's review and approval.

F. Stems: Stems shall be of Type 316 stainless steel and shall be provided with Type 316 stainless steel adjustable bushed stem guides to ensure that the L/R ratio of the stem does not exceed 200.

2.2 ALUMINUM SLIDE GATES

A. Construction: Aluminum slide gates shall be self-contained, or as shown, crank or handwheel-operated, with Type 316 stainless steel operating stem. Aluminum gates in liquids with a pH lower than 5, or higher than 9, shall be anodized. The gates shall have stiffeners, extruded aluminum frames with bearing bars of ultra high molecular weight polymer, resilient P-seals, and fully lubricated stems and operators.

B. Manufacturers:

1. Waterman

2. Fontaine Aquanoz Water Control Products

3. Whipps

4. Or equal.

PART 3 -- EXECUTION

3.1 INSTALLATION

A. Slide gates shall be installed in strict accordance with the manufacturer's printed recommendations and the requirements herein. Operators shall be located to avoid interference with handrails and structural members.

B. All damage to surface coatings incurred during shipment and/or installation shall be repaired to the satisfaction of the ENGINEER prior to installation.

END OF SECTION 11815

This page intentionally left blank

SECTION 13200
MODULAR BURIED STORMWATER INFILTRATION AND DESILTING BASIN SYSTEM

PART 1 - GENERAL

1.1 RELATED DOCUMENTS

A. Drawings and general provisions of the Contract, including General and Supplementary Conditions and Division 01 Specification Sections, apply to this Section.

1.2 SUMMARY

A. This Section includes the performance criteria, materials, design, production, and installation for precast concrete, modular, buried, stormwater desilting basins and infiltration units that together form the stormwater infiltration system. The Work performed under this Section includes all labor, materials, equipment, related services, and supervision required for the supply, installation and commissioning of the precast concrete, modular, buried, stormwater storage and infiltration units and accessories formed into the infiltration system.

1.3 RELATED SPECIFICATIONS

A. All precast concrete for this Section shall comply with the requirements of Section 03400 Precast Concrete.

1.4 SUBMITTALS

A. Submittals shall conform to Section 01330 Shop Drawings/Submittals.

B. Action Submittals

1. Shop Drawings and Calculations

a. Stormwater Infiltration system layout drawings indicating each separate unit type and location, system dimensions, access locations and types, floor infiltration openings vent locations, and other information needed to provide an understanding of the complete system to be supplied.
b. Detail fabrication and installation of structural precast concrete units including joint interface at member ends and to each adjoining member.
c. Indicate locations, plan views, elevations, dimensions, shapes, and cross sections of each unit, openings, inlet and outlet pipe openings, vents, and level sensors, and other equipment openings, support conditions and types of reinforcement, including special reinforcement.
d. Detail loose and embedded hardware, lifting and erection inserts, connections, and interface surfaces.
e. Indicate location and details of joint treatment for sealing of joints.

f. Submit signed and sealed reinforcing drawings for all precast units by a Structural Engineer registered in the State of California.
g. Submit structural calculations and design for cast-in-place modules for approval in accordance with Section 01330 Shop Drawings/Submittals. This also applies to modules that do not fit the 6'x8' access hatch requirements.

C. Concrete Design Mixtures

1. Include a submittal for each concrete design mixture including both 7-day and 28-day compressive strength. Submit Concrete Mix Design signed and sealed by a Structural Engineer registered in the State of California.
2. Water Storage Sizing:

a. Include supporting data to confirm the stormwater infiltration system is sized with sufficient water storage capacity per the Drawings.
b. Alternative stormwater infiltration systems to any Specified system shall include a continuous simulation hydrologic model that supports how the system is sized with sufficient water storage capacity, conforms to the required draw-down time, and conforms to the release rates and other pertinent design parameters as detailed on the Plans and in the Specifications. The continuous simulation hydraulic model and results shall be reviewed and will require Approval by the Engineer or the Owner's authorized representative prior to acceptance of an alternative system.

D. Informational Submittals

1. Material Test Reports:

a. Aggregates: Material test reports shall be from an accredited agency indicating and interpreting test results for compliance with Reference Standards and Specifications as detailed herein.
b. Compressive Strength: Concrete compressive strength test results shall be supplied for 25% of the batches of concrete utilized in the production of the precast concrete, modular, buried, infiltration system.

2. Material Certifications: Material certifications shall be signed by the Manufacturers certifying that each of the following items comply with the Reference Standards and Specifications as detailed herein.

a. Cementitious materials.
b. Reinforcing materials.
c. Admixtures.
d. Bearing pads.
e. Sealants.
f. Gaskets.

3. Operations and Maintenance Manual.

a. Contractor Provided Installation Verification: The installation of the subsurface stormwater infiltration system shall be verified by a California Licensed Professional Engineer and a certification provided indicating that the system has

been constructed and is in substantial conformance with the Shop Drawings, Project Drawings and Specifications.

b. Provide an operations and maintenance manual that includes recommended maintenance schedule and tasks, personnel, access requirements, health and safety, equipment, and standard operating procedures.

1.5 DELIVERY, STORAGE, AND HANDLING

A. Deliver all precast concrete members in such quantities and at such times to assure compliance with the agreed upon Project schedule and setting sequence to ensure continuity of installation.

B. Transport and handle members in a manner that will avoid excessive stresses that could cause cracking or other damage.

C. Store individual precast members with adequate dunnage and bracing, and protect units to prevent contact with soil, staining, and to control cracking, distortion, warping or other physical damage.

D. Store individual precast members with dunnage across the full width of each bearing point unless otherwise Specified or shown on the Shop Drawings.

E. Place stored members so that identification marks are clearly visible and units can be inspected.

F. Place dunnage of even thickness between each member.

G. Precast members shall be stacked according to the manufacturer's recommendation.

H. Lift and support precast members as per manufacturer's recommendations only at designated points indicated on the Shop Drawings. Do not drag, slide or push members.

I. Accessories:

1. Accessory components shall be delivered in the manufacturer's original, unopened packaging and/or containers with labels that clearly identify the make, model, date of fabrication, and manufacturer.
2. Accessory components shall be stored in a clean, dry area out of direct sunlight.

PART 2 - PRODUCTS

2.1 MODULAR BURIED STORMWATER DESILTING BASIN AND INFILTRATION UNITS

A. Manufacturers: Subject to compliance with requirements, provide products manufactured by one of the following:

1. Bio Clean Environmental, 5796 Armada Drive, Suite 250, Carlsbad, CA 92008; Phone: (855) 566-3938, www.biocleanenvironmental.com, Contact: Michael Frasco (310) 595-4583 (Los Angeles, CA)

2. Jensen Precast, 14221 San Bernardino Ave., Fontana, CA 92335, Phone: (909) 350-4111, www.jensenprecast.com, Contact: Matthew Blaylock (909) 429-3174.
3. OldCastle Infrastructure, 10650 Hemlock Ave., Fontana, CA 92337, Phone: (909) 428-3700, oldcastleinfrastructure.com, Contact: Xiaoyu Zhang, (323) 430-3138 (Los Angeles).
4. Precon Products, 240 W. Los Angelese Ave., Simi Valley, CA 93065; Phone: (805) 527-0841, www.pre-conproducts.com; Contact: Dan Zarraonandia, (805) 306-2494.
5. StormTrap, 1287 Windham Parkway, Romeoville, IL 60446; Phone: (815) 941-4549 stormtrap.com; Contact: Charlie Carter, (760) 212-5628.
6. Approved equal.

B. Design and Performance Requirements:

1. Water Storage Capacity: Underground stormwater infiltration system with minimum water storage capacities as indicated on the Drawings and Specifications. The storage volume to reflect any necessary freeboard.
2. System Footprint: Underground infiltration system footprint to be within the site limit restrictions shown on the Drawings. Design system to prevent hydraulic blockage in the longitudinal, lateral or diagonal directions with the exception of areas designated as sedimentation basins. Sedimentation basins shall be designed to the dimensions, locations, etc. as shown on the Drawings without deviation.
3. System Configuration:

    a. Underground stormwater infiltration system to meet one of the following two layout requirements:

        1) Total area of infiltration openings in the concrete base of the infiltration units to meet the minimum required area identified on the drawings. Provide easily removable and replaceable filter fabric units to prevent sediment from entering and clogging the crushed rock voids of the bedding below the infiltration system. Filter fabric to cover all infiltration openings to filter all stormwater that passes through these openings and to not restrict the hydraulic characteristics of the infiltration system if 90% clogged by sediment. Filter fabric shall meet the requirements of Section 02660 Geotextile Filter Fabrics.
        2) Total area of infiltration openings at the concrete base of the infiltration units to be a minimum of 40% of the total area of the infiltration system.

4. Maintenance Access:

    a. Access to be provided for maintenance staff entry into the underground infiltration system. Access locations, sizes and types to be provided at the site locations shown on the Drawings.
    b. Maintenance access for mechanized equipment to be provided that allows access to all locations within the infiltration system through continuous forward motion of the equipment with a turning radius of 2.5 feet without the need for three-point turn arounds.
    c. The stormwater infiltration system shall be designed with no internal ledges, steps, slopes, or walls that would impede the maintenance vehicle pathway.

5. Ventilation: Vents to be provided in locations as shown on the drawings.
6. Structural Performance: Underground stormwater infiltration units capable of withstanding design loads as indicated on the Drawings and Specifications and as detailed herein:

    a. Dead Loads:

        1) Soil load based on minimum and maximum depth of burial as indicated on the Drawings using a minimum of 120 pcf soil density.
        2) Lateral soil pressures based on a minimum "At Rest Earth Pressure" of 60 pcf.
        3) Other dead loads as indicated on the Drawings.

    b. Live Loads:

        1) Able to sustain HS20 loading requirements without damage to the structure; ACI 350 and ACI 318 based on minimum and maximum depths of burial as indicated on the Drawings.
        2) For burial depths less than two feet including at manned access locations a concentrated point load shall be utilized for the calculated live load.

    c. Interior Water Load:

        1) A minimum of 62.4 pcf water density at the maximum water storage depth as indicated on the Drawings. Evaluation of loads on infiltration units to be based on both the maximum water storage volume depth and dry infiltration unit conditions.

    d. Seismic Loads to be based on project Geotechnical Report in the Appendix.
    e. Other Loads (if any) to be determined using the following:

        1) As detailed on the Drawings of otherwise listed in the specifications.

7. Materials and Concrete Thicknesses: Structural precast concrete, modular, buried, stormwater desilting basin and infiltration units to be designed in accordance with ACI 350, ACI 350.3, and ACI 318 latest edition and the details listed herein;

    a. Cement: Type II/V Portland cement; ASTM C150.
    b. Aggregate: ASTM C33, except for gradation requirement
    c. Reinforcement to consist of steel bar conforming to ASTM A615, Grade 60/80, glass fiber reinforced polymer bars conforming to ASTM D7957, or mesh conforming to ASTM A1064, Grade 60/80.
    d. All desilting and stormwater infiltration units to be cured by an approved method. Do not ship until concrete has attained full design compressive strength as determined by a California Licensed Professional Engineer (and in no case less than 2,000 psi compressive strength).
    e. Wall thickness, and top slab thickness of the desilting basin and infiltration units to conform to ACI 350 and ACI 318 and shall be no less than the minimum thickness necessary to sustain soil loading plus HS20 loading requirements as determined by a Licensed Professional Engineer in the State of California.

f. Wall thickness, top slab thickness and bottom slab thickness of the desilting and infiltration units to be no less than the minimum thickness necessary to sustain the expected soil loading based on a minimum of 120 pcf for soil density at the required burial depths as determined by a Licensed Professional Engineer in the State of California.

g. Wet mix concrete or self-consolidating concrete (SCC) with a water/cement ratio of no greater than 0.40 to be utilized for all precast elements and any field cast elements. Dry cast concrete is not to be used in order to maintain dimensional tolerances and to ensure adequate consolidation around heavy reinforcement.

h. The interior assembled floor of the infiltration units is to be flat to within ½" and not sloped greater than 1%. The top of concrete at the floor of the desilting basin units is to be within ½" and not sloped greater than 1% more or less than the slope indicated on the drawings.

i. All vertical load bearing elements to contain transverse reinforcement per ACI 350 and ACI 318 to provide confinement and ensure that spalling of the shell concrete does not result in a loss of axial load strength.

j. Minimize horizontal structural irregularities in interior space to prevent unpredictable movement during a design seismic event.

8. Openings and Risers:

a. Pipe Openings: ASTM C595 or ASTM C1107. Sized to accept pipes of the specified size(s) and material(s) as indicated on the Drawings and shall be sealed by the Contractor with hydraulic cement.

b. Access Risers: ASTM A478 for round access risers and ASTM C857 and ASTM C858 for square/rectangular access risers and provide for an access opening with a minimum dimension of 48-inches.

c. Leveling: Brick or masonry used to level the manhole frames and covers to finished grade; ASTM C32 or ASTM C139 and to be installed in conformance with all local requirements.

9. Warranty Period – Material supplier shall provide a minimum 5-year materials warranty.

C. Accessories:

1. Spacer/Backer (for use between concrete members): 1/2-inch thick x 4-inch wide closed-cell polypropylene foam; ASTM D8139, ASTM D1751, and ASTM D545.
2. Joint Filler (for use between concrete member floors): Non-shrink hydraulic cement; ASTM C595 or C1107.
3. Joint Sealer (for use between concrete member floors): Cold-applied, water proof membrane; ASTM C836.
4. Joint Sealer (for use between concrete member walls): Rapid-cure, elastomeric sealant; ASTM C920.
5. Joint Sealer (to span between concrete member roofs): Polyolefin backed exterior joint wrap; ASTM C877.

2.2 EXCAVATION, BACKFILL AND SOIL MATERIALS

A. Excavation, backfill, soil and bedding materials are specified in Section 02310 Earthwork.

2.3 CAST-IN-PLACE CONCRETE

A. Cast-in-Place Concrete is specified in Division 3.

2.4 ACCESS HATCHES AND MANHOLE FRAMES AND COVERS

A. Manhole frames and covers, and access hatches are specified in Section 02585 Maintenance Hole and Precast Vault Construction.

2.5 FILTER FABRICS

A. Filter fabric to be installed in the filter units in the base of the infiltration gallery to:

1. Filters shall meet the following requirements:

    a. Filters particles to 50 microns in size,
    b. Removes a minimum of 99% of total suspended solids (TSS);
    c. Removed oil and grease to be non detectable;
    d. Flow rate of 100 gpm per sq-ft; and
    e. Minimum gross solids removal of 90%.

2. Product to be Absorb-it Catch Basin Filter Basket, or approved equal.

B. Filter fabric to be installed around the Infiltration Gallery structure to be:

1. EX Description: Fabric of PP or polyester fibers or combination of both, with flow rate range from 110 to 330 gpm/sq. ft. (4480 to 13 440 L/min. per sq. m) when tested according to ASTM D4491.
2. Structure Type: Nonwoven, needle-punched continuous filament. Class 2 in first subparagraph below is the default class recommended by AASHTO. Survivability to meet AASHTO M 288 Class 2; with styles flat and sock.

PART 3 - EXECUTION

3.1 EXAMINATION

A. Examine all surfaces and areas for suitable conditions beneath the modular buried stormwater infiltration system and desilting basins and to a limit of 2 feet outside each structure where crushed stone will be placed for infiltration. Notify Engineer if existing soil area is not acceptable for infiltration.

B. If subsurface drainage is required for landscaping, locate and mark existing utilities, underground structures, and aboveground obstructions before beginning installation and avoid disruption and damage of services.

C. Verify that drainage panels installed as part of foundation wall waterproofing are properly positioned to drain into subsurface drainage system.

D. Proceed with installation only after unsatisfactory conditions have been corrected.

3.2 EARTHWORK

A. Excavating, trenching, and backfilling are specified in Section 02310 Earthwork.

3.3 STORMWATER INFILTRATION SYSTEM INSTALLATION

A. General Locations and Arrangements: As indicated on Shop Drawings.

B. Install per ASTM C891. Follow manufacturer's written instructions where specific installation procedures are not indicated.

C. Inspect all precast concrete members for defects and cracks before being lowered into the excavation. Remove and replace defective, damaged or unsound structures or products whose grade is disturbed after laying. Ensure interior of treatment system is free from dirt, excess water and foreign materials as installation progresses; leave in a clean condition at completion of the installation.

3.4 EXCAVATION

A. Excavate pit to ensure side slopes will be stable under working conditions. Slope trench walls or provide shoring or bracing in conformance with federal, state, and local safety standards. Excavate only as much as can be safely maintained by available equipment.

B. Where excavation walls are stable or supported, provide width sufficient, but no greater than necessary, to ensure working room to properly and safely place and compact embedment materials. Provide space between infiltration system and excavation wall that is wider than compaction equipment used in compaction area.

C. Dewatering:

Do not lay or embed any precast concrete member in standing or running water. Prevent surface runoff from entering excavation at all times.

1. When water is present in work area, dewater to maintain stability of in-situ and imported materials. Maintain water level below infiltration system bedding and foundation to provide a stable excavation bottom. Use, as appropriate, sump pumps, well points, deep wells, geofabrics, perforated underdrains, or stone blankets of sufficient thickness to remove and control water in all excavations. When excavating while depressing ground water, ensure that ground water is kept below bottom of cut at all times to prevent washout from behind sheeting or sloughing of exposed excavation walls. Maintain control of water in excavation before, during, and after stormwater infiltration system

installation and until covering embedment is installed and sufficient backfill has been placed to prevent flotation of system, attached piping, or accessory drainage structures.

D. Removal of Unstable Material:

1. Where wet or otherwise unstable soil incapable of properly supporting the infiltration system, as determined by Engineer, is encountered in bottom of an excavation, remove the material to at least 24 inches below the bottom of the system and replace to proper grade with select granular material, compacted as directed by Engineer. Removal of unstable material created due to fault or neglect of Contractor while performing shoring and sheeting, water removal, or other specified requirements, shall be performed at no additional cost to Owner.

3.5 PLACING PRECAST CONCRETE MEMBERS

A. Examine each precast concrete member for defects before placement; do not use defective or damaged members. Place precast concrete members within ± ¾-inch of elevations as indicated on Drawings. Provide proper equipment for lowering and setting precast concrete members into the excavation. Do not lay precast concrete members in water, and do not lay members when trench conditions or weather are unsuitable for such work. Provide diversion of drainage or dewatering of excavations as directed by Engineer and as indicated in Section 3.4 C.

B. Place a ½" thick x 4" wide closed-cell polypropylene foam gasket conforming to ASTM D8139, ASTM D1751, and ASTM D545 on all sides of precast concrete members that will abut an adjacent member. Keep foam gasket members in place to ensure proper alignment and act as backer material for subsequent sealing.

C. Place and align precast concrete members to within ½-inch of each other horizontally and vertically.

D. Use a random-oriented fiber bearing pad conforming to ASTM D4014 and ASTM D5992 between members with a minimum bearing surface area of 18 square-inches for precast members transferring vertical loads to other members or slabs.

1. Minor misalignment of upper sections on slab or upper sections on other members may be adjusted through shimming using random oriented fiber pads conforming to the ASTM D4014 and ASTM D5992, provided the minimum bearing surface area is maintained.

3.6 JOINTING/SEALING

A. Seal joints on exterior top and side surface using a polyolefin backed exterior joint wrap conforming to ASTM C877. Span joint wrap by a minimum of 6-inches on either side of the joint.

B. Protect sealed joints from damage during placement of additional members and during final backfill. Re-seal joints damaged during construction.

3.7 BACKFILLING

A. General:

1. Backfill placement and compaction shall be constructed in accordance with the Specifications herein and the product manufacturer's published installation guides.

B. Backfilling Stormwater Infiltration System in Excavation:

1. After precast concrete member and accessory drainage connections have been properly bedded, select material from excavation or borrow, at a moisture content that will facilitate compaction as described on the project geotechnical report, shall be placed along all sides of the system in layer depths to ensure minimum compaction density is obtained evenly throughout the backfill material. Bring backfill up evenly on all sides of structure. Compact each layer with mechanical tampers or rammers. The lift thickness for fill soils will depend on the type of compaction equipment used, but generally should not exceed 8 inches in loose thickness. Tests for density as necessary to ensure conformance to compaction requirements as Specified in Geotechnical Evaluation Report. Where necessary, in the opinion of the Engineer, that sheeting or portions of bracing used to be left in place, the contract will be adjusted accordingly. Do not leave untreated wood sheeting or shoring in place beneath structures or pavements.

C. Movement of Construction Machinery:

1. Movement of construction machinery over the stormwater infiltration system at any stage of construction shall be at the Contractor's risk. Remove and replace any damaged precast member. Do not load equipment used during construction greater than H20 per AASHTO. Do not permit equipment to operate over top of the stormwater infiltration system with less than 12-inches of structural cover.

3.8 CONNECTIONS

A. Comply with requirements for piping specified in Section 02545 Storm Drain System. Drawings indicate general arrangement of piping, fittings, and specialties.

3.9 FIELD QUALITY CONTROL

A. Inspect all precast concrete members, accessories, and aggregate material used during installation prior to installation and replace defective, damaged or non-conforming material.

B. Precast Concrete Members: Reject units:

1. With a fracture or continuous crack greater than 12 inches in length or 0.01 inch in width.
2. That have not reached required design strength based on laboratory test results.
3. With indications of imperfections in mixing and/or molding, honeycombed, or open textured surface.
4. With indications of substantial patches or repairs.
5. With exposed reinforcing steel.

C. Accessories: Free from defects and damage.

D. Tests and Inspections:

1. After installing drainage course to top of piping, test drain piping with water to ensure free flow before backfilling.
2. Remove obstructions, replace damaged components, and repeat test until results are satisfactory.

E. Drain piping will be considered defective if it does not pass tests and inspections.

F. Prepare test and inspection reports.

3.10 CLEANING

A. Clear interior of installed piping and structures of dirt and other superfluous material as work progresses. Maintain swab or drag in piping and pull past each joint as it is completed. Place temporary plugs in ends of uncompleted pipe at end of each day or when work stops.

END OF SECTION 13200

This page intentionally left blank

SECTION 15270
MECHANICAL SYSTEMS COMMISSIONING

PART 1 – GENERAL

1.01 DESCRIPTION

A. The purpose of this section is to specify Division 15 responsibilities in the commissioning process.

B. The systems to be commissioned are listed in Section 01810.

C. Commissioning requires the participation of Division 15 to ensure that all systems are operating in a manner consistent with the Contract Documents. The general commissioning requirements and coordination are detailed in Division 01, Section 01810. Division 15 shall be familiar with all parts of Division 01, Section 01810 and the commissioning plan issued by the CA and shall execute all commissioning responsibilities assigned to them in the Contract Documents.

1.02 RESPONSIBILITIES

A. Mechanical, Controls and TAB Contractors. The commissioning responsibilities applicable to each of the mechanical, controls and TAB contractors of Division 15 are as follows (all references apply to commissioned equipment only):

1. Construction and Acceptance Phases

a. Include and itemize the cost of commissioning in the contract price.
b. In each purchase order or subcontract written, include requirements for submittal data, commissioning documentation, O&M data and training.
c. Attend a commissioning kickoff meeting and other meetings necessary to facilitate the commissioning process.
d. Contractors shall provide the CA with normal cut sheets and shop drawing submittals of commissioned equipment.
e. Provide additional requested documentation, prior to normal O&M manual submittals, to the CA for development of start-up and functional testing procedures.

(1) Typically this will include detailed manufacturer installation and start-up, operating, troubleshooting and maintenance procedures, full details of any owner-contracted tests, fan and pump curves, full factory testing reports, if any, and full warranty information, including all responsibilities of the Owner to keep the warranty in force clearly identified. In addition, the installation, start-up and checkout materials that are actually shipped inside the equipment and the actual field checkout sheet forms to be used by the factory or field technicians shall be submitted to the Commissioning Agent.
(2) The Commissioning Agent may request further documentation necessary for the commissioning process.
(3) This data request may be made prior to normal submittals.

f. Provide a copy of the O&M manuals and submittals of commissioned equipment, through normal channels, to the CA for review and approval.
g. Contractors shall assist (along with the design engineers) in clarifying the operation and control of commissioned equipment in areas where the specifications, control drawings or equipment documentation is not sufficient for writing detailed testing procedures.
h. Provide limited assistance to the CA in preparing the specific functional performance test procedures as specified in Section 15997. Subs shall review test procedures to ensure feasibility, safety and equipment protection and provide necessary written alarm limits to be used during the tests.
i. Develop a full start-up and initial checkout plan using manufacturer's start-up procedures and the prefunctional checklists from the CA for all commissioned equipment. Submit to CA for review and approval prior to startup. Refer to Section 01810 for further details on start-up plan preparation.
j. During the startup and initial checkout process, execute the mechanical-related portions of the prefunctional checklists for all commissioned equipment.
k. Perform and clearly document all completed startup and system operational checkout procedures, providing a copy to the CA.
l. Address current A/E punch list items before functional testing. Air and water TAB shall be completed with discrepancies and problems remedied before functional testing of the respective air- or water-related systems.
m. Provide skilled technicians to execute starting of equipment and to execute the functional performance tests. Ensure that they are available and present during the agreed upon schedules and for sufficient duration to complete the necessary tests, adjustments and problem solving.
n. Provide skilled technicians to perform functional performance testing under the direction of the CA for specified equipment in Section 15997 and 01810. Assist the CA in interpreting the monitoring data, as necessary.
o. Correct deficiencies (differences between specified and observed performance) as interpreted by the CA, CM and A/E and retest the equipment.
p. Prepare O&M manuals according to the Contract Documents, including clarifying and updating the original sequences of operation to as-built conditions.
q. During construction, maintain as-built red-line drawings for all drawings and final CAD as-builts for contractor-generated coordination drawings. Update after completion of commissioning (excluding deferred testing).
r. Provide training of the Owner's operating staff using expert qualified personnel, as specified.
s. Coordinate with equipment manufacturers to determine specific requirements to maintain the validity of the warranty.

2. Warranty Period

a. Execute seasonal or deferred functional performance testing, witnessed by the CA, according to the specifications.
b. Correct deficiencies and make necessary adjustments to O&M manuals and as-built drawings for applicable issues identified in any seasonal testing.

B. Mechanical Contractor. The responsibilities of the HVAC mechanical contractor, during construction and acceptance phases in addition to those listed in (A) are:

1. Provide startup for all HVAC equipment, except for the building automation control system, if any.
2. Assist and cooperate with the TAB contractor and CA by:

    a. Putting all HVAC equipment and systems into operation and continuing the operation during each working day of TAB and commissioning, as required.
    b. Including cost of sheaves and belts that may be required by TAB.
    c. Providing test holes in ducts and plenums where directed by TAB to allow air measurements and air balancing. Providing an approved plug.
    d. Providing temperature and pressure taps according to the Construction Documents for TAB and commissioning testing.
    e. Install a P/T plug at each water sensor, which is an input point to the control system.
    f. List and clearly identify on the as-built drawings the locations of all air-flow stations.
    g. Prepare a preliminary schedule for Division 15 pipe and duct system testing, flushing and cleaning, equipment start-up and TAB start and completion for use by the CA. Update the schedule as appropriate.
    h. Notify the GC, CM or CA depending on protocol, when pipe and duct system testing, flushing, cleaning, startup of each piece of equipment and TAB will occur. Be responsible to notify the GC, CM or CA, ahead of time, when commissioning activities not yet performed or not yet scheduled will delay construction. Be proactive in seeing that commissioning processes are executed and that the CA has the scheduling information needed to efficiently execute the commissioning process.

C. Controls Contractor. The commissioning responsibilities of the controls contractor, during construction and acceptance phases in addition to those listed in (A) are:

1. Sequences of Operation Submittals. The Controls Contractor's submittals of control drawings shall include complete detailed sequences of operation for each piece of equipment, regardless of the completeness and clarity of the sequences in the specifications. They shall include:

    a. An overview narrative of the system (1 or 2 paragraphs) generally describing its purpose, components, and function.
    b. All interactions and interlocks with other systems.
    c. Detailed delineation of control between any packaged controls and the temperature control system, listing what points the temperature control system monitors only and what points are control points and are adjustable.
    d. Written sequences of control for packaged controlled equipment. (Equipment manufacturers' stock sequences may be included, but will generally require additional narrative).
    e. Start-up sequences.
    f. Warm-up mode sequences.
    g. Normal operating mode sequences.

h. Unoccupied mode sequences.
i. Shutdown sequences.
j. Capacity control sequences and equipment staging.
k. Temperature and pressure control: setbacks, setups, resets, etc.
l. Detailed sequences for all control strategies, e.g., economizer control, optimum start/stop, staging, optimization, demand limiting, etc.
m. Effects of power or equipment failure with all standby component functions.
n. Sequences for all alarms and emergency shut downs.
o. Seasonal operational differences and recommendations.
p. Initial and recommended values for all adjustable settings, setpoints and parameters that are typically set or adjusted by operating staff; and any other control settings or fixed values, delays, etc. that will be useful during testing and operating the equipment.
q. Schedules, if known.
r. To facilitate referencing in testing procedures, all sequences shall be written in small statements, each with a number for reference. For a given system, numbers will not repeat for different sequence sections, unless the sections are numbered.

2. Control Drawings Submittal

a. The control drawings shall have a key to all abbreviations.
b. The control drawings shall contain graphic schematic depictions of the systems and each component.
c. The schematics will include the system and component layout of any equipment that the control system monitors, enables or controls, even if the equipment is primarily controlled by packaged or integral controls.
d. Provide a full points list with at least the following included for each point:

(1) Controlled system
(2) Point abbreviation
(3) Point description (DB temp, airflow, etc.)
(4) Display unit
(5) Control point or setpoint (Point that controls equipment and can have its setpoint changed, e.g. OSA, SAT, etc.)
(6) Monitoring point (Point that does not control or contribute to the control of equipment, but is used for operation, maintenance, or performance verification)
(7) Intermediate point (Point whose value is used to make a calculation which then controls equipment, e.g. space temperatures that are averaged to a virtual point to control reset)
(8) Calculated point (“Virtual” point generated from calculations of other point values)

e. The Controls Contractor shall keep the CA informed of all changes to this list during programming and setup.

3. An updated as-built version of the control drawings and sequences of operation shall be included in the final controls O&M manual submittal.
4. Assist and cooperate with the TAB contractor in the following manner:

a. For a given area, have all required prefunctional checklists, calibrations, startup and selected functional tests of the system completed and

approved by the CA prior to TAB.

b. Provide a qualified technician to operate the controls to assist the TAB contractor in performing TAB, or provide sufficient training for TAB to operate the system without assistance.

5. Assist and cooperate with the CA in the following manner:

   a. Using a skilled technician who is familiar with this building, execute the functional testing of the controls system as specified for the controls contractor in Section 15997. Assist in the functional testing of all equipment specified in Section 15997.
   b. Execute all control system trend logs specified in Section 15997.

6. The controls contractor shall prepare a written plan indicating in a step-by-step manner, the procedures that will be followed to test, checkout and adjust the control system prior to functional performance testing, according to the process in Section 01810. At minimum, the plan shall include for each type of equipment controlled by the automatic controls:

   a. System name.
   b. List of devices.
   c. Step-by-step procedures for testing each controller after installation, including:

      (1) Process of verifying proper hardware and wiring installation.
      (2) Process of downloading programs to local controllers and verifying that they are addressed correctly.
      (3) Process of performing operational checks of each controlled component.
      (4) Plan and process for calibrating valve and damper actuators and all sensors.
      (5) A description of the expected field adjustments for transmitters, controllers and control actuators should control responses fall outside of expected values.

   d. A copy of the log and field checkout sheets that will document the process. This log must include a place for initial and final read values during calibration of each point and clearly indicate when a sensor or controller has “passed” and is operating within the contract parameters.
   e. A description of the instrumentation required for testing.
   f. Indicate what tests on what systems should be completed prior to TAB using the control system for TAB work. Coordinate with the CA and TAB contractor for this determination.

7. Provide a signed and dated certification to the CA and CM upon completion of the checkout of each controlled device, equipment and system prior to functional testing for each piece of equipment or system, that all system programming is complete as to all respects of the Contract Documents, except functional testing requirements.
8. Beyond the control points necessary to execute all documented control sequences, provide monitoring, control and virtual points as specified in Division 15.
9. List and clearly identify on the as-built duct and piping drawings the locations of all static and differential pressure sensors (air, water and building pressure).

D. TAB Contractor. The duties of the TAB contractor, in addition to those listed in (A) are:

1. Six weeks prior to starting TAB, submit to the CM the qualifications of the site technician for the project, including the name of the contractors and facility managers of recent projects the technician on which was lead. The Owner will approve the site technician's qualifications for this project.
2. Submit the outline of the TAB plan and approach for each system and component to the CA, CM and the controls contractor six weeks prior to starting the TAB. This plan will be developed after the TAB has some familiarity with the control system.
3. The submitted plan will include:

    a. Certification that the TAB contractor has reviewed the construction documents and the systems with the design engineers and contractors to sufficiently understand the design intent for each system.
    b. An explanation of the intended use of the temperature control system. The controls contractor will comment on feasibility of the plan.
    c. All field checkout sheets and logs to be used that list each piece of equipment to be tested, adjusted and balanced with the data cells to be gathered for each.
    d. Discussion of what notations and markings will be made on the duct and piping drawings during the process.
    e. Final test report forms to be used.
    f. Detailed step-by-step procedures for TAB work for each system and issue: flow calibration , diffuser proportioning, branch / submain proportioning, total flow calculations, rechecking, diversity issues, expected problems and solutions, etc. Criteria for using air flow straighteners or relocating flow stations and sensors will be discussed. Provide the analogous explanations for the water side, as applicable.
    g. List of all air flow, water flow, sound level, system capacity and efficiency measurements to be performed and a description of specific test procedures, parameters, formulas to be used.
    h. Details of how *total* flow will be determined (Air: via hood readings of all outlets, supply (SA) and return air (RA) pitot traverse, SA or RA flow stations, etc.).
    i. The identification and types of measurement instruments to be used and their most recent calibration date.
    j. Specific procedures that will ensure that both air and water side are operating at the lowest possible pressures and provide methods to verify this.
    k. Confirmation that TAB understands the outside air ventilation criteria under all conditions.
    l. Details of whether and how minimum outside air cfm will be verified and set, and for what level (total building, zone, etc.).
    m. Details of how building static and exhaust fan / relief damper capacity will be checked.
    n. Proposed selection points for sound measurements and sound measurement methods.
    o. Details of methods for making any specified coil or other system plant capacity measurements.
    p. Details of any TAB work to be done in phases (by floor, etc.), or of areas to be built out later.
    q. Details regarding specified deferred or seasonal TAB work.

r. Details of any specified false loading of systems to complete TAB work.
s. Details of all exhaust fan balancing and capacity verifications, including any required room pressure differentials.

4. A running log of events and issues shall be kept by the TAB field technicians. Submit hand-written reports of discrepancies, deficient or uncompleted work by others, contract interpretation requests and lists of completed tests to the CA and CM at least twice a week.
5. Communicate in writing to the controls contractor all setpoint and parameter changes made or problems and discrepancies identified during TAB which affect the control system setup and operation.
6. Provide a draft TAB report within two weeks of completion. A copy will be provided to the CA. The report will contain a full explanation of the methodology, assumptions and the results in a clear format with designations of all uncommon abbreviations and column headings. The report should follow the latest and most rigorous reporting recommendations by AABC.
7. Provide the CA with any requested data, gathered, but not shown on the draft reports.
8. Provide a final TAB report for the CA with details, as in the draft.
9. Conduct functional performance tests and checks on the original TAB as specified for TAB in Section 15997.

1.03 RELATED WORK

A. Refer to Section 01810 Part 1.12 for systems to be commissioned and Section 01810 Part 3.05 and Section 15997 for functional testing requirements.

PART 2 – PRODUCTS

2.01 TEST EQUIPMENT

A. Division 15 shall provide all test equipment necessary to fulfill the testing requirements of this Division.

B. Refer to Section 01810 Part 2.01 for additional Division 15 requirements.

PART 3 – EXECUTION

3.01 SUBMITTALS

A. Division 15 shall provide submittal documentation relative to commissioning to the CA as requested by the CA. Refer to Section 01810, Part 3.03 for additional Division 15 requirements.

3.02 STARTUP

A. The HVAC mechanical and controls contractors shall follow the start-up and initial checkout procedures listed in the Responsibilities list in this section and in Section 01810. Division 15 has start-up responsibility and is required to complete systems and sub-systems so they are fully functional, meeting the design objectives of the Contract Documents. The commissioning procedures and functional testing do not relieve or

lessen this responsibility or shift that responsibility partially to the commissioning agent or Owner.

B. Functional testing is intended to begin upon completion of a system. Functional testing may proceed prior to the completion of systems or sub-systems at the discretion of the CA and CM. Beginning system testing before full completion does not relieve the Contractor from fully completing the system, including all prefunctional checklists as soon as possible.

3.03 TAB

A. Refer to the TAB responsibilities in Part 1.02 above.

3.04 FUNCTIONAL PERFORMANCE TESTS

A. Refer to Section 01810 Part 1.12 for a list of systems to be commissioned and to Part 3.05 for a description of the process and to Section 15997 for specific details on the required functional performance tests.

3.05 TESTING DOCUMENTATION, NON-CONFORMANCE AND APPROVALS

A. Refer to Section 01810 Part 3.06 for specific details on non-conformance issues relating to prefunctional checklists and tests.

B. Refer to Section 01810 Part 3.05 for issues relating to functional performance tests.

3.06 OPERATION AND MAINTENANCE (O&M) MANUALS

A. The following O&M manual requirements do not replace O&M manual documentation requirements elsewhere in these specifications.

B. Division 15 shall compile and prepare documentation for all equipment and systems covered in Division 15 and deliver this documentation to the GC for inclusion in the O&M manuals, according to this section and Section 01810, prior to the training of owner personnel.

C. The CA shall receive a copy of the O&M manuals for review.

D. Special Control System O&M Manual Requirements. In addition to documentation that may be specified elsewhere, the controls contractor shall compile and organize at minimum the following data on the control system in labeled 3-ring binders with indexed tabs.

1. Three copies of the controls training manuals in a separate manual from the O&M manuals.
2. Operation and Maintenance Manuals containing:

    a. Specific instructions on how to perform and apply all functions, features, modes, etc. mentioned in the controls training sections of this specification and other features of this system. These instructions shall be step-by-step. Indexes and clear tables of contents shall be included. The detailed technical manual for programming and customizing control loops and algorithms shall be included.

b. Full as-built set of control drawings (refer to Submittal section above for details).
c. Full as-built sequence of operations for each piece of equipment.
d. Full points list. In addition to the updated points list required in the original submittals (Part 1 of this section), a listing of all rooms shall be provided with the following information for each room:

(1) Floor
(2) Room number
(3) Room name
(4) Air handler unit ID
(5) Reference drawing number
(6) Heating and/or cooling valve tag ID
(7) Minimum cfm
(8) Maximum cfm

e. Full print out of all schedules and set points after testing and acceptance of the system.
f. Full as-built print out of any software program.
g. Electronic copy on disk or CDRom of the entire program for this facility.
h. Marking of all system sensors and thermostats on the as-built floor plan and mechanical drawings with their control system designations.
i. Maintenance instructions, including sensor calibration requirements and methods by sensor type, etc.
j. Control equipment component submittals, parts lists, etc.
k. Warranty requirements.
l. Copies of all checkout tests and calibrations performed by the Contractor (not commissioning tests).

3. The manual shall be organized and subdivided with permanently labeled tabs for each of the following data in the given order:

a. Sequences of operation
b. Control drawings
c. Points lists
d. Controller / module data
e. Thermostats and timers
f. Sensors and DP switches
g. Valves and valve actuators
h. Dampers and damper actuators
i. Program setups (software program printouts)

4. Field checkout sheets and trend logs should be provided to the CA for inclusion in the Commissioning Record Book.

E. Special TAB Documentation Requirements. The TAB will compile and submit the following with other documentation that may be specified elsewhere in the *Specifications.*

1. Final report containing an explanation of the methodology, assumptions, test conditions and the results in a clear format with designations of all uncommon abbreviations and column headings.
2. The TAB shall mark on the drawings where all traverse and other critical measurements were taken and cross reference the location in the TAB report.

F. Review and Approvals. Review of the commissioning related sections of the O&M manuals shall be made by the A/E and by the CA. Refer to Section 01810, Part 3.07 for details.

3.07 TRAINING OF OWNER PERSONNEL

A. The GC shall be responsible for training coordination and scheduling and ultimately to ensure that training is completed. Refer to Section 01810 for additional details.

B. The CA shall be responsible for overseeing and approving the content and adequacy of the training of Owner personnel for commissioned equipment. Refer to Section 01810 for additional details.

C. Mechanical Contractor. The mechanical contractor shall have the following training responsibilities:

1. Provide the CA with a training plan two weeks before the planned training according to the outline described in Section 01810, Part 3.08.
2. Provide designated Owner personnel with comprehensive orientation and training in the understanding of the systems and the operation and maintenance of each piece of HVAC equipment including, but not limited to air conditioning units, air handling units, fans, and controls, etc.
3. Training shall normally start with classroom sessions followed by hands-on training on each piece of equipment, which shall illustrate the various modes of operation, including startup, shutdown, fire/smoke alarm, power failure, etc.
4. During any demonstration, should the system fail to perform in accordance with the requirements of the O&M manual or sequence of operations, the system will be repaired or adjusted as necessary and the demonstration repeated.
5. The appropriate trade or manufacturer's representative shall provide the instructions on each major piece of equipment. This person may be the start-up technician for the piece of equipment, the installing contractor or manufacturer’s representative. Practical building operating expertise as well as in-depth knowledge of all modes of operation of the specific piece of equipment are required. More than one party may be required to execute the training.
6. The controls contractor shall attend sessions other than the controls training, as requested, to discuss the interaction of the controls system as it relates to the equipment being discussed.
7. The training sessions shall follow the outline in the Table of Contents of the operation and maintenance manual and illustrate whenever possible the use of the O&M manuals for reference.
8. Training shall include:

    a. Use of the printed installation, operation and maintenance instruction material included in the O&M manuals.
    b. A review of the written O&M instructions emphasizing safe and proper operating requirements, preventative maintenance, special tools needed, and spare parts inventory suggestions. The training shall include start-up, operation in all modes possible, shut-down, seasonal changeover and any emergency procedures.
    c. Discussion of relevant health and safety issues and concerns.
    d. Discussion of warranties and guarantees.
    e. Common troubleshooting problems and solutions.
    f. Explanatory information included in the O&M manuals and the location of all plans and manuals in the facility.

g. Discussion of any peculiarities of equipment installation or operation.
h. The format and training agenda in *The HVAC Commissioning Process, ASHRAE Guideline 1-1989R*, 1996 is a recommended reference.
i. Classroom sessions shall include the use of overhead projections, slides, video/audio-taped material as might be appropriate.

9. Hands-on training shall include start-up, operation in all modes possible, including manual, shut-down and any emergency procedures and preventative maintenance for all pieces of equipment.
10. The mechanical contractor shall fully explain and demonstrate the operation, function and overrides of any local packaged controls, not *controlled* by the central control system.
11. Training shall occur after functional testing is complete, unless approved otherwise by the Project Manager.
12. Duration of Training. The mechanical contractor shall provide training on each piece of equipment according to the following schedule.

Hours	System
2	Air Handling Units
1	Variable Speed Drives
2	Split System AC or Heat Pumps
1	Specialty Exhaust Fans
2	Controls

D. Controls Contractor. The controls contractor shall have the following training responsibilities:

1. Provide the CA with a training plan four weeks before the planned training according to the outline described in Section 01810, Part 3.08.
2. The controls contractor shall provide designated Owner personnel training on the control system in this facility. The intent is to clearly and completely instruct the Owner on all the capabilities of the control system.
3. Training manuals. The standard operating manual for the system and any special training manuals will be provided for each trainee, with three extra copies left for the O&M manuals. In addition, copies of the system technical manual will be demonstrated during training and three copies submitted with the O&M manuals. Manuals shall include detailed description of the subject matter for each session. The manuals will cover all control sequences and have a definitions section that fully describes all relevant words used in the manuals *and* in all software displays. Manuals will be approved by the CA. Copies of audiovisuals shall be delivered to the Owner.
4. The trainings will be tailored to the needs and skill-level of the trainees.
5. The trainers will be knowledgeable on the system and its use in buildings. For the on-site sessions, the most qualified trainer(s) will be used. The Owner shall approve the instructor prior to scheduling the training.
6. During any demonstration, should the system fail to perform in accordance with the requirements of the O&M manual or sequence of operations, the system will be repaired or adjusted as necessary and the demonstration repeated.
7. The controls contractor shall attend sessions other than the controls training, as requested, to discuss the interaction of the controls system as it relates to the equipment being discussed.
8. There shall be a training session, which shall consist of a total of 8 hours of actual training. Upon completion, each student, using appropriate documentation, should be able to perform elementary operations and describe

general hardware architecture and functionality of the systems.

a. This training shall be held on-site for a period of 8 hours. The portions of actual hands-on training shall take place after the completion of system commissioning. The session shall include instruction on:
   (1) Controls training. Upon completion, each student, using appropriate documentation, should be able to perform elementary operations and describe general hardware architecture and functionality of the system.
   (2) Specific hardware configuration of installed systems in this building and specific instruction for operating the installed system, including HVAC systems, lighting controls and any interface with security and communication systems.
   (3) Security levels, alarms, system start-up, shut-down, power outage and restart routines, changing setpoints and alarms and other typical changed parameters, overrides, freeze protection, manual operation of equipment, optional control strategies that can be considered, energy savings strategies and set points that if changed will adversely affect energy consumption, energy accounting, procedures for obtaining vendor assistance, etc.
   (4) All trending and monitoring features (values, change of state, totalization, etc.), including setting up, executing, downloading, viewing both tabular and graphically and printing trends. Trainees will actually set-up trends in the presence of the trainer.
   (5) Every screen shall be completely discussed, allowing time for questions.
   (6) Use of keypad or plug-in laptop computer at the zone level, if applicable.
   (7) Use of remote access to the system via phone lines or networks.
   (8) Graphics generation.
   (9) Point database entry and modifications.
   (10) Understanding DDC field panel operating programming (when applicable).

E. TAB The TAB contractor shall have the following training responsibilities:

1. TAB shall meet for 4 hours with facility staff after completion of TAB and instruct them on the following:

   a. Go over the final TAB report, explaining the layout and meanings of each data type.
   b. Discuss any outstanding deficient items in control, ducting or design that may affect the proper delivery of air or water.
   c. Identify and discuss any duct runs, diffusers, coils, and fans that are close to or are not meeting their design capacity.
   d. Discuss any temporary settings and steps to finalize them for any areas that are not finished.
   e. Other salient information that may be useful for facility operations, relative to TAB.

3.08 DEFERRED TESTING

A. Refer to Section 01810, Part 3.09 for requirements of deferred testing.

3.09 WRITTEN WORK PRODUCTS

A. Written work products of Contractors will consist of the start-up and initial checkout plan described in Section 01810 and the filled out start-up, initial checkout and prefunctional checklists.

END OF SECTION 15270

SECTION 15280
MECHANICAL TESTING REQUIREMENTS

PART 1 – GENERAL

1.01 INCLUDED SYSTEMS AND EQUIPMENT

A. The following is a list of the equipment and system test requirements included in this section:

1. Packaged air handling units – including fans, power exhausters, economizers, dampers, UVC lights, variable speed drives, heaters, humidifiers, CO_2 sensors, and controls.
2. Temperature Control System
3. Exhaust fans
4. Split system heat pump – including fans, dampers, UVC lights, variable speed drives, heaters, humidifiers, CO_2 sensors, and controls.
5. Test and balance (TAB) work

1.02 DESCRIPTION

A. This section specifies the functional testing requirements for Division 15 systems and equipment. From these requirements, the Commissioning Authority (CA) shall develop step-by-step procedures to be executed by the Subs or the Commissioning Authority. The general functional testing process, requirements and test method definitions are described in Section 01810. The test requirements for each piece of equipment or system contain the following:

1. The contractors responsible to execute the tests, under the direction of the CA.
2. A list of the integral components being tested.
3. Prefunctional checklists associated with the components.
4. Functions and modes to be tested.
5. Required conditions of the test for each mode.
6. Special procedures.
7. Required methods of testing.
8. Required monitoring.
9. Acceptance criteria.
10. Sampling strategies allowed.

1.03 PREREQUISITES

The following applicable generic prerequisite checklist items shall be listed on each written functional test form and be completed prior to functional testing.

1. All related equipment has been started up and start-up reports and prefunctional checklists submitted and approved ready for functional testing. Sample prefunctional checklists can be found in Section 01813. These are samples and for reference only. Final prefunctional checklists will be provided as part of the Construction Phase Commissioning Plan.
2. All control system functions for this and all interlocking systems are programmed and operable per contract documents, including final setpoints and schedules with debugging, loop tuning and sensor calibrations completed.

_____ _____
Controls Contractor Signature or Verbal Date

3. Piping system flushing complete and required report approved.
4. Test and balance (TAB) complete and approved for the hydronic system.
5. All A/E punchlist items for this equipment corrected.
6. These functional test procedures reviewed and approved by installing contractor.
7. Safeties and operating ranges reviewed by the CA.
8. Test requirements and sequences of operation attached.
9. Schedules and setpoints attached.
10. False loading equipment, system and procedures ready.
11. Sufficient clearance around equipment for servicing.
12. Record of all values for pre-test setpoints changed to accommodate testing has been made and a check box provided to verify return to original values (control parameters, limits, delays, lockouts, schedules, etc.).
13. Other miscellaneous checks of the prefunctinal checklist and start-up reports completed successfully.

1.04 TEST METHODS

A. MANUAL

1. Manual testing involves using hand-held instruments, immediate control system readouts or direct observation to verify performance of a system.

B. MONITORING

1. Monitoring is a method of testing as a stand-alone method or to augment manual testing.
2. All points listed in the required monitoring section of the test requirements which are control system monitored points shall be trended by the controls contractor. At the option of the CA, some control system monitoring may be replaced with datalogger monitoring. At the CA's request, the controls contractor shall trend up to 20% more points than listed herein at no extra charge.
3. Hard copies of monitored data must be in columnar format with time down the left column and at least 5 columns of point values on the same page.
4. Graphical output is desirable, and will be required for all output, if the system can produce it.

PART 2 – PRODUCTS

NOT LISTED

PART 3 – EXECUTION

3.01 TEMPERATURE CONTROL SYSTEM

A. Parties Responsible to Execute Functional Test

1. Controls contractor: operate the controls to activate the equipment.
2. CA: to witness, direct and document testing, Mechanical Contractor assist in testing sequences.

B. Integral Components or Related Equipment Being Tested

1. Building Automation System, if any
2. All prefunctional checklists of controlled equipment

C. Prerequisites The applicable prerequisite checklist items listed in the beginning of Section 15997 shall be listed on each functional test form and checked off prior to functional testing. The commissioning agent will also spot-check misc. items and calibrations on the prefunctional checklists previously completed by the installer, before the beginning of functional testing.

D. A significant part of the temperature control system functional testing requirements is the successful completion of the functional tests of equipment the temperature control system controls or interlocks with. Uncompleted equipment functional tests or outstanding deficiencies in those tests lend the required temperature control system functional testing incomplete.

E. Integral or stand-alone controls are functionally tested with the equipment they are attached to, including any interlocks with other equipment or systems and thus are not covered under the temperature control system testing requirements, except for any integrated functions or interlocks listed below.

F. The following testing requirements are in addition to and do not replace any testing requirements elsewhere in the specifications.

Function / Mode	Test Method Manual (demonstration), Monitoring, Either or Both
MISC. FUNCTIONS	
1. All specified functions and features are set up, debugged and fully operable	Verbal discussion of features
2. Power failure and battery backup and power-up restart functions	Demonstration
3. Specified trending and graphing features demonstration	See equipment trends
4. Global commands features	Demonstration
5. Security and access codes	Demonstration
6. Occupant over-rides (manual, telephone, key, keypad, etc.)	Demonstration
7. O&M schedules and alarms	Demonstration
8. Scheduling features fully functional and setup, including weekends and holidays	Observation in terminal screens or printouts
9. Date and time setting in central computer and verify field panels read the same time	Demonstration
10. Included features not specified to be setup are installed (list)	Demonstration
11. Demonstrate functionality of field panels using local operator keypads and local ports (plug-ins)	Demonstration of 100% of panels and 10% of ports
12. All graphic screens and value readouts completed	Demonstration
13. Setpoint changing features and functions	Done during equipment testing
14. Communications to remote sites	Demonstration
15. Sensor calibrations	Sampled during equipment tests
16. “After hours” use tracking and billing	
17. Final as-builts or redlines (per spec) control drawings, final points list, program code, setpoints, schedules, warranties, etc. per specs, submitted for O&Ms.	Observation
18. Verify that points that are monitored only, having no control function, are checked for proper reporting.	Observation
INTEGRATED TESTS	

Function / Mode	Test Method Manual (demonstration), Monitoring, Either or Both
19. Fire alarm interlocks and response	Demonstration
20. Duty cycling (if specified)	Monitoring
21. Demand limiting (including over-ride of limiting)	Monitoring
22. Sequential staging ON of equipment	Either
23. Optimum start-stop functions	Monitoring
24. All control strategies and sequences not tested during controlled equipment testing	Either

G. Additional Required Monitoring

1. Besides the trending and monitoring required with the functional testing of equipment, all points listed below which are control system monitored points shall be trended by the controls contractor. Refer to the Monitoring section at the beginning of Section 15997 for additional monitoring details.

Point	Time Step (min.)	Minimum Time Period of Trend	Hard Copy? (Y/N)	ASCII File? (Y/N)	Function Being Tested
Misc. equipment current or status for duty cycling and demand limiting	5	5 days incl. weekend	Y	Y	20, 21
Equipment or building kW or current for demand limiting	5	5 days incl. weekend	Y	Y	20, 21
Optimum start/stop equip.	5	5 days incl. weekend	Y	Y	23

H. Acceptance Criteria (referenced by function or mode ID)

1. For the conditions, sequences and modes tested, the integral components and related equipment respond to changing conditions and parameters appropriately as expected, as specified and according to acceptable operating practice.

I. Sampling Strategy for Identical Units

1. Sample 10% of the field panels for procedure 9, and 10% of the local ports for procedure 11. If 10% fail, test another 10%. If 10% of those fail, test all remaining units at the contractor's expense.

3.02 EXHAUST FANS

A. Parties Responsible to Execute Functional Test

1. Controls contractor: operate the controls to activate the equipment, if BAS controlled.
2. CA: to witness, direct and document testing.

B. Integral Components or Related Equipment Being Tested

1. Exhaust fans

C. Prerequisites The applicable prerequisite checklist items listed in the beginning of Section 15997 shall be listed on each functional test form and checked off prior to functional testing. The commissioning agent will also spot-check misc. items and calibrations on the prefunctional checklists previously completed by the installer, before the beginning of functional testing.

D. Functions / Modes Required To Be Tested, Test Methods and Seasonal Test Requirements

1. The following testing requirements are in addition to and do not replace any testing requirements elsewhere in this Division.

Function / Mode	Test Method Manual, Monitoring, Either or Both	Required Seasonal Test
General 1. Test each sequence in the sequence of operations, and other significant modes and sequences not mentioned; including startup, shutdown, unoccupied & manual modes and power failure. Test functionality of this piece of equipment or system in all control strategies or interlocks that it is associated with.	Manual	
In addition to, or as part of (1) above, the following modes or tests are required:		
2. Verify schedules and setpoints to be reasonable and appropriate		
3. Function at fire alarm (off, depressurization, etc.)	Manual	
4. Interlocks to building pressurization control	Manual	
5. Speed controls	Either	
6. Check TAB report record of sound power level tests and space pressures and compare to specifications	Review	
7. Sensor calibration checks on any controlling temperature or pressure sensor	Manual	

E. Acceptance Criteria (referenced by function or mode ID)

1. For the conditions, sequences and modes tested, the fans, integral components and related equipment respond to changing conditions and parameters appropriately as expected, as specified and according to acceptable operating practice.

F. Sampling Strategy for Identical

1. No sampling, test all.

3.03 PACKAGED DX AIR CONDITIONING OR HEAT PUMP UNITS

A. Parties Responsible to Execute Functional Test

1. Controls contractor: operate the controls to activate the equipment.
2. CA: to witness, direct and document testing. Mechanical contractor or equipment vendor to assist in testing sequence as needed.

B. Integral Components or Related Equipment Being Tested

1. Unit (fans, coils, condenser, compressors).
2. Power exhausters
3. Economizers

C. Prerequisites The applicable prerequisite checklist items listed in the beginning of Section 15997 shall be listed on each functional test form and checked off prior to functional testing. The commissioning agent will also spot-check misc. items and calibrations on the prefunctional checklists previously completed by the installer, before the beginning of functional testing.

D. Functions / Modes Required To Be Tested, Test Methods and Seasonal Test Requirements

1. The following testing requirements are in addition to and do not replace any testing requirements elsewhere in this Division.

Function / Mode	Test Method Manual, Monitoring, Either or Both[3]	Required Seasonal Test[1]
General 1. Test each sequence in the sequence of operations, and other significant modes and sequences not mentioned; including startup, shutdown, unoccupied & manual modes and power failure. Test functionality of this piece of equipment or system in all control strategies or interlocks that it is associated with.	Manual	
In addition to, or as part of (1) above, the following modes or tests are required:		
2. Supply air, and reset temp. control functions	Both	
3. Compressor unloading & condenser fan staging for head pressure control	Both	
4. Demand limiting control (if applicable)	Monitoring	Cooling
5. Duct static pressure (SP) control	Both	
6. Return or exhaust fan tracking and building SP	Monitoring	
7. Damper interlocks and correct modulation in all modes, including fire and smoke dampers	Manual	
8. Verification of minimum OSA quantity	Either	[2]
9. Verification of Economizer and Power Exhauster operation	Either	[2]
10. Verify TAB reported SF cfm with control system reading	Manual	[2]
11. All alarms (low limits, high static, freezes at, etc.)	Manual	
12. Sensor and actuator calibration checks on: duct static pressure sensor on units >10 tons, SAT, MAT, OSAT, economizer and RA dampers and other random checks (EMS readout against hand-held calibrated instrument must be within 0.5°F for temps. or within a tolerance equal to 10% of static pressure setpoint, with an inclined manometer)	Manual	
13. Verify control strategies, schedules and setpoints to be reasonable and appropriate		

[1]Cooling season, Heating season or Both. “Design” means within 5°of season design (ASHRAE 2 1/2%), or 95% of loading design. A blank cell denotes no special seasonal test is required and that test can be executed during any season, if condition simulation is appropriate.

[2]Seasonal test not required if seasonal conditions can be adequately simulated.

E. Special Procedures (other equipment to test with, etc.; reference to function ID)

1. Reduced Testing for Smaller Units. For standard application AHU's less than 15 tons, the following modifications to the testing requirements apply: 1) either Manual or Monitoring will satisfy the verification requirement--where Both is listed, choose one. 2) Testing Modes 6, 8, 11, 13 and 16 is not required.

Point	Time Step (min.)	Minimum Time Period of Trend	Hard Copy? (Y/N)	ASCII File? (Y/N)	Function Being Tested
For each Unit being tested:					
RAT	5	5 days incl. weekend	Y	Y	1-3, 11
SAT	5	5 days incl. weekend	Y	Y	1-3
CC LAT	5	5 days incl. weekend	Y	Y	1-3
MAT	5	5 days incl. weekend	Y	Y	1, 3, 11
SF speed	5	5 days incl. weekend	Y	Y	1, 3-6
Duct SP	5	5 days incl. weekend	Y	Y	5, 6
OSAT	5	5 days incl. weekend	Y	Y	All
Indoor dry-bulb all zones	5	5 days incl. weekend	Y	Y	All
Compressor amps or stage	5	5 days incl. weekend	Y	Y	3
Condenser fan amps or stage	5	5 days incl. weekend	Y	Y	3

F. Acceptance Criteria

1. For the conditions, sequences and modes tested, the system, integral components and related equipment respond to varying loads and changing conditions and parameters appropriately as expected, as specified and according to acceptable operating practice.
2. RTU shall be able to maintain the SA temperature within 1.0F either side of the deadband of the current setpoint without excessive hunting.
3. RTU and controls shall control the duct static pressure so that it does not drift more than an amount equal to 10% of the setpoint value either side of the deadband without excessive hunting.

G. Sampling Strategy for Identical Units

1. No sampling, test all.

3.04 TEST AND BALANCE WORK (TAB)

A. Parties Responsible to Execute Functional Test

1. TAB contractor: perform checks using test instruments.
2. Controls contractor: operate the controls to activate the equipment.
3. CA: to witness, direct and document testing.

B. Integral Components or Related Equipment Being Tested

1. TAB air-side

C. Prerequisites The applicable prerequisite checklist items listed in the beginning of Section 15997 shall be listed on each functional test form and checked off prior to functional testing. The commissioning agent will also spot-check misc. items and calibrations on the prefunctional checklists previously completed by the installer, before the beginning of functional testing.

D. Purpose. The purpose of this test is to spot check the TAB work to verify that it was done in accordance with the contract documents and acceptable practice and that the TAB report is accurate.

E. The following tests and checks will be conducted. The following testing requirements are in addition to and do not replace any testing requirements elsewhere in this Division.

Test or Check	Test Method	Required Seasonal Test[3]
1. A random sample of up to 50 % the TAB report data shall be selected for verification (air velocity, air or water flow rate, pressure differential, electrical or sound measurement, etc.). The original TAB contractor will execute the checks, witnessed by the commissioning authority. The TAB contractor will use the same test instruments as used in the original TAB work. A failure[1] of more than 10% of the selected items of a given system[2] shall result in the failure of acceptance of the system TAB report and the TAB contractor shall be responsible to rebalance the system, provide a new system TAB report and repeat random verifications of the new TAB report. The random testing will include the verification of minimum outdoor air intake flows at minimum, maximum and intermediate total airflow rates for all of the air handlers. Other selected data to be verified will be made known upon day of testing.	Demonstration	
2. Verify that final settings of all valves, splitters, dampers and other adjustment devices have been permanently marked by the TAB Contractor.	Demonstration	
3. Verification that the air system is being controlled to the lowest possible static pressure while still meeting design loads, less diversity. This shall include a review of TAB methods, control setpoints established by TAB and a physical verification of at least one leg from fan to diffuser having all balancing dampers wide open and that during full cooling of all TUs taking off downstream of the static pressure sensor, the TU on the critical leg has its damper 90% or more open.	Demonstration	
4. Verification that the water system is being controlled to the lowest possible pressure while still meeting design loads, less diversity. This shall include a review of TAB methods, control setpoints established by TAB and a physical verification of at least one leg from the pump to the coil having all balancing valves wide open and that during full cooling the cooling coil valve of that leg is 90% or more open.	Demonstration	

[1]Failure of an item is defined as follows:
For air flow of supply and return: a deviation of more than 10% of instrument reading
For minimum outside air flow: 20% of instrument reading (30% for reading at intermediate

supply low for inlet vane or VFD OSA compensation system using linear proportional control)
For temperatures: a deviation of more than 1°F
For air and water pressures: a deviation of more than 10% of full scale of test instrument reading
For sound pressures: a deviation of more than 3 decibels. (Variations in background noise must be considered)

[2]Examples of a “system” are: the air distribution system served by one air handler or the hydronic chilled water supply system served by a chiller or the condenser water system. Systems can be defined smaller if inaccuracies in TAB work within the smaller defined system will have little or no impact on connected systems.

[3]Cooling season, Heating season or Both. “Design” means within 5°of season design (ASHRAE 2 1/2%), or 95% of loading design. A blank cell denotes no special seasonal test is required and that test can be executed during any season, if condition simulation is appropriate.

F. Special Procedures

1. None.

G. Required Monitoring

1. None.

H. Acceptance Criteria

1. Provided in footnote to test table above.

I. Sampling Strategy for Identical Units

1. Described in test table above.

END OF SECTION 15280

SECTION 15320
ELECTRICAL REQUIREMENTS FOR MECHANICAL EQUIPMENT

PART 1 – GENERAL

1.1 RELATED DOCUMENTS

A. Drawings and general provisions of Contract, including General and Supplementary Provisions and Division 1A General Requirements, apply to work of this section.

B. Related Sections: Separate electrical components and materials required for field installation and electrical connections are specified in Division 16.

1.2 SUMMARY

A. This section specifies the basic requirements for electrical components which are an integral part of packaged mechanical equipment. These components include, but are not limited to factory installed motors, starters, and disconnect switches furnished as an integral part of packaged mechanical equipment.

B. Specific electrical requirements (i.e. horsepower and electrical characteristics) for mechanical equipment are scheduled on the Drawings.

1.3 REFERENCES

A. NEMA Standards MG 1: Motors and Generators

B. NEMA Standards ICS 2: Industrial Control Devices, Controllers, and Assemblies.

C. NEMA Standard 250: Enclosures for Electrical Equipment

D. NEMA Standard KS 1: Enclosed Switches

E. National Electrical Code (NFPA 70).

1.4 SUBMITTALS

A. No separate submittal is required. Submit product data for motors, starters, and other electrical components with submittal data required for the equipment for which it serves, as required by the individual equipment specification sections.

1.5 QUALITY ASSURANCE

A. Electrical components and materials shall be UL labeled.

PART 2 – PRODUCTS

2.1 MOTORS

A. The following are basic requirements for simple or common motors. For special motors, more detailed and specific requirements are specified in the individual equipment specifications.

1. Torque characteristics shall be sufficient to satisfactorily accelerate the driven loads.

2. Motor sizes shall be large enough so that the driven load will not require the motor to operate in the service factor range.

3. Temperature Rating: Rated for 40 deg. C environment with maximum 50 deg. C temperature rise for continuous duty at full load (Class A Insulation).

4. Starting capability: frequency of starts as indicated by automatic control system, and not less than 5 evenly time spaced starts per hour for manually controlled motors.

5. Service Factor: L15 for poly-phase motors and 1.35 for single phase motors.

6. Motor construction: NEMA Standard MG 1, general purpose, continuous duty, Design "B", except "C" where required for high starting torque.
   a. Frames: NEMA Standard No. 48 or 54; use driven equipment manufacturer's standards to suit specific application.
   b. Bearing:
      1) ball or roller bearings with inner and outer shaft seals;
      2) re-greaseable, except permanently sealed where motor is normally inaccessible for regular maintenance;
      3) designed to resist thrust loading where belt drives or other drives produce lateral or axial thrust in motor;
      4) for fractional horsepower, light duty motors, sleeve type bearings are permitted.
   c. Enclosure Type:
      1) open drip-proof motors for indoor use where satisfactorily housed or remotely located during operation;
      2) guarded drip-proof motors where exposed to contact by employees or building occupants;
      3) weather protected Type 1 for outdoor use, Type II where not housed;
   d. Overload protection: built-in thermal overload protection and, where indicated, internal sensing device suitable for signaling and stopping motor at starter.
   e. Noise rating: "Quiet" rating on motors located in occupied spaces of building.
   f. Nameplate: indicate the full identification of manufacturer, ratings, characteristics, construction, special features and similar information.

2.2 STARTERS, ELECTRICAL DEVICES, AND WIRING

A. Motor Starter Characteristics:

1. Enclosures: NEMA 1, general purpose enclosures with padlock ears, except in wet locations shall be NEMA 3R with conduit hubs, or units in hazardous locations which shall have NEC proper class and division.

2. Type and size of starter shall be as recommended by motor manufacturer and the driven equipment manufacturer for applicable protection and start-up condition.

B. Manual switches shall have:

1. Pilot lights and extra positions for multi-speed motors.

2. Overload protection: melting alloy type thermal overload relays.

C. Magnetic Starters:

1. Maintained contact push buttons and pilot lights, properly arranged for single speed or multi-speed operation as indicated.

2. Trip-free thermal overload relays, each phase.

3. Interlocks and similar devices as required for coordination with control requirements of Division-15 Controls sections.

4. Built-in 120 volts control circuit transformer, fused from line side, where service exceeds 240 volts.

5. Externally operated manual reset.

6. Under-voltage release or protection.

D. Motor connections:

1. Flexible conduit, except where plug-in electrical cords are specifically indicated.

2.3 CAPACITORS

A. Features:

1. Individual unit cells

2. All welded steel housing

3. Each capacitor internally fused

4. Non-flammable synthetic liquid impregnant

5. Craft tissue insulation

6. Aluminum foil electrodes

7. KVAR size shall be as required to correct motor power factor to 90 percent or better and shall be installed on all motors 1 horsepower and larger, that have an uncorrected power factor of less than 85 percent at rated load.

B. Disconnect Switches:

1. Fusible switches: fused, each phase; general duty; horsepower rated; non-teasible quick-make, quick-break mechanism; dead front line side shield; solderless lugs suitable for copper or aluminum conductors; spring reinforced fuse clips; electro silver plated current carrying parts; hinged doors; operating lever arranged for locking in the "OPEN" position; arc quenchers; capacity and characteristics as indicated.

2. Non-fusible switches: for equipment 2 horsepower and smaller, shall be horsepower rated; toggle switch type; quantity of poles and voltage rating as indicated. For equipment larger than 2 horsepower, switches shall be the same as fusible type.

PART 3 – EXECUTION (NOT APPLICABLE)

END OF SECTION 15320

SECTION 16100
BASIC MATERIALS AND METHODS

PART 1 -- GENERAL

1.1 THE REQUIREMENT

A. The CONTRACTOR shall furnish all tools, equipment, materials, and supplies and shall perform all labor required to complete the work as indicated on the Drawings and specified herein.

B. This section covers the work necessary to furnish and install the materials specified hereinafter.

1.2 RELATED WORK SPECIFIED ELSEWHERE

A. The following Sections and Divisions applies to the WORK of this Section. Other Sections and Divisions, not referenced below, shall apply to the extent required for proper performance of this WORK.

1. Division 02 Site Work.

2. Division 03 Concrete.

3. Division 09 Finishes.

4. Division 11 Equipment.

5. Division 17 Instrumentation and Control.

6. Work Specified Under Other Divisions

a. All concrete work required for encasement, installation, or construction of the work specified in the various Sections of Division 16 is included as a part of the work hereunder, and shall be 2500-psi concrete conforming to the applicable requirements of Section 03300, "Cast-in-Place Concrete"; provided, that the following exceptions and supplementary requirements shall apply:

1. Consolidation of encasement concrete around duct banks shall be by hand puddling. No mechanical vibration shall be used.

2. A workability admixture shall be used in encasement concrete, which shall be a hydroxylated carboxylic acid type in liquid form. Admixtures containing calcium chloride shall not be used.

3. Concrete for encasement of conduit or duct banks shall contain an integral red-oxide coloring pigment in the proportion of 8 pounds per cubic yard of concrete.

1.3 REFERENCE CODES AND STANDARDS

A. All work specified herein shall conform to or exceed the applicable requirements of the referenced portions of the following publications to the extent that the provisions thereof are not in conflict with other provisions of these specifications.

1. Codes and Standards:

LAEC	City of Los Angeles Electrical Code, latest adopted edition.

2. Government Standards:

FS W-C-596H/GEN	Connector, Plug, Receptacle and Cable Outlet, Electrical Power.
FS W-S-896G	Switches, Toggle (Toggle and Lode), Flush Mounted (ac).

3. Commercial Standards:

ANSI B16.5	Pipe Flanges and Flanged Fittings, Steel, Nickel Alloy, and Other Special Alloys.
ANSI C80.1	Electrical Rigid Steel Conduit (ERSC)
ANSI Z55.1	Gray Finishes for Industrial Apparatus and Equipment.
ANSI/UL 467	Grounding and Bonding Equipment, Safety Standard For.
NEMA WD-1-1.10	General Requirements for Wiring Devices.
NEMA PB-1	Panelboards.
NEMA KS-1	Enclosed Switches.
NEMA VE-1	Ventilated Cable Tray.
ICEA S-61-402	Thermoplastic - Insulated Wire and Cable for the Transmission and Distribution of Electrical Energy.
ICEA S-19	Rubber - Insulated Wire and Cable for the Transmission and Distribution of Electrical Energy.
ICEA S-95-658/WC70	Power Cables Rated 2000 Volts or Less.
ICEA S-96-659/WC71	Nonshielded Cables Rated 2,001-5,000 V.
ICEA S-93-639/WC74	5-46 kV Shielded Power Cable.
UL 6	Electrical Rigid Metal Conduit - Steel
UL 489	Molded Case Circuit Breakers.
UL 943	Ground Fault Circuit Interrupters.

B. All equipment furnished by the CONTRACTOR shall be listed by and shall bear the label of Underwriters' Laboratories, Incorporated, (UL) or of an independent testing laboratory acceptable to the CITY's Department of Building and Safety.

C. The construction and installation of all electrical equipment and materials shall comply with all applicable provisions of the Cal/ OSHA Safety Orders (Title 8, CCR), State Building Standards, and applicable local codes and regulations.

1.4 CONTRACTOR SUBMITTALS

A. Submittals shall be made in accordance with the requirements of Section 16020 Municipal Facilities General Electrical Requirements.

1.5 QUALITY ASSURANCE

A. Quality assurance shall be in accordance with all applicable requirements of Section 16020 Municipal Facilities General Electrical Requirements.

PART 2 -- PRODUCTS

2.1 SERVICE ENTRANCE

A. Provide labor and furnish equipment as required by the electric utility which will provide service to the facility. All such materials and work shall meet the requirements of the utility company.

B. Provide temporary service for construction.

2.2 OUTLET AND DEVICE BOXES

A. General: Provide boxes not less than 2-inches deep, unless shallower boxes are required by structural conditions and are specifically accepted by the ENGINEER. Do not use box extensions to provide wiring space required by the NEC. For hollow masonry construction, provide boxes of sufficient depth so that conduit knockouts or hubs are in the masonry void space.

B. Sheet Steel (SS) Boxes: Provide zinc- or cadmium-plated boxes of the one-piece drawn type. Install 4-inch minimum octagonal boxes for ceiling outlets, except where smaller boxes are required for the particular fixture being installed. Use concrete type boxes in poured concrete slabs. Provide 2-inch by 4-inch minimum boxes for switches and receptacles. Provide plaster rings where required.

C. Cast Steel (CS) Boxes: Provide boxes of cast ferrous metal with gasketed, watertight, cast ferrous metal covers and stainless steel screws. Provide boxes with threaded conduit hubs and cast mounting lugs where lugs are required. Use Crouse-Hinds or Appleton Type FS or FD boxes, or equal.

D. Cast Aluminum (CA) Boxes: Provide boxes of cast, copper-free aluminum with gasketed, watertight, cast copper-free aluminum covers and stainless steel screws. Provide boxes with threaded conduit hubs and cast mounting lugs where lugs are required. Use Crouse-Hinds or Appleton Type FS or FD boxes, or equal.

E. Nonmetallic (NM) Boxes: Provide fiberglass boxes with gasketed, watertight covers and stainless steel screws. Provide boxes with conduit hubs and any required mounting lugs. Use Crouse-Hinds, Stahlin, or equal.

F. Provide a box suitable for the conditions encountered at each outlet in the wiring or raceway system and sized in accordance with the LAEC. Use the listed types unless otherwise indicated or accepted.

1. Types to be provided, Steel Raceway System:

Locations	Box Type
Exterior Locations, with:	
Exposed Raceways	316 Stainless steel (NEMA 4X)
Concealed Raceways	316 Stainless steel (NEMA 4X)
Concrete Encased Raceways	316 Stainless steel (NEMA 4X)
Interior Dry Locations, with:	
Exposed Rigid Conduit	Sheet metal
Exposed EMT	Sheet steel
Concealed Raceways	Sheet steel
Concrete Encased Raceways	Cast steel
Lighting Circuits, Ceiling Portion	Sheet steel
Interior Wet Locations, with:	
Exposed Raceways	316 Stainless steel (NEMA 4X)
Concealed Raceways	Cast steel
Concrete Encased Raceways	Cast steel
Lighting Circuits, Ceiling Portion	Sheet steel

2. Types to be Provided, Nonmetallic Raceway System:

Locations	Box Type
Concealed Raceways	Nonmetallic
Concrete Encased Raceways	Precast concrete

G. Device Plates:

1. Types to be Provided:

Locations	Plate Type
All Interior	Plastic

WP Designation	Weatherproof
Flush Mounted Boxes	Plastic
Surface Mounted Cast Metal Boxes	Plastic
Surface Mounted Sheet Metal Boxes	Plastic

2.3 JUNCTION AND PULL BOXES

A. Utilize NEMA 4X 316 stainless steel or fiberglass UV-rated watertight enclosures for outdoor or wet and corrosive locations and where subscript WP is indicated at the box location on the Drawings. Fiberglass enclosures may be used only with the approval of the ENGINEER.

B. Where outlet boxes are used as junction or pull boxes, use materials as specified under article 2.2, OUTLET AND DEVICE BOXES.

C. Where larger sheet steel boxes are required, utilize boxes of code-gauge, galvanized steel with full-access screw covers mounted with corrosion-resistant stainless steel machine screws.

D. Where larger cast metal boxes are required, use neoprene gasketed, watertight boxes with hinged, cast metal full-access covers, stainless steel cover hardware, and drilled and tapped conduit entrances. Use Crouse-Hinds Series W, O.Z./Gedney Series Y boxes, or equal. For below grade conduit, use Crouse-Hinds Type WJBF, O.Z./Gedney Series YR, or equal, minimum size 8-inches by 8-inches by 6-inches. For hazardous areas, use boxes applicable for the location and hazardous atmosphere present.

E. Where larger nonmetallic boxes are required, they shall be gasketed, watertight, corrosive resistant, and have a hinged, full-access screw cover. The hinge and machine screws shall be stainless steel. The box and cover shall be of high impact strength fiberglass-reinforced polyester material with stability to high heat. The boxes shall have conduit hubs and any required mounting lugs. The minimum size shall be 7-inches by 10-inches by 6-1/2-inches deep. Use Crouse-Hinds, or equal, Type NJB boxes.

F. Use concrete boxes of reinforced, precast concrete, 10-inches by 17-inches minimum inside dimensions, Brooks Products, Inc., No. 3-1/2T, Jensen Precast HT1017, or equal. Mark cast iron cover as per CITY standards. Boxes shall be inspected and approved by the CITY prior to site delivery.

G. Use special boxes where indicated on the Drawings.

2.4 TERMINAL JUNCTION BOXES (TJB)

A. Provide hinged-cover terminal junction boxes of the required type and size where indicated. Utilize NEMA 12 enclosures for indoor dry locations. Utilize NEMA 4X 316 stainless steel watertight enclosures, as described under article 2.4, JUNCTION AND PULL BOXES, for outdoor or wet locations and where subscript WP is indicated at the box location on the Drawings. Provide terminal blocks with a separate connection point for each conductor entering or leaving the box. Provide 25 percent spare terminal points for CITY use following completion of installation. Paint interior surfaces with white enamel or lacquer.

2.5 WIRING DEVICES

A. Switches:

1. General Use Switches: Provide specification grade, totally-enclosed, ac type, quiet tumbler switches meeting NEMA WD 1 performance standards and Federal Specification W-S-896G, and capable of control of lamp loads. Use switches rated at 20 amps, 120/277 volts. Provide operating handles colored white. Switches shall have screw terminals.

2. Weatherproof Switches: Use switches mounted in a cast metal box with gasketed, weatherproof device plate.

B. Receptacles:

1. Single and Duplex: Provide specification grade receptacles meeting NEMA WD 1 performance standards and Federal Specification W-C-596H, and having a contact arrangement such that contact is made on two sides of each inserted blade without detent. Use two-pole, three-wire grounding type receptacles rated 15 amps, 125 volts, NEMA Configuration 5-15R.

   Acceptable Manufacturers:

   1. Crouse-Hinds;

   2. Hubbell;

   3. Pass & Seymour;

   4. Or equal.

2. Weatherproof Receptacles: Receptacles installed in wet or damp locations shall be listed weather-resistant type and mounted in an enclosure that is weatherproof whether or not the attachment plug cap is inserted. An outlet box hood shall be UL listed and identified as extra-duty.

3. Ground Fault Interrupter (GFI) Receptacles: Provide duplex specification grade GFI receptacles tripping at 5 milliamps; rated 15 amps, 120 volts, NEMA Configuration 5-15Rand capable of interrupting 1,000 amps without damage. Use units meeting NEMA WD 1, fitting standard sized outlet boxes, having No. 12 AWG copper TW insulated pigtails, having provision for testing, and white in color.

   Use standard model where ground fault protection is needed at an individual location. Use feed-thru model where ground fault protection is specified for "downstream" conventional receptacles. Provide receptacles accepting standard device plates.

   Acceptable Manufacturers:

   1. Crouse-Hinds;

   2. Hubbell;

   3. Pass & Seymour;

Or equal.

4. Special Purpose Receptacles: Provide receptacles of the type, rating, and number of poles indicated or required for the anticipated purpose.

C. Device Plates:

1. General:

a. Provide plates fitting closely and tightly to the box on which they are to be installed. On surface mounted boxes, provide plates which do not extend beyond the sides of the box unless the plates do not have sharp corners or edges.

b. Use plate material compatible with the box material so that galvanic corrosion of the plate and/or box does not occur.

2. Plastic (P) Plates: Provide specification grade device plates manufactured of 0.10-inch minimum thickness, noncombustible, thermosetting material. Provide white one-piece with oval-head metal mounting screws of a color matching that of the plate.

3. Metal (M) Plates: Provide specification grade, one-piece, 0.040-inch nominal minimal thickness, No. 430 satin finish stainless steel device plates with oval-head, matching mounting screws.

4. Engraved Plates: Where device titles are indicated, provide device plates engraved with the designated titles. Provide engraved letters, numbers, or characters 1/8-inch high with filler of black color.

5. Cast Metal (CM) Plates: Provide cast metal device plates of copper-free aluminum with gaskets and stainless steel screws with oval heads.

6. Weatherproof (WP) Plates:

a. Where weatherproof receptacles are designated, the receptacle shall be installed in the specified box with a gasketed, weatherproof, cast metal or stainless steel cover plate with individual cap over each receptacle opening and stainless steel mounting screws. Utilize plates with caps held tightly closed with stainless steel springs when receptacle is not in use.

Acceptable Manufacturers:

1. Crouse-Hinds;

2. Hubbell;

3. Pass & Seymour;

4. Or equal.

b. Where weatherproof switches are designated, the switch shall be installed in the specified box with a gasketed, weatherproof, cast metal cover plate incorporating an external operator for the internal switch and with stainless steel mounting screws.

Acceptable Manufacturers:

1. Crouse-Hinds;
2. Hubbell;
3. Pass & Seymour;
4. Or equal.

7. Raised Sheet Metal (SM) Plates: Provide 1/2-inch high zinc or cadmium-plated steel device plates designed for one-piece drawn type sheet steel boxes.

2.6 LIGHTING AND POWER DISTRIBUTION PANELBOARDS

A. General: Provide circuit breaker panelboards meeting standards established by UL, NEMA PB 1, and the NEC. Where used as service entrance equipment, provide panels UL labeled for that use. Furnish panels with fully rated short circuit current equipment rating. Series connected equipment ratings are not acceptable.

Provide panels rated for connection to an electric system having an available amperes rms symmetrical short circuit current as indicated on drawings or as required by electrical studies. Provide panelboards and circuit breakers suitable for use with 75 degrees C wire at full LAEC 75 degrees C ampacity.

B. Cabinets: Furnish boxes large enough to provide a minimum wiring gutter space on both sides and top and bottom of 4-inches by 4-inches minimum. Provide flush or surface mounted boxes as indicated manufactured with reinforced steel frame and code-gauge, hot-dip galvanized sheet steel. Utilize front trim the same size as the box for surface mounted panelboards and 3/4-inch larger all around than the box for flush mounted panelboards. Panel covers shall be installed with direct screw connections. Adjustable clamps shall not be used. Utilize fronts having doors with concealed hinges and flush type lock and catch device. Provide multipoint locking devices for all doors over 30-inches in height. Key all locks alike, and furnish two milled type keys with each lock. Furnish on door interior a metal directory frame with transparent plastic face and enclosed directory card. Furnish an engraved, laminated plastic nameplate screwed (no adhesives) to the cabinet exterior face indicating the panelboard designation, service voltage, and phases. Nameplates shall be white, engraved to a black core. Letter height shall be 1/4 inch.

C. Interiors:

1. Furnished factory assembled panelboard interiors complete with circuit breakers as shown. In addition, space for future circuit breakers shall be provided with easily removable front cover. Utilize panelboards with interiors designed so that circuit breakers can be replaced without disturbing adjacent circuit breakers or without removing the main bus.

2. Provide copper bus bars full sized throughout their length. Make complete provisions for mounting future circuit breakers throughout the full length of the bus. Provide all machining, drilling, or tapping required to add or change circuit breakers in the future. Bolt together and rigidly support bus bars and connection straps on molded insulators.

3. Furnish an insulated neutral bus bar rated the same as the phase bus bars and having at least one terminal screw for each branch circuit. Furnish a copper ground bus bar installed

on the panelboard frame, bonded to the box, and containing at least one terminal screw for each circuit. Provide solderless main lugs for main, neutral, and ground bus bars. Provide sub-feed or thru-feed lugs where indicated. Provide lugs and connection points on phase, neutral, and ground buses suitable for copper conductors.

D. Circuit Breakers:

1. Furnish indicating type molded circuit breakers providing ON/OFF and TRIPPED positions of the operating handle. Furnish thermal magnetic, quick-make, quick-break circuit breakers which are non-interchangeable in accordance with the LAEC. Do not use tandem or dual circuit breakers in normal single-pole spaces. Do not use single-pole circuit breakers with handle ties where multiple circuit breakers are indicated. Utilize multi-pole circuit breakers designed so that an overload on one pole automatically causes all poles to open. Provide circuit breakers meeting requirements of UL 489. Install bolt-on circuit breakers in all panelboards. Provide circuit breaker handle padlocking provisions where indicated or required.

2. Where ground fault interrupter (GFI) circuit breakers are indicated or required by the LAEC, provide a unit containing a conventional thermal magnetic trip and a ground fault sensor rated to trip the circuit breaker in approximately 0.025 second for a 5-milliampere ground fault (UL Class A sensitivity). Utilize a ground fault sensor having the same rating as the circuit breaker and having a push-to-test button.

E. Acceptable Manufacturers:

1. Eaton;

2. Schneider Electric;

3. Siemens;

4. Or equal.

2.7 CIRCUIT BREAKERS, INDIVIDUAL, 600 VOLTS AND LESS

A. Mount individual circuit breakers in NEMA 12, industrial use enclosure unless otherwise indicated. Provide NEMA 4X, 316 stainless steel raintight enclosure for circuit breakers mounted outdoors and wherever the subscript WP is indicated on the Drawings. Provide circuit breakers with handles that can be locked in the OFF position. Interlock enclosure and circuit breaker to prevent opening the cover with the circuit breaker in the ON position. Provide quick-make, quick-break, thermal magnetic circuit breakers of the indicating type showing ON/OFF and TRIPPED positions of the operating handle. Do not use single-pole circuit breakers with handle ties where multi-pole circuit breakers are indicated. Utilize multi-pole circuit breakers designed so that an overload on one pole automatically causes all poles to open. Provide circuit breakers meeting the requirements of UL 489 and having a minimum interrupting rating as indicated. Where circuit breakers are used as service entrance equipment, provide units UL labeled for that use. Provide circuit breakers with terminals suitable for use with 75 degrees C wire at full LAEC 75 degrees C ampacity.

2.8 FUSED SWITCHES, INDIVIDUAL, 600 VOLTS AND LESS

A. Mount individual fused switches in NEMA 12, industrial use enclosures unless otherwise indicated Provide fused switches that can be locked in the OFF position. Interlock enclosure and switch to

prevent opening the cover with the switch in the ON position. Provide fused switches which are quick-make, quick-break, motor rated, load-break, heavy-duty (HD) type having external marking clearly indicating ON and OFF positions. Provide fuses of the current ratings indicated and types specified herein. Utilize fuse mountings that reject Class H fuses and will accept only the current--limiting fuses specified. Provide fused switches meeting the requirements of NEMA KS 1 and UL listed for application to a system having an available short circuit current as indicated. Where fused switches are used as service entrance equipment, provide units UL labeled for that use. Provide switches suitable for use with 75 degrees C wire at full LAEC 75 degrees C ampacity.

2.9 NONFUSED SWITCHES, INDIVIDUAL, 600 VOLTS AND LESS

A. Mount individual switches in NEMA 12, industrial use enclosure unless otherwise indicated. Provide NEMA 4X, 316 stainless steel raintight enclosure for switches mounted outdoors and wherever the subscript WP is indicated on the Drawings. Provide switches that can be locked in the OFF position. Interlock enclosure and switches to prevent opening the cover with the switch in the ON position. Provide switches which are quick-make, quick-break, motor rated, load-break, heavy-duty (HD) type having external marking clearly indicating ON and OFF positions. Furnish switches meeting the requirements of NEMA KS 1. Provide switches with terminals suitable for use with 75 degrees C wire at full LAEC 75 degrees C ampacity.

2.10 FUSES, 600 VOLTS AND LESS

A. Provide a complete set of current-limiting fuses wherever fuses are indicated. Supply a set of six spare fuses of each type and each current rating installed. Utilize fuses that fit mountings specified with switches and which provide features rejecting Class H fuses. Provide the following types:

1. For motor and transformer circuits, 600 volts and less, 0 to 600 amps, UL Class RK-1 with time delay, Bussmann Type LPS-RK, Shawmut Type A6D-R, or equal.

2. For motor and transformer circuits, 250 volts and less, 0 to 600 amps, UL Class RK-1 with time delay, Bussmann Type LPN-RK, Shawmut Type A2D-R, or equal.

3. For feeder and service circuits, 600 volts and less, 0 to 600 amps, UL Class RK-1, Bussmann Type KTS-R, Shawmut Type A6K-R, or equal.

4. For feeder and service circuits, 250 volts and less, 0 to 600 amps, UL Class RK-1, Bussmann Type KTN-R, Shawmut Type A2K-R, or equal.

5. For feeder and service circuits, 600 volts and less, 601 to 6,000 amps, UL Class L, Bussmann Type KRP-C, Shawmut Type A4BY, or equal.

2.11 PUSHBUTTONS, INDICATING LIGHTS, AND SELECTOR SWITCHES

A. For non-hazardous, indoor, dry locations, including motor control centers, control panels, and individual stations, provide heavy-duty, oil tight type pushbuttons, LED indicating lights, selector switches, and stations for these devices.

B. For non-hazardous, outdoor, or normally wet locations, or where otherwise indicated, provide heavy-duty corrosion-resistant, watertight type pushbuttons, indicating lights, or selector switches mounted in NEMA 4X 316 stainless steel watertight enclosures. Provide special gasketing required to make complete station watertight.

C. Provide devices meeting the requirements of NEMA ICS 2, and having individual, extra large nameplates indicating their specific function. Provide pushbutton stations with laminated plastic nameplates indicating the drive they control. Provide contacts with NEMA designation rating A600. Install provisions for locking pushbuttons and selector switches in the OFF position wherever lockout provisions are indicated.

D. Utilize selector switches having standard operating levers. Make all LED indicating lights push-to-test type. Provide ON or START pushbuttons colored green. Provide OFF or STOP pushbuttons colored red**.**

2.12 TERMINAL BLOCKS 600 VOLTS AND LESS

A. Provide 600-volts terminal blocks for termination of all control circuits entering or leaving equipment, panels, or boxes. Provide screw clamp compression, dead front barrier type terminal blocks with current bar providing direct contact with wire between the compression screw and yoke. Provide yoke, current bar, and clamping screw constructed of high strength and high conductivity metal. Utilize yoke that guides all strands of wire into the terminal. Utilize current bar providing dependable vibration-proof connection. Supply terminals constructed to allow connection of wire without any special preparation other than stripping. Rail mount individual terminals to create a complete assembly and provide terminals constructed such that jumpers can be installed with no loss of space on terminal or rail.

B. Size all terminal block components to allow insertion of all necessary wire sizes and types. Supply terminal blocks with marking system allowing the use of preprinted or field-marked tags. Supply UL approved terminal blocks manufactured by Weidmuller, Ideal, or equal. Provide terminal blocks with 25 percent spare termination points for CITY use following completion of installation.

2.13 CONTROL RELAYS

A. Provide industrial control relays, NEMA Class A300 for 300 volts, or A600 for 600 volts, with field convertible contacts, and meeting the requirements of NEMA ICS 2.

B. Where time delay relays are specified or required, unless otherwise noted, provide industrial control relays with a timer attachment adjustable over the range specified on the Drawings.

C. Where latching (mechanically held) relays or motor thermal detector relays are specified, provide industrial control relays with mechanical latch attachment with unlatching coil and coil clearing contacts. Utilize an attachment allowing easy manual latching and unlatching.

2.14 RESET TIMERS

A. Provide synchronous-motor-driven reset timers with a solenoid-operated clutch and suitable for semi-flush, panel mounting. Utilize timers with time range indicated and 10-amp, 120-volts contacts. Provide Eagle Signal Reset timers, Automatic Timing and Controls Reset timers, or equal.

2.15 ELAPSED TIME METERS

A. Provide synchronous-motor-driven, elapsed time meters, 0 to 99,999.9 hours range, non-reset type, suitable for semi-flush, panel mounting. Provide Type 240, 2-1/2-inch Big Look unit, Eagle

Signal Elapsed Time unit, or equal.

2.16 MAGNETIC CONTACTORS

A. Provide contactors of the NEMA sizes indicated. Mount contactors in NEMA 12, dust-tight, drip-tight, industrial use enclosures unless otherwise indicated. Utilize contactors manufactured and rated in accordance with NEMA ICS 2.

2.17 MAGNETIC LIGHTING CONTACTORS

A. Provide mechanically held lighting contactors of the current ratings indicated. Mount contactors in NEMA 12, dust-tight, drip-tight, industrial use enclosures unless otherwise indicated. Provide coil-clearing contacts on mechanically-held units. Utilize contactors manufactured and rated in accordance with NEMA ICS 2.

2.18 DRY TYPE SMALL POWER TRANSFORMERS (600-VOLTS AND LESS PRIMARY)

Provide self-cooled, two-winding, dry type transformers of the ratings indicated and built in accordance with the latest IEEE, ANSI, and NEMA standards. Utilize units with manufacturer's standard insulation class and standard temperature rise. For ratings 3 to 25 kVA single-phase and 3 to 15 kVA 3-phase, provide units with core and coils completely enclosed in a non-ventilated, NEMA 3R weatherproof enclosure. Utilize encapsulated windings on single-phase units 0 to 25 kVA. On all transformers 15 kVA and larger provide units with at least four, 2-1/2 percent, full capacity voltage taps; two above and two below normal voltage rating.

A. Supply units where sound levels determined by tests in accordance with NEMA and ANSI standards do not exceed:

1. 40 decibels for 0 to 9 kVA.
2. 45 decibels for 10 to 50 kVA.
3. 50 decibels for 51 to 150 kVA.
4. 55 decibels for 151 to 300 kVA.
5. 60 decibels for 301 to 500 kVA.

B. For transformers 30 kVA and larger, equip units with integral vibration isolators completely isolating the core and coil assembly from the transformer enclosure. For smaller transformers, provide integral vibration isolators or install external vibration isolators which isolate the entire unit from the structure on which it is mounted.

Utilize only integral or external vibration isolators which are rated for the weight of the transformer and provide 99 percent isolation efficiency at the fundamental frequency of sound emitted by the transformer.

C. Acceptable Manufacturers:

1. Eaton;

2. Hammond Power Solutions;

3. Schneider Electric;

4. Or equal.

2.19 DRY TYPE, SHIELDED, ISOLATION TRANSFORMERS (600-VOLTS AND LESS PRIMARY)

A. General: Supply dry type transformers providing electrical isolation and noise suppression between the electrical supply system and the critical load. Supply transformers of the ratings and connections indicated, built in accordance with current IEEE, ANSI, NEMA, and UL standards in a general purpose indoor enclosure. Provide units having six 2-1/2 percent full capacity primary winding taps, three above and three below rated voltage. Provide units with a minimum 80 degrees C and maximum 150 degrees C temperature rise above ambient.

B. Isolation and Noise Suppression:

1. Provide units including core and coils having two foil type electrostatic shields, one located between the primary and secondary windings, and the other located between the core and the secondary winding. Provide a ground lead from each shield out into the unit enclosure.

2. Supply isolation transformers with electrical noise attenuation and other characteristics as follows:

Common mode attenuation	120 dB
Transverse mode attenuation	20 dB
Impedance	4.3
Reactance	Minimum 3 percent; Maximum 4.2
Regulation, no-load to percent full-load	1.2

Output distortion None added3.

Provide primary surge protection as follows:

Peak transient current	40,000 amps
10-microsecond rise time volts	2.9 kV

C. Additional Features Required:

1. Magnetic field strength around transformer less than 0.1-gauss at 1-1/2-feet.

2. Two thermal switches located in the center cove "hot spot" to provide two-stage (high and high-high alarm) thermal sensing. Each switch rated 5 amps, 120 volts, and having one

normally open and one normally closed contact.

D. Acceptable Manufacturers:

1. Eaton;

2. Hammond Power Solutions;

3. Schneider Electric;

4. Or equal.

2.20 LOW VOLTAGE SURGE PROTECTIVE EQUIPMENT

A. Provide secondary surge protective equipment consisting of a surge capacitor and surge arrestor combination located where indicated on the Drawings. Utilize components for all surge protective equipment covered by this Specification, designed and tested in accordance with ANSI/IEEE C62.11.

B. Provide a surge capacitor impregnated with non-pcb biodegradable dielectric fluid. Include an integral discharge resistor which will drain the residual voltage to 50 volts crest in less than 5 minutes after the unit has been disconnected from the circuit.

C. Provide an arrestor consisting of an assembly of high strength metal oxide valve elements enclosed in a high strength, corrosion-resistant, molded resin housing.

D. Provide a capacitor and arrestor having a mounting nipple, flat washer, and nut suitable for knockout mounting. Install capacitors and arrestors in NEMA 4X (stainless steel) enclosures.

2.21 PENETRATION SEALING SYSTEMS (FIRE STOPS) (NOT USED)

2.22 ELECTRIC VEHICAL PEDESTAL CHARGING STATION – Not Used

A General: Electrical vehicle (EV) standard single 40A, Level 2, and 75A Level 3 pedestal charging stations in NEMA 3R rated cabinet, designed for outdoor use.

B. Charging stations to provide the following:

1. Output cable: Single output cable extending to 18 feet, with cable organizer integral with pedestal. Standard EV connector complying with SAEJ1772.

2.. Pedestal Electrical supply: 240 VAC, 40A, 60 Hz (Level 2) or 480 VAC, 75A, 60 Hz (Level 3).

3. Charging power output: 208 to 240VAC, 30A -- DC, or 60 A DC.

4. Ground fault protection: Internal with auto reclosure.

5. Auto restart after ground fault or mains loss.

6. Authentication using RFID card.

7. Simple user interface: Front panel indicators or display showing power status, charge indicator, system fault indicator, general fault indicator.

8. Ambient operating temperature range: -20 deg F to 120 deg F.

9. Manufacturers: Level 2; General Electric EVSRN3, Schneider Electric EVLinkEV 230PSRR, or equal; Level 3: EFACEC Model QC45, Schneider Electric Level 3, or equal.

2.23 ENCLOSURE PAINT AND FINISH

A. All metallic enclosures shall be finished with a prime coat of rust inhibitor and painted as per ANSI No. 61 or as per the ENGINEER's instructions.

PART 3 -- EXECUTION

3.1 JUNCTION AND PULL BOXES

A. Where indicated on the Drawings, and where necessary to terminate, tap-off, or redirect multiple conduit runs, provide and install appropriately designed junction boxes. Furnish and install pull boxes where necessary in the raceway system to facilitate conductor installation. Provide pull boxes to limit conduit runs to less than 150-feet and to contain no more than the equivalent of three right-angle bends unless accepted by the ENGINEER.

1. Installation:

a. Make all boxes accessible. Do not install boxes in finished areas unless accepted by the ENGINEER. Mount all boxes plumb and level. Use flush mounted boxes with concealed conduits. Make edges of boxes flush with the final surface.

b. Mount boxes in a secure, substantial manner, supported independently of conduit by attachment to the building structure or a structural member. Fasten boxes with bolts and expansion shields on concrete or brick, toggle bolts on hollow masonry units, and machine screws or welded threaded studs on steelwork. Threaded studs driven in by a powder charge and provided with lock washers and nuts are acceptable in lieu of expansion shields. Boxes embedded in concrete or masonry need not be additionally supported. Utilize galvanized mounting hardware in industrial areas.

c. Install boxes for conduits under grade flush with finished grade in locations outside of paved areas, roadways, or walkways.

d. If adjacent structure is available, the box may be mounted on the structure surface just above finished grade in accessible but unobtrusive location. If it is found desirable to locate boxes in paved areas, roadways, or walkways, obtain ENGINEER's written approval and utilize boxes and covers suitable for the weights to which they may be subjected.

3.2 TERMINAL JUNCTION BOXES (TJB)

A. Install in accordance with all the requirements detailed under article 3.2, JUNCTION AND PULL BOXES above. Label each block and terminal with a permanently attached, non-destructible tag.

3.3 WIRING DEVICES

A. Switches: Mount switches at the heights indicated under article 3.1, OUTLET AND DEVICE BOXES. Mount switches for switch operation in the vertical position.

B. Device Plates:

1. Installation: Securely fasten device plates to switch or receptacle boxes or the wiring device contained therein. Install device plates used with flush mounted boxes with all four edges in continuous contact with the finished wall surfaces without the use of mats or similar materials. Plaster fillings will not be acceptable. Install device plates vertically or horizontally with an alignment tolerance of 1/16-inch. Do not use sectional type device plates.

3.4 LIGHTING AND DISTRIBUTION PANELBOARDS

A. Mount panelboards securely where indicated, plumb, in-line, and square with walls. Unless otherwise indicated, mount panelboard with top of its cabinet approximately 6-feet above the floor. Provide a typewritten circuit directory under a metal-framed transparent plastic cover inside each panelboard. Provide an engraved, laminated plastic nameplate on the outside of the panelboard showing the panelboard designation, voltage, and phases.

3.5 DRY TYPE TRANSFORMERS (600-VOLTS AND LESS PRIMARY)

A. Mount transformers approximately where indicated. Load any vibration isolators external to the unit properly and provide complete isolation with no direct transformer unit metal in contact with the mounting surface. Connect electrical circuits to transformers by means of moisture proof, flexible conduit in a manner that prevents transformer vibrations from being transmitted to the building or other equipment.

B. Ground neutrals and enclosures of all transformers and all moisture proof flexible conduit in accordance with applicable codes and as otherwise may be indicated. Connect voltage taps on all transformers to give as close as possible to rated output voltage under normal plant load conditions.

3.6 DRY TYPE, SHIELDED, ISOLATION TRANSFORMERS (600-VOLTS AND LESS PRIMARY)

A. Follow instructions for DRY TYPE TRANSFORMERS (600-VOLTS AND LESS PRIMARY) above. In addition, ground isolation shields to the unit enclosure with a conductor of the same material, and at least as big, as the shield ground lead provided with the unit.

END OF SECTION 16100

SECTION 16110
RACEWAYS

PART 1 -- GENERAL

1.1 THE REQUIREMENT

A. The CONTRACTOR shall furnish all tools, equipment, materials, and supplies and shall perform all labor required to complete the work as indicated on the Drawings and specified herein.

1.2 RELATED WORK SPECIFIED ELSEWHERE

A. The following Divisions and Sections applies to the WORK of this Section. Other Sections of the Specifications, not referenced below, shall also apply to the extent required for proper performance of this WORK.

1. Division 02 Site Work.

2. Division 03 Concrete.

3. Division 09 Finishes.

4. Division 11 Equipment.

5. Division 15 Mechanical.

6. Division 17 Instrumentation and Control.

B. Materials and equipment furnished and installed under Divisions 11 and 15 with raceway and electrical conductors furnished, installed, and connected under Division 16, Electrical.

1.3 REFERENCE CODES AND STANDARDS

A. All work specified herein shall conform to or exceed the applicable requirements of the referenced portions of the following publications to the extent that the provisions thereof are not in conflict with other provisions of these specifications.

B. Comply with the current provisions of the following Codes and Standards.

1. Codes and Standards:

LAEC	City of Los Angeles Electrical Code, latest adopted edition.

2. Commercial Standards:

ANSI C80.1	Electrical Rigid Steel Conduit (ERSC).
ANSI/NEMA FB 1	Fittings, Cast Metal Boxes, and Conduit Bodies for Conduit
ANSI/UL 467	Grounding and Bonding Equipment, Safety Standard For.

NEMA TC 2 Electrical Polyvinyl Chloride (PVC) Conduit

NEMA TC 3	Polyvinyl Chloride (PVC) Fittings
NEMA VE-1	Metal Cable Tray Systems.
UL 6	Electrical Rigid Metal Conduit - Steel

C. All equipment furnished by the CONTRACTOR shall be listed by and shall bear the label of Underwriters' Laboratories, Incorporated (UL), or of an independent testing laboratory acceptable to the Building and Safety Department of the City of Los Angeles.

D. The construction and installation of all electrical equipment and materials shall comply with all provisions of the CAL OSHA Safety orders Title 8 CCR, as applicable, State Building Standards, and applicable local codes and regulations.

1.4 CONTRACTOR SUBMITTALS

A. Submittals shall be made in accordance with the requirements of Section 16020 Municipal Facilities General Electrical Requirements.

B. The following submittals and specific information shall be provided.

1. Catalog cuts, bulletins, or brochures shall be submitted for mass produced non-custom material.

2. The CONTRACTOR shall furnish copies of the manufacturer’s certified test reports for the material being supplied to establish compliance with NEMA RN-1.

1.5 QUALITY ASSURANCE

A. Quality Assurance shall be in accordance with Section 16010 Municipal Facilities General Electrical Requirements.

PART 2 -- PRODUCTS

2.1 RIGID GALVANIZED STEEL CONDUIT

A. Use rigid steel conduit, including bushings, couplings, elbows, nipples, and other fittings,

galvanized by hot-dipping, and meeting the requirements of ANSI C80.1, ANSI/NEMA FB 1, UL, and the LAEC. Do not use setscrew type couplings, bushings, bends, nipples, and other fittings, unless approved by the ENGINEER or the INSPECTOR. Factory bends are not permitted unless approved by the ENGINEER or the INSPECTOR. Conduit bending radius shall not be less than the minimum cable bending radius of the cable to be installed. See NEC Section 300.34 for conductor bending radius.

2.2 PVC SCHEDULE 40 CONDUIT

A. Use rigid PVC Schedule 40 conduit, UL listed for concrete-encased, underground direct burial, concealed and direct sunlight exposed use, and UL listed and marked for use with conductors having 90 degrees C insulation. Use conduits, couplings, bushings, elbows, nipples, and other fittings meeting the requirements of NEMA TC 2 and TC 3, UL, NEC, and ASTM specified tests for the intended use. Use only conduit with a factory formed bell on one end. Conduit that requires the use of couplings for straight runs will not be acceptable.

2.3 PVC SCHEDULE 80 CONDUIT

A. Use rigid PVC conduit, Schedule 80, extra heavy wall, UL listed for concrete-encased, underground direct burial, and UL listed and marked for use with conductors having 90 degrees C insulation. Use conduit, couplings, bushings, elbows, nipples, and other fittings meeting the requirements of NEMA TC 2 and TC 3, UL, and LAEC. CONTRACTOR shall account for conduit wall thickness in determining appropriate conduit size. Schedule 80 conduit shall be used as indicated on the drawings. In general, this conduit is used in concrete encased or direct burial locations exposed to vehicular traffic.

2.4 PVC COATED RIGID GALVANIZED STEEL CONDUIT

A. Use PVC coated rigid steel conduit, galvanized inside and out. Prior to coating, the galvanized conduits and fittings shall be UL listed. The galvanized conduit shall have an exterior PVC coating of 40 mils nominal (+10 mils / -5 mils) bonded to the metal. The interior shall be coated with a urethane coating no more than 7 mils thick. Use PVC coated fittings with the same interior and exterior coating requirements. PVC coated fittings and sleeves shall be completely watertight to prevent moisture from penetrating the interior of the conduits and fittings. The PVC coating shall be resistant to ultra-violet rays when installed outdoors. The conduit and fittings shall meet all the requirements of NEMA RN-1.

2.5 FLEXIBLE METAL CONDUIT, LIQUID-TIGHT

A. Use UL listed liquid-tight flexible metal conduit consisting of galvanized steel flexible conduit covered with an extruded PVC jacket and terminated with nylon bushings or bushings with steel or malleable iron body and insulated throat and sealing O-ring. Provide external grounding connector and appropriately sized grounding conductor to assure ground continuity.

2.6 RACEWAY FITTINGS

A. Fittings for Rigid Steel.

1. Use insulated throat bushings of metal with integral plastic bushings rated for 105 degrees C.

2. For insulated throat bushings for rigid steel conduit, use Thomas & Betts Nylon Insulated Metallic Bushings, or O.Z. Gedney Type B, or equal.

3. Use Myers Scru-Tite, or equal hubs for rigid steel conduit.

4. Use conduit bodies for rigid steel conduit of metal and sized as required by the NEC. Use Appleton Form 35 threaded Unilets; Crouse-Hinds Mark 9 or Form 7 threaded condulets; Killark Series O Electrolets; or equal, for normal conduit bodies for rigid steel conduit. Where conduit bodies for rigid steel conduit are required to be approved for hazardous (classified) locations, use conduit bodies manufactured by Appleton, Crouse-Hinds, Killark, or equal.

5. Use only couplings for rigid steel conduit supplied by the conduit manufacturer.

6. Use Appleton Type EYF, EYM, or ESU; Crouse-Hinds Type EYS or EZS; Killark Type EY or EYS; or equal, 40% fill sealing fittings for rigid steel conduit. Where condensate may collect on top of a seal, provide a drain by using Appleton Type SF Crouse-Hinds Type EYD or EZD, or equal Drain Seal.

7. Use Appleton Type ECDB, Crouse-Hinds ECD, or equal drain fittings for rigid steel conduit.

8. Fittings for Liquid-Tight Flexible Metal Conduit: Use insulated throat connectors for liquid-

tight flexible metal conduit of metal with an integral plastic bushing rated for 105 degrees C, and of the long design type extending outside of the box or other device at least 2-inches. Use Thomas & Betts Super-Tite Nylon Insulated Connectors or equal.

9. Fittings in Hazardous Areas: In hazardous areas, use only fittings approved for the atmosphere involved.

10. Use cable sealing fittings forming a watertight nonslip connection to pass cords and cables into conduit. Size cable sealing fitting for the conductor OD. For conductors with OD's of 1/2-inch or less, provide a neoprene bushing where the conductor enters the connector. Use Crouse-Hinds CGBS, Appleton CG Series, or equal, cable 40% fill sealing fittings.

11. Coating thickness of PVC coated fittings shall be the same as that for PVC coated conduits.

2.7 PRECAST MAINTENANCE HOLES AND HANDHOLES

A. Install maintenance holes and handholes precast with 28-day, 3,000 psi minimum compressive strength concrete and designed for AASHTO H-20 loading. Minimum dimensions for maintenance holes and handholes are shown on the Drawings. Increase these as required by use of extension sections to accommodate the several raceway entrances at their required elevations.

B. Provide raceway entrances on all 4 sides. For raceways installed under this Contract, knockout panels or precast individual raceway openings may be used. On sides where no raceways are installed under this Contract, provide knockout panels for future raceway installation.

C. Utilize heavy-duty type frames and covers made of cast iron, as per CITY of Los Angeles standards, suitable for H-20 loading, and having machined bearing surfaces. Provide indented type covers, solid top design, with two drop handles each. On the upper side of each cover, cast or burned by welder, in integral letters not less than 2-inches high appropriate titles, ELECTRIC HV (for above 600 volts), ELECTRIC LV (for 600 volts and below), or TELEPHONE. Field stamp covers with manhole or handhole numbers indicated on the Drawings.

D. Provide heavy weight cable racks with adjustable arms and acceptable insulators for all cables in each maintenance hole. Set adjustable inserts in the concrete walls for the attachment of racks. Do not use bolts or studs embedded in concrete for attaching racks. Set racks and inserts on not greater than 3-foot centers around the entire inside perimeter of the maintenance hole, arranged so that all spare conduit ends are clear for future cable installation. Provide racks with a sufficient number of arms and insulators to accommodate cables for each conduit entering or leaving the maintenance hole, including spares.

E. Provide a pulling iron embedded in the concrete wall opposite each raceway entrance and one in the floor vertically below the center of the manhole or handhole cover. Utilize 3/4-inch round stock securely fastened to the overall steel reinforcement before concrete is poured.

F. Utilize maintenance hole and handhole hardware of steel, hot-dip galvanized after fabrication.

G. Acceptable Manufacturers:

1. Brooks Products;

2. Jensen Precast;

3. Oldcastle Precast;

4. Or equal.

H. All prefabricated maintenance holes shall be shop inspected before delivery to the site.

2.8 RACEWAY TAGS

A. Provide permanent, stainless steel markers with raceway designations, minimum 1/4-inch high lettering, pressure stamped, embossed, or engraved onto the tag. Tags relying on adhesives or taped-on markers are not acceptable. Attach tags to raceways with stainless steel wire.

2.9 WARNING TAPE

A. Provide heavy-gauge, yellow plastic tape of 6 -inch minimum width for use in trenches containing electric circuits. Utilize tape made of material resistant to corrosive soil. Use tape with printed warning that an electric circuit is located below the tape.

Acceptable Manufacturers:

1. Brady;
2. Marking Services Inc.;
3. Seton;
4. Or equal.

PART 3 -- EXECUTION

3.1 GENERAL

A. Provide raceway systems meeting or exceeding the requirements of the NEC.

3.2 PROTECTION DURING CONSTRUCTION

A. In addition to the provisions of the GENERAL REQUIREMENTS, and Section 16020 "Municipal Facilities General Electrical Requirements," prior to installation, store all products specified in this section in a dry location. Following installation, protect products from the effects of moisture, corrosion, and physical damage during construction. Keep openings in conduit and tubing capped with manufactured seals during construction.

3.3 MINIMUM RACEWAY SIZE

A. Use no circular raceway less than 3/4-inch.

3.4 REQUIRED RACEWAY TYPE FOR LOCATION AND INSTALLATION METHOD

A. Exterior, Exposed:

1. PVC coated rigid galvanized steel conduit.

B. Interior, Exposed:

1. Rigid galvanized steel conduit.
2. EMT for above-ceiling application.

C. Interior, Concealed (Not Embedded in Concrete):

1. Rigid galvanized steel conduit.

2. PVC Schedule 40 conduit.

D. Embedded in Concrete Walls or Floors:

1. PVC Schedule 40 conduit.

E. Underground, Direct Earth Burial:

1. PVC Schedule 40 conduit.

2. PVC Schedule 80 conduit. (For vehicular traffic areas)

F. Concrete Encased Raceways:

1. Rigid galvanized steel conduit.

2. PVC Schedule 40 conduit.

G. Under Concrete Floor Slabs:

1. PVC Schedule 40 conduit.

H. Final Connection to Certain Equipment:

1. Make final connection to motors, wall or ceiling mounted fans and unit heaters, dry type transformers, valves, local instrumentation, and other equipment where flexible connection is required to minimize vibration or where required to facilitate removal or adjustment of equipment, with 36-inch maximum length liquid-tight, PVC-jacketed, flexible steel conduit.

2. The flexible conduit shall be long enough to allow the item to which it is connected to be withdrawn or moved off its base. Use liquid-tight flexible metal conduit in outside areas, process areas exposed to moisture, and areas required to be oil free and dust-tight.

I. Special Locations:

1. Use PVC coated rigid galvanized steel conduit:

a. Where conduit changes from underground and/or concrete embedded to exposed.

b. Under equipment mounting pads.

c. In exterior light pole foundations.

J. Communication and Instrumentation Conduits:

1. Communication and instrumentation conduits shall be PVC coated rigid galvanized steel.

3.5 GENERAL INSTALLATION REQUIREMENTS FOR RACEWAYS

A. Location, Routing, and Grouping:

1. Conceal or expose raceways as indicated. Group raceways in same area together. Locate raceways at least 12-inches away from parallel runs of heated piping for other utility systems.

2. Run exposed raceways parallel or perpendicular to walls, structural members, or intersections of vertical planes to provide a neat appearance. Follow surface contours as much as possible.

3. Avoid obstruction of passageways. Run concealed raceways with a minimum of bends in the shortest practical distance considering the building construction and other systems.

4. In block walls, do not run raceways in the same horizontal course with reinforcing steel.

5. In outdoor, underground, or wet locations, use watertight couplings and connections in raceways. Install and equip boxes and fittings so as to prevent water from entering the raceway.

6. Paint all threads of galvanized conduits with UL approved zinc-rich paint or liquid galvanizing compound before assembling. Touch up after assembly to cover nicks or scars.

7. Do not notch or penetrate structural members for passage of raceways except with prior approval of the ENGINEER or the INSPECTOR.

8. Do not run raceways in equipment base foundations.

9. Locate above ground raceways concealed in poured concrete so that the minimum concrete covering is not less than 1-1/2-inches.

10. Except at raceway crossings, separate raceways in slabs not less than six times the raceway outside diameter.

11. Raceways installed under slab floors shall lie completely under the slab with no part of the horizontal run of the raceway embedded within the slab.

12. Install concealed, embedded, and buried raceways so that they emerge at right angles to the surface. Provide support during pouring of concrete to ensure that raceways remain in position.

13. Allow a minimum headroom of 7 feet for conduit passing over walkways.

14. Communication and instrumentation conduits crossing power circuits shall be separated from such circuits by the minimum distance stipulated by the IEEE standards.

B. Support:

1. Support raceways at intervals not exceeding LAEC requirements unless otherwise indicated. Support multiple raceways adjacent to each other by ceiling trapeze. Support individual raceways by wall brackets, strap hangers, or ceiling trapeze, fastened by toggle bolts on hollow masonry units, expansion shields on concrete or brick, and machine screws or welded thread studs on steelwork.

2. Threaded studs driven in by a powder charge shall not be accepted.

3. Support all raceways from building structural members only.

4. Do not use nails anywhere or wooden plugs inserted in concrete or masonry as a base for raceway or box fastenings. Do not weld raceways or pipe straps to steel structures. Do not use wire in lieu of straps or hangers.

C. Bends:

1. Make changes in direction of runs with symmetrical bends. Make bends and offsets of the longest practical radius. Do not heat metal raceways to facilitate bending.

2. Make bends in parallel or banked runs of raceways from the same center or centerline so that bends are parallel and of neat appearance. Make field bends in parallel runs.

3. For PVC conduits, use factory made elbows for all bends 30 degrees or larger. Use rigid steel elbows on all 90-degree bends in PVC conduits. Use acceptable heating methods for forming smaller bends.

4. Make no bends in flexible conduit that exceed 90 degrees or allowable bending radius of the cable to be installed or that significantly restricts the conduits flexibility.

D. Bushing and Insulating Sleeves:

1. Where metallic conduit enters metal equipment enclosures through conduit openings, install a bonding bushing on the end of each conduit. Install a bonding jumper from the bushing to any equipment ground bus or ground pad.

2. If neither exists, connect the jumper to a threaded bolt connection to the metallic enclosure.

3. Use manufacturer's standard insulating sleeves in all metallic conduits or insulated bushings terminating at an enclosure.

E. Expansion Joints: Provide suitable expansion fittings for raceways crossing expansion joints in structures or concrete slabs or provide other suitable means to compensate for expansion and contraction. Provide for the high rate of thermal expansion and contraction of PVC conduit by providing PVC expansion joints as recommended by the manufacturer and as required.

F. PVC Conduit: Solvent weld PVC conduit joints with solvent recommended by the conduit manufacturer. Follow manufacturer's solvent welding instructions and provide watertight joints. Use acceptable PVC terminal adapters when joining PVC conduit to metallic fittings. Use acceptable PVC female adapters when joining PVC conduit to rigid metal conduit.

G. PVC Coated Rigid Steel Conduit: Install in strict accordance with the manufacturer's instructions. Touch up any damage to the coating with conduit manufacturer acceptable patching compound. PVC boot shall cover all threads. Where belled conduits are used, bevel the unbelled end of the joint before joining. Leave no metallic threads uncovered.

H. Penetrations:

1. Seal the interior of all raceways entering structures at the first box or outlet with oakum or suitable plastic expandable compound to prevent the entrance into the structure of gases, liquids, or rodents.

2. Dry pack with nonshrink grout around raceways that penetrate concrete walls, floors, or ceilings aboveground, or use one of the methods specified for underground penetrations.

3. Where an underground conduit enters a structure through a concrete roof or a membrane waterproofed wall or floor, provide an acceptable, malleable iron, watertight, entrance sealing device. Provide a device having a gland type sealing assembly at each end with pressure bushings which may be tightened at any time when there is no raceway concrete encasement specified or indicated. When there is raceway concrete encasement specified or indicated, provide such a device with a gland type sealing assembly on the accessible side. Securely anchor all such devices into the masonry construction with one or more integral flanges. Secure membrane waterproofing to such devices in a permanently watertight manner.

4. Where an underground raceway without concrete encasement enters a structure through a nonwaterproofed wall or floor, install a sleeve made of Schedule 40 galvanized pipe.

   Fill the space between the conduit and sleeve with a suitable plastic expandable compound, or oakum and lead joint, on each side of the wall or floor in such a manner as to prevent entrance of moisture. A watertight entrance sealing device as specified may be used in lieu of the sleeve.

5. Where raceways penetrate fire-rated walls, floors, or ceilings, fire stop openings around electrical penetrations to maintain the fire-resistance rating.

6. Raceways passing through roofs shall be flashed.

7. Provide conduit seals where required by Article 500 of the LAEC.

3.6 INSTALLATION REQUIREMENTS FOR UNDERGROUND DIRECT BURIAL CONCRETE-ENCASED RACEWAYS

A. General:

1. Coordinate installation of underground raceways with other outside and building construction work. Maintain existing outside utilities in operation unless otherwise authorized by the ENGINEER.

2. Remove entirely and properly reinstall all raceway installations not in compliance with these requirements.

3. Do not use union type fittings underground.

4. Provide a minimum cover per NEC Table 300.5 for all underground raceways unless otherwise indicated. Warning tape as specified in Part 2 shall be placed no less than 12 inches above conduit and duct bank.

5. Where a concrete-encased duct bank is installed over an extensive area of disturbed earth such as that within the periphery of a building, provide a separate concrete base under the duct bank to ensure stability of raceways during installation. Allow this base to set before the duct bank is installed.

6. Do not backfill underground direct burial and concrete-encased raceways until they have been inspected by the ENGINEER and the INSPECTOR.

7. Warning Tapes: Bury warning tapes approximately 8-inches below grade and above all underground conduit runs or duct banks. Align parallel to and within 12-inches of the centerline of runs.

B. Separation and Support:

1. Separate parallel runs of two or more raceways in a single trench with preformed, nonmetallic spacers designed for the purpose. Install spacers at intervals not greater than that specified in the LAEC for support of the type raceways used, and in no case greater than 10-feet.

2. Support raceways installed in fill areas to prevent accidental bending until backfilling is complete. Tie raceways to supports, and raceways and supports to the ground, so that raceways will not be displaced when concrete encasement or earth backfill is placed.

C. Arrangement and Routing:

Arrange multiple conduit runs substantially in accordance with any details shown on the Drawings. Locate underground conduits where indicated on the Drawings.

1. Make minor changes in location or cross-section as necessary to avoid obstructions or conflicts. Where raceway runs cannot be installed substantially as shown because of conditions not discoverable prior to digging of trenches, refer the condition to the ENGINEER for instructions before further work is done.

2. Where other utility piping systems are encountered or being installed along a raceway route, maintain a 12-inch minimum vertical separation between raceways and other systems at crossings. Maintain a 12-inch minimum separation between raceways and other systems in parallel runs. Do not place raceways over valves or couplings in other piping systems. Refer conflicts with these requirements to the ENGINEER for instructions before further work is done.

3. Provide insulated grounding bushings on all metallic raceways entering manholes. Provide bell-ends flush with manhole walls on all nonmetallic raceways entering manholes.

4. In multiple conduit runs, stagger raceway coupling locations so that couplings in adjacent raceways are not in the same transverse line.

5. Provide markers at grade to indicate the direction of underground conduits provided under this Contract. Provide markers consisting of double-ended arrows, straight for straight runs and bent at locations where runs change direction. Provide markers at all bends and at intervals not exceeding 100-feet in straight runs. Use markers made of sheet bronze not less than 1/4-inch thick embedded in and secured to the top of concrete posts. Use markers not less than 10-inches long and 3/4-inch wide and marked ELECTRIC CABLES in letters 1/4-inch high incised into the bronze to a depth of 3/32-inch.

6. All conduits shall enter maintenance holes and structures at right angles.

D. Provide expandable grommets for concrete encased raceway passing through wall to the earth.

E. Raceway Coating: At couplings and joints, coat metallic underground direct-burial conduits with Bitumastic No. 50 or equal, or wrap with Scotchrap No. 51, or equal plastic tape with 1/2-inch overlap.

1. Direct Earth Burial Conduit Zone Backfill Installation:

2. Backfill material for the conduit zone of direct burial conduit trenches may be selected from the excavated material if it is free from roots, foreign material, and oversized particles. Use material with 3/4-inch maximum particle size and suitable gradation for satisfactory compaction. Remove material if necessary to meet these requirements.

3. Imported 3/4-inch minus gravel or sand may be used in lieu of material from the excavation.

4. After conduits have been properly installed, backfill the trench with specified material placed around the conduits and carefully tamped around and over them with hand tampers. Final, tamped conduit cover shall be 4-inches minimum.

F. Concrete Encasement:

1. Where indicated, encase conduits in a red concrete envelope sized as indicated and located at the elevation shown. Use 2,500 psi concrete as specified in Section 03300 CAST-IN-PLACE CONCRETE.

2. Maintain a grade of at least 4-inches per 100-feet, either from one maintenance hole or pull box to the next, or from a high point between them, depending on the surface contour.

3. Hold conduits for concrete-encased raceways securely in place by acceptable window type spacer supports. Where, in the opinion of the ENGINEER, ground conditions are such as to require concrete forms, install forms constructed of materials and in a manner acceptable to the ENGINEER. No variations greater than 1/2-inch in 50-feet will be permitted from a straight line.

4. Envelopes may be poured directly against the sides of trenches if the cut is clean, even, and free of loose material. Remove loose material from trenches before and during pouring of concrete to ensure sound envelopes. Carefully spade concrete during pouring to eliminate all voids under and between raceways and honeycombing of the exterior surface.

5. Do not use power-driven tampers unless they are specifically designed for the application, in order to ensure that the watertight integrity of the raceways is maintained.

6. Generally, pour an entire concrete envelope in one continuous pour. Where more than one pour is necessary, terminate each pour in a sloped plane, and insert 3/4-inch reinforcing rod dowels extending into the concrete 18-inches minimum on each side of the joint. Obtain Engineers' approval for the number and location of dowels.

7. Provide reinforcement shown where envelopes connect to manholes or building structures to prevent shearing of joints.

3.7 MAINTENANCE HOLES AND HANDHOLES

A. Install maintenance holes and handholes where shown on the Drawings. Provide excavation, shoring, bracing, backfilling, grading, etc., in accordance with requirements specified elsewhere in these Contract Documents.

B. Do not install maintenance holes or handholes until final conduit grading, including field changes necessitated by underground interferences, has been determined. Set frames to final grades as required.

C. Make installation so that raceways enter maintenance holes or handholes at nearly right angles and as near as possible to one end of a wall, unless otherwise indicated.

D. Install one ground rod in each maintenance hole and handhole. Connect all noncurrent-carrying metal parts in the maintenance holes and any metallic raceway grounding bushings to this ground rod with No. 6 AWG (minimum) copper conductor.

E. CONTRACTOR shall clean and remove all debris from maintenance holes and handholes

whether new or existing.

3.8 WIREWAYS

A. Mount wireways securely in accordance with the LAEC and manufacturer's instructions. Locate removable cover or hinged cover on accessible vertical face of wireway unless otherwise indicated.

3.9 PREPARATION FOR PULLING IN CONDUCTORS

A. Do not install crushed or deformed raceways. Avoid traps in raceways where possible. Take care to prevent the lodging of plaster, concrete, dirt, or trash in raceways, boxes, fittings, and equipment during the course of construction. Make raceways entirely free of obstructions or replace them. Ream all raceways, remove burrs, and clean raceway interior before introducing conductors or pull wires.

B. Immediately after installation, plug or cap all raceway ends with watertight and dust-tight seals until the time for pulling in conductors.

C. For concrete-encased raceways, after the concrete envelope has set, pull a mandrel of a diameter approximately 1/4-inch less than the raceway inside diameter, through each raceway. Then pull a bristle brush through each raceway to remove debris.

3.10 EMPTY RACEWAYS

A. Certain raceways will have no conductors pulled in as part of this Contract. Identify with tags at each end and at any intermediate pull point the origin and destination of each such empty raceway. Where a raceway has been identified with a name (number) in the Raceway Schedule, use that name on the tag in lieu of origin and destination. Provide a removable permanent cap over each end of each empty raceway. Mandrel and provide a nylon pull cord in each empty raceway.

3.11 PAINTING

A. Paint raceway systems in accordance with and as specified in Section 09800 "Protective Coating."

END OF SECTION 16110

SECTION 16160
CONDUCTORS

PART 1 -- GENERAL

1.1 THE REQUIREMENT

A. The CONTRACTOR shall furnish all tools, equipment, material, and supplies and shall perform all labor required to complete the work as indicated on the Drawings and specified herein.

1.2 RELATED WORK SPECIFIED ELSEWHERE

A. The following Sections or Divisions applies to the WORK of this Section. Other Sections of the Specifications, not referenced below, shall also apply to the extent required for proper performance of this WORK.

1. Division 11 Equipment.

2. Division 17 Instrumentation and Control.

B. Materials and equipment furnished and installed under other divisions with raceway and electrical conductors furnished, installed, and connected under Division 16, Electrical.

1.3 REFERENCE CODES AND STANDARDS

A. All work specified herein shall conform to or exceed the applicable requirements of the referenced portions of the following publications to the extent that the provisions thereof are not in conflict with other provisions of these specifications.

B. Comply with the current provisions of the following Codes and Standards.

1. Codes and Standards:

LAEC	City of Los Angeles Electrical Code, latest adopted edition.

2. Commercial Standards:

ANSI/UL 467	Grounding and Bonding Equipment, Safety Standard For.
ICEA S-95-658/WC70	Power Cables Rated 2000 Volts or Less.
ICEA S-96-659/WC71	Nonshielded Cables Rated 2,001-5,000 V.
ICEA S-93-639/WC74	5-46 kV Shielded Power Cable.
ANSI/UL 62	Flexible Cord and Fixture Wire.
ANSI/UL 510	Insulating Tape.
ANSI/UL 1277	Electric Power and Control Tray Cables with Optional Optical Fiber Members.
ASTM B8	Standard Specifications from Concentric Lay Standard Copper Conductors, Hard, Medium-Hard or Soft.

IEEE 48	Standard Test Procedures and Requirements for High Voltage Alternating Current Cable Terminations.
NEMA WC-57	Control, Thermocouple Extension, and Instrumentation Cable.

C. All Conductors furnished by the CONTRACTOR shall be listed by and shall bear the label of Underwriters' Laboratories, Incorporated, (UL).

D. The construction and installation of all electrical equipment and materials shall comply with all provisions of the CAL OSHA Safety Orders Title 8 CCR, as applicable, State Building Standards, and applicable local codes and regulations.

1.4 CONTRACTOR SUBMITTALS

A. Submittals shall be made in accordance with the Section 16010 Wastewater Facilities General Electrical Requirements.

B. CONTRACTOR shall submit the following items.

1. Catalog cut sheets and other brochures depicting conductor characteristics.

2. Manufacturer’s certified test records and factory test procedures.

3. Manufacturer’s recommended splicing, testing, and installation procedures and practices.

4. Certified test reports of HI-POT and Megger test results for medium and high voltage cables.

1.5 QUALITY ASSURANCE

A. Conductor Identification System:

1. Provide complete power, control and signal conductor identification system so that after installation, circuits can be easily traced from origin to final destination.

2. Identify power, control and signal conductors at each termination and in all accessible locations such as maintenance holes, handholes, panels, switchboards, pull boxes, terminal boxes, etc. For identification, use type of tags specified herein.

3. Tag conductors using a three-segment conductor numbering scheme which defines the origin of the conductor, the function of the conductor, and the destination of the conductor.

   Example: MCCA-P-MCCB where MCCA is the origin, P is the function identification (P = power, C = control, S = signal, etc.), and MCCB is the destination.

4. For conductors with one point of origin and two or more destinations, expand the function identification number, e.g., PA, PB, etc.

5. Make the origin and destination identification the specific names for the equipment used in the Contract Documents. Make the instrumentation and control identification names exactly as designated, i.e., FT-S-121.

B. Conductor Color Coding:

1. Color coding of multiconductor control and instrumentation cable is specified in the individual cable type specification.

2. For power conductors, provide all single conductors and individual conductors of multiconductor power cables with integral insulation pigmentation of the designated colors, except conductors larger than No. 6 AWG may be provided with color coding by applying a heat shrink tube of the appropriate color.

3. Phase A, B, C implies the direction of positive phase rotation.

4. Use the following colors:

System	Conductor	Color
All Systems	Equipment Grounding	Green
240/120 Volts	Grounded Neutral	White
1-Phase, 3-Wire	One Hot Leg	Black
	Other Hot Leg	Red
208Y/120 Volts	Grounded Neutral	White
3-Phase, 4-Wire	Phase A	Black
	Phase B	Red
	Phase C	Blue
240/120 Volts	Grounded Neutral	White
3-Phase, 4-Wire	Phase A	Black
Delta, Center Tap "High"	(wild) Leg	Orange
Ground on 1-Phase	Phase C	Blue
480Y/277 Volts	Grounded Neutral	White
3-Phase, 4-Wire	Tracer	
	Phase A	Brown
	Phase B	Orange
	Phase C	Yellow
4,160 Volt	Grounded Neutral	White
4,800 Volt	Phase A	Yellow
13,800 Volt	Phase B	Red
34,500 Volt	Phase C	Blue

C. For all high voltage cable and all 600 volt cable sized AWG #2 and larger, CONTRACTOR shall furnish cable manufactured no more than one year prior to installation. Provide documentation from the supplier.

PART 2 -- PRODUCTS

2.1 GENERAL

A. The use of a manufacturer's name and model or catalog number is for the purpose of establishing the standard of quality and general configuration desired only. Products of other manufacturers will be considered in accordance with the GENERAL REQUIREMENTS.

2.2 CONDUCTORS

A. Conductors 600 Volts and Below:

1. Unless otherwise indicated, provide stranded conductors, except provide solid conductors where No. 10 AWG and No. 12 AWG are designated for branch circuit power wiring in lighting and receptacle circuits.

2. Provide conductors with Type THW or Type THHN/THWN, except for sizes No. 6 and larger, provide conductors with XHHW, XHHW-2 insulation.

3. Use only copper conductors.

4. For all direct burial and aerial conductors and cables, provide conductors with UL labeling "TYPE USE" and RHW insulation with heavy-duty, black, neoprene sheath meeting the physical requirements and minimum thickness requirements of ICEA S-95-658 NEMA WC70.

5. Where flexible cords and cables are specified, provide Type SO, 600-volt, with the number and size of copper conductors indicated.

6. Conductors for applications of 600 volts and below shall be rated for 600 volts unless otherwise specified.

7. The name of the manufacturer, insulation type, voltage rating and wire size shall be clearly and permanently imprinted throughout the length of each conductor. All conductors and cables supplied shall bear the UL label.

B. Conductors Above 600 Volts:

1. 5 kV Conductors

a. Unless indicated otherwise, provide minimum 19 strand soft annealed uncoated copper conductors with crosslinked polyethylene (XLPE) insulation, extruded semiconducting strand and insulation shields, and a polyvinyl chloride jacket.

b. Provide shielded single conductors with 100 percent insulation level, that meet applicable portions of ICEA S-93-639/NEMA WC74, Ionization Level Requirements. Provide conductors UL listed 1072 Type MV-90.

c. Cable marking shall include manufacturer’s name, insulating material, Conductor size, voltage class and UL mark.

C. Multi-Conductor Cable:

1. Provide cable that is UL listed Type TC and conforms to the requirements of UL 1277 and NEC Article 336, or UL listed Power Limited Circuit Cable that conforms to the requirements of Article 725 of the LAEC. Provide cables permanently and legibly marked with the manufacturer's name, the maximum working voltage for which the cable was designed, the type of cable, and labeled UL (or submit evidence of UL listing).

2. Provide cables as specified under the type number in this section (Type 1, Type 2, etc.). Conduits shown on the Drawings and in the Circuit/Raceway Schedule have been sized to accommodate the outside diameter for each type. For this reason, use cable diameters equal to or less than the diameters specified.

a. Type 1 (600-Volt Multi-Conductor Control Cable, Type TC):

(1) General: Multi-conductor control circuit interconnection cable with ground. Suitable for installation in open air, in cable trays, conduit, or other approved raceways. Maximum cable temperature rating 90 degrees C dry locations, 75 degrees C wet locations. Passes vertical tray flame test.

(2) Individual Conductors: No. 14 AWG, strand copper.

(3) Insulation and Jackets: Provide conductors having 15-mil PVC insulation with 4-mil nylon jacket, and UL listed as Type THHN/THWN. Color code the conductor group in accordance with ICEA S-95-658/WC70. Include one full size green equipment grounding conductor. Bind conductor group with a spiral wrap of barrier tape. Provide cable with overall outer PVC jacket which is flame-retardant, sunlight- and oil-resistant, and has a nominal thickness as shown in the table below.

(4) Use only2,3, 4, 5, 7, 9, 12,19, 25, 30,and 37 -conductor cables. The green grounding conductor is included in the number of conductors shown in the table below.

No. of Conductors	Max. Outside Diameter (inches)	Jacket Thickness (mils)
5	0.45	45
7	0.48	45
12	0.65	60
19	0.76	60
25	0.93	60
37	1.04	80

(5) Acceptable Manufacturers:

1. Belden;

2. General Cable;

3. Southwire;

4. Or equal.

b. Type 2 (600-Volt Multi-Conductor Power Cable, Type TC):

(1) General: 3 or 4-conductor, with ground and overall jacket. Suitable for installation in open air, in cable trays, conduit, or other approved raceways. Maximum cable temperature rating 90 degrees C dry locations, 75 degrees C wet locations.

(2) Individual Conductors: Class B stranded, coated, or uncoated copper.

(3) Insulation and Jacket: Provide conductors insulated with chemically cross-linked polyethylene or ethylene-propylene, UL rated VW-1. Provide sunlight- and oil-resistant PVC outer jacket with nominal thickness as shown in the following table. Provide phase conductors color-coded black, red, and blue. Provide neutral conductor color-coded white with black tracer.

Conductor Size	No. of Conductors	Ground Wire Size	Max. OD (inches)	Thickness (mils)
12	3	-	0.45	45
	4	-	0.49	45
10	3	-	0.50	45
	4	-	0.58	60
8	3	10	0.66	60
	4	10	0.72	60
6	3	8	0.74	60
	4	8	0.81	60
4	3	8	0.88	60
	4	8	0.97	80
2	3	6	1.01	80
	4	6	1.11	80
1	3	6	1.14	80
	4	6	1.25	80
1/0	3	6	1.22	80
	4	6	1.35	80
2/0	3	6	1.32	80
	4	6	1.46	80
3/0	3	4	1.42	80
	4	4	1.58	80
4/0	3	4	1.56	80
	4	4	1.78	110

(4) Acceptable Manufacturers:

1. General Cable;
2. Okonite;
3. Southwire;
4. Or equal.

c. Type 3 (600-Volt No. 16 AWG Twisted, Shielded Pair Instrumentation Cable, Type TC) (UL 62 & 1277):

(1) General: Single pair instrumentation cable designed for noise rejection for process control, computer, or data log applications. Suitable for installation in cable trays, conduit, or other approved raceways. Maximum cable temperature rating shall be 90 degrees C dry locations, 75 degrees C wet locations.

(2) Individual Conductors: Bare soft annealed copper, Class B, 7-strand concentric per ASTM B 8; 20 AWG, 7-strand tinned copper drain wire.

(3) Insulation and Jacket: Each conductor 15-mil nominal PVC and 4-mil nylon insulation. Pair conductors pigmented black and red. Jacket flame-retardant and sunlight- and oil-resistant PVC with 45 mils nominal thickness. Shield 1.35-mil aluminum/mylar overlapped to provide 100 percent coverage.

(4) Dimension: 0.31 inch nominal OD.

(5) Acceptable Manufacturers:

1. Belden;

2. General Cable;

3. Okonite;

4. Or equal.

d. Type 4 (600-Volt No. 16 Twisted, Shielded Triad Instrumentation Cable, Type TC) (UL 62 & 1277):

(1) General: Single triad instrumentation cable designed for noise rejection for process control, computer, or data log applications. Suitable for installation in cable tray, conduit, or other approved raceways. Maximum cable temperature rating shall be 90 degrees C dry locations, 75 degrees C wet locations.

(2) Conductors: Bare soft annealed copper, Class B, 7-strand concentric per ASTM B 8; 20 AWG, 7-strand, tinned copper drain wire.

(3) Insulation and Jacket: Each conductor, 15-mil nominal PVC and 4-mil nylon insulation. Triad conductors pigmented black, red, and blue. Jacket flame-retardant and sunlight- and oil-resistant PVC with 45 mils nominal thickness. Shield 1.35-mil aluminum/mylar, overlapped to provide 100 percent coverage.

(4) Dimension: 0.32 inch nominal OD.

(5) Acceptable Manufacturers:

1. Belden;

2. General Cable;

3. Okonite;

4. Or equal.

e. Type 5 (600-Volt No. 18 AWG, Multi-twisted Shielded Pairs with a Common Overall Shield Instrumentation Cable, Type TC)(UL 62 & 1277):

(1) General: Twisted, shielded pairs of instrument cables, grouped in a single cable, designed for use as instrumentation, process control, and computer cable. Suitable for installation in cable tray, conduit, or other approved raceways. Maximum cable temperature rating shall be 90 degrees C dry locations, 75 degrees C wet locations.

(2) Conductors: Bare soft annealed copper, Class B, 7-strand, concentric per ASTM B 8. Tinned copper drain wires. Pair drain wire size AWG 20, group drain wire size AWG 18.

(3) Insulation and Jacket: Each conductor 15-mil PVC and 4-mil nylon insulation. Pair conductors pigmented black and red with red conductor numerically printed for group identification. Outer jacket flame-retardant and sunlight- and oil-resistant PVC with nominal thickness as shown in table. Individual pair shield 1.35-mil aluminum/mylar. Group shield 2.35-mil aluminum/mylar, overlapped for 100 percent coverage.

(4) Dimensions as noted in table below:

Number of Pairs	Maximum Outside Dimension (inches)	Nominal Jacket Thickness (mils)
4	0.50	45
8	0.68	60
12	0.82	60
16	0.95	80
20	1.05	80
24	1.16	80
36	1.33	80
50	1.56	80

(5) Acceptable Manufacturers:

1. Belden;
2. General Cable;
3. Okonite;
4. Or equal.

D. Conductor and Cable Tags:

1. Tags relying on adhesives or taped-on markers are not acceptable.
2. Provide conductor tags for conductors No. 12 AWG and below with legible permanent sleeve of yellow or white PVC with machine printed black marking.
3. Provide tags for cables, and for conductors No. 10 AWG and larger, consisting of permanent nylon marker plates with legible designations hot stamped on the plate. Attach these marker plates to conductors and cables with nylon tie cord.

E. Equipment Grounding Conductors:

1. Provide soft-drawn copper conductors, not smaller than AWG12 and as indicated or as required by NEC, for equipment grounding.
2. Provide conductors with green insulation of the same type as all other circuit wires.

F. Direct Buried Grounding Conductors:

1. Provide bare stranded copper conductors, size as indicated, for the ground system grid at transformers, switchgear, and where indicated.

2.3 MANUFACTURED WIRING SYSTEMS

A. Provide a flexible, coordinated means of distributing lighting branch circuit and control wiring.

B. Provide a system rated at 20 amperes load-carrying capacity per phase with final assemblies consisting of a maximum of three, phase conductors. Provide a system manufactured of Type MC

cable with 90 degrees C insulation and stranded copper conductors.

C. Provide three, single-phase, five-wire circuit cable configuration with standard color wire coding as per Article 1.5 B. of this Section.

D. Provide a system having a latch/strike locking mechanism with voltage clearly marked on latch. Provide a system UL listed for use in air handling plenums, listed to connect or disconnect under load, and manufactured in accordance with Article No. 604 of the NEC.

PART 3 -- EXECUTION

3.1 GENERAL

A. Do not exceed cable manufacturer's recommendations for maximum pulling tensions and minimum bending radii. Where pulling compound is used, use only UL listed compound compatible with the cable outer jacket and with the raceway involved. contractor shall perform and submit pulling calculation per manufacturers' recommendation to ascertain that there is no overstrain to the cable. The calculation shall be submitted to the ENGINEER for approval."

B. Tighten all screws and terminal bolts using torque type wrenches and/or drivers to tighten to the inch-pound requirements of the NEC and UL.

C. Single conductors and cables in maintenance holes, handholes, vaults, cable trays, and other indicated locations shall be wrapped together by arc and fireproofing tapes, and shall be bundled throughout their exposed length with nylon, self-locking, releasable, cable ties placed at intervals not exceeding **18** inches on centers.

D. Wires and cables in each voltage classification shall be installed in separate raceways and shall be completely isolated at the cable and wire terminations.

E. No vehicles shall be used to pull conductors. Only cable pulling machines shall be used.

F. A means of monitoring cable tension shall be provided at all pulls. (I.e. dynamometer)

3.2 CONDUCTOR 600 VOLTS AND BELOW

A. Provide conductor sizes indicated on Drawings.

B. Wire nuts may be used on solid conductors of 120-volt and 277-volt lighting and 120-volt receptacle circuits only. Place no more than one conductor in any single-barrel pressure connection. Use crimp connectors with tools by same manufacturer and/or UL listed for connectors of all stranded conductors.

C. Soldered mechanical joints insulated with tape will not be acceptable.

D. Vinyl plastic insulating tape for wire and cable splices and terminations shall be flame retardant, 7-mil thick minimum, rated for 90 degrees C minimum meeting the requirements of UL 510.

E. Provide terminals and connectors acceptable for the type of material used.

F. Arrange wiring in cabinets, panels, and motor control centers neatly cut to proper length, remove surplus wire, and bridle and secure in an acceptable manner. Identify all circuits entering motor control centers or other control cabinets in accordance with the conductor identification system specified herein**.**

G. Terminate control and instrumentation wiring with methods consistent with terminals provided, and

in accordance with terminal manufacturer's instructions. Where terminals provided will accept such lugs, terminate all control and instrumentation wiring (except solid thermocouple leads) with insulated, locking-fork compression lugs, Thomas & Betts Sta-Kon, or equal.

H. For terminals designed to accept only bare wire compression terminations, use only stranded wire, and terminate only one wire per terminal. Tighten all terminal screws with torque screwdriver to recommended torque values.

I. Attach compression lugs with a tool specifically designed for that purpose which provides a complete, controlled crimp where the tool will not release until the crimp is complete. Use of plier type crimpers is not acceptable.

J. Cap spare conductors and conductors not terminated with UL listed end caps.

K. Where conductors pass through holes or over edges in sheet metal, remove all burrs, chamfer all edges, and install bushings and protective strips of insulating material to protect the conductors.

L. For conductors that will be connected by others, provide at least 6 feet spare conductor in freestanding panels and at least 2 feet spare in other assemblies. Provide appropriate length of spare conductor in any particular assembly where it is obvious that greater spare conductor length will be needed to reach the termination point.

3.3 CONDUCTORS ABOVE 600 VOLTS

A. Splices will not be permitted unless specifically indicated or approved by the ENGINEER.

B. Make all joints and terminations with high voltage splice and termination kits specified herein and in accordance with splice or termination manufacturer's instructions. Once started, install splices or terminations as a continuous operation.

C. Identify all circuits in accordance with the conductor identification system specified at load centers, maintenance holes, splices, terminations, etc.

D. Provide terminals or connectors acceptable for the type of conductor material used.

E. Give 2 working days' notice to the ENGINEER and the INSPECTOR prior to the making of joints or terminations.

F. Cable splices shall be made by qualified cable splicers in accordance with the recommendations of the manufacturer. CONTRACTOR shall furnish documentation detailing the qualifications of each cable splicer to be working on the job.

3.4 CABLES

A. Do not splice without permission of the ENGINEER or the INSPECTOR. Locate splices, when permitted, only in readily accessible cabinets or junction boxes using locknut terminal strips. Splices will not be permitted unless deemed necessary by approved pulling tension calculations.

B. Where connections of cables installed under this section are to be made under Division Instrumentation and Controls, leave pigtails of adequate length for neat bundled type connections.

C. Instrumentation, computer, and control cables run under infinite access floors in control rooms may be installed under the floor without protection. Run individual wires, pairs, or triads in flex conduit under the floor or grouped into bundles at least 3/4 inch in diameter.

D. Maintaining the integrity of shielding of instrumentation cables is essential to the operation of the control systems. Take special care in cable installation to ensure that grounds do not occur

because of damage to the jacket over the shield.

E. Cables entering maintenance holes, handholes or vaults shall be sealed at the entrance and exit using an expanding fireproof foam product approved for the purpose.

3.5 CONDUCTOR ARC AND FIREPROOFING TAPES

A. Use arc and fireproofing tapes on all 600-volt single conductors and cables except those rated Type TC at splices in all maintenance holes, handholes, vaults, cable trays, and other indicated locations.

B. Use arc and fireproofing tapes on all 5 Kv at splices in all maintenance holes , handholes, vaults, cable trays, and other indicated locations.

C. Wrap together as a single cable all conductors entering from each conduit.

D. Follow tape manufacturer's installation instructions. Secure the arc and fireproofing tape at frequent intervals with bands of the specified glass cloth electrical tape. Make each band of at least two wraps of tape directly over each other.

E. Wrap together as far as possible, conductors carrying phases A, B, and C of the same feeder. Do not wrap together conductors carrying only two of the three phases.

F. The cables shall be placed as closely as possible to their final positions.

G. The cables shall be cleaned of all oil, grease, and cable pulling compounds using suitable solvents and cleaners non-injurious to cable and then wiped completely dry.

H. Any projecting surfaces such as fittings, ground connectors or bonding connections shall be covered with an insulating compound to present a smooth continuous surface for taping.

I. Fireproofing tapes shall be submitted as shop drawings for approval. Tapes shall be 3-inch width half-lapped and extend a minimum of 6-inches into the raceway. Use ¾” glass tape at three foot intervals to hold tape in place.

3.6 UNDERGROUND DIRECT BURIAL CABLE

A. Comply with requirements for Installation of Underground Direct Burial Raceways in Section 16110, "Raceway", including warning tapes above the cables.

3.7 FIELD TESTS

A. Field test shall be performed on conductors in accordance with Section 16020 Municipal Facilities Electrical Testing Requirements.

END OF SECTION 16160

SECTION 16170
CABINETS AND RACKS

PART 1 - GENERAL

1.1 GENERAL CONDITIONS:

A. See the Conditions of the Contract (General, Supplementary and Special Conditions) and the General Requirements (Division 1).

1.2 WORK INCLUDED:

A. This section covers all equipment cabinets, enclosures and racks as shown on the drawings or as required to house the specified devices and equipment. The work under this section consists of furnishing materials and equipment, performing labor and services necessary for the installation of the cabinets and racks required for a complete system.

1.3 RELATED WORK SPECIFIED ELSEWHERE:

A. Refer to all other Division 16 specification sections and drawings, and to the specifications and drawings under the General Construction Contract to ascertain the extent of work included.

1.4 REFERENCED SPECIFICATIONS, MATERIALS AND/OR CODES:

A. City of Los Angeles Electrical Code, latest adopted edition

B. Electronic Industries Alliance (EIA) Standards. EIA/ECA-310-E

1.5 COOPERATION WITH OTHER TRADES:

A. The Contractor shall coordinate the work of the section with that of other sections as required to ensure that the entire work of this Project will be carried out in an orderly, complete and coordinated fashion.

1.6 SUBMITTALS:

A. General: Submittals shall be made in accordance with the General Provisions (Section 16000) of these specifications.

B. Provide thermal calculations for cabinets. Include sizing calculations for air conditioner or forced ventilation fans. Account for solar gain for outside cabinets.

PART 2 - PRODUCTS

2.1 MATERIALS:

A. Cabinets - All equipment cabinets installed indoors shall be NEMA 12 enclosures. All equipment cabinets installed outside or exposed to weather shall be NEMA 3R or 4X enclosures.

1. Cabinets shall be constructed of 14 gauge rolled steel.

2. Cabinet doors shall be furnished with key lockable doors with all cabinets under Division 16 keyed alike.

3. All cabinets shall be furnished with removable steel back panels for mounting equipment.

4. Cabinets shall be furnished with appropriate size and quantity of knock-outs for conduit entry.

5. Cabinets shall be grounded as specified in Section 16290.

6. Cabinets shall be provided with adequate vents.

7. All cabinets shall be furnished with black on white laminated plastic name plates identifying each cabinet as noted on the drawings. Lettering shall be minimum 3/16" high.

8. Cabinet finish shall be ANSI 61 gray inside and out.

9. Cabinets shall be sized in strict accordance with the EIA/ECA-310-E.

10. Cabinet back panels shall be furnished with a ground buss bar.

11. Door size shall be selected to allow a minimum door swing of 90 degrees within the dimensional constraints of the equipment room.

12. Cabinets shall be equipped with index card holders and cards mounted behind heavy plastic on inside of cabinet doors.

13. Affix nameplates to cabinet doors with a minimum of two stainless steel escutcheon pins or screws.

B. Vertical Cabinet - Floor Mounted:

1. All vertical cabinets shall be free-standing floor mounted type having features and/or characteristics as follows:

a. Panel Width - 19"

b. Panel Height - 78-3/4"

c. Overall Height - 87" Nominal

d. Overall Depth - 25" Nominal

e. Rear Door - Vented, except as otherwise specified.

f. Front door with vents at top and bottom, except as otherwise specified.

g. Plain top panel

h. Frame- 14 ga. Cold rolled sheet steel

i. Side panels - 18 ga.

j. Styled frames with trim

k. 19" EIA adjustable mounting rails for front and rear equipment mounting

l. Locks - all cabinets to be keyed alike

m. Units shall be pre-assembled type

n. Color - to be selected by Architect

2. Cabinets grouped side-by-side shall have side panels on each section.

3. Furnish and install blank 19" panels of color to match cabinet for all unused vertical mounting units on front mounting rails. Maximum height of each filler panel shall be 10.5".

C. Power Strips:

1. Furnish and install plug-in or hardwired outlet strips as required to support the installed equipment.

2. Power strips shall have a metallic case.

3. Plug-in power strips shall be equipped with a locking plug and shall only be used with a compatible locking-type receptacle.

D. Pedestals:

1. Pedestals shall be weather-tight, seam welded, constructed of 14 gauge galvanized steel. Where indicated on the drawings construction shall be stainless steel.

2. Pedestals shall be furnished with gasketed panel for access to equipment contained within. Panel shall be secured with security screws.

3. Pedestal shall be painted to withstand environmental conditions and the final color shall be as specified by the Architect.

4. Pedestal shall be pre-drilled for mounting of intercom stations, loop detectors, and other equipment as specified herein.

5. Pedestal dimensions shall be as shown on the drawings.

PART 3 - EXECUTION

3.1 EXECUTION:

A. Cabinets:

1. Provide cabinets as necessary for proper installation of the equipment specified and in compliance with all codes and regulations.

2. Secure all cabinets in place with anchors and lag bolts to ensure compliance with seismic requirements.

3. Unused openings in cabinets shall be closed to afford protection equivalent to that of the wall of the cabinet.

B. Ventilation:

1. Furnish and install ventilation fans, vents, and filters for all cabinets where forced air cooling is required to maintain interior cabinet temperature at or below 95°F.

2. For cabinets with forced ventilation, doors and side panels shall be solid with no louvers.

3. Division 17 Subcontractor shall select vented vs. forced air cabinets based on the environment's conditions of the equipment room and equipment to be installed in each cabinet.

C. Pedestals:

1. Provide pedestals at all locations shown on the drawings.

2. Secure pedestals to concrete base with anchors to ensure compliance with seismic requirements. Anchors shall be located such that they are only accessible from inside the enclosure.

3. Coordinate installation of required conduit such that all conduit is stubbed up inside pedestal.

4. Cabinets shall be large enough and equipment spaced in cabinets to provide adequate spacing for airflow and maintenance.

5. Locate all heat producing equipment, such as power supplies and amplifiers, at top of equipment cabinets.

3.2 COMPLETION:

A. General:

1. Upon completion of the work, remove excess debris, materials, equipment, apparatus, tools and the like and leave the premises clean, neat and orderly.

2. All cables shall be dressed neatly in each cabinet and rack. Excess cable shall be trimmed and disposed of. Any unused cables shall be identified with stainless steel tags showing the origination and marked as “spare”.

END OF SECTION 16170

SECTION 16180
WIRING DEVICES

PART 1- GENERAL

1.1 SCOPE

A. Required: Provide and install wiring devices as indicated on the Contract Drawing and herein specified.

B. Comply with the General Conditions, General Requirements and Section 16020 of this Division 16 concerning definitions, guarantees, submittals, as-builts, clean-up, etc. as applicable to work of this Section.

1.2 SUBMITTALS

A. Submit under the provision of Section 01330.

B. Product Data: For each product specified.

C Maintenance Data: For materials and products to include in maintenance manuals specified in Division 1.

PART 2 - PRODUCTS

2.1 GENERAL

A. All wiring devices shall be specification grade, UL listed and labeled, conform to NEMA standards and meet the requirements of Federal specifications.

2.2 BOXES

A. Types:

1. Provide galvanized steel knockout type outlet boxes with suitable plaster rings of similar material, for interior concealed wiring in dry, non-hazardous (classified) locations.

2. Provide cast metal boxes for floor outlets, and where installed in walls direct contact with the earth. Floor outlet boxes shall be Walker box 880 series or equal.

3. Provide weatherproof cast metal outlet boxes for surface wiring, or in wet or damp locations, or where indicated on the Drawings, unless otherwise directed by the City Engineer. Boxes shall be Crouse-Hinds FS, FD, GRF, GS, or VXF series.

4. Provide sheet steel type with screw cover for pull and junction boxes over 100 cubic inches, in dry non-hazardous (classified) locations.

B. Sizes: In accordance with Code for the number and size of conductors, but not less than indicated on the drawings nor less than 4 inch square trade size, except for cast metal type, or multigang masonry type embedded in concrete or masonry walls.

C. Accessories:

1. Plaster rings, fixture studs, covers, plates, dividers, etc., as required.

2. Weatherproof covers, plates, and other accessories in wet or damp locations.

2.3 SWITCHES

A. All switches shall be specification grade and meet Federal Spec. W-S-896E.

B. Provide screw type; push-in type connections not acceptable.

C. Switches shall be self-grounding, color coded, silent or quiet type, and rated 120-277 Volts AC, 20 ampere rating, totally enclosed, where installed in AC systems Bakelite or composition base with "T" rating for AC loads, standard toggle handle, side wired only and binding screw terminals with screwdriver slot.

D. Where pilot lights are specified for switches, they shall be the neon type 1/25 W. mounted under the same plate as the switch. Lighted toggles are not acceptable.

E. Momentary contact switches shall be three position toggle, 20 Ampere rating at 120 Volts AC.

F. Single pole switches shall be equal to Bryant 1121-I; two pole switches Bryant 1122-I; three way switches Bryant 1123-I; four way switches Bryant 1124-I.

G. Approved Manufacturers:

1. Hubbell/Bryant;

2. General Electric;

3. Or equal.

2.4 PLATES AND COVERS

A. Required: For all switches, receptacles, junction boxes, telephone and other outlets.

B. Finishes of Plates and Devices:

Location	Plate	Device
General interior finished areas	White	White
Interior finished areas over wood panels	Black	Black
On exterior with spring loaded cover	Corrosion resistant	Brown
In equipment rooms or other generally unfinished areas	Galvanized	Brown
Janitor and utility	Stainless	Gray

rooms	steel	
Toilet rooms	Stainless steel	Ivory

C. Provide the Following: Unless otherwise directed by the City Engineer, provide telephone, TV, and communication outlet plates with a bushed hole.

D. Provide engraved or etched plates for all lock switches, pilot switches, switches from which the equipment or circuit controlled cannot be readily seen, three or more switches under a common plate and for switches as indicated.

E. Stainless steel plates, type 302 non-magnetic with beveled edges, 0.040" thick with satin finish. Leviton 84000-40 series or approved equal.

F. Galvanized steel plates shall be square or rectangular and hot dipped galvanized or sherardized beveled edges and 0.040" thick.

G. Provide weatherproof receptacles with spring-loaded, corrosion resistant covers with gasket for mounting on outdoor type or flush wall boxes. Leviton 6196-V or approved equal.

H. Provide plates equipped with close fitting openings for the exact device to be used. Provide plates for telephone outlets equipped with bushed openings. Synthetic plates shall be smooth finish as manufactured by Pass & Seymour, Sierra, Leviton, or approved equal.

I. Provide brass covers for floor receptacles with duplex flap opening flush with floor
See also Section 16115, sub-section 2.2, paragraph E..

J. Provide brass covers for data and communications floor outlets with 2-1/8 x 1 inch combination threaded opening.

K. Engraved plates and covers for equipment and controls, motors, for switches out of sight of the equipment controlled, for receptacles rated other than 125 volts, and for ganged switches (except no more than two switches controlling lights in the same room). Engraving shall provide positive identification acceptable to the City Engineer.

2.5 RECEPTACLES

A. Types:

1. All receptacles shall be specification grade and meet Federal Spec. WC 596 E.

2. Provide screw terminal type receptacles. Push-in type connections are not acceptable.

3. Straight blade 125 volt, 15 and 20 ampere duplex type shall be equal to Bryant 5262-I or 5263-I; single type shall be Bryant 5661-I or 5461-I.

4. Straight blade 250 volt, 15 and 20 ampere duplex type shall be equal to Bryant 5662-I or 5462-I; single type shall be Bryant 5661-I or 5461-I.

5. Combination duplex receptacles, straight blade 125/250 volt, 15 and 20 amperes, shall be equal to Bryant 5292-I or 5492-I.

6. Clock hanger receptacles shall be Bryant 2828-GS or equal.

7. Special outlets of other types shall be as indicated on the Contract Drawings.

2.6 OCCUPANCY SENSORS:

A. Wall-mounted, passive infrared sensors, as specified on the contract drawings or approved equal.

B. Ceiling mounted combination, passive infrared and ultra sonic, as approved on the contract drawings or approved equal.

2.7 CONTROLS

A. Required: For all equipment furnished in this and other divisions, as required by Code, and as indicated on the Contract Drawings and in the specifications. All devices shall be listed by U.L. or another approved testing laboratory.

B. Types:

1. Circuit Breakers: Thermal-magnetic with interrupting and trip ratings as indicated on the drawings. Equip each breaker with a device for individual padlocking. Circuit breakers shall meet Federal Specifications W-C-375B.

2. Enclosed Safety Switches: Shall be externally operable, heavy duty "tease-proof", fusible and nonfusible with number of poles and ratings as indicated on the Contract Drawings. Provide suitable rejection type fuse holders for Class R fuses. Switches shall meet Federal Spec. W-S-865C. Switches shall be as manufactured by Square D Co. or equal.

3. Fuses: All fuses shall meet U.L. Standard 198. Provide a label within each fuse enclosure indicating fuse replacement type and ratings. Provide one complete set of each type and rating of fuses and limiters, as spares. Fuses shall be one of the following types:

   a. Current-limiting Class L; Bussman KRP-C or KTU.

   b. Current-limiting Class J; Bussman JKS or JHC.

   c. Dual element Class RK-1; Bussman KTS-R or KTN-R.

   d. Dual element Class RK-5; Bussman FRS-R or FRN-R.

   e. Low Peak dual element Class RK-5; Bussman LPS-R or LPN-R.

   f. For secondary protection of control transformers rated 500 V.A. and 50 volts, or less; Bussman FNQ fuses with HPS-D or HPL-B fuse holder or equal.

   g. Fuses for direct-current circuits shall be identified for the use.

   h. Other required fuses, if not specified, shall be standard nonrenewable type; Bussman FRN or FRS for circuits where available fault current is 10,000 amperes or less.

4. Terminal connection blocks shall be provided in switch and circuit breaker enclosures in which grounded (neutral) conductors are installed.

5. Magnetic Motor Starters: Shall be across-the-line start type with overload and low voltage protection; Square D. Co. Class 8536. Combination starters shall be fusible or

nonfusible disconnect switch type; Square D. Co. Class 8538, or motor circuit protector type (instantaneous trip only); Square D. Co. Class 8539. Reversing starters shall be Square D. Co. Class 8736 or 8739 or equal. Ratings shall be as indicated on the Drawings. Equip each circuit breaker with a device for individual padlocking.

6. Manual Motor Starters: Pushbutton type with overloads; Square D. Co. Class 2510 Type M. Toggle type with overloads; Square D. Co. Class 2510 Type F. Toggle type without overloads; Square D. Co. Class 2510 Type K or equal. Each device shall have provision for padlocking.

7. General Purpose Contactors: Shall be ASCO 1000 Series or equal with number of poles and ratings as indicated on the drawings. Provide suitable hinged door enclosures.

8. Lighting Contactors: Electrically operated, mechanically held, with coil clearing contacts; ASCO Remote Control (RC) Switches or equal with number of poles and ratings as indicated on the Drawings. Provide suitable hinged door enclosures.

9. Pushbutton and Other Control Devices: Shall be Square D.Co. Class 9001 Type K or equal, in suitable enclosures with legend plates.

10. Pilot Lights: Shall be Square D. Co. Class 9001 Type K, transformer type or equal. Shall have push-to-test feature where installed in switchboards or motor control centers.

11. Control Relays: Shall be Square D. Co. Class 8501 Types D, H, or L. or equal. Install relays in suitable enclosures.

12. Time Switches: Provide types with minimum 10-hour spring driven automatic rewind reserve power. For control of mechanical systems or equipment provide 7 day dial type with features permitting daily control or omission; Paragon 7000 Series. For control of mechanically-held lighting contactors provide astronomic type with day omitting device and momentary contact single pole double-throw switching; Paragon 47216-OSZ or equal. Number of poles and voltages for time switches shall be as indicated on the Drawings.

13. Emergency Control Switches: Shall be ASCO equal to #124 Series break-glass devices for mechanical or data processing rooms or similar applications.

14. Three-Position Selector Switches: Shall be equal to Bryant 4922-I for maintained contact type; Bryant 4921-I for momentary contact type.

15. Manual Timers: Spring-wound timers shall be equal to M.R. Rhoades Inc. "Mark-Time" 125 V. 20 A.

16. Identification: Identify all control and disconnecting devices by engraved laminated plastic nameplates designating the equipment controlled, except where device plates are engraved.

    a. Motors and other equipment shall be suitably and durably identified to correspond to the control or disconnecting device. Nameplate lettering shall be white on black finish and 1/8 inch high minimum.

    b. Marking shall be as indicated on the drawings or as approved by the City Engineer. Nameplates shall be affixed with a minimum of two escutcheon pins or screws.

PART 3 - EXECUTION

3.1 GENERAL

Each class of device shall be furnished by one manufacturer for the total project. Mixing of devices by different suppliers will not be permitted.

3.2 BOX INSTALLATION

A. Install boxes where indicated on the Contract Drawings and coordinate locations with structural and architectural features for proper installation. Boxes shall be accessible.

B. Install boxes for wall mounted local switches at 4 feet to center above floor or standing surface unless otherwise directed by the City Engineer. The maximum height in handicapped areas shall be 48 inches.

C. Install boxes for wall mounted receptacles, signal and communication outlets at 15 inches to center above floor or standing surface except where located above counter tops, or used for clock outlets, or as otherwise indicated on the Drawings or directed by the City Engineer.

3.3 RECEPTACLE AND SNAP SWITCH INSTALLATION

A. General:

1. Install receptacles and switches square, level, secure, and connected to a single set of circuit conductors at each outlet. Plaster ears of receptacles and switches installed in flush boxes shall be seated against the finish surface.

2. Install closely adjacent snap switches in a single multi-gang type box, unless otherwise directed by the City Engineer.

3. Install permanent barriers between switches where the voltage between switches exceed 300 volts.

4. Connect all devices by wrapping conductor around binding screw terminals.

5. Provide GFCI type receptacles in toilet, kitchen counters and for all outdoor locations where required by code.

3.4 OUTLET PLATES AND COVER INSTALLATIONS

A. General:

1. Install square, level and secure. Plates installed at flush outlets shall be seated against the finish.

2. Properly identify plates and covers as required and noted in Subsections 2. 5 D and K of this Section as applicable.

3. Provide jumbo size plates for outlets installed in masonry walls.

4. Properly align and plumb all devices and plates. Fit plates flat against walls and tights against surfaces of devices without strain on the plate.

5. Code sized (#12 minimum) bonding jumper shall connect grounded outlet box to receptacle grounding terminal on all flush mounted units.

END OF SECTION 16180

SECTION 16200
MOTOR CONTROL CENTERS

PART 1 - GENERAL

1.1 RELATED DOCUMENTS

A. Drawings and general provisions of the Contract, including General and Supplementary Conditions and Division 1 Specification Sections, apply to this Section.

B. Related Sections: The following sections contain requirements that relate to this section:

1. Section 16560 " Municipal Facilities Electrical Commissioning Requirements" for commissioning requirements.

2. Section 16570 " Municipal Facilities Electrical Testing Requirements" for testing requirements.

1.2 SUMMARY

A. This Section includes motor-control centers for use on AC circuits rated 600 V and less.

B. Related Sections include the following:

1. Section 16190, "Electrical Identification" for labeling materials.

2. Section 16210, “Switches, Disconnect and Safety”.

1.3 SUBMITTALS

A. Submit under the provisions of Section 01330.

B. Product Data: For products specified in this Section. Include dimensions, ratings, short-circuit rating, and data on features and components.

C. Shop Drawings: For each motor-control center specified in this Section. Include dimensioned plans, elevations, and component lists. Show ratings, including short-time and short-circuit ratings, and horizontal and vertical bus ampacities.

1. Schedule of features, characteristics, ratings, and factory settings of individual motor-control center units.

2. Wiring Diagrams: Interconnecting wiring diagrams pertinent to class and type specified for motor-control center. Schematic diagram of each type of controller unit indicated.

D. Field Test Reports: Indicate and interpret test results for compliance with performance requirements.

E. Maintenance Data: For products to include in the maintenance manuals specified in Division 1. Include operating instructions required per 3.4.B.

F. Load-Current and Overload-Relay Heater List: Compile after motors have been installed and arrange to demonstrate that selection of heaters suits actual motor nameplate full-load currents.

G. Qualification Data for Field Testing Agency: Certificates, signed by Contractor, certifying that agency complies with requirements specified in "Quality Assurance" Article below.

1.4 QUALITY ASSURANCE

A. Manufacturer Qualifications: Maintain, within 100 miles of Project site, a service center capable of providing training, parts, and emergency maintenance and repairs.

B. Field Testing Agency Qualifications: An independent testing agency with experience and capability to satisfactorily conduct testing indicated without delaying the Work. Evaluation criteria shall be according to ASTM E 699.

C. Source Limitations: Obtain similar motor-control devices through one source from a single manufacturer.

D. Comply with NFPA 70 NEMA, IEEE, UL & ANSI Standards.

E. Listing and Labeling: Provide motor-control centers and components specified in this Section that are listed and labeled.

1. The Terms "Listed" and "Labeled": As defined in the National Electrical Code, Article 100.

2. Listing and Labeling Agency Qualifications: A "Nationally Recognized Testing Laboratory" as defined in OSHA Regulation 1910.7.

F. Product Selection for Restricted Space: Drawings indicate maximum dimensions for motor-control centers, including clearances between motor-control centers and adjacent surfaces and items, and are based on types and models indicated. Other manufacturers' motor-control centers with equal performance characteristics and complying with indicated maximum dimensions may be considered. Refer to Section 01330, “Shop Drawings/Submittals."

1.5 DELIVERY, STORAGE, AND HANDLING

A. Deliver in shipping splits of lengths that can be moved past obstructions in delivery path as indicated.

B. Store so condensation will not occur on or in motor-control centers. Provide temporary heaters as required to prevent condensation.

C. Handle motor-control centers according to NEMA ICS 2.3, "Instructions for the Handling, Installation, Operation, and Maintenance of Motor Control Centers." Use factory-installed lifting provisions.

1.6 COORDINATION

A. Coordinate features of controllers and accessory devices with pilot devices and control circuits to which they connect.

B. Coordinate features, accessories, and functions of each motor controller with the ratings and characteristics of the supply circuit, the motor, the required control sequence, and the duty cycle of

the motor and load.

1.7 EXTRA MATERIALS

A. Furnish extra materials described below that match products installed, are packaged with protective covering for storage, and are identified with labels describing contents.

1. Spare Indicating Lights: Furnish 6 of each type required.

PART 2 - PRODUCTS

2.1 MANUFACTURERS

A. Available Manufacturers: Subject to compliance with requirements, manufacturers offering products that may be incorporated into the Work include, but are not limited to, the following:

1. Eaton;

2. Tesco Controls;

3. Or equal.

2.2 MOTOR-CONTROL CENTERS

A. Wiring: NEMA ICS 3, Class I, Type B.

B. Enclosures: Free-standing structure as indicated. U.L.listed, NEMA 250, Type 2, unless otherwise indicated to meet environmental conditions at installed location.

1. Outdoor Locations: NEMA 250, Type 3R.

2. Compartments: Modular; individual doors have concealed hinges and quick-captive screw fasteners. Interlocks on combination controller units require disconnect means in off position before door can be opened or closed, except by consciously operating a permissive release device.

3. Interchangeability: Compartments are constructed to remove units without opening adjacent doors, disconnecting adjacent compartments, or disturbing the operation of other units in control center. Units requiring the same size compartment are interchangeable, and compartments are constructed to permit ready rearrangement of units, such as replacing 3 single units with one unit requiring 3 spaces, without cutting or welding.

4. Wiring Spaces: Each vertical section of structure with horizontal and vertical wiring has spaces for wiring to each unit compartment in each section, with supports holding wiring in place.

5. Controls: As specified elsewhere herein and as indicated on the Drawings. Each magnetic starter shall be provided with a hand-off-auto selector switch and a red "on" pilot light. Control power shall be 120 volts from integral transformer(s) unless indicated otherwise on the Drawings. Control transformer insulation shall be Class H. Provide suitable primary and secondary over current protection, and ground the secondary of control transformers. The secondary grounded

conductor shall be identified with continuous white insulation.

Where external control circuits are used a disconnecting means shall be provided in the control center and identified with a red laminated plastic nameplate marked "120 volt external control". Provide each motor control unit with a wiring diagram and overload heater chart affixed to the inside of the unit door or cover. Overload heaters shall be installed only after verification of actual motor FLA ratings.

C. Short-Circuit Current Rating for Each Section: Minimum 42,000 amps symmetrical RMS or as specified on the drawings.

2.3 BUSES

A. Material: Plated copper.

B. Ampacity Ratings: As indicated for horizontal and vertical main buses.

C. Equipment Ground Bus: Noninsulated, horizontal copper bus 2 by 1/4 inch, minimum.

D. Horizontal Bus Arrangement: Main phase, and ground buses extended with same capacity the entire length of motor-control center, with provision for future extension at both ends by bolt holes and captive bus splice sections or approved equivalent.

E. Short-Circuit Withstand Rating: Minimum 42,000 amps symmetrical rms Or as specified on the drawings.

2.4 FUNCTIONAL FEATURES

A. Description: Modular arrangement of motor controllers, control devices, overcurrent protective devices, transformers, panelboards, instruments, indicating panels, blank panels, and other items mounted in compartments of motor-control center as indicated.

B. Motor-Controller Units: Combination controller units of types and with features, ratings, and circuit assignments indicated.

1. Units with full-voltage, across-the-line, magnetic controllers up to and including Size 3 are installed on drawout mountings with connectors that automatically line up and connect with vertical-section buses while being racked into their normal, energized positions.

2. Units have short-circuit current ratings equal to or greater than short-circuit current rating of motor-control center section.

3. Units in motor-control centers with Type B wiring shall be equipped with pull-apart terminal strips or drawout terminal boards for external control connections.

C. Overcurrent Protective Devices: Types of devices with features, ratings, and circuit assignments indicated. Individual feeder-tap units through 225-A rating shall be installed on drawout mountings with connectors that automatically line up and connect with vertical-section buses while being racked into their normal, energized positions.

D. Spaces and Blank Units: Compartments fully bused and equipped with guide rails or equivalent, ready for insertion of drawout units. Provide bus barrier and compartment door.

E. Spare Units: Type, sizes, and ratings as indicated, and installed in compartments indicated "spare."

PART 3 - EXECUTION

3.1 EXAMINATION

A. Examine surfaces to receive motor control centers for compliance with installation tolerances and other conditions affecting performance of motor control centers installation. Do not proceed with installation until unsatisfactory conditions have been corrected.

3.2 APPLICATIONS

A. Select features of each motor controller to coordinate with ratings and characteristics of supply circuit and motor; required control sequence; duty cycle of motor, drive, and load; and configuration of pilot device and control circuit affecting controller functions.

B. Select horsepower rating of controllers to suit motor controlled.

C. Push-Button Stations: In covers of magnetic controllers for manually started motors where indicated, start contact connected in parallel with sealing auxiliary contact for low-voltage protection.

D. Hand-Off-Automatic Selector Switches: In covers of manual and magnetic controllers of motors started and stopped by automatic controls or interlocks with other equipment.

3.3 INSTALLATION

A. Install motor-control centers according to NEMA ICS 2.3 and manufacturer's written instructions.

B. Anchor each motor-control center assembly to steel-channel sills arranged and sized according to manufacturer's written instructions. Attach by tack welding or bolting. Level and grout sills flush with motor-control center mounting surface.

C. Install motor-control centers on concrete housekeeping bases conforming to Section 03300, "Cast-in-Place Concrete".

D. Fuses: Install fuses in each fusible switch as indicated, oriented for label readability.

3.4 IDENTIFICATION

A. Identify field-installed wiring and components and provide warning signs according to Section 16190, "Electrical Identification".

B. Operating Instructions: Frame printed operating instructions for motor-control centers, including control sequences, and emergency procedures. Fabricate frame of finished wood or metal and cover instructions with clear acrylic plastic. Mount on front of motor-control centers.

3.5 CONTROL WIRING INSTALLATION

A. Install wiring between motor-control devices according to Section 16180, “Wiring Devices".

B. Bundle, train, and support wiring in enclosures.

C. Connect hand-off-automatic switch and other automatic control devices according to an indicated wiring diagram or one that is manufacturer approved, where available.

1. Connect selector switches to bypass only the manual and automatic control devices that have no safety functions when switch is in the hand position.

2. Connect selector switches with motor-control circuit in both hand and automatic positions for safety-type control devices such as low- and high-pressure cutouts, high-temperature cutouts, and motor-overload protectors.

3.6 CONNECTIONS

A. Tighten motor-control center bus joint, electrical connector, and terminal bolts according to manufacturer's published torque-tightening values. Where manufacturer's torque values are not indicated, use those specified in UL 486A and UL 486B.

3.7 FIELD QUALITY CONTROL

A. Testing Agency: Provide services of a qualified independent testing agency to perform specified testing.

B. Testing: After installing motor-control center and after electrical circuitry has been energized, demonstrate product capability and compliance with requirements.

1. Procedures: Perform each visual and mechanical inspection and electrical test stated in NETA ATS, Sections 7.5, 7.6, and 7.16. Certify compliance with test parameters.

2. Remove and replace malfunctioning units with new units, and retest.

3.8 COMMISSIONING

A. Spot check breaker settings against Short Circuit Study. Short Circuit Study to be performed by the contractor.

B. Test the operation of the starters in Hand and Off Automatic control will generally be tested with the functional testing of the device.

C. Spot check insulation resistance on the MCC bus and control circuits.

D. Spot check voltage levels and resistance to ground

3.9 CLEANING

A. Inspect interior and exterior of motor-control centers. Remove paint splatters and other spots, dirt,

and debris. Touch up scratches and mars of finish to match original finish. Clean devices internally, using methods and materials recommended by manufacturer.

3.10 DEMONSTRATION

A. Training:

1. Conduct a minimum of 4 hours of training in operation and maintenance as specified in Division 1 Section 01770, "Project Closeout". Include training relating to equipment operation and maintenance procedures.
2. Schedule training with at least 7 days' advance notice. Deliver maintenance manuals to Owner before training commences.

END OF SECTION 16200

SECTION 16210
SWITCHES, DISCONNECT AND SAFETY

PART 1 -- GENERAL

1.1 SCOPE

A. Work Included: Not limited to the following:

1. Fabricate, provide and install disconnect and safety type switches where indicated on the Contract Drawing and hereinafter specified.

2. Comply with General Conditions, the General Requirements and the requirements of Division 16 concerning definitions, guarantees, submittals, as-builts, clean-up, etc. as applicable to the work of this Section.

3. Examine all other Sections for work related to those Sections which are required to be included as work under this Section.

1.2 QUALITY ASSURANCE

A. Conform to applicable provisions of Subsection 1.7 of Section 16020 –Municipal Facilities General Electrical Requirements.

B. Conform to applicable Codes and NEMA, ANSI, UL and IEEE Standards, Federal Specification W-S-865,

1.3 SUBMITTALS

Conform to applicable provisions of Section 01330 of Division 1 - General Requirements and Subsection 1.6 G of Section 16020.

PART 2 -- PRODUCTS

2.1 GENERAL

A. APPROVED MANUFACTURERS:

1. Appleton;

2. Eaton;

3. Schneider Electric;

4. Or equal.

B. Disconnect Switches: Provide with devices enabling the switch to be locked in the open or closed positions.

C. Manual Motor Switches: Tumbler type rated 3HP, 208 Volts three phase or single phase with or without overload heaters as required to protect equipment served.

D. Externally Operable Safety Switches: To have quick-make, quick-break mechanism, capable of

switching 10 times switch rating, with cover interlock to prevent opening with switch in ON position and defeat mechanism for maintenance.

E. Switches: Shall be Heavy Duty (HD) type unless otherwise indicated. Provide NEMA 1 enclosures for interior locations, NEMA 3R enclosures for exterior or wet locations, NEMA 4X 316 SS for corrosive locations and NEMA 7 for hazardous locations. Provide with number of poles, ampacity, voltage and HP rating, fusible or nonfusible as indicated.

F. Fusible Switches: Equip them with rejection clips for UL Class R fuses. Switches having a dual rating when used with dual element fuses shall have a rating so indicated.

G. 600 Amperes or Less Fuses: UL Class RKI with a minimum interrupting rating of 200,000 Amperes, Bussmann "Low-Peak Type" or equal.

PART 3 -- EXECUTION

3.1 GENERAL INSTALLATION

A. Locations: Install switches, disconnects and safety where indicated on the Contract Drawings.

B. Fastenings: Securely fasten switches to structural members or unistrut support as directed by the manufacturer.

C. Manual Motor Starters: Install flush mounted for switching motors 3HP and smaller in finished areas. Install surface mounted in equipment rooms and non-finished areas. Where installed above inaccessible ceilings provide access panels.

END OF SECTION 16210

SECTION 16270
SERVICE AND DISTRIBUTION SWITCHBOARD

PART 1-- GENERAL

1.1 SCOPE

A. Work Included: Not limited to the following:

1. Fabricate, provide and install service and distribution switchboards as indicated on the Contract Drawings and hereinafter specified.

2. Comply with the General Conditions, the General Requirements and the requirements of Section 16020 of this Division 16, concerning definitions, guarantees, submittals, as-builts, clean-up, etc. as applicable to the Work of this Section.

3. Examine all other Sections for work related to those Sections which are required to be included as Work under this Section.

1.2 RELATED WORK

A. Related Sections: The following sections contain requirements that relate to this section:

1. Section 16560 "Municipal Facilities Electrical Commissioning Requirements" for commissioning requirements.

2. Section 16570 "Municipal Facilities Electrical Testing Requirements" for testing requirements.

1.3 QUALITY ASSURANCE

A. Conform to applicable provisions of Sub-Section 1.7 of Section 16020.

B. Conform to applicable Codes and NEMA, ANSI and IEEE Standards.

1.4 SUBMITTALS

A. Conform to applicable provisions of Section 01330 of Division 1 - General Requirements and of Sub-Section 1.6G of Section 16020.

B. Shop Drawings shall show and contain the following information:

1. Plans showing top and bottom of switchboards.

2. Front, rear and side elevations of switchboards.

3. Schematic Wiring Diagrams showing the following:

a. One-line diagram with each circuit numbered.

b. Schedule showing circuit number, description and rating of protective device(s).

c. Complete short circuit availability of bus.

4. 1/2" - 1'-0" scale drawings of electrical rooms or areas overall dimensions for equipment layout including space available for conduits and protective devices.

PART 2 -- PRODUCTS

2.1 MATERIALS

A. Each switchboard shall be U.L. listed deadfront, deadrear, completely self-supporting, with the required number of vertical sections bolted together to form one floorstanding switchboard. Construction shall be NEMA Class II with line and load and main bus connections accessible from the front. Provide switchboards of 1000 amperes or greater rating with line and load insulated bus bars. Overcurrent protective devices shall be grouped in convertible type construction. Vertical sections shall have full height bussing and where space for future devices is indicated on the Drawings all the necessary mounting hardware shall be furnished. Switchboards shall include all protective devices and other equipment indicated on the Contract Drawings with the necessary interconnections, instrumentation, and control wiring. Bus shall be copper with plated joints, or tin plated aluminum. Bus bars shall be mounted on supports of high impact-resistant, non-tracking insulating material, and braced to withstand the maximum available fault current as indicated on the Contract Drawings. Other ratings shall be as indicated on the Contract Drawings. Series-connected or "integrated equipment" short circuit ratings shall not be applied in lieu of, or to comply with, short circuit and interrupting capacity ratings indicated on the Drawings, unless specifically approved by the City Engineer. Switchboards shall be as manufactured by Eaton, Square D. Co., Power Style Class 2700 (Schneider), or equal.

B. Service and distribution sections shall contain circuit breakers, fusible switches, and combination motor starters, with shunt trips, motor operators, ground fault protection, and other accessories, as indicated on the Drawings, as well as provisions for utility metering in accordance with the serving electric utility requirements. Each disconnecting means shall be provided with a means for individual padlocking. Switches shall be heavy-duty, quick-make and quick-break, and horsepower rated through 500 HP. Switches rated over 600 amperes shall be bolted pressure contact type. Ratings of disconnecting means and overcurrent protective devices shall be as indicated on the Drawings. Combination motor controllers shall comply with applicable requirements of Section 16200 for Motor Control Centers.

C. Finish: Interior finish shall be a gray lacquer or enamel; exterior finish shall be a gray baked-on enamel or lacquer. Apply all finish coatings over a rust-inhibiting metal primer.

D. Identification: Each switchboard shall have an engraved laminated plastic nameplate identifying the switchboard as designated and located on the Contract Drawings, and indicating voltage, phase, and number of system conductors. For example, "Switchboard MS 277/480V. 3Ø 4W. Lettering shall be white on black finish and 1/4-inch high minimum. Nameplates shall be affixed by a minimum of two escutcheon pins or screws. Each device on the switchboard shall be provided with an engraved plastic nameplate as specified in Section 16190.

PART 3 -- EXECUTION

3.1 GENERAL INSTALLATION

A. Switchboard(s) shall be securely bolted to the flooring or structure. Final attachment means shall be in compliance with the seismic requirements of governing authority. Shop Drawings indicating the bolt down requirements shall be provided by the manufacturer along with all necessary

calculations and shall be submitted with the Shop Drawings of the switchboard equipment. Refer to other Sections of the Specifications related to seismic requirements.

B. Switchboard(s) shall be installed on a level floor, with shims provided where necessary to attain both horizontal and vertical "plumb" conditions.

C. Switchboard(s) equipment shall be protected during construction in such a manner to prevent plaster, paint, dust, etc. from defacing the finish of equipment. Prior to final acceptance of the equipment, the interior of the equipment shall be cleaned of all foreign materials and debris. Any blemishes or defects on the exterior of the equipment shall be repaired by painting the equipment with paint supplied by the manufacturer of the equipment to match the factory finishes.

D. No operating handles in any switchboard shall be located above 6-foot 6-inches above finish floor. Code clearances on all sides of the switchboard equipment shall be maintained.

E. Switchboards shall be mechanically grounded to the grounding system.

F. Furnish ammeters, voltmeters, current and potential transformers, test blocks, control switches, fuses and circuit breakers, and other devices as indicated on the Drawings. Meters shall be switchboard type semi-flush mounted, with phase selector switches. The height of all devices shall comply with Code and utility company requirements with the switchboard installed on a 2-inch high concrete pad.

G. For solidly grounded "wye" services of more than 150 volts to ground, but not exceeding 600 volts phase to phase, provide ground fault protection of equipment for each service disconnecting means for services rated 1000 amperes or more, without a single main disconnecting means. Provide ground fault protection of equipment for other systems as indicated on the Drawings.

H. Ground fault sensors shall be zero sequence type unless indicated otherwise on the Drawings. Trip settings shall be as indicated on the Drawings or as directed by the City Engineer.

I. Protection: Keep switchboards covered during construction operations. Clean interior and exterior after all connections are completed. Factory connections shall be checked and re-torqued tight as required. Damage shall be field or factory repaired to a condition acceptable to the City Engineer at no added cost to the City.

J. Operational Test of the ground fault protection system using the primary current injection method shall be performed by qualified personnel with suitable testing/recording equipment in the presence of the City Engineer. Provide the City Engineer with a "Certified Test Report" including test parameters.

3.2 COMMISSIONING OF SWITCHGEAR AND SWITCHBOARD ASSEMBLIES

A. General:

1. Inspect for physical damage.

2. Compare equipment nameplate information with latest single line diagram and report discrepancies.

3. Inspect for proper alignment, anchorage and grounding.

4. Check tightness of accessible bolted bus joints by calibrated torque wrench method. Refer to manufacturer's instruction for proper foot pound levels.

5. Spot check breaker settings against Short Circuit Study.

6. Key interlock systems shall be physically tested to insure proper function.

    a. Closure attempt shall be made on locked open devices. Opening attempt shall be made on locked closed devices.
    b. Key exchange shall be made with devices operated in off-normal positions.

7. All doors, panels and sections shall be inspected for paint, dents, and scratches.

END OF SECTION 16270

SECTION 16280
SHORT CIRCUIT AND COORDINATION REPORT

PART 1 -- GENERAL

1.1 THE REQUIREMENT

A. The CONTRACTOR shall prepare a power system analysis of short circuit calculations, a protective device coordination study and a harmonic analysis in accordance with the requirements of these Specifications and as shown.

B. The studies shall include all portions of the electrical distribution system for normal and standby power sources down to and including the (208 V) distribution system.

C. The work to be provided by the CONTRACTOR shall include protection studies for motors supplied with solid state overload and overcurrent protection devices.

D. The work to be provided by the CONTRACTOR shall include an evaluation of harmonic distortion and the furnishing and installation of filters and any other equipment as may be required for harmonic suppression.

1.2 RELATED WORK SPECIFIED ELSEWHERE

A. The Work of the following Sections applies to the work of this Section. Other Sections of the Specifications, not referenced below, shall also apply to the extent required for proper performance of this work.

1. Section 16020 Municipal Facilities General Electrical Requirements
2. Section 16270 Service and Distribution Switchboard
3. Section 16340 Low Voltage Motor Control

1.3 REFERENCE SPECIFICATIONS, CODES AND STANDARDS

A. Comply with the current provisions of the following codes and standards.

1. Codes:

LAEC	City of Los Angeles Electrical Code, latest adopted edition

2. Commercial Standards:

ANSI/IEEE 141	Recommended Practice for Electrical Power Distribution for Industrial Plants
ANSI/IEEE 242	Recommended Practice for Protection and Coordination of Industrial and Commercial Power Systems

ANSI C 37.010	Standard Application Guide for AC High-Voltage Circuit Breakers
ANSI C 37.5	Calculations of Fault Currents for Application of Power Circuit Breakers
ANSI C-37.13	Low-Voltage AC Power Circuit Breaker (600-Volt Insulation Class)
IEEE 519	Recommended Practices and Requirements for Harmonic Control in Electrical Power Systems

1.4 CONTRACTOR SUBMITTALS

A. Submittals shall be made in accordance with Section 16020 Municipal Facilities General Electrical Requirements and as specified herein.

B. The power system analysis shall be submitted to the ENGINEER prior to receiving final approval of the distribution equipment shop drawings and/or release of equipment for manufacture; approval from the ENGINEER may be obtained for a preliminary submittal of sufficient detail to ensure that device selection will be adequate. Preliminary submittal shall indicate the computer program for use in performing the work of this Section.

C. Studies for harmonic current, voltage and line notching test results shall be forwarded to the ENGINEER prior to acceptance testing of the project and subsequent to the installation of all harmonic generating and harmonic-sensitive equipment.

D. Submittals for solid state motor protective devices shall be forwarded to the engineer prior to loading the motor.

E. Final settings of Protective device shall be approved by the ENGINEER prior to project acceptance and shall be based on the results of the power system analysis.

F. The CONTRACTOR shall indicate in the submittal, changes to the protection scheme or equipment selection that will result in improved system reliability and safety.

1.5 QUALITY ASSURANCE

A. Organization's Qualifications:

1. Short circuit studies, protective device evaluation studies, and protective device coordination studies shall be performed by the medium voltage switchgear manufacturer or by an electrical testing service regularly engaged in the short circuit and protective device coordination studies for a period of at least 15 years. The study shall utilize proven computer programs for power system analysis. The studies shall be signed by the professional electrical engineer, registered in the State of California, responsible for the studies.

PART 2 -- PRODUCTS

2.1 GENERAL

A. The organization of the study shall include a single-line and an impedance diagram of the power system. This diagram shall identify all components considered in the study and the ratings of all power devices (this includes, but is not limited to: transformers, circuit breakers, relays, fuses, busses, and cables). The resistance and reactances of all cables shall be identified in the impedance diagram. The study shall contain, from the service utility company, all written data regarding maximum available short circuit current, voltage, and X/R ratio of the utilities' power system.

2.2 SHORT CIRCUIT STUDY

A. The short circuit study shall be performed with the aid of a digital computer program and shall be in accordance with ANSI C 37.5, IEEE Standard 242, and IEEE Standard 141.

2.3 PROTECTIVE DEVICE EVALUATION STUDY

A. A protective device evaluation study shall be performed to determine the adequacy of circuit breakers, molded case switches, automatic transfer switches, and fuses. Any problem areas or inadequacies in the equipment due to prospective short-circuit currents shall be promptly brought to the ENGINEER's attention.

2.4 PROTECTIVE DEVICE COORDINATION STUDY

A. A protective device coordination study shall be performed to provide the necessary calculations required to select or check the selection of power fuse ratings, protective relay characteristics and settings, ratios and characteristics of associated current transformers, and low-voltage breaker trip characteristics and settings. The results of the study shall govern the final selection of the protective devices.

2.5 TIME/CURRENT COORDINATION CURVES

A. As a minimum, the time/current coordination curves for the power distribution system shall include the following on 5-cycle log-log graph paper:

1. Time/current curves for each protective relay or fuse showing graphically that the settings will provide protection and selectivity within industry standards. Each curve shall be identified, and tap and time dial settings shall be specified.

2. Time/current curves for each device shall be positioned to provide the maximum selectivity to minimize system disturbances during fault clearing.

3. Time/current curves and points for cable and equipment damage.

4. Circuit interrupting device operating and interrupting times.

5. Indicate maximum fault values on the graph.

6. Sketch of bus and breaker arrangement.

7. Magnetizing inrush points of transformers.

8. All restrictions of the ANSI and LAEC shall be adhered to and proper coordination intervals and separation of characteristics curves shall be maintained.

9. Thermal limits of motors 250 hp and above.

2.6 HARMONIC MEASUREMENT

A. The CONTRACTOR shall prepare a report of the distribution system, at all voltage levels, which shall indicate the harmonic currents anticipated at each voltage level. This report shall indicate sources of harmonic currents, voltages, and line notching of all equipment. The report shall state the tolerance of sensitive equipment to harmonics.

B. CONTRACTOR shall measure harmonics present in the output of harmonic-generating equipment and at the input terminals of sensitive equipment. Install filters to prevent equipment malfunction, due to harmonics. Harmonic measurements shall be performed and documented after the filter installations.

C. All equipment which is required to conform to IEEE 519 shall be measured to determine output harmonic content. The CONTRACTOR shall take the corrective action necessary to attain compliance with IEEE 519, Table. Measurements and documentation shall be performed to demonstrate compliance with the standards.

2.7 MOTOR PROTECTION

A. Overload protection as phase overcurrent for medium voltage motors is specified in other Sections of these Specifications to be solid-state protective modules. The CONTRACTOR shall adjust these modules with respect to actual installed motor torque, current and thermal characteristics so that the best possible motor protection will result. Protective settings shall be submitted, and approved, before respective motors are run under load.

PART 3 -- EXECUTION

3.1 PROTECTIVE DEVICE TESTING, CALIBRATION AND ADJUSTMENT

A. The CONTRACTOR shall provide the services of a qualified field engineer and necessary tools and equipment to test, calibrate, and adjust the protective relays and circuit breaker trip devices as recommended in the power system analysis. The qualifications of the field engineer shall be subject to review and approval by the ENGINEER.

3.2 STUDY REPORTS

A. The results of the power system analysis shall be submitted summarized in a final report. The report shall include, but not limited to the following:

1. Single-line diagram

2. Impedance diagram

3. Tabulation of all protective devices, which shall be identified on the single-line diagram

4. Time/current coordination curves

5. Computerized fault current calculations

6. Specific recommendations, if any

7. Test instrumentation, condition and connections, as applicable, for each study

8. Harmonic measurement results

9. Harmonic distortion correction proposals.

END OF SECTION 16280

This page intentionally left blank

SECTION 16290
MUNICIPAL FACILITIES GROUNDING SYSTEMS

PART 1 -- GENERAL

1.1 SCOPE

A. Required: Provide and ground electrical systems completely and effectively as required by Code and herein specified.

B. Comply with the General Conditions, General Requirements and the requirements of Section 16020 of this Division 16 concerning definitions, guarantees, submittals, as-builts, clean-up, etc. as applicable to work of this Section.

1.2 SUBMITTALS

A. General: Submit each item in this article according to the conditions of the Contract and Division 1 Specification 01330.

B. Product Data for grounding rods, connectors and connection materials, and grounding fittings.

C. Field tests and observation reports certified by the testing organization and indicating and interpreting the test reports for compliance with performance requirements.

1.3 RELATED WORK

A. Related Sections: The following sections contain requirements that relate to this section:

1. Section 16560 "Municipal Facilities Electrical Commissioning Requirements" for commissioning requirements.

2. Section 16570 "Municipal Facilities Electrical Testing Requirements" for testing requirements.

1.4 QUALITY ASSURANCE:

A. Testing Agency Qualifications: A “National Recognized Teating Laboratory” (NRTL) As defined in OSHA Regulation 1910.7.

B. Comply with NFPA 70.

C. Comply with UL 467.

D. Listing and Labeling: Provide products specified in this Section that are listed and labeled.

1. The Terms “Listed” and “Labeled”: As defined in the National Electrical Code Article 100.

2 Listing and Labeling Agency Qualifications: A “Nationally Recognized Testing Laboratory” (NRTL) as defined in OSHA Regulation 1910.7.

1.5 REFERENCE STANDARDS:

A. NFPA 70: National Electrical Code – Article 250.

B. Federal Information Processing Standard Publication #94 “Guideline on Electrical Power for ADP Installations”.

C. IEE Std. 142-1982 “Grounding of Industrial and Commercial Power System (GREEN Book).

D. IEE Std. 1100-1992 “Powering and Grounding Sensitive Electronic Equipment” (Emerald Book).

1.6 SYSTEM DESCRIPTION

A. Ground the electrical service system neutral at service entrance equipment to metallic water service and to concrete encased grounding electrodes.

B. Ground each separately-derived system neutral to nearest effectively grounded metallic water pipe.

C. Provide telephone and data system grounding conductor at main terminals of respective system bonded to service entrance grounding electrode.

D. Bond together system neutrals, service equipment enclosures, exposed non-current carrying metal parts of electrical equipment, metal raceway systems, grounding conductor in raceways and cables, receptacle ground connectors, metallic plumbing systems and concrete encased electrode.

PART 2 -- PRODUCTS

2.1 MATERIALS

A. Grounding and Bonding Conductors: Soft-drawn stranded copper.

B. Buried or Concealed Joints: Exothermic welded, inspected and approved the Los Angeles City Building Department before concealment.

C. System grounding conductors shall be a minimum of #3 AWG unless otherwise indicated, and shall be continuous without joints or splices.

D. Bolted Connections: Everdur hardware, bolts, and lock washers or equal.

E. Welded Connections: Either Erico Cadweld Process or Continental Industries Thermoweld Process or equal.

F. Compression Connections: Thomas & Betts Series 5300 fittings or equal. Use manufacturer's specific instructions and tools for each connection.

G. Ground Rods: Copperweld Steel Company or equal. Provide 3/4 inch copperclad steel driven ground rods, 10 feet long, UL listed, in each manhole and where indicated on Contract Drawings.

PART 3 -- EXECUTION

3.1 GENERAL INSTALLATION

A. Grounding and Bonding: Provide in accordance with all requirements of NEC and other applicable codes, Contract Drawings and the following descriptions. Comply with the codes as a minimum requirement with specifications where they are more stringent. Ground each electrical service to cold water systems and provide supplemental grounding as follows:

1. Structural Steel Electrode: Bond the structural steel frame of the building or structure to the point of ground at service equipment with a continuous bonding conductor equal in size to the grounding electrode conductor, but not smaller than No. 4 AWG or

2. Concrete-Encased Electrode: Provide three minimum No. 4 horizontal reinforcing bars in and near the bottom of the building or structure footing, each with a minimum continuous (no splices) length of 20 feet. Install a continuous bonding conductor equal in size to the grounding electrode conductors, but not smaller than No. 4 A.W.G., bonded to each reinforcing bar by means of corrosion-resistant clamps or welding, to the point of ground at service equipment. The bonding conductor shall be installed in schedule 40 rigid PVC conduit from a point within the footing continuous to the service equipment. A single size 3/0 bare copper conductor with a minimum continuous length of 20 feet may be used in lieu of the three No. 4 reinforcing bars.

B. Separate Buildings or Structures: When two or more buildings or structures are supplied from a common source or service, the grounding system in each building or structure shall have a grounding electrode connected to the metal enclosure of the building or structure disconnecting means and to the AC system grounded circuit conductor on the supply of the building or structure disconnecting means.

C. Separately Derived Systems: Shall be bonded and grounded in accordance with Code.

D. Customer-Station Transformer: Shall be bonded and grounded in accordance with the requirements of the serving electric utility.

E. Nonmetallic Raceways: A Code-sized green, or green with yellow stripe insulated conductor shall be installed with the circuit conductors, for equipment grounding. Ground conductor shall be installed in raceways with branch circuit wiring where indicated on the Contract Drawings.

F. Communication, Sound, and Signal Systems: Metal raceways and enclosures shall be grounded as directed by the City Engineer.

G. The interior metallic cold water pipe system shall be bonded to the main grounding electrode by a conductor sized in accordance with Code, but not smaller than No. 8 A.W.G.

H. Telephone service main backboard or cabinet shall be grounded in accordance with requirements of the telephone serving facility.

I. All grounding and bonding conductors shall be installed with sufficient slack to avoid breaking due to settlement and movement of conductors at attached points.

J. Flexible Conduit: Where equipment grounding or bonding conductors are required they shall be installed inside the conduit except bonding conductors may be installed exterior of the conduit if not over 3 feet maximum length, not smaller than No. 8 A.W.G., and if secured to the conduit at 6 inch. Flexible conduit not to be used as a ground path. Include code size green conductors in all flexible conduit.

K. Transformers and other isolated neutrals shall be grounded from the neutral bushing or connector to grounding electrodes, building steel or metallic code water pipe system.

L. All conduit stub-ups shall be grounded and where multiple stub-ups are made within an equipment enclosure such as a switchboard, they shall be equipped with grounding bushings and bonded together to the enclosure, and the enclosure ground bus with code sized copper conductors.

M. Metallic conduits, wireways, metal enclosures of busways, electrical equipment housing and all non-current carrying metallic parts shall be grounded. The metallic conduit system shall be used for equipment and enclosure grounding but not as a system ground conductor.

3.2 MEASUREMENT OF RESISTANCE TO GROUND

A. All Systems**:** Measure by the "direct" method or the "Fall of Potential" method. The "direct" method, or two terminal test, includes a Megger Earth Tester with terminals connected to the electrode under test and to an all metallic water pipe system. The following limitations apply to this method:

1. The water pipe system must be extensive enough to have a negligible resistance.

2. The water pipe system must be metallic throughout, without any insulating couplings or flanges.

3. The earth electrode under test must be far enough away from the water pipe system to be outside its sphere of influence. Rule of thumb: Distance from the earth-electrode system to the water pipe system should be about 10 times the radius of the electrode or grid to obtain a measurement within an accuracy of p 10%.

4. Submit test report of the main building grounding electrode's resistance to ground to the City Engineer.

B. Test each receptacle or branch circuit breaker having ground-fault circuit protection to assure that the ground-fault circuit interrupter will not operate when subjected to a ground-fault current of less than 4 milliamperes and will operate when subjected to a ground-fault current exceeding 6 milliamperes. Perform testing using an instrument specifically designed and manufactured for testing ground-fault circuit interrupters. "TEST" button operation will not be acceptable as a substitute for this test. Replace receptacles that do not shutoff power with 5/1000 of an ampere within 1/40th of a second and retest. Submit test report signed by Test Engineer who performed this test.

END OF SECTION 16290

SECTION 16320
TRANSFORMERS

PART 1- GENERAL

1.1 SCOPE

A. Required**:** Provide and install dry type transformers work as indicated on the Contract Drawings and Schedules and herein specified.

B. Comply with the General Conditions, General Requirements and the requirements of Division 16 concerning definitions, guarantees, submittals, as-builts, clean-up, etc. as applicable to work of this Section.

1.2 RELATED WORK

A. Related Sections: The following sections contain requirements that relate to this section:

1. Section 16190 "Electrical Identification"

2. Section 16030 "Wastewater Facilities Electrical Testing Requirements" for testing requirements.

3. Section 16560 "Municipal Facilities Electrical Commissioning Requirements" for commissioning requirements.

4. Section 16570 "Municipal Facilities Electrical Testing Requirements" for testing requirements.

1.3 QUALITY ASSURANCE

A. Manufacturers: Firms regularly engaged in manufacture of power/distribution transformers of types and ratings required, whose products have been in satisfactory use in similar service for not less than 5 years.

B. Installer's Qualifications: Firm with at least 5 years of successful installation experience on projects utilizing electrical power and distribution transformers similar to those required for this project.

C. NEC Compliance: Comply with NEC as applicable to installation and construction of electrical power/distribution transformers.

D. ANSI Compliance: Comply with applicable requirements of ANSI Standards C57-Series pertaining to power/distribution transformers.

E. NEMA Compliance: Comply with requirements of NEMA Std Pub/No.'s ST 20; "Dry-Type Transformers for General Applications", TR 1.

F. UL Compliance: Comply with applicable requirements of ANSI/UL 506; "Safety Standard for Specialty Transformers". Provide power/distribution transformers and components which are UL-listed and labeled.

G. NESC Compliance: Comply with applicable requirements of National Electrical Safety Code (ANSI Std C2) pertaining to indoor installation of transformers.

H. Testing Agency Qualifications: In addition to requirements specified in Section 01453, "Quality Control," an independent testing agency shall meet OSHA criteria for accreditation of testing laboratories, Title 29, Part 1907; or shall be a full-member company of the InterNational Electrical Testing Association.

1. Testing Agency's Field Supervisor: Person currently certified by the InterNational Electrical Testing Association or the National Institute for Certification in Engineering Technologies, to supervise on-site testing specified in Part 3.

I. Listing and Labeling: Provide transformers specified in this Section that are listed and labeled.

1. The Terms "Listed" and "Labeled": As defined in NFPA 70, Article 100.

2. Listing and Labeling Agency Qualifications: A "Nationally Recognized Testing Laboratory" as defined in OSHA Regulation 1910.7.

1.4 SUBMITTALS

A. Conform to applicable provisions of Section 01330 and as herein specified.

B. Product Data**:** Submit manufacturer's technical product data including rated KVA, frequency, primary and secondary voltages, percent taps, polarity, impedance and certification of transformer performance efficiency at indicated loads, percentage regulation at 100% and 80% power factor, no-load and full-load losses in watts, % impedance at 75 deg. C, hot-spot and average temperature rise above 40 deg. C ambient temperature, sound level in decibels, and standard published data.

C. Shop Drawings: Submit manufacturer's drawings indicating dimensions, and weight loadings for transformer installations, showing layouts, mountings and supports, spatial relationship to panelboards and associated equipment, include transformer connections to electrical equipment.

D. Wiring Diagrams: Submit wiring protection and control diagrams for power distribution transformers. Clearly differentiate between portions of wiring that are manufacturer-installed and portions to be field-installed.

PART 2 -- PRODUCTS

2.1 ACCEPTABLE MANUFACTURERS

A. Available Manufacturers: Subject to compliance with requirements, manufacturers offering products which may be incorporated in the work included, but are not limited to the following:

1. Eaton;

2. Schneider Electric;

3. Siemens;

4. Or equal.

2.2 DISTRIBUTION TRANSFORMERS

A. General**:** Except as otherwise indicated, provide manufacturer's standard materials and components as indicated by published product information, designed and constructed as recommended by manufacturer, and as required for completed installation.

B. 15 KVA and Above**:** Shall have drip-proof ventilated enclosures and copper coils of continuous wound construction impregnated with non-hygroscopic thermosetting varnish. Cores shall be constructed of high grade non-aging silicon steel, with high magnetic permeability and low hysteresis losses. Flux densities shall be well below the saturation point. Vibration-absorbing mounts shall be provided between the core/coil and the mounting base. Provide four 2-1/2 percent full capacity primary taps, two above and two below, the rated nominal voltage. Terminals shall be accessible from the front. Insulation materials shall be in accordance with NEMA ST20 standards for a 220 degrees C. U.L. recognized insulation system. Full load temperature rise shall not exceed 80 degrees C. in a 40 degrees C. ambient.

C. Less than 15 KVA: Wall mounted type, copper coils; full load temperature rise shall not exceed 115 degrees C. in a 40 degrees C. ambient.

D. Finishes: Coat interior and exterior surfaces of transformer, including bolted joints, with manufacturer's standard color baked-on enamel.

2.3 CONTROL AND SIGNAL TRANSFORMERS

A. Units comply with NEMA ST 1 and are listed and labeled as complying with UL 506.

B. Ratings: Continuous duty. If rating is not indicated, provide capacity exceeding peak load by 50 percent minimum.

C. Description: Self-cooled, 2 windings.

PART 3 -- EXECUTION

3.1 INSPECTION

A. Installer must examine areas and conditions under which power/distribution transformers and ancillary equipment are to be installed, and notify Contractor in writing of conditions detrimental to proper completion of the work. Do not proceed with the work until satisfactory conditions have been corrected in a manner acceptable to Installer.

B. Coordinate transformer installation work with electrical raceway and wire/cable work, as necessary for proper interface.

C. Tighten electrical connectors and terminals, including screws and bolts, in accordance with equipment manufacturer's published torque tightening values for equipment connectors. Where manufacturer's torquing requirements are not indicated, tighten connectors and terminals to comply with tightening torques specified in UL Std 486A and B.

3.2 GROUNDING

A. Provide equipment grounding connections for power/distribution transformers as indicated. Tighten connections to comply with tightening torques specified in UL Std 486A to assure permanent and effective grounding.

3.3 CLEANING

A. On completion of installation, inspect components. Remove paint splatters and other spots, dirt, and debris. Repair scratches and mars on finish to match original finish. Clean components internally using methods and materials recommended by the manufacturer.

3.4 INSTALLATION

A. Comply with safety requirements of IEEE C2, National Electrical Safety Code.

B. Arrange equipment to provide adequate spacing for access and for circulation of cooling air.

C. Identify transformers and install warning signs according to Section 16190, "Electrical Identification."

D. Tighten electrical connectors and terminals according to manufacturer's published torque-tightening values. If manufacturer's torque values are not indicated, use those specified in UL 486A and UL 486B.

3.5 TESTING

A. Prior to energizing of transformers, check all accessible connections for compliance with manufacturer's torque tightening Specifications.

B. Prior to energizing, check circuitry for electrical continuity, and for short-circuits.

C. Upon completion of installation of transformers, energize primary circuitry at rated voltage and frequency from normal power source, and test transformers, including, but not limited to, audible sound levels, to demonstrate capability and compliance with requirements. Where possible, correct malfunctioning units at site, then retest to demonstrate compliance; otherwise, remove and replace with new units or components, and proceed with retesting.

END OF SECTION 16320

SECTION 16330
PANELBOARDS

PART 1 -- GENERAL

1.1 SCOPE

A. Required**:** Provide and install complete equipment including circuit breakers and panelboards as indicated on the Contract Drawings and herein specified.

B. Comply with the General Conditions, General Requirements and the requirements of Section 16020 of this Division 16 concerning definitions, guarantees, submittals, as-builts, clean-up, etc. as applicable to work of this Section.

1.2 RELATED WORK

A. Related Sections: The following sections contain requirements that relate to this section:

1. Section 16560 " Municipal Facilities Electrical Commissioning Requirements " for commissioning requirements.

2. Section 16570 " Municipal Facilities Electrical Testing Requirements" for testing requirements.

1.3 QUALITY ASSURANCE

A. Comply with applicable provisions of Subsection 1.2 of Section 16020.

B. Conform to the applicable provisions of Subsection 1.6 of Section 16020 related to legal requirements and standards including NEMA, ANSI and IEEE Standards, NFPA 70, and Federal Specifications.

1. 4 SUBMITTALS

A. Submit under the provisions of Section 01330.

B. Product Data: For each type of panelboard, overcurrent protective device, accessory, and component indicated. Include dimensions and manufacturers' technical data on features, performance, electrical characteristics, ratings, and finishes.

C. Maintenance Data: For panelboards and components to include in maintenance manuals specified in Division 1. In addition to requirements specified in Section 01770, "Closeout Procedures," include the following:

1. Manufacturer's written instructions for testing and adjusting overcurrent protective devices.

2. Time-current curves, including selectable ranges for each type of overcurrent protective device.

PART 2 -- PRODUCTS

2.1 GENERAL REQUIREMENTS

A. Cabinets to House Panelboards: Cabinets shall be formed of galvanized metal, chemically cleaned, and all breaks in galvanizing shall be painted with metallic aluminum paint.

Minimum size: 20 inches wide by 5-3/4 inches deep. Trims and doors shall be chemically cleaned. Provide ANSI synthetic alkalyd factory enamel finish on the exterior and interior of panels. Provide for circuit directory behind door with glass or heavy plastic protection. Cabinets shall be flush or surface mounted type as indicated with screw cover, hinged doors with flush lock keyed to operate from one key. Cabinets greater than three feet shall have three trim bolts on each side.

B. Identification: Each panelboard shall have an exterior engraved laminated plastic nameplate identifying the panelboard as designated on the Drawings and indicating voltage, phases, and number of system conductors. For example:

"Panel A 277/480V. 3ph, 4W". Lettering shall be white on black finish and 3/16 inch high minimum. Nameplates shall be affixed with a minimum of two escutcheon pins or screws. Each circuit breaker shall have a permanent metal or plastic number to identify each circuit. A circuit schedule card and holder shall be mounted on the inside of the door and covered with plastic.

C. Protective Devices:

1. Protective devices, main, branch or sub-feed shall be thermal-magnetic-molded-case circuit breakers, bolt-on type ampacities as scheduled on Drawings. Provide single handle, common trip for two and three-pole units. Handle ties are not acceptable.

2. Circuit Breakers, 250A and Larger: Adjustable magnetic trip setting.

3. Electronic Circuit Breakers, 400A and Larger: RMS sensing; field-replaceable rating plug; with the following field-adjustable settings:

   a. Instantaneous trip.

   b. Long- and short-time pickup levels.

   c. Long- and short-time time adjustments.

   d. Ground-fault pickup level, time delay, and I^2t response. Where indicated on the drawings.

4. GFCI Circuit Breakers: Single- and two-pole configurations with 5-mA trip sensitivity, where indicated on the lighting and appliance panelboards.

5. Molded-case circuit breakers shall be suitable for application; Rype SWD for switching fluorescent lighting loads; Type HACR for heating, air-conditioning, and refrigerating equipment.

D. Electrical Equipment Adjacent to Panelboards**:** Where scheduled provide a separate cabinet with screw cover and hinged door with flush lock keyed alike with panelboard. A single cabinet may be used when a compartment (with appropriate barriers) under separate lockable door and cover is provided.

E. Finish: As specified for service switchboards in Section 16270 service and distribution switchboards.

2.2 DISTRIBUTION PANELBOARDS

A. Each distribution panelboard shall be a deadfront, deadrear, U.L. listed, circuit breaker type with copper buses and comply with Federal Specification W-P-115a. Construction shall be NEMA Class I. Electrical ratings shall be as indicated on the Drawings.

Series-connected or "integrated equipment" short circuit ratings shall not be applied in lieu of, or to comply with, short circuit and interrupting capacity ratings indicated on the Drawings unless specifically approved by the City Engineer. Provide fronts with flush cylinder tumbler locks, trim clamps, and concealed hinges.

Double doors or doors over 48 inches high shall have 3 point latching. Provide 2 keys for each panelboard. Furnish panelboards with main lugs or main circuit breakers and all other circuit breakers as indicated on the drawings. Each circuit breaker shall be provided with a means for individual padlocking. Distribution panelboards shall be Square D. Co. I-line type or equal.

2.3 LIGHTING AND APPLIANCE PANELBOARDS

A. Each lighting and appliance panelboard shall be a U.L. listed circuit breaker type with copper buses and meet Federal Spec. W-P115a. Electrical ratings shall be as indicated on the Drawings. Series connected or "integrated equipment" ratings shall not be applied in lieu of or to comply with short circuit and interrupting ratings indicated on the Drawings, unless specifically approved by the City Engineer. Provide fronts with flush cylinder tumbler locks, trim clamps, and concealed hinges. Provide two keys for each panelboard. Furnish panelboards with main lugs or main circuit breakers and all circuit breakers as indicated on the Drawings.

B. Each circuit breaker shall be provided with a means for individual padlocking. Lighting and appliance panelboards shall be Square D. Co. Type NQO for 120/240 or 208/120 volt systems, and Type NEHB for 480/277 volt systems.

2.4 FABRICATION AND FEATURES

A. Hinged Front Cover: Entire front trim hinged to box and with standard door within hinged trim cover.

B. Directory Card: With transparent protective cover, mounted inside metal frame, inside panelboard door.

C. Bus: Hard-drawn copper, 98 percent conductivity or Tin-plated aluminum.

D. Main and Neutral Lugs: Mechanical type suitable for use with conductor material.

E. Equipment Ground Bus: Adequate for feeder and branch-circuit equipment ground conductors; bonded to box.

F. Future Devices: Mounting brackets, bus connections, and necessary appurtenances required for future installation of devices.

G. Isolated Equipment Ground Bus: Adequate for branch-circuit equipment ground conductors; insulated from box, where indicated on the Drawings.

H. Extra-Capacity Neutral Bus: Neutral bus rated 200 percent of phase bus and UL listed as suitable for nonlinear loads, where indicated on the Drawings.

I. Skirt for Surface-Mounted Panelboards: Same gage and finish as panelboard front with flanges for attachment to panelboard, wall, and ceiling or floor. Provide back, sides and removable front.

J. Feed-through Lugs: Mechanical type suitable for use with conductor material. Locate at opposite end of bus from incoming lugs or main device, where indicated on the Drawings.

PART 3 -- EXECUTION

3.1 GENERAL INSTALLATION OF PANELBOARDS

A. Install equipment square, level and secure to the building structure by bolting.

B. Align top of adjacent panelboards unless specifically noted otherwise. Install panelboards over 29 inches high to mount highest protective device handle a maximum of 6'-6" or 5'-6" for panelboards up to 29 inches high, except where adjacent to taller panelboards.

C. Flush enclosures shall be installed with the front edge flush with combustible finish surfaces and not more than 1/4 inch behind noncombustible finish surfaces, and shall be secured to framing or blocking except where embedded in masonry or concrete.

D. Provide weather-proof gaskets on trims and doors of panelboards located in mechanical areas.

3.2 OTHER APPLICABLE REQUIREMENTS

A. Provide a typewritten circuit directory for each branch circuit. Obtain City facility room numbers and use in final directory.

B. Provide a schematic diagram and sequence of operation for control devices installed under

separate door adjacent to panelboards.

C. Install nameplates in accordance with provisions noted in Section 16190 – Electrical Identification.

D. Equip each circuit breaker for electrical discharge lamps with a locking device unless circuit will be switched at panelboard. Equip each circuit breaker for night-light circuits, fire alarm, security and control circuits with a locking device.

E. Provide filler plates for all unused spaces.

F. Stub five 3/4-inch empty conduits from each flush mounted panelboard into accessible ceiling space and cap for future use. Stub four 1-inch empty conduits into raised floor space or below slab not on grade

G. Wiring in Panelboard Gutters: Arrange conductors into groups and bundle and wrap with wire ties after completing load balancing.

3.3 COMMISSIONING

A. Spot check breaker settings against Short Circuit Study

B. Spot check phase balance after system is under load. Ensure proper, thorough and accurate identification of load. Trip breakers and validate load identified. Test GFI breakers.

C. Receptacle Polarity Test: Spot check receptacles installed or reconnected under this contract with a receptacle circuit tester. Tester shall test for open ground, reverse polarity, open hot, open neutral, hot and ground reversed, hot or neutral and hot open.

D. Check circuit labeling by de-energizing circuits while circuit tester is in the receptacle. Labeling shall be checked on the load/receptacle and at the breaker

3.4 CLEANING

A. On completion of installation, inspect interior and exterior of panelboards. Remove paint splatters and other spots. Vacuum dirt and debris; do not use compressed air to assist in cleaning. Repair exposed surfaces to match original finish.

END OF SECTION 16330

SECTION 16340
LOW VOLTAGE MOTOR CONTROL

PART 1 -- GENERAL

1.1 THE REQUIREMENT

A. The CONTRACTOR shall furnish and install all group-mounted and unit motor control as required for each motor furnished for installation all in accordance with the requirements of the Contract Documents.

B. When motors furnished differ from the indicated, the CONTRACTOR shall, at no additional cost to the CITY, make the necessary adjustments to wiring, conduit, disconnect devices, motor starters, branch circuit protection, and other affected material or equipment to accommodate the motors actually installed.

C. Make like items of equipment provided hereunder the end products of one manufacturer in order to achieve standardization for appearance, operation, maintenance, spare parts, and manufacturer's service.

1.2 RELATED WORK SPECIFIED ELSEWHERE

A. The work of the following Divisions or Sections applies to the work of this Section. Other Sections of the Specifications, not referenced below, shall also apply to the extent required for proper performance of this work.

1. Section 16020 Municipal Facilities General Electrical Requirements.

2. Section 16100 Basic Materials and Methods.

3. Section 16490 Electric Motors

1.3 REFERENCE SPECIFICATIONS, CODES, AND STANDARDS

A. All work specified herein shall conform to or exceed the applicable requirements of the referenced portions of the following publications to the extent that the provisions thereof are not in conflict with other provisions of these specifications.

1. Codes and Standards:

LAEC	City of Los Angeles Electrical Code, latest adopted edition
California Code of Regulations	Title 8, Industrial Relations, Subchapter 5, Electrical Safety Orders.

2. Commercial Standards:

UL 845	Standards for Safety Electric Motor Control Centers.

NEMA	ICS-1	General Standard for Industrial Control and Systems
NEMS	ICS-2	Industrial Control Devices, Controllers and Assemblies

1.4 CONTRACTOR SUBMITTALS

A. Shop drawing submittals shall comply with the "Contractor Submittals" paragraph of Section 16012, "Municipal Facilities General Electrical Requirements".

B. The following submittals and specific information shall be provided.

1. One-line diagrams,

2. Elementary diagrams,

3. Connection diagrams,

4. Interconnection diagrams,

5. Protective device time-current characteristics on conventional-sized transparencies,

6. Operational description,

7. Installation instructions,

8. Maintenance instructions,

9. Spare parts list,

10. Test reports, including procedures, test conditions, results and graphs**.**

1.5 QUALITY ASSURANCE

A. Quality assurance shall be in accordance with Section 16010 Wastewater Facilities General Electrical Requirements.

B. Electrical and Mechanical Testing: All components shall be factory tested in accordance with the applicable NEMA ICS requirements.

C. Field Testing: Field tests shall be performed in accordance with Electrical Testing Requirements.

PART 2 -- PRODUCTS

2.1 MOTOR CONTROL, GENERAL

A. Provide each motor with a suitable controller and devices that will function as specified for the respective motors and meeting NEMA ICS 2, the NEC, and UL.

B. Provide each motor controller with thermal overload protection in all ungrounded phases. Use protection consisting of thermal overload relays meeting NEMA ICS 2 which are sensitive to motor current and mounted within the motor controller, or a combination of thermal protectors embedded within the motor windings and controller-mounted overload relays, as indicated. Use overload protection devices of the inverse-time current characteristic type.

C. Provide controller-mounted overload relays of the manual-reset type with externally operated reset button when used without motor thermal protectors; when used in conjunction with thermal protectors, provide the automatic reset type. Select and install overload relay heaters after the actual nameplate full-load current rating of the motor has been determined.

D. If power factor correction capacitors are connected on the load side of the overload relays, incorporate the resulting reduction in line current in the selection of overload relay heaters.

E. Install and connect any required thermal protector monitoring relay provided by motor manufacturer in motor-control circuit and provide manual reset function

2.2 MANUALLY OPERATED STARTERS, FRACTIONAL HORSEPOWER

A. Provide starters meeting NEMA ICS 2 with the enclosures shown, rated 1 hp at single-phase, ac voltages of 115 and 230 volts, and with thermal overload protection, and toggle or pushbutton operation. Provide for locking in the OFF position.

2.3 MANUALLY OPERATED STARTERS, INTEGRAL HORSEPOWER

A. Provide starters meeting NEMA ICS 2 of the horsepower rating, voltage, number of phases, and enclosure shown and with thermal overload protection, and pushbutton or toggle switch operation. Provide for locking in the OFF position. Provide running overcurrent protection.

2.4 FULL VOLTAGE MAGNETIC STARTERS

A. Provide starters meeting NEMA ICS 2, Class A, with the rating and enclosure shown. Starters shall be full voltage, non-reversing horsepower rated, providing combined protection against running and stalled overloads. Thermal overload relays on all phases shall be temperature compensated bimetallic type with manual reset and inherent single phasing prevention.

2.5 REDUCED VOLTAGE STARTERS

A. Provide starters meeting NEMA ICS 2, Class A, with the rating and enclosure shown. Starters shall be single-step magnetic type, having closed circuit transition and an adjustable time interval between application of starting and running conditions to the motors. Provide autotransformers suitable for medium-duty service as specified in NEMA ICS 2, and with overtemperature protection. Provide taps giving approximately 50 percent, 65 percent, and 80 percent of line voltage at output terminals.

2.6 CONTROL POWER TRANSFORMERS

A. Supply individual control power transformers unless noted otherwise. The transformers shall have sufficient capacity to serve the connected load and limit voltage regulation to 10 percent during contact or pickup. Fuse one side of the secondary winding and ground the other side. Provide primary, current limiting fuses where fuses shown on Drawings, or where required by applicable codes and standards.

2.7 MOTOR CONTROL CENTERS

A. Provide motor control centers and components meeting the requirements of the latest revised NEMA and UL standards and the following requirements, unless otherwise indicated:

RATING

Voltage As indicated on the Drawings

Short Circuit Rating: 42,000 amps rms symmetrical, or as determined by electrical studies

NEMA Class	Class 2, Type B with all remote control and signal circuits wired to a separate terminal board compartment in each motor control center lineup; all additions and revisions shall be included in the final as-built record drawings

ENCLOSURE

Type	NEMA Type as shown
Vertical Section	90-inches high, 20-inches wide, or as shown
Dimensions	20-inches deep, Or depth as shown
Finish	Exterior: manufacturer's standard gray over a primer and rust inhibitor or as per architectural standard; Interior: white lacquer or enamel
Construction	Sheet steel reinforced with channel or angle irons, section constructed so they may be butted flush, end-to-end against a similar section without bolts, nuts, or cover plates causing interference; removable top cover plates and bottom cover plates
Section Mounting	Removable formed steel channel sills and removable lifting angles
Horizontal Wiring Compartments	Full width, top and bottom, accessible from front
Vertical Wiring	Full height, isolated from unit Compartment starters with a separate door, accessible from front

Unit Compartment	Individual compartments separated by steel barriers for each starter, feeder, or other unit capable of being wired from front without unit removal
Compartment Doors	Separate hinged doors for each starter, feeder, or other unit
Door Interlocking	Individual Starter and feeder doors mechanically interlocked so doors cannot be opened with unit energized; defeater mechanism to allow intentional access at any time; provisions for padlocking external disconnect handles in the OFF position
Cable Entrance	Main circuits enter from top or bottom depending on arrangement, control and feeder circuits enter from top or bottom depending on arrangement
Busway Entrance	Pull box with flanged connection for incoming busway, bus connection to motor control center main power bus and cable connection to ground bus and neutral bus; match dimensions of incoming busway;

BUS

Horizontal Power Bus	3-phase copper bus entire width of control center rated as indicated, constructed to allow future extension of additional sections; pressure type solderless lugs for each incoming line cable; Belleville washers on all bus connection bolts.
Vertical Power Bus	3-phase copper bus full height of section rated 300 amps minimum; "sandwich" type bus insulation that provides dead front construction with starter units removed except for bus stab openings; Belleville washers on all bus connection bolts
Neutral Bus	Copper; Belleville washers on all bus connection bolts
Ground Bus	Copper, 400A minimum capacity; Belleville washers on all bus connection bolts
Bus Bracing	As indicated or determined based on electrical studies, 42,000 minimum amps rms symmetrical.

MOTOR STARTER UNITS

General	Individual components and control devices including pushbuttons, selector switches, indicating lights, control relays, time delay relays, and elapsed time meters as specified in Section 16100, "Basic Materials and Methods".
Construction	Drawout combination type with stab connections, except

	where size and weight of equipment make this impracticable; readily interchangeable with starters of similar size; provide pull-apart unit control wiring terminal boards on all units
Starters	NEMA standard rating, NEMA Size 1; minimum meeting requirements specified under article 2.1, MOTOR CONTROL, GENERAL;
Disconnecting Device	disconnecting device lockable in OPEN position
Circuit Breakers	Molded case motor circuit protectors with manufacturer's recommended trip setting for maximum motor protection, tripping indicated by operating handle position; interrupting capacity required for connection to system with short circuit capacity indicated; shunt trip for ground fault protection; copies of circuit breaker time-current characteristics
Fused Switches	Heavy-duty (HD), motor rated, load-break, quick-make, quick-break type meeting requirements of UL and NEMA KS 1; current- limiting fuses as specified with rejection clips
Load Detector Relays	Manual reset with adjustable differential; Relays Cutler-Hammer Type D60LA, or equal
Motor Overload	Temperature compensated, three-pole, Protection bimetallic thermal overload relay; manual-reset overload relays when used independently of other overload protection; automatic-reset when used with integral motor thermal protector
Motor Thermal	Manual-reset interposing Protection Interface relay for connection to motor-mounted thermal protector system
Ground Fault	Same as under FEEDER UNITS Protection AND MAIN PROTECTIVE DEVICE, except instantaneous operation device
Capacitor Connection	Special terminals to allow easy connection of power factor correction capacitors on the source side of starter overload relays on all starters where capacitor connection is shown
CONTROL UNITS	
Disconnecting Device	Disconnecting device capable of de-energizing all circuits in the unit. Provide a warning sign giving location of disconnecting device if not located in the unit.
Control Devices	As indicated on the Drawings and as specified in Section 16100, "Basic Materials and Methods".
	Permanent sleeve type markers to be applied to all wires.

Wire Markers Control Wiring	Minimum wire size 14 AWG copper

FEEDER UNITS AND MAIN PROTECTIVE DEVICE

Construction	Same as under MOTOR STARTER UNITS with UL service entrance label on main protective device
Circuit Breakers	Unless otherwise indicated, molded case with thermal-magnetic trip and interrupting capacity required for connection to system with short circuit capacity indicated; tripping indicated by operating handle position; suitable for use with 75 degrees C wire at full NEC 75 degrees C ampacity; shunt trip for ground fault protection and phase monitoring relay; for main and feeder protective devices, use molded case circuit breakers with ambient insensitive solid state trips and having the current sensors and solid state logic circuits integral in the circuit breaker frame; use solid state current control providing adjustable ampere setting, adjustable long-time delay, adjustable short-time trip and delay band, fixed instantaneous trip set at 15 times the current sensor rating and adjustable ground fault trip and delay band; make settings behind a sealable tamper-proof transparent cover; locate a trip button on the front cover of the circuit breakers to permit mechanical simulation overcurrent tripping for test purposes and to trip the breaker quickly in an emergency situation; copies of circuit breaker time-current characteristics
Fused Switches	Heavy-duty (HD) motor rated, load-break, quick-make, quick-break type meeting requirements of UL and NEMA KS 1; suitable for use with 75 degrees C wire at full NEC 75 degrees C ampacity; current-limiting fuses as specified with rejection clips
Ground Fault	Suitable for 480-volt, 3-phase, Protection four-wire, solidly grounded wye system; consisting of ground sensors encircling all phase conductors and neutral conductor where used and connected to ground relays with adjustable pickup settings and time-current characteristics indicated; circuit breaker shunt trip and relay operating from a fused 120-volt ac control source within the control center; ground fault system ITE Ground Shield, General Electric Ground Break, or equal; copies of relay time-current characteristics
Key Interlocking	Kirk key interlocking where indicated
Phase Monitoring	3-phase monitoring relay to protect Motor against low Relay voltage, voltage unbalance, and phase reversal; Furnas Class 47, or equal

INSTRUMENTS

Voltmeter	Scale indicated, switchboard class with 250-degree scale, GE AB-40, or equal, panel type, nominal 4-1/2-inch

	model with ON/OFF single-phase 3-phase phase-to-phase, phase-to-ground, OFF, seven-position selector switch
Ammeter	Scale indicated, switchboard class with 250-degree scale, GE AB-40, or equal, panel type, nominal 4-1/2-inch model with ON/OFF single-phase 3-phase OFF, four-position selector switch, C.T.'s with ratio indicated
Ground Detection Lights	Heavy-duty oiltight type with operation explanation nameplate
NAMEPLATES	Engraved with inscription as shown on the single-line diagram, laminated plastic nameplates for each motor control center and each unit, blank nameplates on spaces for future units Nameplates that are white and engraved to a black core; attach nameplates with stainless steel panhead screws
SPACE HEATERS	Thermostatically controlled space heater in the bottom of each vertical section for operation from an external 120V power source
DIAGRAMS	Schematic (elementary) and outline diagrams, equipment schedules, wireless unit connection diagrams,

2.8 ACCEPTABLE MANUFACTURERS

1. Eaton;
2. Schneider;
3. Or equal.

PART 3 -- EXECUTION

3.1 GENERAL

A. Perform work in a workmanlike manner with craftsmen skilled in the particular trade. Provide work presenting a neat and finished appearance.

3.2 INSTALLATION

A. Install equipment in strict accordance with submittal drawings and manufacturer's

recommendations. Install motor control centers in accordance with NEMA ICS 2.3 as a minimum. Secure motor control centers using approved means as per latest standards and regulations. Grout mounting channels provided with motor control into the floor or mounting pads.

B. Provide a qualified, factory-trained representative to supervise installation, final adjustment, and initial energization of this equipment. Make this representative available for as long as his services are required, but in any case for a period of 5 days minimum. At the end of installation and adjustment, provide certification signed by this representative that the equipment has been properly installed and tested, and is ready for energization.

C. Retighten to NEMA standards all current-carrying bolted connections and all support framing and panels.

D. Field adjust the trip settings of all motor starter magnetic trip only circuit breakers. Adjust as per manufacturer’s recommendations. Determine motor rated current from motor nameplate following installation. In the selection of overload relay heaters, allow for motor current reduction where power factor correction capacitors are installed on the load side of the overload heaters. Prepare a typed tabulation of motor name, motor horsepower, nameplate full load current, measured load current, heater catalog number, protective device, trip setting, and include copy in the Technical Manual. Attach to the tabulation a copy of the starter manufacturer's overload heater selection tables, including only the tables for the particular starters provided.

E. After the equipment is installed, touch up any scratches, marks, etc., incurred during shipment or installation of equipment. If required by the ENGINEER because of undue amount of scratches, repaint the entire assembly.

3.3 FIELD TESTS

A. Field tests shall be in accordance with Electrical Testing Requirements.

END OF SECTION 16340

SECTION 16360
MUNICIPAL FACILITIES LIGHTING

PART 1 -- GENERAL

1.1 SCOPE

A. Furnish and install lighting fixtures, lamps, drivers, control cabinets, and light poles, as indicated on the Contract Drawings and specified hereinafter.

B. Sports lighting including controls shall be provided as a complete system by a single manufacturer using LEDs as a light source.

C. Comply with the General Conditions, General Requirements and the requirements of Section 16020 of this Division 16 concerning definitions, guarantees, submittals, as-builts, testing, as applicable to work of this Section.

D. The work includes providing submittals, furnishing equipment, installing, and testing complete lighting systems as specified in the Contract documents, including sports fields, security, and park pathway lighting.

E. The work includes exterior sports lighting systems for two new baseball diamonds, security and pathway lighting, as shown in the drawings.

F. Provide lighting system warranties as specified.

1.2 RELATED WORK

A. Related Sections: The following sections contain requirements that relate to this section:

1. Section 16020 “Municipal Facilities General Electrical Requirements”.

2. Section 16100 “Basic Materials and Methods”.

3. Section 16560 "Municipal Facilities Electrical Commissioning Requirements" for commissioning requirements.

4. Section 16570 "Municipal Facilities Electrical Testing Requirements" for testing requirements.

1.3 SUBMITTALS

A. Conform to applicable provisions of Section 01330 of the General Requirements and of Subsection 1.6 of Section 16020.

B. Conform to the following as applicable:

1. Complete luminaire photometric catalog data including manufacturer, model, lamp wattage, input watts, voltage, sound rating, power factor and type of LED driver, as well as levels of total harmonic distortion, candlepower distribution curves in 2 or more planes, lumen output charts, average-maximum brightness data, dimming

controls, wiring diagram, dimensions and luminaire finish. For exterior luminaires also provide cut-off characteristics, pole fastening details, and wind load data.

2. For lamps provide catalog data, voltage, color, life estimate in hours, base type, and dimming capabilities.

3. Ambient light (photocell) and motion detection data indicating switching capacity, means of adjusting the lighting pickup level and enclosure. Motion detection coverage. Control options combining ambient light, diming and motion over-ride.

4. For pole-mounted fixtures provide complete data on the pole material, finish, internal junction box, ballasts/drivers, anchoring and fixture attachment and support method. Pole and luminaire combination to be designed to withstand a 100-mph wind load without damage.

5. For sports field lighting provide electrical diagram showing total load on each pole, power and control cabling, and connection between driver panels and lighting control cabinet. Indicate size and number of conductors to each pole.

6. Provide a computer-generated photo metric study for the site to demonstrate that the proposed new lighting design meets the City of Los Angeles's lighting level requirements detailed in paragraph 2.2 of this Section. Provide lighting calculations showing average/minimum/ maximum foot candles for each space.

7. Pole Foundations: Submit pole foundation designs for all pole types and associated soil types. Designs to be stamped by a Structural Engineer registered in the State of California.

8. Substitutions for specified fixtures, etc. shall be based upon quality of specified fixture construction, light distribution, appearance, wind loading, and maintenance

.

1. 4 QUALITY ASSURANCE

A. Conform to applicable provisions of Subsection 1. 7 in Section 16020.

B. Work of this Section shall comply with applicable legal requirements and standards specified in Subsection 1.6 in Section 16020 and the following:

Reference	Description
NFPA 70	National Electrical Code (NEC)
LAEC	City of Los Angeles Electrical Code
ANSI/UL 8750	Standard for LED lighting Equipment
IESNA LM-5-04	Guide for Photometric Measurements of Area and Sports Lighting Installations.
ASHRAE/IES 90.1-1989	Standards for High Efficiency Electrical Lighting Systems.
State of California, Title 24	Exterior Lighting

C. Conform to California's 2013 Title 24 Energy Efficiency Standards, Part 6 - "Outdoor

Lighting".

D. Demonstrations:

1. Exterior lighting system operation shall be demonstrated during the hours of darkness to indicate that fixtures are properly focused, photocell and motion detection operation is correct, and that fixture switching functions as intended. Through demonstration, the CONTRACTOR shall also verify that panel schedules properly indicate the lighting outlets connected to each circuit.

2. Lighting demonstration shall occur within 2 weeks prior to project acceptance.

1.5 CLEANING PROCEDURES

A. Comply with applicable provisions of Section 01740 of the General Requirements.

B. Clean fixture lenses, diffusers, and reflectors just prior to time specified for required demonstrations **.**

C. Clean damaged finish of fixture trim, including poles and support brackets, prior to required refinishing.

D. Before installation of louvers, diffusers or lenses clean reflector surfaces and lamps of all lighting fixtures of accumulated dust, dirt, grease, plaster, paint, etc.

1. 6 WARRANTY AND MAINTENANCE

A. General Warranty: Special warranty specified in this Article shall not deprive Owner of other rights Owner may have under other provision of the Contract Documents and shall be in addition to, and run concurrent with, other warranties made by Contractor under requirements of the Contract Documents.

B. Special Warranties: Written warranty, executed by manufacturer agreeing to replace or repair defects or failures in materials or workmanship within specified warranty period.

1. Special Warranty Period for Sports Lighting systems: Twenty five years from date of substantial completion. Defects in materials, equipment or workmanship, or drop in lighting levels below those specified, occurring in the warranty period, shall initiate repairs or replacement at the Contractors/ Manufacturer's expense.

2. Special Warranty Period for Pathway/ Parking Area Lights: Manufacturers' standard warranty, but not less than two years from date of Substantial Completion.

C. Maintenance Agreement

1. Sports lighting system Manufacturer shall offer a 25-year maintenance agreement covering the entire sports lighting and control system. The maintenance agreement to guarantee light levels, lamp replacement, monitoring and communications, spill-light control and structural integrity.

a. Maintain lighting levels within ± 10% of the maintained horizontal average illuminance level for the sports field.

b. Replace lamps if one or more lamps are extinguished on a pole.

c. Repairs to be completed within seventy-two (72) hours of notification by Owner unless agreed otherwise by Owner.

2. Manufacturer shall monitor the performance of the lighting system, including on/off status, hours of usage and luminaire outage for 25 years from the date of equipment shipment. Parts and labor shall be covered such that individual luminaire outages will be repaired when the usage of any field is materially impacted. Manufacturer is responsible for removal and replacement of failed luminaires, including all parts, labor, shipping, and equipment rental associated with maintenance. Owner agrees to check fuses in the event of a luminaire outage.

PART 2 -- PRODUCTS

2.1 LIGHTING SYSTEMS GENERAL REQUIREMENTS

A. Conform to ASHRAE/IES 90.1-1989 Standards for High Efficiency Electrical Lighting Systems.

B. Lighting fixtures shall have all parts and fittings necessary for complete and proper installation.

C. Where both catalog numbers and narrative descriptions are indicated, the narrative description requirements shall take precedence and prevail.

D. All fixtures of one type shall be one manufacturer and of identical finish and appearance.

E. Fixture types shall be as indicated on the Contract Drawings. However, if the fixture type is not shown, the bid shall be based on installing fixtures specified in similar areas.

F. Fixtures in exterior locations, wash-down areas, wet or moist locations shall bear a UL label for installation in wet or moist areas or locations.

G. All exposed metal parts of exterior lighting fixtures shall be stainless steel or anodized aluminum with specified finish over. Screws and fastening shall be stainless steel.

H. All above ground wiring shall be enclosed within the poles, crossarms or control cabinets.

I. Complete units and all electrical components for LED and special fixtures shall bear the Underwriters' Laboratories, Inc., IBEW and Electrical Testing Laboratory labels.

2. 2 LIGHTING PERFORMANCE

A. Illumination requirement and control

1. Baseball fields

Description	Average Target Illumination (foot candles)	Maximum to Minimum Uniformity Ratio	Grid points	Grid Spacing
Baseball No.1 Infield	50	2:1	25	20’ x 20’
Baseball No,1 Outfield	30	2.5:1	75	20’ x 20’
Baseball No.2 Infield	50	2:1	25	20’ x 20’
Baseball No,2 Outfield	30	2.5:1	75	20’ x 20’

B. Sports fields Security Lighting

Average (foot candles) minimum	Maximum (foot candles)	Average to Minimum Ratio
0.75	5	16:1

C. Pathway Lighting

Average (foot candles) minimum	Maximum (foot candles)	Minimum (foot candles)	Max/ Min Ratio
2.0	5.5	0.1	52:1

D. Parking Area Lighting (Not Used)

Average (foot candles) minimum	Maximum (foot candles)	Minimum (foot candles)	Max/ Min Ratio
2.5	4.5	1.2	3.75:1

E. City Ordinance exterior lighting requirements: All site and building mounted lighting shall be designed such that it produces a maximum initial luminance value no greater than 0.20 horizontal and vertical foot candles at the site boundary, and no greater than 0.01 horizontal foot candles 15 feet beyond the site. No more than 5.0 percent of the total initial designed lumens shall be emitted at an angle of 90 degrees or higher from nadir (straight down)

2. 3 LED FIXTURES

A. General:

1. Fixture to be an assembly consisting of LED light source array, housing, and electronic power supply, in accordance with UL 1598, UL 8750. Supply voltage as noted on the drawings.

2. Outside fixtures to be completely sealed against moisture and listed under UL 1598, for luminaires in wet locations.

3. The fixture lens shall be clear convex tempered glass.

4. Minimum service life of luminaire of 70,000 hours.

5. Power supply shall be rated for a life expectancy equal or greater than the luminaire, be designed for dimming and incorporate surge protection device (SPD) to protect against electrical transients. Each luminaire shall be independently fused.

6. Electronic module shall have operating temperature -40 deg F to 165 deg F, or better with built in thermal overload.

7. Power factor of unit to be 0.9 or higher and induce total harmonic distortion (current and voltage) of 20% or less in the AC supply line.

8. Control: Outside fixtures to include motion detection and automatic dimming when area is not occupied. Dimming bi-level 50%, or user adjustable dimming level.

9. Cut-off Requirements: Exterior lights shall have full cut-off light distribution.

10. Warranty: 5-year minimum manufacturer's warranty unless stated otherwise.

B. Pathway Lighting, pole mount

1. Architectural style post-top 117 watts LED luminaire with die-cast aluminum housing designed for exterior pathway lighting. Impact resistant tempered glass lens.

2. Finish: Metal parts of luminaire, pole and adapters, finished with corrosion resistant durable, dark bronze, powder coat finish.

3. Pole: 20-foot, 4 inch diameter steel round pole.

4. Control: Motion detector to automatically switch lamp from a pre-set dimmed output to full brightness, for a pre-set minimum time.

5. Concrete base height: 2 feet

6. Power requirements, 277 volts single phase

7. Approved Manufacturer:

   a. Lithonia Lighting MRP LED 1 49B530/40K SR5 with motion detection and 18 foot round steel silver finish pole.

   b. Or equal.

C. Car parking lighting (Not Used)

1. Post top mounted LED luminaire with die-cast aluminum housing, and integral motion detector, designed for lighting parking lots.

2. Finish: Metal parts of luminaire, pole and adapters, finished with corrosion resistant durable, dark bronze, powder coat finish

3. Pole: 20-foot round steel pole with 2 foot concrete base.

4. Approved manufacturer:

    a. Lithonia Lighting DSX2 LED 80C 700 40K T3M MVolt with integral motion detection. 20 foot round steel silver finish pole.

    b. Or equal.

D. Sports field lighting

1. Luminaires, poles, mounting hardware and lighting control system to be supplied by the same manufacturer.

2. Luminaires: High Lumen heavy-duty weather resistant LED Flood Light luminaire with die-cast aluminum housing designed for mounting on tall poles for sports field lighting.

    a. Adjustable yoke mounting to allow field adjustment of light on sports field. Provide an aiming plan for each sports fixture.

    b. UL listed and labeled as suitable for wet locations.

3. Remote lamp driver: Each floodlight to be operated from a remote lamp driver mounted inside a weather resistant enclosure mounted on the pole.

    a. Wiring between luminaires and ballast to be pre-wired and internal to pole.

    b. Driver to provide remote luminaire dimming control.

    c. Pole disconnect, fuse per light circuit and surge protection to be provided inside the cabinet

    d. Color rendering: CRI of 57000K

    e. Electrical supply: 480 volts, 3 phase.

4. Finish: Metal parts of luminaire, pole and adapters, finished with corrosion resistant durable galvanized or sliver powder coat finish.

5. Pole mounting height as shown on the drawings. Pole structure to meet the following requirements:

    a. Hybrid steel and pre-stressed concrete multi-section pole with pre-stressed concrete base foundation designed for direct embedment.

    b. Designed to meet AASHTO requirements for wind loading, with deflection not exceeding 1.1% of the free height of the pole, under a wind loading equivalent to half of the specified maximum wind speed, including a 1.4% gust factor.

    c. Provide a 4 x 10” conduit entrance opening approximately 10” below grade, and a 3.5” x 10.5” hand-hole frame with flush cover approximately 36 inches above grade.

    d. Pole foundations: See paragraph 2.5 of this Section.

6. Mounting hardware. Heavy-gauge steel protected by a weather resistant coating. Adjustable yoke to allow field adjustment of light on sports field.

7. Approved Manufacturer: MUSCO Lighting or equal.

E. Security lighting mounted on sports field poles

1. Provide security light on each sports pole, mounted at 18 feet above grade, directed into the field. Include mounting hardware and driver boxes.

2. Luminaires: High Lumen heavy-duty weather resistant LED security light luminaire with die-cast aluminum housing designed for pole mounting.

3. Adjustable yoke mounting to allow field adjustment of light direction from each fitting.

4. UL listed and labeled as suitable for wet locations.

5. Color rendering: CRI of 57000K

6. Electrical supply: 277V single phase supply, with dimming control.

7. Approved manufacturer: CREE OSQ Series area flood.

2.4 LIGHTING CONTROLS

A. General**:** Provide an automatic, lighting control system manufactured by the sports lighting manufacturer.

B. Control system to be enclosed in a dedicated NEMA 3R cabinet containing all lighting contactors, switches, terminals and a microprocessor-based controller. The system to provide the following functionality:

1. A web based remote scheduling system allowing authorized users to control and monitor remotely by lighting zone. Control parameter options to include time of day, sun rise/ sunset times, and photocell input. Output control to include lighting On/ Off and dimming. Schedules to be stored by controller. Schedules able to be set up for a minimum of seven days in advance.

2. Astronomical time clock, with automatic daylight savings compensation, and calculation of sunrise/ sunset times.

3. Photocell input.

4. Off-On-Auto switches to allow for maintenance and manual operations of lights

5. Key over-ride, High-Medium-Low-Auto switches for light pre-set level dimming control.

6. Minimum of seven zones and twelve lighting contactors (30A/ 60A) per cabinet.

C. Photocells:

1. Provide automatic ON/OFF switching photo control device, completely self-contained in the die-cast aluminum housing, not affected by moisture, vibration, or

temperature changes; ON at dusk and OFF at dawn; time delay feature to prevent false switching; and field adjustable to control operating levels.
Provide a by-bass switch to override photocell. Photocell to be compatible with lighting control panel.

2. Approved Manufacturers: MUSCO Control-Link or equal.

2.5 FOUNDATIONS

A. Install required number and type of reinforced concrete pole bases as indicated on the Contract Drawings.

B. Contractor to prepare pole and foundation drawings for each type of pole, pole loading, and soil type, and submit to the Engineer for approval. Drawings to be stamped by a certified structural Engineer, Register in California. Drawings to show design criteria, soil type, assumptions, code standards, size of foundation, depth of embedment, reinforcing, and backfill material.

C. Typical sports pole foundations are provided in Attachment A of this Section.

PART 3 -- EXECUTION

1. 1 INSTALLATION OF LIGHTING FIXTURES (LUMINARIES)

A. General**:**

Install fixtures in a manner recommended by the fixture manufacturer and accepted by the City Engineer.

1. Furnish and install all additional supports, and other structural reinforcements to the concrete pole bases required to properly and safely mount luminaires, all acceptable to the City Engineer.

2. Be responsible for handling the luminaires, installing plumb and level, and keeping luminaires clean.

3. Where pole foundation penetrates the below ground liner in the bio-swale, seal liner to pole as indicated on the drawings.

4. After construction of total project is completed, remove all labels and other markings, wash dirty luminaires inside and out with a nonabrasive mild soap or cleaner. Clean luminaire plastic lenses with antistatic cleaners only. Touch up all painted surfaces of luminaires with high-grade exterior enamel, and poles with paint supplied by manufacturer.

B. Finished Areas:

1. Locate luminaires where shown on the Site Plan.

2. Install all luminaires straight and true.

3. Exterior fixtures requiring exposed exterior boxes shall be mounted on approved cast boxes equipped with suitable gaskets.

All adjustable lighting fixtures shall be aimed (during non-daylight hours) and set to the satisfaction of, and in the presence of, the City Engineer.

3.2 INSTALLATION OF LAMPS

A. After installation clean all lamps.

3. 3 MISCELLANEOUS

A. Provide all metal shims, spacers and/or mounting bolts necessary,

B. Louvers, diffusers or lenses shall not be installed in lighting fixtures until such time as all glazing has been completed and all construction work involving plastering, grinding, sanding, painting, etc., and final clean-up sweeping and dusting have been completed by the Contractor as noted in Subsection 1. 4 of this Section.

C. Reflector surfaces and lamps in all lighting fixtures shall be thoroughly cleaned of accumulated dust, dirt, plaster, paint, etc., before the installation of the louvers, diffusers or lenses.

D. After completion of this portion of the work, it shall be the responsibility of the Contractor to clean and/or repair any damage to the finished building caused by this work, to the complete satisfaction of the Architect at no added cost to the City.

3.4 INSTALLATION OF BALLASTS/ DRIVERS

A. Install in strict accordance with manufacturer's recommendations.

B. After the installation is completed, remove and replace any ballast or driver which are judged by the City Engineer to be excessively noisy.

3.5 LIGHTING CONTROL

A. Photocell: Install photo control as shown on Drawings.

B. Lighting Control Panel: Install as shown on the drawings and in strict compliance with manufacturer’s recommendation

C. Lighting control panel Configuration: Provide initial configuration of control panel and web interface. Configure to ENGINEERS direction. Document configuration.

D. Contractor to notify lighting Control Panel Manufacturer at least 7 days before activation of the lighting system to allow him to run diagnostics and confirm system programming. Contractor shall assist with any needed corrections Manufacturer identifies.

3.6 FIELD QUALITY CONTROL

A. Inspect each installed fixture for damage. Replace damaged fixtures and components.

B. Advance Notice: Give dates and times for field tests.

C. Provide instruments to make and record test results.

D. Provide independent 3rd party testing and verification that installed lighting systems meet specified material and performance requirements. 3rd party shall be independent from the lighting subcontractor, and perform tests including but not limited to:

1. Verify normal operation of each fixture after installation.

2. Verify motion detection and dimming control.

3. Verify actuation and termination on photocell, timer, or other control function, as applicable, and in coordination with required testing per Section 16570.

4. Perform lighting illumination field measurement and analysis to demonstrate lighting system conforms to the requirements in Section 2.2.

5. Measure spill lighting levels at property boundary to ensure light level is within requirements detailed in paragraph 2.2.B of this Section

6. Report results in writing. Discuss any discrepancies with Engineer

E. Malfunctioning Fixtures and Components: Replace or repair, then retest. Repeat procedure until units operate properly.

F. Corrosive Fixtures: Replace during warranty period.

3.7 COMMISSIONING (FOR LIGHTING CONTROL SYSTEMS)

A. Check the lighting systems start up and ensure that the all lamps are operational and fixtures are clean.

B. Check motion sensor placement and test reliability of activation/deactivation.

C. Test photocells for functionality and accuracy.

D. Check switches to ensure proper operation and circuiting.

E. Check lighting schedules to ensure they are programmed per the ENGINEER direction.

F. Test operation of circuits by changing system date and time to cause various circuits to switch modes.

G. For exterior fixtures, simulate night mode to validate function. Measure and record light level to ensure they meet the requirements and are generally provide adequate security. Check for excessive light level fluctuations or dark spots.

3.8 ATTACHMENT A – TYPICAL SPORTS POLE FOUNDATION DETAILS

END OF SECTION 16360

ATTACHMENT A – TYPICAL SPORTS POLES FOUNDATION DETAILS

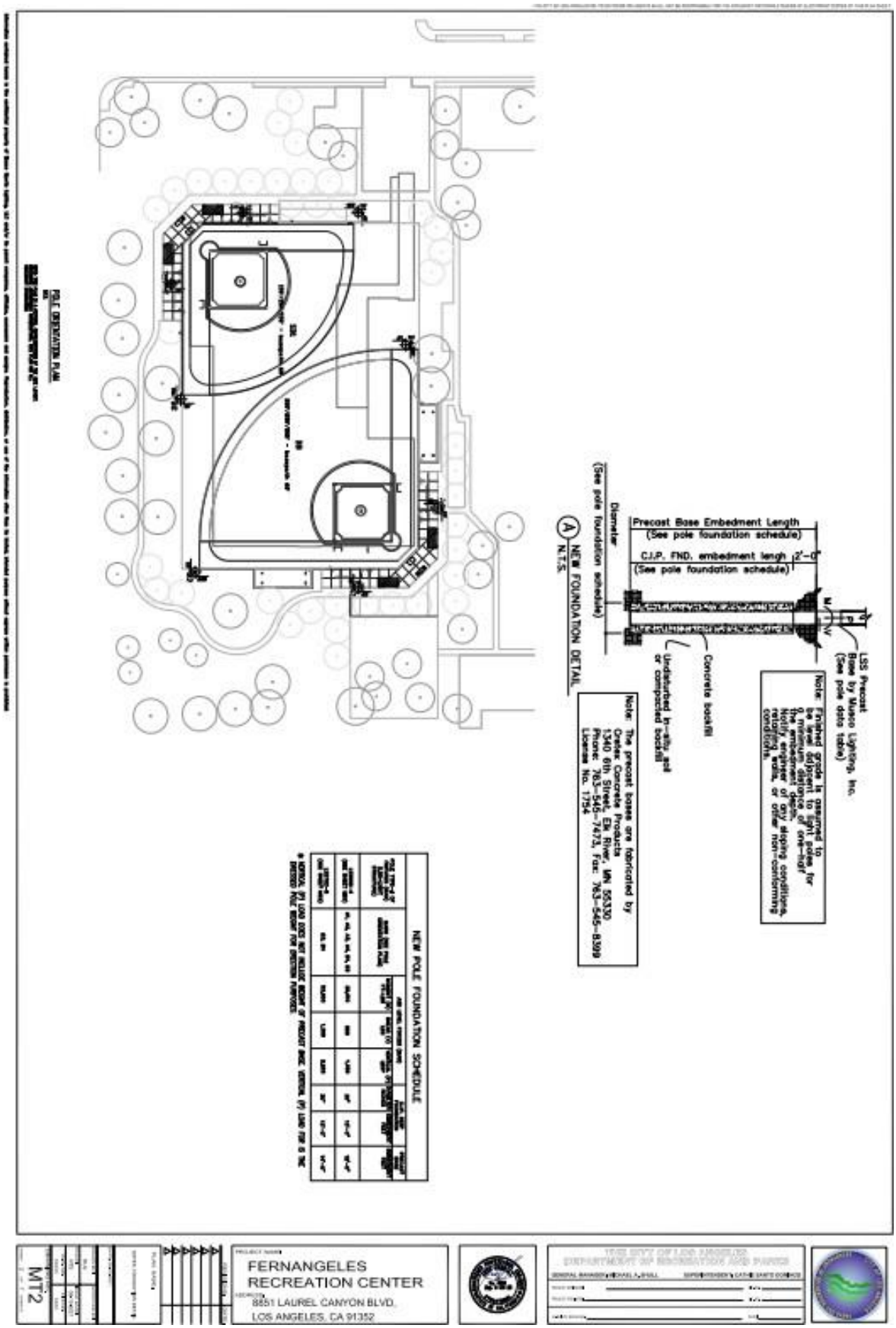

Precast Base Embedment Length
(See pole foundation schedule)
C.J.P. FND. embedment length 2'-0"
(See pole foundation schedule)
Diameter
(See pole foundation schedule)
A NEW FOUNDATION DETAIL
N.T.S.
Concrete backfill
Undisturbed in-situ soil or compacted backfill
LSS Precast Base by Musco Lighting, Inc.
(See pole data table)
Note: Finished grade is assumed to be level adjacent to light poles for a minimum distance of one-half the embedment depth. Notify engineer of any sloping conditions, retaining walls, or other non-conforming conditions.
Note: The precast bases are fabricated by Cretex Concrete Products 1340 6th Street, Elk River, MN 55330 Phone: 763-545-7473, Fax: 763-545-8399 License No. 1754
NEW POLE FOUNDATION SCHEDULE
FERNANGELES RECREATION CENTER
8851 LAUREL CANYON BLVD.
LOS ANGELES, CA 91352
MT2

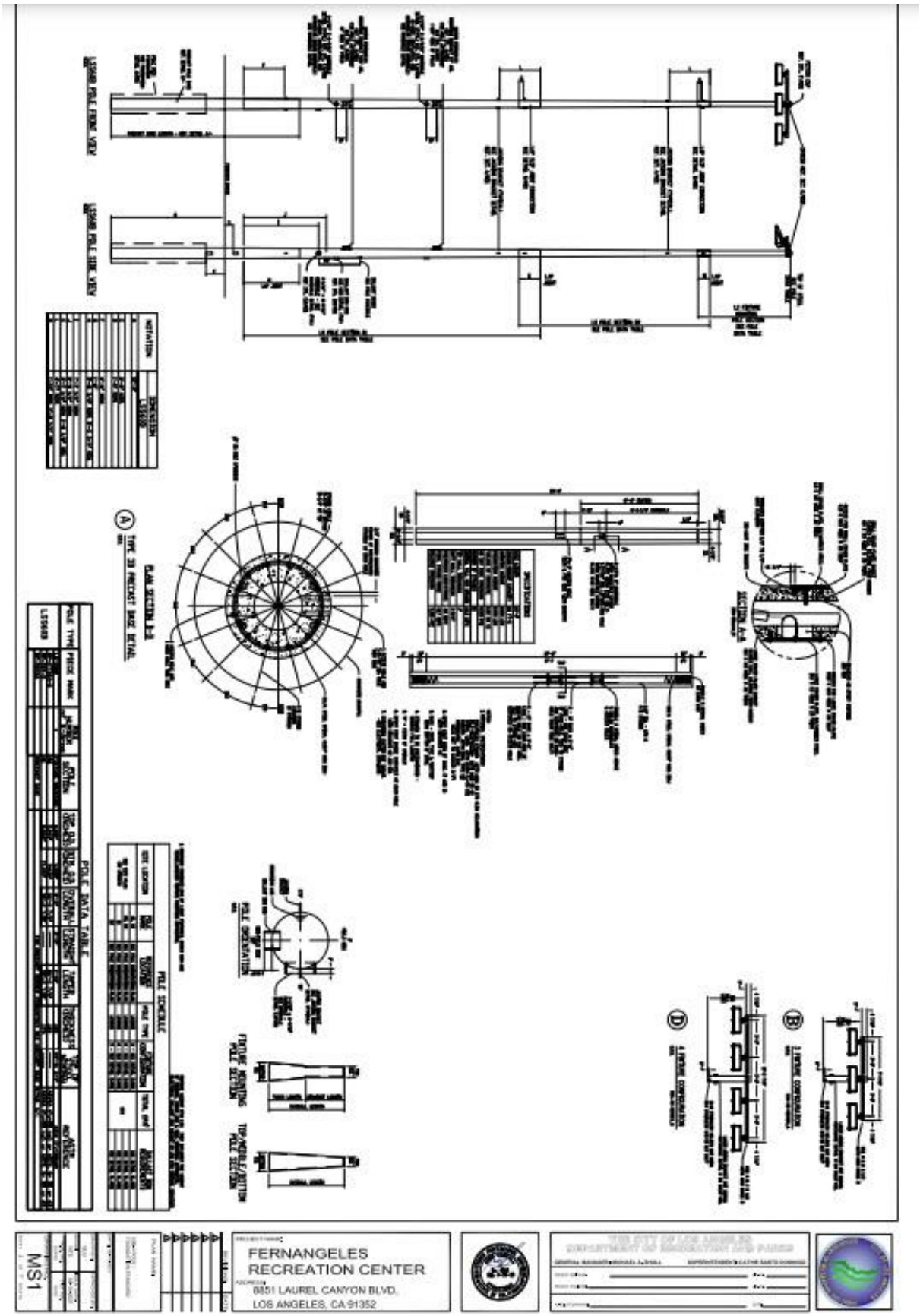
FERNANGELES
RECREATION CENTER
6951 LAUREL CANYON BLVD.
LOS ANGELES, CA 91352
MS1

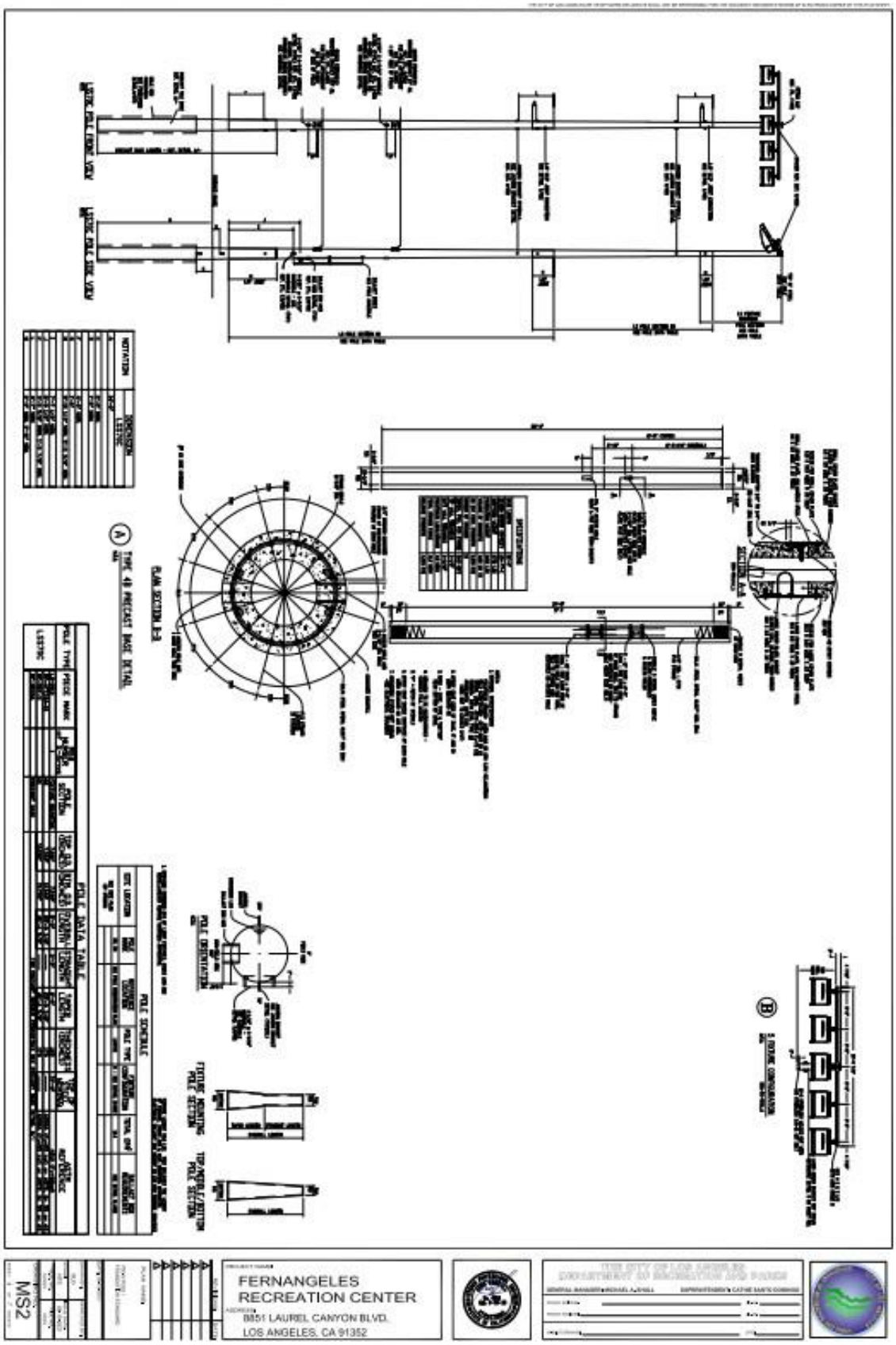
FERNANGELES
RECREATION CENTER
8951 LAUREL CANYON BLVD.
LOS ANGELES, CA 91352
MS2

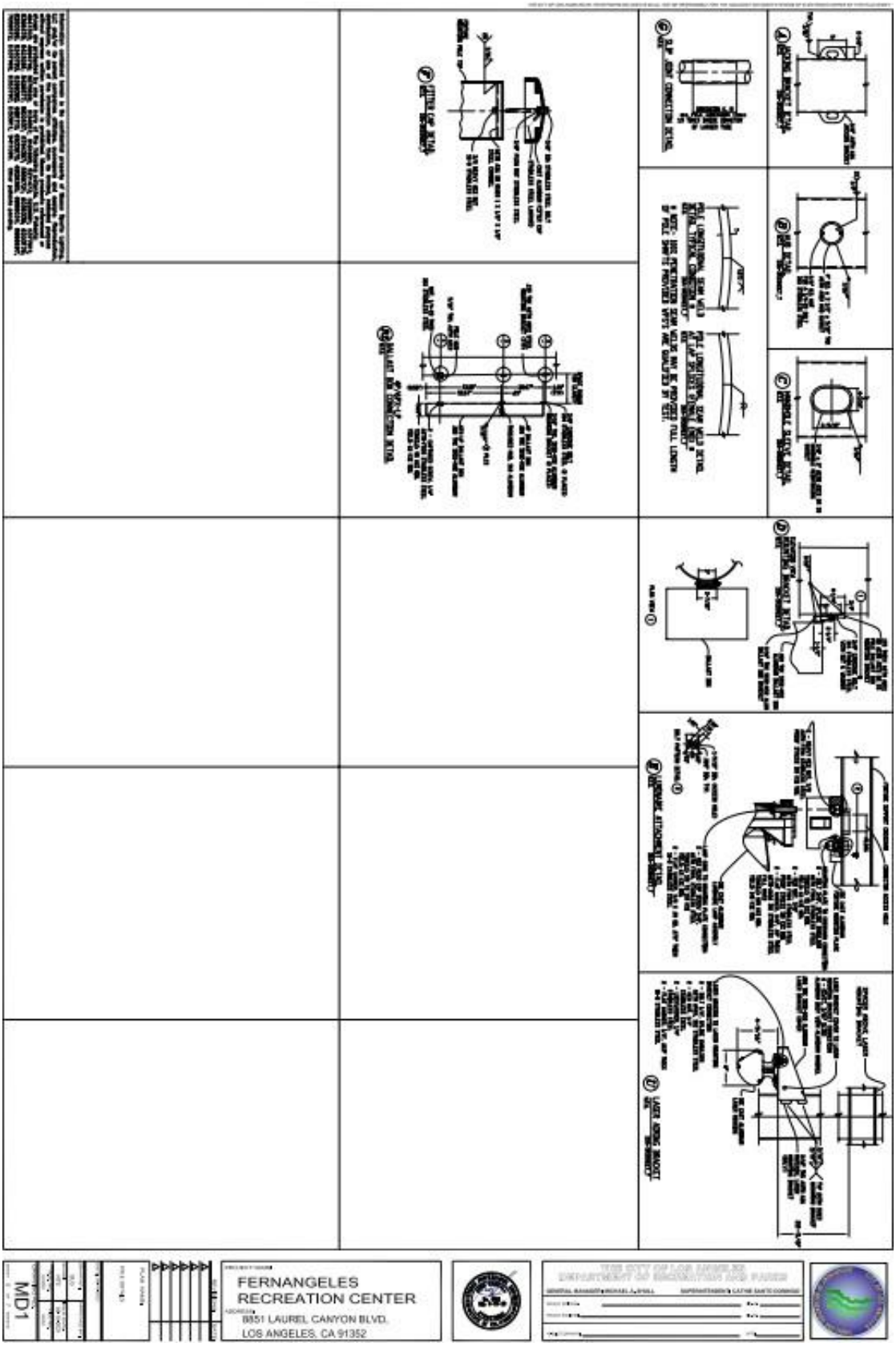
FERNANGELES
RECREATION CENTER
8951 LAUREL CANYON BLVD.
LOS ANGELES, CA 91352

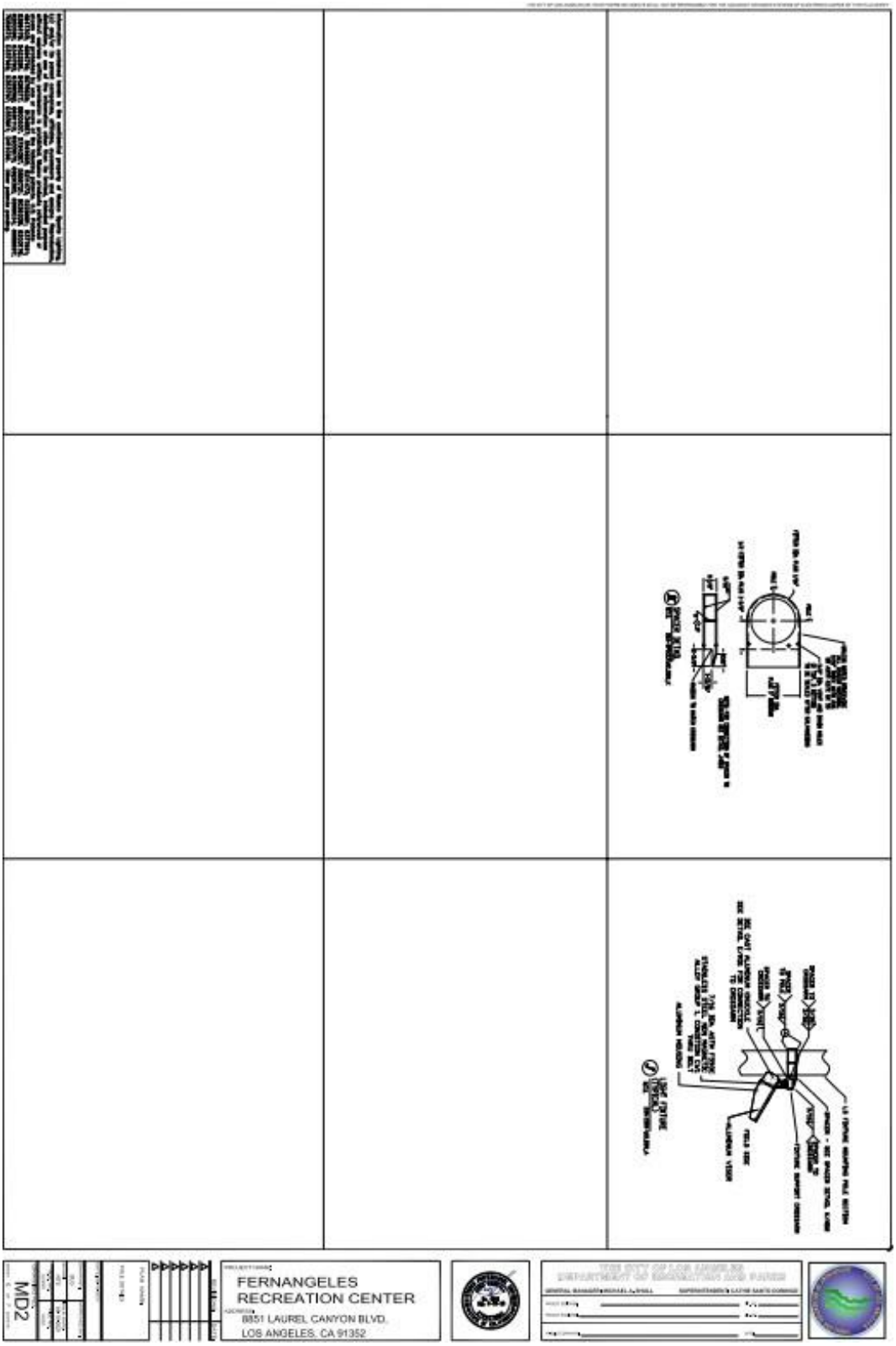
MD2
FERNANGELES
RECREATION CENTER
8951 LAUREL CANYON BLVD.
LOS ANGELES, CA 91352

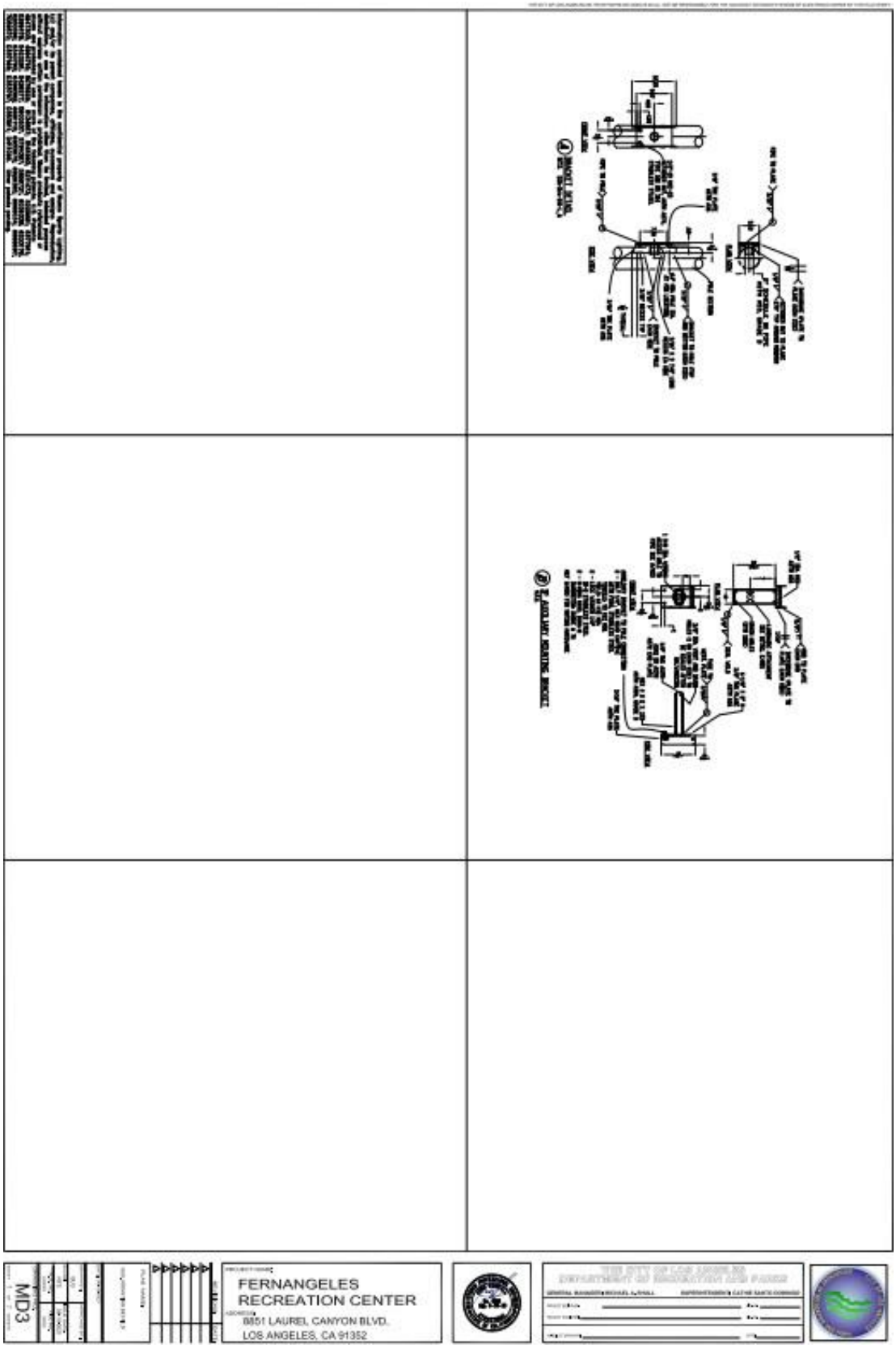
MD3
FERNANGELES
RECREATION CENTER
8951 LAUREL CANYON BLVD.
LOS ANGELES, CA 91352

SECTION 16380
MUNICIPAL FACILITIES UNINTERRUPTIBLE POWER SYSTEM

PART 1 -- GENERAL

1.1 SCOPE

A. Required**:** Furnish and install the single or three phase uninterruptible power system (U.P.S.) and all accessories indicated on the Contract Drawings and herein specified.

B. Comply with the GENERAL CONDITIONS, GENERAL REQUIREMENTS and the requirements of Section 16020 of this DIVISION 16 concerning definitions, guarantees, submittals, as-builts, clean-up, etc. as applicable to work of this Section.

1.2 RELATED WORK

A. Related Sections: The following sections contain requirements that relate to this section:

1. Section 16560 "Municipal Facilities Electrical Commissioning Requirements" for commissioning requirements.

2. Section 16570 "Municipal Facilities Electrical Testing Requirements" for testing requirements.

1.3 LEGAL REQUIREMENTS AND STANDARDS

A. Comply with applicable Codes and Standards noted in Subsection 1.5 of Section 16020 and the following additional commercial standards:

1.	ANSI/IEEE 241	Electric Power Systems in Commercial Buildings, Recommended Practice for.
2.	ANSI/NEMA 250	Enclosures for Electrical Equipment.
3.	EIA	Electronic Industries Association Standards.
4.	IEEE-587	Standards for Surge Suppression.
5.	NEC	National Electrical Code; Article 700 Emergency Systems.
6.	NEMA PB2	Panelboard.
7.	UL 1012	Underwriter's Laboratory Listing.
8.	UL 1778	UL Standard for Safety – Uninterruptible Power Supply Equipment.
9.	IEEE 944	Recommended Practice for the Application and Testing of Uninterruptible Power Supply for power generating stations.
10.	NEMA PE1	Uninterruptible Power Systems.

11. California Code of Regulations
Commercial Standard: Title 8, Industrial Relations Subchapter 5, Electrical Safety Orders.

1.4 SUBMITTALS

A. General**:** Conform to applicable provisions of Subsection 1. 6G in Section 16020 - GENERAL ELECTRICAL REQUIREMENTS.

B. Shop Drawings and Catalogue Data**:** Required to provide sufficient information to indicate scope and quality of the UPS System installation as follows:

1. Block diagram showing system relationships of major components and quantities and interconnecting cable requirements.

2. Control console and panel arrangements, equipment outlet devices, and special mounting details.

3. Wiring diagrams showing terminal identification for field-installed wiring.

4. One-line diagram showing input, output, DC, and bypass circuit breakers and their sizes

5. Operating and services manuals, furnish 6 copies for the system. The manuals shall be bound in flexible binders and all data contained therein shall be printed or typewritten. Each manual shall include all instruction necessary for proper operation and receiving of the system, and shall include a complete block diagram of the system, a complete circuit diagnosis of the system, and a wiring designation schedule for each amplifier as well as other major components, and a replacement parts list.

6. Outline, plan, and elevation drawings, showing dimensions. Mechanical details shall include anchor bolt size and location requirements and net operating and shipping weights for the equipment.

C. The CONTRACTOR shall obtain and submit to the Engineer the test reports for All equipment and material subject to factory testing.

D. The CONTRACTOR shall obtain from the manufacturer all pass codes necessary To perform diagnostic testing and troubleshooting of the system. These pass codes shall be submitted to the ENGINEER and included in the operations and Maintenance manuals.

E. Test Reports: Contractor to provide to the City a bound report of all inspections and tests required in Section 3.

1.5 QUALITY ASSURANCE

A. General**:** Conform to applicable provisions noted in Subsection 1.7 of Section 16020 - GENERAL ELECTRICAL REQUIREMENTS.

B. Uninterruptible power system components shall be manufactured by firms that are regularly

engaged in the production of UPS system including auxiliary equipment similar to that required for this project and that have been in satisfactory service for at least 10 years.

C. Operation of the uninterruptible power system shall be demonstrated to the City Engineer to prove that under normal conditions UPS will provide power to the designated load without interruptions of functions and loss of stored information.

D. The UPS system, when specified as a three-phase unit, shall be a three-phase system in one unit. Use of three single-phase units to comprise a three-phase system is not acceptable.

E. Fabrication and assembly: Unless otherwise specified, the UPS shall be shop assembled in a single enclosure and shall utilize interchangeable plug-in printed circuit boards and power conversion components wherever possible. Shop assembly shall be performed by the UPS manufacturer; systems fabricated or assembled in whole or in part by parties other than the UPS manufacturer will not be acceptable.

F. Printed circuit boards: All printed circuit board components shall be sprayed on both sides with corrosion inhabitant compound, Konform C416, or equal.

G. During the warranty period, the CONTRACTOR shall respond to trouble calls with a competent repair person at the project site within 24 hours; the CONTRACTOR shall also maintain a full inventory of replacement parts so that all routine repairs can be completed within 24 hours. The manufacturer shall have a local representative to provide technical services.

1.6 WARRANTY

A. General Warranty: Special project warranty specified in this Article shall not deprive the Owner of other rights the Owner may have under other provisions of the Contract Documents and shall be in addition to, and run concurrent with, other warranties made by the Contractor under requirements of the Contract Documents.

B. Special Project Warranty:

1. All materials and equipment furnished and installed here under shall be new and free from all defects.

2. The Contractor shall guarantee the uninterruptible power system (UPS) including equipment and labor for a period of two (2) years from the date of final acceptance.

3. Should any trouble develop within two (2) years from date of final acceptance of the work, due to faulty material and/or workmanship, the trouble shall be corrected by the Contractor without expense to the City.

1.7 MAINTENANCE

A. Required**:** The Contractor shall respond to trouble calls with a competent repair person at the project site within 24 hours; Contractor shall also maintain a full inventory of replacement parts so that all routine repairs can be completed within 24 hours.

PART 2 -- PRODUCTS

2.1 THE SYSTEM

A. General Description**:** This Specification describes a continuous duty, single-phase on-line, solid-state uninterruptible power system (UPS). The UPS shall operate in conjunction with the plant electrical system to provide power conditioning, back-up, and distribution for electronic equipment loads.

B. The UPS shall consist of the following major equipment:

1. Inverter/charger.

2. Static bypass switch.

3. Enclosed, sealed, maintenance-free battery. Battery cabinets for longer protection times.

4. Input, battery, and output breakers.

5. Microprocessor controlled logic and control panel.

6. Six-pole output distribution panelboard.

7. System Metering.

8. Control Panel Display.

2.2 MODES OF OPERATION

A. Modes of This On-Line Fully Automatic System**:**

1. Normal: The critical load is continuously controlled by the inverter/charger. It derives power as needed from the commercial ac source and supplies filtered and regulated ac power to the critical load. In addition, simultaneous float-charging of the battery occurs.

2. Emergency: Upon failure of the commercial ac power, the critical load continues to be supplied by the inverter, which without any switching obtains its power from the storage battery. There is no interruption to the critical load upon failure or restoration of the commercial ac source.

3. Recharge: Upon restoration of the commercial ac source, the inverter/charger recharges the battery. This is an automatic function and causes no interruption to the critical load.

4. Bypass Mode: If the UPS must be taken out of service for overload, load fault, or internal failures, the bypass switch automatically transfers the load to the commercial ac power. Return from bypass mode to normal mode of operation is automatic, except for overload trip which requires manual reset. Transfer to bypass mode can also be initiated manually by operating a key controlled ON/OFF switch on the control panel.

5. Maintenance Mode: If the UPS must be taken out of service for maintenance or repair, the external manual bypass switch must be operated to transfer the load to the alternate source. This transfer shall occur without interruption.

6. Downgrade: If the batteries alone are taken out of service, they shall be disconnected from the by circuit breakers. The UPS shall continue to function and meet all of the performance criteria specified herein, except for the reserve time capability.

2.3 UPS PERFORMANCE CHARACTERISTICS

A. Power Ratings**:** 3.0 kVA or as calculated to meet specified backup power requirements for load power factor range of 0.85 lagging to 0.9 leading.

B. Input:

1. Nominal Input Voltage and Frequency: 60 Hz models: 120/240 vac, single-phase

2. Operating Input Voltage Range: +13 percent to -20 percent of nominal without battery discharge.

3. Input Power Factor: 0.9 minimum at full load and nominal input voltage.

4. Input Current THD: 10 percent typical at full load (linear or non-linear).

5. Input Surge Suppression: Per IEEE-587 Standards.

C. Output:

1. Nominal Output Voltage: Same as input voltage.

2. Output Voltage Regulation: Within $\pm$2 percent from nominal output voltage for all operating conditions.

3. Manual Output Voltage Adjustment: Within $\pm$5 percent from nominal.

4. Transient Voltage Response: Within ±8 percent from nominal peak voltage for a 100 percent load step.

5. Transient Voltage Recovery: 100 msec to within ±2 percent of nominal.

6. Frequency Regulation: ±0.1 Hz.

7. Output Voltage Harmonic Distortion: 3 percent THD for 100 percent linear load, [5] [10] percent THD for 100 percent non-linear loads at nominal input voltage.

8. Output fully isolated from input and battery.

9. Common mode noise attenuation (without static switch): 55 dB up to 500 kHz.

D. Static Bypass: A static bypass switch includes transfer control logic which automatically transfers the load to bypass upon the following conditions:

1. Output overvoltage or undervoltage.

2. Overload condition of a duration longer than 10 minutes.

3. Overtemperature.

4. Inverter failure.

Return to UPS mode of operation upon restoration of normal operating conditions shall be automatic except for overload or inverter failure which shall require a manual restart. Electro-mechanical transfers are break before make.

E. Microprocessor Controlled Logic: Fully automatic operation of the UPS shall be provided through the use of microprocessor controlled logic. All operating and protection parameters shall be firmware controlled, to eliminate the need for manual adjustments to compensate for component tolerances. The logic includes system and battery test capability to facilitate maintenance and troubleshooting. Start-up, transfers, and battery recharge shall be all automatic functions.

F. Control Panel**:** The UPS shall be equipped with a control panel that provides the following metering, monitoring, and control functions:

ac input voltage	(LINE VOLT)
ac input current	(LINE AMP)
ac input frequency	(LINE HZ)
dc battery voltage	(BATT VOLT)
dc battery current	(BATT AMP)
ac inverter voltage	(LOAD VOLT)
ac inverter current	(LOAD AMP)
ac inverter frequency	(LOAD HZ)

The metering display shall automatically blank after five minutes.

1. Alarm Monitoring: The following alarm indicators shall be provided on the control panel display:

   a. System Normal (Green): Line is supplying power to the UPS. The UPS is controlling the load voltage, and charging the battery.

   b. Alarm (Red): This indicator flashes whenever an alarm condition exists.

   c. Battery undervoltage (Yellow): The battery voltage has fallen below 128 v dc. Alarm condition ceases when the battery voltage reaches 132 v dc.

   d. Battery discharge (Yellow): The battery is supplying power to the load.

   e. Output Overload (Red): The output current exceeds the maximum rating of the system. If the output current exceeds 105 percent of system rating for 10 minutes, the system will respond by transferring to bypass.

   f. Sync Loss (Red): The utility line frequency has exceeded safe operating tolerances (±1 Hz or ±3 Hz, switch selectable) and/or the UPS is not synchronized within 5 degrees phase angle of the desired operating point.

   g. AC Input Failure (Red): The line voltage is not within normal operating range for the equipment (+13 percent to -20 percent of nominal). The load is being powered by the battery, if not in bypass mode of operation.

   h. Over Temp (Red): The internal temperature of the UPS cabinet is above 65 degrees C. UPS will transfer to bypass.

i. Shutdown Imminent (Red): Inverter shutdown is imminent (triggered by the battery discharging below 110 v dc or output overload over eight minutes). The load will be dropped when the battery falls below 95 v dc or the overload exceeds 105 percent for 10 minutes unless the bypass reacts.

j. On Bypass (Red): The load is receiving power which is bypassing the power protection circuitry of the UPS.

k. Inverter not ready (Red): The inverter is not ready to support the critical load.

2. Controls: The following control functions shall be provided on the control panel:

ON/OFF: Key operated switch which activates and deactivates UPS operation.

Alarm Off: Pushbutton which silences the audible alarm. The alarm will sound again at the reoccurrence of an alarm condition.

Test: Pushbutton which initiates a system test routine by simulating a utility power outage. The critical load will be supplied by the battery. When the pushbutton is released, the control circuitry resynchronizes the inverter to the input line and resumes battery charging.

3. Other controls located behind the front door shall include:

Audible Alarm Volume Control: Loud, soft and off.

Manual Restart: Pushbutton used to restart UPS after an overload or inverter failure trip.

G. Alarm Contact: A dry type summary alarm contact shall be provided for remote indication of alarm conditions.

H. Built-In Distribution: A 6-pole distribution panelboard shall be provided on the output of the system.

I. Environmental Conditions:

1. Efficiency at full, unity power factor load and nominal input voltage: 90 percent for a 3.0 kVA model, or 85 percent for a 1.5 kVA model.

2. Elevation: 5,000 feet (1,500 m) without derating.

3. Acoustical Noise: 50 dB at one meter. (Measured at +25 degrees C.)

4. EMI Suppression: Electromagnetic effects are minimized to ensure that computer systems or other similar electronic systems are neither adversely affecting to, nor are adversely affected by, the UPS. The UPS is certified to meet the requirements of Class A, Subpart J of Part 15 of the FCC Rules and Regulations.

5. Electrostatic Discharge (Commonly Encountered in Carpeted Offices) Immunity: Withstands up to ±25 kV with no disturbance or adverse effect to the load.

6. Ambient Temperature: 40 degrees C.

J. Battery Pack: The battery consists of battery tray(s) either fully enclosed within the UPS cabinet

or enclosed in metal cabinet(s) which match the UPS module in appearance. Individual battery trays are modular and individually fused.

1. Battery Type: a sealed, maintenance-free, high-rate
type battery shall be used as a stored energy source for the UPS. The battery shall be sized to
support the inverter at rated load or the kilowatt load specified for the protection time specified 60 min. The battery shall consist of one or more banks of cells as required, and be a common source for each inverter.

2. Expected Life: 5 years or 200 full discharge cycles at full load.

3. Minimum Final Discharge Voltage: 1.66 volts per cell.

4. Nominal Float Voltage: 2.25 volts per cell.

5. Battery Circuit Breaker: A molded case breaker is provided for battery short circuit protection and as a means of manual disconnection for battery maintenance.

2.4 FUNCTIONAL DESCRIPTION

A. Inverter/Charger**:** The inverter/charger shall employ Pulse Width Modulation (PWM) technology utilizing transistor power blocks as switching elements. The inverter shall be capable of providing the specified quality output power while operating from the ac utility or dc source within the specified operating range. In addition, the inverter shall simultaneously float charge the battery.

B. Electrical Protection:

1. Input protection shall be provided by a thermal-magnetic molded case circuit breaker and transient suppression circuitry.

2. Battery protection shall be provided by individual fusing of each battery tray and a thermal-magnetic molded case circuit breaker.

3. Output protection shall be provided by thermal-magnetic circuit breaker(s), fuses in the inverter circuit, and current limit circuitry.

2.5 ENCLOSURES

A. The UPS shall be housed in a free standing, double dead front (safety shields behind front door) enclosure equipped with casters and leveling feet. Enclosures shall be designed for office or computer room applications. If system consists of more than one cabinet, the cabinets shall be shipped with joining hardware to be bolted together at time of installation.

B. Ventilation: Electronics cabinets shall be designed for natural conversion cooling aided by a thermostatically controlled fan. Air inlets shall be in the lower front and rear; air outlets shall be in the upper rear. Battery cabinets shall be convection cooled.

C. Cable Entry: Units equipped with input cord and plug and output receptacles shall not require any installation. Hard wired systems shall provide for conduit entry through knockouts located in the rear of the unit. Connection between UPS and battery cabinets shall be provided and shall consist of cables and power plugs.

D. Front Access: Major subassemblies shall be modular and shall be replaceable from the front of

the unit.

2.6 WARRANTY:

A. The system warranty shall be no less than 12 months after initial startup, and must include all costs including repair, parts, labor, travel and living expenses for the manufacturer's service personnel, within the United States. The manufacturer shall guarantee, in writing, the stated system efficiency.

2.7 DOCUMENTATION AND TRAINING.

A. The UPS shall be supplied with sufficient documentation, including a concise operation and maintenance manual, also including proprietary troubleshooting information, to allow training personnel to troubleshoot and service the UPS. The UPS vendor shall make available a maintenance training school for customer personnel.

B. Operating and Maintenance Manual: The CONTRACTOR shall furnish 6 copies of the operating and maintenance manuals. The manuals shall possess sufficient detail and clarity to enable the owner's technicians to understand and operate the system equipment, and to identify replaceable parts.

PART 3 -- EXECUTION

3.1 GENERAL

A. The uninterruptible power system shall be installed as shown, shall conform with Section 16010, Wastewater Facilities General Electrical Requirements and in accordance with the equipment manufacturer's installation instructions.

B. Detailed Requirements:

1. The Contractor shall receive, store, and assemble all sections of the UPS to form complete units. The Contractor shall make all internal wiring interconnections as required for complete assembly of each UPS. Where wiring connectors are not supplied by the manufacturer, the Contractor shall furnish the connectors required to complete internal wiring terminations.

2. The Contractor shall take all necessary precautions to eliminate moisture and foreign material from the equipment at all times during storage and installation. Special care shall be taken to prevent corrosion of and damage to the UPS.

3. Each UPS shall be set level and plumb on its floor channels furnished, installed, and grouted in by the Contractor as shown. The Contractor shall furnish all shims necessary to accomplish these requirements.

3.2 INSTALLATION

A. The UPS system shall be set in place, wired and connected in accordance with the approved shop drawings and manufacturer's instructions.

B. Equipment shall be adequately anchored and braced per details on structural contract drawings to withstand the seismic forces at the location where installed.

3.3 ACCEPTANCE INSPECTION AND TESTS

A. Installation, adjustment and testing of the equipment shall be supervised by a manufacturer's representative.

B. All tests shall be witnessed by the ENGINEER.

C. Field Tests: As a minimum, the startup and field test procedures shall include the following:

1. Compare equipment nameplate data with specifications and approved shop drawings.

2. Ensure that shipping members have been removed.

3. Inspect physical, electrical, and mechanical condition.

4. Clean the UPS.

5. Attach a phase rotation meter to the UPS input, output and bypass buses, and observe proper phase sequences.
6. Torque test bus and battery connections at shipping splits.

7. Check each electrical bus for proper phasing and identification.

8. Check and test selector switches and meters for proper operation.

9. Check doors for proper alignment and operation.

10. Check and test each protective device for proper mechanical and electrical operation.

11. Verify protective device overcurrent trip settings against approved coordination study.

12. Verify the correct operation of all sensing devices, alarms, and indicating devices.

13. Perform manufacturer’s onsite field test procedures.

14. Demonstrate to the ENGINEER that the interlocks have been tested and agree with the interlocking scheme.

D. Load Test: The installed system shall be load tested for a continuous 24 hour period by means of resistive load banks, provided by equipment manufacturer. The system shall be continuously tested at 1/2 load for 8 hours, 3/4 load for 8 hours and full load for 8 hours. Instrument readings shall be recorded every half hour for the following:

1. Input voltage and current (all three phases, for each module).

2. Input and output frequency.

3. Battery voltage for each module.

4. Output voltage and current (all three phases, for each module).

5. Output kilowatts for each module.

6. Output voltage and current (all three phases).

7. Output kilowatts.

E. Full Load Burn In Test :

1. The installed system shall undergo an additional full load burn-in period of 24 continuous hours. If a failure occurs during the burn-in period, the tests shall be repeated. Instrument readings shall be recorded every half hour as above. During the burn-in period, the following tests shall be performed:

   a. With the UPS carrying maximum continuous design load and supplied from the normal source, switch 100 percent load on and off a minimum of five times within the burn-in period.
   b. With the UPS carrying maximum continuous design load and supplied from the emergency source, repeat the switching operations described. Also, verify that the UPS module rectifier charger unit(s) go into the second-step current limit mode.
   c. With the UPS carrying maximum continuous design load and operating on battery power, repeat the switching operations described above.
   d. Continue operation on battery power for 1 minute, and then restore normal power.

F. Battery Discharge Test:

1. With the battery fully charged, the system shall undergo a complete battery discharge test to full depletion and a recharge to nominal conditions. Instrument readings shall be recorded every minute during discharge for the following:

   a. Battery voltage and current for each module.
   b. Output voltage and current (all three phases) for each module.
   c. Output kilowatts for each module.
   d. Output voltage and current (all three phases - system output).
   e. Output kilowatts (system output).
   f. Output frequency.

3.4 POSTING FRAMED DATA AND INSTRUCTIONS

Wiring and control diagram instructions and data shall be framed and posted under acrylic glass in a location adjacent to the UPS system as directed by the ENGINEER. Condensed operating instructions, prepared in typed form, shall be framed as specified above and posted beside the diagrams. The framed instructions shall be posted before acceptance testing of the system.

3.5 FOLLOW-UP VERIFICATION

Upon completion of acceptance checks, settings, and tests, the Contractor shall show by demonstration in service that the central uninterruptible power supply is in good operating condition and properly performing the intended function.

3.6 TRAINING OF CITY PERSONNEL

A field training course shall be provided by a certified factory-trained technician for designated City personnel. Training shall be provided for a total period of 8 hours of normal working time and shall start after the system is functionally complete but prior to final acceptance test. Field training shall cover the items contained in the operating and maintenance manuals.

END OF SECTION 16380

SECTION 16490
ELECTRIC MOTORS

PART 1 -- GENERAL

1.1 THE REQUIREMENT

A. General: The CONTRACTOR shall furnish and install electric motors, accessories, and appurtenances as specified herein and in conformance with the individual specifications of driven equipment, to provide a complete and operable installation, all in accordance with the requirements of the Contract Documents.

1.2 RELATED WORK SPECIFIED ELSEWHERE

A. The work of the following Sections and Divisions applies to the work of this Section. Other Sections of the Specifications, not referenced below, shall also apply to the extent required for proper performance of this work.

1. Section 16020 Municipal Facilities General Electrical Requirements.

2. Division 16 as applicable, Electrical.

3. Division 11 as applicable, Equipment.

1.3 REFERENCE SPECIFICATIONS, CODES, AND STANDARDS

A. All work specified herein shall conform to or exceed the applicable requirements of the referenced portions of the following publications to the extent that the provisions thereof are not in conflict with other provisions of these specifications.

1. LAEC City of Los Angeles Electrical Code, latest adopted edition.

2. Commercial Standards

NEMA MG 1	Motors and Generators
NEMA MG 2	Safety Standard for Construction and Guide for Selection, Installation and Use of Electric Motors and Generators
NEMA MG 10	Energy Management Guide for Selection and Use of Polyphase Motors
I EEE 43	Recommended Practice for Testing Insulation Resistance of Rotating Machinery
IEEE 85	Standard Test Procedure for Airborne Sound Measurement on Rotating Electric Machinery
I EEE 112	Standard Test Procedure for Polyphase Induction Motors and Generators.

I EEE 113 Guide on Test Procedures for DC Machines

I EEE 115 Test Procedure for Synchronous Machines

1.4 CONTRACTOR SUBMITTALS

A. Submittals shall be made in accordance with the requirements of Section 16020 Municipal Facilities General Electrical Requirements.

B. Complete motor data shall be submitted with the driven machinery shop drawings. Motor data shall include:

1. Machine name and specification number of driven machine.

2. Motor manufacturer.

3. Motor type or model and dimension drawing.

4. Nominal horsepower.

5. NEMA design.

6. Frame size.

7. Enclosure.

8. Winding insulation class and treatment.

9. Rated ambient temperature.

10. Service factor.

11. Voltage, phase, and frequency rating.

12. Full load current at rated horsepower for application voltage.

13. Starting code letter, or locked rotor kVA, or current.

14. Special winding configuration such as part-winding, star-delta. Include winding diagram.

15. Rated full load speed.

16. Power Factor at full load.

17. Noise certification and data sheets.

18. Replica of motor nameplate.

19. Bearing types and catalog numbers.

C. If water cooling is required for motor thrust bearings, the shop drawing submittals shall indicate this requirement.

D. The following submittals and specific information shall be provided.

1. General Description:

a. Motor dimensional drawings. Net motor weight shall be noted on the dimensional drawings. Shipping weight shall also be noted if motors are to be shipped separately from the driven equipment.

b. Complete motor rating and enclosure type

c. Lists of special characteristics and features being provided as specified

d. Bearing life

e. Type of bearing lubrication

f. Statement that carbon brushes are being provided that are suitable for the low speed, continuous operation specified

2. Motor Characteristics:

a. Guaranteed minimum efficiency at rated load at rated voltage.

b. Guaranteed minimum power factor at rated load at rated voltage.

c. Expected efficiency at 1/2, 3/4, and full load at rated voltage.

d. Expected power factor at 1/2, 3/4, and full load at rated voltage.

e. Motor no-load current at rated voltage.

f. Full load current at rated voltage.

g. Full load current at 110 percent voltage.

h. Starting current at rated voltage.

i. Full load speed.

j. Certified copy of test report for identical motor tested in accordance with NEMA MG 1-12.53a and IEEE Standard 112, Test Method B, showing full load efficiency not less than specified value. Motors not as specified will be rejected.

k. Recommended maximum kVAR of power factor correction capacitors when capacitors are switched with motor.

l. Time in seconds motor can be subjected to locked rotor current at rated voltage without damage to motor with (1) motor initially at rated ambient temperature, and (2) with motor initially at rated temperature rise.

m. Speed torque curves

3. Motor Tests and Test Reports:

a. Certified copies of test reports on actual motors being provided.

b. Short commercial tests, including running light current at rated voltage, high potential, and locked rotor current.

1.5 QUALITY ASSURANCE

A. Quality assurance shall be in accordance with all applicable requirements of Section 16010 Wastewater Facilities General Electrical Requirements.

B. Adjustable frequency driven motors shall be tested as an assembly with the drive and the driven equipment prior to delivery to the site.

1.6 SERVICES OF MANUFACTURER'S REPRESENTATIVE

A. Where motors are part of packaged equipment such as Bridge Crane and Air-Conditioning Unit, a qualified manufacturer's representative shall supervise the unpacking, installation and field testing.

PART 2 -- PRODUCTS

2.1 MATERIALS

A. Materials and equipment shall be standard products of established manufacturers who have produced continuously the type of equipment specified. All equipment and material shall be new and of high quality insuring long life and reliable operation.

2.2 SERVICE CONDITIONS

A. Motors shall be designed and manufactured for continuous severe duty service.

2.3 RATING AND APPLICATION

A. Unless indicated otherwise in Divisions 11, 13, 14 and 15 in which the design equipment is specified or on the motor data sheets, motor enclosures shall be of the following type(s) approved for its intended purpose:

1. Motors installed indoors and outdoors shall be totally enclosed fan cooled (TEFC) with a service factor of 1.15.

2. Motors to be installed in classified areas shall conform to the requirements of NEC Article 500.

B. Motors shall be rated in accordance with the following, unless otherwise specified.

1. Motors below 1/2 hp shall be rated 115 volts, single phase, 60 Hertz and shall be of the capacitor-start, induction-run type.

2. Motors 1/2 hp through 200 hp inclusive shall be rated 460 volts, three phase, 60 Hertz.

3. Motors 250 hp and above shall be rated three phase, 60 Hertz and voltage as specified.

C. Motor mechanical design shall be in accordance with this Specification and the detailed requirements indicated on the individual motor data sheet.

D. The design and construction of all motors shall be coordinated with the driven equipment requirements.

E. Motors shall be designed for full-voltage starting and rated for continuous operation as shown on the Contract Drawings.

F. Motors shall operate successfully under running conditions at rated load at plus or minus 10 percent of rated voltage or plus or minus 5 percent of rated frequency or a combination of the two.

G. In sizing motors, the horsepower rating of the motor, as stamped on the nameplate, shall not be exceeded during any operating conditions of the driven equipment.

H. Starting current at full voltage shall not exceed 650 percent of the motor full load current for all integral horsepower alternating current motors.

I. All motors shall have a safe stall (locked rotor) time equal to or greater than the maximum accelerating time under the worst voltage conditions specified.

J. Motor fans shall be suitable for rotation in either direction. They shall be nonsparking, corrosion resistant material, accurately balanced before assembly on the motor.

K. All motors shall be NEMA Design "B" unless otherwise specified on the motor data sheet, or required by the application.

L. Totally enclosed motors shall be "Severe Duty Chemical Service" type including shaft seals, internal surfaces coated with corrosion resistant paint or epoxy varnish, external surfaces coated with alkyd paint or epoxy enamel.

M. All motors shall be "high-efficiency" design, capable of operating at a higher normal efficiency than the standard industry design.

1. Motors built in NEMA Frames 143T through 445T shall have the guaranteed efficiency stamped on the nameplate. The basis for motor efficiency evaluation shall be IEEE test procedure 112, Method B, using accuracy improvement by segregated loss determination including stray load loss measurements.

2. Motors built in frames larger than 445T shall have the guaranteed efficiency stamped on the nameplate. The test method used in determining efficiency (e.g. Method B-Dynamometer, Method E-Input or Method F-Equivalent Circuit) shall be designated by the CONTRACTOR.

2.4 TERMINAL BOXES

A. Terminal boxes of the split type shall be furnished for each motor unless the base or housing of the motor is of a design which incorporates provisions for incoming cables.

B. Terminal boxes for medium-voltage motors shall have sufficient interior space to permit stress cones to be formed on the incoming cables and to permit the cable shields to be properly terminated and grounded. In addition, boxes shall be sized to contain surge protection equipment.

C. Separate terminal boxes shall be furnished for each accessory device, such as space heaters, temperature detectors, and other items.

D. All boxes shall be heavy duty class, weather tight and thoroughly coated internally and externally with corrosion-resistant paint.

2.5 INSULATION

A. The insulation system shall be Class F with temperature rise (based on maximum ambient temperature of 40 degrees C) of 80 degrees C measured by the resistance method.

B. Motors constructed in NEMA Frame 364 and larger, except totally enclosed motor, shall be vacuum pressure impregnated with 100 percent solids epoxy resins. The completed insulation shall have

a minimum resistance of 10 mega-ohms after 168 hours of testing in a humidity chamber maintained at 100 percent relative humidity and 40 degrees C ambient. In addition, motors with form wound coils shall also meet NEMA MG1-20.48 Qualification Test.

C. Totally enclosed motors shall be dipped and baked in epoxy resin. The completed insulation shall have a minimum resistance of 1.5 mega-ohms after testing as in 2.5B above.

2.6 BEARINGS AND LUBRICATION - HORIZONTAL MOTORS

A. All horizontal motors rated 200 hp and below shall have anti-friction bearings, selected to provide an L10 life of 100,000 hours for direct connected motors and 17,500 hours for belt or chain drive motors when belted or chain driven in accordance with the information contained on the data sheets. Further, bearings shall be re-greaseable while running via installed grease fittings.

B. Bearings on horizontal motors rated 250 hp and larger shall be anti-friction or sleeve-type as indicated on the individual Motor Data sheet(s). Bearings shall be constructed and provided with seals so that dirt, moisture, or lubricant leakage around seals will not enter the motor.

C. Motors which have split capsule type sleeve bearing and split bearing brackets shall be designed to permit bearing replacement without removing the bottom bearing bracket. Reservoirs shall be provided with drains, tapped fill openings and separate level gage glasses. Oil throwers and catchers and close running shaft seals shall be designed to prevent oil escape from the bearings and creepage along the shaft. Vents for equalizing bearing oil pressure shall be provided with screens and caps to prevent the entrance of rodents and the like.

D. Motors with sleeve bearings shall have a minimum motor rotor end float and a maximum coupling end float in accordance with NEMA MG1.

E. The requirement for bearing temperature protection will be specified on the individual motor data sheets. When specified, protection shall be resistance type bearing temperature detectors 120 ohms at 0 degrees C tip sensitive with leads brought out to the head of the device where suitable connection can be made. The detector holder and head assembly shall be suitable for the area classification in which the motors will be installed. The detectors shall sense the temperature at the outer shell of sleeve type bearings.

F. Motors shall be greased type and lubricated with Chevron SRI grease NLGI-2 or equal.

2.7 BEARINGS AND LUBRICATION - VERTICAL MOTORS

A. Vertical motors shall be solid shaft or hollow shaft and bearings shall be anti-friction type grease.

B. Motors for "Process" or "In-Line" service shall be "In-Line, Solid Shaft" type construction with a clamped and locked bearing arrangement. Mounting and shaft extension dimensions and tolerances shall be in accordance with NEMA MG1-18.620 or 18.625. The bearings shall be rated for a L10 minimum life of 2 years or 17,500 hours at the maximum expected up or down thrust the driven equipment may impose during startup or operation at any capacity including shutoff.

2.8 SPACE HEATERS

A. Space heaters shall be supplied to maintain the interior of the motor enclosure above the dew point on all motors 30 hp and larger installed outdoors and on all motors 50 hp and larger installed indoors.

B. Heaters shall be unaffected by the accumulation of moisture and shall have terminals adequately protected against moisture under severe weather conditions. Heaters shall be mounted on noncombustible material and shall operate without thermal damage to the motor or themselves.

Heaters shall be rated 120 volts single phase. They shall have a maximum sheath temperature of 200 degrees C.

C. Leads for the heaters shall be brought out into a terminal box separate from the main power leads terminal box or in a separate cabinet, if required.

D. Where motors are provided with space heaters, warning nameplate shall be red background with white letters and shall read: "CAUTION - CONTAINS AN EXTERNAL VOLTAGE SOURCE."

2.9 WINDINGS AND WINDING PROTECTION

A. Stator windings shall be copper.

B. Leads shall be brought out to a terminal box separate from the main power leads terminal box.

C. Motors 250 hp and larger or as indicated shall be furnished with surge capacitors and lightning arrestors mounted in the main power leads terminal box or in a separate cabinet, if required.

D. Motors controlled by variable frequency shall be supplied with thermostats in two phases as a minimum. Any overload condition shall cause all phases to open.

2.10 GROUNDING

A. Each motor shall have a threaded hole in the motor frame with either a bronze bolt and lock washer or a bronze post-type connector for connection to an external ground conductor. The hole shall be for a 1/2 inch bolt or post-type connector except for motors of 100 hp or less where the size of the bolt or post-type connector may be 3/8 inch. The hole in the motor frame shall be threaded to a depth not less than 1 1/2 times the diameter of the hole to ensure a firm connection. If necessary, a metal pad shall be bonded to the motor frame to provide this depth for the threaded hole. The grounding means shall be located on the same side of the motor as the main lead terminal box.

2.11 BALANCE AND VIBRATION

A. Motors shall be dynamically balanced. Method of measuring dynamic balance shall be when measured in accordance with NEMA MG1-12.06 or MG1-20.52 and with the maximum amplitude values as shown in NEMA MG1-12.05.

B. Motors shall have a maximum peak-to peak amplitude of vibration in accordance with MG1-20.52 when measured in accordance with MG1-12.06 B or MG1-20.53.

2.12 NOISE

A. Maximum sound pressure levels 3 feet from any motor shall not exceed 85dbA.

B. All motors shall be "quiet line" type and shall be so indicated on the submittals, Quiet Line type motors shall be capable of operating at a lower noise level than the standard industry design.

C. Measurement procedures shall in general be guided by the provisions of IEEE Publication No. 85.

2.13 NAMEPLATES

A. Each motor shall have a corrosive-resistant nameplate containing information in accordance with NEMA MG1. In addition the service factor and efficiency shall be included. For motors of 250 hp and larger, the nameplate shall also state any limitations on the number of starts per day, and conditions of restarting.

PART 3 -- EXECUTION

3.1 INSTALLATION

A. Motors shall be installed in accordance with Division 11, EQUIPMENT, Division 16, ELECTRICAL and in accordance with the manufacturer’s recommendations.

B. CONTRACTOR shall make provision to protect motors from moisture by connecting power to space heaters.

1. The space heaters shall be connected while in storage and/or before commissioning.

END OF SECTION 16490

SECTION 16560
MUNICIPAL FACILITIES ELECTRICAL SYSTEMS COMMISSIONING

PART 1 – GENERAL

1.1 DESCRIPTION

A. The purpose of this section is to specify Division 16 responsibilities in the commissioning process which are being directed by the CA. Other electrical systems testing are required under the direction of the CM.

B. The list of commissioned equipment and systems is found in Section 01810, Part 1.12.

C. Commissioning requires the participation of Division 16 to ensure that all systems are operating in a manner consistent with the Contract Documents. The general commissioning requirements and coordination are detailed in Division 01. Division 16 shall be familiar with all parts of Division 01 and the commissioning plan issued by the CA and shall execute all commissioning responsibilities assigned to them in the Contract Documents.

1.2 RESPONSIBILITIES

A. Electrical Contractors. The commissioning responsibilities applicable to the electrical contractor are as follows (all references apply to commissioned equipment only):

1. Construction and Acceptance Phases

a. Include the cost of commissioning in the contract price, if not yet let.

b. In each purchase order or subcontract written, include requirements for submittal data, O&M data and training.

c. Attend a commissioning kickoff meeting and other necessary meetings scheduled by the CA to facilitate the construction process.

d. Contractors shall provide normal cut sheets and shop drawing submittals to the CA of commissioned equipment.

e. Provide additional requested documentation, prior to normal O&M manual submittals, to the CA for development of start-up and functional testing procedures.

(1) Typically this will include detailed manufacturer installation and start-up, operating, troubleshooting and maintenance procedures, full details of any owner-contracted tests, fan and pump curves, full factory testing reports, if any, and full warranty information, including all responsibilities of the Owner to keep the warranty in force clearly identified. In addition, the installation and checkout materials that are actually shipped inside the

equipment and the actual field checkout sheet forms to be used by the factory or field technicians shall be submitted to the Commissioning Agent.

(2) The Commissioning Agent may request further documentation necessary for the commissioning process.

(3) This data request may be made prior to normal submittals.

2. Provide a copy of the O&M manuals submittals of commissioned equipment, through normal channels, to the CA for review and approval.

a. Contractors shall assist (along with the design engineers) in clarifying the operation and control of commissioned equipment in areas where the specifications, control drawings or equipment documentation is not sufficient for writing detailed testing procedures

b. Provide assistance to the CA in preparation of the specific functional performance test procedures specified in Section 16570. Subs shall review test procedures to ensure feasibility, safety and equipment protection and provide necessary written alarm limits to be used during the tests.

c. Develop a full start-up and initial checkout plan using manufacturer's start-up procedures and the prefunctional checklists from the CA. Submit manufacturer's detailed start-up procedures and the full start-up plan and procedures and other requested equipment documentation to CA for review.

d. During the startup and initial checkout process, execute and document the electrical-related portions of the prefucntional checklists provided by the CA for all commissioned equipment.

e. Perform and clearly document all completed startup and system operational checkout procedures, providing a copy to the CA.

f. Address current A/E punch list items before functional testing.

g. Provide skilled technicians to execute starting of equipment and to execute the functional performance tests. Ensure that they are available and present during the agreed upon schedules and for sufficient duration to complete the necessary tests, adjustments and problem-solving.

h. Perform functional performance testing under the direction of the CA for specified equipment in Section 16570 and 01810. Assist the CA in interpreting the monitoring data, as necessary.

i. Correct deficiencies (differences between specified and observed performance) as interpreted by the CA, CM and A/E and retest the equipment.

j. Prepare O&M manuals according to the Contract Documents, including clarifying and updating the original sequences of operation to as-built

conditions.

k. During construction, maintain as-built red-line drawings for all drawings and final CAD as-builts for contractor-generated coordination drawings. Update after completion of commissioning (excluding deferred testing). Prepare red-line as-built drawings for all drawings and final as-builts for contractor-generated coordination drawings.

l. Provide training of the Owner's operating personnel as specified.

m. Coordinate with equipment manufacturers to determine specific requirements to maintain the validity of the warranty.

3. Warranty Period

a. Execute seasonal or deferred functional performance testing, witnessed by the CA, according to the specifications.

b. Correct deficiencies and make necessary adjustments to O&M manuals and as-built drawings for applicable issues identified in any seasonal testing.

B. Electrical Designer/Engineer

1. Refer to Section 01810 for the responsibilities of the Electrical Designer/Engineer.

1.2 RELATED WORK

A. Refer to Section 16570 for functional testing requirements.

PART 2 -- PRODUCTS

2.1 TEST EQUIPMENT

A. Division 16 shall provide all test equipment necessary to fulfill the testing requirements of this Division (i.e. light meters).

PART 3 -- EXECUTION

3.1 SUBMITTALS

A. Division 16 shall provide submittal documentation relative to commissioning to the CA as requested by the CA. Refer to Section 01810 Part 3.3 for additional Division 16 requirements.

3.2 STARTUP

A. The electrical contractors shall follow the start-up and initial checkout procedures listed in the Responsibilities list in this section and in 01810 Part 3.4. Division 16 has start-up responsibility and is required to complete systems and sub-systems so they are fully functional, meeting the design objectives of the Contract Documents. The commissioning

procedures and functional testing do not relieve or lessen this responsibility or shift that responsibility partially to the commissioning agent or Owner.

B. Functional testing is intended to begin upon completion of a system. Functional testing may proceed prior to the completion of systems, or sub-systems at the discretion of the CA and CM. Beginning system testing before full completion does not relieve the Contractor from fully completing the system, including all prefunctional checklists as soon as possible.

1. Functional performance tests

a. Refer to Section 16570 for specific details on the required functional performance tests.

2. Testing documentation, non-conformance and approvals

a. Refer to Section 01810 Part 3.6 for specific details on non-conformance issues relating to prefunctional checklists and tests.

b. Refer to Section 01810 Part 3.5 for issues relating to functional performance tests.

3. Operations and maintenance (O&M) manuals

a. Division 16 shall compile and prepare documentation for all equipment and systems covered in Division 16 and deliver to the GC for inclusion in the O&M manuals, according to Section 01810.

b. The C shall receive a copy of the O&M manuals for review.

4. Training of owner personnel

C. The GC shall be responsible for training coordination and scheduling and ultimately to ensure that training is completed. Refer to Section 01810 for additional details.

D. The CA shall be responsible for overseeing and approving the content and adequacy of the training of Owner personnel for commissioned equipment. Refer to Section 01810 for additional details.

E. Electrical Contractor. The electrical contractor shall have the following training responsibilities:

1. Provide the CA with a training plan two weeks before the planned training according to the outline described in Section 01810, Part 3.8.

2. Provide designated Owner personnel with comprehensive training in the understanding of the systems and the operation and maintenance of each major piece of commissioned electrical equipment or system.

3. Training shall start with classroom sessions, if necessary, followed by hands on training on each piece of equipment, which shall illustrate the various modes of operation, including startup, shutdown, fire/smoke alarm, power failure, etc.

4. During any demonstration, should the system fail to perform in accordance with the requirements of the O&M manual or sequence of operations, the system will be repaired or adjusted as necessary and the demonstration repeated.

5. The appropriate trade or manufacturer's representative shall provide the instructions on each major piece of equipment. This person may be the start-up technician for the piece of equipment, the installing contractor or manufacturer's representative. Practical building operating expertise as well as in-depth knowledge of all modes of operation of the specific piece of equipment is required. More than one party may be required to execute the training.

6. The training sessions shall follow the outline in the Table of Contents of the operation and maintenance manual and illustrate whenever possible the use of the O&M manuals for reference.

7. Training shall include:

    a. Use the printed installation, operation and maintenance instruction material included in the O&M manuals.

    b. Include a review of the written O&M instructions emphasizing safe and proper operating requirements, preventative maintenance, special tools needed and spare parts inventory suggestions. The training shall include start-up, operation in all modes possible, shut-down, seasonal changeover and any emergency procedures.

    c. Discuss relevant health and safety issues and concerns.

    d. Discuss warranties and guarantees.

    e. Cover common troubleshooting problems and solutions.

    f. Explain information included in the O&M manuals and the location of all plans and manuals in the facility.

    g. Discuss any peculiarities of equipment installation or operation.

    h. The format and training agenda in Guidelines for Commissioning HVAC Systems, ASHRAE, 1989R, 1996 is a recommended reference.

    i. Classroom sessions shall include the use of overhead projections, slides, video and audio taped material as might be appropriate.

8. Hands-on training shall include start-up, operation in all modes possible, including manual, shut-down and any emergency procedures and maintenance of all pieces of equipment.

9. The electrical contractor shall fully explain and demonstrate the operation, function and overrides of any local packaged controls, not controlled by the central control system.

    a. Training shall occur after functional testing is complete, unless approved

otherwise by the Project Manager.

b. Duration of Training. The electrical contractor shall provide training on each piece of equipment according to the following schedule.

Hours	System
4	Lighting controls, controllers, and schedules
2	Occupancy sensors and photo sensors

A. Deferred testing

1. Refer to Section 01810, Part 3.9 for requirements of deferred testing.

B. Written work products

1. Written work products of Contractors will consist of the startup and initial checkout plan described in Section 01810 and the filled out startup, initial checkout and pre-functional checklists.

END OF SECTION 16560

SECTION 16570
MUNICIPAL FACILITIES ELECTRICAL TESTING REQUIREMENTS

PART 1 – GENERAL

1.1 INCLUDED SYSTEMS AND EQUIPMENT

A. The following is a list of the equipment and system test requirements included in this section:

1. Lighting sweep controls (weekday, weekend, and holiday schedules).
2. Occupancy sensors.
3. Photo sensors (indoor and outdoor).
4. Lighting controllers (indoor and outdoor).

1.2 DESCRIPTION

A. This section specifies the functional testing requirements for Division 16 systems and equipment. From these requirements, the Commissioning Authority (CA) shall develop step-by-step procedures to be executed by the Subs. The general functional testing process, requirements and testing methods definitions are described in Section 01810. The test requirements for each piece of equipment or system contain the following:

1. The contractors responsible to execute the tests, under the direction of the CA.
2. A list of the integral components being tested.
3. Prefunctional checklists associated with the components.
4. Functions and modes to be tested.
5. Required conditions of the test for each mode.
6. Special procedures.

.

7. Required methods of testing.
8. Required monitoring.
9. Acceptance criteria.
10. Sampling strategies allowed.

1.3 PREREQUISITES

A The following applicable generic prerequisite checklist items are required to be listed on each written functional test form and be completed prior to functional testing.

1. All related equipment has been started up and calibrated and start-up reports and prefunctional checklists submitted and approved ready for functional testing. Sample prefunctional checklists can be found in Section 01813. These are

samples and for reference only. Final prefunctional checklists will be provided as part of the Construction Phase Commissioning Plan.

2. All A/E punchlist items for this equipment corrected.

3. These functional test procedures reviewed and approved by installing contractor.

4. Safeties and operating ranges reviewed by the CA.

5. Test requirements and sequences of operation attached.

6. Schedules and set points attached.

7. Record of all values for pre-test set points changed to accommodate testing has been made and a check box provided to verify return to original values (control parameters, limits, delays, lockouts, schedules, etc.).

PART 2 PRODUCTS (NOT USED)

PART 3 EXECUTION

3-1 LIGHTING SWEEP CONTROLS

A. Parties Responsible to Execute Functional Test

1. Lighting Controls contractor: operate the controls

2. Electrical contractor: assist in testing sequences

3. CA: to witness, direct and document testing.

B. Prerequisites

1. The applicable prerequisite checklist items listed in the beginning of Section 16570 shall be listed on each functional test form and checked off prior to functional testing.

C. Functions / Modes Required To Be Tested and Test Methods

1. The following testing requirements are an addition to and do not replace any testing requirements elsewhere in this Division.

Function / Mode	Test Method Manual (demonstration), Monitoring, Either or Both
MISCELLANEOUS FUNCTIONS	
1. All specified functions and features are set up, debugged and fully operable.	Verbal discussion of features
2. Power failure and battery backup and power-up restart functions.	Demonstration
3. Security and access codes.	Demonstration
4. Verify override duration setting.	Demonstration

Function / Mode	Test Method Manual (demonstration), Monitoring, Either or Both
5. Scheduling features fully functional and setup, including weekdays, weekends, and holidays.	Observation in terminal screens or printouts
SWEEP FUNCTIONS	
1. 50% of the zones with a minimum of 2 zones per controller or relay must be verified by turning on at least 25% of the lights in the zone and witnessing an actual sweep.	Either
OVERRIDE FUNCTIONS	
1. Manual occupant overrides: 25% of the local override switches, with a minimum of 4 switches must be verified by turning the override switches ON after a sweep and seeing the lights turn back on. 100% of the remainder of the switches should be sight verified to be in place.	Either

D. Acceptance Criteria (referenced by function or mode ID)

1. For the conditions, sequences and modes tested, the sweep controls, integral components and related equipment respond to changing conditions and parameters appropriately as expected, as specified and according to acceptable operating practice.

E. Sampling Strategy for Identical Units

1. Sample the units per the above table. If 10% of the units in the first sample fail the functional performance tests, test another 10% of the group (the 2nd sample). If 10% of the units in the 2nd sample fail, test all remaining units in the whole group, fully at the contractor's expense.

3-2 OCCUPANCY SENSORS

A. Parties Responsible to Execute Functional Test

1. Electrical contractor: assist in testing sequences
2. CA: to witness, direct and document testing.

B. Prerequisites

1. All occupancy sensor calibration and set points shall be verified prior to functional testing.

2. The applicable prerequisite checklist items listed in the beginning of Section 16570 shall be listed on each functional test form and checked off prior to functional testing.

C. Functions / Modes Required To Be Tested and Test Methods

1. The following testing requirements are an addition to and do not replace any testing requirements elsewhere in this Division.

Function / Mode	Test Method Manual (demonstration), Monitoring, Either or Both
MISCELLANEOUS FUNCTIONS	
1. All specified functions and features are set up, calibrated, debugged and fully operable.	Verbal discussion of features
2. Occupant over-ride functions and duration setting.	Demonstration
OCCUPANCY SENSOR FUNCTIONS	
1. Test the sequence of operation for all features and modes.	Manual
2. Verify that the controls and sensors are not easily overridden or disabled by occupants.	Visual inspection
3. Verify that the occupancy sensor is in an adequate location and is not being affected by obstructions.	Visual inspection

D. Acceptance Criteria (referenced by function or mode ID)

1. For the conditions, sequences and modes tested, the dimming controls, integral components and related equipment respond to changing conditions and parameters appropriately as expected, as specified and according to acceptable operating practice.

E. Sampling Strategy for Identical Units

1. Each occupancy sensor and its controlled zone must be tested (no sampling).

3-3 PHOTO SENSORS

A. Parties Responsible to Execute Functional Test

1. Electrical contractor: assist in testing sequences

2. CA: to witness, direct and document testing.

B. Prerequisites

1. All photo sensor calibration and set points shall be verified prior to functional testing.

2. The applicable prerequisite checklist items listed in the beginning of Section 16570 shall be listed on each functional test form and checked off prior to functional testing.

C. Functions / Modes Required To Be Tested and Test Methods

1. The following testing requirements are an addition to and do not replace any testing requirements elsewhere in this Division.

Function / Mode	Test Method Manual (demonstration), Monitoring, Either or Both
MISCELLANEOUS FUNCTIONS	
1. All specified functions and features are set up, calibrated, debugged and fully operable (indoor and outdoor sensors).	Verbal discussion of features
PHOTO SENSOR FUNCTIONS	
1. Test the sequence of operation for all features and modes (weekday, weekend, and holiday schedules) and interlocks with time clocks, if any.	Manual
2. Verify that the controls and sensors are not easily overridden or disabled by occupants.	Visual inspection
3. Verify that the photo sensor is in an adequate location and is not being affected by obstructions.	Visual inspection
DIMMING FUNCTIONS	
1. Verify that dimming does not cause lower than specified light levels in adjacent “non-dimmed” spaces.	

D. Acceptance Criteria (referenced by function or mode ID)

1. For the conditions, sequences and modes tested, the dimming controls, integral components and related equipment respond to changing conditions and parameters appropriately as expected, as specified and according to acceptable operating practice.

E. Sampling Strategy for Identical Units

1. Each photo sensor and its controlled zone must be tested (no sampling).

END OF SECTION 16570

SECTION 16190
ELECTRICAL IDENTIFICATION

PART 1 -- GENERAL

1.1 SCOPE

A. Required: Furnish and install nameplates and warning sign where indicated on the Contract Drawings or herein specified.

B. Comply with the General Conditions, General Requirements and Division 16 concerning definitions, guarantees, submittals, as-builts, clean-up, etc. as applicable to work of this Section.

C. Work includes but is not necessarily limited to the following:

1. Nameplates and warning signs permanently installed on all electrical equipment and devices including, but not limited to, the following items:

a. Transformers, switchboards, motor control centers, panelboards, variable frequency drives, pullboxes, cabinets and motors.

b. Enclosures for all separately enclosed devices including, but not limited to, disconnect switches, circuit breakers, contactors, time switches control stations and relays, fire alarm panels and lighting control panel.

c. Wall switches not within sight of outlet controlled.

d. Special systems such as, but not limited to, telephone, fire alarm, warning and signal systems. Identification shall be at each equipment rack, terminal cabinet, control panel, annunciator and pullbox.

e. Devices mounted within and part of equipment including circuit breakers, switches, control devices, control transformers, relays, indication devices and instruments.

PART 2 -- PRODUCTS

2.1 NAMEPLATE DESIGNATIONS SHALL CLEARLY STATE

A. Manufacturer's nameplate including equipment design rating of current, voltage, KVA, HP, bus bracing rating or as applicable.

B. Equipment nameplates designating system usage and purpose, system nominal voltage, equipment rating in KVA, amperes, HP and RPM as applicable. Designation data per drawings shall be supplied with Shop Drawings approval.

C. Panelboard nameplates showing panel designation, voltage, phase and source.

2.2 MANUFACTURERS DEVICE NAMEPLATES

Device usage, purpose, or circuit number; manufacturer and electrical characteristic ratings including the following:

A. Circuit Breakers: Voltage, continuous current, maximum interrupting current and trip current.

B. Switches: Voltage, continuous current, horsepower or maximum current switching. If fused, include nameplate stating, "Fuses must be replaced with current limiting type of identical characteristics".

C. Contactors: Voltage, continuous current, horsepower or interrupting current, and whether "mechanically held" or "electrically held".

D. Motors: Rated voltage, full load amperes, frequency, phases, speed, horsepower, code letter rating, time rating, type of winding, class and temperature.

E. Controllers: Voltage, current, horsepower and trip setting of motor running overcurrent protection.

F. Motor Control Centers: Horizontal and vertical bus ratings.

2.3 MATERIALS

A. For Nameplates**:** Three layer laminated plastic or Micarta with engraved black letters over white background.

B. For Emergency Equipment: Use engraved white letters over red background.

C. For Warning Signs: Minimum 18 gauge steel with red lettering on white porcelain enamel finish.

PART 3 -- EXECUTION

3.1 MOUNTING

Nameplates shall be mounted by self-tapping, threaded stainless steel screws and bolts, or by rivets. Adhesive types are not acceptable.

3.2 MINIMUM LETTER HEIGHTS ON NAMEPLATES (AS APPLICABLE)

A. Panelboards, Switchboards and Motor Control Centers and Special Systems Enclosures: 1/4 inch identifies equipment designation; 3/16 inch identifies voltage rating and source.

B. Individual Circuit Breakers, Switches, and Motor Starters in Panelboards, Switchboards, and Motor Control Centers: 1/4 inch identifies circuit and load served, including location.

C. Individual Circuit Breakers, Enclosed Switches, and Motor Starters: 1/4 inch identify load served.

D. Transformers: 1/4 inch identifies equipment designation; 3/16 inch identifies primary and secondary voltages, primary source and secondary load. Include location of primary source or secondary load if remote from transformer.

3.3 WARNING SIGNS

A. Warning signs shall be permanently mounted with stainless steel screws or nickel-plated brass bolts.

B. Warning signs to read "DANGER - HIGH VOLTAGE", with letters 1-1/2 inch high, 1/4 inch stroke minimum.

C. Provide warning sign on all doors or immediately next to door for equipment rooms or closets containing equipment energized above 150 volts to ground.

END OF SECTION 16190

SECTION 17100
METERS, GENERAL

PART 1 -- GENERAL

1.1 THE REQUIREMENT

A. The CONTRACTOR shall furnish and install all meters and flow measurement devices with associated instrumentation and controls as shown and specified herein, complete and operable, for functions including (but not limited to) flow measurement, density determination, and batch metering of water, wastewater, sludge, chemicals and gases in accordance with the requirements of the Contract Documents.

B. Furnish meters for functions in addition to those listed above wherever required by the Contract Documents and/or required by the specified process.

1.2 RELATED WORK SPECIFIED ELSEWHERE

A. Division 2 and 11, as applicable.

B. Section 09800 Protective Coating.

C. Section 11000 Equipment General Provisions (Mechanical).

D. Section 16100 Basic Materials and Methods (Electrical).

E. Section 17400 Process Instrumentation and Control.

1.3 REFERENCE SPECIFICATIONS, CODES, AND STANDARDS

A. Comply with reference specifications of Section 17400 Process Instrumentation and Control.

B. Commercial Standards:

1.	ANSI/ASME B16.1	Gray Iron Pipe Flanges and Flanged Fittings (Classes 25, 125, 250).
2.	ANSI/AWWA C207	Steel Pipe Flanges for Waterworks Service - Sizes 4 In. Through 144 In. (100 mm Through 3,600 mm).
3.	ANSI/AWWA C701	Cold-Water Meters - Turbine Type, for Customer Service.
4.	ANSI/AWWA C702	Cold-Water Meters - Compound Type.
5.	ANSI/AWWA C704	Propeller-Type Meters for Waterworks Applications.
6.	ASME REPORT	Fluid Meters, Latest Edition.

1.4 CONTRACTOR SUBMITTALS

A. Comply with applicable subsections of Section 17400 Process Instrumentation and Control.

B. Shop Drawings: The CONTRACTOR shall submit complete shop drawings of all meters for review in accordance with Section 01330 Shop Drawings / Submittals of the GENERAL REQUIREMENTS.

Each meter shall be identified with its equipment number / tag number as shown or specified.

C. Manufacturer's Data: With the shop drawings, the CONTRACTOR shall also furnish certified calibration curves indicating flow versus differential pressure and any other information called for in the individual meter specifications.

D. O & M Manuals: The CONTRACTOR shall furnish to the ENGINEER eight (8) copies of complete operation and maintenance instructions for all of the metering systems provided to the project including instrumentation and controls, as specified under Section 01782 Technical Manuals of the GENERAL REQUIREMENTS.

E. Spare Parts: The CONTRACTOR shall obtain and submit from the manufacturer a list of suggested spare parts for each piece of equipment according to the provisions of Section 01781 Spare Parts of the GENERAL REQUIREMENTS. After approval, CONTRACTOR shall furnish such spare parts suitably packaged, identified with the equipment number, and labeled. CONTRACTOR shall also furnish the name, address, and telephone number of the nearest distributor for each piece of equipment. All spare parts are intended for use by the CITY, only, after expiration of the guaranty period. Any spare parts which the ENGINEER permits the CONTRACTOR to use for startup activities shall be replaced by the CONTRACTOR prior to the CITY's acceptance of beneficial use of the equipment.

F. During the term of this Contract the CONTRACTOR shall notify the ENGINEER in writing regarding any manufacturer's modification of the approved spare parts, such as part number, interchangeability, model change or others. If the ENGINEER determines that the modified parts are no longer applicable to the supplied equipment, the CONTRACTOR at its expense shall provide applicable spare parts.

G. Special Tools: A list of special tools required shall be submitted to the ENGINEER for approval. After approval the CONTRACTOR shall supply these tools suitably wrapped and identified for application. Special tools shall include substitute steel spools for each meter for maintenance purposes. Each spool shall be labeled to identify the meter for which temporary replacement is required. The label shall include the meter identification number, size and service.

1.5 QUALITY ASSURANCE

A. Inspection and Testing Requirements: The CONTRACTOR shall obtain the services of an experienced factory service representative to inspect and test all meters for proper performance and installation.

B. Accuracy Requirements: Unless otherwise specified herein, the flow meters shall be guaranteed to register flow to an accuracy of $\pm$2 percent of actual flow throughout the range specified. All density measuring equipment shall have a reference accuracy within $\pm$2 percent of actual solids content over the range specified for each density measurement system.

1.6 MANUFACTURER'S SERVICE REPRESENTATIVE

A. Erection and Startup Assistance: During erection and startup of the plant the CONTRACTOR shall obtain all necessary assistance from an experienced factory service representative to ensure a correct and high quality installation, in accordance with the Contract Documents and the manufacturer's instructions.

B. Instruction of CITY'S Personnel: After completion of the installation and during startup of the plant, the CONTRACTOR shall instruct the CITY'S personnel in the proper operation, maintenance and repair of all metering equipment. For this purpose, the CONTRACTOR shall obtain the services of an experienced factory service representative, who shall spend sufficient time on the site to fully instruct the CITY'S operating personnel on all phases of its equipment. The ENGINEER shall be the sole judge of what is appropriate and sufficient training.

1.7 CLEANUP

A. After completion and testing of its work, the CONTRACTOR shall remove all debris from the site, clean all meters, controls, cabinets, and other metering appurtenances, and deliver to the CITY each system in proper operating condition.

B. Purge all piping and capillary tubing before connection to the meter. Use water, high pressure air, and/or mechanical mandrel as applicable.

C. Purge all electrical and signal conduits before installation of wiring. Use high pressure air followed by mechanical mandrel passed through the conduits from end to end by pull rope.

1.8 GUARANTEES, WARRANTIES

A. After completion the CONTRACTOR shall furnish to the CITY the manufacturer's written guarantees that the metering systems will operate within the published accuracies and flow ranges and meet these Specifications. The CONTRACTOR shall also furnish the manufacturer's warranties as published in its literature and as specified.

B. Warranty period shall not be less than one (1) year beginning from the day of first beneficial use by the City. Contractor testing shall not be counted in this period. Where necessary the CONTRACTOR shall purchase extended warranty coverage from the manufacturer to meet this requirement. All costs shall be included in the CONTRACTOR'S Bid price for the project.

PART 2 -- PRODUCTS (NOT USED)

PART 3 -- EXECUTION

3.1 INSTALLATION

A. The CONTRACTOR shall assemble and install all equipment specified herein, in strict accordance with the manufacturer's published instructions, under the supervision of the manufacturer's representative, and under the general review of the ENGINEER. All installations shall be accomplished by competent craftsmen of the appropriate trades and in keeping with the highest industrial standards for workmanship.

B. The meters shall be installed in easily accessible locations for ease of reading and maintenance. Where indicated, meters may be used for balancing of flow in several lines in conjunction with throttling and shut-off valves. Wherever possible, all meter installations shall provide the manufacturer's recommended straight run of piping upstream and downstream of the meters. All meters, shut-off and balancing valves shall be firmly supported from the structure or from the floor with approved supports. In-line meters shall be installed to provide full-line flow and not less than the manufacturer's recommended head at all times.

3.2 TESTING

A. Equipment shall be prepared for operational use in accordance with manufacturer's instructions, including bench test and calibration, where required.

B. Each item shall be subjected to an operating test over the total range of capability of the equipment. Where applicable, tests shall be conducted in accordance with the Test Code of the Standards of the Hydraulic Institute. The CONTRACTOR shall obtain copies of factory test certifications and shall notify the ENGINEER 1 week in advance of all tests to be conducted on site.

3.3 ACCEPTANCE BY CITY

A. Final acceptance of the equipment is contingent on satisfactory operation after installation.

3.4 INSTALLATION, CALIBRATION, TESTING, PRECOMMISSIONING, START-UP AND INSTRUCTION

A. Comply with the applicable subsections of Section 17400 Process Instrumentation and Control, Part 3 – EXECUTION.

B. CONTRACTOR questions regarding conduct of any part of the work shall be submitted in writing to the ENGINEER for resolution.

END OF SECTION 17100

SECTION 17240
AV FLOW METERS - FIELD MOUNTED

PART 1 -- GENERAL

1.1 THE REQUIREMENT

A. The CONTRACTOR shall furnish and install field-mounted ultrasonic flow meters and all appurtenant work, complete and operable, in accordance with the requirements of the Contract Documents.

B. Each meter shall consist of 2 acoustic sensors, a local flow indicator, an electronic transmitter, associated mounting hardware, cables, junction box, and accessories. The meter shall be bi-directional in measurement, utilizing an ultrasonic velocity measurement to characterize flow volume in the pipe.

1.2 RELATED WORK SPECIFIED ELSEWHERE

A. Section 17100 Meters, General.

B. Section 17400 Process Instrumentation and Controls.

1.3 REFERENCE SPECIFICATIONS, CODES AND STANDARDS

A. Comply with the reference specifications of: Section 17400 Process Instrumentation and Control.

1.4 CONTRACTOR SUBMITTALS

A. Submittals shall be made in accordance with Section 01330, Shop Drawings / Submittals, of the GENERAL REQUIREMENTS.

B. Comply with applicable subsections of Section 17400 Process Instrumentation and Control.

1.5 QUALITY ASSURANCE

A. The CONTRACTOR shall obtain the services of a factory-trained specialist to install, check, and calibrate all field-mounted ultrasonic flow meters.

B. All materials and equipment shall be of the highest available quality, new and unused.

PART 2 -- PRODUCTS

2.1 GENERAL

A. Basic Design: Field-mounted ultrasonic flow meters shall consist of transducers mounted in bosses welded directly to metal pipes, or transducers mounted to gasketed saddles strapped to concrete or plastic pipe. The meters shall be suitable for measuring stormwater with an accuracy of ±2 percent (of reading) for flow velocities above one foot per second, and a rangeability of 10 to 1 (or 25 to 1 for higher velocities).

B. Schedule of Field-Mounted Transit-Time Ultrasonic Meters: Field-mounted ultrasonic flow meters shall be provided as indicated on the drawings.

2.2 BASIC MATERIALS

A. Materials of construction shall be all 316 stainless steel including transducers, fasteners and all other accessories and appurtenances. Sensor enclosures shall have IP68 waterproof rating.

B. Metering Elements: Combined digital doppler radar velocity sensing with ultrasonic pulse echo depth sensing to remotely measure open channel flow from above the water surface (non-contact type). Flow meters shall produce a flow measurement based on the principle that the speed of a doppler radar signal varies with flow velocity. The measurement of signal speed or the measurement of transmitted and reflected frequencies infers the pipeline's average velocity. The primary element shall utilize a single pair of electro-acoustic transducers mounted inside a manhole above the water surface. Meters shall provide flow measurement during manhole surcharge flow conditions in addition to open-channel flow conditions.

C. Two sensors shall be permanently mounted to a straight pipe provided by the CONTRACTOR, with concrete anchors and installation parts provided by the meter manufacturer. The equipment manufacturer shall review and certify in writing that the installation arrangement and details will provide best possible accuracy.

D. The Transmitter shall be provided with a data logger and integral digital display scaled in engineering units and contained in a NEMA 4X enclosure. The electronics shall incorporate dual phase-lock loops in the flow measuring circuitry, one for each direction of sonic transmission. The electronics shall also incorporate automatic gain control circuitry and interference rejecting circuitry for tuning and to mitigate noise and maintain accuracy in the presence of traces of bubbles, solids, electrical noise and pipe vibration. The output signals from the transmitter shall be 4-20 mA DC proportional to flow rate. Overall metering system accuracy shall conform to ± 1 percent of flow rate for velocities over 1 ft/sec.

E. Transmitter shall be provided with manufacturer-supplied interconnecting cable of up to 1000 ft length as required based on distance between sensor and data logger/control panel. External dessicants and potting/sealant kits shall be provided as needed for proper installation.

2.3 Manufacturers:

A. Hach Flo-Dar AV Sensor with FL1500 stationary data logger;

B. Or equal.

PART 3 -- EXECUTION

3.1 INSTALLATION, CALIBRATION, TESTING, PRECOMMISSIONING, START-UP AND INSTRUCTION

A. Comply with the applicable subsections of Section 17400 Process Instrumentation and Control Part 3 - EXECUTION.

B. The sensors shall be positioned in accordance with the manufacturer's published specifications, using mounting templates provided by the manufacturer. The sensors shall be installed with a minimum of 10 pipe diameters of unobstructed straight upstream approach, and a minimum of 3 pipe diameters of unobstructed straight downstream pipe.

C. Installation shall be in strict accordance with the manufacturer's printed instructions.

D. Field welding or boring of piping and mounting of transducers shall be done only by highly skilled technicians certified in this area of expertise and recommended by the Manufacturer.

END OF SECTION 17240

SECTION 17400
PROCESS INSTRUMENTATION AND CONTROL

PART 1 -- GENERAL

1.1 THE REQUIREMENT

A. This section sets forth the general specification and requirements for the instrumentation work for the construction of the Project.

B. A single Prime Contractor, through the use of a qualified Instrumentation and Control System Subcontractor, shall furnish, install, and place into service the operating process instrumentation, all the control systems, and all the appurtenant work, being provided under this section of these Specifications and the integration of the Control and Instrumentation system and control devices provided under this project all in accordance with the requirements of the Contract Documents. The prime CONTRACTOR may act as an instrumentation and Control System Subcontractor provided the prime CONTRACTOR has been qualified to do the work as required in paragraph 1.1 C herein for Instrumentation Subcontractors.

1. Furnish and install complete instrumentation systems as indicated on the Contract Drawings and as specified herein. Complete all required engineering work such as installation details, As-built drawings, Shop submittals, test procedures, training syllabuses and materials, and similar work described in this Specification, to produce a complete, fully documented and properly operating process instrumentation and control system. Other additional drawings and text records to complete this work shall be provided.
2. The Instrumentation and Control System Subcontractor shall assume full responsibility for integration and signal compatibility of the control and instrumentation systems with existing devices and devices provided under other specification sections and the City SCADA control system.
3. As a minimum, the Instrumentation and Control System Subcontractor under the direction of the CONTRACTOR shall provide:

    a. Implementation of the control and instrumentation system;

        1). Provide all engineering, labor and materials required to prepare analog hardware submittals; design, develop, electronically draft and submit loop drawings and control panel designs; prepare test plan, training plan, and spare parts submittals; procure hardware; fabricate panels; factory test panels; supervise the installation of all instrumentation and, control devices and panels. Perform and document all loop tests, system commissioning, and the performance of the Thirty (30) continuous day test for the entire control and instrumentation system.

        2). Provide all engineering, labor, and materials required to prepare Operations and Maintenance Manuals, conduct training classes, and to submit "as-built" or record drawings which reflect the installed state of the control and instrumentation system at the time of acceptance.

b. Integration of the control and instrumentation system with instrumentation and control devices being provided under other specification sections;

1). Provide all engineering, labor, and materials required to review vendor drawings and to design, develop, electronically draft and submit all requisite loop drawings and "As-Built" loop drawings associated with;

a). Equipment being provided under other divisions of these specifications.

b). Owner furnished or existing equipment.

2). Provide all engineering, documentation, labor, and materials required to resolve signal, power, or functional incompatibilities between the control and instrumentation system and interfacing devices.

3). Provide all engineering, labor, and materials required to:

a). Supervise and install all instrumentation and control panels (including City supplied equipment).

b). Verify compliance with the manufacturer's installation recommendations.

c). Conduct, document, supervise the performance, and documentation of testing.

c. The design, development, drafting and submission of all required loop drawings and as-built loop drawings associated with; (a) equipment provided under Division 17; (b) equipment provided under other divisions of these specifications; and (c) CITY furnished equipment. It is the intent of these specifications that all instrumentation loops associated with this project shall be drafted and documented in a CITY approved format as Loop Drawings and shall be submitted for CITY review and approval. All loop drawings shall be developed in an electronic format. The As-Built (final version) shall be submitted both in hard copy and electronic format.

d. All instruments shown on the loop drawings shall be itemized in an instrumentation summary generated by the Instrumentation and Control System Subcontractor. The instrument summary shall be on an electronic Excel and hardcopy format and shall list all of the key attributes of each instrument provided under this contract. As a minimum, attributes shall include:

1). Tag Number

2). Reference Drawing No.

3). Loop Drawing Number

4). Service

5). Area Location

6). Associated LCP, PLC PCM, or RTU

7). Calibration Range

8). Manufacturer

9). Model Number

10). Manufacturer serial number.

4. The Instrumentation and Control System Subcontractor shall obtain from the Prime CONTRACTOR the required information on those primary elements, valve actuators, vendor packages, and other control equipment or devices which are furnished by others but are required to be interfaced under this Division.

5. The Instrumentation and Control System Subcontractor shall coordinate his work to ensure that:

   a. All components provided under this Section are properly installed.

   b. The proper type, size, and number of control wires and data communication cables with their conduits are provided, installed, and tested.

   c. The proper type, size, and number of flexible pneumatic tubes with their conduits are provided and installed.

   d. Proper electric power circuits are provided for all instrumentation components and systems.

C. Instrumentation and Control System Subcontractor Experience Requirements: Prime Contractor shall at bid, submit to the CITY documentation listed below for his proposed Instrumentation and Control System Subcontractor:

1. Documentation describing at least two projects of similar size and complexity that have been successfully completed in which the Instrumentation and Control System Subcontractor performed system engineering, system fabrication and installation, documentation (including schematic, wiring and panel assembly drawings), field testing, calibration and start-up, operator instruction and maintenance training. In addition, list the following information for each project:

   a. Name of plant, owner, contact name and telephone number.

   b. Name of manufacturer for the instrumentation furnished.

   c. Type of instruments/equipment furnished

   d. Approximate number of input functions to the system, analog and digital.

   e. Approximate number of output functions from the system, analog and digital.

   f. Contracted cost of the instrumentation and Control System including change orders

   g. Date of completion or acceptance.

2. Identify individual responsible for office engineering and management, and the individual who will be responsible for field testing, calibration, start-up and operator training for this project. Include references of recent projects for these persons.

3. Documentation showing that the Instrumentation Subcontractor has been in the instrumentation and control systems business for minimum of four years.

D. Instrumentation and Control System Subcontractors not having the experience requirements and/or failing to submit the above listed documentation will be considered not-qualified for the project. The Contractor shall be responsible for substituting the bid listed Instrumentation Subcontractor with one

having the required experience and documentation at no extra cost of the City.

E. The PRIME CONTRACTOR shall assign the Instrumentation and Control System Subcontractor full responsibility for the complete operation of all new and modified instrumentation and control systems. The CONTRACTOR shall have said Subcontractor perform all engineering and coordination necessary in order to select, furnish, install, connect, calibrate, and place into operation all sensors, instruments, alarm equipment, control boards, panels, computers, process control modules, human-machine interfaces, accessories and all other equipment as specified herein. Furthermore, said Subcontractor must calibrate and demonstrate the operability of said systems in accordance with the Contract Documents.

F. The Instrumentation and Control System Subcontractor shall provide all engineering work and installation drawings to produce a complete instrumentation system. If it is necessary to produce additional drawings (due to subcontractor selecting equivalent equipment/instruments in leu of the ones shown on Contract Documents); to complete and document the work, such drawings shall be made at no additional cost to the CITY.

G. The Instrumentation and Control System Subcontractor shall examine all drawings, specifications, and details to become fully acquainted with the method of construction and to evaluate the quantity of Work to be performed. In case of conflicting or incomplete technical information, the Instrumentation and Control System Subcontractor shall include costs in its lump sum bid to coordinate the resolution of these conflicts and deficiencies with the ENGINEER at no additional cost to the CITY. Resolution of these discrepancies shall be obtained from the ENGINEER by the Instrumentation and Control System Subcontractor prior to purchasing of the instrument item.

H. Instrumentation and Control System Subcontractor shall note that the equipment loop, logic and elementary diagrams are based on non-certified vendor information and indicate minimum scope of supply from the Equipment Manufacturer. The Instrumentation and Control System Subcontractor shall include all costs in this bid to add additional instruments, wiring, computer inputs/outputs, controls, conduit, interlocks, electrical hardware, drawing revisions and all related documents and drawings, into the design based on Equipment Manufacturer's final certified prints. Such changes to instrumentation and electrical work shall be incorporated into the scope of work at no additional cost to the CITY.

I. Provide all instrumentation and all related wiring as specified on any one of the following instrument or electrical documents: instrument location drawings, Instrument Index, I/O Tabulation, Loop Descriptions, one-line electrical diagrams, or as indicated on any other Contract Document. Indication of required instrumentation work on any one of these Contract Documents shall require supply and installation of the instrument and related wiring, supports and appurtenances at no additional cost to the CITY.

J. Provide all equipment, all materials, all labor supervision, all consumables and all scaffolding for the installation of the instrumentation systems, including the following:

1. Provide field engineering design, as required, for mounting and supporting details of all field mounted components.

2. Provide coordination, as required, between manufacturer's drawings and Contract Installation Drawings.

3. Provide any additional schematics and any additional interconnection diagrams that may be required to facilitate erection or completion of equipment installation.

4. Assemble and make interconnection of instruments disconnected for shipping purposes.

5. Remove all temporary supports, all bracing or other foreign objects that were installed in instrument control panels or other equipment to prevent damage during shipping, storage and/or erection.

6. Coordinate work with that of the different trades and disciplines so that interference between conduit, piping, equipment, architectural and structural work shall be avoided.

7. Install and support all instruments and all instrument piping not installed and supported by others. The Instrumentation and Control System Subcontractor shall furnish all hardware and all stands required to mount these items and provide modifications, as required, to meet actual site conditions.

8. All piping shall be field measured prior to fabrication/or erection. Any significant discrepancies between drawings and field measurements shall be reported to the ENGINEER. The CITY shall not be responsible for any costs for rework because of failure to field measure prior to initiating fabrication.

9. Capillary tubing shall be adequately supported and protected. All extra tubing shall be carefully coiled, tied, and protected at the instrument location.

10. Provide temporary nitrogen purging to all panels (LCP, PCM, CSI, City supplied equipment) on site before being permanently installed only where the environment requires purge.

K. Prime Contractor shall be responsible for coordination with the City SCADA system for interface, communication, loop tests, and performance of complete control system.

1.2 RELATED WORK SPECIFIED ELSEWHERE

A. The WORK of the following Sections applies to the WORK of this Section. Other Sections of the Specifications, not referenced below, shall also apply to the extent required for proper performance of this WORK.

1. Section 09800 Protective Coating

2. Section 11000 Equipment General Provisions

3. Section 15320 Electrical Requirements for Mechanical Equipment

4. Section 16020 Municipal Facilities General Electrical Requirements

5. Section 16100 Basic Materials and Methods

6. Section 17450 PLC, SCADA, Network and Communications

B. The monitoring and control system configurations indicated are diagrammatic. The locations of equipment are approximate unless dimensioned. The exact locations and routing of wiring and cables shall be governed by structural conditions and physical interferences and by the location of electrical terminations on equipment.

C. The Prime CONTRACTOR shall arrange a meeting with the engineer, and CITY at the site in order to identify equipment location prior to roughing in. The CITY reserves the right to require minor changes in location of equipment prior to roughing in without incurring any additional costs or charges.

D. Determine exact routing and final terminations for all signal, power, data communication wiring/cable. A site visit and review of the existing system control panel is mandatory.

1.3 REFERENCE SPECIFICATIONS, CODES AND STANDARDS

A. Comply with the reference specifications of the GENERAL REQUIREMENTS

B. Prime Contractor shall procure all necessary permits, pay all associated costs, and shall furnish the ENGINEER with evidence of permit procurement prior to the commencement of the Work.

C. The equipment, materials and installation shall comply with the applicable standards, specifications and regulations of the following:

1. Instrument Society of America/International Society for Automation (ISA).
2. American Petroleum Institute (API).
3. National Electrical Manufacturers Association (NEMA).
4. Occupational Safety and Health Administration (OSHA).
5. American National Standards Institute (ANSI).
6. Military Standards (MIL Standards).
7. National Fire Protection Association (NFPA).
8. Scientific Apparatus Makers Association (SAMA).
9. Institute of Electrical and Electronic Engineers (IEEE).
10. National Electrical Code (NEC).
11. Insulated Cable Engineers Association (ICEA).
12. Local Power and Telephone Companies.
13. Local Authorities having jurisdiction over the work.
14. City of Los Angeles Electrical Code (CLAEC)
15. Underwriters Laboratories (UL).
16. City of Los Angeles, Department of Public Works, Bureau of Sanitation, “Operator Interface Graphic Display Standards”.
17. National Institute of Standards and Technology (NIST).
18. Society of Automotive Engineers (S.A.E).
19. American Society for Testing and Materials (ASTM).
20. Steel Structures Painting Council (SSPC).
21. “GREEN BOOK” Standard Specifications for Public Works Construction – latest Edition Adopted by City of Los Angeles.
22. Federal Information Processing Standard (FIPS).

D. All electrical equipment, components, devices, shall be Underwriters Laboratories APPROVED (have the UL label and/or be listed with reexamination in UL Publication Reference No.1). Alternatively, the equipment shall be APPROVED by a testing laboratory recognized by the City of Los Angeles and shall conform to all applicable requirements of the City of Los Angeles Department of Building and Safety.

1. Review and approval by the CITY Department of Building and Safety Electrical Test Laboratory (ETL) requires submittal of the equipment, components or devices and any current testing documents to the ETL. Where major equipment is submitted to ETL for approval, the Prime CONTRACTOR shall submit to the ENGINEER a detailed schedule showing the approval process and approximate equipment delivery dates to ensure that there will be no effect on the project completion date. No electrical equipment will be approved for delivery to the jobsite without ETL approval. All costs incurred in the approval process shall be included in the Bid.

2. Products being specified in the Contract Specifications does not express or imply approval by UL, the Department of Building and Safety or any other testing laboratory. Shop drawing approval by the ENGINEER shall not supersede the requirements of the Department of Building and Safety for listed equipment.

1.4 SUBMITTALS/SHOP DRAWINGS

A. Submittals shall be made in accordance with Section 01330**,** Shop Drawings / Submittals of the GENERAL REQUIREMENTS.

B. Shop Drawings: Coordinate the work required in these Specifications so that a complete instrumentation and control system for the facility will be provided and will be supported by accurate shop and as built drawings. The Instrumentation Subcontractor shall prepare and submit complete and organized shop drawings, as specified herein. Interface between instruments, motor starter, control valves, variable speed drives, flow meters, existing instruments, chemical feeders, instrumentation symbols, and abbreviations, piping and instrumentation, local control panels, new instruments, and equipment related to instrumentation and control shall be included in the shop drawing submittal.

C. A table of Contents shall be provided at the beginning of each binder or volume of the Submittal/Manual and shall list entries down to instrument and device level indexed by name, tag number and sequential page number. All pages of each binder/volume shall be sequentially numbered for ease of reference and review. During the period of preparation of this submittal, the Prime CONTRACTOR shall authorize direct, informal liaison between the Instrumentation Subcontractor and the ENGINEER for exchange of technical information. As a result of this informal liaison, oral communication shall not alter the scope of work or cause increase or decrease in the Contract price. During this informal exchange, no oral statement by the ENGINEER shall be construed to give formal approval of any component or method, nor shall any statement be construed to grant formal exception to or variation from these Contract Documents.

D. The Instrumentation and Control System Subcontractor shall submit an analog/digital hardware submittal that utilizes detailed shop drawings and data prepared and organized for easy reference. Section Tabs, Sequential page numbering and Table of Contents / Index Tables shall be used throughout. All shop drawings shall include the letter head and/or title block of the Prime CONTRACTOR responsible for this project. The title block shall include, as a minimum, the Prime CONTRACTOR'S registered business name and address, project name, drawing name, revision level, and personnel responsible for the content of the drawing. The quantity of submittal sets required shall be as specified in Section 01330 of the general requirements. The analog/digital hardware submittal shall be submitted as a complete bound package at one time within ninety (90) calendar days of receipt of Notice to Proceed, and shall include:

1. Drawings showing definitive diagrams for every instrumentation loop and system. These diagrams shall show and identify each component of each loop or system using legend and symbols from

ANSI/ISA S5.4, extending the format as shown on Instrumentation Drawings and as defined by the most recent revision in ISA. Each System or Loop diagram shall be drawn on a separate drawing sheet with no more than four loops per drawing. Develop, submit, update and maintain in an as-built condition the loop drawings for all loops in this project including vendor supplied packages, equipment supplied under Division 17 and CITY supplied packages. The loop drawings shall also show all software modules and linkages. In addition to the expanded ISA S5.4 requirements the Loop Diagrams shall also contain the following details:

a. ISA tag number

b. Functional name of each Loop

c. Tag number of the loop

d. Reference name, drawing, and Loop diagram numbers for any signal continuing off loop diagram sheet.

e. MCC Panel, circuit, and breaker numbers for all power feeds to the loops and instrumentation (i.e., 24VDC and 120VAC).

f. Designation and if appropriate terminal assignments associated with every manhole, pull box, junction box, conduit and panel the loop circuits pass through.

g. Vendor panel, instrument panel, conduit, junction boxes, equipment and DCS terminations, termination identification wire numbers and colors, power circuits, and ground identifications.

h. Calibration range

i. Manufacturer

j. Model Number

2. Fully executed ISA-S20 data sheets for each component, together with a technical product brochure or bulletin. The technical product brochures must be complete enough to verify conformance to all Contract Document requirements. The data sheets, as a minimum, shall show:

a. Component functional description used herein and on the Drawings.

b. Manufacturer's model number or other product designation.

c. Project tag number used herein and on the Drawings.

d. Project system or loop of which the component is a part.

e. Project location or assembly at which the component is to be installed.

f. Input and output characteristics.

g. Scale range and units and multiplier.

h. Requirements for electric supply.

i. Requirements for air supply.

j. Materials of component parts to be in contact with, or otherwise exposed to, process media;

k. Optional/Special requirements or features.

3. A complete index shall appear in the front of each bound submittal volume. A separate technical brochure or bulletin shall be included with each instrument data sheet. The data sheets shall be indexed in the submittal by systems or loops, as a separate group for each system or loop. If, within a single system or loop, a single instrument is employed more than once, one data sheet with one brochure or bulletin may cover all identical uses of that instrument in that system. Each brochure or bulletin shall include a list of tag numbers for which it applies. System groups shall be separated by labeled tags.

4. Drawings showing both schematic and wiring diagrams for control circuits: Complete details on the circuit interrelationship of all devices within and outside each Control Board shall first be submitted using schematic control diagrams. Subsequent to return of this first submittal by the ENGINEER, piping and wiring diagrams shall be prepared and submitted for review by the ENGINEER; the diagrams shall consist of component layout drawings to scale, showing numbered terminals on components together with the unique number of the wire to be connected to each terminal. Piping and wiring diagrams shall show terminal assignments from all primary measurement devices, such as flow meters, and to all final control devices, such as pumps, valves, chemical feeders and vendor panels. Should an error be found in a shop drawing at any time in the project, it shall be corrected including any field changes found and an "As Built" drawing shall be prepared and submitted for review and approval by the ENGINEER prior to the acceptance of the project. Furnish all necessary equipment suppliers' shop drawings to facilitate inclusion of this information. Respond to all comments on the shop drawing re-submittals made by the ENGINEER either by noted corrections or stating why it was not revised. Any resubmittals received by the ENGINEER which do not contain responses to the ENGINEER's previous comments shall be returned marked "Rejected." No further review by the ENGINEER shall be performed until responses are made to all comments.

5. Assembly and construction drawings for each alarm annunciator, local indicating panel and for other special enclosed assemblies for field installation: These drawings shall include dimensions, identification of all components, surface preparation and finish data, nameplates, and the like. These drawings also shall include enough other details, including prototype photographs, to define exactly the style and overall appearance of the assembly; a finish treatment sample shall be included.

6. Installation, mounting, and anchoring details for all components and assemblies to be field-mounted, including conduit connection or entry details shall be shown in the submittal drawings.

7. A Bill of Material shall be submitted for each field mounted device or assembly as well as cabinet assemblies and sub-assemblies. Bills of Material shall include all items within an enclosure, and shall be complete and detailed. An incomplete submittal shall be rejected, and no further evaluation performed until a completed and detailed bill is submitted.

E. Organization and Binding of Shop Drawings: The organization of the initial shop drawings submittal shall be compatible to eventual inclusion with the technical manuals submittal and shall include final alterations reflecting "As Built" conditions. Accordingly, the final approved multiple-copy shop drawing submittal shall be separately bound in 3-ring binders.

F. Technical Manuals: In addition to updated shop drawing information to reflect actual existing conditions, each set of technical manuals shall include installation, connection, operating, troubleshooting, maintenance and overhaul instructions in complete detail. This shall provide the CITY with comprehensive information on all systems and components to enable operation, service, maintenance and repair. Exploded or other detailed views of all instruments, assemblies and accessory components shall be included together with complete parts lists and ordering instructions. For additional requirement see the GENERAL REQUIREMENTS.

G. Control Panel Engineering Submittal: The Instrumentation and Control System Subcontractor shall submit a control panel engineering submittal (CPES) for each control panel being provided under this Specification Including intrinsically safe and Fiber Optic patch panels. The CPES shall completely define and document the construction, finish, layout, power and UPS circuits, signal and safety grounding circuits, fuses, circuit breakers, signal circuits, switches, surge protectors, internally mounted instrumentation components, faceplate mounted instrumentation components, internal panel arrangements, and external panel arrangements. All panel drawings shall, as a minimum, be ANSI "B" size (11” X 17”) with all data sheets and manufacturer specification sheets being ANSI "A" size (81/2” X 11”). The submittal shall be in conformance with latest, NEMA Standard and shall be submitted as a singular complete bound volume or multi-volume package within 120 calendar days after notice to Proceed and shall have the following contents:

1. A complete index shall appear in the front of each bound volume. All drawings and data sheets associated with a panel shall be grouped together with the panels being indexed by systems or process areas. All panel tagging and nameplate nomenclature shall be consistent with the requirements of the Contract Documents.

2. Construction drawings drawn to a 1-1/2-inch = 1-foot scale which define and quantify the type and gage of fabrication steel to be used for panel fabrication, the ASTM grade to be used for structural shapes and straps, panel door locks and hinge mechanisms, type of bolts and bolt locations for section joining and anchoring, details on the utilization of "UNISTRUT" and proposed locations, stiffener materials and locations, electrical terminal box and outlet locations, electrical access locations, print pocket locations, writing board locations and lifting lug material and locations.

3. Physical arrangement drawings drawn to 1-1/2-inch = 1 foot scale which define and quantify the physical groupings comprising control panel sections, auxiliary panels, subpanels, and racks. Cutout locations with nameplate identifications shall be provided.

4. Schematic/Elementary diagrams shall depict all control devices and circuits and their functions.

5. Wiring/Connection diagrams shall locate and identify electrical devices, terminals, installed Components/Instruments and interconnecting wiring. These diagrams shall show interconnecting wiring by lines, designate terminal assignments, and show the physical location of all electrical and control devices.

6. Interconnection diagrams shall locate and identify all external connections between the control panel/control panel devices and associated equipment. These diagrams shall show interconnecting wiring by lines, designate terminal assignments, and show the physical location of all panel ingress and egress points.

7. Control sequence diagrams shall be submitted to portray the contact positions or connections required to be made for each successive step of the control action.

8. Manufacturer specification sheets which verify the products conformance to the requirements of the Contract Documents.

9. A bill of material which enumerates all devices associated with the control panel.

H. Test Procedure Submittal:

1. The Instrumentation and Control System Subcontractor shall submit the Procedures proposed to be followed during the tests required under this project. Procedures shall include statement indicating test objectives, test descriptions, forms, and checklists to be used to control and document the required tests.

2. Prior to the preparation of the detailed test procedures, submit outlines of the specific proposed tests. Submittals shall include examples of the proposed forms and checklists. Once the Preliminary Test Procedure Submittals have been reviewed by the ENGINEER and returned stamped either "no exceptions noted" or "make corrections noted", the Instrumentation Subcontractor shall submit the proposed detailed test procedures, forms, and checklists.

3. Once the detailed Test Procedures Submittals have been reviewed by the ENGINEER and returned stamped either "no exceptions noted" or "make corrections noted", the tests shall be scheduled in coordination with ENGINEER.

4. Upon completion of each required test, a copy of the signed-off test procedures shall be submitted as test documentation. These requirements shall apply to the factory testing of all panels, and all on-site tests.

I. The Instrument Subcontractor shall submit the integrated hardware/communication loop testing results from field to the DCS at the end of project.

J. The organization of the initial shop drawing submittal required above shall be compatible to eventual inclusion with the Technical Manuals submittal and shall include final alterations reflecting "record" conditions. Submittals not organized as described above and incomplete submittals for a given Loop will not be accepted. Accordingly, the initial multiple-copy shop drawing submittal shall be separately bound in standard size, 3-ring, loose-leaf, vinyl plastic, hard cover binders suitable for bookshelf storage. Binder ring size shall not exceed 2-inches.

K. Control Valve Submittal: Submit the following data within 90 days after Notice to Proceed:

1. Type, Dimensional Outline, Mounting Details, body material, packing gland material, Trim material & shaft material.

2. Diagrams (wiring, schematic, logic)

3. Certified Performance Data

4. Calculations for Valve Sizing

5. Welding procedures, Qualification Test, & Non-destructive testing procedures.

6. Cross Sections with Parts List

7. Inspection and Test Plan Prior to acceptance, the control valve supplier shall submit function test verification certifications and hydrostatic leak test certifications.

L. Instrument Installation Detail and Submittal: Submit the following data within 180 days after Notice to Proceed:

1. Detail and Instrument Installation drawings

2. Bill of Materials.

1.5 QUALITY ASSURANCE

A. Accuracy: The accuracy of each instrumentation system or loop shall be determined as a probable maximum error; this shall be the square-root of the sum of the squares of certified "accuracies" of the

designated components in each system, expressed as a percentage of the actual span or value of the measured variable. Each individual instrument shall have a minimum accuracy of ±0.5 percent of full scale and a minimum repeatability of ±0.25 percent of full scale unless otherwise specified. Instruments which do not conform to or improve upon these criteria are not acceptable.

B. Where materials and equipment are specified to conform to the standards of the Underwriter's Laboratories, the label of, or listing with reexamination in latest UL Publication, shall be accepted as enough evidence that the items conform to Underwriter's Laboratories requirements. In lieu of such label, listing of the materials or equipment by a recognized approved testing laboratory as stated in the CITY of Los Angeles Electrical Code will be acceptable as interpreted by the CITY's Department of Building and Safety.

1.6 PRESUBMITTAL CONFERENCE

A. Arrange and conduct a Pre-submittal Conference on the instrumentation and control system work within 15 days after the notice to proceed. The Instrumentation Subcontractor shall allow one eight-hour working day for the conference. The purpose of the Pre-submittal Conference shall be to informally review with the CONTROL SYSTEM ENGINEER and approve the way the Instrumentation and Control System Subcontractor should respond to the Contract requirements before any submittals are prepared. The Instrumentation and Control System Subcontractor shall prepare the following items for presentation at the Pre-submittal Conference:

1. A list of equipment and materials required for the control system and the manufacturer and model number which the Instrumentation and Control System Subcontractor proposes to use for each item.

2. A list of proposed exceptions to the Specifications and Drawings, along with a brief explanation of each. Approval shall be subject to formal submittal and review by the ENGINEER.

3. An exact one-to-one sample of each type of submittal specified herein.

4. A bar chart type schedule for all system related activities from the Pre-submittal Conference through startup and training, plant acceptance and project closeout. The schedule shall include the dates relative to submittals, design, fabrication, programming, factory testing, deliveries, installation, field testing, and training. The schedule shall be subdivided to show activities relative to each major item or group of items.

5. Provide **3** copies on paper, and 1 electronic copy compatible with City Standard software of Pre-submittal Conference data to the ENGINEER.

B. Keep formal meeting minutes. Prior to adjournment of the conference, all parties must concur in writing with the accuracy of the minutes.

C. Preparation of shop drawings shall not commence until after the Pre-submittal Conference. Submittals required for that conference are exempted.

1.7 GUARANTEE

A. The Instrumentation and Control System Subcontractor shall guarantee all equipment and installation, as specified herein, for a period of one year following the date of completion of the work. To fulfill this obligation, the Instrumentation Subcontractor shall utilize technical service personnel designated by the Instrumentation Subcontractor whom he originally assigned project responsibility for instrumentation. Services of a non-critical nature shall be performed within 5 calendar days after notification by the CITY, and critical services as (determined by the ENGINEER) within 24 hours after

notification.

1. Equipment, software, and materials which do not achieve design requirements after installation shall be replaced or modified to attain compliance at no additional cost to the CITY. Following replacement or modification, retest the system and perform any additional procedures needed to return/restore complete system to satisfactory operation at no additional cost to the CITY and obtain design compliance approval from the ENGINEER.

2. All parts, materials (excluding consumables), labor, travel, subsistence, or other expenses incurred in providing all services and service visits during the one-year warranty period shall be included in the Bid.

1.8 MANUFACTURER'S REPRESENTATIVE SERVICES

A. Provide jobsite visits and services of a manufacturer's technical field representative for the following items of equipment for calibration, testing and start-up:

1. Flow meters

2. Process Analyzers

3. Programmable controller, HMI

4. Valve actuators

5. Any process sensing devices and indicating devices

B. Provide the following services of qualified technical representatives (see Installation, Calibration, Testing, Pre-commissioning, Start-up, and Instruction herein):

1. Install and connect all instruments, all elements, and all components of every system, including connection of instrument signals to primary measurement elements and to final control elements such as pumps, valves, and chemical feeders.

2. Make all necessary adjustments, calibrations hardware/software interfacing and tests, as called out in the specifications, and drawings.

3. Instruct Plant operating and maintenance personnel on the instrumentation. This time shall be in addition to whatever time is required for other facets of work at the site and shall be during the CITY's normal working days and hours.

1.9 SHOP INSPECTION

A. Shop Inspection and Performance Testing: Arrange for shop inspection and performance testing of the equipment according to Division 11 specifications.

1. All equipment shall be subject to shop inspection in accordance with the GENERAL REQUIREMENTS.

2. The INSPECTOR and CITY Control Systems Engineer of Record shall inspect and participate in the shop/factory testing of all panels prior to shipment.

3. For all equipment, obtain and submit the following to the ENGINEER at least 6 weeks before test date for approval:

a. The Manufacturer's factory test procedure, and report forms, and testing schedule prior to equipment testing.
b. Shop testing of the equipment shall be defined as operation of all panels with simulated input/output. The purpose of the shop test shall be to test mechanical, electrical/control, and instrumentation systems. Verify compliance with the Contract Specifications and drawings and intended design function and make any necessary adjustments or repairs prior to shipment. Simulation of faults and trips from the control panel shall be included. If all panels are to be stored at the Prime Contractor's facility, the shop test shall be successfully completed prior to storage. All panels shall not be shipped until they have been successfully shop tested.

B. Field Performance Test and Reports: All equipment shall be performance tested after installation at the field operating site according to Division 11 specifications.

1. Testing shall not start until all preliminary checks and calibrations have been completed, the installation has been certified ready for testing by the Manufacturer's representative, and the test forms and procedures have been approved by the ENGINEER.

2. All test information shall be recorded on forms provided by the CITY or approved by the ENGINEER. If forms are not available from the CITY, prepare test forms and submit for approval prior to the scheduled start of the test.

3. Submit the test procedure for approval prior to the scheduled start of the test.

4. Prepare a field performance test report, including all raw data, and submit the report within 14 calendar days after approved completion of the equipment field test.

1.10 PERSONNEL TRAINING; Refer to General Requirements.

PART 2 -- PRODUCTS

2.1 GENERAL

A. Provide all instrumentation and related wiring as specified on any of the following instrumentations and electrical documents:

1. Instrument Location Drawings, Instrument Index, Instrument Data Sheets, Loop/Logic Diagrams, I/O Tabulation, Loop Description, One-Line Electrical Diagrams, and/or as indicated on any other Contract Document.

2. Indication of required instrumentation work on any of these Contract Documents shall require supply and installation of the instrument and related wiring, supports, accessories and appurtenances, at no additional cost to the CITY.

3. Assume full responsibility to perform all engineering to select, furnish, install, program, test, calibrate, and place into operation all instrumentation, control panels, programmable controllers, and hardware/software interfacing with existing Plant DCS, for a complete and functional system.

B. The monitoring and control system configurations indicated are diagrammatic. The locations of equipment are approximate unless dimensioned. The exact locations and routing of wiring and cables shall be governed by structural conditions and physical interferences and by the location of electrical terminations on equipment. All equipment shall be located and installed so that it will be readily

accessible for operation and maintenance. The CITY reserves the right to require minor changes in location/orientation of equipment prior to roughing in without incurring any additional costs or charges. The Instrumentation Subcontractor shall review the existing site conditions and examine all shop drawings for the various items of equipment in order to determine terminations for all wiring and cables. All deviations from the Drawings or Specifications must be approved in writing by the ENGINEER.

C. All meters, instruments, and other components shall be new and un-used, and the most recent field-proven models marketed by their manufacturers at the time of submittal of the shop drawings unless otherwise specified to match existing equipment.

D. All panel mounted instruments shall have matching style and general appearance. Instruments performing similar functions shall be of the same type, model, or class, and shall be of one manufacturer.

E. All instrumentation shall be rated for operation in the ambient conditions at the equipment installation locations. 316 Stainless Steel NEMA 4X rated enclosures suitable for the environment shall be furnished in all general purpose areas.

F. All instrumentation in hazardous areas shall be approved for use in the particular hazardous classification in which it is to be installed, and shall at a minimum be NEMA 4X.

G. Analog measurements and control signals shall be electrical as indicated herein and shall vary in direct linear proportion to the measured variable, except as otherwise noted. Electrical signals outside control board(s) shall be 4 to 20 milliamperes dc except as noted. Signals within enclosures may be 1-5 volts dc. Dropping resistors shall be installed at all field side terminations in the control panels to ensure loop integrity.

H. All control panels shall be provided with redundant power supplies which are configured in a fault-tolerant manner to prevent:

1. Interruption of service upon failure.

2. Interruption of service necessitated by the replacement of a power supply.

3. All power supplies shall have an excess rated capacity of forty (40) percent.

I. Each signal and control loop shall be individually fused.

J. Equipment or methods requiring redesign of any project details are not acceptable without prior approval of the ENGINEER. Any changes inherent to a proposed alternative shall be at no additional cost to the CITY. The required approval shall be obtained in writing by the Instrumentation and Control System Subcontractor prior to submittal of shop drawings and data. Any proposal for approval of alternative equipment or methods shall include evidence of improved performance, operational advantage and maintenance enhancement over the equipment or method specified or shall include evidence that a specified component is not available. Otherwise, alternative equipment (other than direct, equivalent substitutions) and alternative methods shall not be proposed.

K. All field mounted instruments, control equipment/enclosures mounted outside of protective structures shall be equipped with suitable electrical surge protective/arresting devices to protect the equipment from damage due to electrical transients induced in the interconnecting lines from lightning discharges or nearby electrical devices. Protective devices used on 120V ac inputs to field mounted equipment shall be secondary surge protectors conforming to the requirements of latest IEEE Standard (latest ANSI C62.1), and UL 1449 latest edition.

L. Provide all equipment, material, labor supervision, consumables, scaffolding, for the installation of the instrumentation systems in accordance with the Drawings and Specifications listed herein.

1. Provide field engineering design, as required, for mounting and supporting details of all field mounted components.

2. Provide coordination, as required, between manufacturer's drawings and contract installation drawings.

3. Provide any additional schematic and interconnection diagrams that may be required to facilitate erection or to complete the installation of equipment.

4. Assemble and make interconnection of instruments disconnected for shipping purposes.

5. Remove all temporary supports, bracing or other foreign objects that were installed in instruments, control panels or other equipment to prevent damage during shipping, storage and/or erection.

6. Contractor shall coordinate his work with that of the different trades so that interference between conduit, piping, equipment, architectural and structural work shall be avoided.

7. Install and support all instruments and instrument piping related to this project not installed and supported by others. Furnish all hardware and stands required to mount these items and modify to meet actual site conditions.

8. All piping shall be field measured prior to fabrication/or erection. Any significant discrepancies between drawings and field measurements shall be reported to the ENGINEER. The CITY shall not be responsible for any costs for rework caused by failure to field measure prior to initiating fabrication.

9. Adequately support and protect capillary tubing. All extra tubing shall be carefully coiled, tied, and protected at the instrument.

M. The equipment loop, logic and elementary diagrams are based on non-certified vendor information and indicate minimum scope of supply from the equipment manufacturer. Include additional costs in the bid to add additional instruments, wiring, computer inputs/outputs, controls, conduit, interlocks, electrical hardware and similar items, into the design based on equipment manufacturer's final certified vendor prints. Revise or produce new loop, logic, and elementary diagrams to meet the equipment manufacturer's wiring requirements. Such changes to instrumentation and electrical work shall be incorporated into the scope of work at no additional cost to the CITY.

N. Provide the following:

1. Furnish and install all pneumatic piping/tubing and make connections at control panels, instruments and control valves. All tubing/pipe fittings and instrument valves shall be 316 stainless steel(SS).

2. Provide field engineering and design to install instrument air supply taps and piping/tubing as herein specified.

3. Install adequate support for pneumatic piping/tubing runs in accordance with Drawings and Specifications.

4. Check all air supply branch headers by blowing with clean compressed air before placing in service and check for tightness/leaks.

5. Clean all transmission and control piping/tubing by blowing with dried and filtered air prior to connecting to instrument components.

6. Leak test all pneumatic control circuits and enclosures in accordance with ISA Recommended Practice RP-7.1.

7. Set manufacturer's recommended supply pressure at all instrument air regulators.

8. Installation, wiring, termination, and installation tests for all analog instruments local control panels, Control System Interfaces (CSIs), panels and equipment furnished by the CITY.

2.2 SPARE PARTS

A. See the provisions of Section 01781, Spare Parts, of the GENERAL REQUIREMENTS unless otherwise noted

2.3 CONTROL PANELS

A. General

1. The Instrumentation and Control System Subcontractor shall furnish, supply and install all control panels and enclosures for this project.

2. All panels and enclosures shall be rated NEMA 4X. For hazardous locations they shall be rated NEMA 7 or 9.

3. Dimensions shall be in accordance with manufacturer's requirements. Elevations and horizontal spacing shall be subject to ENGINEER's approval.

3. Furnish, supply and install all control panels for this project. This also covers requirements for local control panels being supplied by the Equipment Manufacturer due to the corrosive environments at wastewater treatment plants, the control panels shall be provided with all required taps, fittings, rotameters, regulators, and when specified alarm interlocks to enable the implementation of an air purge system which is in conformance with ISA-S12.4 Type Z requirements.

4. This Specifications covers the requirements for the fabrication of instrument panel boards, mounting, finishing, piping and wiring of instrument equipment.

5. Front of panel layouts for all control panels shall be submitted to the ENGINEER for review and approval prior to start of fabrication. Refer to other requirements as outlined in Drawings section below.

6. All conduit entries shall utilize Myers hubs or equivalent and shall be made watertight at the point of entry into the cabinet with O-ring or gasket seals. In runs of PVC coated conduits, the hubs shall also be PVC coated in accordance with the conduit manufacturers requirements for fittings and accessories (i.e. Rob Roy Plasti-Bond 2 Red Hot PVC coated Rigid galvanized steel (PVC RGS) or equal.

7. Purge systems shall be provided as defined in the Specifications and Drawings.

B. Mounting of Instruments

1. The panel vendor shall provide cut-outs, and shall mount all instrument items shown or specified to be panel mounted, including any instruments specified to be furnished by other vendors but installed in panel.

2. The panel vendor shall also mount, behind the panels, other instrument accessory items as required and/or specified.

3. Enclosure for all the front panel mounted instruments shall be NEMA 4X rated. Instruments which are not rated NEMA 4X shall be covered with a windowed door to provide overall NEMA 4X rating.

4. Rear of panel mounted equipment shall be installed with due regard to accessibility, commissioning adjustments, servicing requirements and cover removal.

5. Spare space shall be kept clear of wiring, to give maximum space for future additions.

C. Piping Requirements

1. The panels shall be furnished with terminal connections near the top, rear of the panel for all tubing and piping which connect to instruments, valves, instrument air supply and other pressure leads to the panel. Terminal connections for tubing are to be bulkhead tube unions as described below. Those for pipe shall be threaded couplings, plugged for shipping purposes.

2. All tubing, pipe fittings and instrument valves shall be 316 stainless steel (SS).

3. Each terminal connection shall have an engraved metal or plastic plate with a terminal and instrument tag number.

D. Electrical Requirements for Control Panels

1. Furnish and install all the necessary conduit, wireways, switches, and electrical fittings with wire for all circuits to instruments and other panel electrical devices to assure a complete and acceptable installation.

2. Signal and low voltage wiring shall be run separately from power and 120-volt control wiring.

3. Conduit, wireways, junction boxes and fittings shall be installed for all signal/instrument wires. Conduit and wireway runs shall include those required between sensors, indicators, between the thermocouple wireway and junction boxes to instruments.

4. Each terminal connection shall have a plastic plate with a terminal and instrument tag number. All wiring shall be identified with permanent machine printed tubular wire markers.

5. Freestanding panels shall be provided with switched LED (9 WATT) back-of-panel lights with built-in diffuser to prevent bright spots and shadows. One light shall be provided for every 4-feet of panel width and shall be mounted inside and in the top of the back-of-panel area.

6. Freestanding panels shall be provided with a 15-amp, 120-volt, ground fault interrupted

(GFI) service outlet circuit within the back-of-panel area. The circuit shall be provided with three-wire, 120-volt, 15-ampere, duplex receptacles, one for every 4-feet of panel width (two minimum per panel) and spaced evenly along the back-of-panel area.

7. Panels shall be so sized as to adequately dissipate heat generated by equipment mounted in or on the panel.

8. Where panels are mounted outside or in unshaded areas or indoors where ambient temperatures can exceed 80°F or fall below 60°F, they shall be provided with thermostatically controlled heaters that will maintain their inside temperature above 60 °F. Thermostatically controlled refrigeration type air conditioning shall be provided where necessary to prevent overheating of the equipment enclosed.

9. For all control panels, provide heat-load calculations from the cabinet manufacturer for sizing heaters and air conditioners and for setting thermostats. In general, interior cabinet temperatures shall not exceed 80°F and shall not fall below 60°F unless otherwise recommended by the manufacturers of instrumentation and control equipment to be housed in the control panels.

E. Wiring Methods:

1. Wiring methods and materials for all panels shall be in accordance with the N.E.C. requirements for General Purpose (no open wiring), unless otherwise specified. Open wiring in closed cabinet type panels is allowed when specified in the material specifications. Unless otherwise specified by the material specification, design and installation of materials shall conform to the requirements of the latest edition of the following standards and codes as a minimum.

   a. The National Electrical Code

   b. City of Los Angeles Electrical Code

   c. All National Safety Codes

   d. American Petroleum Institute Standard RP-550

   e. Applicable Local Law and Regulations

2. Unless otherwise specified by the material specifications, all instruments, alarm systems and motor controls shall operate on 120 VAC, 60-Hertz and/or 24 VDC circuits.

3. At a location on the top or bottom of the panel, the panel fabricator shall furnish and install terminal block connections for the main power supply entry.

4. Power Supply switches for alarm units shall be three-pole type, arranged to open both the power and alarm circuits. Each annunciator shall be equipped with a separate switch.

5. Instruments located on the same panel section and serving the same process unit may be connected to a common branch circuit from the power supply. The numbers of circuits that depend on the circuit load are as noted in the contract documents. A 15-amp, two-pole circuit breaker shall be provided in each branch circuit. The circuit load shall not exceed 10 amps. Different panel sections or different process units shall not use common branch circuits.

6. When instruments do not come equipped with integral fuses, the panel fabricator shall

furnish and install fuses as required for the protection of individual instruments against fault currents. Fuses shall be mounted on the back of the panel, in DIN rail, fused terminal blocks with knife-blade disconnect switch, blown fuse indicator (LED) and screw terminals for connecting circuit wiring and identified by a service name tag.

7. Where alarm units are single unit types, one switch may be used to disconnect not more than six alarm units located on the same or adjacent panels.

F. Material:

1. Wire for all 120 volt circuits shall be No. 14 AWG stranded with lugs with Type THWN or THHN insulation. All terminals for external wiring connections shall be suitable for wire size Nos. 16 through 12 AWG.

2. Flexible conduit shall not be allowed except when specifically approved by the ENGINEER in writing.

3. Conduit fittings shall be cast metal fittings as specified in the electrical specifications Section 16110, with PVC coating.

4. Splicing of wires in conduits shall not be permitted. All wire terminations/connections shall have crimped wire lugs and shall be landed terminated on strips or blocks in pull boxes or panels.

5. For case grounding, panels shall be furnished with a 1/4" x 1" copper ground bus complete with solderless connectors for one No. 4 AWG bare stranded copper cable. The copper cable shall be furnished and installed and connected to a system ground loop/ground rod.

G. Electrical Locations:

1. When Contract Drawings or Specifications call for thermocouple actuated instruments, the thermocouple lead wire shall be installed, without junction or splicing. The panel vendor shall furnish dedicated empty conduit or wireway running from the instrument(s) to the top or bottom of the panel as called for in the material specifications or as otherwise required. Sizing of the conduit or wireway shall be in accordance with the capacity and number of instrument wires of the instrument(s).

2. Terminal boxes for incoming and outgoing signal leads shall be located at the top or bottom of the panel as specified in the material specification, or as otherwise required.

H. Panel Annunciation

1. Unless otherwise noted, the following color code and inscriptions shall be followed for the lenses of all indicating lights:

STATUS	INSCRIPTION(S)	COLOR
ON	ON	RED
OFF	OFF	GREEN
OPEN	OPEN	RED

CLOSED	CLOSED	GREEN
LOW	LOW	RED
FAIL	FAIL	RED
HIGH	HIGH	RED

2. Lettering shall be black on white and amber lenses. Lettering shall be white on red and green lenses.

3. Unless otherwise noted, the following color codes and inscriptions shall be followed for all pushbuttons:

LABEL / ABBREV.	INSCRIPTION(S)	COLOR
OO	ON / OFF	RED/GREEN
OC	OPEN / CLOSE	RED/GREEN
OCA	OPEN / CLOSE / AUTO	RED/GREEN/BLUE
OOA	ON / OFF / AUTO	RED / GREEN / BLUE

MA	MANUAL / AUTO	AMBER / BLUE
SS	START / STOP	RED / GREEN
E-STOP	EMERGENCY STOP	RED
RESET	RESET	BLACK

All other buttons shall be black. Lettering shall be white on black labels and nameplates.

I. Construction Methods:

1. Materials: Type 316 Stainless Steel shall be standard. Other types may be proposed in writing for use in specific service locations but must be reviewed and approved in writing by the ENGINEER.

   a. Panel section faces shall be #10 gauge minimum thickness, 316 SS for free standing panels and #14 gauge minimum thickness 316 SS for smaller panels. All materials shall be selected for levelness and smoothness.

   b. Relay rack high density type panels shall utilize standard relay racks with 14 gauge 316 SS frame and supports.

   c. Structural Shapes and Strap 316 SS: ASTM A-283.

2. Construction:

   a. All dimensions shall be in accordance with Vendors' requirements and as required in the Contract Documents.

   b. The elevations and horizontal spacing shall be subject to the ENGINEER's approval.

J. Fabrication Requirements:

1. End plates, top plates and top closure panels (to hung ceiling) shall be furnished when required by the material requisition. End plates, top plates and top closure panels shall be removable with countersunk bolts to match panels. Top closure panels shall be furnished in lengths which match the widths of standard panels, except that one top closure panel may extend across two 4-feet 6-inches wide or five 2-feet 0-inches wide standard panels. The vertical joints of these panels shall align with the vertical joints of the standard panels.

2. End closure or rear closure doors shall be provided when specified. Such doors shall be flush fitting and gasketed and be of the hinged lift-off type with lockable door handles. A common key shall be provided for all doors on one panel assembly. Where removable access panels are specified, they shall be furnished with dished handle fasteners. Screwdriver 1/4 turn or Dzus type fasteners are not acceptable. Handles of adequate size, strength and number (provide in pairs with 2 minimum), shall be furnished and installed on each lift-out section to give a lifting effort of not more than 25 pounds per handle based on the weight of the panel section. Handles shall have padded non-slip surfaces for secure gripping to avoid accidents, and shall be large enough size to enable use of workman's gloves and adequate strength that there will be no bending or deformation in use even when sustaining twice the maximum indicated load.

3. The flanged edges of all panels shall be straight and smooth. Corners shall be welded and

ground smooth.

4. The face of the panel shall be true and level after flanging.

5. Panel cut-outs and holes shall be cut or drilled by a method that will not cause deformation, scarring or overheating of the surface. Burrs and sharp edges shall be ground smooth.

6. All seams shall be welded and ground smooth. There shall be no exposed sharp edges on the inside or outside of the enclosure.

7. The cabinet bottom flange for anchoring to the foundation pad shall be rolled (not welded) from the vertical walls of the cabinet and shall run around the entire inside perimeter of the enclosure at the manufacturer's standard width.

8. Adjacent panels shall assemble with faces flush. Gaps or cracks shall not be visible from the front of the assembled instrument board.

9. Stiffeners shall be welded to the back of panels as required to prevent panel deformation due to the weight of panel mounted instruments.

10. Data pocket shall be high impact thermoplastic.

11. Panel doors shall have Heavy duty ¼ turn 3-point latching mechanism constructed of 316L stainless Steel, with nylon rollers at the end of latch rods.

12. Panels shall be self-supporting as defined below.

K. Frameworks and Supports:

1. The rear of each panel section shall have a 316 SS framework assembled to it for supporting conduit, tubing, wireways, switches, air piping and all instrument accessory items such as relay or terminal enclosures, transducers, pressure switches, valves and air relays. The main framework shall be constructed of standard structural shapes. Special shapes such as 316 SS "Unistrut" may be used for secondary supports. Framework must not interfere with instrument connections or access needed for maintenance or adjustments.

2. Two removable lifting lugs shall be provided and shall be designed for moving the fully assembled control panel sections without causing distortion or bending.

L. Preparation of Panel Surface (following shall not apply to 316 stainless Steel):

1. The surface of the panel shall be prepared for finishing in a manner equal to that described below. The entire surface shall comprise the front and rear face of the panel top and bottom, both sides and the edges of all flanges, and the periphery of all holes or cut-outs.

2. All high spots, burrs, and rough spots and sharp edges shall be ground smooth.

3. The surfaces shall be sanded or sandblasted to a smooth, clean bright finish.

4. All traces of oil shall be removed with solvent.

5. The first coat of primer shall be applied immediately.

M. Panel Finishing (does not apply to 316 Stainless Steel):

1. A thin coat of primer shall be applied over the entire panel surface. Minimum dry film thickness of primer coat shall be 1 mil.

2. Wet sand to smooth clear finish and then dry.

3. At least two coats of air-dry, epoxy paint shall be applied over the entire surface. Dry film thickness of lacquer enamel shall be 1 to 2.5 mil. Color to be as approved by the ENGINEER.

4. Supply two one-pint containers of air drying, matching paint for field touch-up of the panel.

N. Instrument Finishing:

1. The final coats applied to painted surface of instrument cases, doors, or bezels which are visible from the front of panels shall be manufacturer's standard unless otherwise specified.

2. Black japan or "crinkle" finishes on instrument cases are not acceptable.

O. Preparation for Shipment and Shipping:

1. All panels shall be crated for shipment using a heavy framework and skids.

2. The panel sections shall further be cushioned satisfactorily to protect the finish of the instruments and panel during shipment.

3. All instruments which are shipped with the panel shall further have suitable shipping stops and cushioning material installed in a manner to protect instrument parts which could be damaged due to mechanical shock during shipment.

4. Each separate panel unit shall be provided with removable lifting lugs to facilitate handling.

5. All shipments shall be by air ride van, unless otherwise specified or approved.

P. Labor and Workmanship:

1. All panels shall be fabricated, piped and wired by fully qualified workers who are properly trained, experienced and supervised.

2. All personnel used on the project shall be subject to CITY approval.

Q. Drawings:

1. Furnish copies of preliminary drawings for approval. These drawings shall include:

a. Complete panel layouts showing all outside dimensions, locations and dimensions of panel cutouts, locations of back of panel stiffeners, and panel face drawings to exact scale.

b. Terminal point locations with coded identification for wiring, and piping connections (includes all pneumatic transmission lines).

c. Back of panel piping.

d. Back of panel wiring, including dimensioned location of connections.

2. Fabrication of panels, piping and wiring shall not proceed without the CITY's written release for fabrication or approval of shop drawings by the ENGINEER.

3. The ENGINEER's requirements for final certified drawings include final approved copies of the above described shop drawings as well as certified drawings of instrument equipment furnished by the panel fabricator.

4. The number of copies of final certified drawings required by the ENGINEER and the required procedure for identification of these drawings are covered by Section 01330, Shop Drawings/Submittals, of the GENERAL REQUIREMENTS.

R. Inspection and Approval:

1. Panel fabricator must carry out the following tests prior to arrival of the ENGINEER and the INSPECTOR for factory testing (FAT):

a. All air lines shall be purged and adequately tested for leaks.

b. All alarm circuits shall be rung out to determine their operability and proper function.

c. All electrical circuits shall be checked for continuity and where applicable, proper function.

d. All nameplates shall be checked for correct spelling and correct size of letters.

e. Perform any/all other tests needed to place the control panel in proper operating condition.

2. Furnish all necessary testing devices and manpower to perform the tests required by the ENGINEER and the INSPECTOR.

3. If the above tests have not been performed and confirmed prior to the arrival of the ENGINEER and the INSPECTOR, the CONTRACTOR shall be liable for back charges by the ENGINEER for the extra time required for the inspection services.

S. Photographs:

1. Fabricator shall furnish two (2) copies of 8 x 10 glossy photographs of the front, rear and all interior wiring and devices of the finished panel for the ENGINEER's record.

2. Additional photographs shall be provided at the ENGINEER's request where needed for proper documentation.

3. Photos shall be taken in digital format and shall be provided to the ENGINEER in both hard copy and digital form.

2.4 GENERAL ENCLOSURE COMPONENTS

A. Signal Isolators, Converters, and Power Supplies: Signal isolators shall be furnished and installed in each measurement and control loop, wherever required, to ensure adjacent component impedance match, or where feedback paths may be generated or to maintain loop integrity when the removal of a component of a loop is required. Signal converters shall be included where required to resolve any

signal level incompatibilities. Signal power supplies shall be as follows, as required by the manufacturer's instrument load characteristics, to ensure enough power to each loop component:

1. Moore Industries;
2. Acromag:
3. Red Lion;
4. Phoenix Contact:
5. Or equal.

B. General Purpose Relays: General purpose relays in the Control Panel (s) shall be plug-in type with 2DPDT contacts rated 10 amperes at 120 VAC. Each relay shall be enclosed in a clear plastic heat and shock resistant dust cover, relays shall also include manual test button, LED status light and hold-down clip. Sockets for relays shall have screw type terminals. Relays shall be:

1. Eaton;
2. Schneider Electric;
3. Allen Bradley;
4. Or equal.

C. Time Delay Relays: Time delay relays shall be pneumatic or electric on-delay or off-delay type, with contacts rated 10-amperes at 120 VAC. Units shall include adjustable dial with graduated scale covering the time range in each case. Time delay relays shall be:

1. Eaton;
2. Schneider Electric;
3. Allen Bradley;
4. Or equal.

D. Interposing/Slave Relays: Additional relays (interposing/slave relays) shall be installed and wired when the number or type of contacts indicated exceed the contact capacity of the specified relays and timers or to isolate field voltages. These relays shall be like general purpose relays as indicated in paragraph “B” above.

E. Circuit Breakers: Circuit breakers shall be single pole, 120 VAC, 15 ampere rating, or as required to protect wires and equipment and mounted inside the panels. Branch circuit breakers in control panels shall be miniature, DIN rail mounted.

F. Nameplates/tag numbers: Nameplates/tag numbers shall be provided for instruments, function titles for each group of instruments, and other components mounted on the front panel(s) as shown.

1. A nameplate and tag number shall be provided for each signal transducer, signal converter, signal isolator, each electronic trip, and the like, mounted inside the panel(s).

2. They shall be descriptive, to define the function and system of such element.

3. Nameplates/tag numbers shall be of the same material as those on the front of the panel(s).

4. The nameplates/tag numbers shall be descriptive to define the equipment tag, function and system.

5. The nameplates/tag numbers shall be, made from phenolic material 1/8-inch thick having a black exterior and white center.

6. Nameplates shall be fastened with stainless steel machine screws, or epoxy adhesive where penetrations to the panel are not permitted by the NEMA rating (i.e. NEMA 4/4X).

7. Tag numbers for instruments and equipment numbers for machinery shall be coded to CITY numbering system**.**

8. Nameplates/Tag numbers shall be fabricated from Laminated plastic**.** Colors, lettering, styles, abbreviations and sizes shall be in conformance with latest ISA-RP-60.6 standard with an intended viewing distance of three (3) to six (6) feet as shown or as selected by the ENGINEER.

9. Instrument tags made of 316 stainless steel shall be provided and installed for all field instruments located:
   a. Outdoors

   b. In underground pipe galleries

   c. In Tunnels

   d. In utility trenches

   e. Within 200 feet of any process area

   The Tags shall be stamped or engraved with the instrument Tag Number shown on the Contract Drawings and shall be attached to the instrument with 316 stainless steel wire.
   Otherwise, the Tags shall be made of engraved laminated plastic material (see Nameplates above) and shall be attached to the instrument with black zip ties guaranteed for sunlight exposure by the manufacturer.

10. Before being produced, submit a list indicating the wording and tag numbering of all equipment identification Nameplates/Tags along with a sample to the Engineer for approval.

    Manufacturers shall be:

    a. Brady

    b. Or equal.

G. Terminal Blocks: Terminal blocks shall be molded plastic with barriers and box lug/compression screw terminals and shall be rated 15 amperes at 600-volts. White marking strips, fastened securely to the molded sections, shall be provided and wire numbers or circuit identifications shall be marked thereon with permanent marking fluid. Terminal blocks shall be:

1. Allen Bradley;

2. Phoenix Contact;

3. Weidmuller**;**

4. Or equal.

H. Totalizer LED: Totalizers (counters) shall be electronic LED type with 7 (minimum) non-resettable digits. Counters shall be approximately 2"h x 2"w x 3"d and shall be suitable for front panel mounting. Character height shall be 0.140 inches minimum. Each electronic counter shall have a standby battery or non-volatile memory capable of maintaining the last totalized value for a minimum of 72 hours after a utility power failure. Totalizers (counters) shall be:

1. Allen Bradley;

2. Schneider Electric;

3. Or equal.

I. Signal Isolator: Signal isolators shall have complete isolation of the input, output and power circuits. Signal input shall be 4-20 mA into 50 ohms maximum; signal output shall be 4-20 mA into 1000 ohms minimum. Power input shall be 120 VAC 60 Hz. Span and zero shall be adjustable; accuracy shall be
±1 percent of span. Units shall be surface, or rack mounted. Signal isolators shall be:

1. Phoenix Contact;

2. Moore Industries.

3. AGM Electric;

4. Or equal.

J. Signal Converter: Signal converters shall have complete isolation of the input, output and power circuits. Signal input shall be 1-5 VDC into a minimum of 5 megohms input impedance. Signal output shall be 4-20 mA into 1000 ohms minimum. Power input shall be 120 VAC 60 Hz. Span and zero shall be adjustable; accuracy shall be ±0.1 percent of span. Units shall be surface, or rack mounted. Signal converters shall be:

1. Phoenix Contact;

2. Moore Industries;

3. AGM Electric.

4. Or equal.

K. Current Alarm Trip (Switches): Current alarm trips shall be single or dual type as shown. Units shall accept voltage or current input signals. Dead bands shall be adjustable over 100 percent of span for single/dual trips. Alarm trips shall be equipped with 10A DPDT contacts. Alarm trips shall include setpoint dials calibrated 0-100 percent for each trip point. Single alarm trips shall include a dead band adjustment dial calibrated 0-100 percent. Alarm trips shall be:

1. Phoenix Contact;

2. Moore Industries;

3. AGM Electric;

4. Or equal.

L. Selector and Pushbutton Switches: Selector and pushbutton switches shall be rated 10-amperes at 600 volts, shall be heavy-duty, oil-tight and shall have the number of positions and poles indicated. Operators shall be nickel or chrome plated. Switches shall be:

1. Allen Bradley;

2. Eaton;

3. Schneider Electric;

4. ABB

5. Or equal.

M. Indicating Lights: Indication lights shall be high-brightness LED, push-to-test type, and shall be NEMA heavy-duty, oil tight. Each light shall have a screwed-on glass prismatic lens approximately one-inch in diameter. Each light shall have a factory-engraved legend plate, as shown on the Drawings. Indicating lights shall be:

1. Allen Bradley;

2. Eaton;

3. Schneider Electric;

4. Or equal.

N. Signal and Control Circuit Wiring:

1. Wire type and sizes: Conductor shall be flexible stranded copper machine tool wire; these shall be UL listed Type MTW and shall be rated 600-volts. Wires for instrument signal circuits and alarm input circuits shall be No. 14 AWG. All other wires, including shielded cables, shall be No. 16 AWG minimum.

2. Analog signal, digital signals and power wiring shall each be run in separate conduits.

3. Wire Insulation Colors: Conductors supplying 120 VAC power on the line side of a disconnecting switch shall have a black insulation for the ungrounded conductor. Grounded circuit conductors shall have white insulation. Insulation for ungrounded 120 VAC control circuit conductors shall be red. All wires energized by a voltage source external to the Control Panel(s) shall have yellow insulation. Insulation for all DC conductors shall be blue.

4. Wire Marking: Each signal, control, alarm, and indicating circuit conductor connected to a given electrical point shall be designated by a single unique number which shall be shown on all shop drawings. These numbers shall be marked on all conductors at every terminal using white numbered wire markers which shall be plastic-coated cloth or shall be permanently machine marked heat-shrink plastic and easily visible and readable. Manufacturers shall be:

a. Brady,

b. Or equal

2.5 EQUIPMENT SPECIFICATIONS

A. Differential Pressure type Flow Transmitter: Differential pressure flow transmitters shall be two wire devices with the following features: continuously adjustable span, zero and damping adjustments, integral indicator scaled in engineering units, square root extraction, solid state circuitry and 4-20 mA output plus HART. The transmitter shall be rated to withstand up to 2000 psig on either side without incurring damage. Accuracy shall be ±0.25 percent of calibrated span. Process wetted materials shall be 316 SS. Body materials shall be 316 SS. Process connections shall be ½" NPT. A five-valve manifold shall be furnished with the transmitter. Unless otherwise specified, the manifold wetted materials shall be the same as specified for the transmitter. The differential pressure flow transmitter shall be:

1. Emerson- Rosemount;

2. Endress+ Hauser;

3. Honeywell,

4. Or equal.

B. Liquid Level Transmitter: The level transducer shall be a flanged, differential pressure sensing unit. The transmitter shall be a two wire device with the following features: continuously adjustable span, zero and damping adjustments, integral indicator scaled in engineering units, solid state circuitry, and 4-20 mA output plus HART. Accuracy shall be ±0.25 percent of span. Process wetted parts shall be 316SS Body and flange shall be 316SS. The flanged process connection shall be ANSI 3 or 4 inch 150 lbs. The level transmitter shall be:

1. Emerson- Rosemount;

2. Endress+ Hauser;

3. Honeywell**;**

4. Or equal.

C. Ultrasonic Level Transmitter: The system shall use ultrasonic ranging to measure the level of liquid and shall consist of a sensor with interconnecting cable and control transmitter unit which can be located up to 600 feet from the sensing unit. Level sensing shall be automatically compensated over the system temperature range of at least 0 to 50 degrees C and shall incorporate non-linear digital filtering and moving average techniques to reduce noise and atmospheric interference. Transmitter shall be microprocessor based. Calibration shall require no reference targets. Accuracy shall be 1 percent or better. In the case of momentary signal loss, relays shall maintain their last state. Output shall be 4 - 20 mA plus HART proportional to the range of level sensing. Ultrasonic transmitter shall also have a minimum of **five** programmable contacts rated at 10 amps and 115 VAC outputs (SPDT each) with adjustable set points and dead bands which can be used for pump control. The ultrasonic unit shall be powered by 120 VAC. Twenty-five feet of transducer to transmitter interconnecting cable shall be provided or as specified in the Instrument Schedule. Ultrasonic unit shall be:

1. Siemens/ Miltronics Hydroranger;

2. ABB;

3. Endress + Houser;

4. Or equal.

D. Bubbler Assemblies: Bubbler air regulating systems shall be furnished as shown including piping, pressure or level gages, shut-off valves, pressure regulating valves, filter, differential pressure regulator, rotameter, level transmitters, and/or pressure switches. For those bubbler systems not receiving plant air, a non-lubricated top end air compressor with receiving tank shall be furnished. The continuous air stream generated is intended to provide a self-purging action for low maintenance operation.

E. Pneumatic Systems: Each assembly shall consist of the electrical, electronic, and pneumatic components defined in the specifications and shown on the drawings. Interconnecting tubing for the low pressure connections shall be ½" stainless steel with stainless steel fittings. The connection from the low pressure connection on each level transmitter shall be piped to a screened breather-drain. Air pressure gages shall be scaled in psig, bubbler tube level gages shall be scaled in inches or feet of W.C. with minor division not to exceed 3" W.C. All level and pressure gages shall have indicating dials that are a minimum of 2.5" in diameter. The purge air flow shall be set by a needle valve and the flow rate shall be indicated on a direct reading rotameter scale. This scale shall be in standard cubic feet per hour (SCFH) units and shall have a scale range of 0.25 to 2.5 SCFH.

F. Pressure Transmitters: Pressure transmitters shall be two wire devices with the following features: continuously adjustable span, zero and damping adjustments, integral indicators scaled in engineering units, solid state circuitry and 4-20 mA output plus HART. The transmitter shall be rated to withstand up to 2000 psig without incurring damage to the transmitter. Accuracy shall be ±0.25 percent of span. Process wetted materials and body shall be 316 SS. Process connections shall be ½" NPT. The transmitter housing shall be rated NEMA 4X plus NEMA 7 or 9 for hazardous locations. Conduit hubs shall be cast integral with the instrument housing and shall be ¾" NPT. Pressure transmitter shall be.

1. Emerson- Rosemount;

2. Endress+ Hauser;

3. Honeywell**;**

4. Or equal.

G. Differential Pressure Transmitter: Differential pressure transmitters shall be two wire devices with the following features: continuously adjustable span, zero and damping adjustments, integral indicator scaled in engineering units, solid state circuitry and 4-20 mA output plus HART. Accuracy shall be ± 0.25 percent of span. Process wetted diaphragm materials shall be as shown on the specification sheets herein. Body materials shall be as shown on the specification sheets herein. Process connections shall be 1/4" or ½" NPT as indicated. The transmitter housing shall be rated NEMA 4X (plus NEMA 7 or 9 for hazardous locations).The differential pressure transmitter shall be:

1. Emerson- Rosemount;

2. Endress+ Hauser;

3. Honeywell**;**

4. Or equal.

H. Level Switch Float Tilt Type: Liquid level switches shall be float actuated type designed for use for wastewater sump control. The float when tilted magnetically actuates hermetically sealed SPDT switch within the unit. Switch rated at minimum of 240 VAC, 10 amps. Switch enclosure shall be the appropriate NEMA rating. Process wetted materials shall be PVC or polypropylene. Liquid level switches shall be:

1. Magnetrol Model T10;

2. Warrick Series 10;

3. Xylem Flygt ELM-10 ;

4. Or equal.

I. Pressure Switches: The pressure switches shall be double-pole, double-throw with adjustable differential range. Minimum differential shall be less than 10 percent of range. Allowable surge pressure shall be 1.5 times range or better. Each pressure switch shall have visible scale and visible contact operation. Pressure switches shall have a contact rating of 10 amperes at 120 volts AC. Pressure switches shall be non-mercury wetted type or snap switches and shall be in NEMA 4X rated enclosures (plus NEMA 7 or 9 for hazardous installations). All pressure switches shall be provided with diaphragm seals. Diaphragm seals shall be provided and included with the pressure switches at the locations shown on the Drawings. Pressure switches shall be:

1. Ashcroft Type 1125A with contacts;

2. Mercoid Series 1000;

3. Or equal.

J. Temperature Switches: Temperature switches shall be either bimetallic or filled system type with three-quarter inch (0.750 inch) NPT thermowell process connection per applicable piping code. Switches shall have SPDT contacts and provided with an adjustable set point. Enclosure shall be rated NEMA 4X plus NEMA 7 or 9 for hazardous environments.

K. Pressure and Vacuum Gages: Pressure gages shall be provided where shown. In all locations where pressure may vary from below to above atmospheric head, compound gages shall be installed.

1. Gage Construction: Gages shall be industrial grade with type 316 stainless steel movement and stainless steel or alloy case or phenol case. Unless otherwise shown or specified, gages shall have a 4-1/2-inch dial, ½-inch threaded connection, a Type 316 stainless steel snubber adapter, and a shut-off valve. Gages shall be calibrated to read in engineering units, with an accuracy of ±1 percent of reading, and shall withstand pressures equal to 150 percent of the rated working pressure or vacuum without failure or damage to the gage. All gages shall be vibration and shock resistant (sealed liquid filled). Pressure gages shall be:

a. Ashcroft Duraguage;

b. Ametek 1981

c. Or equal.

2. Diaphragm Seal: Gages attached to systems involving chemical solutions, corrosive fluids, or other liquids containing one percent or less of solids, shall be equipped with diaphragm seals. For liquid having 1 percent or greater solids content saddle type diaphragm seals shall be used:

   a. Ametek;

   b. Rosemount;

   c. Or equal.

3. Elastomer Diaphragm Seal - For liquids containing solids, pulsating flow: Utilize seals of type 316 stainless steel for liquids having grit, solids or pulsating flows, and for pressures over 1 psi. Use an elastomer diaphragm for pressures of 1 psi and below. All nuts, bolts, fasteners and accessories shall be Type 316 stainless steel. Provide fill connection and valved flush port size 1/4-inch NPT, Gages/Seals shall be capable of disassembly without loss of fill fluid.

4. Installation: All gages and appurtenances shall be installed at the locations shown in the Contract Documents and in accordance with the manufacturer's printed instructions. Care shall be taken to minimize the effect of water hammer or vibrations on the gages. Where indicated or necessary for proper operation, gages shall be mounted independently of vibrating piping or machines and connected to the process with diaphragm seals and flexible capillary tubing.

L. Differential Pressure Gages with Alarm Set points: Differential pressure indicators shall have a six inch dial with differential pressure flow in engineering units. Accuracy shall be ±0.5 percent of full scale. Other requirements shall be like Gages above.

1. Each differential pressure gage (and other device – i.e. transmitters and switches) shall be furnished with a three valve manifold constructed entirely of **316 stainless steel.**

2. Differential pressure gages shall be complete with integral high and low alarm set points as shown on the Contract Documents. Alarm setpoint controls shall have indicating scales and shall be adjustable over the entire scale range. Each alarm output shall be a SPDT dry contact rated at 5 amps at 120 VAC minimum.

3. The enclosure shall be rated NEMA 4X (plus NEMA 7 or 9 for hazardous locations). Gages shall be:

   a. Dwyer Series 3000 with switch;

   b. Or equal.

2.6 ELECTRIC ACTUATORS

A. General: As applicable, see Instrument Data Sheet/s in Attachment C and the Contract Plans and other parts of these Specifications for additional requirements.

B. Equipment Requirements: Where electric motor actuators are shown, an electric motor-operated valve control unit shall be attached to the valve operating mechanism by means of a flanged motor adaptor piece. All electric motor operators shall be capable of operating at any mounting angle and position and shall be modulating or open-close type, multi-turn or ¼-turn as required by the application.

C. Gearing: The motor operator shall include the motor, reduction gearing, reversing starter, torque

switches, and limit switches in a weatherproof NEMA 4X and 6 and IP68 (submersible to 20 ft for 72 hours as a minimum) and other necessary equipment in the assembly. Additionally, comply with NEMA 7, Class 1 DIV 1 / 2 where applicable as indicated on the drawings and/or attached valve schedule or other parts of the Contract Documents. The actuator shall be designed and constructed to not require power to be connected during storage or prior to start-up/ commissioning to protect its interior. The operator shall be a single or double reduction unit consisting of spur or helical gears and worm gearing. The spur or helical gears shall be of hardened alloy steel and the worm gear shall be alloy bronze. All gearing shall be accurately cut with hobbling machines. All power gearing shall be oil lubricated to allow for mounting in ANY position, in a sealed housing. Ball or roller bearings shall be used throughout. Operator output speed changes shall be mechanically possible by removing the motor and changing the exposed or helical gear set ratio without further disassembly of the electric operator. For applications requiring the use of external gearboxes, to match a certain speed and torque, or for quarter-turn installations, all power gearing shall be accurately cut to assure minimum backlash. Nonmetallic, aluminum or cast gearing will not be acceptable. Anti-friction bearings shall be used throughout. Multi-turn applications shall use a heavy-duty bevel gearbox, and quarter-turn actuators shall use a heavy duty worm gearbox.

D. Hammer Blow Operation: The unit shall be so designed that a hammer blow is imparted to the stem nut when opening a closed valve or closing an open valve. The device should allow free movement at the stem nut before imparting the hammer blow, enabling the motor to reach full speed before engaging the stem load.

E. Torque Switches - Travel in the opening and closing directions shall be governed by a switch responsive to mechanical torque developed in seating the valve, or by an obstruction met in opening or closing. The torque switch shall be adjustable and shall function without auxiliary relays or other devices. Torque shall be adjustable from 40-100% of the actuator capacity, and adjustable in 1% increments, non-intrusively (no removal of covers).

F. Position Switches - Four contacts shall be provided which can be selected to indicate any position of the valve with each contact selectable as normally open or normally closed. The contacts shall be rated at 5A, 120V AC, 30V DC. Provision shall be made for 4 additional contacts should they be required or needed for the specified control.

G. Position Indication - The actuator shall provide a local display of the position of the valve and to track and monitor any manual operation of the actuator, even when the power supply is not present. The display shall be able to be rotated in 90° increments to provide easy viewing regardless of actuator mounting position. The local display shall be large enough to be readable from six (6) feet when the actuator is powered up. The actuator shall include a digital position indicator with a display indicating valve position from fully open to fully closed in 1% increments. Red, green, and yellow lights corresponding to Open, Closed, and Intermediate positions shall be included on the actuator.

H. The actuators transformer shall provide 24 VDC or 120 VAC power available for customer use.

I. Jammed valve protection: Torque switch and motor thermal protection shall be provided to prevent motor burn-out. Remote indication of availability/non-availability status of the actuator shall be provided for remote monitoring and control. Monitor relays shall be provided to detect a loss of local three phase or control voltage supply, motor thermostat trip, the local stop button locked off or the selector switch not set to the REMOTE position. Availability of the actuator for remote control shall be indicated by electrical contacts, series connected for all of the above conditions. These contacts shall be connected to a single interposing (monitor) relay integral with the actuator with dry contacts for remote wiring.

J. The remote-control signals shall be 24 VDC or 120 VAC without the need for additional relays.

K. The operator shall be wired in accordance with the schematic diagram and all wiring for external

connections shall be connected to marked terminals. The electric circuit diagram of the actuator shall not vary with valve type remaining identical regardless of whether the valve is to open or close on torque or position limit. Two 1-inch and one 1-1/4 or 1-1/2-inch conduit connections shall be provided in the enclosing case.

L. Handwheel Operation: A handwheel shall be provided for emergency operation engaged when the motor is declutched by a lever or similar means; the drive being restored to power automatically by starting the motor. The hand/auto selection lever shall be padlockable in both in Hand and Auto positions. It shall be possible to select hand operation while the actuator is running or start the actuator motor while the hand/auto selection lever is locked in Hand position without damage to the actuator.

M. The handwheel drive shall be mechanically independent of the motor drive, and any gearing shall be such as to permit emergency manual operation in a reasonable time. Worn or damaged gears shall not prevent manual operation. Clockwise operation of the handwheel shall give closing movement of the valve unless otherwise stated in the Contract specification. Valves mounted higher than 5 feet-6 inches above floor or operating level shall have chain operators and a remote-control station at ground level that performs all of the same functions as the actuator mounted station, and complying with all of the test laboratory, NEMA, and other ratings required for the actuator. Station shall be stand mounted per instrumentation mounting details found in the Contract Drawings.

N. For safety purposes, it shall be possible to disengage the electric drive with the declutch lever. This disengagement and any subsequent reengagement shall not cause any damage to the valve or actuator - even with the motor running.

O. The maximum torque required on the handwheel under the most adverse conditions specified herein shall not exceed 60 ft-lb, and the maximum force required on the rim of the handwheel shall not exceed 60 lb. An arrow and either the word "open" or "close" shall be cast on the handwheel to indicate the direction to turn for manual operation.

P. Motor: The motor shall be of the totally-enclosed, non-ventilated, high-starting torque, low-starting current type for full voltage starting or as otherwise required for modulating service. It shall be suitable for operation on 480-volt, 3-phase, 60-Hz input power, and have Class B insulation, and a motor frame with all dimensions in accordance with the latest revised NEMA Standards. The observed temperature rise by thermometer shall not exceed 55 degrees C above an ambient temperature of 40 degrees C when operating continuously for 15 minutes under full rated load, with a line voltage of not more than 10 percent above or 10 percent below the rated voltage, the motor shall develop full rated torque continuously for 15 minutes without causing the thermal contact protective devices, imbedded in the motor windings to trip or the starter overloads to drop out. All bearings shall be of the ball type and thrust bearings shall be provided where necessary. All bearings shall be provided with suitable seals to confine the lubricant and prevent the entrance of dirt and dust. Motor conduit connections shall be watertight. Motor construction shall incorporate the use of stator and rotor as independent components from the valve operation such that the failure of either item shall not require operator disassembly or gearing replacement. The actuator shall include a device to ensure that the motor runs with the correct rotation for the required direction of valve travel with either phase sequence of the three-phase power supply connected to the actuator. The motor shall be de-energized in the event of stall when attempting to unseat a jammed valve, or if single phasing occurs. Motor temperature shall be sensed by a thermostat to protect against overheating. For On/Off service, this starter shall be an electromechanical type suitable for 60 starts per hour and of a rating appropriate to the motor size. For modulating duty, a solid-state starter shall be supplied that is suitable for up to a maximum of 1,200 starts per hour. Instant reversal of actuator from one direction to another shall be protected by an automatic time delay circuit.

Q. Starter: There shall be furnished and installed in the integral weatherproof housing on the valve

actuator, unless otherwise shown, a suitably sized amperage rated reversing starter with its coils rated for operation on 120-VAC, 1-phase, 60-Hz current. A control power transformer shall be included to provide a 120-VAC source. The starter shall be equipped with 3 overload relays of the automatic reset type (NOTE! Space heaters are not required in properly sealed enclosures, per this revised specification).

R. Operator Appurtenances: The operator for each valve shall be supplied with a push button station with mechanical or electrical lockout device. The pushbutton station enclosure, if separate, shall also be rated for NEMA 4X environments and hazardous duty if needed to meet the arearequirements.

S. Terminal Compartment: A separate terminal compartment which is sealed from the rest of the actuator assembly, shall be provided as part of the actuator housing so that electrical components shall remain sealed (not exposed to the outside environment) during site wiring. The terminal compartment shall be O-ring sealed at the cover and also have an inner watertight and dustproof “O” ring seal between the terminal compartment and the internal electrical elements of the actuator, fully protecting the motor and all other internal components from ingress of moisture and dust when the terminal compartment cover is removed to perform wring on site. Enclosure shall be able to allow for temporary site storage without the need for temporary electrical power supply connection.

T. All external fasteners on the actuator shall be stainless steel and shall be lubricated with anti-seize compound to prevent galling. Threaded covers and other appurtenances shall also be lubricated with anti-seize.

U. Power terminals shall be of the stud type, segregated by an insulating cover. At least three conduit entries shall be provided, threaded with an NPT standard tap with 2/4 inch taper per foot. Fine stranded wire with solderless compression connectors (ring tongue type), shall be used for all electrical connections to the actuator. Terminals for remote controls shall be provided. No external wiring or conduit shall be used for interconnection of components on the actuator.

V. It shall be possible to carry out the setting of the torque, turns, and configuration of the indication contacts via an infra-red setting tool, without opening or removing any electrical compartment covers. Diagnostic information shall be available from both an integrally mounted display window and through non-intrusive means of reading and writing data to the actuator, Two way communication shall be possible to facilitate downloading actuator setup and reading/analyzing the “on board” Data Logger via an IrDA port and non-intrusive hand-held computer/PDA. Diagnostic information from the Data Logger shall include, as a minimum, historical valve torque profiles and an actuator events log that can be stored and analyzed. Provision shall be made to display valve torque demand as a percent of rated actuator torque and position simultaneously, in order to facilitate valve trouble shooting and diagnostics.

W. Closing and opening speeds: The electric actuators and motors shall be sized to close or open the valves at a speed of 12” per minute, unless otherwise shown on the drawings or spec. Startup Kit: Each actuator shall be supplied with a startup kit comprising of installation instructions, electrical wiring diagrams, and enough spare cover screws and seals to compensate for any site losses during the startup/commissioning period.

2.7 PENUMATIC ACTUATORS

A. The pneumatic actuators shall be used to modulate valves/dampers with a positioner. The pneumatic actuator shall have an integral pressure to milliamp transducer/positioner in order to be able to respond to analog signals of 4-20 mADC at 0 to 30 VDC. The actuator material shall be suitable for the environment that it will be operating in as well as requirements described in the attached design documents Contractor shall prepare and submit ISA data sheets to document compliance with specification requirements. All pneumatic tubing of the actuator shall

be 316 SS.

2.8 HYDRAULIC ACTUATORS

Refer to mechanical specifications.

PART 3 -- EXECUTION

3.1 INSTALLATION

A. The Instrumentation Subcontractor shall utilize personnel provided by its assigned organization to accomplish, or oversee the physical installation of all elements, instruments, accessories or assemblies which it furnishes. The Instrumentation Subcontractor shall employ installers who are skilled and experienced in the installation and connection of all elements, instruments, accessories, and assemblies being furnished under this Contract.

B. In summary, it is the general intent of this Contract that all field cabling external to the Local Control panels shall be furnished and installed under provisions of Division 16 Electrical. Further, it is the general intent that all field wiring, i.e., 4-20 mA signal circuits, process equipment control wiring, signal wiring to field instruments, LCPs and PCM input and output wiring, be furnished and installed under Division 16 and be terminated and identified under provisions of Division 17 Instrumentation and Control.

C. The Instrumentation Subcontractor's attention is directed to the electrical and mechanical schematics and details of this project. Referral to these portions of the contract documents shall be required in order to understand the full intent and scope of work required.

3.2 CONTROL PANEL SIGNAL AND CONTROL CIRCUIT WIRING

A. Wiring Installation: All wires shall be run in plastic wireways except (1) field wiring, (2) wiring run between mating blocks in adjacent sections, (3) wiring run from components on a swing-out panel to components on a part of the fixed structure, and (4) wiring run to panel-mounted components. Wiring run from components on a swing-out panel to other components on a fixed panel shall be made up in tied bundles. These bundles shall be tied with nylon wire ties and shall be secured to panels at both sides of the "hinge loop" so that conductors are not strained at the terminals.

B. Wiring run to control devices on the front panels shall be tied together at short intervals with nylon wire ties and secured to the inside face of the panel using adhesive mounts.

C. Wiring to rear terminals on panel-mount instruments shall be run in plastic wireways secured to horizontal brackets run above or below the instruments in about the same plane as the rear of the instruments.

D. Conformance to the above wiring installation requirements shall be reflected by details shown on the shop drawings for the ENGINEER'S review and approval.

E. Wire Marking: Each signal, control, alarm, and indicating circuit conductor connected to a given electrical point shall be designated by a single unique number which shall be shown on all shop drawings. These numbers shall be marked on all conductors at every terminal using white numbered wire markers which shall be plastic-coated cloth, or permanently machine marked heat-shrink plastic and easily visible and readable.

3.3 INSTRUMENT CABLE TESTS

A. General: The following tests shall be performed on each instrumentation and control system cable which is installed under this Contract. All tests shall be end-to-end tests of installed cables with the ends supported in free air, not adjacent to any grounded object. Complete records of all tests shall be made and delivered to the ENGINEER for review and approval.

B. Continuity tests shall be performed by measuring wire/shield loop resistance of each signal cable as the wires, taken one at a time, are shorted to the channel shield. No loop resistance measurement shall vary by more than ±2 ohms from the calculated average loop resistance value.

C. Insulation resistance tests shall be performed by using a 1000 volt Megger for insulations rated 600V or higher and 500 volts Megger for insulations rated 500V or lower. Megohmmeter shall be used to measure the insulation resistance between each conductor , between each conductor and the conductor shield, between individual conductor shields in a multi-channel cable, between each individual conductor shield and the overall cable shield in a multi conductor cable, between each conductor and ground, and between each shield and ground. Values of resistance less than 1 megohms will be unacceptable. For further detail refer to electrical specifications.

3.4 INSTALLATION, CALIBRATION, TESTING, PRECOMMISSIONING, START-UP

A. General: All systems specified in the applicable Sections of Division 17, shall be installed, Connected/terminated, calibrated and tested, and in coordination with the ENGINEER, shall be started to place the plant processes in operation. This shall include final calibration in concert with equipment specified elsewhere in these Contract Documents, including pumps, samplers, valves and chemical feeders. The installation personnel shall have a final reviewed copy of the shop drawings and data.

B. Installation and Connection: Install and connect all field-mounted components and assemblies under the criteria imposed in this Section under "Manufacturer's Representative Services." The installation personnel shall have a final reviewed copy of the shop drawings and data.

1. The instrument process sensing lines and air signal tubing shall, in general, be installed in a similar manner to the installation of conduit specified under Division 16 specifications. Individual tubes shall be run parallel and near the surfaces from which they are supported. Supports shall be used at intervals of not more than 3 feet of rigid tubing.

2. Bends shall be formed with the proper tool and to uniform radii and shall be made without deforming or thinning the walls of the tubing. Ends of tubing shall be square-cut and cleaned before being inserted in the fittings. Bulkhead fittings shall be provided at all panels requiring pipe and/or tubing entries.

3. All instruments and connecting lines shall have allowance made for movement of equipment caused by seismic loading, vibration, or expansion or contraction caused by temperature changes. This shall be demonstrated to the ENGINEER during witnessing of field installation work prior to startup.

4. All accessory items required for installation and proper operation of the equipment shall be provided. Such items may include instrument valves, seal pots pigtails.

5. Lines or connections open to atmosphere shall be protected against ingress of foreign matter.

Unprotected openings shall have a goose neck, or equivalent, attached to protect against falling particles. Bird screen and insect screens shall be installed.

6. Comply with installation detail in the specifications for mounting of the instrument.

7. Verify that all Differential Pressure elements have three valve 316 SS manifolds.

8. All flexible cables and capillary tubing shall be installed in flexible conduits. The lengths shall be enough to withdraw the element for periodic maintenance.

9. All power and signal wires shall be terminated with spade type lugs.

10. All connectors shall be, as a minimum, watertight.

11. All wires shall be mounted clearly with identification tags at both ends that is of a permanent and reusable nature.

12. All wire and cable shall be connected from terminal to terminal without splices unless specifically approved by the ENGINEER and arranged in a neat manner and securely supported in cable groups. All wiring shall be protected from sharp edges and corners.

13. Verify that all mounting stand and bracket materials and workmanship comply with requirements set forth in the specifications and drawings.

14. Provide a technical field representative to instruct the installation personnel on any and all installation requirements; thereafter, the technical field representative shall be readily available by telephone to answer questions and supply clarification when needed by the installation personnel.

15. Finally, after all installation and connection work has been completed, the technical field representative shall check for correctness, verifying polarity of electric power and signal connections, making sure all liquid or pneumatic process connections are free of leaks, and all other similar details. The technical field representative shall certify in writing that for each loop or system checked out, all discrepancies have been corrected by the installation personnel.

16. Bear all costs and provide all personnel, equipment and materials necessary to implement all activities specified herein.

C. Process Connections: Process Connections and root valves shall be located so that they are accessible. Root valves stem and handle shall be installed clear of mainline insulation.

1. Consistent with measuring needs, process connections shall be located to have minimum movement. Therefore, they shall be as close to the system anchor points as possible.

2. For instruments mounted on a local board, the process connection shall be located as close as practical to the board.

3. Process connections in pipelines shall be oriented to avoid gas pockets in the sensing lines for liquid and vapor, and to avoid liquid pockets in the sensing lines for gas.

D. Valves: Root valves shall conform in design to the main-line class. If a globe-pattern root valve is used for pressure ranges of 0-15 psig, or differential pressure ranges of 0-100 inches H_2O, or vacuum service, its stem shall be installed horizontally. All other globe-pattern root valves shall have the stem vertical. All valves shall be full port ball where available.

1. Relief valves shall be installed without isolation valves.

2. To allow isolation of instruments, each instrument, EXCEPT FOR RELIEF VALVES, shall have a shutoff valve that is close to the instrument and is readily accessible. Where the root valve serves this purpose, instrument valves are not required.

3. If the root valve for a test point is not accessible, pipe or tubing shall be added and an instrument valve installed at convenient location.

E. Instruments: Locate locally mounted instruments near the most convenient point of use consistent with good measuring practice and accessibility. Sensing lines shall be as short as practical.

1. When consistent with good measuring practice, local boards or racks may be used to mount instruments that are grouped together because of common locations or related function.

2. Sensing instruments are preferred to be elevated as follows relative to the process connection in order to avoid gas pockets in a liquid-sensing line or liquid pockets in a gas or vapor sensing line:

Fluid	Preferred Instrument Elevation
Liquid	Below Line
Slurry	Below Line
Steam over 20 psia	Below Line
Steam not over 20 psia	Above Line
Gas	Above Line

3. Instruments and local boards shall not block walkways. For use, calibration, and repair, they shall be accessible without requiring instrument disassembly or the removal of piping, grating, or other structure.

4. Instruments shall be 4' - 6" above the floor. Exceptions may be made for seismic supports, for instruments accessibility, or for other factors, but must be approved by the ENGINEER prior to the work being done. Enough lighting shall be provided for night-time use.

5. Instruments shall be protected against shock and vibration. Because of vibration, electro-pneumatic signal converters shall not be mounted on control valves.

6. High temperature, high humidity and other ambient factors must be considered when locating instruments that require access for service.

7. Fluid-filled sensing systems, or "capillary tubes", are sealed to the instrument by the instrument manufacturer and are not repairable in the field. Such systems shall not be opened or cut during or after installation and shall be routed and protected as required to guard against damage. Avoid sharp bends in capillary tubing (i.e. bend radius shall not be less than 10 times the diameter of the capillary tubing). Excess lengths of capillary tubing shall be neatly coiled in a protected area or enclosure, e.g., coiled inside a protective shipping cap for 12-inch pipe.

8. Manufacturer's installation requirements, including those relating to unsupported span and minimum bend-radius of capillary tubing, must be submitted for review and approval by the ENGINEER.

9. All instruments shall have nameplates and tag numbers engraved on tags made of 316

stainless steel and attached with 316 stainless steel wire.

F. Sensing Lines: Sensing lines shall have a continuous slope to promote their being kept either full or free of liquid, as appropriate. The slope shall be one inch, or more, per foot of run. For instruments sensing steam at pressures up to 20 psia, 2 inches per foot of run is required as minimum.

1. If an instrument having a large dynamic displacement, e.g., a U-tube manometer, is in liquid service and is mounted above the main line, the sensing line shall descend for at least 36" close to the process connection and before sloping up to the instrument with the intent of preventing the entrapment of a non-condensable in the sensing line and shall be located below process taps.

2. If a sensing line has a liquid purge, the line shall be arranged so that the purge flow is up. If a gas purge is used into a process liquid, the purge flow shall be down.

3. Low points, except for pigtails, shall have a valved drain connection. Drip or dirt chambers shall be installed where needed. For dirty or freezing services, drain valves shall be a gate or ball type suitable for rod out.

4. High points shall have a vent connection with a manual or automatic vent valve except when the fluid is a non-condensable gas and except for pigtails. Not for U-Tube Manometers.

5. The discharge of bleed connections shall be piped to a safe disposal point if opening the bleed may create a hazard. The outlet of the valve on an atmospheric bleed shall not be plugged or capped, otherwise potentially hazardous pressure buildup may occur downstream of the valve.

6. Process fluids shall not be piped to a control room, or control panel, except instrument air, nitrogen, or other inert gas at pressure not exceeding 150 psig.

7. Dead-end sensing lines shall preferably be not over 50 feet long when using 1/4" O.D. tubing. The tubing diameter shall be increased to **½" O.D.** if a line is over 50 feet long or if the sensing instrument has a large dynamic displacement.

8. Hydrostatic head in a sensing line may affect a measurement. The effect of head shall be considered, particularly for low measuring ranges or low operating pressures.

9. Instruments in steam or vapor service shall have a pigtail or equivalent wet-leg to keep the instrument cool. The pigtail shall be close to the instrument. A wet-leg shall have a filling connection, usually at the top. If the instrument is mounted above the line, it shall be insulated up to the pigtail to minimize refluxing.

10. Use of a condensate pot may be necessary for any measured variable. If used, condensate and seal pots shall be located as close as possible to the process connection.

11. Pulsation dampers, when required, shall be installed close to the instrument, downstream of the instrument block valve.

12. Sensing lines shall be protected against mechanical loads and wear. Otherwise, additional wall thickness shall be required for mechanical strength. Unsupported spans of process and pneumatic tubing shall not exceed 3 feet in length.

13. Expansion bends shall be provided as necessary to allow for movement of supporting structures or change of length due to temperature change.

14. Hot lines shall be covered with insulation for personnel protection.

15. The main-line pipe class shall apply up to the instrument side of the root valve. Beyond that point, the appropriate instrument pipe class shall be used.

G. Fittings: Fittings shall not be used between the process connection and the root valve nor for pipe on the process side of condensate or seal pots, except that displacement and float-type level instruments are normally installed using pipe fittings.

1. So far as practical, bends rather than fittings shall be used to change the direction of a run of tubing or pipe. The minimum bending radius for cold-bending of tubing shall be three times the outside diameter of tubing. .

2. The ferrule of a flareless tube fitting shall be harder than the tube on which it is used.

3. Lubricant and sealant compounds shall be used as required by the city and equipment suppliers.

4. Where a detail specifies a size and type of fitting, a combination of fittings of other sizes but of the same or equivalent type giving the same or better overall effect may be substituted for convenience or if the desired part is not available. Flareless or threaded connections may not be used where weld connections are required. Where a ½" socket-weld fitting is required, a pipe 1/2" tube socket-weld fitting plus a 1/2" x 3/8" tube socket-weld fitting may be substituted. A flareless-end valve may be substituted for a threaded valve with flareless connectors, or vice versa. A weld fitting may replace a threaded or flareless fitting unless maintenance access will require the ability to make and break the connection. Each substitution shall require written approval of the ENGINEER.

5. Welding shall conform to project requirements.

H. Instrument Installation Notes - Flow: Condensate pots are not required for a sensing element, e.g., a force balance flow transmitter, which has negligible dynamic displacement. If displacement is not negligible, as for a U-tube manometer, and if the process fluid is either steam, other condensable fluid, water hotter than 250 Deg. F, other fluid that may flash, or moisture laden air then condensate pots shall be used. The pots shall have a volume not less than three times the displaced volume.

1. A pair of condensate pots shall be at the same elevation and as high as, or higher than, the higher process connection.

2. The pipe from a process connection to a condensate pot shall be insulated for process fluids hotter than 250 Deg. F.

3. A pair of head-type sensing lines shall be run together to the maximum extent practical so as to keep both lines at the same temperature. If they are to be insulated, they shall be insulated together.

4. Head-type sensing lines shall be checked to make sure that they are connected to the proper sides, HP and LP, of the instrument.

5. The edges of the holes for orifice taps shall be square or slightly rounded, clean, and free

from burrs, wire edges, or other irregularities.

6. For all Differential Pressure type elements, use a 316 SS five valve manifold.

7. Flow meter Installation Criteria: The following table lists the straight pipe run requirement upstream and downstream of each type of meter in terms of the number of required pipe diameters.

TYPE	UPSTREAM	DOWNSTREAM
Orifice plates	20	5
Venturi Tubes	20	5
Pitot Tubes	40	10
Propeller Meters	15	4
Ultrasonic Meters	10	5
Magnetic Meters	5	3

I. Instrument Installation Notes - Level: The lower connection on a vessel for piping to a level instrument is preferred to be on the side of the vessel rather than to come vertically down from the bottom. The intent is to minimize the trapping of solids in the sensing lines.

1. Head-type level instruments shall be located below the process connections on the vessel unless a gas purge is used, in which case the instruments may be located at any convenient elevation.

2. A stilling well shall be used in all cases to reduce the turbulence for displacement type elements located inside a vessel. A well may be required to protect a bubble tube against excessive turbulence.

3. So far as practical, level devices shall be placed away from areas of turbulence and shall not interfere with other vessel parts or instruments, such as thermowells or sample nozzles that may be required.

4. Stilling wells and bubble tubes shall be firmly supported. Head room shall be provided to permit withdrawing the tubes for cleaning and maintenance.

5. Gage glasses and their associated level instruments shall be installed adjacent to each other. The gage glasses and the other instruments shall be visible from a walkway.

6. External-chamber level instruments shall be installed with main-line-class pipe. Gate valves shall be used for root valves and other shutoff valves for these instruments, except that the manufacturer's standard pattern may be used for gage-glass valves.

7. An external-chamber instrument or a differential-pressure-type instrument used to measure level in a vessel that is open to atmosphere may have one of its input connections, as appropriate, open to atmosphere instead of being connected to the vessel. An external-chamber instrument thus installed may require additional bracing.

8. A pair of sensing lines for head-type level measurement shall have an equalizing manifold with bleed valves. Because of support problems, commercial manifold assemblies having flanged outlets shall not be used in seismic applications. In other applications, their use is not recommended for the same reason.

9. The usual level-instrument connections on vessels are:

Head-type instruments:	
Piped	3/4"
Flanged-mounted	3"
Float or Displacement-type Switches	1-
1/2" Displacement-type Transmitters and Controllers:	
External	1-1/2" or 2"
Internal	4"
Multi-instrument standpipes	3"

10. Displacement and float-type level instruments shall be placed as close as possible to the vessel to improve response. If any external-chamber instrument or a standpipe unavoidably cannot be located close to the vessel, the size of the connecting pipes shall be enlarged to facilitate the transfer of liquid on level changes, thereby reducing the loss of response caused by the long sensing and equalizing lines. The ENGINEER shall review and approve such installation.

J. Instrument Installation Notes - Pressure Differential: Condensate pots are not required for a sensing element, e.g., a force-balance transmitter that has negligible dynamic displacement. If displacement is not negligible as for a U-tube manometer, and if the process fluid is either steam, other condensable fluid, water hotter than 250°F, or other fluid that may flash, then condensate pots shall be used. The pots shall have a volume not less than three times the displaced volume.

1. A pair differential-pressure sensing lines shall be run together to the maximum extent practical to keep both lines at the same temperature. If they are to be insulated, they shall be insulated together.

2. A pair of condensate pots must be at the same elevation and as high or higher than the higher process connection.

3. The pipe from a process connection to a condensate pot shall be insulated for process fluids hotter than 250°F.

4. The differential-pressure sensing lines shall be checked to make sure that they are connected to the proper sides, HP and LP, of the instrument.

5. A pair of differential-pressure sensing lines shall have an equalizing manifold with bleed valves. Because of support problems, commercial manifold assemblies having flanged outlets shall not be used in seismic applications. In other applications, their use is not recommended for the same reason.

K. Installation – Pressure gauges; All gages and appurtenances shall be installed at the locations shown in the Contract Documents and in accordance with the manufacturer's printed instructions.

1. Care shall be taken to minimize the effect of water hammer or vibrations on gages. Gages shall be filled with oil.

2. Where indicated or necessary for proper operation, gages shall be mounted independently of vibrating piping or machines, and connected to the process with diaphragm seals, snubbers, and flexible capillary tubing.

L. Instrument Installation Notes - Pneumatic: Air supply headers shall be sized as noted on the P&ID. Air-supply branch taps shall come off the top of the header but may come off the side if necessary.

1. Lines for air that is not dry shall be sloped. Dry air lines shall be sloped where possible. Low points shall have drain connections. Air header drains shall be 1/2" size.

2. Branch isolation valves shall be installed as required to reduce interdependence of branches and to facilitate maintenance.

3 Each pneumatic instrument shall have a local 5-Micron air filter, which may be part of an air set if the supply pressure is required to be reduced. When pressure is reduced for an instrument, a relief valve, which may be integral with the reducing regulator in an air set is generally required. The regulator shall be provided with a small output-pressure gage if the instrument does not have a supply-pressure gage.

4. Lubricated air may be required for certain piston actuators or other devices But shall not be used for any other pneumatic devices. If necessary, use a local lubricator.

M. Instrument Installation Notes - Temperature: Non-standard wells are not allowed to be connected to the process pipe or vessel. It is necessary to make sure that there is internal clearance for insertion and that no excessive obstruction to flow is created.

1. Direct-connected readout instruments, e.g., thermometers or indicating transmitters, shall be located near the most convenient point of use consistent with good measuring practice.

2. Filled-system temperature instruments shall follow the manufacturer's limitations, if any, regarding (a) relative elevations of bulb and measuring instrument, and (b) ambient temperatures.

3. Pressure and Temperature instruments shall be installed to minimize exposure to shock, vibration, and radioactivity, and to avoid temperature extremes.

4. Instruments shall not block walkways. For use, calibration, and repair, they shall be accessible without requiring instrument disassembly or the removal of piping, grating, or other structure.

5. Where a pipe is reduced or enlarged for a temperature connection, consideration shall be given to the orientation of the pipe and the possibility of the change of pipe size causing high- or low-point pockets that may affect the measurement by entrapment of material or that may accumulate a radioactive substance.

6. Temperature connections shall be located to provide external clearance for insertion and removal of their sensing elements.

7. The materials and pressure-temperature ratings of pipe fittings used for temperature connections shall conform to the applicable pipe class.

8. Welding shall conform to project requirements.

9. A temperature-well connection to a pipe, which is made by weld-attachment of a fitting or nozzle, shall be drilled to have a hole approximately the same size as the inside

diameter of the fitting or nozzle. The intent is to provide clearance for insertion of the well and to minimize the entrapping of fluid.

10. For threaded connections of stainless steel to stainless steel, lubrication is required to prevent seizing and galling.

11. Filled-system temperature elements shall be sealed to the instrument by the instrument manufacturer and are not repairable in the field. Filled systems shall not be opened or cut during installation and shall be routed and protected as required to guard against damage. Excess lengths of capillary tubing for filled systems shall be neatly coiled in a protected area or enclosure, e.g., coiled inside a protective shipping cap for 12 inch pipe, preferably avoiding ambient temperature extremes.

12. Manufacturer's installation requirements, including those relating to unsupported span and minimum bend-radius of capillary tubing, shall be followed.

N. Calibration: Analog instrumentation and control system equipment shall be calibrated and tested after installation to verify that control system requirements are satisfied.

1. The Instrumentation Subcontractor shall provide all necessary labor, tools, and equipment to calibrate and test each instrument in accordance with the manufacturer's specifications and instructions.

2. Each instrument shall be calibrated at a minimum of five points using test equipment to simulate inputs and read outputs. A fewer number of calibration steps may be used for selected instruments if prior written approval has been obtained from the ENGINEER.

3. All test equipment and instruments used to simulate inputs and read outputs shall be suitable for the purpose intended and shall have a current calibration record certified to an accuracy greater than that required for the instrument under test. Such test equipment shall have accuracy traceable to the National Bureau of Standards as applicable. All analog instruments shall be calibrated and tested in place without removal.

4. All test data shall be entered on test forms that verify compliance with all applicable contract accuracy requirements, instrument manufacturer published performance specifications, and permissible tolerances at each point of calibration.

5. A report shall be delivered to the ENGINEER for each instrument, certifying that the instrument has been calibrated, in the presence of the ENGINEER or the ENGINEER's designated representative and meets contract and system requirements. The report shall include but not be limited to pertinent manufacturers name plate data, units span setting, any error in percent at each test point, switch and alarm set points, valve stroking and controller balancing information.

O. Analog/Digital Loop Tests: The Instrumentation and Control System Subcontractor shall provide all necessary labor, tools, and equipment to field test, inspect and adjust each instrument installed under this contract to its specified performance requirement in accordance with manufacturer's specifications and instructions. Any instrument furnished by the Instrumentation and Control System Subcontractor which fails to meet any Contract requirement, or any published manufacturer performance specification for functional and operational parameters, shall be repaired or replaced, by Instrumentation Subcontractor at no cost to the CITY. The Instrumentation and Control System Subcontractor shall bear all costs and provide all personnel, equipment and materials necessary to implement all installation tests and inspection activities specified herein.

1. At least 15 days before the anticipated initiation of installation testing, the Instrumentation and Control System Subcontractor shall submit to the ENGINEER a detailed description, in duplicate, of the installation tests to be conducted to demonstrate the correct installation of the instrumentation and control system and the anticipated dates the testing will occur.

2. Elements such as controllers, electronic function modules, shall be tested and exercised by the Instrumentation Subcontractor to demonstrate correct operation, first individually and then collectively as functional analog networks. Each hardwired analog control network shall be tested to verify proper performance within specified accuracy tolerances. Specified accuracy tolerances for each analog network shall be defined as the root-mean-square (RMS) summation of individual component accuracy requirements. Individual component accuracy requirements shall be as specified by contract requirements or by published manufacturer accuracy specifications, whenever contract accuracy requirements are not specified.

3. Each analog network shall be tested by applying simulated analog/digital and/or discrete inputs to the first element(s) of an analog/digital network (i.e., applying simulated analog and/or discrete signals to element(s) of the network; e.g., controllers, alarms, indicators, valve operators). For networks which incorporate analog elements, simulated sensor inputs corresponding to 10 percent, 50 percent, and 90 percent of span shall be applied, and the resulting element outputs read to verify compliance to calculated root-mean-square- summation accuracy tolerance requirements. Continuously variable analog inputs shall be applied to verify the proper operation and setting off discrete devices (i.e., alarms). Provisional settings shall be made on controllers, alarms, during analog loop tests. All analog loop test data shall be recorded on test forms, which include calculated root-mean-square-summation system accuracy tolerance requirements for each output.

4. Air systems shall be tested for leaks in compliance with ISA RP7.1. When installation tests have been successfully completed for all individual instruments and all separate analog control networks, a certified copy of all test forms signed by the ENGINEER or the ENGINEER's representative as a witness, with test data entered, shall be furnished to the CITY together with an unequivocal statement that all instrumentation has been successfully calibrated, inspected, and tested.

5. Digital loops shall be tested for loop integrity and on/off function.

P. System Pre-commissioning: The Instrumentation and Control System Subcontractor shall submit an instrumentation and control system Pre-commissioning Completion Report, which shall state that all Contract requirements have been met and shall include a listing of all instrumentation and control system maintenance/repair activities conducted during the pre-commissioning testing. Acceptance of the instrumentation and control system pre- commissioning testing must be provided in writing by the engineer before the seven day operational testing may begin. Pre-commissioning shall commence after acceptance of all wire, calibration and loop tests, and all inspections have demonstrated instrumentation and control system compliance with all contract requirements. Pre-commissioning shall demonstrate proper operation of all systems under this Contract with process equipment operating over full operating ranges under actual operating conditions.

1. All pre-commissioning and test activities shall follow detailed test procedures, check lists previously developed by the Instrumentation and Control System Subcontractor and reviewed and accepted by the ENGINEER. All test data shall be acquired using equipment as specified and recorded on test forms, previously reviewed by the ENGINEER, which include calculated tolerance limits for each step. Completion of all system pre-commissioning and test activities shall be documented by a certified report, including all test forms with test data entered, delivered to the ENGINEER with a clear and unequivocal statement that all system pre-commissioning and test requirements have been satisfied.

2. Proper operation of all final control elements, control panels and instrumentation furnished under this Contract shall be verified by tests specified herein. Where feasible, system pre-commissioning activities shall, to the greatest extent possible, simulate normal final control element operating conditions in terms of applied process loads, operating ranges and environmental conditions (e.g. using water). Final control elements, control panels, and ancillary equipment shall be tested under start-up and steady-state operating conditions to verify that proper and stable control is achieved using motor control center and local field mounted control circuits. All hardwired and software control circuit interlocks and alarms shall be operational. The control of final control elements and ancillary equipment shall be tested using both manual and automatic (where provided) control circuits. The stable steady-state operation of final control elements running under the control of field mounted automatic analog controllers or software based controllers shall be assured by adjusting the controllers, as required, to eliminate oscillatory final control element operation. Transient stability of final control elements operating under the control of field mounted, and software based automatic analog controllers shall be verified by applying control signal disturbances, monitoring the amplitude and decay rate of control parameter oscillations (if any) and making necessary controller adjustments, as required, to eliminate excessive oscillatory amplitudes and decay rates.

3. All electronic control stations incorporating proportional, integral and/or differential control circuits shall be optimally tuned, experimentally, by applying control signal disturbances and adjusting the gain, reset and/or rate setting(s) as required to achieve a proper response. Measured final control element variable position/speed setpoint settings shall be compared to measured final control element position/speed values at 25 percent, 50 percent, 75 percent and 100 percent of span and the results checked against specified accuracy tolerances. Specified accuracy tolerances are defined as the root-mean-square-summation of individual component accuracy requirements. Individual component accuracy requirements shall be as specified in the Contract or as specified by published manufacturer accuracy specifications whenever Contract accuracy requirements are not specified.

Q. 30-Day Operational Testing: The Instrumentation and Control System Subcontractor shall provide start-up support to include the Instrumentation and Control System Subcontractor's personnel, electrical personnel, and any instrument manufacturers' representatives as required during the testing period to produce a fully operational system. This support shall be provided at no additional cost to the CITY.

R. Record Drawings: Keep current an approved set of complete loop and schematic diagrams which shall include all field and panel wiring, piping/tubing runs, routing, mounting details, point-to-point diagrams with cable, wire, tube and termination numbers. These drawings shall include all instruments and instrument elements for the complete instrument loop as furnished under Divisions 11, 13, 15, 16 and 17 of this Contract. Drawings shall be a record of work as actually constructed and shall be prepared and submitted as specified in the GENERAL REQUIREMENTS.

3.5 INSTRUMENT LOOP DESCRIPTION -- SEE LOOP DESCRIPTIONS in the drawings.

3.6 INSTRUMENT AND I/O SUMMARIES - SEE INSTRUMENT SUMMARY, included in the drawings.

A. General: An Instrument and I/O Summary has been compiled for most instruments specified to be furnished under this contract.

B. This index is intended to complement the plans and specifications and shall not be construed as representing a complete itemization of instruments specified to be furnished under this contract. Instruments not presently included in the index, but which can be inferred from the Contract Documents and/or are required elsewhere herein shall be included and incorporated into the

instrument and I/O summary.

3.7 INSTRUMENT DATA SHEETS - Contractor shall prepare and submit instrument data sheets for instruments specified to be furnished under this project. Data sheets are intended to complement the Instrument and I/O Summary, plans and specifications.

3.8 CALIBRATION FORMS – Contractor shall prepare and submit calibration forms for instruments specified to be furnished under this contract.

END OF SECTION 17400

SECTION 17450
SCADA, PLCS, NETWORK AND COMMUNICATIONS

PART 1 -- GENERAL

1.1 THE REQUIREMENT

A. This section specifies requirements for PLCs, SCADA, networks, and data communications shown on the drawings.

B. The Contractor shall furnish, install, configure, test, and document, all copper and fiber-optic communications network systems, including cables, switches, firewalls, software, and software licenses. The work includes accessories and appurtenances needed to provide reliable communications systems, as specified.

C. Operator HMIs

1. The System Integrator shall create an overview display for the stormwater diversion system at the new Honeywell, or equal, HMI (in LCP-01) attached to the new ControlEdge PLC. Display screens to include alarms, trending, and provide gate control.

2. Venice pump station will monitor the PLC, via the new EPL connection. As part of the scope of this project, the LCP-01 HMI displays will be replicated on the Venice station's new Honeywell, or equal, DCS. The Contractor will provide an Allowance for Honeywell to perform Venice configuration and testing.

D. The Ethernet Private Line (EPL) communications will be provided between LCP-01 and Venice Pump Station. The Contractor to coordinate with the City to arrange installation and testing of the EPL communications line and mounting of the Service Provider's EPL modem/router and associated fiber-optic patch panel.

E. SCADA configuration at Venice Pump Station

1. Contractor and System Integrator shall coordinate with City and Honeywell, or equal, control system staff for implementation of control strategies, graphic user interface screens, alarming, reports, and communication connectivity.

2. Contractor and System Integrator shall lead a minimum of two (2) workshops with City to coordinate PLC and HMI approaches and interface requirements.

3. Contractor and System Integrator shall lead a minimum of two (2) field testing sessions to verify stormwater diversion controls and displays at Venice Pump Station.

1.2 RELATED WORK SPECIFIED ELSEWHERE

A. Other Sections of the Specifications, not referenced below, shall also apply to the extent required for proper performance of the WORK of this Section.

1. All Division 16000 Sections.

2. Section 17400 Process Instrumentation and Controls.

1.3 REFERENCE SPECIFICATIONS, CODES AND STANDARDS

A. The following documents referenced shall mean:

1. EIA Electronics Industry Alliance
2. TIA Telecommunications Industry Association
3. NEC National Electric Code. NFPA 70
4. NECA National Electrical Contractors Association

B. Comply with the applicable provisions of the latest edition of the following standards for design, materials, installation, and testing:

1. TIA/EIA-568-B Telecommunications Cabling Standard.
2. ANSI/ ICEA S-83-596 Optical Fiber Premise Distribution Cable.
3. ANSI/ ICEA S-87-640 Optical Fiber Outside Plant Communications Cable.
4. ANSI/ NECA 301 Standard for Installing and Testing Fiber Optic Cable.
5. TIA/ EIA-526-7 Measurement of Optical Power Loss of Installed Single Mode Fiber.
6. Bellcore GR-20-Core Generic Requirements for Optical Fiber and Optical Fiber Cable.
7. TIA/ EIA 568-B Telecommunications Cabling Standard.

1.4 SUBMITTALS

A. See submittal requirements of Section 17400 “Process Instrumentation and Control”.

B. Furnish submittals including shop drawings, product literature and datasheets,

C. Network and communications test plans: Submit a detailed test plan including the following:

1. Media to be verified and test methodology.
2. Test equipment to be used with calibration certificate.
3. Testing Procedures.
4. Network diagrams.

D. Control Systems testing procedure. See Section 17400.

E. The Shop Drawings: The shop drawings shall include a full description of the PLC system, including documentation of operation theory, programming methods, i.e. ladder logic diagram (All contacts, coils, timers, latches and each section of the ladder shall be clearly annotated and defined. The annotation of each of the input contacts representing a field device shall clearly define the status of the device.), data codes and security features, maintenance and trouble-shooting information. Schematics of all cards or units within the system along with point-to-point wiring diagrams shall be furnished after award of contract.

1. The documentation shall, also, provide a sequential flow chart of the logic implemented. The format of the flow chart and the annotation shall be proposed for acceptance by the ENGINEER before implementation.
2. Two sets of the program and documentation shall be forwarded for review and comments at least 30 days before factory test.

3. Control system architecture and interconnection cabling diagrams for the complete system. Include each cable fiber and copper network cable connection.

F. Product Data

1. Manufacturers brochures with proposed materials and options clearly marked.

2. Data sheets, including catalog numbers with code for determining catalog number code. Include data sheets for all cabinet components, instruments, cables, Ethernet switches, firewalls, and cable management.

3. Manufacturer’s installation instructions for equipment proposed.

4. Submit results of an un-witnessed test performed prior to the witnessed test. Any deficiencies found are to be noted and corrected before the witnessed test. Unwitnessed Test Results together with any re-testing, to be signed by Contractor as being correct.

G. Test Report results: Submit a hardcopy report for approval by the Engineer:

H. O&M Manual: Include in the submitted O&M Manual the following as a minimum:

1. Manufacturers network device data sheets and installation instructions.

2. System Network Diagram showing device model numbers and network addresses.

3. Documentation of all final device configuration settings, IP addresses and passwords.

1.5 QUALITY ASSURANCE

A. Training: A manufacturer's representative shall supply 40 hours of on-site training if required, for CITY personnel. The training shall include, but not be restricted to, operation of programming unit, trouble shooting of system hardware, software, and program development.

B. Communications system installer qualifications: The communications system installer shall:

1. Demonstrate direct experience with installation and testing of communications systems on at least two similar recent projects in the last three years.

2. Utilize qualified, experienced personnel, familiar with the design, installation, and configuration of communications systems.

3. Provide special tools and equipment needed for the installation and testing of the communications system, including but not limited to tools for terminating and testing copper/fiber-optic cables, jack stands for cable reels or cable winches, and OTDR testing

1.6 COMMUNICATIONS WITH VENICE PUMP STATION

A. The Contractor to coordinate with the City of LA and the selected Ethernet Private Line (EPL) Service Provider, to install and test the communications link to Venice Pump Station.

B. The Contractor shall install the Service Providers modem and fiber-optic patch panel in the Local Control Panel (LCP-01).

C. The Contractor to coordinate with Honeywell, or equal and the Engineer/ City to provide PLC register data to allow proper configuration of the SCADA screens at Venice Pump Station and testing of the communications link to the station.

D. The City's Information Technology Agency (ITA) is responsible for selecting and contract with the EPL Service provider to establish the communications link.

PART 2 -- PRODUCTS

2.1 PROGRAMMABLE LOGIC CONTROLLER HARDWARE

A. PLC hardware shall be Honeywell, or equal – ControlEdge 900 platform, no equal, and provide the following features:

1. All PLC components, including power supplies, racks, CPUs, memory, I/O modules and cables shall be standardized to minimize the spare parts inventory and maximize interchangeability, and to conform to the City's LAWINS Standards.

2. All I/O modules shall be installed with appropriate type and size of Remote Termination Cables (RTP) and associated RTP module for field wiring terminations.

3. All CPUs shall have 16MBIts non-volatile memory for retention of key programming.

4. Each PLC shall have the ability to provide 4GBits of Dynamic memory capacity (RAM) and 2GBits of Program memory capacity (Flash)

5. Each PLC shall have the ability to operate in redundant or non-redundant modes and shall have the capability of a maximum of thirty-one (31) I/O bases and 372 Slots.

6. Each PLC shall be provided with redundant power supplies and shall be sized as required for I/O and field requirements. Power supplies shall provide a minimum of 5VDC @ 3.0A and 24VDC @ .6A. Power supply shall be Honeywell, or equal, 900P01-0101.

7. Input power: 120VAC, 60Hz

B. PLC Hardware shall be:

Honeywell, or equal, ControlEdge PLC Hardware		
Part Number	**Manufacturer**	**Description**
900CP1-0200	Honeywell or Equal	Control Processor Module (CPM), ControlEdge 900
900SP1-0200	Honeywell or Equal	Expansion Processor Module (EPM), ControlEdge 900
900R12-0200	Honeywell or Equal	12 I/0 Slot Rack
900P01-0301	Honeywell or Equal	120/240 VAC. 60W Rack Power Supply
900G32-0101	Honeywell or Equal	Digital Input, 24 VDC, 32 Channel
900H32-0102	Honeywell or Equal	Digital Output, 24 VDC, 32 Channel
900A16-0103	Honeywell or	Analog Input High Level, 16 Channel

	Equal	
900B01-0301	Honeywell or Equal	Analog Output, 0 to 20 mA, 4 Channel
900TCK-0200	Honeywell or Equal	Digital I /0 - A/I - Terminal Block
900TEK-0200	Honeywell or Equal	Analog Output - Terminal Block
900TNF-0200	Honeywell or Equal	Filler Block Cover, Spare I/0 Slot

1. PLC I/O modules shall be Honeywell, or equal, Universal Input/Output Module (900U01-0100), or equal.

2. Interposing relays shall be provided for all relay outputs

2.2 HUMAN MACHINE INTERFACE HARDWARE (HMI-100)

A. The Where required, panel mounted HMI shall be Honeywell, Model HC 900 family, or equal.

B. The panel mounted HMIs shall have a keypad and touch-screen, including dedicated membrane keyboard to access up to 80 preformatted graphic displays.

C. The display screen shall be a minimum of 10.4” LCD color screen.

D. The HMI shall be capable of communicating with the PLC via an Ethernet TCP/IP or Modbus TCP connection.

E. Input power: 120VAC, 60Hz via 24VDC Power Supply.

2.3 PLC AND HMI PROGRAMMING DEVELOPMENT SOFTWARE

A. The PLC programming software shall be Honeywell, or equal, ControlEdge Builder– Latest Revision

1. The PLC programming software version for the PLCs shall be certified to run on the latest version of Microsoft Windows.

2. The PLC programming software shall comply with the International IEC 61131-3 standard and support Ladder Diagram, Sequential Function Chart and Structured Text programming language formats.

B. The HMI programming software shall be Honeywell MasterLogic ”Station Designer” for HC 900 family, or equal – Latest Revision

1. The HMI programming software version shall be certified to run on the latest Microsoft Windows platform.

2. The HMI programming software shall be capable of directly accessing tag information in the PLC by using the tag name, and not the memory address.

2.4 PLC APPLICATION OF SOFTWARE DESIGN CRITERIA

A. PLC Program Design:

1. CONTRACTOR shall organize the PLC application software into:

a. Sections

1). Contains all sequential control logic for a specific unit of operation

2). Each section consists of a general logic subsections, followed by unit operation subsections.

b. Subsections: Contains all sequential control logic for specific equipment such as a pump, valve or loop.

2. Program Documentation

a. Note and describe start of a new program section.

b. Annotate the PLC program

c. Briefly describe the control objectives.

d. Identify subsections
e. Subsection documentation includes brief description of control objective followed by a description and tag of the equipment being controlled

f. CONTRACTOR shall provide an, internal or external, organizational index for PLC application software that can be used to quickly search and locate a specific section, such as:

1). Flow, pressure and other process variable monitoring

2). Control valve or VFD PID control

3). Unit pump control

4). Unit blower control

5). Alarms

6). Data communications

7). System time-synchronization

8). PLC program initialization

g. The PLC program shall be able to initialize and bring a PLC unit from an inactive condition (e.g., power failure or hardware reset) to a state of operational readiness. Initialization shall include determination of system status prior to start-up of the operating system software and application software. Initialization shall also include the loading of all memory resident software, operator-entered setpoints, timers, counters, queues and all dynamic database values. For example, existing operator-entered setpoints shall not require operator re-entry after a power failure or after the downloading of a new PLC program.

2.5 HMI APPLICATION SOFTWARE DESIGN

A. General:

1. CONTRACTOR shall develop and submit HMI application software in accordance with ASM guidelines and in strict accordance with these requirements.

2. The following items outline the key objectives in designing the HMI graphic displays:

    a. Easily navigated menus

    b. Provide no more than three (3) mouse actions to navigate to any graphic display

    c. Maintain consistency in graphic display and controls design

    d. Maintain consistent and predictable window operations

    e. Accurate representation of the facility and its operation

    f. Represent control options in an easily understood fashion

    g. Wherever possible, design overview displays similar to the physical layout of the facility. The perspective to the physical layout should be from the local main control room.

    h. Provide operator access to process and alarm setpoints, including the following:

        1). Process alarms (High-High, High, Low, and Low-Low)

        2). Control setpoints.

        3). Process timer setpoints

        4). Sequence setpoints for volume, level, time, etc.

        5). Set or correct the time and date of the Real Time Clock for both the PLC and HMI. The time and date of both the PLC and HMI shall be synchronized to the DCS clock once per day.

    i. Provide an alarm/event screen with listing of current and historical alarms and events, e.g., operator login/commands/set-point entry, change in pump/blower/equipment status, including descriptions, times of occurrence, operator acknowledgement and return to normal status.

    j. Configure the HMI to provide four levels of user access security.

        1). Visitor: View screens only

        2). Operator: View screens, enter process setpoints, and select equipment configuration.

        3). Supervisor: All access provided to an Operator, but in addition ability to change alarm setpoints and PID controller parameters.

        4). Administrator: Access to all functions.

B. HMI's graphics screens shall be programmed to comply with City (WINS) latest HMI standards including symbols, colors, layout, navigation. Provide the following:

    1. Overall Facility Layout Operating/Monitoring/Troubleshooting screens.

    2. Log – in screen.

    3. Process status screen (s).

4. Plant configuration screens.

5. Setpoint entry screens.

6. Alarm logs.

7. Event log.

8. Maintenance screen.

9. Communication screen.

10. Trend screen.

11. Report screens.

12. All screens shall have top three lines to display latest alarms, with date and time stamp, with navigational buttons for navigating between screens.

13. Screen graphics presentation to follow the recommendations of ISA-101, and the existing plant SCADA screens symbols, color scheme, and alarming.

14. Provide pop-up windows for: mini-trends.

15. Provide active page connectors for navigation.

C. Provide pre-configured local trend displays of the following historical data with a choice of time ranges of at least 1hr, 4 hrs, 24 hrs and 7 days.

1. Stormwater diversion flow together wetwell and/or basin level.

2. Pump on/off together with pump discharge flow and pump kW.

3. Facility kW (15 minute average) and kW/1000 gallons of pump discharge flow.

D. PLC/HMI I/O DATABASE

1. CONTRACTOR shall segment all I/O and cards to increase the reliability of all systems and limit any single I/O card failure causing an outage.

2. CONTRACTOR shall provide, coordinate, manage and document a PLC Database in accordance with LAWINS tag naming conventions. The Database shall have the following functions:

a. The database shall contain all the fields necessary to configure the various points including the following per point type:

1). Discrete Point configuration: CONTRACTOR shall provide a PLC/HMI Discrete I/O database of all the analog and discrete points. The I/O list includes the following fields:

a). Loop Number

b). Tag number

c). Type

d). Point description

e). Alarm Description 1

f). Alarm Description 2

g). Closed Condition Input: Description of the state of the input parameter of device when the field or internal PLC contacts are in the CLOSED position.

h). Open Condition Input: Description of the state of the input parameter of device when the field or internal PLC contacts are in the OPEN position.

i). Closed Condition Output: Description of the state of the output signal in the CLOSED condition

j). Open Condition Output: Description of the state of the output signal in the OPEN condition.

k). PLC name and/or number

l). PLC network address

2). Analog Point Configuration: CONTRACTOR shall provide a PLC/HMI I/O database of all analog points that are communicated to and from the DCS and the HMI. The analog I/O database shall include, but is not limited to, the following fields:

a). Attributes that further define the function of the points as listed below: Note that the attributes will be used for sorting and development of the I/O driver configuration. Additional attributes shall be developed to meet the software needs:

i Setpoint read
ii Setpoint write
iii Process variable
iv Flow totalizer read
v Equipment run time

b). Point description

c). Alarm description 1

d). Alarm description 2

e). Engineering units

f). Scale range

g). Alarm ranges:
i High-High
ii High
iii Low
iv Low-Low
v Signal fail
vi Rate of Change
vii Other

h). PLC number

i). PLC I/O hardware address

j). PLC I/O memory address

E. System Growth

1. Contractor shall provide twenty (20) percent spare capacity. Spare capacity shall be based on current ‘equipped’ I/O counts

F. Operations and Maintenance Manuals: Furnish to the ENGINEER 10 complete sets of Operation and Maintenance manuals. The manuals shall include data sheets, catalog cuts, approved shop drawings, manufacturer’s technical manuals, information drawings, etc., for the system, subsystems, and all components, and shall include names, addresses and telephone numbers of equipment suppliers, representatives and repair facilities.

1. This shall include a complete description of the recommended operating procedures, maintenance procedures, and spare/replacement parts list for equipment items with catalog data, diagrams, and drawings or cuts describing the equipment..

2. Each set shall include full size assembly and wiring diagrams; drawings showing "as built" conditions shall be furnished to the CITY

2.6 PLC PANEL

A. Refer to Section 17400 “Process Instrumentation and Control”.

B. Provide 316 stainless steel NEMA 4X PLC cabinet with air conditioner. Size conditioner for a maximum ambient of 110 deg F. Provide cabinet thermal calculations with shop drawing submittal.

C. PLC cabinet to exclude motor starters, VFDs and any 480V devices.

2.7 SPARES

A. The following spare parts shall be provided:

1. One of each type of PLC controller module

2. One of each type of communications and remote I/O module.

3. One I/O module for each ten of each type installed, with a minimum of 2 per type

4. One spare PLC power supply.

5. One field termination module of each type for every ten installed, with a minimum of 2 per type.

6. One of each type of preformed interconnection cable

2.8 MANAGED INDUSTRIAL ETHERNET SWITCH WITH INTEGRAL FIREWALL.

A. Furnish industrial managed Ethernet switches with firewall as shown on the drawings and complying with the requirements of this Section, to provide network connectivity between network components.

B. The Ethernet switch manufacturer shall be CISCO, Industrial Security Appliance 3000, no exceptions

C. Provide the switch with the following minimum features:

1. Fan-less metal enclosure. DIN rail or rack mounting. Built for harsh environments.

2. Ports: As required. Minimum of two shielded RJ45 10/100 Mbps Ethernet ports with auto negotiation. One Ethernet RJ console port.

3. Support Small Form-factor Pluggable (SFP) transceivers, selectable for copper and single/ multi-mode fiber networks. Provide a minimum of 2 SFP ports.

4. SFP fiber transceivers as shown on the drawings. Coordinate transceiver model with the requirements of the ESL Service Provider.

5. Ethernet /IP support. Port security and access control.

6. Rapid Spanning Tree Protocol, and bandwidth control.

7. Power supply: 120 VAC

8. Minimum operating temperature range: -40 to 70 deg C (-40 to 158 deg F)

D. Provide threat defense/malware application and 5-year update subscription. License in the name of the City of LA

2.9 UNMANAGED INDUSTRIAL FAST ETHERNET SWITCH

A. Furnish industrial unmanaged Ethernet switch as shown on the drawings and complying with the requirements of this Section, to provide network connectivity between network components.

B. The Ethernet switch manufacturer shall be CISCO, Industrial Security Appliance 2000, Red Lion N-Tron series, Allen Bradley, or equal.

C. Provide the switch with the following minimum features:

1. Compact, fan-less metal enclosure. DIN rail mounting. Built for harsh environments.

2. Copper ports: As required. Minimum of four shielded RJ45 10/100 Mbps full duplex Ethernet ports with auto negotiation. One Ethernet RJ console port.

3. Support Small Form-factor Pluggable (SFP) transceivers, selectable for copper and single/ multi-mode fiber networks. Provide a minimum of 2 SFP ports.

4. SFP fiber transceivers as shown on the drawings. Coordinate transceiver model with the requirements of the ESL Service Provider.

5. Ethernet /IP support. Port security and access control.

6. Rapid Spanning Tree Protocol, and bandwidth control.

7. Power supply: 120 VAC

8. Minimum operating temperature range: -40 to 70 deg C (-40 to 158 deg F)

9. DIN rail mounting kit.

2.10 FIBER OPTIC PATCH PANELS

A. All fiber-optic cable terminations shall be made in optical patch panel assemblies. Patch panel assemblies shall be of the pre-assembled chassis type with associated rack or wall mounting hardware.

B. To facilitate the transition between outside plant cable and the pre-connectorized cable assemblies, the fibers shall be fusion spliced and housed in a splice tray. Splice tray shall be positioned in the optical patch panel assembly per manufactures recommendation. Splice attenuation shall not exceed 0.2 db. Splice shall be covered with a protective sleeve. Splice tray to provide fiber storage.

C. Provide one port for each fiber specified. Terminate all spare fibers within the patch panel.

D. Provide protection and strain relief for cables entering the patch panels.

E. Provide fiber-optic patch cords to connect between the fiber-optic panel and fiber-optic network equipment.

F. Provide machine printed port labels, and cable management items to maintain a greater than minimum cable bending radius.

G. Manufacturer shall be: Corning Cable Systems, Panduit, Commscope, or equal.

2.11 FIBER-OPTIC CABLE

A. Single mode fiber cables:

1. Type: Single mode, loose tube, gel-free, indoor/outdoor rated with water blocking layer.

2. Designed for inter-building and intra-building backbones Flame retardant, low smoke, zero halogen.

3. Core/ clad diameter: 8.2/ 125 micron

4. Number of fibers: As shown on the drawings. Minimum of 12.

5. Maximum attenuation: 0.4 dB/km at 1310 nm, 0.3 db at 1550 nm

6. Maximum connector loss: 0.75 db

7. Maximum splice loss: 0.2 db

B. Multimode fiber cables

1. Loose-tube, gel free, indoor/outdoor rated with water blocking layer. Color coded fibers according to TIA/EIA-598.

2. Designed for inter-building and intra-building backbones Flame retardant, low smoke, zero halogen.

3. Core/ Clad diameter: 50/125 micron

4. Number of fibers: As shown on the drawings. Minimum of 12 fibers.

5. Maximum attenuation: 2.5 dB/km at 850 nm, 0.3 db at 1550 nm

6. Maximum connector loss: 0.75 db

7. Maximum splice loss: 0.2 db

C. Connectors: LC/UPC-90° (TIA/EIA-604-10A) polished connectors unless required otherwise by equipment.

2.12 COPPER NETWORK CABLE

A. Category 5E, 6 network cable.

1. Cable: CAT 5E, 6 UTP, rated indoor/outdoor as required by NEC Article 800

2. Jacket: FEP/PVC

3. Conductors: 4 pair, 23 AWG minimum

4. Manufacturer: Belden, Berk-Tek, General Cable or equal.

PART 3 -- EXECUTION

3.1 INSTALLATION

A. Install communications equipment and cables as recommended by the manufacturer and in accordance with TIA-568-C.0/ C.1, C.2, C.3

B. Ensure maximum pulling tensions of communications cables are not exceeded, and cable bends maintain proper radius

C. Prior to installation, physically inspect cable for damage to the jacket as it is taken from the reel. Do not install damaged cable.

D. D. Install equipment and cables as recommended by the Manufacturer and in accordance with TIA-568-C.0/C.1,C.2, C.3.

E. Provide all device configuration required to implement the full functionality of the networks/ communication system. Document the final configuration parameters, IP addresses, and passwords. Include a copy in the submitted Operations and Maintenance Manuals.

F. Category 5E, 6 Ethernet network cable testing.

1. Test Ethernet cables with cable network test set (Fluke LinkIQ or similar) and record results.

2. Measure values and determine pass/fail result for each parameter. Include:
   a. Continuity and attenuation
   b. Shorts between conductors
   c. Crossed and reversed pairs
   d. Cable length
   e. Bandwidth.

3.2 TESTING - GENERAL

A. All control panels and other control system equipment shall be factory tested to verify all functions and features of the equipment; both the manufacturer’s published specifications and compliance with all requirements of these Contract Specifications.

B. The ENGINEER may witness testing of the units.

C. Solid-state logic systems shall be tested as complete assemblies. Testing of individual components or modules will not be acceptable. All testing shall be witnessed by the representative of the City Engineer. All costs for travel, lodging, transportation, meals, per-diem and other related expense shall be paid by the Contractor as part of the Contract Bid price. See General Requirements, Section 01453: Sampling, Testing and Fabrication Inspection..

D. Seven Day Acceptance Test:

1. After startup has been completed, the System shall undergo a seven (7) day acceptance test. The System must run continuously for seven (7) consecutive days. During this period, all System functions shall be exercised, and any System interruption and accompanying component, subsystem, or program failure shall be logged for cause of failure, as well as time of occurrence and duration of each failure. A failure shall cause termination of the seven (7) day acceptance test. When the cause of a failure has been corrected, a new seven (7) day acceptance test shall be started. Skilled technicians shall respond to all trouble calls by the CITY.

2. The technician responding to a System malfunction, must prepare a report which includes details concerning the nature of the complaint or malfunction and the resulting repair action required and taken, plus time and date of occurrence and correction.

3. The System Malfunction Report form shall be submitted to the ENGINEER for review and approval before the time of re-start of testing. Failure to obtain ENGINEER approval for the Report form shall cause postponement of testing.

3.3 FIBER-OPTIC CABLE TESTING

A. Provide 100% attenuation testing of all cable fibers while on the reel and prior to installation. Document results including cable manufacturer, date of manufacture, shipping date, cable identification, length and fiber identification. Submit results for approval prior to installation

B. Install communications equipment and cables as recommended by the manufacturer and in accordance with TIA-568-C.0/ C.1, C.2, C.3

C. Ensure maximum pulling tensions of communications cables are not exceeded, and cable bends maintain proper radius..

D. Visual inspection for continuity. Connector and loss testing after installation.

1. Fiber Connector Inspection: Use a fiber optics microscope to check the quality of the termination. A well-made connector is smooth, polished, scratch free with no signs of cracks, chips or areas where the fiber is either protruding from the end of the ferrule or pulling back into it. Remake poor connections.

E. After cable installation use a power meter per EIA/TIA 455-78-B and OTDR per ANSI/TIA/EIA-455-8-2000 to perform bi-directional cable testing of each fiber/ connector system from end to end. Match the source type and wavelength (850, 1300, 1550 nm). Calculate the loss using the average of the two bi-directional measurements.

F. Fiber acceptance power loss for cable, connectors and splices:

1. For each mated connector pair, a maximum of 0.7 dB. Typical 0.5 dB.

2. For each splice a maximum of 0.2 dB

3. For fiber: Attenuation as specified by the manufacturer.

4. Maximum allowable link loss:

   Maximum loss = (0.7dB X # of mated pairs of connectors) +(0.2 dB X #of splices) +fiber loss of total length of cable

G. If the measured loss is greater than the allowable maximum loss, take necessary measures to bring the link loss into compliance.

END OF SECTION

APPENDICES

GEOTECHNICAL EVALUATION REPORT, FERNANGELES PARK

Geotechnical Evaluation

LABOE TOS No. 25
Stormwater Capture Parks Program
Fernangeles Park
8851 Laurel Canyon Boulevard
Sun Valley, California

CDM Smith

600 Wilshire Boulevard, Suite 750 | Los Angeles, California 90017

August 31, 2020 | Project No. 211294002









Geotechnical | Environmental | Construction Inspection & Testing | Forensic Engineering & Expert Witness

Geophysics | Engineering Geology | Laboratory Testing | Industrial Hygiene | Occupational Safety | Air Quality | GIS

Ninyo & Moore

Geotechnical & Environmental Sciences Consultants

Ninyo & Moore
Geotechnical & Environmental Sciences Consultants

Geotechnical Evaluation

LABOE TOS No. 25
Stormwater Capture Parks Program
Fernangeles Park
8851 Laurel Canyon Boulevard
Sun Valley, California

Mr. Scott Dellinger
CDM Smith
600 Wilshire Boulevard, Suite 750 | Los Angeles, California 90071

August 31, 2020 | Project No. 211294002

REGISTERED PROFESSIONAL ENGINEER
SPENCER MARCINEK
No. GE3127
GEOTECHNICAL
STATE OF CALIFORNIA

Spencer Marcinek, PE, GE
Senior Project Engineer

REGISTERED PROFESSIONAL ENGINEER
DANIEL B. CHU
No. GE2096
GEOTECHNICAL
STATE OF CALIFORNIA

Daniel Chu, PhD, PE, GE
Principal Engineer

CERTIFIED ENGINEERING GEOLOGIST
GREGORY M. CORSON
No. 2310
STATE OF CALIFORNIA

Greg M. Corson, PG, CEG
Principal Geologist

KMB/SCM/GMC/mlc

Distribution: (1) Addressee (via e-mail)

CONTENTS

1 INTRODUCTION 1
2 SCOPE OF SERVICES 1
3 SITE DESCRIPTION 2
4 PROJECT DESCRIPTION AND PROPOSED CONSTRUCTION 3
5 SUBSURFACE EVALUATION AND LABORATORY TESTING 4
6 GEOLOGIC AND SUBSURFACE CONDITIONS 5
7 GROUNDWATER 6
8 FIELD PERCOLATION TESTING 7
9 FLOOD HAZARDS 9
10 FAULTING AND SEISMICITY 9
10.1 Surface Fault Rupture 9
10.2 Site-Specific Ground Motion 10
10.3 Liquefaction 12
11 CONCLUSIONS 12
12 PRELIMINARY RECOMMENDATIONS 13
12.1 Earthwork 14
12.1.1 Pre-Construction Conference 14
12.1.2 Clearing and Site Preparation 14
12.1.3 Excavation Characteristics 14
12.1.4 Subgrade Preparation for the Infiltration Gallery 15
12.1.5 Subgrade Preparation for the Other Buried Structures and At-Grade Structures 15
12.1.6 Temporary Excavations and Shoring 16
12.1.7 Fill Material 17
12.1.8 Fill Placement and Compaction 17
12.2 Underground Utilities 18
12.2.1 Pipe Bedding 18
12.2.2 Modulus of Soil Reaction for Pipe Design 18
12.3 Site-Specific Seismic Design Considerations 18
12.4 Foundations 19

12.4.1 Spread Footings for Infiltration Gallery and At-Grade Structures 19
12.4.2 Mat Foundations 20
12.5 Lateral Earth Pressures for Below-Grade Structures 20
12.6 Lateral Earth Pressures for Thrust Blocks 20
12.7 Exterior Flatwork 21
12.8 Pavement Construction 21
12.9 Corrosivity 23
12.10 Concrete Placement 23
12.11 Stormwater Infiltration Gallery 24
12.12 Drainage 24
12.13 Landscaping 24
13 CONSTRUCTION OBSERVATION 24
14 LIMITATIONS 25
15 REFERENCES 27

TABLES

1 – Percolation Test Results 8
2 – 2019 California Building Code Seismic Design Criteria 19
3 – Preliminary Pavement Structural Sections 21
4 – Preliminary Permeable Pavement Structural Sections 22

FIGURES

1 – Site Location
2 – Boring, Percolation Test, and CPT Locations
3 – Site Plan (Alternative 1)
4 – Regional Geology
5 – Fault Locations
6 – Acceleration Response Spectra
7 – Seismic Hazard Zones
8 – Lateral Earth Pressures for Braced Excavation
9 – Lateral Earth Pressures for Temporary Cantilevered Shoring
10 – Lateral Earth Pressures for Underground Structures
11 – Thrust Block Lateral Earth Pressure Diagram

APPENDICES

A – Boring Logs

B – CPT Soundings

C – Geotechnical Laboratory Testing

D – Drum Characterization Test Results and Transportation Manifest

E – Site-Specific Ground Motion Hazard Analysis

1 INTRODUCTION

In accordance with your request and authorization, we have performed a geotechnical evaluation at Fernangeles Park located at 8851 Laurel Canyon Boulevard in Sun Valley, California as part of the Los Angeles Bureau of Engineering (LABOE) Stormwater Capture Parks Program (Figure 1 [all figures are located at the end of the text of this report]). The purpose of our study was to evaluate the soil and geologic conditions at the site and to provide preliminary geotechnical recommendations for pre-design of proposed Best Management Practices (BMPs) at the site for stormwater infiltration. Our evaluation was performed in general accordance with Task Order Solicitation (TOS) No. 25 (LABOE, 2019a) and our referenced proposal dated May 18, 2020 (Ninyo & Moore, 2020a). This report presents our findings, conclusions, and recommendations for the Fernangeles Park project.

The intent of the Stormwater Capture Parks Program is to capture up to 2,912 acre-feet of stormwater and urban runoff per year that drain from 5,868 acres within a portion of the San Fernando Valley in order to reduce the potential for flooding, improve stormwater quality, increase water supplies through stormwater capture, and provide recreational, social, and economic benefits (LABOE, 2019). The stormwater runoff will be diverted into proposed stormwater capture and infiltration BMPs within nine City of Los Angeles parks generally located along the SR-170 corridor, including the subject Fernangeles Park, for replenishment of the San Fernando Groundwater Basin. According to the Conceptual Study Report (CSR) (Los Angeles Department of Water & Power [LADWP], 2018), the project at Fernangeles Park is anticipated to capture and infiltrate stormwater runoff from a tributary area of approximately 292 acres.

2 SCOPE OF SERVICES

Our scope of services was prepared based on our review and the conceptual design provided in the CSR (LADWP, 2018), an anticipated infiltration invert depth of 16 feet, and discussions with the client, CDM Smith, and included the following:

- Project coordination and planning with subcontractor, CDM Smith, LABOE, and Los Angeles Department of Recreations and Parks (RAP) personnel, and attendance at a project kick-off meeting.
- Review of readily available background materials, including published topographic maps, geologic maps, fault and seismic hazard maps, groundwater data, stereoscopic aerial photographs, project related plans, and in-house geotechnical information.
- Acquisition of a Los Angeles County Environmental Health Department (LACEHD) permit.
- Acquisition of a City of Los Angeles Encroachment permit for drilling within the City right-of-way on Morehart Avenue.

- Field reconnaissance to observe and document the site conditions, mark-out proposed hollow-stem-auger (HSA) boring and cone penetration test (CPT) sounding locations for underground utility clearance by Underground Service Alert, meet with RAP personnel regarding site access and constraints, and meet with the City of Los Angeles inspectors.

- Subsurface exploration consisting of the drilling, sampling, and logging of five HSA borings, ranging in depths from approximately 16 feet to 58 feet, and four CPTs to depths ranging from approximately 13 feet to 24 feet. The purpose of the borings and CPTs was to evaluate the subsurface soil conditions and percolation rates of the on-site soils.

- Field percolation testing in four of the borings in general accordance with the methods presented in the County of Los Angeles Guidelines for Geotechnical Investigation and Reporting Low Impact Development Stormwater Infiltration (COLA, 2017).

- Geotechnical laboratory testing of representative soil samples to evaluate in-situ moisture content and dry density, gradation, percentage of particles finer than the No. 200 sieve, consolidation, direct shear strength, R-value, and soil corrosivity.

- Data compilation and engineering analysis of the information obtained from our background review, subsurface evaluation, infiltration testing, and laboratory testing.

- Preparation of this geotechnical report presenting our findings, conclusions, and preliminary recommendations pertaining to the design and construction of the proposed improvements.

3 SITE DESCRIPTION

Fernangeles Park is a City of Los Angeles park located at 8851 Laurel Canyon Boulevard in the central-eastern side of the San Fernando Valley, approximately 260 feet south of Interstate 5 (I-5) and 1,700 feet east of California State Route (SR) 170 (Figure 1). The park consists of a relatively flat, square-shaped lot bounded by Laurel Canyon Boulevard on the northeast, Allegheny Street on the northwest, Remick Avenue on the southwest, and Vicks Street on the southeast (Figure 2). Residential properties are located on the northwest, southwest, and southeast sides of the park. Residential and commercial properties are located on the northeast of the park. The park generally consists of two baseball diamonds surrounded by grass-covered areas and trees. The northeast side of the park is developed with a recreation center consisting of a community pool, a gymnasium, a basketball court, picnic areas, playground areas, and Portland cement concrete (PCC) walkways and landscaping. Asphalt concrete (AC) parking lots are located on the northwest and southeast sides of the park. The project also includes an approximately 690-foot-long section of Morehart Avenue between Sheldon and Allegheny Streets on the northwest side of the park. Morehart Avenue is paved with AC and bounded on both sides by residential properties.

Based on our review of topographic maps (NavigateLA, 2020), the park slopes gently downward toward the south with site elevations ranging from approximately 858 feet above mean sea level (MSL) at the north corner of the park to approximately 848 feet (MSL) at the south corner.

Morehart Avenue slopes gently downward toward the southeast with site elevations ranging from approximately 860 feet above mean sea level (MSL) at the northwest to approximately 856 feet (MSL) at the southeast.

4 PROJECT DESCRIPTION AND PROPOSED CONSTRUCTION

Based on our review of TOS 25 (LABOE, 2019), the Fernangeles Park project would consist of the installation of an underground infiltration gallery sized to store approximately 703,000 cubic feet of water. In addition, other design elements include catch basins, green street elements, diversion structure(s), bioswales, in-line pretreatment devices, flow measuring devices, supervisory control and data acquisition (SCADA), educational signage, and park restoration/improvements. In addition, we understand that various street improvements to Morehart Street, such as new pavements, sidewalks, curbs and gutters, etc., may be included as part of the project. According to the CSR (LADPW, 2018), which was included as part of TOS 25, the conceptual infiltration gallery would have a footprint of approximately 71,000 square feet (sf) with an inner height of approximately 12 feet (11 feet of storage), and an invert depth of approximately 16 feet below the ground surface (bgs). As indicated our proposed scope of services (2020) was based on our review of the CSR (LADPW, 2018). We understand that the gallery will likely consist of prefabricated, modular concrete vaults with open bottoms underlain by drain rock over a layer of filter fabric. Based on our discussions with CDM Smith, it is our understanding that the gallery may be supported on concrete strip footings. Upon completion of the BMP installation, the BMPs will be buried with compacted fill and the ground surface returned to its existing condition for continued use and additional development as a park.

Subsequent to performing our subsurface exploration, presented herein, we received conceptual plans from our client (CDM Smith, 2020), which include three BMP options (Alternatives 1 through 3) for collecting, treating, and infiltrating stormwater. Each alternative includes the construction of an approximately 58,000 sf underground infiltration gallery within the existing baseball diamonds. The gallery would have an interior height of 14 feet and invert depth of approximately 20½ feet. The three alternatives generally include differing methods of conveying stormwater from the adjacent watershed to the infiltration gallery. Based on our discussions with CDM Smith, we understand that dry wells could potentially be added to the project for stormwater infiltration. We understand that these proposed alternatives are subject to change as further design is performed. The three alternatives are described below.

Alternative 1 – According to CDM Smith (2020), Alternative 1 consists of the installation three catch basins (one at the intersection of Morehart Avenue and Allegheny Street, one on Laurel Canyon Boulevard, and one on Wicks Street), a new trash/debris spreader to intercept discharge

from the California Department of Transportation (Caltrans) pump station surge chamber located near the intersection of Morehart Avenue and Sheldon Street, and bioswales and Green Street improvements on Morehart Avenue. New 18 and 24-inch-diameter pipelines would be installed between the catch basins and the gallery with an in-line pretreatment device on each pipeline. The proposed layout of Alternative 1 is presented on Figure 3.

Alternative 2 – The conveyance system for Alternative 2 is similar to Alternative 1 except that the catch basins on Morehart Avenue and Laurel Canyon Boulevard will be replaced with porous paved swales and a cross-gutter, respectively, that convey stormwater to the park. Stormwater collected from Laurel Canyon Boulevard will be diverted into a 15,700 sf bioswale at the northeast end of the park with a debris interceptor before the gallery. The bioswale is anticipated to be on the order of 5 to 6 feet in width and 2 to 3 feet in depth. A catch basin with an in-line pretreatment device and diversion pipeline will be constructed on Wicks Avenue.

Alternative 3 – The conveyance system for Alternative 3 will include the bioswale/cross gutter from Laurel Boulevard similar to Alternative 2. However, stormwater from the Caltrans pump station surge chamber will be diverted past Morehart Avenue to a second 39,100 sf pre-treatment bioswale along the northwest and southwest sides of the park. In addition, new catch basins will be installed on Remick Avenue and Allegheny Street that will catch and divert stormwater into diversion pipelines that empty into the pre-treatment bioswale. The pretreatment bioswale is anticipated to be on the order of 5 to 6 feet in width and 3 to 4 feet in depth. A new storage facility will be installed at the southern end of the pre-treatment bioswale to store water for on-site irrigation. Debris interceptors would also be installed between Morehart Avenue and an on-site storage facility for irrigation on the southern corner of the park.

5 SUBSURFACE EVALUATION AND LABORATORY TESTING

Our subsurface evaluation was conducted on March 24 through March 31, 2020, and May 28 and May 29, 2020, and consisted of the drilling, logging, and sampling of five HSA borings (B-1 and P-1 through P-4) and four CPT soundings (CPT-1 through CPT-4). The borings were drilled using a truck-mounted drill rig with 8-inch diameter augers. The depths of the borings were based on the conceptual design depths for the infiltration basin presented in the CSR (LADWP, 2018) and on our discussions with CDM Smith regarding the possible use of deeper dry wells. Borings P-1, P-3, and P-4 were drilled to proposed depths of approximately 16, 16, and 51½ feet, respectively. Drilling refusal was encountered in borings B-1 and P-2 at depths of approximately 58 feet and 47 feet (proposed depths of 75 and 50 feet), respectively. The borings were logged in the field by a representative of Ninyo & Moore and representative bulk and relatively undisturbed soil samples were collected from the borings at selected depths for laboratory testing. Percolation testing was

performed in borings P-1 through P-4 as further discussed in Section 8 of this report. The CPT soundings (CPT-1 through CPT-4) were performed using a 30-ton CPT rig with a 15 square centimeter cone to depths of approximately 19.2, 50.1, 12.4, and 31.2 feet, respectively. Since the proposed depths of the CPT soundings were 50 feet, and relatively shallow refusal was encountered in CPT-1, CPT-3, and CPT-4, these three CPTs were repeated as CPT-1A, CPT-3A, and CPT-4A within approximately 5 feet of each previous CPT. The repeated CPTs also encountered refusal at depths of approximately 34.9, 47.7, and 39.2 feet, respectively. Continuous soil profiles, including cone tip resistance and sleeve friction, were recorded during the sounding. A representative of Ninyo & Moore was on site to observe the CPT soundings. Logs of the exploratory borings and CPT soundings are provided in Appendices A and B, respectively. The approximate locations of the borings and CPTs are presented on Figures 2 and 3. The borings and CPTs were backfilled with cement-bentonite grout upon completion of the drilling and percolation testing in general accordance with the requirements of LACEHD.

Geotechnical laboratory testing of representative soil samples included tests to evaluate in-situ moisture content and dry density, gradation, percentage of particles finer than the No. 200 sieve consolidation, direct shear strength, R-value, and soil corrosivity. Moisture and density test results are presented on the boring logs in Appendix A. The remaining test results are presented in Appendix C.

Soil cuttings from the borings and CPT were placed in 55-gallon drums, and composite soil samples of the drummed soil were collected in 8-ounce jars for waste characterization. The samples were stored in a chilled cooler and delivered to SunStar Laboratories, Inc. for analytical testing under chain-of-custody protocol. The samples were tested for total petroleum hydrocarbons (TPH) (gas and diesel range) per United Stated Environmental Protection Agency (EPA) Test Method 8015B, Title 22 metals per EPA Test Methods 6010B/7470/7471, and volatile organic compounds per EPA Test Method 8260B. Based on the characterization test results, the drums were disposed at an approved landfill (Soil Safe in Adelanto, California) by a licensed transportation subcontractor (Belshire) as non-hazardous. The test results and a copy of the transportation manifest are provided in Appendix D.

6 GEOLOGIC AND SUBSURFACE CONDITIONS

The project site is within the San Fernando Valley, which is generally bounded by the Santa Monica Mountains on the south, Verdugo Mountains on the east, Santa Susana Mountains on the north, and Chatsworth Hills on the west. The valley along with these bounding mountain ranges are part of the Transverse Ranges Geomorphic Province. The province encompasses an approximately 40- to 60-mile-wide area (north to south) that extends approximately 320 miles

(west to east) from Point Arguello and San Miguel Island to the Eagle and Pinto Mountains of the Mojave Desert (Norris and Webb, 1990). The province generally consists of a region of east to west-trending mountain ranges considered atypical to the predominant northwest to southeast structural fabric of California. The atypical trend of the Province is the result of a restraining bend ("the Big Bend") on the San Andreas Fault that has rotated and compressed the region to its current configuration. The compression has resulted in folding and reverse/thrust faulting with similar east to west trends, and regional uplift. The Santa Monica Mountains are the southernmost of the east to west trending ranges of the province and the San Fernando Valley is a synclinal valley infilled with relatively thick deposits of sedimentary rock overlain by alluvial deposits (Norris and Webb, 1980).

Review of regional geologic maps indicate that the locations of the proposed project improvements, including the buried concrete structure, catch basins, pipelines, and park BMPs, are underlain by Holocene to Pleistocene-age alluvial fan deposits consisting of unconsolidated gravel, sand, and silt of the Pacoima/Tujunga alluvial fan (Campbell et al., 2014) (Figure 4). The California Department of Conservation, Division of Mines and Geology (CDMG, 1997) has also mapped the site as being underlain by alluvial fan deposits consisting of loose to medium dense, silty sand and sand with minor clay.

Materials encountered during our subsurface exploration generally consisted of undocumented fill underlain by alluvium. AC pavement was encountered at the ground surface in boring P-4 on Morehart Avenue. The pavement section consisted of approximately 6 inches of AC with no aggregate base. Undocumented fill was encountered in our borings to depths ranging from approximately 1½ to 2 feet below the ground surface. The undocumented fill generally consisted of brown, moist, loose to medium dense, clayey sand and silty sand with variable amounts of organic material, gravel, and cobbles. Documentation regarding the limits of fill or the placement and compaction of the fill soils was not available for our review. Alluvium was encountered beneath the undocumented fill to the total depth explored of up to approximately 58 feet. The alluvium generally consisted of granular deposits of light brown and brown, moist, medium dense to very dense, poorly graded sand, poorly graded sand with silt, well-graded sand, silty sand, poorly graded gravel, and sandy silt with variable amounts of gravel and cobbles. Boulders may also be present. More detailed descriptions of the subsurface materials are presented on the boring logs and CPT soundings in Appendices A and B, respectively.

7 GROUNDWATER

Seepage and/or groundwater was not encountered in our borings or CPTs to the total depth explored of up to approximately 58 feet. CDMG (1997) indicates that the historic high depth to

groundwater at the project site is between 150 to 160 feet below the ground surface. The depth to groundwater in a Los Angeles County groundwater monitoring well (Well ID 4897A) located 800 feet southwest of the site was approximately 337 feet in 2007 (the latest posted measurement) (COLA, 2020). The depth to groundwater in this well ranged from approximately 220 and 349 feet between 1964 and 2007. It is anticipated that similar depths to groundwater are present at the park site. Fluctuations in the level of groundwater will occur due to variations in ground surface topography, subsurface stratification, rainfall, irrigation practices, groundwater pumping, and other factors that were not evident at the time of our field evaluation.

8 FIELD PERCOLATION TESTING

Percolation testing was performed in percolation borings P-1 through P-4 in general accordance with the County of Los Angeles Guidelines for Geotechnical Investigation and Reporting Low Impact Development Stormwater Infiltration (COLA, 2017). The testing was performed to evaluate the infiltration rate of the on-site soils for use in design of the BMPs by CDM Smith. The approximate locations of the percolation test borings are shown on Figures 2 and 3.

Borings P-1 through P-4 were drilled to depths ranging from 16 to 51½ feet. Preparation of each boring for percolation testing included the installation of a 2-inch-diameter polyvinyl chloride (PVC) pipe in the borings, the lowest 15 feet of which was slotted, and backfilling the bottom approximately 15 feet of annular space between the borehole wall and pipe with clean gravel. The infiltration zones were pre-soaked with water for at least one hour prior to performing percolation testing. After the borings were pre-soaked, constant-head percolation testing was performed in borings P-1 through P-3 and falling-head percolation testing was performed in boring P-4.

The constant-head testing was performed by placing clean water in the PVC pipe at a constant flow rate to establish a stabilized head. The flow rate was measured using a digital flow meter. Once a stabilized head was established in the borings, the constant-head test was initiated and the flow was maintained for a period of approximately 2 hours. The field percolation rate was calculated by measuring the total volume of water infiltrated during the total duration of the test and dividing by the surface area of the tested zone of the boring. The measured field percolation rates are presented in Table 1.

The falling-head test method involved placing clean water into the PVC pipe to establish a head of water and measuring the rate at which the water level dropped in the pipe at consecutive time intervals (approximately 10 minutes). The test was repeated until three consecutive tests provided similar results and a stabilized rate was obtained. The field percolation rate was calculated by measuring the total volume of water infiltrated during the time interval and dividing by the surface

area of the tested zone of the boring. The measured field percolation rates are presented in Table 1.

The County of Los Angeles guidelines (COLA, 2017) indicate that the measured field percolation rates should be reduced to account for the long-term performance of the proposed BMPs by dividing the rates by the "Total Reduction Factor (RF)." They define the RF as the product of the "test-specific" reduction factor (RF_t), the "site variability" reduction factor (RF_v), and the "long-term siltation, plugging, and maintenance" reduction factor (RF_s) (i.e., RF = RF_t x RF_v x RF_s).

The guidelines (COLA, 2017) indicate that the RF_t is applied to account for variations in the direction of flow during the test and the reliability of the different test methods. The guidelines provide RF_t values to be used in the equation that vary based on the test method performed. Values of 2 and 3 are specified for the falling-head and constant-head percolation tests, respectively, and were applied to the RF equation accordingly. The RF_v value is applied to account for site variability, number of tests, and thoroughness of the subsurface investigation and ranges from 1 to 3. For the subject park, it is our opinion that an RF_v value of 1.2 should be used due to the variability of the on-site soils and field percolations rates. The long-term siltation, plugging, and maintenance value (RF_s) also ranges from 1 to 3 and will generally vary on the level of pre-treatment performed prior to infiltration and the level of future maintenance of the system. Based on our discussions with the BMP designers, an RFs value of 1 has been applied since pre-treatment systems will be used to remove silt prior to water entering the infiltration gallery/deep wells. The actual RF_s value and resulting RF to be used for the project should be adjusted by the BMP designer as needed. The RF_t, RF_v, RF_s, and resulting RF values used in our analysis are presented in Table 1. The adjusted percolation rates and average adjusted percolation rate based on these values are also presented in Table 1.

Table 1 – Percolation Test Results

Test Boring	Test Type	Approximate Depth of Tested Zone (feet)	Field Percolation Rate (inches/hour)	Reduction Factor				Adjusted Percolation Rate (inches/hour)
				RF_t	RF_v	RF_s	RF	
P-1	Constant Head	5 – 16	3.3	3	1.2	1	3.6	0.9
P-2	Constant Head	36 – 47	18.1	3	1.2	1	3.6	5.0
P-3	Constant Head	5 – 16	7.6	3	1.2	1	3.6	2.1
P-4	Falling Head	43 – 51½	9.4	2	1.2	1	2.4	3.9
Average Adjusted Percolation Rate (inches/hour)								**3**

Notes:
RF_t – Test Specific Reduction Factor
RF_v – Site Variability Reduction Factor
RF_s – Long-Term Siltation, Plugging, and Maintenance Reduction Factor (To be adjusted by the BMP designer)
RF – Total Reduction Factor

Based on our evaluation, we recommend that the average adjusted percolation rate of 3 inches per hour, following adjustments by the BMP designer for RF_s, be used for design at Fernangeles Park for both shallow and deep infiltration.

In addition, we recommend the new or existing buildings be set-back from the proposed infiltration gallery a minimum of 15 feet or a distance where the bottom of the lowest foundation element of the structure is 10 feet or more (horizontally) outside of an imaginary 1:1 (horizontal:vertical) plane projected downward and outward from the top of the gallery. Where basement levels are proposed that extend beneath the top of the infiltration gallery elevation, additional evaluation should be performed to confirm the appropriate set-back.

9 FLOOD HAZARDS

Based on our review of flood insurance rate maps for the project area (Federal Emergency Management Agency [FEMA], 2020), the project site is not located in the 100-year Flood Hazard Zone, A99. Zone A99 includes areas to be protected from a 100-year flood by the Federal Flood Protection System under construction at the time of publication of the FEMA map; no base flood elevations are given. The site is located within Other Flood Areas – Zone X, which includes areas of 500-year floods and areas of 100-year floods with average depths of less than one foot and areas protected by levees from 100-year floods.

10 FAULTING AND SEISMICITY

The site is in a seismically active area, as is the majority of southern California, and the potential for strong ground motion in the project area is considered significant during the design life of the proposed project. Figure 5 shows the approximate site location relative to the known major faults in the region. The site is not located within a State of California EFZ (formerly known as an Alquist-Priolo Special Studies Zone) (Hart and Bryant, 2018). The nearest mapped active fault to the site is the Verdugo fault located approximately 1.1 miles northeast of the site (United States Geological Survey [USGS], 2008).

The principal seismic hazards evaluated at the subject site are surface fault rupture, ground motion, and liquefaction. A brief description of these principal seismic hazards are discussed in the following sections.

10.1 Surface Fault Rupture

Surface fault rupture is the offset or rupturing of the ground surface by relative displacement across a fault during an earthquake. Based on our review of referenced geologic and fault hazard data, the project site is not transected by known active faults. Therefore, the potential for surface

rupture is relatively low. However, lurching or cracking of the ground surface as a result of nearby seismic events is possible.

10.2 Site-Specific Ground Motion

Considering the proximity of the site to active faults capable of producing a M_{max} of 6.0 or more, the project area has a high potential for experiencing strong ground motion. The 2019 CBC specifies that the risk-targeted maximum considered earthquake (MCE_R) ground motion response accelerations be used to evaluate seismic loads for design of buildings and other structures.

In accordance with Chapter 20 of the American Society of Civil Engineers (ASCE) Publication 7-16 Minimum Design Loads and Associated Criteria for Building and Other Structures (2016), the Site Class should be classified based on the average shear wave velocity (V_S) in the upper 100 feet (i.e., 30 meters) (V_{S30}), the average field standard penetration resistance in the upper 100 feet (blow counts, N), or the average undrained shear strength in the upper 100 feet (S_u). After reviewing the blow counts obtained from our borings and correlations from our CPTs, the field penetration blow counts in the upper 100 feet are within the range of 15 to 50 blows per foot. Additionally, we estimated that the V_{S30} at the site is 918 feet per second (ft/s) (i.e., 280 meters per second [m/s) (CGS/Willis Site Classification Map) using the Open Seismic Hazard Analysis software developed by USGS (USGS, 2019). ASCE 7-16 defines a site as Site Class D (stiff soil) if the V_{S30} ranges from 600 to 1,200 ft/s (180 to 370 m/s) and if the blow counts in the upper 100 feet range from 15 to 50 blows per foot. Accordingly, the site is classified as Site Class D.

Per the 2019 CBC, a site-specific ground motion hazard analysis shall be performed for structures on Site Class D with a mapped MCE_R, 5 percent damped, spectral response acceleration parameter at a period of 1 second (S_1) greater than or equal to 0.2g in accordance with Sections 21.2 and 21.3 of ASCE 7-16. We calculated that the S_1 for the site is equal to 0.699g using the 2020 Applied Technology Council [ATC] seismic design tool (web-based)]; therefore, a site-specific ground motion hazard analysis was performed for the project area.

The site-specific ground motion hazard analysis consisted of the review of available seismologic information for nearby faults and performance of probabilistic seismic hazard analysis (PSHA) and deterministic seismic hazard analysis (DSHA) to develop acceleration response spectrum (ARS) curves corresponding to the MCE_R for 5 percent damping. Prior to the site-specific ground motion hazard analysis, we obtained the mapped seismic ground motion values and developed the general MCE_R response spectrum for 5 percent damping in accordance with Section 11.4 of ASCE 7-16 (ATC, 2020). The V_{S30} is assumed to be 918 ft/s (i.e., 280 m/s) (CGS/Willis Site Classification Map) and the depths to V_S = 3,281 ft/s (i.e., 1,000 m/s) and V_S = 8,202 ft/s (i.e.,

2,500 m/s) are assumed to be 1,148 feet (i.e., 350 meters) and 6,299 feet (i.e., 1,920 meters), respectively (Southern California Earthquake Center [SCEC] Velocity Model Version 4, Iteration 26, Basin Depth). These values were evaluated using the Open Seismic Hazard Analysis software developed by USGS (USGS, 2019).

The 2014 next generation attenuation (NGA) West-2 relationships were used to evaluate the site-specific ground motions. The NGA relationships that we used for developing the probabilistic and deterministic response spectra are by Chiou and Youngs (2014), Campbell and Bozorgnia (2014), Boore, Stewart, Seyhan, and Atkinson (2014), and Abrahamson, Silva, and Kamai (2014). The Open Seismic Hazard Analysis software developed by USGS (USGS, 2019) was used for performing the PSHA. The Calculation of Weighted Average 2014 NGA Models spreadsheet by the Pacific Earthquake Engineering Research Center was used for performing the DSHA (Seyhan, 2014).

PSHA was performed for earthquake hazards having a 2 percent chance of being exceeded in 50 years multiplied by the risk coefficients per ASCE 7-16. The maximum rotated components of ground motions were considered in PSHA with 5 percent damping. For the DSHA, we analyzed accelerations from characteristic earthquakes on active faults within the region using the Caltrans ARS (Caltrans, 2020c) seismic design tool (web-based) and the hazard curves and deaggregation plots at the site using the USGS Unified Hazard Tool application (USGS, 2020a). A magnitude 7.5 event on the Verdugo fault with a distance of 1.1 miles (i.e., 1.8 kilometers) from the site is the controlling earthquake. Hence, the DSHA was performed for the site using this event and corrections were made to the spectral accelerations for the 84th percentile of the maximum rotated component of ground motion with 5 percent damping. The results of our site-specific seismic hazard analysis are presented in Appendix E.

The site-specific MCE_R response spectrum was taken as the lesser of the spectral response acceleration at any period from the PSHA and DSHA, and the site-specific general response spectrum was determined by taking two-thirds of the MCE_R response spectrum with some conditions in accordance with Section 21.3 of ASCE 7-16. Figure 6 presents the site-specific MCE_R response spectrum and the site-specific design response spectrum. The general mapped design response spectrum calculated in accordance with Section 11.4 of ASCE 7-16 is also presented on Figure 6 for comparison. The site-specific spectral response acceleration parameters, consistent with the 2019 CBC, are provided in Section 12.3 of this report for the evaluation of seismic loads on buildings and other structures. The site-specific maximum considered earthquake geometric mean (MCE_G) peak ground acceleration, PGA_M, was calculated as 0.881g.

10.3 Liquefaction

Liquefaction is the phenomenon in which loosely deposited granular soils with silt and clay contents of less than approximately 35 percent and non-plastic silts located below the water table undergo rapid loss of shear strength when subjected to strong earthquake-induced ground shaking. Ground shaking of sufficient duration results in the loss of grain-to-grain contact due to a rapid rise in pore water pressure and causes the soil to behave as a fluid for a short period of time. Liquefaction is known generally to occur in saturated or near saturated cohesionless soils at depths shallower than 50 feet below the ground surface. Factors known to influence liquefaction potential include composition and thickness of soil layers, grain size, relative density, groundwater level, degree of saturation, and both intensity and duration of ground shaking.

The State of California Hazard Zones map (CDMG, 1998) indicates that the subject site is not located within a mapped area that is considered susceptible to seismically induced liquefaction (Figure 7). Based on the historic high groundwater depth of approximately 150 to 160 feet below the ground surface and the presence of dense sands with scattered gravel, it is our opinion that liquefaction and liquefaction-related seismic hazards (e.g., dynamic settlement, ground subsidence, and/or lateral spreading) are not design considerations for the project.

11 CONCLUSIONS

Based on the results of our evaluation, it is our opinion that the proposed BMPs at Fernangeles Park are feasible from a geotechnical standpoint, provided the recommendations presented in this report are incorporated into the design and construction of the project. In general, the following conclusions were made:

- The subject site is underlain by up to approximately 2 feet of undocumented fill underlain by granular alluvial materials. The fill and alluvium generally consisted of moist, loose to very dense, poorly graded sand, poorly graded sand with silt, well-graded sand, silty sand, poorly graded gravel, and sandy silt. Variable amounts of gravel and cobbles (and possible boulders) were encountered in the fill and alluvium.
- Our four percolation tests performed in borings P-1 through P-4 indicate that the on-site soils tested at depths ranging from approximately 16 to 51½ feet have adjusted percolation rates ranging from approximately 1.1 to 6.0 inches per hour. For design purposes, we recommend using a percolation rate of 3 inches per hour for both shallow (gallery) and deep (dry well) infiltration systems. However, this rate should be adjusted as needed in accordance with COLA 2017 guidelines.
- In general, excavations and drilling in the existing fill soil and alluvium should be feasible with earthmoving equipment in good working condition. However, difficult excavating and drilling conditions should be anticipated by the contractor where excavations encounter cobbles/boulders in the alluvium. Oversized materials should be anticipated in the undocumented fill and alluvium by the contractor.

- We anticipate that the on-site excavated materials should be suitable for re-use as engineered fill and trench backfill provided they are free of trash, debris, roots, contamination, deleterious materials, and cobbles or hard lumps of material in excess of 4 inches in diameter. Processing of the materials to bring them near the laboratory optimum moisture content (i.e., drying and/or wetting) prior to use as fill should be planned by the contractor.

- The on-site soils are generally granular and will be prone to caving during excavation. The on-site soils should be considered as Type C soils in accordance with United States Department of Labor Occupational Safety Health Administration (OSHA) regulations. Accordingly, temporary excavations deeper than 4 feet in depth should be laid back at inclinations of 1½ to 1 (horizontal to vertical) or flatter.

- Where excavations cannot be laid back, temporary shoring is anticipated. Shoring should be designed by the contractor to support the excavation sidewalls and to reduce the potential for settlement of adjacent structures, roadways and other site improvements. Shoring should be designed in accordance with OSHA regulations.

- Groundwater was not encountered in our exploratory borings to the total depth explored of approximately 58 feet. Historical high groundwater levels are approximately 150 to 160 feet below the ground surface. A groundwater monitoring well located approximately 800 feet southwest of the site indicates that the depth to groundwater is on the order of 337 feet (COLA, 2020). Fluctuations in the level of groundwater will occur due to variations in ground surface topography, subsurface stratification, rainfall, irrigation practices, groundwater pumping, and other factors that were not evident at the time of our field evaluation

- The site is not located within a mapped Seismic Hazards Zone considered susceptible to liquefaction (CDMG, 1998).

- The site is not located within an Earthquake Fault Zone with the potential for fault rupture as defined by the Alquist-Priolo Earthquake Fault Zoning Act (Hart and Bryant, 2018).

- Hydro-collapse is not considered a design issue given the proposed depth of the infiltration gallery (approximately 20½ feet [CDM Smith, 2020]) and the results of our laboratory testing.

- The site is not located within a designated flood inundation zone from failure of a dam or the 100-year and 500-year flood events (FEMA, 2020).

- Based on our laboratory corrosion testing, the on-site soil can be classified as non-corrosive based on the Caltrans Corrosion Guidelines (Caltrans, 2018).

12 PRELIMINARY RECOMMENDATIONS

The following sections present our preliminary geotechnical recommendations for design and construction of the project. This project is in preliminary design phase and some aspects of the design will be subject to change. Detailed plans regarding the design of the BMPs have not been developed yet. Accordingly, the following recommendations should be considered preliminary. Ninyo & Moore should review the final plans and develop additional geotechnical recommendations as appropriate. These recommendations are based on our evaluation of the site geotechnical conditions, our understanding of the planned construction, and experience in the vicinity of the project. The work should be performed in conformance with the

recommendations presented in this report, project specifications, and appropriate agency standards.

12.1 Earthwork

We anticipate that earthwork at the site will consist of cuts and fills associated with excavations to install the proposed BMP improvements, including the gallery, catch basins, in-line pretreatment devices, pipelines, debris interceptors, and manholes. Based on the preliminary plans (CDM Smith, 2020), excavations for the proposed BMP improvements are anticipated to be up to 20½ feet in depth. Earthwork may also include preparation of subgrade and installation of new porous pavement on Morehart Avenue, placement of bioswales, and finish grading for establishment of site drainage. Earthwork operations should be performed in accordance with the requirements of applicable governing agencies and the recommendations presented in the following sections.

12.1.1 Pre-Construction Conference

We recommend that grading and foundation plans be submitted to Ninyo & Moore for review to check for conformance to the recommendations provided in this report. We further recommend that a pre-construction conference be held to discuss the grading recommendations presented in this report. The owner and/or their representative, the governing agencies' representatives, the civil engineer, Ninyo & Moore, and the contractor should be in attendance to discuss the work plan, project schedule, and earthwork requirements.

12.1.2 Clearing and Site Preparation

Prior to excavating or other earthwork, the proposed area of improvements should be cleared of surface obstructions, debris, pavement, abandoned utilities, and other deleterious materials. Obstructions that extend below finish grade, if any, should be removed and the resulting holes filled with compacted soils. Materials generated from the clearing operations should be removed from the project site and disposed at a legal dump site.

12.1.3 Excavation Characteristics

We anticipate that excavations in the undocumented fill and alluvium should be feasible with earthmoving equipment in good working order. The undocumented fill and alluvial materials generally consisted of moist, loose to very dense, poorly graded sand, poorly graded sand with silt, well-graded sand, silty sand, poorly graded gravel, and sandy silt with variable amounts of organic material, gravel, and cobbles. Cobbles and possible boulders were encountered in our subsurface exploration and should be anticipated in the excavations. These oversized materials may lead to difficult excavating and/or drilling, where encountered.

Processing of the excavated materials to bring them near the laboratory optimum moisture content (i.e., drying and/or wetting) prior to use as fill should be planned by the contractor.

12.1.4 Subgrade Preparation for the Infiltration Gallery

Based on our exploratory borings, test pits, and CPTs, alluvium is anticipated at the bottom of the planned infiltration gallery that should be suitable for support of the gallery and overlying compacted fill. The excavation bottom should be evaluated by our representative during the excavation work. In the event that unsuitable material is encountered along the bottom of the excavation, including undocumented fill and/or waste, the unsuitable material encountered at the bottom of the gallery excavation should be removed and replaced with loosely-packed clean sand or gravel, such as additional drainage rock. The actual recommendations for removal and replacement should be based on our field observations. suitable on-site material. We recommend that minimal compaction be performed on the exposed subgrade, materials used to replace unsuitable materials (if needed), and and/or rock blanket placed beneath the gallery. We recommend that the rock blanket consist of open-graded gravel of ¾-inch to 1½-inch diameter rock underlain by filter fabric consisting of Mirafi 140N or equivalent. Compaction of the subgrade could potentially reduce the infiltration rate of the gallery. If the subgrade of the infiltration gallery is compacted, we recommend that additional percolation testing be performed.

If foundations are to be installed along the bottom of the gallery, such as strip footings, the upper approximately 8-inches of subgrade, only beneath the foundations, should be scarified, moisture-conditioned to near optimum moisture content, and recompacted to a relative compaction of 90 percent as evaluated by ASTM D 1557. If unsuitable materials, including undocumented fill, waste, loose/soft, and/or wet materials, are encountered along the excavation bottom that extend beneath proposed footings, specific recommendations for removal and replacement of these materials, if warranted, will be provided by our firm based on field observations. If loose, soft, and/or wet materials are encountered beneath the foundations, removal and recompaction of the materials may be warranted. The excavation bottoms should be evaluated by our representative during the excavation work.

12.1.5 Subgrade Preparation for the Other Buried Structures and At-Grade Structures

In order to provide suitable support for proposed buried and/or at-grade structures, including, the catch basins, in-line pretreatment devices, debris interceptors, and manholes, we recommend that the existing undocumented fill and upper loose alluvial deposits be removed from beneath the structures. In addition, the structure foundations should be founded on 2

feet or more of newly compacted fill material. The overexcavation should remove undocumented fill and expose relatively dense alluvial deposits. Additional over-excavation of loose, soft, and/or wet areas may be appropriate. The excavation bottom should be evaluated by our representative during the excavation work and additional recommendations, if needed, be based on field observations. The limits of removal should extend approximately 2 feet beyond the footprint of the foundations. If drainage rock is placed beneath the foundations, this can be considered part of the 2-foot thick layer of compacted fill beneath the foundations. Prior to placing compacted fill and/or drainage rock, the upper approximately 8 inches of the exposed bottom should be scarified, moisture-conditioned to near optimum moisture content, and recompacted to a relative compaction of 90 percent as evaluated by ASTM D 1557.

12.1.6 Temporary Excavations and Shoring

We recommend that excavations be designed and constructed in accordance with OSHA regulations. These regulations provide shoring design parameters for excavations and trenches up to 20 feet deep based on the soil types encountered. Trenches over 20 feet deep should be designed by the contractor's engineer based on site-specific geotechnical analyses. For planning purposes, we recommend that fill and alluvium be considered as OSHA Type C soil. For trench or other excavations, OSHA requirements regarding personnel safety should be met by using appropriate shoring or by laying back the slopes no steeper than 1½:1 (horizontal to vertical) in the site fill and alluvium. Temporary excavations that encounter seepage may need shoring or may be mitigated by placing sandbags or gravel along the base of the seepage zone. Excavations encountering seepage should be evaluated on a case-by-case basis.

Based on our review of the project drawings, we anticipate that site excavations will be laid-back using temporary slopes (CDM Smith, 2020). Where slopes cannot be laid back, shoring may be appropriate. If shoring systems are used for site excavations, they should be designed for the anticipated soil conditions using the lateral earth pressure values shown on Figures 8 through 9 for braced and cantilevered excavations, respectively. The recommended design pressures are based on the assumption that the shoring system is constructed without raising the ground surface elevation behind the shored sidewalls of the excavation, that there are no surcharge loads, such as soil stockpiles and construction materials, and that no loads act above a 1:1 (horizontal to vertical) plane ascending from the base of the shoring system. For a shoring system subjected to the above-mentioned surcharge loads, the contractor should include the effect of these loads on the lateral earth pressures acting on the shored walls.

We anticipate that settlement of the ground surface will occur behind the shored excavations. The amount of settlement depends heavily on the type of shoring system, the contractor's workmanship, and soil conditions. To reduce the potential for distress to adjacent improvements, we recommend that the shoring system be designed to limit the ground settlement behind the shoring system to ½ inch or less. Possible causes of settlement that should be addressed include settlement during installation of the shoring elements, excavation for structure construction, construction vibrations, and removal of the support system. We recommend that shoring installation be evaluated carefully by the contractor prior to construction and that ground vibration and settlement monitoring be performed during construction.

The contractor should retain a qualified and experienced engineer to design the shoring system. The shoring parameters presented in this report are minimum requirements, and the contractor should evaluate the adequacy of these parameters and make the appropriate modifications for their design. We recommend that the contractor take appropriate measures to protect workers. OSHA requirements pertaining to worker safety should be observed.

12.1.7 Fill Material

In general, the on-site soils should be suitable for reuse as fill materials, provided they are free of trash, debris, oversize material, or other deleterious materials. Fill should generally be free of rocks or lumps of material in excess of 4 inches in diameter. Rocks or hard lumps larger than approximately 4 inches in diameter should be broken into smaller pieces or should be removed from the site.

Imported fill material, if used, should also consist of clean, granular material with a low expansion potential, corresponding to an expansion index of 50 or less. The soil should also be tested for corrosive properties prior to importing. We recommend that the imported materials satisfy the Caltrans (2018) criteria for non-corrosive soils (i.e., soils having a chloride concentration of 500 parts per million [ppm] or less, a soluble sulfate content of approximately 0.15 percent (1,500 ppm) or less, a pH value of 5.5 or higher, or an electrical resistivity of 1,100 ohm-centimeters or more). Materials for use as fill should be evaluated by Ninyo & Moore prior to importing. The contractor should be responsible for the uniformity of import material brought to the site.

12.1.8 Fill Placement and Compaction

In general, fill material, including retaining wall, trench backfill, fill placed beneath gallery footings, and other, should be moisture-conditioned and compacted in horizontal lifts to a

relative compaction of 90 percent or more as evaluated by ASTM D 1557. Fill material with less than 5 percent fines (passing No. 200 sieve) should be compacted to 95 percent relative compaction in accordance with City of Los Angeles guidelines as evaluated by ASTM D 1557. The rock blanket and granular materials placed as fill along the bottom of the gallery excavation, with the exception of fill placed beneath footings, should generally not be compacted. Fill material should be moisture-conditioned to slightly above the laboratory optimum moisture content. The lift thickness for fill soils will depend on the type of compaction equipment used but generally should not exceed 8 inches in loose thickness. Special care should be exercised to avoid damaging pipes during compaction of trench backfill. Placement and compaction of the fill soils should be in general accordance with local grading ordinances and good construction practice.

12.2 Underground Utilities

We anticipate that underground pipelines will be supported on native alluvial deposits. Based on the preliminary plans, pipeline inverts may be on the order of 15 feet in depth.

12.2.1 Pipe Bedding

We recommend that pipes be supported on 6 inches or more of granular bedding material, such as sand, with a sand equivalent value of 30 or more. Bedding material should be placed around the pipe and 12 inches or more above the top of the pipe in accordance with the current “Greenbook” Standard Specifications for Public Works. Special care should be taken not to allow voids beneath the pipe. Compaction of the bedding material and backfill should proceed up both sides of the pipe. Trench backfill, including bedding material, should be placed in accordance with the recommendations presented in Section 12.1.

12.2.2 Modulus of Soil Reaction for Pipe Design

The modulus of soil reaction is used to characterize the stiffness of soil backfill placed along the sides of buried flexible pipelines for the purpose of evaluating deflection caused by the weight of the backfill above the pipe. We recommend that a modulus of soil reaction of 1,000 pounds per square inch be used for design, provided that granular bedding material is placed adjacent to the pipe, as recommended in the previous section.

12.3 Site-Specific Seismic Design Considerations

Design of the proposed improvements should be performed in accordance with the requirements of governing jurisdictions and applicable building codes. Table 2 presents the site-specific spectral response acceleration parameters in accordance with the CBC (2019) guidelines.

Table 2 – 2019 California Building Code Seismic Design Criteria	
Site Coefficients and Spectral Response Acceleration Parameters	**Values**
Site Class	D
Mapped Spectral Response Acceleration at 0.2-second Period, S_s	2.042g
Mapped Spectral Response Acceleration at 1.0-second Period, S_1	0.699g
Site-Specific Spectral Response Acceleration at 0.2-second Period, S_{MS}	2.204g
Site-Specific Spectral Response Acceleration at 1.0-second Period, S_{M1}	1.802g
Site-Specific Design Spectral Response Acceleration at 0.2-second Period, S_{DS}	1.469g
Site-Specific Design Spectral Response Acceleration at 1.0-second Period, S_{D1}	1.201g
Site-Specific Maximum Considered Earthquake Geometric Mean (MCE_G) Peak Ground Acceleration, PGA_M	0.881g

12.4 Foundations

It is our opinion that the proposed infiltration gallery may be supported on strip-type foundations and that other underground structures (i.e., catch basins, in-line pretreatment devices, etc.) may be supported by mat foundations. Spread foundations may also be used to support other at-grade structures, if planned. The following are our recommendations for project foundations:

12.4.1 Spread Footings for Infiltration Gallery and At-Grade Structures

Spread footings for the infiltration gallery (i.e., strip footings) should be placed directly on low expansion alluvial materials and/or compacted fill in accordance with the recommendations presented in the Earthwork section of this report. Spread footings for at-grade structures bearing on low expansion compacted fill in accordance with the recommendations presented in the Earthwork section of this report should extend 18 inches or more below the lowest adjacent finished grade. Continuous and isolated footings should have a width of 24 inches or more. Continuous footings should be reinforced with two No. 4 steel reinforcing bars, one placed near the top and one placed near the bottom of the footings, and further detailed in accordance with the recommendations of the structural engineer.

Footings, as described above and bearing on alluvial materials and compacted fill, may be designed using a net allowable bearing capacity of 2,500 pounds per square foot (psf). Total and differential settlements for footings designed in accordance with the above recommendations are estimated to be less than approximately 1 inch and ½ inch over a horizontal span of 40 feet, respectively.

Footings bearing on alluvial materials and compacted fill may be designed using a coefficient of friction of 0.35, where the total frictional resistance equals the coefficient of friction times the dead load. Footings may be designed using a passive resistance value of 300 psf per foot of depth, with a maximum value of 3,000 psf. The allowable lateral resistance can be taken as the sum of the frictional resistance and passive resistance, provided the passive

resistance does not exceed one-half of the total allowable resistance. The passive resistance (including the maximum value) may be increased by one-third when considering loads of short duration such as wind or seismic forces.

12.4.2 Mat Foundations

Mat foundations for other underground structures (i.e., catch basins, in-line pretreatment devices, etc.) may be supported on alluvial materials and/or compacted fill in accordance with the recommendations presented in the Earthwork section of this report. Foundations should be designed in accordance with structural considerations and the following recommendations. In addition, requirements of the appropriate governing jurisdictions and applicable building codes should be considered in the design of the structures.

The mat foundations may be designed using a net allowable bearing capacity of 4,000 psf. The total and differential settlement corresponding to this allowable bearing load are estimated to be less than approximately 1 inch and ½ inch over a horizontal span of 40 feet, respectively.

Mat foundations typically experience some deflection due to loads placed on the mat and the reaction of the soils directly underlying the mat. A design modulus of subgrade reaction (K) of 50 tons per cubic foot (tcf) may be used for the subgrade soils in evaluating such deflections.

12.5 Lateral Earth Pressures for Below-Grade Structures

Walls for below-grade structures when constructed as recommended above may be designed for lateral pressures represented by the pressure diagram on Figure 10. To reduce the potential for pipe-to-wall differential settlement, which could cause pipe shearing, we recommend that a flexible pipe joint be located close to the exterior of the wall. The type of joint should be such that minor relative movement can be accommodated without distress. The pipe connections should be sufficiently flexible to withstand differential settlement of approximately ¾ inch.

12.6 Lateral Earth Pressures for Thrust Blocks

Thrust restraint for buried pipelines may be achieved by transferring the thrust force to the soil outside the pipe through a thrust block. Thrust blocks may be designed using the passive lateral earth pressures presented on Figure 11. Excavations for construction of thrust blocks should be backfilled with granular backfill material and compacted following the recommendations presented in this report.

12.7 Exterior Flatwork

We recommend that new exterior concrete sidewalks and flatwork (hardscape) have a thickness of 4 inches and be reinforced with No. 3 steel reinforcing bars placed 24 inches on-center (each way) near the mid-height of the slab. The hardscape should be underlain by 4 inches of clean sand and installed with crack-control joints at an appropriate spacing as designed by the structural engineer to reduce the potential for shrinkage cracking. Positive drainage should be established and maintained adjacent to flatwork. To reduce the potential for differential offset, joints between the new hardscape and adjacent curbs, existing hardscape, building walls, and/or other structures, and between sections of new hardscape, should be doweled.

12.8 Pavement Construction

We understand that street improvements may be performed along Morehart Avenue that may include the installation of new pavement. We considered full-depth AC, AC over aggregate base, and Portland Cement Concrete (PCC). We also understand that permeable pavement is being considered on Morehart Avenue as one of the alternatives. New pavement sections were designed based on the subgrade soil conditions and our laboratory testing. In general, the subgrade soils encountered at the project site consisted primarily of coarse-grained soils with variable amounts of silt. Laboratory testing was performed on a representative subgrade soil sample and indicated an R-value of approximately 76. Due to the variability of the on-site soils, an R-value of 60 was used for the pavement design. We evaluated the structural pavement sections assuming a traffic index (TI) of 5 for light-duty pavements and a TI of 6 for medium-duty pavements. A TI of 5 is generally associated with light automobile traffic (passenger cars) and commercial automobile traffic and a TI of 6 is generally associated with periodic heavy truck traffic.

Our AC pavement analysis was performed using the methodology outlined by the Highway Design Manual (Caltrans, 2020a). For the design of PCC pavement, we used the methodology present in the Navy Pavement Design Manual (1979) assuming a 28-day compressive strength of concrete of 3,000 psi. The pavement analysis assumes an approximately 20-year design life for new pavement. Based on the design R-value and TIs, our recommended pavement structural sections are provided in Table 3.

Table 3 – Preliminary Pavement Structural Sections

Traffic Index	Recommended Pavement Sections		
	Flexible Pavement		Rigid Pavement
	AC/AB (inches)	Full Depth AC (inches)	PCC (inches)
5.0	3.0 over 4½	4.0	5½
6.0	3.0 over 4½	4½	6.0

Notes:
AC – Asphalt Concrete
AB – Class II Aggregate Base
PCC – Portland Cement Concrete

For the design of pervious pavements (pervious concrete and permeable interlocking concrete pavement), we used the methodology presented in the Pervious Pavement Design Guidance (Caltrans, 2013). We evaluated the structural pavement sections based on three categories of traffic conditions representing low to moderate vehicular loading. The thickness of the reservoir layer is based on the higher value of the thickness required to handle the 85th percentile 24-hour storm event and the minimum thickness recommended in the pavement design structural requirements section. Our preliminary permeable pavement sections presented in Table 4 below are based on the minimum pavement structures to provide structural adequacy and constructability for the various loading. Thicker class 4 aggregate base may be appropriate in areas that require a high hydraulic storage requirement.

Table 4 – Preliminary Permeable Pavement Structural Sections

Category	PCP over AB (inches)	PICP over PM over AB (inches)
A (Pedestrian and bike pathways, landscaped areas, sidewalks) – No vehicular loads	4½ over 3½	$2^{3}/_{8}$ over 4½ over 1½
B (Parking lots, park and ride areas, maintenance access roads) – Few heavy loads at low speed	5½ over 6.0	$3^{1}/_{8}$ over 4½ over 9½
C (Parking lots, rest areas, maintenance stations) – Moderate heavy loads at low speed	8½ over 8½	$3^{1}/_{8}$ over 4½ over 17½

Notes:
PCP – Pervious Concrete Pavement
PICP – Permeable Interlocking Concrete Pavement
AB – Caltrans Class 4 Aggregate Base
PM – Caltrans Class 3 Permeable Material

Prior to placement of the new structural pavement sections, the subgrade soils should be prepared appropriately. The upper approximately 8 inches of the subgrade beneath new pavements should be scarified, moisture conditioned, and re-compacted to a relative compaction of 90 percent as evaluated by ASTM D 1557. If full-depth AC pavement is used, we recommend that the subgrade soils be recompacted to a relative compaction of 95 percent. The subgrade compaction should also result in a non-yielding condition to allow for pavement construction.

Aggregate base material should conform to the latest specifications in Section 200-2.2 for crushed aggregate base or Section 200-2.4 for crushed miscellaneous base of the Greenbook and should be compacted to a relative compaction of 95 percent in accordance with ASTM D 1557. AC should conform to Section 203-6 of the Greenbook and should be compacted to a relative compaction of 95 percent in accordance with ASTM D 1560 or California Test Method (CT) 304. Permeable material should conform to Section 68-2.02 (F) of the Caltrans Standard Specifications (2020b). It is also recommended that a 2-inch-thick bedding sand be placed between the Class 3 permeable material and permeable interlocking concrete pavement.

Pavement sections should be selected based on actual anticipated traffic loading conditions and evaluation of the subgrade materials at the time of construction. We recommend that the paving

operations be observed and tested by Ninyo & Moore. We further recommend that mix designs for the various pavements be made by an engineering company specialized in this type of work.

12.9 Corrosivity

Laboratory testing was performed on a representative sample of near-surface soil to evaluate soil pH, electrical resistivity, water-soluble chloride content, and water-soluble sulfate content. The soil pH and electrical resistivity tests were performed in general accordance with California Test Method (CT) 643. Chloride content tests were performed in general accordance with CT 422. Sulfate testing was performed in general accordance with CT 417. The laboratory test results are presented in Appendix C.

The soil pH of the sample tested was measured to be 6.8 and the electrical resistivity was measured to be 6,708 ohm-centimeters. The chloride content of the sample was measured to be 10 ppm. The sulfate content of the sample was measured to be 0.001 to percent by weight (i.e., 10 ppm). Based on the laboratory test results and Caltrans criteria (2018), the project site can be classified as a non-corrosive site, which is defined as having earth materials with a pH of more than 5.5, an electrical resistivity of more than 1,100 ohm-centimeters, chloride concentrations of less than 500 ppm, and less than 0.15 percent sulfates (i.e., 1,500 ppm).

12.10 Concrete Placement

Concrete in contact with soil or water that contains high concentrations of water-soluble sulfates can be subject to premature chemical and/or physical deterioration. Based on the CBC (2019), the potential for sulfate attack is negligible for water-soluble sulfate contents in soil ranging from 0.00 to 0.10 percent by weight, moderate for water-soluble sulfate contents ranging from 0.10 to 0.20 percent by weight, severe for water-soluble sulfate contents ranging from 0.20 to 2.00 percent by weight, and very severe for water-soluble sulfate contents over 2.00 percent by weight. The soil sample tested for this evaluation, using CT 417, indicates a water-soluble sulfate content of approximately 0.001 percent by weight (i.e., 10 ppm). Accordingly, the on-site soils are considered to have a negligible potential for sulfate attack. However, due to the potential variability of the on-site soils, consideration should be given to using Type II/V cement for the project.

To reduce the potential for shrinkage cracks in the concrete during curing, we recommend that the concrete for the proposed improvements, if applicable, be placed with a slump of 4 inches based on ASTM C 143. The slump should be checked periodically at the site prior to concrete placement. We further recommend that concrete cover over reinforcing steel for foundations be provided in accordance with CBC (2019). The structural engineer should be consulted for additional concrete specifications.

12.11 Stormwater Infiltration Gallery

Based on our subsurface evaluation, the park is generally underlain by granular alluvial deposits consisting of poorly graded sand, poorly graded sand with silt, well-graded sand, silty sand, poorly graded gravel, and sandy silt with variable amounts of gravel and cobbles. The wide range of adjusted infiltration rates (0.9 to 5.0 inches per hour) is likely due to lateral and vertical variations in material types, including silt content of alluvial interbeds and lenses. Due to site variability and the number of percolation tests performed, we recommend that an infiltration rate of 3 inches per hour, following adjustments by the BMP designer for RF_s, be used for design at Fernangeles Park for both shallow and deep infiltration based on our review of our boring logs and laboratory test results. We recommend that the bottoms of the infiltration BMPs be further evaluated during construction. Additional recommendations may be provided at that time if fine-grained materials are present along the bottom of the basin, such as removing the fine-grained material and replacing it with granular material.

Based on our evaluation, the potential for hydro-collapse settlement associated with infiltration is generally low due to the proposed depth of infiltration. However, we generally recommend a setback of 15 feet or more between settlement sensitive structures and proposed infiltration areas.

12.12 Drainage

Proper surface drainage is imperative for satisfactory site performance. Positive drainage should be provided and maintained to direct surface water away from existing foundations. Positive drainage is defined as a slope of 2 percent or more for a distance of 5 feet or more away from foundations and tops of slopes. Surface waters should not be allowed to pond adjacent to footings. We recommend that above-ground structures, if constructed, have roof drains and downspouts installed to collect runoff.

12.13 Landscaping

Project landscaping should consist of drought tolerant plants. Landscape irrigation should be kept to a level just sufficient to maintain plant vigor. Overwatering should not be permitted

13 CONSTRUCTION OBSERVATION

The recommendations provided in this report are based on our understanding of the proposed project and our evaluation of the data collected based on subsurface conditions disclosed by widely spaced exploratory borings and CPTs. It is imperative that the geotechnical consultant checks the interpolated subsurface conditions during construction. We recommend that Ninyo & Moore review the project plans and specifications prior to construction. It should be noted that,

upon review of these documents, some recommendations presented in this report may be revised or modified.

During construction, we recommend that the duties of the geotechnical consultant include, but not be limited to:

- Observing site clearing, grubbing, and removals.
- Observing excavation bottoms, and the placement and compaction of fill, including trench backfill.
- Evaluating imported materials prior to their use as fill (if used).
- Performing field tests to evaluate fill compaction.
- Observing foundation excavations for bearing materials and cleaning prior to placement of reinforcing steel or concrete.
- Performing material testing services including concrete compressive strength and steel tensile strength tests and inspections.

The recommendations provided in this report assume that Ninyo & Moore will be retained as the geotechnical consultant during the construction phase of this project. If another geotechnical consultant is selected, we request that the selected consultant indicate to the owner and to our firm in writing that our recommendations are understood and that they are in full agreement with our recommendations.

14 LIMITATIONS

The field evaluation, laboratory testing, and geotechnical analysis presented in this geotechnical report have been conducted in general accordance with current practice and the standard of care exercised by geotechnical consultants performing similar tasks in the project area. No warranty, expressed or implied, is made regarding the conclusions, recommendations, and opinions presented in this report. There is no evaluation detailed enough to reveal every subsurface condition. Variations may exist and conditions not observed or described in this report may be encountered during construction. Uncertainties relative to subsurface conditions can be reduced through additional subsurface exploration. Additional subsurface evaluation will be performed upon request. Please also note that our evaluation was limited to assessment of the geotechnical aspects of the project, and did not include evaluation of structural issues, environmental concerns, or the presence of hazardous materials.

This document is intended to be used only in its entirety. No portion of the document, by itself, is designed to completely represent any aspect of the project described herein. Ninyo & Moore

should be contacted if the reader requires additional information or has questions regarding the content, interpretations presented, or completeness of this document.

This report is intended for design purposes only. It does not provide sufficient data to prepare an accurate bid by contractors. It is suggested that the bidders and their geotechnical consultant perform an independent evaluation of the subsurface conditions in the project areas. The independent evaluations may include, but not be limited to, review of other geotechnical reports prepared for the adjacent areas, site reconnaissance, and additional exploration and laboratory testing.

Our conclusions, recommendations, and opinions are based on an analysis of the observed site conditions. If geotechnical conditions different from those described in this report are encountered, our office should be notified, and additional recommendations, if warranted, will be provided upon request. It should be understood that the conditions of a site could change with time as a result of natural processes or the activities of man at the subject site or nearby sites. In addition, changes to the applicable laws, regulations, codes, and standards of practice may occur due to government action or the broadening of knowledge. The findings of this report may, therefore, be invalidated over time, in part or in whole, by changes over which Ninyo & Moore has no control.

This report is intended exclusively for use by the client. Any use or reuse of the findings, conclusions, and/or recommendations of this report by parties other than the client is undertaken at said parties' sole risk.

15 REFERENCES

Abrahamson, N.A., Silva, W.J. and Kamai, R., 2014, Summary of the ASK14 Ground Motion Relation for Active Crustal Regions, Earthquake Spectra: Vol. 30, No. 3, pp. 1025-1055, dated August.

American Concrete Institute, 2019, Building Code Requirements for Structural Concrete (ACI 318-19) and Commentary (ACI 318R-19).

American Concrete Institute (ACI), 2016, ACI Manual of Concrete Practice.

American Society of Civil Engineers (ASCE), 2016, Minimum Design Loads for Building and Other Structures, Standard 7-16.

The Applied Technology Council (ATC), 2020, Hazards by Location, https://hazards.atcouncil.org/#/.

ASTM International (ASTM), 2019, Annual Book of ASTM Standards, West Conshohocken, Pennsylvania.

Bartlett, S.F., and Youd, T.L., 1995, Empirical Prediction of Liquefaction-Induced Lateral Spread Journal of Geotechnical Engineering, American Society of Civil Engineers, Vol. 121, No. 4, 316-329, dated April.

Boore, D.M., Stewart, J.P., Seyhan, E., and Atkinson, G.M., 2014, NGA-West2 Equations for Predicting PGA, PGV, and 5% Damped PSA for Shallow Crustal Earthquakes, Earthquake Spectra, Vol. 30, No. 3, pp. 1057-1085, dated August.

Bowles, J.E., 1996, Foundation Analysis and Design, Fifth Edition, The McGraw-Hill Companies, Inc.

Building Seismic Safety Council, 2009, National Earthquake Hazards Reduction Program (NEHRP) Recommended Seismic Provisions for New Buildings and Other Structures (FEMA P-750).

California Building Standards Commission, 2019, California Building Code (CBC): California Code of Regulations, Title 24, Part 2, Volumes 1 and 2, dated July 1.

California Department of Transportation, 2013, Pervious Pavement Design Guidance, Division of Design, Office of Storm Water Management, dated October.

California Department of Transportation, 2018, Corrosion Guidelines, Version 3.0, Division of Engineering Services, Materials Engineering and Testing Services, Corrosion Technology Branch, dated March.

California Department of Transportation, 2020a, Highway Design Manual, U.S. Customary Units, dated March 20.

California Department of Transportation, 2020b, 2018 Standard Specifications, dated April 17.

California Department of Transportation, 2020c, Caltrans ARS Online (V3.0.2), http://dap3.dot.ca.gov/ARS_Online/.

California Department of Conservation, Division of Mines and Geology, 1997, Seismic Hazard Zone Report for the Van Nuys 7.5-Minute Quadrangle, Los Angeles County, California: Seismic Hazard Zone Report 08.

California Department of Conservation, Division of Mines and Geology, 1998, Seismic Hazard Zones Official Map, Van Nuys Quadrangle, 7.5-Minute Series: Scale 1:24,000, dated February 1.

California Geological Survey, 2008, Guidelines for Evaluating and Mitigating Seismic Hazards in California, CDMG Special Publication 117A.

California Geological Survey, 2010, Fault Activity Map of California, http://maps.conservation.ca.gov/cgs/fam/.

California Geological Survey, 2007, Significant California Earthquakes (M > 6.5 or That Caused Loss of Life or More than $200,000* in Damage), *Damage Estimates Have Not Been Adjusted for Inflation, Website http://www.conservation.ca.gov/cgs/rghm/quakes/eq_chron.htm, last edited on June 11.

California Geological Survey, 2020, Earthquake Zones of Required Investigation, https://maps.conservation.ca.gov/cgs/EQZApp/app/.

Campbell, K.W., and Bozorgnia, Y., 2014, NGA-West2 Ground Motion Model for the Average Horizontal Components of PGA, PGV, and 5% Damped Linear Acceleration Response Spectra, Earthquake Spectra, Vol. 30, No. 3, pp. 1087-1115, dated August.

Campbell, R.H., Wills, C.J., Irvine, P.J., Swanson, B.J., 2014, Preliminary Geologic Map of the Los Angeles 30' x 60' Quadrangle, California, Version 2.0: United States Geological Survey, Scale 1:100,000.

CDM Smith, 2020, TOS 25 Stormwater Capture Parks Program Presentation, Fernangeles Park Site Layout, dated March 24.

Chiou, B. S.-J., and Youngs, R.R., 2014, Update of the Chiou and Youngs NGA Model for the Average Horizontal Component of Peak Ground Motion and Response Spectra, Earthquake Spectra, August 2014, Vol. 30, No. 3, dated August.

CivilTech Software, 2008, Liquefy Pro (Version 5.5j), A computer program for liquefaction and settlement analysis.

City of Los Angeles, 2004, Methane and Methane Buffer Zones, Bureau of Engineering, Department of Public Works, dated March 31.

City of Los Angeles, Department of Building and Safety, 2014, Site Testing Standards for Methane, Bulletin P/BC 2014-101.

City of Los Angeles, Department of Public Works, Bureau of Engineering, 2019, Pre-Qualified On-Call Wastewater and Environmental Engineering Services Consultant Contract, Task Order Solicitation (TOS) No. 25, Stormwater Capture Parks Program, Pre-Design and Design Services, dated June 12.

County of Los Angeles, Department of Public Works, Geotechnical and Materials Engineering Division, 2017, Guidelines for Geotechnical Investigation and Reporting, Low Impact Stormwater Infiltration, dated June 30.

County of Los Angeles, Department of Public Works, Well Measurement Data, Well Number 4897A; www.dpw.lacounty.gov/general/wells.

City of Los Angeles, Department of Public Works, Bureau of Engineering, 2020, NavigateLA, http://navigatela.lacity.org/navigatela/.

Dibblee, T.W., Jr., 1991, Geologic Map of the San Fernando and Van Nuys (North ½) Quadrangles, Los Angeles County, California: Dibblee Foundation, DF-33, Scale 1:24,000.

Federal Emergency Management Agency, 2020, Flood Insurance Rate Maps, Search by Address, https://msc.fema.gov/portal/search.

Hart, E.W., and Bryant, W.A., 2018, Earthquake Fault Zones, A Guide for Government Agencies, Property Owners/Developers, and Geoscience Practitioners for Assessing Fault Rupture Hazards in California.

Historical Aerials, 2020, Website for Viewing Aerial Photographs, www.historicaerials.com.

Ishihara, K. and Yoshimine, M. (1992) “Evaluation of settlements in sand deposits following liquefaction during earthquakes,” Soils and Foundations, 32 (1), 173-188.

Jennings, C.W. and Bryant, W.A., 2010, Fault Activity Map of California and Adjacent Areas: California Division of Mines and Geology, California Geologic Data Map Series, Map No. 6, Scale 1:750,000.

Joint Cooperative Committee of the Southern California Chapter of the American Public Works Association and Southern California Districts of the Associated General Contractors of California, 2018, “Greenbook,” Standard Specifications for Public Works Construction: BNI Building News, Los Angeles, California.

Los Angeles Department of Water and Power, Watershed Management Group and City of Los Angeles Sanitation – Watershed Protection Division, 2018, Conceptual Study Report, Fernangeles Park, Stormwater Capture Project, dated October.

Naval Facilities Engineering Command, 1979, Pavement Design Manual, D.M. 5.4, dated October.

Naval Facilities Engineering Command, 1982, Foundations and Earth Structures Design Manuals, dated May

Ninyo & Moore, 2020a, Revised Proposal for Geotechnical and Environmental Consulting Services, Strathern, Fernangeles, and David M. Gonzales Parks, Stormwater Capture Parks Program, Los Angeles Bureau of Engineering Task Oder Solicitation (TOS) No. 25, Los Angeles, California, dated May 18.

Norris, R.M. and Webb, R.W., 1990, Geology of California: John Wiley & Sons.

Seed, H.B., and Idriss, I.M., 1982, Ground Motions and Soil Liquefaction During Earthquakes, Volume 5 of Engineering Monographs on Earthquake Criteria, Structural Design, and Strong Motion Records: Berkeley, Earthquake Engineering Research Institute.

Seyhan, E, 2014, Weighted Average 2014 NGA West-2 GMPE, Pacific Earthquake Engineering Research Center.

Southern California Earthquake Center, 1999, Recommended Procedures for Implementation of DMG Special Publication 117 Guidelines for Analyzing and Mitigating Liquefaction Hazards in California.

Southern California Earthquake Data Center, 2011, SCEC/Harvard Community Velocity Model, Version 11.9.0.

State of California, State Water Resources Control Board, 2020, GeoTracker Database System, http://geotracker.swrcb.ca.gov/.

Structural Engineers Association of California (SEAOC) and California Office of Statewide Health Planning and Development (OSHPD), 2019, Web Based Seismic Design Maps Tool; https://seismicmaps.org.

Tokimatsu, K., and Seed, H.B., 1987, Evaluation of Settlements in Sands Due to Earthquake Shaking, Journal of the Geotechnical Engineering Division, ASCE, Vol. 113, No. 8, pp. 861-878.

United States Department of Agriculture (USDA), Aerial Photograph, Date 11-19-53, Flight AXJ-14K, Numbers 50 and 51, Scale 1:20,000.

United States Geological Survey, 2018, Van Nuys, California, Quadrangle Map, 7.5 Minute Series: Scale 1:24,000.

United States Geological Survey, 2008, National Seismic Hazard Maps, http://geohazards.usgs.gov/cfusion/hazfaults_search/hf_search_main.cfm.

United States Geological Survey and Southern California Earthquake Center, 2019, Open Seismic Hazard Analysis, http://www.opensha.org/.

United States Geological Survey, 2020a, Unified Hazard Tool; https://earthquake.usgs.gov/hazards/interactive/.

United States Geological Survey, 2020b, Slope Based Vs30 Map Viewer; https://usgs.maps.arcgis.com/apps/webappviewer/index.html?id=8ac19bc334f747e486550f32837578e1.

Wills, C.J., and Clahan, L.B., 2006, Developing a Map of Geologically Defined Site-Condition Categories for California, Bulletin of the Seismological Society of America, v. 96, no. 4A, p. 1483–1501.

Yerkes, R.F., 1996, Preliminary Geologic Map of the Van Nuys 7.5' Quadrangle, Southern California.

Youd, T.L., Idriss, I.M., Andrus, R.D., Arango, I., Castro, G., Christian, J.T., Dobry, R., Finn, W.D., Harder, L.F., Hynes, M.E., Ishihara, K., Koester, J.P., Liao, S.S.C., Marcuson, W.F., Martin, G.R., Mitchell, J.K., Moriwaki, Y., Power, M.S., Robertson, P.K., Seed, R.B., and Stokoe, K.H., II., 2001, Liquefaction Resistance of Soils: Summary Report from the 1996 NCEER and 1998 NCEER/NSF Workshops on Evaluation of Liquefaction Resistance of Soils, Journal of Geotechnical and Geoenvironmental Engineering, ASCE, 124(10), 817-833.

FIGURES

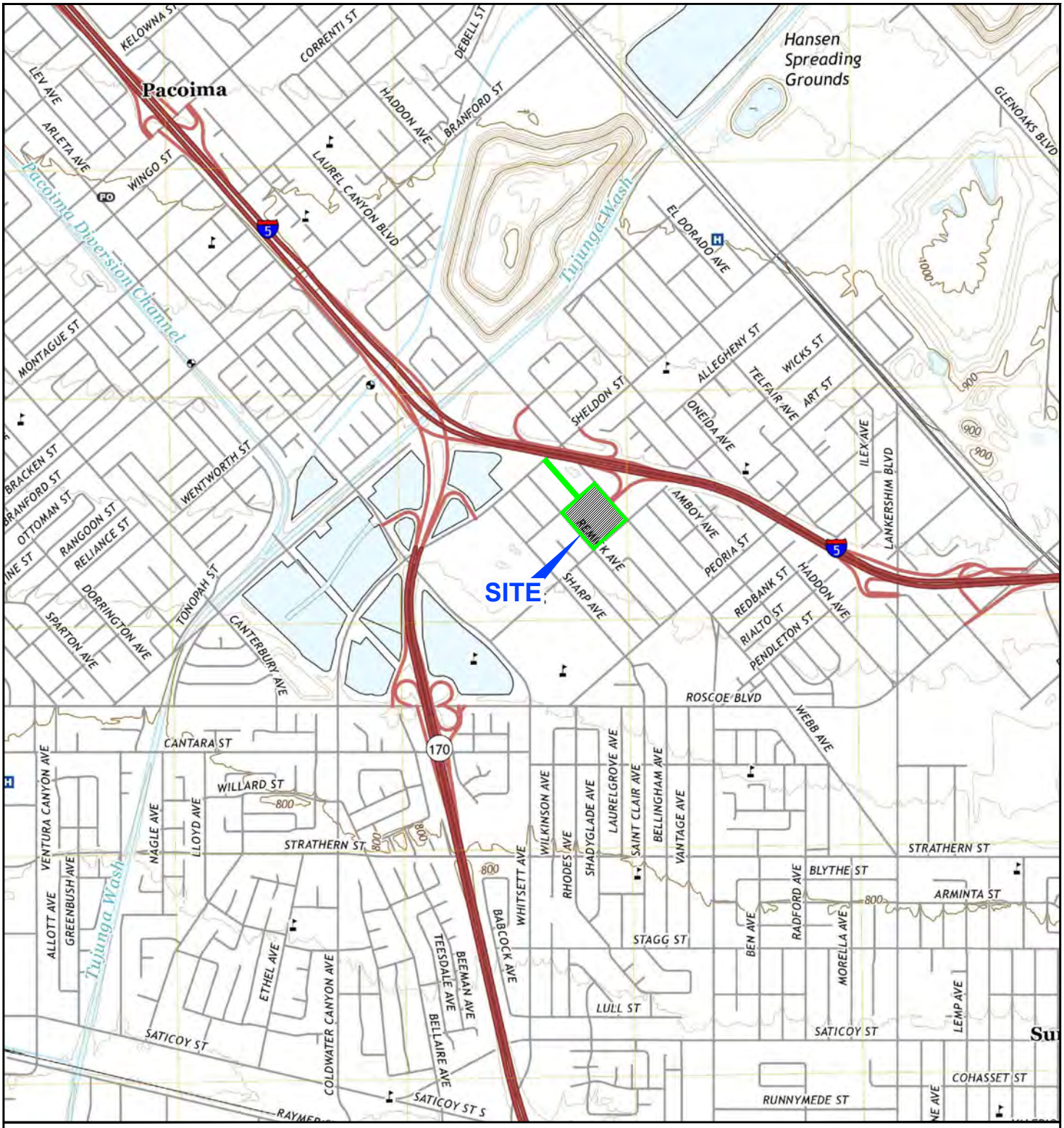

NOTE: DIMENSIONS, DIRECTIONS AND LOCATIONS ARE APPROXIMATE. I REFERENCE: USGS, 2018.

N

FEET

0 2,000 4,000

211294002_SL.dwg 04/30/2020 GK

FIGURE 1

SITE LOCATION

LABOE TOS NO. 25 - FERNANGELES PARK
SUN VALLEY, CALIFORNIA

211294002 I 8/20

Ninyo & Moore
Geotechnical & Environmental Sciences Consultants



LEGEND

B-1 TD=58.0 — BORING; TD=TOTAL DEPTH IN FEET

P-4 TD=51.5 — BORING/PERCOLATION TEST; TD=TOTAL DEPTH IN FEET

CPT-4A TD=39.2 — CONE PENETROMETER TEST; TD=TOTAL DEPTH IN FEET

SITE BOUNDARY

PROPOSED INFILTRATION GALLERY

NOTE: DIMENSIONS, DIRECTIONS AND LOCATIONS ARE APPROXIMATE. I REFERENCE: GOOGLE EARTH, 2020.

N

FEET

0 200 400

211294002_BPCL.dwg 06/30/2020 GK, JDP

FIGURE 2

BORING, PERCOLATION TEST, AND CPT LOCATIONS

LABOE TOS NO. 25 - FERNANGELES PARK
SUN VALLEY, CALIFORNIA

211294002 I 8/20

Ninyo & Moore
Geotechnical & Environmental Sciences Consultants



LEGEND

- Infiltration Gallery (New)
- Hydrodynamic Separator (New)
- Catch Basin (New)
- Cross Gutter (New)
- Bioswale (New)
- Spreader (New)
- Pipeline (New)
- Pump Surge Chamber
- Water
- Gas
- Storm Drain Inlets
- Storm Pipes
- Sewer Structures
- Sewer Pipes
- Sewer Laterals
- Site Boundary

B-1 TD=58.0 — BORING; TD=TOTAL DEPTH IN FEET

P-4 TD=51.5 — BORING/PERCOLATION TEST; TD=TOTAL DEPTH IN FEET

CPT-4A TD=39.2 — CONE PENETROMETER TEST; TD=TOTAL DEPTH IN FEET

FEET
0 150 300

NOTE: DIMENSIONS, DIRECTIONS AND LOCATIONS ARE APPROXIMATE. I REFERENCE: CDM SMITH, 2020.

211294002_SP.dwg 06/30/2020 GK, JDP

FIGURE 3

Ninyo & Moore
Geotechnical & Environmental Sciences Consultants

SITE PLAN (ALTERNATIVE 1)

LABOE TOS NO. 25 - FERNANGELES PARK
SUN VALLEY, CALIFORNIA

211294002 I 8/20

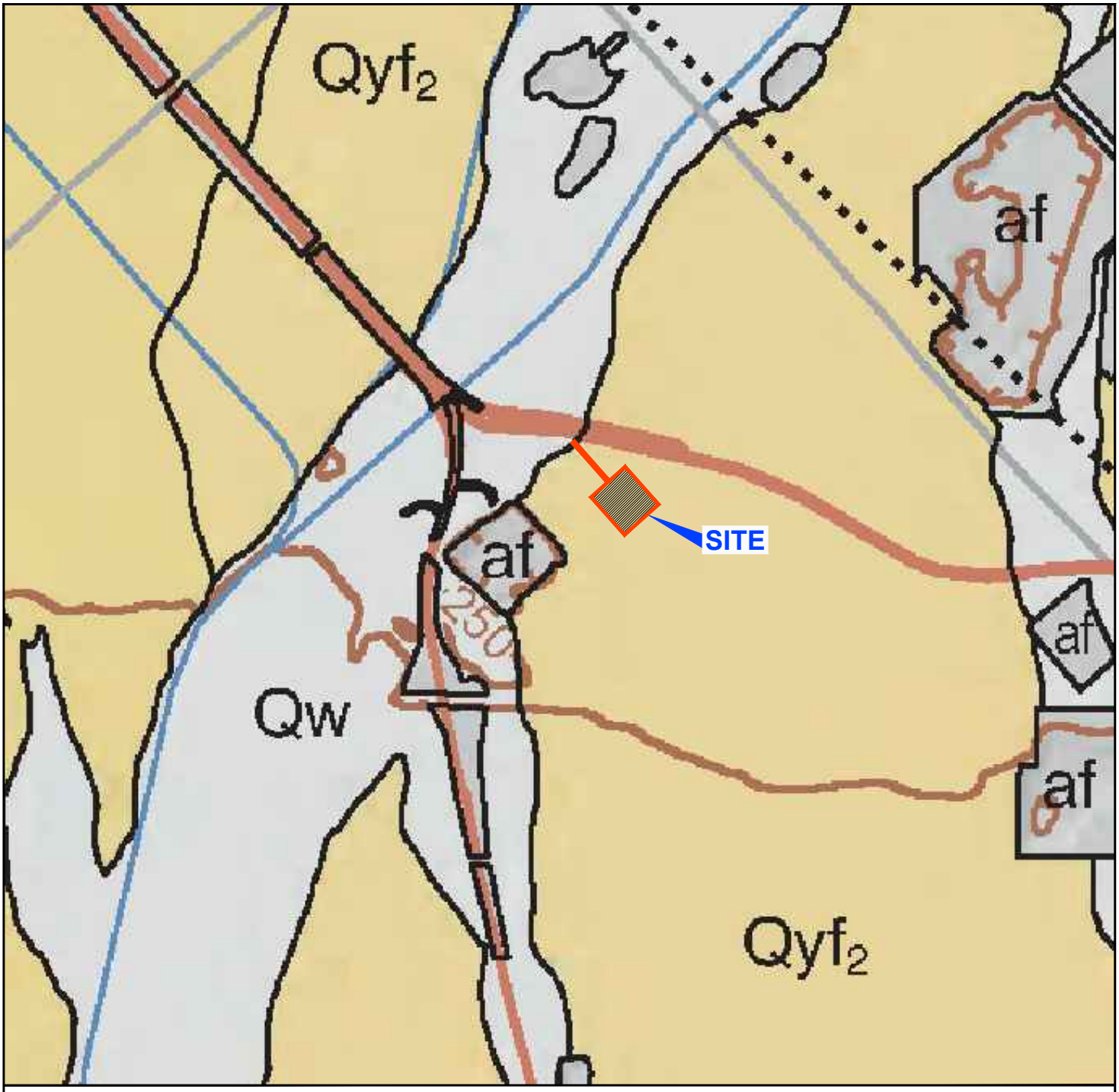

LEGEND

af	ARTIFICIAL FILL
Qw	WASH DEPOSITS
Qyf	YOUNG ALLUVIAL FAN DEPOSITS

FAULT; DOTTED WHERE BURIED

GEOLOGIC CONTACT

N

FEET

0 2,000 4,000

NOTE: DIMENSIONS, DIRECTIONS AND LOCATIONS ARE APPROXIMATE. I REFERENCE: R.H. CAMPBELL, ET AL., 2014.

211294002_RG.dwg 06/29/2020 GK, JDP

FIGURE 4

Ninyo & Moore
Geotechnical & Environmental Sciences Consultants

REGIONAL GEOLOGY

LABOE TOS NO. 25 - FERNANGELES PARK
SUN VALLEY, CALIFORNIA

211294002 I 8/20

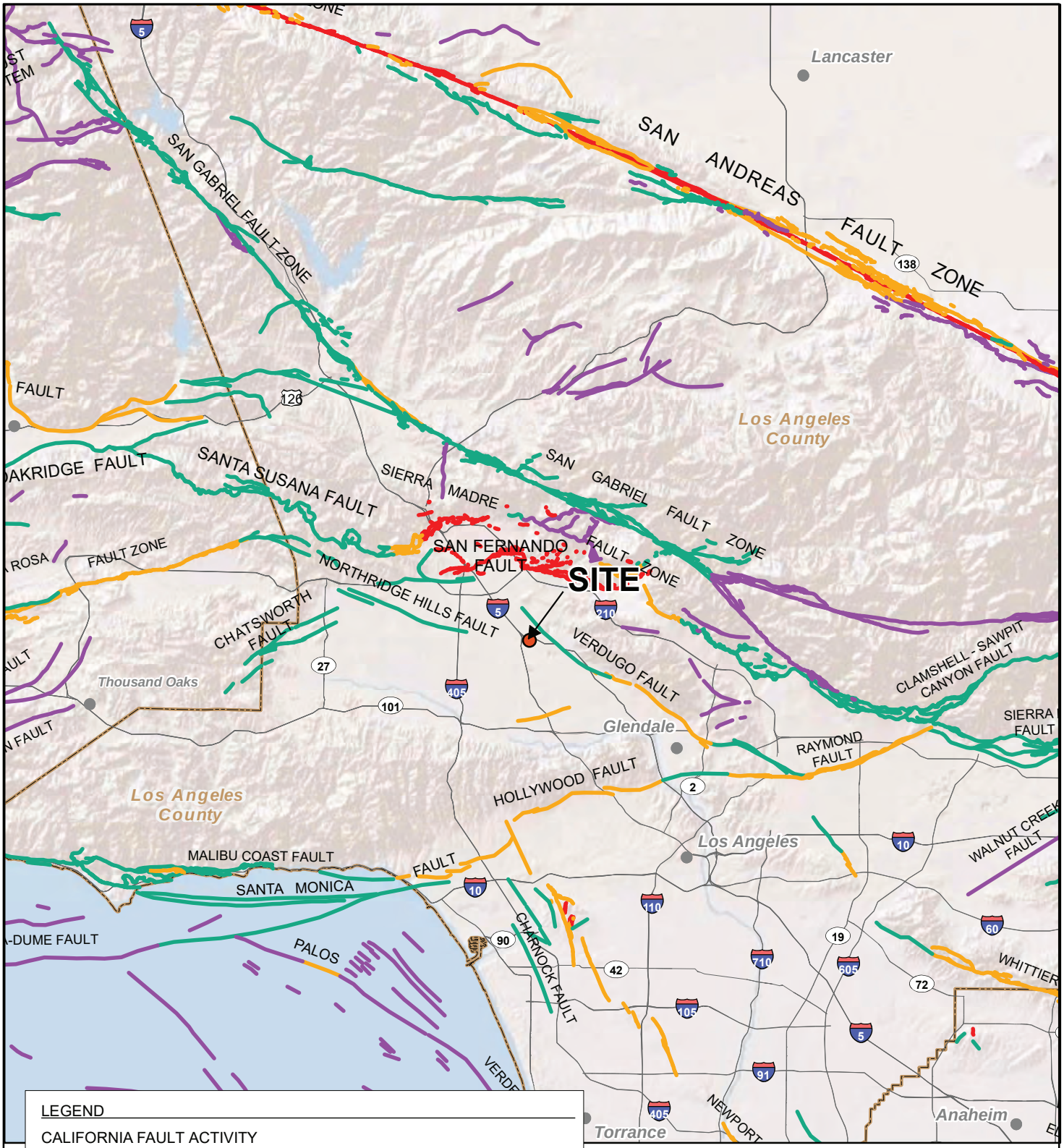

SOURCES: CALIFORNIA DIVISION OF MINES AND GEOLOGY, 1976, ENVIRONMENTAL GEOLOGY OF ORANGE COUNTY, CALIFORNIA, OPEN FILE REPORT 79-8.; JENNINGS, C.W., AND BRYANT, 2010, FAULT ACTIVITY MAP OF CALIFORNIA; ESRI SHADED RELIEF, 2017

NOTE: DIRECTIONS, DIMENSIONS AND LOCATIONS ARE APPROXIMATE.

211294002_FL.mxd 5/5/2020

FIGURE 5

FAULT LOCATIONS

LABOE TOS NO. 25 - FERNANGELES PARK
NORTH HOLLYWOOD, CALIFORNIA

Ninyo & Moore
Geotechnical & Environmental Sciences Consultants

211294002 | 8/20

PERIOD (seconds)	SITE-SPECIFIC MCE_R RESPONSE SPECTRUM Sa (g)	SITE-SPECIFIC DESIGN RESPONSE SPECTRUM Sa (g)
0.010	0.936	0.624
0.020	0.942	0.628
0.030	0.966	0.644
0.050	1.062	0.708
0.075	1.240	0.827
0.100	1.424	0.949
0.150	1.705	1.136
0.200	1.924	1.283
0.250	2.174	1.450
0.300	2.398	1.598
0.400	2.449	1.633

PERIOD (seconds)	SITE-SPECIFIC MCE_R RESPONSE SPECTRUM Sa (g)	SITE-SPECIFIC DESIGN RESPONSE SPECTRUM Sa (g)
0.500	2.396	1.597
0.750	2.033	1.355
1.000	1.733	1.155
1.500	1.201	0.801
2.000	0.892	0.595
3.000	0.569	0.379
4.000	0.396	0.264
5.000	0.304	0.203
7.500	0.186	0.124
10.000	0.112	0.075

S_{DS} = 1.469 g	S_{D1} = 1.201 g	S_{MS} = 2.204 g	S_{M1} = 1.802 g	PGA_M = 0.881 g

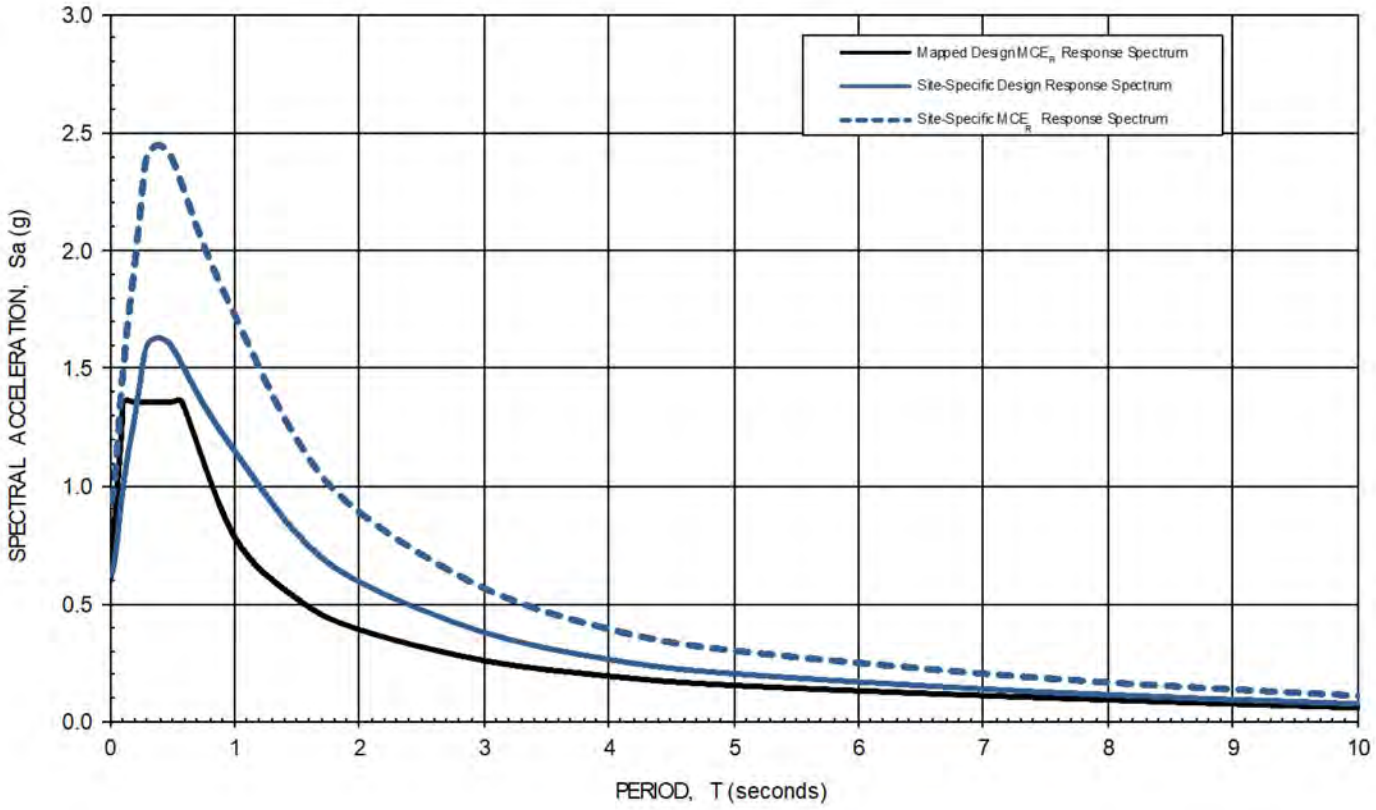

NOTES:

1 The probabilistic ground motion spectral response accelerations are based on the risk-targeted Maximum Considered Earthquake (MCE_R) having a 2% probability of exceedance in 50 years in the maximum direction using the Chiou & Youngs (2014), Campbell & Bozorgnia (2014), Boore et al. (2014), and Abrahamson et al. (2014) attenuation relationships and the risk coefficients.

2 The deterministic ground motion spectral response accelerations are for the 84th percentile of the geometric mean values in the maximum direction using the Chiou & Youngs (2014), Campbell & Bozorgnia (2014), Boore et al. (2014), and Abrahamson et al. (2014) attenuation relationships for deep soil sites considering a Mw 7.5 event on the Verdugo fault zone located 1.84 kilometers from the site. It conforms with the lower bound limit per ASCE 7-16 Section 21.2.2.

3 The Site-Specific MCE_R Response Spectrum is the lesser of spectral ordinates of deterministic and probabilistic accelerations at each period per ASCE 7-16 Section 21.2.3. The Site-Specific Design Response Spectrum conforms with lower bound limit per ASCE 7-16 Section 21.3.

4 The Mapped Design MCE_R Response Spectrum is computed from mapped spectral ordinates modified for Site Class D (stiff soil profile) per ASCE 7-16 Section 11.4. It is presented for the sake of comparison.

211294002_ARS.dwg 06/16/2020 JDP

FIGURE 6

ACCELERATION RESPONSE SPECTRA

LABOE TOS NO. 25 - FERNANGELES PARK
SUN VALLEY, CALIFORNIA

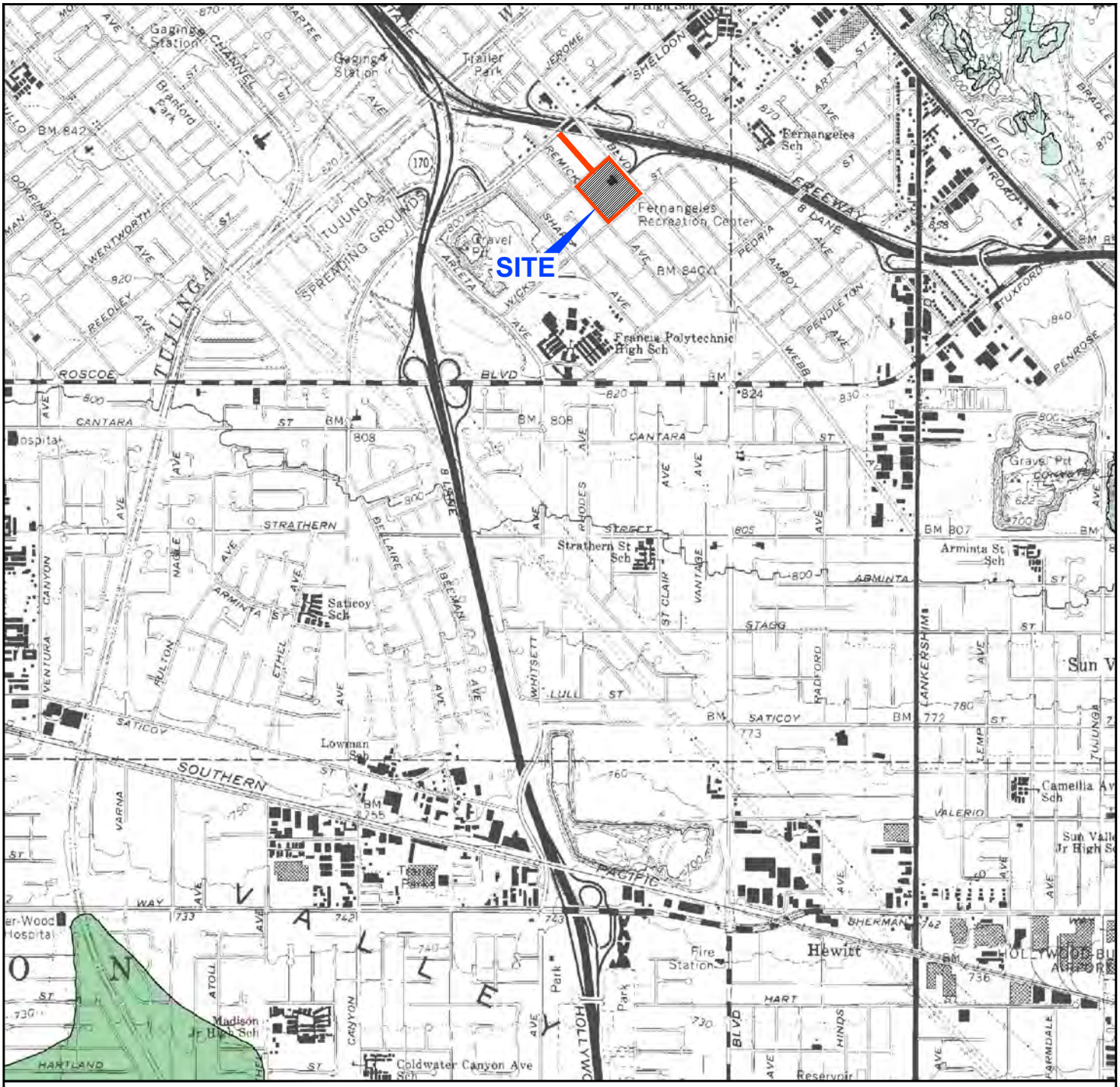

LEGEND

EARTHQUAKE-INDUCED LANDSLIDES

Areas where previous occurrence of landslide movement, or local topographic, geological, geotechnical and subsurface water conditions indicate a potential for permanent ground displacements such that mitigation as defined in Public Resources Code Section 2693(c) would be required.

LIQUEFACTION

Areas where historic occurrence of liquefaction, or local geological, geotechnical and groundwater conditions indicate a potential for permanent ground displacements such that mitigation as defined in Public Resources Code Section 2693(c) would be required.

NOTE: DIMENSIONS, DIRECTIONS AND LOCATIONS ARE APPROXIMATE. I REFERENCE: CDC, 1998.

N

FEET

0 2,000 4,000

211294002_SHZ.dwg 06/29/2020 GK, JDP

FIGURE 7

SEISMIC HAZARD ZONES

LABOE TOS NO. 25 - FERNANGELES PARK
SUN VALLEY, CALIFORNIA

211294002 I 8/20

Ninyo & Moore
Geotechnical & Environmental Sciences Consultants

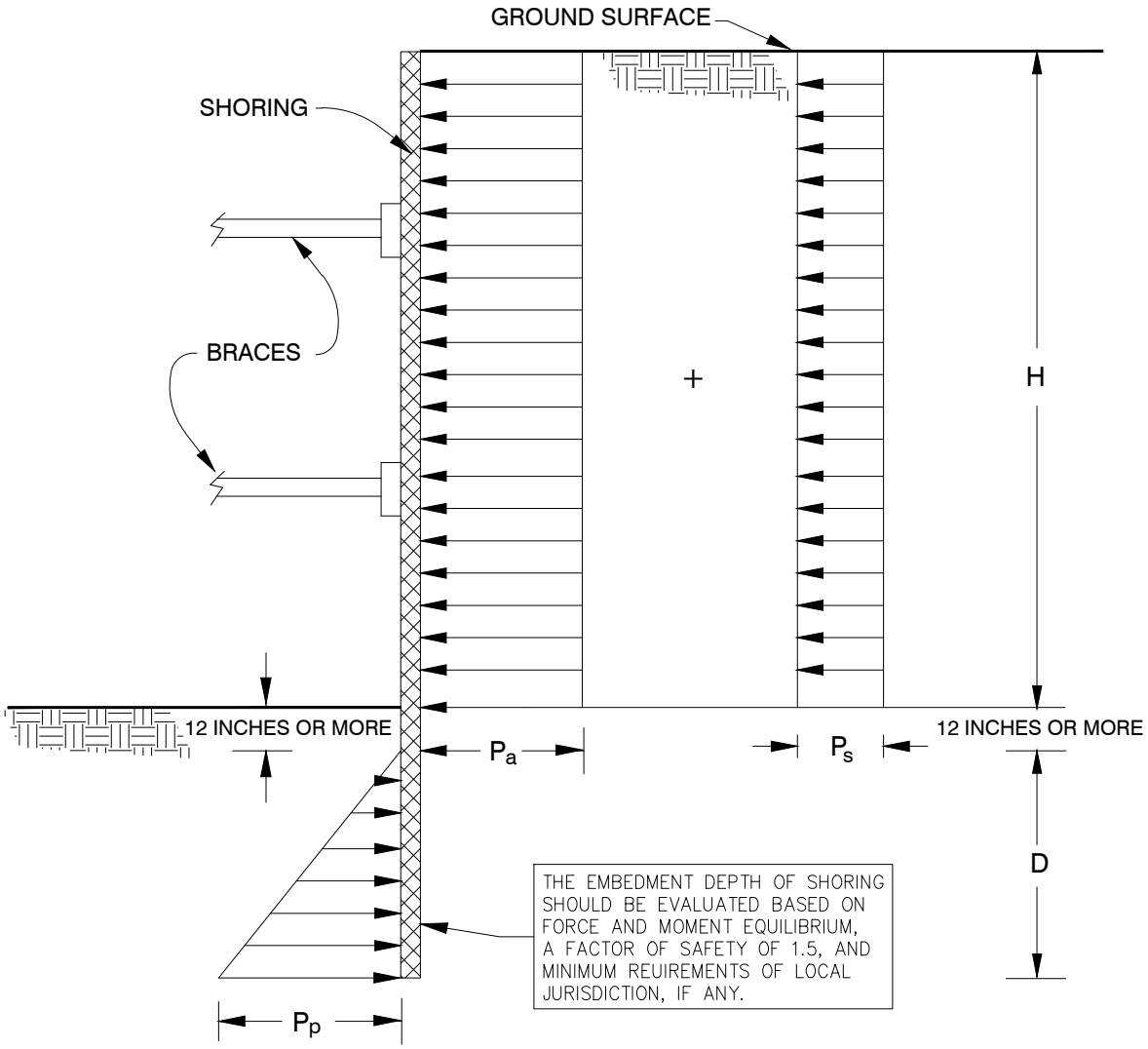

NOTES:

1. APPARENT LATERAL EARTH PRESSURE, P_a
   P_a = 24H psf
2. CONSTRUCTION TRAFFIC INDUCED SURCHARGE PRESSURE, P_s
   P_s = 120 psf
3. PASSIVE LATERAL EARTH PRESSURE, P_p
   P_p = 390D psf
4. ASSUMES GROUNDWATER IS NOT PRESENT
5. SURCHARGES FROM EXCAVATED SOIL OR CONSTRUCTION MATERIALS ARE NOT INCLUDED
6. H AND D ARE IN FEET

NOT TO SCALE

211294002_LEP-BE.dwg 06/29/2020 GK, JDP

FIGURE 8

LATERAL EARTH PRESSURES FOR BRACED EXCAVATION

LABOE TOS NO. 25 - FERNANGELES PARK
SUN VALLEY, CALIFORNIA

Ninyo & Moore
Geotechnical & Environmental Sciences Consultants

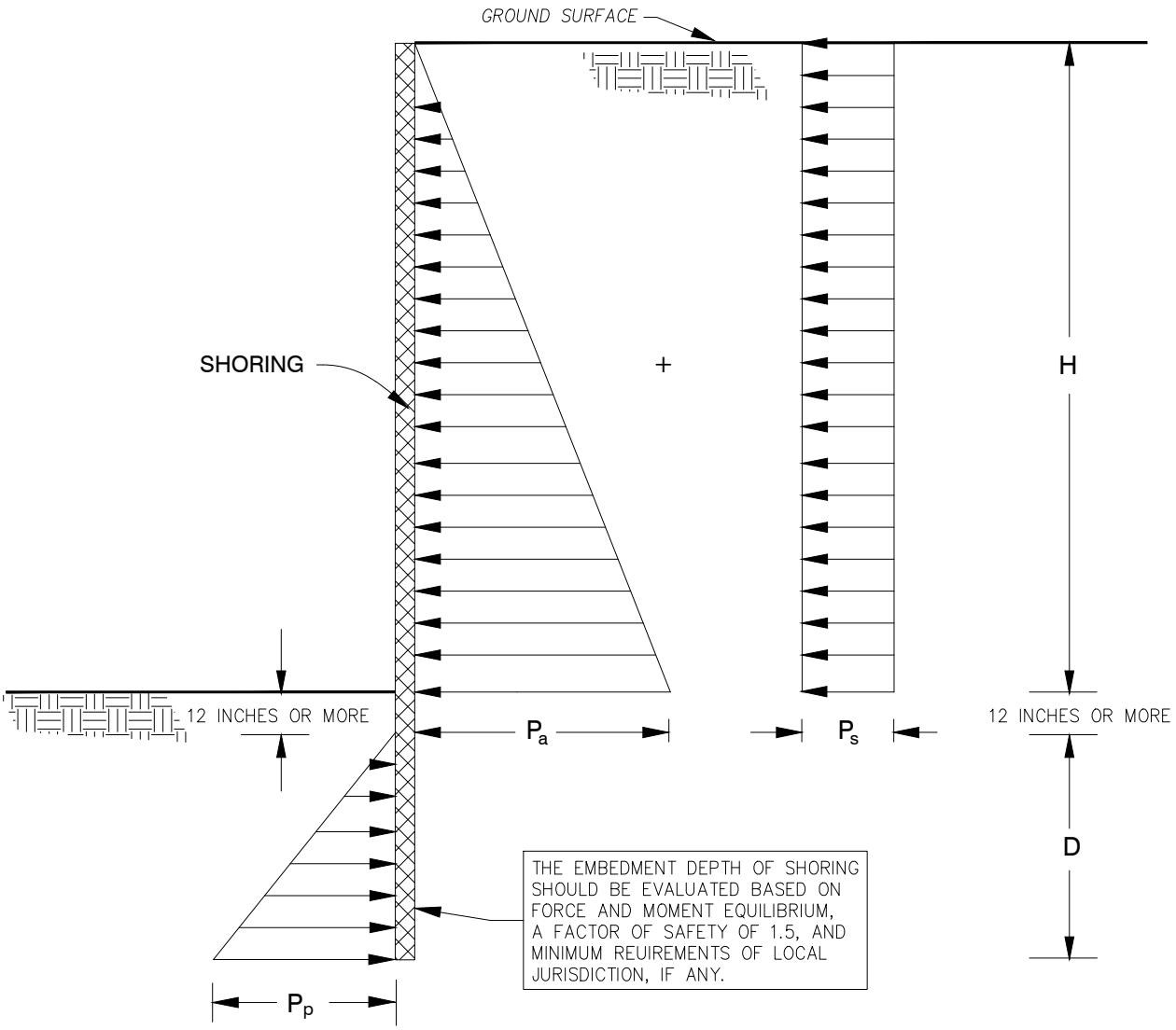

NOTES:

1. ACTIVE LATERAL EARTH PRESSURE, P_a
   P_a = 37H psf
2. CONSTRUCTION TRAFFIC INDUCED SURCHARGE PRESSURE, P_s
   P_s = 120 psf
3. PASSIVE LATERAL EARTH PRESSURE, P_p
   P_p = 390D psf
4. ASSUMES GROUNDWATER IS NOT PRESENT
5. SURCHARGES FROM EXCAVATED SOIL OR CONSTRUCTION MATERIALS ARE NOT INCLUDED
6. H AND D ARE IN FEET

NOT TO SCALE

211294002_LEP-CS1.dwg 06/29/2020 GK, JDP

FIGURE 9

LATERAL EARTH PRESSURES FOR TEMPORARY CANTILEVERED SHORING

LABOE TOS NO. 25 - FERNANGELES PARK
SUN VALLEY, CALIFORNIA

Ninyo & Moore
Geotechnical & Environmental Sciences Consultants

211294002 I 8/20

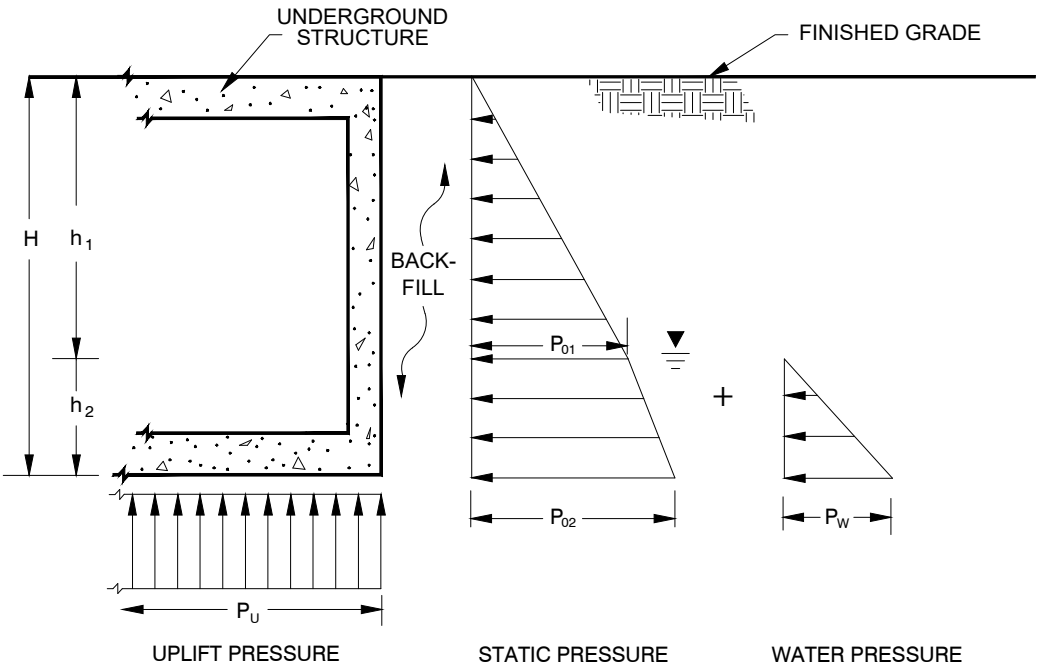

NOTES:

1. APPARENT LATERAL EARTH PRESSURES, P_{01} AND P_{02}
   $P_{01} = 57h$ psf
   $P_{02} = 57h_1 + 28h_2$ psf
2. HYDROSTATIC PRESSURE, P_w
   $P_w = 62.4\ h_2$ psf
3. UPLIFT PRESSURE, P_u
   $P_u = 62.4\ h_2$ psf
4. SURCHARGE PRESSURES CAUSED BY VEHICLES OR NEARBY STRUCTURES ARE NOT INCLUDED
5. H, h_1 AND h_2 ARE IN FEET
6. ▼ GROUNDWATER TABLE
7. THE GROUNDWATER TABLE IS RELATED TO THE FILL-LEVEL WITHIN THE OPEN-BOTTOM VAULTS AND THE HYDROSTATIC PRESSURE MAY ACT ON THE WALLS IN THE POSSIBLE CASE THAT THE VAULTS EXPERIENCE A RAPID DECREASE IN FILL-LEVEL BY BEING PUMPED OUT.

NOT TO SCALE

211294002_LEP-US.dwg 06/29/2020 GK, JDP

FIGURE 10

LATERAL EARTH PRESSURES FOR UNDERGROUND STRUCTURES

Ninyo & Moore
Geotechnical & Environmental Sciences Consultants

LABOE TOS NO. 25 - FERNANGELES PARK
SUN VALLEY, CALIFORNIA

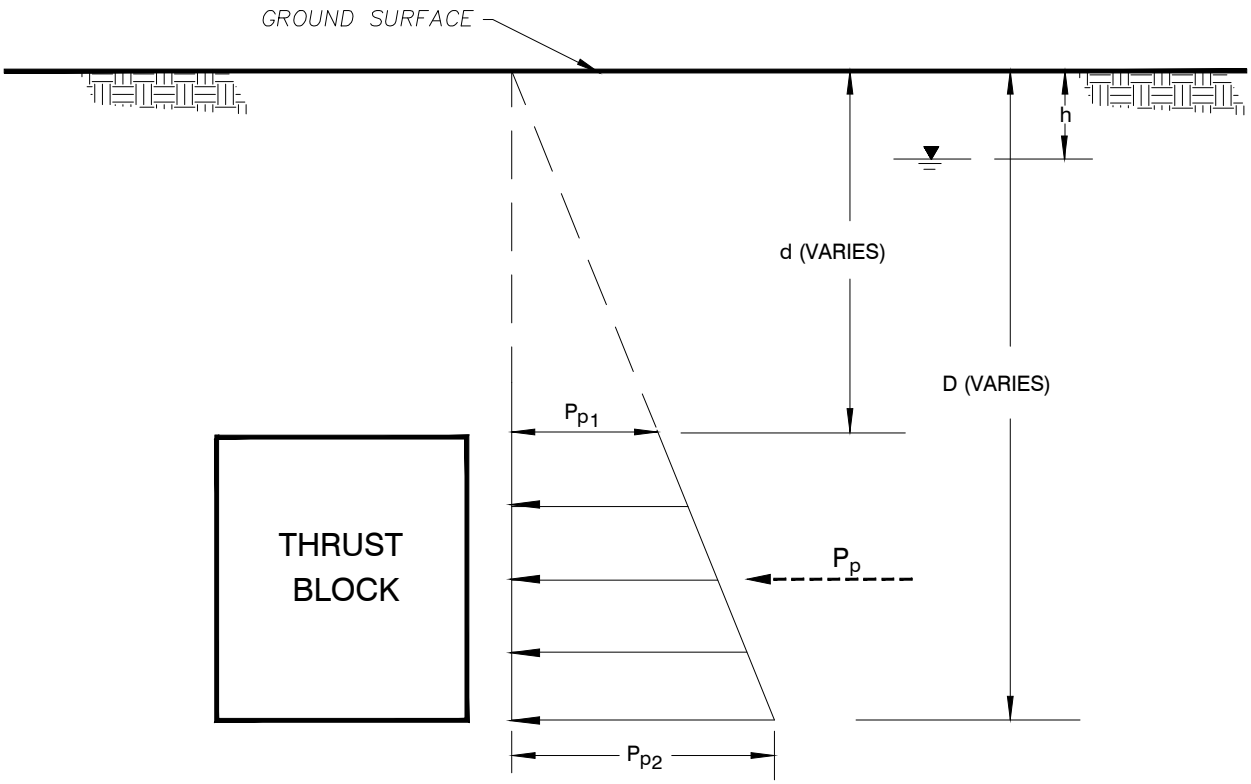

NOTES:

1. GROUNDWATER BELOW BLOCK

   $P_p = 190(D^2 - d^2)$ lb/ft

2. GROUNDWATER ABOVE BLOCK

   $P_p = 1.62(D - d)[124.8h + 57.6(D + d)]$ lb/ft

3. ASSUMES BACKFILL IS GRANULAR MATERIAL
4. ASSUMES THRUST BLOCK IS ADJACENT TO COMPETENT MATERIAL
5. D, d AND h ARE IN FEET
6. ▽ GROUNDWATER TABLE

NOT TO SCALE

211294002_LEP-TB.dwg 06/29/2020 JDP

FIGURE 11

THRUST BLOCK LATERAL EARTH PRESSURE DIAGRAM

LABOE TOS NO. 25 - FERNANGELES PARK
SUN VALLEY, CALIFORNIA

Ninyo & Moore
Geotechnical & Environmental Sciences Consultants

APPENDIX A

Boring Logs

APPENDIX A

BORING LOGS

Field Procedure for the Collection of Disturbed Samples

Disturbed soil samples were obtained in the field using the following method.

Bulk Samples

Bulk samples of representative earth materials were obtained from the exploratory borings. The samples were bagged and transported to the laboratory for testing.

The Standard Penetration Test (SPT) Sampler

Disturbed drive samples of earth materials were obtained by means of a Standard Penetration Test sampler. The sampler is composed of a split barrel with an external diameter of 2 inches and an unlined internal diameter of 1-3/8 inches. The sampler was driven into the ground 12 to 18 inches with a 140-pound hammer free-falling from a height of 30 inches in general accordance with ASTM D 1586. The blow counts were recorded for every 6 inches of penetration; the blow counts reported on the logs are those for the last 12 inches of penetration. Soil samples were observed and removed from the sampler, bagged, sealed and transported to the laboratory for testing.

Field Procedure for the Collection of Relatively Undisturbed Samples

Relatively undisturbed soil samples were obtained in the field using the following method.

The Modified Split-Barrel Drive Sampler

The sampler, with an external diameter of 3 inches, was lined with 1-inch-long, thin brass rings with inside diameters of approximately 2.4 inches. The sample barrel was driven into the ground with the weight of a hammer in general accordance with ASTM D 3550. The driving weight was permitted to fall freely. The approximate length of the fall, the weight of the hammer, and the number of blows per foot of driving are presented on the boring logs as an index to the relative resistance of the materials sampled. The samples were removed from the sample barrel in the brass rings, sealed, and transported to the laboratory for testing.

ASTM D 2488

Primary Divisions			Secondary Divisions	
			Group Symbol	Group Name
COARSE-GRAINED SOILS more than 50% retained on No. 200 sieve	**GRAVEL** more than 50% of coarse fraction retained on No. 4 sieve	CLEAN GRAVEL	GW	well-graded GRAVEL
			GP	poorly graded GRAVEL
		GRAVEL with DUAL CLASSIFICATIONS	GW-GM	well-graded GRAVEL with silt
			GP-GM	poorly graded GRAVEL with silt
			GW-GC	well-graded GRAVEL with clay
			GP-GC	poorly graded GRAVEL with clay
		GRAVEL with FINES more than	GM	silty GRAVEL
			GC	clayey GRAVEL
			GC-GM	silty, clayey GRAVEL
	SAND 50% or more of coarse fraction passes No. 4 sieve	CLEAN SAND	SW	well-graded SAND
			SP	poorly graded SAND
		SAND with DUAL CLASSIFICATIONS	SW-SM	well-graded SAND with silt
			SP-SM	poorly graded SAND with silt
			SW-SC	well-graded SAND with clay
			SP-SC	poorly graded SAND with clay
		SAND with FINES more than	SM	silty SAND
			SC	clayey SAND
			SC-SM	silty, clayey SAND
FINE-GRAINED SOILS 50% or more passes No. 200 sieve	**SILT and CLAY** liquid limit less than 50%	INORGANIC	CL	lean CLAY
			ML	SILT
			CL-ML	silty CLAY
		ORGANIC	OL (PI > 4)	organic CLAY
			OL (PI < 4)	organic SILT
	SILT and CLAY liquid limit 50% or more	INORGANIC	CH	fat CLAY
			MH	elastic SILT
		ORGANIC	OH (plots on or above "A"-line)	organic CLAY
			OH (plots below "A"-line)	organic SILT
	Highly Organic Soils		PT	Peat

Grain Size

Description		Sieve Size	Grain Size	Approximate Size
Boulders		> 12"	> 12"	Larger than basketball-sized
Cobbles		3 - 12"	3 - 12"	Fist-sized to basketball-sized
Gravel	Coarse	3/4 - 3"	3/4 - 3"	Thumb-sized to
	Fine	#4 - 3/4"	0.19 - 0.75"	Pea-sized to thumb-sized
Sand	Coarse	#10 - #4	0.079 - 0.19"	Rock-salt-sized to pea-sized
	Medium	#40 - #10	0.017 - 0.079"	Sugar-sized to rock-salt-sized
	Fine	#200 - #40	0.0029 - 0.017"	Flour-sized to sugar-sized
Fines		Passing #200	< 0.0029"	Flour-sized and smaller

Plasticity Chart

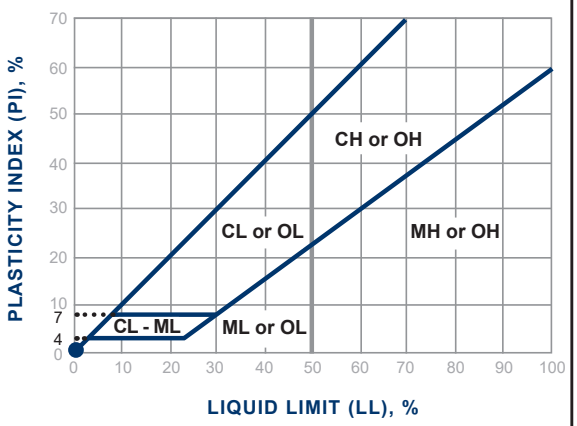

Apparent Density - Coarse-Grained Soil

Apparent Density	Spooling Cable or Cathead		Automatic Trip Hammer	
	SPT (blows/foot)	Split Barrel (blows/foot)	SPT (blows/foot)	Split Barrel (blows/foot)
Very Loose	≤ 4	≤ 8	≤ 3	≤ 5
Loose	5 - 10	9 - 21	4 - 7	6 - 14
Medium Dense	11 - 30	22 - 63	8 - 20	15 - 42
Dense	31 - 50	64 - 105	21 - 33	43 - 70
Very Dense	> 50	> 105	> 33	> 70

Consistency - Fine-Grained Soil

Consis-tency	Spooling Cable or Cathead		Automatic Trip Hammer	
	SPT (blows/foot)	Split Barrel (blows/foot)	SPT (blows/foot)	Split Barrel (blows/foot)
Very Soft	< 2	< 3	< 1	< 2
Soft	2 - 4	3 - 5	1 - 3	2 - 3
Firm	5 - 8	6 - 10	4 - 5	4 - 6
	9 - 15	11 - 20	6 - 10	7 - 13
V	16 - 30	21 - 39	11 - 20	14 - 26
Hard	> 30	> 39	> 20	> 26

Ninyo & Moore
Geotechnical & Environmental Sciences Consultants

USCS METHOD OF SOIL CLASSIFICATION

BORING LOG EXPLANATION SHEET

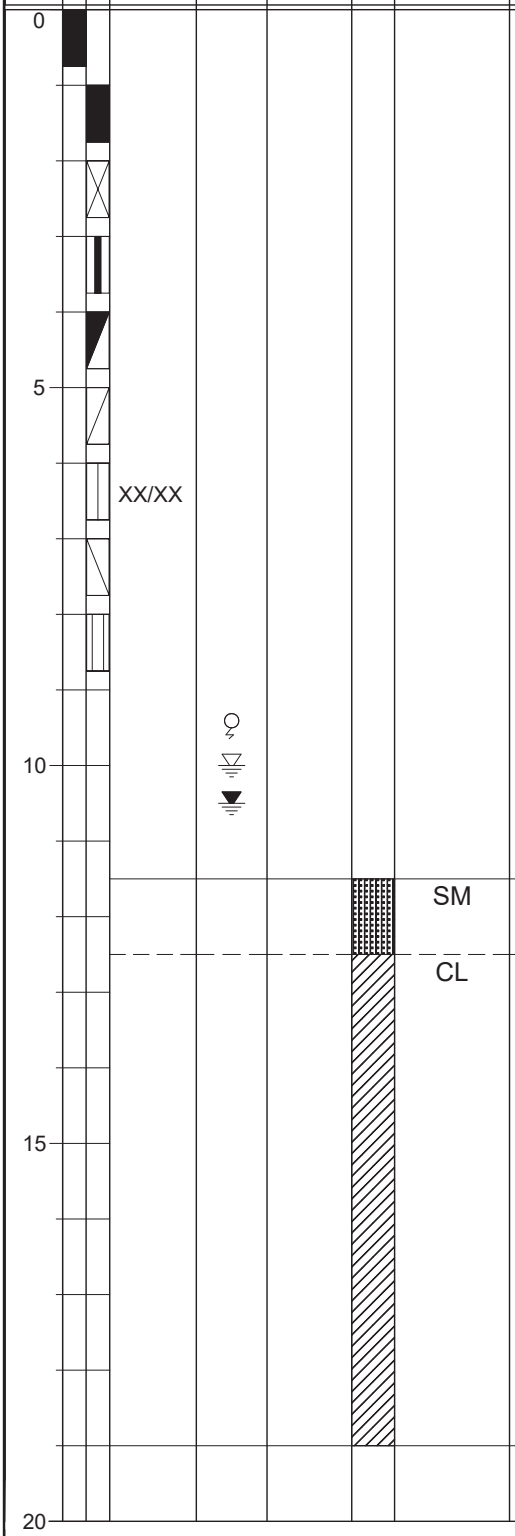

Bulk sample.

Modified split-barrel drive sampler.

No recovery with modified split-barrel drive sampler.

Sample retained by others.

Standard Penetration Test (SPT).

No recovery with a SPT.

Shelby tube sample. Distance pushed in inches/length of sample recovered in inches.

No recovery with Shelby tube sampler.

Continuous Push Sample.

Seepage.

Groundwater encountered during drilling.

Groundwater measured after drilling.

SM

MAJOR MATERIAL TYPE (SOIL):

Solid line denotes unit change.

CL

Dashed line denotes material change.

Attitudes: Strike/Dip
b: Bedding
c: Contact
j: Joint
f: Fracture
F: Fault
cs: Clay Seam
s: Shear
bss: Basal Slide Surface
sf: Shear Fracture
sz: Shear Zone
sbs: Shear Bedding Surface

The total depth line is a solid line that is drawn at the bottom of the boring.

DATE DRILLED 3/30/20 BORING NO. B-1

GROUND ELEVATION 854' ± (MSL) SHEET 1 OF 2

METHOD OF DRILLING 8" Hollow-Stem Auger (Baja Exploration)

DRIVE WEIGHT 140 lbs (Auto. Trip Hammer) DROP 30"

SAMPLED BY KMB LOGGED BY KMB REVIEWED BY GMC

DEPTH (feet)	SAMPLES (Bulk / Driven)	BLOWS/FOOT	MOISTURE (%)	DRY DENSITY (PCF)	SYMBOL	CLASSIFICATION U.S.C.S.	DESCRIPTION/INTERPRETATION
0						SC	FILL: Brown, moist, loose, clayey SAND; trace gravel; organics.
						SP	ALLUVIUM: Light brown, moist, medium dense, poorly graded SAND; few to little gravel.
		40	3.4	107.3		SP-SM	Light brown, moist, medium dense, poorly graded SAND with silt and gravel.
10		26					Dense.
		44					
20		26					
		79/11"	4.5	118.7		SP	Light brown, moist, very dense, poorly graded SAND with gravel.
30		44					
		50/3"					
40							

FIGURE A- 1

Ninyo & Moore
Geotechnical & Environmental Sciences Consultants

LABOE TOS NO. 25 - FERNANGELES PARK
SUN VALLEY, CALIFORIA

DATE DRILLED 3/30/20 BORING NO. B-1

GROUND ELEVATION 854' ± (MSL) SHEET 2 OF 2

METHOD OF DRILLING 8" Hollow-Stem Auger (Baja Exploration)

DRIVE WEIGHT 140 lbs (Auto. Trip Hammer) DROP 30"

SAMPLED BY KMB LOGGED BY KMB REVIEWED BY GMC

DEPTH (feet)	SAMPLES (Bulk / Driven)	BLOWS/FOOT	MOISTURE (%)	DRY DENSITY (PCF)	SYMBOL	CLASSIFICATION U.S.C.S.	DESCRIPTION/INTERPRETATION
40		37				SP-SM	ALLUVIUM: (Continued) Light brown, moist, very dense, poorly graded SAND with silt; few gravel.
		82/9"					
50		63					Interbeds of gravel.
		50/1"					Possible cobbles/boulders.
							Total Depth = 58.0 feet (Refusal). Groundwater was not encountered during drilling. Backfilled with cement-bentonite grout on 3/31/20.
60							Notes: Groundwater, though not encountered at the time of drilling, may rise to a higher level due to seasonal variations in precipitation and several other factors as discussed in the report. The ground elevation shown above is an estimation only. It is based on our interpretations of published maps and other documents reviewed for the purposes of this evaluation. It is not sufficiently accurate for preparing construction bids and design documents.
70							
80							

DATE DRILLED 3/31/20 BORING NO. P-1

GROUND ELEVATION 853' ± (MSL) SHEET 1 OF 1

METHOD OF DRILLING 8" Hollow-Stem Auger (Baja Exploration)

DRIVE WEIGHT 140 lbs (Auto. Trip Hammer) DROP 30"

SAMPLED BY KMB LOGGED BY KMB REVIEWED BY GMC

DEPTH (feet)	SAMPLES (Bulk / Driven)	BLOWS/FOOT	MOISTURE (%)	DRY DENSITY (PCF)	SYMBOL	CLASSIFICATION U.S.C.S.	DESCRIPTION/INTERPRETATION
0						SC	FILL: Brown, moist, loose, clayey SAND; organics.
		36				SP	ALLUVIUM: Light brown, moist, very dense, poorly graded SAND; trace gravel.
10		37	3.1	117.6		SW	Light brown, moist, medium dense, well-graded SAND with gravel.
		60				SM	Brown, moist, very dense, silty SAND; few gravel.
20							Total Depth = 16.0 feet. Groundwater was not encountered during drilling. In-situ percolation testing performed on 4/8/20. Backfilled with cement-bentonite grout on 4/13/20. Notes: Groundwater, though not encountered at the time of drilling, may rise to a higher level due to seasonal variations in precipitation and several other factors as discussed in the report. The ground elevation shown above is an estimation only. It is based on our interpretations of published maps and other documents reviewed for the purposes of this evaluation. It is not sufficiently accurate for preparing construction bids and design documents.
30							
40							

FIGURE A- 3

Ninyo & Moore
Geotechnical & Environmental Sciences Consultants

LABOE TOS NO. 25 - FERNANGELES PARK
SUN VALLEY, CALIFORIA

DATE DRILLED 3/30/20 BORING NO. P-2

GROUND ELEVATION 850' ± (MSL) SHEET 1 OF 2

METHOD OF DRILLING 8" Hollow-Stem Auger (Baja Exploration)

DRIVE WEIGHT 140 lbs (Auto. Trip Hammer) DROP 30"

SAMPLED BY KMB LOGGED BY KMB REVIEWED BY GMC

DEPTH (feet)	SAMPLES (Bulk / Driven)	BLOWS/FOOT	MOISTURE (%)	DRY DENSITY (PCF)	SYMBOL	CLASSIFICATION U.S.C.S.	DESCRIPTION/INTERPRETATION
0						SM	FILL: Brown, moist, loose, silty SAND; few to little gravel; cobbles; few organics.
						SP	ALLUVIUM: Light brown, moist, medium dense, poorly graded SAND; trace gravel.
		36					Interbed of gravel and cobbles.
10		24					Dense.
		37	3.7	107.4			Medium dense; few gravel.
20		23					Dense; interbedded clayey sand layers.
		50/5"					Very dense.
30		36					Few to little gravel.
		83/11"	4.6	117.9			
40							

FIGURE A- 4

Ninyo & Moore
Geotechnical & Environmental Sciences Consultants

LABOE TOS NO. 25 - FERNANGELES PARK
SUN VALLEY, CALIFORIA

211294002 | 8/20

DATE DRILLED 3/30/20 BORING NO. P-2

GROUND ELEVATION 850' ± (MSL) SHEET 2 OF 2

METHOD OF DRILLING 8" Hollow-Stem Auger (Baja Exploration)

DRIVE WEIGHT 140 lbs (Auto. Trip Hammer) DROP 30"

SAMPLED BY KMB LOGGED BY KMB REVIEWED BY GMC

DEPTH (feet)	SAMPLES Bulk	SAMPLES Driven	BLOWS/FOOT	MOISTURE (%)	DRY DENSITY (PCF)	SYMBOL	CLASSIFICATION U.S.C.S.	DESCRIPTION/INTERPRETATION
40			53				SP	ALLUVIUM: (Continued) Light brown, moist, very dense, poorly graded SAND. Interbeds of gravel and cobbles.
			50/6"					
50								Total Depth = 47.0 feet (Refusal). Groundwater was not encountered during drilling. In-situ percolation testing performed on 4/8/20. Backfilled with cement-bentonite grout on 4/13/20. Notes: Groundwater, though not encountered at the time of drilling, may rise to a higher level due to seasonal variations in precipitation and several other factors as discussed in the report. The ground elevation shown above is an estimation only. It is based on our interpretations of published maps and other documents reviewed for the purposes of this evaluation. It is not sufficiently accurate for preparing construction bids and design documents.
60								
70								
80								

DATE DRILLED 3/30/20 BORING NO. P-3

GROUND ELEVATION 850' ± (MSL) SHEET 1 OF 1

METHOD OF DRILLING 8" Hollow-Stem Auger (Baja Exploration)

DRIVE WEIGHT 140 lbs (Auto. Trip Hammer) DROP 30"

SAMPLED BY KMB LOGGED BY KMB REVIEWED BY GMC

DEPTH (feet)	SAMPLES (Bulk / Driven)	BLOWS/FOOT	MOISTURE (%)	DRY DENSITY (PCF)	SYMBOL	CLASSIFICATION U.S.C.S.	DESCRIPTION/INTERPRETATION
0						SC	FILL: Brown, moist, loose, clayey SAND; organics.
						SP	ALLUVIUM: Light brown, moist, medium dense, poorly graded SAND; trace gravel.
		18					Poorly graded sand with gravel; cobbles.
10		46	3.3	115.3			Dense.
		28					
							Total Depth = 16.0 feet. Groundwater was not encountered during drilling. In-situ percolation testing performed on 4/8/20. Backfilled with cement-bentonite grout on 4/13/20. Notes: Groundwater, though not encountered at the time of drilling, may rise to a higher level due to seasonal variations in precipitation and several other factors as discussed in the report. The ground elevation shown above is an estimation only. It is based on our interpretations of published maps and other documents reviewed for the purposes of this evaluation. It is not sufficiently accurate for preparing construction bids and design documents.
20							
30							
40							

FIGURE A- 6

Ninyo & Moore
Geotechnical & Environmental Sciences Consultants

LABOE TOS NO. 25 - FERNANGELES PARK
SUN VALLEY, CALIFORIA

DATE DRILLED 5/28/20 BORING NO. P-4

GROUND ELEVATION 860' ± (MSL) SHEET 1 OF 2

METHOD OF DRILLING 8" Hollow-Stem Auger (J&H Drilling)

DRIVE WEIGHT 140 lbs (Auto. Trip Hammer) DROP 30"

SAMPLED BY KMB LOGGED BY KMB REVIEWED BY GMC

DEPTH (feet)	SAMPLES (Bulk / Driven)	BLOWS/FOOT	MOISTURE (%)	DRY DENSITY (PCF)	SYMBOL	CLASSIFICATION U.S.C.S.	DESCRIPTION/INTERPRETATION
0						SP-SM	ASPHALT CONCRETE: Approximately 6 inches thick.
						SP	FILL: Light brown, moist, medium dense, poorly graded SAND with silt and gravel.
							ALLUVIUM: Light brown, moist, medium dense, poorly graded SAND with silt and gravel.
		19	2.8	106.1			
10		30					Dense.
		23					Medium dense.
20		23					Dense; possible cobbles/boulders.
		41					Medium dense; few gravel.
						SM	Light brown, moist, very dense, silty SAND.
30		47					
		60					Dense.
40							

FIGURE A- 7

Ninyo & Moore
Geotechnical & Environmental Sciences Consultants

LABOE TOS NO. 25 - FERNANGELES PARK
SUN VALLEY, CALIFORIA

211294002 | 8/20

DATE DRILLED 5/28/20 BORING NO. P-4

GROUND ELEVATION 860' ± (MSL) SHEET 2 OF 2

METHOD OF DRILLING 8" Hollow-Stem Auger (J&H Drilling)

DRIVE WEIGHT 140 lbs (Auto. Trip Hammer) DROP 30"

SAMPLED BY KMB LOGGED BY KMB REVIEWED BY GMC

DEPTH (feet)	SAMPLES Bulk	SAMPLES Driven	BLOWS/FOOT	MOISTURE (%)	DRY DENSITY (PCF)	SYMBOL	CLASSIFICATION U.S.C.S.	DESCRIPTION/INTERPRETATION
40			26				SP	ALLUVIUM: (Continued) Brown, moist, dense, poorly graded SAND; few to little gravel.
			61				GP	Brown, moist, dense, poorly graded GRAVEL with sand.
50			56				ML	Brown, moist, very dense, sandy SILT; trace gravel.
60								Total Depth = 51.5 feet. Groundwater was not encountered during drilling. In-situ percolation testing performed on 5/28/20. Backfilled with cement-bentonite grout on 5/28/20. Notes: Groundwater, though not encountered at the time of drilling, may rise to a higher level due to seasonal variations in precipitation and several other factors as discussed in the report. The ground elevation shown above is an estimation only. It is based on our interpretations of published maps and other documents reviewed for the purposes of this evaluation. It is not sufficiently accurate for preparing construction bids and design documents.
70								
80								

APPENDIX B

CPT Soundings

APPENDIX B

CPT SOUNDINGS

Field Procedure for Cone Penetration Testing

The cone penetration testing (CPT) described in this report was conducted by Kehoe Testing and Engineering in general accordance with ASTM D 5778. The cone penetrometer assembly used for this project consisted of a conical tip and a cylindrical friction sleeve. The conical tip had an apex angle of 60 degrees and a cross-section area of approximately 15 square centimeters. The interior of the CPT probe was instrumented with strain gauges that allowed simultaneous measurement of cone tip resistance and friction sleeve resistance during penetration. The cone hydraulically pushed into the soil using the reaction mass of a specially designed 30-ton truck at a constant rate while the cone tip resistance and sleeve friction were recorded at an approximately 1-inch interval and stored in digital form. The computer generated logs presented in the following pages include cone resistance, sleeve friction, pore pressure, and soil behavior type.

Kehoe Testing and Engineering
714-901-7270
steve@kehoetesting.com
www.kehoetesting.com

Project: **Ninyo & Moore / Fernangeles Site**
Location: **Los Angeles County, CA**

CPT-1
Total depth: 19.17 ft, Date: 3/24/2020

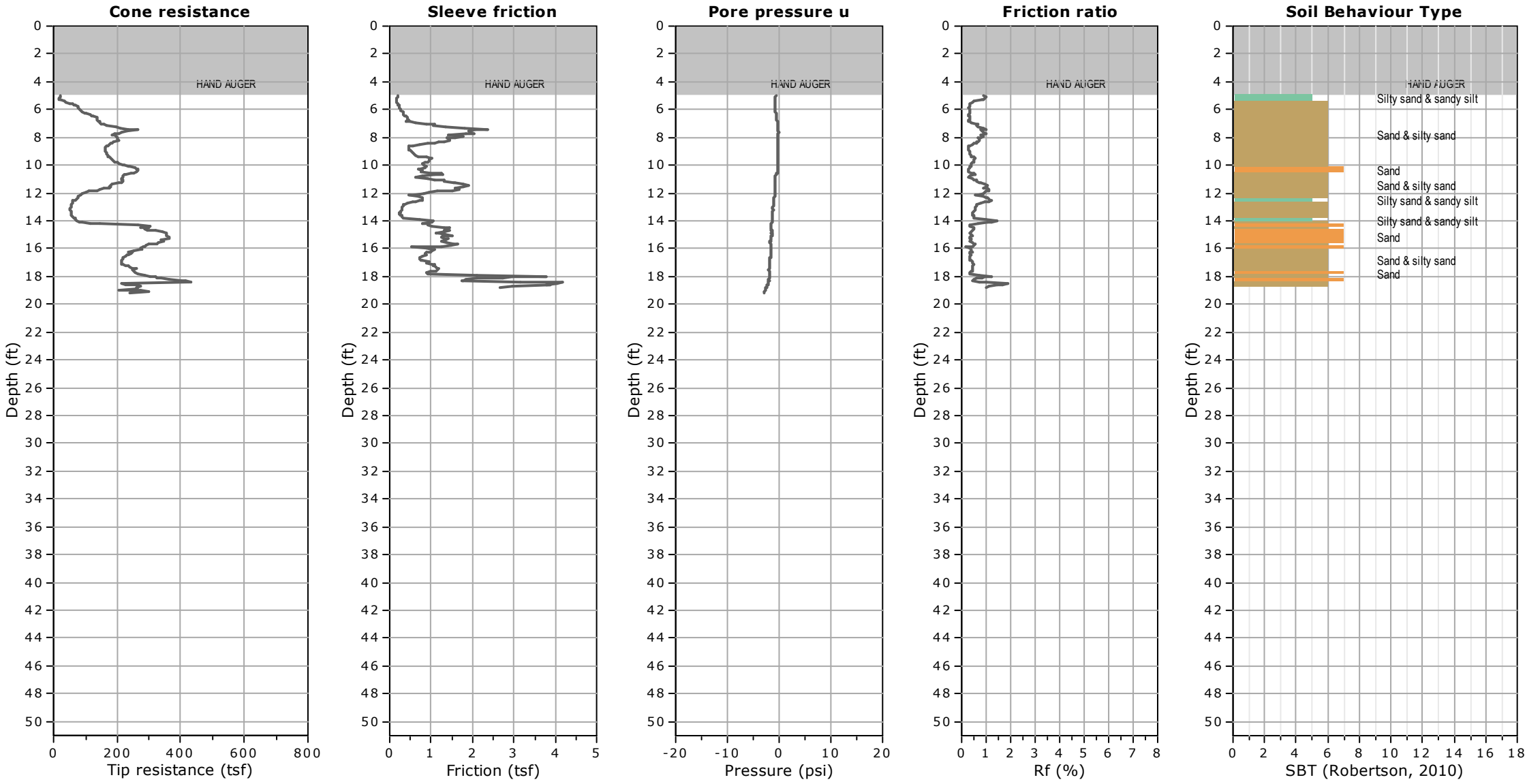

Kehoe Testing and Engineering
714-901-7270
steve@kehoetesting.com
www.kehoetesting.com

Project: **Ninyo & Moore / Fernangeles Site**
Location: **Los Angeles County, CA**

CPT-1A
Total depth: 34.92 ft, Date: 3/24/2020

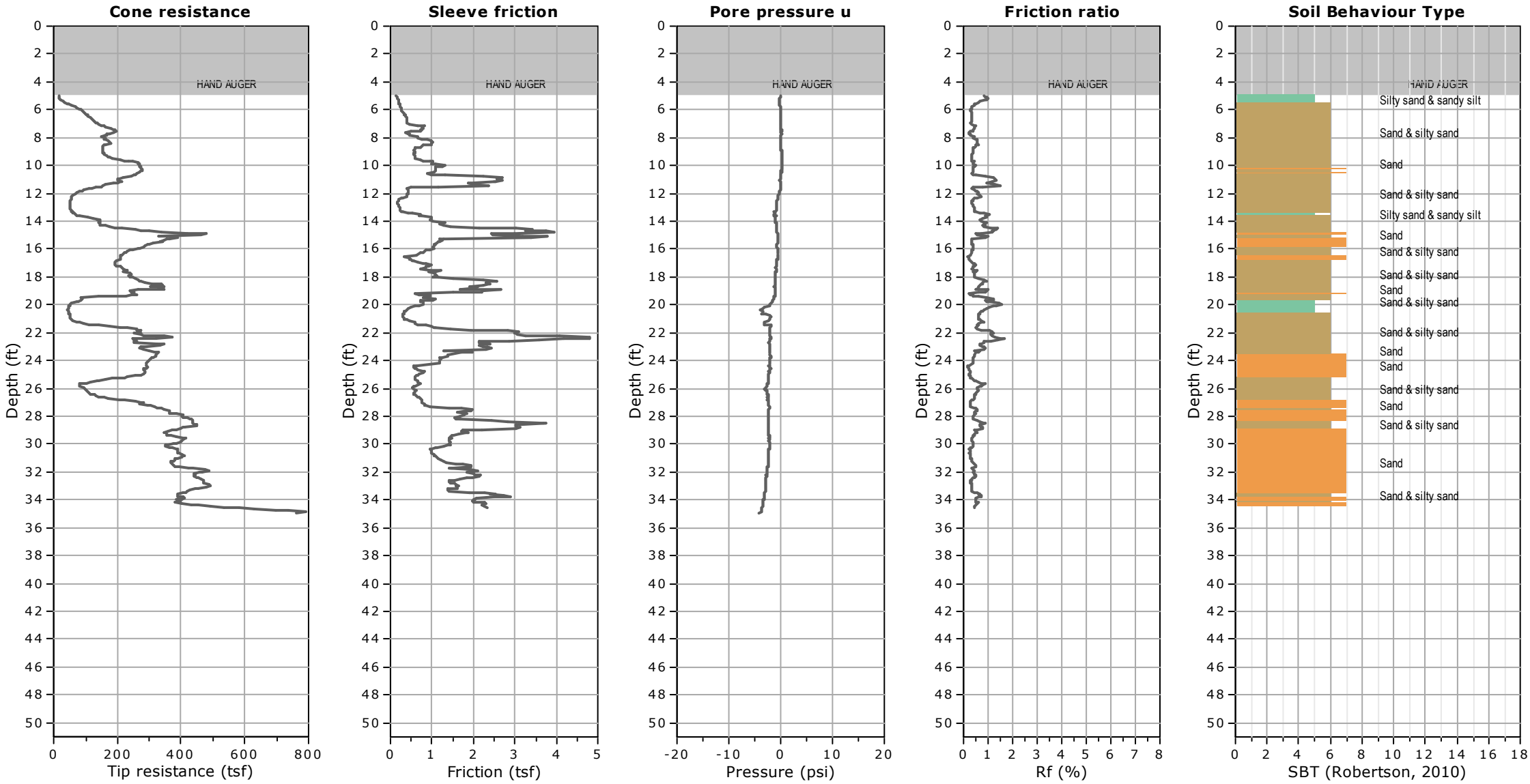

Kehoe Testing and Engineering
714-901-7270
steve@kehoetesting.com
www.kehoetesting.com

Project: **Ninyo & Moore / Fernangeles Site**
Location: **Los Angeles County, CA**

CPT-2
Total depth: 50.09 ft, Date: 3/24/2020

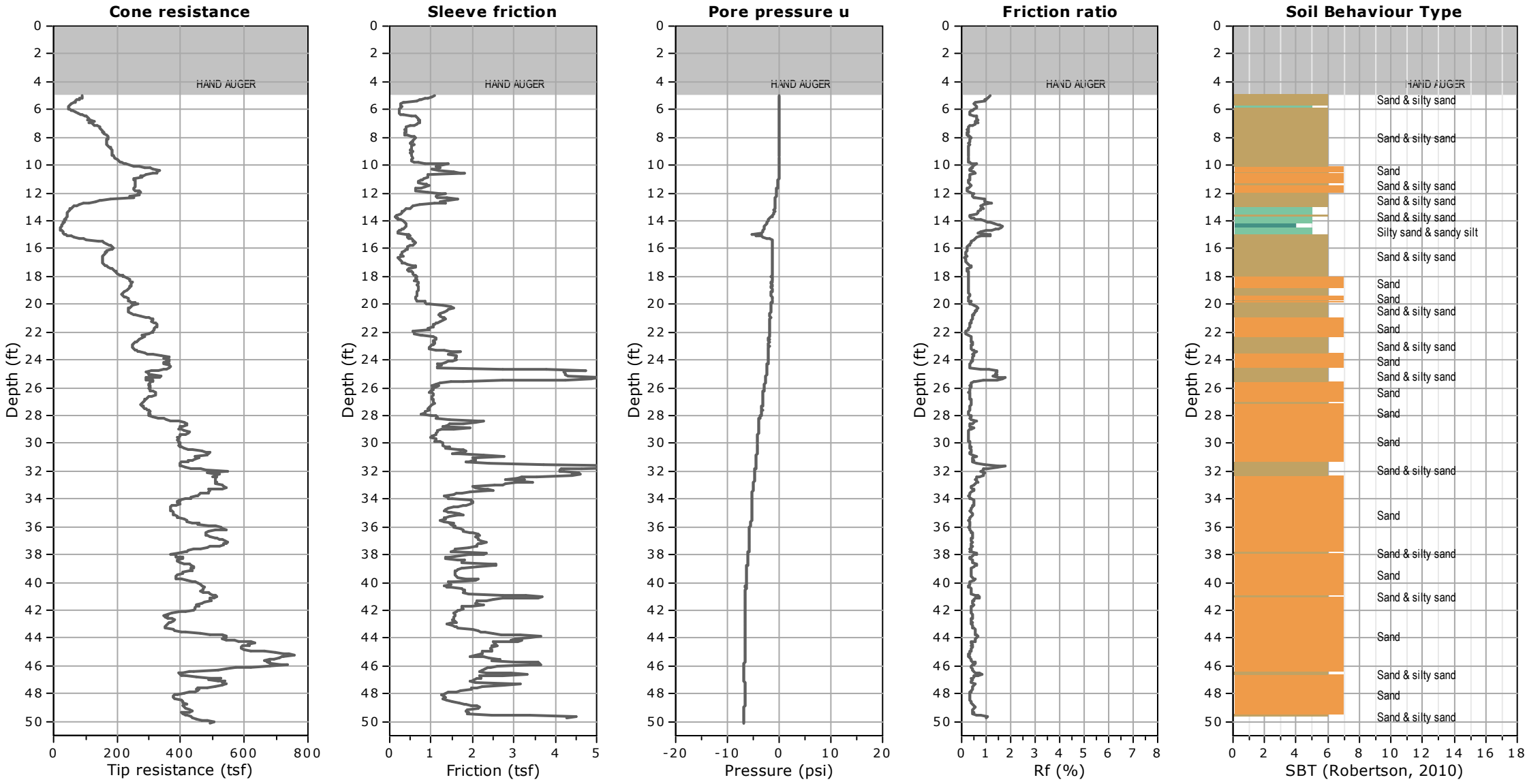

Kehoe Testing and Engineering
714-901-7270
steve@kehoetesting.com
www.kehoetesting.com

Project: **Ninyo & Moore / Fernangeles Site**
Location: **Los Angeles County, CA**

CPT-3
Total depth: 12.40 ft, Date: 3/24/2020

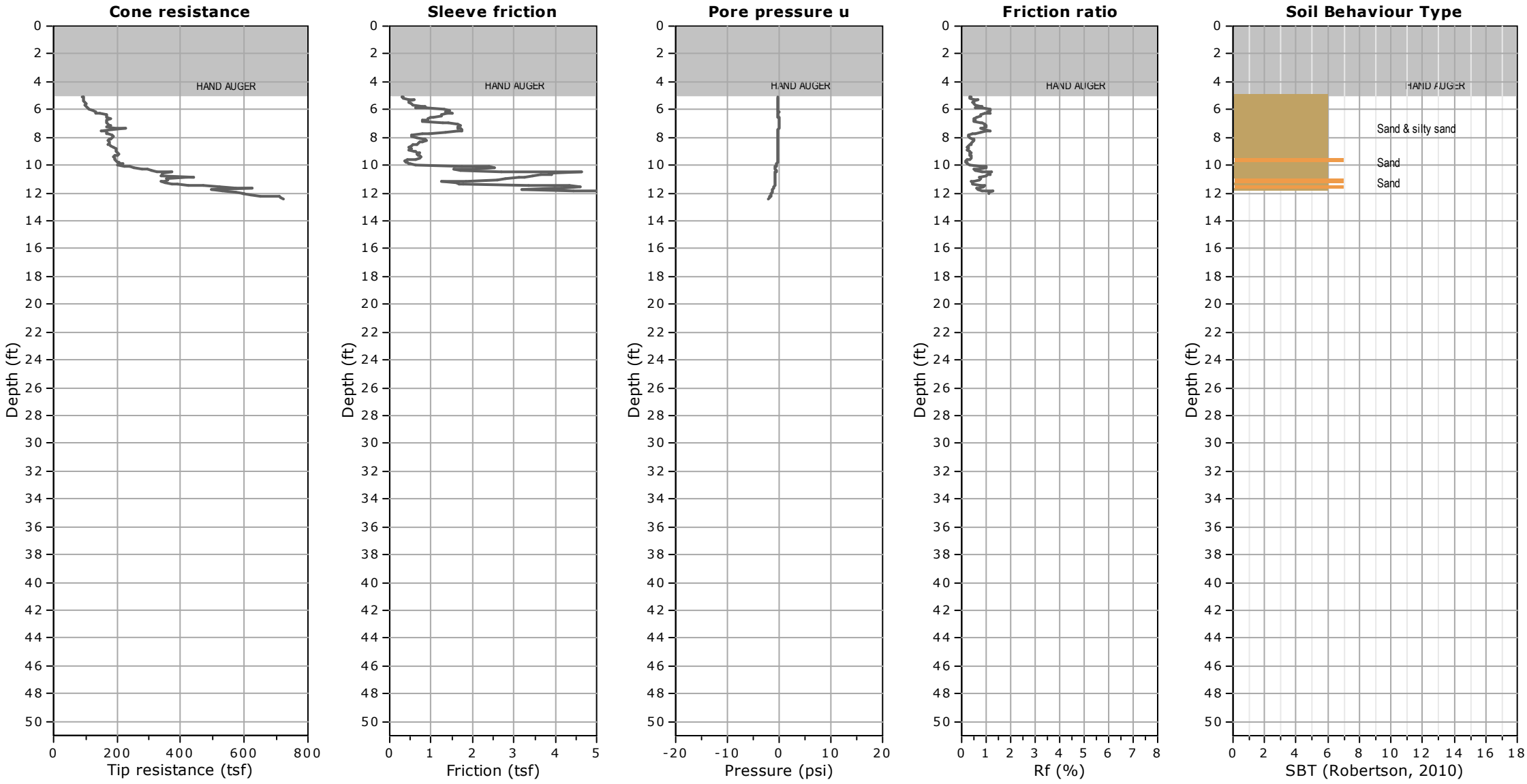

Kehoe Testing and Engineering
714-901-7270
steve@kehoetesting.com
www.kehoetesting.com

Project: **Ninyo & Moore / Fernangeles Site**
Location: **Los Angeles County, CA**

CPT-3A
Total depth: 47.71 ft, Date: 3/24/2020

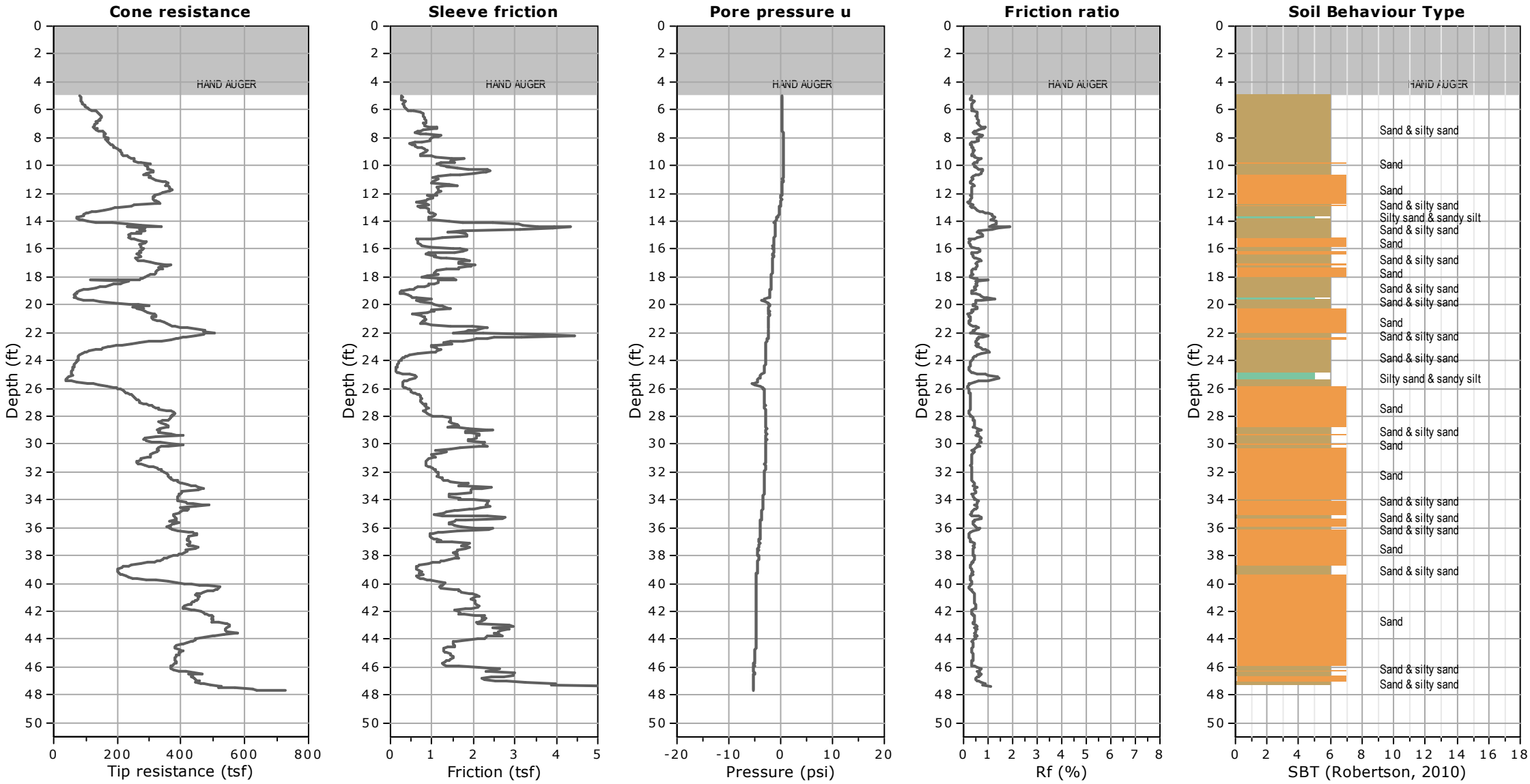

Kehoe Testing and Engineering
714-901-7270
steve@kehoetesting.com
www.kehoetesting.com

Project: **Ninyo & Moore / Fernangeles Site**
Location: **Los Angles County, CA**

CPT-4
Total depth: 31.24 ft, Date: 5/29/2020

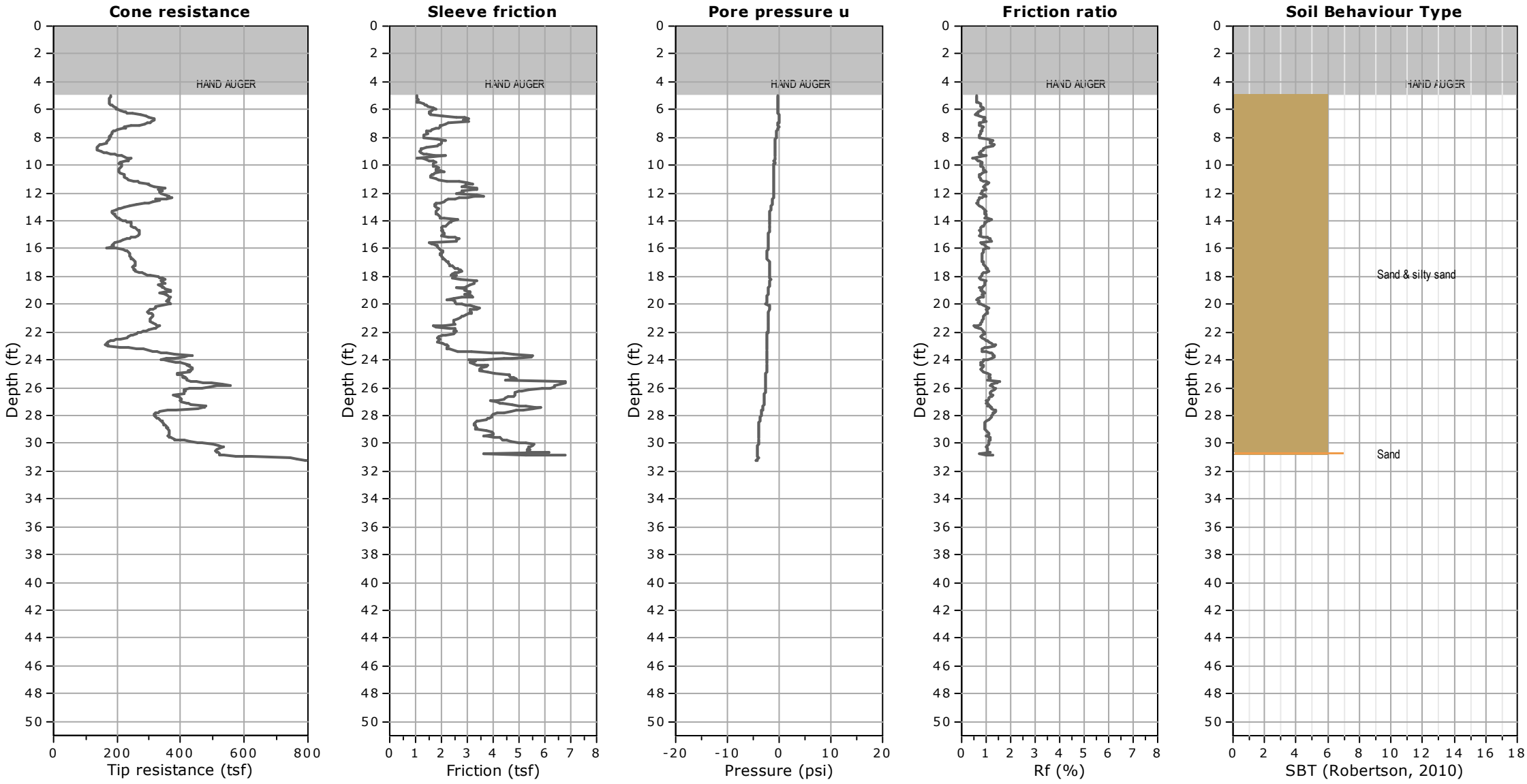

Kehoe Testing and Engineering
714-901-7270
steve@kehoetesting.com
www.kehoetesting.com

Project: **Ninyo & Moore / Fernangeles Site**
Location: **Los Angles County, CA**

CPT-4A
Total depth: 39.18 ft, Date: 5/29/2020

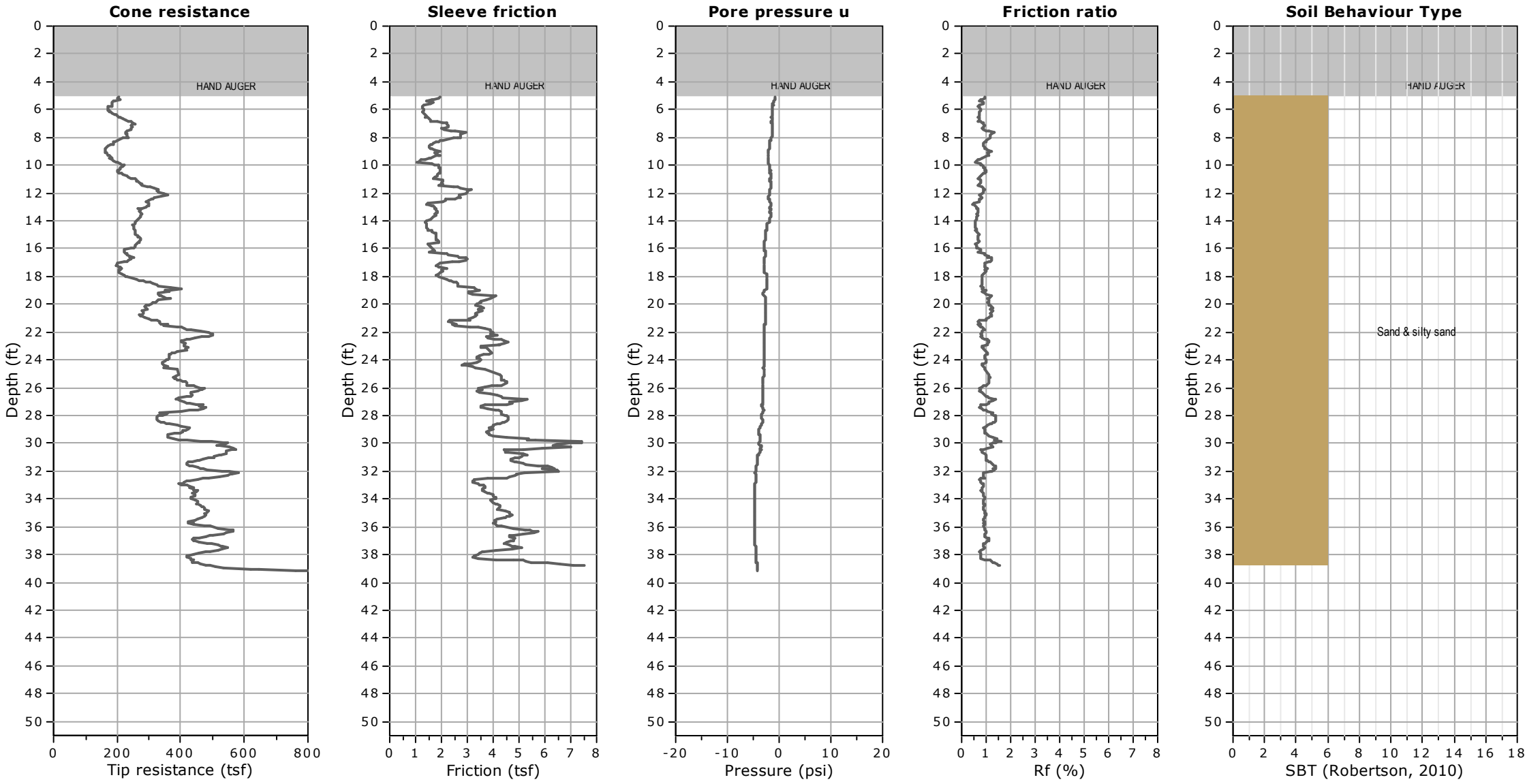

APPENDIX C

Geotechnical Laboratory Testing

APPENDIX C

GEOTECHNICAL LABORATORY TESTING

Classification
Soils were visually and texturally classified in accordance with the Unified Soil Classification System (USCS) in general accordance with ASTM D 2488. Soil classifications are indicated on the logs of the exploratory borings in Appendix B.

In-Place Moisture and Density Tests
The moisture content and dry density of relatively undisturbed samples obtained from the exploratory borings were evaluated in general accordance with ASTM D 2937. The test results are presented on the logs of the exploratory borings in Appendix B.

Gradation Analysis
Gradation analysis tests were performed on selected representative soil samples in general accordance with ASTM D 422. The grain-size distribution curves are shown on Figures C-1 through C-6. These test results were utilized in evaluating the soil classifications in accordance with the USCS.

200 Wash
An evaluation of the percentage of particles finer than the No. 200 sieve in selected soil samples was performed in general accordance with ASTM D 1140. The results of the tests are presented on Figure C-7.

Consolidation Test
Consolidation testing was performed on selected relatively undisturbed soil samples in general accordance with ASTM D 2435. The samples were inundated during testing to represent adverse field conditions. The percent of consolidation for each load cycle was recorded as a ratio of the amount of vertical compression to the original height of the sample. The results of the tests are summarized on Figures C-8 and C-9.

Direct Shear Tests
Direct shear tests were performed on relatively undisturbed samples in general accordance with ASTM D 3080 to evaluate the shear strength characteristics of selected materials. The samples were inundated during shearing to represent adverse field conditions. The results are shown on Figures C-10 and C-11.

Soil Corrosivity Tests
Soil pH and resistivity tests were performed on a representative sample in general accordance with California Test (CT) 643. The soluble sulfate and chloride content of the selected sample were evaluated in general accordance with CT 417 and CT 422, respectively. The test results are presented on Figure C-12.

R-Value
The resistance value, or R-value, for site soils was evaluated in general accordance with California Test (CT) 301. The soil sample was prepared and evaluated for exudation pressure and expansion pressure. The equilibrium R-value is reported as the lesser or more conservative of the two calculated results. The test results are shown on Figure C-13.

GRAVEL		SAND			FINES	
Coarse	Fine	Coarse	Medium	Fine	SILT	CLAY

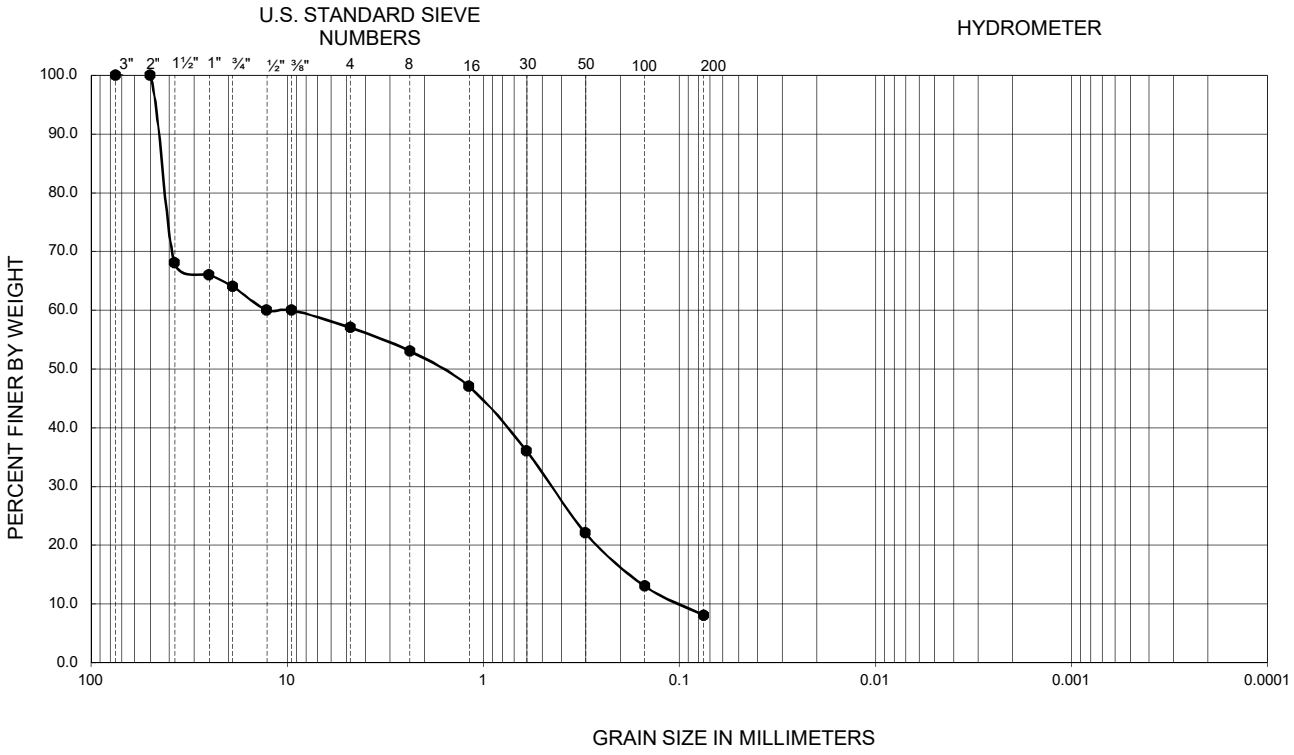

Symbol	Sample Location	Depth (ft)	Liquid Limit	Plastic Limit	Plasticity Index	D_{10}	D_{30}	D_{60}	C_u	C_c	Passing No. 200 (percent)	USCS
●	B-1	5.0-6.5	--	--	--	0.10	0.44	10.0	100.0	0.2	8	SP-SM

PERFORMED IN GENERAL ACCORDANCE WITH ASTM D 422

FIGURE C-1

GRADATION TEST RESULTS

LABOE TOS NO. 25 - FERNANGELES PARK
SUN VALLEY, CALIFORNIA

211294002 | 8/20

Ninyo & Moore
Geotechnical & Environmental Sciences Consultants

GRAVEL		SAND			FINES	
Coarse	Fine	Coarse	Medium	Fine	SILT	CLAY

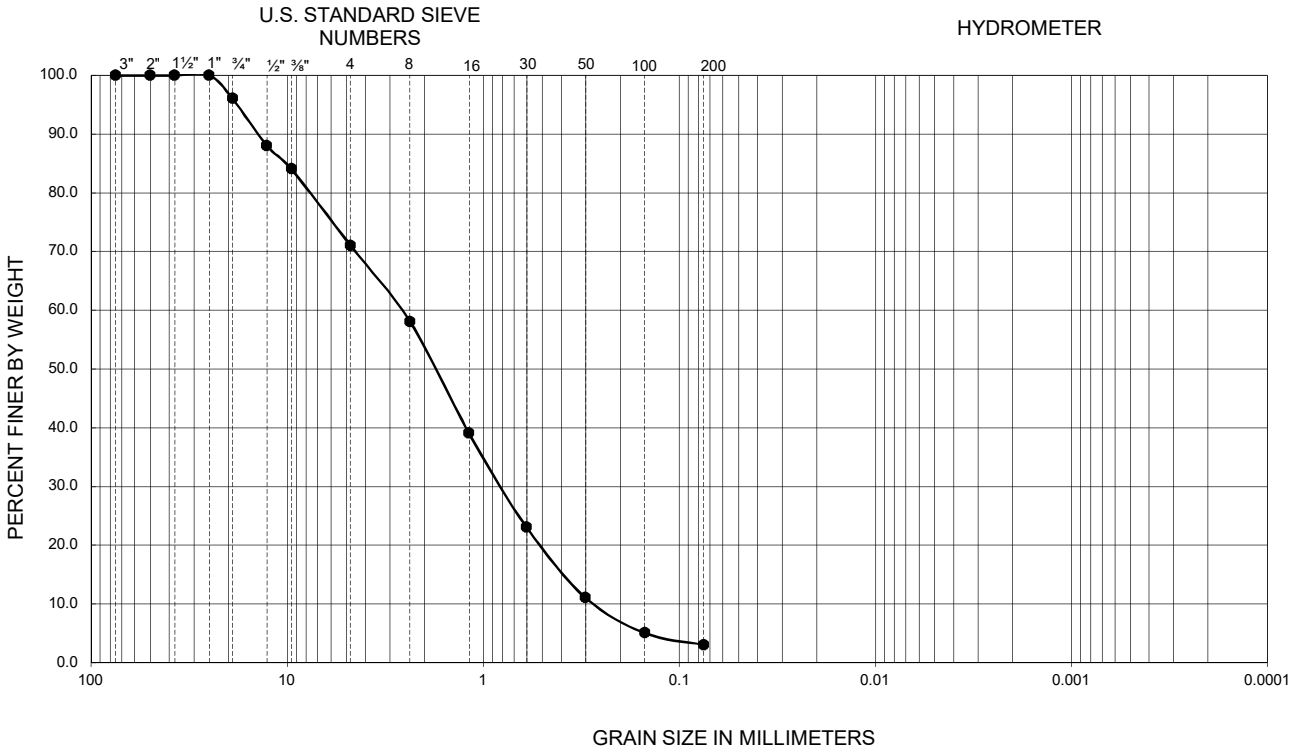

Symbol	Sample Location	Depth (ft)	Liquid Limit	Plastic Limit	Plasticity Index	D_{10}	D_{30}	D_{60}	C_u	C_c	Passing No. 200 (percent)	USCS
●	P-1	10.0-11.5	--	--	--	0.27	0.82	2.50	9.3	1.0	3	SW

PERFORMED IN GENERAL ACCORDANCE WITH ASTM D 422

FIGURE C-2

GRADATION TEST RESULTS

LABOE TOS NO. 25 - FERNANGELES PARK
SUN VALLEY, CALIFORNIA

211294002 | 8/20

Ninyo & Moore
Geotechnical & Environmental Sciences Consultants

GRAVEL		SAND			FINES	
Coarse	Fine	Coarse	Medium	Fine	SILT	CLAY

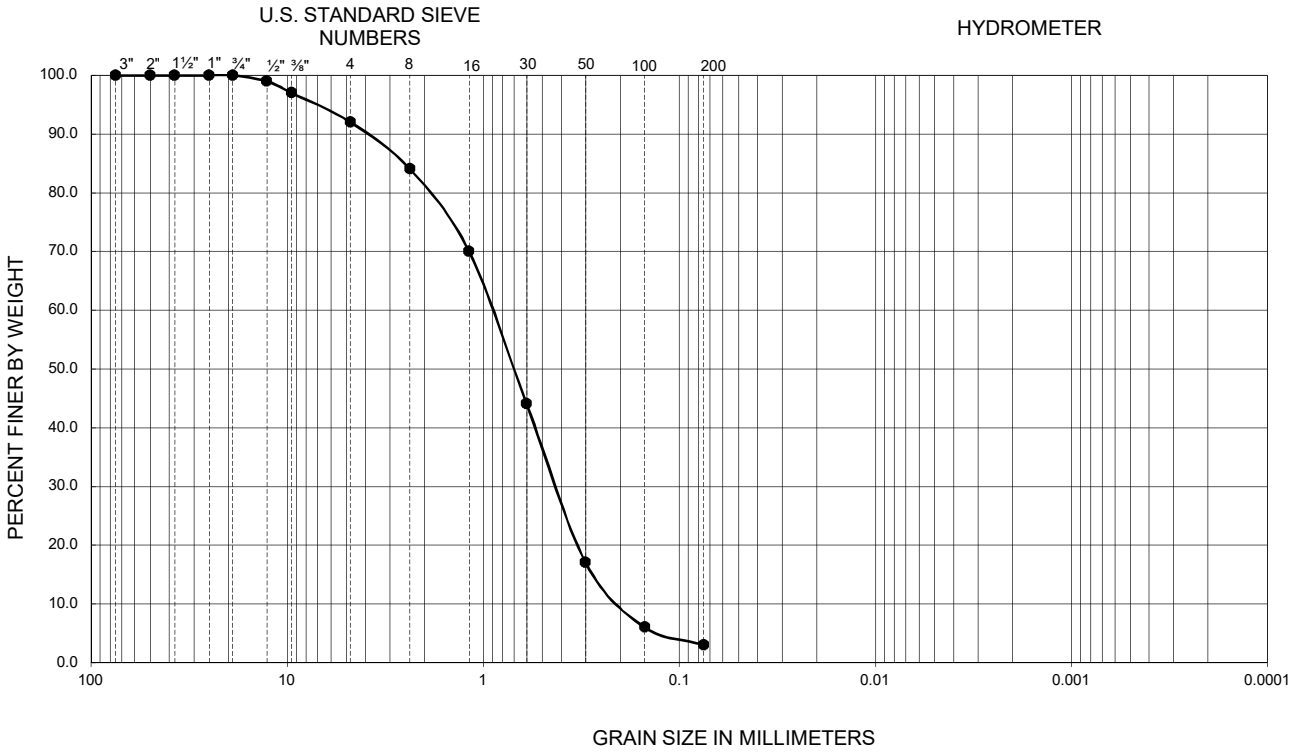

Symbol	Sample Location	Depth (ft)	Liquid Limit	Plastic Limit	Plasticity Index	D_{10}	D_{30}	D_{60}	C_u	C_c	Passing No. 200 (percent)	USCS
●	P-2	15.0-16.5	--	--	--	0.21	0.43	0.89	4.2	1.0	3	SP

PERFORMED IN GENERAL ACCORDANCE WITH ASTM D 422

FIGURE C-3

GRADATION TEST RESULTS

LABOE TOS NO. 25 - FERNANGELES PARK
SUN VALLEY, CALIFORNIA

211294002 | 8/20

Ninyo & Moore
Geotechnical & Environmental Sciences Consultants

GRAVEL		SAND			FINES	
Coarse	Fine	Coarse	Medium	Fine	SILT	CLAY

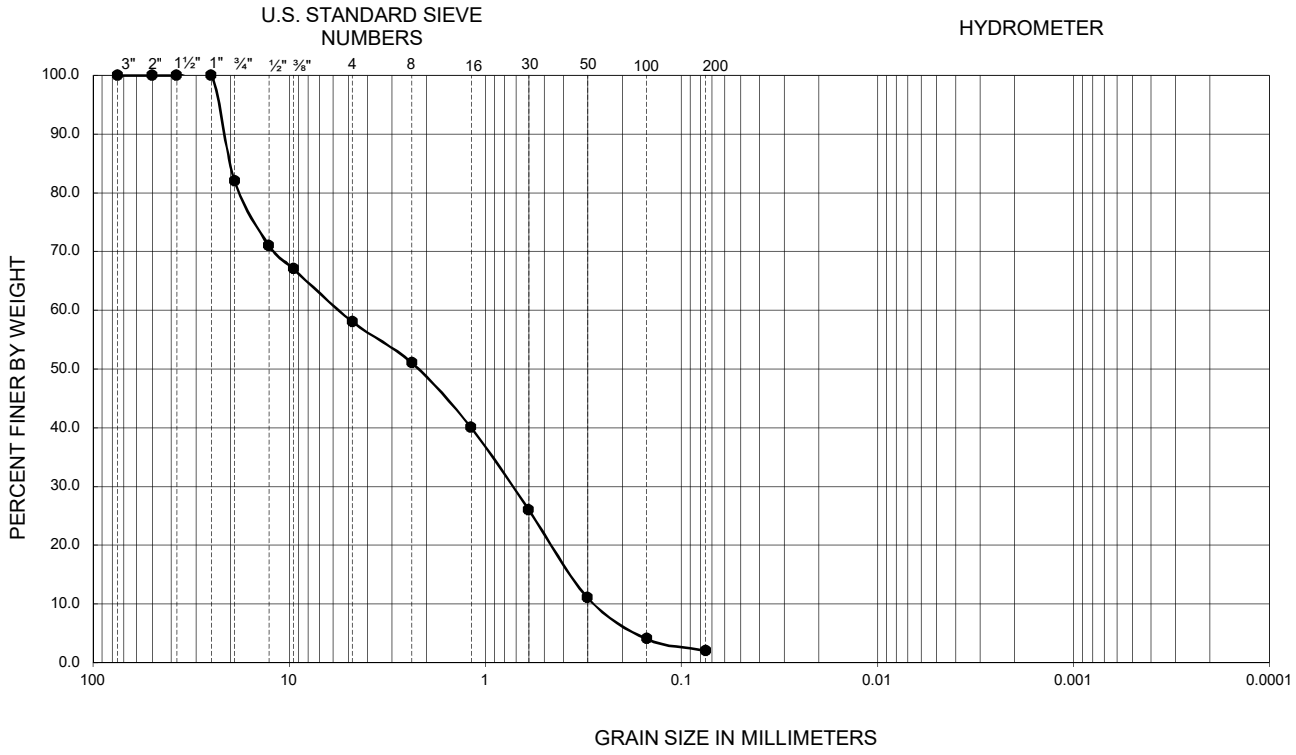

Symbol	Sample Location	Depth (ft)	Liquid Limit	Plastic Limit	Plasticity Index	D_{10}	D_{30}	D_{60}	C_u	C_c	Passing No. 200 (percent)	USCS
●	P-3	10.0-11.5	--	--	--	0.27	0.72	5.60	20.7	0.3	2	SP

PERFORMED IN GENERAL ACCORDANCE WITH ASTM D 422

FIGURE C-4

GRADATION TEST RESULTS

LABOE TOS NO. 25 - FERNANGELES PARK
SUN VALLEY, CALIFORNIA

211294002 | 8/20

Ninyo & Moore
Geotechnical & Environmental Sciences Consultants

GRAVEL		SAND			FINES	
Coarse	Fine	Coarse	Medium	Fine	SILT	CLAY

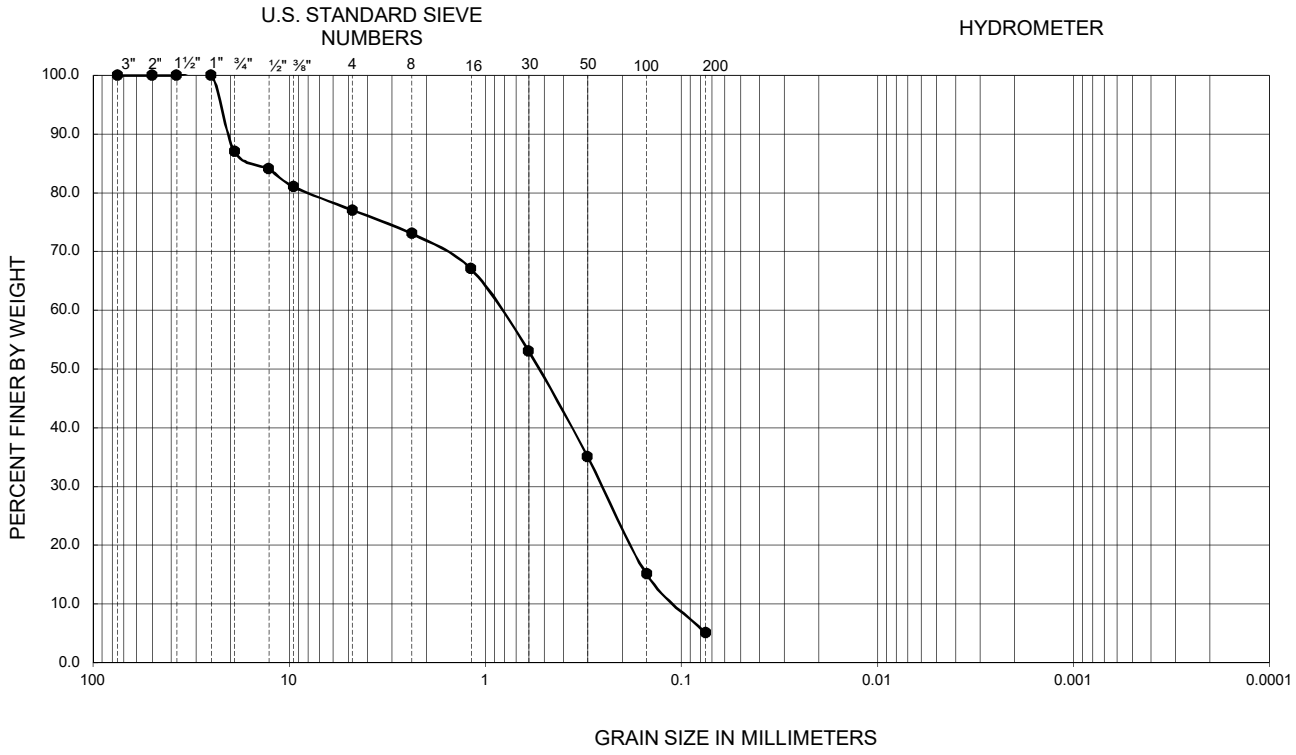

Symbol	Sample Location	Depth (ft)	Liquid Limit	Plastic Limit	Plasticity Index	D_{10}	D_{30}	D_{60}	C_u	C_c	Passing No. 200 (percent)	USCS
●	P-4	0.5-5.0	--	--	--	0.11	0.25	0.80	7.1	0.7	5	SP-SM

PERFORMED IN GENERAL ACCORDANCE WITH ASTM D 422

FIGURE C-5

GRADATION TEST RESULTS

LABOE TOS NO. 25 - FERNANGELES PARK
SUN VALLEY, CALIFORNIA

211294002 | 8/20

Ninyo & Moore
Geotechnical & Environmental Sciences Consultants

GRAVEL		SAND			FINES	
Coarse	Fine	Coarse	Medium	Fine	SILT	CLAY

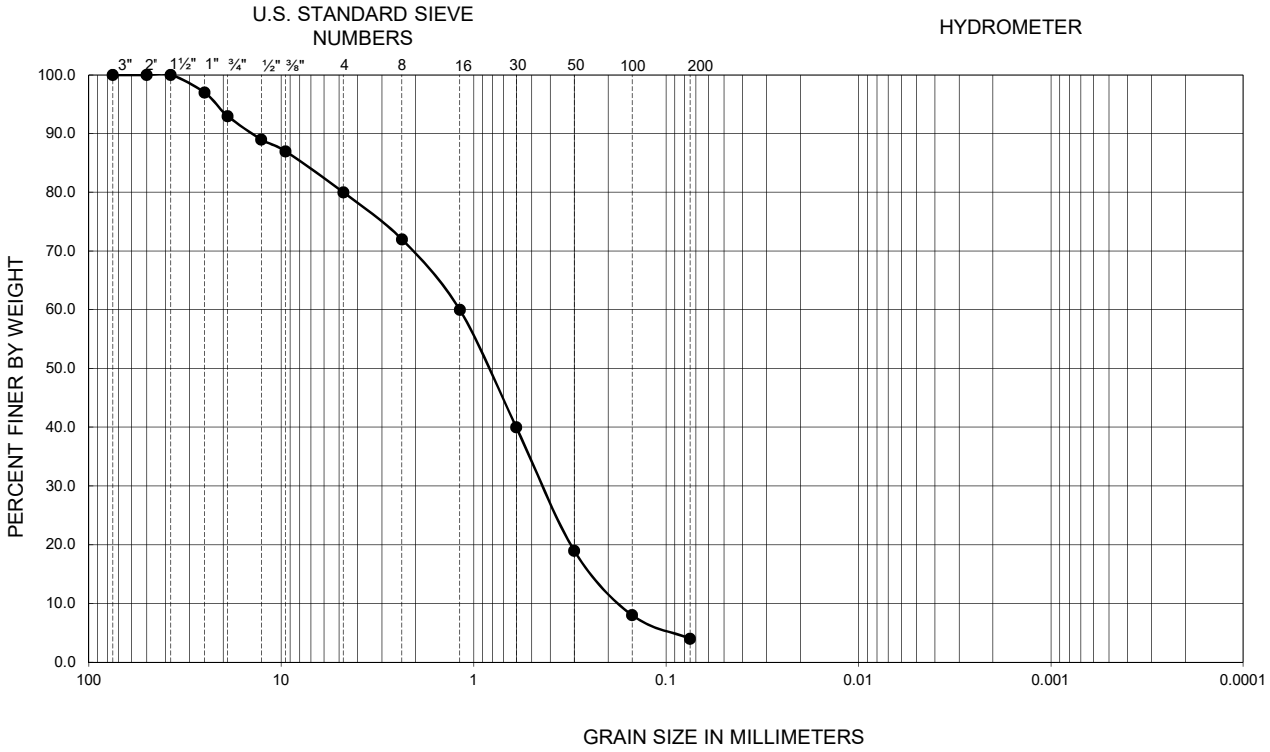

Symbol	Sample Location	Depth (ft)	Liquid Limit	Plastic Limit	Plasticity Index	D_{10}	D_{30}	D_{60}	C_u	C_c	Passing No. 200 (percent)	USCS
●	P-4	10.0-12.0	--	--	--	0.175	0.44	1.18	6.7	0.9	4	SP

PERFORMED IN GENERAL ACCORDANCE WITH ASTM D 422

FIGURE C-6

GRADATION TEST RESULTS

LABOE TOS NO. 25 - FERNANGELES PARK
SUN VALLEY, CALIFORNIA

211294002 | 8/20

Ninyo & Moore
Geotechnical & Environmental Sciences Consultants

SAMPLE LOCATION	SAMPLE DEPTH (ft)	DESCRIPTION	PERCENT PASSING NO. 4	PERCENT PASSING NO. 200	USCS (TOTAL SAMPLE)
B-1	25.0-26.4	POORLY GRADED SAND WITH GRAVEL	81	4	SP
B-1	40.0-41.5	POORLY GRADED SAND WITH SILT	92	7	SP-SM
P-1	14.5-16.0	SILTY SAND	94	44	SM
P-2	0.0-2.0	SILTY SAND	88	35	SM
P-2	35.0-36.4	POORLY GRADED SAND	88	3	SP
P-4	50.0-51.5	SANDY SILT	99	54	ML

PERFORMED IN GENERAL ACCORDANCE WITH ASTM D 1140

FIGURE C-7

NO. 200 SIEVE ANALYSIS TEST RESULTS

LABOE TOS NO. 25 - FERNANGELES PARK
SUN VALLEY, CALIFORNIA

211294002 | 8/20

Ninyo & Moore
Geotechnical & Environmental Sciences Consultants

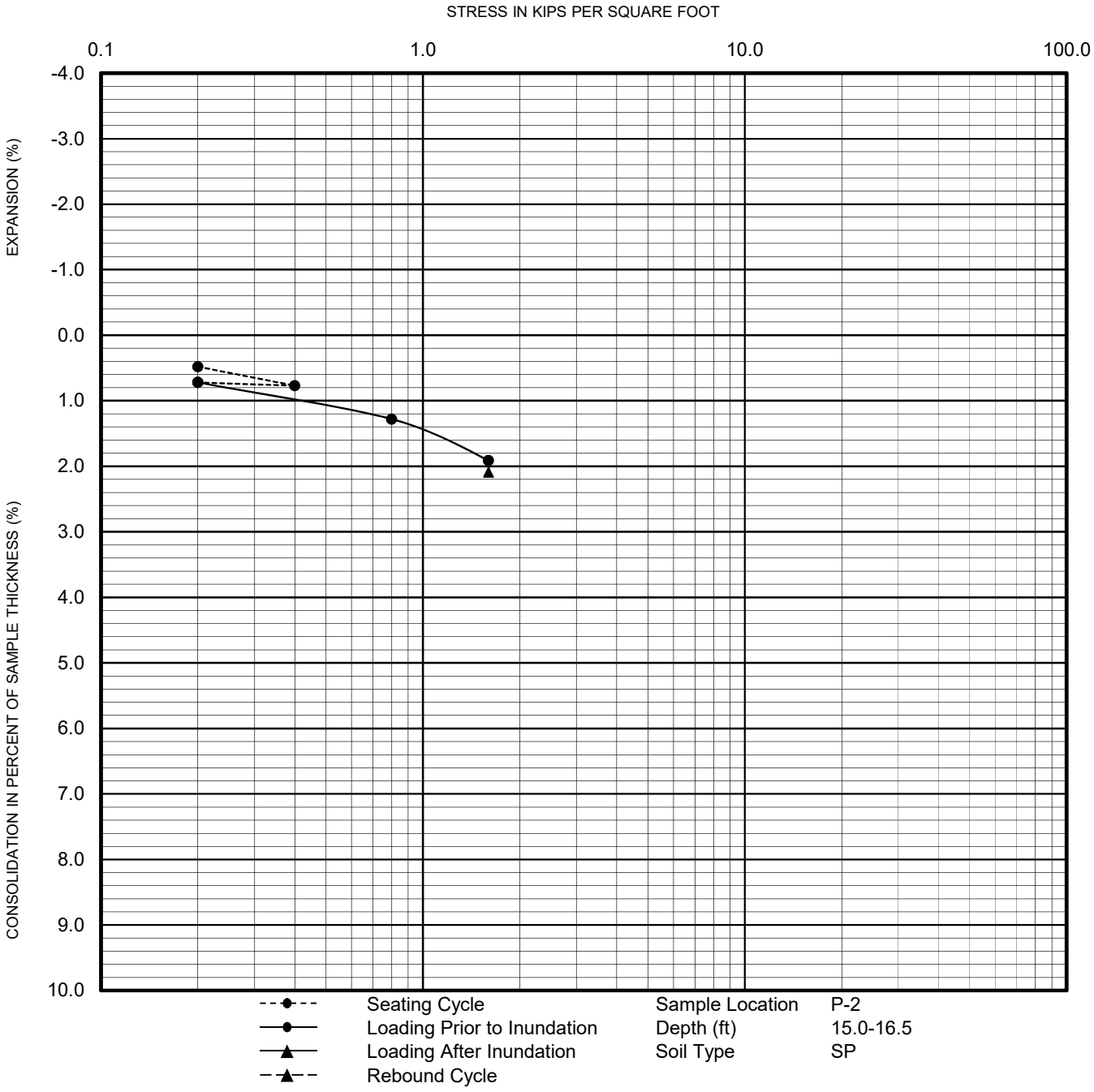

PERFORMED IN GENERAL ACCORDANCE WITH ASTM D 2435

FIGURE C-8

CONSOLIDATION TEST RESULTS

LABOE TOS NO. 25 - FERNANGELES PARK
SUN VALLEY, CALIFORNIA

211294002 | 8/20

Ninyo & Moore
Geotechnical & Environmental Sciences Consultants

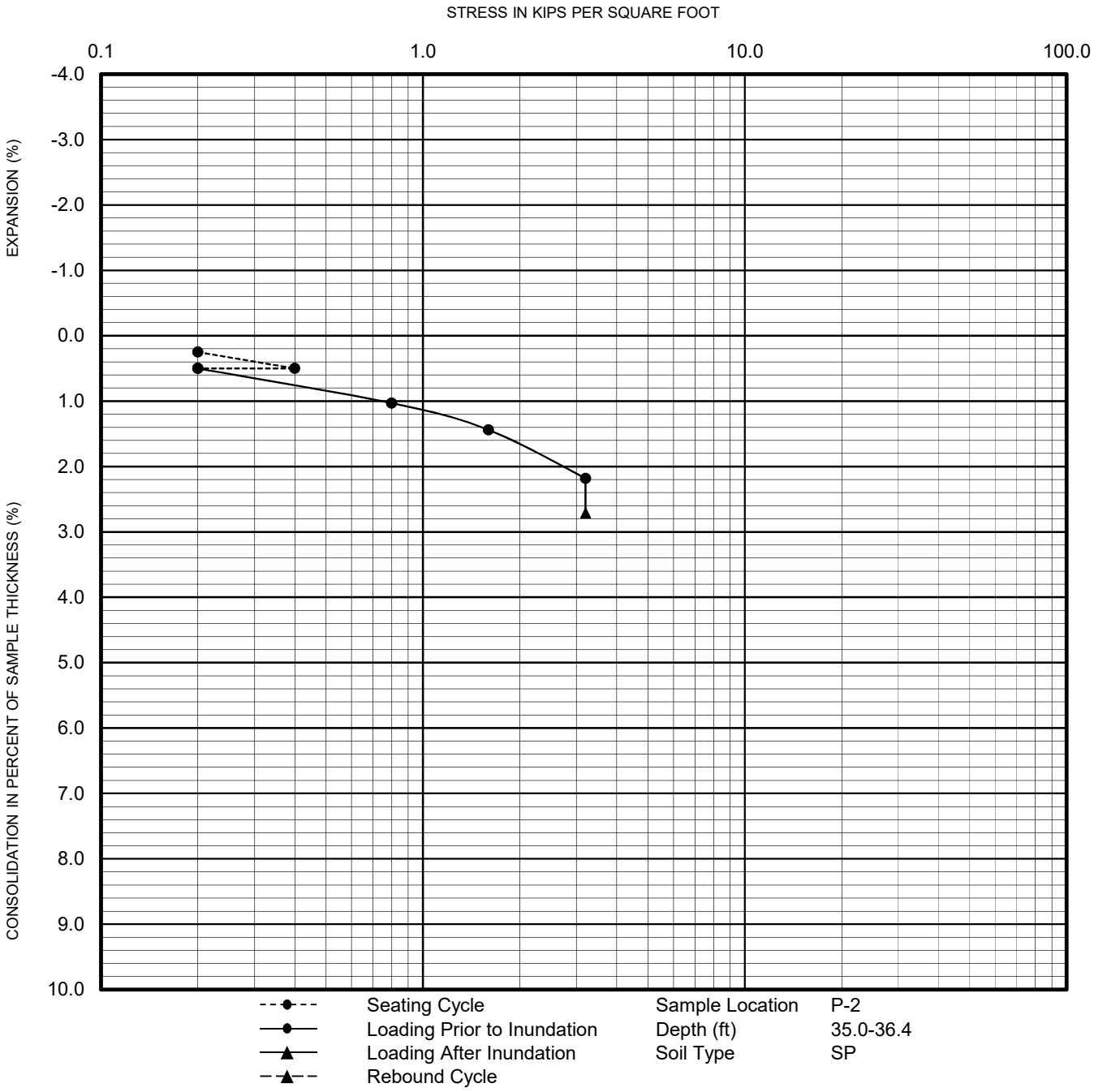

PERFORMED IN GENERAL ACCORDANCE WITH ASTM D 2435

FIGURE C-9

CONSOLIDATION TEST RESULTS

LABOE TOS NO. 25 - FERNANGELES PARK
SUN VALLEY, CALIFORNIA

211294002 | 8/20

Ninyo & Moore
Geotechnical & Environmental Sciences Consultants

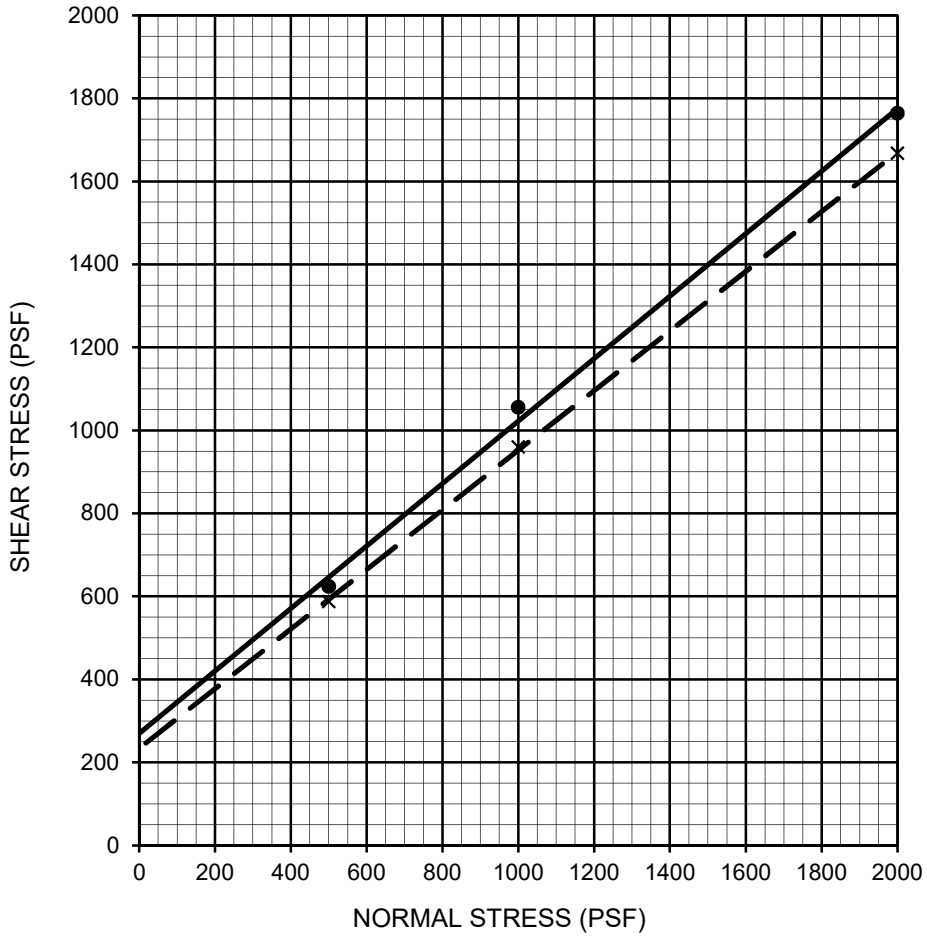

Description	Symbol	Sample Location	Depth (ft)	Shear Strength	Cohesion (psf)	Friction Angle (degrees)	Soil Type
WELL-GRADED SAND	—●—	P-1	10.0-11.5	Peak	270	37	SW
WELL-GRADED SAND	– – X – –	P-1	10.0-11.5	Ultimate	234	36	SW

PERFORMED IN GENERAL ACCORDANCE WITH ASTM D 3080

FIGURE C-10

DIRECT SHEAR TEST RESULTS

LABOE TOS NO. 25 - FERNANGELES PARK
SUN VALLEY, CALIFORNIA

211294002 | 8/20

Ninyo & Moore
Geotechnical & Environmental Sciences Consultants

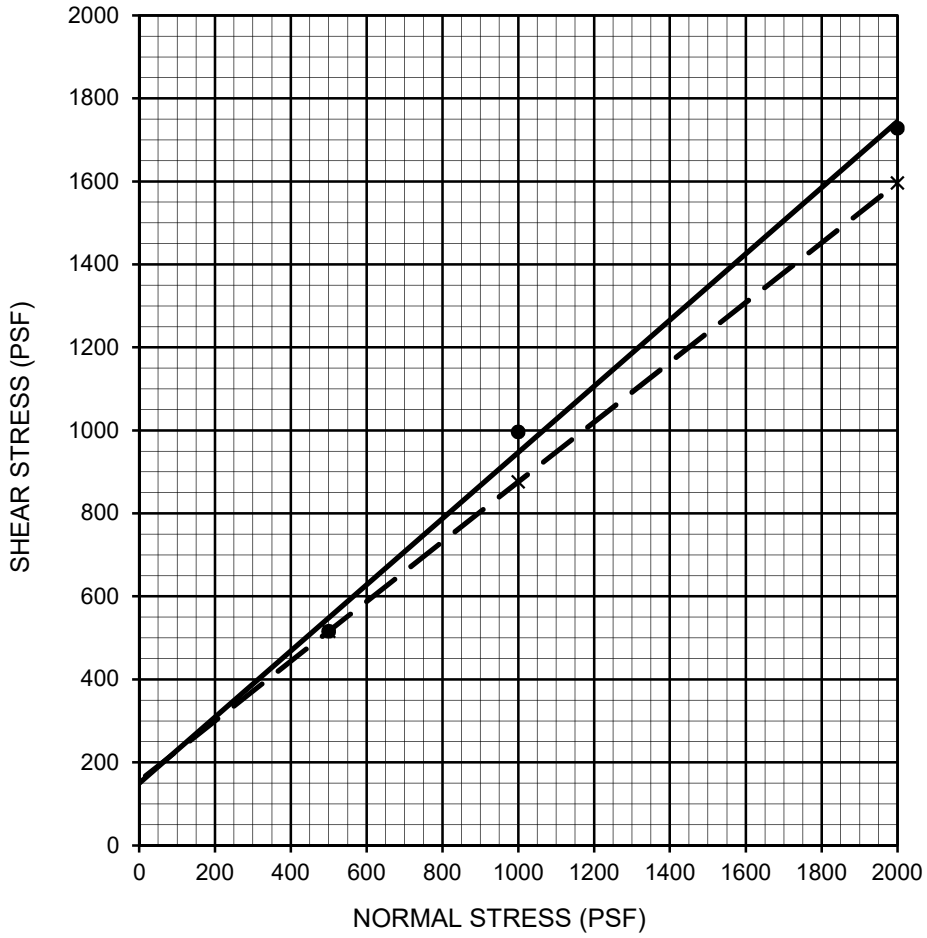

Description	Symbol	Sample Location	Depth (ft)	Shear Strength	Cohesion (psf)	Friction Angle (degrees)	Soil Type
POORLY GRADED SAND WITH GRAVEL	●——	P-3	10.0-11.5	Peak	150	39	SP
POORLY GRADED SAND WITH GRAVEL	– – X – –	P-3	10.0-11.5	Ultimate	156	36	SP

PERFORMED IN GENERAL ACCORDANCE WITH ASTM D 3080

FIGURE C-11

DIRECT SHEAR TEST RESULTS

LABOE TOS NO. 25 - FERNANGELES PARK
SUN VALLEY, CALIFORNIA

211294002 | 8/20

Ninyo & Moore
Geotechnical & Environmental Sciences Consultants

SAMPLE LOCATION	SAMPLE DEPTH (ft)	pH [1]	RESISTIVITY [1] (ohm-cm)	SULFATE CONTENT [2]		CHLORIDE CONTENT [3] (ppm)
				(ppm)	(%)	
P-2	0.0-2.0	6.8	6,708	10	0.001	10

[1] PERFORMED IN GENERAL ACCORDANCE WITH CALIFORNIA TEST METHOD 643
[2] PERFORMED IN GENERAL ACCORDANCE WITH CALIFORNIA TEST METHOD 417
[3] PERFORMED IN GENERAL ACCORDANCE WITH CALIFORNIA TEST METHOD 422

FIGURE C-12

CORROSIVITY TEST RESULTS

LABOE TOS NO. 25 - FERNANGELES PARK
SUN VALLEY, CALIFORNIA

211294002 | 8/20

Ninyo & Moore
Geotechnical & Environmental Sciences Consultants

APPENDIX D

Drum Characterization Test Results and Transportation Manifest

SunStar Laboratories, Inc.
PROVIDING QUALITY ANALYTICAL SERVICES NATIONWIDE

25712 Commercentre Drive
Lake Forest, California 92630
949.297.5020 Phone
949.297.5027 Fax

15 April 2020

Spencer Marcinek
Ninyo & Moore
475 Goddard, Ste. 200
Irvine, CA 92618

RE: LABOE Stormwater/Fernangeles

Enclosed are the results of analyses for samples received by the laboratory on 04/07/20 13:03. If you have any questions concerning this report, please feel free to contact me.

Sincerely,



Mike Jaroudi
Project Manager

SunStar Laboratories, Inc.
PROVIDING QUALITY ANALYTICAL SERVICES NATIONWIDE

25712 Commercentre Drive
Lake Forest, California 92630
949.297.5020 Phone
949.297.5027 Fax

Ninyo & Moore	Project: LABOE Stormwater/Fernangeles	
475 Goddard, Ste. 200	Project Number: 211294002	**Reported:**
Irvine CA, 92618	Project Manager: Spencer Marcinek	04/15/20 16:08

ANALYTICAL REPORT FOR SAMPLES

Sample ID	Laboratory ID	Matrix	Date Sampled	Date Received
WC-1	T201979-01	Soil	03/31/20 12:00	04/07/20 13:03
WC-2	T201979-02	Soil	03/31/20 12:00	04/07/20 13:03

SunStar Laboratories, Inc.



Mike Jaroudi, Project Manager

The results in this report apply to the samples analyzed in accordance with the chain of custody document. This analytical report must be reproduced in its entirety.

SunStar Laboratories, Inc.
PROVIDING QUALITY ANALYTICAL SERVICES NATIONWIDE

25712 Commercentre Drive
Lake Forest, California 92630
949.297.5020 Phone
949.297.5027 Fax

Ninyo & Moore	Project: LABOE Stormwater/Fernangeles	
475 Goddard, Ste. 200	Project Number: 211294002	**Reported:**
Irvine CA, 92618	Project Manager: Spencer Marcinek	04/15/20 16:08

DETECTIONS SUMMARY

Sample ID: WC-1 **Laboratory ID:** T201979-01

Analyte	Result	Reporting Limit	Units	Method	Notes
Barium	**43**	1.0	mg/kg	EPA 6010b	
Chromium	**4.2**	2.0	mg/kg	EPA 6010b	
Cobalt	**3.1**	2.0	mg/kg	EPA 6010b	
Copper	**5.7**	1.0	mg/kg	EPA 6010b	
Nickel	**2.7**	2.0	mg/kg	EPA 6010b	
Vanadium	**12**	5.0	mg/kg	EPA 6010b	
Zinc	**16**	1.0	mg/kg	EPA 6010b	

Sample ID: WC-2 **Laboratory ID:** T201979-02

Analyte	Result	Reporting Limit	Units	Method	Notes
C13-C28 (DRO)	**61**	10	mg/kg	EPA 8015B	
C29-C40 (MORO)	**860**	10	mg/kg	EPA 8015B	
Barium	**43**	1.0	mg/kg	EPA 6010b	
Chromium	**6.0**	2.0	mg/kg	EPA 6010b	
Cobalt	**3.2**	2.0	mg/kg	EPA 6010b	
Copper	**5.3**	1.0	mg/kg	EPA 6010b	
Nickel	**2.9**	2.0	mg/kg	EPA 6010b	
Vanadium	**12**	5.0	mg/kg	EPA 6010b	
Zinc	**13**	1.0	mg/kg	EPA 6010b	
m,p-Xylene	**15**	5.0	ug/kg	EPA 8260B	
o-Xylene	**11**	2.5	ug/kg	EPA 8260B	

SunStar Laboratories, Inc.

The results in this report apply to the samples analyzed in accordance with the chain of custody document. This analytical report must be reproduced in its entirety.

Mike Jaroudi, Project Manager

SunStar Laboratories, Inc.
Providing Quality Analytical Services Nationwide

25712 Commercentre Drive
Lake Forest, California 92630
949.297.5020 Phone
949.297.5027 Fax

Ninyo & Moore	Project: LABOE Stormwater/Fernangeles	
475 Goddard, Ste. 200	Project Number: 211294002	**Reported:**
Irvine CA, 92618	Project Manager: Spencer Marcinek	04/15/20 16:08

WC-1

T201979-01 (Soil)

SunStar Laboratories, Inc.

Analyte	Result	Reporting Limit	Units	Dilution	Batch	Prepared	Analyzed	Method	Notes
Extractable Petroleum Hydrocarbons by 8015B									
C6-C12 (GRO)	ND	10	mg/kg	1	0040722	04/07/20	04/10/20	EPA 8015B	
C13-C28 (DRO)	ND	10	"	"	"	"	"	"	
C29-C40 (MORO)	ND	10	"	"	"	"	"	"	
Surrogate: p-Terphenyl		*88.5 %*	*65-135*		"	"	"	"	
Metals by EPA 6010B									
Antimony	ND	3.0	mg/kg	1	0040827	04/08/20	04/09/20	EPA 6010b	
Silver	ND	2.0	"	"	"	"	"	"	
Arsenic	ND	5.0	"	"	"	"	"	"	
Barium	**43**	1.0	"	"	"	"	"	"	
Beryllium	ND	1.0	"	"	"	"	"	"	
Cadmium	ND	2.0	"	"	"	"	"	"	
Chromium	**4.2**	2.0	"	"	"	"	"	"	
Cobalt	**3.1**	2.0	"	"	"	"	"	"	
Copper	**5.7**	1.0	"	"	"	"	"	"	
Lead	ND	3.0	"	"	"	"	"	"	
Molybdenum	ND	5.0	"	"	"	"	"	"	
Nickel	**2.7**	2.0	"	"	"	"	"	"	
Selenium	ND	5.0	"	"	"	"	"	"	
Thallium	ND	5.0	"	"	"	"	"	"	
Vanadium	**12**	5.0	"	"	"	"	"	"	
Zinc	**16**	1.0	"	"	"	"	"	"	
Cold Vapor Extraction EPA 7470/7471									
Mercury	ND	0.10	mg/kg	1	0040826	04/08/20	04/08/20	EPA 7471A Soil	

SunStar Laboratories, Inc.

The results in this report apply to the samples analyzed in accordance with the chain of custody document. This analytical report must be reproduced in its entirety.

Mike Jaroudi, Project Manager

SunStar Laboratories, Inc.
Providing Quality Analytical Services Nationwide

25712 Commercentre Drive
Lake Forest, California 92630
949.297.5020 Phone
949.297.5027 Fax

Ninyo & Moore	Project: LABOE Stormwater/Fernangeles	
475 Goddard, Ste. 200	Project Number: 211294002	**Reported:**
Irvine CA, 92618	Project Manager: Spencer Marcinek	04/15/20 16:08

WC-1

T201979-01 (Soil)

SunStar Laboratories, Inc.

Volatile Organic Compounds by EPA Method 8260B

Analyte	Result	Reporting Limit	Units	Dilution	Batch	Prepared	Analyzed	Method	Notes
Bromobenzene	ND	1.2	ug/kg	1	0040828	04/08/20	04/08/20	EPA 8260B	
Bromochloromethane	ND	1.2	"	"	"	"	"	"	
Bromodichloromethane	ND	1.2	"	"	"	"	"	"	
Bromoform	ND	1.2	"	"	"	"	"	"	
Bromomethane	ND	1.2	"	"	"	"	"	"	
n-Butylbenzene	ND	1.2	"	"	"	"	"	"	
sec-Butylbenzene	ND	1.2	"	"	"	"	"	"	
tert-Butylbenzene	ND	1.2	"	"	"	"	"	"	
Carbon tetrachloride	ND	1.2	"	"	"	"	"	"	
Chlorobenzene	ND	1.2	"	"	"	"	"	"	
Chloroethane	ND	1.2	"	"	"	"	"	"	
Chloroform	ND	1.2	"	"	"	"	"	"	
Chloromethane	ND	1.2	"	"	"	"	"	"	
2-Chlorotoluene	ND	1.2	"	"	"	"	"	"	
4-Chlorotoluene	ND	1.2	"	"	"	"	"	"	
Dibromochloromethane	ND	1.2	"	"	"	"	"	"	
1,2-Dibromo-3-chloropropane	ND	2.5	"	"	"	"	"	"	
1,2-Dibromoethane (EDB)	ND	1.2	"	"	"	"	"	"	
Dibromomethane	ND	1.2	"	"	"	"	"	"	
1,2-Dichlorobenzene	ND	1.2	"	"	"	"	"	"	
1,3-Dichlorobenzene	ND	1.2	"	"	"	"	"	"	
1,4-Dichlorobenzene	ND	1.2	"	"	"	"	"	"	
Dichlorodifluoromethane	ND	1.2	"	"	"	"	"	"	
1,1-Dichloroethane	ND	1.2	"	"	"	"	"	"	
1,2-Dichloroethane	ND	1.2	"	"	"	"	"	"	
1,1-Dichloroethene	ND	1.2	"	"	"	"	"	"	
cis-1,2-Dichloroethene	ND	1.2	"	"	"	"	"	"	
trans-1,2-Dichloroethene	ND	1.2	"	"	"	"	"	"	
1,2-Dichloropropane	ND	1.2	"	"	"	"	"	"	
1,3-Dichloropropane	ND	1.2	"	"	"	"	"	"	
2,2-Dichloropropane	ND	1.2	"	"	"	"	"	"	
1,1-Dichloropropene	ND	1.2	"	"	"	"	"	"	

SunStar Laboratories, Inc.

The results in this report apply to the samples analyzed in accordance with the chain of custody document. This analytical report must be reproduced in its entirety.

Mike Jaroudi, Project Manager

SunStar Laboratories, Inc.
PROVIDING QUALITY ANALYTICAL SERVICES NATIONWIDE

25712 Commercentre Drive
Lake Forest, California 92630
949.297.5020 Phone
949.297.5027 Fax

Ninyo & Moore	Project: LABOE Stormwater/Fernangeles	
475 Goddard, Ste. 200	Project Number: 211294002	**Reported:**
Irvine CA, 92618	Project Manager: Spencer Marcinek	04/15/20 16:08

WC-1

T201979-01 (Soil)

SunStar Laboratories, Inc.

Volatile Organic Compounds by EPA Method 8260B

Analyte	Result	Reporting Limit	Units	Dilution	Batch	Prepared	Analyzed	Method	Notes
cis-1,3-Dichloropropene	ND	1.2	ug/kg	1	0040828	04/08/20	04/08/20	EPA 8260B	
trans-1,3-Dichloropropene	ND	1.2	"	"	"	"	"	"	
Hexachlorobutadiene	ND	1.2	"	"	"	"	"	"	
Isopropylbenzene	ND	1.2	"	"	"	"	"	"	
p-Isopropyltoluene	ND	1.2	"	"	"	"	"	"	
Methylene chloride	ND	5.0	"	"	"	"	"	"	
Naphthalene	ND	1.2	"	"	"	"	"	"	
n-Propylbenzene	ND	1.2	"	"	"	"	"	"	
Styrene	ND	1.2	"	"	"	"	"	"	
1,1,2,2-Tetrachloroethane	ND	1.2	"	"	"	"	"	"	
1,1,1,2-Tetrachloroethane	ND	1.2	"	"	"	"	"	"	
Tetrachloroethene	ND	0.75	"	"	"	"	"	"	
1,2,3-Trichlorobenzene	ND	1.2	"	"	"	"	"	"	
1,2,4-Trichlorobenzene	ND	1.2	"	"	"	"	"	"	
1,1,2-Trichloroethane	ND	1.2	"	"	"	"	"	"	
1,1,1-Trichloroethane	ND	1.2	"	"	"	"	"	"	
Trichloroethene	ND	0.75	"	"	"	"	"	"	
Trichlorofluoromethane	ND	1.2	"	"	"	"	"	"	
1,2,3-Trichloropropane	ND	1.2	"	"	"	"	"	"	
1,3,5-Trimethylbenzene	ND	1.2	"	"	"	"	"	"	
1,2,4-Trimethylbenzene	ND	1.2	"	"	"	"	"	"	
Vinyl chloride	ND	1.2	"	"	"	"	"	"	
Benzene	ND	1.2	"	"	"	"	"	"	
Toluene	ND	1.2	"	"	"	"	"	"	
Ethylbenzene	ND	1.2	"	"	"	"	"	"	
m,p-Xylene	ND	2.5	"	"	"	"	"	"	
o-Xylene	ND	1.2	"	"	"	"	"	"	
Surrogate: 4-Bromofluorobenzene		*100 %*	*75.4-139*		"	"	"	"	
Surrogate: Dibromofluoromethane		*102 %*	*73.1-125*		"	"	"	"	
Surrogate: Toluene-d8		*101 %*	*82.6-117*		"	"	"	"	

SunStar Laboratories, Inc.

The results in this report apply to the samples analyzed in accordance with the chain of custody document. This analytical report must be reproduced in its entirety.

Mike Jaroudi, Project Manager

SunStar Laboratories, Inc.
Providing Quality Analytical Services Nationwide

25712 Commercentre Drive
Lake Forest, California 92630
949.297.5020 Phone
949.297.5027 Fax

Ninyo & Moore	Project: LABOE Stormwater/Fernangeles	
475 Goddard, Ste. 200	Project Number: 211294002	**Reported:**
Irvine CA, 92618	Project Manager: Spencer Marcinek	04/15/20 16:08

WC-2

T201979-02 (Soil)

SunStar Laboratories, Inc.

Analyte	Result	Reporting Limit	Units	Dilution	Batch	Prepared	Analyzed	Method	Notes
Extractable Petroleum Hydrocarbons by 8015B									
C6-C12 (GRO)	ND	10	mg/kg	1	0040917	04/09/20	04/09/20	EPA 8015B	
C13-C28 (DRO)	**61**	10	"	"	"	"	"	"	
C29-C40 (MORO)	**860**	10	"	"	"	"	"	"	
Surrogate: p-Terphenyl		*90.2 %*		*65-135*	"	"	"	"	
Metals by EPA 6010B									
Antimony	ND	3.0	mg/kg	1	0040914	04/09/20	04/10/20	EPA 6010b	
Silver	ND	2.0	"	"	"	"	"	"	
Arsenic	ND	5.0	"	"	"	"	"	"	
Barium	**43**	1.0	"	"	"	"	"	"	
Beryllium	ND	1.0	"	"	"	"	"	"	
Cadmium	ND	2.0	"	"	"	"	"	"	
Chromium	**6.0**	2.0	"	"	"	"	"	"	
Cobalt	**3.2**	2.0	"	"	"	"	"	"	
Copper	**5.3**	1.0	"	"	"	"	"	"	
Lead	ND	3.0	"	"	"	"	"	"	
Molybdenum	ND	5.0	"	"	"	"	"	"	
Nickel	**2.9**	2.0	"	"	"	"	"	"	
Selenium	ND	5.0	"	"	"	"	"	"	
Thallium	ND	5.0	"	"	"	"	"	"	
Vanadium	**12**	5.0	"	"	"	"	"	"	
Zinc	**13**	1.0	"	"	"	"	"	"	
Cold Vapor Extraction EPA 7470/7471									
Mercury	ND	0.10	mg/kg	1	0041010	04/10/20	04/13/20	EPA 7471A Soil	

SunStar Laboratories, Inc.



Mike Jaroudi, Project Manager

The results in this report apply to the samples analyzed in accordance with the chain of custody document. This analytical report must be reproduced in its entirety.

SunStar Laboratories, Inc.
Providing Quality Analytical Services Nationwide

25712 Commercentre Drive
Lake Forest, California 92630
949.297.5020 Phone
949.297.5027 Fax

Ninyo & Moore	Project: LABOE Stormwater/Fernangeles	
475 Goddard, Ste. 200	Project Number: 211294002	**Reported:**
Irvine CA, 92618	Project Manager: Spencer Marcinek	04/15/20 16:08

WC-2

T201979-02 (Soil)

SunStar Laboratories, Inc.

Volatile Organic Compounds by EPA Method 8260B

Analyte	Result	Reporting Limit	Units	Dilution	Batch	Prepared	Analyzed	Method	Notes
Bromobenzene	ND	2.5	ug/kg	1	0040829	04/10/20	04/14/20	EPA 8260B	
Bromochloromethane	ND	2.5	"	"	"	"	"	"	
Bromodichloromethane	ND	2.5	"	"	"	"	"	"	
Bromoform	ND	2.5	"	"	"	"	"	"	
Bromomethane	ND	2.5	"	"	"	"	"	"	
n-Butylbenzene	ND	2.5	"	"	"	"	"	"	
sec-Butylbenzene	ND	2.5	"	"	"	"	"	"	
tert-Butylbenzene	ND	2.5	"	"	"	"	"	"	
Carbon tetrachloride	ND	2.5	"	"	"	"	"	"	
Chlorobenzene	ND	2.5	"	"	"	"	"	"	
Chloroethane	ND	2.5	"	"	"	"	"	"	
Chloroform	ND	2.5	"	"	"	"	"	"	
Chloromethane	ND	2.5	"	"	"	"	"	"	
2-Chlorotoluene	ND	2.5	"	"	"	"	"	"	
4-Chlorotoluene	ND	2.5	"	"	"	"	"	"	
Dibromochloromethane	ND	2.5	"	"	"	"	"	"	
1,2-Dibromo-3-chloropropane	ND	5.0	"	"	"	"	"	"	
1,2-Dibromoethane (EDB)	ND	2.5	"	"	"	"	"	"	
Dibromomethane	ND	2.5	"	"	"	"	"	"	
1,2-Dichlorobenzene	ND	2.5	"	"	"	"	"	"	
1,3-Dichlorobenzene	ND	2.5	"	"	"	"	"	"	
1,4-Dichlorobenzene	ND	2.5	"	"	"	"	"	"	
Dichlorodifluoromethane	ND	2.5	"	"	"	"	"	"	
1,1-Dichloroethane	ND	2.5	"	"	"	"	"	"	
1,2-Dichloroethane	ND	2.5	"	"	"	"	"	"	
1,1-Dichloroethene	ND	2.5	"	"	"	"	"	"	
cis-1,2-Dichloroethene	ND	2.5	"	"	"	"	"	"	
trans-1,2-Dichloroethene	ND	2.5	"	"	"	"	"	"	
1,2-Dichloropropane	ND	2.5	"	"	"	"	"	"	
1,3-Dichloropropane	ND	2.5	"	"	"	"	"	"	
2,2-Dichloropropane	ND	2.5	"	"	"	"	"	"	
1,1-Dichloropropene	ND	2.5	"	"	"	"	"	"	

SunStar Laboratories, Inc.

The results in this report apply to the samples analyzed in accordance with the chain of custody document. This analytical report must be reproduced in its entirety.

Mike Jaroudi, Project Manager

SunStar Laboratories, Inc.
Providing Quality Analytical Services Nationwide

25712 Commercentre Drive
Lake Forest, California 92630
949.297.5020 Phone
949.297.5027 Fax

Ninyo & Moore	Project: LABOE Stormwater/Fernangeles	
475 Goddard, Ste. 200	Project Number: 211294002	**Reported:**
Irvine CA, 92618	Project Manager: Spencer Marcinek	04/15/20 16:08

WC-2

T201979-02 (Soil)

SunStar Laboratories, Inc.

Volatile Organic Compounds by EPA Method 8260B

Analyte	Result	Reporting Limit	Units	Dilution	Batch	Prepared	Analyzed	Method	Notes
cis-1,3-Dichloropropene	ND	2.5	ug/kg	1	0040829	04/10/20	04/14/20	EPA 8260B	
trans-1,3-Dichloropropene	ND	2.5	"	"	"	"	"	"	
Hexachlorobutadiene	ND	2.5	"	"	"	"	"	"	
Isopropylbenzene	ND	2.5	"	"	"	"	"	"	
p-Isopropyltoluene	ND	2.5	"	"	"	"	"	"	
Methylene chloride	ND	10	"	"	"	"	"	"	
Naphthalene	ND	2.5	"	"	"	"	"	"	
n-Propylbenzene	ND	2.5	"	"	"	"	"	"	
Styrene	ND	2.5	"	"	"	"	"	"	
1,1,2,2-Tetrachloroethane	ND	2.5	"	"	"	"	"	"	
1,1,1,2-Tetrachloroethane	ND	2.5	"	"	"	"	"	"	
Tetrachloroethene	ND	1.5	"	"	"	"	"	"	
1,2,3-Trichlorobenzene	ND	2.5	"	"	"	"	"	"	
1,2,4-Trichlorobenzene	ND	2.5	"	"	"	"	"	"	
1,1,2-Trichloroethane	ND	2.5	"	"	"	"	"	"	
1,1,1-Trichloroethane	ND	2.5	"	"	"	"	"	"	
Trichloroethene	ND	1.5	"	"	"	"	"	"	
Trichlorofluoromethane	ND	2.5	"	"	"	"	"	"	
1,2,3-Trichloropropane	ND	2.5	"	"	"	"	"	"	
1,3,5-Trimethylbenzene	ND	2.5	"	"	"	"	"	"	
1,2,4-Trimethylbenzene	ND	2.5	"	"	"	"	"	"	
Vinyl chloride	ND	2.5	"	"	"	"	"	"	
Benzene	ND	2.5	"	"	"	"	"	"	
Toluene	ND	2.5	"	"	"	"	"	"	
Ethylbenzene	ND	2.5	"	"	"	"	"	"	
m,p-Xylene	**15**	5.0	"	"	"	"	"	"	
o-Xylene	**11**	2.5	"	"	"	"	"	"	
Surrogate: 4-Bromofluorobenzene		*98.1 %*	*75.4-139*		"	"	"	"	
Surrogate: Dibromofluoromethane		*91.8 %*	*73.1-125*		"	"	"	"	
Surrogate: Toluene-d8		*96.8 %*	*82.6-117*		"	"	"	"	

SunStar Laboratories, Inc.



Mike Jaroudi, Project Manager

The results in this report apply to the samples analyzed in accordance with the chain of custody document. This analytical report must be reproduced in its entirety.

SunStar Laboratories, Inc.
PROVIDING QUALITY ANALYTICAL SERVICES NATIONWIDE

25712 Commercentre Drive
Lake Forest, California 92630
949.297.5020 Phone
949.297.5027 Fax

Ninyo & Moore	Project: LABOE Stormwater/Fernangeles	
475 Goddard, Ste. 200	Project Number: 211294002	**Reported:**
Irvine CA, 92618	Project Manager: Spencer Marcinek	04/15/20 16:08

Extractable Petroleum Hydrocarbons by 8015B - Quality Control

SunStar Laboratories, Inc.

Analyte	Result	Reporting Limit	Units	Spike Level	Source Result	%REC	%REC Limits	RPD	RPD Limit	Notes
Batch 0040722 - EPA 3550B GC										
Blank (0040722-BLK1)				Prepared: 04/07/20 Analyzed: 04/09/20						
C6-C12 (GRO)	ND	10	mg/kg							
C13-C28 (DRO)	ND	10	"							
C29-C40 (MORO)	ND	10	"							
Surrogate: p-Terphenyl	*90.4*		*"*	*102*		*88.6*	*65-135*			
LCS (0040722-BS1)				Prepared: 04/07/20 Analyzed: 04/09/20						
C13-C28 (DRO)	450	10	mg/kg	510		88.5	75-125			
Surrogate: p-Terphenyl	*88.7*		*"*	*102*		*86.9*	*65-135*			
LCS Dup (0040722-BSD1)				Prepared: 04/07/20 Analyzed: 04/09/20						
C13-C28 (DRO)	440	10	mg/kg	510		86.3	75-125	2.55	20	
Surrogate: p-Terphenyl	*86.9*		*"*	*102*		*85.1*	*65-135*			
Batch 0040917 - EPA 3550B GC										
Blank (0040917-BLK1)				Prepared & Analyzed: 04/09/20						
C6-C12 (GRO)	ND	10	mg/kg							
C13-C28 (DRO)	ND	10	"							
C29-C40 (MORO)	ND	10	"							
Surrogate: p-Terphenyl	*50.4*		*"*	*99.0*		*50.9*	*65-135*			*S-13*
LCS (0040917-BS1)				Prepared & Analyzed: 04/09/20						
C13-C28 (DRO)	390	10	mg/kg	495		79.5	75-125			
Surrogate: p-Terphenyl	*66.1*		*"*	*99.0*		*66.7*	*65-135*			
LCS Dup (0040917-BSD1)				Prepared & Analyzed: 04/09/20						
C13-C28 (DRO)	410	10	mg/kg	495		82.5	75-125	3.62	20	
Surrogate: p-Terphenyl	*68.9*		*"*	*99.0*		*69.6*	*65-135*			

SunStar Laboratories, Inc.



Mike Jaroudi, Project Manager

The results in this report apply to the samples analyzed in accordance with the chain of custody document. This analytical report must be reproduced in its entirety.

SunStar Laboratories, Inc.
PROVIDING QUALITY ANALYTICAL SERVICES NATIONWIDE

25712 Commercentre Drive
Lake Forest, California 92630
949.297.5020 Phone
949.297.5027 Fax

Ninyo & Moore	Project: LABOE Stormwater/Fernangeles	
475 Goddard, Ste. 200	Project Number: 211294002	**Reported:**
Irvine CA, 92618	Project Manager: Spencer Marcinek	04/15/20 16:08

Metals by EPA 6010B - Quality Control

SunStar Laboratories, Inc.

Analyte	Result	Reporting Limit	Units	Spike Level	Source Result	%REC	%REC Limits	RPD	RPD Limit	Notes
Batch 0040827 - EPA 3050B										
Blank (0040827-BLK1)				Prepared: 04/08/20 Analyzed: 04/09/20						
Antimony	ND	3.0	mg/kg							
Silver	8.08	2.0	"							B-ND
Arsenic	ND	5.0	"							
Barium	ND	1.0	"							
Beryllium	ND	1.0	"							
Cadmium	ND	2.0	"							
Chromium	ND	2.0	"							
Cobalt	ND	2.0	"							
Copper	ND	1.0	"							
Lead	ND	3.0	"							
Molybdenum	ND	5.0	"							
Nickel	ND	2.0	"							
Selenium	ND	5.0	"							
Thallium	ND	5.0	"							
Vanadium	ND	5.0	"							
Zinc	ND	1.0	"							
LCS (0040827-BS1)				Prepared: 04/08/20 Analyzed: 04/09/20						
Arsenic	98.9	5.0	mg/kg	100		98.9	75-125			
Barium	99.9	1.0	"	100		99.9	75-125			
Cadmium	99.4	2.0	"	100		99.4	75-125			
Chromium	99.6	2.0	"	100		99.6	75-125			
Lead	99.9	3.0	"	100		99.9	75-125			
Matrix Spike (0040827-MS1)	**Source: T201972-01**			Prepared: 04/08/20 Analyzed: 04/09/20						
Arsenic	67.6	5.0	mg/kg	94.3	2.02	69.5	75-125			QM-05
Barium	139	1.0	"	94.3	74.1	69.1	75-125			QM-05
Cadmium	70.2	2.0	"	94.3	0.317	74.1	75-125			QM-05
Chromium	83.5	2.0	"	94.3	16.1	71.5	75-125			QM-05
Lead	74.3	3.0	"	94.3	9.12	69.1	75-125			QM-05

SunStar Laboratories, Inc.

The results in this report apply to the samples analyzed in accordance with the chain of custody document. This analytical report must be reproduced in its entirety.

Mike Jaroudi, Project Manager

SunStar Laboratories, Inc.
PROVIDING QUALITY ANALYTICAL SERVICES NATIONWIDE

25712 Commercentre Drive
Lake Forest, California 92630
949.297.5020 Phone
949.297.5027 Fax

Ninyo & Moore	Project: LABOE Stormwater/Fernangeles	
475 Goddard, Ste. 200	Project Number: 211294002	**Reported:**
Irvine CA, 92618	Project Manager: Spencer Marcinek	04/15/20 16:08

Metals by EPA 6010B - Quality Control

SunStar Laboratories, Inc.

Analyte	Result	Reporting Limit	Units	Spike Level	Source Result	%REC	%REC Limits	RPD	RPD Limit	Notes
Batch 0040827 - EPA 3050B										
Matrix Spike Dup (0040827-MSD1)	**Source: T201972-01**			Prepared: 04/08/20 Analyzed: 04/09/20						
Arsenic	60.3	4.5	mg/kg	90.9	2.02	64.1	75-125	11.3	20	QM-05
Barium	127	0.91	"	90.9	74.1	58.8	75-125	8.79	20	QM-05
Cadmium	62.3	1.8	"	90.9	0.317	68.1	75-125	12.0	20	QM-05
Chromium	72.9	1.8	"	90.9	16.1	62.5	75-125	13.5	20	QM-05
Lead	67.5	2.7	"	90.9	9.12	64.2	75-125	9.69	20	QM-05
Batch 0040914 - EPA 3050B										
Blank (0040914-BLK1)				Prepared: 04/09/20 Analyzed: 04/10/20						
Antimony	ND	3.0	mg/kg							
Silver	10.4	2.0	"							B-ND
Arsenic	ND	5.0	"							
Barium	ND	1.0	"							
Beryllium	ND	1.0	"							
Cadmium	ND	2.0	"							
Chromium	ND	2.0	"							
Cobalt	ND	2.0	"							
Copper	ND	1.0	"							
Lead	ND	3.0	"							
Molybdenum	ND	5.0	"							
Nickel	ND	2.0	"							
Selenium	ND	5.0	"							
Thallium	ND	5.0	"							
Vanadium	ND	5.0	"							
Zinc	ND	1.0	"							
LCS (0040914-BS1)				Prepared: 04/09/20 Analyzed: 04/10/20						
Arsenic	97.1	5.0	mg/kg	100		97.1	75-125			
Barium	96.1	1.0	"	100		96.1	75-125			
Cadmium	95.5	2.0	"	100		95.5	75-125			
Chromium	95.7	2.0	"	100		95.7	75-125			
Lead	98.1	3.0	"	100		98.1	75-125			

SunStar Laboratories, Inc.

The results in this report apply to the samples analyzed in accordance with the chain of custody document. This analytical report must be reproduced in its entirety.

Mike Jaroudi, Project Manager

SunStar Laboratories, Inc.
PROVIDING QUALITY ANALYTICAL SERVICES NATIONWIDE

25712 Commercentre Drive
Lake Forest, California 92630
949.297.5020 Phone
949.297.5027 Fax

Ninyo & Moore	Project: LABOE Stormwater/Fernangeles	
475 Goddard, Ste. 200	Project Number: 211294002	**Reported:**
Irvine CA, 92618	Project Manager: Spencer Marcinek	04/15/20 16:08

Metals by EPA 6010B - Quality Control

SunStar Laboratories, Inc.

Analyte	Result	Reporting Limit	Units	Spike Level	Source Result	%REC	%REC Limits	RPD	RPD Limit	Notes
Batch 0040914 - EPA 3050B										
Matrix Spike (0040914-MS1)	**Source: T201911-01**			Prepared: 04/09/20 Analyzed: 04/10/20						
Arsenic	56.4	5.0	mg/kg	97.1	ND	58.1	75-125			QM-05
Barium	147	1.0	"	97.1	23.3	128	75-125			QM-05
Cadmium	56.5	2.0	"	97.1	0.121	58.0	75-125			QM-05
Chromium	81.8	2.0	"	97.1	2.17	82.0	75-125			
Lead	58.9	3.0	"	97.1	ND	60.6	75-125			QM-05
Matrix Spike Dup (0040914-MSD1)	**Source: T201911-01**			Prepared: 04/09/20 Analyzed: 04/10/20						
Arsenic	68.1	5.0	mg/kg	94.3	ND	72.1	75-125	18.7	20	QM-05
Barium	149	1.0	"	94.3	23.3	133	75-125	1.27	20	QM-05
Cadmium	63.3	2.0	"	94.3	0.121	67.0	75-125	11.4	20	QM-05
Chromium	88.6	2.0	"	94.3	2.17	91.6	75-125	8.01	20	
Lead	70.3	3.0	"	94.3	ND	74.5	75-125	17.7	20	QM-05

SunStar Laboratories, Inc.

The results in this report apply to the samples analyzed in accordance with the chain of custody document. This analytical report must be reproduced in its entirety.

Mike Jaroudi, Project Manager

SunStar Laboratories, Inc.
PROVIDING QUALITY ANALYTICAL SERVICES NATIONWIDE

25712 Commercentre Drive
Lake Forest, California 92630
949.297.5020 Phone
949.297.5027 Fax

Ninyo & Moore	Project: LABOE Stormwater/Fernangeles	
475 Goddard, Ste. 200	Project Number: 211294002	**Reported:**
Irvine CA, 92618	Project Manager: Spencer Marcinek	04/15/20 16:08

Cold Vapor Extraction EPA 7470/7471 - Quality Control

SunStar Laboratories, Inc.

Analyte	Result	Reporting Limit	Units	Spike Level	Source Result	%REC	%REC Limits	RPD	RPD Limit	Notes
Batch 0040826 - EPA 7471A Soil										
Blank (0040826-BLK1)				Prepared & Analyzed: 04/08/20						
Mercury	ND	0.10	mg/kg							
LCS (0040826-BS1)				Prepared & Analyzed: 04/08/20						
Mercury	0.407	0.10	mg/kg	0.403		101	80-120			
Matrix Spike (0040826-MS1)		**Source: T201972-01**		Prepared & Analyzed: 04/08/20						
Mercury	0.384	0.10	mg/kg	0.397	0.0460	85.0	75-125			
Matrix Spike Dup (0040826-MSD1)		**Source: T201972-01**		Prepared & Analyzed: 04/08/20						
Mercury	0.406	0.10	mg/kg	0.391	0.0460	92.1	75-125	5.67	20	
Batch 0041010 - EPA 7471A Soil										
Blank (0041010-BLK1)				Prepared: 04/10/20 Analyzed: 04/13/20						
Mercury	ND	0.10	mg/kg							
LCS (0041010-BS1)				Prepared: 04/10/20 Analyzed: 04/13/20						
Mercury	0.391	0.10	mg/kg	0.385		102	80-120			
Matrix Spike (0041010-MS1)		**Source: T201911-01**		Prepared: 04/10/20 Analyzed: 04/13/20						
Mercury	0.387	0.10	mg/kg	0.410	ND	94.5	75-125			
Matrix Spike Dup (0041010-MSD1)		**Source: T201911-01**		Prepared: 04/10/20 Analyzed: 04/13/20						
Mercury	0.382	0.10	mg/kg	0.403	ND	94.7	75-125	1.32	20	

SunStar Laboratories, Inc.

The results in this report apply to the samples analyzed in accordance with the chain of custody document. This analytical report must be reproduced in its entirety.

Mike Jaroudi, Project Manager

SunStar Laboratories, Inc.
Providing Quality Analytical Services Nationwide

25712 Commercentre Drive
Lake Forest, California 92630
949.297.5020 Phone
949.297.5027 Fax

Ninyo & Moore	Project: LABOE Stormwater/Fernangeles	
475 Goddard, Ste. 200	Project Number: 211294002	**Reported:**
Irvine CA, 92618	Project Manager: Spencer Marcinek	04/15/20 16:08

Volatile Organic Compounds by EPA Method 8260B - Quality Control

SunStar Laboratories, Inc.

Analyte	Result	Reporting Limit	Units	Spike Level	Source Result	%REC	%REC Limits	RPD	RPD Limit	Notes
Batch 0040828 - EPA 5030 GCMS										
Blank (0040828-BLK1)				Prepared & Analyzed: 04/08/20						
Bromobenzene	ND	1.2	ug/kg							
Bromochloromethane	ND	1.2	"							
Bromodichloromethane	ND	1.2	"							
Bromoform	ND	1.2	"							
Bromomethane	ND	1.2	"							
n-Butylbenzene	ND	1.2	"							
sec-Butylbenzene	ND	1.2	"							
tert-Butylbenzene	ND	1.2	"							
Carbon tetrachloride	ND	1.2	"							
Chlorobenzene	ND	1.2	"							
Chloroethane	ND	1.2	"							
Chloroform	ND	1.2	"							
Chloromethane	ND	1.2	"							
2-Chlorotoluene	ND	1.2	"							
4-Chlorotoluene	ND	1.2	"							
Dibromochloromethane	ND	1.2	"							
1,2-Dibromo-3-chloropropane	ND	2.5	"							
1,2-Dibromoethane (EDB)	ND	1.2	"							
Dibromomethane	ND	1.2	"							
1,2-Dichlorobenzene	ND	1.2	"							
1,3-Dichlorobenzene	ND	1.2	"							
1,4-Dichlorobenzene	ND	1.2	"							
Dichlorodifluoromethane	ND	1.2	"							
1,1-Dichloroethane	ND	1.2	"							
1,2-Dichloroethane	ND	1.2	"							
1,1-Dichloroethene	ND	1.2	"							
cis-1,2-Dichloroethene	ND	1.2	"							
trans-1,2-Dichloroethene	ND	1.2	"							
1,2-Dichloropropane	ND	1.2	"							
1,3-Dichloropropane	ND	1.2	"							
2,2-Dichloropropane	ND	1.2	"							
1,1-Dichloropropene	ND	1.2	"							
cis-1,3-Dichloropropene	ND	1.2	"							
trans-1,3-Dichloropropene	ND	1.2	"							
Hexachlorobutadiene	ND	1.2	"							
Isopropylbenzene	ND	1.2	"							

SunStar Laboratories, Inc.



Mike Jaroudi, Project Manager

The results in this report apply to the samples analyzed in accordance with the chain of custody document. This analytical report must be reproduced in its entirety.

SunStar Laboratories, Inc.
Providing Quality Analytical Services Nationwide

25712 Commercentre Drive
Lake Forest, California 92630
949.297.5020 Phone
949.297.5027 Fax

Ninyo & Moore	Project: LABOE Stormwater/Fernangeles	
475 Goddard, Ste. 200	Project Number: 211294002	**Reported:**
Irvine CA, 92618	Project Manager: Spencer Marcinek	04/15/20 16:08

Volatile Organic Compounds by EPA Method 8260B - Quality Control

SunStar Laboratories, Inc.

Analyte	Result	Reporting Limit	Units	Spike Level	Source Result	%REC	%REC Limits	RPD	RPD Limit	Notes
Batch 0040828 - EPA 5030 GCMS										
Blank (0040828-BLK1)				Prepared & Analyzed: 04/08/20						
p-Isopropyltoluene	ND	1.2	ug/kg							
Methylene chloride	ND	5.0	"							
Naphthalene	ND	1.2	"							
n-Propylbenzene	ND	1.2	"							
Styrene	ND	1.2	"							
1,1,2,2-Tetrachloroethane	ND	1.2	"							
1,1,1,2-Tetrachloroethane	ND	1.2	"							
Tetrachloroethene	ND	0.75	"							
1,2,3-Trichlorobenzene	ND	1.2	"							
1,2,4-Trichlorobenzene	ND	1.2	"							
1,1,2-Trichloroethane	ND	1.2	"							
1,1,1-Trichloroethane	ND	1.2	"							
Trichloroethene	ND	0.75	"							
Trichlorofluoromethane	ND	1.2	"							
1,2,3-Trichloropropane	ND	1.2	"							
1,3,5-Trimethylbenzene	ND	1.2	"							
1,2,4-Trimethylbenzene	ND	1.2	"							
Vinyl chloride	ND	1.2	"							
Benzene	ND	1.2	"							
Toluene	ND	1.2	"							
Ethylbenzene	ND	1.2	"							
m,p-Xylene	ND	2.5	"							
o-Xylene	ND	1.2	"							
Surrogate: 4-Bromofluorobenzene	*50.6*		"	*50.0*		*101*	*75.4-139*			
Surrogate: Dibromofluoromethane	*48.8*		"	*50.0*		*97.5*	*73.1-125*			
Surrogate: Toluene-d8	*50.4*		"	*50.0*		*101*	*82.6-117*			
LCS (0040828-BS1)				Prepared & Analyzed: 04/08/20						
Chlorobenzene	46.0	1.2	ug/kg	50.0		91.9	65.2-124			
1,1-Dichloroethene	38.7	1.2	"	50.0		77.3	60.9-131			
Trichloroethene	45.5	0.75	"	50.0		91.0	62.1-126			
Benzene	44.0	1.2	"	50.0		88.0	65.3-127			
Toluene	44.0	1.2	"	50.0		87.9	64.3-122			
Surrogate: 4-Bromofluorobenzene	*51.2*		"	*50.0*		*102*	*75.4-139*			
Surrogate: Dibromofluoromethane	*50.0*		"	*50.0*		*99.9*	*73.1-125*			
Surrogate: Toluene-d8	*49.2*		"	*50.0*		*98.5*	*82.6-117*			

SunStar Laboratories, Inc.



Mike Jaroudi, Project Manager

The results in this report apply to the samples analyzed in accordance with the chain of custody document. This analytical report must be reproduced in its entirety.

SunStar Laboratories, Inc.
PROVIDING QUALITY ANALYTICAL SERVICES NATIONWIDE

25712 Commercentre Drive
Lake Forest, California 92630
949.297.5020 Phone
949.297.5027 Fax

Ninyo & Moore	Project: LABOE Stormwater/Fernangeles	
475 Goddard, Ste. 200	Project Number: 211294002	**Reported:**
Irvine CA, 92618	Project Manager: Spencer Marcinek	04/15/20 16:08

Volatile Organic Compounds by EPA Method 8260B - Quality Control

SunStar Laboratories, Inc.

Analyte	Result	Reporting Limit	Units	Spike Level	Source Result	%REC	%REC Limits	RPD	RPD Limit	Notes
Batch 0040828 - EPA 5030 GCMS										
Matrix Spike (0040828-MS1)	**Source: T201979-01**			Prepared & Analyzed: 04/08/20						
Chlorobenzene	42.0	1.2	ug/kg	49.8	ND	84.3	65.2-125			
1,1-Dichloroethene	47.2	1.2	"	49.8	ND	94.7	60.9-131			
Trichloroethene	44.7	0.75	"	49.8	ND	89.8	62.1-126			
Benzene	43.5	1.2	"	49.8	ND	87.4	65.3-127			
Toluene	41.5	1.2	"	49.8	ND	83.2	64.3-125			
Surrogate: 4-Bromofluorobenzene	*51.2*		*"*	*49.8*		*103*	*75.4-139*			
Surrogate: Dibromofluoromethane	*50.4*		*"*	*49.8*		*101*	*73.1-125*			
Surrogate: Toluene-d8	*49.1*		*"*	*49.8*		*98.7*	*82.6-117*			
Matrix Spike Dup (0040828-MSD1)	**Source: T201979-01**			Prepared & Analyzed: 04/08/20						
Chlorobenzene	40.9	1.2	ug/kg	49.3	ND	83.0	65.2-125	2.47	20	
1,1-Dichloroethene	46.2	1.2	"	49.3	ND	93.7	60.9-131	2.03	20	
Trichloroethene	43.3	0.74	"	49.3	ND	87.8	62.1-126	3.29	20	
Benzene	42.9	1.2	"	49.3	ND	87.0	65.3-127	1.45	20	
Toluene	41.3	1.2	"	49.3	ND	83.7	64.3-125	0.464	20	
Surrogate: 4-Bromofluorobenzene	*50.2*		*"*	*49.3*		*102*	*75.4-139*			
Surrogate: Dibromofluoromethane	*49.7*		*"*	*49.3*		*101*	*73.1-125*			
Surrogate: Toluene-d8	*49.1*		*"*	*49.3*		*99.6*	*82.6-117*			
Batch 0040829 - EPA 5030 GCMS										
Blank (0040829-BLK1)				Prepared: 04/08/20 Analyzed: 04/13/20						
Bromobenzene	ND	2.5	ug/kg							
Bromochloromethane	ND	2.5	"							
Bromodichloromethane	ND	2.5	"							
Bromoform	ND	2.5	"							
Bromomethane	ND	2.5	"							
n-Butylbenzene	ND	2.5	"							
sec-Butylbenzene	ND	2.5	"							
tert-Butylbenzene	ND	2.5	"							
Carbon tetrachloride	ND	2.5	"							
Chlorobenzene	ND	2.5	"							
Chloroethane	ND	2.5	"							
Chloroform	ND	2.5	"							
Chloromethane	ND	2.5	"							
2-Chlorotoluene	ND	2.5	"							

SunStar Laboratories, Inc.

The results in this report apply to the samples analyzed in accordance with the chain of custody document. This analytical report must be reproduced in its entirety.

Mike Jaroudi, Project Manager

SunStar Laboratories, Inc.
Providing Quality Analytical Services Nationwide

25712 Commercentre Drive
Lake Forest, California 92630
949.297.5020 Phone
949.297.5027 Fax

Ninyo & Moore	Project: LABOE Stormwater/Fernangeles	
475 Goddard, Ste. 200	Project Number: 211294002	**Reported:**
Irvine CA, 92618	Project Manager: Spencer Marcinek	04/15/20 16:08

Volatile Organic Compounds by EPA Method 8260B - Quality Control

SunStar Laboratories, Inc.

Analyte	Result	Reporting Limit	Units	Spike Level	Source Result	%REC	%REC Limits	RPD	RPD Limit	Notes
Batch 0040829 - EPA 5030 GCMS										
Blank (0040829-BLK1)				Prepared: 04/08/20 Analyzed: 04/13/20						
4-Chlorotoluene	ND	2.5	ug/kg							
Dibromochloromethane	ND	2.5	"							
1,2-Dibromo-3-chloropropane	ND	5.0	"							
1,2-Dibromoethane (EDB)	ND	2.5	"							
Dibromomethane	ND	2.5	"							
1,2-Dichlorobenzene	ND	2.5	"							
1,3-Dichlorobenzene	ND	2.5	"							
1,4-Dichlorobenzene	ND	2.5	"							
Dichlorodifluoromethane	ND	2.5	"							
1,1-Dichloroethane	ND	2.5	"							
1,2-Dichloroethane	ND	2.5	"							
1,1-Dichloroethene	ND	2.5	"							
cis-1,2-Dichloroethene	ND	2.5	"							
trans-1,2-Dichloroethene	ND	2.5	"							
1,2-Dichloropropane	ND	2.5	"							
1,3-Dichloropropane	ND	2.5	"							
2,2-Dichloropropane	ND	2.5	"							
1,1-Dichloropropene	ND	2.5	"							
cis-1,3-Dichloropropene	ND	2.5	"							
trans-1,3-Dichloropropene	ND	2.5	"							
Hexachlorobutadiene	ND	2.5	"							
Isopropylbenzene	ND	2.5	"							
p-Isopropyltoluene	ND	2.5	"							
Methylene chloride	ND	10	"							
Naphthalene	ND	2.5	"							
n-Propylbenzene	ND	2.5	"							
Styrene	ND	2.5	"							
1,1,2,2-Tetrachloroethane	ND	2.5	"							
1,1,1,2-Tetrachloroethane	ND	2.5	"							
Tetrachloroethene	ND	1.5	"							
1,2,3-Trichlorobenzene	ND	2.5	"							
1,2,4-Trichlorobenzene	ND	2.5	"							
1,1,2-Trichloroethane	ND	2.5	"							
1,1,1-Trichloroethane	ND	2.5	"							
Trichloroethene	ND	1.5	"							
Trichlorofluoromethane	ND	2.5	"							

SunStar Laboratories, Inc.

The results in this report apply to the samples analyzed in accordance with the chain of custody document. This analytical report must be reproduced in its entirety.

Mike Jaroudi, Project Manager

SunStar Laboratories, Inc.
PROVIDING QUALITY ANALYTICAL SERVICES NATIONWIDE

25712 Commercentre Drive
Lake Forest, California 92630
949.297.5020 Phone
949.297.5027 Fax

Ninyo & Moore	Project: LABOE Stormwater/Fernangeles	
475 Goddard, Ste. 200	Project Number: 211294002	**Reported:**
Irvine CA, 92618	Project Manager: Spencer Marcinek	04/15/20 16:08

Volatile Organic Compounds by EPA Method 8260B - Quality Control

SunStar Laboratories, Inc.

Analyte	Result	Reporting Limit	Units	Spike Level	Source Result	%REC	%REC Limits	RPD	RPD Limit	Notes
Batch 0040829 - EPA 5030 GCMS										
Blank (0040829-BLK1)				Prepared: 04/08/20 Analyzed: 04/13/20						
1,2,3-Trichloropropane	ND	2.5	ug/kg							
1,3,5-Trimethylbenzene	ND	2.5	"							
1,2,4-Trimethylbenzene	ND	2.5	"							
Vinyl chloride	ND	2.5	"							
Benzene	ND	2.5	"							
Toluene	ND	2.5	"							
Ethylbenzene	ND	2.5	"							
m,p-Xylene	ND	5.0	"							
o-Xylene	ND	2.5	"							
Surrogate: 4-Bromofluorobenzene	*52.2*		*"*	*50.0*		*104*	*75.4-139*			
Surrogate: Dibromofluoromethane	*49.5*		*"*	*50.0*		*99.0*	*73.1-125*			
Surrogate: Toluene-d8	*49.8*		*"*	*50.0*		*99.5*	*82.6-117*			
LCS (0040829-BS1)				Prepared: 04/08/20 Analyzed: 04/13/20						
Chlorobenzene	41.8	2.5	ug/kg	50.0		83.6	65.2-124			
1,1-Dichloroethene	42.8	2.5	"	50.0		85.6	60.9-131			
Trichloroethene	43.2	1.5	"	50.0		86.3	62.1-126			
Benzene	42.8	2.5	"	50.0		85.6	65.3-127			
Toluene	39.8	2.5	"	50.0		79.5	64.3-122			
Surrogate: 4-Bromofluorobenzene	*50.0*		*"*	*50.0*		*99.9*	*75.4-139*			
Surrogate: Dibromofluoromethane	*48.1*		*"*	*50.0*		*96.2*	*73.1-125*			
Surrogate: Toluene-d8	*50.1*		*"*	*50.0*		*100*	*82.6-117*			
Matrix Spike (0040829-MS1)	**Source: T201980-02**			Prepared: 04/08/20 Analyzed: 04/13/20						
Chlorobenzene	43.2	2.5	ug/kg	49.8	ND	86.7	65.2-125			
1,1-Dichloroethene	49.4	2.5	"	49.8	ND	99.2	60.9-131			
Trichloroethene	46.1	1.5	"	49.8	ND	92.6	62.1-126			
Benzene	45.7	2.5	"	49.8	ND	91.7	65.3-127			
Toluene	42.7	2.5	"	49.8	ND	85.7	64.3-125			
Surrogate: 4-Bromofluorobenzene	*50.3*		*"*	*49.8*		*101*	*75.4-139*			
Surrogate: Dibromofluoromethane	*47.8*		*"*	*49.8*		*96.0*	*73.1-125*			
Surrogate: Toluene-d8	*50.1*		*"*	*49.8*		*101*	*82.6-117*			

SunStar Laboratories, Inc.

The results in this report apply to the samples analyzed in accordance with the chain of custody document. This analytical report must be reproduced in its entirety.

Mike Jaroudi, Project Manager

SunStar Laboratories, Inc.
PROVIDING QUALITY ANALYTICAL SERVICES NATIONWIDE

25712 Commercentre Drive
Lake Forest, California 92630
949.297.5020 Phone
949.297.5027 Fax

Ninyo & Moore	Project: LABOE Stormwater/Fernangeles	
475 Goddard, Ste. 200	Project Number: 211294002	**Reported:**
Irvine CA, 92618	Project Manager: Spencer Marcinek	04/15/20 16:08

Volatile Organic Compounds by EPA Method 8260B - Quality Control

SunStar Laboratories, Inc.

Analyte	Result	Reporting Limit	Units	Spike Level	Source Result	%REC	%REC Limits	RPD	RPD Limit	Notes
Batch 0040829 - EPA 5030 GCMS										
Matrix Spike Dup (0040829-MSD1)	**Source: T201980-02**			Prepared: 04/08/20 Analyzed: 04/13/20						
Chlorobenzene	41.2	2.5	ug/kg	49.8	ND	82.7	65.2-125	4.74	20	
1,1-Dichloroethene	48.6	2.5	"	49.8	ND	97.6	60.9-131	1.61	20	
Trichloroethene	44.3	1.5	"	49.8	ND	88.9	62.1-126	4.10	20	
Benzene	44.3	2.5	"	49.8	ND	89.0	65.3-127	2.99	20	
Toluene	40.7	2.5	"	49.8	ND	81.8	64.3-125	4.66	20	
Surrogate: 4-Bromofluorobenzene	*50.5*		*"*	*49.8*		*101*	*75.4-139*			
Surrogate: Dibromofluoromethane	*49.0*		*"*	*49.8*		*98.4*	*73.1-125*			
Surrogate: Toluene-d8	*50.0*		*"*	*49.8*		*100*	*82.6-117*			

SunStar Laboratories, Inc.

The results in this report apply to the samples analyzed in accordance with the chain of custody document. This analytical report must be reproduced in its entirety.

Mike Jaroudi, Project Manager

SunStar Laboratories, Inc.
PROVIDING QUALITY ANALYTICAL SERVICES NATIONWIDE

25712 Commercentre Drive
Lake Forest, California 92630
949.297.5020 Phone
949.297.5027 Fax

Ninyo & Moore	Project: LABOE Stormwater/Fernangeles	
475 Goddard, Ste. 200	Project Number: 211294002	**Reported:**
Irvine CA, 92618	Project Manager: Spencer Marcinek	04/15/20 16:08

Notes and Definitions

S-13	Surrogate recovery outside of established control limits. The data was accepted based on valid recovery of surrogates in client samples and remaining QC including CCV.
QM-05	The spike recovery was outside acceptance limits for the MS and/or MSD due to possible matrix interference. The LCS was within acceptance criteria. The data is acceptable as no negative impact on data is expected.
B-ND	The analyte is found in the method blank at a level greater than the reporting limit but the associated samples are ND. There is no impact on data.
DET	Analyte DETECTED
ND	Analyte NOT DETECTED at or above the reporting limit
NR	Not Reported
dry	Sample results reported on a dry weight basis
RPD	Relative Percent Difference

SunStar Laboratories, Inc.

The results in this report apply to the samples analyzed in accordance with the chain of custody document. This analytical report must be reproduced in its entirety.

Mike Jaroudi, Project Manager

SunStar Laboratories, Inc.
25712 Commercentre Dr
Lake Forest, CA 92630
949-297-5020

Chain of Custody Record

Client: Ninyo & Moore
Address: 475 Goddard, Suite 200, Irvine CA
Phone: 949.753.7070 Fax: 949.753.7071
Project Manager: Spencer Marcinek

Date: 4/7/2020 Page: 1 Of 1
Project Name: LABOE Stormwater Capture Program/Fernangelo
Collector: Client Project #: 211294002
Batch #: ~~T201978~~ DB T201979 EDF #: ~~T201979~~ DB

Sample ID	Date Sampled	Time	Sample Type	Container Type	8260	8260 + OXY	8260 BTEX, OXY only	8270	8021 BTEX	8015M (gasoline)	8015M (diesel)	8015M Ext./Carbon Chain	6010/7000 Title 22 Metals	8015 TPHs				Laboratory ID #	Comments/Preservative	Total # of containers
WC-1	3/31/2020	12:00pm	Soil	jar	X								X	X				01		1
WC-2	3/31/2020	12:00pm	Soil	jar	X								X	X				02		1
																				2

Relinquished by: (signature)	Date / Time	Received by: (signature)	Date / Time
	4/7/2020 12:45		4.7.20 - 12:45
	4.7.20 13:03		4/7/20 1303

Total # of containers
Chain of Custody seals Y/N/NA
Seals intact? Y/N/NA
Received good condition/cold 2.6°

Turn around time:

Notes

Sample disposal Instructions: Disposal @ $2.00 each ___ Return to client ___ Pickup ___

SunStar Laboratories, Inc.
PROVIDING QUALITY ANALYTICAL SERVICES NATIONWIDE

SAMPLE RECEIVING REVIEW SHEET

Batch/Work Order #: T20 1979

Client Name: _____ Project: LABOE Stormwater Capture Program/Fernangelo

Delivered by: ☐ Client ☒ SunStar Courier ☐ GSO ☐ FedEx ☐ Other

If Courier, Received by: David Berner Date/Time Courier Received: 4-7-20 ~~13:03~~ DB 12:45

Lab Received by: Brian Charon Date/Time Lab Received: 4-7-20 13:03

Total number of coolers received: 0 Thermometer ID: SC-1 Calibration due: 6/27/20

Temperature:	Cooler #1	1.4 °C +/- the CF (+ 1.2°C)	= 2.6	°C corrected temperature
Temperature:	Cooler #2	°C +/- the CF (+ 1.2°C)	=	°C corrected temperature
Temperature:	Cooler #3	°C +/- the CF (+ 1.2°C)	=	°C corrected temperature

Temperature criteria = ≤ 6°C (no frozen containers)	Within criteria?	☒ **Yes** ☐ **No**
If NO:		
Samples received on ice?	☐ Yes	☐ **No → Complete Non-Conformance Sheet**
If on ice, samples received same day collected?	☐ Yes → Acceptable	☐ **No → Complete Non-Conformance Sheet**

Custody seals intact on cooler/sample	☐ Yes	☐ No*	☒ N/A
Sample containers intact	☒ Yes	☐ No*	
Sample labels match Chain of Custody IDs	☒ Yes	☐ No*	
Total number of containers received match COC	☒ Yes	☐ No*	
Proper containers received for analyses requested on COC	☒ Yes	☐ No*	
Proper preservative indicated on COC/containers for analyses requested	☐ Yes	☐ No*	☒ N/A
Complete shipment received in good condition with correct temperatures, containers, labels, volumes preservatives and within method specified holding times	☒ **Yes**	☐ **No***	

* Complete Non-Conformance Receiving Sheet if checked

Cooler/Sample Review - Initials and date: DB 4-7-20

Comments:

SunStar Laboratories, Inc.
Providing Quality Analytical Services Nationwide

WORK ORDER

T201979

Client:	**Ninyo & Moore**	**Project Manager:**	**Mike Jaroudi**
Project:	**LABOE Stormwater/Fernangeles**	**Project Number:**	**211294002**

Report To:

Ninyo & Moore
Spencer Marcinek
475 Goddard, Ste. 200
Irvine, CA 92618

Date Due:	04/14/20 17:00 (5 day TAT)		
Received By:	Brian Charon	Date Received:	04/07/20 13:03
Logged In By:	Dave Berner	Date Logged In:	04/07/20 14:49

Samples Received at: **2.6°C**

Custody Seals	No	Received On Ice	Yes
Containers Intact	Yes		
COC/Labels Agree	Yes		
Preservation Confirı	No		

Analysis	Due	TAT	Expires	Comments
T201979-01 WC-1 [Soil] Sampled 03/31/20 12:00 (GMT-08:00) Pacific Time (US &				
6010 Title 22	04/14/20 15:00	5	09/27/20 12:00	
8015 Carbon Chain	04/14/20 15:00	5	04/14/20 12:00	
8260	04/14/20 15:00	5	04/14/20 12:00	
T201979-02 WC-2 [Soil] Sampled 03/31/20 12:00 (GMT-08:00) Pacific Time (US &				
6010 Title 22	04/14/20 15:00	5	09/27/20 12:00	
8015 Carbon Chain	04/14/20 15:00	5	04/14/20 12:00	
8260	04/14/20 15:00	5	04/14/20 12:00	

Analysis groups included in this work order

6010 Title 22

subgroup 6010B T22 7470/71 Hg

Reviewed By

Date

SunStar Laboratories, Inc.
PROVIDING QUALITY ANALYTICAL SERVICES NATIONWIDE

25712 Commercentre Drive
Lake Forest, California 92630
949.297.5020 Phone
949.297.5027 Fax

08 June 2020

Spencer Marcinek
Ninyo & Moore
475 Goddard, Ste. 200
Irvine, CA 92618

RE: LABOE Stormwater /David M. Gonzales

Enclosed are the results of analyses for samples received by the laboratory on 06/01/20 14:46. If you have any questions concerning this report, please feel free to contact me.

Sincerely,



Mike Jaroudi
Project Manager

SunStar Laboratories, Inc.
PROVIDING QUALITY ANALYTICAL SERVICES NATIONWIDE

25712 Commercentre Drive
Lake Forest, California 92630
949.297.5020 Phone
949.297.5027 Fax

Ninyo & Moore	Project: LABOE Stormwater /David M. Gonzales	
475 Goddard, Ste. 200	Project Number: 211294003	**Reported:**
Irvine CA, 92618	Project Manager: Spencer Marcinek	06/08/20 14:27

ANALYTICAL REPORT FOR SAMPLES

Sample ID	Laboratory ID	Matrix	Date Sampled	Date Received
COMPOSITE 1	T202431-01	Soil	05/29/20 00:00	06/01/20 14:46

SunStar Laboratories, Inc.



Mike Jaroudi, Project Manager

The results in this report apply to the samples analyzed in accordance with the chain of custody document. This analytical report must be reproduced in its entirety.

SunStar Laboratories, Inc.
Providing Quality Analytical Services Nationwide

25712 Commercentre Drive
Lake Forest, California 92630
949.297.5020 Phone
949.297.5027 Fax

Ninyo & Moore	Project: LABOE Stormwater /David M. Gonzales	
475 Goddard, Ste. 200	Project Number: 211294003	**Reported:**
Irvine CA, 92618	Project Manager: Spencer Marcinek	06/08/20 14:27

DETECTIONS SUMMARY

Sample ID: COMPOSITE 1 **Laboratory ID:** T202431-01

Analyte	Result	Reporting Limit	Units	Method	Notes
C29-C40 (MORO)	**20**	10	mg/kg	EPA 8015B	
Barium	**53**	1.0	mg/kg	EPA 6010b	
Chromium	**2.4**	2.0	mg/kg	EPA 6010b	
Cobalt	**4.4**	2.0	mg/kg	EPA 6010b	
Copper	**7.7**	1.0	mg/kg	EPA 6010b	
Lead	**6.5**	3.0	mg/kg	EPA 6010b	
Nickel	**2.5**	2.0	mg/kg	EPA 6010b	
Vanadium	**11**	5.0	mg/kg	EPA 6010b	
Zinc	**12**	1.0	mg/kg	EPA 6010b	

SunStar Laboratories, Inc.

The results in this report apply to the samples analyzed in accordance with the chain of custody document. This analytical report must be reproduced in its entirety.

Mike Jaroudi, Project Manager

SunStar Laboratories, Inc.
Providing Quality Analytical Services Nationwide

25712 Commercentre Drive
Lake Forest, California 92630
949.297.5020 Phone
949.297.5027 Fax

Ninyo & Moore	Project: LABOE Stormwater /David M. Gonzales	
475 Goddard, Ste. 200	Project Number: 211294003	**Reported:**
Irvine CA, 92618	Project Manager: Spencer Marcinek	06/08/20 14:27

COMPOSITE 1

T202431-01 (Soil)

SunStar Laboratories, Inc.

Analyte	Result	Reporting Limit	Units	Dilution	Batch	Prepared	Analyzed	Method	Notes
Extractable Petroleum Hydrocarbons by 8015B									
C6-C12 (GRO)	ND	10	mg/kg	1	0060218	06/02/20	06/02/20	EPA 8015B	
C13-C28 (DRO)	ND	10	"	"	"	"	"	"	
C29-C40 (MORO)	**20**	10	"	"	"	"	"	"	
Surrogate: p-Terphenyl		*72.6 %*	*65-135*		"	"	"	"	
Metals by EPA 6010B									
Antimony	ND	3.0	mg/kg	1	0060138	06/01/20	06/02/20	EPA 6010b	
Silver	ND	2.0	"	"	"	"	"	"	
Arsenic	ND	5.0	"	"	"	"	"	"	
Barium	**53**	1.0	"	"	"	"	"	"	
Beryllium	ND	1.0	"	"	"	"	"	"	
Cadmium	ND	2.0	"	"	"	"	"	"	
Chromium	**2.4**	2.0	"	"	"	"	"	"	
Cobalt	**4.4**	2.0	"	"	"	"	"	"	
Copper	**7.7**	1.0	"	"	"	"	"	"	
Lead	**6.5**	3.0	"	"	"	"	"	"	
Molybdenum	ND	5.0	"	"	"	"	"	"	
Nickel	**2.5**	2.0	"	"	"	"	"	"	
Selenium	ND	5.0	"	"	"	"	"	"	
Thallium	ND	5.0	"	"	"	"	"	"	
Vanadium	**11**	5.0	"	"	"	"	"	"	
Zinc	**12**	1.0	"	"	"	"	"	"	
Cold Vapor Extraction EPA 7470/7471									
Mercury	ND	0.10	mg/kg	1	0060139	06/01/20	06/02/20	EPA 7471A Soil	

SunStar Laboratories, Inc.

The results in this report apply to the samples analyzed in accordance with the chain of custody document. This analytical report must be reproduced in its entirety.

Mike Jaroudi, Project Manager

SunStar Laboratories, Inc.
PROVIDING QUALITY ANALYTICAL SERVICES NATIONWIDE

25712 Commercentre Drive
Lake Forest, California 92630
949.297.5020 Phone
949.297.5027 Fax

Ninyo & Moore	Project: LABOE Stormwater /David M. Gonzales	
475 Goddard, Ste. 200	Project Number: 211294003	**Reported:**
Irvine CA, 92618	Project Manager: Spencer Marcinek	06/08/20 14:27

Extractable Petroleum Hydrocarbons by 8015B - Quality Control

SunStar Laboratories, Inc.

Analyte	Result	Reporting Limit	Units	Spike Level	Source Result	%REC	%REC Limits	RPD	RPD Limit	Notes
Batch 0060218 - EPA 3550B GC										
Blank (0060218-BLK1)				Prepared & Analyzed: 06/02/20						
C6-C12 (GRO)	ND	10	mg/kg							
C13-C28 (DRO)	ND	10	"							
C29-C40 (MORO)	ND	10	"							
Surrogate: p-Terphenyl	*82.6*		*"*	*101*		*81.8*	*65-135*			
LCS (0060218-BS1)				Prepared & Analyzed: 06/02/20						
C13-C28 (DRO)	420	10	mg/kg	505		82.8	75-125			
Surrogate: p-Terphenyl	*80.3*		*"*	*101*		*79.5*	*65-135*			
LCS Dup (0060218-BSD1)				Prepared & Analyzed: 06/02/20						
C13-C28 (DRO)	430	10	mg/kg	505		84.5	75-125	2.13	20	
Surrogate: p-Terphenyl	*77.6*		*"*	*101*		*76.8*	*65-135*			

SunStar Laboratories, Inc.

The results in this report apply to the samples analyzed in accordance with the chain of custody document. This analytical report must be reproduced in its entirety.

Mike Jaroudi, Project Manager

SunStar Laboratories, Inc.
PROVIDING QUALITY ANALYTICAL SERVICES NATIONWIDE

25712 Commercentre Drive
Lake Forest, California 92630
949.297.5020 Phone
949.297.5027 Fax

Ninyo & Moore	Project: LABOE Stormwater /David M. Gonzales	
475 Goddard, Ste. 200	Project Number: 211294003	**Reported:**
Irvine CA, 92618	Project Manager: Spencer Marcinek	06/08/20 14:27

Metals by EPA 6010B - Quality Control

SunStar Laboratories, Inc.

Analyte	Result	Reporting Limit	Units	Spike Level	Source Result	%REC	%REC Limits	RPD	RPD Limit	Notes
Batch 0060138 - EPA 3050B										
Blank (0060138-BLK1)				Prepared: 06/01/20 Analyzed: 06/02/20						
Antimony	ND	3.0	mg/kg							
Silver	ND	2.0	"							
Arsenic	ND	5.0	"							
Barium	ND	1.0	"							
Beryllium	ND	1.0	"							
Cadmium	ND	2.0	"							
Chromium	ND	2.0	"							
Cobalt	ND	2.0	"							
Copper	ND	1.0	"							
Lead	ND	3.0	"							
Molybdenum	ND	5.0	"							
Nickel	ND	2.0	"							
Selenium	ND	5.0	"							
Thallium	ND	5.0	"							
Vanadium	ND	5.0	"							
Zinc	ND	1.0	"							
LCS (0060138-BS1)				Prepared: 06/01/20 Analyzed: 06/02/20						
Arsenic	85.4	5.0	mg/kg	100		85.4	75-125			
Barium	88.9	1.0	"	100		88.9	75-125			
Cadmium	89.1	2.0	"	100		89.1	75-125			
Chromium	89.2	2.0	"	100		89.2	75-125			
Lead	87.5	3.0	"	100		87.5	75-125			
Matrix Spike (0060138-MS1)	**Source: T202424-01**			Prepared: 06/01/20 Analyzed: 06/02/20						
Arsenic	63.2	5.0	mg/kg	100	ND	63.2	75-125			QM-05
Barium	162	1.0	"	100	137	24.3	75-125			QM-05
Cadmium	62.4	2.0	"	100	0.345	62.1	75-125			QM-05
Chromium	75.2	2.0	"	100	11.4	63.8	75-125			QM-05
Lead	84.1	3.0	"	100	134	NR	75-125			QM-05

SunStar Laboratories, Inc.

The results in this report apply to the samples analyzed in accordance with the chain of custody document. This analytical report must be reproduced in its entirety.

Mike Jaroudi, Project Manager

SunStar Laboratories, Inc.
PROVIDING QUALITY ANALYTICAL SERVICES NATIONWIDE

25712 Commercentre Drive
Lake Forest, California 92630
949.297.5020 Phone
949.297.5027 Fax

Ninyo & Moore	Project: LABOE Stormwater /David M. Gonzales	
475 Goddard, Ste. 200	Project Number: 211294003	**Reported:**
Irvine CA, 92618	Project Manager: Spencer Marcinek	06/08/20 14:27

Metals by EPA 6010B - Quality Control

SunStar Laboratories, Inc.

Analyte	Result	Reporting Limit	Units	Spike Level	Source Result	%REC	%REC Limits	RPD	RPD Limit	Notes
Batch 0060138 - EPA 3050B										
Matrix Spike Dup (0060138-MSD1)	**Source: T202424-01**			Prepared: 06/01/20 Analyzed: 06/02/20						
Arsenic	59.9	5.0	mg/kg	94.3	ND	63.5	75-125	5.30	20	QM-05
Barium	154	1.0	"	94.3	137	17.5	75-125	4.94	20	QM-05
Cadmium	59.6	2.0	"	94.3	0.345	62.8	75-125	4.60	20	QM-05
Chromium	70.1	2.0	"	94.3	11.4	62.3	75-125	7.01	20	QM-05
Lead	79.9	3.0	"	94.3	134	NR	75-125	5.08	20	QM-05

SunStar Laboratories, Inc.

The results in this report apply to the samples analyzed in accordance with the chain of custody document. This analytical report must be reproduced in its entirety.

Mike Jaroudi, Project Manager

SunStar Laboratories, Inc.
Providing Quality Analytical Services Nationwide

25712 Commercentre Drive
Lake Forest, California 92630
949.297.5020 Phone
949.297.5027 Fax

Ninyo & Moore	Project: LABOE Stormwater /David M. Gonzales	
475 Goddard, Ste. 200	Project Number: 211294003	**Reported:**
Irvine CA, 92618	Project Manager: Spencer Marcinek	06/08/20 14:27

Cold Vapor Extraction EPA 7470/7471 - Quality Control

SunStar Laboratories, Inc.

Analyte	Result	Reporting Limit	Units	Spike Level	Source Result	%REC	%REC Limits	RPD	RPD Limit	Notes
Batch 0060139 - EPA 7471A Soil										
Blank (0060139-BLK1)				Prepared: 06/01/20 Analyzed: 06/02/20						
Mercury	ND	0.10	mg/kg							
LCS (0060139-BS1)				Prepared: 06/01/20 Analyzed: 06/02/20						
Mercury	0.369	0.10	mg/kg	0.391		94.4	80-120			
Matrix Spike (0060139-MS1)	**Source: T202424-01**			Prepared: 06/01/20 Analyzed: 06/02/20						
Mercury	0.634	0.10	mg/kg	0.391	0.396	60.9	75-125			QM-05
Matrix Spike Dup (0060139-MSD1)	**Source: T202424-01**			Prepared: 06/01/20 Analyzed: 06/02/20						
Mercury	0.717	0.10	mg/kg	0.417	0.396	77.1	75-125	12.3	20	

SunStar Laboratories, Inc.

The results in this report apply to the samples analyzed in accordance with the chain of custody document. This analytical report must be reproduced in its entirety.

Mike Jaroudi, Project Manager

SunStar Laboratories, Inc.
PROVIDING QUALITY ANALYTICAL SERVICES NATIONWIDE

25712 Commercentre Drive
Lake Forest, California 92630
949.297.5020 Phone
949.297.5027 Fax

Ninyo & Moore	Project: LABOE Stormwater /David M. Gonzales	
475 Goddard, Ste. 200	Project Number: 211294003	**Reported:**
Irvine CA, 92618	Project Manager: Spencer Marcinek	06/08/20 14:27

Notes and Definitions

QM-05	The spike recovery was outside acceptance limits for the MS and/or MSD due to possible matrix interference. The LCS was within acceptance criteria. The data is acceptable as no negative impact on data is expected.
DET	Analyte DETECTED
ND	Analyte NOT DETECTED at or above the reporting limit
NR	Not Reported
dry	Sample results reported on a dry weight basis
RPD	Relative Percent Difference

SunStar Laboratories, Inc.

The results in this report apply to the samples analyzed in accordance with the chain of custody document. This analytical report must be reproduced in its entirety.

Mike Jaroudi, Project Manager

SunStar Laboratories, Inc.
25712 Commercentre Dr
Lake Forest, CA 92630
949-297-5020

Chain of Custody Record

Client: Ninyo & Moore
Address: 475 Goddard Suite 200, Irvine CA
Phone: 949.753.7070 Fax: 949.753.7071
Project Manager: Spencer Marcinek

Date: 6/1/2020 Page: 1 Of 1
Project Name: LABOE Stormwater Capture Program / David M. Gonzales
Collector:
Client Project #: 211294003
Batch #: T202431 EDF #:

Sample ID	Date Sampled	Time	Sample Type	Container Type	8260	8260 + OXY	8260 BTEX, OXY only	8270	8021 BTEX	8015M (gasoline)	8015M (diesel)	8015M Ext./Carbon Chain	6010/7000 Title 22 Metals	8015 TPHs				Laboratory ID #	Comments/Preservative	Total # of containers
Composite 1	5/28/2020	12:30	Soil	jar									X	X				01		

Relinquished by: (signature)	Date / Time	Received by: (signature)	Date / Time
	6/1/2020 2:17		6-1-20 14:17
	6-1-20 14:46		6/1/20 1496

Total # of containers: 1
Chain of Custody seals Y/N/NA: NA
Seals intact? Y/N/NA: NA
Received good condition/cold: 3.7°C

Turn around time: STD

Notes

Sample disposal Instructions: Disposal @ $2.00 each ____ Return to client ____ Pickup ____

SunStar Laboratories, Inc.
Providing Quality Analytical Services Nationwide

Rev. 02 Date 07/19
Receiving Form 001

SAMPLE RECEIVING REVIEW SHEET

Batch/Work Order #: T202431

Client Name: Ninyo & Moore Project: Laboe Stormwater Capture Program/ David M. Gonzales

Delivered by: ☐ Client ☒ SunStar Courier ☐ GSO ☐ FedEx ☐ Other

If Courier, Received by: Dave Date/Time Courier Received: 6.1.20 14:17

Lab Received by: Brian Date/Time Lab Received: 6.1.20 14:46

Total number of coolers received: 1 Thermometer ID: SC-1 Calibration due : 6/27/20

Temperature: Cooler #1	3.7 °C +/- the CF (+ 1.2°C) =	4.9	°C corrected temperature
Temperature: Cooler #2	°C +/- the CF (+ 1.2°C) =		°C corrected temperature
Temperature: Cooler #3	°C +/- the CF (+ 1.2°C) =		°C corrected temperature
Temperature criteria = ≤ 6°C (no frozen containers)	Within criteria?	☒ **Yes**	☐ **No**
If NO:			
Samples received on ice?	☐ Yes	☐ **No → Complete Non-Conformance Sheet**	
If on ice, samples received same day collected?	☐ Yes → Acceptable	☐ **No → Complete Non-Conformance Sheet**	

Custody seals intact on cooler/sample	☐ Yes	☐ No*	☒ N/A
Sample containers intact	☒ Yes	☐ No*	
Sample labels match Chain of Custody IDs	☒ Yes	☐ No*	
Total number of containers received match COC	☒ Yes	☐ No*	
Proper containers received for analyses requested on COC	☒ Yes	☐ No*	
Proper preservative indicated on COC/containers for analyses requested	☐ Yes	☐ No*	☒ N/A
Complete shipment received in good condition with correct temperatures, containers, labels, volumes preservatives and within method specified holding times	☒ **Yes**	☐ **No***	

* Complete Non-Conformance Receiving Sheet if checked

Cooler/Sample Review - Initials and date: RDS 6.2.20

Comments:

(949) 297-5020 ■ www.sunstarlabs.com ■ 25712 Commercentre Drive ■ Lake Forest, CA 92630

SunStar Laboratories, Inc.
PROVIDING QUALITY ANALYTICAL SERVICES NATIONWIDE

WORK ORDER

T202431

Client:	**Ninyo & Moore**	**Project Manager:**	**Mike Jaroudi**
Project:	**LABOE Stormwater /David M. Gonzales**	**Project Number:**	**211294003**

Report To:

Ninyo & Moore
Spencer Marcinek
475 Goddard, Ste. 200
Irvine, CA 92618

Date Due:	06/08/20 17:00 (5 day TAT)		
Received By:	Brian Charon	Date Received:	06/01/20 14:46
Logged In By:	Dan Marteski	Date Logged In:	06/01/20 16:58

Samples Received at:	**3.7°C**		
Custody Seals	No	Received On Ice	Yes
Containers Intact	Yes		
COC/Labels Agree	Yes		
Preservation Confirme	No		

Analysis	Due	TAT	Expires	Comments
T202431-01 COMPOSITE 1 [Soil] Sampled 05/29/20 00:00 (GMT-08:00) Pacific Time (US &				
6010 Title 22	06/08/20 15:00	5	11/25/20 00:00	
8015 Carbon Chain	06/08/20 15:00	5	06/12/20 00:00	

Analysis groups included in this work order

6010 Title 22

subgroup 6010B T22 7470/71 Hg

Reviewed By

Date

Manifest

SOIL SAFE OF CA – TPST
Non-Hazardous Soils

↓ Manifest # ↓

Date of Shipment:	Responsible for Payment:	Transport Truck #:	Facility #:	Approval Number:	Load #
5/1/20		929-8300	A07	AS-1728	0011

Generator and/or Consultant

Generator's Name and Billing Address:
CITY OF LOS ANGELES DEPARTMENT OF RECREATION AND PARKS
211 NORTH FIGUEROA STREET
3RD FLOOR, SUITE 350
LOS ANGELES, CA 90012

Generator's Phone #: 818-517-6081
Person to Contact:
FAX#:
Customer Account Number

Consultant's Name and Billing Address:

Consultant's Phone #:
Person to Contact:
FAX#:
Customer Account Number

Generation Site (Transport from): *(name & address)*
FERNANGELES RECREATION CENTER
8851 LAUREL CANYON BLVD.
SUN VALLEY, CA 91352

Site Phone #:
Person to Contact:
FAX#:

Designated Facility (Transport to): *(name & address)*
SOIL SAFE
12328 HIBISCUS AVENUE
ADELANTO, CA 92301

Facility Phone #: (800) 862-8001
Person to Contact: JOE PROVANSAL
FAX#: (760) 246-8004

Transporter Name and Mailing Address:
BELSHIRE
25971 TOWNE CENTRE DRIVE
FOOTHILL RANCH, CA 92610
BESI: 318193

Transporter's Phone #: 949-460-5200
CAR000183913
Person to Contact: LARRY MOOTHART
450647
FAX#: 949-460-5210
Customer Account Number

Description of Soil	Moisture Content	Contaminated by:	Approx. Qty:	Description of Delivery	Gross Weight	Tare Weight	Net Weight
Sand ☐ Organic ☐ Clay ☐ Other ☐	0 - 10% ☐ 10 - 20% ☐ 20% - over ☐	Gas ☐ Diesel ☐ Other ☐	3 DM	Soil	39820	38100	1780
Sand ☐ Organic ☐ Clay ☐ Other ☐	0 - 10% ☐ 10 - 20% ☐ 20% - over ☐	Gas ☐ Diesel ☐ Other ☐				.86	[illegible]

List any exception to items listed above:
Scale Ticket # 160161

Generator's and/or consultant's certification: I/We certify that the soil referenced herein is taken entirely from those soils descried in the Soil Data Sheet completed and certified by me/us for the Generation Site shown above and nothing has been added or done to such soil that would alter it in any way.

Print or Type Name: Generator ☑ Consultant ☐ JUAN MONZON
Signature and date:
Month 5 Day 06 Year 20

Transporter

Transporter's certification: I/We acknowledge receipt of the soil referenced above and certify that such soil is being delivered in exactly the same condition as when received. I/We further certify that the soil is being directly transported from the Generation Site to the Designated Facility without off-loading, adding to, subtracting from or in any way delaying delivery to such site.

Print or Type Name: Carlos Villa
Signature and date: Carlos Villa
Month 05 Day 06 Year 20

Recycling Facility

Discrepancies:
8851LAUR
2289264

Recycling Facility certifies the receipt of the soil covered by this manifest except as noted above:

Print or Type Name: J. PROVANSAL
Signature and date: 5-11-20

Please print or type.

TRANSPORTER COPY

APPENDIX E

Site-Specific Ground Motion Hazard Analysis

Site Class	Mapped Spectral Response Acceleration Parameters		Site Coefficients		Spectral Response Acceleration Parameters Adjusted for Site Effects		Design Spectral Response Acceleration Parameters		Period			Vs30 (m/sec)	Risk Coefficients			PGA		Site-Specific MCE_G PGA
	Ss (g)	S1 (g)	Fa	Fv	Sms (g)	Sm1 (g)	Sds (g)	Sd1 (g)	To (sec)	Ts (sec)	T_L (sec)		C_{RS}	C_{R1}	Ratio	F_{PGA}	PGA_M (g)	PGA_M (g)
D	2.042	0.699	1.000	1.700	2.042	1.188	1.361	0.792	0.116	0.582	8.0	280	0.91	0.897	-0.01625	1.1	0.921	0.881

Mapped Design MCE_R Response Spectrum (Fa and Fv per Section 11.4 of ASCE 7 -16)		Period (sec)	Probabilistic MCE_R Response Spectrum				Deterministic MCE_R Response Spectrum				Site-Specific MCE_R Response Spectrum	Site-Specific MCE_R Response Spectrum - 150% Limit of Design	Mapped Design MCE_R Response Spectrum (Fa and Fv per Section 21.3 of ASCE 7-16)	80% of Mapped Design MCE_R Response Spectrum (Fa and Fv per Section 21.3 of ASCE 7-16)	Site-Specific Design Response Spectrum	Site-Specific Design Response Spectrum with 80% Limit
			Geomean 2% in 50 Years	Max Horiz Direction Response to Geomean	Geomean 2% in 50 Years Rotated	1% Chance of Collapse in 50 Years (Method 1)	84th Percentile of Geomean	Max Horiz Direction Response to Geomean	84th Percentile of Geomean Rotated	Deterministic Limit on Response Spectrum						
Period (sec)	Sa (g)		Sa (g)	Max/Mean	Sa (g)	Sa (g)	Sa (g)	Max/Mean	Sa (g)	Sa (g)	Sa (g)	Sa (g)	Sa (g)	Sa (g)	Sa (g)	Sa (g)
0.01	0.615	0.01	0.936	1.100	1.029	0.936	0.881	1.100	0.969	0.969	0.936	0.936	0.592	0.474	0.624	**0.624**
0.02	0.685	0.02	0.941	1.100	1.035	0.942	0.885	1.100	0.974	0.974	0.942	0.942	0.640	0.512	0.628	**0.628**
0.03	0.755	0.03	0.965	1.100	1.062	0.966	0.890	1.100	0.979	0.979	0.966	0.966	0.688	0.550	0.644	**0.644**
0.05	0.895	0.05	1.096	1.100	1.205	1.097	0.966	1.100	1.062	1.062	1.062	1.062	0.783	0.627	0.708	**0.708**
0.075	1.071	0.075	1.357	1.100	1.493	1.359	1.127	1.100	1.240	1.240	1.240	1.240	0.902	0.722	0.827	**0.827**
0.1	1.246	0.1	1.602	1.100	1.762	1.603	1.294	1.100	1.424	1.424	1.424	1.424	1.022	0.817	0.949	**0.949**
0.116	1.361	0.15	1.918	1.100	2.110	1.920	1.550	1.100	1.705	1.705	1.705	1.705	1.100	0.880	1.136	**1.136**
0.2	1.361	0.2	2.103	1.100	2.314	2.105	1.749	1.100	1.924	1.924	1.924	1.924	1.361	1.089	1.283	**1.283**
0.25	1.361	0.25	2.240	1.113	2.492	2.265	1.955	1.113	2.174	2.174	2.174	2.174	1.361	1.089	1.450	**1.450**
0.3	1.361	0.3	2.352	1.125	2.646	2.404	2.131	1.125	2.398	2.398	2.398	2.398	1.361	1.089	1.598	**1.598**
0.4	1.361	0.4	2.349	1.150	2.701	2.449	2.283	1.150	2.625	2.625	2.449	2.449	1.361	1.089	1.633	**1.633**
0.5	1.361	0.5	2.253	1.175	2.647	2.396	2.264	1.175	2.661	2.661	2.396	2.396	1.361	1.089	1.597	**1.597**
0.582	1.361	0.75	1.823	1.238	2.256	2.033	1.964	1.238	2.431	2.431	2.033	2.033	1.361	1.089	1.355	**1.355**
1	0.792	1	1.486	1.300	1.932	1.733	1.684	1.300	2.189	2.189	1.733	1.733	1.165	0.932	1.155	**1.155**
1.5	0.528	1.5	1.011	1.325	1.339	1.201	1.217	1.325	1.613	1.613	1.201	1.201	0.777	0.621	0.801	**0.801**
2	0.396	2	0.736	1.350	0.994	0.892	0.909	1.350	1.227	1.227	0.892	0.892	0.583	0.466	0.595	**0.595**
3	0.264	3	0.453	1.400	0.634	0.569	0.588	1.400	0.823	0.823	0.569	0.569	0.388	0.311	0.379	**0.379**
4	0.198	4	0.304	1.450	0.441	0.396	0.397	1.450	0.576	0.576	0.396	0.396	0.291	0.233	0.264	**0.264**
5	0.158	5	0.226	1.500	0.339	0.304	0.285	1.500	0.427	0.427	0.304	0.304	0.233	0.186	0.203	**0.203**
7.5	0.106	7.5	0.122	1.500	0.184	0.165	0.136	1.500	0.204	0.204	0.165	0.186	0.155	0.124	0.110	**0.124**
10	0.063	10	0.072	1.500	0.107	0.096	0.078	1.500	0.117	0.117	0.096	0.112	0.093	0.075	0.064	**0.075**

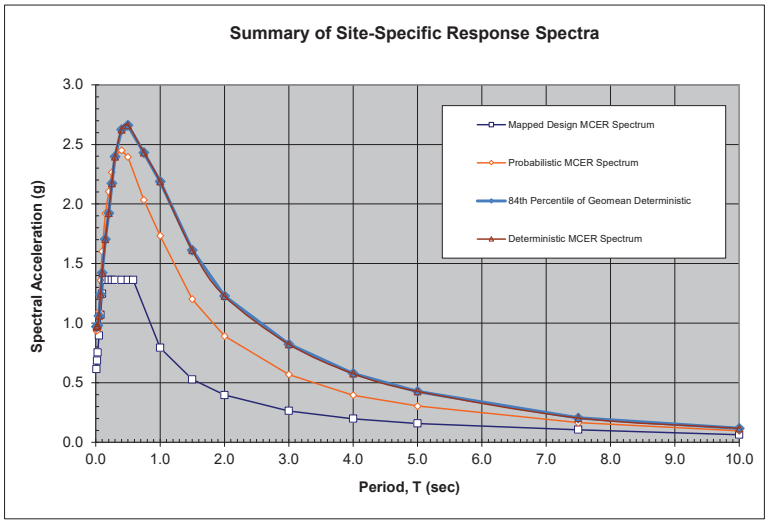

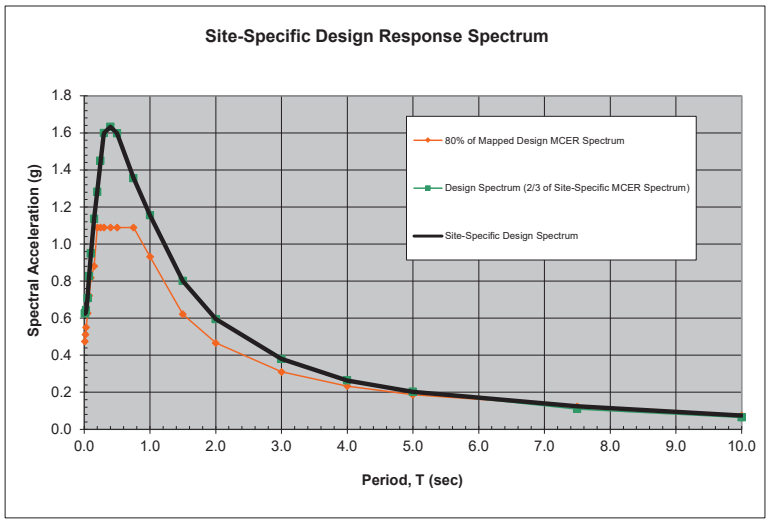

Deterministic Seismic Hazard Analysis Input Verdugo	
M_W:	7.5
R_{RUP} (km):	1.84
R_{JB} (km):	1.84
R_X (km):	1.84
Ry0 (km):	999
V_{S30} (m/sec):	280
U:	0
F_{RV}:	1
F_{NM}:	0
F_{HW}:	0
Dip (deg):	55
Z_{TOR} (km):	0
Z_{HYP} (km):	999
$Z_{1.0}$ (km):	0.35
$Z_{2.5}$ (km):	1.92
W (km):	999
Vs30Flag:	inferred
F_{AS}:	no
Region	California

Deterministic Seismic Hazard Analysis Output (50th Percentile)

Chiou & Youngs (2014)		Campbell & Bozorgnia (2014)		Boore et al. (2014)		Abrahamson et al. (2014)	
Period (sec)	S_a (g)	Period (sec)	S_a (g)	Period (sec)	S_a (g)	Period (sec)	S_a (g)
0.01	0.674	0.01	0.442	0.01	0.543	0.01	0.479
0.02	0.679	0.02	0.458	0.02	0.529	0.02	0.477
0.03	0.686	0.03	0.483	0.03	0.524	0.03	0.455
0.05	0.732	0.05	0.545	0.05	0.559	0.05	0.466
0.075	0.845	0.075	0.617	0.075	0.655	0.075	0.539
0.1	0.960	0.1	0.668	0.1	0.785	0.1	0.639
0.15	1.138	0.15	0.729	0.15	0.975	0.15	0.883
0.2	1.314	0.2	0.757	0.2	1.096	0.2	1.098
0.25	1.456	0.25	0.859	0.25	1.155	0.25	1.261
0.3	1.536	0.3	0.922	0.3	1.212	0.3	1.379
0.4	1.595	0.4	1.007	0.4	1.189	0.4	1.410
0.5	1.599	0.5	1.001	0.5	1.127	0.5	1.294
0.75	1.398	0.75	0.901	0.75	0.892	0.75	0.978
1	1.150	1	0.816	1	0.749	1	0.763
1.5	0.761	1.5	0.625	1.5	0.532	1.5	0.536
2	0.558	2	0.488	2	0.391	2	0.382
3	0.329	3	0.344	3	0.246	3	0.251
4	0.203	4	0.228	4	0.170	4	0.192
5	0.130	5	0.162	5	0.126	5	0.149
7.5	0.056	7.5	0.068	7.5	0.065	7.5	0.085
10	0.030	10	0.039	10	0.039	10	0.052

Deterministic Seismic Hazard Analysis Output (84th Percentile)

Chiou & Youngs (2014)		Campbell & Bozorgnia (2014)		Boore et al. (2014)		Abrahamson et al. (2014)	
Period	S_a	Period	S_a	Period	S_a	Period	S_a
0.01	1.106	0.01	0.692	0.01	0.982	0.01	0.801
0.02	1.117	0.02	0.717	0.02	0.967	0.02	0.793
0.03	1.138	0.03	0.759	0.03	0.978	0.03	0.745
0.05	1.209	0.05	0.868	0.05	1.099	0.05	0.754
0.075	1.377	0.075	1.012	0.075	1.333	0.075	0.869
0.1	1.553	0.1	1.103	0.1	1.591	0.1	1.029
0.15	1.846	0.15	1.174	0.15	1.886	0.15	1.411
0.2	2.159	0.2	1.211	0.2	2.022	0.2	1.770
0.25	2.427	0.25	1.378	0.25	2.096	0.25	2.082
0.3	2.598	0.3	1.527	0.3	2.198	0.3	2.366
0.4	2.768	0.4	1.744	0.4	2.179	0.4	2.582
0.5	2.834	0.5	1.803	0.5	2.108	0.5	2.440
0.75	2.582	0.75	1.755	0.75	1.728	0.75	1.901
1	2.177	1	1.630	1	1.491	1	1.519
1.5	1.481	1.5	1.273	1.5	1.064	1.5	1.095
2	1.100	2	0.991	2	0.786	2	0.796
3	0.654	3	0.702	3	0.499	3	0.523
4	0.404	4	0.452	4	0.345	4	0.396
5	0.258	5	0.323	5	0.256	5	0.309
7.5	0.110	7.5	0.137	7.5	0.130	7.5	0.175
10	0.059	10	0.079	10	0.075	10	0.107

Chiou & Youngs (2014)		Campbell & Bozorgnia (2014)		Boore et al. (2014)		Abrahamson et al. (2014)	
Site Param List:		**Site Param List:**		**Site Param List:**		**Site Param List:**	
Longitude	-118.4023	Longitude	-118.4023	Longitude	-118.4023	Longitude	-118.4023
Latitude	34.229107	Latitude	34.229107	Latitude	34.229107	Latitude	34.229107
Vs30	280	Vs30	280	Vs30	280	Vs30	280
Vs30 Type	Inferred	Vs30 Type	Inferred	Vs30 Type	Inferred	Vs30 Type	Inferred
Depth 1.0 km/sec (m)	350	Depth 1.0 km/sec (m)	350	Depth 1.0 km/sec (m)	350	Depth 1.0 km/sec (m)	350
Depth 2.5 km/sec (km)	1.92	Depth 2.5 km/sec (km)	1.92	Depth 2.5 km/sec (km)	1.92	Depth 2.5 km/sec (km)	1.92

IMR Param List:	
Gaussian Truncation	None
Tectonic Region	Active Shallow Crust
Component	RotD50
Std Dev Type	Total
Additional Epistemic Uncertainty	(Disabled)
IML/Prob Param List:	
Map Type	IML@Prob
Probability	0.02
Forecast Param List:	
Eqk Rup Forecast	Mean UCERF3
Mean UCERF3 Presets	(POISSON ONLY) Both FM Branch Averaged
Apply Aftershock Filter	False
Aleatory Mag-Area StdDev	0
Background Seismicity	Include
Treat Background Seismicity As	Point Sources
Use Quad Surfaces (otherwise gridded)	False
Fault Grid Spacing	1
Probability Model	Poisson
Sect Upper Depth Averaging Tolerance (km)	100
Use Mean Upper Depth	True
Rup Mag Averaging Tolerance	1
Rupture Rake To Use	Def. Model Mean
Fault Model(s)	Both
Ignore Cache	FALSE
TimeSpan Param List:	
Duration (Years)	50

Probabilistic Seismic Hazard Analysis (2% in 50 years)							
Chiou & Youngs (2014)		Campbell & Bozorgnia (2014)		Boore et al. (2014)		Abrahamson et al. (2014)	
Period (sec)	S_a (g)	Period (sec)	S_a (g)	Period (sec)	S_a (g)	Period (sec)	S_a (g)
0.01	1.006	0.01	0.708	0.01	1.128	0.01	0.953
0.02	1.019	0.02	0.721	0.02	1.124	0.02	0.950
0.03	1.064	0.03	0.760	0.03	1.175	0.03	0.913
0.05	1.185	0.05	0.888	0.05	1.436	0.05	0.953
0.075	1.408	0.075	1.141	0.075	1.916	0.075	1.103
0.1	1.636	0.1	1.349	0.1	2.258	0.1	1.321
0.15	1.975	0.15	1.514	0.15	2.481	0.15	1.826
0.2	2.263	0.2	1.593	0.2	2.427	0.2	2.236
0.25	2.479	0.25	1.693	0.25	2.376	0.25	2.523
0.3	2.566	0.3	1.847	0.3	2.389	0.3	2.703
0.4	2.560	0.4	1.923	0.4	2.256	0.4	2.738
0.5	2.476	0.5	1.908	0.5	2.167	0.5	2.516
0.75	2.041	0.75	1.714	0.75	1.712	0.75	1.845
1	1.632	1	1.454	1	1.434	1	1.432
1.5	1.058	1.5	1.044	1.5	0.950	1.5	0.995
2	0.760	2	0.789	2	0.699	2	0.703
3	0.420	3	0.522	3	0.448	3	0.429
4	0.251	4	0.343	4	0.326	4	0.306
5	0.158	5	0.274	5	0.255	5	0.236
7.5	0.067	7.5	0.149	7.5	0.151	7.5	0.150
10	0.036	10	0.077	10	0.092	10	0.103

Ninyo & Moore

Geotechnical & Environmental Sciences Consultants

475 Goddard, Suite 200 | Irvine, California 92618 | p. 949.753.7070

ARIZONA | CALIFORNIA | COLORADO | NEVADA | TEXAS | UTAH

www.ninyoandmoore.com

METHANE GAS SURVEY FOR FERNANGELES PARK

Ninyo & Moore
Geotechnical & Environmental Sciences Consultants

June 3, 2020
Project No. 211294005

Mr. Scott Dellinger
Vice President
CDM Smith
600 Wilshire Blvd., Suite 750
Los Angeles, California 90017

Subject: Methane Gas Survey for Fernangeles Park
City of Los Angeles, Bureau of Engineering
Stormwater Capture Parks Program Project (TOS 25)
Los Angeles, California

References: City of Los Angeles, Department of Building and Safety, 2014, Site Testing Standards for Methane, Bulletin P/BC 2014-101.

City of Los Angeles, Department of Public Works, 2004, Methane and Methane Buffer Zones, City of Los Angeles, dated March 31.

Ninyo & Moore, 2020, Proposal for Methane Surveys, Valley Plaza Park North and North Hollywood Park, Stormwater Capture Parks Program, Los Angeles Bureau of Engineering Task Order Solicitation (TOS No. 25, Los Angeles, California, dated February 5.

Dear Mr. Dellinger:

In accordance with your request, Ninyo & Moore performed a methane survey during the Pre-Design phase of the Stormwater Capture Parks Program project (TOS 25) at the City of Los Angeles Fernangeles Park (site) located at 8851 Laurel Canyon Blvd., Sun Valley, California (Figure 1). Our services were performed in general accordance with our referenced proposal dated February 5, 2020, and included methane site testing within the footprint of the proposed Fernangeles Park infiltration gallery. The methane survey was performed in order to evaluate for the presence of methane gas at the location of the proposed structure in general accordance with Bulletin P/BC 2014-101 (City of Los Angeles, Department of Building and Safety [LADBS], 2014), and to list mitigation requirements as indicated in the City of Los Angeles, Municipal Ordinance No. 175790. Our findings, conclusions, and recommendations regarding our methane survey of the proposed location of the Fernangeles Park infiltration gallery are provided herein.

Based on our review of the referenced map (City of Los Angeles, 2004), we understand that the proposed project is located in an area of Los Angeles that is mapped as being within a Methane Buffer Zone. According to Bulletin P/BC 2014-101 (LADBS, 2014), methane surveys are required in construction sites located within LADBS jurisdiction and within Methane and Methane Buffer Zones.

Due to the potential hazards associated with methane gases, we have been requested to perform the subject methane survey in general accordance with the LADBS requirements. Ninyo & Moore is certified by LADBS to perform methane field testing (License #10087).

METHANE GAS SURVEY

As part of the methane survey, Ninyo & Moore performed a shallow soil gas test and a gas probe test at the site in general accordance with Bulletin P/BC 2014-101 (LADBS, 2014). The methane survey was conducted between May 11 through May 14, 2020.

Shallow Soil Gas Test

The shallow soil gas test was conducted by installing 7 shallow soil gas probes (MS-1 through MS-7) within the proposed infiltration gallery. The number of shallow soil gas wells installed were based on anticipated infiltration gallery total footprint of approximately 70,000 square-feet (SF) and a rate of one shallow soil gas sample per 10,000 SF of site area, per LADBS P/BC 2014-101. The approximate location of the proposed infiltration gallery and shallow soil gas tests are shown on Figure 2. A gas probe was installed in each test location at a depth of approximately 5 feet below ground surface (bgs) by our drilling subcontractor, Strongarm Environmental Field Services, Inc. (Strongarm) of Fullerton, California. Soil borings were advanced to total depth using a stainless steel hand auger drill kit. Each probe was placed within an approximately 1-foot-thick zone of sand filter pack at the bottom of the well. The portion of the well above the sand was filled/sealed with hydrated granular bentonite. The probe was connected to the ground surface with a ¼-inch-diameter nylon tube that extended through the sandy soil with an open/close polycarbonate stopcock valve at the surface. After a minimum of two hours after the installation of the soil gas probes, methane concentrations were measured at each shallow soil gas test location using a calibrated RKI Eagle II combustible gas analyzer. The shallow methane concentrations were recorded on field logs and are provided in the LADBS P/BC 2014-101 Form 1, Certificate of Compliance for Methane Test Data, which is included in Attachment A.

Gas Probe Test

After the shallow soil gas test, triple-nested soil gas probe test wells were installed in select shallow test locations that exhibited the highest recorded methane concentrations. Since methane was not detected in the shallow soil gas probes, the gas probe test well locations were selected to be well-distributed across the site. The gas probe test wells were installed by Strongarm using a GeoProbe 6620 DT track-mounted direct-push drill rig. In general, each deep well included the placement of gas probes at depths of approximately 5, 10, and 20 feet below the anticipated bottom depths of the infiltration gallery. Based on our understanding of the project, the proposed infiltration gallery invert

elevation is 16 feet. Based on a rate of one gas probe test location per 20,000 SF of site area per LADBS P/BC 2014-101, four triple-nested soil gas probe test wells (MD-1 through MD-4) with gas probes placed at depths of approximately 21, 26, and 36 feet bgs were installed at the site.

Initial gas probe test methane concentrations and soil gas pressure readings were measured from each gas probe after allowing the probe to equilibrate for a minimum of two hours after installation. Methane concentrations were measured using a calibrated RKI Eagle II combustible gas analyzer. Soil gas pressures were measured using a magnehelic gauge with a range of 0.00 to 2.50 inches of water column. Readings were recorded on the field logs and are provided in the attached Certificate of Compliance for Methane Test Data, Form 1 (Attachment A). A second round of methane and soil gas pressure field readings was measured at least 24 hours or more after the first round of gas probe test readings. The gas probe test readings are provided on Form 1 in Attachment A.

RESULTS

As requested, Ninyo & Moore performed methane surveys of the proposed infiltration gallery location in general accordance with the requirements of LADBS (2014). The City of Los Angeles, Municipal Ordinance No. 175790, indicates various levels of methane mitigation design for structures based on methane concentrations and gas pressures observed during the methane survey.

Methane concentrations and soil gas pressures detected at the site correspond to Municipal Ordinance No. 175790 methane mitigation design levels for planned structures in City of Los Angeles Methane Zones and Methane Buffer Zones. The Design Methane Concentration, Design Soil Gas Pressure, and associated Methane Design Level are as follows:

Location	Design Maximum Methane Concentration (ppm)	Percent of Lower Explosive Limit (LEL)	Design Soil Gas Pressure (inches of water column)	Ord #175790 Site Methane Design Level
MD-1	105	0%	0.00	Level II

Notes:
ppm – parts per million
LEL – methane = 50,000 ppm
% – percent

Based on results of this methane gas survey, in accordance with the LADBS Municipal Ordinance No. 175790 requirements, the Site Design Level for the proposed construction at Fernangeles Park is a Site Design Level II with 0.0 inches of water column soil gas pressure. Per Section 91.7104.3.6 of the City of Los Angeles Municipal Code Ordnance No. 175790, buildings located in a Methane Buffer Zone, shall not be required to provide any methane mitigation system if the Design Pressure is less than or equal to two inches of water column and qualifies as a Site Design Level I or II. Since this site is in a Methane Buffer Zone and is Site Design Level II with soil gas pressure less than two

inches of water column, no methane mitigation system is required for the proposed infiltration gallery footprint at Fernangeles Park.

Ninyo & Moore appreciates the opportunity to provide services on this project.

Sincerely,
NINYO & MOORE

Jackson Flanagan, GIT
Staff Geologist

Travis Coburn, PE
Senior Project Engineer



Anthony Lizzi, PG, CHG
Principal Geologist

JF/TMC/AJL/sc

Attachments: Figure 1 – Site Location
Figure 2 – Methane Test Locations
Attachment A – Certificate of Compliance for Methane Test Data, Form 1

Distribution: (1) Addressee (via e-mail)

FIGURES

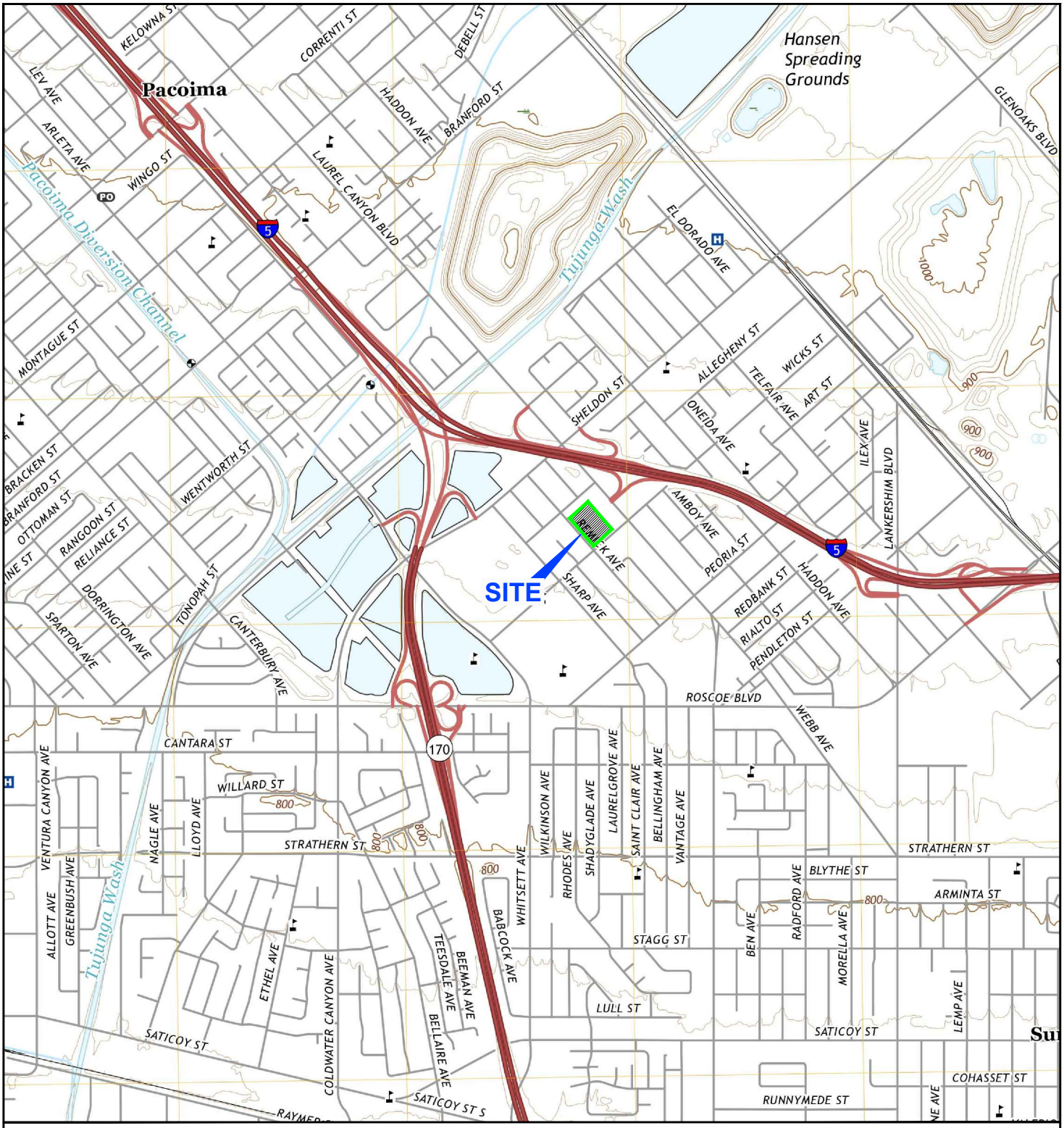

NOTE: DIMENSIONS, DIRECTIONS AND LOCATIONS ARE APPROXIMATE. I REFERENCE: USGS, 2018.

N

FEET
0 2,000 4,000

211294005_SL.dwg 06/01/2020 GK

FIGURE 1

SITE LOCATION

FERNANGELES PARK METHANE SURVEY
8851 LAUREL CANYON BOULEVARD
SUN VALLEY, CALIFORNIA
211294005 I 6/20

Ninyo & Moore
Geotechnical & Environmental Sciences Consultants

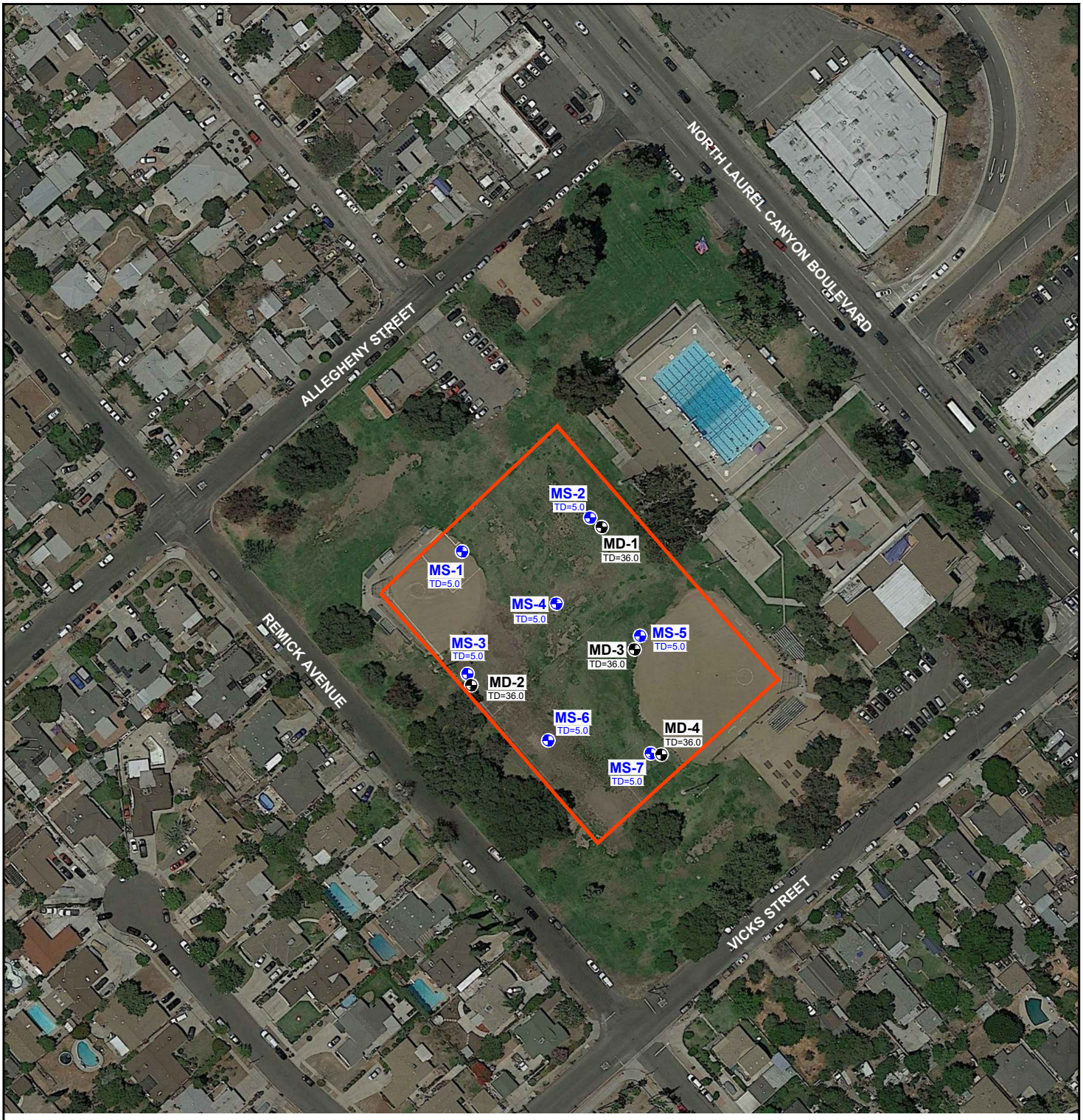

LEGEND

PROPOSED INFILTRATION GALLERY FOOTPRINT

MD-4 TD=5.0 — DEEP METHANE SURVEY LOCATION TD=TOTAL DEPTH IN FEET

MS-7 TD=36.0 — SHALLOW METHANE SURVEY LOCATION TD=TOTAL DEPTH IN FEET

NOTE: DIMENSIONS, DIRECTIONS AND LOCATIONS ARE APPROXIMATE. I REFERENCE: GOOGLE EARTH, 2020.

N

FEET

0 150 300

211294005_MTL.dwg 06/01/2020 GK

FIGURE 2

Ninyo & Moore
Geotechnical & Environmental Sciences Consultants

METHANE TEST LOCATIONS

FERNANGELES PARK METHANE SURVEY
8851 LAUREL CANYON BOULEVARD
SUN VALLEY, CALIFORNIA

211294005 I 6/20

ATTACHMENT A

Certificate of Compliance for Methane Test Data, Form 1

FORM 1 - CERTIFICATE OF COMPLIANCE FOR METHANE TEST DATA

Part 1: Certification Sheet

Site Address: 8851 Laurel Canyon Boulevard, Sun Valley, California 91352
Legal Description: Tract: TR 1582 Lot: FR 23 & FR 24 Block: None
Building Use: Subsurface Stormwater Infiltration

Architect's, Engineer's or Geologist's Stamp:



Name of Architect, Engineer, or Geologist:
Travis Coburn, PE
Mailing Address:
475 Goddard, Suite 200
Irvine, CA 92618
Telephone: 949-753-7070

Name of Testing Laboratory:
Ninyo & Moore
City Test Lab License #:10087
Telephone:949-753-7070

I hereby certify that I have tested the above site for the purpose of methane mitigation and that all procedures were conducted by a City of Los Angeles licensed testing agency in conformity with the requirements of the LADBS Information Bulletin P/BC 2014-101. Where the inspection and testing of all or part of the work above is delegated, full responsibility shall be assumed by the architect, engineer or geologist whose signature is affixed thereon.

Signed: _____ date _6/3/20_____

Required Data:

- Project is in the (Methane Zone) or (Methane Buffer Zone).
- Depth of ground water observed during testing: N/A feet below the Impervious Membrane.
- Depth of Historical High Ground Water Table Elevation*: 330 feet below the Impervious Membrane.
- Design Methane Concentration**: 105 parts per million in volume (ppmv).
- Design Methane Pressure***: 0.00 inches of water column.
- Site Design Level: (Level I, Level II, Level III, Level IV, Level V) with 0.00 inches of water column.

De-watering:

- De-watering (is) (is not) required per Section 7104.3.7.
- Pump discharge rate _____N/A___ cubic feet per minute per reference geology or soil report: _____ dated _____.

Additional Investigation:

- Additional investigation (was) (was not) conducted.

Latest Grading on Site:

- Date of last grading on site (was) (was not) more than 30 days before Site Testing.
- See Attached explanation of the effect on soil gas survey results by grading operations.

Notes:

* Historical High Ground Water Table Elevation shall mean the highest recorded elevation of ground water table based on historical records and field investigations as determined by the engineer for the methane mitigation system.

** Design Methane Concentration shall mean the highest recorded measured methane concentration from either Shallow Soil Gas Test or any Gas Probe Set on the site.

*** Design Methane Pressure shall mean the highest total pressure measured from any Gas Probe Set on the site.

As a covered entity under Title II of the Americans with Disabilities Act, the City of Los Angeles does not discriminate on the basis of disability and, upon request, will provide reasonable accommodation to ensure equal access to its programs, services and activities. For efficient handling of information internally and in the internet, conversion to this new format of code related and administrative information bulletins including MGD and RGA that were previously issued will allow flexibility and timely distribution of information to the public.

FORM 1 (CONTINUED) – CERTIFICATE OF COMPLIANCE FOR METHANE TEST DATA

Part 2: Test Data – Shallow Soil Gas Test and Gas Probe Test
Site Address: Fernangeles Park, 8851 Laurel Canyon Blvd., Sun Valley, California 91352
Description of Gas Analysis Instrument(s):
Instrument Name and Model: RKI Eagle 2 Instrument Accuracy: ± 50 ppmv or 5%.
City of Los Angeles Testing License # 10087

Date	Time	Probe Set #	Concentration (ppmv)	Pressure (inches water column)	Probe Depth (feet)	Description / Probe Location
05/11/2020	1142	MS-1	CH_4=0	0.00	5	CO = 0 ppmv, H_2S = 0.0 ppmv, O_2 = 19.5 vol%
05/11/2020	1148	MS-2	CH_4=0	0.00	5	CO = 20 ppmv, H_2S = 0.0 ppmv, O_2 = 18.9 vol%
05/11/2020	1153	MS-3	CH_4=0	0.00	5	CO = 0 ppmv, H_2S = 0.0 ppmv, O_2 = 19.0 vol%
05/11/2020	1202	MS-4	CH_4=0	-0.05	5	CO = 0 ppmv, H_2S = 0.0 ppmv, O_2 = 19.8 vol%
05/11/2020	1209	MS-5	CH_4=0	0.00	5	CO = 42 ppmv, H_2S = 0.0 ppmv, O_2 = 19.7 vol%
05/11/2020	1220	MS-6	CH_4=0	0.00	5	CO = 10 ppmv, H_2S = 0.0 ppmv, O_2 = 19.2 vol%
05/11/2020	1229	MS-7	CH_4=0	0.00	5	CO = 12 ppmv, H_2S = 0.0 ppmv, O_2 = 18.9 vol%
05/12/2020	1258	MD-1	CH_4=0	0.00	36	CO = 0 ppmv, H_2S = 0.0 ppmv, O_2 = 19.3 vol%
05/12/2020	1302	MD-1	CH_4=0	0.00	26	CO = 0 ppmv, H_2S = 0.0 ppmv, O_2 = 18.2 vol%
05/12/2020	1305	MD-1	CH_4=0	0.00	21	CO = 0 ppmv, H_2S = 0.0 ppmv, O_2 = 18.6 vol%
05/12/2020	1315	MD-2	CH_4=0	0.00	36	CO = 91 ppmv, H_2S = 0.0 ppmv, O_2 = 19.6 vol%
05/12/2020	1319	MD-2	CH_4=0	0.00	26	CO = 32 ppmv, H_2S = 0.0 ppmv, O_2 = 18.6 vol%
05/12/2020	1321	MD-2	CH_4=0	0.00	21	CO = 10 ppmv, H_2S = 0.0 ppmv, O_2 = 19.9 vol%
05/12/2020	1332	MD-3	CH_4=0	0.00	36	CO = 0 ppmv, H_2S = 0.0 ppmv, O_2 = 19.5 vol%
05/12/2020	1336	MD-3	CH_4=15	0.00	26	CO = 0 ppmv, H_2S = 0.0 ppmv, O_2 = 18.7 vol%
05/12/2020	1339	MD-3	CH_4=0	0.00	21	CO = 0 ppmv, H_2S = 0.0 ppmv, O_2 = 18.6 vol%
05/12/2020	1345	MD-4	CH_4=0	0.00	36	CO = 0 ppmv, H_2S = 0.0 ppmv, O_2 = 19.2 vol%

TABLE 1 – DATA COLLECTION EQUIPMENT

As a covered entity under Title II of the Americans with Disabilities Act, the City of Los Angeles does not discriminate on the basis of disability and, upon request, will provide reasonable accommodation to ensure equal access to its programs, services and activities. For efficient handling of information internally and in the internet, conversion to this new format of code related and administrative information bulletins including MGD and RGA that were previously issued will allow flexibility and timely distribution of information to the public.

FORM 1 (CONTINUED) – CERTIFICATE OF COMPLIANCE FOR METHANE TEST DATA

Part 2: Test Data – Shallow Soil Gas Test and Gas Probe Test
Site Address: Fernangeles Park, 8851 Laurel Canyon Blvd., Sun Valley, California 91352
Description of Gas Analysis Instrument(s):
Instrument Name and Model: RKI Eagle 2 Instrument Accuracy: ± 50 ppmv or 5%.
City of Los Angeles Testing License # 10087

Date	Time	Probe Set #	Concentration (ppmv)	Pressure (inches water column)	Probe Depth (feet)	Description / Probe Location
05/12/2020	1348	MD-4	CH_4=0	0.00	26	CO = 0 ppmv, H_2S = 0.0 ppmv, O_2 = 18.9 vol%
05/12/2020	1351	MD-4	CH_4=0	0.00	21	CO = 0 ppmv, H_2S = 0.0 ppmv, O_2 = 19.0 vol%
05/14/2020	0751	MD-1	CH_4=0	-0.05	36	CO = 0 ppmv, H_2S = 0.0 ppmv, O_2 = 18.1 vol%
05/14/2020	0754	MD-1	CH_4=0	0.00	26	CO = 0 ppmv, H_2S = 0.0 ppmv, O_2 = 19.2 vol%
05/14/2020	0758	MD-1	CH_4=105	0.00	21	CO = 0 ppmv, H_2S = 0.0 ppmv, O_2 = 22.5 vol%
05/14/2020	0802	MD-2	CH_4=0	0.00	36	CO = 32 ppmv, H_2S = 0.0 ppmv, O_2 = 18.2 vol%
05/14/2020	0805	MD-2	CH_4=0	0.00	26	CO = 0 ppmv, H_2S = 0.0 ppmv, O_2 = 19.0 vol%
05/14/2020	0809	MD-2	CH_4=0	0.00	21	CO = 0 ppmv, H_2S = 0.0 ppmv, O_2 = 19.2 vol%
05/14/2020	0814	MD-3	CH_4=0	0.00	36	CO = 0 ppmv, H_2S = 0.0 ppmv, O_2 = 18.6 vol%
05/14/2020	0818	MD-3	CH_4=35	0.00	26	CO = 31 ppmv, H_2S = 0.0 ppmv, O_2 = 19.2 vol%
05/14/2020	0821	MD-3	CH_4=0	0.00	21	CO = 50 ppmv, H_2S = 0.0 ppmv, O_2 = 19.0 vol%
05/14/2020	0827	MD-4	CH_4=0	0.00	36	CO = 46 ppmv, H_2S = 0.0 ppmv, O_2 = 19.1 vol%
05/14/2020	0831	MD-4	CH_4=0	0.00	26	CO = 15 ppmv, H_2S = 0.0 ppmv, O_2 = 19.0 vol%
05/14/2020	0835	MD-4	CH_4=10	0.00	21	CO = 81 ppmv, H_2S = 0.0 ppmv, O_2 = 19.6 vol%

TABLE 1 – DATA COLLECTION EQUIPMENT

As a covered entity under Title II of the Americans with Disabilities Act, the City of Los Angeles does not discriminate on the basis of disability and, upon request, will provide reasonable accommodation to ensure equal access to its programs, services and activities. For efficient handling of information internally and in the internet, conversion to this new format of code related and administrative information bulletins including MGD and RGA that were previously issued will allow flexibility and timely distribution of information to the public.

DRAFT STORMWATER POLLUTION PREVENTION PLAN FOR CONSTRUCTION ACTIVITIES

STORM WATER POLLUTION PREVENTION PLAN

FOR

CONSTRUCTION ACTIVITIES

Risk Level 1
Order No. 2009-009-DWQ
NPDES NO. CAS000002

Fernangeles Park
Stormwater Capture Project

WDID No.

DRAFT

Date Updated:
1/24/2023

PROJECT INFORMATION SUMMARY

Project Location and Address:
Fernangeles Park
8851 Laurel Canyon Blvd,
Sun Valley, CA 91352

Land Owner Name, Address, and Phone Number:
City of Los Angeles
Department of Water and Power
111 N. Hope Street, Room 1218
Los Angeles, CA 90012
(213) 367-0436

Qualified SWPPP Developer Name, Address, Phone No and Email:
Christine Rice, PE, QSD
CDM Smith
600 Wilshire Blvd, Suite 750
Los Angeles, CA 90017
(213) 457-2151
ricetc@cdmsmith.com

SWPPP Compliance Contact:
Mike Hanson, Certified QSD #20531
(213) 367-0634

Robin Yamada
(213) 367-4230

On-site Contact Person:
QSP or designated responsible person
TBD

Contractor:
TBD

Date Notice of Intent Filed:
TBD

State Water Resources Control Board
Waste Discharge Identification (WDID) Number*:*

WDID:

PROJECT INFORMATION SUMMARY

Project Location and Address:
Fernangeles Park
8851 Laurel Canyon Blvd,
Sun Valley, CA 91352

Land Owner Name, Address, and Phone Number:
City of Los Angeles
Department of Water and Power
111 N. Hope Street, Room 1218
Los Angeles, CA 90012
(213) 367-0436

Qualified SWPPP Developer Name, Address, Phone No and Email:
Christine Rice, PE, QSD
CDM Smith
600 Wilshire Blvd, Suite 750
Los Angeles, CA 90017
(213) 457-2151
ricetc@cdmsmith.com

SWPPP Compliance Contact:
Mike Hanson, Certified QSD #20531
(213) 367-0634

Robin Yamada
(213) 367-4230

On-site Contact Person:
QSP or designated responsible person
TBD

Contractor:
TBD

Date Notice of Intent Filed:
TBD

State Water Resources Control Board
Waste Discharge Identification (WDID) Number*:*

WDID:

TABLE OF CONTENTS

PROJECT INFORMATION SUMMARY ..... **I**
TABLE OF CONTENTS ..... **II**
1.0 PURPOSE **1**
2.0 OBJECTIVES **2**
2.1 TRAINING QUALIFICATIONS AND CERTIFICATION REQUIREMENTS **2**
3.0 LIST OF CONTRACTORS AND SUBCONTRACTORS **5**
4.0 PROJECT INFORMATION **6**
4.1 PROJECT DESCRIPTION 6
4.2 PROJECT LOCATION 6
4.3 PROJECT SCHEDULE 6
4.4 EXISTING SITE CONDITIONS 7
5.0 EFFLUENT LIMITS, POLLUTANT SOURCES,AND BMP IDENTIFICATION **9**
5.1 INTRODUCTION 9
5.2 EFFLUENT STANDARDS: NUMERIC AND NARRATIVE LIMITATIONS 9
5.3 UNAUTHORIZED NON-STORM WATER DISCHARGES 9
5.3 (a) Non-Storm Water Management *10*
5.4 AUTHORIZED NON-STORM WATER DISCHARGES 10
5.5 BEST MANAGEMENT PRACTICES 10
5.5 (a) Employee Training Program *11*
5.5(b) Good Site Management "Housekeeping" *11*
5.5 (c) Non-Storm Water Management *14*
5.5 (d) Erosion Control *14*
5.5 (e) Sediment Control *15*
5.5 (f) Run-on and Run-off Controls *16*
5.5 (g) Inspection, Maintenance and Repair *16*
5.5(h) Hazardous Waste Management and Disposal *17*
5.5(i) Spill Prevention and Control *18*
5.5(j) Materials Handling and Storage *18*
5.5 (k) Stockpile Management *18*
5.5 (l) Scheduling *19*
5.5 (m) Vehicle ingress and egress *19*
5.5(n) Concrete Truck Washing Waste *19*
6.0 RAIN EVENT ACTION PLAN (REAP) **19**
7.0 MONITORING AND REPORTING REQUIREMENTS **22**
7.1 INTRODUCTION 22
7.2 MONITORING AND REPORTING REQUIREMENTS 23
7.2 (a) Construction Site Monitoring Program (CSMP) Requirements *23*
7.2 (b) CSMP Monitoring Description *23*
7.2 (c) Objectives *24*
7.2 (d) Visual Observation and Sample Collection Exemptions *25*
7.3 VISUAL MONITORING (INSPECTION) REQUIREMENTS FOR QUALIFYING RAIN EVENTS 25

7.4 WATER QUALITY SAMPLING AND ANALYSIS 26
7.4 (a) Effluent Analysis Requirements *26*
7.4 (b)Effluent Sampling Schedule *26*
7.4 (c) Number of Effluent Samples *26*
7.4 (d) Effluent Sampling Locations *26*
7.4 (e) Storm Water Sample Collection and Handling Instructions *27*
7.4 (f)– Monitoring Methods *28*
7.4 (g) Analytical Methods *28*
7.4 (h) Non-Storm Water Discharge Monitoring Requirements *29*
7.4 (i) Non-Visible Pollutant Monitoring Requirements *30*
7.4 (j)– Watershed Monitoring Option *31*
7.5 PARTICLE SIZE ANALYSIS FOR PROJECT RISK JUSTIFICATION 31
7.6 – RECORDS 31
7.7 NAL EXCEEDANCE REPORT 32

8.0 GENERAL REQUIREMENTS 33

8.1 SWPPP CERTIFICATION 33
8.2 ANNUAL SITE COMPLIANCE EVALUATION AND CERTIFICATION 33
8.3 SWPPP AMENDMENTS 33
8.4 SWPPP AVAILABILITY 33

9.0 POST-CONSTRUCTION STANDARDS 34

10.0 CERTIFICATION STATEMENT 35

Appendices

Appendix A	**Notice of Intent**
Appendix B	**Site Maps**
Appendix C	**Combined Visual Inspection Form**
Appendix D	**Construction Site Monitoring Plan (CSMP)**
Appendix E	**Rain Event Action Plan (REAP)**
Appendix F	**Training Documentation Forms and Records**
Appendix G	**Change of Information Form and Amendments Certification**
Appendix H	**Weather Information Guide**
Appendix I	**LRP Authorization & Certification**
Appendix J	**Annual Certification**
Appendix K	**Risk Determination**
Appendix L	**Glossary and Acronyms**
Appendix M	**BMP Fact Sheets**
Appendix N	**Monitoring Records**
Appendix O	**Example Forms**
Appendix P	**Field Meter Instructions**
Appendix Q	**Construction General Permit**

1.0 PURPOSE

This Storm Water Pollution Prevention Plan (SWPPP) lists and describes Best Management Practices (BMPs) that will be used during this construction project to minimize the potential for pollutants to leave the site during construction activities. Construction BMPs can include structural devices, material storage methods, and operational procedures used to prevent, control, and treat storm water pollution emanating from the site. Construction activities can disturb large areas that result in erosion and transportation of related particulates such as sediments and dust to nearby waterways. In excess amounts, these particulates can increase water turbidity and consequently impair aquatic life and beneficial uses of the water.

Pollutants such as hydrocarbons, metals, nutrients, toxic substances, trash, and other debris can be generated from a variety of construction activities and can travel with eroded sediments. Potential pollutants traveling with the sediments may include the organic components in the top soil, plant residues, nutrient elements, organic material, deposited atmospheric pollutants, and other liquid and solid wastes.

The amended federal Clean Water Act of 1987 (CWA) added a requirement to address construction site storm water pollution. In California, construction activities consisting of one acre or more of soil are subject to the National Pollutant Discharge Elimination System (NPDES) General Permit for Discharges of Storm Water Runoff Associated with Construction Activity (General Permit). This permit requires all dischargers (i.e. landowners or developers) to prepare and implement a Storm Water Pollution Prevention Plan (SWPPP) prior to disturbing a site. This (SWPPP) is designed to meet the requirements of the General Permit. This SWPPP must also be implemented at the appropriate level to protect water quality at all times throughout the entire construction project, including both dry and wet weather. BMPs must be implemented and maintained to control erosion, sediment, other construction pollutants, and non-storm water discharges year-round. Other requirements of this SWPPP include employee training, site inspections, and proper maintenance of BMPs as necessary. Los Angeles Department of Water and Power (LADWP) construction crews and personnel, as well as its contractors and subcontractors, are required to follow the guidelines and BMPs outlined in this SWPPP. They are also required to ensure proper implementation and maintenance of such BMPs for the entire duration of this project.

A copy of this SWPPP must be maintained at the construction site. This SWPPP must be modified as necessary to reflect any changes in personnel or construction site conditions.

Amendments to this SWPPP must be documented using the forms provided in Appendix G**.**



2.0 OBJECTIVES

A. The SWPPP shall be designed to address the following objectives:

1. All pollutants and their sources, including sources of sediment associated with construction, construction site erosion and all other activities associated with construction activity are controlled;

2. Where not otherwise required to be under a Regional Water Board permit, all non-storm water discharges are identified and either eliminated, controlled, or treated;

3. Site BMPs are effective and result in the reduction or elimination of pollutants in storm water discharges and authorized non-storm water discharges from construction activity to the BAT/BCT standard;

4. Calculations and design details as well as BMP controls for site run-on are complete and correct, and

5. Stabilization BMPs installed to reduce or eliminate pollutants after construction are completed.

B. To demonstrate compliance with requirements of this General Permit, the QSD shall include information in the SWPPP that supports the conclusions, selections, use, and maintenance of BMPs.

C. The discharger shall make the SWPPP available at the construction site during working hours while construction is occurring and shall be made available upon request by a State or Municipal inspector. When the original SWPPP is retained by a crewmember in a construction vehicle and is not currently at the construction site, current copies of the BMPs and map/drawing will be left with the field crew and the original SWPPP shall be made available via a request by radio/telephone. -

2.1 TRAINING QUALIFICATIONS AND CERTIFICATION REQUIREMENTS

A. General

The discharger shall ensure that all persons responsible for implementing requirements of this General Permit shall be appropriately trained in accordance with this section 2.1.(See Section *5.5 (a) Employee Training Program* for more details). Training should be both formal and informal, occur on an ongoing basis, and should include training offered by recognized governmental agencies or professional organizations. Those responsible for preparing and amending SWPPPs shall comply with the requirements in this section.



The discharger shall provide documentation of all training for persons responsible for implementing the requirements of this General Permit in the Annual Reports.

B. SWPPP Certification Requirements

1. Qualified SWPPP Developer: The discharger shall ensure that SWPPPs are written, amended and certified by a Qualified SWPPP Developer (QSD). A QSD shall have one of the following registrations or certifications, and appropriate experience, as required for:

   a. A California registered professional civil engineer;

   b. A California registered professional geologist or engineering geologist;

   c. A California registered landscape architect;

   d. A professional hydrologist registered through the American Institute of Hydrology;

   e. A Certified Professional in Erosion and Sediment Control (CPESC) ™ registered through Enviro Cert International, Inc.;

   f. A Certified Professional in Storm Water Quality (CPSWQ) ™ registered through Enviro Cert International, Inc.; or

   g. A professional in erosion and sediment control registered through the National Institute for Certification in Engineering Technologies (NICET);

   Effective two years after the adoption date of this General Permit, a QSD shall have attended a State Water Board-sponsored or approved QSD training course.

2. The discharger shall list the name and telephone number of the currently designated Qualified SWPPP Developer(s) in the SWPPP.

3. Qualified SWPPP Practitioner: The discharger shall ensure that all BMPs required by this General Permit are implemented by a Qualified SWPPP Practitioner (QSP). A QSP is a person responsible for non-storm water and storm water visual observations, sampling and analysis. Effective two years from the date of adoption of this General Permit, a QSP shall be either a QSD or have one of the following certifications:

   a. A certified erosion, sediment and storm water inspector registered through Enviro Cert International, Inc.; or

   b. A certified inspector of sediment and erosion control registered through Certified Inspector of Sediment and Erosion Control, Inc. Effective two years

after the adoption date of this General Permit, a QSP shall have attended a State Water Board-sponsored or approved QSP training course.

4. The LRP shall list in the SWPPP, the name of any Approved Signatory, and provide a copy of the written agreement or other mechanism that provides this authority from the LRP in the SWPPP.

5. The discharger shall include, in the SWPPP, a list of names of all contractors, subcontractors, and individuals who will be directed by the Qualified SWPPP Practitioner. This list shall include telephone numbers and work addresses. Specific areas of responsibility of each subcontractor and emergency contact numbers shall also be included.

6. The discharger shall ensure that the SWPPP and each amendment will be signed by the Qualified SWPPP Developer. The discharger shall include a listing of the date of initial preparation and the date of each amendment in the SWPPP.



3.0 List of Contractors and Subcontractors

The tables below list the contractors and subcontractors conducting work at the site.
Table 1 Contractors and Subcontractors.

General Contractor: TBD			
On-site Supervisor: TBD			
Persons Responsible for BMP Implementation: TBD			
Name	**Title**	**SWPPP Responsibility (ex. BMP inspection. Training)**	**Phone, Mobile or Pager Number**

Sub-Contractor: TBD			
On-site Supervisor: TBD			
Persons Responsible for BMP Implementation: TBD			
Name	**Title**	**SWPPP Responsibility (ex. BMP inspection. Training)**	**Phone, Mobile or Pager Number**

4.0 PROJECT INFORMATION

4.1 Project Description

As part of the Stormwater Capture Parks Program with Los Angeles Department of Public Works Bureau of Engineering (LABOE) and the Los Angeles Department of Water and Power (LADWP), the Fernangeles Park Stormwater Capture Project includes the construction of a subsurface infiltration gallery, storm drain diversion structure and piping, and improved park facilities. The project will divert and infiltrate stormwater to replenish the San Fernando Groundwater Basin in order to increase local water supply; alleviate localized flooding; improve water quality; and improve park amenities, and recreational and environmental education opportunities for the local community. The stormwater capture facilities are sized to ensure full capture of the entire 85th percentile, 24-hour storm event for the tributary areas upstream of the site. The total project site area is approximately 475,000 SF, with 175,000 SF having land disturbing activities. Approximately 145,000 sf of the site is impervious surface. The proposed ground cover post construction will be the same as the existing condition, except for the 12 ft wide access road and walkways around the baseball field (<2% of total ground coverage).

Site grading would be limited to the existing baseball field area where the desilting basin and infiltration gallery would be installed. The finished grade would be raised by approximately 2 feet over the existing grade with smooth transition to adjacent existing grade to ensure stormwater would drain away from the base of the infiltration gallery. Stormwater runoff from the elevated baseball field will be captured by the surface flow path and local depressed areas locate along the west perimeter of the baseball field. Existing site drainage pattern which mainly slopes southeasterly toward the intersection of Remick Avenue and Wicks Street will remain undisturbed. Surface flow collected by existing drainage swale will be diverted to the infiltration gallery with a proposed 24-inch by 24-inch drop inlet and a 12-inch RCP pipe.

4.2 Project Location

Fernangeles Park is a park owned by the City of Los Angeles Department of Recreation and Parks (RAP) in the Sun Valley neighborhood of the City of Los Angeles. The site is located south of the Interstate-5 (I-5) freeway and State Route-170 (SR-170) freeway interchange. The park is bordered by Allegheny Street to the west, Laurel Canyon Boulevard to the north, Wicks Street to the east, and Remick Avenue to the south. The park is predominantly surrounded by single and multi-family residential homes. Remick Avenue and Wicks Street are entirely residential streets while Allegheny Street is a residential street which also has commercial buildings with shops and food establishments near the intersection with Laurel Canyon Boulevard. Single family homes, a multi-family residential home, Tempco Engineering Building, and the on-ramp and off-ramp for southbound I-5 are across from the park on Laurel Canyon Boulevard.

4.3 Project Schedule

A condensed list of significant construction milestones can be found in the table below.

CONSTRUCTION PHASE	ESTIMATED COMPLETION DATE
Initial Construction Support Activities	06/17/2022
Infiltration Gallery	03/31/2023
Influent Facilities	02/03/2023
Site Work and Amenities	09/08/2023
Startup and Testing	11/03/2023

4.4 Existing Site Conditions

Fernangeles Park is approximately 380,000 square feet (sf), or 8.72 acres. Approximately 85,000 sf of the park is impervious surface. The site features amenities such as baseball fields, soccer field, football field, basketball courts, outdoor gym, picnic tables, horseshoe pits, playground, and a community center building that houses an indoor basketball court, indoor volleyball court, kitchen, stage, and classrooms. Most of these facilities are located in the northern half of the park along Laurel Canyon Boulevard. Two baseball diamonds and a football/soccer field make up the southwestern half of the park and are surrounded by open field and trees. The recreation center slopes generally from north to south, the ball field area slopes from an approximate elevation of 855 feet to 847 feet towards Wicks Street.

The upstream tributary areas and streets surrounding and downstream of the Fernangeles Park lack catch basins and storm drainage conveyance system. In addition, Morehart Avenue, Allegheny Street and Remick Avenue lack curb and gutter to protect the private properties from surface flow. Freeway runoff collected by the drainage system in the sump at Caltrans' Sheldon Street Pump Station is diverted by two pumps with two 14-inch pump discharge pipes to a surge chamber that drains by a combination of gravity and pressure flow to the intersection of Sheldon Street and Morehart Avenue. The majority of the diverted Caltrans pump station flow runs across Morehart Avenue, along the east side of Sheldon Street to Remick Avenue, and then south along Allegheny Street to a series of catch basins and a 39-inch storm drain at the intersection of Wicks Street and Sharp Avenue. Surface runoff from the upper tributary Area 2 runs along a 9-inch high curb on both sides of Laurel Canyon Boulevard across an I-5 freeway overpass. Flow on the south side of the street turns southerly to the west side of Allegheny Street, then follows the natural street slope approximately 2000 feet downstream to the catch basins at Sharp Avenue. Flows on the north side of Laurel Canyon Boulevard turn into Wicks Street, then makes its way south into the catch basins on Wicks Street/Sharp Avenue. Flat topography and lack of catch basins cause runoff to accumulate and spread into travel lanes throughout the area. The existing site is approximately 1-2 ft above the adjacent streets. The potential for stormwater to run on to the construction site from surrounding areas is unlikely.

The subject site is underlain by up to approximately 2 feet of undocumented fill underlain by granular alluvial materials. The fill and alluvium generally consisted of moist, loose to very dense, poorly graded sand, poorly graded sand with silt, well-graded sand, silty sand, poorly graded gravel, and sandy silt. Variable amounts of

gravel and cobbles (and possible boulders) were encountered in the fill and alluvium. Groundwater was not encountered in the exploratory borings to the total depth explored of approximately 58 feet. Historical high groundwater levels are approximately 150 to 160 feet below the ground surface.



5.0 EFFLUENT LIMITS, POLLUTANT SOURCES, AND BMP IDENTIFICATION

5.1 Introduction

The General Permit requirements must be met on a year-round basis, not just during the wet season. Therefore, this SWPPP, and prescribed Best Management Practices must be implemented at the appropriate level and in a proactive manner during all seasons until the construction project is complete. Post-construction BMPs will be implemented after the project is complete as required by the General Permit (refer to Section 9.0 POST-CONSTRUCTION STANDARDS of this Plan).

BMPs are defined as "any program, technology, process, siting criteria, operational methods or measures, or engineered systems, that when implemented, prevent, control, remove or reduce pollution."

5.2 *Effluent Standards: Numeric and Narrative Limitations*

A. Numeric – There is no Numeric Effluent Limitation (NEL) for pH or Turbidity.

B. Narrative – Risk Level 2 dischargers shall comply with the Narrative Action Levels as follows:

1. Storm water discharges and authorized non-storm water discharges regulated by this General Permit shall not contain a hazardous substance equal to or in excess of reportable quantities established in 40 C.F.R. §§ 117.3 and 302.4, unless a separate NPDES Permit has been issued to regulate those discharges.

2. Dischargers shall minimize or prevent pollutants in storm water discharges and authorized non-storm water discharges through the use of controls, structures, and management practices that achieve BAT for toxic and non-conventional pollutants and BCT for conventional pollutants.

3. The Numeric Action Level (NAL) for pH is 6.5 – 8.5. The test method is a field test with a calibrated portable instrument.

4. The NAL for turbidity is 250 NTU. The test method is EPA 180.1 and/or field test with a calibrated portable instrument.

5.3 Unauthorized Non-Storm Water Discharges

Elimination or reduction of "unauthorized non-storm water discharges" to the storm drain system or receiving waters is a major goal of the General Permit. Most non-storm water discharges are prohibited. Unauthorized non-storm water discharges can be generated from a variety of sources. Examples include, but are not limited to: waters from the rinsing or washing of vehicles, equipment, buildings and pavement; materials that have

been improperly disposed of or dumped and spilled, and leaked materials. Such discharges should be eliminated or reduced to the maximum extent practicable.

5.3 (a) Non-Storm Water Management

A. Dischargers shall implement measures to control all non-storm water discharges during construction.

B. Dischargers shall wash vehicles in such a manner as to prevent non-storm water discharges to surface waters or MS4 drainage systems.

C. Dischargers shall clean streets in such a manner as to prevent unauthorized non-storm water discharges from reaching surface water or MS4 drainage systems.

5.4 Authorized Non-Storm Water Discharges

The General Permit authorizes certain non-storm water discharges that may be necessary for the completion of construction projects. Such discharges include, but are not limited to: irrigation of vegetative erosion control measures; fire hydrant flushing; potable water sources related to the operation and maintenance of potable water systems; drinking fountain water; atmospheric condensates including refrigeration, air conditioning, and compressor condensate; irrigation drainage; springs; ground water; and foundation or footing drainage. These discharges are allowed provided they are: 1) not relied upon to clean up failed or inadequate construction or post construction BMPs designed to keep materials on site; 2) infeasible to eliminate; 3) include BMPs described herein; and 4) do not cause or contribute to a violation of water quality standards. The General Permit prohibits the discharge of sediment-laden water offsite without prior treatment (detention or filtering).

5.5 Best Management Practices

The BMPs described in this document will be implemented to minimize the potential for pollutants to leave the project area and enter the storm drain system to the maximum extent practicable. The BMPs listed below are designed to minimize non-storm water discharges, minimize pollutants in storm water drainage and minimize the release of pollutants that can eventually be carried off by runoff, wind, or tracked out into the storm drain system. BMPs also include planning and preparing for rainfall. The site should be stabilized before a storm and BMPs should be checked for correct implementation prior to storm events. Appendix H lists sources for weather forecasts. Through proactive BMP implementation and good housekeeping measures, the construction site will pose a minimum threat of polluting local waterways through storm water runoff.

BMPs must be implemented to prevent or reduce the contact of non-storm water discharges with potential pollutant sources (i.e. waste storage areas, soil piles) and minimize to the extent practicable the flow or volume of non-storm water discharges.

Detailed descriptions of various types of BMPs for construction projects are located in Appendix M.

5.5 (a) Employee Training Program

All employees working on the site shall receive a general briefing about the importance of preventing storm water pollution, potential sources of storm water pollution, and the BMPs to be implemented at the site. New employees shall be briefed prior to work. Storm water pollution control training may be integrated with other training sessions, such as those conducted for worker safety, spill prevention, or hazardous materials management. Employees are encouraged to provide suggestions/feedback to improve training sessions and implementation of control practices.

Employees responsible for implementing, inspecting, maintaining, or repairing storm water pollution control practices should receive copies of relevant portions of this SWPPP and become familiar with their responsibilities. When such responsibilities shift from one employee to another, the outgoing employee shall pass on all necessary information to ensure the continuing effectiveness of the BMPs and SWPPP compliance, including copies of this SWPPP and inspection checklists. The table provided in Section 3.0 List of Contractors and Subcontractors, may be used to identify employees and their respective SWPPP responsibilities.

For projects that start during the dry season, refresher sessions on storm water pollution control must be conducted prior to the wet season. Additional training will be provided as necessary, based on site inspections and evidence of storm water quality problems.

Documentation of training will be maintained as part of this plan. Training documentation forms are located in Appendix F. Completed training records must be kept with this SWPPP.

5.5(b) Good Site Management "Housekeeping"

A. Documentation of BMPs in SWPPP
   Dischargers shall document all housekeeping BMPs in the SWPPP and in the REAP (See Section 6.0 Rain Event Action Plan (REAP)) in accordance with the nature and phase of the construction project. Construction phases at traditional land development projects include Grading and Land Development Phase, Streets and Utilities, or Vertical Construction for traditional land development projects.

B. Housekeeping
   Dischargers shall implement good site management (i.e., "housekeeping") measures for construction materials that could potentially be a threat to water quality if discharged. At a minimum, Dischargers shall implement the following good housekeeping measures:

1. Conduct an inventory of the products used and/or expected to be used and the end products that are produced and/or expected to be produced. This does not include materials and equipment that are designed to be outdoors and exposed to environmental conditions (i.e., poles, equipment pads, cabinets, conductors, insulators, bricks, etc.).
2. Cover and berm loose stockpiled construction materials that are not actively being used (i.e. soil, spoils, aggregate, fly-ash, stucco, hydrated lime, etc.).
3. Store chemicals in watertight containers (with appropriate secondary containment to prevent any spillage or leakage) or in a storage shed (completely enclosed)
4. Minimize exposure of construction materials to precipitation. This does not include materials and equipment that are designed to be outdoors and exposed to environmental conditions (i.e. poles, equipment pads, cabinets, conductors, insulators, bricks. etc.).
5. Implement BMPs to prevent the off-site tracking of loose construction and landscape materials.

C. Waste Management

Dischargers shall implement good housekeeping measures for waste management, which, at a minimum, shall consist of the following:

1. Prevent disposal of any rinse or wash waters or materials on impervious or pervious site surfaces or into the storm drain system.
2. Ensure the containment of sanitation facilities (e.g., portable toilets) to prevent discharges of pollutants to the storm water drainage system or receiving water.
3. Clean or replace sanitation facilities and inspecting them regularly for leaks and spills.
4. Cover waste disposal containers at the end of every business day and during a rain event.
5. Prevent discharges from waste disposal containers to the storm water drainage system or receiving water.
6. Contain and securely protect stockpiled waste material from wind and rain at all times unless actively being used.
7. Implement procedures that effectively address hazardous and non-hazardous spills.
8. Develop a spill response and implementation element of the SWPPP prior to commencement of construction activities. The SWPPP shall require:
   a. Equipment and materials for cleanup of spills shall be available on site and that spills and leaks shall be cleaned up immediately and disposed of properly.
   b. Appropriate spill response personnel are assigned and trained.
   c. LADWP has spill notification phone numbers (Bulletin 2010-38), which must be included as a part of spill response training.



9. Ensure the containment of concrete washout areas and other washout areas that may contain additional pollutants so there is no discharge into the underlying soil and onto the surrounding areas.

D. Vehicle Storage and Maintenance
Dischargers shall implement good housekeeping for vehicle storage and maintenance, which, at a minimum, shall consist of the following:

Vehicles and equipment may pose a threat to storm water quality if their fluids come into contact with storm water runoff. When stored, place drip pans under vehicles or equipment. Vehicles and equipment will be inspected regularly to minimize leaks and drips. Equipment with chronic leakage problems will be returned to the yard for repair prior to continuing its use at the site. Refueling and vehicle maintenance at the construction site will be conducted only when absolutely necessary. When maintenance and repair of vehicles or equipment is required, every effort will be made to prevent any motor related fluids or wastes from leaving the designated repair area, which shall be located in designated areas away from storm drains and drainage areas. When vehicles or equipment are immobilized and need repair, drip pans and oil-absorbing mats should be placed beneath the vehicle in order to capture spilled fluids. Absorbent materials and other wastes (used oil filters, oily rags, etc.) must be disposed of properly with other hazardous wastes from the site (See Section 5.5 Best Management Practices). Vehicle washing will not be conducted onsite.

1. Prevent oil, grease, or fuel to leak into the ground, storm drains or surface waters.
2. Place all equipment or vehicles, which are to be fueled, maintained and stored in a designated area fitted with appropriate BMPs.
3. Clean leaks immediately and disposing of leaked materials properly.

E. Landscape Materials
Dischargers shall implement good housekeeping for landscape materials, which, at a minimum, shall consist of the following:

1. Contain stockpiled materials such as mulches and topsoil when they are not actively being used.
2. Contain all fertilizers and other landscape materials when they are not actively being used.
3. Discontinue the application of any erodible landscape material within 2 days before a forecasted rain event or during periods of precipitation.
4. Apply erodible landscape material at quantities and application rates according to manufacture recommendations or based on written specifications by knowledgeable and experienced field personnel.
5. Stack erodible landscape material on pallets and covering or storing such materials when not being used or applied.



F. Potential Pollutant Sources

Dischargers shall conduct an assessment and create a list of potential pollutant sources and identify any areas of the site where additional BMPs are necessary to reduce or prevent pollutants in storm water discharges and authorized non-storm water discharges. This potential pollutant list shall be kept with the SWPPP and shall identify all non-visible pollutants which are known, or should be known, to occur on the construction site. At a minimum, when developing BMPs, Risk Level 2 dischargers shall do the following:

a. Consider the quantity, physical characteristics (e.g., liquid, powder, solid), and locations of each potential pollutant source handled, produced, stored, recycled, or disposed of at the site.
b. Consider the degree to which pollutants associated with those materials may be exposed to and mobilized by contact with storm water.
c. Consider the direct and indirect pathways that pollutants may be exposed to storm water or authorized non-storm water discharges. This shall include an assessment of past spills or leaks, non-storm water discharges, and discharges from adjoining areas.
d. Ensure retention of sampling, visual observation, and inspection records.
e. Ensure effectiveness of existing BMPs to reduce or prevent pollutants in storm water discharges and authorized non-storm water discharges.

G. Aerial Deposition

Dischargers shall implement good housekeeping measures on the construction site to control the air deposition of site materials and from site operations. Such particulates can include, but are not limited to, sediment, nutrients, trash, metals, bacteria, oil and grease and organics.

5.5 (c) Non-Storm Water Management

A. Dischargers shall implement measures to control all non-storm water discharges during construction. This includes groundwater, water used for dust control, water used for washing or rinsing, water leaks, chemical leaks, solid and liquid chemicals that are exposed to the elements.

B. Vehicle washing shall be done in a manner as to prevent non-storm water discharges to surface waters or MS4 drainage systems.

5.5 (d) Erosion Control

Construction activities that include grading and soil disturbance require a concentrated effort to prevent and minimize the transport of sediments into nearby storm drain inlets. Sediment can flow into nearby storm drain inlets through storm water runoff and non-storm water runoff. When the use of water is required, every effort should be made to



contain that water and allow it to evaporate in a bermed area. Remaining sediment and debris must be swept and removed from the street.

A. Dischargers shall implement effective wind erosion control (CASQA BMP WE-1).

B. Dischargers shall provide effective soil cover for inactive[1] areas and all finished slopes, open space, utility backfill, and completed lots. One or more of the following temporary soil stabilization measures may be applied to disturbed areas that will be inactive for extended periods. These measures may be used in conjunction with temporary linear sediment barriers.

- Hydraulic Mulch (CASQA BMP EC-3)
- Hydroseeding (CASQA BMP EC-4)
- Soil binders (CASQA BMP EC-5)
- Straw mulch (CASQA BMP EC-6)
- Geotextiles and mats (CASQA BMP EC-7)
- Wood mulching (CASQA BMP EC-8)

C. Dischargers shall limit the use of plastic materials when more sustainable, environmentally friendly alternatives exist. Where plastic materials are deemed necessary, the discharger shall consider the use of plastic materials resistant to solar degradation.

5.5 (e) Sediment Control

A. Dischargers shall establish and maintain effective perimeter controls and stabilize all construction entrances and exits to sufficiently control erosion and sediment discharges from the site.

B. On sites where sediment basins are to be used, Dischargers shall, at minimum, design sediment basins according to the method provided in CASQA's Construction BMP Guidance Handbook (CASQA BMP SE-2).

C. Dischargers shall implement appropriate erosion control BMPs (runoff control and soil stabilization) in conjunction with sediment control BMPs for areas under active[2] construction.

D. Dischargers shall apply linear sediment controls along the toe of the slope, face of the slope, and at the grade breaks of exposed slopes to comply with sheet flow lengths[3] in accordance with Table 3.

[1] Inactive areas of construction are areas of construction activity that have been disturbed and area not scheduled to be re-disturbed for at least 14 days

[2] Active areas of construction are areas undergoing land surface disturbance. This includes construction activity during the preliminary stage, mass grading stage, streets and utilities stage and the vertical construction stage.

[3] Sheet flow length is the length that shallow, low velocity flow travels across a site.

Table 3. Critical Slope/Sheet Flow Length Combinations

Slope Percentage	Sheet flow length not to exceed
0-25%	20 feet
25-50%	15 feet
Over 50%	10 feet

One or more of the following sediment barriers will be used around disturbed areas that will be inactive for extended periods. These measures may be used in conjunction with temporary soil stabilization measures.

- Silt fence (CASQA BMP SE-1)
- Fiber rolls (CASQA BMP SE-5)
- Gravel bag berm (CASQA BMP SE-6)
- Sandbag barrier (CASQA BMP SE-8)
- Straw bale barrier (CASQA BMP SE-9)
- Drainage ditch

E. Dischargers shall ensure that construction activity traffic to and from the project is limited to entrances and exits that employ effective controls to prevent offsite tracking of sediment.

F. Dischargers shall ensure that all storm drain inlets and perimeter controls, runoff control BMPs, and pollutant controls at entrances and exits (e.g. tire wash off locations) are maintained and protected from activities that reduce their effectiveness.

G. Dischargers shall inspect on a daily basis all immediate access roads daily. At a minimum daily (when necessary) and prior to any rain event, the discharger shall remove any sediment or other construction activity related materials that are deposited on the roads (by vacuuming or sweeping).

5.5 (f) Run-on and Run-off Controls

Dischargers shall effectively manage all run-on, all runoff within the site and all runoff that discharges off the site. Run-on from off-site shall be directed away from all disturbed areas or shall collectively be in compliance with the effluent limitations in this General Permit.

5.5 (g) Inspection, Maintenance and Repair

A. Dischargers shall ensure that all inspection, maintenance repair and sampling activities at the project location shall be performed or supervised by a Qualified SWPPP Practitioner (QSP) representing the discharger. The QSP may delegate any or all of these activities to an employee appropriately trained to do the task(s).

B. Dischargers shall perform weekly inspections and observations, and at least once each 24-hour period during extended storm events, to identify and record BMPs that need maintenance to operate effectively, that have failed, or that could fail to operate as intended. Inspectors shall be the QSP or be trained by the QSP.

C. Upon identifying failures or other shortcomings, as directed by the QSP, Dischargers shall begin implementing repairs or design changes to BMPs within 72 hours of identification and complete the changes as soon as possible.

D. For each inspection required, Dischargers shall complete an inspection checklist, using a form provided by the State Water Board or Regional Water Board or in an alternative format.

E. Dischargers shall ensure that checklists shall remain onsite with the SWPPP and at a minimum, shall include:

1. Inspection date and date the inspection report was written.
2. Weather information, including presence or absence of precipitation, estimate of beginning of qualifying storm event, duration of event, time elapsed since last storm, and approximate amount of rainfall in inches.
3. Site information, including stage of construction, activities completed, and approximate area of the site exposed.
4. A description of any BMPs evaluated and any deficiencies noted.
5. If the construction site is safely accessible during inclement weather, list the observations of all BMPs: erosion controls, sediment controls, chemical and waste controls, and non-storm water controls. Otherwise, list the results of visual inspections at all relevant outfalls, discharge points, downstream locations and any projected maintenance activities.
6. Report the presence of noticeable odors or of any visible sheen on the surface of any discharges.
7. Any corrective actions required, including any necessary changes to the SWPPP and the associated implementation dates.
8. Photographs taken during the inspection, if any.
9. Inspector’s name, title, and signature.

5.5(h) Hazardous Waste Management and Disposal

Hazardous waste will be stored and handled in separate collection and containment areas in accordance with state and federal standards. Hazardous waste can be generated from equipment maintenance and refueling activities (e.g., anti-freeze, hydraulic fluids, gasoline, diesel fuel, waste oil). Other hazardous wastes include: pesticides, paints, cleaners, epoxies and sandblast grit. Hazardous waste will be stored in covered, labeled containers and secondary containment will be provided for liquid hazardous wastes. Different types of hazardous wastes will not be mixed so as to promote recycling and prevent undesirable chemical reactions.

5.5(i) Spill Prevention and Control

Leaks and spills from construction machinery generally contain petroleum products and heavy metals. Drip pans or some type of impermeable material will be placed under equipment that has been known to leak when such equipment is stored outdoors and not in use. Spills of any type will be cleaned up immediately. Drip pans will be cleaned as necessary to maintain their effectiveness. If absorbent is used for spills, it must be removed promptly and in a proper manner.

5.5(j) Materials Handling and Storage

The primary goal of BMPs for on-site storage of potential pollutants is to minimize the opportunity for them to come into contact with storm water. Hazardous materials, plasters, solvents, paints and other compounds must be properly handled and stored in order to reduce the risk of pollution or contamination. There will be a designated area for all hazardous materials storage, and for any filling or dispensing activity. This area must be located away from drainage paths and should not be directly on the ground (i.e. use plastic liners or containment pallets). This storage area will be covered, or at a minimum, the hazardous materials will be covered in some fashion, either by a tarp, within a covered construction tool bin, or within a storage container. The storage area should be surrounded by berms to prevent any materials from leaving the area should a spill or leak occur. Consideration should be paid to keeping only the minimum amount of hazardous materials on site. Follow manufacturer's instructions regarding storage and use of materials. If any product should come into contact with the soil, that soil will be removed immediately and properly disposed of as hazardous waste.

5.5 (k) Stockpile Management

Stockpile Management procedures and practices are designed to reduce or eliminate air and stormwater pollution from stockpiles of soil, paving materials such as Portland cement, concrete rubble, asphalt concrete, aggregate base, asphalt minder and pressure treated wood.

1. Locate stockpiles a minimum of 50 ft away from concentrated flows of stormwater, draining courses, and inlets.

2. Protect all stockpiles from stormwater runoff using a temporary perimeter sediment barrier such as berms, dikes, fiber rolls, silt fences, sandbag, gravel bags, or straw bale barriers

3. Contain stockpiled materials such as mulches and topsoil when they are not actively being used.

4. Contain fertilizers and other landscape materials when they are not actively being used.

5. Discontinue the application of any erodible landscape material within 2 days before a forecasted rain event or during periods of precipitation.

6. Apply erodible landscape material at quantities and application rates according to manufacture recommendations or based on written specifications by knowledgeable and experienced field personnel.

7. Stack erodible landscape material on pallets and cover such materials when not being used or applied.

5.5 (l) Scheduling

Work will not be conducted during storm events. Prior to finishing work before a storm event, the work area will be stabilized to reduce the potential for pollutants to leave the area and enter the storm drain system.

5.5 (m) Vehicle ingress and egress

Vehicles and equipment shall pass over metal shaker plates to loosen and remediate soil and debris from ingress/egress access points. Inspect ingress/egress access points daily and sweep tracked sediment as needed.

5.5(n) Concrete Truck Washing Waste

Concrete truck wash out will only be conducted over the open trench so that all concrete waste is captured and buried in the trench. When that is not feasible and the truck must be washed out in the work area, a containment area will be created to capture the wash water. When dry, concrete waste and residue will be swept and removed. Only as much concrete as needed will be mixed or brought on site in order to reduce the amount of concrete waste. If concrete truck rinsing must occur, it will be done in a contained area. Concrete rinse water must not enter the storm drain system. The concrete containment area must be cleaned out and maintained periodically to minimize the potential of storm water contamination.

6.0 RAIN EVENT ACTION PLAN (REAP)

Dischargers shall document all housekeeping BMPs in the SWPPP in accordance with the nature and phase of the construction project. Construction phases at traditional land development projects include Grading and Land Development Phase, Streets and Utilities, or Vertical Construction for traditional land development projects.

A. The discharger shall ensure that a Qualified SWPPP Practitioner (QSP) develops a Rain Event Action Plan (REAP) 48 hours prior to any likely precipitation event. A likely precipitation event is any weather pattern that is forecast to have a 50% or greater probability of producing precipitation in the project area. The discharger shall

ensure a QSP obtain a printed copy of precipitation forecast information from the National Weather Service Forecast Office (e.g., by entering the zip code of the project's location at http://www.srh.noaa.gov/forecast).

B. The discharger shall ensure that a QSP develops the REAPs for all phases of construction (i.e., Grading and Land Development, Streets and Utilities, Vertical Construction, Final Landscaping and Site Stabilization).

C. The discharger shall ensure that the QSP ensures that the REAP include, at a minimum, the following site information:

1. Site Address
2. Calculated Risk Level 2
3. Site Storm Water Manager Information including the name, company, and 24-hour emergency telephone number
4. Erosion and Sediment Control Provider information including the name, company, and 24-hour emergency telephone number
5. Storm Water Sampling Agent information including the name, company, and 24-hour emergency telephone number

D. The discharger shall ensure a QSP includes in the REAP, at a minimum, the following project phase information:

1. Activities associated with each construction phase
2. Trades active on the construction site during each construction phase
3. Trade contractor information
4. Suggested actions for each project phase

E. The discharger shall ensure a QSP develops additional REAPs for project sites where construction activities are indefinitely halted or postponed (Inactive Construction). At a minimum, Inactive Construction REAPs must include:

1. Site Address
2. Calculated Risk Level 2
3. Site Storm Water Manager Information including the name, company, and 24-hour emergency telephone number
4. Erosion and Sediment Control Provider information including the name, company, and 24-hour emergency telephone number
5. Storm Water Sampling Agent information including the name, company, and 24-hour emergency telephone number
6. Trades active on site during Inactive Construction
7. Trade contractor information
8. Suggested actions for inactive construction sites

F. The discharger shall ensure a QSP begins implementation and make the REAP available onsite no later than 24 hours prior to the likely precipitation event.



G. The discharger shall ensure a QSP maintains onsite a paper copy of each REAP onsite in compliance with the record retention requirements of the Special Provisions in this General Permit.

7.0 MONITORING AND REPORTING REQUIREMENTS

7.1 Introduction

This chapter addresses maintenance, inspection, and repair procedures for all construction-related BMPs to ensure that all graded surfaces, walls, berms, drainage structures, vegetation, erosion and sediment control measures, etc., are maintained in effective condition and are promptly repaired or restored. A properly trained person must be assigned the responsibility to conduct inspections. All completed inspection/ maintenance forms must be kept with this SWPPP. A written site- specific Construction Site Monitoring Program (CSMP) shall be developed and implemented prior to the commencement of construction activities, and revised as necessary to reflect project revisions. The CSMP shall include all monitoring procedures and instructions, location maps, forms, and checklists as required. Inspection forms are included in Appendix C.

The goals of the inspection program are:

1. To demonstrate that the site is in compliance with the Discharge Prohibitions;

2. To determine whether non-visible pollutants are present at the construction site and are causing or contributing to exceedances of water quality objectives;

3. To determine whether immediate corrective actions, additional BMP or SWPPP revisions are necessary to reduce pollutants in storm water discharges and authorized non-storm water discharges; and

4. To determine whether BMPs included in the SWPPP are effective in preventing or reducing pollutants in storm water discharges and authorized non-storm water discharges.

The inspector should keep in mind that construction activity that cause or contribute to an exceedance of water quality standards must be corrected immediately. If storm water runoff is visibly oily or greasy, turbid, has a strong odor, or if it is known to contain pollutants such as pesticides, debris, sediment, settleable material or suspended material (i.e. trash), then it has potentially exceeded water quality standards.

If a violation of water quality standards is suspected, or if additional guidance or information is necessary, call the LADWP Wastewater Quality and Compliance Group (WQG) as soon as possible at (213) 367-0436.



7.2 Monitoring and Reporting Requirements

Table 4. Summary of Monitoring Requirements

Risk Level	Visual Inspections					Sample Collection	
	Quarterly Non-storm water Discharge	Pre-storm Event		Daily Storm BMP	Post Storm	Storm Water Discharge	Receiving Water
		Baseline	REAP				
2	X	X	X	X	X	X	

7.2 (a) Construction Site Monitoring Program (CSMP) Requirements

A. Dischargers shall be prepared to collect samples and conduct visual observation (inspections) until the minimum requirements of Table 4 - Summary of Monitoring Requirements, are completed.

B. Pursuant to Water Code Sections 13383 and 13267, all dischargers subject to this General Permit shall develop and implement a written site-specific Construction Site Monitoring Program (CSMP) in accordance with the requirements of this Section. The CSMP shall include all monitoring procedures and instructions, location maps, forms, and checklists as required in this section. The CSMP shall be developed prior to the commencement of construction activities, and revised as necessary to reflect project revisions. The CSMP shall be a part of this Storm Water Pollution Prevention Plan (SWPPP), included in **.**

C. As stated in Section *5.5(b) Good Site Management "Housekeeping"*, Risk Level 2 dischargers shall conduct an assessment and create a list of potential pollutant sources and a potential pollutant list. The list shall be kept with the SWPPP in the CSMP and shall identify all non-visible pollutants which are known, or should be known, to occur at the construction site.

D. Existing dischargers registered under the State Water Board Order No. 99-08-DWQ shall make and implement necessary revisions to their Monitoring Program to reflect the changes in this General Permit in a timely manner. Existing dischargers shall continue to implement their existing Monitoring Programs in compliance with State Water Board Order No. 99-08-DWQ.

E. When a change of ownership occurs for all or any portion of the construction site prior to completion or final stabilization, the new discharger shall comply with these requirements as of the date the ownership change occurs.

7.2 (b) CSMP Monitoring Description

Dischargers shall include a description of the following items in the CSMP:

1. Visual observation locations, visual observation procedures, and visual observation follow-up and tracking procedures.

2. Sampling locations, and sample collection and handling procedures. This shall include detailed procedures for sample collection, storage, preservation, and shipping to the testing lab to assure that consistent quality control and quality assurance is maintained. Dischargers shall attach to the monitoring program an example Chain of Custody form used when handling and shipping samples. **Note: the pH test must be performed immediately in the field. Turbidity test may be performed in the field or shipped to a lab provided the test is performed on the same day.**

3. Identification of the analytical methods and related method detection limits (if applicable) for each parameter required in Table 5.

Table 5. Risk Level 2 Test Methods, Detection Limits, Reporting Units and Applicable NALs/NELs

Parameter	Test Method / Protocol	Discharge Type	Min. Detection Limit	Reporting Units	Numeric Action Level
pH	Field test with calibrated portable instrument	Risk Level 2 Discharges	0.2	pH units	lower NAL = 6.5 upper NAL = 8.5
Turbidity	EPA 0180.1 and/or field test with calibrated portable instrument	Risk Level 2 Discharges other than ATS	1	NTU	250 NTU
		For ATS discharges	1	NTU	N/A
Any other pollutants identified for non-visible pollutant monitoring – see CSMP					

ATS = Active Treatment System

7.2 (c) Objectives

The CSMP shall be developed and implemented to address the following objectives:

1. To demonstrate that the site is in compliance with the Discharge Prohibitions and applicable Numeric Action Levels (NALs)/Numeric Effluent Limitations (NELs) of this General Permit.

2. To determine whether non-visible pollutants are present at the construction site and are causing or contributing to exceedances of water quality objectives.

3. To determine whether immediate corrective actions, additional Best Management Practice (BMP) implementation, or SWPPP revisions are necessary to reduce pollutants in storm water discharges and authorized non-storm water discharges.



4. To determine whether BMPs included in the SWPPP/Rain Event Action Plan (REAP) are effective in preventing or reducing pollutants in storm water discharges and authorized non-storm water discharges.

7.2 (d) Visual Observation and Sample Collection Exemptions

Dischargers are not required to physically collect samples or conduct visual observation (inspections) under the following conditions:

1. During dangerous weather conditions such as flooding and electrical storms.

2. Outside of scheduled site business hours.

If no required samples or visual observation (inspections) are collected due to these exceptions, Risk Level 2 dischargers shall include an explanation in their SWPPP and in the Annual Report documenting why the sampling or visual observation (inspections) were not conducted.

7.3 Visual Monitoring (Inspection) Requirements for Qualifying Rain Events

Use form in

A. Dischargers shall visually observe (inspect) storm water discharges at all discharge locations within two business days (48 hours) after each qualifying rain event.

B. Dischargers shall visually observe (inspect) the discharge of stored or contained storm water that is derived from and discharged subsequent to a qualifying rain event producing precipitation of ½ inch or more at the time of discharge. Stored or contained storm water that will likely discharge after operating hours due to anticipated precipitation shall be observed prior to the discharge during operating hours.

C. Dischargers shall conduct visual observations (inspections) during business hours only.

D. Dischargers shall record the time, date and rain gauge reading of all qualifying rain events.

E. Within 2 business days (48 hours) prior to each qualifying rain event, Dischargers shall visually observe (inspect):

1. all storm water drainage areas to identify any spills, leaks, or uncontrolled pollutant sources. If needed, the discharger shall implement appropriate corrective actions.
2. all BMPs to identify whether they have been properly implemented in accordance with the SWPPP and REAP. If needed, the discharger shall implement appropriate corrective actions.



3. any storm water storage and containment areas to detect leaks and ensure maintenance of adequate freeboard.

F. For the visual observations (inspections) described in this Section, dischargers shall observe the presence or absence of floating and suspended materials, a sheen on the surface, discolorations, turbidity, odors, and source(s) of any observed pollutants.

G. Within two business days (48 hours) after each qualifying rain event, Dischargers shall conduct post rain event visual observations (inspections) to (1) identify whether BMPs were adequately designed, implemented, and effective, and (2) identify additional BMPs and revise the SWPPP accordingly.

H. Dischargers shall maintain on-site records of all visual observations (inspections), personnel performing the observations, observation dates, weather conditions, locations observed, and corrective actions taken in response to the observations.

7.4 Water Quality Sampling and Analysis

Dischargers shall collect storm water grab samples from sampling locations, as defined in Section 7.4 (d) Effluent Sampling Locations. The storm water grab sample(s) obtained shall be representative of the flow and characteristics of the discharge.

7.4 (a) Effluent Analysis Requirements

A. Dischargers shall analyze their effluent samples for:

1. pH and turbidity.

7.4 (b)Effluent Sampling Schedule

Dischargers shall ensure that the grab samples collected of stored or contained storm water are from discharges subsequent to a qualifying rain event (producing precipitation of ½ inch or more at the time of discharge).

7.4 (c) Number of Effluent Samples

At minimum, Dischargers shall collect **3 samples per day** of the qualifying event (1/2 inch or more of rain causing the discharge).

7.4 (d) Effluent Sampling Locations

A. Dischargers shall collect storm water grab samples from sampling locations found in Table 6. The storm water grab sample(s) obtained shall be representative of the flow and characteristics of the discharge.



B. Dischargers shall perform sampling and analysis of storm water discharges to characterize discharges associated with construction activity from the entire project disturbed area.

C. Dischargers shall collect effluent samples at all discharge points where storm water is discharged off-site.

Table 6. Sample Locations.[4]

Location ID:		
Location Description		
Coordinates	Lat:	Long:
Location ID:		
Location Description		
Coordinates	Lat:	Long:
Location ID:		
Location Description		
Coordinates	Lat:	Long:

D. Dischargers shall ensure that storm water discharge collected and observed represents[5] the effluent in each drainage area based on visual observation of the water and upstream conditions.

E. Dischargers shall monitor and report site run-on from surrounding areas if there is reason to believe run-on may contribute to an exceedance of NALs or NELs.

F. Dischargers who deploy an Active Treatment System (ATS) on their site, or a portion on their site, shall collect ATS effluent samples and measurements from the discharge pipe or another location representative of the nature of the discharge.

7.4 (e) Storm Water Sample Collection and Handling Instructions

A. Dischargers shall refer to Table 5 above for test methods, detection limits, and reporting units.

B. Dischargers shall ensure that testing laboratories will receive samples within 48 hours of the physical sampling (unless otherwise required by the laboratory), and shall use only the sample containers provided by the laboratory to collect and store samples.

[4] To be determined.

[5] For example, if there has been concrete work recently in an area, or drywall scrap is exposed to the rain, a pH sample shall be taken of drainage from the relevant work area. Similarly, if sediment laden water is flowing through some parts of a silt fence, samples shall be taken of the sediment-laden water even if most water flowing through the fence is clear.

C. Dischargers shall designate and train personnel to collect, maintain, and ship samples in accordance with the Surface Water Ambient Monitoring Program's (SWAMP) 2008 Quality Assurance Program Plan (QAPrP)[6].

7.4 (f)– Monitoring Methods

A. Dischargers shall include a description of the following items in the CSMP:

1. Visual observation locations, visual observation procedures, and visual observation follow-up and tracking procedures.

2. Sampling locations, and sample collection and handling procedures. This shall include detailed procedures for sample collection, storage, preservation, and shipping to the testing lab to assure that consistent quality control and quality assurance is maintained. Dischargers shall attach to the monitoring program an example Chain of Custody form used when handling and shipping samples.

3. Identification of the analytical methods and related method detection limits (if applicable) for each parameter required in Table 5 above.

B. Dischargers shall ensure that all sampling and sample preservation are in accordance with the current edition of "Standard Methods for the Examination of Water and Wastewater" (American Public Health Association). All monitoring instruments and equipment (including a discharger's own field instruments for measuring pH and turbidity) should be calibrated and maintained in accordance with manufacturers' specifications to ensure accurate measurements. Dischargers shall ensure that all laboratory analyses are conducted according to test procedures under 40 CFR Part 136, unless other test procedures have been specified in this General Permit or by the Regional Water Board. With the exception of field analysis conducted by the discharger for turbidity and pH, all analyses should be sent to and conducted at a laboratory certified for such analyses by the State Department of Health Services. Dischargers shall conduct their own field analysis of pH and may conduct their own field analysis of turbidity if the discharger has sufficient capability (qualified and trained employees, properly calibrated and maintained field instruments, etc.) to adequately perform the field analysis.

7.4 (g) Analytical Methods

A. Dischargers shall select analytical test methods from the list provided in Table 5 above for test methods, detection limits, and reporting units.

---

[6] Additional information regarding SWAMP's QAPrP and QAMP can be found at http://www.waterboards.ca.gov/water_issues/programs/swamp/.
QAPrP:http://www.waterboards.ca.gov/water_issues/programs/swamp/docs/qapp/swamp_qapp_master090108a.pdf.
QAMP:http://www.waterboards.ca.gov/water_issues/programs/swamp/qamp.shtml.

B. pH: Dischargers shall perform pH analysis on-site with a calibrated pH meter or a pH test kit. Risk Level 2 dischargers shall record pH monitoring results on paper and retain these records in accordance with Section 7.6 – Records below.

C. Turbidity: Dischargers shall perform turbidity analysis using a calibrated turbidity meter (turbidimeter), either on-site or at an accredited lab. Acceptable test methods include Standard Method 2130 or USEPA Method 180.1. The results will be recorded in the site log book in Nephelometric Turbidity Units (NTU).

7.4 (h) Non-Storm Water Discharge Monitoring Requirements

Visual Monitoring Requirements:

A. Dischargers shall visually observe (inspect) each drainage area for the presence of (or indications of prior) unauthorized and authorized non-storm water discharges and their sources.

B. Dischargers shall conduct one visual observation (inspection) quarterly in each of the following periods: January-March, April-June, July-September, and October-December. Visual observation (inspections) are only required during daylight hours (sunrise to sunset).

C. Dischargers shall ensure that visual observations (inspections) document the presence or evidence of any non-storm water discharge (authorized or unauthorized), pollutant characteristics (floating and suspended material, sheen, discoloration, turbidity, odor, etc.), and source. Risk Level 2 dischargers shall maintain on-site records indicating the personnel performing the visual observation (inspections), the dates and approximate time each drainage area and non-storm water discharge was observed, and the response taken to eliminate unauthorized non-storm water discharges and to reduce or prevent pollutants from contacting non-storm water discharges.

Effluent Sampling Locations:

A. Dischargers shall sample effluent at all discharge points where non-storm water and/or authorized non-storm water is discharged off-site.

B. Dischargers shall send all non-storm water sample analyses to a laboratory certified for such analyses by the State Department of Health Services.

C. Dischargers shall monitor and report run-on from surrounding areas if there is reason to believe run-on may contribute to an exceedance of NALs.

7.4 (i) Non-Visible Pollutant Monitoring Requirements

A. Dischargers shall collect one or more samples during any breach, malfunction, leakage, or spill observed during a visual inspection which could result in the discharge of pollutants to surface waters that would not be visually detectable in storm water.

B. Dischargers shall ensure that water samples are large enough to characterize the site conditions.

C Dischargers shall collect samples at all discharge locations that can be safely accessed.

D. Dischargers shall collect samples during the first two hours of discharge from rain events that occur during business hours and which generate runoff.

E. Dischargers shall analyze samples for all non-visible pollutant parameters listed in the CSMP (if applicable) - parameters indicating the presence of pollutants identified in the pollutant source assessment required (Risk Level 2 dischargers shall modify their CSMPs to address these additional parameters in accordance with any updated SWPPP pollutant source assessment).

F. Dischargers shall collect a sample of storm water that has not come in contact with the disturbed soil or the materials stored or used on-site (uncontaminated sample) for comparison with the discharge sample.

G. Dischargers shall compare the uncontaminated sample to the samples of discharge using field analysis or through laboratory analysis.[6]

[6] For laboratory analysis, all sampling, sample preservation, and analyses must be conducted according to test procedures under 40 CFR Part 136. Field discharge samples shall be collected and analyzed according to the specifications of the manufacturer of the sampling devices

H. Dischargers shall keep all field /or analytical data in the SWPPP document.



7.4 (j)– Watershed Monitoring Option

Dischargers who are part of a qualified regional watershed-based monitoring program may be eligible for relief from the requirements in *7.4 (d) Effluent Sampling Locations* (Section I.5 of Attachment D of the Permit). The Regional Water Board may approve proposals to substitute an acceptable watershed-based monitoring program by determining if the watershed-based monitoring program will provide substantially similar monitoring information in evaluating discharger compliance with the requirements of this General Permit.

7.5 Particle Size Analysis for Project Risk Justification

Dischargers justifying an alternative project risk shall report a soil particle size analysis used to determine the RUSLE K-Factor. ASTM D-422 (Standard Test Method for Particle-Size Analysis of Soils), as revised, shall be used to determine the percentages of sand, very fine sand, silt, and clay on the site.

7.6 – Records

Dischargers shall retain records of all storm water monitoring information and copies of all reports (including Annual Reports) for a period of at least three years. Dischargers shall retain all records on-site while construction is ongoing. These records include:

1. The date, place, time of facility inspections, sampling, visual observation (inspections), and/or measurements, including precipitation.

2. The individual(s) who performed the facility inspections, sampling, visual observation (inspections), and or measurements.

3. The date and approximate time of analyses.

4. The individual(s) who performed the analyses.

5. A summary of all analytical results from the last three years, the method detection limits and reporting units, the analytical techniques or methods used, and the chain of custody forms.

6 Rain gauge readings from site inspections;

7. Quality assurance/quality control records and results.

8. Non-storm water discharge inspections and visual observation (inspections) and storm water discharge visual observation records (see Sections 7.4 (h) Non-



Storm Water Discharge Monitoring Requirements and 7.4 (i) Non-Visible Pollutant Monitoring Requirements above).

9. Visual observation and sample collection exception records (see Section 7.2 (d) above).

10. The records of any corrective actions and follow-up activities that resulted from analytical results, visual observation (inspections), or inspections.

7.7 NAL Exceedance Report

A. In the event that any effluent sample exceeds an applicable NAL, Dischargers shall electronically submit all storm event sampling results to the State Water Board no later than 10 days after the conclusion of the storm event. The Regional Boards have the authority to require the submittal of an NAL Exceedance Report.

B. Dischargers shall certify each NAL Exceedance Report in accordance with the Special Provisions for Construction Activity.

C. Dischargers shall retain an electronic or paper copy of each NAL Exceedance Report for a minimum of three years after the date the annual report is filed.

D. Dischargers shall include in the NAL Exceedance Report:

1. The analytical method(s), method reporting unit(s), and method detection limit(s) of each analytical parameter (analytical results that are less than the method detection limit shall be reported as “less than the method detection limit”).

2. The date, place, time of sampling, visual observation (inspections), and/or measurements, including precipitation.

3. A description of the current BMPs associated with the effluent sample that exceeded the NAL and the proposed corrective actions taken.



8.0 GENERAL REQUIREMENTS

8.1 SWPPP Certification

This SWPPP must be certified in accordance with the signatory requirements described below. Use the Compliance Certification Form provided at the end of this section, and make additional copies as needed.

8.2 Annual Site Compliance Evaluation and Certification

This SWPPP must be certified annually to ensure that construction activities comply with the requirements of the General Construction Permit. The certification should be based upon the results of required site inspections. This certification must be completed by July 1 of each year until the construction project is completed and a Notice of Termination (NOT) has been submitted to the State Water Resources Control Board.

8.3 SWPPP Amendments

This SWPPP will be amended whenever:

A. There is a change in construction or operations which may affect the discharge of pollutants to surface waters, ground waters, or the municipal storm drain system (e.g. Additional soils will be stored onsite, or excavation outside of the project area will be necessary);

B. There is a violation of any condition of the General Permit; or

C. The SWPPP has not achieved the general objective of reducing or eliminating pollutants in storm water discharges.

Use Appendix G to document all changes made to the SWPPP. Make additional copies of Appendix G as needed. Each amendment should be signed by the site construction manager or site supervisor and include the date of initial preparation and the date of each amendment. All amendments should be directly attached to this SWPPP.

8.4 SWPPP Availability

This SWPPP must be kept on the site while the site is under construction, beginning with the initial mobilization and ending with the termination of coverage under the permit. It should be available to site employees at all times and provided upon request to the Los Angeles Regional Water Quality Control Board or local storm water agency.



9.0 POST-CONSTRUCTION STANDARDS

A. All dischargers shall comply with the following runoff reduction requirements unless they are located within an area subject to post construction standards of an active Phase I or II municipal separate storm sewer system (MS4) permit that has an approved Storm Water Management Plan.

   1. This provision shall take effect three years from the adoption date of this permit, or later at the discretion of the Executive Officer of the Regional Board.

   2. The discharger shall demonstrate compliance with the requirements of this section by submitting with their NOI a map and worksheets in accordance with the instructions in Appendix 2 of Order No. 2009-0009-DWQ.The discharger shall use non-structural controls unless the discharger demonstrates that non-structural controls are infeasible or that structural controls will produce greater reduction in water quality impacts.

   3. The discharger shall, through the use of non-structural and structural measures as described in Appendix 2, of Order No. 2009-0009-DWQ replicate the pre-project water balance (for this permit, defined as the volume of rainfall that ends up as runoff) for the smallest storms up to the 85th percentile storm event (or the smallest storm event that generates runoff, whichever is larger). Dischargers shall inform Regional Water Board staff at least 30 days prior to the use of any structural control measure used to comply with this requirement. Volume that cannot be addressed using nonstructural practices shall be captured in structural practices and approved by the Regional Water Board. When seeking Regional Board approval for the use of structural practices, dischargers shall document the infeasibility of using non-structural practices on the project site, or document that there will be fewer water quality impacts

   4. For sites whose disturbed area exceeds two acres, the discharger shall preserve the pre-construction drainage density (miles of stream length per square mile of drainage area) for all drainage areas within the area serving a first order stream[14] or larger stream and ensure that post project time of runoff concentration is equal or greater than pre-project time of concentration.

B. All dischargers shall implement BMPs to reduce pollutants in storm water discharges that are reasonably foreseeable after all construction phases have been completed at the site (Post-construction BMPs).

.



10.0 CERTIFICATION STATEMENT

This SWPPP must be evaluated and re-certified using this form annually by July 1 until the construction project is complete and a Notice of Termination has been submitted to the Regional Board. Use this form for the initial certification, annual re-certification, and re-certification following revisions. Additional blank forms can be made by copying the form included in Appendix J.

"I certify under penalty of law that this document and all attachments were prepared under my direction or supervision in accordance with a system designed to assure that qualified personnel properly gather and evaluate the information submitted. Based on my inquiry of the person or persons who manage the system, or those persons directly responsible for gathering the information, to the best of my knowledge and belief, the information submitted is, true, accurate, and complete. I am aware that there are significant penalties for submitting false information including the possibility of fine and imprisonment for knowing violations."

Annual Re-Certification:

Print Name: _____ **Title:** _____

Signature: _____ **Date:** _____

Telephone Number: _____



Appendix A

Notice of Intent

Appendix B

Site Maps

Appendix B
Vicinity Map

SWPPP VICINITY MAP

Construction of Fernangeles Park

Stormwater Capture Project

PROJECT LOCATION:
8851 LAUREL CANYON BLVD, SUN VALLEY, CA 91352



LEGEND:

Project Area

* Discharge Points

N.T.S

Note: There are no offsite drainage areas discharging on the Site.

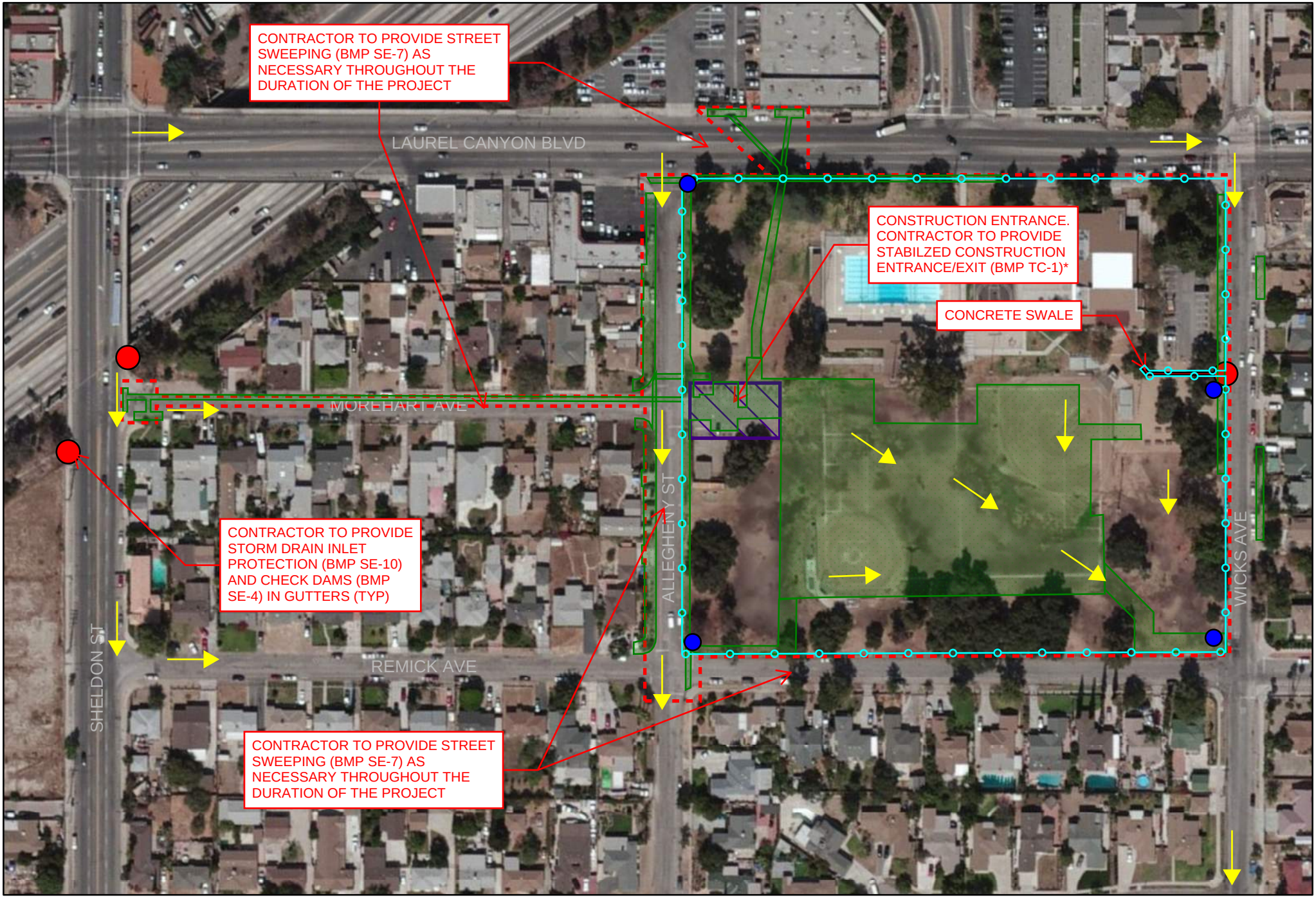

Legend

- Project Site Boundary
- Storm Drain Outlet
- Areas of Soil Disturbance
- Fiber Rolls
- Sample Location
- Runoff Flow Direction

0 125 250 500 750 1,000 Feet

FERNANGELES PARK SITE MAP

*Parking lot can serve as equipment/material storage. Stockpiling of excavated soil can be at southwest corner of the park, outside of the excavated limit.

Appendix C

Combined Visual Inspection Form for:

Weekly inspections for BMP effectiveness and maintenance
Daily Inspections for BMP Effectiveness and Maintenance During Extended Storms
Pre-storm Event Baseline Inspection for BMPs and Drainage Areas (within 48 hours)
Post-storm Event Baseline Inspection for BMPs and Drainage Areas (within 48 hours)
Quarterly Non-storm Water Discharges and/or Evidence of Discharges

Field Test Form

(*Make copies as needed)

BMP and Drainage Area Inspection Form Haskell Switching Station

LADWP CONSTRUCTION SWPPP BMP/ DRAINAGE AREA INSPECTION REPORT	
Check one: ☐ Weekly BMP inspection (dry weather) ☐ Pre-storm BMP and drainage area inspection (within 48 hours) ☐ Daily Storm BMP inspection (wet weather) ☐ Post-storm BMP and drainage area inspection (within 48 hours) ☐ Quarterly Non Storm Water Discharge Point Inspection (dry weather) If quarterly, circle one: Jan-Mar, Apr-Jun, Jul-Sep, Oct-Dec	
Project Observation Location*:	**Weather:**
Area of Site Exposed:	**Stage of Construction:**
Date of Inspection: **Time of Inspection:**	**Storm Start Time:**
Inspector:	**Duration of Storm:**
Name:	**Time Since Last Storm:**
Title:	**Approximate Rainfall (in):** **Rain Gauge or NOAA**
Telephone No.:	

YES	NO	
		Are the BMPs called for in the SWPPP installed in the proper location according to the specifications for the SWPPP?
		Are all operational storm drain inlets protected from sediment inflow?
		Do any structural BMPs require repair or clean out to maintain adequate function? If yes, indicate which ones:
		Is there evidence of equipment leakage/ spillage of equipment/vehicle maintenance fluids?
		Are construction on-site traffic routes, parking, and storage of equipment and supplies restricted to areas specifically designated for those uses?
		Do any seeded or landscaped areas require maintenance, irrigation, and fertilization, seeding or mulching?
		Is there any evidence that sediment is leaving the site?

BMP and Drainage Area Inspection Form for Haskell Switching Station observed on _____, continued

Yes	No	
		Is there any evidence of floating and suspended material, sheen, discoloration, turbidity, or odor?
		Is there any evidence of sediment, debris, or mud on public roads at intersections with site access roads?
		Is there any evidence of incorrect waste disposal (paints, concrete, solid wastes)?
		Is the overall housekeeping sufficiently maintained?
		Is the vehicle/ equipment maintenance and cleaning areas clean and free of oil, grease or potential pollutants?
		Is the construction area access point stabilized? Has potential for mud/ dirt tracking from the site been minimized?
		Are liquid transfer areas (equipment fueling) clean and protected from rain?
		Are there any visible non-storm water discharges? Is there evidence that non-storm water discharges occurred in the past? If so, describe the non-storm water discharge:
		Are trashcans covered?
		Are sanitary waste facilities in working order and not leaking?

Describe Corrective Actions Taken or Recommended:
Describe any necessary revisions to the SWPPP or REAP

Fill out as many forms as necessary to cover all observation locations in the entire project area.

Risk Level 2 Effluent Testing Field Log Sheets			
Construction Site Name **Haskell Switching Station**		**Date:**	**Time:**
Sampler/Tester			
Sampling event Type:	☐ **Stormwater**	☐ **Non-stormwater**	☐ **Non-visible pollutant**
Field Meter Calibration			
pH meter ID/Desc: **Calibration date/time:**		**Turbidity meter ID/Desc:** **Calibration date/time:**	
Field pH and Turbidity Measurements			
Discharge Location	**pH**	**Turbidity**	**Time**
For grab samples please include sampling notes on a Chain of Custody form.			
Additional sampling notes:			
Time End:			

Appendix D

Construction Site Monitoring Plan

Construction Site Monitoring Program

1. Purpose

This Construction Site Monitoring Program was developed to address the following objectives:

1. To demonstrate that the site is in compliance with the Discharge Prohibitions and Numeric Action Levels (NALs) of the Construction General Permit;
2. To determine whether non-visible pollutants are present at the construction site and are causing or contributing to exceedances of water quality objectives;
3. To determine whether immediate corrective actions, additional Best Management Practices (BMP) implementation, or SWPPP revisions are necessary to reduce pollutants in stormwater discharges and authorized non-stormwater discharges;
4. To determine whether BMPs included in the SWPPP and REAP are effective in preventing or reducing pollutants in stormwater discharges and authorized non-stormwater discharges.

2. Applicability of Permit Requirements

This project has been determined to be a Risk Level 2 project. The General Permit identifies the following types of monitoring as being applicable for a Risk Level 2 project.

Risk Level 2

- Visual inspections of BMPs;
- Visual monitoring of the site related to qualifying storm events;
- Visual monitoring of the site for non-stormwater discharges;
- Sampling and analysis of construction site runoff for pH and turbidity;
- Sampling and analysis of construction site runoff for non-visible pollutants when applicable; and
- Sampling and analysis of non-stormwater discharges when applicable.

3. Weather and Rain Event Tracking

Visual monitoring and inspections requirements of the General Permit are triggered by a qualifying rain event. The General Permit defines a qualifying rain event as any event that produces ½ inch of precipitation. A minimum of 48 hours of dry weather will be used to distinguish between separate qualifying storm events.

Visual monitoring, inspections, and sampling requirements of the General Permit are triggered by a qualifying rain event. The General Permit defines a qualifying rain event as any event that produces ½ inch of precipitation. A minimum of 48 hours of dry weather will be used to distinguish between separate qualifying storm events.

For the purposes of assessing exceptions to the Receiving Water Monitoring Triggers the General Permit establishes the compliance storm event at the 5-year, 24-hour event. Based on the Western Regional Climate Center, the 5-year, 24-hour event for this project is 4.5 inches.

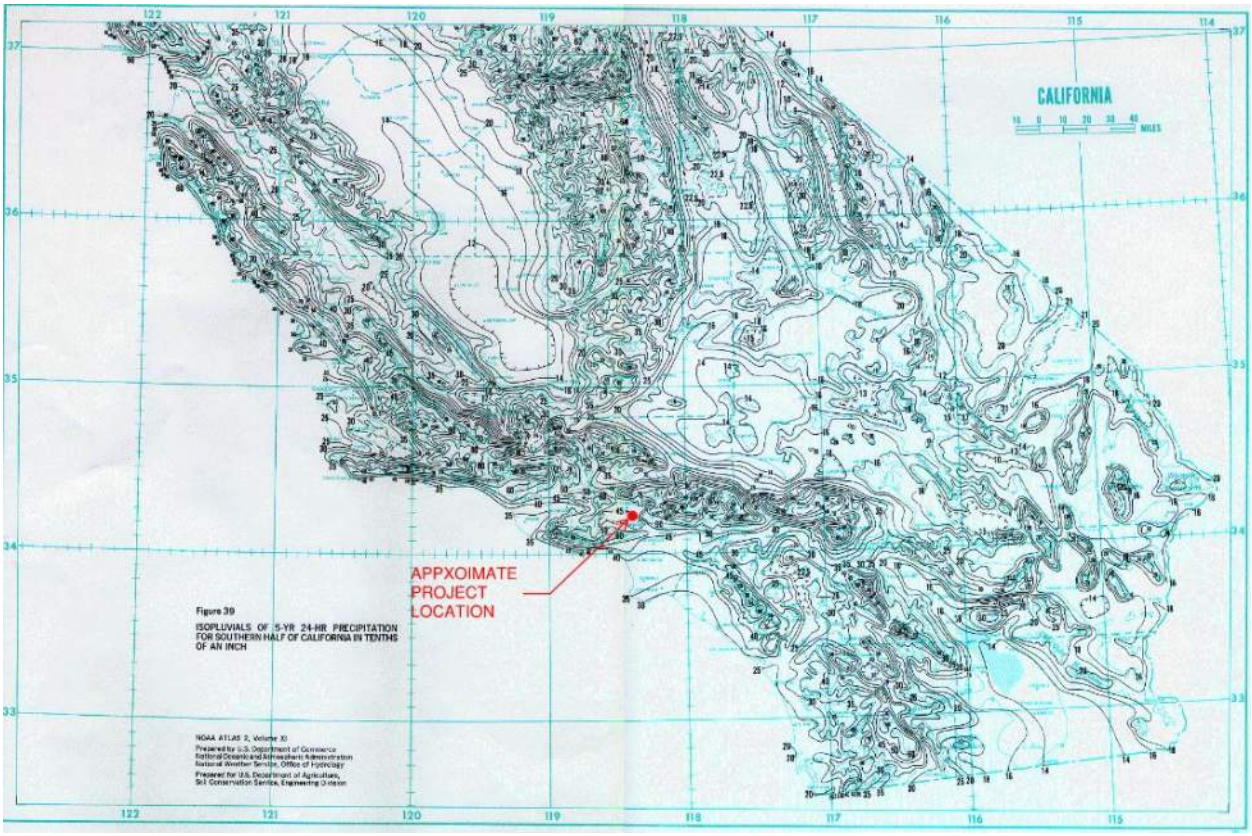

Figure 3.1 Western US Precipitation Frequency Map, Southern California

3.1. Weather Tracking

The QSP should daily consult the National Oceanographic and Atmospheric Administration (NOAA) for the Forecast Weather Table Interface. These forecasts can be obtained at http://forecast.weather.gov . Weather reports should be printed and maintained with the SWPPP in Appendix H "Weather Reports".

3.2. Rain Gauges

The QSP shall install 1 rain gauge on the project site. Locate the gauge in an open area away from obstructions such as trees or overhangs. Mount the gauge on a post at a height of 3 to 5 feet with the gauge extending several inches beyond the post. Make sure that the top of the gauge is level. Make sure the post is not in an area where rainwater can indirectly splash from sheds, equipment, trailers, etc.

The rain gauge(s) shall be read daily during normal site scheduled hours. The rain gauge should be read at approximately the same time every day and the date and time of each reading recorded. Log rain gauge readings in Appendix H "Weather Records". Follow the rain gauge instructions to obtain accurate measurements.

Once the rain gauge reading has been recorded, accumulated rain shall be emptied, and the gauge reset. Alternatively, include instructions for an automated recording rain gauge if used.

For comparison with the site rain gauge, the nearest appropriate governmental rain gauge(s) is located at Tujunga Spreading Grounds (https://dpw.lacounty.gov/wrd/rainfall/).

4. Monitoring Locations

Monitoring locations are shown on the Site Maps in Appendix B. Monitoring locations are described in the Sections 6 and 7.

Whenever changes in the construction site might affect the appropriateness of sampling locations, the sampling locations shall be revised accordingly. All such revisions shall be implemented as soon as feasible and the SWPPP amended. Temporary changes that result in a one-time additional sampling location do not require a SWPPP amendment.

5. Safety and Monitoring Exemptions

Safety practices for sample collection will be in accordance with the [ENTER TITLE AND PUBLICATION DATE OF CONTRACTOR'S HEALTH AND SAFETY PLAN FOR THE PROJECT OR PROVIDE SPECIFIC REQUIREMENTS IN THIS SECTION]. A summary of the safety requirements that apply to sampling personnel is provided below.

-
-
-
-

This project is not required to collect samples or conduct visual observations (inspections) under the following conditions:

- During dangerous weather conditions such as flooding and electrical storms.
- Outside of scheduled site business hours.

Scheduled site business hours are: [SPECIFY SITE BUSINESS DAYS AND HOURS].

If monitoring (visual monitoring or sample collection) of the site is unsafe because of the dangerous conditions noted above, then the QSP shall document the conditions for why an exception to performing the monitoring was necessary. The exemption documentation shall be filed in Appendix N "Monitoring Records".

6. Visual Monitoring

Visual monitoring includes observations and inspections. Inspections of BMPs are required to identify and record BMPs that need maintenance to operate effectively, that have failed, or that could fail to operate as intended. Visual observations of the site are required to observe storm water drainage areas to identify any spills, leaks, or uncontrolled pollutant sources.

Table 6.1 identifies the required frequency of visual observations and inspections. Inspections and observations will be conducted at the locations identified in Section 6.3.

Table 6.1 Summary of Visual Monitoring and Inspections

Type of Inspection	Frequency
Routine Inspections	
BMP Inspections	Weekly[1]
BMP Inspections – Tracking Control	Daily
[add rows for other BMPs as needed]	[Enter Frequency]

Table 6.1 Summary of Visual Monitoring and Inspections

Type of Inspection	Frequency
Non-Stormwater Discharge Observations	Quarterly during daylight hours
Rain Event Triggered Inspections	
Site Inspections Prior to a Qualifying Event	Within 48 hours of a qualifying event [2]
BMP Inspections During an Extended Storm Event	Every 24-hour period of a rain event[3]
Site Inspections Following a Qualifying Event	Within 48 hours of a qualifying event[2]

[1] Most BMPs must be inspected weekly; those identified below must be inspected more frequently.

[2] Inspections are required during scheduled site operating hours.

[3] Inspections are required during scheduled site operating hours regardless of the amount of precipitation on any given day.

6.1. Routine Observations and Inspections

Routine site inspections and visual monitoring are necessary to ensure that the project is in compliance with the requirements of the Construction General Permit.

6.1.1. Routine BMP Inspections

Inspections of BMPs are conducted to identify and record:

- BMPs that are properly installed;
- BMPs that need maintenance to operate effectively;
- BMPs that have failed; or
- BMPs that could fail to operate as intended.

6.1.2. Non-Stormwater Discharge Observations

Each drainage area will be inspected for the presence of or indications of prior unauthorized and authorized non-stormwater discharges. Inspections will record:

- Presence or evidence of any non-stormwater discharge (authorized or unauthorized);
- Pollutant characteristics (floating and suspended material, sheen, discoloration, turbidity, odor, etc.); and
- Source of discharge.

6.2. Rain-Event Triggered Observations and Inspections

Visual observations of the site and inspections of BMPs are required prior to a qualifying rain event; following a qualifying rain event, and every 24-hour period during a qualifying rain event. Pre-rain inspections will be conducted after consulting NOAA and determining that a precipitation event with a 50 percent or greater probability of precipitation has been predicted on the Forecast Weather Table Interface.

6.2.1. Visual Observations Prior to a Forecasted Qualifying Rain Event

Within 48 hours prior to a qualifying event, a stormwater visual monitoring site inspection will include observations of the following locations:

- Stormwater drainage areas to identify any spills, leaks, or uncontrolled pollutant sources;
- BMPs to identify if they have been properly implemented;
- Any stormwater storage and containment areas to detect leaks and ensure maintenance of adequate freeboard.

BMP inspections and visual monitoring will be triggered by a NOAA prediction of rain in the project area.

6.2.2. BMP Inspections During an Extended Storm Event

During an extended rain event BMP inspection will be conducted to identify and record:

- BMPs that are properly installed;
- BMPs that need maintenance to operate effectively;
- BMPs that have failed; or
- BMPs that could fail to operate as intended.

If the construction site is not accessible during the rain event, the visual inspections shall be performed at all relevant outfalls, discharge points, downstream locations. The inspections should record any projected maintenance activities.

6.2.3. Visual Observations Following a Qualifying Rain Event

Within 48 hours following a qualifying rain event (0.5 inches of rain), a stormwater visual monitoring site inspection is required to observe:

- Stormwater drainage areas to identify any spills, leaks, or uncontrolled pollutant sources;
- BMPs to identify if they have been properly designed, implemented, and effective;
- Need for additional BMPs;
- Any stormwater storage and containment areas to detect leaks and ensure maintenance of adequate freeboard; and
- Discharge of stored or contained rain water.

6.3. Visual Monitoring Procedures

Visual monitoring shall be conducted by the QSP or staff trained by and under the supervision of the QSP.

The name(s) and contact number(s) of the site visual monitoring personnel are listed below and their training qualifications are provided in Appendix F.

Assigned inspector: NAME OF INSPECTOR Contact phone: TELEPHONE NUMBER

Alternate inspector: NAME OF INSPECTOR Contact phone: TELEPHONE NUMBER

Stormwater observations shall be documented on the *Visual Inspection Field Log Sheet* (see Appendix O "Example Forms"). BMP inspections shall be documented on the site-specific BMP inspection checklist. Any photographs used to document observations will be referenced on stormwater site inspection report and maintained with the Monitoring Records in Appendix N.

The QSP shall within [Enter Number] days of the inspection submit copies of the completed inspection report to [Name].

The completed reports will be kept in Appendix N "Monitoring Records".

6.4. Visual Monitoring Follow-Up and Reporting

Correction of deficiencies identified by the observations or inspections, including required repairs or maintenance of BMPs, shall be initiated and completed as soon as possible.

If identified deficiencies require design changes, including additional BMPs, the implementation of changes will be initiated within 72 hours of identification and be completed as soon as possible. When design changes to BMPs are required, the SWPPP shall be amended to reflect the changes.

Deficiencies identified in site inspection reports and correction of deficiencies will be tracked on the *Inspection Field Log Sheet* or *BMP Inspection Report* and shall be submitted to the QSP and shall be kept in Appendix N "Monitoring Records".

The QSP shall within [Enter Number] days of the inspection submit copies of the completed *Inspection Field Log Sheet* or *BMP Inspection Report* with the corrective actions to [Name].

Results of visual monitoring must be summarized and reported in the Annual Report.

6.5. Visual Monitoring Locations

The inspections and observations identified in Sections 6.1 and 6.2 will be conducted at the locations identified in this section.

BMP locations are shown on the Site Maps in SWPPP Appendix B.

There are 3 drainage area(s) on the project site and the contractor's yard, staging areas, and storage areas. Drainage area(s) are shown on the Site Maps in Appendix B and Table 6.2 identifies each drainage area by location.

Table 6.2 Site Drainage Areas

Location No.	Location
1	Fernangeles Park
2	Fernangeles Park Southeast Swale
3	Allegheny Street
4	Morehart Avenue

There are [Enter Number] stormwater storage or containment area(s) are on the project site. Stormwater storage or containment area(s) are shown on the Site Maps in Appendix B and Table 6.3 identifies each stormwater storage or containment area by location.

Table 6.3 Stormwater Storage and Containment Areas

Location No.	Location

There are [Enter Number] discharge location(s) on the project site. Site stormwater discharge location(s) are shown on the Site Maps in Appendix B and Table 6.4 identifies each stormwater discharge location.

Table 6.4 Site Stormwater Discharge Locations

Location No.	Location

7. Water Quality Sampling and Analysis

7.1. Sampling and Analysis Plan for Non-Visible Pollutants in Stormwater Runoff Discharges

This Sampling and Analysis Plan for Non-Visible Pollutants describes the sampling and analysis strategy and schedule for monitoring non-visible pollutants in stormwater runoff discharges from the project site.

Sampling for non-visible pollutants will be conducted when (1) a breach, leakage, malfunction, or spill is observed; and (2) the leak or spill has not been cleaned up prior to the rain event; and (3) there is the potential for discharge of non-visible pollutants to surface waters or drainage system.

The following construction materials, wastes, or activities, as identified in Section 2.6, are potential sources of non-visible pollutants to stormwater discharges from the project. Storage, use, and operational locations are shown on the Site Maps in Appendix B.

- [LIST or State NONE]
- [LIST or State NONE]

The following existing site features, as identified in Section 2.6, are potential sources of non-visible pollutants to stormwater discharges from the project. Locations of existing site features contaminated with non-visible pollutants are shown on the Site Maps in Appendix B.

- NONE

The following soil amendments have the potential to change the chemical properties, engineering properties, or erosion resistance of the soil and will be used on the project site. Locations of soil amendment application are shown on the Site Maps in Appendix B.

- NONE

The project has the potential to receive stormwater run-on from the following locations with the potential to contribute non-visible pollutants to stormwater discharges from the project. Locations of such run-on to the project site are shown on the Site Maps in Appendix B.

- Caltrans Stormwater Pump Station

7.1.1. Sampling Schedule

Samples for the potential non-visible pollutant(s) and a sufficiently large unaffected background sample shall be collected during the first two hours of discharge from rain events that result in a sufficient discharge for sample collection. Samples shall be collected during the site's scheduled hours and shall be collected regardless of the time of year and phase of the construction.

Collection of discharge samples for non-visible pollutant monitoring will be triggered when any of the following conditions are observed during site inspections conducted prior to or during a rain event.

- Materials or wastes containing potential non-visible pollutants are not stored under watertight conditions. Watertight conditions are defined as (1) storage in a watertight container, (2) storage under a watertight roof or within a building, or (3) protected by temporary cover and containment that prevents stormwater contact and runoff from the storage area.
- Materials or wastes containing potential non-visible pollutants are stored under watertight conditions, but (1) a breach, malfunction, leakage, or spill is observed, (2) the leak or spill is not cleaned up prior to the rain event, and (3) there is the potential for discharge of non-visible pollutants to surface waters or a storm drain system.
- A construction activity, including but not limited to those in Section 2.6, with the potential to contribute non-visible pollutants (1) was occurring during or within 24 hours prior to the rain event, (2) BMPs were observed to be breached, malfunctioning, or improperly implemented, and (3) there is the potential for discharge of non-visible pollutants to surface waters or a storm drain system.
- Soil amendments that have the potential to change the chemical properties, engineering properties, or erosion resistance of the soil have been applied, and there is the potential for discharge of non-visible pollutants to surface waters or a storm drain system.
- Stormwater runoff from an area contaminated by historical usage of the site has been observed to combine with stormwater runoff from the site, and there is the potential for discharge of non-visible pollutants to surface waters or a storm drain system.

7.1.2. Sampling Locations

Sampling locations are based on proximity to planned non-visible pollutant storage, occurrence or use, accessibility for sampling, and personnel safety. Planned non-visible pollutant sampling locations are shown on the Site Maps in Appendix B and include the locations identified in Tables 7.5 through 7.9.

Three sampling location(s) on the project site and the contractor's yard have been identified for the collection of samples of runoff from planned material and waste storage areas and areas where non-visible pollutant producing construction activities are planned.

Table 7.5 Non-Visible Pollutant Sample Locations – Project Site

Sample Location Number	Sample Location Description	Sample Location Latitude and Longitude
2	NE corner of Alleghney Street and Remick Avenue	N 1906096.97 E 6439663.04
3	Swale outlet on Wicks Avenue	N 1905806.95 E 6440353.45
4	NW corner of Wicks Avenue and Remick Ave	N 1905578.50 E 6440107.14

[Enter number of locations] sampling locations have been identified for the collection of samples of runoff from drainage areas where soil amendments will be applied that have the potential to affect water quality.

Table 7.6 Non-Visible Pollutant Sample Locations – Soil Amendment Areas

Sample Location Number	Sample Location	Sample Location Latitude and Longitude (Decimal Degrees)
[Enter Number]	[Enter Location]	[Enter Latitude] [Enter Longitude]
[Enter Number]	[Enter Location]	[Enter Latitude] [Enter Longitude]

[Enter number of locations] sampling locations have been identified for the collection of samples of runoff from drainage areas contaminated by historical usage of the site.

Table 7.7 Non-Visible Pollutant Sample Locations – Areas of Historical Contamination

Sample Location Number	Sample Location	Sample Location Latitude and Longitude (Decimal Degrees)
[Enter Number]	[Enter Location]	[Enter Latitude] [Enter Longitude]
[Enter Number]	[Enter Location]	[Enter Latitude] [Enter Longitude]

One sampling location(s) has been identified for the collection of an uncontaminated sample of runoff as a background sample for comparison with the samples being analyzed for non-visible pollutants. This location(s) was selected such that the sample will not have come in contact with the operations, activities, or areas identified in Section 7.1 or with disturbed soils areas.

Table 7.8 Non-Visible Pollutant Sample Locations – Background (Unaffected Sample)

Sample Location Number	Sample Location	Sample Location Latitude and Longitude (Decimal Degrees)
[Enter Number]	[Enter Location]	[Enter Latitude] [Enter Longitude]

One sampling location has been identified for the collection of samples of run-on to the project site. Run-on from these locations has the potential to combine with discharges from the site being sampled for non-visible pollutants. These samples are intended to identify potential sources of non-visible pollutants that originate off the project site.

Table 7.9 Non-Visible Pollutant Sample Locations – Site Run-On

Sample Location Number	Sample Location	Sample Location Latitude and Longitude (Decimal Degrees)
1	SE corner of Alleghany Street and Laurel Canyon Boulevard	N 1906449.70 E 6440066.63

If a stormwater visual monitoring site inspection conducted prior to or during a storm event identifies the presence of a material storage, waste storage, operations area with spills, or the potential for the discharge of non-visible pollutants to surface waters or a storm drain system that is at a location not listed above and has not been identified on the Site Maps, sampling locations will be selected by the QSP using the same rationale as that used to identify planned locations. Non-visible pollutant sampling locations shall be identified by the QSP on the pre-rain event inspection form and/or Rain Event Action Plan prior to a forecasted qualifying rain event.

7.1.3. Monitoring Preparation

Non-visible pollutant samples will be collected by:

Contractor ☐ Yes ☐ No

Consultant ☐ Yes ☐ No

Laboratory ☐ Yes ☐ No

Samples on the project site will be collected by the following contractor sampling personnel:

Name/Telephone Number:

Alternate(s)/Telephone Number:

An adequate stock of monitoring supplies and equipment for monitoring non-visible pollutants will be available on the project site prior to a sampling event. Monitoring supplies and equipment will be stored in a cool temperature environment that will not come into contact with rain or direct sunlight. Sampling personnel will be available to collect samples in accordance with the sampling schedule. Supplies maintained at the project site will include, but are not limited to, clean powder-free nitrile gloves, sample collection equipment, coolers, appropriate

number and volume of sample bottles, identification labels, re-sealable storage bags, paper towels, personal rain gear, ice, and *Effluent Sampling Field Log Sheets* and Chain of Custody (CoC) forms, which are provided in Appendix O "Example Forms".

Samples on the project site will be collected by the following [specify laboratory or environmental consultant]:

Company Name:	TBD
Street Address:	
City, State Zip:	
Telephone Number:	
Point of Contact:	
Name of Sampler(s):	
Name of Alternate(s):	

The QSP or his/her designee will contact [specify name of laboratory or environmental consultant] 24 hours prior to a predicted rain event or for an unpredicted event, as soon as a rain event begins if one of the triggering conditions is identified during an inspection to ensure that adequate sample collection personnel and supplies for monitoring non-visible pollutants are available and will be mobilized to collect samples on the project site in accordance with the sampling schedule.

7.1.4. Analytical Constituents

Table 7.10 lists the specific sources and types of potential non-visible pollutants on the project site and the water quality indicator constituent(s) for that pollutant.

Table 7.10 Potential Non-Visible Pollutants and Water Quality Indicator Constituents

Pollutant Source	Pollutant	Water Quality Indicator Constituent
Asphalt Work	VOC	VOC
Concrete Work	pH	pH
Landscape Work	Pesticides/Herbicides	Product dependent, see label and check with laboratory

7.1.5. Sample Collection

Samples of discharge shall be collected at the designated non-visible pollutant sampling locations shown on the Site Maps in Appendix B or in the locations determined by observed breaches, malfunctions, leakages, spills, operational areas, soil amendment application areas, and historical site usage areas that triggered the sampling event.

Grab samples shall be collected and preserved in accordance with the methods identified in the Table 7.11, "Sample Collection, Preservation and Analysis for Monitoring Non-Visible Pollutants" provided in Section 7.1.6. Only the QSP, or personnel trained in water quality sampling under the direction of the QSP shall collect samples.

Sample collection and handling requirements are described in Section 7.7.

7.1.6. Sample Analysis

Samples shall be analyzed using the analytical methods identified in the Table 7.11.

Samples will be analyzed by:

Laboratory Name:	TBD
Street Address:	
City, State Zip:	
Telephone Number:	
Point of Contact:	
ELAP Certification Number:	

Samples will be delivered to the laboratory by:

Driven by Contractor	☐ Yes	☐ No
Picked up by Laboratory Courier	☐ Yes	☐ No
Shipped	☐ Yes	☐ No

7.1.7. Data Evaluation and Reporting

The QSP shall complete an evaluation of the water quality sample analytical results.

Runoff/downgradient results shall be compared with the associated upgradient/unaffected results and any associated run-on results. Should the runoff/downgradient sample show an increased level of the tested analyte relative to the unaffected background sample, which cannot be explained by run-on results, the BMPs, site conditions, and surrounding influences shall be assessed to determine the probable cause for the increase.

As determined by the site and data evaluation, appropriate BMPs shall be repaired or modified to mitigate discharges of non-visible pollutant concentrations. Any revisions to the BMPs shall be recorded as an amendment to the SWPPP.

Table 7.11 Sample Collection, Preservation and Analysis for Monitoring Non-Visible Pollutants

Constituent	Analytical Method	Minimum Sample Volume	Sample Containers	Sample Preservation	Reporting Limit	Maximum Holding Time
Notes:						

The General Permit prohibits the storm water discharges that contain hazardous substances equal to or in excess of reportable quantities established in 40 C.F.R. §§ 117.3 and 302.4. The results of any non-stormwater discharge results that indicate the presence of a hazardous substance in excess of established reportable quantities shall be immediately reported to the Regional Water Board and other agencies as required by 40 C.F.R. §§ 117.3 and 302.4.

Results of non-visible pollutant monitoring shall be reported in the Annual Report.

7.2. Sampling and Analysis Plan for pH and Turbidity in Stormwater Runoff Discharges

Sampling and analysis of runoff for pH and turbidity is required for this project. This Sampling and Analysis Plan describes the strategy for monitoring turbidity and pH levels of stormwater runoff discharges from the project site and run-on that may contribute to an exceedance of a Numeric Action Level (NAL) or the exceedance of a Receiving Water Monitoring Trigger.

Samples for pH and turbidity will be collected at all discharge points where stormwater is discharged off-site.

7.2.1. Sampling Schedule

Stormwater runoff samples shall be collected for pH and turbidity from each day of a qualifying rain event that results in a discharge from the project site. A minimum of three samples will be collected per day of discharge during a qualifying event. Samples should be representative of the total discharge from the project each day of discharge during the qualifying event. Typically, representative samples will be spaced in time throughout the daily discharge event.

Stored or collected water from a qualifying storm event when discharged shall be tested for turbidity and pH. Stored or collected water from a qualifying event may be sampled at the point it is released from the storage or containment area or at the site discharge location.

Run-on samples shall be collected whenever the QSP identifies that run-on has the potential to contribute to an exceedance of a NAL or the exceedance of a Receiving Water Monitoring Trigger.

7.2.2. Sampling Locations

Sampling locations are based on the site runoff discharge locations and locations where run-on enters the site, accessibility for sampling, and personnel safety. Planned pH and turbidity sampling locations are shown on the Site Maps in Appendix B and include the locations identified in Table 7.13 and Table 7-14.

[Enter Number] sampling location(s) on the project site and the contractor's yard have been identified for the collection of runoff samples. Table 7.12 also provides an estimate of the site's area that drains to each location.

Table 7.12 Turbidity and pH Runoff Sample Locations

Sample Location Number	Sample Location	Estimate of Site [Factor] (%)
3	Swale outlet on Wicks Avenue	25
4	NW corner of Wicks Avenue and Remick Ave	75

[Enter number of locations] sampling locations have been identified for the collection of run-on samples where the run-on has the potential to contribute to an exceedance of an NAL or a Receiving Water Monitoring Trigger. Table 7.13 identifies the run-on sample locations.

Table 7.13 Turbidity and pH Run-On Sample Locations

Sample Location Number	Sample Location	Sample Location Latitude and Longitude (Decimal Degrees)
[Enter Number]	[Enter Location]	[Enter Latitude] [Enter Longitude]
[Enter Number]	[Enter Location]	[Enter Latitude] [Enter Longitude]

The project does not receive run-on with the potential to exceed NALs or Receiving Water Monitoring Triggers.

7.2.3. Monitoring Preparation

Turbidity and pH samples will be collected and analyzed by:

Contractor ☐ Yes ☐ No

Consultant ☐ Yes ☐ No

Laboratory ☐ Yes ☐ No

Samples on the project site will be collected by the following contractor sampling personnel:

Name/Telephone Number:

Alternate(s)/Telephone Number:

An adequate stock of monitoring supplies and equipment for monitoring turbidity and will be available on the project site prior to a sampling event. Monitoring supplies and equipment will be stored in a cool temperature environment that will not come into contact with rain or direct sunlight. Sampling personnel will be available to collect samples in accordance with the sampling schedule. Supplies maintained at the project site will include, but are not limited to, field meters, extra batteries, clean powder-free nitrile gloves, sample collection equipment, appropriate sample containers, paper towels, personal rain gear, and *Effluent Sampling Field Log Sheets* and CoC forms provided in Appendix O "Example Forms".

The contractor will obtain and maintain the field-testing instruments, as identified in Section 7.2.6, for analyzing samples in the field by contractor sampling personnel.

Samples on the project site will be collected by the following [specify laboratory or environmental consultant]:

Company Name:

Street Address:

City, State, Zip:

Telephone Number:

Point of Contact:

Name of Sampler(s):

Name of Alternate(s):

The QSP or his/her designee will contact [specify name of laboratory or environmental consultant] 24 hours prior to a predicted rain event or for an unpredicted event, as soon as a rain event begins to ensure that adequate sample collection personnel, supplies for monitoring pH and turbidity are available and will be mobilized to collect samples on the project site in accordance with the sampling schedule.

7.2.4. Field Parameters

Samples shall be analyzed for the constituents indicated in the Table 7.14.

Table 7.14 Sample Collection and Analysis for Monitoring Turbidity and pH

Parameter	Test Method	Minimum Sample Volume [1]	Sample Collection Container Type	Detection Limit (minimum)
Turbidity	Field meter/probe with calibrated portable instrument	500 mL	Polypropylene or glass (Do not collect in meter sample cells)	1 NTU
pH	Field meter/probe with calibrated portable instrument or calibrated pH test kit	100 mL	Polypropylene	0.2 pH units

Notes: [1] Minimum sample volume recommended. Specific volume requirements will vary by instrument; check instrument manufacturer instructions.

L – Liter
mL – Milliliter
NTU – Nephelometric Turbidity Unit

7.2.5. Sample Collection

Samples of discharge shall be collected at the designated runoff and run-on sampling locations shown on the Site Maps in Appendix B. Run-on samples shall be collected within close proximity of the point of run-on to the project.

Only personnel trained in water quality sampling and field measurements working under the direction of the QSP shall collect samples.

Sample collection and handling requirements are described in Section 7.7.

7.2.6. Field Measurements

Samples collected for field analysis, collection, analysis and equipment calibration shall be in accordance with the field instrument manufacturer's specifications.

Immediately following collection, samples for field analysis shall be tested in accordance with the field instrument manufacturer's instructions and results recorded on the *Effluent Sampling Field Log Sheet*.

The field instrument(s) listed in Table 7.15 will be used to analyze the following constituents:

Table 7.15 Field Instruments

Field Instrument (Manufacturer and Model)	Constituent
	pH
	Turbidity

The manufacturers' instructions are included in Appendix P "Field Meter Instructions". Field sampling staff shall review the instructions prior to each sampling event and follow the instructions in completing measurement of the samples.

- The instrument(s) shall be maintained in accordance with manufacturer's instructions.
- The instrument(s) shall be calibrated before each sampling and analysis event.
- Maintenance and calibration records shall be maintained with the SWPPP.

The QSP may authorize alternate equipment provided that the equipment meets the Construction General Permit's requirements and the manufacturers' instructions for calibration and use are added to Appendix P "Field Meter Instructions".

7.2.7. Data Evaluation and Reporting

Immediately upon completing the measurements for the sampling event, provide the *Effluent Sampling Field Log Sheets* to the QSP for evaluation.

Numeric Action Levels

This project is subject to NALs for pH and turbidity (Table 7.16). Compliance with the NAL for pH and turbidity is based on a weighted daily average. Upon receiving the field log sheets, the QSP shall immediately calculate the weighted arithmetic average of the turbidity samples, and the weighted logarithmic average of the pH samples to determine if the NALs, shown in the table below, have been exceeded.

Table 7.16 Numeric Action Levels

Parameter	Unit	Daily Average
pH	pH units	Lower NAL = 6.5 Upper NAL = 8.5
Turbidity	NTU	250 NTU

The QSP shall within [Enter Number] days of the sample collection submit copies of the completed *Effluent Sampling Field Log Sheets* to LADWP representative.

In the event that the pH or turbidity NAL is exceeded, the QSP shall immediately notify LADWP and investigate the cause of the exceedance and identify corrective actions.

Exceedances of NALs shall be electronically reported to the State Water Board by LADWP through the SMARTs system within 10 days of the conclusion of the storm event. If requested by the Regional Board, a NAL Exceedance report will be submitted. The NAL Exceedance Report must contain the following information:

- Analytical method(s), method reporting unit(s), and MDL(s) of each parameter;
- Date, place, time of sampling, visual observation, and/or measurements, including precipitation; and
- Description of the current BMPs associated with the sample that exceeded the NAL and the proposed corrective actions taken.

Receiving Water Monitoring Triggers

This project is not subject to Receiving Water Monitoring Triggers because it does not have a direct discharge to the receiving water.

7.3. Sampling and Analysis Plan for pH, Turbidity, and SSC in Receiving Water

This project is not subject to Receiving Water Monitoring.

7.4. Sampling and Analysis Plan for Non-Stormwater Discharges

The Regional Water Board has not specified monitoring for additional pollutants.

7.5. Training of Sampling Personnel

Sampling personnel shall be trained to collect, maintain, and ship samples in accordance with the Surface Water Ambient Monitoring program (SWAMP) 2008 Quality Assurance Program Plan (QAPrP). Training records of designated contractor sampling personnel are provided in Appendix F.

The stormwater sampler(s) and alternate(s) have received the following stormwater sampling training:

Name	Training
	INSERT LIST OF TRAINING COURSES
	INSERT LIST OF TRAINING COURSES

The stormwater sampler(s) and alternates have the following stormwater sampling experience:

Name	Experience
	INSERT LIST OF STORMWATER SAMPLING EXPERIENCE
	INSERT LIST OF STORMWATER SAMPLING EXPERIENCE

7.6. Sample Collection and Handling

7.6.1. Sample Collection

Samples shall be collected at the designated sampling locations shown on the Site Maps and listed in the preceding sections. Samples shall be collected, maintained and shipped in accordance with the SWAMP 2008 Quality Assurance Program Plan (QAPrP).

Grab samples shall be collected and preserved in accordance with the methods identified in preceding sections.

To maintain sample integrity and prevent cross-contamination, sample collection personnel shall follow the protocols below.

- Collect samples (for laboratory analysis) only in analytical laboratory-provided sample containers;
- Wear clean, powder-free nitrile gloves when collecting samples;
- Change gloves whenever something not known to be clean has been touched;
- Change gloves between sites;
- Decontaminate all equipment (e.g., bucket, tubing) prior to sample collection using a trisodium phosphate water wash, distilled water rinse, and final rinse with distilled water. (Dispose of wash and rinse water appropriately [i.e., do not discharge to storm drain or receiving water]). Do not decontaminate laboratory provided sample containers;
- Do not smoke during sampling events;
- Never sample near a running vehicle;
- Do not park vehicles in the immediate sample collection area (even non-running vehicles);
- Do not eat or drink during sample collection; and
- Do not breathe, sneeze, or cough in the direction of an open sample container.

The most important aspect of grab sampling is to collect a sample that represents the entire runoff stream. Typically, samples are collected by dipping the collection container in the runoff flow paths and streams as noted below.

i. For small streams and flow paths, simply dip the bottle facing upstream until full.
ii. For larger stream that can be safely accessed, collect a sample in the middle of the flow stream by directly dipping the mouth of the bottle. Once again making sure that the opening of the bottle is facing upstream as to avoid any contamination by the sampler.
iii. For larger streams that cannot be safely waded, pole-samplers may be needed to safely access the representative flow.
iv. Avoid collecting samples from ponded, sluggish or stagnant water.
v. Avoid collecting samples directly downstream from a bridge as the samples can be affected by the bridge structure or runoff from the road surface.

Note, that depending upon the specific analytical test, some containers may contain preservatives. These containers should **never** be dipped into the stream but filled indirectly from the collection container.

SSC samples should be taken as a normal grab sample, where the bottle is submerged facing upstream and filled. SSC samples need to be collected in a separate bottle because the analysis requires the entire volume of the bottle. Do not collect in a larger container and partition into the laboratory sample container.

7.6.2. Sample Handling

Turbidity and pH measurements must be conducted immediately. Do not store turbidity or pH samples for later measurement.

Samples for laboratory analysis must be handled as follows. Immediately following sample collection:

- Cap sample containers;
- Complete sample container labels;
- Sealed containers in a re-sealable storage bag;
- Place sample containers into an ice-chilled cooler;

- Document sample information on the *Effluent Sampling Field Log Sheet*; and
- Complete the CoC.

All samples for laboratory analysis must be maintained between 0-6 degrees Celsius during delivery to the laboratory. Samples must be kept on ice, or refrigerated, from sample collection through delivery to the laboratory. Place samples to be shipped inside coolers with ice. Make sure the sample bottles are well packaged to prevent breakage and secure cooler lids with packaging tape.

Ship samples that will be laboratory analyzed to the analytical laboratory right away. Hold times are measured from the time the sample is collected to the time the sample is analyzed. The General Permit requires that samples be received by the analytical laboratory within 48 hours of the physical sampling (unless required sooner by the analytical laboratory).

Laboratory Name:	
Address:	
City, State Zip:	
Telephone Number:	
Point of Contact:	

7.6.3. Sample Documentation Procedures

All original data documented on sample bottle identification labels, *Effluent Sampling Field Log Sheet*, and CoCs shall be recorded using waterproof ink. These shall be considered accountable documents. If an error is made on an accountable document, the individual shall make corrections by lining through the error and entering the correct information. The erroneous information shall not be obliterated. All corrections shall be initialed and dated.

Duplicate samples shall be identified consistent with the numbering system for other samples to prevent the laboratory from identifying duplicate samples. Duplicate samples shall be identified in the Effluent Sampling Field Log Sheet.

Sample documentation procedures include the following:

Sample Bottle Identification Labels: Sampling personnel shall attach an identification label to each sample bottle. Sample identification shall uniquely identify each sample location.

Field Log Sheets: Sampling personnel shall complete the *Effluent Sampling Field Log Sheet* and *Receiving Water Sampling Field Log Sheet* for each sampling event, as appropriate.

Chain of Custody: Sampling personnel shall complete the CoC for each sampling event for which samples are collected for laboratory analysis. The sampler will sign the CoC when the sample(s) is turned over to the testing laboratory or courier.

8. Active Treatment System Monitoring

An Active Treatment System (ATS) will be deployed on the site?

☐ Yes ☒ No

This project does not require a project specific Sampling and Analysis Plan for an ATS because deployment of an ATS is not planned.

9. Bioassessment Monitoring

This project is not subject to bioassessment monitoring because it is not a Risk Level 3 project.

This project is Risk Level 3	☐ Yes	☒ No
This project will disturb more than 30 acres	☐ Yes	☒ No
This project directly discharges runoff to a freshwater wadable stream (or streams) that is either:	☐ Yes	☒ No
a) Listed by the State Water Board or EPA as impaired due to sediment or is tributary to any downstream waterbody that is listed for sediment impairments	☐	
or		
b) Has the beneficial uses of SPAWN and COLD and MIGRATORY	☐	

This project is not subject to bioassessment monitoring because it does not meet both of the permit specified trigger requirements.

10. Watershed Monitoring Option

This project is not participating in a watershed monitoring option.

11. Quality Assurance and Quality Control

An effective Quality Assurance and Quality Control (QA/QC) plan shall be implemented as part of the CSMP to ensure that analytical data can be used with confidence. QA/QC procedures to be initiated include the following:

- Field logs;
- Clean sampling techniques;
- CoCs;
- QA/QC Samples; and
- Data verification.

Each of these procedures is discussed in more detail in the following sections.

11.1. Field Logs

The purpose of field logs is to record sampling information and field observations during monitoring that may explain any uncharacteristic analytical results. Sampling information to be included in the field log include the date and time of water quality sample collection, sampling personnel, sample container identification numbers, and types of samples that were collected. Field observations should be noted in the field log for any abnormalities at the sampling location (color, odor, BMPs, etc.). Field measurements for pH and turbidity should also be recorded in the field log. A Visual Inspection Field Log and an Effluent Sampling Field Log Sheet are included in Appendix O “Example Forms”.

11.2. Clean Sampling Techniques

Clean sampling techniques involve the use of certified clean containers for sample collection and clean powder-free nitrile gloves during sample collection and handling. As discussed in Section 7.7, adoption of a clean sampling approach will minimize the chance of field contamination and questionable data results.

11.3. Chain of Custody

The sample CoC is an important documentation step that tracks samples from collection through analysis to ensure the validity of the sample. Sample CoC procedures include the following:

- Proper labeling of samples;
- Use of CoC forms for all samples; and
- Prompt sample delivery to the analytical laboratory.

Analytical laboratories usually provide CoC forms to be filled out for sample containers. An example CoC is included in Appendix O "Example Forms".

11.4. QA/QC Samples

QA/QC samples provide an indication of the accuracy and precision of the sample collection; sample handling; field measurements; and analytical laboratory methods. The following types of QA/QC will be conducted for this project:

☒ Field Duplicates at a frequency of 5 percent or 1 duplicate minimum per sampling event (Required for all sampling plans with field measurements or laboratory analysis)

☐ Equipment Blanks at a frequency of 1 minimum per sampling event
(Only needed if equipment used to collect samples could add the pollutants to sample)

☐ Field Blanks at a frequency of 1 minimum per sampling event (Only required if sampling method calls for field blanks)

☐ Travel Blanks at a frequency of 1 minimum per sampling event
(Required for sampling plans that include VOC laboratory analysis)

11.4.1. Field Duplicates

Field duplicates provide verification of laboratory or field analysis and sample collection. Duplicate samples shall be collected, handled, and analyzed using the same protocols as primary samples. The sample location where field duplicates are collected shall be randomly selected from the discharge locations. Duplicate samples shall be collected immediately after the primary sample has been collected. Duplicate samples must be collected in the same manner and as close in time as possible to the original sample. Duplicate samples shall not influence any evaluations or conclusion.

11.4.2. Equipment Blanks

Equipment blanks provide verification that equipment has not introduced a pollutant into the sample. Equipment blanks are typically collected when:

- New equipment is used;
- Equipment that has been cleaned after use at a contaminated site;
- Equipment that is not dedicated for surface water sampling is used; or
- Whenever a new lot of filters is used when sampling metals.

11.4.3. Field Blanks

Field blanks assess potential sample contamination levels that occur during field sampling activities. De-ionized water field blanks are taken to the field, transferred to the appropriate container, and treated the same as the corresponding sample type during the course of a sampling event.

11.4.4. Travel Blanks

Travel blanks assess the potential for cross-contamination of volatile constituents between sample containers during shipment from the field to the laboratory. De-ionized water blanks are taken along for the trip and held unopened in the same cooler with the VOC samples.

11.5. Data Verification

After results are received from the analytical laboratory, the QSP shall verify the data to ensure that it is complete, accurate, and the appropriate QA/QC requirements were met. Data must be verified as soon as the data reports are received. Data verification shall include:

- Check the CoC and laboratory reports.
  Make sure all requested analyses were performed and all samples are accounted for in the reports.
- Check laboratory reports to make sure hold times were met and that the reporting levels meet or are lower than the reporting levels agreed to in the contract.
- Check data for outlier values and follow up with the laboratory.
  Occasionally typographical errors, unit reporting errors, or incomplete results are reported and should be easily detected. These errors need to be identified, clarified, and corrected quickly by the laboratory. The QSP should especially note data that is an order of magnitude or more different than similar locations or is inconsistent with previous data from the same location.
- Check laboratory QA/QC results.
  EPA establishes QA/QC checks and acceptable criteria for laboratory analyses. These data are typically reported along with the sample results. The QSP shall evaluate the reported QA/QC data to check for contamination (method, field, and equipment blanks), precision (laboratory matrix spike duplicates), and accuracy (matrix spikes and laboratory control samples). When QA/QC checks are outside acceptable ranges, the laboratory must flag the data, and usually provides an explanation of the potential impact to the sample results.
- Check the data set for outlier values and, accordingly, confirm results and re-analyze samples where appropriate.
  Sample re-analysis should only be undertaken when it appears that some part of the QA/QC resulted in a value out of the accepted range. Sample results may not be discounted unless the analytical laboratory identifies the required QA/QC criteria were not met and confirms this in writing.

Field data including inspections and observations must be verified as soon as the field logs are received, typically at the end of the sampling event. Field data verification shall include:

- Check field logs to make sure all required measurements were completed and appropriately documented;
- Check reported values that appear out of the typical range or inconsistent;
  Follow-up immediately to identify potential reporting or equipment problems, if appropriate, recalibrate equipment after sampling;
- Verify equipment calibrations;

- Review observations noted on the field logs; and
- Review notations of any errors and actions taken to correct the equipment or recording errors.

12. Records Retention

All records of stormwater monitoring information and copies of reports (including Annual Reports) must be retained for a period of at least three years from date of submittal or longer if required by the Regional Water Board.

Results of visual monitoring, field measurements, and laboratory analyses must be kept in the SWPPP along with CoCs, and other documentation related to the monitoring.

Records are to be kept onsite while construction is ongoing. Records to be retained include:

- The date, place, and time of inspections, sampling, visual observations, and/or measurements, including precipitation;
- The individual(s) who performed the inspections, sampling, visual observation, and/or field measurements;
- The date and approximate time of field measurements and laboratory analyses;
- The individual(s) who performed the laboratory analyses;
- A summary of all analytical results, the method detection limits and reporting limits, and the analytical techniques or methods used;
- Rain gauge readings from site inspections;
- QA/QC records and results;
- Calibration records;
- Visual observation and sample collection exemption records;
- The records of any corrective actions and follow-up activities that resulted from analytical results, visual observations, or inspections; and
    - NAL Exceedance Reports.

Appendix E

Rain Event Action Plan (REAP)
File previous versions in the Project Manager's office.

Rain Event Action Plan (REAP)

Date:		**WDID Number:**	
Date Rain Predicted:		**Predicted % chance of rain:**	
NOAA Forecast Attached:		**Date of NOAA Forecast:**	

Site Information:

_____

Site Name, City and Zip Code Project Risk Level: ☐ Risk Level 2 ☐ Risk Level 3

Site Stormwater Manager Information:

_____

Name, Company, Emergency Phone Number (24/7)

Erosion and Sediment Control Contractor – Labor force contracted for the site:

_____

Name, Company, Emergency Phone Number (24/7)

Stormwater Sampling Agent:

_____

Name, Company, Emergency Phone Number (24/7)

Current Phase of Construction

(*Check ALL the boxes below that apply to the site).*

☐ Grading and Land Development ☐ Vertical Construction ☐ Inactive Site

☐ Streets and Utilities ☐ Final Landscaping/Site Stabilization ☐ Other:

Activities Associated with Current Phase(s)

Check ALL the boxes below that apply to the site (some apply to all Phases).

Grading and Land Development:

☐ Demolition	☐ Vegetation Removal	☐ Vegetation Salvage-Harvest
☐ Rough Grade	☐ Finish Grade	☐ Blasting
☐ Soil Amendment(s):	☐ Excavation (_____ ft)	☐ Soils Testing
☐ Rock Crushing	☐ Erosion and Sediment Control	☐ Surveying
☐ Equip. Maintenance/Fueling	☐ Material Delivery and Storage	☐ Other:

Streets and Utilities:

☐ Finish Grade	☐ Utility Install: water-sewer-gas	☐ Paving Operations
☐ Equip. Maintenance/Fueling	☐ Storm Drain Installation	☐ Material Delivery & Storage
☐ Curb and Gutter/Concrete Pour	☐ Masonry	☐ Trenching:
☐ Other:	☐ Other:	☐ Other:

Vertical Construction:

☐ Framing	☐ Carpentry	☐ Concrete/Forms/Foundation
☐ Masonry	☐ Electrical	☐ Painting
☐ Drywall/Interior Walls	☐ Plumbing	☐ Stucco
☐ Equip. Maintenance/Fueling	☐ HVAC	☐ Tile
☐ Exterior Siding	☐ Insulation	☐ Landscaping & Irrigation
☐ Flooring	☐ Roofing	☐ Other:

Final Landscaping & Site Stabilization:

☐ Stabilization	☐ Vegetation Establishment	☐ E&S Control BMP Removal
☐ Finish Grade	☐ Storage Yard/ Material Removal	☐ Landscape Installation
☐ Painting and Touch-Up	☐ Irrigation System Testing	☐ Removal of Temporary BMPs and Construction Waste from Site
☐ Drainage Inlet Stencils	☐ Inlet Filtration	☐ Post-Construction Runoff Mitigation BMP Installation
☐ Other:	☐ Other:	☐ Other:

Inactive Construction Site:

☐ E & S Control Installation	☐ Routine Site Inspection	☐ Trash Removal
☐ E & S Control Maintenance	☐ Street Sweeping	☐ Other:

REAP (Continued)

Active on Site during Current Phase(s)

(Check ALL the boxes below that apply to your site)

☐ Storm Drain Improvement	☐ Grading Contractor	☐ Surveyor- Soil Technician
☐ Street Improvements	☐ Water Pipe Installation	☐ Sanitary Station Provider
☐ Material Delivery	☐ Sewer Pipe Installation	☐ Electrical
☐ Trenching	☐ Gas Pipe Installation	☐ Carpentry
☐ Concrete Pouring	☐ Electrical Installation	☐ Plumbing
☐ Foundation	☐ Communication Installation	☐ Masonry
☐ Demolition	☐ Erosion and Sediment Control	☐ Water, Sewer, Electric Utilities
☐ Material Delivery	☐ Equipment Fueling/Maintenance	☐ Rock Products
☐ Tile Work- Flooring	☐ Irrigation System Installation	☐ Painters
☐ Drywall	☐ Roofers	☐ Carpenters
☐ HVAC installers	☐ Stucco	☐ Pest Control: e.g., Termites
☐ Exterior Siding	☐ Steel Systems	☐ Water Feature Installation
☐ Insulation	☐ Landscapers	☐ Utility Line Testers
☐ Fireproofing	☐ Riggers	☐ Other:

Consider breaking out trades to those doing interior work versus outdoor/exterior work

Trade Contractor Information Provided

(Check ALL the boxes below that apply to the site.)

☐ Educational Material Handout	☐ Tailgate Meetings	☐ Training Workshop
☐ Contractual Language	☐ Fines and Penalties	☐ Signage
☐ Site superintendents notified of forecasted rain via email, phone call or voicemail	☐ Other:	☐ Other:

Predicted Rain Event-Triggered Actions

Below is a list of suggested actions and items to review for this project. Each active Trade should check all material storage areas, stockpiles, waste management areas, vehicle and equipment storage and maintenance, areas of active soil disturbance, and areas of active work to ensure the proper implementation of BMPs. Project-wide BMPs should be checked and cross-referenced to the BMP progress map.

Trade or Activity	Suggested action(s) to perform / item(s) to review prior to rain event
☐ Information & Scheduling	☐ Inform trade supervisors of predicted rain
	☐ Check scheduled activities and reschedule as needed
	☐ Alert erosion/sediment control provider
	☐ Alert sample collection contractor (if applicable)
	☐ Schedule staff for extended rain inspections
	☐ Check Erosion and Sediment Control (ESC) material stock
	☐ Review BMP progress map
	☐ Hours of operation verified for upcoming storm event
	☐ Other:
☐ Material storage areas	☐ Material under cover or in sheds (e.g., treated woods and metals)
	☐ Perimeter control around stockpiles
	☐ Stockpiles covered (as applicable)
	☐ Other:
☐ Waste management areas	☐ Dumpsters closed and drain holes plugged
	☐ Recycling bins covered
	☐ Portable restrooms have secondary containment and protected from tipping over

REAP (Continued)

Trade or Activity, Continued	Suggested action(s) to perform / item(s) to review prior to rain event
☐ Trade operations	☐ Exterior operations shut down for event (e.g., no concrete pours or paving)
	☐ Soil treatments (e.g., fertilizer, soil binder) ceased within 24 hours of event
	☐ Materials and equipment (e.g., tools) properly stored and covered
	☐ Waste and debris disposed in covered dumpsters or removed from site
	☐ Trenches and excavations protected
	☐ Perimeter controls around disturbed areas
	☐ Fueling and repair areas covered and bermed
	☐ Other:
☐ Site ESC BMPs	☐ Adequate capacity in sediment basins and traps
	☐ Site perimeter and slope controls in place
	☐ Catch basin and drop inlet protection in place and cleaned
	☐ Temporary erosion controls deployed
	☐ Roads swept; site ingress and egress points stabilized
	☐ Temporary perimeter controls deployed around disturbed areas and stockpiles
	☐ Other:
☐ Concrete rinse out area	☐ Adequate capacity for rain
	☐ Wash-out bins covered
	☐ Other:
☐ Spill and drips	☐ All incident spills and drips cleaned, including paint, stucco, fuel, and oil cleaned
	☐ Drip pans emptied
	☐ Other:
☐ Other / Discussion / Diagrams	☐ _____
	☐ _____
	☐ _____

I certify under penalty of law that this Rain Event Action Plan (REAP) will be performed in accordance with the General Permit by me or under my direction or supervision in accordance with a system designed to assure that qualified personnel properly gathered and evaluated the information submitted. Based on my inquiry of the persons who manage the system, or those persons directly responsible for gathering the information, the information submitted is, to the best of my knowledge and belief, true, accurate, and complete. I am aware that there are significant penalties for submitting false information, including the possibility of fine and imprisonment for knowing violations.

_____ Date: _____

Qualified SWPPP Practitioner

Appendix F

Training Documentation Forms and Records

Training Records

Training Date: _____		
Trainer: _____		
Topics Covered: **(Check applicable topics)**		
SWPPP **BMPs** _____	**BMP** **Maintenance:** _____	**Non-Storm Water** **Discharges:** _____
Other:		

Name	*Company*	*Telephone*	*SWPPP Duties*

Appendix G

Change of Information Form

Change of Information Form and Amendments Certification

Use additional sheets if necessary.

Section Number/ Page Number	Summary of Revisions	Effective Date of Amendment	Signature, Name, Title, Phone

Appendix H
Weather Information Guide

The General Permit requires inspections of the construction site prior to anticipated storms, during prolonged storms, and after actual storm events. The following sources may be used to obtain weather forecasts:

National Weather Service:

http://www.nws.noaa.gov/

Los Angeles Department of Water and Power
Rain Gauge Reading for
Fernangeles Stormwater Capture Project

Month of:	Time	Rain Gauge Reading (inches)	Initials
1			
2			
3			
4			
5			
6			
7			
8			
9			
10			
11			
12			
13			
14			
15			
16			
17			
18			
19			
20			
21			
22			
23			
24			
25			
26			
27			
28			
29			
30			
31			

Appendix I

LRP Authorization & Certification

Appendix J

Annual Certification Statement

Fernangeles Park Stormwater Capture Project
Annual Certification Statement

"I certify under penalty of law that this document and all attachments were prepared under my direction or supervision in accordance with a system designed to assure that qualified personnel properly gather and evaluate the information submitted. Based on my inquiry of the person or persons who manage the system, or those persons directly responsible for gathering the information, to the best of my knowledge and belief, the information submitted is, true, accurate, and complete. I am aware that there are significant penalties for submitting false information including the possibility of fine and imprisonment for knowing violations."

Annual Re-Certification:

Print Name: _____ **Title:** _____

Signature: _____ **Date:** _____

Telephone Number: _____

Appendix K

Risk Determination

	A	B	C
1	**Sediment Risk Factor Worksheet**		**Entry**
2	**A) R Factor**		
3	Analyses of data indicated that when factors other than rainfall are held constant, soil loss is directly proportional to a rainfall factor composed of total storm kinetic energy (E) times the maximum 30-min intensity (I30) (Wischmeier and Smith, 1958). The numerical value of R is the average annual sum of EI30 for storm events during a rainfall record of at least 22 years. "Isoerodent" maps were developed based on R values calculated for more than 1000 locations in the Western U.S. Refer to the link below to determine the R factor for the project site.		
4	http://cfpub.epa.gov/npdes/stormwater/LEW/lewCalculator.cfm		
5	**R Factor Value**		56
6	**B) K Factor (weighted average, by area, for all site soils)**		
7	The soil-erodibility factor K represents: (1) susceptibility of soil or surface material to erosion, (2) transportability of the sediment, and (3) the amount and rate of runoff given a particular rainfall input, as measured under a standard condition. Fine-textured soils that are high in clay have low K values (about 0.05 to 0.15) because the particles are resistant to detachment. Coarse-textured soils, such as sandy soils, also have low K values (about 0.05 to 0.2) because of high infiltration resulting in low runoff even though these particles are easily detached. Medium-textured soils, such as a silt loam, have moderate K values (about 0.25 to 0.45) because they are moderately susceptible to particle detachment and they produce runoff at moderate rates. Soils having a high silt content are especially susceptible to erosion and have high K values, which can exceed 0.45 and can be as large as 0.65. Silt-size particles are easily detached and tend to crust, producing high rates and large volumes of runoff. Use Site-specific data must be submitted.		
8	Site-specific K factor guidance		
9	**K Factor Value**		0.12
10	**C) LS Factor (weighted average, by area, for all slopes)**		
11	The effect of topography on erosion is accounted for by the LS factor, which combines the effects of a hillslope-length factor, L, and a hillslope-gradient factor, S. Generally speaking, as hillslope length and/or hillslope gradient increase, soil loss increases. As hillslope length increases, total soil loss and soil loss per unit area increase due to the progressive accumulation of runoff in the downslope direction. As the hillslope gradient increases, the velocity and erosivity of runoff increases. Use the LS table located in separate tab of this spreadsheet to determine LS factors. Estimate the weighted LS for the site prior to construction.		
12	LS Table		
13	**LS Factor Value**		0.27
14			
15	**Watershed Erosion Estimate (=RxKxLS) in tons/acre**		1.8144
16	**Site Sediment Risk Factor**		**Low**
17	Low Sediment Risk: < 15 tons/acre		
18	Medium Sediment Risk: >=15 and <75 tons/acre		
19	High Sediment Risk: >= 75 tons/acre		
20			

Receiving Water (RW) Risk Factor Worksheet	Entry	Score
A. Watershed Characteristics	**yes/no**	
A.1. Does the disturbed area discharge (either directly or indirectly) to a **303(d)-listed waterbody impaired by sediment** (For help with impaired waterbodies please visit the link below) or has a **USEPA approved TMDL implementation plan for sediment**?: http://www.waterboards.ca.gov/water_issues/programs/tmdl/integrated2010.shtml	**no**	**Low**
OR		
A.2. Does the disturbed area discharge to a waterbody with designated beneficial uses of SPAWN & COLD & MIGRATORY? (For help please review the appropriate Regional Board Basin Plan) http://www.waterboards.ca.gov/waterboards_map.shtml		
Region 1 Basin Plan Region 2 Basin Plan Region 3 Basin Plan Region 4 Basin Plan Region 5 Basin Plan Region 6 Basin Plan Region 7 Basin Plan Region 8 Basin Plan Region 9 Basin Plan		

Combined Risk Level Matrix

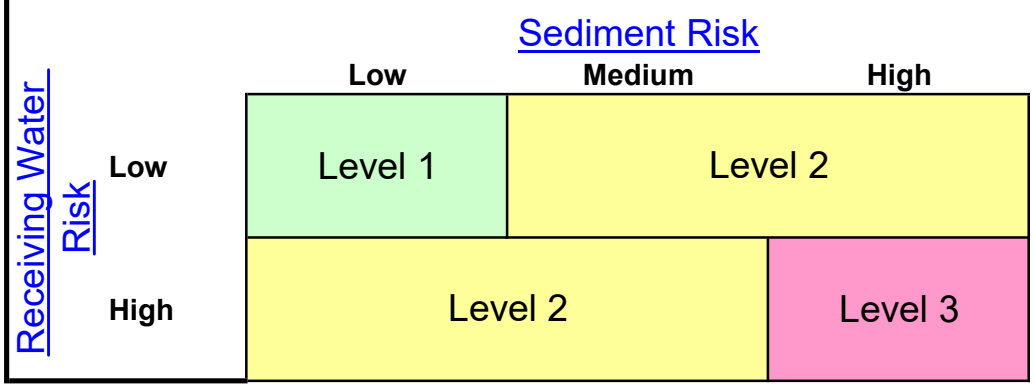

Project Sediment Risk:	**Low**
Project RW Risk:	**Low**
Project Combined Risk:	**Level 1**

Soil Erodibility Factor (K)

The K factor can be determined by using the nomograph method, which requires that a particle size analysis (ASTM D-422) be done to determine the percentages of sand, very fine sand, silt and clay. Use the figure below to determine appropriate K value.

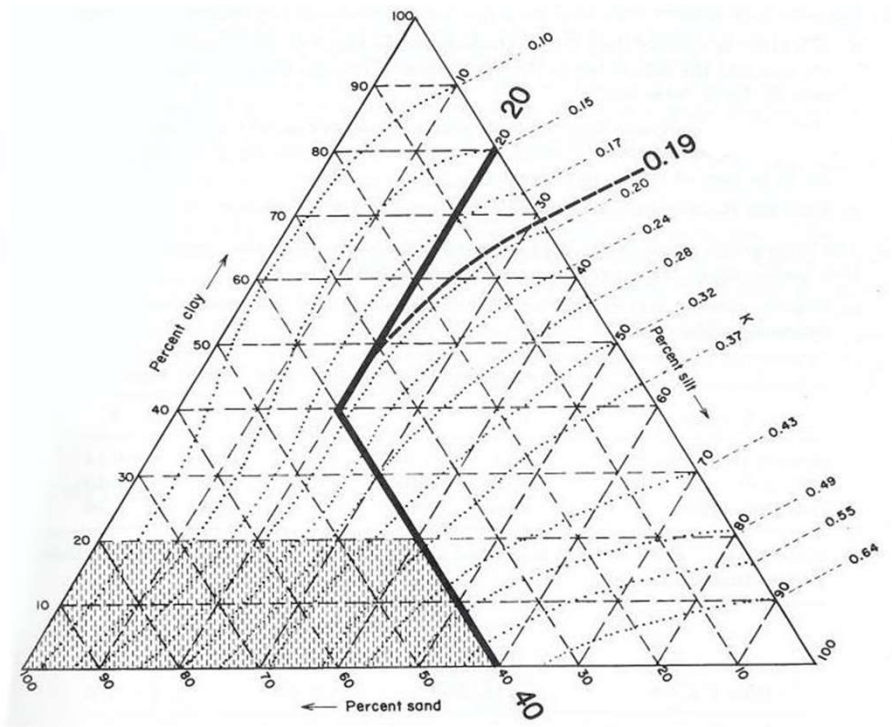

Erickson triangular nomograph used to estimate soil erodibility (K) factor.
The figure above is the USDA nomograph used to determine the K factor for a soil, based on its texture (% silt plus very fine sand, % sand, % organic matter, soil structure, and permeability). *Nomograph from Erickson 1977 as referenced in Goldman et. al., 1986.*

Sheet Flow Length (ft)	Average Watershed Slope (%)																		
	0.2	**0.5**	**1.0**	**2.0**	**3.0**	**4.0**	**5.0**	**6.0**	**8.0**	**10.0**	**12.0**	**14.0**	**16.0**	**20.0**	**25.0**	**30.0**	**40.0**	**50.0**	**60.0**
<3	0.05	0.07	0.09	0.13	0.17	0.20	0.23	0.26	0.32	0.35	0.36	0.38	0.39	0.41	0.45	0.48	0.53	0.58	0.63
6	0.05	0.07	0.09	0.13	0.17	0.20	0.23	0.26	0.32	0.37	0.41	0.45	0.49	0.56	0.64	0.72	0.85	0.97	1.07
9	0.05	0.07	0.09	0.13	0.17	0.20	0.23	0.26	0.32	0.38	0.45	0.51	0.56	0.67	0.80	0.91	1.13	1.31	1.47
12	0.05	0.07	0.09	0.13	0.17	0.20	0.23	0.26	0.32	0.39	0.47	0.55	0.62	0.76	0.93	1.08	1.37	1.62	1.84
15	0.05	0.07	0.09	0.13	0.17	0.20	0.23	0.26	0.32	0.40	0.49	0.58	0.67	0.84	1.04	1.24	1.59	1.91	2.19
25	0.05	0.07	0.10	0.16	0.21	0.26	0.31	0.36	0.45	0.57	0.71	0.85	0.98	1.24	1.56	1.86	2.41	2.91	3.36
50	0.05	0.08	0.13	0.21	0.30	0.38	0.46	0.54	0.70	0.91	1.15	1.40	1.64	2.10	2.67	3.22	4.24	5.16	5.97
75	0.05	0.08	0.14	0.25	0.36	0.47	0.58	0.69	0.91	1.20	1.54	1.87	2.21	2.86	3.67	4.44	5.89	7.20	8.37
100	0.05	0.09	0.15	0.28	0.41	0.55	0.68	0.82	1.10	1.46	1.88	2.31	2.73	3.57	4.59	5.58	7.44	9.13	10.63
150	0.05	0.09	0.17	0.33	0.50	0.68	0.86	1.05	1.43	1.92	2.51	3.09	3.68	4.85	6.30	7.70	10.35	12.75	14.89
200	0.06	0.10	0.18	0.37	0.57	0.79	1.02	1.25	1.72	2.34	3.07	3.81	4.56	6.04	7.88	9.67	13.07	16.16	18.92
250	0.06	0.10	0.19	0.40	0.64	0.89	1.16	1.43	1.99	2.72	3.60	4.48	5.37	7.16	9.38	11.55	15.67	19.42	22.78
300	0.06	0.10	0.20	0.43	0.69	0.98	1.28	1.60	2.24	3.09	4.09	5.11	6.15	8.23	10.81	13.35	18.17	22.57	26.51
400	0.06	0.11	0.22	0.48	0.80	1.14	1.51	1.90	2.70	3.75	5.01	6.30	7.60	10.24	13.53	16.77	22.95	28.60	33.67
600	0.06	0.12	0.24	0.56	0.96	1.42	1.91	2.43	3.52	4.95	6.67	8.45	10.26	13.94	18.57	23.14	31.89	39.95	47.18
800	0.06	0.12	0.26	0.63	1.10	1.65	2.25	2.89	4.24	6.03	8.17	10.40	12.69	17.35	23.24	29.07	40.29	50.63	59.93
1000	0.06	0.13	**0.27**	0.69	1.23	1.86	2.55	3.30	4.91	7.02	9.57	12.23	14.96	20.57	27.66	34.71	48.29	60.84	72.15

LS Factors for Construction Sites. *Table from Renard et. al., 1997.*

Appendix L
Glossary and Acronyms

Best Management Practices (BMPs):	**Any program, technology, process, siting criteria, operational methods or measures, or engineered systems, that when implemented, prevent, control, remove or reduce pollution.**
Clean Water Act:	**The Federal Water Pollution Control Act enacted by Public Law 92-500 as amended by 95-217, 95-576, 96-483, and 97-117; 33 USC. 1251 et seq. Enacted in 1977, the CWA gave EPA the authority to control point-source storm water discharges that convey pollutants to the waters of the United States. Congress amended the CWA in 1987 to create a new section devoted to storm water permitting. In accordance with the 1987 revisions, the EPA adopted regulations in 1990 that established requirements for National Pollutant Discharge Elimination System (NPDES) permits for discharge of storm water from industries and municipalities.**
Contamination:	**"An impairment of the quality of the waters of the state by waste to a degree which creates a hazard to the public health through poisoning or through the spread of disease...including any equivalent effect resulting from the disposal of waste, whether or not waters of the state are affected." [California Water Code Section 13050(k)].**
General Permit:	**The National Pollutant Discharge Elimination System General Permit for Storm Water Discharges Associated with Construction Activities, issued by the State of California Water Resources Control Board (Water Quality Order 99-08-DWQ, adopted August 1999).**
Good Housekeeping Practices:	**The act of maintaining clean, orderly site areas to prevent potential pollutants from contacting storm water.**
National Pollutant Discharge Elimination System (NPDES):	**A permitting process established pursuant to the Clean Water Act that regulates the release of pollutants to waters of the United States.**
Non-Storm Water Discharge:	**Any discharge to surface waters, to a storm drain, or to any other storm water drainage facility that is not composed entirely of storm water or landscape irrigation runoff.**
Notice of Intent (NOI):	**The NOI is the application form used to obtain the General Construction Permit. The NOI indicates the facility's intent to comply with the terms of the permit.**
Nuisance:	**"Anything which meets all of the following requirements: (1) is injurious to health, or is indecent or offensive to the senses, or an obstruction to the free use of property, so as to**

	interfere with the comfortable enjoyment of life and property; (2) affects at the same time an entire community or neighborhood, or any considerable number of persons, although the extent of the annoyance or damage inflicted upon individuals may be unequal; (3) occurs during or as a result of the treatment or disposal of wastes." [California Water Code Section 13050(m)].
Pollution:	**The "man-made or man-induced alternation of the chemical, physical, biological, and radiological integrity of water." [Clean Water Act Section 502 (19)]. Pollution also means "an alternation of the quality of the waters of the state by waste to a degree which unreasonably affects either...the waters for beneficial uses...or facilities which serve these beneficial uses." [California Water Code Section 13050(l)].**
Regional Water Quality Control Board:	**State agency responsible for administration and enforcement of the municipal and industrial NPDES storm water permits.**
Sanitary Sewer System:	**A network of pipelines carrying sewage to a wastewater treatment facility. Storm drains are separate pipeline and are not connected to sanitary sewers.**
Significant Materials:	**Includes, but is not limited to: raw materials; fuels; materials such as solvents, detergents, and plastic pellets; finished materials such as metallic products; raw materials used in food processing or production; hazardous substances designated under Section 101(14) of Comprehensive Environmental Response, Compensation, and Liability Act (CERCLA); any chemical the facility is required to report pursuant to Section 313 of Title III of Superfund Amendments and Reauthorization Act (SARA); fertilizers; pesticides; and waste products such as ashes, slag, and sludge that have the potential to be released with storm water discharges.**
Significant Quantities:	**The volume, concentrations, or mass of a pollutant in storm water discharges that can cause or threaten to cause pollution, contamination, or nuisance; adversely impact human health or the environment; and cause or contribute to a violation of any applicable water quality standards for the receiving water.**
Storm Water:	**Storm water runoff, and surface runoff and drainage. It excludes infiltration and runoff from agricultural land.**
Storm Water Discharge:	**Storm water at the point where it runs off private property onto adjacent property, the street, canals, creeks, the river, or into the municipal storm drain system.**
Storm Water Pollution Prevention Plan (SWPPP):	**The SWPPP is a document that identifies sources and activities at a particular construction site that may contribute pollutants to storm water, and commits the property owner**

	to implement specific control measures to prevent or treat such pollutants.
U.S. Environmental Protection Agency (EPA):	**The federal agency with authority for enacting and enforcing many environmental laws, including the Clean Water Act.**

Acronyms

ASTM	American Society for Testing and Materials
ATS	Active Treatment System
BAT	Best Available Technology Economically Achievable (BAT) is defined at Section 304(b)(2) of the CWA.
BCT	Best Conventional Pollutant Control Technology (BCT) is defined at Section 304(b)(4) of the CWA.
BMP	Best Management Practices
CASQA	California Storm water Quality Association
CPSWQ	Certified Professional in Storm Water Quality
CPESC	Certified Professional in Erosion and Sediment Control
CSMP	Construction Storm water Monitoring Plan
CWA	Clean Water Act
LADWP	Los Angeles Department of Water and Power
MS4	Municipal Separate Storm water Sewer Systems (separate means separate from a sewage collection system)
NAL	Numeric Action Level (there is no acronym for Narrative Action Level)
NEL	Numeric Effluent Limitation (none for Risk Level 2)
NTU	Nephelometric Turbidity Units, the units of measure for testing for turbidity.
NICET	National Institute for Certification in Engineering Technologies
QSD	Qualified SWPPP Developer
QSP	Qualified SWPPP Practitioner
REAP	Rain Event Action Plan
RUSLE	Revised Universal Soil Loss Equation
SWAMP	Surface Water Ambient Monitoring Program (a State program for monitoring)
SWPPP	Storm Water Pollution Prevention Plan (this document)

Appendix M

BMP Fact Sheets

LIST OF BMPS

EC-1	Scheduling
EC-2	Preservation of Existing Vegetation
SE-4	Check Dams
SE-5	Fiber Rolls
SE-6	Gravel Bag Berm
SE-7	Street Sweeping and Vacuuming
SE-10	Storm Drain Inlet Protection
WE-1	Wind Erosion Control
TC-1	Stabilized Construction Entrance/Exit
NS-1	Water Conservation Practices
NS-2	Dewatering Operations
NS-3	Paving and Grinding Operations
NS-6	Illicit Connection/Discharge
NS-8	Vehicle and Equipment Cleaning
NS-9	Vehicle and Equipment Fueling
NS-10	Vehicle and Equipment Maintenance
NS-11	Pile Driving Operations
NS-12	Concrete Curing
NS-13	Concrete Finishing
WM-1	Material Delivery and Storage
WM-2	Material Use
WM-3	Stockpile Management
WM-4	Spill Prevention and Control
WM-5	Solid Waste Management
WM-6	Hazardous Waste Management
WM-8	Concrete Waste Management
WM-9	Sanitary/Septic Waste Management
WM-10	Liquid Waste Management

Scheduling EC-1

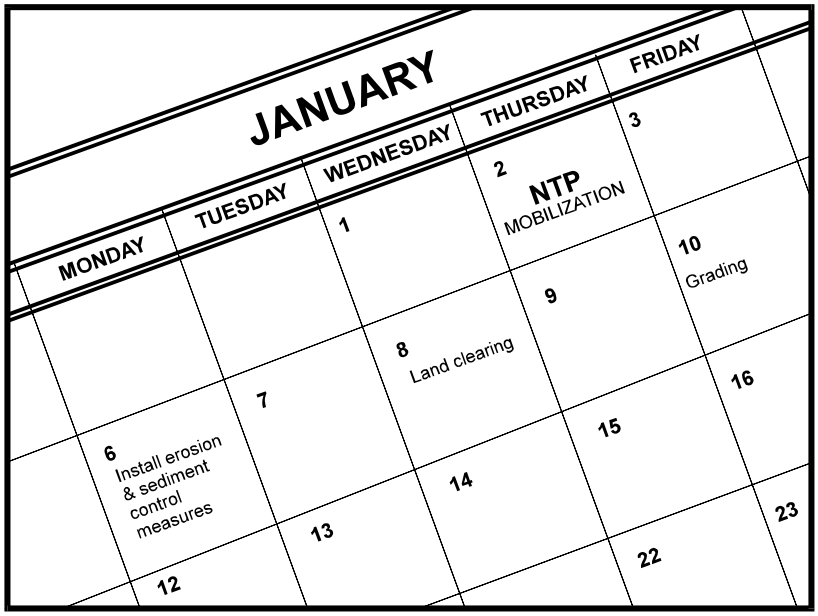

Description and Purpose

Scheduling is the development of a written plan that includes sequencing of construction activities and the implementation of BMPs such as erosion control and sediment control while taking local climate (rainfall, wind, etc.) into consideration. The purpose is to reduce the amount and duration of soil exposed to erosion by wind, rain, runoff, and vehicle tracking, and to perform the construction activities and control practices in accordance with the planned schedule.

Suitable Applications

Proper sequencing of construction activities to reduce erosion potential should be incorporated into the schedule of every construction project especially during rainy season. Use of other, more costly yet less effective, erosion and sediment control BMPs may often be reduced through proper construction sequencing.

Limitations

- Environmental constraints such as nesting season prohibitions reduce the full capabilities of this BMP.

Implementation

- Avoid rainy periods. Schedule major grading operations during dry months when practical. Allow enough time before rainfall begins to stabilize the soil with vegetation or physical means or to install sediment trapping devices.
- Plan the project and develop a schedule showing each phase of construction. Clearly show how the rainy season relates

Categories

EC	Erosion Control	☑
SE	Sediment Control	☒
TC	Tracking Control	☒
WE	Wind Erosion Control	☒
NS	Non-Stormwater Management Control	
WM	Waste Management and Materials Pollution Control	

Legend:
☑ **Primary Objective**
☒ **Secondary Objective**

Targeted Constituents

Sediment	☑
Nutrients	
Trash	
Metals	
Bacteria	
Oil and Grease	
Organics	

Potential Alternatives

None

If User/Subscriber modifies this fact sheet in any way, the CASQA name/logo and footer below must be removed from each page and not appear on the modified version.

to soil disturbing and re-stabilization activities. Incorporate the construction schedule into the SWPPP.

- Include on the schedule, details on the rainy season implementation and deployment of:
  - Erosion control BMPs
  - Sediment control BMPs
  - Tracking control BMPs
  - Wind erosion control BMPs
  - Non-stormwater BMPs
  - Waste management and materials pollution control BMPs
- Include dates for activities that may require non-stormwater discharges such as dewatering, sawcutting, grinding, drilling, boring, crushing, blasting, painting, hydro-demolition, mortar mixing, pavement cleaning, etc.
- Work out the sequencing and timetable for the start and completion of each item such as site clearing and grubbing, grading, excavation, paving, foundation pouring utilities installation, etc., to minimize the active construction area during the rainy season.
  - Sequence trenching activities so that most open portions are closed before new trenching begins.
  - Incorporate staged seeding and re-vegetation of graded slopes as work progresses.
  - Schedule establishment of permanent vegetation during appropriate planting time for specified vegetation.
- Non-active areas should be stabilized as soon as practical after the cessation of soil disturbing activities or one day prior to the onset of precipitation.
- Monitor the weather forecast for rainfall.
- When rainfall is predicted, adjust the construction schedule to allow the implementation of soil stabilization and sediment treatment controls on all disturbed areas prior to the onset of rain.
- Be prepared year-round to deploy erosion control and sediment control BMPs. Erosion may be caused during dry seasons by un-seasonal rainfall, wind, and vehicle tracking. Keep the site stabilized year-round and retain and maintain rainy season sediment trapping devices in operational condition.
- Apply permanent erosion control to areas deemed substantially complete during the project's defined seeding window.
- Avoid soil disturbance during periods with high wind velocities.

Costs

Construction scheduling to reduce erosion may increase other construction costs due to reduced economies of scale in performing site grading. The cost effectiveness of scheduling techniques

should be compared with the other less effective erosion and sedimentation controls to achieve a cost-effective balance.

Inspection and Maintenance

- Verify that work is progressing in accordance with the schedule. If progress deviates, take corrective actions.
- Amend the schedule when changes are warranted.
- Amend the schedule prior to the rainy season to show updated information on the deployment and implementation of construction site BMPs.

References

Stormwater Quality Handbooks Construction Site Best Management Practices (BMPs) Manual, State of California Department of Transportation (Caltrans), November 2000.

Stormwater Management for Construction Activities Developing Pollution Prevention Plans and Best Management Practices (EPA 832-R-92-005), U.S. Environmental Protection Agency, Office of Water, September 1992.

Preservation of Existing Vegetation EC-2

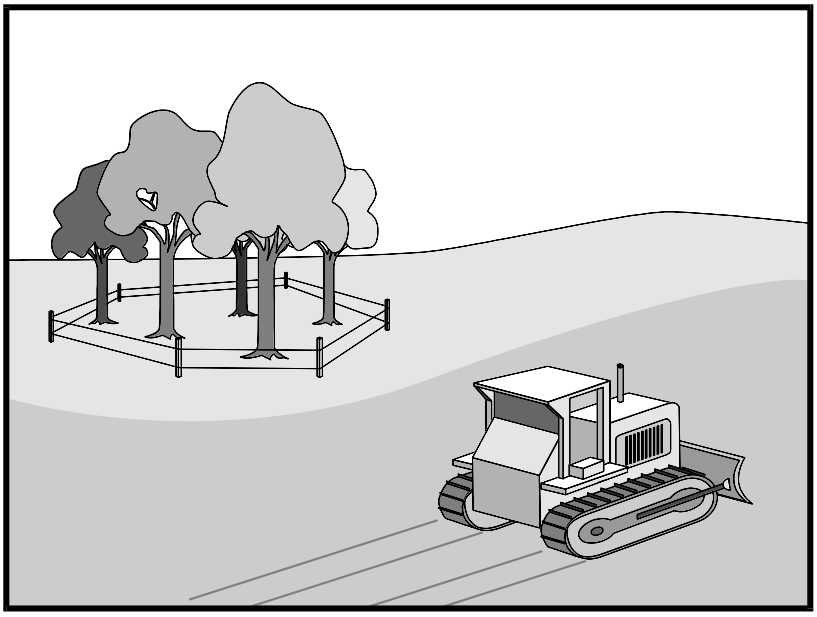

Categories		
EC	Erosion Control	☑
SE	Sediment Control	
TC	Tracking Control	
WE	Wind Erosion Control	
NS	Non-Stormwater Management Control	
WM	Waste Management and Materials Pollution Control	

Legend:

☑ **Primary Objective**

☒ **Secondary Objective**

Targeted Constituents	
Sediment	☑
Nutrients	
Trash	
Metals	
Bacteria	
Oil and Grease	
Organics	

Potential Alternatives

None

Description and Purpose

Carefully planned preservation of existing vegetation minimizes the potential of removing or injuring existing trees, vines, shrubs, and grasses that protect soil from erosion.

Suitable Applications

Preservation of existing vegetation is suitable for use on most projects. Large project sites often provide the greatest opportunity for use of this BMP. Suitable applications include the following:

- Areas within the site where no construction activity occurs or occurs at a later date. This BMP is especially suitable to multi year projects where grading can be phased.
- Areas where natural vegetation exists and is designated for preservation. Such areas often include steep slopes, watercourse, and building sites in wooded areas.
- Areas where local, state, and federal government require preservation, such as vernal pools, wetlands, marshes, certain oak trees, etc. These areas are usually designated on the plans, or in the specifications, permits, or environmental documents.
- Where vegetation designated for ultimate removal can be temporarily preserved and be utilized for erosion control and sediment control.
- Protecting existing vegetation buffers and swales.

If User/Subscriber modifies this fact sheet in any way, the CASQA name/logo and footer below must be removed from each page and not appear on the modified version.

Limitations

- Requires forward planning by the owner/developer, contractor, and design staff.
- Limited opportunities for use when project plans do not incorporate existing vegetation into the site design.
- For sites with diverse topography, it is often difficult and expensive to save existing trees while grading the site satisfactory for the planned development.

Implementation

The best way to prevent erosion is to not disturb the land. In order to reduce the impacts of new development and redevelopment, projects may be designed to avoid disturbing land in sensitive areas of the site (e.g., natural watercourses, steep slopes), and to incorporate unique or desirable existing vegetation into the site's landscaping plan. Clearly marking and leaving a buffer area around these unique areas during construction will help to preserve these areas as well as take advantage of natural erosion prevention and sediment trapping.

Existing vegetation to be preserved on the site must be protected from mechanical and other injury while the land is being developed. The purpose of protecting existing vegetation is to ensure the survival of desirable vegetation for shade, beautification, and erosion control. Mature vegetation has extensive root systems that help to hold soil in place, thus reducing erosion. In addition, vegetation helps keep soil from drying rapidly and becoming susceptible to erosion. To effectively save existing vegetation, no disturbances of any kind should be allowed within a defined area around the vegetation. For trees, no construction activity should occur within the drip line of the tree.

Timing

- Provide for preservation of existing vegetation prior to the commencement of clearing and grubbing operations or other soil disturbing activities in areas where no construction activity is planned or will occur at a later date.

Design and Layout

- Mark areas to be preserved with temporary fencing. Include sufficient setback to protect roots.
  - Orange colored plastic mesh fencing works well.
  - Use appropriate fence posts and adequate post spacing and depth to completely support the fence in an upright position.
- Locate temporary roadways, stockpiles, and layout areas to avoid stands of trees, shrubs, and grass.
- Consider the impact of grade changes to existing vegetation and the root zone.
- Maintain existing irrigation systems where feasible. Temporary irrigation may be required.
- Instruct employees and subcontractors to honor protective devices. Prohibit heavy equipment, vehicular traffic, or storage of construction materials within the protected area.

- Consider pruning or mowing vegetation instead of removing it to allow for regrowth.
- If possible, retain vegetation buffer around the site and adjacent waterways.

Costs

There is little cost associated with preserving existing vegetation if properly planned during the project design, and these costs may be offset by aesthetic benefits that enhance property values. During construction, the cost for preserving existing vegetation will likely be less than the cost of applying erosion and sediment controls to the disturbed area. Replacing vegetation inadvertently destroyed during construction can be extremely expensive, sometimes in excess of $10,000 per tree.

Inspection and Maintenance

During construction, the limits of disturbance should remain clearly marked at all times. Irrigation or maintenance of existing vegetation should be described in the landscaping plan. If damage to protected trees still occurs, maintenance guidelines described below should be followed:

- Verify that protective measures remain in place. Restore damaged protection measures immediately.
- Serious tree injuries shall be attended to by an arborist.
- Damage to the crown, trunk, or root system of a retained tree shall be repaired immediately.
- Trench as far from tree trunks as possible, usually outside of the tree drip line or canopy. Curve trenches around trees to avoid large roots or root concentrations. If roots are encountered, consider tunneling under them. When trenching or tunneling near or under trees to be retained, place tunnels at least 18 in. below the ground surface, and not below the tree center to minimize impact on the roots.
- Do not leave tree roots exposed to air. Cover exposed roots with soil as soon as possible. If soil covering is not practical, protect exposed roots with wet burlap or peat moss until the tunnel or trench is ready for backfill.
- Cleanly remove the ends of damaged roots with a smooth cut.
- Fill trenches and tunnels as soon as possible. Careful filling and tamping will eliminate air spaces in the soil, which can damage roots.
- If bark damage occurs, cut back all loosened bark into the undamaged area, with the cut tapered at the top and bottom and drainage provided at the base of the wood. Limit cutting the undamaged area as much as possible.
- Aerate soil that has been compacted over a trees root zone by punching holes 12 in. deep with an iron bar and moving the bar back and forth until the soil is loosened. Place holes 18 in. apart throughout the area of compacted soil under the tree crown.
- Fertilization:

- Fertilize trees in the late fall or early spring. Although to note, many native species do not require fertilization.

- Apply fertilizer to the soil over the feeder roots and in accordance with label instructions, but never closer than 3 ft to the trunk. Increase the fertilized area by one-fourth of the crown area for conifers that have extended root systems.

- Retain protective measures until all other construction activity is complete to avoid damage during site cleanup and stabilization.

References

County of Sacramento Tree Preservation Ordinance, September 1981.

Stormwater Quality Handbooks Construction Site Best Management Practices (BMPs) Manual, State of California Department of Transportation (Caltrans), November 2000.

Stormwater Management of the Puget Sound Basin, Technical Manual, Publication #91-75, Washington State Department of Ecology, February 1992.

Water Quality Management Plan for The Lake Tahoe Region, Volume II, Handbook of Management Practices, Tahoe Regional Planning Agency, November 1988.

Check Dams SE-4

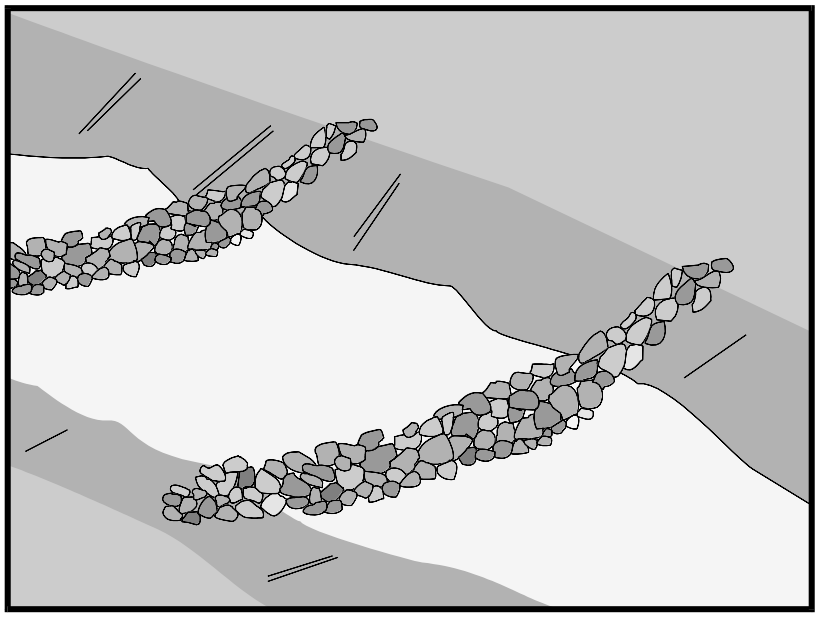

Description and Purpose

A check dam is a small barrier constructed of rock, gravel bags, sandbags, fiber rolls, or other proprietary products, placed across a constructed swale or drainage ditch. Check dams reduce the effective slope of the channel, thereby reducing scour and channel erosion by reducing flow velocity and increasing residence time within the channel, allowing sediment to settle.

Suitable Applications

Check dams may be appropriate in the following situations:

- To promote sedimentation behind the dam.
- To prevent erosion by reducing the velocity of channel flow in small intermittent channels and temporary swales.
- In small open channels that drain 10 acres or less.
- In steep channels where stormwater runoff velocities exceed 5 ft/s.
- During the establishment of grass linings in drainage ditches or channels.
- In temporary ditches where the short length of service does not warrant establishment of erosion-resistant linings.
- To act as a grade control structure.

Categories

EC	Erosion Control	☒
SE	Sediment Control	☑
TC	Tracking Control	
WE	Wind Erosion Control	
NS	Non-Stormwater Management Control	
WM	Waste Management and Materials Pollution Control	

Legend:

☑ **Primary Category**

☒ **Secondary Category**

Targeted Constituents

Sediment	☑
Nutrients	
Trash	
Metals	
Bacteria	
Oil and Grease	
Organics	

Potential Alternatives

SE-5 Fiber Rolls

SE-6 Gravel Bag Berm

SE-8 Sandbag Barrier

SE-12 Manufactured Linear Sediment Controls

SE-14 Biofilter Bags

If User/Subscriber modifies this fact sheet in any way, the CASQA name/logo and footer below must be removed from each page and not appear on the modified version.

Limitations

- Not to be used in live streams or in channels with extended base flows.
- Not appropriate in channels that drain areas greater than 10 acres.
- Not appropriate in channels that are already grass-lined unless erosion potential or sediment-laden flow is expected, as installation may damage vegetation.
- Require extensive maintenance following high velocity flows.
- Promotes sediment trapping which can be re-suspended during subsequent storms or removal of the check dam.
- Do not construct check dams with straw bales or silt fence.
- Water suitable for mosquito production may stand behind check dams, particularly if subjected to daily non-stormwater discharges.

Implementation

General

Check dams reduce the effective slope and create small pools in swales and ditches that drain 10 acres or less. Using check dams to reduce channel slope reduces the velocity of stormwater flows, thus reducing erosion of the swale or ditch and promoting sedimentation. Thus, check dams are dual-purpose and serve an important role as erosion controls as well as sediment controls. Note that use of 1-2 isolated check dams for sedimentation will likely result in little net removal of sediment because of the small detention time and probable scour during longer storms. Using a series of check dams will generally increase their effectiveness. A sediment trap (SE-3) may be placed immediately upstream of the check dam to increase sediment removal efficiency.

Design and Layout

Check dams work by decreasing the effective slope in ditches and swales. An important consequence of the reduced slope is a reduction in capacity of the ditch or swale. This reduction in capacity should be considered when using this BMP, as reduced capacity can result in overtopping of the ditch or swale and resultant consequences. In some cases, such as a "permanent" ditch or swale being constructed early and used as a "temporary" conveyance for construction flows, the ditch or swale may have sufficient capacity such that the temporary reduction in capacity due to check dams is acceptable. When check dams reduce capacities beyond acceptable limits, either:

- Don't use check dams. Consider alternative BMPs, or.
- Increase the size of the ditch or swale to restore capacity.

Maximum slope and velocity reduction is achieved when the toe of the upstream dam is at the same elevation as the top of the downstream dam (see "Spacing Between Check Dams" detail at the end of this fact sheet). The center section of the dam should be lower than the edge sections (at least 6 inches), acting as a spillway, so that the check dam will direct flows to the center of

the ditch or swale (see "Typical Rock Check Dam" detail at the end of this fact sheet). Bypass or side-cutting can occur if a sufficient spillway is not provided in the center of the dam.

Check dams are usually constructed of rock, gravel bags, sandbags, and fiber rolls. A number of products can also be used as check dams (e.g. HDPE check dams, temporary silt dikes (SE-12)), and some of these products can be removed and reused. Check dams can also be constructed of logs or lumber and have the advantage of a longer lifespan when compared to gravel bags, sandbags, and fiber rolls. Check dams should not be constructed from straw bales or silt fences, since concentrated flows quickly wash out these materials.

Rock check dams are usually constructed of 8 to 12 in. rock. The rock is placed either by hand or mechanically, but never just dumped into the channel. The dam should completely span the ditch or swale to prevent washout. The rock used should be large enough to stay in place given the expected design flow through the channel. It is recommended that abutments be extended 18 in. into the channel bank. Rock can be graded such that smaller diameter rock (e.g. 2-4 in) is located on the upstream side of larger rock (holding the smaller rock in place); increasing residence time.

Log check dams are usually constructed of 4 to 6 in. diameter logs, installed vertically. The logs should be embedded into the soil at least 18 in. Logs can be bolted or wired to vertical support logs that have been driven or buried into the soil.

See fiber rolls, SE-5, for installation of fiber roll check dams.

Gravel bag and sand bag check dams are constructed by stacking bags across the ditch or swale, shaped as shown in the drawings at the end of this fact sheet (see "Gravel Bag Check Dam" detail at the end of this fact sheet).

Manufactured products, such as temporary silt dikes (SE-12), should be installed in accordance with the manufacturer's instructions. Installation typically requires anchoring or trenching of products, as well as regular maintenance to remove accumulated sediment and debris.

If grass is planted to stabilize the ditch or swale, the check dam should be removed when the grass has matured (unless the slope of the swales is greater than 4%).

The following guidance should be followed for the design and layout of check dams:

- Install the first check dam approximately 16 ft from the outfall device and at regular intervals based on slope gradient and soil type.
- Check dams should be placed at a distance and height to allow small pools to form between each check dam.
- For multiple check dam installation, backwater from a downstream check dam should reach the toes of the upstream check dam.
- A sediment trap provided immediately upstream of the check dam will help capture sediment. Due to the potential for this sediment to be resuspended in subsequent storms, the sediment trap should be cleaned following each storm event.

- High flows (typically a 2-year storm or larger) should safely flow over the check dam without an increase in upstream flooding or damage to the check dam.
- Where grass is used to line ditches, check dams should be removed when grass has matured sufficiently to protect the ditch or swale.

Materials

- Rock used for check dams should typically be 8-12 in rock and be sufficiently sized to stay in place given expected design flows in the channel. Smaller diameter rock (e.g. 2 to 4 in) can be placed on the upstream side of larger rock to increase residence time.
- Gravel bags used for check dams should conform to the requirements of SE-6, Gravel Bag Berms.
- Sandbags used for check dams should conform to SE-8, Sandbag Barrier.
- Fiber rolls used for check dams should conform to SE-5, Fiber Rolls.
- Temporary silt dikes used for check dams should conform to SE-12, Temporary Silt Dikes.

Installation

- Rock should be placed individually by hand or by mechanical methods (no dumping of rock) to achieve complete ditch or swale coverage.
- Tightly abut bags and stack according to detail shown in the figure at the end of this section (pyramid approach). Gravel bags and sandbags should not be stacked any higher than 3 ft.
- Upper rows or gravel and sand bags shall overlap joints in lower rows.
- Fiber rolls should be trenched in, backfilled, and firmly staked in place.
- Install along a level contour.
- HDPE check dams, temporary silt dikes, and other manufactured products should be used and installed per manufacturer specifications.

Costs

Cost consists of labor costs if materials are readily available (such as gravel on-site). If material must be imported, costs will increase. For other material and installation costs, see SE-5, SE-6, SE-8, SE-12, and SE-14.

Inspection and Maintenance

- BMPs must be inspected in accordance with General Permit requirements for the associated project type and risk level. It is recommended that at a minimum, BMPs be inspected weekly, prior to forecasted rain events, daily during extended rain events, and after the conclusion of rain events.
- Replace missing rock, bags, rolls, etc. Replace bags or rolls that have degraded or have become damaged.

- If the check dam is used as a sediment capture device, sediment that accumulates behind the BMP should be periodically removed in order to maintain BMP effectiveness. Sediment should be removed when the sediment accumulation reaches one-third of the barrier height.
- If the check dam is used as a grade control structure, sediment removal is not required as long as the system continues to control the grade.
- Inspect areas behind check dams for pools of standing water, especially if subjected to daily non-stormwater discharges.
- Remove accumulated sediment prior to permanent seeding or soil stabilization.
- Remove check dam and accumulated sediment when check dams are no longer needed.

References

Draft – Sedimentation and Erosion Control, and Inventory of Current Practices, USEPA, April 1990.

Manual of Standards of Erosion and Sediment Control Measures, Association of Bay Area Governments, May 1995.

Stormwater Quality Handbooks - Construction Site Best Management Practices (BMPs) Manual, State of California Department of Transportation (Caltrans), March 2003.

Stormwater Management of the Puget Sound Basin, Technical Manual, Publication #91-75, Washington State Department of Ecology, February 1992.

Erosion and Sediment Control Manual, Oregon Department of Environmental Quality, February 2005.

Metzger, M.E. 2004. Managing mosquitoes in stormwater treatment devices. University of California Division of Agriculture and Natural Resources, Publication 8125. On-line: http://anrcatalog.ucdavis.edu/pdf/8125.pdf

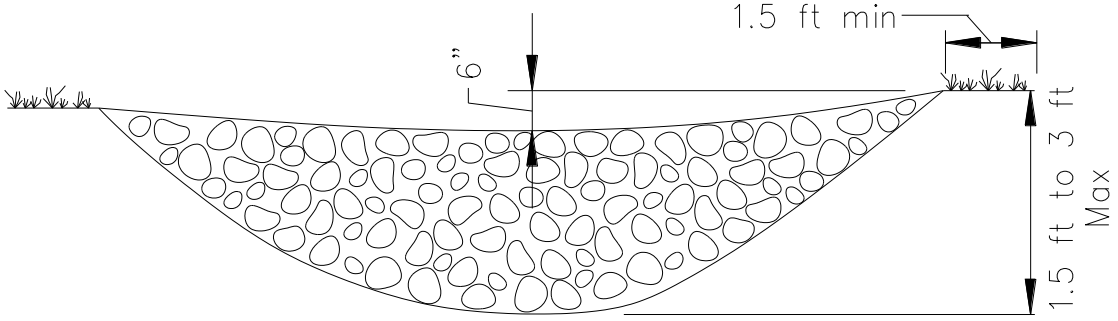

ELEVATION

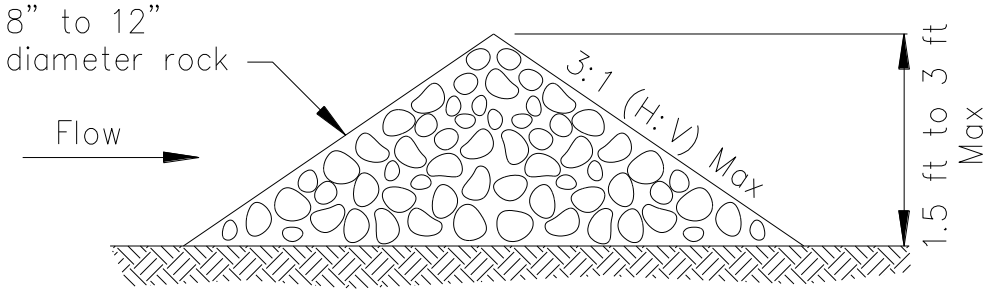

TYPICAL ROCK CHECK DAM SECTION

ROCK CHECK DAM
NOT TO SCALE

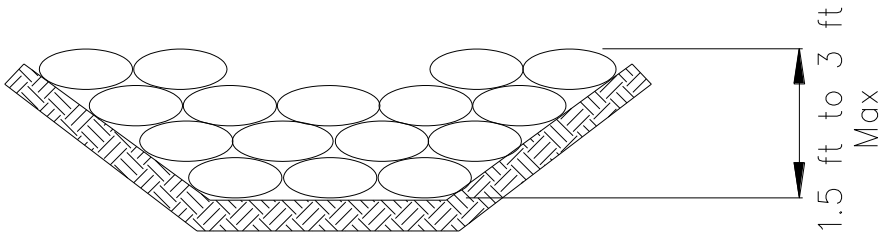

GRAVEL BAG CHECK DAM ELEVATION
NOT TO SCALE

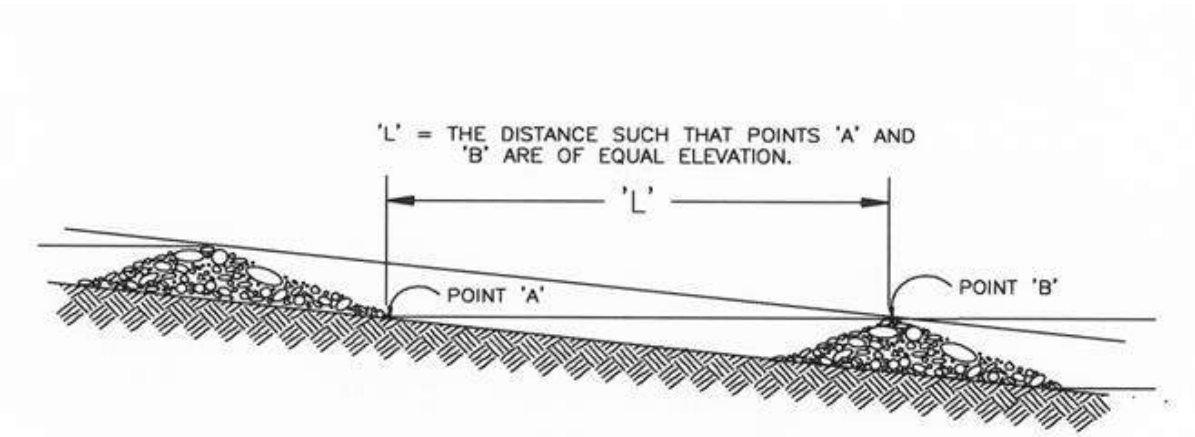

SPACING BETWEEN CHECK DAMS

Fiber Rolls SE-5

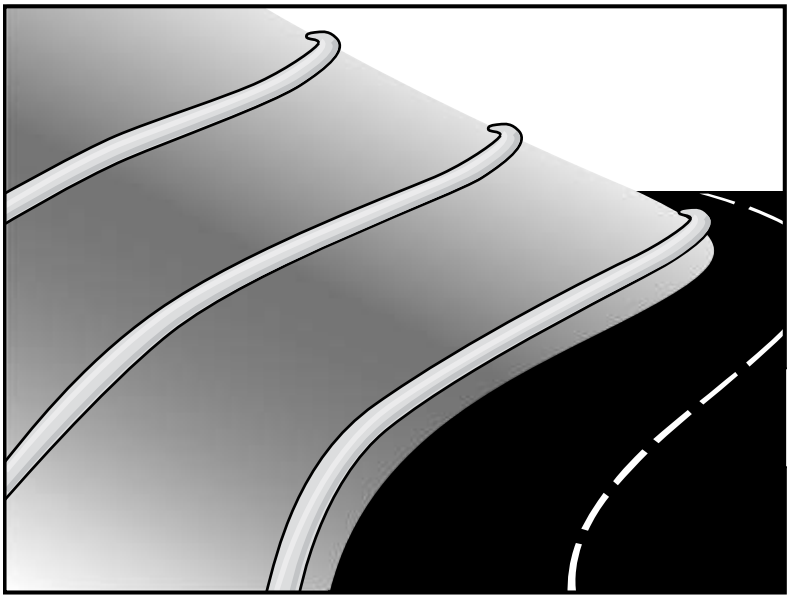

Categories

EC	Erosion Control	☒
SE	Sediment Control	☑
TC	Tracking Control	
WE	Wind Erosion Control	
NS	Non-Stormwater Management Control	
WM	Waste Management and Materials Pollution Control	

Legend:

☑ **Primary Category**

☒ **Secondary Category**

Description and Purpose

A fiber roll (also known as wattles or logs) consists of straw, coir, curled wood fiber, or other biodegradable materials bound into a tight tubular roll wrapped by plastic netting, which can be photodegradable, or natural fiber, such as jute, cotton, or sisal. Additionally, gravel core fiber rolls are available, which contain an imbedded ballast material such as gravel or sand for additional weight when staking the rolls are not feasible (such as use as inlet protection). When fiber rolls are placed at the toe and on the face of slopes along the contours, they intercept runoff, reduce its flow velocity, release the runoff as sheet flow, and provide removal of sediment from the runoff (through sedimentation). By interrupting the length of a slope, fiber rolls can also reduce sheet and rill erosion until vegetation is established.

Suitable Applications

Fiber rolls may be suitable:

- Along the toe, top, face, and at grade breaks of exposed and erodible slopes to shorten slope length and spread runoff as sheet flow.
- At the end of a downward slope where it transitions to a steeper slope.
- Along the perimeter of a project.
- As check dams in unlined ditches with minimal grade.
- Down-slope of exposed soil areas.

Targeted Constituents

Sediment	☑
Nutrients	
Trash	
Metals	
Bacteria	
Oil and Grease	
Organics	

Potential Alternatives

SE-1 Silt Fence

SE-6 Gravel Bag Berm

SE-8 Sandbag Barrier

SE-12 Manufactured Linear Sediment Controls

SE-14 Biofilter Bags

If User/Subscriber modifies this fact sheet in any way, the CASQA name/logo and footer below must be removed from each page and not appear on the modified version.

- At operational storm drains as a form of inlet protection.
- Around temporary stockpiles.

Limitations

- Fiber rolls should be used in conjunction with erosion control, such as hydroseed, RECPs, etc.
- Only biodegradable fiber rolls containing no plastic can remain on a site applying for a Notice of Termination due to plastic pollution and wildlife concerns (State Water Board, 2016). Fiber rolls containing plastic that are used on a site must be disposed of for final stabilization.
- Fiber rolls are not effective unless trenched in and staked. If not properly staked and trenched in, fiber rolls will not work as intended and could be transported by high flows.
- Not intended for use in high flow situations (i.e., for concentrated flows).
- Difficult to move once saturated.
- Fiber rolls have a limited sediment capture zone.
- Fiber rolls should not be used on slopes subject to creep, slumping, or landslide.
- Rolls typically function for 12-24 months, depending upon local conditions and roll material.

Implementation

Fiber Roll Materials

- Fiber rolls should be prefabricated.
- Fiber rolls may come manufactured containing polyacrylamide (PAM), a flocculating agent within the roll. Fiber rolls impregnated with PAM provide additional sediment removal capabilities and should be used in areas with fine, clayey or silty soils to provide additional sediment removal capabilities. Monitoring may be required for these installations.
- Fiber rolls are made from weed-free rice straw, flax, curled wood fiber, or coir bound into a tight tubular roll by netting or natural fiber (see *Limitations* above regarding plastic netting).
- Typical fiber rolls vary in diameter from 6 in. to 20 in. Larger diameter rolls are available as well. The larger the roll, the higher the sediment retention capacity.
- Typical fiber rolls lengths are 4, 10, 20 and 25 ft., although other lengths are likely available.

Installation

- Locate fiber rolls on level contours spaced as follows:
  - Slope inclination of 4:1 (H:V) or flatter: Fiber rolls should be placed at a maximum interval of 20 ft.

  - Slope inclination between 4:1 and 2:1 (H:V): Fiber Rolls should be placed at a maximum interval of 15 ft. (a closer spacing is more effective).

  - Slope inclination 2:1 (H:V) or greater: Fiber Rolls should be placed at a maximum interval of 10 ft. (a closer spacing is more effective).

- Prepare the slope before beginning installation.

- Dig small trenches across the slope on the contour. The trench depth should be ¼ to 1/3 of the thickness of the roll, and the width should equal the roll diameter, in order to provide area to backfill the trench.

- It is critical that rolls are installed perpendicular to water movement, and parallel to the slope contour.

- Start building trenches and installing rolls from the bottom of the slope and work up.

- It is recommended that pilot holes be driven through the fiber roll. Use a straight bar to drive holes through the roll and into the soil for the wooden stakes.

- Turn the ends of the fiber roll up slope to prevent runoff from going around the roll.

- Stake fiber rolls into the trench.

  - Drive stakes at the end of each fiber roll and spaced 4 ft maximum on center.

  - Use wood stakes with a nominal classification of 0.75 by 0.75 in. and minimum length of 24 in.

- If more than one fiber roll is placed in a row, the rolls should be overlapped, not abutted.

- See typical fiber roll installation details at the end of this fact sheet.

Removal

- Fiber rolls can be left in place or removed depending on the type of fiber roll and application (temporary vs. permanent installation). Fiber rolls encased with plastic netting or containing any plastic material will need to be removed from the site for final stabilization. Fiber rolls used in a permanent application are to be encased with a non-plastic material and are left in place. Removal of a fiber roll used in a permanent application can result in greater disturbance; therefore, during the BMP planning phase, the areas where fiber rolls will be used on final slopes, only fiber rolls wrapped in non-plastic material should be selected.

- Temporary installations should only be removed when up gradient areas are stabilized per General Permit requirements, and/or pollutant sources no longer present a hazard. But they should also be removed before vegetation becomes too mature so that the removal process does not disturb more soil and vegetation than is necessary.

Costs

Material costs for straw fiber rolls range from $26 - $38 per 25-ft. roll[1] and curled wood fiber rolls range from $30 - $40 per roll[2].

Material costs for PAM impregnated fiber rolls range between $9.00-$12.00 per linear foot, based upon vendor research[1] .

Inspection and Maintenance

- BMPs must be inspected in accordance with General Permit requirements for the associated project type and risk level. It is recommended that at a minimum, BMPs be inspected weekly, prior to forecasted rain events, daily during extended rain events, and after the conclusion of rain events.
- Repair or replace split, torn, unraveling, or slumping fiber rolls.
- If the fiber roll is used as a sediment capture device, or as an erosion control device to maintain sheet flows, sediment that accumulates in the BMP should be periodically removed in order to maintain BMP effectiveness. Sediment should be removed when sediment accumulation reaches one-third the designated sediment storage depth.
- If fiber rolls are used for erosion control, such as in a check dam, sediment removal should not be required as long as the system continues to control the grade. Sediment control BMPs will likely be required in conjunction with this type of application.
- Repair any rills or gullies promptly.

References

General Construction – Frequently Asked Questions, Storm Water Program website, State Water Resources Control Board, 2009 updated in 2016. Available online at: http://www.waterboards.ca.gov/water_issues/programs/stormwater/gen_const_faq.shtml.

Stormwater Quality Handbooks - Construction Site Best Management Practices (BMPs) Manual, State of California Department of Transportation (Caltrans), March 2003.

Erosion and Sediment Control Manual, Oregon Department of Environmental Quality, February 2005.

[1] Adjusted for inflation (2016 dollars) by Tetra Tech, Inc.
[2] Costs estimated based on vendor query by Tetra Tech, Inc. 2016.

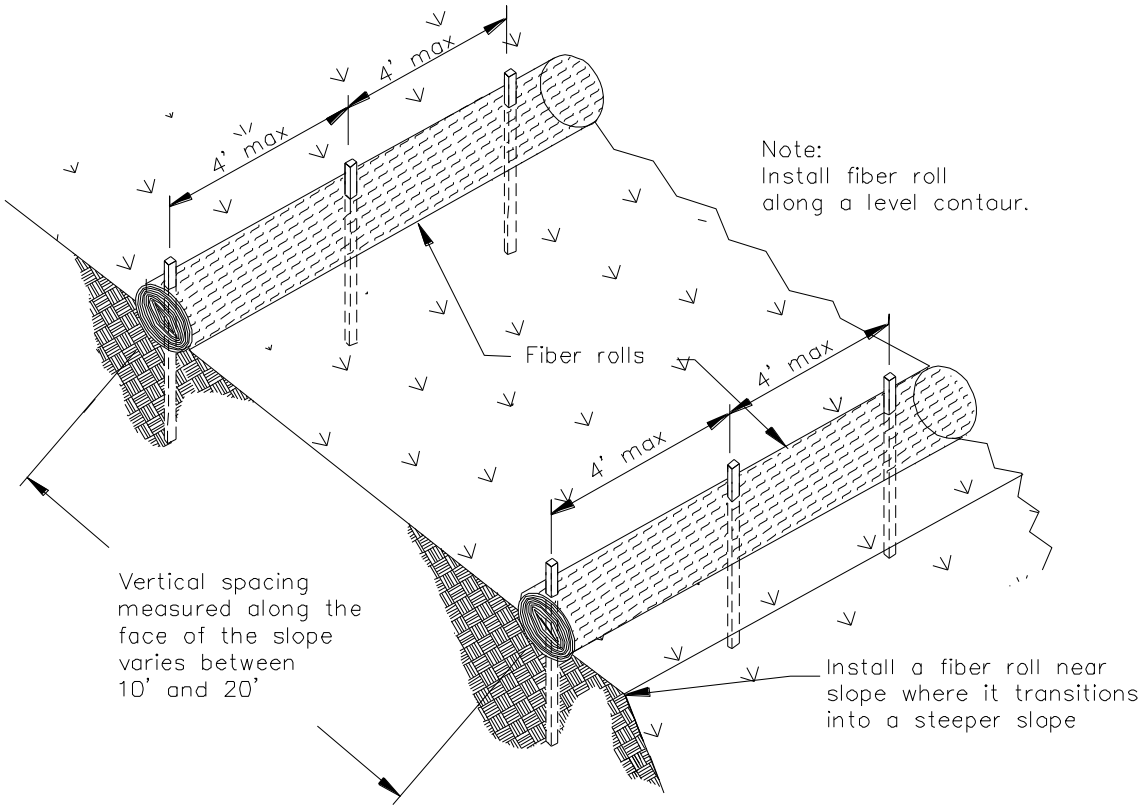

TYPICAL FIBER ROLL INSTALLATION
N.T.S.

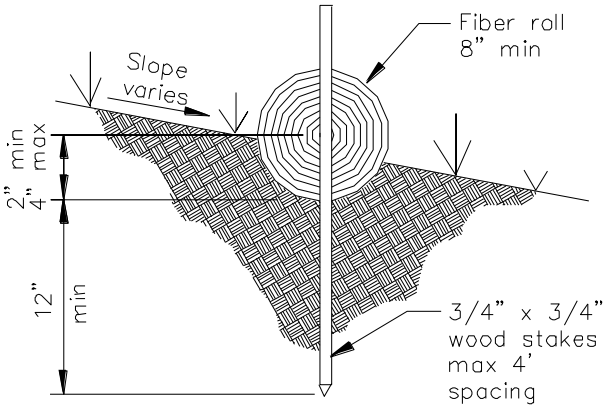

ENTRENCHMENT DETAIL
N.T.S.

Gravel Bag Berm SE-6

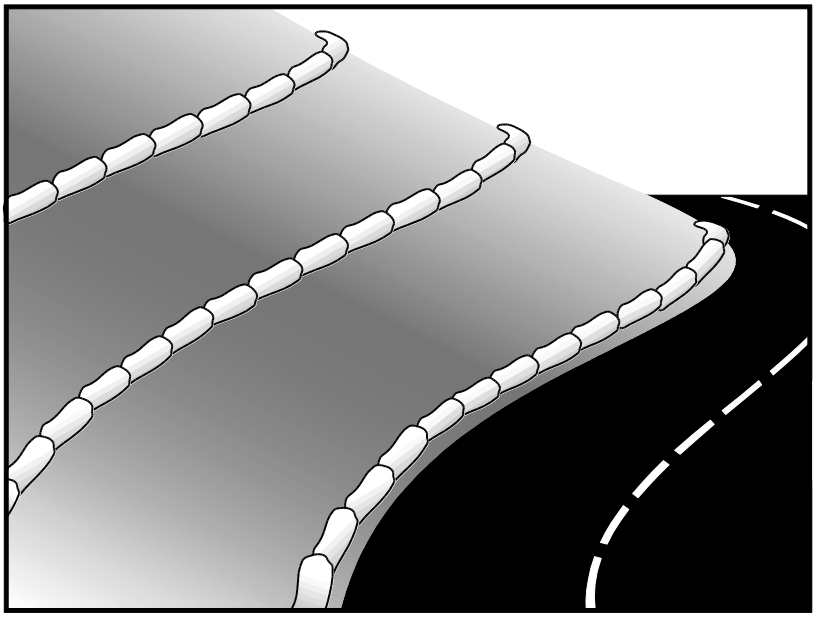

Description and Purpose

A gravel bag berm is a series of gravel-filled bags placed on a level contour to intercept sheet flows. Gravel bags pond sheet flow runoff, allowing sediment to settle out, and release runoff slowly as sheet flow, preventing erosion.

Suitable Applications

Gravel bag berms may be suitable:

- As a linear sediment control measure:
  - Below the toe of slopes and erodible slopes
  - As sediment traps at culvert/pipe outlets
  - Below other small cleared areas
  - Along the perimeter of a site
  - Down slope of exposed soil areas
  - Around temporary stockpiles and spoil areas
  - Parallel to a roadway to keep sediment off paved areas
  - Along streams and channels
- As a linear erosion control measure:
  - Along the face and at grade breaks of exposed and erodible slopes to shorten slope length and spread runoff as sheet flow.

Categories

EC	Erosion Control	☒
SE	Sediment Control	☑
TC	Tracking Control	
WE	Wind Erosion Control	
NS	Non-Stormwater Management Control	
WM	Waste Management and Materials Pollution Control	

Legend:

☑ **Primary Category**

☒ **Secondary Category**

Targeted Constituents

Sediment	☑
Nutrients	
Trash	
Metals	
Bacteria	
Oil and Grease	
Organics	

Potential Alternatives

SE-1 Silt Fence

SE-5 Fiber Roll

SE-8 Sandbag Barrier

SE-12 Temporary Silt Dike

SE-14 Biofilter Bags

If User/Subscriber modifies this fact sheet in any way, the CASQA name/logo and footer below must be removed from each page and not appear on the modified version.

- At the top of slopes to divert runoff away from disturbed slopes.
- As chevrons (small check dams) across mildly sloped construction roads. For use check dam use in channels, see SE-4, Check Dams.

Limitations

- Gravel berms may be difficult to remove.
- Removal problems limit their usefulness in landscaped areas.
- Gravel bag berm may not be appropriate for drainage areas greater than 5 acres.
- Runoff will pond upstream of the berm, possibly causing flooding if sufficient space does not exist.
- Degraded gravel bags may rupture when removed, spilling contents.
- Installation can be labor intensive.
- Durability of gravel bags is somewhat limited, and bags may need to be replaced when installation is required for longer than 6 months.
- Easily damaged by construction equipment.
- When used to detain concentrated flows, maintenance requirements increase.

Implementation

General

A gravel bag berm consists of a row of open graded gravel-filled bags placed on a level contour. When appropriately placed, a gravel bag berm intercepts and slows sheet flow runoff, causing temporary ponding. The temporary ponding allows sediment to settle. The open graded gravel in the bags is porous, which allows the ponded runoff to flow slowly through the bags, releasing the runoff as sheet flows. Gravel bag berms also interrupt the slope length and thereby reduce erosion by reducing the tendency of sheet flows to concentrate into rivulets, which erode rills, and ultimately gullies, into disturbed, sloped soils. Gravel bag berms are similar to sand bag barriers but are more porous. Generally, gravel bag berms should be used in conjunction with temporary soil stabilization controls up slope to provide effective erosion and sediment control.

Design and Layout

- Locate gravel bag berms on level contours.
- When used for slope interruption, the following slope/sheet flow length combinations apply:
  - Slope inclination of 4:1 (H:V) or flatter: Gravel bags should be placed at a maximum interval of 20 ft, with the first row near the slope toe.
  - Slope inclination between 4:1 and 2:1 (H:V): Gravel bags should be placed at a maximum interval of 15 ft. (a closer spacing is more effective), with the first row near the slope toe.

Slope inclination 2:1 (H:V) or greater: Gravel bags should be placed at a maximum interval of 10 ft. (a closer spacing is more effective), with the first row near the slope toe.

- Turn the ends of the gravel bag barriers up slope to prevent runoff from going around the berm.
- Allow sufficient space up slope from the gravel bag berm to allow ponding, and to provide room for sediment storage.
- For installation near the toe of the slope, gravel bag barriers should be set back from the slope toe to facilitate cleaning. Where specific site conditions do not allow for a set-back, the gravel bag barrier may be constructed on the toe of the slope. To prevent flows behind the barrier, bags can be placed perpendicular to a berm to serve as cross barriers.
- Drainage area should not exceed 5 acres.
- In Non-Traffic Areas:
  - Height = 18 in. maximum
  - Top width = 24 in. minimum for three or more-layer construction
  - Top width = 12 in. minimum for one- or two-layer construction
  - Side slopes = 2:1 (H:V) or flatter
- In Construction Traffic Areas:
  - Height = 12 in. maximum
  - Top width = 24 in. minimum for three or more-layer construction.
  - Top width = 12 in. minimum for one- or two-layer construction.
  - Side slopes = 2:1 (H:V) or flatter.
- Butt ends of bags tightly.
- On multiple row, or multiple layer construction, overlap butt joints of adjacent row and row beneath.
- Use a pyramid approach when stacking bags.

Materials

- ***Bag Material:*** Bags should be woven polypropylene, polyethylene or polyamide fabric or burlap, minimum unit weight of 4 ounces/yd^2, Mullen burst strength exceeding 300 lb/in^2 in conformance with the requirements in ASTM designation D3786, and ultraviolet stability exceeding 70% in conformance with the requirements in ASTM designation D4355.

- ***Bag Size:*** Each gravel-filled bag should have a length of 18 in., width of 12 in., thickness of 3 in., and mass of approximately 33 lbs. Bag dimensions are nominal and may vary based on locally available materials.

- ***Fill Material:*** Fill material should be 0.5 to 1 in. Crushed rock, clean and free from clay, organic matter, and other deleterious material, or other suitable open graded, non-cohesive, porous gravel.

Costs

Material costs for gravel bags are average and are dependent upon material availability. $3.20-$3.80 per filled gravel bag is standard based upon vendor research (Adjusted for inflation, 2016 dollars, by Tetra Tech, Inc.).

Inspection and Maintenance

- BMPs must be inspected in accordance with General Permit requirements for the associated project type and risk level. It is recommended that at a minimum, BMPs be inspected weekly, prior to forecasted rain events, daily during extended rain events, and after the conclusion of rain events.

- Gravel bags exposed to sunlight will need to be replaced every two to three months due to degrading of the bags.

- Reshape or replace gravel bags as needed.

- Repair washouts or other damage as needed.

- Sediment that accumulates in the BMP should be periodically removed in order to maintain BMP effectiveness. Sediment should be removed when the sediment accumulation reaches one-third of the barrier height.

- Remove gravel bag berms when no longer needed and recycle gravel fill whenever possible and properly dispose of bag material. Remove sediment accumulation and clean, re-grade, and stabilize the area.

References

Handbook of Steel Drainage and Highway Construction, American Iron and Steel Institute, 1983.

Stormwater Quality Handbooks - Construction Site Best Management Practices (BMPs) Manual, State of California Department of Transportation (Caltrans), March 2003.

Stormwater Pollution Plan Handbook, First Edition, State of California, Department of Transportation Division of New Technology, Materials and Research, October 1992.

Erosion and Sediment Control Manual, Oregon Department of Environmental Quality, February 2005.

Street Sweeping and Vacuuming SE-7



Categories		
EC	Erosion Control	
SE	Sediment Control	☒
TC	Tracking Control	☑
WE	Wind Erosion Control	
NS	Non-Stormwater Management Control	
WM	Waste Management and Materials Pollution Control	

Legend:
☑ **Primary Objective**
☒ **Secondary Objective**

Targeted Constituents	
Sediment	☑
Nutrients	
Trash	☑
Metals	
Bacteria	
Oil and Grease	☑
Organics	

Potential Alternatives

None

If User/Subscriber modifies this fact sheet in any way, the CASQA name/logo and footer below must be removed from each page and not appear on the modified version.

Description and Purpose

Street sweeping and vacuuming includes use of self-propelled and walk-behind equipment to remove sediment from streets and roadways and to clean paved surfaces in preparation for final paving. Sweeping and vacuuming prevents sediment from the project site from entering storm drains or receiving waters.

Suitable Applications

Sweeping and vacuuming are suitable anywhere sediment is tracked from the project site onto public or private paved streets and roads, typically at points of egress. Sweeping and vacuuming are also applicable during preparation of paved surfaces for final paving.

Limitations

- Sweeping and vacuuming may not be effective when sediment is wet or when tracked soil is caked (caked soil may need to be scraped loose).
- Sweeping may be less effective for fine particle soils (i.e., clay).

Implementation

- Controlling the number of points where vehicles can leave the site will allow sweeping and vacuuming efforts to be focused and perhaps save money.
- Inspect potential sediment tracking locations daily.

- Visible sediment tracking should be swept or vacuumed on a daily basis.
- Do not use kick brooms or sweeper attachments. These tend to spread the dirt rather than remove it.
- If not mixed with debris or trash, consider incorporating the removed sediment back into the project

Costs

Rental rates for self-propelled sweepers vary depending on hopper size and duration of rental. Expect rental rates from $ 650/day to $2,500/day[1], plus operator costs. Hourly production rates vary with the amount of area to be swept and amount of sediment. Match the hopper size to the area and expect sediment load to minimize time spent dumping.

Inspection and Maintenance

- Inspect BMPs in accordance with General Permit requirements for the associated project type and risk level. It is recommended that at a minimum, BMPs be inspected weekly, prior to forecasted rain events, daily during extended rain events, and after the conclusion of rain events.
- When actively in use, points of ingress and egress must be inspected daily.
- When tracked or spilled sediment is observed outside the construction limits, it must be removed at least daily. More frequent removal, even continuous removal, may be required in some jurisdictions.
- Be careful not to sweep up any unknown substance or any object that may be potentially hazardous.
- Adjust brooms frequently; maximize efficiency of sweeping operations.
- After sweeping is finished, properly dispose of sweeper wastes at an approved dumpsite.

References

Stormwater Quality Handbooks - Construction Site Best Management Practices (BMPs) Manual, State of California Department of Transportation (Caltrans), November 2000.

[1] Based on contractor query conducted by Tetra Tech, Inc. November 2016.

Storm Drain Inlet Protection SE-10

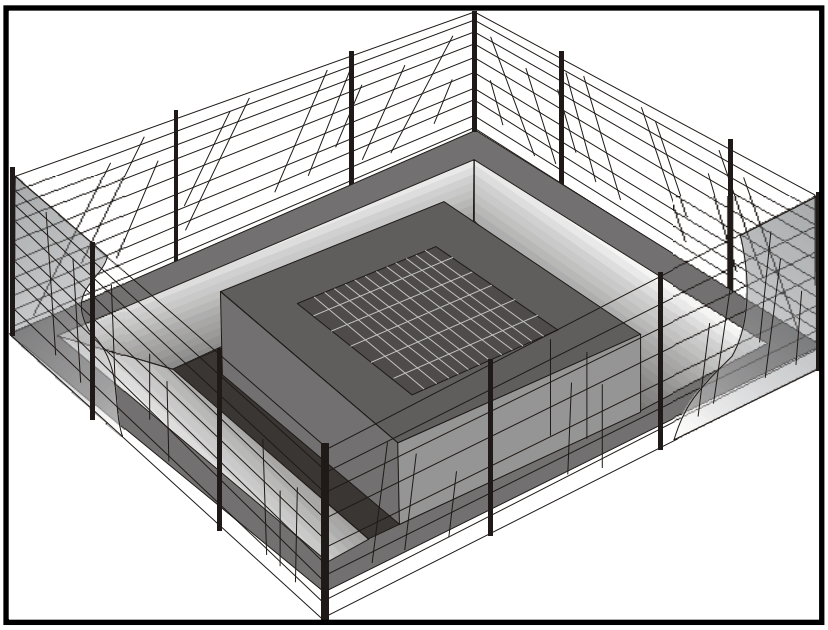

Description and Purpose

Storm drain inlet protection consists of a sediment filter or an impounding area in, around or upstream of a storm drain, drop inlet, or curb inlet. Storm drain inlet protection measures temporarily pond runoff before it enters the storm drain, allowing sediment to settle. Some filter configurations also remove sediment by filtering, but usually the ponding action results in the greatest sediment reduction. Temporary geotextile storm drain inserts attach underneath storm drain grates to capture and filter storm water.

Suitable Applications

- Every storm drain inlet receiving runoff from unstabilized or otherwise active work areas should be protected. Inlet protection should be used in conjunction with other erosion and sediment controls to prevent sediment-laden stormwater and non-stormwater discharges from entering the storm drain system.

Limitations

- Drainage area should not exceed 1 acre.
- In general straw bales should not be used as inlet protection.
- Requires an adequate area for water to pond without encroaching into portions of the roadway subject to traffic.
- Sediment removal may be inadequate to prevent sediment discharges in high flow conditions or if runoff is heavily sediment laden. If high flow conditions are expected, use

Categories

EC	Erosion Control	
SE	Sediment Control	☑
TC	Tracking Control	
WE	Wind Erosion Control	
NS	Non-Stormwater Management Control	
WM	Waste Management and Materials Pollution Control	

Legend:

☑ **Primary Category**

☒ **Secondary Category**

Targeted Constituents

Sediment	☑
Nutrients	
Trash	☒
Metals	
Bacteria	
Oil and Grease	
Organics	

Potential Alternatives

SE-1 Silt Fence

SE-5 Fiber Rolls

SE-6 Gravel Bag Berm

SE-8 Sandbag Barrier

SE-14 Biofilter Bags

SE-13 Compost Socks and Berms

If User/Subscriber modifies this fact sheet in any way, the CASQA name/logo and footer below must be removed from each page and not appear on the modified version.

other onsite sediment trapping techniques in conjunction with inlet protection.

- Frequent maintenance is required.
- Limit drainage area to 1 acre maximum. For drainage areas larger than 1 acre, runoff should be routed to a sediment-trapping device designed for larger flows. See BMPs SE-2, Sediment Basin, and SE-3, Sediment Traps.
- Excavated drop inlet sediment traps are appropriate where relatively heavy flows are expected, and overflow capability is needed.

Implementation

General

Inlet control measures presented in this handbook should not be used for inlets draining more than one acre. Runoff from larger disturbed areas should be first routed through SE-2, Sediment Basin or SE-3, Sediment Trap and/or used in conjunction with other drainage control, erosion control, and sediment control BMPs to protect the site. Different types of inlet protection are appropriate for different applications depending on site conditions and the type of inlet. Alternative methods are available in addition to the methods described/shown herein such as prefabricated inlet insert devices, or gutter protection devices.

Design and Layout

Identify existing and planned storm drain inlets that have the potential to receive sediment-laden surface runoff. Determine if storm drain inlet protection is needed and which method to use.

- The key to successful and safe use of storm drain inlet protection devices is to know where runoff that is directed toward the inlet to be protected will pond or be diverted as a result of installing the protection device.
  - Determine the acceptable location and extent of ponding in the vicinity of the drain inlet. The acceptable location and extent of ponding will influence the type and design of the storm drain inlet protection device.
  - Determine the extent of potential runoff diversion caused by the storm drain inlet protection device. Runoff ponded by inlet protection devices may flow around the device and towards the next downstream inlet. In some cases, this is acceptable; in other cases, serious erosion or downstream property damage can be caused by these diversions. The possibility of runoff diversions will influence whether or not storm drain inlet protection is suitable; and, if suitable, the type and design of the device.
- The location and extent of ponding, and the extent of diversion, can usually be controlled through appropriate placement of the inlet protection device. In some cases, moving the inlet protection device a short distance upstream of the actual inlet can provide more efficient sediment control, limit ponding to desired areas, and prevent or control diversions.
- Seven types of inlet protection are presented below. However, it is recognized that other effective methods and proprietary devices exist and may be selected.

- Silt Fence: Appropriate for drainage basins with less than a 5% slope, sheet flows, and flows under 0.5 cfs.

- Excavated Drop Inlet Sediment Trap: An excavated area around the inlet to trap sediment (SE-3).

- Gravel bag barrier: Used to create a small sediment trap upstream of inlets on sloped, paved streets. Appropriate for sheet flow or when concentrated flow may exceed 0.5 cfs, and where overtopping is required to prevent flooding.

- Block and Gravel Filter: Appropriate for flows greater than 0.5 cfs.

- Temporary Geotextile Storm drain Inserts: Different products provide different features. Refer to manufacturer details for targeted pollutants and additional features.

- Biofilter Bag Barrier: Used to create a small retention area upstream of inlets and can be located on pavement or soil. Biofilter bags slowly filter runoff allowing sediment to settle out. Appropriate for flows under 0.5 cfs.

- Compost Socks: Allow filtered run-off to pass through the compost while retaining sediment and potentially other pollutants (SE-13). Appropriate for flows under 1.0 cfs.

- Select the appropriate type of inlet protection and design as referred to or as described in this fact sheet.

- Provide area around the inlet for water to pond without flooding structures and property.

- Grates and spaces around all inlets should be sealed to prevent seepage of sediment-laden water.

- Excavate sediment sumps (where needed) 1 to 2 ft with 2:1 side slopes around the inlet.

Installation

- ***DI Protection Type 1 - Silt Fence -*** Similar to constructing a silt fence; see BMP SE-1, Silt Fence. Do not place fabric underneath the inlet grate since the collected sediment may fall into the drain inlet when the fabric is removed or replaced and water flow through the grate will be blocked resulting in flooding. See typical Type 1 installation details at the end of this fact sheet.

  1. Excavate a trench approximately 6 in. wide and 6 in. deep along the line of the silt fence inlet protection device.

  2. Place 2 in. by 2 in. wooden stakes around the perimeter of the inlet a maximum of 3 ft apart and drive them at least 18 in. into the ground or 12 in. below the bottom of the trench. The stakes should be at least 48 in.

  3. Lay fabric along bottom of trench, up side of trench, and then up stakes. See SE-1, Silt Fence, for details. The maximum silt fence height around the inlet is 24 in.

  4. Staple the filter fabric (for materials and specifications, see SE-1, Silt Fence) to wooden stakes. Use heavy-duty wire staples at least 1 in. in length.

5. Backfill the trench with gravel or compacted earth all the way around.

- ***DI Protection Type 2 - Excavated Drop Inlet Sediment Trap -*** Install filter fabric fence in accordance with DI Protection Type 1. Size excavated trap to provide a minimum storage capacity calculated at the rate 67 yd^3/acre of drainage area. See typical Type 2 installation details at the end of this fact sheet.

- ***DI Protection Type 3 - Gravel bag -*** Flow from a severe storm should not overtop the curb. In areas of high clay and silts, use filter fabric and gravel as additional filter media. Construct gravel bags in accordance with SE-6, Gravel Bag Berm. Gravel bags should be used due to their high permeability. See typical Type 3 installation details at the end of this fact sheet.

  1. Construct on gently sloping street.

  2. Leave room upstream of barrier for water to pond and sediment to settle.

  3. Place several layers of gravel bags – overlapping the bags and packing them tightly together.

  4. Leave gap of one bag on the top row to serve as a spillway. Flow from a severe storm (e.g., 10-year storm) should not overtop the curb.

- ***DI Protection Type 4 – Block and Gravel Filter -*** Block and gravel filters are suitable for curb inlets commonly used in residential, commercial, and industrial construction. See typical Type 4 installation details at the end of this fact sheet.

  1. Place hardware cloth or comparable wire mesh with 0.5 in. openings over the drop inlet so that the wire extends a minimum of 1 ft beyond each side of the inlet structure. If more than one strip is necessary, overlap the strips. Place woven geotextile over the wire mesh.

  2. Place concrete blocks lengthwise on their sides in a single row around the perimeter of the inlet, so that the open ends face outward, not upward. The ends of adjacent blocks should abut. The height of the barrier can be varied, depending on design needs, by stacking combinations of blocks that are 4 in., 8 in., and 12 in. wide. The row of blocks should be at least 12 in. but no greater than 24 in. high.

  3. Place wire mesh over the outside vertical face (open end) of the concrete blocks to prevent stone from being washed through the blocks. Use hardware cloth or comparable wire mesh with 0.5 in. opening.

  4. Pile washed stone against the wire mesh to the top of the blocks. Use 0.75 to 3 in.

- ***DI Protection Type 5 – Temporary Geotextile Insert (proprietary) –*** Many types of temporary inserts are available. Most inserts fit underneath the grate of a drop inlet or inside of a curb inlet and are fastened to the outside of the grate or curb. These inserts are removable, and many can be cleaned and reused. Installation of these inserts differs between manufacturers. Please refer to manufacturer instruction for installation of proprietary devices.

- ***DI Protection Type 6 - Biofilter bags*** – Biofilter bags may be used as a substitute for gravel bags in low-flow situations. Biofilter bags should conform to specifications detailed in SE-14, Biofilter bags.

    1. Construct in a gently sloping area.
    2. Biofilter bags should be placed around inlets to intercept runoff flows.
    3. All bag joints should overlap by 6 in.
    4. Leave room upstream for water to pond and for sediment to settle out.
    5. Stake bags to the ground as described in the following detail. Stakes may be omitted if bags are placed on a paved surface.

- ***DI Protection Type 7 – Compost Socks*** – A compost sock can be assembled on site by filling a mesh sock (e.g., with a pneumatic blower). Compost socks do not require special trenching compared to other sediment control methods (e.g., silt fence). Compost socks should conform to specification detailed in SE-13, Compost Socks and Berms.

Costs

- Average annual cost for installation and maintenance of DI Type 1-4 and 6 (one-year useful life) is $200 per inlet.
- Temporary geotextile inserts are proprietary, and cost varies by region. These inserts can often be reused and may have greater than 1 year of use if maintained and kept undamaged. Average cost per insert ranges from $50-75 plus installation, but costs can exceed $100. This cost does not include maintenance.
- See SE-13 for Compost Sock cost information.

Inspection and Maintenance

- BMPs must be inspected in accordance with General Permit requirements for the associated project type and risk level. It is recommended that at a minimum, BMPs be inspected weekly, prior to forecasted rain events, daily during extended rain events, and after the conclusion of rain events.
- Silt Fences. If the fabric becomes clogged, torn, or degrades, it should be replaced. Make sure the stakes are securely driven in the ground and are in good shape (i.e., not bent, cracked, or splintered, and are reasonably perpendicular to the ground). Replace damaged stakes. At a minimum, remove the sediment behind the fabric fence when accumulation reaches one-third the height of the fence or barrier height.
- Gravel Filters. If the gravel becomes clogged with sediment, it should be carefully removed from the inlet and either cleaned or replaced. Since cleaning gravel at a construction site may be difficult, consider using the sediment-laden stone as fill material and put fresh stone around the inlet. Inspect bags for holes, gashes, and snags, and replace bags as needed. Check gravel bags for proper arrangement and displacement.

- Sediment that accumulates in the BMP should be periodically removed in order to maintain BMP effectiveness. Sediment should be removed when the sediment accumulation reaches one-third of the barrier height.
- Inspect and maintain temporary geotextile insert devices according to manufacturer's specifications.
- Remove storm drain inlet protection once the drainage area is stabilized.
    - Clean and regrade area around the inlet and clean the inside of the storm drain inlet, as it should be free of sediment and debris at the time of final inspection.

References

Stormwater Quality Handbooks - Construction Site Best Management Practices (BMPs) Manual, State of California Department of Transportation (Caltrans), March 2003.

Stormwater Management Manual for The Puget Sound Basin, Washington State Department of Ecology, Public Review Draft, 1991.

Erosion and Sediment Control Manual, Oregon Department of Environmental Quality, February 2005.

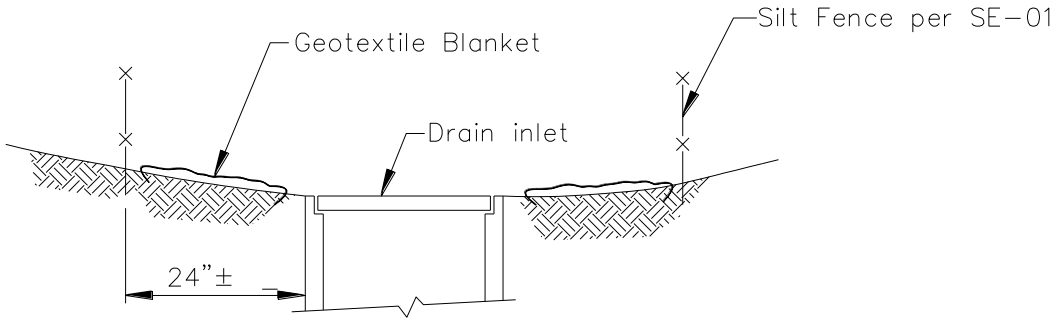

SECTION A–A

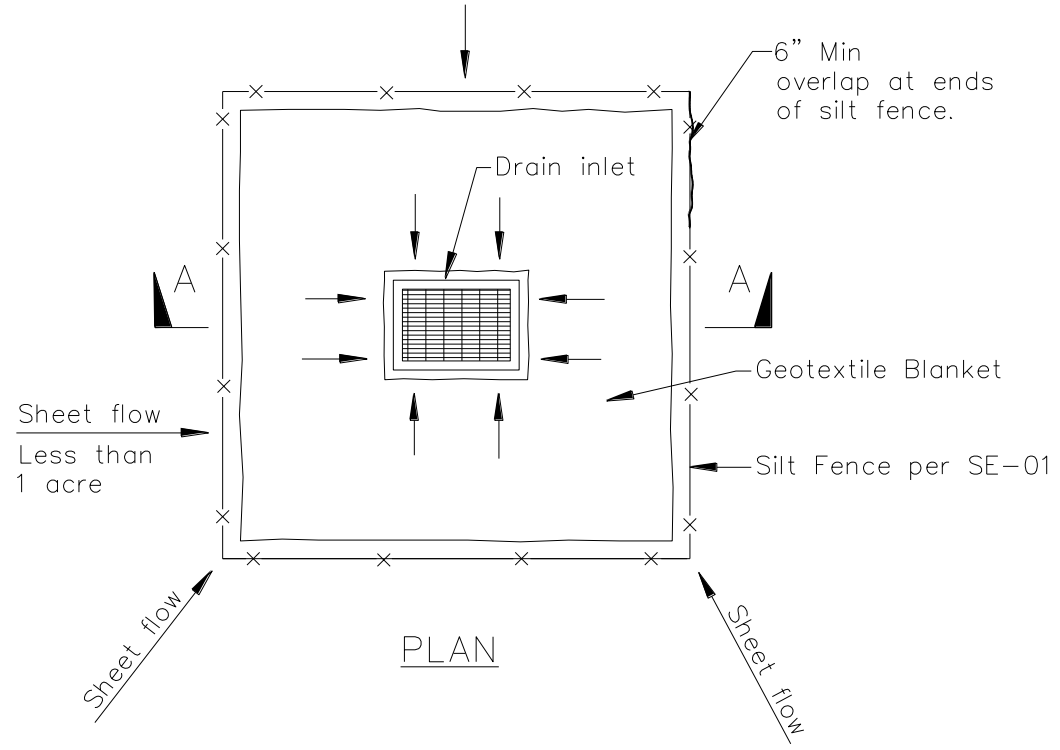

PLAN

DI PROTECTION TYPE 1
NOT TO SCALE

NOTES:

1. For use in areas where grading has been completed and final soil stabilization and seeding are pending.
2. Not applicable in paved areas.
3. Not applicable with concentrated flows.

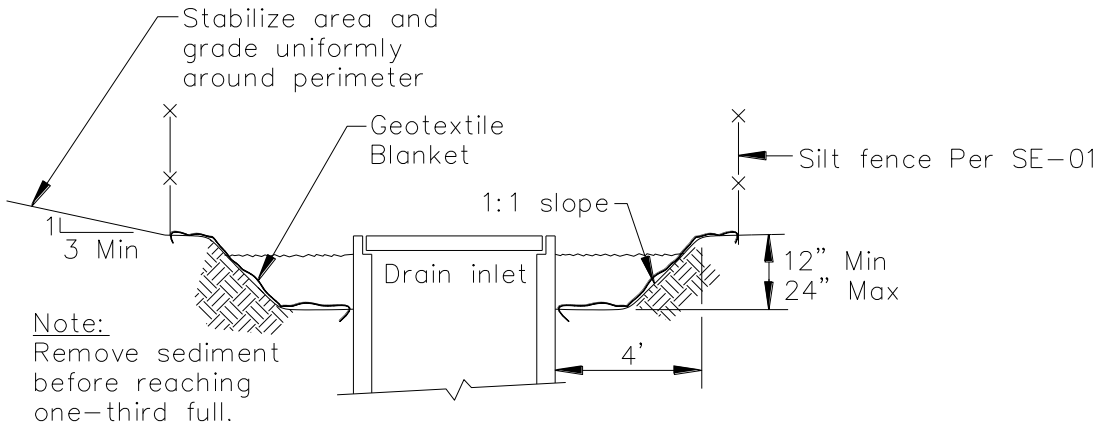

Section A–A

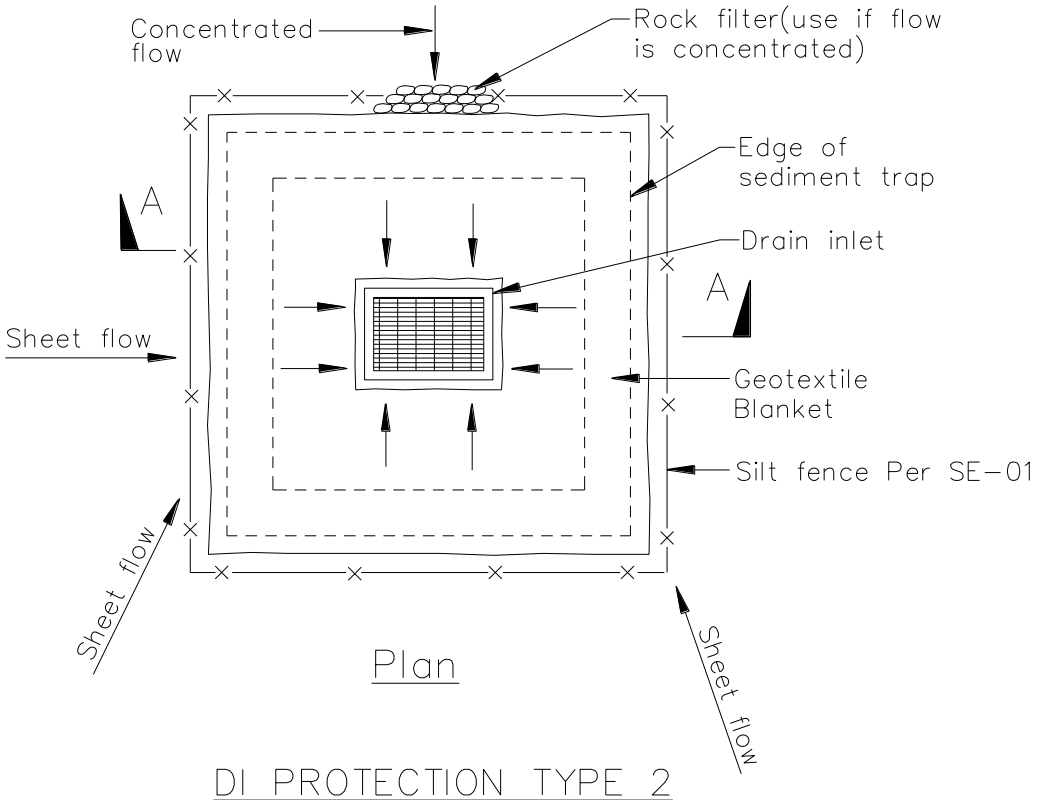

Plan

DI PROTECTION TYPE 2
NOT TO SCALE

Notes
1. For use in cleared and grubbed and in graded areas.
2. Shape basin so that longest inflow area faces longest length of trap.
3. For concentrated flows, shape basin in 2:1 ratio with length oriented towards direction of flow.

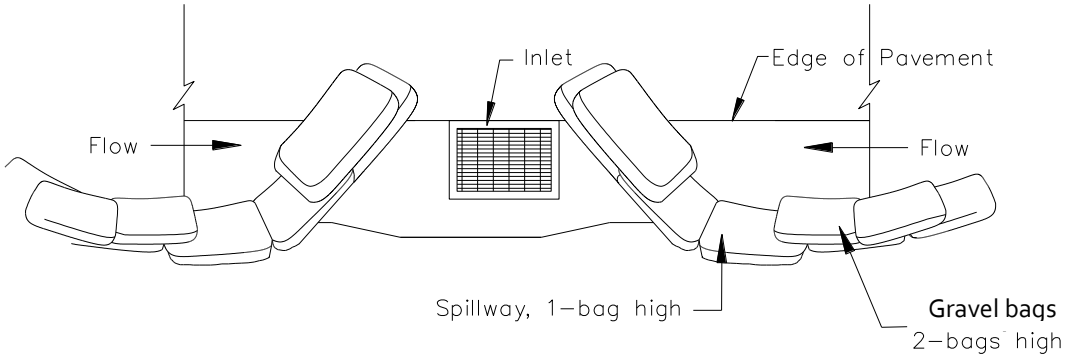

TYPICAL PROTECTION FOR INLET ON SUMP

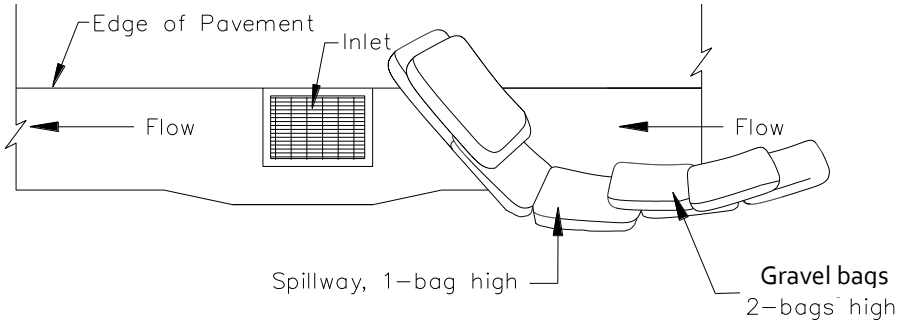

TYPICAL PROTECTION FOR INLET ON GRADE

NOTES:

1. Intended for short-term use.
2. Use to inhibit non-storm water flow.
3. Allow for proper maintenance and cleanup.
4. Bags must be removed after adjacent operation is completed
5. Not applicable in areas with high silts and clays without filter fabric.
6. Protection can be effective even if it is not immediately adjacent to the inlet provided that the inlet is protected from potential sources of pollution.

DI PROTECTION TYPE 3
NOT TO SCALE

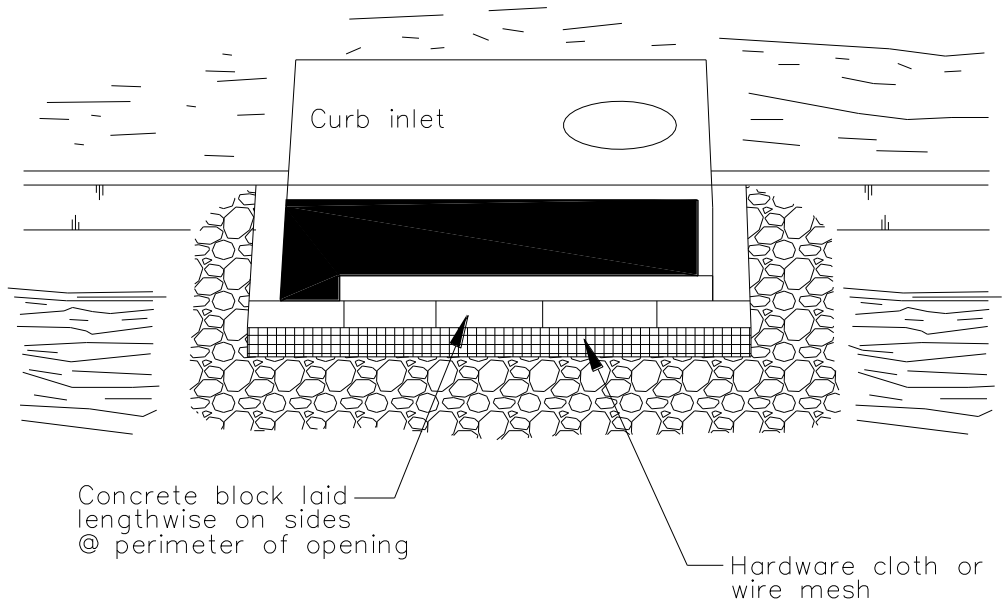

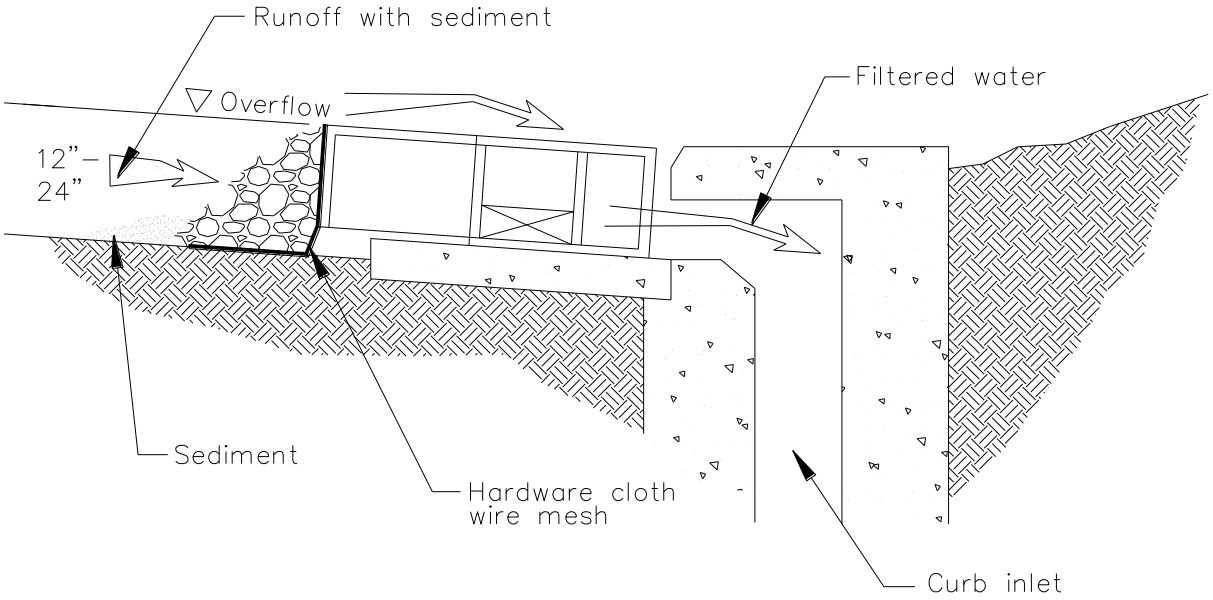

DI PROTECTION – TYPE 4

NOT TO SCALE

Wind Erosion Control WE-1

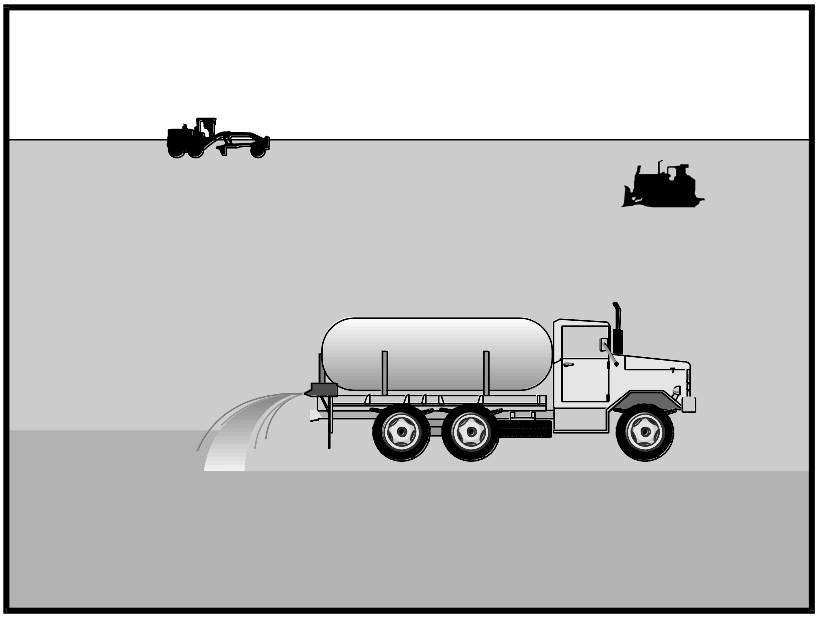

Categories

EC	Erosion Control	
SE	Sediment Control	☒
TC	Tracking Control	
WE	Wind Erosion Control	☑
NS	Non-Stormwater Management Control	
WM	Waste Management and Materials Pollution Control	

Legend:

☑ **Primary Category**

☒ **Secondary Category**

Targeted Constituents

Sediment	☑
Nutrients	
Trash	
Metals	
Bacteria	
Oil and Grease	
Organics	

Potential Alternatives

EC-5 Soil Binders

If User/Subscriber modifies this fact sheet in any way, the CASQA name/logo and footer below must be removed from each page and not appear on the modified version.

Description and Purpose

Wind erosion or dust control consists of applying water or other chemical dust suppressants as necessary to prevent or alleviate dust nuisance generated by construction activities. Covering small stockpiles or areas is an alternative to applying water or other dust palliatives.

California's Mediterranean climate, with a short "wet" season and a typically long, hot "dry" season, allows the soils to thoroughly dry out. During the dry season, construction activities are at their peak, and disturbed and exposed areas are increasingly subject to wind erosion, sediment tracking, and dust generated by construction equipment. Site conditions and climate can make dust control more of an erosion problem than water-based erosion. Additionally, many local agencies, including Air Quality Management Districts, require dust control and/or dust control permits in order to comply with local nuisance laws, opacity laws (visibility impairment) and the requirements of the Clean Air Act. Wind erosion control is required to be implemented at all construction sites greater than 1 acre by the General Permit.

Suitable Applications

Most BMPs that provide protection against water-based erosion will also protect against wind-based erosion and dust control requirements required by other agencies will generally meet wind erosion control requirements for water quality protection. Wind erosion control BMPs are suitable during the following construction activities:

CASQA
CALIFORNIA STORMWATER QUALITY ASSOCIATION

- Construction vehicle traffic on unpaved roads
- Drilling and blasting activities
- Soils and debris storage piles
- Batch drop from front-end loaders
- Areas with unstabilized soil
- Final grading/site stabilization

Limitations

- Watering prevents dust only for a short period (generally less than a few hours) and should be applied daily (or more often) to be effective.
- Over watering may cause erosion and track-out.
- Oil or oil-treated subgrade should not be used for dust control because the oil may migrate into drainageways and/or seep into the soil.
- Chemical dust suppression agents may have potential environmental impacts. Selected chemical dust control agents should be environmentally benign.
- Effectiveness of controls depends on soil, temperature, humidity, wind velocity and traffic.
- Chemical dust suppression agents should not be used within 100 feet of wetlands or water bodies.
- Chemically treated subgrades may make the soil water repellant, interfering with long-term infiltration and the vegetation/re-vegetation of the site. Some chemical dust suppressants may be subject to freezing and may contain solvents and should be handled properly.
- In compacted areas, watering and other liquid dust control measures may wash sediment or other constituents into the drainage system.
- If the soil surface has minimal natural moisture, the affected area may need to be pre-wetted so that chemical dust control agents can uniformly penetrate the soil surface.

Implementation

Dust Control Practices

Dust control BMPs generally stabilize exposed surfaces and minimize activities that suspend or track dust particles. The following table presents dust control practices that can be applied to varying site conditions that could potentially cause dust. For heavily traveled and disturbed areas, wet suppression (watering), chemical dust suppression, gravel asphalt surfacing, temporary gravel construction entrances, equipment wash-out areas, and haul truck covers can be employed as dust control applications. Permanent or temporary vegetation and mulching can be employed for areas of occasional or no construction traffic. Preventive measures include minimizing surface areas to be disturbed, limiting onsite vehicle traffic to 15 mph or less, and controlling the number and activity of vehicles on a site at any given time.

Chemical dust suppressants include: mulch and fiber based dust palliatives (e.g. paper mulch with gypsum binder), salts and brines (e.g. calcium chloride, magnesium chloride), non-petroleum based organics (e.g. vegetable oil, lignosulfonate), petroleum based organics (e.g. asphalt emulsion, dust oils, petroleum resins), synthetic polymers (e.g. polyvinyl acetate, vinyl, acrylic), clay additives (e.g. bentonite, montmorillonite) and electrochemical products (e.g. enzymes, ionic products).

Site Condition	Dust Control Practices							
	Permanent Vegetation	Mulching	Wet Suppression (Watering)	Chemical Dust Suppression	Gravel or Asphalt	Temporary Gravel Construction Entrances/Equipment Wash Down	Synthetic Covers	Minimize Extent of Disturbed Area
Disturbed Areas not Subject to Traffic	x	x	x	x	x			x
Disturbed Areas Subject to Traffic			x	x	x	x		x
Material Stockpiles		x	x	x			x	x
Demolition			x			x	x	
Clearing/ Excavation			x	x				x
Truck Traffic on Unpaved Roads			x	x	x	x	x	
Tracking					x	x		

Additional preventive measures include:

- Schedule construction activities to minimize exposed area (see EC-1, Scheduling).
- Quickly treat exposed soils using water, mulching, chemical dust suppressants, or stone/gravel layering.
- Identify and stabilize key access points prior to commencement of construction.
- Minimize the impact of dust by anticipating the direction of prevailing winds.
- Restrict construction traffic to stabilized roadways within the project site, as practicable.
- Water should be applied by means of pressure-type distributors or pipelines equipped with a spray system or hoses and nozzles that will ensure even distribution.
- All distribution equipment should be equipped with a positive means of shutoff.
- Unless water is applied by means of pipelines, at least one mobile unit should be available at all times to apply water or dust palliative to the project.
- If reclaimed waste water is used, the sources and discharge must meet California Department of Health Services water reclamation criteria and the Regional Water Quality

Control Board (RWQCB) requirements. Non-potable water should not be conveyed in tanks or drain pipes that will be used to convey potable water and there should be no connection between potable and non-potable supplies. Non-potable tanks, pipes, and other conveyances should be marked, "NON-POTABLE WATER - DO NOT DRINK."

- Pave or chemically stabilize access points where unpaved traffic surfaces adjoin paved roads.
- Provide covers for haul trucks transporting materials that contribute to dust.
- Provide for rapid clean up of sediments deposited on paved roads. Furnish stabilized construction road entrances and wheel wash areas.
- Stabilize inactive areas of construction sites using temporary vegetation or chemical stabilization methods.

For chemical stabilization, there are many products available for chemically stabilizing gravel roadways and stockpiles. If chemical stabilization is used, the chemicals should not create any adverse effects on stormwater, plant life, or groundwater and should meet all applicable regulatory requirements.

Costs

Installation costs for water and chemical dust suppression vary based on the method used and the length of effectiveness. Annual costs may be high since some of these measures are effective for only a few hours to a few days.

Inspection and Maintenance

- Inspect and verify that activity-based BMPs are in place prior to the commencement of associated activities.
- BMPs must be inspected in accordance with General Permit requirements for the associated project type and risk level. It is recommended that at a minimum, BMPs be inspected weekly, prior to forecasted rain events, daily during extended rain events, and after the conclusion of rain events.
- Check areas protected to ensure coverage.
- Most water-based dust control measures require frequent application, often daily or even multiple times per day. Obtain vendor or independent information on longevity of chemical dust suppressants.

References

Best Management Practices and Erosion Control Manual for Construction Sites, Flood Control District of Maricopa County, Arizona, September 1992.

California Air Pollution Control Laws, California Air Resources Board, updated annually.

Construction Manual, Chapter 4, Section 10, "Dust Control"; Section 17, "Watering"; and Section 18, "Dust Palliative", California Department of Transportation (Caltrans), July 2001.

Prospects for Attaining the State Ambient Air Quality Standards for Suspended Particulate Matter (PM10), Visibility Reducing Particles, Sulfates, Lead, and Hydrogen Sulfide, California Air Resources Board, April 1991.

Stormwater Quality Handbooks Construction Site Best Management Practices (BMPs) Manual, State of California Department of Transportation (Caltrans), March 2003.

Stabilized Construction Entrance/Exit TC-1

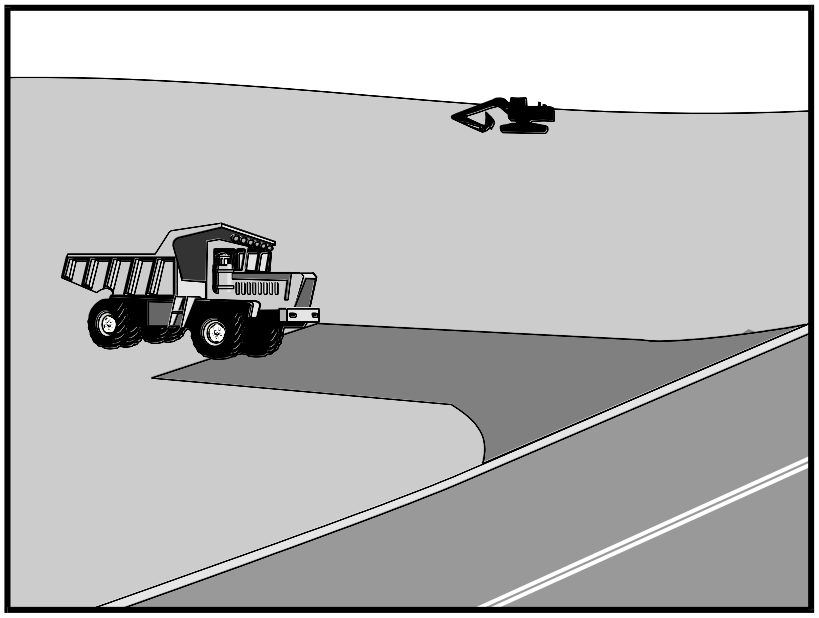

Categories		
EC	Erosion Control	☒
SE	Sediment Control	☒
TC	Tracking Control	☑
WE	Wind Erosion Control	
NS	Non-Stormwater Management Control	
WM	Waste Management and Materials Pollution Control	

Legend:

☑ **Primary Objective**

☒ **Secondary Objective**

Targeted Constituents	
Sediment	☑
Nutrients	
Trash	
Metals	
Bacteria	
Oil and Grease	
Organics	

Potential Alternatives

None

If User/Subscriber modifies this fact sheet in any way, the CASQA name/logo and footer below must be removed from each page and not appear on the modified version.

Description and Purpose

A stabilized construction access is defined by a point of entrance/exit to a construction site that is stabilized to reduce the tracking of mud and dirt onto public roads by construction vehicles.

Suitable Applications

Use at construction sites:

- Where dirt or mud can be tracked onto public roads.
- Adjacent to water bodies.
- Where poor soils are encountered.
- Where dust is a problem during dry weather conditions.

Limitations

- Entrances and exits require periodic top dressing with additional stones.
- This BMP should be used in conjunction with street sweeping on adjacent public right of way.
- Entrances and exits should be constructed on level ground only.
- Stabilized construction entrances are rather expensive to construct and when a wash rack is included, a sediment trap of some kind must also be provided to collect wash water runoff.

Implementation

General

A stabilized construction entrance is a pad of aggregate underlain with filter cloth located at any point where traffic will be entering or leaving a construction site to or from a public right of way, street, alley, sidewalk, or parking area. The purpose of a stabilized construction entrance is to reduce or eliminate the tracking of sediment onto public rights of way or streets. Reducing tracking of sediments and other pollutants onto paved roads helps prevent deposition of sediments into local storm drains and production of airborne dust.

Where traffic will be entering or leaving the construction site, a stabilized construction entrance should be used. NPDES permits require that appropriate measures be implemented to prevent tracking of sediments onto paved roadways, where a significant source of sediments is derived from mud and dirt carried out from unpaved roads and construction sites.

Stabilized construction entrances are moderately effective in removing sediment from equipment leaving a construction site. The entrance should be built on level ground. Advantages of the Stabilized Construction Entrance/Exit is that it does remove some sediment from equipment and serves to channel construction traffic in and out of the site at specified locations. Efficiency is greatly increased when a washing rack is included as part of a stabilized construction entrance/exit.

Design and Layout

- Construct on level ground where possible.
- Select 3 to 6 in. diameter stones.
- Use minimum depth of stones of 12 in. or as recommended by soils engineer.
- Construct length of 50 ft or maximum site will allow, and 10 ft minimum width or to accommodate traffic.
- Rumble racks constructed of steel panels with ridges and installed in the stabilized entrance/exit will help remove additional sediment and to keep adjacent streets clean.
- Provide ample turning radii as part of the entrance.
- Limit the points of entrance/exit to the construction site.
- Limit speed of vehicles to control dust.
- Properly grade each construction entrance/exit to prevent runoff from leaving the construction site.
- Route runoff from stabilized entrances/exits through a sediment trapping device before discharge.
- Design stabilized entrance/exit to support heaviest vehicles and equipment that will use it.

Stabilized Construction Entrance/Exit TC-1

- Select construction access stabilization (aggregate, asphaltic concrete, concrete) based on longevity, required performance, and site conditions. Do not use asphalt concrete (AC) grindings for stabilized construction access/roadway.
- If aggregate is selected, place crushed aggregate over geotextile fabric to at least 12 in. depth, or place aggregate to a depth recommended by a geotechnical engineer. A crushed aggregate greater than 3 in. but smaller than 6 in. should be used.
- Designate combination or single purpose entrances and exits to the construction site.
- Require that all employees, subcontractors, and suppliers utilize the stabilized construction access.
- Implement SE-7, Street Sweeping and Vacuuming, as needed.
- All exit locations intended to be used for more than a two-week period should have stabilized construction entrance/exit BMPs.

Inspection and Maintenance

- Inspect and verify that activity–based BMPs are in place prior to the commencement of associated activities. While activities associated with the BMPs are under way, inspect BMPs in accordance with General Permit requirements for the associated project type and risk level. It is recommended that at a minimum, BMPs be inspected weekly, prior to forecasted rain events, daily during extended rain events, and after the conclusion of rain events.
- Inspect local roads adjacent to the site daily. Sweep or vacuum to remove visible accumulated sediment.
- Remove aggregate, separate and dispose of sediment if construction entrance/exit is clogged with sediment.
- Keep all temporary roadway ditches clear.
- Check for damage and repair as needed.
- Replace gravel material when surface voids are visible.
- Remove all sediment deposited on paved roadways within 24 hours.
- Remove gravel and filter fabric at completion of construction

Costs

Average annual cost for installation and maintenance may vary from $1,500 to $6,100 each, averaging $3,100 per entrance. Costs will increase with addition of washing rack and sediment trap. With wash rack, costs range from $1,500 - $7,700 each, averaging $4,600 per entrance (All costs adjusted for inflation, 2016 dollars, by Tetra Tech Inc.

References

Manual of Standards of Erosion and Sediment Control Measures, Association of Bay Area Governments, May 1995.

National Management Measures to Control Nonpoint Source Pollution from Urban Areas, USEPA Agency, 2002.

Proposed Guidance Specifying Management Measures for Sources of Nonpoint Pollution in Coastal Waters, Work Group Working Paper, USEPA, April 1992.

Stormwater Quality Handbooks Construction Site Best Management Practices (BMPs) Manual, State of California Department of Transportation (Caltrans), November 2000.

Stormwater Management of the Puget Sound Basin, Technical Manual, Publication #91-75, Washington State Department of Ecology, February 1992.

Virginia Erosion and Sedimentation Control Handbook, Virginia Department of Conservation and Recreation, Division of Soil and Water Conservation, 1991.

Guidance Specifying Management Measures for Nonpoint Pollution in Coastal Waters, EPA 840-B-9-002, USEPA, Office of Water, Washington, DC, 1993.

Water Quality Management Plan for the Lake Tahoe Region, Volume II, Handbook of Management Practices, Tahoe Regional Planning Agency, November 1988.

Stabilized Construction Entrance/Exit TC-1

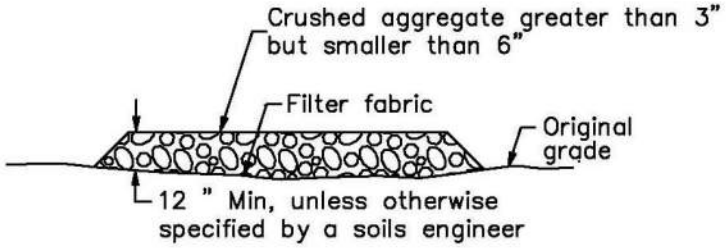

SECTION B–B
NTS

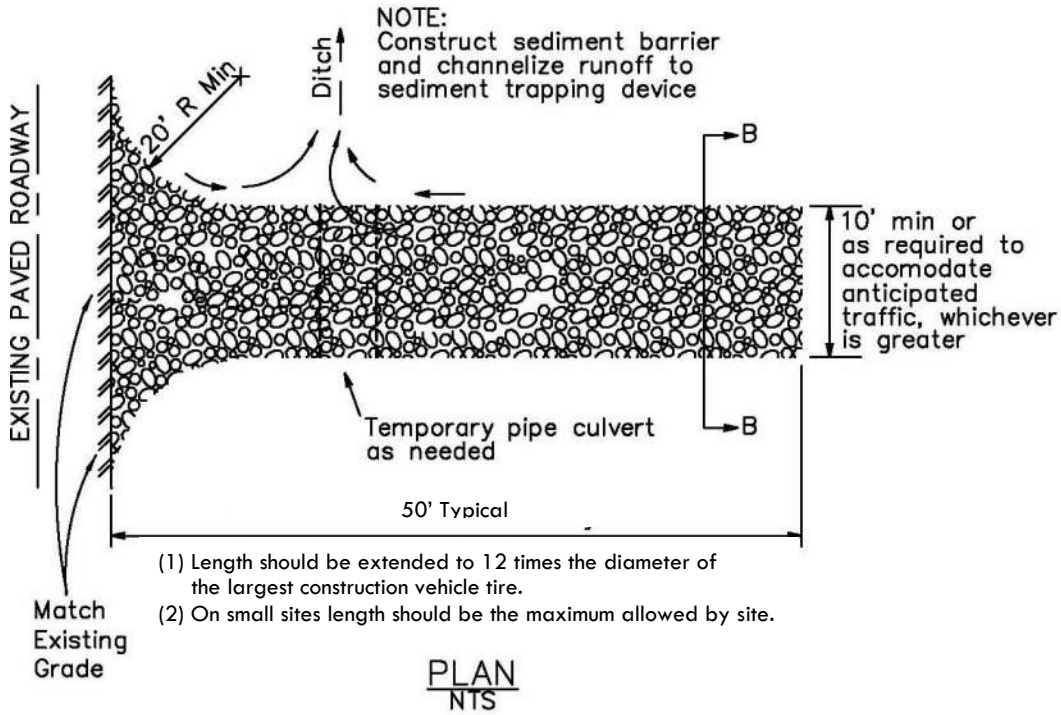

(1) Length should be extended to 12 times the diameter of the largest construction vehicle tire.
(2) On small sites length should be the maximum allowed by site.

PLAN
NTS

Stabilized Construction Entrance/Exit TC-1

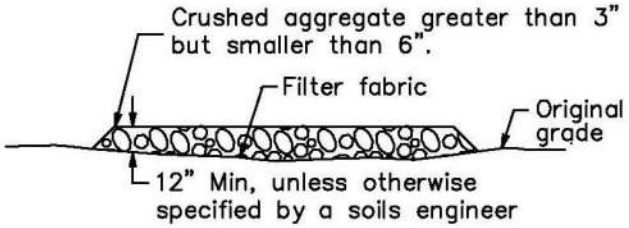

SECTION B–B
NTS

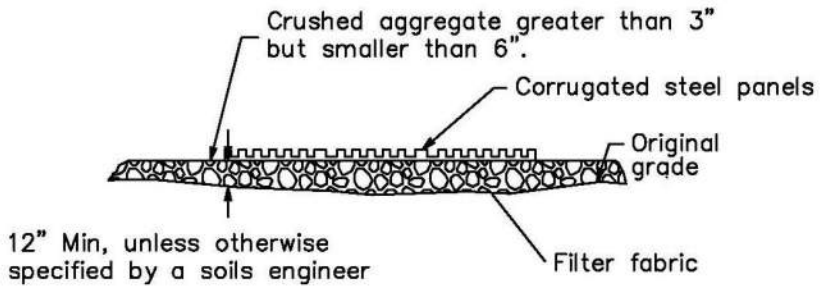

SECTION A–A
NOT TO SCALE

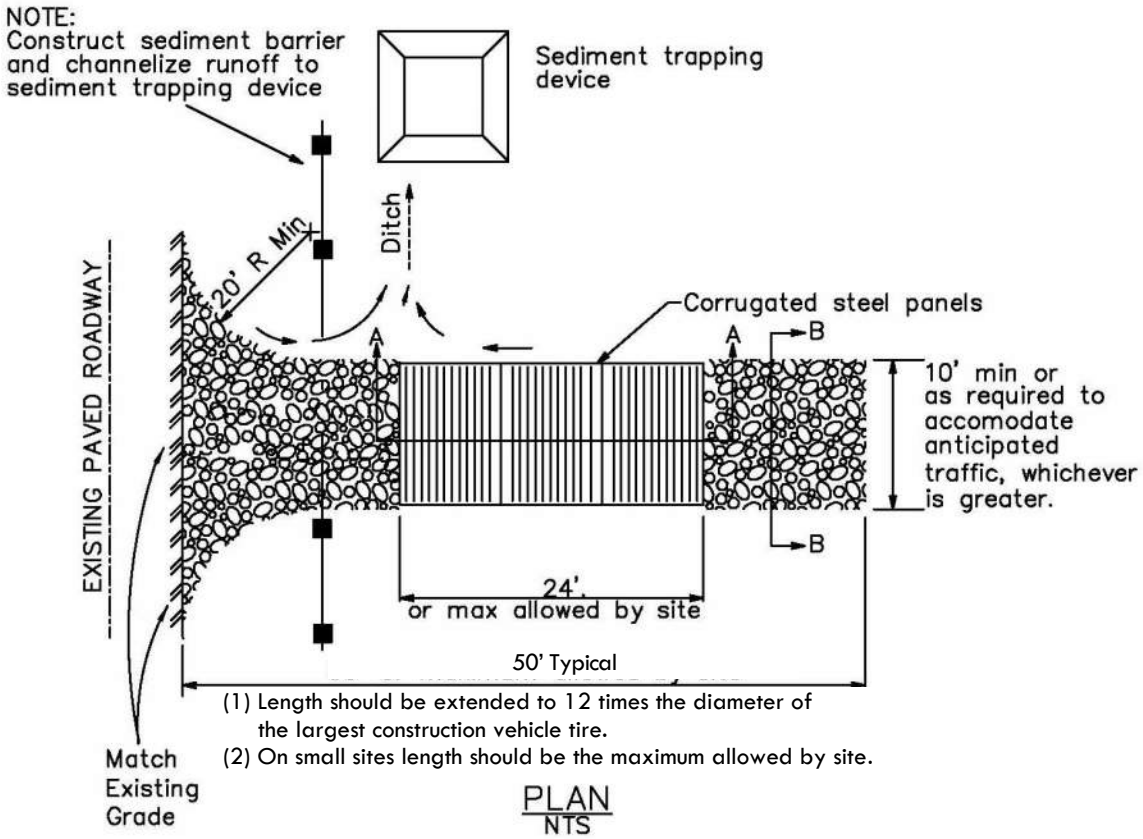

(1) Length should be extended to 12 times the diameter of the largest construction vehicle tire.
(2) On small sites length should be the maximum allowed by site.

PLAN
NTS

Water Conservation Practices NS-1

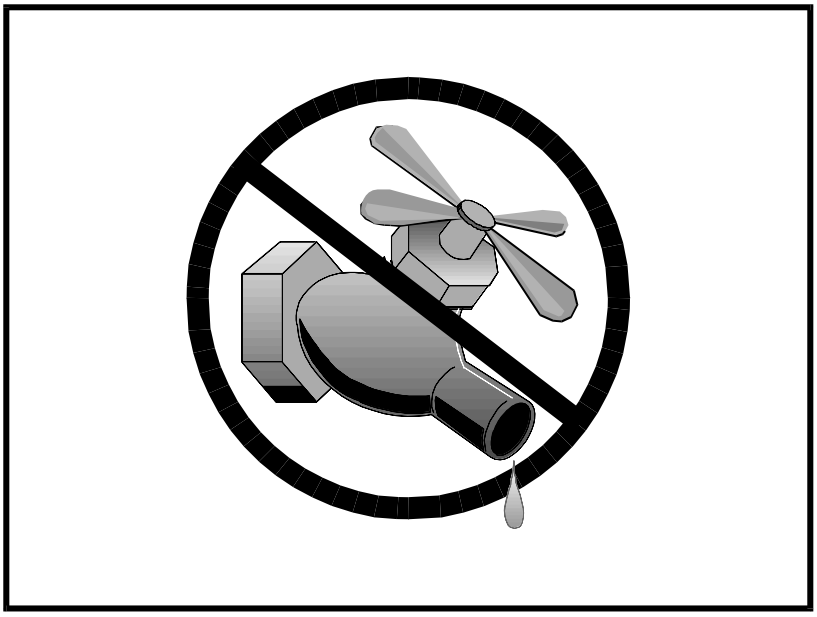

Categories		
EC	Erosion Control	☒
SE	Sediment Control	☒
TC	Tracking Control	
WE	Wind Erosion Control	
NS	Non-Stormwater Management Control	☑
WM	Waste Management and Materials Pollution Control	

Legend:
☑ **Primary Objective**
☒ **Secondary Objective**

Targeted Constituents	
Sediment	☑
Nutrients	
Trash	
Metals	
Bacteria	
Oil and Grease	
Organics	

Potential Alternatives

None

If User/Subscriber modifies this fact sheet in any way, the CASQA name/logo and footer below must be removed from each page and not appear on the modified version.

Description and Purpose

Water conservation practices are activities that use water during the construction of a project in a manner that avoids causing erosion and the transport of pollutants offsite. These practices can reduce or eliminate non-stormwater discharges.

Suitable Applications

Water conservation practices are suitable for all construction sites where water is used, including piped water, metered water, trucked water, and water from a reservoir.

Limitations

- None identified.

Implementation

- Keep water equipment in good working condition.
- Stabilize water truck filling area.
- Repair water leaks promptly.
- Washing of vehicles and equipment on the construction site is discouraged.
- Avoid using water to clean construction areas. If water must be used for cleaning or surface preparation, surface should be swept and vacuumed first to remove dirt. This will minimize amount of water required.

- Direct construction water runoff to areas where it can soak into the ground or be collected and used.
- Authorized non-stormwater discharges to the storm drain system, channels, or receiving waters are acceptable with the implementation of appropriate BMPs.
- Lock water tank valves to prevent unauthorized use.

Costs

The cost is small to none compared to the benefits of conserving water.

Inspection and Maintenance

- Inspect and verify that activity based BMPs are in place prior to the commencement of authorized non-stormwater discharges.
- Inspect BMPs in accordance with General Permit requirements for the associated project type and risk level. It is recommended that at a minimum, BMPs be inspected weekly, prior to forecasted rain events, daily during extended rain events, and after the conclusion of rain events.
- Inspect BMPs subject to non-stormwater discharges daily while non-stormwater discharges are occuring.
- Repair water equipment as needed to prevent unintended discharges.
  - Water trucks
  - Water reservoirs (water buffalos)
  - Irrigation systems
  - Hydrant connections

References

Stormwater Quality Handbooks - Construction Site Best Management Practices (BMPs) Manual, State of California Department of Transportation (Caltrans), November 2000.

Dewatering Operations NS-2

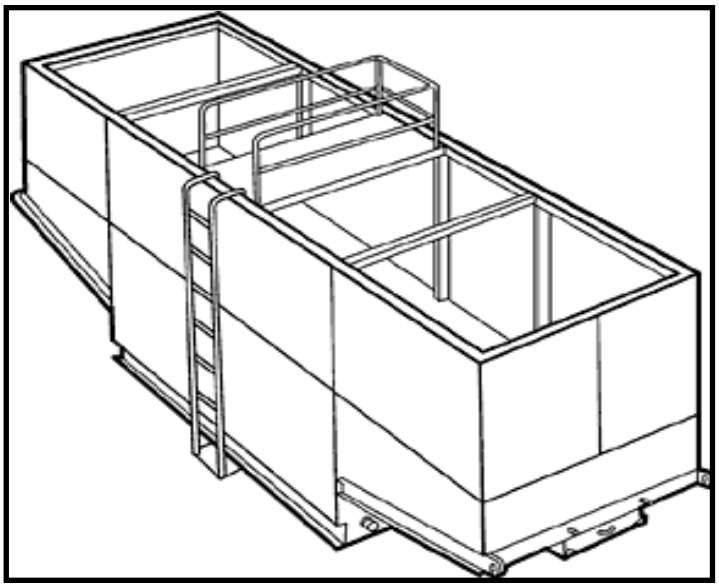

Categories		
EC	Erosion Control	
SE	Sediment Control	☒
TC	Tracking Control	
WE	Wind Erosion Control	
NS	Non-Stormwater Management Control	☑
WM	Waste Management and Materials Pollution Control	

Legend:
☑ **Primary Category**
☒ **Secondary Category**

Targeted Constituents	
Sediment	☑
Nutrients	
Trash	
Metals	
Bacteria	
Oil and Grease	☑
Organics	

Potential Alternatives

SE-5: Fiber Roll

SE-6: Gravel Bag Berm

If User/Subscriber modifies this fact sheet in any way, the CASQA name/logo and footer below must be removed from each page and not appear on the modified version.

Description and Purpose

Dewatering operations are practices that manage the discharge of pollutants when non-stormwater and accumulated precipitation (stormwater) must be removed from a work location to proceed with construction work or to provide vector control.

The General Permit incorporates Numeric Action Levels (NAL) for turbidity (see Section 2 of this handbook to determine your project's risk level and if you are subject to these requirements).

Discharges from dewatering operations can contain high levels of fine sediment that, if not properly treated, could lead to exceedances of the General Permit requirements or Basin Plan standards.

The dewatering operations described in this fact sheet are not Active Treatment Systems (ATS) and do not include the use of chemical coagulations, chemical flocculation or electrocoagulation.

Suitable Applications

These practices are implemented for discharges of non-stormwater from construction sites. Non-stormwaters include, but are not limited to, groundwater, water from cofferdams, water diversions, and waters used during construction activities that must be removed from a work area to facilitate construction.

Practices identified in this section are also appropriate for implementation when managing the removal of accumulated

CASQA
CALIFORNIA STORMWATER QUALITY ASSOCIATION

precipitation (stormwater) from depressed areas at a construction site.

Stormwater mixed with non-stormwater should be managed as non-stormwater.

Limitations

- Dewatering operations will require and should comply with applicable local and project-specific permits and regulations. In some areas, all dewatering activities, regardless of the discharge volume, require a dewatering permit.
- Site conditions will dictate design and use of dewatering operations.
- The controls discussed in this fact sheet primarily address sediment. Other secondary pollutant removal benefits are discussed where applicable.
- The controls detailed in this fact sheet only allow for minimal settling time for sediment particles. Use only when site conditions restrict the use of the other control methods.
- Avoid dewatering discharges where possible by using the water for dust control.

Implementation

- A Construction Site Monitoring Plan (CSMP) should be included in the project Stormwater Pollution Prevention Plan (SWPPP).
- Regional Water Quality Control Board (RWQCB) Regions may require notification and approval prior to any discharge of water from construction sites.
- The destination of discharge from dewatering activities will typically determine the type of permit required for the discharge. For example, when discharging to a water of the U.S., a dewatering permit may be required through the site's governing RWQCB. When discharging to a sanitary sewer or Municipal Separate Storm Sewer System (MS4), a permit may need to be obtained from the owner of the sanitary sewer or MS4 in addition to obtaining an RWQCB dewatering permit. Additional permits or permissions from other agencies may be required for dewatering cofferdams or diversions.
- Dewatering discharges should not cause erosion at the discharge point. Appropriate BMPs should be implemented to maintain compliance with all applicable permits.
- Maintain dewatering records in accordance with all local and project-specific permits and regulations.

Sediment Treatment

A variety of methods can be used to treat water during dewatering operations. Several devices are presented below and provide options to achieve sediment removal. The sediment particle size and permit or receiving water limitations on sediment or turbidity are key considerations for selecting sediment treatment option(s); in some cases, the use of multiple devices may be appropriate. Use of other enhanced treatment methods (i.e., introduction of chemicals or electric current to enhance flocculation and removal of sediment) must comply with: 1) for storm drain or surface water discharges, the requirements for Active Treatment Systems (see SE-11); or 2) for sanitary sewer discharges, the requirements of applicable sanitary sewer discharge permits.

Sediment Basin (see also SE-2)

Description:

- A sediment basin is a temporary basin with a controlled release structure that is formed by excavation or construction of an embankment to detain sediment-laden runoff and allow sediment to settle out before discharging. Sediment basins are generally larger than Sediment Traps (SE-3) and have a designed outlet structure.

Appropriate Applications:

- Effective for the removal of trash, gravel, sand, silt, some metals that settle out with the sediment.

Implementation:

- Excavation and construction of related facilities is required.
- Temporary sediment basins should be fenced if safety is a concern.
- Outlet protection is required to prevent erosion at the outfall location.

Maintenance:

- Maintenance is required for safety fencing, vegetation, embankment, inlet and outlet, as well as other features.
- Removal of sediment is required when the storage volume is reduced by one-third.

Sediment Trap (See also SE-3)

Description:

- A sediment trap is a temporary basin formed by excavation and/or construction of an earthen embankment across a waterway or low drainage area to detain sediment-laden runoff and allow sediment to settle out before discharging. Sediment traps are generally smaller than Sediment Basins (SE-2) and do not have a designed outlet (but do have a spillway or overflow).

Appropriate Applications:

Effective for the removal of large and medium sized particles (sand and gravel) and some metals that settle out with the sediment.

Implementation:

- Excavation and construction of related facilities is required.
- Trap inlets should be located to maximize the travel distance to the trap outlet.
- Use rock or vegetation to protect the trap outlets against erosion.

Maintenance:

- Maintenance is required for vegetation, embankment, inlet and outfall structures, as well as other features.
- Removal of sediment is required when the storage volume is reduced by one-third.

Weir Tanks

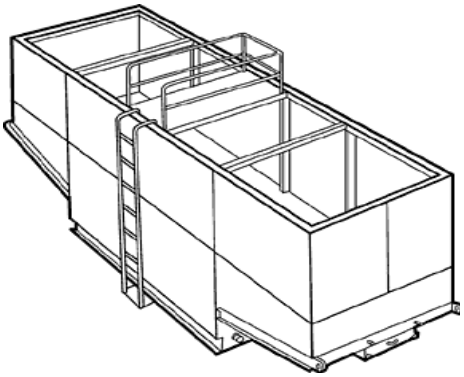

Description:

- A weir tank separates water and waste by using weirs. The configuration of the weirs (over and under weirs) maximizes the residence time in the tank and determines the waste to be removed from the water, such as oil, grease, and sediments.

Appropriate Applications:

- The tank removes trash, some settleable solids (gravel, sand, and silt), some visible oil and grease, and some metals (removed with sediment). To achieve high levels of flow, multiple tanks can be used in parallel. If additional treatment is desired, the tanks can be placed in series or as pre-treatment for other methods.

Implementation:

- Tanks are delivered to the site by the vendor, who can provide assistance with set-up and operation.
- Tank size will depend on flow volume, constituents of concern, and residency period required. Vendors should be consulted to appropriately size tank.
- Treatment capacity (i.e., volume and number of tanks) should provide at a minimum the required volume for discrete particle settling for treatment design flows.

Maintenance:

- Periodic cleaning is required based on visual inspection or reduced flow.
- Oil and grease disposal should be conducted by a licensed waste disposal company.

Dewatering Tanks



Description:

- A dewatering tank removes debris and sediment. Flow enters the tank through the top, passes through a fabric filter, and is discharged through the bottom of the tank. The filter separates the solids from the liquids.

Appropriate Applications:

- The tank removes trash, gravel, sand, and silt, some visible oil and grease, and some metals (removed with sediment). To achieve high levels of flow, multiple tanks can be used in parallel. If additional treatment is desired, the tanks can be placed in series or as pre-treatment for other methods.

Implementation:

- Tanks are delivered to the site by the vendor, who can provide assistance with set-up and operation.
- Tank size will depend on flow volume, constituents of concern, and residency period required. Vendors should be consulted to appropriately size tank.

Maintenance:

- Periodic cleaning is required based on visual inspection or reduced flow.
- Oil and grease disposal should be conducted by licensed waste disposal company.

Gravity Bag Filter



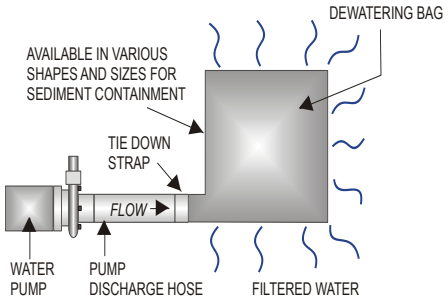

Description:

- A gravity bag filter, also referred to as a dewatering bag, is a square or rectangular bag made of non-woven geotextile fabric that collects gravel, sand, silt, and fines.

Appropriate Applications:

- Effective for the removal of sediments (gravel, sand, silt, and fines). Some metals are removed with the sediment.

Implementation:

- Water is pumped into one side of the bag and seeps through the top, bottom, and sides of the bag.
- Place filter bag on pavement or a gravel bed or paved surface. Avoid placing a dewatering bag on unprotected bare soil. If placing the bag on bare soil is unavoidable, a secondary barrier should be used, such as a rock filter bed placed beneath and beyond the edges of the bag to, prevent erosion and capture sediments that escape the bag.
- Perimeter control around the downstream end of the bag should be implemented. Secondary sediment controls are important especially in the initial stages of discharge, which tend to allow fines to pass through the bag.

Maintenance:

- Inspection of the flow conditions, bag condition, bag capacity, and the secondary barrier (as applicable) is required.
- Replace the bag when it no longer filters sediment or passes water at a reasonable rate.
- Caution should be taken when removing and disposing of the bag, to prevent the release of captured sediment
- Properly dispose of the bag offsite. If sediment is removed from the bag prior to disposal (bags can potentially be reused depending upon their condition), dispose of sediment in accordance with the general maintenance procedures described at the end of this BMP Fact Sheet.

Sand Media Particulate Filter





Description:

- Water is treated by passing it through canisters filled with sand media. Generally, sand filters provide a final level of treatment. They are often used as a secondary or higher level of treatment after a significant amount of sediment and other pollutants have been removed using other methods.

Appropriate Applications:

- Effective for the removal of trash, gravel, sand, and silt and some metals, as well as the reduction of biochemical oxygen demand (BOD) and turbidity.
- Sand filters can be used for stand-alone treatment or in conjunction with bag and cartridge filtration if further treatment is required.
- Sand filters can also be used to provide additional treatment to water treated via settling or basic filtration.

Implementation:

- The filters require delivery to the site and initial set up. The vendor can provide assistance with installation and operation.

Maintenance:

- The filters require regular service to monitor and maintain the level of the sand media. If subjected to high loading rates, filters can plug quickly.
- Venders generally provide data on maximum head loss through the filter. The filter should be monitored daily while in use and cleaned when head loss reaches target levels.
- If cleaned by backwashing, the backwash water may need to be hauled away for disposal or returned to the upper end of the treatment train for another pass through the series of dewatering BMPs.

Pressurized Bag Filter





Description:

- A pressurized bag filter is a unit composed of single filter bags made from polyester felt material. The water filters through the unit and is discharged through a header. Vendors provide bag filters in a variety of configurations. Some units include a combination of bag filters and cartridge filters for enhanced contaminant removal.

Appropriate Applications:

- Effective for the removal of sediment (sand and silt) and some metals, as well as the reduction of BOD, turbidity, and hydrocarbons. Oil absorbent bags are available for hydrocarbon removal.

- Filters can be used to provide secondary treatment to water treated via settling or basic filtration.

Implementation:

- The filters require delivery to the site and initial set up. The vendor can provide assistance with installation and operation.

Maintenance:

- The filter bags require replacement when the pressure differential equals or exceeds the manufacturer's recommendation.

Cartridge Filter



Description:

- Cartridge filters provide a high degree of pollutant removal by utilizing a number of individual cartridges as part of a larger filtering unit. They are often used as a secondary or higher (polishing) level of treatment after a significant amount of sediment and other pollutants are removed. Units come with various cartridge configurations (for use in series with bag filters) or with a larger single cartridge filtration unit (with multiple filters within).

Appropriate Applications:

- Effective for the removal of sediment (sand, silt, and some clays) and metals, as well as the reduction of BOD, turbidity, and hydrocarbons. Hydrocarbons can effectively be removed with special resin cartridges.

- Filters can be used to provide secondary treatment to water treated via settling or basic filtration.

Implementation:

- The filters require delivery to the site and initial set up. The vendor can provide assistance.

Maintenance:

- The cartridges require replacement when the pressure differential equals or exceeds the manufacturer's recommendation.

Costs

- Sediment control costs vary considerably depending on the dewatering and sediment treatment system that is selected. Pressurized filters tend to be more expensive than gravity settling but are often more effective. Simple tanks are generally rented on a long-term basis (one or more months) and can range from $460 per month for a 1,000-gallon tank to $3,400 per month for a 10,000-gallon tank (adjusted for inflation, 2016 dollars, by Tetra Tech Inc.). Mobilization and demobilization costs vary considerably.

Inspection and Maintenance

- Inspect and verify that dewatering BMPs are in place and functioning prior to the commencement of activities requiring dewatering.

- Inspect dewatering BMPs daily while dewatering activities are being conducted.

- Inspect all equipment before use. Monitor dewatering operations to ensure they do not cause offsite discharge or erosion.
- Sample dewatering discharges as required by the General Permit.
- Unit-specific maintenance requirements are included with the description of each unit.
- Sediment removed during the maintenance of a dewatering device may be either spread onsite and stabilized or disposed of at a disposal site as approved by the owner.
- Sediment that is commingled with other pollutants should be disposed of in accordance with all applicable laws and regulations and as approved by the owner.

References

Blueprint for a Clean Bay: Best Management Practices to Prevent Stormwater Pollution from Construction Related Activities; Santa Clara Valley Nonpoint Source Pollution Control Program, 1995.

Stormwater Quality Handbooks - Construction Site Best Management Practices (BMPs) Manual, State of California Department of Transportation (Caltrans), March 2003; Updated March 2004.

Stormwater Management for Construction Activities, Developing Pollution Prevention Plans and Best Management Practices, EPA 832-R-92005; USEPA, April 1992.

Labor Surcharge & Equipment Rental Rates, April 1, 2002 through March 31, 2003, California Department of Transportation (Caltrans).

Erosion and Sediment Control Manual, Oregon Department of Environmental Quality, February 2005.

Paving and Grinding Operations NS-3

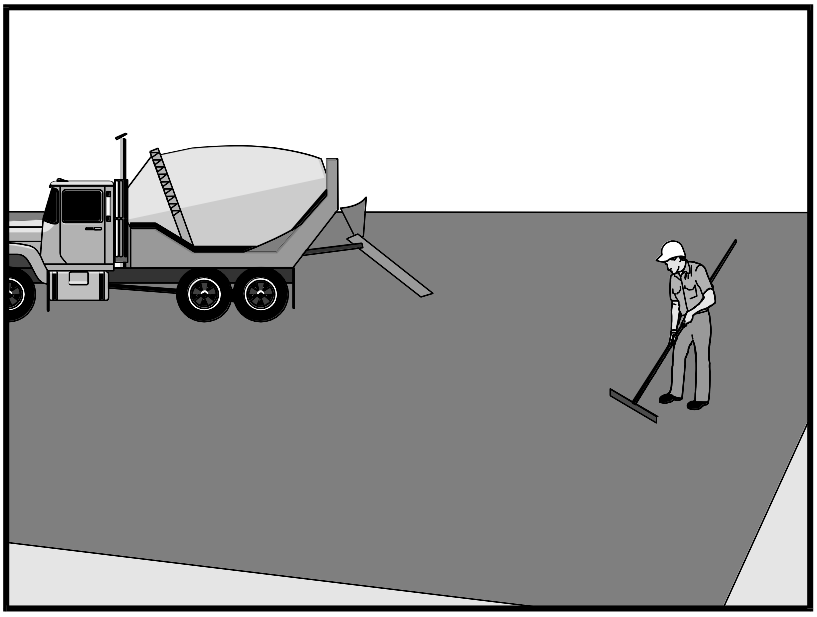

Categories		
EC	Erosion Control	
SE	Sediment Control	
TC	Tracking Control	
WE	Wind Erosion Control	
NS	Non-Stormwater Management Control	☑
WM	Waste Management and Materials Pollution Control	☒

Legend:
☑ **Primary Category**
☒ **Secondary Category**

Targeted Constituents	
Sediment	☑
Nutrients	
Trash	
Metals	
Bacteria	
Oil and Grease	☑
Organics	

Potential Alternatives

None

If User/Subscriber modifies this fact sheet in any way, the CASQA name/logo and footer below must be removed from each page and not appear on the modified version.

Description and Purpose

Prevent or reduce the discharge of pollutants from paving operations, using measures to prevent runon and runoff pollution, properly disposing of wastes, and training employees and subcontractors.

The General Permit incorporates Numeric Action Levels (NAL) for pH and turbidity (see Section 2 of this handbook to determine your project's risk level and if you are subject to these requirements).

Many types of construction materials associated with paving and grinding operations, including mortar, concrete, and cement and their associated wastes have basic chemical properties that can raise pH levels outside of the permitted range. Additional care should be taken when managing these materials to prevent them from coming into contact with stormwater flows, which could lead to exceedances of the General Permit requirements.

Suitable Applications

These procedures are implemented where paving, surfacing, resurfacing, or sawcutting, may pollute stormwater runoff or discharge to the storm drain system or watercourses.

Limitations

- Paving opportunities may be limited during wet weather.

  Discharges of freshly paved surfaces may raise pH to environmentally harmful levels and trigger permit violations.

Implementation

General

- Avoid paving during the wet season when feasible.
- Reschedule paving and grinding activities if rain is forecasted.
- Train employees and sub-contractors in pollution prevention and reduction.
- Store materials away from drainage courses to prevent stormwater runon (see WM-1, Material Delivery and Storage).
- Protect drainage courses, particularly in areas with a grade, by employing BMPs to divert runoff or to trap and filter sediment.
- Stockpile material removed from roadways away from drain inlets, drainage ditches, and watercourses. These materials should be stored consistent with WM-3, Stockpile Management.
- Disposal of PCC (Portland cement concrete) and AC (asphalt concrete) waste should be in conformance with WM-8, Concrete Waste Management.

Saw Cutting, Grinding, and Pavement Removal

- Shovel or vacuum saw-cut slurry and remove from site. Cover or barricade storm drains during saw cutting to contain slurry.
- When paving involves AC, the following steps should be implemented to prevent the discharge of grinding residue, uncompacted or loose AC, tack coats, equipment cleaners, or unrelated paving materials:
  - AC grindings, pieces, or chunks used in embankments or shoulder backing should not be allowed to enter any storm drains or watercourses. Install inlet protection and perimeter controls until area is stabilized (i.e. cutting, grinding or other removal activities are complete and loose material has been properly removed and disposed of)or permanent controls are in place. Examples of temporary perimeter controls can be found in EC-9, Earth Dikes and Drainage Swales; SE-1, Silt Fence; SE-5, Fiber Rolls, or SE-13 Compost Socks and Berms
  - Collect and remove all broken asphalt and recycle when practical. Old or spilled asphalt should be recycled or disposed of properly.
- Do not allow saw-cut slurry to enter storm drains or watercourses. Residue from grinding operations should be picked up by a vacuum attachment to the grinding machine, or by sweeping, should not be allowed to flow across the pavement, and should not be left on the surface of the pavement. See also WM-8, Concrete Waste Management, and WM-10, Liquid Waste Management.
- Pavement removal activities should not be conducted in the rain.
- Collect removed pavement material by mechanical or manual methods. This material may be recycled for use as shoulder backing or base material.

- If removed pavement material cannot be recycled, transport the material back to an approved storage site.

Asphaltic Concrete Paving

- If paving involves asphaltic cement concrete, follow these steps:

  - Do not allow sand or gravel placed over new asphalt to wash into storm drains, streets, or creeks. Vacuum or sweep loose sand and gravel and properly dispose of this waste by referring to WM-5, Solid Waste Management.

  - Old asphalt should be disposed of properly. Collect and remove all broken asphalt from the site and recycle whenever possible.

Portland Cement Concrete Paving

- Do not wash sweepings from exposed aggregate concrete into a storm drain system. Collect waste materials by dry methods, such as sweeping or shoveling, and return to aggregate base stockpile or dispose of properly. Allow aggregate rinse to settle. Then, either allow rinse water to dry in a temporary pit as described in WM-8, Concrete Waste Management, or pump the water to the sanitary sewer if authorized by the local wastewater authority.

Sealing Operations

- During chip seal application and sweeping operations, petroleum or petroleum covered aggregate should not be allowed to enter any storm drain or water courses. Apply temporary perimeter controls until structure is stabilized (i.e. all sealing operations are complete and cured and loose materials have been properly removed and disposed).

- Inlet protection (SE-10, Storm Drain Inlet Protection) should be used during application of seal coat, tack coat, slurry seal, and fog seal.

- Seal coat, tack coat, slurry seal, or fog seal should not be applied if rainfall is predicted to occur during the application or curing period.

Paving Equipment

- Leaks and spills from paving equipment can contain toxic levels of heavy metals and oil and grease. Place drip pans or absorbent materials under paving equipment when not in use. Clean up spills with absorbent materials and dispose of in accordance with the applicable regulations. See NS-10, Vehicle and Equipment Maintenance, WM-4, Spill Prevention and Control, and WM-10, Liquid Waste Management.

- Substances used to coat asphalt transport trucks and asphalt spreading equipment should not contain soap and should be non-foaming and non-toxic.

- Paving equipment parked onsite should be parked over plastic to prevent soil contamination.

- Clean asphalt coated equipment offsite whenever possible. When cleaning dry, hardened asphalt from equipment, manage hardened asphalt debris as described in WM-5, Solid Waste Management. Any cleaning onsite should follow NS-8, Vehicle and Equipment Cleaning.

Thermoplastic Striping

- Thermoplastic striper and pre-heater equipment shutoff valves should be inspected to ensure that they are working properly to prevent leaking thermoplastic from entering drain inlets, the stormwater drainage system, or watercourses.
- Pre-heaters should be filled carefully to prevent splashing or spilling of hot thermoplastic. Leave six inches of space at the top of the pre-heater container when filling thermoplastic to allow room for material to move.
- Do not pre-heat, transfer, or load thermoplastic near drain inlets or watercourses.
- Clean truck beds daily of loose debris and melted thermoplastic. When possible, recycle thermoplastic material.

Raised/Recessed Pavement Marker Application and Removal

- Do not transfer or load bituminous material near drain inlets, the stormwater drainage system, or watercourses.
- Melting tanks should be loaded with care and not filled to beyond six inches from the top to leave room for splashing.
- When servicing or filling melting tanks, ensure all pressure is released before removing lids to avoid spills.
- On large-scale projects, use mechanical or manual methods to collect excess bituminous material from the roadway after removal of markers.

Costs

- All of the above are low cost measures.

Inspection and Maintenance

- Inspect and verify that activity-based BMPs are in place prior to the commencement of paving and grinding operations.
- BMPs must be inspected in accordance with General Permit requirements for the associated project type and risk level. It is recommended that at a minimum, BMPs be inspected weekly, prior to forecasted rain events, daily during extended rain events, and after the conclusion of rain events.
- Sample stormwater runoff required by the General Permit.
- Keep ample supplies of drip pans or absorbent materials onsite.
- Inspect and maintain machinery regularly to minimize leaks and drips.

References

Blueprint for a Clean Bay: Best Management Practices to Prevent Stormwater Pollution from Construction Related Activities; Santa Clara Valley Nonpoint Source Pollution Control Program, 1995.

Hot Mix Asphalt-Paving Handbook AC 150/5370-14, Appendix I, U.S. Army Corps of Engineers, July 1991.

Stormwater Quality Handbooks - Construction Site Best Management Practices (BMPs) Manual, State of California Department of Transportation (Caltrans), March 2003.

Erosion and Sediment Control Manual, Oregon Department of Environmental Quality, February 2005.

Illicit Connection/Discharge NS-6

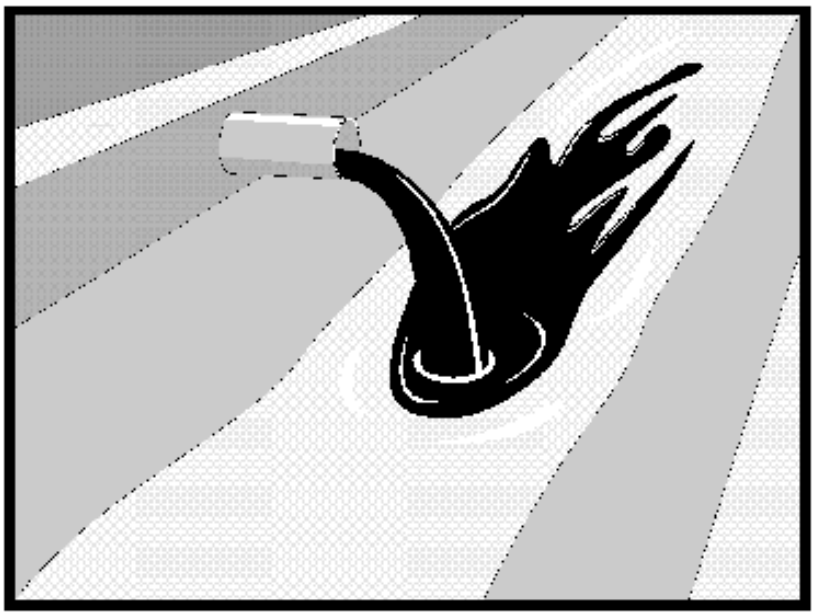

Categories		
EC	Erosion Control	
SE	Sediment Control	
TC	Tracking Control	
WE	Wind Erosion Control	
NS	Non-Stormwater Management Control	☑
WM	Waste Management and Materials Pollution Control	

Legend:
☑ **Primary Objective**
☒ **Secondary Objective**

Targeted Constituents	
Sediment	
Nutrients	☑
Trash	☑
Metals	☑
Bacteria	☑
Oil and Grease	☑
Organics	☑

Potential Alternatives

None

If User/Subscriber modifies this fact sheet in any way, the CASQA name/logo and footer below must be removed from each page and not appear on the modified version.

Description and Purpose

Procedures and practices designed for construction contractors to recognize illicit connections or illegally dumped or discharged materials on a construction site and report incidents.

Suitable Applications

This best management practice (BMP) applies to all construction projects. Illicit connection/discharge and reporting is applicable anytime an illicit connection or discharge is discovered, or illegally dumped material is found on the construction site.

Limitations

Illicit connections and illegal discharges or dumping, for the purposes of this BMP, refer to discharges and dumping caused by parties other than the contractor. If pre-existing hazardous materials or wastes are known to exist onsite, they should be identified in the SWPPP and handled as set forth in the SWPPP.

Implementation

Planning

- Review the SWPPP. Pre-existing areas of contamination should be identified and documented in the SWPPP.
- Inspect site before beginning the job for evidence of illicit connections, illegal dumping or discharges. Document any pre-existing conditions and notify the owner.

- Inspect site regularly during project execution for evidence of illicit connections, illegal dumping or discharges.
- Observe site perimeter for evidence for potential of illicitly discharged or illegally dumped material, which may enter the job site.

Identification of Illicit Connections and Illegal Dumping or Discharges

- **General –** unlabeled and unidentifiable material should be treated as hazardous.
- **Solids** - Look for debris, or rubbish piles. Solid waste dumping often occurs on roadways with light traffic loads or in areas not easily visible from the traveled way.
- **Liquids** - signs of illegal liquid dumping or discharge can include:
  - Visible signs of staining or unusual colors to the pavement or surrounding adjacent soils
  - Pungent odors coming from the drainage systems
  - Discoloration or oily substances in the water or stains and residues detained within ditches, channels or drain boxes
  - Abnormal water flow during the dry weather season
- **Urban Areas** - Evidence of illicit connections or illegal discharges is typically detected at storm drain outfall locations or at manholes. Signs of an illicit connection or illegal discharge can include:
  - Abnormal water flow during the dry weather season
  - Unusual flows in sub drain systems used for dewatering
  - Pungent odors coming from the drainage systems
  - Discoloration or oily substances in the water or stains and residues detained within ditches, channels or drain boxes
  - Excessive sediment deposits, particularly adjacent to or near active offsite construction projects
- **Rural Areas** - Illicit connections or illegal discharges involving irrigation drainage ditches are detected by visual inspections. Signs of an illicit discharge can include:
  - Abnormal water flow during the non-irrigation season
  - Non-standard junction structures
  - Broken concrete or other disturbances at or near junction structures

Reporting

Notify the owner of any illicit connections and illegal dumping or discharge incidents at the time of discovery. For illicit connections or discharges to the storm drain system, notify the local stormwater management agency. For illegal dumping, notify the local law enforcement agency.

Cleanup and Removal

The responsibility for cleanup and removal of illicit or illegal dumping or discharges will vary by location. Contact the local stormwater management agency for further information.

Costs

Costs to look for and report illicit connections and illegal discharges and dumping are low. The best way to avoid costs associated with illicit connections and illegal discharges and dumping is to keep the project perimeters secure to prevent access to the site, to observe the site for vehicles that should not be there, and to document any waste or hazardous materials that exist onsite before taking possession of the site.

Inspection and Maintenance

- Inspect and verify that activity-based BMPs are in place prior to the commencement of associated activities. While activities associated with the BMP are under way, inspect BMPs in accordance with General Permit requirements for the associated project type and risk level. It is recommended that at a minimum, BMPs be inspected weekly, prior to forecasted rain events, daily during extended rain events, and after the conclusion of rain events.
- Inspect the site regularly to check for any illegal dumping or discharge.
- Prohibit employees and subcontractors from disposing of non-job-related debris or materials at the construction site.
- Notify the owner of any illicit connections and illegal dumping or discharge incidents at the time of discovery.

References

Blueprint for a Clean Bay: Best Management Practices to Prevent Stormwater Pollution from Construction Related Activities; Santa Clara Valley Nonpoint Source Pollution Control Program, 1995.

Stormwater Quality Handbooks - Construction Site Best Management Practices (BMPs) Manual, State of California Department of Transportation (Caltrans), November 2000.

Stormwater Management for Construction Activities, Developing Pollution Prevention Plans and Best Management Practices, EPA 832-R-92005; USEPA, April 1992.

Vehicle and Equipment Cleaning NS-8

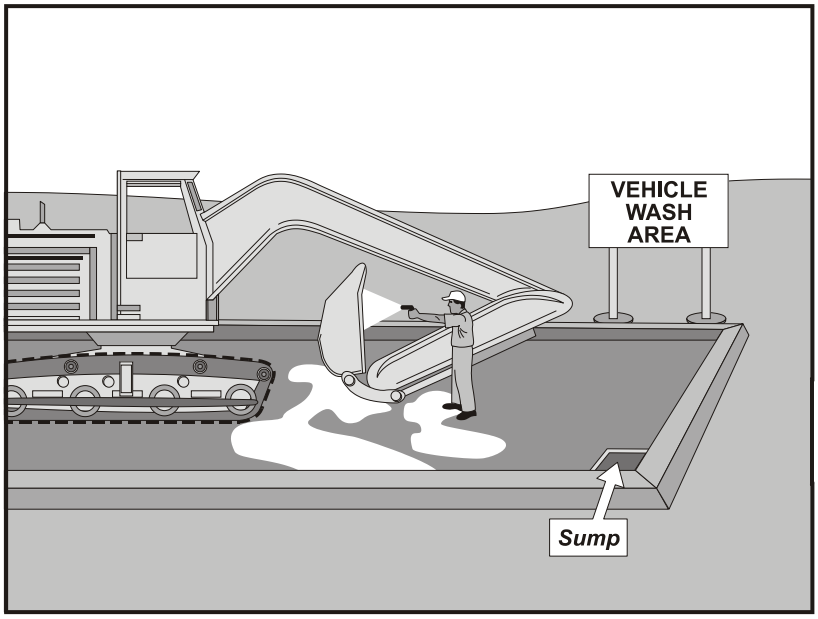

Categories

EC	Erosion Control	
SE	Sediment Control	
TC	Tracking Control	
WE	Wind Erosion Control	
NS	Non-Stormwater Management Control	☑
WM	Waste Management and Materials Pollution Control	

Legend:

☑ **Primary Objective**

☒ **Secondary Objective**

Targeted Constituents

Sediment	☑
Nutrients	☑
Trash	
Metals	
Bacteria	
Oil and Grease	☑
Organics	☑

Potential Alternatives

None

If User/Subscriber modifies this fact sheet in any way, the CASQA name/logo and footer below must be removed from each page and not appear on the modified version.

Description and Purpose

Vehicle and equipment cleaning procedures and practices eliminate or reduce the discharge of pollutants to stormwater from vehicle and equipment cleaning operations. Procedures and practices include but are not limited to: using offsite facilities; washing in designated, contained areas only; eliminating discharges to the storm drain by infiltrating the wash water; and training employees and subcontractors in proper cleaning procedures.

Suitable Applications

These procedures are suitable on all construction sites where vehicle and equipment cleaning is performed.

Limitations

Even phosphate-free, biodegradable soaps have been shown to be toxic to fish before the soap degrades. Sending vehicles/equipment offsite should be done in conjunction with TC-1, Stabilized Construction Entrance/Exit.

Implementation

Other options to washing equipment onsite include contracting with either an offsite or mobile commercial washing business. These businesses may be better equipped to handle and dispose of the wash waters properly. Performing this work offsite can also be economical by eliminating the need for a separate washing operation onsite.

If washing operations are to take place onsite, then:

CASQA
CALIFORNIA STORMWATER QUALITY ASSOCIATION

- Use phosphate-free, biodegradable soaps.
- Educate employees and subcontractors on pollution prevention measures.
- Do not permit steam cleaning onsite. Steam cleaning can generate significant pollutant concentrates.
- Cleaning of vehicles and equipment with soap, solvents or steam should not occur on the project site unless resulting wastes are fully contained and disposed of. Resulting wastes should not be discharged or buried and must be captured and recycled or disposed according to the requirements of WM-10, Liquid Waste Management or WM-6, Hazardous Waste Management, depending on the waste characteristics. Minimize use of solvents. Use of diesel for vehicle and equipment cleaning is prohibited.
- All vehicles and equipment that regularly enter and leave the construction site must be cleaned offsite.
- When vehicle and equipment washing and cleaning must occur onsite, and the operation cannot be located within a structure or building equipped with appropriate disposal facilities, the outside cleaning area should have the following characteristics:
  - Located away from storm drain inlets, drainage facilities, or watercourses
  - Paved with concrete or asphalt and bermed to contain wash waters and to prevent runon and runoff
  - Configured with a sump to allow collection and disposal of wash water
  - No discharge of wash waters to storm drains or watercourses
  - Used only when necessary
- When cleaning vehicles and equipment with water:
  - Use as little water as possible. High-pressure sprayers may use less water than a hose and should be considered
  - Use positive shutoff valve to minimize water usage
  - Facility wash racks should discharge to a sanitary sewer, recycle system or other approved discharge system and must not discharge to the storm drainage system, watercourses, or to groundwater

Costs

Cleaning vehicles and equipment at an offsite facility may reduce overall costs for vehicle and equipment cleaning by eliminating the need to provide similar services onsite. When onsite cleaning is needed, the cost to establish appropriate facilities is relatively low on larger, long-duration projects, and moderate to high on small, short-duration projects.

Inspection and Maintenance

- Inspect and verify that activity-based BMPs are in place prior to the commencement of associated activities. While activities associated with the BMP are under way, inspect BMPs in accordance with General Permit requirements for the associated project type and risk level. It is recommended that at a minimum, BMPs be inspected weekly, prior to forecasted rain events, daily during extended rain events, and after the conclusion of rain events.
- Inspect BMPs subject to non-stormwater discharges daily while non-stormwater discharges occur.
- Inspection and maintenance is minimal, although some berm repair may be necessary.
- Monitor employees and subcontractors throughout the duration of the construction project to ensure appropriate practices are being implemented.
- Inspect sump regularly and remove liquids and sediment as needed.
- Prohibit employees and subcontractors from washing personal vehicles and equipment on the construction site.

References

Stormwater Quality Handbooks - Construction Site Best Management Practices (BMPs) Manual, State of California Department of Transportation (Caltrans), November 2000.

Swisher, R.D. Surfactant Biodegradation, Marcel Decker Corporation, 1987.

Vehicle and Equipment Fueling NS-9

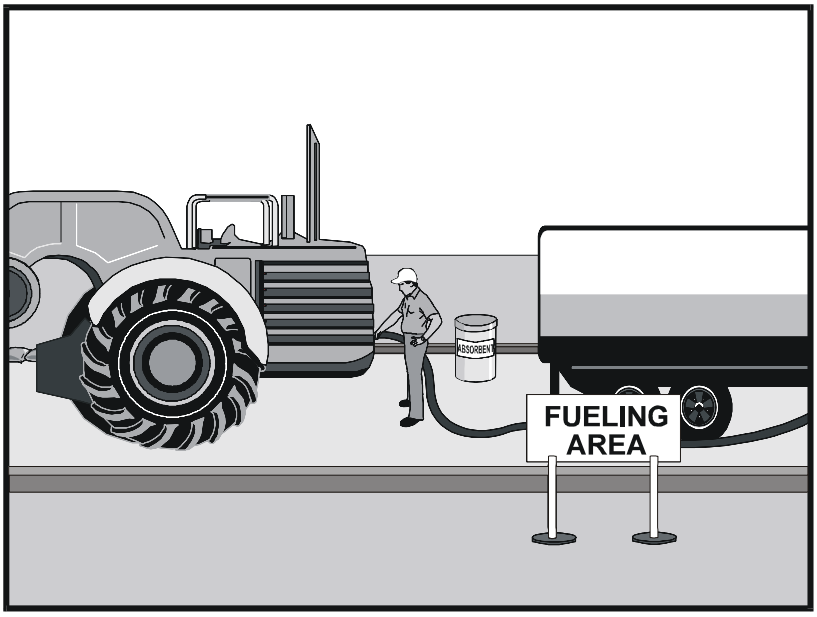

Categories

EC	Erosion Control	
SE	Sediment Control	
TC	Tracking Control	
WE	Wind Erosion Control	
NS	Non-Stormwater Management Control	☑
WM	Waste Management and Materials Pollution Control	

Legend:

☑ **Primary Objective**

☒ **Secondary Objective**

Targeted Constituents

Sediment	
Nutrients	
Trash	
Metals	
Bacteria	
Oil and Grease	☑
Organics	

Potential Alternatives

None

If User/Subscriber modifies this fact sheet in any way, the CASQA name/logo and footer below must be removed from each page and not appear on the modified version.

Description and Purpose

Vehicle equipment fueling procedures and practices are designed to prevent fuel spills and leaks and reduce or eliminate contamination of stormwater. This can be accomplished by using offsite facilities, fueling in designated areas only, enclosing or covering stored fuel, implementing spill controls, and training employees and subcontractors in proper fueling procedures.

Suitable Applications

These procedures are suitable on all construction sites where vehicle and equipment fueling takes place.

Limitations

Onsite vehicle and equipment fueling should only be used where it is impractical to send vehicles and equipment offsite for fueling. Sending vehicles and equipment offsite should be done in conjunction with TC-1, Stabilized Construction Entrance/ Exit.

Implementation

- Use offsite fueling stations as much as possible. These businesses are better equipped to handle fuel and spills properly. Performing this work offsite can also be economical by eliminating the need for a separate fueling area at a site.
- Discourage "topping-off" of fuel tanks.

CASQA
CALIFORNIA STORMWATER QUALITY ASSOCIATION

- Absorbent spill cleanup materials and spill kits should be available in fueling areas and on fueling trucks and should be disposed of properly after use.
- Drip pans or absorbent pads should be used during vehicle and equipment fueling, unless the fueling is performed over an impermeable surface in a dedicated fueling area.
- Use absorbent materials on small spills. Do not hose down or bury the spill. Remove the adsorbent materials promptly and dispose of properly.
- Avoid mobile fueling of mobile construction equipment around the site; rather, transport the equipment to designated fueling areas. With the exception of tracked equipment such as bulldozers and large excavators, most vehicles should be able to travel to a designated area with little lost time.
- Train employees and subcontractors in proper fueling and cleanup procedures.
- When fueling must take place onsite, designate an area away from drainage courses to be used. Fueling areas should be identified in the SWPPP.
- Dedicated fueling areas should be protected from stormwater runon and runoff and should be located at least 50 ft away from downstream drainage facilities and watercourses. Fueling must be performed on level-grade areas.
- Protect fueling areas with berms and dikes to prevent runon, runoff, and to contain spills.
- Nozzles used in vehicle and equipment fueling should be equipped with an automatic shutoff to control drips. Fueling operations should not be left unattended.
- Use vapor recovery nozzles to help control drips as well as air pollution where required by Air Quality Management Districts (AQMD).
- Federal, state, and local requirements should be observed for any stationary above ground storage tanks.

Costs

- All of the above measures are low cost except for the capital costs of above ground tanks that meet all local environmental, zoning, and fire codes.

Inspection and Maintenance

- Inspect BMPs in accordance with General Permit requirements for the associated project type and risk level. It is recommended that at a minimum, BMPs be inspected weekly, prior to forecasted rain events, daily during extended rain events, and after the conclusion of rain events.
- Vehicles and equipment should be inspected each day of use for leaks. Leaks should be repaired immediately, or problem vehicles or equipment should be removed from the project site.
- Keep ample supplies of spill cleanup materials onsite.

- Immediately clean up spills and properly dispose of contaminated soil and cleanup materials.

References

Blueprint for a Clean Bay: Best Management Practices to Prevent Stormwater Pollution from Construction Related Activities; Santa Clara Valley Nonpoint Source Pollution Control Program, 1995.

Coastal Nonpoint Pollution Control Program: Program Development and Approval Guidance, Working Group Working Paper; USEPA, April 1992.

Stormwater Quality Handbooks - Construction Site Best Management Practices (BMPs) Manual, State of California Department of Transportation (Caltrans), November 2000.

Stormwater Management for Construction Activities, Developing Pollution Prevention Plans and Best Management Practices, EPA 832-R-92005; USEPA, April 1992.

Vehicle & Equipment Maintenance NS-10

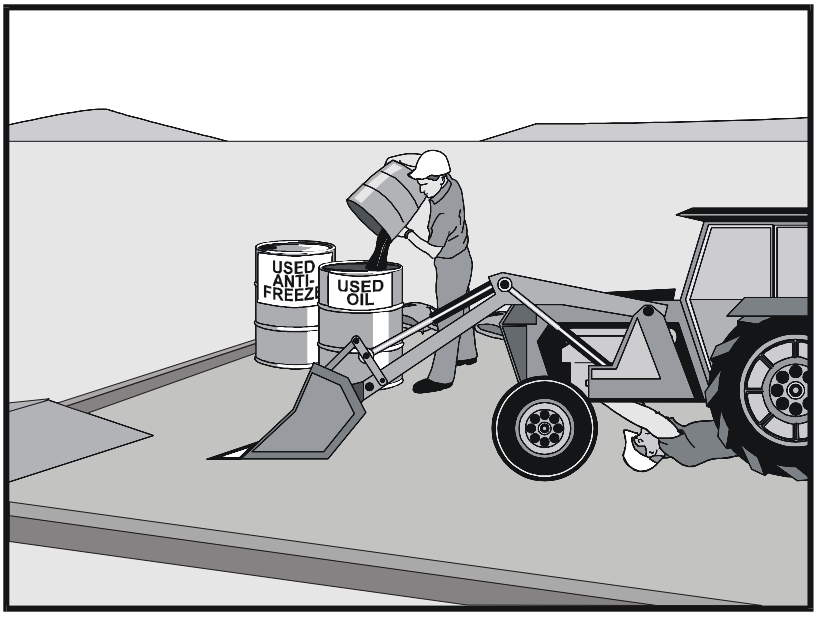

Categories

EC	Erosion Control	
SE	Sediment Control	
TC	Tracking Control	
WE	Wind Erosion Control	
NS	Non-Stormwater Management Control	☑
WM	Waste Management and Materials Pollution Control	

Legend:

☑ **Primary Objective**

☒ **Secondary Objective**

Targeted Constituents

Sediment	
Nutrients	☑
Trash	☑
Metals	
Bacteria	
Oil and Grease	☑
Organics	☑

Potential Alternatives

None

If User/Subscriber modifies this fact sheet in any way, the CASQA name/logo and footer below must be removed from each page and not appear on the modified version.

Description and Purpose

Prevent or reduce the contamination of stormwater resulting from vehicle and equipment maintenance by running a "dry and clean site". The best option would be to perform maintenance activities at an offsite facility. If this option is not available then work should be performed in designated areas only, while providing cover for materials stored outside, checking for leaks and spills, and containing and cleaning up spills immediately. Employees and subcontractors must be trained in proper procedures.

Suitable Applications

These procedures are suitable on all construction projects where an onsite yard area is necessary for storage and maintenance of heavy equipment and vehicles.

Limitations

Onsite vehicle and equipment maintenance should only be used where it is impractical to send vehicles and equipment offsite for maintenance and repair. Sending vehicles/equipment offsite should be done in conjunction with TC-1, Stabilized Construction Entrance/Exit.

Outdoor vehicle or equipment maintenance is a potentially significant source of stormwater pollution. Activities that can contaminate stormwater include engine repair and service, changing or replacement of fluids, and outdoor equipment storage and parking (engine fluid leaks). For further information on vehicle or equipment servicing, see NS-8,

CASQA
CALIFORNIA STORMWATER QUALITY ASSOCIATION

Vehicle and Equipment Cleaning, and NS-9, Vehicle and Equipment Fueling.

Implementation

- Use offsite repair shops as much as possible. These businesses are better equipped to handle vehicle fluids and spills properly. Performing this work offsite can also be economical by eliminating the need for a separate maintenance area.
- If maintenance must occur onsite, use designated areas, located away from drainage courses. Dedicated maintenance areas should be protected from stormwater runon and runoff and should be located at least 50 ft from downstream drainage facilities and watercourses.
- Drip pans or absorbent pads should be used during vehicle and equipment maintenance work that involves fluids, unless the maintenance work is performed over an impermeable surface in a dedicated maintenance area.
- Place a stockpile of spill cleanup materials where it will be readily accessible.
- All fueling trucks and fueling areas are required to have spill kits and/or use other spill protection devices.
- Use adsorbent materials on small spills. Remove the absorbent materials promptly and dispose of properly.
- Inspect onsite vehicles and equipment daily at startup for leaks, and repair immediately.
- Keep vehicles and equipment clean; do not allow excessive build-up of oil and grease.
- Segregate and recycle wastes, such as greases, used oil or oil filters, antifreeze, cleaning solutions, automotive batteries, hydraulic and transmission fluids. Provide secondary containment and covers for these materials if stored onsite.
- Train employees and subcontractors in proper maintenance and spill cleanup procedures.
- Drip pans or plastic sheeting should be placed under all vehicles and equipment placed on docks, barges, or other structures over water bodies when the vehicle or equipment is planned to be idle for more than 1 hour.
- For long-term projects, consider using portable tents or covers over maintenance areas if maintenance cannot be performed offsite.
- Consider use of new, alternative greases and lubricants, such as adhesive greases, for chassis lubrication and fifth-wheel lubrication.
- Properly dispose of used oils, fluids, lubricants, and spill cleanup materials.
- Do not place used oil in a dumpster or pour into a storm drain or watercourse.
- Properly dispose of or recycle used batteries.
- Do not bury used tires.

- Repair leaks of fluids and oil immediately.

Listed below is further information if you must perform vehicle or equipment maintenance onsite.

Safer Alternative Products

- Consider products that are less toxic or hazardous than regular products. These products are often sold under an "environmentally friendly" label.
- Consider use of grease substitutes for lubrication of truck fifth-wheels. Follow manufacturers label for details on specific uses.
- Consider use of plastic friction plates on truck fifth-wheels in lieu of grease. Follow manufacturers label for details on specific uses.

Waste Reduction

Parts are often cleaned using solvents such as trichloroethylene, trichloroethane, or methylene chloride. Many of these cleaners are listed in California Toxic Rule as priority pollutants. These materials are harmful and must not contaminate stormwater. They must be disposed of as a hazardous waste. Reducing the number of solvents makes recycling easier and reduces hazardous waste management costs. Often, one solvent can perform a job as well as two different solvents. Also, if possible, eliminate or reduce the amount of hazardous materials and waste by substituting non-hazardous or less hazardous materials. For example, replace chlorinated organic solvents with non-chlorinated solvents. Non-chlorinated solvents like kerosene or mineral spirits are less toxic and less expensive to dispose of properly. Check the list of active ingredients to see whether it contains chlorinated solvents. The "chlor" term indicates that the solvent is chlorinated. Also, try substituting a wire brush for solvents to clean parts.

Recycling and Disposal

Separating wastes allows for easier recycling and may reduce disposal costs. Keep hazardous wastes separate, do not mix used oil solvents, and keep chlorinated solvents (like,-trichloroethane) separate from non-chlorinated solvents (like kerosene and mineral spirits). Promptly transfer used fluids to the proper waste or recycling drums. Don't leave full drip pans or other open containers lying around. Provide cover and secondary containment until these materials can be removed from the site.

Oil filters can be recycled. Ask your oil supplier or recycler about recycling oil filters.

Do not dispose of extra paints and coatings by dumping liquid onto the ground or throwing it into dumpsters. Allow coatings to dry or harden before disposal into covered dumpsters.

Store cracked batteries in a non-leaking secondary container. Do this with all cracked batteries, even if you think all the acid has drained out. If you drop a battery, treat it as if it is cracked. Put it into the containment area until you are sure it is not leaking.

Costs

All of the above are low cost measures. Higher costs are incurred to setup and maintain onsite maintenance areas.

Vehicle & Equipment Maintenance NS-10

Inspection and Maintenance

- Inspect and verify that activity-based BMPs are in place prior to the commencement of associated activities. While activities associated with the BMP are under way, inspect BMPs in accordance with General Permit requirements for the associated project type and risk level. It is recommended that at a minimum, BMPs be inspected weekly, prior to forecasted rain events, daily during extended rain events, and after the conclusion of rain events.
- Inspect BMPs subject to non-stormwater discharges daily while non-stormwater discharges occur.
- Keep ample supplies of spill cleanup materials onsite.
- Maintain waste fluid containers in leak proof condition.
- Vehicles and equipment should be inspected on each day of use. Leaks should be repaired immediately, or the problem vehicle(s) or equipment should be removed from the project site.
- Inspect equipment for damaged hoses and leaky gaskets routinely. Repair or replace as needed.

References

Blueprint for a Clean Bay: Best Management Practices to Prevent Stormwater Pollution from Construction Related Activities; Santa Clara Valley Nonpoint Source Pollution Control Program, 1995.

Coastal Nonpoint Pollution Control Program; Program Development and Approval Guidance, Working Group, Working Paper; USEPA, April 1992.

Stormwater Quality Handbooks - Construction Site Best Management Practices (BMPs) Manual, State of California Department of Transportation (Caltrans), November 2000.

Pile Driving Operations NS-11

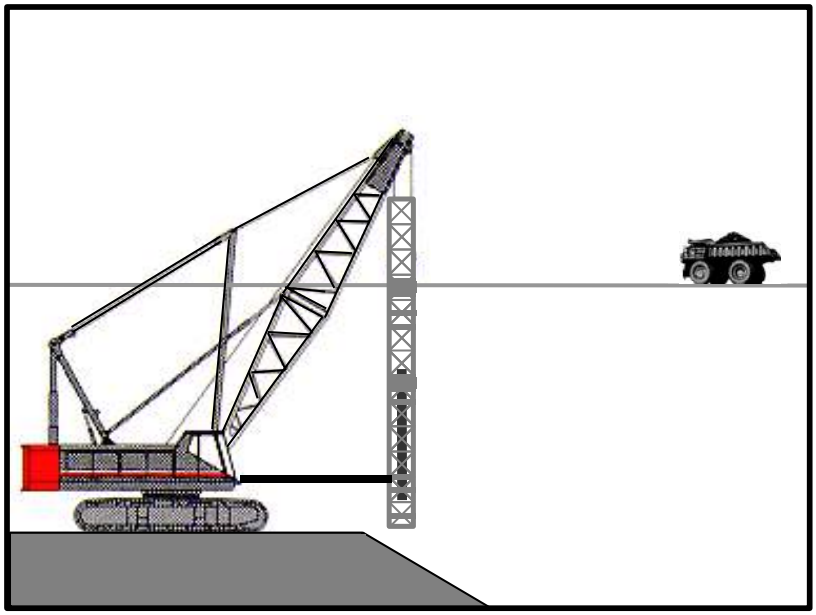

Categories		
EC	Erosion Control	
SE	Sediment Control	
TC	Tracking Control	
WE	Wind Erosion Control	
NS	Non-Stormwater Management Control	☑
WM	Waste Management and Materials Pollution Control	

Legend:
☑ **Primary Objective**
☒ **Secondary Objective**

Targeted Constituents	
Sediment	☑
Nutrients	
Trash	
Metals	
Bacteria	
Oil and Grease	☑
Organics	

Potential Alternatives

None

If User/Subscriber modifies this fact sheet in any way, the CASQA name/logo and footer below must be removed from each page and not appear on the modified version.

Description and Purpose

The construction and retrofit of bridges and retaining walls often include driving piles for foundation support and shoring operations. Driven piles are typically constructed of precast concrete, steel, or timber. Driven sheet piles are also used for shoring and cofferdam construction. Proper control and use of equipment, materials, and waste products from pile driving operations will reduce or eliminate the discharge of potential pollutants to the storm drain system, watercourses, and waters of the United States.

Suitable Applications

These procedures apply to all construction sites near or adjacent to a watercourse or groundwater where permanent and temporary pile driving (impact and vibratory) takes place, including operations using pile shells as well as construction of cast-in-steel-shell and cast-in-drilled-hole piles.

Limitations

None identified.

Implementation

- Use drip pans or absorbent pads during vehicle and equipment operation, maintenance, cleaning, fueling, and storage. Refer to NS-8, Vehicle and Equipment Cleaning, NS-9, Vehicle and Equipment Fueling, and NS-10, Vehicle and Equipment Maintenance.

- Have spill kits and cleanup materials available at all locations of pile driving. Refer to WM-4, Spill Prevention and Control.
- Equipment that is stored or in use in streambeds, or on docks, barges, or other structures over water bodies should be kept leak free.
- Park equipment over plastic sheeting or equivalent where possible. Plastic is not a substitute for drip pans or absorbent pads. The storage or use of equipment in streambeds or other bodies of water must comply with all applicable permits.
- Implement other BMPs as applicable, such as NS-2, Dewatering Operations, WM-5, Solid Waste Management, WM-6, Hazardous Waste Management, and WM-10, Liquid Waste Management.
- When not in use, store pile-driving equipment away from concentrated flows of stormwater, drainage courses, and inlets. Protect hammers and other hydraulic attachments from runon and runoff by placing them on plywood and covering them with plastic or a comparable material prior to the onset of rain.
- Use less hazardous products, e.g., vegetable oil, when practicable.

Costs

All of the above measures can be low cost.

Inspection and Maintenance

- Inspect and verify that activity-based BMPs are in place prior to the commencement of associated activities. While activities associated with the BMP are under way, inspect BMPs in accordance with General Permit requirements for the associated project type and risk level. It is recommended that at a minimum, BMPs be inspected weekly, prior to forecasted rain events, daily during extended rain events, and after the conclusion of rain events.
- Inspect BMPs subject to non-stormwater discharges daily while non-stormwater discharges occur.
- Inspect equipment every day at startup and repair equipment as needed (i.e., worn or damaged hoses, fittings, and gaskets). Recheck equipment at shift changes or at the end of the day and scheduled repairs as needed.

References

Stormwater Quality Handbooks - Construction Site Best Management Practices (BMPs) Manual, State of California Department of Transportation (Caltrans), November 2000.

Stormwater Management for Construction Activities, Developing Pollution Prevention Plans and Best Management Practices, EPA 832-R-92005; USEPA, April 1992.

Concrete Curing NS-12

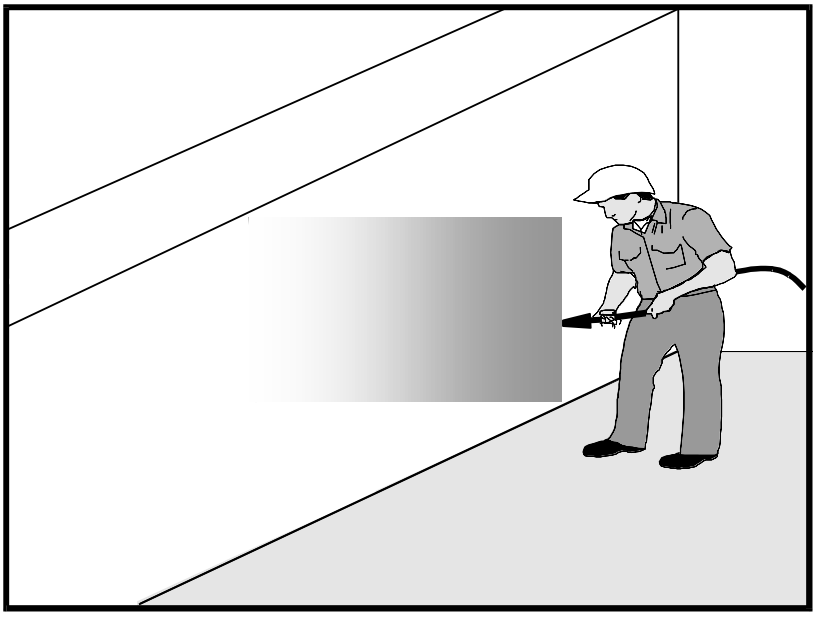

Categories		
EC	Erosion Control	
SE	Sediment Control	
TC	Tracking Control	
WE	Wind Erosion Control	
NS	Non-Stormwater Management Control	☑
WM	Waste Management and Materials Pollution Control	☑

Legend:
☑ **Primary Category**
☒ **Secondary Category**

Targeted Constituents	
Sediment	☑
Nutrients	
Trash	
Metals	☑
Bacteria	
Oil and Grease	☑
Organics	

Potential Alternatives

None

If User/Subscriber modifies this fact sheet in any way, the CASQA name/logo and footer below must be removed from each page and not appear on the modified version.

Description and Purpose

Concrete curing is used in the construction of structures such as bridges, retaining walls, pump houses, large slabs, and structured foundations. Concrete curing includes the use of both chemical and water methods.

Concrete and its associated curing materials have basic chemical properties that can raise the pH of water to levels outside of the permitted range. Discharges of stormwater and non-stormwater exposed to concrete during curing may have a high pH and may contain chemicals, metals, and fines. The General Permit incorporates Numeric Action Levels (NAL) for pH (see Section 2 of this handbook to determine your project's risk level and if you are subject to these requirements).

Proper procedures and care should be taken when managing concrete curing materials to prevent them from coming into contact with stormwater flows, which could result in a high pH discharge.

Suitable Applications

Suitable applications include all projects where Portland Cement Concrete (PCC) and concrete curing chemicals are placed where they can be exposed to rainfall, runoff from other areas, or where runoff from the PCC will leave the site.

Limitations

- Runoff contact with concrete waste can raise pH levels in the water to environmentally harmful levels and trigger permit violations.

Implementation

Chemical Curing

- Avoid over spray of curing compounds.
- Minimize the drift by applying the curing compound close to the concrete surface. Apply an amount of compound that covers the surface but does not allow any runoff of the compound.
- Use proper storage and handling techniques for concrete curing compounds. Refer to WM-1, Material Delivery and Storage.
- Protect drain inlets prior to the application of curing compounds.
- Refer to WM-4, Spill Prevention and Control.

Water Curing for Bridge Decks, Retaining Walls, and other Structures

- Direct cure water away from inlets and watercourses to collection areas for evaporation or other means of removal in accordance with all applicable permits. See WM-8 Concrete Waste Management.
- Collect cure water at the top of slopes and transport to a concrete waste management area in a non-erosive manner. See EC-9 Earth Dikes and Drainage Swales, EC-10, Velocity Dissipation Devices, and EC-11, Slope Drains.
- Utilize wet blankets or a similar method that maintains moisture while minimizing the use and possible discharge of water.

Education

- Educate employees, subcontractors, and suppliers on proper concrete curing techniques to prevent contact with discharge as described herein.
- Arrange for the QSP or the appropriately trained contractor's superintendent or representative to oversee and enforce concrete curing procedures.

Costs

All of the above measures are generally low cost.

Inspection and Maintenance

- Inspect and verify that activity-based BMPs are in place prior to the commencement of associated activities.
- BMPs must be inspected in accordance with General Permit requirements for the associated project type and risk level. It is recommended that at a minimum, BMPs be inspected weekly, prior to forecasted rain events, daily during extended rain events, and after the conclusion of rain events.
- Inspect BMPs subject to non-stormwater discharges daily while non-stormwater discharges occur.
- Sample non-stormwater discharges and stormwater runoff that contacts uncured and partially cured concrete as required by the General Permit.

- Ensure that employees and subcontractors implement appropriate measures for storage, handling, and use of curing compounds.
- Inspect cure containers and spraying equipment for leaks.

References

Blue Print for a Clean Bay-Construction-Related Industries: Best Management Practices for Stormwater Pollution Prevention; Santa Clara Valley Non-Point Source Pollution Control Program, 1992.

Stormwater Quality Handbooks - Construction Site Best Management Practices (BMPs) Manual, State of California Department of Transportation (Caltrans), March 2003.

Stormwater Management for Construction Activities, Developing Pollution Prevention Plans and Best Management Practices, EPA 832-R-92005; USEPA, April 1992.

Erosion and Sediment Control Manual, Oregon Department of Environmental Quality, February 2005.

Concrete Finishing NS-13

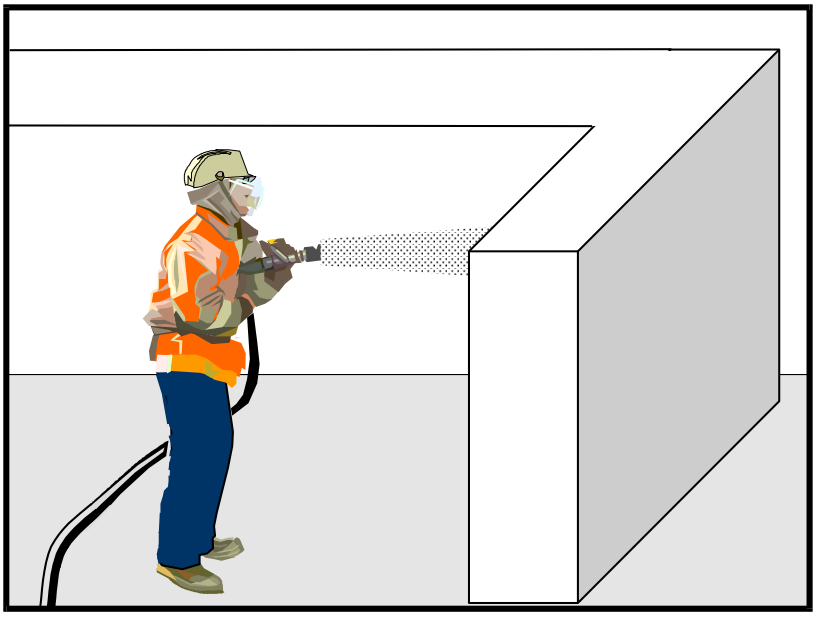

Categories

EC	Erosion Control	
SE	Sediment Control	
TC	Tracking Control	
WE	Wind Erosion Control	
NS	Non-Stormwater Management Control	☑
WM	Waste Management and Materials Pollution Control	☑

Legend:

☑ **Primary Category**

☒ **Secondary Category**

Targeted Constituents

Sediment	☑
Nutrients	
Trash	
Metals	☑
Bacteria	
Oil and Grease	
Organics	☑

Potential Alternatives

None

If User/Subscriber modifies this fact sheet in any way, the CASQA name/logo and footer below must be removed from each page and not appear on the modified version.

Description and Purpose

Concrete finishing methods are used for bridge deck rehabilitation, paint removal, curing compound removal, and final surface finish appearances. Methods include sand blasting, shot blasting, grinding, or high-pressure water blasting. Stormwater and non-stormwater exposed to concrete finishing by-products may have a high pH and may contain chemicals, metals, and fines. Proper procedures and implementation of appropriate BMPs can minimize the impact that concrete-finishing methods may have on stormwater and non-stormwater discharges.

The General Permit incorporates Numeric Action Levels (NAL) for pH (see Section 2 of this handbook to determine your project's risk level and if you are subject to these requirements).

Concrete and its associated curing materials have basic chemical properties that can raise pH levels outside of the permitted range. Additional care should be taken when managing these materials to prevent them from coming into contact with stormwater flows, which could lead to exceedances of the General Permit requirements.

Suitable Applications

These procedures apply to all construction locations where concrete finishing operations are performed.

Limitations

- Runoff contact with concrete waste can raise pH levels in the water to environmentally harmful levels and trigger permit violations.

Implementation

- Collect and properly dispose of water from high-pressure water blasting operations.
- Collect contaminated water from blasting operations at the top of slopes. Transport or dispose of contaminated water while using BMPs such as those for erosion control. Refer to EC-9, Earth Dikes and Drainage Swales, EC-10, Velocity Dissipation Devices, and EC-11, Slope Drains.
- Direct water from blasting operations away from inlets and watercourses to collection areas for infiltration or other means of removal (dewatering). Refer to NS-2 Dewatering Operations.
- Protect inlets during sandblasting operations. Refer to SE-10, Storm Drain Inlet Protection.
- Refer to WM-8, Concrete Waste Management for disposal of concrete debris.
- Minimize the drift of dust and blast material as much as possible by keeping the blasting nozzle close to the surface.
- When blast residue contains a potentially hazardous waste, refer to WM-6, Hazardous Waste Management.

Education

- Educate employees, subcontractors, and suppliers on proper concrete finishing techniques to prevent contact with discharge as described herein.
- Arrange for the QSP or the appropriately trained contractor's superintendent or representative to oversee and enforce concrete finishing procedures.

Costs

These measures are generally of low cost.

Inspection and Maintenance

- Inspect and verify that activity-based BMPs are in place prior to the commencement of associated activities.
- BMPs must be inspected in accordance with General Permit requirements for the associated project type and risk level. It is recommended that at a minimum, BMPs be inspected weekly, prior to forecasted rain events, daily during extended rain events, and after the conclusion of rain events.
- Inspect BMPs subject to non-stormwater discharges daily while non-stormwater discharges occur.
- Sample non-stormwater discharges and stormwater runoff that contacts concrete dust and debris as required by the General Permit.

- Sweep or vacuum up debris from sandblasting at the end of each shift.
- At the end of each work shift, remove and contain liquid and solid waste from containment structures, if any, and from the general work area.
- Inspect containment structures for damage prior to use and prior to onset of forecasted rain.

References

Blueprint for a Clean Bay: Best Management Practices to Prevent Stormwater Pollution from Construction Related Activities; Santa Clara Valley Nonpoint Source Pollution Control Program, 1995.

Stormwater Quality Handbooks - Construction Site Best Management Practices (BMPs) Manual, State of California Department of Transportation (Caltrans), March 2003.

Stormwater Management for Construction Activities, Developing Pollution Prevention Plans and Best Management Practices, EPA 832-R-92005; USEPA, April 1992.

Material Delivery and Storage WM-1

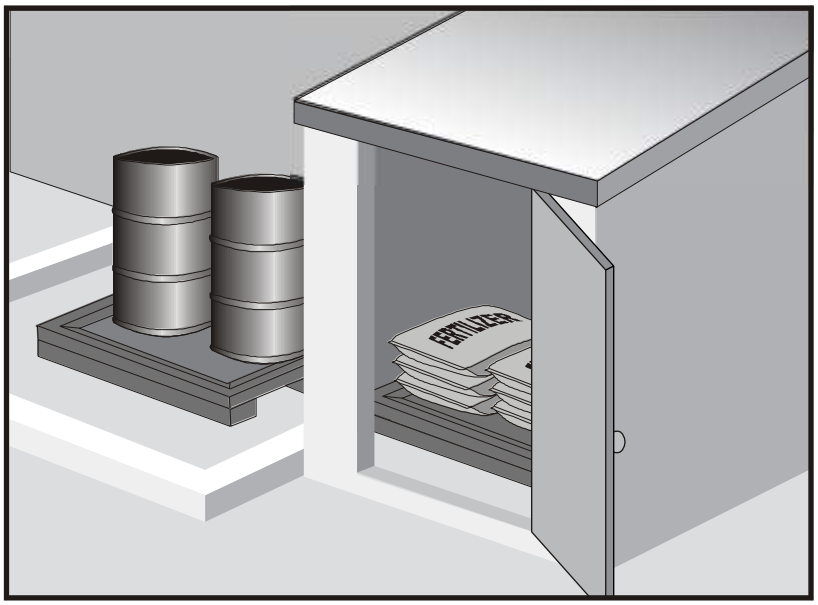

Categories		
EC	Erosion Control	
SE	Sediment Control	
TC	Tracking Control	
WE	Wind Erosion Control	
NS	Non-Stormwater Management Control	
WM	Waste Management and Materials Pollution Control	☑

Legend:
☑ **Primary Category**
☒ **Secondary Category**

Description and Purpose

Prevent, reduce, or eliminate the discharge of pollutants from material delivery and storage to the stormwater system or watercourses by minimizing the storage of hazardous materials onsite, storing materials in watertight containers and/or a completely enclosed designated area, installing secondary containment, conducting regular inspections, and training employees and subcontractors.

This best management practice covers only material delivery and storage. For other information on materials, see WM-2, Material Use, or WM-4, Spill Prevention and Control. For information on wastes, see the waste management BMPs in this section.

Suitable Applications

These procedures are suitable for use at all construction sites with delivery and storage of the following materials:

- Soil stabilizers and binders
- Pesticides and herbicides
- Fertilizers
- Detergents
- Plaster
- Petroleum products such as fuel, oil, and grease

Targeted Constituents	
Sediment	☑
Nutrients	☑
Trash	☑
Metals	☑
Bacteria	
Oil and Grease	☑
Organics	☑

Potential Alternatives

None

If User/Subscriber modifies this fact sheet in any way, the CASQA name/logo and footer below must be removed from each page and not appear on the modified version.

- Asphalt and concrete components
- Hazardous chemicals such as acids, lime, glues, adhesives, paints, solvents, and curing compounds
- Concrete compounds
- Other materials that may be detrimental if released to the environment

Limitations

- Space limitation may preclude indoor storage.
- Storage sheds often must meet building and fire code requirements.

Implementation

The following steps should be taken to minimize risk:

- Chemicals must be stored in water tight containers with appropriate secondary containment or in a storage shed.
- When a material storage area is located on bare soil, the area should be lined and bermed.
- Use containment pallets or other practical and available solutions, such as storing materials within newly constructed buildings or garages, to meet material storage requirements.
- Stack erodible landscape material on pallets and cover when not in use.
- Contain all fertilizers and other landscape materials when not in use.
- Temporary storage areas should be located away from vehicular traffic.
- Material Safety Data Sheets (MSDS) should be available on-site for all materials stored that have the potential to effect water quality.
- Construction site areas should be designated for material delivery and storage.
- Material delivery and storage areas should be located away from waterways, if possible.
    - Avoid transport near drainage paths or waterways.
    - Surround with earth berms or other appropriate containment BMP. See EC-9, Earth Dikes and Drainage Swales.
    - Place in an area that will be paved.
- Storage of reactive, ignitable, or flammable liquids must comply with the fire codes of your area. Contact the local Fire Marshal to review site materials, quantities, and proposed storage area to determine specific requirements. See the Flammable and Combustible Liquid Code, NFPA30.
- An up to date inventory of materials delivered and stored onsite should be kept.

- Hazardous materials storage onsite should be minimized.
- Hazardous materials should be handled as infrequently as possible.
- Keep ample spill cleanup supplies appropriate for the materials being stored. Ensure that cleanup supplies are in a conspicuous, labeled area.
- Employees and subcontractors should be trained on the proper material delivery and storage practices.
- Employees trained in emergency spill cleanup procedures must be present when dangerous materials or liquid chemicals are unloaded.
- If significant residual materials remain on the ground after construction is complete, properly remove and dispose of materials and any contaminated soil. See WM-7, Contaminated Soil Management. If the area is to be paved, pave as soon as materials are removed to stabilize the soil.

Material Storage Areas and Practices

- Liquids, petroleum products, and substances listed in 40 CFR Parts 110, 117, or 302 should be stored in approved containers and drums and should not be overfilled. Containers and drums should be placed in temporary containment facilities for storage.
- A temporary containment facility should provide for a spill containment volume able to contain precipitation from a 25-year storm event, plus the greater of 10% of the aggregate volume of all containers or 100% of the capacity of the largest container within its boundary, whichever is greater.
- A temporary containment facility should be impervious to the materials stored therein for a minimum contact time of 72 hours.
- A temporary containment facility should be maintained free of accumulated rainwater and spills. In the event of spills or leaks, accumulated rainwater and spills should be collected and placed into drums. These liquids should be handled as a hazardous waste unless testing determines them to be non-hazardous. All collected liquids or non-hazardous liquids should be sent to an approved disposal site.
- Sufficient separation should be provided between stored containers to allow for spill cleanup and emergency response access.
- Incompatible materials, such as chlorine and ammonia, should not be stored in the same temporary containment facility.
- Materials should be covered prior to, and during rain events.
- Materials should be stored in their original containers and the original product labels should be maintained in place in a legible condition. Damaged or otherwise illegible labels should be replaced immediately.

- Bagged and boxed materials should be stored on pallets and should not be allowed to accumulate on the ground. To provide protection from wind and rain throughout the rainy season, bagged and boxed materials should be covered during non-working days and prior to and during rain events.
- Stockpiles should be protected in accordance with WM-3, Stockpile Management.
- Materials should be stored indoors within existing structures or completely enclosed storage sheds when available.
- Proper storage instructions should be posted at all times in an open and conspicuous location.
- An ample supply of appropriate spill clean up material should be kept near storage areas.
- Also see WM-6, Hazardous Waste Management, for storing of hazardous wastes.

Material Delivery Practices

- Keep an accurate, up-to-date inventory of material delivered and stored onsite.
- Arrange for employees trained in emergency spill cleanup procedures to be present when dangerous materials or liquid chemicals are unloaded.

Spill Cleanup

- Contain and clean up any spill immediately.
- Properly remove and dispose of any hazardous materials or contaminated soil if significant residual materials remain on the ground after construction is complete. See WM-7, Contaminated Soil Management.
- See WM-4, Spill Prevention and Control, for spills of chemicals and/or hazardous materials.
- If spills or leaks of materials occur that are not contained and could discharge to surface waters, non-visible sampling of site discharge may be required. Refer to the General Permit or to your project specific Construction Site Monitoring Plan to determine if and where sampling is required.

Cost

- The largest cost of implementation may be in the construction of a materials storage area that is covered and provides secondary containment.

Inspection and Maintenance

- BMPs must be inspected in accordance with General Permit requirements for the associated project type and risk level. It is recommended that at a minimum, BMPs be inspected weekly, prior to forecasted rain events, daily during extended rain events, and after the conclusion of rain events.
- Keep storage areas clean and well organized, including a current list of all materials onsite.
- Inspect labels on containers for legibility and accuracy.

- Repair or replace perimeter controls, containment structures, covers, and liners as needed to maintain proper function.

References

Blueprint for a Clean Bay: Best Management Practices to Prevent Stormwater Pollution from Construction Related Activities; Santa Clara Valley Nonpoint Source Pollution Control Program, 1995.

Coastal Nonpoint Pollution Control Program: Program Development and Approval Guidance, Working Group Working Paper; USEPA, April 1992.

Stormwater Quality Handbooks - Construction Site Best Management Practices (BMPs) Manual, State of California Department of Transportation (Caltrans), March 2003.

Stormwater Management for Construction Activities; Developing Pollution Prevention Plans and Best Management Practice, EPA 832-R-92005; USEPA, April 1992.

Material Use WM-2

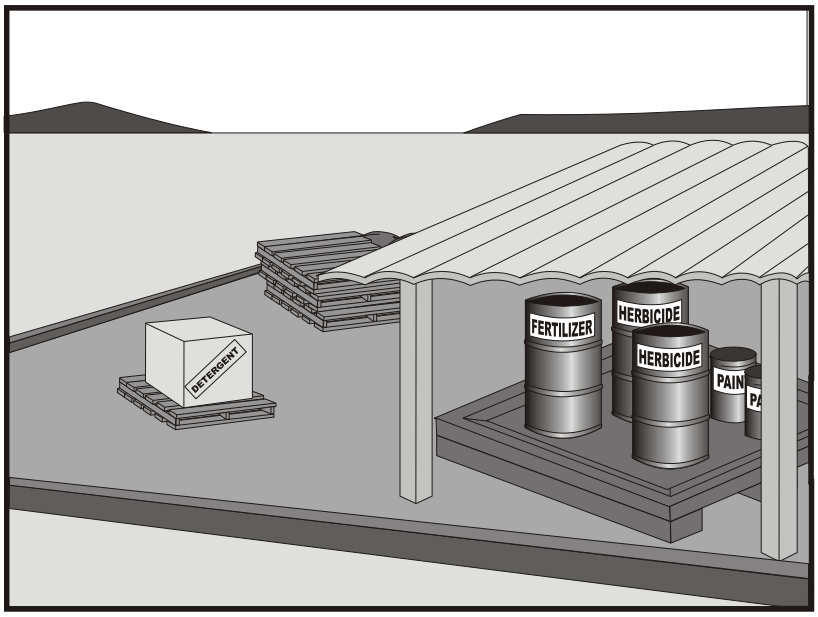

Description and Purpose

Prevent or reduce the discharge of pollutants to the storm drain system or watercourses from material use by using alternative products, minimizing hazardous material use onsite, and training employees and subcontractors.

Suitable Applications

This BMP is suitable for use at all construction projects. These procedures apply when the following materials are used or prepared onsite:

- Pesticides and herbicides
- Fertilizers
- Detergents
- Petroleum products such as fuel, oil, and grease
- Asphalt and other concrete components
- Other hazardous chemicals such as acids, lime, glues, adhesives, paints, solvents, and curing compounds
- Other materials that may be detrimental if released to the environment

Categories

EC	Erosion Control	
SE	Sediment Control	
TC	Tracking Control	
WE	Wind Erosion Control	
NS	Non-Stormwater Management Control	
WM	Waste Management and Materials Pollution Control	☑

Legend:

☑ **Primary Category**

☒ **Secondary Category**

Targeted Constituents

Sediment	☑
Nutrients	☑
Trash	☑
Metals	☑
Bacteria	
Oil and Grease	☑
Organics	☑

Potential Alternatives

None

If User/Subscriber modifies this fact sheet in any way, the CASQA name/logo and footer below must be removed from each page and not appear on the modified version.

Limitations

Safer alternative building and construction products may not be available or suitable in every instance.

Implementation

The following steps should be taken to minimize risk:

- Minimize use of hazardous materials onsite.
- Follow manufacturer instructions regarding uses, protective equipment, ventilation, flammability, and mixing of chemicals.
- Train personnel who use pesticides. The California Department of Pesticide Regulation and county agricultural commissioners license pesticide dealers, certify pesticide applicators, and conduct onsite inspections.
- The preferred method of termiticide application is soil injection near the existing or proposed structure foundation/slab; however, if not feasible, soil drench application of termiticides should follow EPA label guidelines and the following recommendations (most of which are applicable to most pesticide applications):
  - Do not treat soil that is water-saturated or frozen.
  - Application shall not commence within 24-hours of a predicted precipitation event with a 40% or greater probability. Weather tracking must be performed on a daily basis prior to termiticide application and during the period of termiticide application.
  - Do not allow treatment chemicals to runoff from the target area. Apply proper quantity to prevent excess runoff. Provide containment for and divert stormwater from application areas using berms or diversion ditches during application.
  - Dry season: Do not apply within 10 feet of storm drains. Do not apply within 25 feet of aquatic habitats (such as, but not limited to, lakes; reservoirs; rivers; permanent streams; marshes or ponds; estuaries; and commercial fish farm ponds).
  - Wet season: Do not apply within 50 feet of storm drains or aquatic habitats (such as, but not limited to, lakes; reservoirs; rivers; permanent streams; marshes or ponds; estuaries; and commercial fish farm ponds) unless a vegetative buffer is present (if so, refer to dry season requirements).
  - Do not make on-grade applications when sustained wind speeds are above 10 mph (at application site) at nozzle end height.
  - Cover treatment site prior to a rain event in order to prevent run-off of the pesticide into non-target areas. The treated area should be limited to a size that can be backfilled and/or covered by the end of the work shift. Backfilling or covering of the treated area shall be done by the end of the same work shift in which the application is made.
  - The applicator must either cover the soil him/herself or provide written notification of the above requirement to the contractor on site and to the person commissioning the

application (if different than the contractor). If notice is provided to the contractor or the person commissioning the application, then they are responsible under the Federal Insecticide Fungicide, and Rodenticide Act (FIFRA) to ensure that: 1) if the concrete slab cannot be poured over the treated soil within 24 hours of application, the treated soil is covered with a waterproof covering (such as polyethylene sheeting), and 2) the treated soil is covered if precipitation is predicted to occur before the concrete slab is scheduled to be poured.

- Do not over-apply fertilizers, herbicides, and pesticides. Prepare only the amount needed. Follow the recommended usage instructions. Over-application is expensive and environmentally harmful. Unless on steep slopes, till fertilizers into the soil rather than hydraulic application. Apply surface dressings in several smaller applications, as opposed to one large application, to allow time for infiltration and to avoid excess material being carried offsite by runoff. Do not apply these chemicals before predicted rainfall.
- Train employees and subcontractors in proper material use.
- Supply Material Safety Data Sheets (MSDS) for all materials.
- Dispose of latex paint and paint cans, used brushes, rags, absorbent materials, and drop cloths, when thoroughly dry and are no longer hazardous, with other construction debris.
- Do not remove the original product label; it contains important safety and disposal information. Use the entire product before disposing of the container.
- Mix paint indoors or in a containment area. Never clean paintbrushes or rinse paint containers into a street, gutter, storm drain, or watercourse. Dispose of any paint thinners, residue, and sludge(s) that cannot be recycled, as hazardous waste.
- For water-based paint, clean brushes to the extent practicable, and rinse to a drain leading to a sanitary sewer where permitted or contain for proper disposal off site. For oil-based paints, clean brushes to the extent practicable, and filter and reuse thinners and solvents.
- Use recycled and less hazardous products when practical. Recycle residual paints, solvents, non-treated lumber, and other materials.
- Use materials only where and when needed to complete the construction activity. Use safer alternative materials as much as possible. Reduce or eliminate use of hazardous materials onsite when practical.
- Document the location, time, chemicals applied, and applicator's name and qualifications.
- Keep an ample supply of spill clean up material near use areas. Train employees in spill clean up procedures.
- Avoid exposing applied materials to rainfall and runoff unless sufficient time has been allowed for them to dry.
- Discontinue use of erodible landscape material within 2 days prior to a forecasted rain event and materials should be covered and/or bermed.

- Provide containment for material use areas such as masons' areas or paint mixing/preparation areas to prevent materials/pollutants from entering stormwater.

Costs

All of the above are low cost measures.

Inspection and Maintenance

- Inspect and verify that activity-based BMPs are in place prior to the commencement of associated activities.
- BMPs must be inspected in accordance with General Permit requirements for the associated project type and risk level. It is recommended that at a minimum, BMPs be inspected weekly, prior to forecasted rain events, daily during extended rain events, and after the conclusion of rain events.
- Ensure employees and subcontractors throughout the job are using appropriate practices.

References

Blueprint for a Clean Bay: Best Management Practices to Prevent Stormwater Pollution from Construction Related Activities; Santa Clara Valley Nonpoint Source Pollution Control Program, 1995.

Coastal Nonpoint Pollution Control Program: Program Development and Approval Guidance, Working Group Working Paper; USEPA, April 1992.

Comments on Risk Assessments Risk Reduction Options for Cypermethrin: Docket No. OPP–2005–0293; California Stormwater Quality Association (CASQA) letter to USEPA, 2006.Environmental Hazard and General Labeling for Pyrethroid Non-Agricultural Outdoor Products, EPA-HQ-OPP-2008-0331-0021; USEPA, 2008.

Stormwater Quality Handbooks - Construction Site Best Management Practices (BMPs) Manual, State of California Department of Transportation (Caltrans), March 2003.

Stormwater Management for Construction Activities; Developing Pollution Prevention Plans and Best Management Practice, EPA 832-R-92005; USEPA, April 1992.

Stockpile Management WM-3

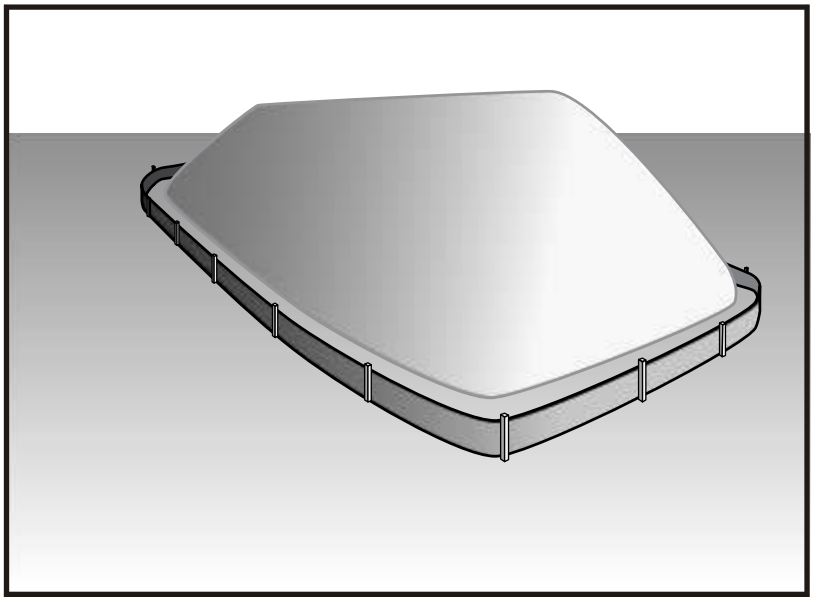

Treat Categories		
EC	Erosion Control	
SE	Sediment Control	☒
TC	Tracking Control	
WE	Wind Erosion Control	
NS	Non-Stormwater Management Control	☒
WM	Waste Management and Materials Pollution Control	☑

Legend:
☑ **Primary Category**
☒ **Secondary Category**

Description and Purpose

Stockpile management procedures and practices are designed to reduce or eliminate air and stormwater pollution from stockpiles of soil, soil amendments, sand, paving materials such as Portland cement concrete (PCC) rubble, asphalt concrete (AC), asphalt concrete rubble, aggregate base, aggregate sub base or pre-mixed aggregate, asphalt minder (so called "cold mix" asphalt), and pressure treated wood.

Suitable Applications

Implement in all projects that stockpile soil and other loose materials.

Limitations

- Plastic sheeting as a stockpile protection is temporary and hard to manage in windy conditions. Where plastic is used, consider use of plastic tarps with nylon reinforcement which may be more durable than standard sheeting.
- Plastic sheeting can increase runoff volume due to lack of infiltration and potentially cause perimeter control failure.
- Plastic sheeting breaks down faster in sunlight.
- The use of Plastic materials and photodegradable plastics should be avoided.

Implementation

Protection of stockpiles is a year-round requirement. To properly manage stockpiles:

Targeted Constituents	
Sediment	☑
Nutrients	☑
Trash	☑
Metals	☑
Bacteria	
Oil and Grease	☑
Organics	☑

Potential Alternatives

None

If User/Subscriber modifies this fact sheet in any way, the CASQA name/logo and footer below must be removed from each page and not appear on the modified version.

- On larger sites, a minimum of 50 ft separation from concentrated flows of stormwater, drainage courses, and inlets is recommended.
- After 14 days of inactivity, a stockpile is non-active and requires further protection described below. All stockpiles are required to be protected as non-active stockpiles immediately if they are not scheduled to be used within 14 days.
- Protect all stockpiles from stormwater run-on using temporary perimeter sediment barriers such as compost berms (SE-13), temporary silt dikes (SE-12), fiber rolls (SE-5), silt fences (SE-1), sandbags (SE-8), gravel bags (SE-6), or biofilter bags (SE-14). Refer to the individual fact sheet for each of these controls for installation information.
- Implement wind erosion control practices as appropriate on all stockpiled material. For specific information, see WE-1, Wind Erosion Control.
- Manage stockpiles of contaminated soil in accordance with WM-7, Contaminated Soil Management.
- Place bagged materials on pallets and under cover.
- Ensure that stockpile coverings are installed securely to protect from wind and rain.
- Some plastic covers withstand weather and sunlight better than others. Select cover materials or methods based on anticipated duration of use.

Protection of Non-Active Stockpiles

A stockpile is considered non-active if it either is not used for 14 days or if it is scheduled not to be used for 14 days or more. Stockpiles need to be protected immediately if they are not scheduled to be used within 14 days. Non-active stockpiles of the identified materials should be protected as follows:

Soil stockpiles

- Soil stockpiles should be covered or protected with soil stabilization measures and a temporary perimeter sediment barrier at all times.
- Temporary vegetation should be considered for topsoil piles that will be stockpiled for extended periods.

Stockpiles of Portland cement concrete rubble, asphalt concrete, asphalt concrete rubble, aggregate base, or aggregate sub base

- Stockpiles should be covered and protected with a temporary perimeter sediment barrier at all times.

Stockpiles of "cold mix"

- Cold mix stockpiles should be placed on and covered with plastic sheeting or comparable material at all times and surrounded by a berm.

Stockpiles of fly ash, stucco, hydrated lime

- Stockpiles of materials that may raise the pH of runoff (i.e., basic materials) should be covered with plastic and surrounded by a berm.

Stockpiles/Storage of treated wood

- Treated wood should be covered with plastic sheeting or comparable material at all times and surrounded by a berm.

Protection of Active Stockpiles

A stockpile is active when it is being used or is scheduled to be used within 14 days of the previous use. Active stockpiles of the identified materials should be protected as follows:

- All stockpiles should be covered and protected with a temporary linear sediment barrier prior to the onset of precipitation.
- Stockpiles of "cold mix" and treated wood, and basic materials should be placed on and covered with plastic sheeting or comparable material and surrounded by a berm prior to the onset of precipitation.
- The downstream perimeter of an active stockpile should be protected with a linear sediment barrier or berm and runoff should be diverted around or away from the stockpile on the upstream perimeter.

Costs

For cost information associated with stockpile protection refer to the individual erosion or sediment control BMP fact sheet considered for implementation (For example, refer to SE-1 Silt Fence for installation of silt fence around the perimeter of a stockpile.)

Inspection and Maintenance

- Stockpiles must be inspected in accordance with General Permit requirements for the associated project type and risk level. It is recommended that at a minimum, BMPs be inspected weekly, prior to forecasted rain events, daily during extended rain events, and after the conclusion of rain events.
- It may be necessary to inspect stockpiles covered with plastic sheeting more frequently during certain conditions (for example, high winds or extreme heat).
- Repair and/or replace perimeter controls and covers as needed to keep them functioning properly.
- Sediment shall be removed when it reaches one-third of the barrier height.

References

Stormwater Quality Handbooks - Construction Site Best Management Practices (BMPs) Manual, State of California Department of Transportation (Caltrans), March 2003.

Spill Prevention and Control WM-4

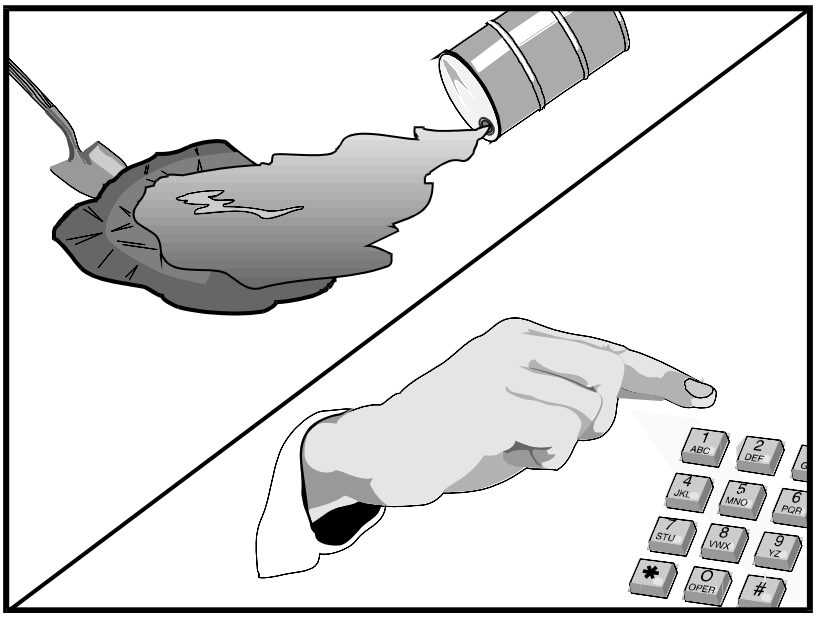

Description and Purpose

Prevent or reduce the discharge of pollutants to drainage systems or watercourses from leaks and spills by reducing the chance for spills, stopping the source of spills, containing and cleaning up spills, properly disposing of spill materials, and training employees.

This best management practice covers only spill prevention and control. However, WM-1, Materials Delivery and Storage, and WM-2, Material Use, also contain useful information, particularly on spill prevention. For information on wastes, see the waste management BMPs in this section.

Suitable Applications

This BMP is suitable for all construction projects. Spill control procedures are implemented anytime chemicals or hazardous substances are stored on the construction site, including the following materials:

- Soil stabilizers/binders
- Dust palliatives
- Herbicides
- Growth inhibitors
- Fertilizers
- Deicing/anti-icing chemicals

Categories

EC	Erosion Control	
SE	Sediment Control	
TC	Tracking Control	
WE	Wind Erosion Control	
NS	Non-Stormwater Management Control	
WM	Waste Management and Materials Pollution Control	☑

Legend:

☑ **Primary Objective**

☒ **Secondary Objective**

Targeted Constituents

Sediment	☑
Nutrients	☑
Trash	☑
Metals	☑
Bacteria	
Oil and Grease	☑
Organics	☑

Potential Alternatives

None

If User/Subscriber modifies this fact sheet in any way, the CASQA name/logo and footer below must be removed from each page and not appear on the modified version.

- Fuels
- Lubricants
- Other petroleum distillates

Limitations

- In some cases, it may be necessary to use a private spill cleanup company.
- This BMP applies to spills caused by the contractor and subcontractors.
- Procedures and practices presented in this BMP are general. Contractor should identify appropriate practices for the specific materials used or stored onsite

Implementation

The following steps will help reduce the stormwater impacts of leaks and spills:

Education

- Be aware that different materials pollute in different amounts. Make sure that each employee knows what a "significant spill" is for each material they use, and what is the appropriate response for "significant" and "insignificant" spills.
- Educate employees and subcontractors on potential dangers to humans and the environment from spills and leaks.
- Hold regular meetings to discuss and reinforce appropriate disposal procedures (incorporate into regular safety meetings).
- Establish a continuing education program to indoctrinate new employees.
- Have contractor's superintendent or representative oversee and enforce proper spill prevention and control measures.

General Measures

- To the extent that the work can be accomplished safely, spills of oil, petroleum products, substances listed under 40 CFR parts 110,117, and 302, and sanitary and septic wastes should be contained and cleaned up immediately.
- Store hazardous materials and wastes in covered containers and protect from vandalism.
- Place a stockpile of spill cleanup materials where it will be readily accessible.
- Train employees in spill prevention and cleanup.
- Designate responsible individuals to oversee and enforce control measures.
- Spills should be covered and protected from stormwater runon during rainfall to the extent that it doesn't compromise clean up activities.
- Do not bury or wash spills with water.

- Store and dispose of used clean up materials, contaminated materials, and recovered spill material that is no longer suitable for the intended purpose in conformance with the provisions in applicable BMPs.
- Do not allow water used for cleaning and decontamination to enter storm drains or watercourses. Collect and dispose of contaminated water in accordance with WM-10, Liquid Waste Management.
- Contain water overflow or minor water spillage and do not allow it to discharge into drainage facilities or watercourses.
- Place proper storage, cleanup, and spill reporting instructions for hazardous materials stored or used on the project site in an open, conspicuous, and accessible location.
- Keep waste storage areas clean, well organized, and equipped with ample cleanup supplies as appropriate for the materials being stored. Perimeter controls, containment structures, covers, and liners should be repaired or replaced as needed to maintain proper function.

Cleanup

- Clean up leaks and spills immediately.
- Use a rag for small spills on paved surfaces, a damp mop for general cleanup, and absorbent material for larger spills. If the spilled material is hazardous, then the used cleanup materials are also hazardous and must be sent to either a certified laundry (rags) or disposed of as hazardous waste.
- Never hose down or bury dry material spills. Clean up as much of the material as possible and dispose of properly. See the waste management BMPs in this section for specific information.

Minor Spills

- Minor spills typically involve small quantities of oil, gasoline, paint, etc. which can be controlled by the first responder at the discovery of the spill.
- Use absorbent materials on small spills rather than hosing down or burying the spill.
- Absorbent materials should be promptly removed and disposed of properly.
- Follow the practice below for a minor spill:
  - Contain the spread of the spill.
  - Recover spilled materials.
  - Clean the contaminated area and properly dispose of contaminated materials.

Semi-Significant Spills

- Semi-significant spills still can be controlled by the first responder along with the aid of other personnel such as laborers and the foreman, etc. This response may require the cessation of all other activities.

- Spills should be cleaned up immediately:
  - Contain spread of the spill.
  - Notify the project foreman immediately.
  - If the spill occurs on paved or impermeable surfaces, clean up using "dry" methods (absorbent materials, cat litter and/or rags). Contain the spill by encircling with absorbent materials and do not let the spill spread widely.
  - If the spill occurs in dirt areas, immediately contain the spill by constructing an earthen dike. Dig up and properly dispose of contaminated soil.
  - If the spill occurs during rain, cover spill with tarps or other material to prevent contaminating runoff.

Significant/Hazardous Spills

- For significant or hazardous spills that cannot be controlled by personnel in the immediate vicinity, the following steps should be taken:
  - Notify the local emergency response by dialing 911. In addition to 911, the contractor will notify the proper county officials. It is the contractor's responsibility to have all emergency phone numbers at the construction site.
  - Notify the Governor's Office of Emergency Services Warning Center, (916) 845-8911.
  - For spills of federal reportable quantities, in conformance with the requirements in 40 CFR parts 110,119, and 302, the contractor should notify the National Response Center at (800) 424-8802.
  - Notification should first be made by telephone and followed up with a written report.
  - The services of a spill's contractor or a Haz-Mat team should be obtained immediately. Construction personnel should not attempt to clean up until the appropriate and qualified staffs have arrived at the job site.
  - Other agencies which may need to be consulted include, but are not limited to, the Fire Department, the Public Works Department, the Coast Guard, the Highway Patrol, the City/County Police Department, Department of Toxic Substances, California Division of Oil and Gas, Cal/OSHA, etc.

Reporting

- Report significant spills to local agencies, such as the Fire Department; they can assist in cleanup.
- Federal regulations require that any significant oil spill into a water body or onto an adjoining shoreline be reported to the National Response Center (NRC) at 800-424-8802 (24 hours).

Use the following measures related to specific activities:

Vehicle and Equipment Maintenance

- If maintenance must occur onsite, use a designated area and a secondary containment, located away from drainage courses, to prevent the runon of stormwater and the runoff of spills.
- Regularly inspect onsite vehicles and equipment for leaks and repair immediately
- Check incoming vehicles and equipment (including delivery trucks, and employee and subcontractor vehicles) for leaking oil and fluids. Do not allow leaking vehicles or equipment onsite.
- Always use secondary containment, such as a drain pan or drop cloth, to catch spills or leaks when removing or changing fluids.
- Place drip pans or absorbent materials under paving equipment when not in use.
- Use absorbent materials on small spills rather than hosing down or burying the spill. Remove the absorbent materials promptly and dispose of properly.
- Promptly transfer used fluids to the proper waste or recycling drums. Don't leave full drip pans or other open containers lying around
- Oil filters disposed of in trashcans or dumpsters can leak oil and pollute stormwater. Place the oil filter in a funnel over a waste oil-recycling drum to drain excess oil before disposal. Oil filters can also be recycled. Ask the oil supplier or recycler about recycling oil filters.
- Store cracked batteries in a non-leaking secondary container. Do this with all cracked batteries even if you think all the acid has drained out. If you drop a battery, treat it as if it is cracked. Put it into the containment area until you are sure it is not leaking.

Vehicle and Equipment Fueling

- If fueling must occur onsite, use designate areas, located away from drainage courses, to prevent the runon of stormwater and the runoff of spills.
- Discourage "topping off" of fuel tanks.
- Always use secondary containment, such as a drain pan, when fueling to catch spills/ leaks.

Costs

Prevention of leaks and spills is inexpensive. Treatment and/ or disposal of contaminated soil or water can be quite expensive.

Inspection and Maintenance

- Inspect and verify that activity–based BMPs are in place prior to the commencement of associated activities. While activities associated with the BMP are under way, inspect BMPs in accordance with General Permit requirements for the associated project type and risk level. It is recommended that at a minimum, BMPs be inspected weekly, prior to forecasted rain events, daily during extended rain events, and after the conclusion of rain events.

- Inspect BMPs subject to non-stormwater discharge daily while non-stormwater discharges occur.
- Keep ample supplies of spill control and cleanup materials onsite, near storage, unloading, and maintenance areas.
- Update your spill prevention and control plan and stock cleanup materials as changes occur in the types of chemicals onsite.

References

Blueprint for a Clean Bay: Best Management Practices to Prevent Stormwater Pollution from Construction Related Activities; Santa Clara Valley Nonpoint Source Pollution Control Program, 1995.

Stormwater Quality Handbooks - Construction Site Best Management Practices (BMPs) Manual, State of California Department of Transportation (Caltrans), November 2000.

Stormwater Management for Construction Activities; Developing Pollution Prevention Plans and Best Management Practice, EPA 832-R-92005; USEPA, April 1992.

Solid Waste Management WM-5

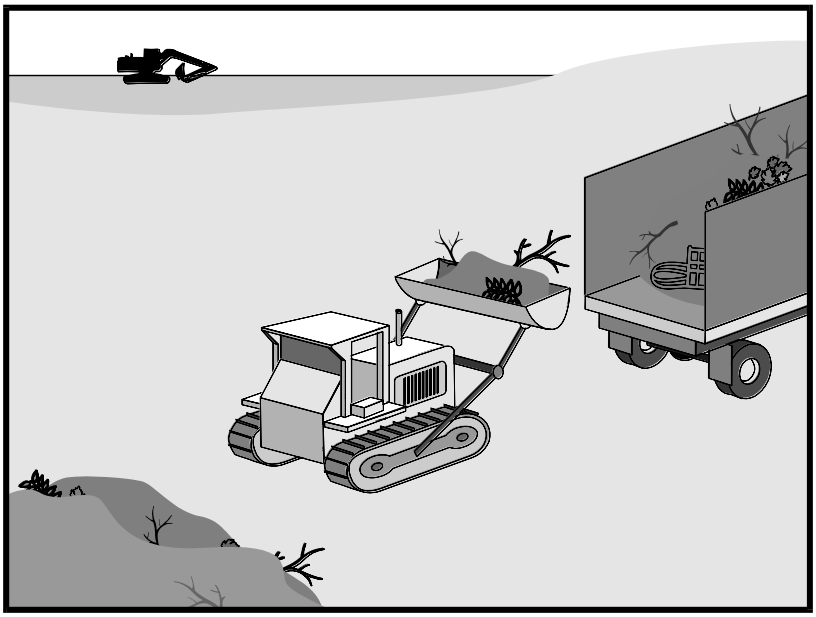

Categories		
EC	Erosion Control	
SE	Sediment Control	
TC	Tracking Control	
WE	Wind Erosion Control	
NS	Non-Stormwater Management Control	
WM	Waste Management and Materials Pollution Control	☑

Legend:
☑ **Primary Objective**
☒ **Secondary Objective**

Targeted Constituents	
Sediment	☑
Nutrients	☑
Trash	☑
Metals	☑
Bacteria	
Oil and Grease	☑
Organics	☑

Potential Alternatives

None

If User/Subscriber modifies this fact sheet in any way, the CASQA name/logo and footer below must be removed from each page and not appear on the modified version.

Description and Purpose

Solid waste management procedures and practices are designed to prevent or reduce the discharge of pollutants to stormwater from solid or construction waste by providing designated waste collection areas and containers, arranging for regular disposal, and training employees and subcontractors.

Suitable Applications

This BMP is suitable for construction sites where the following wastes are generated or stored:

- Solid waste generated from trees and shrubs removed during land clearing, demolition of existing structures (rubble), and building construction
- Packaging materials including wood, paper, and plastic
- Scrap or surplus building materials including scrap metals, rubber, plastic, glass pieces, and masonry products
- Domestic wastes including food containers such as beverage cans, coffee cups, paper bags, plastic wrappers, and cigarettes
- Construction wastes including brick, mortar, timber, steel and metal scraps, pipe and electrical cuttings, non-hazardous equipment parts, styrofoam and other materials used to transport and package construction materials

CASQA
CALIFORNIA STORMWATER QUALITY ASSOCIATION

- Highway planting wastes, including vegetative material, plant containers, and packaging materials

Limitations

Temporary stockpiling of certain construction wastes may not necessitate stringent drainage related controls during the non-rainy season or in desert areas with low rainfall.

Implementation

The following steps will help keep a clean site and reduce stormwater pollution:

- Select designated waste collection areas onsite.
- Inform trash-hauling contractors that you will accept only watertight dumpsters for onsite use. Inspect dumpsters for leaks and repair any dumpster that is not watertight.
- Locate containers in a covered area or in a secondary containment.
- Provide an adequate number of containers with lids or covers that can be placed over the container to keep rain out or to prevent loss of wastes when it is windy.
- Cover waste containers at the end of each work day and when it is raining.
- Plan for additional containers and more frequent pickup during the demolition phase of construction.
- Collect site trash daily, especially during rainy and windy conditions.
- Remove this solid waste promptly since erosion and sediment control devices tend to collect litter.
- Make sure that toxic liquid wastes (used oils, solvents, and paints) and chemicals (acids, pesticides, additives, curing compounds) are not disposed of in dumpsters designated for construction debris.
- Do not hose out dumpsters on the construction site. Leave dumpster cleaning to the trash hauling contractor.
- Arrange for regular waste collection before containers overflow.
- Clean up immediately if a container does spill.
- Make sure that construction waste is collected, removed, and disposed of only at authorized disposal areas.

Education

- Have the contractor's superintendent or representative oversee and enforce proper solid waste management procedures and practices.
- Instruct employees and subcontractors on identification of solid waste and hazardous waste.
- Educate employees and subcontractors on solid waste storage and disposal procedures.

- Hold regular meetings to discuss and reinforce disposal procedures (incorporate into regular safety meetings).
- Require that employees and subcontractors follow solid waste handling and storage procedures.
- Prohibit littering by employees, subcontractors, and visitors.
- Minimize production of solid waste materials wherever possible.

Collection, Storage, and Disposal

- Littering on the project site should be prohibited.
- To prevent clogging of the storm drainage system, litter and debris removal from drainage grates, trash racks, and ditch lines should be a priority.
- Trash receptacles should be provided in the contractor's yard, field trailer areas, and at locations where workers congregate for lunch and break periods.
- Litter from work areas within the construction limits of the project site should be collected and placed in watertight dumpsters at least weekly, regardless of whether the litter was generated by the contractor, the public, or others. Collected litter and debris should not be placed in or next to drain inlets, stormwater drainage systems, or watercourses.
- Dumpsters of sufficient size and number should be provided to contain the solid waste generated by the project.
- Full dumpsters should be removed from the project site and the contents should be disposed of by the trash hauling contractor.
- Construction debris and waste should be removed from the site biweekly or more frequently as needed.
- Construction material visible to the public should be stored or stacked in an orderly manner.
- Stormwater runon should be prevented from contacting stored solid waste through the use of berms, dikes, or other temporary diversion structures or through the use of measures to elevate waste from site surfaces.
- Solid waste storage areas should be located at least 50 ft from drainage facilities and watercourses and should not be located in areas prone to flooding or ponding.
- Except during fair weather, construction and highway planting waste not stored in watertight dumpsters should be securely covered from wind and rain by covering the waste with tarps or plastic.
- Segregate potentially hazardous waste from non-hazardous construction site waste.
- Make sure that toxic liquid wastes (used oils, solvents, and paints) and chemicals (acids, pesticides, additives, curing compounds) are not disposed of in dumpsters designated for construction debris.

- For disposal of hazardous waste, see WM-6, Hazardous Waste Management. Have hazardous waste hauled to an appropriate disposal and/or recycling facility.
- Salvage or recycle useful vegetation debris, packaging and surplus building materials when practical. For example, trees and shrubs from land clearing can be used as a brush barrier, or converted into wood chips, then used as mulch on graded areas. Wood pallets, cardboard boxes, and construction scraps can also be recycled.

Costs

All of the above are low cost measures.

Inspection and Maintenance

- Inspect and verify that activity–based BMPs are in place prior to the commencement of associated activities. While activities associated with the BMP are under way, inspect BMPs in accordance with General Permit requirements for the associated project type and risk level. It is recommended that at a minimum, BMPs be inspected weekly, prior to forecasted rain events, daily during extended rain events, and after the conclusion of rain events.
- Inspect BMPs subject to non-stormwater discharge daily while non-stormwater discharges occur
- Inspect construction waste area regularly.
- Arrange for regular waste collection.

References

Processes, Procedures and Methods to Control Pollution Resulting from All Construction Activity, 430/9-73-007, USEPA, 1973.

Stormwater Quality Handbooks - Construction Site Best Management Practices (BMPs) Manual, State of California Department of Transportation (Caltrans), November 2000.

Stormwater Management for Construction Activities; Developing Pollution Prevention Plans and Best Management Practice, EPA 832-R-92005; USEPA, April 1992.

Hazardous Waste Management WM-6

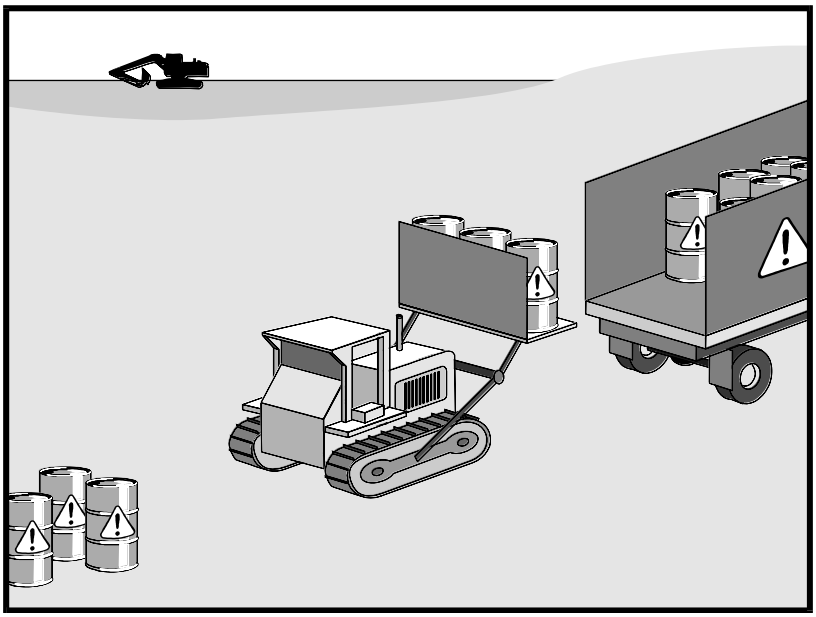

Categories		
EC	Erosion Control	
SE	Sediment Control	
TC	Tracking Control	
WE	Wind Erosion Control	
NS	Non-Stormwater Management Control	
WM	Waste Management and Materials Pollution Control	☑

Legend:
☑ **Primary Objective**
☒ **Secondary Objective**

Targeted Constituents	
Sediment	
Nutrients	☑
Trash	☑
Metals	☑
Bacteria	☑
Oil and Grease	☑
Organics	☑

Potential Alternatives

None

If User/Subscriber modifies this fact sheet in any way, the CASQA name/logo and footer below must be removed from each page and not appear on the modified version.

Description and Purpose

Prevent or reduce the discharge of pollutants to stormwater from hazardous waste through proper material use, waste disposal, and training of employees and subcontractors.

Suitable Applications

This best management practice (BMP) applies to all construction projects. Hazardous waste management practices are implemented on construction projects that generate waste from the use of:

- Petroleum Products
- Asphalt Products
- Concrete Curing Compounds
- Pesticides
- Palliatives
- Acids
- Septic Wastes
- Paints
- Stains
- Solvents
- Wood Preservatives
- Roofing Tar
- Any materials deemed a hazardous waste in California, Title 22 Division 4.5, or listed in 40 CFR Parts 110, 117, 261, or 302

In addition, sites with existing structures may contain wastes, which must be disposed of in accordance with federal, state, and local regulations. These wastes include:

- Sandblasting grit mixed with lead-, cadmium-, or chromium-based paints
- Asbestos
- PCBs (particularly in older transformers)

Limitations

- Hazardous waste that cannot be reused or recycled must be disposed of by a licensed hazardous waste hauler.
- Nothing in this BMP relieves the contractor from responsibility for compliance with federal, state, and local laws regarding storage, handling, transportation, and disposal of hazardous wastes.
- This BMP does not cover aerially deposited lead (ADL) soils. For ADL soils refer to WM-7, Contaminated Soil Management.

Implementation

The following steps will help reduce stormwater pollution from hazardous wastes:

Material Use

- Wastes should be stored in sealed containers constructed of a suitable material and should be labeled as required by Title 22 CCR, Division 4.5 and 49 CFR Parts 172, 173, 178, and 179.
- All hazardous waste should be stored, transported, and disposed as required in Title 22 CCR, Division 4.5 and 49 CFR 261-263.
- Waste containers should be stored in temporary containment facilities that should comply with the following requirements:
    - Temporary containment facility should provide for a spill containment volume equal to 1.5 times the volume of all containers able to contain precipitation from a 25-year storm event, plus the greater of 10% of the aggregate volume of all containers or 100% of the capacity of the largest tank within its boundary, whichever is greater.
    - Temporary containment facility should be impervious to the materials stored there for a minimum contact time of 72 hours.
    - Temporary containment facilities should be maintained free of accumulated rainwater and spills. In the event of spills or leaks, accumulated rainwater and spills should be placed into drums after each rainfall. These liquids should be handled as a hazardous waste unless testing determines them to be non-hazardous. Non-hazardous liquids should be sent to an approved disposal site.
    - Sufficient separation should be provided between stored containers to allow for spill cleanup and emergency response access.

  - Incompatible materials, such as chlorine and ammonia, should not be stored in the same temporary containment facility.

  - Throughout the rainy season, temporary containment facilities should be covered during non-working days, and prior to rain events. Covered facilities may include use of plastic tarps for small facilities or constructed roofs with overhangs.

- Drums should not be overfilled, and wastes should not be mixed.

- Unless watertight, containers of dry waste should be stored on pallets.

- Do not over-apply herbicides and pesticides. Prepare only the amount needed. Follow the recommended usage instructions. Over application is expensive and environmentally harmful. Apply surface dressings in several smaller applications, as opposed to one large application. Allow time for infiltration and avoid excess material being carried offsite by runoff. Do not apply these chemicals just before it rains. People applying pesticides must be certified in accordance with federal and state regulations.

- Paint brushes and equipment for water and oil-based paints should be cleaned within a contained area and should not be allowed to contaminate site soils, watercourses, or drainage systems. Waste paints, thinners, solvents, residues, and sludges that cannot be recycled or reused should be disposed of as hazardous waste. When thoroughly dry, latex paint and paint cans, used brushes, rags, absorbent materials, and drop cloths should be disposed of as solid waste.

- Do not clean out brushes or rinse paint containers into the dirt, street, gutter, storm drain, or stream. “Paint out” brushes as much as possible. Rinse water-based paints to the sanitary sewer. Filter and reuse thinners and solvents. Dispose of excess oil-based paints and sludge as hazardous waste.

- The following actions should be taken with respect to temporary contaminant:

  - Ensure that adequate hazardous waste storage volume is available.

  - Ensure that hazardous waste collection containers are conveniently located.

  - Designate hazardous waste storage areas onsite away from storm drains or watercourses and away from moving vehicles and equipment to prevent accidental spills.

  - Minimize production or generation of hazardous materials and hazardous waste on the job site.

  - Use containment berms in fueling and maintenance areas and where the potential for spills is high.

  - Segregate potentially hazardous waste from non-hazardous construction site debris.

  - Keep liquid or semi-liquid hazardous waste in appropriate containers (closed drums or similar) and under cover.

- Clearly label all hazardous waste containers with the waste being stored and the date of accumulation.
- Place hazardous waste containers in secondary containment.
- Do not allow potentially hazardous waste materials to accumulate on the ground.
- Do not mix wastes.
- Use all of the product before disposing of the container.
- Do not remove the original product label; it contains important safety and disposal information.

Waste Recycling Disposal

- Select designated hazardous waste collection areas onsite.
- Hazardous materials and wastes should be stored in covered containers and protected from vandalism.
- Place hazardous waste containers in secondary containment.
- Do not mix wastes, this can cause chemical reactions, making recycling impossible and complicating disposal.
- Recycle any useful materials such as used oil or water-based paint.
- Make sure that toxic liquid wastes (used oils, solvents, and paints) and chemicals (acids, pesticides, additives, curing compounds) are not disposed of in dumpsters designated for construction debris.
- Arrange for regular waste collection before containers overflow.
- Make sure that hazardous waste (e.g., excess oil-based paint and sludge) is collected, removed, and disposed of only at authorized disposal areas.

Disposal Procedures

- Waste should be disposed of by a licensed hazardous waste transporter at an authorized and licensed disposal facility or recycling facility utilizing properly completed Uniform Hazardous Waste Manifest forms.
- A Department of Health Services certified laboratory should sample waste to determine the appropriate disposal facility.
- Properly dispose of rainwater in secondary containment that may have mixed with hazardous waste.
- Attention is directed to "Hazardous Material", "Contaminated Material", and "Aerially Deposited Lead" of the contract documents regarding the handling and disposal of hazardous materials.

Education

- Educate employees and subcontractors on hazardous waste storage and disposal procedures.
- Educate employees and subcontractors on potential dangers to humans and the environment from hazardous wastes.
- Instruct employees and subcontractors on safety procedures for common construction site hazardous wastes.
- Instruct employees and subcontractors in identification of hazardous and solid waste.
- Hold regular meetings to discuss and reinforce hazardous waste management procedures (incorporate into regular safety meetings).
- The contractor's superintendent or representative should oversee and enforce proper hazardous waste management procedures and practices.
- Make sure that hazardous waste is collected, removed, and disposed of only at authorized disposal areas.
- Warning signs should be placed in areas recently treated with chemicals.
- Place a stockpile of spill cleanup materials where it will be readily accessible.
- If a container does spill, clean up immediately.

Costs

All of the above are low cost measures.

Inspection and Maintenance

- Inspect and verify that activity–based BMPs are in place prior to the commencement of associated activities. While activities associated with the BMP are under way, inspect BMPs in accordance with General Permit requirements for the associated project type and risk level. It is recommended that at a minimum, BMPs be inspected weekly, prior to forecasted rain events, daily during extended rain events, and after the conclusion of rain events.
- Inspect BMPs subject to non-stormwater discharge daily while non-stormwater discharges occur
- Hazardous waste should be regularly collected.
- A foreman or construction supervisor should monitor onsite hazardous waste storage and disposal procedures.
- Waste storage areas should be kept clean, well organized, and equipped with ample cleanup supplies as appropriate for the materials being stored.
- Perimeter controls, containment structures, covers, and liners should be repaired or replaced as needed to maintain proper function.

- Hazardous spills should be cleaned up and reported in conformance with the applicable Material Safety Data Sheet (MSDS) and the instructions posted at the project site.
- The National Response Center, at (800) 424-8802, should be notified of spills of federal reportable quantities in conformance with the requirements in 40 CFR parts 110, 117, and 302. Also notify the Governors Office of Emergency Services Warning Center at (916) 845-8911.
- A copy of the hazardous waste manifests should be provided.

References

Blueprint for a Clean Bay: Best Management Practices to Prevent Stormwater Pollution from Construction Related Activities; Santa Clara Valley Nonpoint Source Pollution Control Program, 1995.

Processes, Procedures and Methods to Control Pollution Resulting from All Construction Activity, 430/9-73-007, USEPA, 1973.

Stormwater Quality Handbooks - Construction Site Best Management Practices (BMPs) Manual, State of California Department of Transportation (Caltrans), November 2000.

Stormwater Management for Construction Activities; Developing Pollution Prevention Plans and Best Management Practice, EPA 832-R-92005; USEPA, April 1992.

Concrete Waste Management WM-8

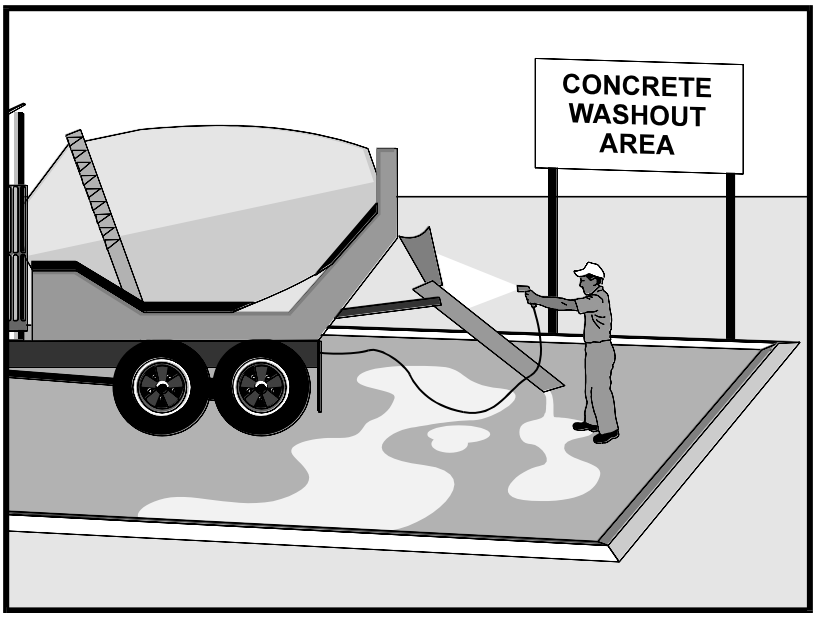

Categories		
EC	Erosion Control	
SE	Sediment Control	
TC	Tracking Control	
WE	Wind Erosion Control	
NS	Non-Stormwater Management Control	☒
WM	Waste Management and Materials Pollution Control	☑

Legend:
☑ **Primary Category**
☒ **Secondary Category**

Targeted Constituents	
Sediment	☑
Nutrients	
Trash	
Metals	☑
Bacteria	
Oil and Grease	
Organics	

Potential Alternatives

None

If User/Subscriber modifies this fact sheet in any way, the CASQA name/logo and footer below must be removed from each page and not appear on the modified version.

Description and Purpose

Prevent the discharge of pollutants to stormwater from concrete waste by conducting washout onsite or offsite in a designated area, and by employee and subcontractor training.

The General Permit incorporates Numeric Action Levels (NAL) for pH (see Section 2 of this handbook to determine your project's risk level and if you are subject to these requirements).

Many types of construction materials, including mortar, concrete, stucco, cement and block and their associated wastes have basic chemical properties that can raise pH levels outside of the permitted range. Additional care should be taken when managing these materials to prevent them from coming into contact with stormwater flows and raising pH to levels outside the accepted range.

Suitable Applications

Concrete waste management procedures and practices are implemented on construction projects where:

- Concrete is used as a construction material or where concrete dust and debris result from demolition activities.
- Slurries containing Portland cement concrete (PCC) are generated, such as from saw cutting, coring, grinding, grooving, and hydro-concrete demolition.
- Concrete trucks and other concrete-coated equipment are washed onsite.

CASQA
CALIFORNIA STORMWATER QUALITY ASSOCIATION

- Mortar-mixing stations exist.
- Stucco mixing and spraying.
- See also NS-8, Vehicle and Equipment Cleaning.

Limitations

- Offsite washout of concrete wastes may not always be possible.
- Multiple washouts may be needed to assure adequate capacity and to allow for evaporation.

Implementation

The following steps will help reduce stormwater pollution from concrete wastes:

- Incorporate requirements for concrete waste management into material supplier and subcontractor agreements.
- Store dry and wet materials under cover, away from drainage areas. Refer to WM-1, Material Delivery and Storage for more information.
- Avoid mixing excess amounts of concrete.
- Perform washout of concrete trucks in designated areas only, where washout will not reach stormwater.
- Do not wash out concrete trucks into storm drains, open ditches, streets, streams or onto the ground. Trucks should always be washed out into designated facilities.
- Do not allow excess concrete to be dumped onsite, except in designated areas.
- For onsite washout:
  - On larger sites, it is recommended to locate washout areas at least 50 feet from storm drains, open ditches, or water bodies. Do not allow runoff from this area by constructing a temporary pit or bermed area large enough for liquid and solid waste.
  - Washout wastes into the temporary washout where the concrete can set, be broken up, and then disposed properly.
  - Washouts shall be implemented in a manner that prevents leaching to underlying soils. Washout containers must be water tight and washouts on or in the ground must be lined with a suitable impervious liner, typically a plastic type material.
- Do not wash sweepings from exposed aggregate concrete into the street or storm drain. Collect and return sweepings to aggregate base stockpile or dispose in the trash.
- See typical concrete washout installation details at the end of this fact sheet.

Education

- Educate employees, subcontractors, and suppliers on the concrete waste management techniques described herein.

- Arrange for contractor's superintendent or representative to oversee and enforce concrete waste management procedures.
- Discuss the concrete management techniques described in this BMP (such as handling of concrete waste and washout) with the ready-mix concrete supplier before any deliveries are made.

Concrete Demolition Wastes

- Stockpile concrete demolition waste in accordance with BMP WM-3, Stockpile Management.
- Dispose of or recycle hardened concrete waste in accordance with applicable federal, state or local regulations.

Concrete Slurry Wastes

- PCC and AC waste should not be allowed to enter storm drains or watercourses.
- PCC and AC waste should be collected and disposed of or placed in a temporary concrete washout facility (as described in Onsite Temporary Concrete Washout Facility, Concrete Transit Truck Washout Procedures, below).
- A foreman or construction supervisor should monitor onsite concrete working tasks, such as saw cutting, coring, grinding and grooving to ensure proper methods are implemented.
- Saw-cut concrete slurry should not be allowed to enter storm drains or watercourses. Residue from grinding operations should be picked up by means of a vacuum attachment to the grinding machine or by sweeping. Saw cutting residue should not be allowed to flow across the pavement and should not be left on the surface of the pavement. See also NS-3, Paving and Grinding Operations; and WM-10, Liquid Waste Management.
- Concrete slurry residue should be disposed in a temporary washout facility (as described in Onsite Temporary Concrete Washout Facility, Concrete Transit Truck Washout Procedures, below) and allowed to dry. Dispose of dry slurry residue in accordance with WM-5, Solid Waste Management.

Onsite Temporary Concrete Washout Facility, Transit Truck Washout Procedures

- Temporary concrete washout facilities should be located a minimum of 50 ft from storm drain inlets, open drainage facilities, and watercourses. Each facility should be located away from construction traffic or access areas to prevent disturbance or tracking.
- A sign should be installed adjacent to each washout facility to inform concrete equipment operators to utilize the proper facilities.
- Temporary concrete washout facilities should be constructed above grade or below grade at the option of the contractor. Temporary concrete washout facilities should be constructed and maintained in sufficient quantity and size to contain all liquid and concrete waste generated by washout operations.

- Temporary washout facilities should have a temporary pit or bermed areas of sufficient volume to completely contain all liquid and waste concrete materials generated during washout procedures.
- Temporary washout facilities should be lined to prevent discharge to the underlying ground or surrounding area.
- Washout of concrete trucks should be performed in designated areas only.
- Only concrete from mixer truck chutes should be washed into concrete wash out.
- Concrete washout from concrete pumper bins can be washed into concrete pumper trucks and discharged into designated washout area or properly disposed of or recycled offsite.
- Once concrete wastes are washed into the designated area and allowed to harden, the concrete should be broken up, removed, and disposed of per WM-5, Solid Waste Management. Dispose of or recycle hardened concrete on a regular basis.
- Temporary Concrete Washout Facility (Type Above Grade)
    - Temporary concrete washout facility (type above grade) should be constructed as shown on the details at the end of this BMP, with a recommended minimum length and minimum width of 10 ft; however, smaller sites or jobs may only need a smaller washout facility. With any washout, always maintain a sufficient quantity and volume to contain all liquid and concrete waste generated by washout operations.
    - Materials used to construct the washout area should conform to the provisions detailed in their respective BMPs (e.g., SE-8 Sandbag Barrier).
    - Plastic lining material should be a minimum of 10 mil in polyethylene sheeting and should be free of holes, tears, or other defects that compromise the impermeability of the material.
    - Alternatively, portable removable containers can be used as above grade concrete washouts. Also called a “roll-off”; this concrete washout facility should be properly sealed to prevent leakage and should be removed from the site and replaced when the container reaches 75% capacity.
- Temporary Concrete Washout Facility (Type Below Grade)
    - Temporary concrete washout facilities (type below grade) should be constructed as shown on the details at the end of this BMP, with a recommended minimum length and minimum width of 10 ft. The quantity and volume should be sufficient to contain all liquid and concrete waste generated by washout operations.
    - Lath and flagging should be commercial type.
    - Plastic lining material should be a minimum of 10 mil polyethylene sheeting and should be free of holes, tears, or other defects that compromise the impermeability of the material.

- The base of a washout facility should be free of rock or debris that may damage a plastic liner.

Removal of Temporary Concrete Washout Facilities

- When temporary concrete washout facilities are no longer required for the work, the hardened concrete should be removed and properly disposed or recycled in accordance with federal, state or local regulations. Materials used to construct temporary concrete washout facilities should be removed from the site of the work and properly disposed or recycled in accordance with federal, state or local regulations.

- Holes, depressions or other ground disturbance caused by the removal of the temporary concrete washout facilities should be backfilled and repaired.

Costs

All of the above are low cost measures. Roll-off concrete washout facilities can be more costly than other measures due to removal and replacement; however, provide a cleaner alternative to traditional washouts. The type of washout facility, size, and availability of materials will determine the cost of the washout.

Inspection and Maintenance

- BMPs must be inspected in accordance with General Permit requirements for the associated project type and risk level. It is recommended that at a minimum, BMPs be inspected weekly, prior to forecasted rain events, daily during extended rain events, and after the conclusion of rain events.

- Temporary concrete washout facilities should be maintained to provide adequate holding capacity with a minimum freeboard of 4 in. for above grade facilities and 12 in. for below grade facilities. Maintaining temporary concrete washout facilities should include removing and disposing of hardened concrete and returning the facilities to a functional condition. Hardened concrete materials should be removed and properly disposed or recycled in accordance with federal, state or local regulations.

- Washout facilities must be cleaned, or new facilities must be constructed and ready for use once the washout is 75% full.

- Inspect washout facilities for damage (e.g. torn liner, evidence of leaks, signage, etc.). Repair all identified damage.

References

Blueprint for a Clean Bay: Best Management Practices to Prevent Stormwater Pollution from Construction Related Activities; Santa Clara Valley Nonpoint Source Pollution Control Program, 1995.

Stormwater Quality Handbooks - Construction Site Best Management Practices (BMPs) Manual, State of California Department of Transportation (Caltrans), November 2000, Updated March 2003.

Stormwater Management for Construction Activities; Developing Pollution Prevention Plans and Best Management Practice, EPA 832-R-92005; USEPA, April 1992.

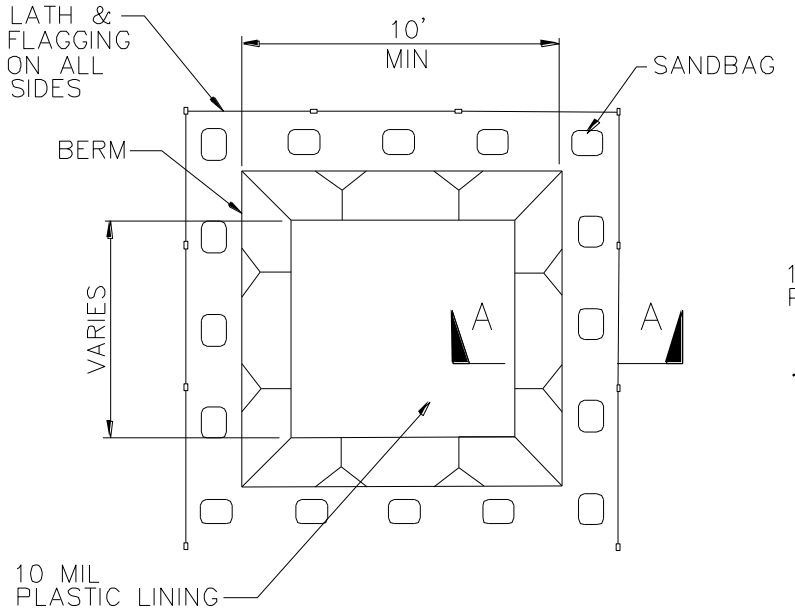

PLAN
NOT TO SCALE
TYPE "BELOW GRADE"

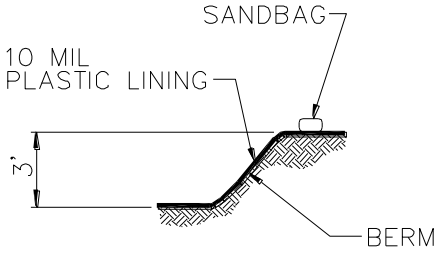

SECTION A–A
NOT TO SCALE

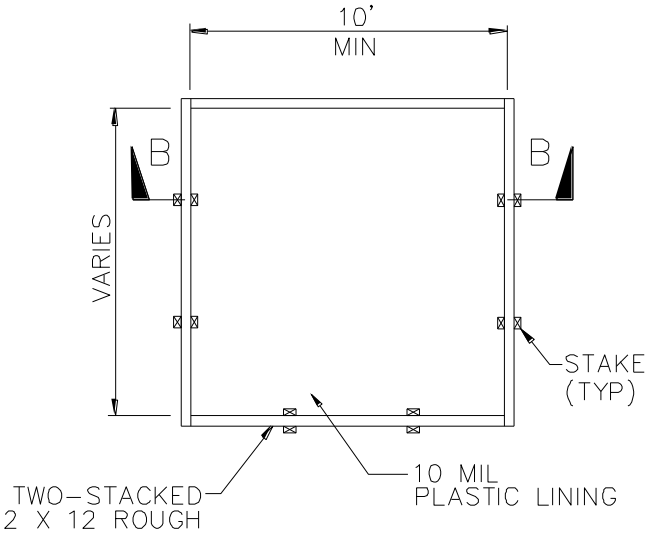

PLAN
NOT TO SCALE
TYPE "ABOVE GRADE"

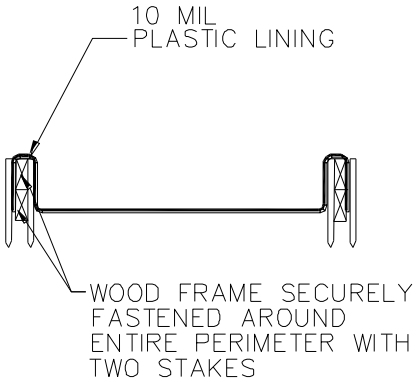

SECTION B–B
NOT TO SCALE

NOTES

1. ACTUAL LAYOUT DETERMINED IN FIELD.
2. THE CONCRETE WASHOUT SIGN SHALL BE INSTALLED WITHIN 30 FT. OF THE TEMPORARY CONCRETE WASHOUT FACILITY.

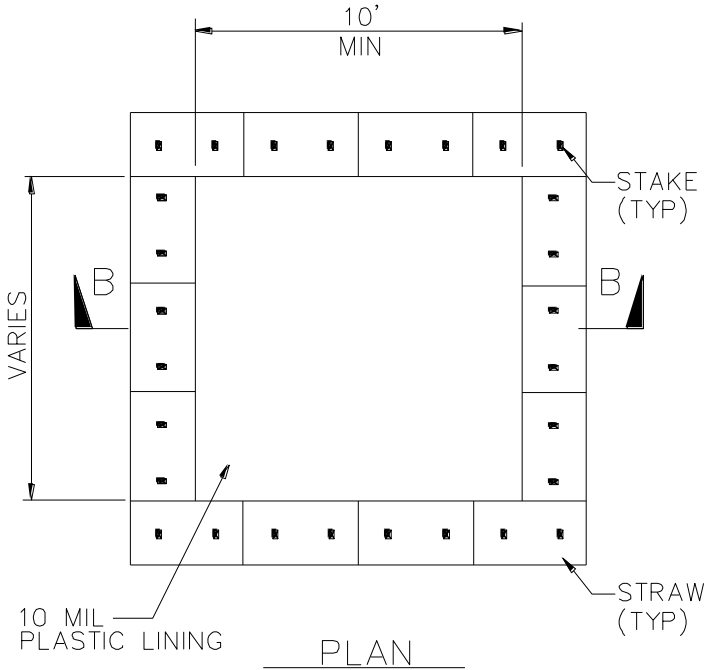

PLAN
NOT TO SCALE
TYPE "ABOVE GRADE"
WITH STRAW BALES

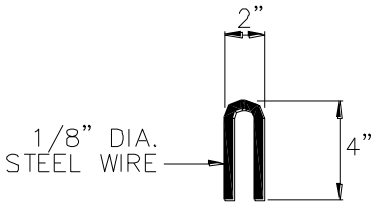

STAPLE DETAIL

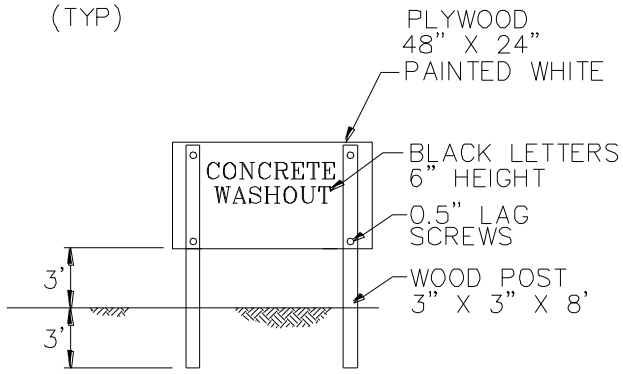

CONCRETE WASHOUT
SIGN DETAIL
(OR EQUIVALENT)

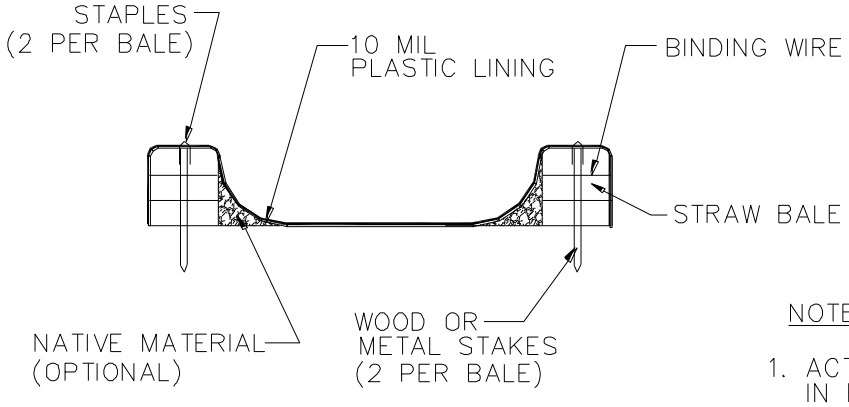

SECTION B–B
NOT TO SCALE

NOTES

1. ACTUAL LAYOUT DETERMINED IN FIELD.
2. THE CONCRETE WASHOUT SIGN SHALL BE INSTALLED WITHIN 30 FT. OF THE TEMPORARY CONCRETE WASHOUT FACILITY.

Sanitary/Septic Waste Management WM-9

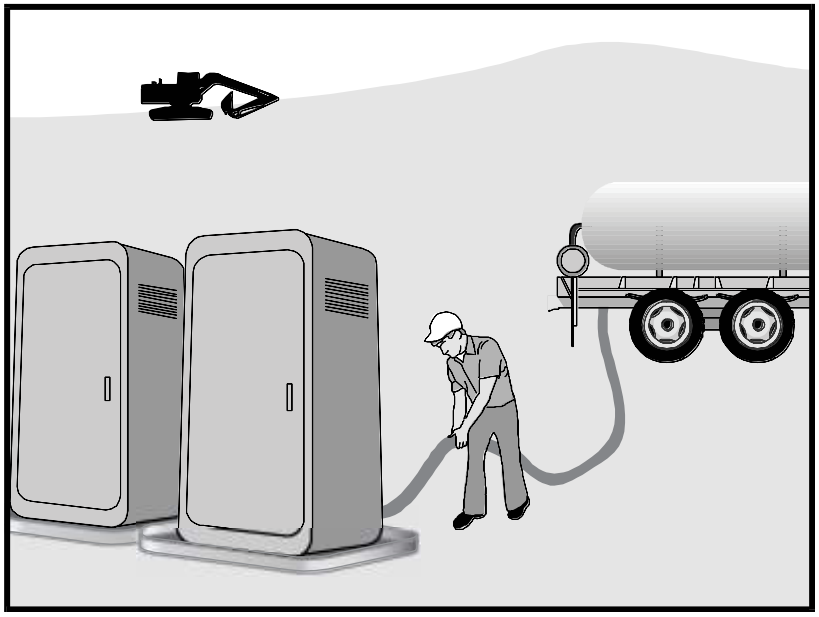

Categories		
EC	Erosion Control	
SE	Sediment Control	
TC	Tracking Control	
WE	Wind Erosion Control	
NS	Non-Stormwater Management Control	
WM	Waste Management and Materials Pollution Control	☑

Legend:
☑ **Primary Category**
☒ **Secondary Category**

Targeted Constituents	
Sediment	
Nutrients	☑
Trash	☑
Metals	
Bacteria	☑
Oil and Grease	
Organics	☑

Potential Alternatives

None

If User/Subscriber modifies this fact sheet in any way, the CASQA name/logo and footer below must be removed from each page and not appear on the modified version.

Description and Purpose

Proper sanitary and septic waste management prevent the discharge of pollutants to stormwater from sanitary and septic waste by providing convenient, well-maintained facilities, and arranging for regular service and disposal.

Suitable Applications

Sanitary septic waste management practices are suitable for use at all construction sites that use temporary or portable sanitary and septic waste systems.

Limitations

None identified.

Implementation

Sanitary or septic wastes should be treated or disposed of in accordance with state and local requirements. In many cases, one contract with a local facility supplier will be all that it takes to make sure sanitary wastes are properly disposed.

Storage and Disposal Procedures

- Temporary sanitary facilities should be located away from drainage facilities, watercourses, and from traffic circulation. If site conditions allow, place portable facilities a minimum of 50 feet from drainage conveyances and traffic areas. When subjected to high winds or risk of high winds, temporary sanitary facilities should be secured to prevent overturning.

CASQA
CALIFORNIA STORMWATER QUALITY ASSOCIATION

- Temporary sanitary facilities must be equipped with containment to prevent discharge of pollutants to the stormwater drainage system of the receiving water.
- Consider safety as well as environmental implications before placing temporary sanitary facilities.
- Wastewater should not be discharged or buried within the project site.
- Sanitary and septic systems that discharge directly into sanitary sewer systems, where permissible, should comply with the local health agency, city, county, and sewer district requirements.
- Only reputable, licensed sanitary and septic waste haulers should be used.
- Sanitary facilities should be located in a convenient location.
- Temporary septic systems should treat wastes to appropriate levels before discharging.
- If using an onsite disposal system (OSDS), such as a septic system, local health agency requirements must be followed.
- Temporary sanitary facilities that discharge to the sanitary sewer system should be properly connected to avoid illicit discharges.
- Sanitary and septic facilities should be maintained in good working order by a licensed service.
- Regular waste collection by a licensed hauler should be arranged before facilities overflow.
- If a spill does occur from a temporary sanitary facility, follow federal, state and local regulations for containment and clean-up.

Education

- Educate employees, subcontractors, and suppliers on sanitary and septic waste storage and disposal procedures.
- Educate employees, subcontractors, and suppliers of potential dangers to humans and the environment from sanitary and septic wastes.
- Instruct employees, subcontractors, and suppliers in identification of sanitary and septic waste.
- Hold regular meetings to discuss and reinforce the use of sanitary facilities (incorporate into regular safety meetings).
- Establish a continuing education program to indoctrinate new employees.

Costs

All of the above are low cost measures.

Sanitary/Septic Waste Management WM-9

Inspection and Maintenance

- BMPs must be inspected in accordance with General Permit requirements for the associated project type and risk level. It is recommended that at a minimum, BMPs be inspected weekly, prior to forecasted rain events, daily during extended rain events, and after the conclusion of rain events.
- Arrange for regular waste collection.
- If high winds are expected, portable sanitary facilities must be secured with spikes or weighed down to prevent over turning.
- If spills or leaks from sanitary or septic facilities occur that are not contained and discharge from the site, non-visible sampling of site discharge may be required. Refer to the General Permit or to your project specific Construction Site Monitoring Plan to determine if and where sampling is required.

References

Stormwater Quality Handbooks - Construction Site Best Management Practices (BMPs) Manual, State of California Department of Transportation (Caltrans), March 2003.

Stormwater Management for Construction Activities; Developing Pollution Prevention Plans and Best Management Practice, EPA 832-R-92005; USEPA, April 1992.

Liquid Waste Management WM-10

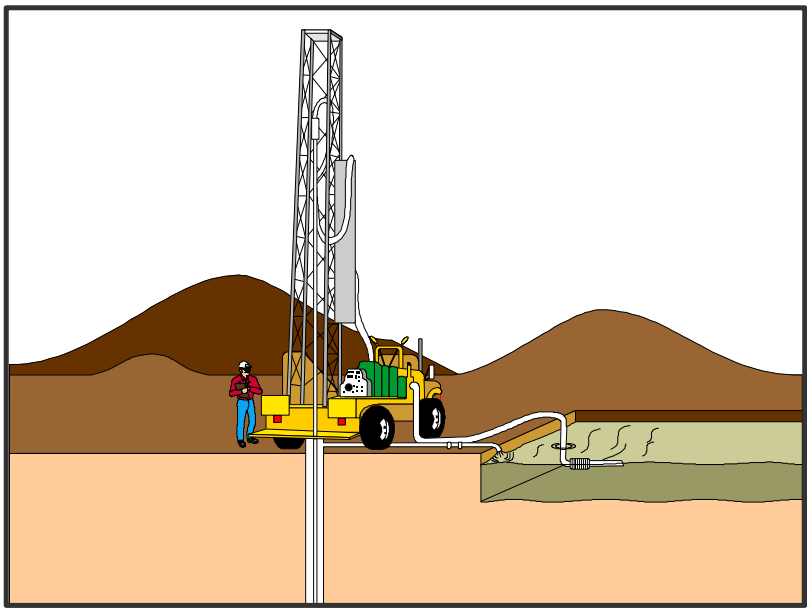

Description and Purpose

Liquid waste management includes procedures and practices to prevent discharge of pollutants to the storm drain system or to watercourses as a result of the creation, collection, and disposal of non-hazardous liquid wastes.

Suitable Applications

Liquid waste management is applicable to construction projects that generate any of the following non-hazardous by-products, residuals, or wastes:

- Drilling slurries and drilling fluids
- Grease-free and oil-free wastewater and rinse water
- Dredgings
- Other non-stormwater liquid discharges not permitted by separate permits

Limitations

- Disposal of some liquid wastes may be subject to specific laws and regulations or to requirements of other permits secured for the construction project (e.g., NPDES permits, Army Corps permits, Coastal Commission permits, etc.).
- Liquid waste management does not apply to dewatering operations (NS-2 Dewatering Operations), solid waste management (WM-5, Solid Waste Management), hazardous wastes (WM-6, Hazardous Waste Management), or

Categories

EC	Erosion Control	
SE	Sediment Control	
TC	Tracking Control	
WE	Wind Erosion Control	
NS	Non-Stormwater Management Control	
WM	Waste Management and Materials Pollution Control	☑

Legend:

☑ **Primary Objective**

☒ **Secondary Objective**

Targeted Constituents

Sediment	☑
Nutrients	☑
Trash	☑
Metals	☑
Bacteria	
Oil and Grease	☑
Organics	

Potential Alternatives

None

If User/Subscriber modifies this fact sheet in any way, the CASQA name/logo and footer below must be removed from each page and not appear on the modified version.

concrete slurry residue (WM-8, Concrete Waste Management).

- Typical permitted non-stormwater discharges can include: water line flushing; landscape irrigation; diverted stream flows; rising ground waters; uncontaminated pumped ground water; discharges from potable water sources; foundation drains; irrigation water; springs; water from crawl space pumps; footing drains; lawn watering; flows from riparian habitats and wetlands; and discharges or flows from emergency fire fighting activities.

Implementation

General Practices

- Instruct employees and subcontractors how to safely differentiate between non-hazardous liquid waste and potential or known hazardous liquid waste.
- Instruct employees, subcontractors, and suppliers that it is unacceptable for any liquid waste to enter any storm drainage device, waterway, or receiving water.
- Educate employees and subcontractors on liquid waste generating activities and liquid waste storage and disposal procedures.
- Hold regular meetings to discuss and reinforce disposal procedures (incorporate into regular safety meetings).
- Verify which non-stormwater discharges are permitted by the statewide NPDES permit; different regions might have different requirements not outlined in this permit.
- Apply NS-8, Vehicle and Equipment Cleaning for managing wash water and rinse water from vehicle and equipment cleaning operations.

Containing Liquid Wastes

- Drilling residue and drilling fluids should not be allowed to enter storm drains and watercourses and should be disposed of.
- If an appropriate location is available, drilling residue and drilling fluids that are exempt under Title 23, CCR § 2511(g) may be dried by infiltration and evaporation in a containment facility constructed in conformance with the provisions concerning the Temporary Concrete Washout Facilities detailed in WM-8, Concrete Waste Management.
- Liquid wastes generated as part of an operational procedure, such as water-laden dredged material and drilling mud, should be contained and not allowed to flow into drainage channels or receiving waters prior to treatment.
- Liquid wastes should be contained in a controlled area such as a holding pit, sediment basin, roll-off bin, or portable tank.
- Containment devices must be structurally sound and leak free.
- Containment devices must be of sufficient quantity or volume to completely contain the liquid wastes generated.

- Precautions should be taken to avoid spills or accidental releases of contained liquid wastes. Apply the education measures and spill response procedures outlined in WM-4, Spill Prevention and Control.

- Containment areas or devices should not be located where accidental release of the contained liquid can threaten health or safety or discharge to water bodies, channels, or storm drains.

Capturing Liquid Wastes

- Capture all liquid wastes that have the potential to affect the storm drainage system (such as wash water and rinse water from cleaning walls or pavement), before they run off a surface.

- Do not allow liquid wastes to flow or discharge uncontrolled. Use temporary dikes or berms to intercept flows and direct them to a containment area or device for capture.

- Use a sediment trap (SE-3, Sediment Trap) for capturing and treating sediment laden liquid waste or capture in a containment device and allow sediment to settle.

Disposing of Liquid Wastes

- A typical method to handle liquid waste is to dewater the contained liquid waste, using procedures such as described in NS-2, Dewatering Operations, and SE-2, Sediment Basin, and dispose of resulting solids per WM-5, Solid Waste Management.

- Methods of disposal for some liquid wastes may be prescribed in Water Quality Reports, NPDES permits, Environmental Impact Reports, 401 or 404 permits, and local agency discharge permits, etc. Review the SWPPP to see if disposal methods are identified.

- Liquid wastes, such as from dredged material, may require testing and certification whether it is hazardous or not before a disposal method can be determined.

- For disposal of hazardous waste, see WM-6, Hazardous Waste Management.

- If necessary, further treat liquid wastes prior to disposal. Treatment may include, though is not limited to, sedimentation, filtration, and chemical neutralization.

Costs

Prevention costs for liquid waste management are minimal. Costs increase if cleanup or fines are involved.

Inspection and Maintenance

- Inspect and verify that activity–based BMPs are in place prior to the commencement of associated activities. While activities associated with the BMP are under way, inspect weekly during the rainy season and of two-week intervals in the non-rainy season to verify continued BMP implementation.

- Inspect BMPs subject to non-stormwater discharge daily while non-stormwater discharges occur.

- Remove deposited solids in containment areas and capturing devices as needed and at the completion of the task. Dispose of any solids as described in WM-5, Solid Waste Management.
- Inspect containment areas and capturing devices and repair as needed.

References

Stormwater Quality Handbooks - Construction Site Best Management Practices (BMPs) Manual, State of California Department of Transportation (Caltrans), November 2000.

Appendix N

Monitoring Records

Appendix O

Example Forms

Rain Gauge Log Sheet				
Construction Site Name:				
WDID #:				
Date (mm/dd/yy)	Time (24-hr)	Initials	Rainfall Depth (Inches)	Notes:

Risk Level 1, 2, 3 ***Visual Inspection Field Log Sheet***						
Date and Time of Inspection:				Report Date:		
Inspection Type:	☐ Weekly	☐ Before predicted rain	☐ During rain event	☐ Following qualifying rain event	☐ Contained stormwater release	☐ Quarterly non-stormwater
Site Information						
Construction Site Name:						
Construction stage and completed activities:				Approximate area of exposed site:		
Weather and Observations						
Date Rain Predicted to Occur:				Predicted % chance of rain:		
Estimate storm beginning: _____ (date and time)		Estimate storm duration:_____ (hours)		Estimate time since last storm: _____ (days or hours)	Rain gauge reading:_____ (inches)	
Observations: If yes identify location						
Odors	Yes ☐	No ☐				
Floating material	Yes ☐	No ☐				
Suspended Material	Yes ☐	No ☐				
Sheen	Yes ☐	No ☐				
Discolorations	Yes ☐	No ☐				
Turbidity	Yes ☐	No ☐				
Site Inspections						
Outfalls or BMPs Evaluated			**Deficiencies Noted**			
(add additional sheets or attached detailed BMP Inspection Checklists)						
Photos Taken:	Yes ☐	No ☐	Photo Reference IDs:			
Corrective Actions Identified (note if SWPPP/REAP change is needed)						
Inspector Information						
Inspector Name:				Inspector Title:		
Signature:					Date:	
Risk Level 2						

Effluent Sampling Field Log Sheets			
Construction Site Name:		Date:	Time Start:
Sampler:			
Sampling Event Type:	☐ Stormwater	☐ Non-stormwater	☐ Non-visible pollutant

Field Meter Calibration	
pH Meter ID No./Desc.: Calibration Date/Time:	Turbidity Meter ID No./Desc.: Calibration Date/Time:

Field pH and Turbidity Measurements			
Discharge Location Description	pH	Turbidity	Time

Grab Samples Collected		
Discharge Location Description	Sample Type	Time

Additional Sampling Notes:
Time End:

NAL Exceedance Evaluation Summary Report	Page __ of __
Project Name	
Project WDID	
Project Location	
Date of Exceedance	
Type of Exceedance	**NAL Daily Average ☐ pH ☐ Turbidity** **☐ Other (specify) _____**
Measurement or Analytical Method	**☐ Field meter** **(Sensitivity: _____)** **☐ Lab method (specify) _____** **(Reporting Limit: _____)** **(MDL: _____)**
Calculated Daily Average	**☐ pH _____ pH units** **☐ Turbidity _____ NTU**
Rain Gauge Measurement	**_____ inches**
Compliance Storm Event	**_____ inches (5-year, 24-hour event)**
Visual Observations on Day of Exceedance	

NAL Exceedance Evaluation Summary Report	Page __ of __
Description of BMPs in Place at Time of Event	
Initial Assessment of Cause	
Corrective Actions Taken (deployed after exceedance)	
Additional Corrective Actions Proposed	
Report Completed By	_____ **(Print Name, Title)**
Signature	_____

CHAIN-OF-CUSTODY **DATE:** **Lab ID:**

DESTINATION LAB: ATTN: **ADDRESS:** **Office Phone:** **Cell Phone:**							REQUESTED ANALYSIS				Notes:
SAMPLED BY:											
Contact:											
Project Name											
Client Sample ID	**Sample Date**	**Sample Time**	**Sample Matrix**	**Container #**	**Container Type**	**Container Pres.**					

SENDER COMMENTS:	**RELINQUISHED BY**	
	Signature:	
	Print:	
	Company:	
	Date:	TIME:
LABORATORY COMMENTS:	**RECEIVED BY**	
	Signature:	
	Print:	
	Company:	
	Date:	TIME:

Appendix P

Field Meter Instructions

Appendix Q

Construction General Permit

State Water Resources Control Board
Division of Water Quality
1001 I Street • Sacramento, California 95814 • (916) 341-5455
Mailing Address: P.O. Box 100 • Sacramento, California • 95812-0100
Fax (916) 341-5463 • http://www.waterboards.ca.gov

Linda S. Adams
Secretary for
Environmental Protection

Arnold Schwarzenegger
Governor

CONSTRUCTION GENERAL PERMIT FACT SHEET TABLE OF CONTENTS

I. BACKGROUND 1

A. History 1

B. Legal Challenges and Court Decisions 1

C. Blue Ribbon Panel of Experts and Feasibility of Numeric Effluent Limitations 4

D. Summary of Panel Findings on Construction Activities 4

E. How the Panel's Findings are Used in this General Permit 5

F. Summary of Significant Changes in This General Permit 5

II. RATIONALE 7

A. General Permit Approach 7

B. Construction Activities Covered 7

C. Construction Activities Not Covered 9

D. Obtaining and Terminating Permit Coverage 12

E. Discharge Prohibitions 12

F. Effluent Standards for All Types of Discharges 13

G. Receiving Water Limitations 20

H. Training Qualifications and Requirements 20

I. Sampling, Monitoring, Reporting and Record Keeping 21

J. Risk Determination 27

K. ATS Requirements 35

L. Post-Construction Requirements 37

M. Storm Water Pollution Prevention Plans 46

N. Regional Water Board Authorities 48

LIST OF TABLES

Table 1 - Regional Water Board Basin Plans, Water Quality Objectives for Turbidity 16
Table 2 - Results of Ecoregion Analysis 16
Table 3 – ACL Sampling Data taken by Regional Water Board Staff 17
Table 4 - Required Monitoring Elements for Risk Levels 21
Table 5 - Storm Water Effluent Monitoring Requirements by Risk Level 23
Table 6 - Receiving Water Monitoring Requirements 26
Table 7 - Combined Risk Level Matrix 29
Table 8 -National Oceanic and Atmospheric Administration (NOAA) Definition of Probability of Precipitation (PoP) 31
Table 9 - Qualified SWPPP Developer/ Qualified SWPPP Practitioner Certification Criteria 47

LIST OF FIGURES

Figure 1 -Statewide Map of K * LS 28
Figure 2 - Suite of Storm Events 37
Figure 3 - Northern CA (2009) Counties / Cities With SUSMP-Plus Coverage 39
Figure 4 - Southern CA (2009) Counties / Cities With SUSMP-Plus Coverage 40
Figure 5 - Schematic of the Lane Relationship 42
Figure 6 - Channel Changes Associated with Urbanization 43

I. BACKGROUND

A. History

In 1972, the Federal Water Pollution Control Act (also referred to as the Clean Water Act [CWA]) was amended to provide that the discharge of pollutants to waters of the United States from any point source is unlawful unless the discharge is in compliance with a National Pollutant Discharge Elimination System (NPDES) permit. The 1987 amendments to the CWA added Section 402(p), which establishes a framework for regulating municipal and industrial storm water discharges under the NPDES Program. On November 16, 1990, the U.S. Environmental Protection Agency (USEPA) published final regulations that established storm water permit application requirements for specified categories of industries. The regulations provide that discharges of storm water to waters of the United States from construction projects that encompass five or more acres of soil disturbance are effectively prohibited unless the discharge is in compliance with an NPDES Permit. Regulations (Phase II Rule) that became final on December 8, 1999 lowered the permitting threshold from five acres to one acre.

While federal regulations allow two permitting options for storm water discharges (Individual Permits and General Permits), the State Water Board has elected to adopt only one statewide General Permit at this time that will apply to most storm water discharges associated with construction activity.

On August 19, 1999, the State Water Board reissued the General Construction Storm Water Permit (Water Quality Order 99-08-DWQ). On December 8, 1999 the State Water Board amended Order 99-08-DWQ to apply to sites as small as one acre.

The General Permit accompanying this fact sheet regulates storm water runoff from construction sites. Regulating many storm water discharges under one permit will greatly reduce the administrative burden associated with permitting individual storm water discharges. To obtain coverage under this General Permit, dischargers shall electronically file the Permit Registration Documents (PRDs), which includes a Notice of Intent (NOI), Storm Water Pollution Prevention Plan (SWPPP), and other compliance related documents required by this General Permit and mail the appropriate permit fee to the State Water Board. It is expected that as the storm water program develops, the Regional Water Quality Control Boards (Regional Water Boards) may issue General Permits or Individual Permits containing more specific permit provisions. When this occurs, this General Permit will no longer regulate those dischargers.

B. Legal Challenges and Court Decisions

1. Early Court Decisions

Shortly after the passage of the CWA, the USEPA promulgated regulations exempting most storm water discharges from the NPDES permit requirements. (See 40 C.F.R. § 125.4 (1975); see also *Natural Resources Defense Council v. Costle* (D.C. Cir. 1977) 568 F.2d 1369, 1372 (*Costle*); *Defenders of Wildlife v. Browner* (9th Cir. 1999) 191 F.3d 1159, 1163 (*Defenders of Wildlife*).) When environmental groups challenged this exemption in federal court, the District of Columbia Court of Appeals invalidated the regulation, holding that the USEPA "does not have authority to exempt categories of point sources from the permit requirements of [CWA] § 402." (*Costle*, 568 F.2d at 1377.) The *Costle* court rejected the USEPA's argument that effluent-based storm sewer regulation was administratively infeasible because of the variable nature of storm water pollution and the number of affected storm sewers throughout the country. (*Id.* at 1377-82.) Although the court acknowledged the practical problems relating to storm sewer regulation, the court found the USEPA had the flexibility under the CWA to design regulations that would overcome these problems. (*Id.* at 1379-83.) In particular, the court pointed to general permits and permits based on requiring best management practices (BMPs).

During the next 15 years, the USEPA made numerous attempts to reconcile the statutory requirement of point source regulation with the practical problem of regulating possibly millions of diverse point source discharges of storm water. (See *Defenders of Wildlife*, 191 F.3d at 1163; see also Gallagher, Clean Water Act in Environmental Law Handbook (Sullivan, edit., 2003)
p. 300 (Environmental Law Handbook); Eisen, *Toward a Sustainable Urbanism: Lessons from Federal Regulation of Urban Storm Water Runoff* (1995) 48 Wash. U.J. Urb. & Contemp. L.1, 40-41 [Regulation of Urban Storm Water Runoff].)

In 1987, Congress amended the CWA to require NPDES permits for storm water discharges. (See CWA § 402(p), 33 U.S.C. § 1342(p); *Defenders of Wildlife,* 191 F.3d at 1163; *Natural Resources Defense Council v. USEPA* (9th Cir. 1992) 966 F.2d 1292, 1296.) In these amendments, enacted as part of the Water Quality Act of 1987, Congress distinguished between industrial and municipal storm water discharges. With respect to industrial storm water discharges, Congress provided that NPDES permits "shall meet all applicable provisions of this section and section 1311 [requiring the USEPA to establish effluent limitations under specific timetables]." (CWA § 402(p)(3)(A), 33 U.S.C. § 1342(p)(3)(A); see also *Defenders of Wildlife,* 191 F.3d at 1163-64.)

In 1990, USEPA adopted regulations specifying what activities were considered “industrial” and thus required discharges of storm water associated with those activities to obtain coverage under NPDES permits. (55 Fed. Reg. 47,990 (1990); 40 C.F.R. § 122.26(b)(14).) Construction activities, deemed a subset of the industrial activities category, must also be regulated by an NPDES permit. (40 C.F.R. § 122.26(b)(14)(x)). In 1999, USEPA issued regulations for “Phase II” of storm water regulation, which required most small construction sites (1-5 acres) to be regulated under the NPDES program. (64 Fed. Reg. 68,722; 40 C.F.R. § 122.26(b)(15)(i).)

2. Court Decisions on Public Participation

Two recent federal court opinions have vacated USEPA rules that denied meaningful public review of NPDES permit conditions. On January 14, 2003, the Ninth Circuit Court of Appeals held that certain aspects of USEPA’s Phase II regulations governing MS4s were invalid primarily because the general permit did not contain express requirements for public participation. (*Environmental Defense Center v. USEPA* (9th Cir. 2003) 344 F.3d 832.) Specifically, the court determined that applications for general permit coverage (including the Notice of Intent (NOI) and Storm Water Management Program (SWMP)) must be made available to the public, the applications must be reviewed and determined to meet the applicable standard by the permitting authority before coverage commences, and there must be a process to accommodate public hearings. (*Id.* at 852-54.) Similarly, on February 28, 2005, the Second Circuit Court of Appeals held that the USEPA's confined animal feeding operation (CAFO) rule violated the CWA because it allowed dischargers to write their own nutrient management plans without public review. (*Waterkeeper Alliance v. USEPA* (2d Cir. 2005) 399 F.3d 486.) Although neither decision involved the issuance of construction storm water permits, the State Water Board’s Office of Chief Counsel has recommended that the new General Permit address the courts’ rulings where feasible[1].

[1] In *Texas Independent Producers and Royalty Owners Assn. v. USEPA* (7th Cir. 2005) 410 F.3d 964, the Seventh Circuit Court of Appeals held that the USEPA’s construction general permit was not required to provide the public with the opportunity for a public hearing on the Notice of Intent or Storm Water Pollution Prevention Plan. The Seventh Circuit briefly discussed why it agreed with the Ninth Circuit’s dissent in *Environmental Defense Center*, but

The CWA and the USEPA's regulations provide states with the discretion to formulate permit terms, including specifying best management practices (BMPs), to achieve strict compliance with federal technology-based and water quality-based standards. (*Natural Resources Defense Council v. USEPA* (9th Cir. 1992) 966 F.2d 1292, 1308.) Accordingly, this General Permit has developed specific BMPs as well as numeric action levels (NALs) in order to achieve these minimum federal standards. In addition, the General Permit requires a SWPPP and REAP (another dynamic, site-specific plan) to be developed but has removed all language requiring the discharger to implement these plans – instead, the discharger is required to comply with specific requirements. By requiring the dischargers to implement these specific BMPs and NALs, this General Permit ensures that the dischargers do not "write their own permits." As a result this General Permit does not require each discharger's SWPPP and REAP to be reviewed and approved by the Regional Water Boards.

This General Permit also requires dischargers to electronically file all permit-related compliance documents. These documents include, but are not limited to, NOIs, SWPPPs, annual reports, Notice of Terminations (NOTs), and numeric action level (NAL) exceedance reports. Electronically submitted compliance information is immediately available to the public, as well as the Regional Water Quality Control Board (Regional Water Board) offices, via the Internet. In addition, this General Permit enables public review and hearings on permit applications when appropriate. Under this General Permit, the public clearly has a meaningful opportunity to participate in the permitting process.

---

generally did not discuss the substantive holdings in *Environmental Defense Center* and *Waterkeeper Alliance*, because neither court addressed the initial question of whether the plaintiffs had standing to challenge the permits at issue. However, notwithstanding the Seventh Circuit's decision, it is not binding or controlling on the State Water Board because California is located within the Ninth Circuit.

C. Blue Ribbon Panel of Experts and Feasibility of Numeric Effluent Limitations

In 2005 and 2006, the State Water Board convened an expert panel (panel) to address the feasibility of numeric effluent limitations (NELs) in California's storm water permits. Specifically, the panel was asked to address:

"Is it technically feasible to establish numeric effluent limitations, or some other quantifiable limit, for inclusion in storm water permits? How would such limitations or criteria be established, and what information and data would be required?"

"The answers should address industrial general permits, construction general permits, and area-wide municipal permits. The answers should also address both technology-based limitations or criteria and water quality-based limitations or criteria. In evaluating establishment of any objective criteria, the panel should address all of the following:

The ability of the State Water Board to establish appropriate objective limitations or criteria;

How compliance determinations would be made;

The ability of dischargers and inspectors to monitor for compliance; and

The technical and financial ability of dischargers to comply with the limitations or criteria."

Through a series of public participation processes (State Water Board meetings, State Water Board workshops, and the solicitation of written comments), a number of water quality, public process and overall program effectiveness problems were identified. Some of these problems are addressed through this General Permit.

D. Summary of Panel Findings on Construction Activities

The panel's final report can be downloaded and viewed through links at www.waterboards.ca.gov or by clicking here[2].

The panel made the following observations:

"Limited field studies indicate that traditional erosion and sediment controls are highly variable in performance, resulting in highly variable turbidity levels in the site discharge."

"Site-to-site variability in runoff turbidity from undeveloped sites can also be quite large in many areas of California, particularly in more arid regions with less natural vegetative cover and steep slopes."

---

[2] http://www.waterboards.ca.gov/stormwtr/docs/numeric/swpanel_final_report.pdf

"Active treatment technologies involving the use of polymers with relatively large storage systems now exist that can provide much more consistent and very low discharge turbidity. However, these technologies have as yet only been applied to larger construction sites, generally five acres or greater. Furthermore, toxicity has been observed at some locations, although at the vast majority of sites, toxicity has not occurred. There is also the potential for an accidental large release of such chemicals with their use."

"To date most of the construction permits have focused on TSS and turbidity, but have not addressed other, potentially significant pollutants such as phosphorus and an assortment of chemicals used at construction sites."

"Currently, there is no required training or certification program for contractors, preparers of soil erosion and sediment control Storm Water Pollution Prevention Plans, or field inspectors."

"The quality of storm water discharges from construction sites that effectively employ BMPs likely varies due to site conditions such as climate, soil, and topography."

"The States of Oregon and Washington have recently adopted similar concepts to the Action Levels described earlier."

In addition, the panel made the following conclusions:

"It is the consensus of the Panel that active treatment technologies make Numeric Limits technically feasible for pollutants commonly associated with storm water discharges from construction sites (e.g. TSS and turbidity) for larger construction sites. Technical practicalities and cost-effectiveness may make these technologies less feasible for smaller sites, including small drainages within a larger site, as these technologies have seen limited use at small construction sites. If chemical addition is not permitted, then Numeric Limits are not likely feasible."

"The Board should consider Numeric Limits or Action Levels for other pollutants of relevance to construction sites, but in particular pH. It is of particular concern where fresh concrete or wash water from cement mixers/equipment is exposed to storm water."

"The Board should consider the phased implementation of Numeric Limits and Action Levels, commensurate with the capacity of the dischargers and support industry to respond."

E. How the Panel's Findings are Used in this General Permit

The State Water Board carefully considered the findings of the panel and related public comments. The State Water Board also reviewed and considered the comments regarding statewide storm water policy and the reissuance of the Industrial General Permit. From the input received the State Water Board identified some permit and program performance gaps that are addressed in this General Permit. The Summary of Significant Changes (below) in this General Permit are a direct result of this process.

F. Summary of Significant Changes in This General Permit

The State Water Board has significant changes to Order 99-08-DWQ. This General Permit differs from Order 99-08-DWQ in the following significant ways:

Rainfall Erosivity Waiver: this General Permit includes the option allowing a small construction site (>1 and <5 acres) to self-certify if the rainfall erosivity value (R value) for their site's given location and time frame compute to be less than or equal to 5.

Technology-Based Numeric Action Levels: this General Permit includes NALs for pH and turbidity.

Risk-Based Permitting Approach: this General Permit establishes three levels of risk possible for a construction site. Risk is calculated in two parts: 1) Project Sediment Risk, and 2) Receiving Water Risk.

Minimum Requirements Specified: this General Permit imposes more minimum BMPs and requirements that were previously only required as elements of the SWPPP or were suggested by guidance.

Project Site Soil Characteristics Monitoring and Reporting: this General Permit provides the option for dischargers to monitor and report the soil characteristics at their project location. The primary purpose of this requirement is to provide better risk determination and eventually better program evaluation.

Effluent Monitoring and Reporting: this General Permit requires effluent monitoring and reporting for pH and turbidity in storm water discharges. The purpose of this monitoring is to evaluate whether NALs and NELs for Active Treatment Systems included in this General Permit are exceeded.

Receiving Water Monitoring and Reporting: this General Permit requires some Risk Level 3 and LUP Type 3 dischargers to monitor receiving waters and conduct bioassessments.

Post-Construction Storm Water Performance Standards: this General Permit specifies runoff reduction requirements for all sites not covered by a Phase I or Phase II MS4 NPDES permit, to avoid, minimize and/or mitigate post-construction storm water runoff impacts.

Rain Event Action Plan: this General Permit requires certain sites to develop and implement a Rain Event Action Plan (REAP) that must be designed to protect all exposed portions of the site within 48 hours prior to any likely precipitation event.

Annual Reporting: this General Permit requires all projects that are enrolled for more than one continuous three-month period to submit information and annually certify that their site is in compliance with these requirements. The primary purpose of this requirement is to provide information needed for overall program evaluation and pubic information.

Certification/Training Requirements for Key Project Personnel: this General Permit requires that key personnel (e.g., SWPPP preparers, inspectors, etc.) have specific training or certifications to ensure their level of knowledge and skills are adequate to ensure their ability to design and evaluate project specifications that will comply with General Permit requirements.

Linear Underground/Overhead Projects: this General Permit includes requirements for all Linear Underground/Overhead Projects (LUPs).

II. RATIONALE

A. General Permit Approach

A general permit for construction activities is an appropriate permitting approach for the following reasons:

1. A general permit is an efficient method to establish the essential regulatory requirements for a broad range of construction activities under differing site conditions;

2. A general permit is the most efficient method to handle the large number of construction storm water permit applications;

3. The application process for coverage under a general permit is far less onerous than that for individual permit and hence more cost effective;

4. A general permit is consistent with USEPA's four-tier permitting strategy, the purpose of which is to use the flexibility provided by the CWA in designing a workable and efficient permitting system; and

5. A general permit is designed to provide coverage for a group of related facilities or operations of a specific industry type or group of industries. It is appropriate when the discharge characteristics are sufficiently similar, and a standard set of permit requirements can effectively provide environmental protection and comply with water quality standards for discharges. In most cases, the general permit will provide sufficient and appropriate management requirements to protect the quality of receiving waters from discharges of storm water from construction sites.

There may be instances where a general permit is not appropriate for a specific construction project. A Regional Water Board may require any discharger otherwise covered under the General Permit to apply for and obtain an Individual Permit or apply for coverage under a more specific General Permit. The Regional Water Board must determine that this General Permit does not provide adequate assurance that water quality will be protected, or that there is a site-specific reason why an individual permit should be required.

B. Construction Activities Covered

1. **Construction activity subject to this General Permit:**

Any construction or demolition activity, including, but not limited to, clearing, grading, grubbing, or excavation, or any other activity that results in a land disturbance of equal to or greater than one acre.

Construction activity that results in land surface disturbances of less than one acre if the construction activity is part of a larger common plan of development or sale of one or more acres of disturbed land surface.

Construction activity related to residential, commercial, or industrial development on lands currently used for agriculture including, but not limited to, the construction of buildings related to agriculture that are considered industrial pursuant to USEPA regulations, such as dairy barns or food processing facilities.

Construction activity associated with LUPs including, but not limited to, those activities necessary for the installation of underground and overhead linear facilities (e.g., conduits, substructures, pipelines, towers, poles, cables, wires, connectors, switching, regulating and transforming equipment and associated ancillary facilities) and include, but are not limited to, underground utility mark-out, potholing, concrete

and asphalt cutting and removal, trenching, excavation, boring and drilling, access road and pole/tower pad and cable/wire pull station, substation construction, substructure installation, construction of tower footings and/or foundations, pole and tower installations, pipeline installations, welding, concrete and/or pavement repair or replacement, and stockpile/borrow locations.

Discharges of sediment from construction activities associated with oil and gas exploration, production, processing, or treatment operations or transmission facilities.[3]

Storm water discharges from dredge spoil placement that occur outside of U.S. Army Corps of Engineers jurisdiction[4] (upland sites) and that disturb one or more acres of land surface from construction activity are covered by this General Permit. Construction projects that intend to disturb one or more acres of land within the jurisdictional boundaries of a CWA § 404 permit should contact the appropriate Regional Water Board to determine whether this permit applies to the project.

2. Linear Underground/Overhead Projects (LUPs) subject to this General Permit:

Underground/overhead facilities typically constructed as LUPs include, but are not limited to, any conveyance, pipe, or pipeline for the transportation of any gaseous, liquid (including water, wastewater for domestic municipal services), liquescent, or slurry substance; any cable line or wire for the transmission of electrical energy; any cable line or wire for communications (e.g., telephone, telegraph, radio or television messages); and associated ancillary facilities. Construction activities associated with LUPs include, but are not limited to, those activities necessary for the installation of underground and overhead linear facilities (e.g., conduits, substructures, pipelines, towers, poles, cables, wires, connectors, switching, regulating and transforming equipment and associated ancillary facilities) and include, but are not limited to, underground utility mark-out, potholing, concrete and asphalt cutting and removal, trenching, excavation, boring and drilling, access road and pole/tower pad and cable/wire pull station, substation construction, substructure installation, construction of tower footings and/or foundations, pole and tower installations, pipeline installations, welding, concrete and/or pavement repair or replacement, and stockpile/borrow locations.

Water Quality Order 2003-0007-DWQ regulated construction activities associated with small LUPs that resulted in land disturbances greater than one acre, but less than five acres. These projects were considered non-traditional construction projects. Attachment A of this Order now regulates all construction activities from LUPs resulting in land disturbances greater than one acre.

3. Common Plan of Development or Sale

USEPA regulations include the term “common plan of development or sale” to ensure that acreage within a common project does not artificially escape the permit requirements because construction activities are phased, split among smaller parcels, or completed by different owners/developers. In the absence of an

---

[3] Pursuant to the Ninth Circuit Court of Appeals’ decision in *NRDC v. EPA* (9th Cir. 2008) 526 F.3d 591, and subsequent denial of the USEPA’s petition for reconsideration in November 2008, oil and gas construction activities discharging storm water contaminated only with sediment are no longer exempt from the NPDES program.

[4] A construction site that includes a dredge and/or fill discharge to any water of the United States (e.g., wetland, channel, pond, or marine water) requires a CWA Section 404 permit from the U.S. Army Corps of Engineers and a CWA Section 401 Water Quality Certification from the Regional Water Board or State Water Board.

exact definition of “common plan of development or sale,” the State Water Board is required to exercise its regulatory discretion in providing a common sense interpretation of the term as it applies to construction projects and permit coverage. An overbroad interpretation of the term would render meaningless the clear “one acre” federal permitting threshold and would potentially trigger permitting of almost any construction activity that occurs within an area that had previously received area-wide utility or road improvements.

Construction projects generally receive grading and/or building permits (Local Permits) from local authorities prior to initiating construction activity. These Local Permits spell out the scope of the project, the parcels involved, the type of construction approved, etc. Referring to the Local Permit helps define “common plan of development or sale.” In cases such as tract home development, a Local Permit will include all phases of the construction project including rough grading, utility and road installation, and vertical construction. All construction activities approved in the Local Permit are part of the common plan and must remain under the General Permit until construction is completed. For custom home construction, Local Permits typically only approve vertical construction as the rough grading, utilities, and road improvements were already independently completed under the a previous Local Permit. In the case of a custom home site, the homeowner must submit plans and obtain a distinct and separate Local Permit from the local authority in order to proceed. It is not the intent of the State Water Board to require permitting for an individual homeowner building a custom home on a private lot of less than one acre if it is subject to a separate Local Permit. Similarly, the installation of a swimming pool, deck, or landscaping that disturbs less than one acre that was not part of any previous Local Permit are not required to be permitted.

The following are several examples of construction activity of less than one acre that would require permit coverage:

a. A landowner receives a building permit(s) to build tract homes on a 100-acre site split into 200 one-third acre parcels, (the remaining acreage consists of streets and parkways) which are sold to individual homeowners as they are completed. The landowner completes and sells all the parcels except for two. Although the remaining two parcels combined are less than one acre, the landowner must continue permit coverage for the two parcels.

b. One of the parcels discussed above is sold to another owner who intends to complete the construction as already approved in the Local Permit. The new landowner must file Permit Registration Documents (PRDs) to complete the construction even if the new landowner is required to obtain a separate Local Permit.

c. Landowner in (1) above purchases 50 additional one half-acre parcels adjacent to the original 200-acre project. The landowner seeks a Local Permit (or amendment to existing Local permit) to build on 20 parcels while leaving the remaining 30 parcels for future development. The landowner must amend PRDs to include the 20 parcels 14 days prior to commencement of construction activity on those parcels.

C. Construction Activities Not Covered

1. Traditional Construction Projects Not Covered

This General Permit does not apply to the following construction activity:

a. Routine maintenance to maintain original line and grade, hydraulic capacity, or original purpose of the facility.

b. Disturbances to land surfaces solely related to agricultural operations such as disking, harrowing, terracing and leveling, and soil preparation.

c. Discharges of storm water from areas on tribal lands; construction on tribal lands is regulated by a federal permit.

d. Discharges of storm water within the Lake Tahoe Hydrologic Unit. The Lahontan Regional Water Board has adopted its own permit to regulate storm water discharges from construction activity in the Lake Tahoe Hydrologic Unit (Regional Water Board 6SLT). Owners of construction projects in this watershed must apply for the Lahontan Regional Water Board permit rather than the statewide Construction General Permit. Construction projects within the Lahontan region must also comply with the Lahontan Region Project Guideline for Erosion Control (R6T-2005-0007 Section), which can be found at **http://www.waterboards.ca.gov/lahontan/Adopted_Orders/2005/r6t_2005_0007.pdf**

e. Construction activity that disturbs less than one acre of land surface, unless part of a larger common plan of development or the sale of one or more acres of disturbed land surface.

f. Construction activity covered by an individual NPDES Permit for storm water discharges.

g. Landfill construction activity that is subject to the Industrial General Permit.

h. Construction activity that discharges to Combined Sewer Systems.

i. Conveyances that discharge storm water runoff combined with municipal sewage.

j. Discharges of storm water identified in CWA § 402(*l*)(2), 33 U.S.C. § 1342(*l*)(2).

2. **Linear Projects Not Covered**

a. LUP construction activity does not include linear routine maintenance projects. Routine maintenance projects are projects associated with operations and maintenance activities that are conducted on existing lines and facilities and within existing right-of-way, easements, franchise agreements, or other legally binding agreements of the discharger. Routine maintenance projects include, but are not limited to projects that are conducted to:

i. Maintain the original purpose of the facility or hydraulic capacity.

ii. Update existing lines[5] and facilities to comply with applicable codes, standards, and regulations regardless if such projects result in increased capacity.

iii. Repairing leaks.

[5]Update existing lines includes replacing existing lines with new materials or pipes.

Routine maintenance does not include construction of new[6] lines or facilities resulting from compliance with applicable codes, standards, and regulations.

Routine maintenance projects do not include those areas of maintenance projects that are outside of an existing right-of-way, franchise, easements, or agreements. When a project must secure new areas, those areas may be subject to this General Permit based on the area of disturbed land outside the original right-of-way, easement, or agreement.

b. LUP construction activity does not include field activities associated with the planning and design of a project (e.g., activities associated with route selection).

c. Tie-ins conducted immediately adjacent to "energized" or "pressurized" facilities by the discharger are not considered construction activities where all other LUP construction activities associated with the tie-in are covered by an NOI and SWPPP of a third party or municipal agency.

3. **EPA's Small Construction Rainfall Erosivity Waiver**

EPA's Storm Water Phase II Final Rule provides the option for a Small Construction Rainfall Erosivity Waiver. This waiver applies to small construction sites between 1 and 5 acres, and allows permitting authorities to waive those sites that do not have adverse water quality impacts.

Dischargers eligible for this waiver are exempt from Construction General Permit Coverage. In order to obtain the waiver, the discharger must certify to the State Water Board that small construction activity will occur only when the rainfall erosivity factor is less than 5 ("R" in the Revised Universal Soil Loss Equation). The period of construction activity begins at initial earth disturbance and ends with final stabilization. Where vegetation will be used for final stabilization, the date of installation of a practice that provides interim non-vegetative stabilization can be used for the end of the construction period. The operator must agree (as a condition waiver eligibility) to periodically inspect and properly maintain the area until the criteria for final stabilization as defined in the General Permit have been met. If use of this interim stabilization eligibility condition was relied on to qualify for the waiver, signature on the waiver with a certification statement constitutes acceptance of and commitment to complete the final stabilization process. The discharger must submit a waiver certification to the State Board prior to commencing construction activities.

USEPA funded a cooperative agreement with Texas A&M University to develop an online rainfall erosivity calculator. Dischargers can access the calculator from EPA's website at: www.epa.gov/npdes/stormwater/cgp. Use of the calculator allows the discharger to determine potential eligibility for the rainfall erosivity waiver. It may also be useful in determining the time periods during which construction activity could be waived from permit coverage.

[6]New lines are those that are not associated with existing facilities and are not part of a project to update or replace existing lines.

D. Obtaining and Terminating Permit Coverage

The appropriate Legally Responsible Person (LRP) must obtain coverage under this General Permit. To obtain coverage, the LRP or the LRP's Approved Signatory must file Permit Registration Documents (PRDs) prior to the commencement of construction activity. Failure to obtain coverage under this General Permit for storm water discharges to waters of the United States is a violation of the CWA and the California Water Code.

To obtain coverage under this General Permit, LRPs must electronically file the PRDs, which include a Notice of Intent (NOI), Storm Water Pollution Prevention Plan (SWPPP), and other documents required by this General Permit, and mail the appropriate permit fee to the State Water Board. It is expected that as the storm water program develops, the Regional Water Boards may issue General Permits or Individual Permits that contain more specific permit provisions. When this occurs, this General Permit will no longer regulate those dischargers that obtain coverage under Individual Permits.

Any information provided to the Regional Water Board shall comply with the Homeland Security Act and any other federal law that concerns security in the United States; any information that does not comply should not be submitted.

The application requirements of the General Permit establish a mechanism to clearly identify the responsible parties, locations, and scope of operations of dischargers covered by the General Permit and to document the discharger's knowledge of the General Permit's requirements.

This General Permit provides a grandfathering exception to existing dischargers subject to Water Quality Order No. 99-08-DWQ. Construction projects covered under Water Quality Order No. 99-08-DWQ shall obtain permit coverage at Risk Level 1. LUP projects covered under Water Quality Order No. 2003-0007-DWQ shall obtain permit coverage at LUP Type 1. The Regional Water Boards have the authority to require Risk Determination to be performed on projects currently covered under Water Quality Order No. 99-08-DWQ and 2003-0007-DWQ where they deem necessary.

LRPs must file a Notice of Termination (NOT) with the Regional Water Board when construction is complete and final stabilization has been reached or ownership has been transferred. The discharger must certify that all State and local requirements have been met in accordance with this General Permit. In order for construction to be found complete, the discharger must install post-construction storm water management measures and establish a long-term maintenance plan. This requirement is intended to ensure that the post-construction conditions at the project site do not cause or contribute to direct or indirect water quality impacts (i.e., pollution and/or hydromodification) upstream and downstream. Specifically, the discharger must demonstrate compliance with the post-construction standards set forth in this General Permit (Section XIII). The discharger is responsible for all compliance issues including all annual fees until the NOT has been filed and approved by the local Regional Water Board.

E. Discharge Prohibitions

This General Permit authorizes the discharge of storm water to surface waters from construction activities that result in the disturbance of one or more acres of land, provided that the discharger satisfies all permit conditions set forth in the Order. This General Permit prohibits the discharge of pollutants other than storm water and non-storm water discharges authorized by this General Permit or another NPDES permit. This General Permit also prohibits all discharges which contain a hazardous substance in excess of reportable quantities established in 40 C.F.R. §§ 117.3 and 302.4, unless a separate NPDES Permit has been issued to regulate those discharges. In addition, this General Permit incorporates discharge prohibitions contained in water quality control plans, as implemented by the nine Regional Water Boards. Discharges to Areas of Special Biological Significance (ASBS) are prohibited unless covered by an exception that the State Water Board has approved.

Non-storm water discharges include a wide variety of sources, including improper dumping, spills, or leakage from storage tanks or transfer areas. Non-storm water discharges may contribute significant pollutant loads to receiving waters. Measures to control spills, leakage, and dumping, and to prevent illicit connections during construction must be addressed through structural as well as non-structural BMPs. The State Water Board recognizes, however, that certain non-storm water discharges may be necessary for the completion of construction projects. Authorized non-storm water discharges may include those from de-chlorinated potable water sources such as: fire hydrant flushing, irrigation of vegetative erosion control measures, pipe flushing and testing, water to control dust, uncontaminated ground water dewatering, and other discharges not subject to a separate general NPDES permit adopted by a region. Therefore this General Permit authorizes such discharges provided they meet the following conditions.

These authorized non-storm water discharges must:

1. be infeasible to eliminate;
2. comply with BMPs as described in the SWPPP;
3. filter or treat, using appropriate technology, all dewatering discharges from sedimentation basins;
4. meet the NALs for pH and turbidity; and
5. not cause or contribute to a violation of water quality standards.

Additionally, authorized non-storm water discharges must not be used to clean up failed or inadequate construction or post-construction BMPs designed to keep materials onsite. Authorized non-storm water dewatering discharges may require a permit because some Regional Water Boards have adopted General Permits for dewatering discharges.

This General Permit prohibits the discharge of storm water that causes or threatens to cause pollution, contamination, or nuisance.

F. Effluent Standards for All Types of Discharges

1. Technology-Based Effluent Limitations

Permits for storm water discharges associated with construction activity must meet all applicable provisions of Sections 301 and 402 of the CWA. These provisions require controls of pollutant discharges that utilize best available technology economically achievable (BAT) for toxic pollutants and non conventional pollutants and best conventional pollutant control technology (BCT) for conventional pollutants. Additionally, these provisions require controls of pollutant discharges to reduce pollutants and any more stringent controls necessary to meet water quality standards. The USEPA has already established such limitations, known as effluent limitation guidelines (ELGs), for some industrial categories. This is not the case with construction discharges. In instances where there are no ELGs the permit writer is to use best professional judgment (BPJ) to establish requirements that the discharger must meet using BAT/BCT technology. This General Permit contains only narrative effluent limitations and does not contain numeric effluent limitations, except for Active Treatment Systems (ATS).

Order No. 2009-0009-DWQ, as originally adopted by the State Water Board on September 2, 2009, contained numeric effluent limitations for pH (within the range of 6.0 and 9.0 pH units) and turbidity (500 NTU) that applied only to Risk Level 3 and LUP Type 3 construction sites. The State Water Board adopted the numeric effluent limitations as technology-based effluent limitations based upon its best professional judgment. The California Building Industry Association, the Building Industry Legal Defense

Foundation, and the California Business Properties Association (petitioners) challenged Order No. 2009-0009-DWQ in *California Building Industry Association et al. v. State Water Resources Control Board*. On December 27, 2011, the Superior Court issued a judgment and writ of mandamus. The Superior Court ruled in favor of the State Water Board on almost all of the issues the petitioners raised, but the Superior Court invalidated the numeric effluent limitations for pH and turbidity for Risk Level 3 and LUP Type 3 sites because it determined that the State Water Board did not have sufficient BMP performance data to support those numeric effluent limitations. Therefore, the Superior Court concluded that the State Water Board did not comply with the federal regulations that apply to the use of best professional judgment. In invalidating the numeric effluent limitations, the Superior Court also suspended two ancillary requirements (a compliance storm event provision and receiving water monitoring at Risk Level 3 and LUP Type 3 sites that violated the numeric effluent limitations) that related solely to the invalidated numeric effluent limitations.

As a result of the Superior Court's writ of mandamus, this Order no longer contains numeric effluent limitations for pH and turbidity, except for ATS. In addition, as a result of the Superior Court's writ of mandamus, the receiving water monitoring requirements for Risk Level 3 and LUP Type 3 sites were suspended until the State Water Board amended this Order to restore the receiving water monitoring requirements. As amended, this Order now requires Risk Level 3 and LUP Type 3 Dischargers with direct discharges to surface waters to conduct receiving water monitoring whenever their effluent exceeds specified receiving water monitoring triggers. The receiving water monitoring triggers were established at the same levels as the previous numeric effluent limitations (effluent pH outside the range of 6.0 and 9.0 pH units or turbidity exceeding 500 NTU). In restoring the receiving water monitoring requirements, the State Water Board determined that it was appropriate to require receiving water monitoring for these types of sites with direct discharges to surface waters that exceeded the receiving water monitoring triggers under any storm event scenarios, because these sites represent the highest threat to receiving water quality. An exceedance of a receiving water monitoring trigger does not constitute a violation of this General Permit. These receiving water monitoring requirements take effect on the effective date of the amendment to this Order.

BAT/BCT technologies not only include passive systems such as conventional runoff and sediment control, but also treatment systems such as coagulation/flocculation using sand filtration, when appropriate. Such technologies allow for effective treatment of soil particles less 0.02 mm (medium silt) in diameter. The discharger must install structural controls, as necessary, such as erosion and sediment controls that meet BAT and BCT to achieve compliance with water quality standards. The narrative effluent limitations constitute compliance with the requirements of the CWA.

Because the permit is an NPDES permit, there is no legal requirement to address the factors set forth in Water Code sections 13241 and 13263, unless the permit is more stringent than what federal law requires. (See *City of Burbank v. State Water Resources Control Bd.* (2005) 35 Cal.4th 613, 618, 627.) None of the requirements in this permit are more stringent than the minimum federal requirements, which include technology-based requirements achieving BAT/BCT and strict compliance with water quality standards. The inclusion of numeric effluent limitations (NELs) in the permit for Active Treatment Systems does not cause the permit to be more stringent than current federal law. NELs and best management practices are simply two different methods of achieving the same federal requirement: strict compliance with state water quality standards. Federal law authorizes both narrative and numeric effluent limitations to meet state water quality standards. The use of NELs to achieve compliance with water quality standards is not a more stringent requirement than the use of BMPs. (State Water Board Order No. WQ 2006-0012 (*Boeing*).) Accordingly, the State Water Board does not need to take into account the factors in Water Code sections 13241 and 13263.

The State Water Board has concluded that the establishment of BAT/BCT will not create or aggravate other environmental problems through increases in air pollution, solid waste generation, or energy consumption. While there may be a slight increase in non-water quality impacts due to the implementation of additional monitoring or the construction of additional BMPs, these impacts will be negligible in comparison with the construction activities taking place on site and would be justified by the water quality benefits associated with compliance.

pH Receiving Water Monitoring Trigger

Given the potential contaminants, the minimum standard method for control of pH in runoff requires the use of preventive measures such as avoiding concrete pours during rainy weather, covering concrete and directing flow away from fresh concrete if a pour occurs during rain, covering scrap drywall and stucco materials when stored outside and potentially exposed to rain, and other housekeeping measures. If necessary, pH-impaired storm water from construction sites can be treated in a filter or settling pond or basin, with additional natural or chemical treatment required to meet pH limits set forth in this permit. The basin or pond acts as a collection point and holds storm water for a sufficient period for the contaminants to be settled out, either naturally or artificially, and allows any additional treatment to take place. The State Water Board considers these techniques to be equivalent to BCT. In determining the pH concentration trigger for discharges, the State Water Board used BPJ to set these limitations.

The chosen trigger was established by calculating three standard deviations above and below the mean pH of runoff from highway construction sites[7] in California. Proper implementation of BMPs should result in discharges that are within the range of 6.0 to 9.0 pH Units.

Turbidity Receiving Water Monitoring Trigger

The Turbidity receiving water monitoring trigger of 500 NTU is a technology-based trigger and was developed using three different analyses aimed at finding the appropriate threshold to set the technology-based limit to ensure environmental protection, effluent quality and cost-effectiveness. The analyses fell into three, main types: (1) an ecoregion-specific dataset developed by Simon et. al. (2004) [8]; (2) Statewide Regional Water Quality Control Board enforcement data; and (3) published, peer-reviewed studies and reports on in-situ performance of best management practices in terms of erosion and sediment control on active construction sites.

A 1:3 relationship between turbidity (expressed as NTU) and suspended sediment concentration (expressed as mg/L) is assumed based on a review of suspended sediment and turbidity data from three gages used in the USGS National Water Quality Assessment Program:

USGS 11074000 SANTA ANA R BL PRADO DAM CA
USGS 11447650 SACRAMENTO R A FREEPORT CA
USGS 11303500 SAN JOAQUIN R NR VERNALIS CA

The receiving water monitoring trigger represents staff determination that the trigger value is the most practicable based on available data. The turbidity receiving water monitoring trigger represents a bridge between the narrative effluent limitations and receiving water limitations. To support this receiving water monitoring trigger, State Water Board staff analyzed construction site discharge information (monitoring data, estimates) and receiving water monitoring information.

Since the turbidity receiving water monitoring trigger represents an appropriate threshold level expected at a site, compliance with this value does not necessarily represent compliance with either the narrative effluent limitations (as enforced through the BAT/BCT standard) or the receiving water limitations. In the San Diego region, some inland surface waters have a receiving water objective for turbidity equal to 20 NTU. Obviously a discharge up to, but not exceeding, the turbidity receiving water monitoring trigger of

[7] Caltrans Construction Sites Runoff Characterization Study, 2002. Available at: http://www.dot.ca.gov/hq/env/stormwater/pdf/CTSW-RT-02-055.pdf.

500 NTU may still cause or contribute to the exceedance of the 20 NTU standard. Most of the waters of the State are protected by turbidity objectives based on background conditions.

Table 1 - Regional Water Board Basin Plans, Water Quality Objectives for Turbidity

REGIONAL WATER BOARD	WQ Objective	Background/Natural Turbidity	Maximum Increase
1	Based on background	All levels	20%
2	Based on background	> 50 NTU	10%
3	Based on background	0-50 JTU 50-100 JTU > 100 JTU	20% 10 NTU 10%
4	Based on background	0-50 NTU > 50 NTU	20% 10%
5	Based on background	0-5 NTU 5-50 NTU 50-100 NTU >100 NTU	1 NTU 20% 10 NTU 10%
6	Based on background	All levels	10%
7	Based on background	N/A	N/A
8	Based on background	0-50 NTU 50-100 NTU >100 NTU	20% 10 NTU 10%
9	Inland Surface Waters, 20 NTU All others, based on background	 0-50 NTU 50-100 NTU >100 NTU	 20% 10 NTU 10%

Table 2 shows the suspended sediment concentrations at the 1.5 year flow recurrence interval for the 12 ecoregions in California from Simon et. al (2004).

Table 2 - Results of Ecoregion Analysis

Ecoregion	Percent of California Land Area	Median Suspended Sediment Concentration (mg/L)
1	9.1	874
4	0.2	120
5	8.8	35.6
6	20.7	1530
7	7.7	122
8	3.0	47.4
9	9.4	284
13	5.2	143
14	21.7	5150
78	8.1	581
80	2.4	199
81	3.7	503
Area-weighted average		1633

If a 1:3 relationship between turbidity and suspended sediment is assumed, the median turbidity is 544 NTU.

The following table is composed of turbidity readings measured in NTUs from administrative civil liability (ACL) actions for construction sites from 2003 - 2009. This data was derived from the complete listing of construction-related ACLs for the six year period. All ACLs were reviewed and those that included turbidimeter readings at the point of storm water discharge were selected for this dataset.

Table 3 – ACL Sampling Data taken by Regional Water Board Staff

WDID#	Region	Discharger	Turbidity (NTU)
5S34C331884	5S	Bradshaw Interceptor Section 6B	1800
5S05C325110	5S	Bridalwood Subdivision	1670
5S48C336297	5S	Cheyenne at Browns Valley	1629
5R32C314271	5R	Grizzly Ranch Construction	1400
6A090406008	6T	El Dorado County Department of Transportation, Angora Creek	97.4
5S03C346861	5S	TML Development, LLC	1600
6A31C325917	6T	Northstar Village	See Subdata Set

Subdata Set - Turbidity for point of storm water runoff discharge at Northstar Village

Date	Turbidity (NTU)	Location
10/5/2006	900	Middle Martis Creek
11/2/2006	190	Middle Martis Creek
01/04/2007	36	West Fork, West Martis Creek
02/08/2007	180	Middle Martis Creek
02/09/2007	130	Middle Martis Creek
02/09/2007	290	Middle Martis Creek
02/09/2007	100	West Fork, West Martis Creek
02/10/2007	28	Middle Martis Creek
02/10/2007	23	Middle Martis Creek
02/10/2007	32	Middle Martis Creek
02/10/2007	12	Middle Martis Creek
02/10/2007	60	West Fork, West Martis Creek
02/10/2007	34	West Fork, West Martis Creek

A 95% confidence interval for mean turbidity in an ACL order was constructed. The data set used was a small sample size, so the 500 NTU (the value derived as the receiving water monitoring trigger for this General Permit) needed to be verified as a possible population mean. In this case, the population refers to a hypothetical population of turbidity measurements of which our sample of 20 represents. A t-distribution was assumed due to the small sample size:

Mean: 512.23 NTU
Standard Deviation: 686.85
Margin of Error: 321.45
Confidence Interval: 190.78 NTU (Low)
833.68 NTU (High)

Based on a constructed 95% confidence interval, an ACL order turbidity measurement will be between 190.78 – 833.68 NTU. 500 NTU falls within this range. Using the same data set, a small-sample hypothesis test was also performed to test if the ACL turbidity data set contains enough information to cast doubt on choosing a 500 NTU as a mean. 500 NTU was again chosen due to its proposed use as an acceptable value. The test was carried out using a 95% confidence interval. Results indicated that the ACL turbidity data set *does not* contain significant sample evidence to reject the claim of 500 NTU as an acceptable mean for the ACL turbidity population.

There are not many published, peer-reviewed studies and reports on in-situ performance of best management practices in terms of erosion and sediment control on active construction sites. The most often cited study is a report titled, "Improving the Cost Effectiveness of Highway Construction Site Erosion and Pollution Control" (Horner, Guedry, and Kortenhof 1990, http://www.wsdot.wa.gov/Research/Reports/200/200.1.htm). In a comment letter summarizing this report sent to the State Water Board, the primary author, Dr. Horner, states:

"The most effective erosion control product was wood fiber mulch applied at two different rates along with a bonding agent and grass seed in sufficient time before the tests to achieve germination. Plots treated in this way reduced influent turbidity by more than 97 percent and discharged effluent exhibiting mean and maximum turbidity values of 21 and 73 NTU, respectively. Some other mulch and blanket materials performed nearly as well. These tests demonstrated the control ability of widely available BMPs over a very broad range of erosion potential."

Other technologies studied in this report produced effluent quality at or near 100 NTU. It is the BPJ of the State Water Board staff that erosion control, while preferred, is not always an option on construction sites and that technology performance in a controlled study showing effluent quality directly leaving a BMP is always easier and cheaper to control than effluent being discharged from the project (edge of property, etc.). As a result, it is the BPJ of the State Water Board staff that it is not cost effective or feasible, at this time, for all risk level and type 3 sites in California to achieve effluent discharges with turbidity values that are less than 100 NTU.

To summarize, the analysis showed that: (1) results of the Simon et. al dataset reveals turbidity values in background receiving water in California's ecoregions range from 16 NTU to 1716 NTU (with a mean of 544 NTU); (2) based on a constructed 95% confidence interval, construction sites will be subject to administrative civil liability (ACL) when their turbidity measurement falls between 190.78 – 833.68 NTU; and (3) sites with highly controlled discharges employing and maintaining good erosion control practices can discharge effluent from the BMP with turbidity values less than 100 NTU. State Water Board staff has determined, using its BPJ, that it is most cost effective to set the receiving water monitoring trigger for turbidity at 500 NTU.

i. *Compliance Storm Event*

While this General Permit no longer contains "compliance storm event" exceptions from technology-based NELs, the "compliance storm event" exception from the ATS NELs remain in effect. See Section K of this Fact Sheet, and Attachment F of this General Permit for more information.

a. TMDLs and Waste Load Allocations

Dischargers located within the watershed of a CWA § 303(d) impaired water body, for which a TMDL for sediment has been adopted by the Regional Water Board or USEPA, must comply with the approved TMDL if it identifies "construction activity" or land disturbance as a source of sediment. If it does, the

TMDL should include a specific waste load allocation for this activity/source. The discharger, in this case, may be required by a separate Regional Water Board order to implement additional BMPs, conduct additional monitoring activities, and/or comply with an applicable waste load allocation and implementation schedule. If a specific waste load allocation has been established that would apply to a specific discharge, the Regional Water Board may adopt an order requiring specific implementation actions necessary to meet that allocation. In the instance where an approved TMDL has specified a general waste load allocation to construction storm water discharges, but no specific requirements for construction sites have been identified in the TMDL, dischargers must consult with the state TMDL authority[9] to confirm that adherence to a SWPPP that meets the requirements of the General Permit will be consistent with the approved TMDL.

2. Determining Compliance with Effluent Standards

a. Technology-Based Numeric Action Levels (NALs)

This General Permit contains technology-based NALs for pH and turbidity, and requirements for effluent monitoring at all Risk level 2 & 3, and LUP Type 2 & 3 sites. Numeric action levels are essentially numeric benchmark values for certain parameters that, if exceeded in effluent sampling, trigger the discharger to take actions. Exceedance of an NAL does not itself constitute a violation of the General Permit. If the discharger fails to take the corrective action required by the General Permit, though, that may consititute a violation.

The primary purpose of NALs is to assist dischargers in evaluating the effectiveness of their on-site measures. Construction sites need to employ many different systems that must work together to achieve compliance with the permit's requirements. The NALs chosen should indicate whether the systems are working as intended.

Another purpose of NALs is to provide information regarding construction activities and water quality impacts. This data will provide the State and Regional Water Boards and the rest of the storm water community with more information about levels and types of pollutants present in runoff and how effective the dischargers BMPs are at reducing pollutants in effluent. The State Water Board also hopes to learn more about the linkage between effluent and receiving water quality. In addition, these requirements will provide information on the mechanics needed to establish compliance monitoring programs at construction sites in future permit deliberations.

i. *pH*

The chosen limits were established by calculating one standard deviation above and below the mean pH of runoff from highway construction sites[10] in California. Proper implementation of BMPs should result in discharges that are within the range of 6.5 to 8.5 pH Units.

---

[9] http://www.waterboards.ca.gov/tmdl/tmdl.html.
[10] Caltrans Construction Sites Runoff Characterization Study, 2002. Available at: http://www.dot.ca.gov/hq/env/stormwater/pdf/CTSW-RT-02-055.pdf.

The Caltrans study included 33 highway construction sites throughout California over a period of four years, which included 120 storm events. All of these sites had BMPs in place that would be generally implemented at all types of construction sites in California.

ii. ***Turbidity***

BPJ was used to develop an NAL that can be used as a learning tool to help dischargers improve their site controls, and to provide meaningful information on the effectiveness of storm water controls. A statewide turbidity NAL has been set at 250 NTU.

G. Receiving Water Limitations

Construction-related activities that cause or contribute to an exceedance of water quality standards must be addressed. The dynamic nature of construction activity gives the discharger the ability to quickly identify and monitor the source of the exceedances. This is because when storm water mobilizes sediment, it provides visual cues as to where corrective actions should take place and how effective they are once implemented.

This General Permit requires that storm water discharges and authorized non-storm water discharges must not contain pollutants that cause or contribute to an exceedance of any applicable water quality objective or water quality standards. The monitoring requirements in this General Permit for sampling and analysis procedures will help determine whether BMPs installed and maintained are preventing pollutants in discharges from the construction site that may cause or contribute to an exceedance of water quality standards.

Water quality standards consist of designated beneficial uses of surface waters and the adoption of ambient criteria necessary to protect those uses. When adopted by the State Water Board or a Regional Water Board, the ambient criteria are termed "water quality objectives." If storm water runoff from construction sites contains pollutants, there is a risk that those pollutants could enter surface waters and cause or contribute to an exceedance of water quality standards. For that reason, dischargers should be aware of the applicable water quality standards in their receiving waters. (The best method to ensure compliance with receiving water limitations is to implement BMPs that prevent pollutants from contact with storm water or from leaving the construction site in runoff.)

In California, water quality standards are published in the Basin Plans adopted by each Regional Water Board, the California Toxics Rule (CTR), the National Toxics Rule (NTR), and the Ocean Plan.

Dischargers can determine the applicable water quality standards by contacting Regional Water Board staff or by consulting one of the following sources. The actual Basin Plans that contain the water quality standards can be viewed at the website of the appropriate Regional Water Board. (http://www.waterboards.ca.gov/regions.html), the State Water Board site for statewide plans (http://www.waterboards.ca.gov/plnspols/index.html), or the USEPA regulations for the NTR and CTR (40 C.F.R. §§ 131.36-38). Basin Plans and statewide plans are also available by mail from the appropriate Regional Water Board or the State Water Board. The USEPA regulations are available at http://www.epa.gov/. Additional information concerning water quality standards can be accessed through http://www.waterboards.ca.gov/stormwtr/gen_const.html.

H. Training Qualifications and Requirements

The Blue Ribbon Panel (BRP) made the following observation about the lack of industry-specific training requirements:

"Currently, there is no required training or certification program for contractors, preparers of soil erosion and sediment control Storm Water Pollution Prevention Plans, or field inspectors."

Order 99-08-DWQ required that all dischargers train their employees on how to comply with the permit, but it did not specificy a curriculum or certification program. This has resulted in inconsistent implementation by all affected parties - the dischargers, the local governments where the construction activity occurs, and the regulators required to enforce 99-08-DWQ. This General Permit requires Qualified SWPPP Developers and practitioners to obtain appropriate training, and makes this curriculum mandatory two years after adoption, to allow time for course completion. The State and Regional Water Board are working with many stakeholders to develop the curriculum and mechanisms needed to develop and deliver the courses.

To ensure that the preparation, implementation, and oversight of the SWPPP is sufficient for effective pollution prevention, the Qualified SWPPP Developer and Qualified SWPPP Practitioners responsible for creating, revising, overseeing, and implementing the SWPPP must attend a State Water Board-sponsored or approved Qualified SWPPP Developer and Qualified SWPPP Practitioner training course.

I. Sampling, Monitoring, Reporting and Record Keeping

1. Traditional Construction Monitoring Requirements

This General Permit requires visual monitoring at all sites, and effluent water quality at all Risk Level 2 & 3 sites. It requires receiving water monitoring at some Risk Level 3 sites. All sites are required to submit annual reports, which contain various types of information, depending on the site characteristics and events. A summary of the monitoring and reporting requirements is found in Table 4.

Table 4 - Required Monitoring Elements for Risk Levels

	Visual	Non-visible Pollutant	Effluent	Receiving Water
Risk Level 1	three types required for all Risk Levels: non-storm water, pre-rain and post-rain	As needed for all Risk Levels (see below)	where applicable	not required
Risk Level 2			pH, turbidity	not required
Risk Level 3			pH, turbidity	(if Receiving Water Monitoring Trigger exceeded) pH, turbidity and SSC. Bioassessment for sites 30 acres or larger.

a. Visual

All dischargers are required to conduct quarterly, non-storm water visual inspections. For these inspections, the discharger must visually observe each drainage area for the presence of (or indications of prior) unauthorized and authorized non-storm water discharges and their sources. For storm-related inspections, dischargers must visually observe storm water discharges at all discharge locations within two business days after a qualifying event. For this requirement, a qualifying rain event is one producing precipitation of ½ inch or more of discharge. Dischargers must conduct a post-storm event inspection to (1) identify whether BMPs were adequately designed, implemented, and effective, and (2) identify any additional BMPs necessary and revise the SWPPP accordingly. Dischargers must maintain on-site records of all visual observations, personnel performing the observations, observation dates, weather conditions, locations observed, and corrective actions taken in response to the observations.

b. Non-Visible Pollutant Monitoring

This General Permit requires that all dischargers develop a sampling and analysis strategy for monitoring pollutants that are not visually detectable in storm water. Monitoring for non-visible pollutants must be required at any construction site when the exposure of construction materials occurs and where a discharge can cause or contribute to an exceedance of a water quality objective.

Of significant concern for construction discharges are the pollutants found in materials used in large quantities at construction sites throughout California and exposed throughout the rainy season, such as cement, flyash, and other recycled materials or by-products of combustion. The water quality standards that apply to these materials will depend on their composition. Some of the more common storm water pollutants from construction activity are not CTR pollutants. Examples of non-visible pollutants include glyphosate (herbicides), diazinon and chlorpyrifos (pesticides), nutrients (fertilizers), and molybdenum (lubricants). The use of diazinon and chlorpyrifos is a common practice among landscaping professionals and may trigger sampling and analysis requirements if these materials come into contact with storm water. High pH values from cement and gypsum, high pH and SSC from wash waters, and chemical/fecal contamination from portable toilets, also are not CTR pollutants. Although some of these constituents do have numeric water quality objectives in individual Basin Plans, many do not and are subject only to narrative water quality standards (i.e. not causing toxicity). Dischargers are encouraged to discuss these issues with Regional Water Board staff and other storm water quality professionals.

The most effective way to avoid the sampling and analysis requirements, and to ensure permit compliance, is to avoid the exposure of construction materials to precipitation and storm water runoff. Materials that are not exposed do not have the potential to enter storm water runoff, and therefore receiving waters sampling is not required. Preventing contact between storm water and construction materials is one of the most important BMPs at any construction site.

Preventing or eliminating the exposure of pollutants at construction sites is not always possible. Some materials, such as soil amendments, are designed to be used in a manner that will result in exposure to storm water. In these cases, it is important to make sure that these materials are applied according to the manufacturer's instructions and at a time when they are unlikely to be washed away. Other construction materials can be exposed when storage, waste disposal or the application of the material is done in a manner not protective of water quality. For these situations, sampling is required unless there is capture and containment of all storm water that has been exposed. In cases where construction materials may be exposed to storm water, but the storm water is contained and is not allowed to run off the site, sampling will only be required when inspections show that the containment failed or is breached, resulting in potential exposure or discharge to receiving waters.

The discharger must develop a list of potential pollutants based on a review of potential sources, which will include construction materials soil amendments, soil treatments, and historic contamination at the site. The discharger must review existing environmental and real estate documentation to determine the potential for pollutants that could be present on the construction site as a result of past land use activities.

Good sources of information on previously existing pollution and past land uses include:

i. Environmental Assessments;

ii. Initial Studies;

iii. Phase 1 Assessments prepared for property transfers; and

iv. Environmental Impact Reports or Environmental Impact Statements prepared under the requirements of the National Environmental Policy Act or the California Environmental Quality Act.

In some instances, the results of soil chemical analyses may be available and can provide additional information on potential contamination.

The potential pollutant list must include all non-visible pollutants that are known or should be known to occur on the construction site including, but not limited to, materials that:

i. are being used in construction activities;

ii. are stored on the construction site;

iii. were spilled during construction operations and not cleaned up;

iv. were stored (or used) in a manner that created the potential for a release of the materials during past land use activities;

v. were spilled during previous land use activities and not cleaned up; or

vi. were applied to the soil as part of past land use activities.

C. Effluent Monitoring

Federal regulations[11] require effluent monitoring for discharges subject to NALs. Subsequently, all Risk Level 2 and 3 dischargers must perform sampling and analysis of effluent discharges to characterize discharges associated with construction activity from the entire area disturbed by the project. Dischargers must collect samples of stored or contained storm water that is discharged subsequent to a storm event producing precipitation of ½ inch or more at the time of discharge.

Table 5 - Storm Water Effluent Monitoring Requirements by Risk Level

	Frequency	Effluent Monitoring (Section E, below)
Risk Level 1	when applicable	non-visible pollutant parameters (if applicable)
Risk Level 2	Minimum of 3 samples per day during qualifying rain event characterizing discharges associated with construction activity from the entire project disturbed area.	pH, turbidity, and non-visible pollutant parameters (if applicable)
Risk Level 3	Minimum of 3 samples per day during qualifying rain event characterizing discharges associated with construction activity from the entire project disturbed area.	pH, turbidity, and non-visible pollutant parameters if applicable

Risk Level 1 dischargers must analyze samples for:

i. any parameters indicating the presence of pollutants identified in the pollutant source assessment required in Attachment C contained in the General Permit.

[11] 40 C.F.R. § 122.44.

Risk Level 2 dischargers must analyze samples for:

i. pH and turbidity;

ii. any parameters indicating the presence of pollutants identified in the pollutant source assessment required in Attachment D contained in the General Permit, and

iii. any additional parameters for which monitoring is required by the Regional Water Board.

Risk Level 3 dischargers must analyze samples for:

i. pH, turbidity;

ii. any parameters indicating the presence of pollutants identified in the pollutant source assessment required in Attachment E contained in the General Permit, and

iii. any additional parameters for which monitoring is required by the Regional Water Board.

2. Linear Monitoring and Sampling Requirements

Attachment A, establishes minimum monitoring and reporting requirements for all LUPs. It establishes different monitoring requirements depending on project complexity and risk to water quality. The monitoring requirements for Type 1 LUPs are less than Type 2 & 3 projects because Type 1 projects have a lower potential to impact water quality.

A discharger shall prepare a monitoring program prior to the start of construction and immediately implement the program at the start of construction for LUPs. The monitoring program must be implemented at the appropriate level to protect water quality at all times throughout the life of the project.

a. Type 1 LUP Monitoring Requirements

A discharger must conduct daily visual inspections of Type 1 LUPs during working hours while construction activities are occurring. Inspections are to be conducted by qualified personnel and can be conducted in conjunction with other daily activities. Inspections will be conducted to ensure the BMPs are adequate, maintained, and in place at the end of the construction day. The discharger will revise the SWPPP, as appropriate, based on the results of the daily inspections. Inspections can be discontinued in non-active construction areas where soil disturbing activities have been completed and final stabilization has been achieved (e.g., trench has been paved, substructures have been installed, and successful final vegetative cover or other stabilization criteria have been met).

A discharger shall implement the monitoring program for inspecting Type 1 LUPs. This program requires temporary and permanent stabilization BMPs after active construction is completed. Inspection activities will continue until adequate permanent stabilization has been established and will continue in areas where re-vegetation is chosen until minimum vegetative coverage has been established. Photographs shall be taken during site inspections and submitted to the State Water Board.

b. Type 2 & 3 LUP Monitoring Requirements

A discharger must conduct daily visual inspections of Type 2 & 3 LUPs during working hours while construction activities are occurring. Inspections are to be conducted by qualified personnel and can be in conjunction with other daily activities.

All dischargers of Type 2 & 3 LUPs are required to conduct inspections by qualified personnel of the construction site during normal working hours prior to all anticipated storm events and after actual storm events. During extended storm events, the discharger shall conduct inspections during normal working hours for each 24-hour period. Inspections can be discontinued in non-active construction areas where soil disturbing activities have been completed and final stabilization has been achieved (e.g., trench has been paved, substructures installed, and successful vegetative cover or other stabilization criteria have been met).

The goals of these inspections are (1) to identify areas contributing to a storm water discharge; (2) to evaluate whether measures to reduce pollutant loadings identified in the SWPPP are adequate and properly installed and functioning in accordance with the terms of the General Permit; and (3) to determine whether additional control practices or corrective maintenance activities are needed. Equipment, materials, and workers must be available for rapid response to failures and emergencies. All corrective maintenance to BMPs shall be performed as soon as possible, depending upon worker safety.

All dischargers shall develop and implement a monitoring program for inspecting Type 2 & 3 LUPs that require temporary and permanent stabilization BMPs after active construction is completed. Inspections will be conducted to ensure the BMPs are adequate and maintained. Inspection activities will continue until adequate permanent stabilization has been established and will continue in areas where revegetation is chosen until minimum vegetative coverage has been established.

A log of inspections conducted before, during, and after the storm events must be maintained in the SWPPP. The log will provide the date and time of the inspection and who conducted the inspection. Photographs must be taken during site inspections and submitted to the State Water Board.

C. Sampling Requirements for all LUP Project Types

LUPs are also subject to sampling and analysis requirements for visible pollutants (i.e., sedimentation/siltation, turbidity) and for non-visible pollutants.

Sampling for visible pollutants is required for Type 2 & 3 LUPs.

Non-visible pollutant monitoring is required for pollutants associated with construction sites and activities that (1) are not visually detectable in storm water discharges, and (2) are known or should be known to occur on the construction site, and (3) could cause or contribute to an exceedance of water quality objectives in the receiving waters. Sample collection for non-visible pollutants must only be required (1) during a storm event when pollutants associated with construction activities may be discharged with storm water runoff due to a spill, or in the event there was a breach, malfunction, failure, and/or leak of any BMP, and (2) when the discharger has failed to adequately clean the area of material and pollutants. Failure to implement appropriate BMPs will trigger the same sampling requirements as those required for a breach, malfunction and/or leak, or when the discharger has failed to implement appropriate BMPs prior to the next storm event.

Additional monitoring parameters may be required by the Regional Water Boards.

It is not anticipated that many LUPs will be required to collect samples for pollutants not visually detected in runoff due to the nature and character of the construction site and activities as previously described in this fact sheet. Most LUPs are constructed in urban areas with public access (e.g., existing roadways, road shoulders, parking areas, etc.). This raises a concern regarding the potential contribution of pollutants from vehicle use and/or from normal activities of the public (e.g., vehicle washing, landscape fertilization, pest spraying, etc.) in runoff from the project site. Since the dischargers are not the land owners of the project area and are not able to control the presence of these pollutants in the storm water that runs through their projects, it is not the intent of this General Permit to require dischargers to sample for these pollutants. This General Permit does not require the discharger to sample for these types of pollutants except where the discharger has brought materials onsite that contain these pollutants and when a condition (e.g., breach, failure, etc.) described above occurs.

3. Receiving Water Monitoring

In order to ensure that receiving water limitations are met, discharges subject to receiving water monitoring triggers (i.e., Risk Level 3 and LUP Type 3 sites) or numeric effluent limitations (i.e., Risk Level 3 and LUP Type 3 sites utilizing ATS with direct discharges into receiving waters) must also monitor the downstream receiving water(s) for turbidity, SSC, and pH (if applicable) when a receiving water monitoring trigger or NEL is exceeded.

a. Bioassessment Monitoring

This General Permit requires a bioassessment of receiving waters for dischargers of Risk Level 3 or LUP Type 3 construction projects equal to or larger than 30 acres with direct discharges into receiving waters. Benthic macroinvertebrate samples will be taken upstream and downstream of the site's discharge point in the receiving water. Bioassessments measure the quality of the stream by analyzing the aquatic life present. Higher levels of appropriate aquatic species tend to indicate a healthy stream; whereas low levels of organisms can indicate stream degradation. Active construction sites have the potential to discharge large amounts of sediment and pollutants into receiving waters. Requiring a bioassessment for large project sites, with the most potential to impact water quality, provides a snapshot of the health of the receiving water prior to initiation of construction activities. This snapshot can be used in comparison to the health of the receiving water after construction has commenced.

Each ecoregion (biologically and geographically related area) in the State has a specific yearly peak time where stream biota is in a stable and abundant state. This time of year is called an Index Period. The bioassessment requirements in this General Permit, requires benthic macroinvertebrate sampling within a sites index period. The State Water Board has developed a map designating index periods for the ecoregions in the State (see State Water Board Website).

This General Permit requires the bioassessment methods to be in accordance with the Surface Water Ambient Monitoring Program (SWAMP) in order to provide data consistency within the state as well as generate useable biological stream data.

Table 6 - Receiving Water Monitoring Requirements

	Receiving Water Monitoring Parameters
Risk Level 1 /LUP Type 1	not required
Risk Level 2 / LUP Type 2	not required
Risk Level 3 / LUP Type 3	If Receiving Water Monitoring Trigger exceeded: pH (if applicable), turbidity, and SSC. Bioassessment for sites 30 acres or larger.

4. Reporting Requirements

a. NAL Exceedance Report

All Risk Level 3 and LUP Type 3 dischargers must electronically submit all storm event sampling results to the State And Regional Boards, via the electronic data system, no later than 10 days after the conclusion of the storm event.

b. Annual Report

All dischargers must prepare and electronically submit an annual report no later than September 1 of each year using the Storm water Multi-Application Reporting and Tracking System (SMARTS). The

Annual Report must include a summary and evaluation of all sampling and analysis results, original laboratory reports, chain of custody forms, a summary of all corrective actions taken during the compliance year, and identification of any compliance activities or corrective actions that were not implemented.

5. Record Keeping

According to 40 C.F.R. Parts 122.21(p) and 122.41(j), the discharger is required to retain paper or electronic copies of all records required by this General Permit for a period of at least three years from the date generated or the date submitted to the State Water Board or Regional Water Boards. A discharger must retain records for a period beyond three years as directed by Regional Water Board.

J. Risk Determination

1. Traditional Projects

a. Overall Risk Determination

There are two major requirements related to site planning and risk determination in this General Permit. The project's overall risk is broken up into two elements – (1) project sediment risk (the relative amount of sediment that can be discharged, given the project and location details) and (2) receiving water risk (the risk sediment discharges pose to the receiving waters).

Project Sediment Risk:
Project Sediment Risk is determined by multiplying the R, K, and LS factors from the Revised Universal Soil Loss Equation (RUSLE) to obtain an estimate of project-related bare ground soil loss expressed in tons/acre. The RUSLE equation is as follows:

A = (R)(K)(LS)(C)(P)

Where: A = the rate of sheet and rill erosion
R = rainfall-runoff erosivity factor
K = soil erodibility factor
LS = length-slope factor
C = cover factor (erosion controls)
P = management operations and support practices (sediment controls)

The C and P factors are given values of 1.0 to simulate bare ground conditions.

There is a map option and a manual calculation option for determining soil loss. For the map option, the R factor for the project is calculated using the online calculator at http://cfpub.epa.gov/npdes/stormwater/LEW/lewCalculator.cfm. The product of K and LS are shown on Figure 1. To determine soil loss in tons per acre, the discharger multiplies the R factor times the value for K times LS from the map.

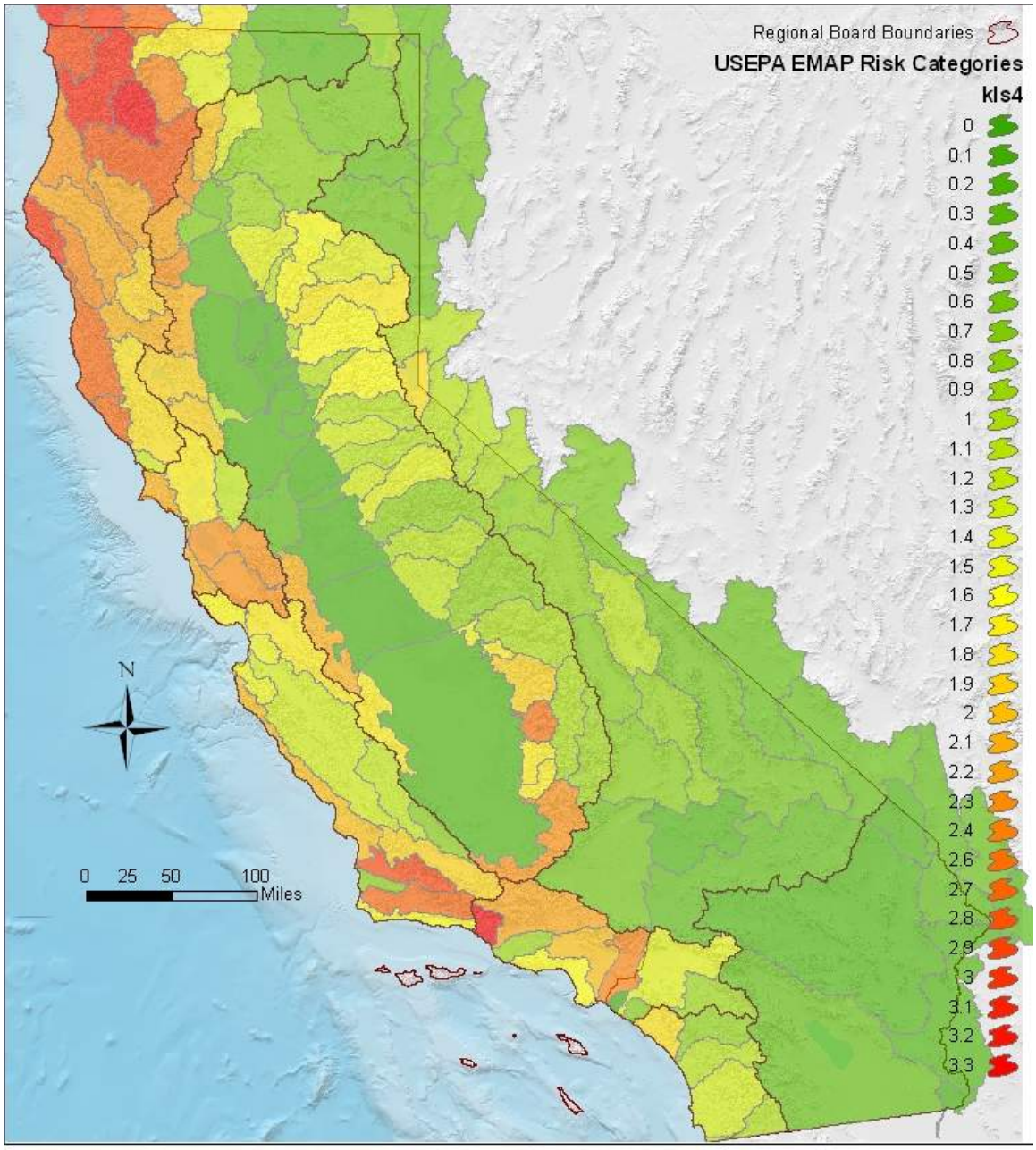

Figure 1 -Statewide Map of K * LS

For the manual calculation option, the R factor for the project is calculated using the online calculator at http://cfpub.epa.gov/npdes/stormwater/LEW/lewCalculator.cfm. The K and LS factors are determined using Appendix 1.

Soil loss of less than 15 tons/acre is considered **low** sediment risk.
Soil loss between 15 and 75 tons/acre is **medium** sediment risk.
Soil loss over 75 tons/acre is considered **high** sediment risk.

The soil loss values and risk categories were obtained from mean and standard deviation RKLS values from the USEPA EMAP program. High risk is the mean RKLS value plus two standard deviations. Low risk is the mean RKLS value minus two standard deviations.

Receiving Water Risk:
Receiving water risk is based on whether a project drains to a sediment-sensitive waterbody. A sediment-sensitive waterbody is either

on the most recent 303d list for waterbodies impaired for sediment;
has a USEPA-approved Total Maximum Daily Load implementation plan for sediment; **or**
has the beneficial uses of COLD, SPAWN, and MIGRATORY.

A project that meets at least one of the three criteria has a high receiving water risk. A list of sediment-sensitive waterbodies will be posted on the State Water Board's website. It is anticipated that an interactive map of sediment sensitive water bodies in California will be available in the future.

The Risk Levels have been altered by eliminating the possibility of a Risk Level 4, and expanding the constraints for Risk Levels 1, 2, and 3. Therefore, projects with high receiving water risk and high sediment risk will be considered a Risk Level 3 risk to water quality.

In response to public comments, the Risk Level requirements have also been changed such that Risk Level 1 projects will be subject to minimum BMP and visual monitoring requirements, Risk Level 2 projects will be subject to NALs and some additional monitoring requirements, and Risk Level 3 projects will be subject to NALs, and more rigorous monitoring requirements such as receiving water monitoring and in some cases bioassessment.

Table 7 - Combined Risk Level Matrix

Combined Risk Level Matrix				
Receiving Water Risk		Sediment Risk		
		Low	Medium	High
	Low	Level 1	Level 2	
	High	Level 2		Level 3

b. **Effluent Standards**

All dischargers are subject to the narrative effluent limitations specified in the General Permit. The narrative effluent limitations require storm water discharges associated with construction activity to meet all applicable provisions of Sections 301 and 402 of the CWA. These provisions require controls of pollutant discharges that utilize BAT and BCT to reduce pollutants and any more stringent controls necessary to meet water quality standards.

Risk Level 2 dischargers that pose a medium risk to water quality are subject to technology-based NALs for pH and turbidity. Risk Level 3 dischargers that pose a high risk to water quality are also subject to technology-based NALs for pH and turbidity.

c. Good Housekeeping

Proper handling and managing of construction materials can help minimize threats to water quality. The discharger must consider good housekeeping measures for: construction materials, waste management, vehicle storage & maintenance, landscape materials, and potential pollutant sources. Examples include; conducting an inventory of products used, implementing proper storage & containment, and properly cleaning all leaks from equipment and vehicles.

d. Non-Storm Water Management

Non-storm water discharges directly connected to receiving waters or the storm drain system have the potential to negatively impact water quality. The discharger must implement measures to control all non-storm water discharges during construction, and from dewatering activities associated with construction. Examples include; properly washing vehicles in contained areas, cleaning streets, and minimizing irrigation runoff.

e. Erosion Control

The best way to minimize the risk of creating erosion and sedimentation problems during construction is to disturb as little of the land surface as possible by fitting the development to the terrain. When development is tailored to the natural contours of the land, little grading is necessary and, consequently, erosion potential is lower.[14] Other effective erosion control measures include: preserving existing vegetation where feasible, limiting disturbance, and stabilizing and re-vegetating disturbed areas as soon as possible after grading or construction activities. Particular attention must be paid to large, mass-graded sites where the potential for soil exposure to the erosive effects of rainfall and wind is great and where there is potential for significant sediment discharge from the site to surface waters. Until permanent vegetation is established, soil cover is the most cost-effective and expeditious method to protect soil particles from detachment and transport by rainfall. Temporary soil stabilization can be the single most important factor in reducing erosion at construction sites. The discharger is required to consider measures such as: covering disturbed areas with mulch, temporary seeding, soil stabilizers, binders, fiber rolls or blankets, temporary vegetation, and permanent seeding. These erosion control measures are only examples of what should be considered and should not preclude new or innovative approaches currently available or being developed. Erosion control BMPs should be the primary means of preventing storm water contamination, and sediment control techniques should be used to capture any soil that becomes eroded.[12]

Risk Level 3 dischargers pose a higher risk to water quality and are therefore additionally required to ensure that post-construction soil loss is equivalent to or less than the pre-construction levels.

f. Sediment Control

Sediment control BMPs should be the secondary means of preventing storm water contamination. When erosion control techniques are ineffective, sediment control techniques should be used to capture any soil that becomes eroded. The discharger is required to consider perimeter control measures such as: installing silt fences or placing straw wattles below slopes. These sediment control measures are only

---

[12] U.S. Environmental Protection Agency. 2007. Developing Your Storm Water Pollution Prevention Plan: A Guide for Construction Sites.

examples of what should be considered and should not preclude new or innovative approaches currently available or being developed.

Because Risk Level 2 and 3 dischargers pose a higher risk to water quality, additional requirements for the application of sediment controls are imposed on these projects. This General Permit also authorizes the Regional Water Boards to require Risk Level 3 dischargers to implement additional site-specific sediment control requirements if the implementation of other erosion or sediment controls are not adequately protecting the receiving waters.

g. Run-on and Runoff Control

Inappropriate management of run-on and runoff can result in excessive physical impacts to receiving waters from sediment and increased flows. The discharger is required to manage all run-on and runoff from a project site. Examples include: installing berms and other temporary run-on and runoff diversions.

Risk Level 1 dischargers with lower risks to impact water quality are not subject to the run-on and runoff control requirements unless an evaluation deems them necessary or visual inspections show that such controls are required.

h. Inspection, Maintenance and Repair

All measures must be periodically inspected, maintained and repaired to ensure that receiving water quality is protected. Frequent inspections coupled with thorough documentation and timely repair is necessary to ensure that all measures are functioning as intended.

i. Rain Event Action Plan (REAP)

A Rain Event Action Plan (REAP) is a written document, specific for each rain event. A REAP should be designed that when implemented it protects all exposed portions of the site within 48 hours of any likely precipitation event forecast of 50% or greater probability.

This General Permit requires Risk Level 2 and 3 dischargers to develop and implement a REAP designed to protect all exposed portions of their sites within 48 hours prior to any likely precipitation event. The REAP requirement is designed to ensure that the discharger has adequate materials, staff, and time to implement erosion and sediment control measures that are intended to reduce the amount of sediment and other pollutants generated from the active site. A REAP must be developed when there is likely a forecast of 50% or greater probability of precipitation in the project area. (The National Oceanic and Atmospheric Administration (NOAA) defines a chance of precipitation as a probability of precipitation of 30% to 50% chance of producing precipitation in the project area.[13] NOAA defines the probability of precipitation (PoP) as the likelihood of occurrence (expressed as a percent) of a measurable amount (0.01 inch or more) of liquid precipitation (or the water equivalent of frozen precipitation) during a specified period of time at any given point in the forecast area.) Forecasts are normally issued for 12-hour time periods. Descriptive terms for uncertainty and aerial coverage are used as follows:

Table 8 -National Oceanic and Atmospheric Administration (NOAA) Definition of Probability of Precipitation (PoP)

[13] http://www.crh.noaa.gov/lot/severe/wxterms.php.

PoP	Expressions of Uncertainty	Aerial Coverage
0%	none used	none used
10%	none used	isolated
20%	slight chance	isolated
30-50%	chance	scattered
60-70%	likely	numerous
80-100%	none used	none used

The discharger must obtain the precipitation forecast information from the National Weather Service Forecast Office (http://www.srh.noaa.gov/).

2. **Linear Projects**

a. **Linear Risk Determination**

LUPs vary in complexity and water quality concerns based on the type of project. This General Permit has varying application requirements based on the project's risk to water quality. Factors that lead to the characterization of the project include location, sediment risk, and receiving water risk.

Based on the location and complexity of a project area or project section area, LUPs are separated into project types. As described below, LUPs have been categorized into three project types.

i. ***Type 1 LUPs***

Type 1 LUPs are those construction projects where:

(1) 70 percent or more of the construction activity occurs on a paved surface and where areas disturbed during construction will be returned to preconstruction conditions or equivalent protection established at the end of the construction activities for the day, or

(2) greater than 30 percent of construction activities occur within the non-paved shoulders or land immediately adjacent to paved surfaces, or where construction occurs on unpaved improved roads, including their shoulders or land immediately adjacent to them where:

Areas disturbed during construction will be returned to pre-construction conditions or equivalent protection established at the end of the construction activities for the day to minimize the potential for erosion and sediment deposition, and

Areas where established vegetation was disturbed during construction will be stabilized and re-vegetated by the end of project. When required, adequate temporary stabilization Best Management Practices (BMPs) will be installed and maintained until vegetation is established to meet minimum cover requirements established in this General Permit for final stabilization.

Type 1 LUPs typically do not have a high potential to impact storm water quality because (1) these construction activities are not typically conducted during a rain event, (2) these projects are normally constructed over a short period of time[14], minimizing the duration that pollutants could potentially be exposed to rainfall; and (3) disturbed soils such as those from trench excavation are required to be hauled away, backfilled into the trench, and/or covered (e.g., metal plates, pavement, plastic covers over spoil piles) at the end of the construction day.

Type 1 LUPs are determined during the risk assessment found in Attachment A.1 to be 1) low sediment risk and low receiving water risk; 2) low sediment risk and medium receiving water risk; and 3) medium sediment risk and low receiving water risk.

This General Permit requires the discharger to ensure a SWPPP is developed for these construction activities that is specific to project type, location and characteristics.

ii. ***Type 2 LUPs:***

Type 2 projects are determined to have a combination of High, Medium, and Low project sediment risk along with High, Medium, and Low receiving water risk. Like Type 1 projects, Type 2 projects are typically constructed over a short period of time. However, these projects have a higher potential to impact water quality because they:

(1) typically occur outside the more urban/developed areas;

(2) have larger areas of soil disturbance that are not closed or restored at the end of the day;

(3) may have onsite stockpiles of soil, spoil and other materials;

(4) cross or occur in close proximity to a wide variety of sensitive resources that may include, but are not limited to, steep topography and/or water bodies; and

(5) have larger areas of disturbed soils that may be exposed for a longer time interval before final stabilization, cleanup and/or reclamation occurs.

This General Permit requires the discharger to develop and implement a SWPPP for these construction activities that are specific for project type, location and characteristics.

iii. ***Type 3 LUPs:***

[14] Short period of time refers to a project duration of weeks to months, but typically less than one year in duration.

Type 3 projects are determined to have a combination of High and Medium project sediment risk along with High and Medium receiving water risk. Similar to Type 2 projects, Type 3 projects have a higher potential to impact water quality because they:

(1) typically occur outside of the more urban/developed areas;

(2) have larger areas of soil disturbance that are not closed or restored at the end of the day;

(3) may have onsite stockpiles of soil, spoil and other materials;

(4) cross or occur in close proximity to a wide variety of sensitive resources that may include, but are not limited to, steep topography and/or water bodies; and

(5) have larger areas of disturbed soils that may be exposed for a longer time interval before final stabilization, cleanup and/or reclamation occurs.

This General Permit requires the discharger to develop and implement a SWPPP for these construction activities that are specific for project type, location, and characteristics.

b. Linear Effluent Standards

All LUPs are subject to the narrative effluent limitations specified in the General Permit.

Type 2 and Type 3 projects are subject to technology-based NALs for pH and turbidity.

c. Linear Good Housekeeping

Improper use and handling of construction materials could potentially cause a threat to water quality. In order to ensure proper site management of these construction materials, all LUP dischargers must comply with a minimum set of Good Housekeeping measures specified in Attachment A of this General Permit.

d. Linear Non-Storm Water Management

In order to ensure control of all non-storm water discharges during construction, all LUP dischargers must comply with the Non-Storm Water Management measures specified in Attachment A of this General Permit.

e. Linear Erosion Control

This General Permit requires all LUP dischargers to implement effective wind erosion control measures, and soil cover for inactive areas. Type 3 LUPs posing a higher risk to water quality are additionally required to ensure the post-construction soil loss is equivalent to or less than the pre-construction levels.

f. Linear Sediment Control

In order to ensure control and containment of all sediment discharges, all LUP dischargers must comply with the general Sediment Control measures specified in Attachment A or this General Permit. Additional requirements for sediment controls are imposed on Type 2 & 3 LUPs due to their higher risk to water quality.

g. Linear Run-on and Runoff Control

Discharges originating outside of a project's perimeter and flowing onto the property can adversely affect the quantity and quality of discharges originating from a project site. In order to ensure proper management of run-on and runoff, all LUPs must comply with the run-on and runoff control measures specified in Attachment A of this General Permit. Due to the lower risk of impacting water quality, Type 1 LUPs are not required to implement run-on and runoff controls unless deemed necessary by the discharger.

h. Linear Inspection, Maintenance and Repair

Proper inspection, maintenance, and repair activities are important to ensure the effectiveness of on-site measures to control water quality. In order to ensure that inspection, maintenance, and repair activities are adequately performed, the all LUP dischargers a re required to comply with the Inspection, Maintenance, and Repair requirements specified in Attachment A of this General Permit.

K. ATS[15] Requirements

There are instances on construction sites where traditional erosion and sediment controls do not effectively control accelerated erosion. Under such circumstances, or under circumstances where storm water discharges leaving the site may cause or contribute to an exceedance of a water quality standard, the use of an Active Treatment System (ATS) may be necessary. Additionally, it may be appropriate to use an ATS when site constraints inhibit the ability to construct a correctly sized sediment basin, when clay and/or highly erosive soils are present, or when the site has very steep or long slope lengths.[16]

Although treatment systems have been in use in some form since the mid-1990s, the ATS industry in California is relatively young, and detailed regulatory standards have not yet been developed. Many developers are using these systems to treat storm water discharges from their construction sites. The new ATS requirements set forth in this General Permit are based on those in place for small wastewater treatment systems, ATS regulations from the Central Valley Regional Water Quality Control Board (September 2005 memorandum "2005/2006 Rainy Season – Monitoring Requirements for Storm Water Treatment Systems that Utilize Chemical Additives to Enhance Sedimentation"), the Construction Storm Water Program at the State of Washington's Department of Ecology, as well as recent advances in technology and knowledge of coagulant performance and aquatic safety.

The effective design of an ATS requires a detailed survey and analysis of site conditions. With proper planning, ATS performance can provide exceptional water quality discharge and prevent significant impacts to surface water quality, even under extreme environmental conditions.

These systems can be very effective in reducing the sediment in storm water runoff, but the systems that use additives/polymers to enhance sedimentation also pose a potential risk to water quality (e.g., operational failure, equipment failure, additive/polymer release, etc.). The State Water Board is concerned about the potential acute and chronic impacts that the polymers and other chemical additives may have on fish and aquatic organisms if released in sufficient quantities or concentrations. In addition

[15] An ATS is a treatment system that employs chemical coagulation, chemical flocculation, or electrocoagulation in order to reduce turbidity caused by fine suspended sediment.
[16] Pitt, R., S. Clark, and D. Lake. 2006. Construction Site Erosion and Sediment Controls: Planning, Design, and Performance. DEStech Publications. Lancaster, PA. 370pp.

to anecdotal evidence of polymer releases causing aquatic toxicity in California, the literature supports this concern.[17] For example, cationic polymers have been shown to bind with the negatively charged gills of fish, resulting in mechanical suffocation.[18] Due to the potential toxicity impacts, which may be caused by the release of additives/polymers into receiving waters, this General Permit establishes residual polymer monitoring and toxicity testing requirements have been established in this General Permit for discharges from construction sites that utilize an ATS in order to protect receiving water quality and beneficial uses.

The primary treatment process in an ATS is coagulation/flocculation. ATS's operate on the principle that the added coagulant is bound to suspended sediment, forming floc, which is gravitationally settled in tanks or a basin, or removed by sand filters. A typical installation utilizes an injection pump upstream from the clarifier tank, basin, or sand filters, which is electronically metered to both flow rate and suspended solids level of the influent, assuring a constant dose. The coagulant mixes and reacts with the influent, forming a dense floc. The floc may be removed by gravitational setting in a clarifier tank or basin, or by filtration. Water from the clarifier tank, basin, or sand filters may be routed through cartridge(s) and/or bag filters for final polishing. Vendor-specific systems use various methods of dose control, sediment/floc removal, filtration, etc., that are detailed in project-specific documentation. The particular coagulant/flocculant to be used for a given project is determined based on the water chemistry of the site because the coagulants are specific in their reactions with various types of sediments. Appropriate selection of dosage must be carefully matched to the characteristics of each site.

ATS's are operated in two differing modes, either Batch or Flow-Through. Batch treatment can be defined as Pump-Treat-Hold-Test-Release. In Batch treatment, water is held in a basin or tank, and is not discharged until treatment is complete. Batch treatment involves holding or recirculating the treated water in a holding basin or tank(s) until treatment is complete or the basin or storage tank(s) is full. In Flow-Through treatment, water is pumped into the ATS directly from the runoff collection system or storm water holding pond, where it is treated and filtered as it flows through the system, and is then directly discharged. "Flow-Through Treatment" is also referred to as "Continuous Treatment."

1. Effluent Standards

This General Permit establishes NELs for discharges from construction sites that utilize an ATS. These systems lend themselves to NELs for turbidity and pH because of their known reliable treatment. Advanced systems have been in use in some form since the mid-1990s. An ATS is considered reliable, can consistently produce a discharge of less than 10 NTU, and has been used successfully at many sites in several states since 1995 to reduce turbidity to very low levels.[19]

This General Permit contains "compliance storm event" exceptions from the technology-based NELs for ATS discharges. The rationale is that technology-based requirements are developed assuming a certain design storm. In the case of ATS the industry-standard design storm is 10-year, 24-hour (as stated in

---

[17] RomØen, K., B. Thu, and Ø. Evensen. 2002. Immersion delivery of plasmid DNA II. A study of the potentials of a chitosan based delivery system in rainbow trout (*Oncorhynchus mykiss*) fry. *Journal of Controlled Release* **85**: 215-225.

[18] Bullock, G., V. Blazer, S. Tsukuda, and S. Summerfelt. 2000. Toxicity of acidified chitosan for cultured rainbow trout (*Oncorhynchus mykiss*). *Aquaculture* **185**:273-280.

[19] Currier, B., G. Minton, R. Pitt, L. Roesner, K. Schiff, M. Stenstrom, E. Strassler, and E. Strecker. 2006. The Feasibility of Numeric Effluent Limits Applicable to Discharges of Storm Water Associated with Municipal, Industrial and Construction Activities.

Attachment F of this General Permit), so the compliance storm event has been established as the 10-year 24-hour event as well to provide consistency.

2. **Training**

Operator training is critical to the safe and efficient operation and maintenance of the ATS, and to ensure that all State Water Board monitoring and sampling requirements are met. The General Permit requires that all ATS operators have training specific to using ATS's liquid coagulants.

L. Post-Construction Requirements

Under past practices, new and redevelopment construction activities have resulted in modified natural watershed and stream processes. This is caused by altering the terrain, modifying the vegetation and soil characteristics, introducing impervious surfaces such as pavement and buildings, increasing drainage density through pipes and channels, and altering the condition of stream channels through straightening, deepening, and armoring. These changes result in a drainage system where sediment transport capacity is increased and sediment supply is decreased. A receiving channel's response is dependent on dominant channel materials and its stage of adjustment.

Construction activity can lead to impairment of beneficial uses in two main ways. First, during the actual construction process, storm water discharges can negatively affect the chemical, biological, and physical properties of downstream receiving waters. Due to the disturbance of the landscape, the most likely pollutant is sediment, however pH and other non-visible pollutants are also of great concern. Second, after most construction activities are completed at a construction site, the finished project may result in significant modification of the site's response to precipitation. New development and redevelopment projects have almost always resulted in permanent post-construction water quality impacts because more precipitation ends up as runoff and less precipitation is intercepted, evapotranspired, and infiltrated.

General Permit 99-08-DWQ required the SWPPP to include a description of all post-construction BMPs on a site and a maintenance schedule. An effective storm water management strategy must address the full suite of storm events (water quality, channel protection, overbank flood protection, extreme flood protection) (Figure 2).

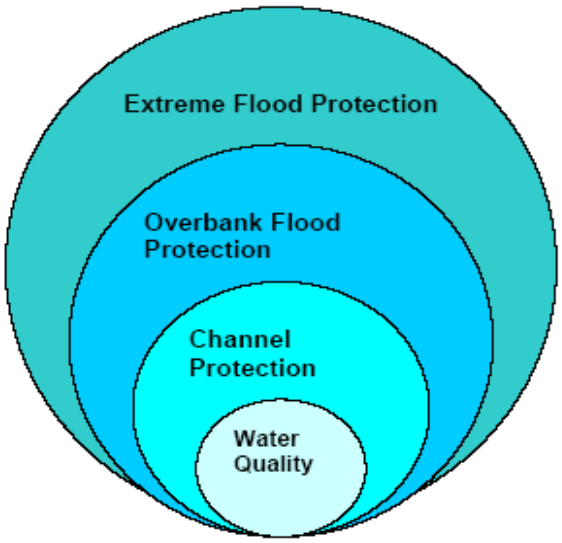

Figure 2 - Suite of Storm Events

The post-construction storm water performance standards in this General Permit specifically address water quality and channel protection events. Overbank flood protection and extreme flood protection events are traditionally dealt with in local drainage and flood protection ordinances. However, measures in this General Permit to address water quality and channel protection also reduce overbank and extreme flooding impacts. This General Permit aims to match post-construction runoff to pre-construction runoff for the 85th percentile storm event, which not only reduces the risk of impact to the receiving water's channel morphology but also provides some protection of water quality.

This General Permit clarifies that its runoff reduction requirements only apply to projects that lie outside of jurisdictions covered by a Standard Urban Storm water Management Plan (SUSMP) (or other more protective) post-construction requirements in either Phase I or Phase II permits.

Figures 3 and 4, below, show the General Permit enrollees (to Order 99-08-DWQ, as of March 10, 2008) overlaid upon a map with SUSMP (or more protective) areas in blue and purple. Areas without blue or purple indicate where the General Permit's runoff reduction requirements would actually apply.

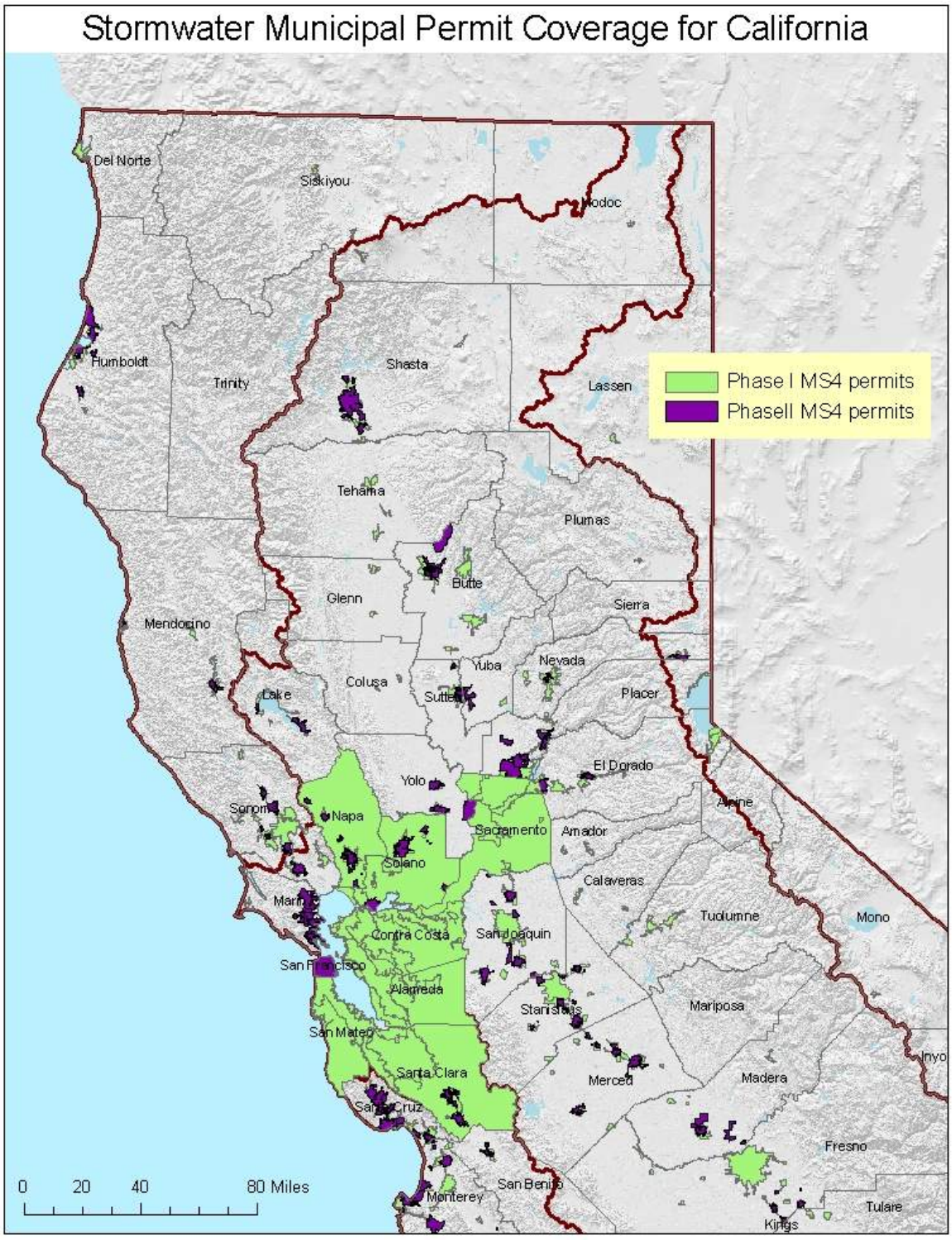

Figure 3 - Northern CA (2009) Counties / Cities With SUSMP-Plus Coverage



Stormwater Municipal Permit Coverage for California

Figure 4 - Southern CA (2009) Counties / Cities With SUSMP-Plus Coverage

Water Quality:
This General Permit requires dischargers to replicate the pre-project runoff water balance (defined as the amount of rainfall that ends up as runoff) for the smallest storms up to the 85th percentile storm event, or the smallest storm event that generates runoff, whichever is larger. Contemporary storm water management generally routes these flows directly to the drainage system, increasing pollutant loads and potentially causing adverse effects on receiving waters. These smaller water quality events happen much more frequently than larger events and generate much higher pollutant loads on an annual basis. There are other adverse hydrological impacts that result from not designing according to the site's pre-construction water balance. In Maryland, Klein[20] noted that baseflow decreases as the extent of urbanization increases. Ferguson and Suckling[21] noted a similar relation in watersheds in Georgia. On Long Island, Spinello and Simmons[22] noted substantial decreases in base flow in intensely urbanized watersheds.

The permit emphasizes runoff reduction through on-site storm water reuse, interception, evapo-transpiration and infiltration through non-structural controls and conservation design measures (e.g., downspout disconnection, soil quality preservation/enhancement, interceptor trees). Employing these measures close to the source of runoff generation is the easiest and most cost-effective way to comply with the pre-construction water balance standard. Using low-tech runoff reduction techniques close to the source is consistent with a number of recommendations in the literature.[23] In many cases, BMPs implemented close to the source of runoff generation cost less than end-of the pipe measures.[24] Dischargers are given the option of using Appendix 2 to calculate the required runoff volume or a watershed process-based, continuous simulation model such as the EPA's Storm Water Management Model (SWMMM) or Hydrologic Simulation Program Fortran (HSPF). Such methods used by the discharger will be reviewed by the Regional Water Board upon NOT application.

Channel Protection:
In order to address channel protection, a basic understanding of fluvial geomorphic concepts is necessary. A dominant paradigm in fluvial geomorphology holds that streams adjust their channel dimensions (width and depth) in response to long-term changes in sediment supply and bankfull discharge (1.5 to 2 year recurrence interval). The bankfull stage corresponds to the discharge at which channel maintenance is the most effective, that is, the discharge at which the moving sediment, forming or removing bars, forming or changing bends and meanders, and generally doing work that results in the average morphologic characteristics of channels.[25] Lane (1955 as cited in Rosgen 1996[26]) showed the generalized relationship between sediment load, sediment size, stream discharge and stream slope in

---

[20] Klein 1979 as cited in Delaware Department of Natural Resources (DDNR). 2004. Green Technology: The Delaware Urban Runoff Management Approach. Dover, DE. 117 pp.
[21] Ferguson and Suckling 1990 as cited Delaware Department of Natural Resources (DDNR). 2004. Green Technology: The Delaware Urban Runoff Management Approach. Dover, DE. 117 pp.
[22] Center for Watershed Protection (CWP). 2000. The Practice of Watershed Protection: Techniques for protecting our nation's streams, lakes, rivers, and estuaries. Ellicott City, MD. 741 pp.
[23] Bay Area Storm Water Management Agencies Association (BASMAA). 1997. Start at the Source: Residential Site Planning and Design Guidance Manual for Storm Water Quality Protection. Palo Alto, CA;
McCuen, R.H. 2003 Smart Growth: hydrologic perspective. Journal of Professional Issues in Engineering Education and Practice. Vol (129), pp.151-154;
Moglen, G.E. and S. Kim. 2007. Impervious imperviousness-are threshold based policies a good idea? Journal of the American Planning Association, Vol 73 No. 2. pp 161-171.
[24] Delaware Department of natural Resources (DDNR). 2004. Green technology: The Delaware urban Runoff Management Approcah. Dover, DE. 117 pp.
[25] Dunne, T and L.B. Leopold. 1978. Water in Environmental Planning. San Francisco W.H. Freeman and Company
[26] Rosgen. D.L. 1996. Applied River Morphology. Pagosa Springs. Wildland Hydrology

Figure 5. A change in any one of these variables sets up a series of mutual adjustments in the companion variables with a resulting direct change in the physical characteristics of the stream channel.

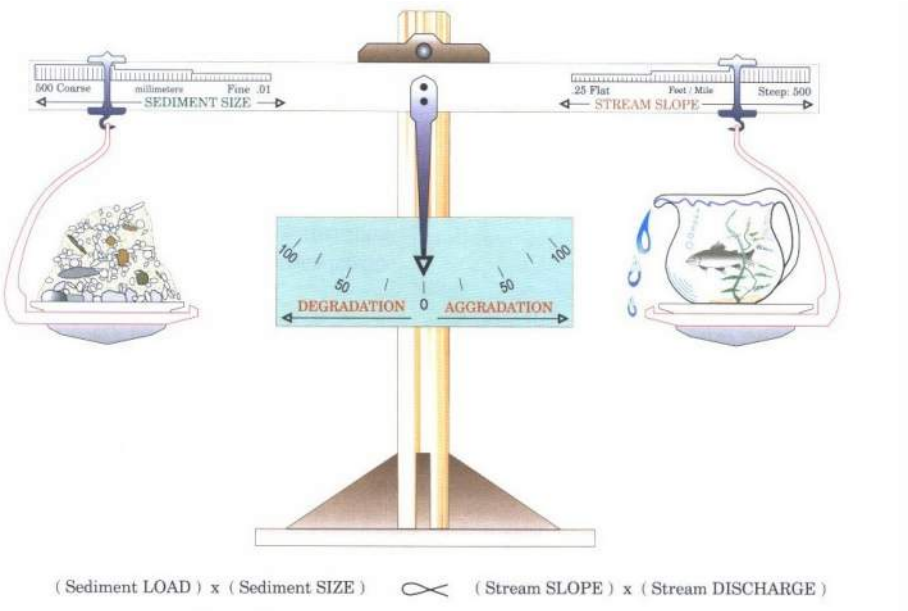

Figure 5 - Schematic of the Lane Relationship

After Lane (1955) as cited in Rosgen (1996)

Stream slope multiplied by stream discharge (the right side of the scale) is essentially an approximation of stream power, a unifying concept in fluvial geomorphology (Bledsoe 1999). Urbanization generally increases stream power and affects the resisting forces in a channel (sediment load and sediment size represented on the left side of the scale).

During construction, sediment loads can increase from 2 to 40,000 times over pre-construction levels.[27] Most of this sediment is delivered to stream channels during large, episodic rain events.[28] This increased sediment load leads to an initial aggradation phase where stream depths may decrease as sediment fills the channel, leading to a decrease in channel capacity and increase in flooding and overbank deposition. A degradation phase initiates after construction is completed.

Schumm et. al (1984) developed a channel evolution model that describes the series of adjustments from initial downcutting, to widening, to establishing new floodplains at lower elevations (Figure 6).

[27] Goldman S.J., K. Jackson, and T.A. Bursztynsky. 1986. Erosion and Sediment Control Handbook. McGraw Hill. San Francisco.
[28] Wolman 1967 as cited in Paul, M.P. and J.L. Meyer. 2001. Streams in the Urban Landscape. *Annu. Rev.Ecol. Syst.* 32: 333-365.

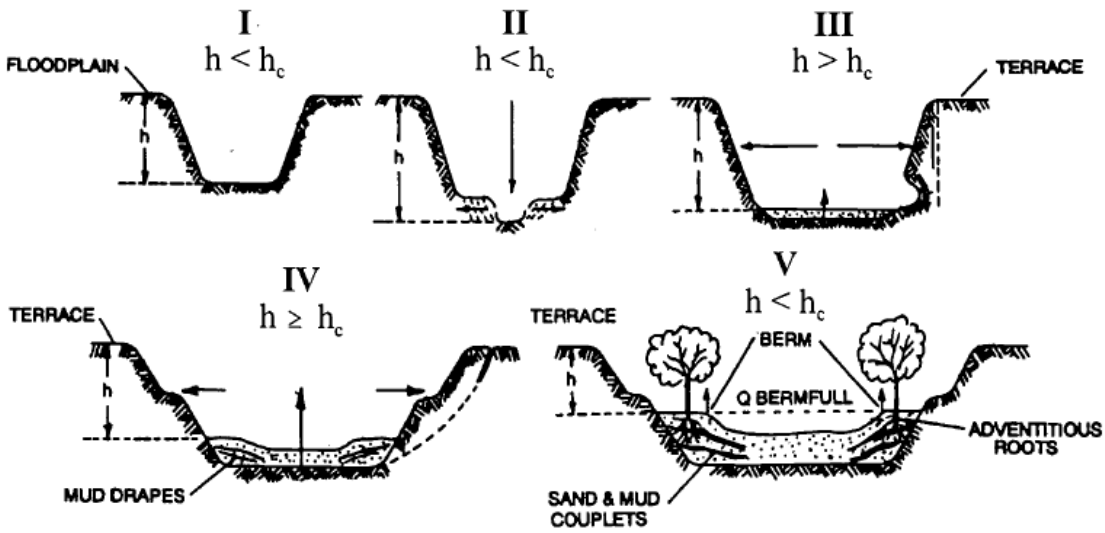

Figure 6 - Channel Changes Associated with Urbanization

After Incised Channel Evolution Sequence in Schumm et. al 1984

Channel incision (Stage II) and widening (Stages III and to a lesser degree, Stage IV) are due to a number of fundamental changes on the landscape. Connected impervious area and compaction of pervious surfaces increase the frequency and volume of bankfull discharges.[29] Increased drainage density (miles of stream length per square mile of watershed) also negatively impacts receiving stream channels.[30] Increased drainage density and hydraulic efficiency leads to an increase in the frequency and volume of bankfull discharges because the time of concentration is shortened. Flows from engineered pipes and channels are also often "sediment starved" and seek to replenish their sediment supply from the channel.

Encroachment of stream channels can also lead to an increase in stream slope, which leads to an increase in stream power. In addition, watershed sediment loads and sediment size (with size generally represented as the median bed and bank particle size, or d_{50}) decrease during urbanization.[31] This means

[29] Booth, D. B. and C. R. Jackson. 1997. Urbanization of Aquatic Systems: Degradation Thresholds, Storm Water Detection, and the Limits of Mitigation. Journal of the American Water Resources Association Vol. 33, No.5, pp. 1077-1089.

[30] May, C.W. 1998. Cumulative effects of urbanization on small streams in the Puget Sound Lowland ecoregion. Conference proceedings from Puget Sound Research '98 held March 12, 13 1998 in Seattle, WA;
Santa Clara Valley Urban Runoff Pollution Prevention Program. 2002. Hydromodification Management Plan Literature Review. 80 pp.

[31] Finkenbine, J.K., D.S. Atwater, and D.S. Mavinic. 2000. Stream health after urbanization. *J. Am. Water Resour. Assoc.* 36:1149-60;

that even if pre- and post-development stream power are the same, more erosion will occur in the post-development stage because the smaller particles are less resistant (provided they are non-cohesive).

As shown in Stages II and III, the channel deepens and widens to accommodate the increased stream power [32]and decrease in sediment load and sediment size. Channels may actually narrow as entrained sediment from incision is deposited laterally in the channel. After incised channels begin to migrate laterally (Stage III), bank erosion begins, which leads to general channel widening.[33] At this point, a majority of the sediment that leaves a drainage area comes from within the channel, as opposed to the background and construction related hillslope contribution. Stage IV is characterized by more aggradation and localized bank instability. Stage V represents a new quasi-equilibrium channel morphology in balance with the new flow and sediment supply regime. In other words, stream power is in balance with sediment load and sediment size.

The magnitude of the channel morphology changes discussed above varies along a stream network as well as with the age of development, slope, geology (sand-bedded channels may cycle through the evolution sequence in a matter of decades whereas clay-dominated channels may take much longer), watershed sediment load and size, type of urbanization, and land use history. It is also dependent on a channel's stage in the channel evolution sequence when urbanization occurs. Management strategies

---

Pizzuto, J.E. W.S. Hession, and M. McBride. 2000. Comparing gravel-bed rivers in paired urban and rural catchments of southeastern Pennsylvania. *Geology* 28:79-82.

[32] Hammer 1973 as cited in Delaware Department of Natural Resources (DDNR). 2004. Green Technology: The Delaware Urban Runoff Management Approach. Dover, DE. 117 pp;
Booth, D.B. 1990. Stream Channel Incision Following Drainage Basin Urbanization. *Water Resour. Bull.* 26:407-417.

[33] Trimble, S.W. 1997. Contribution of Stream Channel Erosion to Sediment Yield from an Urbanizing Watershed. *Science*: Vol. 278 (21), pp. 1442-1444.

must take into account a channel's stage of adjustment and account for future changes in the evolution of channel form (Stein and Zaleski 2005). [34]

Traditional structural water quality BMPs (e.g. detention basins and other devices used to store volumes of runoff) unless they are highly engineered to provide adequate flow duration control, do not adequately protect receiving waters from accelerated channel bed and bank erosion, do not address post-development increases in runoff volume, and do not mitigate the decline in benthic macroinvertebrate communities in the receiving waters[35] suggest that structural BMPs are not as effective in protecting aquatic communities as a continuous riparian buffer of native vegetation. This is supported by the findings of Zucker and White[36], where instream biological metrics were correlated with the extent of forested buffers.

This General Permit requires dischargers to maintain pre-development drainage densities and times of concentration in order to protect channels and encourages dischargers to implement setbacks to reduce channel slope and velocity changes that can lead to aquatic habitat degradation.

There are a number of other approaches for modeling fluvial systems, including statistical and physical models and simpler stream power models.[37] The use of these models in California is described in Stein and Zaleski (2005).[38] Rather than prescribe a specific one-size-fits-all modeling method in this permit, the State Water Board intends to develop a stream power and channel evolution model-based framework to assess channels and develop a hierarchy of suitable analysis methods and management strategies. In time, this framework may become a State Water Board water quality control policy.

Permit Linkage to Overbank and Extreme Flood Protection
Site design BMPs (e.g. rooftop and impervious disconnection, vegetated swales, setbacks and buffers) filter and settle out pollutants and provide for more infiltration than is possible for traditional centralized structural BMPs placed at the lowest point in a site. They provide source control for runoff and lead to a reduction in pollutant loads. When implemented, they also help reduce the magnitude and volume of larger, less frequent storm events (e.g., 10-yr, 24-hour storm and larger), thereby reducing the need for expensive flood control infrastructure. Nonstructural BMPs can also be a landscape amenity, instead of a large isolated structure requiring substantial area for ancillary access, buffering, screening and maintenance facilities.[25] The multiple benefits of using non-structural benefits will be critically important as the state's population increases and imposes strains upon our existing water resources.

Maintaining predevelopment drainage densities and times of concentration will help reduce post-development peak flows and volumes in areas not covered under a municipal permit. The most effective way to preserve drainage areas and maximize time of concentration is to implement landform grading,

---

[34] Stein, E.S. and S. Zaleski. 2005.Managing runoff to protect natural stream: the latest developments on investigation and management of hydromodification in California. Southern California Coastal Water Research Project Technical Report 475. 26 pp.
[35] Horner, R.R. 2006. Investigation of the Feasibility and Benefits of Low-Impact Site Design Practices (LID) for the San Diego Region. Available at: http://www.projectcleanwater.org/pdf/permit/case-study_lid.pdf.
[36] Delaware Department of Natural Resources (DDNR). 2004. Green Technology: The Delaware Urban Runoff Management Approach. Dover, DE. 117 pp.
[37] Finlayson, D.P. and D.R. Montgomery. 2003. Modeling large-scale fluvial erosion in geographic information systems. Geomorphology (53), pp. 147-164).
[38] Stein, E.S. and S. Zaleski. 2005.Managing runoff to protect natural stream: the latest developments on investigation and management of hydromodification in California. Southern California Coastal Water Research Project Technical Report 475. 26 pp.

incorporate site design BMPs and implement distributed structural BMPs (e.g., bioretention cells, rain gardens, rain cisterns).

M. Storm Water Pollution Prevention Plans

USEPA's Construction General Permit requires that qualified personnel conduct inspections. USEPA defines qualified personnel as "a person knowledgeable in the principles and practice of erosion and sediment controls who possesses the skills to assess conditions at the construction site that could impact storm water quality and to assess the effectiveness of any sediment and erosion control measures selected to control the quality of storm water discharges from the construction activity."[39] USEPA also suggests that qualified personnel prepare SWPPPs and points to numerous states that require certified professionals to be on construction sites at all times. States that currently have certification programs are Washington, Georgia, Florida, Delaware, Maryland, and New Jersey. The Permit 99-08-DWQ did not require that qualified personnel prepare SWPPPs or conduct inspections. However, to ensure that water quality is being protected, this General Permit requires that all SWPPPs be written, amended, and certified by a Qualified SWPPP Developer. A Qualified SWPPP Developer must possess one of the eight certifications and or registrations specified in this General Permit and effective two years after the adoption date of this General Permit, must have attended a State Water Board-sponsored or approved Qualified SWPPP Developer training course. Table 9 provides an overview of the criteria used in determining qualified certification titles for a QSD and QSP.

39 US Environmental Protection Agency. Stormwater Pollution Prevention Plans for Construction Activities. <http://cfpub.epa.gov/npdes/stormwater/swppp.cfm> and <http://www.epa.gov/npdes/pubs/sw_swppp_guide.pdf>.

Table 9 - Qualified SWPPP Developer/ Qualified SWPPP Practitioner Certification Criteria

Certification/ Title	Registered By	QSD/QSP	Certification Criteria
Professional Civil Engineer	California	Both	1. Approval Process 2. Code of Ethics 3. Accountability 4. Pre-requisites
Professional Geologist or Engineering Geologist	California	Both	1. Approval Process 2. Code of Ethics 3. Accountability 4. Pre-requisites
Landscape Architect	California	Both	1. Approval Process 2. Code of Ethics 3. Accountability 4. Pre-requisites
Professional Hydrologist	American Institute of Hydrology	Both	1. Approval Process 2. Code of Ethics 3. Accountability 4. Pre-requisites
Certified Professional in Erosion and Sediment Control™ (CPESC)	Enviro Cert International Inc.	Both	1. Approval Process 2. Code of Ethics 3. Accountability 4. Pre-requisites 5. Continuing Education
Certified Inspector of Sediment and Erosion Control™ (CISEC)	Certified Inspector of Sediment and Erosion Control, Inc.	QSP	1. Approval Process 2. Code of Ethics 3. Accountability 4. Pre-requisites 5. Continuing Education
Certified Erosion, Sediment and Storm Water Inspector™ (CESSWI)	Enviro Cert International Inc.	QSP	1. Approval Process 2. Code of Ethics 3. Accountability 4. Pre-requisites 5. Continuing Education
Certified Professional in Storm Water Quality™ (CPSWQ)	Enviro Cert International Inc.	Both	1. Approval Process 2. Code of Ethics 3. Accountability 4. Pre-requisites 5. Continuing Education

The previous versions of the General Permit required development and implementation of a SWPPP as the primary compliance mechanism. The SWPPP has two major objectives: (1) to help identify the sources of sediment and other pollutants that affect the quality of storm water discharges; and (2) to describe and ensure the implementation of BMPs to reduce or eliminate sediment and other pollutants in storm water and non-storm water discharges. The SWPPP must include BMPs that address source control, BMPs that address pollutant control, and BMPs that address treatment control.

This General Permit shifts some of the measures that were covered by this general requirement to specific permit requirements, each individually enforceable as a permit term. This General Permit emphasizes the use of appropriately selected, correctly installed and maintained pollution reduction BMPs. This approach provides the flexibility necessary to establish BMPs that can effectively address source control of pollutants during changing construction activities. These specific requirements also improve both the clarity and the enforceability of the General Permit so that the dischargers understand, and the public can determine whether the discharges are in compliance with, permit requirements.

The SWPPP must be implemented at the appropriate level to protect water quality at all times throughout the life of the project. The SWPPP must remain on the site during construction activities, commencing with the initial mobilization and ending with the termination of coverage under the General Permit. For LUPs the discharger shall make the SWPPP available at the construction site during working hours while construction is occurring and shall be made available upon request by a State or Municipal inspector. When the original SWPPP is retained by a crewmember in a construction vehicle and is not currently at the construction site, current copies of the BMPs and map/drawing will be left with the field crew and the original SWPPP shall be made available via a request by radio or telephone. Once construction activities are complete, until stabilization is achieved, the SWPPP shall be available from the SWPPP contact listed in the PRDs

A SWPPP must be appropriate for the type and complexity of a project and will be developed and implemented to address project specific conditions. Some projects may have similarities or complexities, yet each project is unique in its progressive state that requires specific description and selection of BMPs needed to address all possible generated pollutants

N. Regional Water Board Authorities

Because this General Permit will be issued to thousands of construction sites across the State, the Regional Water Boards retain discretionary authority over certain issues that may arise from the discharges in their respective regions. This General Permit does not grant the Regional Water Boards any authority they do not otherwise have; rather, it merely emphasizes that the Regional Water Boards can take specific actions related to this General Permit. For example, the Regional Water Boards will be enforcing this General Permit and may need to adjust some requirements for a discharger based on the discharger’s compliance history.

Linda S. Adams
Secretary for
Environmental Protection

State Water Resources Control Board

Division of Water Quality
1001 I Street • Sacramento, California 95814 • (916) 341-5455
Mailing Address: P.O. Box 100 • Sacramento, California • 95812-0100
Fax (916) 341-5463 • http://www.waterboards.ca.gov

Arnold Schwarzenegger
Governor

NATIONAL POLLUTANT DISCHARGE ELIMINATION SYSTEM (NPDES)
GENERAL PERMIT FOR
STORM WATER DISCHARGES
ASSOCIATED WITH CONSTRUCTION AND LAND DISTURBANCE
ACTIVITIES

ORDER NO. 2009-0009-DWQ
NPDES NO. **CAS000002**

This Order was adopted by the State Water Resources Control Board on:	**September 2, 2009**
This Order shall become effective on:	**July 1, 2010**
This Order shall expire on:	**September 2, 2014**

IT IS HEREBY ORDERED, that this Order supersedes Order No. 99-08-DWQ [as amended by Order No. 2010-0014-DWQ] except for enforcement purposes. The Discharger shall comply with the requirements in this Order to meet the provisions contained in Division 7 of the California Water Code (commencing with section 13000) and regulations adopted thereunder, and the provisions of the federal Clean Water Act and regulations and guidelines adopted thereunder.

I, Jeanine Townsend, Clerk to the Board, do hereby certify that this Order with all attachments is a full, true, and correct copy of an Order adopted by the State Water Resources Control Board, on September 2, 2009.

AYE: Vice Chair Frances Spivy-Weber
Board Member Arthur G. Baggett, Jr.
Board Member Tam M. Doduc

NAY: Chairman Charles R. Hoppin

ABSENT: None

ABSTAIN: None

Jeanine Townsend
Clerk to the Board

Linda S. Adams
Secretary for
Environmental Protection

State Water Resources Control Board

Division of Water Quality
1001 I Street • Sacramento, California 95814 • (916) 341-5455
Mailing Address: P.O. Box 100 • Sacramento, California • 95812-0100
Fax (916) 341-5463 • http://www.waterboards.ca.gov

Arnold Schwarzenegger
Governor

NATIONAL POLLUTANT DISCHARGE ELIMINATION SYSTEM (NPDES) GENERAL PERMIT FOR STORM WATER DISCHARGES ASSOCIATED WITH CONSTRUCTION AND LAND DISTURBANCE ACTIVITIES

ORDER NO. 2010-0014-DWQ
NPDES NO. CAS000002

Order No. 2009-0009-DWQ was adopted by the State Water Resources Control Board on:	**September 2, 2009**
Order No. 2009-0009-DWQ became effective on:	**July 1, 2010**
Order No. 2009-0009-DWQ shall expire on:	**September 2, 2014**
This Order, which amends Order No. 2009-0009-DWQ, was adopted by the State Water Resources Control Board on:	**November 16, 2010**
This Order shall become effective on:	**February 14, 2011**

IT IS HEREBY ORDERED that this Order amends Order No. 2009-0009-DWQ. Additions to Order No. 2009-0009-DWQ are reflected in blue-underline text and deletions are reflected in red-strikeout text.

IT IS FURTHER ORDERED that staff are directed to prepare and post a conformed copy of Order No. 2009-0009-DWQ incorporating the revisions made by this Order.

I, Jeanine Townsend, Clerk to the Board, do hereby certify that this Order with all attachments is a full, true, and correct copy of an Order adopted by the State Water Resources Control Board, on **November 16, 2010.**

AYE: Chairman Charles R. Hoppin
Vice Chair Frances Spivy-Weber
Board Member Arthur G. Baggett, Jr.
Board Member Tam M. Doduc

NAY: None

ABSENT: None

ABSTAIN: None

Jeanine Townsend
Clerk to the Board

CALIFORNIA
Water Boards

EDMUND G. BROWN JR.
GOVERNOR

MATTHEW RODRIQUEZ
SECRETARY FOR
ENVIRONMENTAL PROTECTION

State Water Resources Control Board

NATIONAL POLLUTANT DISCHARGE ELIMINATION SYSTEM (NPDES) GENERAL PERMIT FOR STORM WATER DISCHARGES ASSOCIATED WITH CONSTRUCTION AND LAND DISTURBANCE ACTIVITIES

ORDER NO. 2012-0006-DWQ
NPDES NO**. CAS000002**

Order No. 2009-0009-DWQ was adopted by the State Water Resources Control Board on:	**September 2, 2009**
Order No. 2009-0009-DWQ became effective on:	**July 1, 2010**
Order No. 2010-0014-DWQ became effective on:	**February 14, 2011**
Order No. 2009-0009-DWQ as amended by 2010-0014-DWQ shall expire on:	**September 2, 2014**
This Order, which amends Order No. 2009-0009-DWQ as amended by 2010-0014-DWQ, was adopted by the State Water Resources Control Board on:	**July 17, 2012**
This Order No. 2012-0006-DWQ shall become effective on:	**July 17, 2012**

IT IS HEREBY ORDERED that this Order amends Order No. 2009-0009-DWQ. Additions to Order No. 2009-0009-DWQ are reflected in blue-underline text and deletions are reflected in red-strikeout text.

IT IS FURTHER ORDERED that staff are directed to prepare and post a conformed copy of Order No. 2009-000-DWQ incorporating the revisions made by this Order.

I, Jeanine Townsend, Clerk to the Board, do hereby certify that this Order with all attachments is a full, true, and correct copy of an Order adopted by the State Water Resources Control Board, on July 17, 2012.

AYE:	Chairman Charles R. Hoppin Vice Chair Frances Spivy-Weber Board Member Tam M. Doduc Board Member Steven Moore Board Member Felicia Marcus
NAY:	None
ABSENT:	None
ABSTAIN:	None

Jeanine Townsend
Clerk to the Board

TABLE OF CONTENTS

I.	FINDINGS	1
II.	CONDITIONS FOR PERMIT COVERAGE	14
III.	DISCHARGE PROHIBITIONS	20
IV.	SPECIAL PROVISIONS	22
V.	EFFLUENT STANDARDS & RECEIVING WATER MONITORING	28
VI.	RECEIVING WATER LIMITATIONS	31
VII.	TRAINING QUALIFICATIONS AND CERTIFICATION REQUIREMENTS	32
VIII.	RISK DETERMINATION	33
IX.	RISK LEVEL 1 REQUIREMENTS	34
X.	RISK LEVEL 2 REQUIREMENTS	34
XI.	RISK LEVEL 3 REQUIREMENTS	34
XII.	ACTIVE TREATMENT SYSTEMS (ATS)	34
XIII.	POST-CONSTRUCTION STANDARDS	35
XIV.	SWPPP REQUIREMENTS	37
XV.	REGIONAL WATER BOARD AUTHORITIES	38
XVI.	ANNUAL REPORTING REQUIREMENTS	39

LIST OF ATTACHMENTS

Attachment A – Linear Underground/Overhead Requirements
Attachment A.1 – LUP Type Determination
Attachment A.2 – LUP Permit Registration Documents
Attachment B – Permit Registration Documents
Attachment C – Risk Level 1 Requirements
Attachment D – Risk Level 2 Requirements
Attachment E – Risk Level 3 Requirements
Attachment F – Active Treatment System (ATS) Requirements

LIST OF APPENDICES

Appendix 1 – Risk Determination Worksheet
Appendix 2 – Post-Construction Water Balance Performance Standard
Appendix 2.1 – Post-Construction Water Balance Performance Standard Spreadsheet
Appendix 3 – Bioassessment Monitoring Guidelines
Appendix 4 – Adopted/Implemented Sediment TMDLs
Appendix 5 – Glossary
Appendix 6 – Acronyms
Appendix 7 – State and Regional Water Resources Control Board Contacts

STATE WATER RESOURCES CONTROL BOARD
ORDER NO. 2009-0009-DWQ
[AS AMENDED BY ORDER NO. 2010-0014-DWQ]
NATIONAL POLLUTANT DISCHARGE ELIMINATION SYSTEM
GENERAL PERMIT NO. CAS000002

WASTE DISCHARGE REQUIREMENTS
FOR
DISCHARGES OF STORM WATER RUNOFF ASSOCIATED WITH CONSTRUCTION AND LAND DISTURBANCE ACTIVITIES

I. FINDINGS

A. General Findings

The State Water Resources Control Board (State Water Board) finds that:

1. The federal Clean Water Act (CWA) prohibits certain discharges of storm water containing pollutants except in compliance with a National Pollutant Discharge Elimination System (NPDES) permit (Title 33 United States Code (U.S.C.) §§ 1311 and 1342(p); also referred to as Clean Water Act (CWA) §§ 301 and 402(p)). The U.S. Environmental Protection Agency (U.S. EPA) promulgates federal regulations to implement the CWA's mandate to control pollutants in storm water runoff discharges. (Title 40 Code of Federal Regulations (C.F.R.) Parts 122, 123, and 124). The federal statutes and regulations require discharges to surface waters comprised of storm water associated with construction activity, including demolition, clearing, grading, and excavation, and other land disturbance activities (except operations that result in disturbance of less than one acre of total land area and which are not part of a larger common plan of development or sale), to obtain coverage under an NPDES permit. The NPDES permit must require implementation of Best Available Technology Economically Achievable (BAT) and Best Conventional Pollutant Control Technology (BCT) to reduce or eliminate pollutants in storm water runoff. The NPDES permit must also include additional requirements necessary to implement applicable water quality standards.

2. This General Permit authorizes discharges of storm water associated with construction activity so long as the dischargers comply with all requirements, provisions, limitations and prohibitions in the permit. In addition, this General Permit regulates the discharges of storm water associated with construction activities from all Linear

Underground/Overhead Projects resulting in the disturbance of greater than or equal to one acre (Attachment A).

3. This General Permit regulates discharges of pollutants in storm water associated with construction activity (storm water discharges) to waters of the United States from construction sites that disturb one or more acres of land surface, or that are part of a common plan of development or sale that disturbs more than one acre of land surface.

4. This General Permit does not preempt or supersede the authority of local storm water management agencies to prohibit, restrict, or control storm water discharges to municipal separate storm sewer systems or other watercourses within their jurisdictions.

5. This action to adopt a general NPDES permit is exempt from the provisions of Chapter 3 of the California Environmental Quality Act (CEQA) (Public Resources Code Section 21100, et seq.), pursuant to Section 13389 of the California Water Code.

6. Pursuant to 40 C.F.R. § 131.12 and State Water Board Resolution No. 68-16,[1] which incorporates the requirements of § 131.12 where applicable, the State Water Board finds that discharges in compliance with this General Permit will not result in the lowering of water quality standards, and are therefore consistent with those provisions. Compliance with this General Permit will result in improvements in water quality.

7. This General Permit serves as an NPDES permit in compliance with CWA § 402 and will take effect on July 1, 2010 by the State Water Board provided the Regional Administrator of the U.S. EPA has no objection. If the U.S. EPA Regional Administrator objects to its issuance, the General Permit will not become effective until such objection is withdrawn.

8. Following adoption and upon the effective date of this General Permit, the Regional Water Quality Control Boards (Regional Water Boards) shall enforce the provisions herein.

9. Regional Water Boards establish water quality standards in Basin Plans. The State Water Board establishes water quality standards in various statewide plans, including the California Ocean Plan. U.S. EPA establishes water quality standards in the National Toxic Rule (NTR) and the California Toxic Rule (CTR).

[1] Resolution No. 68-16 generally requires that existing water quality be maintained unless degradation is justified based on specific findings.

10. This General Permit does not authorize discharges of fill or dredged material regulated by the U.S. Army Corps of Engineers under CWA § 404 and does not constitute a waiver of water quality certification under CWA § 401.

11. The primary storm water pollutant at construction sites is excess sediment. Excess sediment can cloud the water, which reduces the amount of sunlight reaching aquatic plants, clog fish gills, smother aquatic habitat and spawning areas, and impede navigation in our waterways. Sediment also transports other pollutants such as nutrients, metals, and oils and greases.

12. Construction activities can impact a construction site's runoff sediment supply and transport characteristics. These modifications, which can occur both during and after the construction phase, are a significant cause of degradation of the beneficial uses established for water bodies in California. Dischargers can avoid these effects through better construction site design and activity practices.

13. This General Permit recognizes four distinct phases of construction activities. The phases are Grading and Land Development Phase, Streets and Utilities Phase, Vertical Construction Phase, and Final Landscaping and Site Stabilization Phase. Each phase has activities that can result in different water quality effects from different water quality pollutants. This General Permit also recognizes inactive construction as a category of construction site type.

14. Compliance with any specific limits or requirements contained in this General Permit does not constitute compliance with any other applicable requirements.

15. Following public notice in accordance with State and Federal laws and regulations, the State Water Board heard and considered all comments and testimony in a public hearing on 06/03/2009. The State Water Board has prepared written responses to all significant comments.

16. Construction activities obtaining coverage under the General Permit may have multiple discharges subject to requirements that are specific to general, linear, and/or active treatment system discharge types.

17. The State Water Board may reopen the permit if the U.S. EPA adopts a final effluent limitation guideline for construction activities.

B. Activities Covered Under the General Permit

18. Any construction or demolition activity, including, but not limited to, clearing, grading, grubbing, or excavation, or any other activity that results in a land disturbance of equal to or greater than one acre.

19. Construction activity that results in land surface disturbances of less than one acre if the construction activity is part of a larger common plan of development or the sale of one or more acres of disturbed land surface.

20. Construction activity related to residential, commercial, or industrial development on lands currently used for agriculture including, but not limited to, the construction of buildings related to agriculture that are considered industrial pursuant to U.S. EPA regulations, such as dairy barns or food processing facilities.

21. Construction activity associated with Linear Underground/Overhead Utility Projects (LUPs) including, but not limited to, those activities necessary for the installation of underground and overhead linear facilities (e.g., conduits, substructures, pipelines, towers, poles, cables, wires, connectors, switching, regulating and transforming equipment and associated ancillary facilities) and include, but are not limited to, underground utility mark-out, potholing, concrete and asphalt cutting and removal, trenching, excavation, boring and drilling, access road and pole/tower pad and cable/wire pull station, substation construction, substructure installation, construction of tower footings and/or foundations, pole and tower installations, pipeline installations, welding, concrete and/or pavement repair or replacement, and stockpile/borrow locations.

22. Discharges of sediment from construction activities associated with oil and gas exploration, production, processing, or treatment operations or transmission facilities.[2]

23. Storm water discharges from dredge spoil placement that occur outside of U.S. Army Corps of Engineers jurisdiction (upland sites) and that disturb one or more acres of land surface from construction activity are covered by this General Permit. Construction sites that intend to disturb one or more acres of land within the jurisdictional boundaries of

[2] Pursuant to the Ninth Circuit Court of Appeals' decision in *NRDC v. EPA* (9th Cir. 2008) 526 F.3d 591, and subsequent denial of the U.S. EPA's petition for reconsideration in November 2008, oil and gas construction activities discharging storm water contaminated only with sediment are no longer exempt from the NPDES program.

a CWA § 404 permit should contact the appropriate Regional Water Board to determine whether this permit applies to the site.

C. Activities Not Covered Under the General Permit

24. Routine maintenance to maintain original line and grade, hydraulic capacity, or original purpose of the facility.

25. Disturbances to land surfaces solely related to agricultural operations such as disking, harrowing, terracing and leveling, and soil preparation.

26. Discharges of storm water from areas on tribal lands; construction on tribal lands is regulated by a federal permit.

27. Construction activity and land disturbance involving discharges of storm water within the Lake Tahoe Hydrologic Unit. The Lahontan Regional Water Board has adopted its own permit to regulate storm water discharges from construction activity in the Lake Tahoe Hydrologic Unit (Regional Water Board 6SLT). Owners of construction sites in this watershed must apply for the Lahontan Regional Water Board permit rather than the statewide Construction General Permit.

28. Construction activity that disturbs less than one acre of land surface, and that is not part of a larger common plan of development or the sale of one or more acres of disturbed land surface.

29. Construction activity covered by an individual NPDES Permit for storm water discharges.

30. Discharges from small (1 to 5 acre) construction activities with an approved Rainfall Erosivity Waiver authorized by U.S. EPA Phase II regulations certifying to the State Board that small construction activity will occur only when the Rainfall Erosivity Factor is less than 5 (“R” in the Revised Universal Soil Loss Equation).

31. Landfill construction activity that is subject to the Industrial General Permit.

32. Construction activity that discharges to Combined Sewer Systems.

33. Conveyances that discharge storm water runoff combined with municipal sewage.

34. Discharges of storm water identified in CWA § 402(*l*)(2), 33 U.S.C. § 1342(*l*)(2).

35. Discharges occurring in basins that are not tributary or hydrologically connected to waters of the United States (for more information contact your Regional Water Board).

D. Obtaining and Modifying General Permit Coverage

36. This General Permit requires all dischargers to electronically file all Permit Registration Documents (PRDs), Notices of Termination (NOT), changes of information, annual reporting, and other compliance documents required by this General Permit through the State Water Board's Storm water Multi-Application and Report Tracking System (SMARTS) website.

37. Any information provided to the Regional Water Board shall comply with the Homeland Security Act and any other federal law that concerns security in the United States; any information that does not comply should not be submitted.

38. This General Permit grants an exception from the Risk Determination requirements for existing sites covered under Water Quality Orders No. 99-08-DWQ, and No. 2003-0007-DWQ. For certain sites, adding additional requirements may not be cost effective. Construction sites covered under Water Quality Order No. 99-08-DWQ shall obtain permit coverage at the Risk Level 1. LUPs covered under Water Quality Order No. 2003-0007-DWQ shall obtain permit coverage as a Type 1 LUP. The Regional Water Boards have the authority to require Risk Determination to be performed on sites currently covered under Water Quality Orders No. 99-08-DWQ and No. 2003-0007-DWQ where they deem it necessary. The State Water Board finds that there are two circumstances when it may be appropriate for the Regional Water Boards to require a discharger that had filed an NOI under State Water Board Order No. 99-08-DWQ to recalculate the site's risk level. These circumstances are: (1) when the discharger has a demonstrated history of noncompliance with State Water Board Order No. 99-08-DWQ or; (2) when the discharger's site poses a significant risk of causing or contributing to an exceedance of a water quality standard without the implementation of the additional Risk Level 2 or 3 requirements.

E. Prohibitions

39. All discharges are prohibited except for the storm water and non-storm water discharges specifically authorized by this General Permit or another NPDES permit. Non-storm water discharges include a wide variety of sources, including improper dumping, spills, or leakage from storage tanks or transfer areas. Non-storm water discharges may

contribute significant pollutant loads to receiving waters. Measures to control spills, leakage, and dumping, and to prevent illicit connections during construction must be addressed through structural as well as non-structural Best Management Practices (BMPs)[3]. The State Water Board recognizes, however, that certain non-storm water discharges may be necessary for the completion of construction.

40. This General Permit prohibits all discharges which contain a hazardous substance in excess of reportable quantities established in 40 C.F.R. §§ 117.3 and 302.4, unless a separate NPDES Permit has been issued to regulate those discharges.

41. This General Permit incorporates discharge prohibitions contained in water quality control plans, as implemented by the State Water Board and the nine Regional Water Boards.

42. Pursuant to the Ocean Plan, discharges to Areas of Special Biological Significance (ASBS) are prohibited unless covered by an exception that the State Water Board has approved.

43. This General Permit prohibits the discharge of any debris[4] from construction sites. Plastic and other trash materials can cause negative impacts to receiving water beneficial uses. The State Water Board encourages the use of more environmentally safe, biodegradable materials on construction sites to minimize the potential risk to water quality.

F. Training

44. In order to improve compliance with and to maintain consistent enforcement of this General Permit, all dischargers are required to appoint two positions - the Qualified SWPPP Developer (QSD) and the Qualified SWPPP Practitioner (QSP) - who must obtain appropriate training. Together with the key stakeholders, the State and Regional Water Boards are leading the development of this curriculum through a collaborative organization called The Construction General Permit (CGP) Training Team.

45. The Professional Engineers Act (Bus. & Prof. Code section 6700, et seq.) requires that all engineering work must be performed by a California licensed engineer.

[3] BMPs are scheduling of activities, prohibitions of practices, maintenance procedures, and other management practices to prevent or reduce the discharge of pollutants to waters of the United States. BMPs also include treatment requirements, operating procedures, and practice to control site runoff, spillage or leaks, sludge or waste disposal, or drainage from raw material storage.

[4] Litter, rubble, discarded refuse, and remains of destroyed inorganic anthropogenic waste.

G. Determining and Reducing Risk

46. The risk of accelerated erosion and sedimentation from wind and water depends on a number of factors, including proximity to receiving water bodies, climate, topography, and soil type.

47. This General Permit requires dischargers to assess the risk level of a site based on both sediment transport and receiving water risk. This General Permit contains requirements for Risk Levels 1, 2 and 3, and LUP Risk Type 1, 2, and 3 (Attachment A). Risk levels are established by determining two factors: first, calculating the site's sediment risk; and second, receiving water risk during periods of soil exposure (i.e. grading and site stabilization). Both factors are used to determine the site-specific Risk Level(s). LUPs can be determined to be Type 1 based on the flowchart in Attachment A.1.

48. Although this General Permit does not mandate specific setback distances, dischargers are encouraged to set back their construction activities from streams and wetlands whenever feasible to reduce the risk of impacting water quality (e.g., natural stream stability and habitat function). Because there is a reduced risk to receiving waters when setbacks are used, this General Permit gives credit to setbacks in the risk determination and post-construction storm water performance standards. The risk calculation and runoff reduction mechanisms in this General Permit are expected to facilitate compliance with any Regional Water Board and local agency setback requirements, and to encourage voluntary setbacks wherever practicable.

49. Rain events can occur at any time of the year in California. Therefore, a Rain Event Action Plan (REAP) is necessary for Risk Level 2 and 3 traditional construction projects (LUPs exempt) to ensure that active construction sites have adequate erosion and sediment controls implemented prior to the onset of a storm event, even if construction is planned only during the dry season.

50. Soil particles smaller than 0.02 millimeters (mm) (i.e., finer than medium silt) do not settle easily using conventional measures for sediment control (i.e., sediment basins). Given their long settling time, dislodging these soils results in a significant risk that fine particles will be released into surface waters and cause unacceptable downstream impacts. If operated correctly, an Active Treatment System (ATS[5]) can prevent or reduce the release of fine particles from construction sites.

[5] An ATS is a treatment system that employs chemical coagulation, chemical flocculation, or electro coagulation in order to reduce turbidity caused by fine suspended sediment.

Use of an ATS can effectively reduce a site's risk of impacting receiving waters.

51. Dischargers located in a watershed area where a Total Maximum Daily Load (TMDL) has been adopted or approved by the Regional Water Board or U.S. EPA may be required by a separate Regional Water Board action to implement additional BMPs, conduct additional monitoring activities, and/or comply with an applicable waste load allocation and implementation schedule. Such dischargers may also be required to obtain an individual Regional Water Board permit specific to the area.

H. Effluent Standards

52. The State Water Board convened a blue ribbon panel of storm water experts that submitted a report entitled, “The Feasibility of Numeric Effluent Limits Applicable to Discharges of Storm Water Associated with Municipal, Industrial and Construction Activities,” dated June 19, 2006. The panel concluded that numeric limits or action levels are technically feasible to control construction storm water discharges, provided that certain conditions are considered. The panel also concluded that numeric effluent limitations (NELs) are feasible for discharges from construction sites that utilize an ATS. The State Water Board has incorporated the expert panel’s suggestions into this General Permit, which includes numeric action levels (NALs) for pH and turbidity, and special numeric limits for ATS discharges.

Determining Compliance with Numeric Limitations

53. This General Permit sets a pH NAL of 6.5 to 8.5, and a turbidity NAL of 250 NTU. The purpose of the NAL and its associated monitoring requirement is to provide operational information regarding the performance of the measures used at the site to minimize the discharge of pollutants and to protect beneficial uses and receiving waters from the adverse effects of construction-related storm water discharges. An exceedance of a NAL does not constitute a violation of this General Permit.

54. This General Permit requires dischargers with NAL exceedances to immediately implement additional BMPs and revise their Storm Water Pollution Prevention Plans (SWPPPs) accordingly to either prevent pollutants and authorized non-storm water discharges from contaminating storm water, or to substantially reduce the pollutants to levels consistently below the NALs. NAL exceedances are reported in the State Water Boards SMARTS system, and the discharger is

required to provide an NAL Exceedance Report when requested by a Regional Water Board.

I. Receiving Water Limitations

55. This General Permit requires all enrolled dischargers to determine the receiving waters potentially affected by their discharges and to comply with all applicable water quality standards, including any more stringent standards applicable to a water body.

J. Sampling, Monitoring, Reporting and Record Keeping

56. Visual monitoring of storm water and non-storm water discharges is required for all sites subject to this General Permit.

57. Records of all visual monitoring inspections are required to remain on-site during the construction period and for a minimum of three years.

58. For all Risk Level 3/LUP Type 3 and Risk Level 2/LUP Type 2 sites, this General Permit requires effluent monitoring for pH and turbidity. Sampling, analysis and monitoring requirements for effluent monitoring for pH and turbidity are contained in this General Permit.

59. Risk Level 3 and LUP Type 3 sites with effluent that exceeds the Receiving Water Monitoring Triggers contained in this General Permit and with direct discharges to receiving water are required to conduct receiving water monitoring. An exceedance of a Receiving Water Monitoring Trigger does not constitute a violation of this General Permit.

60. This General Permit establishes a 5 year, 24 hour (expressed in inches of rainfall) as an exemptions to the receiving water monitoring requirements for Risk Level 3 and LUP Type 3 dischargers.

61. If run-on is caused by a forest fire or any other natural disaster, then receiving water monitoring triggers do not apply.

62. For Risk Level 3 and LUP Type 3 sites larger than 30 acres and with direct discharges to receiving waters, this General Permit requires bioassessment sampling before and after site completion to determine if significant degradation to the receiving water's biota has occurred. Bioassessment sampling guidelines are contained in this General Permit.

63. A summary and evaluation of the sampling and analysis results will be submitted in the Annual Reports.

64. This General Permit contains sampling, analysis and monitoring requirements for non-visible pollutants at all sites subject to this General Permit.

65. Compliance with the General Permit relies upon dischargers to electronically self-report any discharge violations and to comply with any Regional Water Board enforcement actions.

66. This General Permit requires that all dischargers maintain a paper or electronic copy of all required records for three years from the date generated or date submitted, whichever is last. These records must be available at the construction site until construction is completed. For LUPs, these documents may be retained in a crew member's vehicle and made available upon request.

K. Active Treatment System (ATS) Requirements

67. Active treatment systems add chemicals to facilitate flocculation, coagulation and filtration of suspended sediment particles. The uncontrolled release of these chemicals to the environment can negatively affect the beneficial uses of receiving waters and/or degrade water quality (e.g., acute and chronic toxicity). Additionally, the batch storage and treatment of storm water through an ATS' can potentially cause physical impacts on receiving waters if storage volume is inadequate or due to sudden releases of the ATS batches and improperly designed outfalls.

68. If designed, operated and maintained properly an ATS can achieve very high removal rates of suspended sediment (measured as turbidity), albeit at sometimes significantly higher costs than traditional erosion/sediment control practices. As a result, this General Permit establishes NELs consistent with the expected level of typical ATS performance.

69. This General Permit requires discharges of storm water associated with construction activity that undergo active treatment to comply with special operational and effluent limitations to ensure that these discharges do not adversely affect the beneficial uses of the receiving waters or cause degradation of their water quality.

70. For ATS discharges, this General Permit establishes technology-based NELs for turbidity.

71. This General Permit establishes a 10 year, 24 hour (expressed in inches of rainfall) Compliance Storm Event exemption from the technology-based numeric effluent limitations for ATS discharges. Exceedances of the ATS turbidity NEL constitutes a violation of this General Permit.

L. Post-Construction Requirements

72. This General Permit includes performance standards for post-construction that are consistent with State Water Board Resolution No. 2005-0006, "Resolution Adopting the Concept of Sustainability as a Core Value for State Water Board Programs and Directing Its Incorporation," and 2008-0030, "Requiring Sustainable Water Resources Management." The requirement for all construction sites to match pre-project hydrology will help ensure that the physical and biological integrity of aquatic ecosystems are sustained. This "runoff reduction" approach is analogous in principle to Low Impact Development (LID) and will serve to protect related watersheds and waterbodies from both hydrologic-based and pollution impacts associated with the post-construction landscape.

73. LUP projects are not subject to post-construction requirements due to the nature of their construction to return project sites to pre-construction conditions.

M. Storm Water Pollution Prevention Plan Requirements

74. This General Permit requires the development of a site-specific SWPPP. The SWPPP must include the information needed to demonstrate compliance with all requirements of this General Permit, and must be kept on the construction site and be available for review. The discharger shall ensure that a QSD develops the SWPPP.

75. To ensure proper site oversight, this General Permit requires a Qualified SWPPP Practitioner to oversee implementation of the BMPs required to comply with this General Permit.

N. Regional Water Board Authorities

76. Regional Water Boards are responsible for implementation and enforcement of this General Permit. A general approach to permitting is not always suitable for every construction site and environmental circumstances. Therefore, this General Permit recognizes that Regional Water Boards must have some flexibility and authority to alter, approve, exempt, or rescind permit authority granted under this

General Permit in order to protect the beneficial uses of our receiving waters and prevent degradation of water quality.

IT IS HEREBY ORDERED that all dischargers subject to this General Permit shall comply with the following conditions and requirements (including all conditions and requirements as set forth in Attachments A, B, C, D, E and F)[6]:

II. CONDITIONS FOR PERMIT COVERAGE

A. Linear Underground/Overhead Projects (LUPs)

1. Linear Underground/Overhead Projects (LUPs) include, but are not limited to, any conveyance, pipe, or pipeline for the transportation of any gaseous, liquid (including water and wastewater for domestic municipal services), liquescent, or slurry substance; any cable line or wire for the transmission of electrical energy; any cable line or wire for communications (e.g. telephone, telegraph, radio or television messages); and associated ancillary facilities. Construction activities associated with LUPs include, but are not limited to, (a) those activities necessary for the installation of underground and overhead linear facilities (e.g., conduits, substructures, pipelines, towers, poles, cables, wires, connectors, switching, regulating and transforming equipment, and associated ancillary facilities); and include, but are not limited to, (b) underground utility mark-out, potholing, concrete and asphalt cutting and removal, trenching, excavation, boring and drilling, access road and pole/tower pad and cable/wire pull station, substation construction, substructure installation, construction of tower footings and/or foundations, pole and tower installations, pipeline installations, welding, concrete and/ or pavement repair or replacement, and stockpile/borrow locations.

2. The Legally Responsible Person is responsible for obtaining coverage under the General Permit where the construction of pipelines, utility lines, fiber-optic cables, or other linear underground/overhead projects will occur across several properties unless the LUP construction activities are covered under another construction storm water permit.

3. Only LUPs shall comply with the conditions and requirements in Attachment A, A.1 & A.2 of this Order. The balance of this Order is not applicable to LUPs except as indicated in Attachment A.

[6] These attachments are part of the General Permit itself and are not separate documents that are capable of being updated independently by the State Water Board.

B. Obtaining Permit Coverage Traditional Construction Sites

1. The Legally Responsible Person (LRP) (see Special Provisions, Electronic Signature and Certification Requirements, Section IV.I.1) must obtain coverage under this General Permit.

2. To obtain coverage, the LRP must electronically file Permit Registration Documents (PRDs) prior to the commencement of construction activity. Failure to obtain coverage under this General Permit for storm water discharges to waters of the United States is a violation of the CWA and the California Water Code.

3. PRDs shall consist of:

   a. Notice of Intent (NOI)
   b. Risk Assessment (Section VIII)
   c. Site Map
   d. Storm Water Pollution Prevention Plan (Section XIV)
   e. Annual Fee
   f. Signed Certification Statement

   Any information provided to the Regional Water Board shall comply with the Homeland Security Act and any other federal law that concerns security in the United States; any information that does not comply should not be submitted.

   Attachment B contains additional PRD information. Dischargers must electronically file the PRDs, and mail the appropriate annual fee to the State Water Board.

4. This permit is effective on July 1, 2010.

   a. **Dischargers Obtaining Coverage On or After July 1, 2010:** All dischargers requiring coverage on or after July 1, 2010, shall electronically file their PRDs prior to the commencement of construction activities, and mail the appropriate annual fee no later than seven days prior to the commencement of construction activities. Permit coverage shall not commence until the PRDs and the annual fee are received by the State Water Board, and a WDID number is assigned and sent by SMARTS.

   b. **Dischargers Covered Under 99-08-DWQ and 2003-0007-DWQ:** Existing dischargers subject to State Water Board Order No. 99-08-DWQ (existing dischargers) will continue coverage under 99-08-DWQ until July 1, 2010. After July 1, 2010, all NOIs subject to State Water Board Order No. 99-08-DWQ will be terminated.

Existing dischargers shall electronically file their PRDs no later than July 1, 2010. If an existing discharger's site acreage subject to the annual fee has changed, it shall mail a revised annual fee no less than seven days after receiving the revised annual fee notification, **or else lose permit coverage**. All existing dischargers shall be exempt from the risk determination requirements in Section VIII of this General Permit until two years after permit adoption. All existing dischargers are therefore subject to Risk Level 1 requirements regardless of their site's sediment and receiving water risks. However, a Regional Board retains the authority to require an existing discharger to comply with the Section VIII risk determination requirements.

5. The discharger is only considered covered by this General Permit upon receipt of a Waste Discharger Identification (WDID) number assigned and sent by the State Water Board Storm water Multi-Application and Report Tracking System (SMARTS). In order to demonstrate compliance with this General Permit, the discharger must obtain a WDID number and must present documentation of a valid WDID upon demand.

6. During the period this permit is subject to review by the U.S. EPA, the prior permit (State Water Board Order No. 99-08-DWQ) remains in effect. Existing dischargers under the prior permit will continue to have coverage under State Water Board Order No. 99-08-DWQ until this General Permit takes effect on July 1, 2010. Dischargers who complete their projects and electronically file an NOT prior to July 1, 2010, are not required to obtain coverage under this General Permit.

7. Small Construction Rainfall Erosivity Waiver

   EPA's Small Construction Erosivity Waiver applies to sites between one and five acres demonstrating that there are no adverse water quality impacts.

   Dischargers eligible for a Rainfall Erosivity Waiver based on low erosivity potential shall complete the electronic Notice of Intent (NOI) and Sediment Risk form through the State Water Board's SMARTS system, certifying that the construction activity will take place during a period when the value of the rainfall erosivity factor is less than five. Where the LRP changes or another LRP is added during construction, the new LRP must also submit a waiver certification through the SMARTS system.

   If a small construction site continues beyond the projected completion date given on the waiver certification, the LRP shall recalculate the

rainfall erosivity factor for the new project duration and submit this information through the SMARTS system. If the new R factor is below five (5), the discharger shall update through SMARTS all applicable information on the waiver certification and retain a copy of the revised waiver onsite. The LRP shall submit the new waiver certification 30 days prior to the projected completion date listed on the original waiver form to assure exemption from permitting requirements is uninterrupted. If the new R factor is five (5) or above, the LRP shall be required to apply for coverage under this Order.

8. In the case of a public emergency that requires immediate construction activities, a discharger shall submit a brief description of the emergency construction activity within five days of the onset of construction, and then shall submit all PRDs within thirty days.

C. Revising Permit Coverage for Change of Acreage or New Ownership

1. The discharger may reduce or increase the total acreage covered under this General Permit when a portion of the site is complete and/or conditions for termination of coverage have been met (See Section II.D Conditions for Termination of Coverage); when ownership of a portion of the site is sold to a different entity; or when new acreage, subject to this General Permit, is added to the site.

2. Within 30 days of a reduction or increase in total disturbed acreage, the discharger shall electronically file revisions to the PRDs that include:

   a. A revised NOI indicating the new project size;

   b. A revised site map showing the acreage of the site completed, acreage currently under construction, acreage sold/transferred or added, and acreage currently stabilized in accordance with the Conditions for Termination of Coverage in Section II.D below.

   c. SWPPP revisions, as appropriate; and

   d. Certification that any new landowners have been notified of applicable requirements to obtain General Permit coverage. The certification shall include the name, address, telephone number, and e-mail address of the new landowner.

   e. If the project acreage has increased, dischargers shall mail payment of revised annual fees within 14 days of receiving the revised annual fee notification.

3. The discharger shall continue coverage under the General Permit for any parcel that has not achieved "Final Stabilization" as defined in Section II.D.

4. When an LRP with active General Permit coverage transfers its LRP status to another person or entity that qualifies as an LRP, the existing LRP shall inform the new LRP of the General Permit's requirements. In order for the new LRP to continue the construction activity on its parcel of property, the new LRP, or the new LRP's approved signatory, must submit PRDs in accordance with this General Permit's requirements.

D. Conditions for Termination of Coverage

1. Within 90 days of when construction is complete or ownership has been transferred, the discharger shall electronically file a Notice of Termination (NOT), a final site map, and photos through the State Water Boards SMARTS system. Filing a NOT certifies that all General Permit requirements have been met. The Regional Water Board will consider a construction site complete only when all portions of the site have been transferred to a new owner, or all of the following conditions have been met:

   a. For purposes of "final stabilization," the site will not pose any additional sediment discharge risk than it did prior to the commencement of construction activity;

   b. There is no potential for construction-related storm water pollutants to be discharged into site runoff;

   c. Final stabilization has been reached;

   d. Construction materials and wastes have been disposed of properly;

   e. Compliance with the Post-Construction Standards in Section XIII of this General Permit has been demonstrated;

   f. Post-construction storm water management measures have been installed and a long-term maintenance plan[7] has been established; and

   g. All construction-related equipment, materials and any temporary BMPs no longer needed are removed from the site.

[7] For the purposes of this requirement a long-term maintenance plan will be designed for a minimum of five years, and will describe the procedures to ensure that the post-construction storm water management measures are adequately maintained.

2. The discharger shall certify that final stabilization conditions are satisfied in their NOT. Failure to certify shall result in continuation of permit coverage and annual billing.

3. The NOT must demonstrate through photos, RUSLE or RUSLE2, or results of testing and analysis that the site meets all of the conditions above (Section II.D.1) and the final stabilization condition (Section II.D.1.a) is attained by one of the following methods:

   a. "70% final cover method," no computational proof required

      OR:

   b. "RUSLE or RUSLE2 method," computational proof required

      OR:

   c. "Custom method", the discharger shall demonstrate in some other manner than a or b, above, that the site complies with the "final stabilization" requirement in Section II.D.1.a.

III. DISCHARGE PROHIBITIONS

A. Dischargers shall not violate any discharge prohibitions contained in applicable Basin Plans or statewide water quality control plans. Waste discharges to Areas of Special Biological Significance (ASBS) are prohibited by the California Ocean Plan, unless granted an exception issued by the State Water Board.

B. All discharges are prohibited except for the storm water and non-storm water discharges specifically authorized by this General Permit or another NPDES permit.

C. Authorized non-storm water discharges may include those from de-chlorinated potable water sources such as: fire hydrant flushing, irrigation of vegetative erosion control measures, pipe flushing and testing, water to control dust, uncontaminated ground water from dewatering, and other discharges not subject to a separate general NPDES permit adopted by a Regional Water Board. The discharge of non-storm water is authorized under the following conditions:

1. The discharge does not cause or contribute to a violation of any water quality standard;

2. The discharge does not violate any other provision of this General Permit;

3. The discharge is not prohibited by the applicable Basin Plan;

4. The discharger has included and implemented specific BMPs required by this General Permit to prevent or reduce the contact of the non-storm water discharge with construction materials or equipment.

5. The discharge does not contain toxic constituents in toxic amounts or (other) significant quantities of pollutants;

6. The discharge is monitored and meets the applicable NALs; and

7. The discharger reports the sampling information in the Annual Report.

If any of the above conditions are not satisfied, the discharge is not authorized by this General Permit. The discharger shall notify the Regional Water Board of any anticipated non-storm water discharges not already authorized by this General Permit or another NPDES permit, to determine whether a separate NPDES permit is necessary.

D. Debris resulting from construction activities are prohibited from being discharged from construction sites.

E. When soil contamination is found or suspected and a responsible party is not identified, or the responsible party fails to promptly take the appropriate action, the discharger shall have those soils sampled and tested to ensure proper handling and public safety measures are implemented. The discharger shall notify the appropriate local, State, and federal agency(ies) when contaminated soil is found at a construction site, and will notify the appropriate Regional Water Board.

IV. SPECIAL PROVISIONS

A. Duty to Comply

1. The discharger shall comply with all of the conditions of this General Permit. Any permit noncompliance constitutes a violation of the Clean Water Act (CWA) and the Porter-Cologne Water Quality Control Act and is grounds for enforcement action and/or removal from General Permit coverage.

2. The discharger shall comply with effluent standards or prohibitions established under Section 307(a) of the CWA for toxic pollutants within the time provided in the regulations that establish these standards or prohibitions, even if this General Permit has not yet been modified to incorporate the requirement.

B. General Permit Actions

1. This General Permit may be modified, revoked and reissued, or terminated for cause. The filing of a request by the discharger for a General Permit modification, revocation and reissuance, or termination, or a notification of planned changes or anticipated noncompliance does not annul any General Permit condition.

2. If any toxic effluent standard or prohibition (including any schedule of compliance specified in such effluent standard or prohibition) is promulgated under Section 307(a) of the CWA for a toxic pollutant which is present in the discharge and that standard or prohibition is more stringent than any limitation on the pollutant in this General Permit, this General Permit shall be modified or revoked and reissued to conform to the toxic effluent standard or prohibition and the dischargers so notified.

C. Need to Halt or Reduce Activity Not a Defense

It shall not be a defense for a discharger in an enforcement action that it would have been necessary to halt or reduce the permitted activity in order to maintain compliance with the conditions of this General Permit.

D. Duty to Mitigate

The discharger shall take all responsible steps to minimize or prevent any discharge in violation of this General Permit, which has a reasonable likelihood of adversely affecting human health or the environment.

E. Proper Operation and Maintenance

The discharger shall at all times properly operate and maintain any facilities and systems of treatment and control (and related appurtenances) which are installed or used by the discharger to achieve compliance with the conditions of this General Permit. Proper operation and maintenance also includes adequate laboratory controls and appropriate quality assurance procedures. Proper operation and maintenance may require the operation of backup or auxiliary facilities or similar systems installed by a discharger when necessary to achieve compliance with the conditions of this General Permit.

F. Property Rights

This General Permit does not convey any property rights of any sort or any exclusive privileges, nor does it authorize any injury to private property or any invasion of personal rights, nor does it authorize any infringement of Federal, State, or local laws or regulations.

G. Duty to Maintain Records and Provide Information

1. The discharger shall maintain a paper or electronic copy of all required records, including a copy of this General Permit, for three years from the date generated or date submitted, whichever is last. These records shall be available at the construction site until construction is completed.

2. The discharger shall furnish the Regional Water Board, State Water Board, or U.S. EPA, within a reasonable time, any requested information to determine compliance with this General Permit. The discharger shall also furnish, upon request, copies of records that are required to be kept by this General Permit.

H. Inspection and Entry

The discharger shall allow the Regional Water Board, State Water Board, U.S. EPA, and/or, in the case of construction sites which discharge through a municipal separate storm sewer, an authorized representative of the municipal operator of the separate storm sewer system receiving the discharge, upon the presentation of credentials and other documents as may be required by law, to:

1. Enter upon the discharger's premises at reasonable times where a regulated construction activity is being conducted or where records must be kept under the conditions of this General Permit;

2. Access and copy at reasonable times any records that must be kept under the conditions of this General Permit;

3. Inspect at reasonable times the complete construction site, including any off-site staging areas or material storage areas, and the erosion/sediment controls; and

4. Sample or monitor at reasonable times for the purpose of ensuring General Permit compliance.

I. Electronic Signature and Certification Requirements

1. All Permit Registration Documents (PRDs) and Notices of Termination (NOTs) shall be electronically signed, certified, and submitted via SMARTS to the State Water Board. Either the Legally Responsible Person (LRP), as defined in Appendix 5 – Glossary, or a person legally authorized to sign and certify PRDs and NOTs on behalf of the LRP (the LRP's Approved Signatory, as defined in Appendix 5 - Glossary) must submit all information electronically via SMARTS.

2. Changes to Authorization. If an Approved Signatory's authorization is no longer accurate, a new authorization satisfying the requirements of paragraph (a) of this section must be submitted via SMARTS prior to or together with any reports, information or applications to be signed by an Approved Signatory.

3. All Annual Reports, or other information required by the General Permit (other than PRDs and NOTs) or requested by the Regional Water Board, State Water Board, U.S. EPA, or local storm water management agency shall be certified and submitted by the LRP or the LRP's Approved Signatory.

J. Certification

Any person signing documents under Section IV.I above, shall make the following certification:

"I certify under penalty of law that this document and all attachments were prepared under my direction or supervision in accordance with a system designed to assure that qualified personnel properly gather and evaluate the information submitted. Based on my inquiry of the person or persons who manage the system or those persons directly responsible for gathering the information, to the best of my knowledge and belief, the information submitted is, true, accurate, and complete. I am aware that there are significant penalties for submitting false information, including the possibility of fine and imprisonment for knowing violations."

K. Anticipated Noncompliance

The discharger shall give advance notice to the Regional Water Board and local storm water management agency of any planned changes in the construction activity, which may result in noncompliance with General Permit requirements.

L. Bypass

Bypass[8] is prohibited. The Regional Water Board may take enforcement action against the discharger for bypass unless:

1. Bypass was unavoidable to prevent loss of life, personal injury or severe property damage;[9]

2. There were no feasible alternatives to bypass, such as the use of auxiliary treatment facilities, retention of untreated waste, or maintenance during normal periods of equipment downtime. This condition is not satisfied if adequate back-up equipment should have been installed in the exercise of reasonable engineering judgment to prevent a bypass that could occur during normal periods of equipment downtime or preventative maintenance;

3. The discharger submitted a notice at least ten days in advance of the need for a bypass to the Regional Water Board; or

4. The discharger may allow a bypass to occur that does not cause effluent limitations to be exceeded, but only if it is for essential maintenance to assure efficient operation. In such a case, the above bypass conditions are not applicable. The discharger shall submit notice of an unanticipated bypass as required.

M. Upset

1. A discharger that wishes to establish the affirmative defense of an upset[10] in an action brought for noncompliance shall demonstrate,

[8] The intentional diversion of waste streams from any portion of a treatment facility

[9] Severe property damage means substantial physical damage to property, damage to the treatment facilities that causes them to become inoperable, or substantial and permanent loss of natural resources that can reasonably be expected to occur in the absence of a bypass. Severe property damage does not mean economic loss caused by delays in production.

[10] An exceptional incident in which there is unintentional and temporary noncompliance the technology based numeric effluent limitations because of factors beyond the reasonable control of the discharger. An upset does not include noncompliance to the extent caused by operational error, improperly designed treatment facilities, inadequate treatment facilities, lack of preventative maintenance, or careless or improper operation.

through properly signed, contemporaneous operating logs, or other relevant evidence that:

a. An upset occurred and that the discharger can identify the cause(s) of the upset

b. The treatment facility was being properly operated by the time of the upset

c. The discharger submitted notice of the upset as required; and

d. The discharger complied with any remedial measures required

2. No determination made before an action of noncompliance occurs, such as during administrative review of claims that noncompliance was caused by an upset, is final administrative action subject to judicial review.

3. In any enforcement proceeding, the discharger seeking to establish the occurrence of an upset has the burden of proof

N. Penalties for Falsification of Reports

Section 309(c)(4) of the CWA provides that any person who knowingly makes any false material statement, representation, or certification in any record or other document submitted or required to be maintained under this General Permit, including reports of compliance or noncompliance shall upon conviction, be punished by a fine of not more than $10,000 or by imprisonment for not more than two years or by both.

O. Oil and Hazardous Substance Liability

Nothing in this General Permit shall be construed to preclude the institution of any legal action or relieve the discharger from any responsibilities, liabilities, or penalties to which the discharger is or may be subject to under Section 311 of the CWA.

P. Severability

The provisions of this General Permit are severable; and, if any provision of this General Permit or the application of any provision of this General Permit to any circumstance is held invalid, the application of such provision to other circumstances and the remainder of this General Permit shall not be affected thereby.

Q. Reopener Clause

This General Permit may be modified, revoked and reissued, or terminated for cause due to promulgation of amended regulations, receipt of U.S. EPA guidance concerning regulated activities, judicial decision, or in accordance with 40 Code of Federal Regulations (CFR) 122.62, 122.63, 122.64, and 124.5.

R. Penalties for Violations of Permit Conditions

1. Section 309 of the CWA provides significant penalties for any person who violates a permit condition implementing Sections 301, 302, 306, 307, 308, 318, or 405 of the CWA or any permit condition or limitation implementing any such section in a permit issued under Section 402. Any person who violates any permit condition of this General Permit is subject to a civil penalty not to exceed $37,500[11] per calendar day of such violation, as well as any other appropriate sanction provided by Section 309 of the CWA.

2. The Porter-Cologne Water Quality Control Act also provides for civil and criminal penalties, which in some cases are greater than those under the CWA.

S. Transfers

This General Permit is not transferable.

T. Continuation of Expired Permit

This General Permit continues in force and effect until a new General Permit is issued or the SWRCB rescinds this General Permit. Only those dischargers authorized to discharge under the expiring General Permit are covered by the continued General Permit.

[11] May be further adjusted in accordance with the Federal Civil Penalties Inflation Adjustment Act.

V. EFFLUENT STANDARDS & RECEIVING WATER MONITORING

A. Narrative Effluent Limitations

1. Storm water discharges and authorized non-storm water discharges regulated by this General Permit shall not contain a hazardous substance equal to or in excess of reportable quantities established in 40 C.F.R. §§ 117.3 and 302.4, unless a separate NPDES Permit has been issued to regulate those discharges.

2. Dischargers shall minimize or prevent pollutants in storm water discharges and authorized non-storm water discharges through the use of controls, structures, and management practices that achieve BAT for toxic and non-conventional pollutants and BCT for conventional pollutants.

Table 1- Numeric Action Levels, Test Methods, Detection Limits, and Reporting Units

Parameter	Test Method	Discharge Type	Min. Detection Limit	Units	Numeric Action Level
pH	Field test with calibrated portable instrument	Risk Level 2	0.2	pH units	lower NAL = 6.5 upper NAL = 8.5
		Risk Level 3			lower NAL = 6.5 upper NAL = 8.5
Turbidity	EPA 0180.1 and/or field test with calibrated portable instrument	Risk Level 2	1	NTU	250 NTU
		Risk Level 3			250 NTU

B. Numeric Action Levels (NALs)

1. For Risk Level 2 and 3 dischargers, the lower storm event average NAL for pH is 6.5 pH units and the upper storm event average NAL for

pH is 8.5 pH units. The discharger shall take actions as described below if the discharge is outside of this range of pH values.

2. For Risk Level 2 and 3 dischargers, the NAL storm event daily average for turbidity is 250 NTU. The discharger shall take actions as described below if the discharge is outside of this range of turbidity values.

3. Whenever the results from a storm event daily average indicate that the discharge is below the lower NAL for pH, exceeds the upper NAL for pH, or exceeds the turbidity NAL (as listed in Table 1), the discharger shall conduct a construction site and run-on evaluation to determine whether pollutant source(s) associated with the site's construction activity may have caused or contributed to the NAL exceedance and shall immediately implement corrective actions if they are needed.

4. The site evaluation shall be documented in the SWPPP and specifically address whether the source(s) of the pollutants causing the exceedance of the NAL:

   a. Are related to the construction activities and whether additional BMPs are required to (1) meet BAT/BCT requirements; (2) reduce or prevent pollutants in storm water discharges from causing exceedances of receiving water objectives; and (3) determine what corrective action(s) were taken or will be taken and with a description of the schedule for completion.

      AND/OR:

   b. Are related to the run-on associated with the construction site location and whether additional BMPs measures are required to (1) meet BAT/BCT requirements; (2) reduce or prevent pollutants in storm water discharges from causing exceedances of receiving water objectives; and (3) what corrective action(s) were taken or will be taken with a description of the schedule for completion.

C. Receiving Water Monitoring Triggers

1. The receiving water monitoring triggers for Risk Level 3 dischargers with direct discharges to surface waters are triggered when the daily average effluent pH values during any site phase when there is a high risk of pH discharge[12] fall outside of the range of 6.0 and 9.0 pH units, or when the daily average effluent turbidity exceeds 500 NTU.

2. Risk Level 3 dischargers with with direct discharges to surface waters shall conduct receiving water monitoring whenever their effluent monitoring results exceed the receiving water monitoring triggers. If the pH trigger is exceeded, the receiving water shall be monitored for pH for the duration of coverage under this General Permit. If the turbidity trigger is exceeded, the receiving water shall be monitored for turbidity and SSC for the duration of coverage under this general permit.

3. Risk Level 3 dischargers with direct discharges to surfaces waters shall initiate receiving water monitoring when the triggers are exceeded unless the storm event causing the exceedance is determined after the fact to equal to or greater than the 5-year 24-hour storm (expressed in inches of rainfall) as determined by using these maps:

   http://www.wrcc.dri.edu/pcpnfreq/nca5y24.gif
   http://www.wrcc.dri.edu/pcpnfreq/sca5y24.gif

   Verification of the 5-year 24-hour storm event shall be done by reporting on-site rain gauge readings as well as nearby governmental rain gauge readings.

4. If run-on is caused by a forest fire or any other natural disaster, then receiving water monitoring triggers do not apply.

[12] A period of high risk of pH discharge is defined as a project's complete utilities phase, complete vertical build phase, and any portion of any phase where significant amounts of materials are placed directly on the land at the site in a manner that could result in significant alterations of the background pH of the discharges.

VI. RECEIVING WATER LIMITATIONS

A. The discharger shall ensure that storm water discharges and authorized non-storm water discharges to any surface or ground water will not adversely affect human health or the environment.

B. The discharger shall ensure that storm water discharges and authorized non-storm water discharges will not contain pollutants in quantities that threaten to cause pollution or a public nuisance.

C. The discharger shall ensure that storm water discharges and authorized non-storm water discharges will not contain pollutants that cause or contribute to an exceedance of any applicable water quality objectives or water quality standards (collectively, WQS) contained in a Statewide Water Quality Control Plan, the California Toxics Rule, the National Toxics Rule, or the applicable Regional Water Board's Water Quality Control Plan (Basin Plan).

D. Dischargers located within the watershed of a CWA § 303(d) impaired water body, for which a TMDL has been approved by the U.S. EPA, shall comply with the approved TMDL if it identifies "construction activity" or land disturbance as a source of the pollution.

VII. TRAINING QUALIFICATIONS AND CERTIFICATION REQUIREMENTS

A. General

The discharger shall ensure that all persons responsible for implementing requirements of this General Permit shall be appropriately trained in accordance with this Section. Training should be both formal and informal, occur on an ongoing basis, and should include training offered by recognized governmental agencies or professional organizations. Those responsible for preparing and amending SWPPPs shall comply with the requirements in this Section VII.

The discharger shall provide documentation of all training for persons responsible for implementing the requirements of this General Permit in the Annual Reports.

B. SWPPP Certification Requirements

1. **Qualified SWPPP Developer:** The discharger shall ensure that SWPPPs are written, amended and certified by a Qualified SWPPP Developer (QSD). A QSD shall have one of the following registrations or certifications, and appropriate experience, as required for:

   a. A California registered professional civil engineer;

   b. A California registered professional geologist or engineering geologist;

   c. A California registered landscape architect;

   d. A professional hydrologist registered through the American Institute of Hydrology;

   e. A Certified Professional in Erosion and Sediment Control (CPESC) ™ registered through Enviro Cert International, Inc.;

   f. A Certified Professional in Storm Water Quality (CPSWQ) ™ registered through Enviro Cert International, Inc.; or

   g. A professional in erosion and sediment control registered through the National Institute for Certification in Engineering Technologies (NICET).

Effective two years after the adoption date of this General Permit, a QSD shall have attended a State Water Board-sponsored or approved QSD training course.

2. The discharger shall list the name and telephone number of the currently designated Qualified SWPPP Developer(s) in the SWPPP.

3. **Qualified SWPPP Practitioner:** The discharger shall ensure that all BMPs required by this General Permit are implemented by a Qualified SWPPP Practitioner (QSP). A QSP is a person responsible for non-storm water and storm water visual observations, sampling and analysis. Effective two years from the date of adoption of this General Permit, a QSP shall be either a QSD or have one of the following certifications:

   a. A certified erosion, sediment and storm water inspector registered through Enviro Cert International, Inc.; or

   b. A certified inspector of sediment and erosion control registered through Certified Inspector of Sediment and Erosion Control, Inc.

   Effective two years after the adoption date of this General Permit, a QSP shall have attended a State Water Board-sponsored or approved QSP training course.

4. The LRP shall list in the SWPPP, the name of any Approved Signatory, and provide a copy of the written agreement or other mechanism that provides this authority from the LRP in the SWPPP.

5. The discharger shall include, in the SWPPP, a list of names of all contractors, subcontractors, and individuals who will be directed by the Qualified SWPPP Practitioner. This list shall include telephone numbers and work addresses. Specific areas of responsibility of each subcontractor and emergency contact numbers shall also be included.

6. The discharger shall ensure that the SWPPP and each amendment will be signed by the Qualified SWPPP Developer. The discharger shall include a listing of the date of initial preparation and the date of each amendment in the SWPPP.

VIII. RISK DETERMINATION

The discharger shall calculate the site's sediment risk and receiving water risk during periods of soil exposure (i.e. grading and site stabilization) and use the calculated risks to determine a Risk Level(s) using the methodology in

Appendix 1. For any site that spans two or more planning watersheds,[13] the discharger shall calculate a separate Risk Level for each planning watershed. The discharger shall notify the State Water Board of the site's Risk Level determination(s) and shall include this determination as a part of submitting the PRDs. If a discharger ends up with more than one Risk Level determination, the Regional Water Board may choose to break the project into separate levels of implementation.

IX. RISK LEVEL 1 REQUIREMENTS

Risk Level 1 Dischargers shall comply with the requirements included in Attachment C of this General Permit.

X. RISK LEVEL 2 REQUIREMENTS

Risk Level 2 Dischargers shall comply with the requirements included in Attachment D of this General Permit.

XI. RISK LEVEL 3 REQUIREMENTS

Risk Level 3 Dischargers shall comply with the requirements included in Attachment E of this General Permit.

XII. ACTIVE TREATMENT SYSTEMS (ATS)

Dischargers choosing to implement an ATS on their site shall comply with all of the requirements in Attachment F of this General Permit.

[13] Planning watershed: defined by the Calwater Watershed documents as a watershed that ranges in size from approximately 3,000 to 10,000 acres http://cain.ice.ucdavis.edu/calwater/calwfaq.html, http://gis.ca.gov/catalog/BrowseRecord.epl?id=22175 .

XIII. POST-CONSTRUCTION STANDARDS

A. All dischargers shall comply with the following runoff reduction requirements unless they are located within an area subject to post-construction standards of an active Phase I or II municipal separate storm sewer system (MS4) permit that has an approved Storm Water Management Plan.

1. This provision shall take effect three years from the adoption date of this permit, or later at the discretion of the Executive Officer of the Regional Board.

2. The discharger shall demonstrate compliance with the requirements of this section by submitting with their NOI a map and worksheets in accordance with the instructions in Appendix 2. The discharger shall use non-structural controls unless the discharger demonstrates that non-structural controls are infeasible or that structural controls will produce greater reduction in water quality impacts.

3. The discharger shall, through the use of non-structural and structural measures as described in Appendix 2, replicate the pre-project water balance (for this permit, defined as the volume of rainfall that ends up as runoff) for the smallest storms up to the 85th percentile storm event (or the smallest storm event that generates runoff, whichever is larger). Dischargers shall inform Regional Water Board staff at least 30 days prior to the use of any structural control measure used to comply with this requirement. Volume that cannot be addressed using non-structural practices shall be captured in structural practices and approved by the Regional Water Board. When seeking Regional Board approval for the use of structural practices, dischargers shall document the infeasibility of using non-structural practices on the project site, or document that there will be fewer water quality impacts through the use of structural practices.

4. For sites whose disturbed area exceeds two acres, the discharger shall preserve the pre-construction drainage density (miles of stream length per square mile of drainage area) for all drainage areas within the area serving a first order stream[14] or larger stream and ensure that post-project time of runoff concentration is equal or greater than pre-project time of concentration.

[14] A first order stream is defined as a stream with no tributaries.

B. All dischargers shall implement BMPs to reduce pollutants in storm water discharges that are reasonably foreseeable after all construction phases have been completed at the site (Post-construction BMPs).

XIV. SWPPP REQUIREMENTS

A. The discharger shall ensure that the Storm Water Pollution Prevention Plans (SWPPPs) for all traditional project sites are developed and amended or revised by a QSD. The SWPPP shall be designed to address the following objectives:

1. All pollutants and their sources, including sources of sediment associated with construction, construction site erosion and all other activities associated with construction activity are controlled;

2. Where not otherwise required to be under a Regional Water Board permit, all non-storm water discharges are identified and either eliminated, controlled, or treated;

3. Site BMPs are effective and result in the reduction or elimination of pollutants in storm water discharges and authorized non-storm water discharges from construction activity to the BAT/BCT standard;

4. Calculations and design details as well as BMP controls for site run-on are complete and correct, and

5. Stabilization BMPs installed to reduce or eliminate pollutants after construction are completed.

B. To demonstrate compliance with requirements of this General Permit, the QSD shall include information in the SWPPP that supports the conclusions, selections, use, and maintenance of BMPs.

C. The discharger shall make the SWPPP available at the construction site during working hours while construction is occurring and shall be made available upon request by a State or Municipal inspector. When the original SWPPP is retained by a crewmember in a construction vehicle and is not currently at the construction site, current copies of the BMPs and map/drawing will be left with the field crew and the original SWPPP shall be made available via a request by radio/telephone.

XV. REGIONAL WATER BOARD AUTHORITIES

A. In the case where the Regional Water Board does not agree with the discharger's self-reported risk level (e.g., they determine themselves to be a Level 1 Risk when they are actually a Level 2 Risk site), Regional Water Boards may either direct the discharger to reevaluate the Risk Level(s) for their site or terminate coverage under this General Permit.

B. Regional Water Boards may terminate coverage under this General Permit for dischargers who fail to comply with its requirements or where they determine that an individual NPDES permit is appropriate.

C. Regional Water Boards may require dischargers to submit a Report of Waste Discharge / NPDES permit application for Regional Water Board consideration of individual requirements.

D. Regional Water Boards may require additional Monitoring and Reporting Program Requirements, including sampling and analysis of discharges to sediment-impaired water bodies.

E. Regional Water Boards may require dischargers to retain records for more than the three years required by this General Permit.

XVI. ANNUAL REPORTING REQUIREMENTS

A. All dischargers shall prepare and electronically submit an Annual Report no later than September 1 of each year.

B. The discharger shall certify each Annual Report in accordance with the Special Provisions.

C. The discharger shall retain an electronic or paper copy of each Annual Report for a minimum of three years after the date the annual report is filed.

D. The discharger shall include storm water monitoring information in the Annual Report consisting of:

1. a summary and evaluation of all sampling and analysis results, including copies of laboratory reports;

2. the analytical method(s), method reporting unit(s), and method detection limit(s) of each analytical parameter (analytical results that are less than the method detection limit shall be reported as "less than the method detection limit");

3. a summary of all corrective actions taken during the compliance year;

4. identification of any compliance activities or corrective actions that were not implemented;

5. a summary of all violations of the General Permit;

6. the names of individual(s) who performed the facility inspections, sampling, visual observation (inspections), and/or measurements;

7. the date, place, time of facility inspections, sampling, visual observation (inspections), and/or measurements, including precipitation (rain gauge); and

8. the visual observation and sample collection exception records and reports specified in Attachments C, D, and E.

E. The discharger shall provide training information in the Annual Report consisting of:

1. documentation of all training for individuals responsible for all activities associated with compliance with this General Permit;

2. documentation of all training for individuals responsible for BMP installation, inspection, maintenance, and repair; and

3. documentation of all training for individuals responsible for overseeing, revising, and amending the SWPPP.

ATTACHMENT A
Linear Underground/ Overhead Requirements

A. DEFINITION OF LINEAR UNDERGROUND/OVERHEAD PROJECTS 1
B. LINEAR PROJECT PERMIT REGISTRATION DOCUMENTS (PRDs) 3
C. LINEAR PROJECT TERMINATION OF COVERAGE REQUIREMENTS..4
D. DISCHARGE PROHIBITIONS 6
E. SPECIAL PROVISIONS.....8
F. EFFLUENT STANDARDS & RECEIVING WATER MONITORING 13
G. RECEIVING WATER LIMITATIONS 16
H. TRAINING QUALIFICATIONS 17
I. TYPES OF LINEAR PROJECTS 19
J. LUP TYPE-SPECIFIC REQUIREMENTS 20
K. STORM WATER POLLUTION PREVENTION PLAN (SWPPP) REQUIREMENTS 28
L. REGIONAL WATER BOARD AUTHORITIES.....29
M. MONITORING AND REPORTING REQUIREMENTS 31

All Linear Underground/Overhead project dischargers who submit permit registration documents (PRDs) indicating their intention to be regulated under the provisions of this General Permit shall comply with the following:

A. DEFINITION OF LINEAR UNDERGROUND/OVERHEAD PROJECTS

1. Linear Underground/Overhead Projects (LUPs) include, but are not limited to, any conveyance, pipe, or pipeline for the transportation of any gaseous, liquid (including water and wastewater for domestic municipal services), liquiescent, or slurry substance; any cable line or wire for the transmission of electrical energy; any cable line or wire for communications (e.g., telephone, telegraph, radio, or television messages); and associated ancillary facilities. Construction activities associated with LUPs include, but are not limited to, (a) those activities necessary for the installation of underground and overhead linear facilities (e.g., conduits, substructures, pipelines, towers, poles, cables, wires, connectors, switching, regulating and transforming equipment, and associated ancillary facilities); and include, but are not limited to, (b) underground utility mark-out, potholing, concrete and asphalt cutting and removal, trenching, excavation, boring and drilling, access road and pole/tower pad and cable/wire pull station, substation construction, substructure installation, construction of tower footings and/or foundations, pole and tower installations, pipeline installations, welding, concrete and/ or pavement repair or replacement, and stockpile/borrow locations.

2. LUP evaluation shall consist of two tasks:

a. Confirm that the project or project section(s) qualifies as an LUP. The State Water Board website contains a project determination guidance flowchart. http://www.waterboards.ca.gov/water_issues/programs/stormwater/constpermits.shtml

b. Identify which Type(s) (1, 2 or 3 described in Section I below) are applicable to the project or project sections based on project sediment and receiving water risk. (See Attachment A.1)

3. A Legally Responsible Person (LRP) for a Linear Underground/Overhead project is required to obtain CGP coverage under one or more permit registration document (PRD) electronic submittals to the State Water Board's Storm Water Multi-Application and Report Tracking (SMARTs) system. Attachment A.1 contains a flow chart to be used when determining if a linear project qualifies for coverage and to determine LUP Types. Since a LUP may be constructed within both developed and undeveloped locations and portions of LUPs may be constructed by different contractors, LUPs may be broken into logical permit sections. Sections may be determined based on portions of a project conducted by one contractor. Other situations may also occur, such as the time period in which the sections of a project will be constructed (e.g. project phases), for which separate permit coverage is possible. For projects that are broken into separate sections, a description of how each section relates to the overall project and the definition of the boundaries between sections shall be clearly stated.

4. Where construction activities transverse or enter into different Regional Water Board jurisdictions, LRPs shall obtain permit coverage for each Regional Water Board area involved prior to the commencement of construction activities.

5. Small Construction Rainfall Erosivity Waiver

EPA's Small Construction Erosivity Waiver applies to sites between one and five acres demonstrating that there are no adverse water quality impacts.

Dischargers eligible for a Rainfall Erosivity Waiver based on low erosivity potential shall complete the electronic Notice of Intent (NOI) and Sediment Risk form through the State Water Board's SMARTS system, certifying that the construction activity will take place during a period when the value of the rainfall erosivity factor is less than five. Where the LRP changes or another LRP is added during construction, the new LRP must also submit a waiver certification through the SMARTS system.

If a small linear construction site continues beyond the projected completion date given on the waiver certification, the LRP shall recalculate the rainfall erosivity factor for the new project duration and submit this information through the SMARTS system. If the new R factor is below five (5), the discharger shall update through SMARTS all applicable information on the waiver certification and retain a copy of the revised waiver onsite. The LRP shall submit the new waiver certification 30 days prior to the projected completion date listed on the original waiver form to assure exemption from permitting requirements is uninterrupted. If the new R factor is five (5) or above, the LRP shall be required to apply for coverage under this Order.

B. LINEAR PROJECT PERMIT REGISTRATION DOCUMENTS (PRDs)

Any information provided to the Regional Water Board shall comply with the Homeland Security Act and any other federal law that concerns security in the United States; any information that does not comply should not be submitted. PRDs shall consist of the following:

1. Notice of Intent (NOI)

Prior to construction activities, the LRP of a proposed linear underground/overhead project shall utilize the processes and methods provided in Attachment A.2, Permit Registration Documents (PRDs) – General Instructions for Linear Underground/Overhead Projects to comply with the Construction General Permit.

2. Site Maps

LRPs submitting PRDs shall include at least 3 maps. The first map will be a zoomed[1] 1000-1500 ft vicinity map that shows the starting point of the project. The second will be a zoomed map of 1000-1500 ft showing the ending location of the project. The third will be a larger view vicinity map, 1000 ft to 2000 ft, displaying the entire project location depending on the project size, and indicating the LUP type (1, 2 or 3) areas within the total project footprint.

3. Drawings

LRPs submitting PRDs shall include a construction drawing(s) or other appropriate drawing(s) or map(s) that shows the locations of storm drain

[1] An image with a close-up/enhanced detailed view of site features that show minute details such as streets and neighboring structures.
Or: An image with a close-up/enhanced detailed view of the site's surrounding infrastructure.
Or: An image with a close up detailed view of the project and its surroundings.

inlets and waterbodies[2] that may receive discharges from the construction activities and that shows the locations of BMPs to be installed for all those BMPs that can be illustrated on the revisable drawing(s) or map(s). If storm drain inlets, waterbodies, and/or BMPs cannot be adequately shown on the drawing(s) or map(s) they should be described in detail within the SWPPP.

4. Storm Water Pollution Prevention Plan (SWPPP)

LUP dischargers shall comply with the SWPPP Preparation, Implementation, and Oversight requirements in Section K of this Attachment.

5. Contact information

LUP dischargers shall include contact information for all contractors (or subcontractors) responsible for each area of an LUP project. This should include the names, telephone numbers, and addresses of contact personnel. Specific areas of responsibility of each contact, and emergency contact numbers should also be included.

6. In the case of a public emergency that requires immediate construction activities, a discharger shall submit a brief description of the emergency construction activity within five days of the onset of construction, and then shall submit all PRDs within thirty days.

C. LINEAR PROJECT TERMINATION OF COVERAGE REQUIREMENTS

The LRP may terminate coverage of an LUP when construction activities are completed by submitting an electronic notice of termination (NOT) through the State Water Board's SMARTS system. Termination requirements are different depending on the complexity of the LUP. An LUP is considered complete when: (a) there is no potential for construction-related storm water pollution; (b) all elements of the SWPPP have been completed; (c) construction materials and waste have been disposed of properly; (d) the site is in compliance with all local storm water management requirements; and (e) the LRP submits a notice of termination (NOT) and has received approval for termination from the appropriate Regional Water Board office.

1. LUP Stabilization Requirements

The LUP discharger shall ensure that all disturbed areas of the construction site are stabilized prior to termination of coverage under this General Permit. Final stabilization for the purposes of submitting an NOT

[2] Includes basin(s) that the MS4 storm sewer systems may drain to for Hydromodification or Hydrological Conditional of Concerns under the MS4 permits.

is satisfied when all soil disturbing activities are completed and one of the following criteria is met:

a. In disturbed areas that were vegetated prior to construction activities of the LUP, the area disturbed must be re-established to a uniform vegetative cover equivalent to 70 percent coverage of the preconstruction vegetative conditions. Where preconstruction vegetation covers less than 100 percent of the surface, such as in arid areas, the 70 percent coverage criteria is adjusted as follows: if the preconstruction vegetation covers 50 percent of the ground surface, 70 percent of 50 percent (.70 X .50=.35) would require 35 percent total uniform surface coverage; or

b. Where no vegetation is present prior to construction, the site is returned to its original line and grade and/or compacted to achieve stabilization; or

c. Equivalent stabilization measures have been employed. These measures include, but are not limited to, the use of such BMPs as blankets, reinforced channel liners, soil cement, fiber matrices, geotextiles, or other erosion resistant soil coverings or treatments.

2. LUP Termination of Coverage Requirements

The LRP shall file an NOT through the State Water Board's SMARTS system. By submitting an NOT, the LRP is certifying that construction activities for an LUP are complete and that the project is in full compliance with requirements of this General Permit and that it is now compliant with soil stabilization requirements where appropriate. Upon approval by the appropriate Regional Water Board office, permit coverage will be terminated.

3. Revising Coverage for Change of Acreage

When the LRP of a portion of an LUP construction project changes, or when a phase within a multi-phase project is completed, the LRP may reduce the total acreage covered by this General Permit. In reducing the acreage covered by this General Permit, the LRP shall electronically file revisions to the PRDs that include:

a. a revised NOI indicating the new project size;

b. a revised site map showing the acreage of the project completed, acreage currently under construction, acreage sold, transferred or added, and acreage currently stabilized.

c. SWPPP revisions, as appropriate; and

d. certification that any new LRPs have been notified of applicable requirements to obtain General Permit coverage. The certification shall include the name, address, telephone number, and e-mail address (if known) of the new LRP.

If the project acreage has increased, dischargers shall mail payment of revised annual fees within 14 days of receiving the revised annual fee notification.

D. DISCHARGE PROHIBITIONS

1. LUP dischargers shall not violate any discharge prohibitions contained in applicable Basin Plans or statewide water quality control plans. Waste discharges to Areas of Special Biological Significance (ASBS) are prohibited by the California Ocean Plan, unless granted an exception issued by the State Water Board.

2. LUP dischargers are prohibited from discharging non-storm water that is not otherwise authorized by this General Permit. Non-storm water discharges authorized by this General Permit[3] may include, fire hydrant flushing, irrigation of vegetative erosion control measures, pipe flushing and testing, water to control dust, street cleaning, dewatering,[4] uncontaminated groundwater from dewatering, and other discharges not subject to a separate general NPDES permit adopted by a Regional Water Board. Such discharges are allowed by this General Permit provided they are not relied upon to clean up failed or inadequate construction or post-construction BMPs designed to keep materials on site. These authorized non-storm water discharges:

[3] Dischargers must identify all authorized non-storm water discharges in the LUP's SWPPP and identify BMPs that will be implemented to either eliminate or reduce pollutants in non-storm water discharges. Regional Water Boards may direct the discharger to discontinue discharging such non-storm water discharges if determined that such discharges discharge significant pollutants or threaten water quality.
[4] Dewatering activities may be prohibited or need coverage under a separate permit issued by the Regional Water Boards. Dischargers shall check with the appropriate Regional Water Boards for any required permit or basin plan conditions prior to initial dewatering activities to land, storm drains, or waterbodies.

a. Shall not cause or contribute to a violation of any water quality standard;

b. Shall not violate any other provision of this General Permit;

c. Shall not violate any applicable Basin Plan;

d. Shall comply with BMPs as described in the SWPPP;

e. Shall not contain toxic constituents in toxic amounts or (other) significant quantities of pollutants;

f. Shall be monitored and meets the applicable NALs; and

g. Shall be reported by the discharger in the Annual Report.

If any of the above conditions are not satisfied, the discharge is not authorized by this General Permit. The discharger shall notify the Regional Water Board of any anticipated non-storm water discharges not authorized by this General Permit to determine the need for a separate NPDES permit.

Additionally, some LUP dischargers may be required to obtain a separate permit if the applicable Regional Water Board has adopted a General Permit for dewatering discharges. Wherever feasible, alternatives, that do not result in the discharge of non-storm water, shall be implemented in accordance with this Attachment's Section K.2 - SWPPP Implementation Schedule.

3. LUP dischargers shall ensure that trench spoils or any other soils disturbed during construction activities that are contaminated[5] are not discharged with storm water or non-storm water discharges into any storm drain or water body except pursuant to an NPDES permit.

When soil contamination is found or suspected and a responsible party is not identified, or the responsible party fails to promptly take the appropriate action, the LUP discharger shall have those soils sampled and tested to ensure that proper handling and public safety measures are

[5] Contaminated soil contains pollutants in concentrations that exceed the appropriate thresholds that various regulatory agencies set for those substances. Preliminary testing of potentially contaminated soils will be based on odor, soil discoloration, or prior history of the site's chemical use and storage and other similar factors. When soil contamination is found or suspected and a responsible party is not identified, or the responsible party fails to promptly take the appropriate action, the discharger shall have those soils sampled and tested to ensure proper handling and public safety measures are implemented. The legally responsible person will notify the appropriate local, State, or federal agency(ies) when contaminated soil is found at a construction site, and will notify the Regional Water Board by submitting an NOT at the completion of the project.

implemented. The LUP discharger shall notify the appropriate local, State, and federal agency(ies) when contaminated soil is found at a construction site, and will notify the appropriate Regional Water Board.

4. Discharging any pollutant-laden water that will cause or contribute to an exceedance of the applicable Regional Water Board's Basin Plan from a dewatering site or sediment basin into any receiving water or storm drain is prohibited.

5. Debris[6] resulting from construction activities are prohibited from being discharged from construction project sites.

E. SPECIAL PROVISIONS

1. Duty to Comply

a. The LUP discharger must comply with all of the conditions of this General Permit. Any permit noncompliance constitutes a violation of the Clean Water Act (CWA) and the Porter-Cologne Water Quality Control Act and is grounds for enforcement action and/or removal from General Permit coverage.

b. The LUP discharger shall comply with effluent standards or prohibitions established under Section 307(a) of the CWA for toxic pollutants within the time provided in the regulations that establish these standards or prohibitions, even if this General Permit has not yet been modified to incorporate the requirement.

2. General Permit Actions

a. This General Permit may be modified, revoked and reissued, or terminated for cause. The filing of a request by the discharger for a General Permit modification, revocation and reissuance, or termination, or a notification of planned changes or anticipated noncompliance does not annul any General Permit condition.

[6] Litter, rubble, discarded refuse, and remains of something destroyed.

b. If any toxic effluent standard or prohibition (including any schedule of compliance specified in such effluent standard or prohibition) is promulgated under Section 307(a) of the CWA for a toxic pollutant which is present in the discharge and that standard or prohibition is more stringent than any limitation on the pollutant in this General Permit, this General Permit shall be modified or revoked and reissued to conform to the toxic effluent standard or prohibition and the dischargers so notified.

3. Need to Halt or Reduce Activity Not a Defense

It shall not be a defense for an LUP discharger in an enforcement action that it would have been necessary to halt or reduce the permitted activity in order to maintain compliance with the conditions of this General Permit.

4. Duty to Mitigate

The LUP discharger shall take all responsible steps to minimize or prevent any discharge in violation of this General Permit, which has a reasonable likelihood of adversely affecting human health or the environment.

5. Proper Operation and Maintenance

The LUP discharger shall at all times properly operate and maintain any facilities and systems of treatment and control (and related appurtenances) which are installed or used by the discharger to achieve compliance with the conditions of this General Permit and with the requirements of the Storm Water Pollution Prevention Plan (SWPPP). Proper operation and maintenance also includes adequate laboratory controls and appropriate quality assurance procedures. Proper operation and maintenance may require the operation of backup or auxiliary facilities or similar systems installed by a discharger when necessary to achieve compliance with the conditions of this General Permit.

6. Property Rights

This General Permit does not convey any property rights of any sort or any exclusive privileges, nor does it authorize any injury to private property or any invasion of personal rights, nor does it authorize any infringement of Federal, State, or local laws or regulations.

7. Duty to Maintain Records and Provide Information

a. The LUP discharger shall maintain a paper or electronic copy of all required records, including a copy of this General Permit, for three years from the date generated or date submitted, whichever is last. These records shall be kept at the construction site or in a crew

member's vehicle until construction is completed, and shall be made available upon request.

b. The LUP discharger shall furnish the Regional Water Board, State Water Board, or USEPA, within a reasonable time, any requested information to determine compliance with this General Permit. The LUP discharger shall also furnish, upon request, copies of records that are required to be kept by this General Permit.

8. Inspection and Entry

The LUP discharger shall allow the Regional Water Board, State Water Board, USEPA, and/or, in the case of construction sites which discharge through a municipal separate storm sewer, an authorized representative of the municipal operator of the separate storm sewer system receiving the discharge, upon the presentation of credentials and other documents as may be required by law, to:

a. Enter upon the discharger's premises at reasonable times where a regulated construction activity is being conducted or where records must be kept under the conditions of this General Permit;

b. Access and copy at reasonable times any records that must be kept under the conditions of this General Permit;

c. Inspect at reasonable times the complete construction site, including any off-site staging areas or material storage areas, and the erosion/sediment controls; and

d. Sample or monitor at reasonable times for the purpose of ensuring General Permit compliance.

9. Electronic Signature and Certification Requirements

a. All Permit Registration Documents (PRDs) and Notices of Termination (NOTs) shall be electronically signed, certified, and submitted via SMARTS to the State Water Board. Either the Legally Responsible Person (LRP), as defined in Appendix 5 – Glossary, or a person legally authorized to sign and certify PRDs and NOTs on behalf of the LRP (the LRP's Approved Signatory, as defined in Appendix 5 - Glossary) must submit all information electronically via SMARTS.

b. Changes to Authorization. If an Approved Signatory's authorization is no longer accurate, a new authorization satisfying the requirements of paragraph (a) of this section must be submitted via SMARTS prior to or

together with any reports, information or applications to be signed by an Approved Signatory.

c. All SWPPP revisions, annual reports, or other information required by the General Permit (other than PRDs and NOTs) or requested by the Regional Water Board, State Water Board, USEPA, or local storm water management agency shall be certified and submitted by the LRP or the LRP's Approved Signatory.

10. Certification

Any person signing documents under Section E.9 above, shall make the following certification:

"I certify under penalty of law that this document and all attachments were prepared under my direction or supervision in accordance with a system designed to assure that qualified personnel properly gather and evaluate the information submitted. Based on my inquiry of the person or persons who manage the system or those persons directly responsible for gathering the information, to the best of my knowledge and belief, the information submitted is, true, accurate, and complete. I am aware that there are significant penalties for submitting false information, including the possibility of fine and imprisonment for knowing violations."

11. Anticipated Noncompliance

The LUP discharger shall give advance notice to the Regional Water Board and local storm water management agency of any planned changes in the construction activity, which may result in noncompliance with General Permit requirements.

12. Penalties for Falsification of Reports

Section 309(c)(4) of the CWA provides that any person who knowingly makes any false material statement, representation, or certification in any record or other document submitted or required to be maintained under this General Permit, including reports of compliance or noncompliance shall upon conviction, be punished by a fine of not more than $10,000 or by imprisonment for not more than two years or by both.

13. Oil and Hazardous Substance Liability

Nothing in this General Permit shall be construed to preclude the institution of any legal action or relieve the discharger from any responsibilities, liabilities, or penalties to which the LUP discharger is or may be subject to under Section 311 of the CWA.

14. Severability

The provisions of this General Permit are severable; and, if any provision of this General Permit or the application of any provision of this General Permit to any circumstance is held invalid, the application of such provision to other circumstances and the remainder of this General Permit shall not be affected thereby.

15. Reopener Clause

This General Permit may be modified, revoked and reissued, or terminated for cause due to promulgation of amended regulations, receipt of USEPA guidance concerning regulated activities, judicial decision, or in accordance with 40 Code of Federal Regulations (CFR) 122.62, 122.63, 122.64, and 124.5.

16. Penalties for Violations of Permit Conditions

a. Section 309 of the CWA provides significant penalties for any person who violates a permit condition implementing Sections 301, 302, 306, 307, 308, 318, or 405 of the CWA or any permit condition or limitation implementing any such section in a permit issued under Section 402. Any person who violates any permit condition of this General Permit is subject to a civil penalty not to exceed $37,500[7] per calendar day of such violation, as well as any other appropriate sanction provided by Section 309 of the CWA.

b. The Porter-Cologne Water Quality Control Act also provides for civil and criminal penalties, which in some cases are greater than those under the CWA.

17. Transfers

This General Permit is not transferable. A new LRP of an ongoing construction activity must submit PRDs in accordance with the requirements of this General Permit to be authorized to discharge under this General Permit. An LRP who is a property owner with active General Permit coverage who sells a fraction or all the land shall inform the new property owner(s) of the requirements of this General Permit.

18. Continuation of Expired Permit

This General Permit continues in force and effect until a new General Permit is issued or the SWRCB rescinds this General Permit. Only those

[7] May be further adjusted in accordance with the Federal Civil Penalties Inflation Adjustment Act

dischargers authorized to discharge under the expiring General Permit are covered by the continued General Permit.

F. EFFLUENT STANDARDS & RECEIVING WATER MONITORING

1. Narrative Effluent Limitations

a. LUP dischargers shall ensure that storm water discharges and authorized non-storm water discharges regulated by this General Permit do not contain a hazardous substance equal to or in excess of reportable quantities established in 40 C.F.R. §§ 117.3 and 302.4, unless a separate NPDES Permit has been issued to regulate those discharges.

b. LUP dischargers shall minimize or prevent pollutants in storm water discharges and authorized non-storm water discharges through the use of structural or non-structural controls, structures, and management practices that achieve BAT for toxic and non-conventional pollutants and BCT for conventional pollutants.

Table 1. Numeric Action Levels, Test Methods, Detection Limits, and Reporting Units

Parameter	Test Method	Discharge Type	Min. Detection Limit	Units	Numeric Action Level
pH	Field test with calibrated portable instrument	LUP Type 2	0.2	pH units	lower NAL = 6.5 upper NAL = 8.5
		LUP Type 3			lower NAL = 6.5 upper NAL = 8.5
Turbidity	EPA 0180.1 and/or field test with calibrated portable instrument	LUP Type 2	1	NTU	250 NTU
		LUP Type 3			250 NTU

2. Numeric Action Levels (NALs)

a. For LUP Type 2 and 3 dischargers, the lower storm event daily average NAL for pH is 6.5 pH units and the upper storm event daily average NAL for pH is 8.5 pH units. The LUP discharger shall take actions as described below if the storm event daily average discharge is outside of this range of pH values.

b. For LUP Type 2 and 3 dischargers, the storm event daily average NAL for turbidity is 250 NTU. The discharger shall take actions as described below if the storm event daily average discharge is outside of this range of turbidity values.

c. Whenever daily average analytical effluent monitoring results indicate that the discharge is below the lower NAL for pH, exceeds the upper NAL for pH, or exceeds the turbidity NAL (as listed in Table 1), the LUP discharger shall conduct a construction site and run-on evaluation to determine whether pollutant source(s) associated with the site's construction activity may have caused or contributed to the NAL exceedance and shall immediately implement corrective actions if they are needed.

d. The site evaluation will be documented in the SWPPP and specifically address whether the source(s) of the pollutants causing the exceedance of the NAL:

i Are related to the construction activities and whether additional BMPs or SWPPP implementation measures are required to (1) meet BAT/BCT requirements; (2) reduce or prevent pollutants in storm water discharges from causing exceedances of receiving water objectives; and (3) determine what corrective action(s) were taken or will be taken and with a description of the schedule for completion.

AND/OR:

ii Are related to the run-on associated with the construction site location and whether additional BMPs or SWPPP implementation measures are required to (1) meet BAT/BCT requirements; (2) reduce or prevent pollutants in storm water discharges from causing exceedances of receiving water objectives; and (3) decide what corrective action(s) were taken or will be taken, including a description of the schedule for completion.

3. Receiving Water Monitoring Triggers

a. The receiving water monitoring triggers for LUP Type 3 dischargers with direct discharges to surface waters are triggered when the daily average effluent pH values during any site phase when there is a high risk of pH discharge[8] fall outside of the range of 6.0 and 9.0 pH units, or when the daily average effluent turbidity exceeds 500 NTU.

b. LUP Type 3 dischargers with direct discharges to surface waters shall conduct receiving water monitoring whenever their effluent monitoring results exceed the receiving water monitoring triggers. If the pH trigger is exceeded, the receiving water shall be monitored for pH for the duration of coverage under this General Permit. If the turbidity trigger is exceeded, the receiving water shall be monitored for turbidity and SSC for the duration of coverage under this General Permit.

c. LUP Type 3 dischargers with direct discharges to surfaces waters shall initiate receiving water monitoring when the triggers are exceeded unless the storm event causing the exceedance is determined after the fact to equal to or greater than the 5-year 24-hour storm (expressed in inches of rainfall) as determined by using these maps:

   http://www.wrcc.dri.edu/pcpnfreq/nca5y24.gif
   http://www.wrcc.dri.edu/pcpnfreq/sca5y24.gif

   Verification of the 5-year 24-hour storm event shall be done by reporting on-site rain gauge readings as well as nearby governmental rain gauge readings.

d. If run-on is caused by a forest fire or any other natural disaster, then receiving water monitoring triggers do not apply.

G. RECEIVING WATER LIMITATIONS

1. LUP dischargers shall ensure that storm water discharges and authorized non-storm water discharges to any surface or ground water will not adversely affect human health or the environment.

2. LUP dischargers shall ensure that storm water discharges and authorized non-storm water discharges will not contain pollutants in quantities that threaten to cause pollution or a public nuisance.

3. LUP dischargers shall ensure that storm water discharges and authorized non-storm water discharges will not contain pollutants that cause or

[8] A period of high risk of pH discharge is defined as a project's complete utilities phase, complete vertical build phase, and any portion of any phase where significant amounts of materials are placed directly on the land at the site in a manner that could result in significant alterations of the background pH of the discharges.

contribute to an exceedance of any applicable water quality objectives or water quality standards (collectively, WQS) contained in a Statewide Water Quality Control Plan, the California Toxics Rule, the National Toxics Rule, or the applicable Regional Water Board's Water Quality Control Plan (Basin Plan).

H. TRAINING QUALIFICATIONS

1. General

All persons responsible for implementing requirements of this General Permit shall be appropriately trained. Training should be both formal and informal, occur on an ongoing basis, and should include training offered by recognized governmental agencies or professional organizations. Persons responsible for preparing, amending and certifying SWPPPs shall comply with the requirements in this Section H.

2. SWPPP Certification Requirements

a. **Qualified SWPPP Developer:** The LUP discharger shall ensure that all SWPPPs be written, amended and certified by a Qualified SWPPP Developer (QSD). A QSD shall have one of the following registrations or certifications, and appropriate experience, as required for:

i A California registered professional civil engineer;

ii A California registered professional geologist or engineering geologist;

iii A California registered landscape architect;

iv A professional hydrologist registered through the American Institute of Hydrology;

v A certified professional in erosion and sediment control (CPESC) ™ registered through Enviro Cert International, Inc;

vi A certified professional in storm water quality (CPSWQ)™ registered through Enviro Cert International, Inc.; or

vii A certified professional in erosion and sediment control registered through the National Institute for Certification in Engineering Technologies (NICET).

Effective two years after the adoption date of this General Permit, a QSD shall have attended a State Water Board-sponsored or approved QSD training course.

b. The LUP discharger shall ensure that the SWPPP is written and amended, as needed, to address the specific circumstances for each construction site covered by this General Permit prior to commencement of construction activity for any stage.

c. The LUP discharger shall list the name and telephone number of the currently designated Qualified SWPPP Developer(s) in the SWPPP.

d. **Qualified SWPPP Practitioner:** The LUP discharger shall ensure that all elements of any SWPPP for each project will be implemented by a Qualified SWPPP Practitioner (QSP). A QSP is a person responsible for non-storm water and storm water visual observations, sampling and analysis, and for ensuring full compliance with the permit and implementation of all elements of the SWPPP. Effective two years from the date of adoption of this General Permit, a QSP shall be either a QSD or have one of the following certifications:

   i A certified erosion, sediment and storm water inspector registered through Certified Professional in Erosion and Sediment Control, Inc.; or

   ii A certified inspector of sediment and erosion control registered through Certified Inspector of Sediment and Erosion Control, Inc.

   Effective two years after the adoption date of this General Permit, a QSP shall have attended a State Water Board-sponsored or approved QSP training course.

e. The LUP discharger shall ensure that the SWPPP include a list of names of all contractors, subcontractors, and individuals who will be directed by the Qualified SWPPP Practitioner, and who is ultimately responsible for implementation of the SWPPP. This list shall include telephone numbers and work addresses. Specific areas of responsibility of each subcontractor and emergency contact numbers shall also be included.

f. The LUP discharger shall ensure that the SWPPP and each amendment be signed by the Qualified SWPPP Developer. The LUP discharger shall include a listing of the date of initial preparation and the dates of each amendment in the SWPPP.

I. TYPES OF LINEAR PROJECTS

This attachment establishes three types (Type 1, 2 & 3) of complexity for areas within an LUP or project section based on threat to water quality. Project area Types are determined through Attachment A.1.

The Type 1 requirements below establish the baseline requirements for all LUPs subject to this General Permit. Additional requirements for Type 2 and Type 3 LUPs are labeled.

1. Type 1 LUPs*:*

LUP dischargers with areas of a LUP designated as Type 1 shall comply with the requirements in this Attachment. Type 1 LUPs are:

a. Those construction areas where 70 percent or more of the construction activity occurs on a paved surface and where areas disturbed during construction will be returned to preconstruction conditions or equivalent protection established at the end of the construction activities for the day; or

b. Where greater than 30 percent of construction activities occur within the non-paved shoulders or land immediately adjacent to paved surfaces, or where construction occurs on unpaved improved roads, including their shoulders or land immediately adjacent to them where:

   i Areas disturbed during construction will be returned to preconstruction conditions or equivalent protection is established at the end of the construction activities for the day to minimize the potential for erosion and sediment deposition, and

   ii Areas where established vegetation was disturbed during construction will be stabilized and re-vegetated by the end of project. When required, adequate temporary stabilization BMPs will be installed and maintained until vegetation is established to meet minimum cover requirements established in this General Permit for final stabilization.

c. Where the risk determination is as follows:

   i Low sediment risk, low receiving water risk, or

   ii Low sediment risk, medium receiving water risk, or

   iii Medium sediment risk, low receiving water risk

2. Type 2 LUPs:

Type 2 LUPs are determined by the Combined Risk Matrix in Attachment A.1. Type 2 LUPs have the specified combination of risk:

d. High sediment risk, low receiving water risk, or

e. Medium sediment risk, medium receiving water risk, or

f. Low sediment risk, high receiving water risk

Receiving water risk is either considered "Low" for those areas of the project that are not in close proximity to a sensitive receiving watershed, "Medium" for those areas of the project within a sensitive receiving watershed yet outside of the flood plain of a sensitive receiving water body, and "High" where the soil disturbance is within close proximity to a sensitive receiving water body. Project sediment risk is calculated based on the Risk Factor Worksheet in Attachment C of this General Permit.

3. Type 3 LUPs:

Type 3 LUPs are determined by the Combined Risk Matrix in Attachment A.1. Type 3 LUPs have the specified combination of risk:

a. High sediment risk, high receiving water risk, or

b. High sediment risk, medium receiving water risk, or

c. Medium sediment risk, high receiving water risk

Receiving water risk is either considered "Medium" for those areas of the project within a sensitive receiving watershed yet outside of the flood plain of a sensitive receiving water body, or "High" where the soil disturbance is within close proximity to a sensitive receiving water body. Project sediment risk is calculated based on the Risk Factor Worksheet in Attachment C.

J. LUP TYPE-SPECIFIC REQUIREMENTS

1. Effluent Standards

a. Narrative – LUP dischargers shall comply with the narrative effluent standards below.

i Storm water discharges and authorized non-storm water discharges regulated by this General Permit shall not contain a hazardous substance equal to or in excess of reportable quantities established in 40 C.F.R. §§ 117.3 and 302.4, unless a separate NPDES Permit has been issued to regulate those discharges.

ii LUP dischargers shall minimize or prevent pollutants in storm water discharges and authorized non-storm water discharges through the use of controls, structures, and management practices that achieve BAT for toxic and non-conventional pollutants and BCT for conventional pollutants.

b. Numeric – LUP Type 1 dischargers are not subject to a numeric effluent standard

c. Numeric –LUP Type 2 dischargers are subject to a pH NAL of 6.5-8.5, and a turbidity NAL of 250 NTU.

d. Numeric – LUP Type 3 dischargers are subject to a pH NAL of 6.5-8.5, and a turbidity NAL of 250 NTU.

2. Good Site Management "Housekeeping"

a. LUP dischargers shall implement good site management (i.e., "housekeeping") measures for construction materials that could potentially be a threat to water quality if discharged. At a minimum, the good housekeeping measures shall consist of the following:

i Identify the products used and/or expected to be used and the end products that are produced and/or expected to be produced. This does not include materials and equipment that are designed to be outdoors and exposed to environmental conditions (i.e. poles, equipment pads, cabinets, conductors, insulators, bricks, etc.).

ii Cover and berm loose stockpiled construction materials that are not actively being used (i.e. soil, spoils, aggregate, fly-ash, stucco, hydrated lime, etc.).

iii Store chemicals in watertight containers (with appropriate secondary containment to prevent any spillage or leakage) or in a storage shed (completely enclosed).

iv Minimize exposure of construction materials to precipitation (not applicable to materials designed to be outdoors and exposed to the environment).

v Implement BMPs to control the off-site tracking of loose construction and landscape materials.

b. LUP dischargers shall implement good housekeeping measures for waste management, which, at a minimum, shall consist of the following:

i Prevent disposal of any rinse or wash waters or materials on impervious or pervious site surfaces or into the storm drain system.

ii Ensure the containment of sanitation facilities (e.g., portable toilets) to prevent discharges of pollutants to the storm water drainage system or receiving water.

iii Clean or replace sanitation facilities and inspecting them regularly for leaks and spills.

iv Cover waste disposal containers at the end of every business day and during a rain event.

v Prevent discharges from waste disposal containers to the storm water drainage system or receiving water.

vi Contain and securely protect stockpiled waste material from wind and rain at all times unless actively being used.

vii Implement procedures that effectively address hazardous and non-hazardous spills.

viii Develop a spill response and implementation element of the SWPPP prior to commencement of construction activities. The SWPPP shall require that:

(1) Equipment and materials for cleanup of spills shall be available on site and that spills and leaks shall be cleaned up immediately and disposed of properly; and

(2) Appropriate spill response personnel are assigned and trained.

ix Ensure the containment of concrete washout areas and other washout areas that may contain additional pollutants so there is no discharge into the underlying soil and onto the surrounding areas.

c. LUP dischargers shall implement good housekeeping for vehicle storage and maintenance, which, at a minimum, shall consist of the following:

   i Prevent oil, grease, or fuel from leaking into the ground, storm drains or surface waters.

   ii Implement appropriate BMPs whenever equipment or vehicles are fueled, maintained or stored.

   iii Clean leaks immediately and disposing of leaked materials properly.

d. LUP dischargers shall implement good housekeeping for landscape materials, which, at a minimum, shall consist of the following:

   i Contain stockpiled materials such as mulches and topsoil when they are not actively being used.

   ii Contain fertilizers and other landscape materials when they are not actively being used.

   iii Discontinue the application of any erodible landscape material at least 2 days before a forecasted rain event[9] or during periods of precipitation.

   iv Applying erodible landscape material at quantities and application rates according to manufacture recommendations or based on written specifications by knowledgeable and experienced field personnel.

   v Stacking erodible landscape material on pallets and covering or storing such materials when not being used or applied.

e. LUP dischargers shall conduct an assessment and create a list of potential pollutant sources and identify any areas of the site where additional BMPs are necessary to reduce or prevent pollutants in storm water discharges and authorized non-storm water discharges. This potential pollutant list shall be kept with the SWPPP and shall identify all non-visible pollutants which are known, or should be known, to occur on the construction site. At a minimum, when developing BMPs, LUP dischargers shall do the following:

[9] 50% or greater chance of producing precipitation.

i Consider the quantity, physical characteristics (e.g., liquid, powder, solid), and locations of each potential pollutant source handled, produced, stored, recycled, or disposed of at the site.

ii Consider the degree to which pollutants associated with those materials may be exposed to and mobilized by contact with storm water.

iii Consider the direct and indirect pathways that pollutants may be exposed to storm water or authorized non-storm water discharges. This shall include an assessment of past spills or leaks, non-storm water discharges, and discharges from adjoining areas.

iv Ensure retention of sampling, visual observation, and inspection records.

v Ensure effectiveness of existing BMPs to reduce or prevent pollutants in storm water discharges and authorized non-storm water discharges.

f. LUP dischargers shall implement good housekeeping measures on the construction site to control the air deposition of site materials and from site operations.

3. Non-Storm Water Management

a. LUP dischargers shall implement measures to control all non-storm water discharges during construction.

b. LUP dischargers shall wash vehicles in such a manner as to prevent non-storm water discharges to surface waters or MS4 drainage systems.

c. LUP dischargers shall clean streets in such a manner as to prevent unauthorized non-storm water discharges from reaching surface water or MS4 drainage systems.

4. Erosion Control

a. LUP dischargers shall implement effective wind erosion control.

b. LUP dischargers shall provide effective soil cover for inactive[10] areas and all finished slopes, and utility backfill.

[10] Areas of construction activity that have been disturbed and are not scheduled to be re-disturbed for at least 14 days

c. LUP dischargers shall limit the use of plastic materials when more sustainable, environmentally friendly alternatives exist. Where plastic materials are deemed necessary, the discharger shall consider the use of plastic materials resistant to solar degradation.

5. Sediment Controls

a. LUP dischargers shall establish and maintain effective perimeter controls as needed, and implement effective BMPs for all construction entrances and exits to sufficiently control erosion and sediment discharges from the site.

b. On sites where sediment basins are to be used, LUP dischargers shall, at minimum, design sediment basins according to the guidance provided in CASQA's Construction BMP Handbook.

c. **Additional LUP Type 2 & 3 Requirement:** LUP Type 2 & 3 dischargers shall apply linear sediment controls along the toe of the slope, face of the slope, and at the grade breaks of exposed slopes to comply with sheet flow lengths[11] in accordance with Table 2 below.

Table 2 – Critical Slope/Sheet Flow Length Combinations

Slope Percentage	Sheet flow length not to exceed
0-25%	20 feet
25-50%	15 feet
Over 50%	10 feet

d. **Additional LUP Type 2 & 3 Requirement:** LUP Type 2 & 3 dischargers shall ensure that construction activity traffic to and from the project is limited to entrances and exits that employ effective controls to prevent off-site tracking of sediment.

e. **Additional LUP Type 2 & 3 Requirement:** LUP Type 2 & 3 dischargers shall ensure that all storm drain inlets and perimeter controls, runoff control BMPs, and pollutant controls at entrances and exits (e.g. tire washoff locations) are maintained and protected from activities that reduce their effectiveness.

f. **Additional LUP Type 2 & 3 Requirement:** LUP Type 2 & 3 dischargers shall inspect all immediate access roads. At a minimum daily and prior to any rain event, the discharger shall remove any

[11] Sheet flow length is the length that shallow, low velocity flow travels across a site.

sediment or other construction activity-related materials that are deposited on the roads (by vacuuming or sweeping).

g. **Additional LUP Type 3 Requirement:** The Regional Water Board may require LUP Type 3 dischargers to implement additional site-specific sediment control requirements if the implementation of the other requirements in this section are not adequately protecting the receiving waters.

6. Run-on and Run-off Controls

a. LUP dischargers shall effectively manage all run-on, all runoff within the site and all runoff that discharges off the site. Run-on from off site-shall be directed away from all disturbed areas or shall collectively be in compliance with the effluent limitations in this Attachment.

b. Run-on and runoff controls are not required for Type 1 LUPs unless the evaluation of quantity and quality of run-on and runoff deems them necessary or visual inspections show that the site requires such controls.

7. Inspection, Maintenance and Repair

a. All inspection, maintenance repair and sampling activities at the discharger's LUP location shall be performed or supervised by a QSP representing the discharger. The QSP may delegate any or all of these activities to an employee trained to do the task(s) appropriately, but shall ensure adequate deployment.

b. LUP dischargers shall conduct visual inspections and observations daily during working hours (not recorded). At least once each 24-hour period during extended storm events, **LUP Type 2 & 3 dischargers** shall conduct visual inspections to identify and record BMPs that need maintenance to operate effectively, that have failed, or that could fail to operate as intended. Inspectors shall be the QSP or be trained by the QSP.

c. Upon identifying failures or other shortcomings, as directed by the QSP, LUP dischargers shall begin implementing repairs or design changes to BMPs within 72 hours of identification and complete the changes as soon as possible.

d. For each pre- and post-rain event inspection required, LUP dischargers shall complete an inspection checklist, using a form provided by the State Water Board or Regional Water Board or in an alternative format that includes the information described below.

e. The LUP discharger shall ensure that the checklist remains on-site or with the SWPPP. At a minimum, an inspection checklist should include:

i Inspection date and date the inspection report was written.

ii Weather information, including presence or absence of precipitation, estimate of beginning of qualifying storm event, duration of event, time elapsed since last storm, and approximate amount of rainfall in inches.

iii Site information, including stage of construction, activities completed, and approximate area of the site exposed.

iv A description of any BMPs evaluated and any deficiencies noted.

v If the construction site is safely accessible during inclement weather, list the observations of all BMPs: erosion controls, sediment controls, chemical and waste controls, and non-storm water controls. Otherwise, list the results of visual inspections at all relevant outfalls, discharge points, downstream locations and any projected maintenance activities.

vi Report the presence of noticeable odors or of any visible sheen on the surface of any discharges.

vii Any corrective actions required, including any necessary changes to the SWPPP and the associated implementation dates.

viii Photographs taken during the inspection, if any.

ix Inspector’s name, title, and signature.

K. STORM WATER POLLUTION PREVENTION PLAN (SWPPP) REQUIREMENTS

1. Objectives

SWPPPs for all LUPs shall be developed and amended or revised by a QSD. The SWPPP shall be designed to address the following objectives:

a. All pollutants and their sources, including sources of sediment, associated with construction activities associated with LUP activity are controlled;

b. All non-storm water discharges are identified and either eliminated, controlled, or treated;

c. BMPs are effective and result in the reduction or elimination of pollutants in storm water discharges and authorized non-storm water discharges from LUPs during construction; and

d. Stabilization BMPs installed to reduce or eliminate pollutants after construction is completed are effective and maintained.

2. SWPPP Implementation Schedule

a. LUPs for which PRDs have been submitted to the State Water Board shall develop a site/project location SWPPP prior to the start of land-disturbing activity in accordance with this Section and shall implement the SWPPP concurrently with commencement of soil-disturbing activities.

b. For an ongoing LUP involving a change in the LRP, the new LRP shall review the existing SWPPP and amend it, if necessary, or develop a new SWPPP within 15 calendar days to conform to the requirements set forth in this General Permit.

3. Availability

The SWPPP shall be available at the construction site during working hours while construction is occurring and shall be made available upon request by a State or Municipal inspector. When the original SWPPP is retained by a crewmember in a construction vehicle and is not currently at the construction site, copies of the BMPs and map/drawing will be left with the field crew and the original SWPPP shall be made available via a request by radio/telephone.

L. REGIONAL WATER BOARD AUTHORITIES

1. Regional Water Boards shall administer the provisions of this General Permit. Administration of this General Permit may include, but is not limited to, requesting the submittal of SWPPPs, reviewing SWPPPs, reviewing monitoring and sampling and analysis reports, conducting compliance inspections, gathering site information by any medium including sampling, photo and video documentation, and taking enforcement actions.

2. Regional Water Boards may terminate coverage under this General Permit for dischargers who fail to comply with its requirements or where they determine that an individual NPDES permit is appropriate.

3. Regional Water Boards may issue separate permits for discharges of storm water associated with construction activity to individual dischargers, categories of dischargers, or dischargers in a geographic area. Upon issuance of such permits by a Regional Water Board, dischargers subject to those permits shall no longer be regulated by this General Permit.

4. Regional Water Boards may direct the discharger to reevaluate the LUP Type(s) for the project (or elements/areas of the project) and impose the appropriate level of requirements.

5. Regional Water Boards may terminate coverage under this General Permit for dischargers who negligently or with willful intent incorrectly determine or report their LUP Type (e.g., they determine themselves to be a LUP Type 1 when they are actually a Type 2).

6. Regional Water Boards may review PRDs and reject or accept applications for permit coverage or may require dischargers to submit a Report of Waste Discharge / NPDES permit application for Regional Water Board consideration of individual requirements.

7. Regional Water Boards may impose additional requirements on dischargers to satisfy TMDL implementation requirements or to satisfy provisions in their Basin Plans.

8. Regional Water Boards may require additional Monitoring and Reporting Program Requirements, including sampling and analysis of discharges to sediment-impaired water bodies.

9. Regional Water Boards may require dischargers to retain records for more than the three years required by this General Permit.

10. Based on an LUP's threat to water quality and complexity, the Regional Water Board may determine on a case-by-case basis that an LUP, or a portion of an LUP, is not eligible for the linear project requirements contained in this Attachment, and require that the discharger comply with all standard requirements in this General Permit.

11. The Regional Water Board may require additional monitoring and reporting program requirements including sampling and analysis of discharges to CWA § 303(d)-listed water bodies. Additional requirements imposed by the Regional Water Board shall be consistent with the overall monitoring effort in the receiving waters.

M. MONITORING AND REPORTING REQUIREMENTS

Table 3. LUP Summary of Monitoring Requirements

LUP Type	Visual Inspections				Sample Collection		
	Daily Site BMP	Pre-storm Event: Baseline	Daily Storm BMP	Post Storm	Storm Water Discharge	Receiving Water	Non-Visible (when applicable)
1	X						X
2	X	X	X	X	X		X
3	X	X	X	X	X	X	X

1. Objectives

LUP dischargers shall prepare a monitoring and reporting program (M&RP) prior to the start of construction and immediately implement the program at the start of construction for LUPs. The monitoring program must be implemented at the appropriate level to protect water quality at all times throughout the life of the project. The M&RP must be a part of the SWPPP, included as an appendix or separate SWPPP chapter.

2. M&RP Implementation Schedule

a. LUP dischargers shall implement the requirements of this Section at the time of commencement of construction activity. LUP dischargers are responsible for implementing these requirements until construction activity is complete and the site is stabilized.

b. LUP dischargers shall revise the M&RP when:

i Site conditions or construction activities change such that a change in monitoring is required to comply with the requirements and intent of this General Permit.

ii The Regional Water Board requires the discharger to revise its M&RP based on its review of the document. Revisions may include, but not be limited to, conducting additional site inspections, submitting reports, and certifications. Revisions shall be submitted via postal mail or electronic e-mail.

iii The Regional Water Board may require additional monitoring and reporting program requirements including sampling and analysis of discharges to CWA § 303(d)-listed water bodies. Additional requirements imposed by the Regional Water Board shall be consistent with the overall monitoring effort in the receiving waters.

3. LUP Type 1 Monitoring and Reporting Requirements

a. LUP Type 1 Inspection Requirements

i LUP Type 1 dischargers shall ensure that all inspections are conducted by trained personnel. The name(s) and contact number(s) of the assigned inspection personnel should be listed in the SWPPP.

ii LUP Type 1 dischargers shall ensure that all visual inspections are conducted daily during working hours and in conjunction with other daily activities in areas where active construction is occurring.

iii LUP Type 1 dischargers shall ensure that photographs of the site taken before, during, and after storm events are taken during inspections, and submitted through the State Water Board's SMARTS website once every three rain events.

iv LUP Type 1 dischargers shall conduct daily visual inspections to verify that:

(1) Appropriate BMPs for storm water and non-storm water are being implemented in areas where active construction is occurring (including staging areas);

(2) Project excavations are closed, with properly protected spoils, and that road surfaces are cleaned of excavated material and construction materials such as chemicals by either removing or storing the material in protective storage containers at the end of every construction day;

(3) Land areas disturbed during construction are returned to pre-construction conditions or an equivalent protection is used at the end of each workday to eliminate or minimize erosion and the possible discharge of sediment or other pollutants during a rain event.

v Inspections may be discontinued in non-active construction areas where soil-disturbing activities are completed and final soil stabilization is achieved (e.g., paving is completed, substructures

are installed, vegetation meets minimum cover requirements for final stabilization, or other stabilization requirements are met).

vi Inspection programs are required for LUP Type 1 projects where temporary and permanent stabilization BMPs are installed and are to be monitored after active construction is completed. Inspection activities shall continue until adequate permanent stabilization is established and, in areas where re-vegetation is chosen, until minimum vegetative coverage is established in accordance with Section C.1 of this Attachment.

b. LUP Type 1 Monitoring Requirements for Non-Visible Pollutants

LUP Type 1 dischargers shall implement sampling and analysis requirements to monitor non-visible pollutants associated with (1) construction sites; (2) activities producing pollutants that are not visually detectable in storm water discharges; and (3) activities which could cause or contribute to an exceedance of water quality objectives in the receiving waters.

i Sampling and analysis for non-visible pollutants is only required where the LUP Type 1 discharger believes pollutants associated with construction activities have the potential to be discharged with storm water runoff due to a spill or in the event there was a breach, malfunction, failure and/or leak of any BMP. Also, failure to implement BMPs may require sample collection.

(1) Visual observations made during the monitoring program described above will help the LUP Type 1 discharger determine when to collect samples.

(2) The LUP Type 1 discharger is not required to sample if one of the conditions described above (e.g., breach or spill) occurs and the site is cleaned of material and pollutants and/or BMPs are implemented prior to the next storm event.

ii LUP Type 1 dischargers shall collect samples down-gradient from all discharge locations where the visual observations were made triggering the monitoring, and which can be safely accessed. For sites where sampling and analysis is required, personnel trained in water quality sampling procedures shall collect storm water samples.

iii If sampling for non-visible pollutant parameters is required, LUP Type 1 dischargers shall ensure that samples be analyzed for parameters indicating the presence of pollutants identified in the pollutant source assessment required in Section J.2.a.i.

iv LUP Type 1 dischargers shall collect samples during the first two hours of discharge from rain events that occur during business hours and which generate runoff.

v LUP Type 1 dischargers shall ensure that a sufficiently large sample of storm water that has not come into contact with the disturbed soil or the materials stored or used on-site (uncontaminated sample[12]) will be collected for comparison with the discharge sample. Samples shall be collected during the first two hours of discharge from rain events that occur during daylight hours and which generate runoff.

vi LUP Type 1 dischargers shall compare the uncontaminated sample to the samples of discharge using field analysis or through laboratory analysis. Analyses may include, but are not limited to, indicator parameters such as: pH, specific conductance, dissolved oxygen, conductivity, salinity, and Total Dissolved Solids (TDS).

vii For laboratory analyses, all sampling, sample preservation, and other analyses must be conducted according to test procedures pursuant to 40 C.F.R. Part 136. LUP Type 1 dischargers shall ensure that field samples are collected and analyzed according to manufacturer specifications of the sampling devices employed. Portable meters shall be calibrated according to manufacturer's specification.

viii LUP Type 1 dischargers shall ensure that all field and/or analytical data are kept in the SWPPP document.

c. LUP Type 1 Visual Observation Exceptions

i LUP Type 1 dischargers shall be prepared to collect samples and conduct visual observation (inspections) to meet the minimum visual observation requirements of this Attachment. The Type 1 LUP discharger is not required to physically collect samples or conduct visual observation (inspections) under the following conditions:

(1) During dangerous weather conditions such as flooding and electrical storms;

(2) Outside of scheduled site business hours.

(3) When access to the site is unsafe due to storm events.

[12] Sample collected at a location unaffected by contruction activities.

ii If the LUP Type 1 discharger does not collect the required samples or visual observation (inspections) due to these exceptions, an explanation why the sampling or visual observation (inspections) were not conducted shall be included in both the SWPPP and the Annual Report.

d. Particle Size Analysis for Risk Justification

LUP Type 1 dischargers utilizing justifying an alternative project risk shall report a soil particle size analysis used to determine the RUSLE K-Factor. ASTM D-422 (Standard Test Method for Particle-Size Analysis of Soils), as revised, shall be used to determine the percentages of sand, very fine sand, silt, and clay on the site.

4. LUP Type 2 & 3 Monitoring and Reporting Requirements

a. LUP Type 2 & 3 Inspection Requirements

i LUP Type 2 & 3 dischargers shall ensure that all inspections are conducted by trained personnel. The name(s) and contact number(s) of the assigned inspection personnel should be listed in the SWPPP.

ii LUP Type 2 & 3 dischargers shall ensure that all visual inspections are conducted daily during working hours and in conjunction with other daily activities in areas where active construction is occurring.

iii LUP Type 2 & 3 dischargers shall ensure that photographs of the site taken before, during, and after storm events are taken during inspections, and submitted through the State Water Board's SMARTS website once every three rain events.

iv LUP Type 2 & 3 dischargers shall conduct daily visual inspections to verify that appropriate BMPs for storm water and non-storm water are being implemented and in place in areas where active construction is occurring (including staging areas).

v LUP Type 2 & 3 dischargers shall conduct inspections of the construction site prior to anticipated storm events, during extended storm events, and after actual storm events to identify areas contributing to a discharge of storm water associated with construction activity. Pre-storm inspections are to ensure that BMPs are properly installed and maintained; post-storm inspections are to assure that BMPs have functioned adequately. During

extended storm events, inspections shall be required during normal working hours for each 24-hour period.

vi Inspections may be discontinued in non-active construction areas where soil-disturbing activities are completed and final soil stabilization is achieved (e.g., paving is completed, substructures are installed, vegetation meets minimum cover requirements for final stabilization, or other stabilization requirements are met).

vii LUP Type 2 & 3 dischargers shall implement a monitoring program for inspecting projects that require temporary and permanent stabilization BMPs after active construction is complete. Inspections shall ensure that the BMPs are adequate and maintained. Inspection activities shall continue until adequate permanent stabilization is established and, in vegetated areas, until minimum vegetative coverage is established in accordance with Section C.1 of this Attachment.

viii If possible, LUP Type 2 & 3 dischargers shall install a rain gauge on-site at an accessible and secure location with readings made during all storm event inspections. When readings are unavailable, data from the closest rain gauge with publically available data may be used.

ix LUP Type 2 & 3 dischargers shall Include and maintain a log of the inspections conducted in the SWPPP. The log will provide the date and time of the inspection and who conducted the inspection.

b. LUP Type 2 & 3 Storm Water Effluent Monitoring Requirements

Table 4. LUP Type 2 & 3 Effluent Monitoring Requirements

LUP Type	Frequency	Effluent Monitoring
2	Minimum of 3 samples per day characterizing discharges associated with construction activity from the project active areas of construction.	Turbidity, pH, and non-visible pollutant parameters (if applicable)
3	Minimum of 3 samples per day characterizing discharges associated with construction activity from the project active areas of construction.	turbidity, pH, and non-visible pollutant parameters (if applicable)

i LUP Type 2 & 3 dischargers shall collect storm water grab samples from sampling locations characterizing discharges associated with activity from the LUP active areas of construction. At a minimum, 3 samples shall be collected per day of discharge.

ii LUP Type 2 & 3 dischargers shall collect samples of stored or contained storm water that is discharged subsequent to a storm event producing precipitation of ½ inch or more at the time of discharge.

iii LUP Type 2 & 3 dischargers shall ensure that storm water grab sample(s) obtained be representative of the flow and characteristics of the discharge.

iv LUP Type 2 & 3 dischargers shall analyze their effluent samples for:

(1) pH and turbidity
(2) Any additional parameter for which monitoring is required by the Regional Water Board.

c. LUP Type 2 & 3 Storm Water Effluent Sampling Locations

i LUP Type 2 & 3 dischargers shall perform sampling and analysis of storm water discharges to characterize discharges associated with construction activity from the entire disturbed project or area.

ii LUP Type 2 & 3 dischargers may monitor and report run-on from surrounding areas if there is reason to believe run-on may contribute to exceedance of NALs.

iii LUP Type 2 & 3 dischargers shall select analytical test methods from the list provided in Table 5 below.

iv LUP Type 2 & 3 dischargers shall ensure that all storm water sample collection preservation and handling shall be conducted in accordance with the “Storm Water Sample Collection and Handling Instructions” below.

d. LUP Type 3 Receiving Water Monitoring Requirements

i In the event that an LUP Type 3 discharger’s effluent exceeds the receiving water monitoring triggers of 500 NTU turbidity or pH range of 6.0-9.0, contained in this General Permit and has a direct discharge to receiving waters, the LUP discharger shall subsequently sample Receiving Waters (RWs) for turbidity, pH (if applicable) and SSC for the duration of coverage under this General Permit. In the event that an LUP Tupe 3 discharger utilizing ATS with direct discharges into receiving waters discharges effluent that exceeds the NELs in this permit, the discharger shall

subsequently sample RWs for turbidity, pH (if applicable), and SSC for the duration of coverage under this General Permit.

ii LUP Type 3 dischargers that meet the project criteria in Appendix 3 of this General Permit and have more than 30 acres of soil disturbance in the project area or project section area designated as Type 3, shall comply with the Bioassessment requirements prior to commencement of construction activity.

iii LUP Type 3 dischargers shall obtain RW samples in accordance with the requirements of the Receiving Water Sampling Locations section (Section M.4.c. of this Attachment).

e. LUP Type 3 Receiving Water Sampling Locations

i **Upstream/up-gradient RW samples**: LUP Type 3 dischargers shall obtain any required upstream/up-gradient receiving water samples from a representative and accessible location as close as possible to and upstream from the effluent discharge point.

ii **Downstream/down-gradient RW samples**: LUP Type 3 dischargers shall obtain any required downstream/down-gradient receiving water samples from a representative and accessible location as close as possible to and downstream from the effluent discharge point.

iii If two or more discharge locations discharge to the same receiving water, LUP Type 3 dischargers may sample the receiving water at a single upstream and downstream location.

f. LUP Type 2 & 3 Monitoring Requirements for Non-Visible Pollutants

LUP Type 2 & 3 dischargers shall implement sampling and analysis requirements to monitor non-visible pollutants associated with (1) construction sites; (2) activities producing pollutants that are not visually detectable in storm water discharges; and (3) activities which could cause or contribute to an exceedance of water quality objectives in the receiving waters.

i Sampling and analysis for non-visible pollutants is only required where LUP Type 2 & 3 dischargers believe pollutants associated with construction activities have the potential to be discharged with storm water runoff due to a spill or in the event there was a breach, malfunction, failure and/or leak of any BMP. Also, failure to implement BMPs may require sample collection.

(1) Visual observations made during the monitoring program described above will help LUP Type 2 & 3 dischargers determine when to collect samples.

(2) LUP Type 2 & 3 dischargers are not required to sample if one of the conditions described above (e.g., breach or spill) occurs and the site is cleaned of material and pollutants and/or BMPs are implemented prior to the next storm event.

ii LUP Type 2 & 3 dischargers shall collect samples down-gradient from the discharge locations where the visual observations were made triggering the monitoring and which can be safely accessed. For sites where sampling and analysis is required, personnel trained in water quality sampling procedures shall collect storm water samples.

iii If sampling for non-visible pollutant parameters is required, LUP Type 2 & 3 dischargers shall ensure that samples be analyzed for parameters indicating the presence of pollutants identified in the pollutant source assessment required in Section J.2.a.i.

iv LUP Type 2 & 3 dischargers shall collect samples during the first two hours of discharge from rain events that occur during business hours and which generate runoff.

v LUP Type 2 & 3 dischargers shall ensure that a sufficiently large sample of storm water that has not come into contact with the disturbed soil or the materials stored or used on-site (uncontaminated sample[13]) will be collected for comparison with the discharge sample. Samples shall be collected during the first two hours of discharge from rain events that occur during daylight hours and which generate runoff.

vi LUP Type 2 & 3 dischargers shall compare the uncontaminated sample to the samples of discharge using field analysis or through laboratory analysis. Analyses may include, but are not limited to, indicator parameters such as: pH, specific conductance, dissolved oxygen, conductivity, salinity, and Total Dissolved Solids (TDS).

vii For laboratory analyses, all sampling, sample preservation, and other analyses must be conducted according to test procedures pursuant to 40 C.F.R. Part 136. LUP Type 2 & 3 dischargers shall ensure that field samples are collected and analyzed according to manufacturer specifications of the sampling devices employed.

[13] Sample collected at a location unaffected by construction activities

Portable meters shall be calibrated according to manufacturer's specification.

viii LUP Type 2 & 3 dischargers shall ensure that all field and/or analytical data are kept in the SWPPP document.

g. LUP Type 2 & 3 Visual Observation and Sample Collection Exceptions

i LUP Type 2 & 3 dischargers shall be prepared to collect samples and conduct visual observation (inspections) to meet the minimum visual observation requirements of this Attachment. Type 2 & 3 LUP dischargers are not required to physically collect samples or conduct visual observation (inspections) under the following conditions:

(1) During dangerous weather conditions such as flooding and electrical storms;

(2) Outside of scheduled site business hours.

(3) When access to the site is unsafe due to storm events.

ii If the LUP Type 2 or 3 discharger does not collect the required samples or visual observation (inspections) due to these exceptions, an explanation why the sampling or visual observation (inspections) were not conducted shall be included in both the SWPPP and the Annual Report.

h. LUP Type 2 & 3 Storm Water Sample Collection and Handling Instructions

LUP Type 2 & 3 dischargers shall refer to Table 5 below for test Methods, detection Limits, and reporting Units. During storm water sample collection and handling, the LUP Type 2 & 3 discharger shall:

i Identify the parameters required for testing and the number of storm water discharge points that will be sampled. Request the laboratory to provide the appropriate number of sample containers, types of containers, sample container labels, blank chain of custody forms, and sample preservation instructions.

ii Determine how to ship the samples to the laboratory. The testing laboratory should receive samples within 48 hours of the physical sampling (unless otherwise required by the laboratory). The options are to either deliver the samples to the laboratory, arrange to have the laboratory pick them up, or ship them overnight to the laboratory.

iii Use only the sample containers provided by the laboratory to collect and store samples. Use of any other type of containers could contaminate your samples.

iv Prevent sample contamination, by not touching, or putting anything into the sample containers before collecting storm water samples.

v Not overfilling sample containers. Overfilling can change the analytical results.

vi Tightly screw the cap of each sample container without stripping the threads of the cap.

vii Complete and attach a label to each sample container. The label shall identify the date and time of sample collection, the person taking the sample, and the sample collection location or discharge point. The label should also identify any sample containers that have been preserved.

viii Carefully pack sample containers into an ice chest or refrigerator to prevent breakage and maintain temperature during shipment. Remember to place frozen ice packs into the shipping container. Samples should be kept as close to 4° C (39° F) as possible until arriving at the laboratory. Do not freeze samples.

ix Complete a Chain of Custody form for each set of samples. The Chain of Custody form shall include the discharger's name, address, and phone number, identification of each sample container and sample collection point, person collecting the samples, the date and time each sample container was filled, and the analysis that is required for each sample container.

x Upon shipping/delivering the sample containers, obtain both the signatures of the persons relinquishing and receiving the sample containers.

xi Designate and train personnel to collect, maintain, and ship samples in accordance with the above sample protocols and good laboratory practices.

xii Refer to the Surface Water Ambient Monitoring Program's (SWAMP) 2008 Quality Assurance Program Plan (QAPrP) for more

information on sampling collection and analysis. See http://www.waterboards.ca.gov/water_issues/programs/swamp/[14]

Table 5. Test Methods, Detection Limits, Reporting Units and Applicable NALs

Parameter	Test Method	Discharge Type	Min. Detection Limit	Reporting Units	Numeric Action Levels	(LUP Type 3) Receiving Water Monitoring Trigger
pH	Field test with calibrated portable instrument	Type 2 & 3	0.2	pH units	Lower = 6.5 upper = 8.5	Lower = 6.0 upper = 9.0
Turbidity	EPA 0180.1 and/or field test with calibrated portable instrument	Type 2 & 3	1	NTU	250 NTU	500 NTU
SSC	ASTM Method D 3977-97[15]	Type 3 if Receiving Water Monitoring Trigger is exceeded	5	Mg/L	N/A	N/A
Bioassessment	(STE) Level I of (SAFIT),[16] fixed-count of 600 org/sample	Type 3 LUPs > 30 acres	N/A	N/A	N/A	N/A

i. LUP Type 2 & 3 Monitoring Methods

i The LUP Type 2 or 3 discharger's project M&RP shall include a description of the following items:

(1) Visual observation locations, visual observation procedures, and visual observation follow-up and tracking procedures.

[14] Additional information regarding SWAMP's QAPrP can be found at: http://www.waterboards.ca.gov/water_issues/programs/swamp/.

[15] ASTM, 1999, Standard Test Method for Determining Sediment Concentration in Water Samples: American Society of Testing and Materials, D 3977-97, Vol. 11.02, pp. 389-394

[16] The current SAFIT STEs (28 November 2006) list requirements for both the Level I and Level II taxonomic effort, and are located at: http://www.swrcb.ca.gov/swamp/docs/safit/ste_list.pdf. When new editions are published by SAFIT, they will supersede all previous editions. All editions will be posted at the State Water Board's SWAMP website.

(2) Sampling locations, and sample collection and handling procedures. This shall include detailed procedures for sample collection, storage, preservation, and shipping to the testing lab to assure that consistent quality control and quality assurance is maintained. Dischargers shall attach to the monitoring program a copy of the Chain of Custody form used when handling and shipping samples.

(3) Identification of the analytical methods and related method detection limits (if applicable) for each parameter required in Section M.4.f above.

ii LUP Type 2 & 3 dischargers shall ensure that all sampling and sample preservation be in accordance with the current edition of "Standard Methods for the Examination of Water and Wastewater" (American Public Health Association). All monitoring instruments and equipment (including a discharger's own field instruments for measuring pH and turbidity) shall be calibrated and maintained in accordance with manufacturers' specifications to ensure accurate measurements. All laboratory analyses shall be conducted according to test procedures under 40 CFR Part 136, unless other test procedures have been specified in this General Permit or by the Regional Water Board. With the exception of field analysis conducted by the discharger for turbidity and pH, all analyses shall be sent to and conducted at a laboratory certified for such analyses by the State Department of Health Services (SSC exception). The LUP discharger shall conduct its own field analysis of pH and may conduct its own field analysis of turbidity if the discharger has sufficient capability (qualified and trained employees, properly calibrated and maintained field instruments, etc.) to adequately perform the field analysis.

j. LUP Type 2 & 3 Analytical Methods

LUP Type 2 & 3 dischargers shall refer to Table 5 above for test Methods, detection Limits, and reporting Units.

i **pH**: LUP Type 2 & 3 dischargers shall perform pH analysis on-site with a calibrated pH meter or pH test kit. The LUP discharger shall record pH monitoring results on paper and retain these records in accordance with Section M.4.o, below.

ii **Turbidity**: LUP Type 2 & 3 dischargers shall perform turbidity analysis using a calibrated turbidity meter (turbidimeter), either on-site or at an accredited lab. Acceptable test methods include Standard Method 2130 or USEPA Method 180.1. The results shall

be recorded in the site log book in Nephelometric Turbidity Units (NTU).

iii **Suspended sediment concentration (SSC)**: LUP Type 3 dischargers exceeding the turbidity Receiving Water Monitoring Trigger, shall perform SSC analysis using ASTM Method D3977-97.

iv **Bioassessment**: LUP Type 3 dischargers shall perform bioassessment sampling and analysis according to Appendix 3 of this General Permit.

k. Watershed Monitoring Option

If an LUP Type 2 or 3 discharger is part of a qualified regional watershed-based monitoring program the LUP Type 2 or 3 discharger may be eligible for relief from the monitoring requirements in this Attachment. The Regional Water Board may approve proposals to substitute an acceptable watershed-based monitoring program if it determines that the watershed-based monitoring program will provide information to determine each discharger's compliance with the requirements of this General Permit.

l. Particle Size Analysis for Risk Justification

LUP Type 2 & 3 dischargers justifying an alternative project risk shall report a soil particle size analysis used to determine the RUSLE K-Factor. ASTM D-422 (Standard Test Method for Particle-Size Analysis of Soils), as revised, shall be used to determine the percentages of sand, very fine sand, silt, and clay on the site.

m. NAL Exceedance Report

i In the event that any effluent sample exceeds an applicable NAL, the Regional Water Boards may require LUP Type 2 & 3 dischargers to submit NAL Exceedance Reports.

ii LUP Type 2 & 3 dischargers shall certify each NAL Exceedance Report in accordance with the Special Provisions for Construction Activity.

iii LUP Type 2 & 3 dischargers shall retain an electronic or paper copy of each NAL Exceedance Report for a minimum of three years after the date the exceedance report is filed.

iv LUP Type 2 & 3 dischargers shall include in the NAL Exceedance Report:

(1) the analytical method(s), method reporting unit(s), and method detection limit(s) of each analytical parameter (analytical results that are less than the method detection limit shall be reported as "less than the method detection limit"); and
(2) the date, place, time of sampling, visual observation (inspections), and/or measurements, including precipitation.
(3) Description of the current BMPs associated with the effluent sample that exceeded the NAL and the proposed corrective actions taken.

n. Monitoring Records

LUP Type 2 & 3 dischargers shall ensure that records of all storm water monitoring information and copies of all reports (including Annual Reports) required by this General Permit be retained for a period of at least three years. LUP Type 2 & 3 dischargers may retain records off-site and make them available upon request. These records shall include:

i The date, place, time of facility inspections, sampling, visual observation (inspections), and/or measurements, including precipitation (rain gauge);

ii The individual(s) who performed the facility inspections, sampling, visual observation (inspections), and or measurements;

iii The date and approximate time of analyses;

iv The individual(s) who performed the analyses;

v A summary of all analytical results from the last three years, the method detection limits and reporting units, the analytical techniques or methods used, and all chain of custody forms;

vi Quality assurance/quality control records and results;

vii Non-storm water discharge inspections and visual observation (inspections) and storm water discharge visual observation records (see Section M.4.a above);

viii Visual observation and sample collection exception records (see Section M.4.g above); and

ix The records of any corrective actions and follow-up activities that resulted from analytical results, visual observation (inspections), or inspections.

ATTACHMENT A.1
LUP Project Area or Project Section Area Type Determination

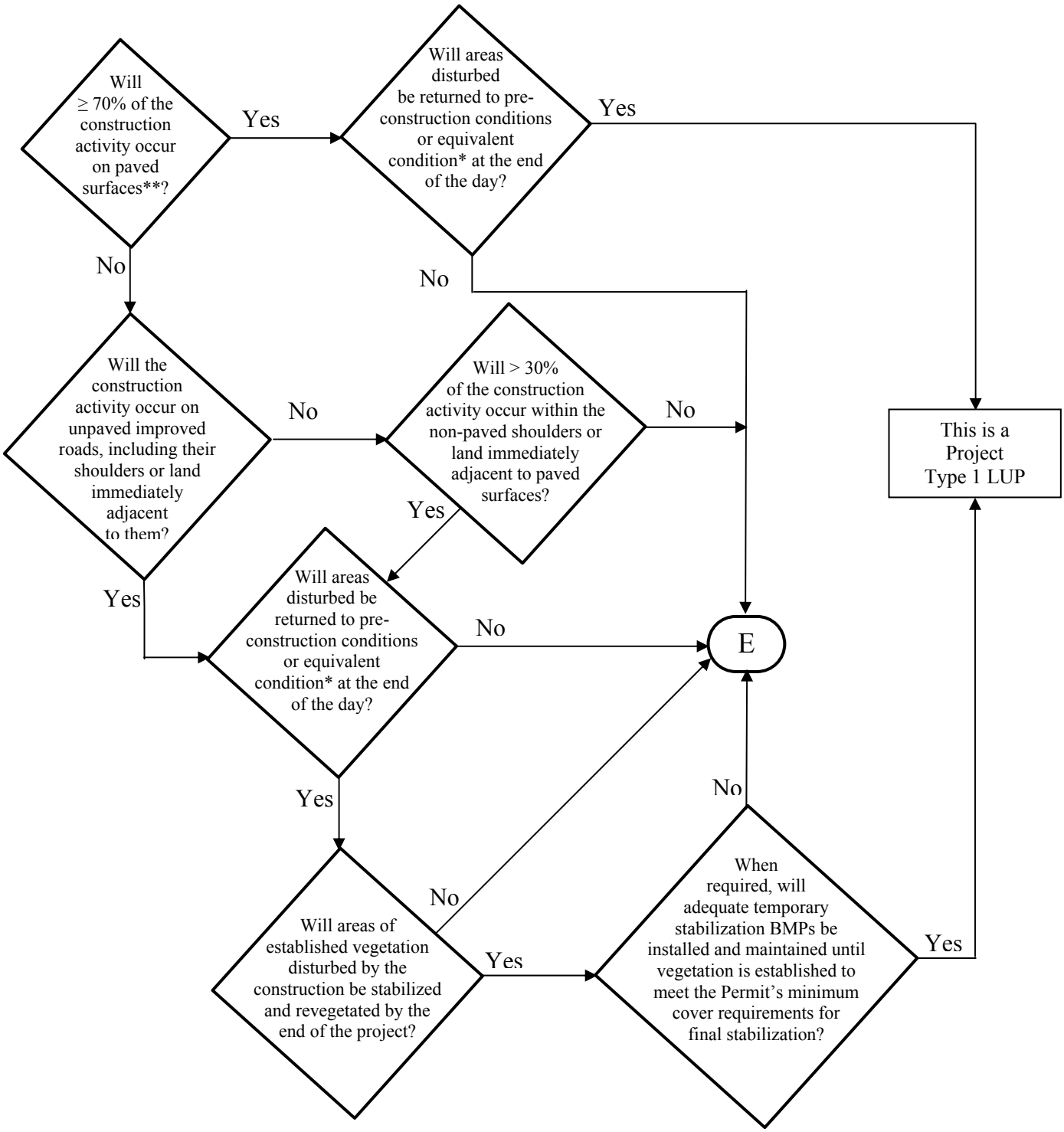

*See Definition of Terms
** Or: "Will < 30% of the soil disturbance occur on unpaved surfaces?

ATTACHMENT A.1
LUP Project Area or Project Section Area Type Determination

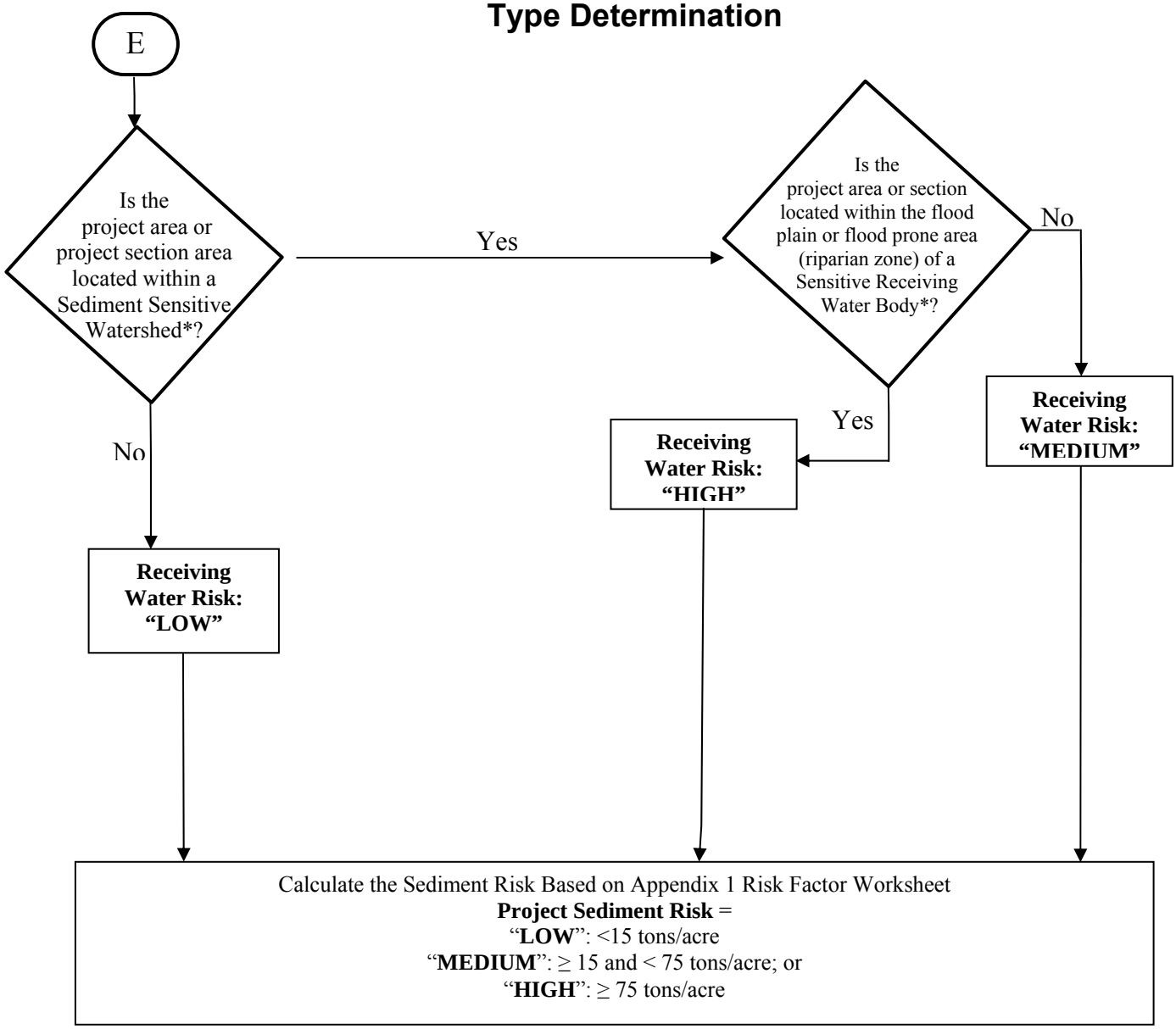

* See Definition of Terms

PROJECT SEDIMENT RISK

RECEIVING WATER RISK	**LOW**	**MEDIUM**	**HIGH**
LOW	Type 1	Type 1	Type 2
MEDIUM	Type 1	Type 2	Type 3
HIGH	Type 2	Type 3	Type 3

ATTACHMENT A.1
Definition of Terms

1. **Equivalent Condition** – Means disturbed soils such as those from trench excavation are required to be hauled away, backfilled into the trench, and/or covered (e.g., metal plates, pavement, plastic covers over spoil piles) at the end of the construction day.
2. **Linear Construction Activity** – Linear construction activity consists of underground/ overhead facilities that typically include, but are not limited to, any conveyance, pipe or pipeline for the transportation of any gaseous, liquid (including water, wastewater for domestic municipal services), liquescent, or slurry substance; any cable line or wire for the transmission of electrical energy; any cable line or wire for communications (e.g., telephone, telegraph, radio or television messages); and associated ancillary facilities. Construction activities associated with LUPs include, but are not limited to those activities necessary for the installation of underground and overhead linear facilities (e.g., conduits, substructures, pipelines, towers, poles, cables, wires, connectors, switching, regulating and transforming equipment and associated ancillary facilities) and include, but are not limited to, underground utility mark-out, potholing, concrete and asphalt cutting and removal, trenching, excavation, boring and drilling, access road and pole/ tower pad and cable/ wire pull station, substation construction, substructure installation, construction of tower footings and/or foundations, pole and tower installations, pipeline installations, welding, concrete and/or pavement repair or replacement, and stockpile/ borrow locations.
3. **Sediment Sensitive Receiving Water Body –** Defined as a water body segment that is listed on EPA's approved CWA 303(d) list for sedimentation/siltation, turbidity, or is designated with beneficial uses of SPAWN, MIGRATORY, and COLD.
4. **Sediment Sensitive Watershed –** Defined as a watershed draining into a receiving water body listed on EPA's approved CWA 303(d) list for sedimentation/siltation, turbidity, or a water body designated with beneficial uses of SPAWN, MIGRATORY, and COLD.

ATTACHMENT A.2
PERMIT REGISTRATION DOCUMENTS (PRDs)
GENERAL INSTRUCTIONS FOR LINEAR UNDERGROUND/OVERHEAD PROJECTS TO COMPLY WITH THE CONSTRUCTION GENERAL PERMIT

GENERAL INSTRUCTIONS

Who Must Submit

This permit is effective on July 1, 2010.

The Legally Responsible Person (LRP) for construction activities associated with linear underground/overhead project (LUP) must electronically apply for coverage under this General Permit on or after July 1, 2010. If it is determined that the LUP construction activities require an NPDES permit, the Legally Responsible Person[1] (LRP) shall submit PRDs for this General Permit in accordance with the following:

LUPs associated with Private or Municipal Development Projects

1. For LUPs associated with pre-development and pre-redevelopment construction activities:

   The LRP must obtain coverage[2] under this General Permit for its pre-development and pre-redevelopment construction activities where the total disturbed land area of these construction activities is greater than 1 acre.

2. For LUPs associated with new development and redevelopment construction projects:

   The LRP must obtain coverage under this General Permit for LUP construction activities associated with new development and redevelopment projects where the total disturbed land area of the LUP is greater than 1 acre. Coverage under this permit is not required where the same LUP construction activities are covered by another NPDES permit.

LUPs not associated with private or municipal new development or redevelopment projects:

The LRP must obtain coverage under this General Permit on or after July 1, 2010 for its LUP construction activities where the total disturbed land area is greater than 1 acre.

PRD Submittal Requirements

Prior to the start of construction activities a LRP must submit PRDs and fees to the State Water Board for each LUP.

New and Ongoing LUPs

Dischargers of new LUPs that commence construction activities after the adoption date of this General Permit shall file PRDs prior to the commencement of construction and implement the SWPPP upon the start of construction.

[1] person possessing the title of the land on which the construction activities will occur for the regulated site
[2] obtain coverage means filing PRDs for the project.

PERMIT REGISTRATION DOCUMENTS (PRDs)
GENERAL INSTRUCTIONS (CONTINUED)

Dischargers of ongoing LUPs that are currently covered under State Water Board Order No. 2003-0007 (Small LUP General Permit) shall electronically file Permit Registration Documents no later than July 1, 2010. After July 1, 2010, all NOIs subject to State Water Board Order No. 2003-0007-DWQ will be terminated. All existing dischargers shall be exempt from the risk determination requirements in Attachment A. All existing dischargers are therefore subject to LUP Type 1 requirements regardless of their project's sediment and receiving water risks. However, a Regional Board retains the authority to require an existing discharger to comply with the risk determination requirements in Attachment A.

Where to Apply

The Permit Registration Documents (PRDs) can be found at www.waterboards.ca.gov/water_issues/programs/stormwater/

Fees

The annual fee for storm water permits are established through the State of California Code of Regulations.

When Permit Coverage Commences

To obtain coverage under the General Permit, the LRP must include the complete PRDs and the annual fee. All PRDs deemed incomplete will be rejected with an explanation as to what is required to complete submittal. Upon receipt of complete PRDs and associated fee, each discharger will be sent a waste discharger's identification (WDID) number.

Projects and Activities Not Defined As Construction Activity

1. LUP construction activity does not include routine maintenance projects to maintain original line and grade, hydraulic capacity, or original purpose of the facility. Routine maintenance projects are projects associated with operations and maintenance activities that are conducted on existing lines and facilities and within existing right-of-way, easements, franchise agreements or other legally binding agreements of the discharger. Routine maintenance projects include, but are not limited to projects that are conducted to:

    - Maintain the original purpose of the facility, or hydraulic capacity.
    - Update existing lines[3] and facilities to comply with applicable codes, standards and regulations regardless if such projects result in increased capacity.
    - Repairing leaks.

    Routine maintenance does not include construction of new[4] lines or facilities resulting from compliance with applicable codes, standards and regulations.

[3] Update existing lines includes replacing existing lines with new materials or pipes.
[4] New lines are those that are not associated with existing facilities and are not part of a project to update or replace existing lines.

PERMIT REGISTRATION DOCUMENTS (PRDs)
GENERAL INSTRUCTIONS (CONTINUED)

Routine maintenance projects do not include those areas of maintenance projects that are outside of an existing right-of-way, franchise, easements, or agreements. When a project must acquire new areas, those areas may be subject to this General Permit based on the area of disturbed land outside the original right-of-way, easement, or agreement.

2. LUP construction activity does not include field activities associated with the planning and design of a project (e.g., activities associated with route selection).

3. Tie-ins conducted immediately adjacent to "energized" or "pressurized" facilities by the discharger are not considered small construction activities where all other LUP construction activities associated with the tie-in are covered by a NOI and SWPPP of a third party or municipal agency.

Calculating Land Disturbance Areas of LUPs

The total land area disturbed for LUPs is the sum of the:

- Surface areas of trenches, laterals and ancillary facilities, plus
- Area of the base of stockpiles on unpaved surfaces, plus
- Surface area of the borrow area, plus
- Areas of paved surfaces constructed for the project, plus
- Areas of new roads constructed or areas of major reconstruction to existing roads (e.g. improvements to two-track surfaces or road widening) for the sole purpose of accessing construction activities or as part of the final project, plus
- Equipment and material storage, staging, and preparation areas (laydown areas) not on paved surfaces, plus
- Soil areas outside the surface area of trenches, laterals and ancillary facilities that will be graded, and/or disturbed by the use of construction equipment, vehicles and machinery during construction activities.

Stockpiling Areas

Stockpiling areas, borrow areas and the removal of soils from a construction site may or may not be included when calculating the area of disturbed soil for a site depending on the following conditions:

- For stockpiling of soils onsite or immediately adjacent to a LUP site and the stockpile is not on a paved surface, the area of the base of the stockpile is to be included in the disturbed area calculation.

- The surface area of borrow areas that are onsite or immediately adjacent to a project site are to be included in the disturbed area calculation.

- For soil that is hauled offsite to a location owned or operated by the discharger that is not a paved surface, the area of the base of the stockpile is to be included in the disturbed area calculation except when the offsite location is already subject to a separate storm water permit.

PERMIT REGISTRATION DOCUMENTS (PRDs)
GENERAL INSTRUCTIONS (CONTINUED)

- For soil that is brought to the project from an off-site location owned or operated by the discharger the surface area of the borrow pit is to be included in the disturbed area calculation except when the offsite location is already subject to a separate storm water permit.

- Trench spoils on a paved surface that are either returned to the trench or excavation or hauled away from the project daily for disposal or reuse will not be included in the disturbed area calculation.

If you have any questions concerning submittal of PRDs, please call the State Water Board at (866) 563-3107.

ATTACHMENT B
PERMIT REGISTRATION DOCUMENTS (PRDs) TO COMPLY WITH THE TERMS OF THE GENERAL PERMIT TO DISCHARGE STORM WATER ASSOCIATED WITH CONSTRUCTION ACTIVITY

GENERAL INSTRUCTIONS

A. All Linear Construction Projects shall comply with the PRD requirements in Attachment A.2 of this Order.

B. Who Must Submit

Discharges of storm water associated with construction that results in the disturbance of one acre or more of land must apply for coverage under the General Construction Storm Water Permit (General Permit). Any construction activity that is a part of a larger common plan of development or sale must also be permitted, regardless of size. (For example, if 0.5 acre of a 20-acre subdivision is disturbed by the construction activities of discharger A and the remaining 19.5 acres is to be developed by discharger B, discharger A must obtain a General Storm Water Permit for the 0.5 acre project).

Other discharges from construction activities that are covered under this General Permit can be found in the General Permit Section II.B.

It is the LRP's responsibility to obtain coverage under this General Permit by electronically submitting complete PRDs (Permit Registration Documents).

In all cases, the proper procedures for submitting the PRDs must be completed before construction can commence.

C. Construction Activity Not Covered By This General Permit

Discharges from construction that are not covered under this General Permit can be found in the General Permit Sections II.A &B..

D. Annual Fees and Fee Calculation

Annual fees are calculated based upon the total area of land to be disturbed not the total size of the acreage owned. However, the calculation includes all acres to be disturbed during the duration of the project. For example, if 10 acres are scheduled to be disturbed the first year and 10 in each subsequent year for 5 years, the annual fees would be based upon 50 acres of disturbance. The State Water Board will evaluate adding acreage to an existing Permit Waste Discharge Identification (WDID) number on a case-by-case basis. In general, any acreage to be considered must be contiguous to the permitted land area and the existing

SWPPP must be appropriate for the construction activity and topography of the acreage under consideration. As acreage is built out and stabilized or sold, the Change of Information (COI) form enables the applicant to remove those acres from inclusion in the annual fee calculation. Checks should be made payable to: State Water Board.

The Annual fees are established through regulations adopted by the State Water Board. The total annual fee is the current base fee plus applicable surcharges for all construction sites submitting an NOI, based on the total acreage to be disturbed during the life of the project. Annual fees are subject to change by regulation.

Dischargers that apply for and satisfy the Small Construction Erosivity Wavier requirements shall pay a fee of $200.00 plus an applicable surcharge, see the General Permit Section II.B.7.

E. When to Apply

LRP's proposing to conduct construction activities subject to this General Permit must submit their PRDs prior to the commencement of construction activity.

F. Requirements for Completing Permit Registration Documents (PRDs)

All dischargers required to comply with this General Permit shall electronically submit the required PRDs for their type of construction as defined below.

G. Standard PRD Requirements (All Dischargers)

1. Notice of Intent
2. Risk Assessment (Standard or Site-Specific)
3. Site Map
4. SWPPP
5. Annual Fee
6. Certification

H. Additional PRD Requirements Related to Construction Type

1. Discharger in unincorporated areas of the State (not covered under an adopted Phase I or II SUSMP requirements) and that are not a linear project shall also submit a completed:
   a. Post-Construction Water Balance Calculator (Appendix 2).

2. Dischargers who are proposing to implement ATS shall submit:
   a. Complete ATS Plan in accordance with Attachment F at least 14 days prior to the planned operation of the ATS and a paper copy shall be available onsite during ATS operation.

b. Certification proof that design done by a professional in accordance with Attachment F.

3. Dischargers who are proposing an alternate Risk Justification:
   a. Particle Size Analysis.

I. Exceptions to Standard PRD Requirements

Construction sites with an R value less than 5 as determined in the Risk Assessment are not required to submit a SWPPP.

J. Description of PRDs

1. Notice of Intent (NOI)

2. Site Map(s) Includes:
   a. The project's surrounding area (vicinity)
   b. Site layout
   c. Construction site boundaries
   d. Drainage areas
   e. Discharge locations
   f. Sampling locations
   g. Areas of soil disturbance (temporary or permanent)
   h. Active areas of soil disturbance (cut or fill)
   i. Locations of all runoff BMPs
   j. Locations of all erosion control BMPs
   k. Locations of all sediment control BMPs
   l. ATS location (if applicable)
   m. Locations of sensitive habitats, watercourses, or other features which are not to be disturbed
   n. Locations of all post-construction BMPs
   o. Locations of storage areas for waste, vehicles, service, loading/unloading of materials, access (entrance/exits) points to construction site, fueling, and water storage, water transfer for dust control and compaction practices

3. **SWPPPs**
   A site-specific SWPPP shall be developed by each discharger and shall be submitted with the PRDs.

4. **Risk Assessment**
   All dischargers shall use the Risk Assessment procedure as describe in the General Permit Appendix 1.

   a. The Standard Risk Assessment includes utilization of the following:
      i. Receiving water Risk Assessment interactive map

ii. EPA Rainfall Erosivity Factor Calculator Website
iii. Sediment Risk interactive map
iv. Sediment sensitive water bodies list

b. The Site-Specific Risk Assessment includes the completion of the hand calculated R value Risk Calculator

5. **Post-Construction Water Balance Calculator**
All dischargers subject to this requirement shall complete the Water Balance Calculator (in Appendix 2) in accordance with the instructions.

6. **ATS Design Document and Certification**
All dischargers using ATS must submit electronically their system design (as well as any supporting documentation) and proof that the system was designed by a qualified ATS design professional (See Attachment F).

To obtain coverage under the General Permit PRDs must be included and completed. If any of the required items are missing, the PRD submittal is considered incomplete and will be rejected. Upon receipt of a complete PRD submittal, the State Water Board will process the application package in the order received and assign a (WDID) number.

Questions?

If you have any questions on completing the PRDs please email stormwater@waterboards.ca.gov or call (866) 563-3107.

ATTACHMENT C
RISK LEVEL 1 REQUIREMENTS

A. Effluent Standards

[These requirements are the same as those in the General Permit order.]

1. Narrative – Risk Level 1 dischargers shall comply with the narrative effluent standards listed below:

   a. Storm water discharges and authorized non-storm water discharges regulated by this General Permit shall not contain a hazardous substance equal to or in excess of reportable quantities established in 40 C.F.R. §§ 117.3 and 302.4, unless a separate NPDES Permit has been issued to regulate those discharges.

   b. Dischargers shall minimize or prevent pollutants in storm water discharges and authorized non-storm water discharges through the use of controls, structures, and management practices that achieve BAT for toxic and non-conventional pollutants and BCT for conventional pollutants.

2. Numeric – Risk Level 1 dischargers are not subject to a numeric effluent standard.

B. Good Site Management "Housekeeping"

1. Risk Level 1 dischargers shall implement good site management (i.e., "housekeeping") measures for construction materials that could potentially be a threat to water quality if discharged. At a minimum, Risk Level 1 dischargers shall implement the following good housekeeping measures:

   a. Conduct an inventory of the products used and/or expected to be used and the end products that are produced and/or expected to be produced. This does not include materials and equipment that are designed to be outdoors and exposed to environmental conditions (i.e. poles, equipment pads, cabinets, conductors, insulators, bricks, etc.).

   b. Cover and berm loose stockpiled construction materials that are not actively being used (i.e. soil, spoils, aggregate, fly-ash, stucco, hydrated lime, etc.).

c. Store chemicals in watertight containers (with appropriate secondary containment to prevent any spillage or leakage) or in a storage shed (completely enclosed).

d. Minimize exposure of construction materials to precipitation. This does not include materials and equipment that are designed to be outdoors and exposed to environmental conditions (i.e. poles, equipment pads, cabinets, conductors, insulators, bricks, etc.).

e. Implement BMPs to prevent the off-site tracking of loose construction and landscape materials.

2. Risk Level 1 dischargers shall implement good housekeeping measures for waste management, which, at a minimum, shall consist of the following:

a. Prevent disposal of any rinse or wash waters or materials on impervious or pervious site surfaces or into the storm drain system.

b. Ensure the containment of sanitation facilities (e.g., portable toilets) to prevent discharges of pollutants to the storm water drainage system or receiving water.

c. Clean or replace sanitation facilities and inspecting them regularly for leaks and spills.

d. Cover waste disposal containers at the end of every business day and during a rain event.

e. Prevent discharges from waste disposal containers to the storm water drainage system or receiving water.

f. Contain and securely protect stockpiled waste material from wind and rain at all times unless actively being used.

g. Implement procedures that effectively address hazardous and non-hazardous spills.

h. Develop a spill response and implementation element of the SWPPP prior to commencement of construction activities. The SWPPP shall require that:

i. Equipment and materials for cleanup of spills shall be available on site and that spills and leaks shall be cleaned up immediately and disposed of properly; and

ii. Appropriate spill response personnel are assigned and trained.

i. Ensure the containment of concrete washout areas and other washout areas that may contain additional pollutants so there is no discharge into the underlying soil and onto the surrounding areas.

3. Risk Level 1 dischargers shall implement good housekeeping for vehicle storage and maintenance, which, at a minimum, shall consist of the following:

   a. Prevent oil, grease, or fuel to leak in to the ground, storm drains or surface waters.

   b. Place all equipment or vehicles, which are to be fueled, maintained and stored in a designated area fitted with appropriate BMPs.

   c. Clean leaks immediately and disposing of leaked materials properly.

4. Risk Level 1 dischargers shall implement good housekeeping for landscape materials, which, at a minimum, shall consist of the following:

   a. Contain stockpiled materials such as mulches and topsoil when they are not actively being used.

   b. Contain fertilizers and other landscape materials when they are not actively being used.

   c. Discontinue the application of any erodible landscape material within 2 days before a forecasted rain event or during periods of precipitation.

   d. Apply erodible landscape material at quantities and application rates according to manufacture recommendations or based on written specifications by knowledgeable and experienced field personnel.

   e. Stack erodible landscape material on pallets and covering or storing such materials when not being used or applied.

5. Risk Level 1 dischargers shall conduct an assessment and create a list of potential pollutant sources and identify any areas of the site where additional BMPs are necessary to reduce or prevent pollutants in storm water discharges and authorized non-storm water discharges. This potential pollutant list shall be kept with the SWPPP and shall identify

all non-visible pollutants which are known, or should be known, to occur on the construction site. At a minimum, when developing BMPs, Risk Level 1 dischargers shall do the following:

a. Consider the quantity, physical characteristics (e.g., liquid, powder, solid), and locations of each potential pollutant source handled, produced, stored, recycled, or disposed of at the site.

b. Consider the degree to which pollutants associated with those materials may be exposed to and mobilized by contact with storm water.

c. Consider the direct and indirect pathways that pollutants may be exposed to storm water or authorized non-storm water discharges. This shall include an assessment of past spills or leaks, non-storm water discharges, and discharges from adjoining areas.

d. Ensure retention of sampling, visual observation, and inspection records.

e. Ensure effectiveness of existing BMPs to reduce or prevent pollutants in storm water discharges and authorized non-storm water discharges.

6. Risk Level 1 dischargers shall implement good housekeeping measures on the construction site to control the air deposition of site materials and from site operations. Such particulates can include, but are not limited to, sediment, nutrients, trash, metals, bacteria, oil and grease and organics.

C. Non-Storm Water Management

1. Risk Level 1 dischargers shall implement measures to control all non-storm water discharges during construction.

2. Risk Level 1 dischargers shall wash vehicles in such a manner as to prevent non-storm water discharges to surface waters or MS4 drainage systems.

3. Risk Level 1 dischargers shall clean streets in such a manner as to prevent unauthorized non-storm water discharges from reaching surface water or MS4 drainage systems.

D. Erosion Control

1. Risk Level 1 dischargers shall implement effective wind erosion control.

2. Risk Level 1 dischargers shall provide effective soil cover for inactive[1] areas and all finished slopes, open space, utility backfill, and completed lots.

3. Risk Level 1 dischargers shall limit the use of plastic materials when more sustainable, environmentally friendly alternatives exist. Where plastic materials are deemed necessary, the discharger shall consider the use of plastic materials resistant to solar degradation.

E. Sediment Controls

1. Risk Level 1 dischargers shall establish and maintain effective perimeter controls and stabilize all construction entrances and exits to sufficiently control erosion and sediment discharges from the site.

2. On sites where sediment basins are to be used, Risk Level 1 dischargers shall, at minimum, design sediment basins according to the method provided in CASQA's Construction BMP Guidance Handbook.

F. Run-on and Runoff Controls

Risk Level 1 dischargers shall effectively manage all run-on, all runoff within the site and all runoff that discharges off the site. Run-on from off site shall be directed away from all disturbed areas or shall collectively be in compliance with the effluent limitations in this General Permit.

G. Inspection, Maintenance and Repair

1. Risk Level 1 dischargers shall ensure that all inspection, maintenance repair and sampling activities at the project location shall be performed or supervised by a Qualified SWPPP Practitioner (QSP) representing the discharger. The QSP may delegate any or all of these activities to an employee trained to do the task(s) appropriately, but shall ensure adequate deployment.

2. Risk Level 1 dischargers shall perform weekly inspections and observations, and at least once each 24-hour period during extended

[1] Inactive areas of construction are areas of construction activity that have been disturbed and are not scheduled to be re-disturbed for at least 14 days.

storm events, to identify and record BMPs that need maintenance to operate effectively, that have failed, or that could fail to operate as intended. Inspectors shall be the QSP or be trained by the QSP.

3. Upon identifying failures or other shortcomings, as directed by the QSP, Risk Level 1 dischargers shall begin implementing repairs or design changes to BMPs within 72 hours of identification and complete the changes as soon as possible.

4. For each inspection required, Risk Level 1 dischargers shall complete an inspection checklist, using a form provided by the State Water Board or Regional Water Board or in an alternative format.

5. Risk Level 1 dischargers shall ensure that checklists shall remain onsite with the SWPPP and at a minimum, shall include:

    a. Inspection date and date the inspection report was written.

    b. Weather information, including presence or absence of precipitation, estimate of beginning of qualifying storm event, duration of event, time elapsed since last storm, and approximate amount of rainfall in inches.

    c. Site information, including stage of construction, activities completed, and approximate area of the site exposed.

    d. A description of any BMPs evaluated and any deficiencies noted.

    e. If the construction site is safely accessible during inclement weather, list the observations of all BMPs: erosion controls, sediment controls, chemical and waste controls, and non-storm water controls. Otherwise, list the results of visual inspections at all relevant outfalls, discharge points, downstream locations and any projected maintenance activities.

    f. Report the presence of noticeable odors or of any visible sheen on the surface of any discharges.

    g. Any corrective actions required, including any necessary changes to the SWPPP and the associated implementation dates.

    h. Photographs taken during the inspection, if any.

    i. Inspector’s name, title, and signature.

H. Rain Event Action Plan

Not required for Risk Level 1 dischargers.

I. Risk Level 1 Monitoring and Reporting Requirements

Table 1- Summary of Monitoring Requirements

Risk Level	Visual Inspections					Sample Collection	
	Quarterly Non-storm Water Discharge	Pre-storm Event		Daily Storm BMP	Post Storm	Storm Water Discharge	Receiving Water
		Baseline	REAP				
1	X	X		X	X		

1. **Construction Site Monitoring Program Requirements**

   a. Pursuant to Water Code Sections 13383 and 13267, all dischargers subject to this General Permit shall develop and implement a written site-specific Construction Site Monitoring Program (CSMP) in accordance with the requirements of this Section. The CSMP shall include all monitoring procedures and instructions, location maps, forms, and checklists as required in this section. The CSMP shall be developed prior to the commencement of construction activities, and revised as necessary to reflect project revisions. The CSMP shall be a part of the Storm Water Pollution Prevention Plan (SWPPP), included as an appendix or separate SWPPP chapter.

   b. Existing dischargers registered under the State Water Board Order No. 99-08-DWQ shall make and implement necessary revisions to their Monitoring Programs to reflect the changes in this General Permit in a timely manner, but no later than July 1, 2010. Existing dischargers shall continue to implement their existing Monitoring Programs in compliance with State Water Board Order No. 99-08-DWQ until the necessary revisions are completed according to the schedule above.

   c. When a change of ownership occurs for all or any portion of the construction site prior to completion or final stabilization, the new discharger shall comply with these requirements as of the date the ownership change occurs.

2. **Objectives**

   The CSMP shall be developed and implemented to address the following objectives:

   a. To demonstrate that the site is in compliance with the Discharge Prohibitions;

b. To determine whether non-visible pollutants are present at the construction site and are causing or contributing to exceedances of water quality objectives;

c. To determine whether immediate corrective actions, additional Best Management Practice (BMP) implementation, or SWPPP revisions are necessary to reduce pollutants in storm water discharges and authorized non-storm water discharges; and

d. To determine whether BMPs included in the SWPPP are effective in preventing or reducing pollutants in storm water discharges and authorized non-storm water discharges.

3. **Risk Level 1 - Visual Monitoring (Inspection) Requirements for Qualifying Rain Events**

a. Risk Level 1 dischargers shall visually observe (inspect) storm water discharges at all discharge locations within two business days (48 hours) after each qualifying rain event.

b. Risk Level 1 dischargers shall visually observe (inspect) the discharge of stored or contained storm water that is derived from and discharged subsequent to a qualifying rain event producing precipitation of ½ inch or more at the time of discharge. Stored or contained storm water that will likely discharge after operating hours due to anticipated precipitation shall be observed prior to the discharge during operating hours.

c. Risk Level 1 dischargers shall conduct visual observations (inspections) during business hours only.

d. Risk Level 1 dischargers shall record the time, date and rain gauge reading of all qualifying rain events.

e. Within 2 business days (48 hours) prior to each qualifying rain event, Risk Level 1 dischargers shall visually observe (inspect):

i. All storm water drainage areas to identify any spills, leaks, or uncontrolled pollutant sources. If needed, the discharger shall implement appropriate corrective actions.

ii. All BMPs to identify whether they have been properly implemented in accordance with the SWPPP. If needed, the discharger shall implement appropriate corrective actions.

iii. Any storm water storage and containment areas to detect leaks and ensure maintenance of adequate freeboard.

f. For the visual observations (inspections) described in e.i and e.iii above, Risk Level 1 dischargers shall observe the presence or absence of floating and suspended materials, a sheen on the surface, discolorations, turbidity, odors, and source(s) of any observed pollutants.

g. Within two business days (48 hours) after each qualifying rain event, Risk Level 1 dischargers shall conduct post rain event visual observations (inspections) to (1) identify whether BMPs were adequately designed, implemented, and effective, and (2) identify additional BMPs and revise the SWPPP accordingly.

h. Risk Level 1 dischargers shall maintain on-site records of all visual observations (inspections), personnel performing the observations, observation dates, weather conditions, locations observed, and corrective actions taken in response to the observations.

4. **Risk Level 1 – Visual Observation Exemptions**

a. Risk Level 1 dischargers shall be prepared to conduct visual observation (inspections) until the minimum requirements of Section I.3 above are completed. Risk Level 1 dischargers are not required to conduct visual observation (inspections) under the following conditions:

i. During dangerous weather conditions such as flooding and electrical storms.

ii. Outside of scheduled site business hours.

b. If no required visual observations (inspections) are collected due to these exceptions, Risk Level 1 dischargers shall include an explanation in their SWPPP and in the Annual Report documenting why the visual observations (inspections) were not conducted.

5. **Risk Level 1 – Monitoring Methods**

Risk Level 1 dischargers shall include a description of the visual observation locations, visual observation procedures, and visual observation follow-up and tracking procedures in the CSMP.

6. **Risk Level 1 – Non-Storm Water Discharge Monitoring Requirements**

a. Visual Monitoring Requirements:

   i. Risk Level 1 dischargers shall visually observe (inspect) each drainage area for the presence of (or indications of prior) unauthorized and authorized non-storm water discharges and their sources.

   ii. Risk Level 1 dischargers shall conduct one visual observation (inspection) quarterly in each of the following periods: January-March, April-June, July-September, and October-December. Visual observation (inspections) are only required during daylight hours (sunrise to sunset).

   iii. Risk Level 1 dischargers shall ensure that visual observations (inspections) document the presence or evidence of any non-storm water discharge (authorized or unauthorized), pollutant characteristics (floating and suspended material, sheen, discoloration, turbidity, odor, etc.), and source. Risk Level 1 dischargers shall maintain on-site records indicating the personnel performing the visual observation (inspections), the dates and approximate time each drainage area and non-storm water discharge was observed, and the response taken to eliminate unauthorized non-storm water discharges and to reduce or prevent pollutants from contacting non-storm water discharges.

7. **Risk Level 1 – Non-Visible Pollutant Monitoring Requirements**

   a. Risk Level 1 dischargers shall collect one or more samples during any breach, malfunction, leakage, or spill observed during a visual inspection which could result in the discharge of pollutants to surface waters that would not be visually detectable in storm water.

   b. Risk Level 1 dischargers shall ensure that water samples are large enough to characterize the site conditions.

   c. Risk Level 1 dischargers shall collect samples at all discharge locations that can be safely accessed.

   d. Risk Level 1 dischargers shall collect samples during the first two hours of discharge from rain events that occur during business hours and which generate runoff.

   e. Risk Level 1 dischargers shall analyze samples for all non-visible pollutant parameters (if applicable) - parameters indicating the

presence of pollutants identified in the pollutant source assessment required (Risk Level 1 dischargers shall modify their CSMPs to address these additional parameters in accordance with any updated SWPPP pollutant source assessment).

f. Risk Level 1 dischargers shall collect a sample of storm water that has not come in contact with the disturbed soil or the materials stored or used on-site (uncontaminated sample) for comparison with the discharge sample.

g. Risk Level 1 dischargers shall compare the uncontaminated sample to the samples of discharge using field analysis or through laboratory analysis.[2]

h. Risk Level 1 dischargers shall keep all field /or analytical data in the SWPPP document.

8. **Risk Level 1 – Particle Size Analysis for Project Risk Justification**

Risk Level 1 dischargers justifying an alternative project risk shall report a soil particle size analysis used to determine the RUSLE K-Factor. ASTM D-422 (Standard Test Method for Particle-Size Analysis of Soils), as revised, shall be used to determine the percentages of sand, very fine sand, silt, and clay on the site.

9. **Risk Level 1 – Records**

Risk Level 1 dischargers shall retain records of all storm water monitoring information and copies of all reports (including Annual Reports) for a period of at least three years. Risk Level 1 dischargers shall retain all records on-site while construction is ongoing. These records include:

a. The date, place, time of facility inspections, sampling, visual observation (inspections), and/or measurements, including precipitation.

b. The individual(s) who performed the facility inspections, sampling, visual observation (inspections), and or measurements.

c. The date and approximate time of analyses.

d. The individual(s) who performed the analyses.

[2] For laboratory analysis, all sampling, sample preservation, and analyses must be conducted according to test procedures under 40 CFR Part 136. Field discharge samples shall be collected and analyzed according to the specifications of the manufacturer of the sampling devices employed.

e. A summary of all analytical results from the last three years, the method detection limits and reporting units, and the analytical techniques or methods used.

f. Rain gauge readings from site inspections.

g. Quality assurance/quality control records and results.

h. Non-storm water discharge inspections and visual observation (inspections) and storm water discharge visual observation records (see Sections I.3 and I.6 above).

i. Visual observation and sample collection exception records (see Section I.4 above).

j. The records of any corrective actions and follow-up activities that resulted from analytical results, visual observation (inspections), or inspections.

ATTACHMENT D
RISK LEVEL 2 REQUIREMENTS

A. Effluent Standards

[These requirements are the same as those in the General Permit order.]

1. Narrative – Risk Level 2 dischargers shall comply with the narrative effluent standards listed below:

   a. Storm water discharges and authorized non-storm water discharges regulated by this General Permit shall not contain a hazardous substance equal to or in excess of reportable quantities established in 40 C.F.R. §§ 117.3 and 302.4, unless a separate NPDES Permit has been issued to regulate those discharges.

   b. Dischargers shall minimize or prevent pollutants in storm water discharges and authorized non-storm water discharges through the use of controls, structures, and management practices that achieve BAT for toxic and non-conventional pollutants and BCT for conventional pollutants.

2. Numeric – Risk level 2 dischargers are subject to a pH NAL of 6.5-8.5, and a turbidity NAL of 250 NTU.

B. Good Site Management "Housekeeping"

1. Risk Level 2 dischargers shall implement good site management (i.e., "housekeeping") measures for construction materials that could potentially be a threat to water quality if discharged. At a minimum, Risk Level 2 dischargers shall implement the following good housekeeping measures:

   a. Conduct an inventory of the products used and/or expected to be used and the end products that are produced and/or expected to be produced. This does not include materials and equipment that are designed to be outdoors and exposed to environmental conditions (i.e. poles, equipment pads, cabinets, conductors, insulators, bricks, etc.).

   b. Cover and berm loose stockpiled construction materials that are not actively being used (i.e. soil, spoils, aggregate, fly-ash, stucco, hydrated lime, etc.).

c. Store chemicals in watertight containers (with appropriate secondary containment to prevent any spillage or leakage) or in a storage shed (completely enclosed).

d. Minimize exposure of construction materials to precipitation. This does not include materials and equipment that are designed to be outdoors and exposed to environmental conditions (i.e. poles, equipment pads, cabinets, conductors, insulators, bricks, etc.).

e. Implement BMPs to prevent the off-site tracking of loose construction and landscape materials.

2. Risk Level 2 dischargers shall implement good housekeeping measures for waste management, which, at a minimum, shall consist of the following:

a. Prevent disposal of any rinse or wash waters or materials on impervious or pervious site surfaces or into the storm drain system.

b. Ensure the containment of sanitation facilities (e.g., portable toilets) to prevent discharges of pollutants to the storm water drainage system or receiving water.

c. Clean or replace sanitation facilities and inspecting them regularly for leaks and spills.

d. Cover waste disposal containers at the end of every business day and during a rain event.

e. Prevent discharges from waste disposal containers to the storm water drainage system or receiving water.

f. Contain and securely protect stockpiled waste material from wind and rain at all times unless actively being used.

g. Implement procedures that effectively address hazardous and non-hazardous spills.

h. Develop a spill response and implementation element of the SWPPP prior to commencement of construction activities. The SWPPP shall require:

i. Equipment and materials for cleanup of spills shall be available on site and that spills and leaks shall be cleaned up immediately and disposed of properly.

ii. Appropriate spill response personnel are assigned and trained.

i. Ensure the containment of concrete washout areas and other washout areas that may contain additional pollutants so there is no discharge into the underlying soil and onto the surrounding areas.

3. Risk Level 2 dischargers shall implement good housekeeping for vehicle storage and maintenance, which, at a minimum, shall consist of the following:

   a. Prevent oil, grease, or fuel to leak in to the ground, storm drains or surface waters.

   b. Place all equipment or vehicles, which are to be fueled, maintained and stored in a designated area fitted with appropriate BMPs.

   c. Clean leaks immediately and disposing of leaked materials properly.

4. Risk Level 2 dischargers shall implement good housekeeping for landscape materials, which, at a minimum, shall consist of the following:

   a. Contain stockpiled materials such as mulches and topsoil when they are not actively being used.

   b. Contain all fertilizers and other landscape materials when they are not actively being used.

   c. Discontinue the application of any erodible landscape material within 2 days before a forecasted rain event or during periods of precipitation.

   d. Apply erodible landscape material at quantities and application rates according to manufacture recommendations or based on written specifications by knowledgeable and experienced field personnel.

   e. Stack erodible landscape material on pallets and covering or storing such materials when not being used or applied.

5. Risk Level 2 dischargers shall conduct an assessment and create a list of potential pollutant sources and identify any areas of the site where additional BMPs are necessary to reduce or prevent pollutants in storm water discharges and authorized non-storm water discharges. This potential pollutant list shall be kept with the SWPPP and shall identify

all non-visible pollutants which are known, or should be known, to occur on the construction site. At a minimum, when developing BMPs, Risk Level 2 dischargers shall do the following:

a. Consider the quantity, physical characteristics (e.g., liquid, powder, solid), and locations of each potential pollutant source handled, produced, stored, recycled, or disposed of at the site.

b. Consider the degree to which pollutants associated with those materials may be exposed to and mobilized by contact with storm water.

c. Consider the direct and indirect pathways that pollutants may be exposed to storm water or authorized non-storm water discharges. This shall include an assessment of past spills or leaks, non-storm water discharges, and discharges from adjoining areas.

d. Ensure retention of sampling, visual observation, and inspection records.

e. Ensure effectiveness of existing BMPs to reduce or prevent pollutants in storm water discharges and authorized non-storm water discharges.

6. Risk Level 2 dischargers shall implement good housekeeping measures on the construction site to control the air deposition of site materials and from site operations. Such particulates can include, but are not limited to, sediment, nutrients, trash, metals, bacteria, oil and grease and organics.

7. **Additional Risk Level 2 Requirement:** Risk Level 2 dischargers shall document all housekeeping BMPs in the SWPPP and REAP(s) in accordance with the nature and phase of the construction project. Construction phases at traditional land development projects include Grading and Land Development Phase, Streets and Utilities, or Vertical Construction for traditional land development projects.

C. Non-Storm Water Management

1. Risk Level 2 dischargers shall implement measures to control all non-storm water discharges during construction.

2. Risk Level 2 dischargers shall wash vehicles in such a manner as to prevent non-storm water discharges to surface waters or MS4 drainage systems.

3. Risk Level 2 dischargers shall clean streets in such a manner as to prevent unauthorized non-storm water discharges from reaching surface water or MS4 drainage systems.

D. Erosion Control

1. Risk Level 2 dischargers shall implement effective wind erosion control.

2. Risk Level 2 dischargers shall provide effective soil cover for inactive[1] areas and all finished slopes, open space, utility backfill, and completed lots.

3. Risk Level 2 dischargers shall limit the use of plastic materials when more sustainable, environmentally friendly alternatives exist. Where plastic materials are deemed necessary, the discharger shall consider the use of plastic materials resistant to solar degradation.

E. Sediment Controls

1. Risk Level 2 dischargers shall establish and maintain effective perimeter controls and stabilize all construction entrances and exits to sufficiently control erosion and sediment discharges from the site.

2. On sites where sediment basins are to be used, Risk Level 2 dischargers shall, at minimum, design sediment basins according to the method provided in CASQA's Construction BMP Guidance Handbook.

3. **Additional Risk Level 2 Requirement:** Risk Level 2 dischargers shall implement appropriate erosion control BMPs (runoff control and soil stabilization) in conjunction with sediment control BMPs for areas under active[2] construction.

4. **Additional Risk Level 2 Requirement:** Risk Level 2 dischargers shall apply linear sediment controls along the toe of the slope, face of the slope, and at the grade breaks of exposed slopes to comply with sheet flow lengths[3] in accordance with Table 1.

[1] Inactive areas of construction are areas of construction activity that have been disturbed and are not scheduled to be re-disturbed for at least 14 days.
[2] Active areas of construction are areas undergoing land surface disturbance. This includes construction activity during the preliminary stage, mass grading stage, streets and utilities stage and the vertical construction stage.
[3] Sheet flow length is the length that shallow, low velocity flow travels across a site.

Table 1 - Critical Slope/Sheet Flow Length Combinations

Slope Percentage	Sheet flow length not to exceed
0-25%	20 feet
25-50%	15 feet
Over 50%	10 feet

5. **Additional Risk Level 2 Requirement:** Risk Level 2 dischargers shall ensure that construction activity traffic to and from the project is limited to entrances and exits that employ effective controls to prevent offsite tracking of sediment.

6. **Additional Risk Level 2 Requirement:** Risk Level 2 dischargers shall ensure that all storm drain inlets and perimeter controls, runoff control BMPs, and pollutant controls at entrances and exits (e.g. tire washoff locations) are maintained and protected from activities that reduce their effectiveness.

7. **Additional Risk Level 2 Requirement:** Risk Level 2 dischargers shall inspect on a daily basis all immediate access roads daily. At a minimum daily (when necessary) and prior to any rain event, the discharger shall remove any sediment or other construction activity-related materials that are deposited on the roads (by vacuuming or sweeping).

F. Run-on and Run-off Controls

Risk Level 2 dischargers shall effectively manage all run-on, all runoff within the site and all runoff that discharges off the site. Run-on from off site shall be directed away from all disturbed areas or shall collectively be in compliance with the effluent limitations in this General Permit.

G. Inspection, Maintenance and Repair

1. Risk Level 2 dischargers shall ensure that all inspection, maintenance repair and sampling activities at the project location shall be performed or supervised by a Qualified SWPPP Practitioner (QSP) representing the discharger. The QSP may delegate any or all of these activities to an employee appropriately trained to do the task(s).

2. Risk Level 2 dischargers shall perform weekly inspections and observations, and at least once each 24-hour period during extended storm events, to identify and record BMPs that need maintenance to operate effectively, that have failed, or that could fail to operate as intended. Inspectors shall be the QSP or be trained by the QSP.

3. Upon identifying failures or other shortcomings, as directed by the QSP, Risk Level 2 dischargers shall begin implementing repairs or design changes to BMPs within 72 hours of identification and complete the changes as soon as possible.

4. For each inspection required, Risk Level 2 dischargers shall complete an inspection checklist, using a form provided by the State Water Board or Regional Water Board or in an alternative format.

5. Risk Level 2 dischargers shall ensure that checklists shall remain onsite with the SWPPP and at a minimum, shall include:

   a. Inspection date and date the inspection report was written.

   b. Weather information, including presence or absence of precipitation, estimate of beginning of qualifying storm event, duration of event, time elapsed since last storm, and approximate amount of rainfall in inches.

   c. Site information, including stage of construction, activities completed, and approximate area of the site exposed.

   d. A description of any BMPs evaluated and any deficiencies noted.

   e. If the construction site is safely accessible during inclement weather, list the observations of all BMPs: erosion controls, sediment controls, chemical and waste controls, and non-storm water controls. Otherwise, list the results of visual inspections at all relevant outfalls, discharge points, downstream locations and any projected maintenance activities.

   f. Report the presence of noticeable odors or of any visible sheen on the surface of any discharges.

   g. Any corrective actions required, including any necessary changes to the SWPPP and the associated implementation dates.

   h. Photographs taken during the inspection, if any.

   i. Inspector's name, title, and signature.

H. Rain Event Action Plan

1. **Additional Risk Level 2 Requirement:** The discharger shall ensure a QSP develop a Rain Event Action Plan (REAP) 48 hours prior to any

likely precipitation event. A likely precipitation event is any weather pattern that is forecast to have a 50% or greater probability of producing precipitation in the project area. The discharger shall ensure a QSP obtain a printed copy of precipitation forecast information from the National Weather Service Forecast Office (e.g., by entering the zip code of the project's location at http://www.srh.noaa.gov/forecast).

2. **Additional Risk Level 2 Requirement:** The discharger shall ensure a QSP develop the REAPs for all phases of construction (i.e., Grading and Land Development, Streets and Utilities, Vertical Construction, Final Landscaping and Site Stabilization).

3. **Additional Risk Level 2 Requirement:** The discharger shall ensure a QSP ensure that the REAP include, at a minimum, the following site information:

   a. Site Address
   b. Calculated Risk Level (2 or 3)
   c. Site Storm Water Manager Information including the name, company, and 24-hour emergency telephone number
   d. Erosion and Sediment Control Provider information including the name, company, and 24-hour emergency telephone number
   e. Storm Water Sampling Agent information including the name, company, and 24-hour emergency telephone number

4. **Additional Risk Level 2 Requirement:** The discharger shall ensure a QSP include in the REAP, at a minimum, the following project phase information:

   a. Activities associated with each construction phase
   b. Trades active on the construction site during each construction phase
   c. Trade contractor information
   d. Suggested actions for each project phase

5. **Additional Risk Level 2 Requirement:** The discharger shall ensure a QSP develop additional REAPs for project sites where construction activities are indefinitely halted or postponed (Inactive Construction). At a minimum, Inactive Construction REAPs must include:

   a. Site Address
   b. Calculated Risk Level (2 or 3)
   c. Site Storm Water Manager Information including the name, company, and 24-hour emergency telephone number

d. Erosion and Sediment Control Provider information including the name, company, and 24-hour emergency telephone number
e. Storm Water Sampling Agent information including the name, company, and 24-hour emergency telephone number
f. Trades active on site during Inactive Construction
g. Trade contractor information
h. Suggested actions for inactive construction sites

6. **Additional Risk Level 2 Requirement:** The discharger shall ensure a QSP begin implementation and make the REAP available onsite no later than 24 hours prior to the likely precipitation event.

7. **Additional Risk Level 2 Requirement:** The discharger shall ensure a QSP maintain onsite a paper copy of each REAP onsite in compliance with the record retention requirements of the Special Provisions in this General Permit.

I. Risk Level 2 Monitoring and Reporting Requirements

Table 2- Summary of Monitoring Requirements

Risk Level	Visual Inspections					Sample Collection	
	Quarterly Non-storm Water Discharge	Pre-storm Event		Daily Storm BMP	Post Storm	Storm Water Discharge	Receiving Water
		Baseline	REAP				
2	X	X	X	X	X	X	

1. Construction Site Monitoring Program Requirements

   a. Pursuant to Water Code Sections 13383 and 13267, all dischargers subject to this General Permit shall develop and implement a written site-specific Construction Site Monitoring Program (CSMP) in accordance with the requirements of this Section. The CSMP shall include all monitoring procedures and instructions, location maps, forms, and checklists as required in this section. The CSMP shall be developed prior to the commencement of construction activities, and revised as necessary to reflect project revisions. The CSMP shall be a part of the Storm Water Pollution Prevention Plan (SWPPP), included as an appendix or separate SWPPP chapter.

   b. Existing dischargers registered under the State Water Board Order No. 99-08-DWQ shall make and implement necessary revisions to their Monitoring Program to reflect the changes in this General Permit in a timely manner, but no later than July 1, 2010. Existing dischargers shall continue to implement their existing Monitoring Programs in compliance with State Water Board Order No. 99-08-DWQ until the necessary revisions are completed according to the schedule above.

   c. When a change of ownership occurs for all or any portion of the construction site prior to completion or final stabilization, the new discharger shall comply with these requirements as of the date the ownership change occurs.

2. **Objectives**

   The CSMP shall be developed and implemented to address the following objectives:

   a. To demonstrate that the site is in compliance with the Discharge Prohibitions and applicable Numeric Action Levels (NALs).

b. To determine whether non-visible pollutants are present at the construction site and are causing or contributing to exceedances of water quality objectives.

c. To determine whether immediate corrective actions, additional Best Management Practice (BMP) implementation, or SWPPP revisions are necessary to reduce pollutants in storm water discharges and authorized non-storm water discharges.

d. To determine whether BMPs included in the SWPPP/Rain Event Action Plan (REAP) are effective in preventing or reducing pollutants in storm water discharges and authorized non-storm water discharges.

3. **Risk Level 2 – Visual Monitoring (Inspection) Requirements for Qualifying Rain Events**

a. Risk Level 2 dischargers shall visually observe (inspect) storm water discharges at all discharge locations within two business days (48 hours) after each qualifying rain event.

b. Risk Level 2 dischargers shall visually observe (inspect) the discharge of stored or contained storm water that is derived from and discharged subsequent to a qualifying rain event producing precipitation of ½ inch or more at the time of discharge. Stored or contained storm water that will likely discharge after operating hours due to anticipated precipitation shall be observed prior to the discharge during operating hours.

c. Risk Level 2 dischargers shall conduct visual observations (inspections) during business hours only.

d. Risk Level 2 dischargers shall record the time, date and rain gauge reading of all qualifying rain events.

e. Within 2 business days (48 hours) prior to each qualifying rain event, Risk Level 2 dischargers shall visually observe (inspect):

i. all storm water drainage areas to identify any spills, leaks, or uncontrolled pollutant sources. If needed, the discharger shall implement appropriate corrective actions.

ii. all BMPs to identify whether they have been properly implemented in accordance with the SWPPP/REAP. If needed, the discharger shall implement appropriate corrective actions.

iii. any storm water storage and containment areas to detect leaks and ensure maintenance of adequate freeboard.

f. For the visual observations (inspections) described in c.i and c.iii above, Risk Level 2 dischargers shall observe the presence or absence of floating and suspended materials, a sheen on the surface, discolorations, turbidity, odors, and source(s) of any observed pollutants.

g. Within two business days (48 hours) after each qualifying rain event, Risk Level 2 dischargers shall conduct post rain event visual observations (inspections) to (1) identify whether BMPs were adequately designed, implemented, and effective, and (2) identify additional BMPs and revise the SWPPP accordingly.

h. Risk Level 2 dischargers shall maintain on-site records of all visual observations (inspections), personnel performing the observations, observation dates, weather conditions, locations observed, and corrective actions taken in response to the observations.

4. **Risk Level 2 – Water Quality Sampling and Analysis**

a. Risk Level 2 dischargers shall collect storm water grab samples from sampling locations, as defined in Section I.5. The storm water grab sample(s) obtained shall be representative of the flow and characteristics of the discharge.

b. At minimum, Risk Level 2 dischargers shall collect 3 samples per day of the qualifying event.

c. Risk Level 2 dischargers shall ensure that the grab samples collected of stored or contained storm water are from discharges subsequent to a qualifying rain event (producing precipitation of ½ inch or more at the time of discharge).

<u>Storm Water Effluent Monitoring Requirements</u>

d. Risk Level 2 dischargers shall analyze their effluent samples for:

i. pH and turbidity.

ii. Any additional parameters for which monitoring is required by the Regional Water Board.

5. **Risk Level 2 – Storm Water Discharge Water Quality Sampling Locations**

Effluent Sampling Locations

a. Risk Level 2 dischargers shall perform sampling and analysis of storm water discharges to characterize discharges associated with construction activity from the entire project disturbed area.

b. Risk Level 2 dischargers shall collect effluent samples at all discharge points where storm water is discharged off-site.

c. Risk Level 2 dischargers shall ensure that storm water discharge collected and observed represent[4] the effluent in each drainage area based on visual observation of the water and upstream conditions.

d. Risk Level 2 dischargers shall monitor and report site run-on from surrounding areas if there is reason to believe run-on may contribute to an exceedance of NALs.

e. Risk Level 2 dischargers who deploy an ATS on their site, or a portion on their site, shall collect ATS effluent samples and measurements from the discharge pipe or another location representative of the nature of the discharge.

f. Risk Level 2 dischargers shall select analytical test methods from the list provided in Table 3 below.

g. All storm water sample collection preservation and handling shall be conducted in accordance with Section I.7 “Storm Water Sample Collection and Handling Instructions” below.

6. **Risk Level 2 – Visual Observation and Sample Collection Exemptions**

a. Risk Level 2 dischargers shall be prepared to collect samples and conduct visual observation (inspections) until the minimum requirements of Sections I.3 and I.4 above are completed. Risk Level 2 dischargers are not required to physically collect samples or conduct visual observation (inspections) under the following conditions:

[4] For example, if there has been concrete work recently in an area, or drywall scrap is exposed to the rain, a pH sample shall be taken of drainage from the relevant work area. Similarly, if sediment laden water is flowing through some parts of a silt fence, samples shall be taken of the sediment-laden water even if most water flowing through the fence is clear.

i. During dangerous weather conditions such as flooding and electrical storms.

ii. Outside of scheduled site business hours.

b. If no required samples or visual observation (inspections) are collected due to these exceptions, Risk Level 2 dischargers shall include an explanation in their SWPPP and in the Annual Report documenting why the sampling or visual observation (inspections) were not conducted.

7. **Risk Level 2 – Storm Water Sample Collection and Handling Instructions**

a. Risk Level 2 dischargers shall refer to Table 3 below for test methods, detection limits, and reporting units.

b. Risk Level 2 dischargers shall ensure that testing laboratories will receive samples within 48 hours of the physical sampling (unless otherwise required by the laboratory), and shall use only the sample containers provided by the laboratory to collect and store samples.

c. Risk Level 2 dischargers shall designate and train personnel to collect, maintain, and ship samples in accordance with the Surface Water Ambient Monitoring Program's (SWAMP) 2008 Quality Assurance Program Plan (QAPrP).[5]

8. **Risk Level 2 – Monitoring Methods**

a. Risk Level 2 dischargers shall include a description of the following items in the CSMP:

i. Visual observation locations, visual observation procedures, and visual observation follow-up and tracking procedures.

ii. Sampling locations, and sample collection and handling procedures. This shall include detailed procedures for sample collection, storage, preservation, and shipping to the testing lab to assure that consistent quality control and quality assurance is maintained. Dischargers shall attach to the monitoring program

[5] Additional information regarding SWAMP's QAPrP can be found at http://www.waterboards.ca.gov/water_issues/programs/swamp/. QAPrP:http://www.waterboards.ca.gov/water_issues/programs/swamp/docs/qapp/swamp_qapp_master090108a.pdf.

an example Chain of Custody form used when handling and shipping samples.

iii. Identification of the analytical methods and related method detection limits (if applicable) for each parameter required in Section I.4 above.

b. Risk Level 2 dischargers shall ensure that all sampling and sample preservation are in accordance with the current edition of "Standard Methods for the Examination of Water and Wastewater" (American Public Health Association). All monitoring instruments and equipment (including a discharger's own field instruments for measuring pH and turbidity) should be calibrated and maintained in accordance with manufacturers' specifications to ensure accurate measurements. Risk Level 2 dischargers shall ensure that all laboratory analyses are conducted according to test procedures under 40 CFR Part 136, unless other test procedures have been specified in this General Permit or by the Regional Water Board. With the exception of field analysis conducted by the discharger for turbidity and pH, all analyses should be sent to and conducted at a laboratory certified for such analyses by the State Department of Health Services. Risk Level 2 dischargers shall conduct their own field analysis of pH and may conduct their own field analysis of turbidity if the discharger has sufficient capability (qualified and trained employees, properly calibrated and maintained field instruments, etc.) to adequately perform the field analysis.

9. **Risk Level 2 – Analytical Methods**

a. Risk Level 2 dischargers shall refer to Table 3 below for test methods, detection limits, and reporting units.

b. **pH**: Risk Level 2 dischargers shall perform pH analysis on-site with a calibrated pH meter or a pH test kit. Risk Level 2 dischargers shall record pH monitoring results on paper and retain these records in accordance with Section I.14, below.

c. **Turbidity**: Risk Level 2 dischargers shall perform turbidity analysis using a calibrated turbidity meter (turbidimeter), either on-site or at an accredited lab. Acceptable test methods include Standard Method 2130 or USEPA Method 180.1. The results will be recorded in the site log book in Nephelometric Turbidity Units (NTU).

10. **Risk Level 2 - Non-Storm Water Discharge Monitoring Requirements**

a. Visual Monitoring Requirements:

   i. Risk Level 2 dischargers shall visually observe (inspect) each drainage area for the presence of (or indications of prior) unauthorized and authorized non-storm water discharges and their sources.

   ii. Risk Level 2 dischargers shall conduct one visual observation (inspection) quarterly in each of the following periods: January-March, April-June, July-September, and October-December. Visual observation (inspections) are only required during daylight hours (sunrise to sunset).

   iii. Risk Level 2 dischargers shall ensure that visual observations (inspections) document the presence or evidence of any non-storm water discharge (authorized or unauthorized), pollutant characteristics (floating and suspended material, sheen, discoloration, turbidity, odor, etc.), and source. Risk Level 2 dischargers shall maintain on-site records indicating the personnel performing the visual observation (inspections), the dates and approximate time each drainage area and non-storm water discharge was observed, and the response taken to eliminate unauthorized non-storm water discharges and to reduce or prevent pollutants from contacting non-storm water discharges.

b. Effluent Sampling Locations:

   i. Risk Level 2 dischargers shall sample effluent at all discharge points where non-storm water and/or authorized non-storm water is discharged off-site.

   ii. Risk Level 2 dischargers shall send all non-storm water sample analyses to a laboratory certified for such analyses by the State Department of Health Services.

   iii. Risk Level 2 dischargers shall monitor and report run-on from surrounding areas if there is reason to believe run-on may contribute to an exceedance of NALs.

11. **Risk Level 2 – Non-Visible Pollutant Monitoring Requirements**

a. Risk Level 2 dischargers shall collect one or more samples during any breach, malfunction, leakage, or spill observed during a visual

inspection which could result in the discharge of pollutants to surface waters that would not be visually detectable in storm water.

b. Risk Level 2 dischargers shall ensure that water samples are large enough to characterize the site conditions.

c. Risk Level 2 dischargers shall collect samples at all discharge locations that can be safely accessed.

d. Risk Level 2 dischargers shall collect samples during the first two hours of discharge from rain events that occur during business hours and which generate runoff.

e. Risk Level 2 dischargers shall analyze samples for all non-visible pollutant parameters (if applicable) - parameters indicating the presence of pollutants identified in the pollutant source assessment required (Risk Level 2 dischargers shall modify their CSMPs to address these additional parameters in accordance with any updated SWPPP pollutant source assessment).

f. Risk Level 2 dischargers shall collect a sample of storm water that has not come in contact with the disturbed soil or the materials stored or used on-site (uncontaminated sample) for comparison with the discharge sample.

g. Risk Level 2 dischargers shall compare the uncontaminated sample to the samples of discharge using field analysis or through laboratory analysis.[6]

h. Risk Level 2 dischargers shall keep all field /or analytical data in the SWPPP document.

12. **Risk Level 2 – Watershed Monitoring Option**

Risk Level 2 dischargers who are part of a qualified regional watershed-based monitoring program may be eligible for relief from the requirements in Sections I.5. The Regional Water Board may approve proposals to substitute an acceptable watershed-based monitoring program by determining if the watershed-based monitoring program will provide substantially similar monitoring information in evaluating discharger compliance with the requirements of this General Permit.

[6] For laboratory analysis, all sampling, sample preservation, and analyses must be conducted according to test procedures under 40 CFR Part 136. Field discharge samples shall be collected and analyzed according to the specifications of the manufacturer of the sampling devices employed.

13. **Risk Level 2 – Particle Size Analysis for Project Risk Justification**

    Risk Level 2 dischargers justifying an alternative project risk shall report a soil particle size analysis used to determine the RUSLE K-Factor. ASTM D-422 (Standard Test Method for Particle-Size Analysis of Soils), as revised, shall be used to determine the percentages of sand, very fine sand, silt, and clay on the site.

14. **Risk Level 2 – Records**

    Risk Level 2 dischargers shall retain records of all storm water monitoring information and copies of all reports (including Annual Reports) for a period of at least three years. Risk Level 2 dischargers shall retain all records on-site while construction is ongoing. These records include:

    a. The date, place, time of facility inspections, sampling, visual observation (inspections), and/or measurements, including precipitation.

    b. The individual(s) who performed the facility inspections, sampling, visual observation (inspections), and or measurements.

    c. The date and approximate time of analyses.

    d. The individual(s) who performed the analyses.

    e. A summary of all analytical results from the last three years, the method detection limits and reporting units, the analytical techniques or methods used, and the chain of custody forms.

    f. Rain gauge readings from site inspections;

    g. Quality assurance/quality control records and results.

    h. Non-storm water discharge inspections and visual observation (inspections) and storm water discharge visual observation records (see Sections I.3 and I.10 above).

    i. Visual observation and sample collection exception records (see Section I.6 above).

    j. The records of any corrective actions and follow-up activities that resulted from analytical results, visual observation (inspections), or inspections.

15. **Risk Level 2 – NAL Exceedance Report**

a. In the event that any effluent sample exceeds an applicable NAL, Risk Level 2 dischargers shall electronically submit all storm event sampling results to the State Water Board no later than 10 days after the conclusion of the storm event. The Regional Boards have the authority to require the submittal of an NAL Exceedance Report.

b. Risk Level 2 dischargers shall certify each NAL Exceedance Report in accordance with the Special Provisions for Construction Activity.

c. Risk Level 2 dischargers shall retain an electronic or paper copy of each NAL Exceedance Report for a minimum of three years after the date the annual report is filed.

d. Risk Level 2 dischargers shall include in the NAL Exceedance Report:

i. The analytical method(s), method reporting unit(s), and method detection limit(s) of each analytical parameter (analytical results that are less than the method detection limit shall be reported as “less than the method detection limit”).

ii. The date, place, time of sampling, visual observation (inspections), and/or measurements, including precipitation.

iii. A description of the current BMPs associated with the effluent sample that exceeded the NAL and the proposed corrective actions taken.

Table 3 – Risk Level 2 Test Methods, Detection Limits, Reporting Units and Applicable NALs/NELs

Parameter	Test Method / Protocol	Discharge Type	Min. Detection Limit	Reporting Units	Numeric Action Level
pH	Field test with calibrated portable instrument	Risk Level 2 Discharges	0.2	pH units	lower NAL = 6.5 upper NAL = 8.5
Turbidity	EPA 0180.1 and/or field test with calibrated portable instrument	Risk Level 2 Discharges other than ATS	1	NTU	250 NTU
		For ATS discharges	1	NTU	N/A

ATTACHMENT E
RISK LEVEL 3 REQUIREMENTS

A. Effluent Standards

[These requirements are the same as those in the General Permit order.]

1. Narrative – Risk Level 3 dischargers shall comply with the narrative effluent standards listed below:

   a. Storm water discharges and authorized non-storm water discharges regulated by this General Permit shall not contain a hazardous substance equal to or in excess of reportable quantities established in 40 C.F.R. §§ 117.3 and 302.4, unless a separate NPDES Permit has been issued to regulate those discharges.

   b. Dischargers shall minimize or prevent pollutants in storm water discharges and authorized non-storm water discharges through the use of controls, structures, and management practices that achieve BAT for toxic and non-conventional pollutants and BCT for conventional pollutants.

2. Numeric –Risk Level 3 dischargers are subject to a pH NAL of 6.5-8.5, and a turbidity NAL of 250 NTU.

B. Good Site Management "Housekeeping"

1. Risk Level 3 dischargers shall implement good site management (i.e., "housekeeping") measures for construction materials that could potentially be a threat to water quality if discharged. At a minimum, Risk Level 3 dischargers shall implement the following good housekeeping measures:

   a. Conduct an inventory of the products used and/or expected to be used and the end products that are produced and/or expected to be produced. This does not include materials and equipment that are designed to be outdoors and exposed to environmental conditions (i.e. poles, equipment pads, cabinets, conductors, insulators, bricks, etc.).

   b. Cover and berm loose stockpiled construction materials that are not actively being used (i.e. soil, spoils, aggregate, fly-ash, stucco, hydrated lime, etc.).

c. Store chemicals in watertight containers (with appropriate secondary containment to prevent any spillage or leakage) or in a storage shed (completely enclosed).

d. Minimize exposure of construction materials to precipitation. This does not include materials and equipment that are designed to be outdoors and exposed to environmental conditions (i.e. poles, equipment pads, cabinets, conductors, insulators, bricks, etc.).

e. Implement BMPs to prevent the off-site tracking of loose construction and landscape materials.

2. Risk Level 3 dischargers shall implement good housekeeping measures for waste management, which, at a minimum, shall consist of the following:

a. Prevent disposal of any rinse or wash waters or materials on impervious or pervious site surfaces or into the storm drain system.

b. Ensure the containment of sanitation facilities (e.g., portable toilets) to prevent discharges of pollutants to the storm water drainage system or receiving water.

c. Clean or replace sanitation facilities and inspecting them regularly for leaks and spills.

d. Cover waste disposal containers at the end of every business day and during a rain event.

e. Prevent discharges from waste disposal containers to the storm water drainage system or receiving water.

f. Contain and securely protecting stockpiled waste material from wind and rain at all times unless actively being used.

g. Implement procedures that effectively address hazardous and non-hazardous spills.

h. Develop a spill response and implementation element of the SWPPP prior to commencement of construction activities. The SWPPP shall require that:

i. Equipment and materials for cleanup of spills shall be available on site and that spills and leaks shall be cleaned up immediately and disposed of properly; and

ii. Appropriate spill response personnel are assigned and trained.

i. Ensure the containment of concrete washout areas and other washout areas that may contain additional pollutants so there is no discharge into the underlying soil and onto the surrounding areas.

3. Risk Level 3 dischargers shall implement good housekeeping for vehicle storage and maintenance, which, at a minimum, shall consist of the following:

   a. Prevent oil, grease, or fuel to leak in to the ground, storm drains or surface waters.

   b. Place all equipment or vehicles, which are to be fueled, maintained and stored in a designated area fitted with appropriate BMPs.

   c. Clean leaks immediately and disposing of leaked materials properly.

4. Risk Level 3 dischargers shall implement good housekeeping for landscape materials, which, at a minimum, shall consist of the following:

   a. Contain stockpiled materials such as mulches and topsoil when they are not actively being used.

   b. Contain fertilizers and other landscape materials when they are not actively being used.

   c. Discontinuing the application of any erodible landscape material within 2 days before a forecasted rain event or during periods of precipitation.

   d. Applying erodible landscape material at quantities and application rates according to manufacture recommendations or based on written specifications by knowledgeable and experienced field personnel.

   e. Stacking erodible landscape material on pallets and covering or storing such materials when not being used or applied.

5. Risk Level 3 dischargers shall conduct an assessment and create a list of potential pollutant sources and identify any areas of the site where additional BMPs are necessary to reduce or prevent pollutants in storm water discharges and authorized non-storm water discharges. This potential pollutant list shall be kept with the SWPPP and shall identify

all non-visible pollutants which are known, or should be known, to occur on the construction site. At a minimum, when developing BMPs, Risk Level 3 dischargers shall do the following:

a. Consider the quantity, physical characteristics (e.g., liquid, powder, solid), and locations of each potential pollutant source handled, produced, stored, recycled, or disposed of at the site.

b. Consider the degree to which pollutants associated with those materials may be exposed to and mobilized by contact with storm water.

c. Consider the direct and indirect pathways that pollutants may be exposed to storm water or authorized non-storm water discharges. This shall include an assessment of past spills or leaks, non-storm water discharges, and discharges from adjoining areas.

d. Ensure retention of sampling, visual observation, and inspection records.

e. Ensure effectiveness of existing BMPs to reduce or prevent pollutants in storm water discharges and authorized non-storm water discharges.

6. Risk Level 3 dischargers shall implement good housekeeping measures on the construction site to control the air deposition of site materials and from site operations. Such particulates can include, but are not limited to, sediment, nutrients, trash, metals, bacteria, oil and grease and organics.

7. **Additional Risk Level 3 Requirement:** Risk Level 3 dischargers shall document all housekeeping BMPs in the SWPPP and REAP(s) in accordance with the nature and phase of the construction project. Construction phases at traditional land development projects include Grading and Land Development Phase, Streets and Utilities, or Vertical Construction for traditional land development projects.

C. Non-Storm Water Management

1. Risk Level 3 dischargers shall implement measures to control all non-storm water discharges during construction.

2. Risk Level 3 dischargers shall wash vehicles in such a manner as to prevent non-storm water discharges to surface waters or MS4 drainage systems.

3. Risk Level 3 dischargers shall clean streets in such a manner as to prevent unauthorized non-storm water discharges from reaching surface water or MS4 drainage systems.

D. Erosion Control

1. Risk Level 3 dischargers shall implement effective wind erosion control.

2. Risk Level 3 dischargers shall provide effective soil cover for inactive[1] areas and all finished slopes, open space, utility backfill, and completed lots.

3. Dischargers shall limit the use of plastic materials when more sustainable, environmentally friendly alternatives exist. Where plastic materials are deemed necessary, the discharger shall consider the use of plastic materials resistant to solar degradation.

E. Sediment Controls

1. Risk Level 3 dischargers shall establish and maintain effective perimeter controls and stabilize all construction entrances and exits to sufficiently control erosion and sediment discharges from the site.

2. On sites where sediment basins are to be used, Risk Level 3 dischargers shall, at minimum, design sediment basins according to the method provided in CASQA's Construction BMP Guidance Handbook.

3. **Additional Risk Level 3 Requirement:** Risk Level 3 dischargers shall implement appropriate erosion control BMPs (runoff control and soil stabilization) in conjunction with sediment control BMPs for areas under active[2] construction.

4. **Additional Risk Level 3 Requirement:** Risk Level 3 dischargers shall apply linear sediment controls along the toe of the slope, face of the slope, and at the grade breaks of exposed slopes to comply with sheet flow lengths[3] in accordance with Table 1.

[1] Inactive areas of construction are areas of construction activity that have been disturbed and are not scheduled to be re-disturbed for at least 14 days.
[2] Active areas of construction are areas undergoing land surface disturbance. This includes construction activity during the preliminary stage, mass grading stage, streets and utilities stage and the vertical construction stage
[3] Sheet flow length is the length that shallow, low velocity flow travels across a site.

Table 1 - Critical Slope/Sheet Flow Length Combinations

Slope Percentage	Sheet flow length not to exceed
0-25%	20 feet
25-50%	15 feet
Over 50%	10 feet

5. **Additional Risk Level 3 Requirement:** Risk Level 3 dischargers shall ensure that construction activity traffic to and from the project is limited to entrances and exits that employ effective controls to prevent offsite tracking of sediment.

6. **Additional Risk Level 3 Requirement:** Risk Level 3 dischargers shall ensure that all storm drain inlets and perimeter controls, runoff control BMPs, and pollutant controls at entrances and exits (e.g. tire washoff locations) are maintained and protected from activities that reduce their effectiveness.

7. **Additional Risk Level 3 Requirement:** Risk Level 3 dischargers shall inspect on a daily basis all immediate access roads daily. At a minimum daily (when necessary) and prior to any rain event, the discharger shall remove any sediment or other construction activity-related materials that are deposited on the roads (by vacuuming or sweeping).

8. **Additional Risk Level 3 Requirement:** The Regional Water Board may require Risk Level 3 dischargers to implement additional site-specific sediment control requirements if the implementation of the other requirements in this section are not adequately protecting the receiving waters.

F. Run-on and Run-off Controls

Risk Level 3 dischargers shall effectively manage all run-on, all runoff within the site and all runoff that discharges off the site. Run-on from off site shall be directed away from all disturbed areas or shall collectively be in compliance with the effluent limitations in this General Permit.

G. Inspection, Maintenance and Repair

1. Risk Level 3 dischargers shall ensure that all inspection, maintenance repair and sampling activities at the project location shall be performed or supervised by a Qualified SWPPP Practitioner (QSP) representing the discharger. The QSP may delegate any or all of these activities to an employee appropriately trained to do the task(s).

2. Risk Level 3 dischargers shall perform weekly inspections and observations, and at least once each 24-hour period during extended storm events, to identify and record BMPs that need maintenance to operate effectively, that have failed, or that could fail to operate as intended. Inspectors shall be the QSP or be trained by the QSP.

3. Upon identifying failures or other shortcomings, as directed by the QSP, Risk Level 3 dischargers shall begin implementing repairs or design changes to BMPs within 72 hours of identification and complete the changes as soon as possible.

4. For each inspection required, Risk Level 3 dischargers shall complete an inspection checklist, using a form provided by the State Water Board or Regional Water Board or in an alternative format.

5. Risk Level 3 dischargers shall ensure that checklists shall remain onsite with the SWPPP and at a minimum, shall include:

    a. Inspection date and date the inspection report was written.

    b. Weather information, including presence or absence of precipitation, estimate of beginning of qualifying storm event, duration of event, time elapsed since last storm, and approximate amount of rainfall in inches.

    c. Site information, including stage of construction, activities completed, and approximate area of the site exposed.

    d. A description of any BMPs evaluated and any deficiencies noted.

    e. If the construction site is safely accessible during inclement weather, list the observations of all BMPs: erosion controls, sediment controls, chemical and waste controls, and non-storm water controls. Otherwise, list the results of visual inspections at all relevant outfalls, discharge points, downstream locations and any projected maintenance activities.

    f. Report the presence of noticeable odors or of any visible sheen on the surface of any discharges.

    g. Any corrective actions required, including any necessary changes to the SWPPP and the associated implementation dates.

    h. Photographs taken during the inspection, if any.

i. Inspector's name, title, and signature.

H. Rain Event Action Plan

1. **Additional Risk Level 3 Requirement:** The discharger shall ensure a QSP develop a Rain Event Action Plan (REAP) 48 hours prior to any likely precipitation event. A likely precipitation event is any weather pattern that is forecast to have a 50% or greater probability of producing precipitation in the project area. The QSP shall obtain a printed copy of precipitation forecast information from the National Weather Service Forecast Office (e.g., by entering the zip code of the project's location at http://www.srh.noaa.gov/forecast).

2. **Additional Risk Level 3 Requirement:** The discharger shall ensure a QSP develop the REAPs for all phases of construction (i.e., Grading and Land Development, Streets and Utilities, Vertical Construction, Final Landscaping and Site Stabilization).

3. **Additional Risk Level 3 Requirement:** The discharger shall ensure a QSP ensure that the REAP include, at a minimum, the following site information:

   a. Site Address.
   b. Calculated Risk Level (2 or 3).
   c. Site Storm Water Manager Information including the name, company, and 24-hour emergency telephone number.
   d. Erosion and Sediment Control Provider information including the name, company, and 24-hour emergency telephone number.
   e. Storm Water Sampling Agent information including the name, company, and 24-hour emergency telephone number.

4. **Additional Risk Level 3 Requirement:** The QSP shall include in the REAP, at a minimum, the following project phase information:

   a. Activities associated with each construction phase.
   b. Trades active on the construction site during each construction phase.
   c. Trade contractor information.
   d. Suggested actions for each project phase.

5. **Additional Risk Level 3 Requirement:** The QSP shall develop additional REAPs for project sites where construction activities are indefinitely halted or postponed (Inactive Construction). At a minimum, Inactive Construction REAPs must include:

a. Site Address.
b. Calculated Risk Level (2 or 3).
c. Site Storm Water Manager Information including the name, company, and 24-hour emergency telephone number.
d. Erosion and Sediment Control Provider information including the name, company, and 24-hour emergency telephone number.
e. Storm Water Sampling Agent information including the name, company, and 24-hour emergency telephone number.
f. Trades active on site during Inactive Construction.
g. Trade contractor information.
h. Suggested actions for inactive construction sites.

6. **Additional Risk Level 3 Requirement:** The discharger shall ensure a QSP begin implementation and make the REAP available onsite no later than 24 hours prior to the likely precipitation event.

7. **Additional Risk Level 3 Requirement:** The discharger shall ensure a QSP maintain onsite a paper copy of each REAP onsite in compliance with the record retention requirements of the Special Provisions in this General Permit.

I. Risk Level 3 Monitoring and Reporting Requirements

Table 2- Summary of Monitoring Requirements

Risk Level	Visual Inspections					Sample Collection	
	Quarterly Non-storm Water Discharge	Pre-storm Event		Daily Storm BMP	Post Storm	Storm Water Discharge	Receiving Water
		Baseline	REAP				
3	X	X	X	X	X	X	X[4]

1. Construction Site Monitoring Program Requirements

   a. Pursuant to Water Code Sections 13383 and 13267, all dischargers subject to this General Permit shall develop and implement a written site-specific Construction Site Monitoring Program (CSMP) in accordance with the requirements of this Section. The CSMP shall include all monitoring procedures and instructions, location maps, forms, and checklists as required in this section. The CSMP shall be developed prior to the commencement of construction activities, and revised as necessary to reflect project revisions. The CSMP shall be a part of the Storm Water Pollution Prevention Plan (SWPPP), included as an appendix or separate SWPPP chapter.

   b. Existing dischargers registered under the State Water Board Order No. 99-08-DWQ shall make and implement necessary revisions to their Monitoring Program to reflect the changes in this General Permit in a timely manner, but no later than July 1, 2010. Existing dischargers shall continue to implement their existing Monitoring Program in compliance with State Water Board Order No. 99-08-DWQ until the necessary revisions are completed according to the schedule above.

   c. When a change of ownership occurs for all or any portion of the construction site prior to completion or final stabilization, the new discharger shall comply with these requirements as of the date the ownership change occurs.

2. **Objectives**

   The CSMP shall be developed and implemented to address the following objectives:

[4] When receiving water monitoring trigger is exceeded

a. To demonstrate that the site is in compliance with the Discharge Prohibitions and applicable Numeric Action Levels (NALs) of this General Permit.

b. To determine whether non-visible pollutants are present at the construction site and are causing or contributing to exceedances of water quality objectives.

c. To determine whether immediate corrective actions, additional Best Management Practice (BMP) implementation, or SWPPP revisions are necessary to reduce pollutants in storm water discharges and authorized non-storm water discharges.

d. To determine whether BMPs included in the SWPPP/Rain Event Action Plan (REAP) are effective in preventing or reducing pollutants in storm water discharges and authorized non-storm water discharges.

3. **Risk Level 3 – Visual Monitoring (Inspection) Requirements for Qualifying Rain Events**

a. Risk Level 3 dischargers shall visually observe (inspect) storm water discharges at all discharge locations within two business days (48 hours) after each qualifying rain event.

b. Risk Level 3 dischargers shall visually observe (inspect) the discharge of stored or contained storm water that is derived from and discharged subsequent to a qualifying rain event producing precipitation of ½ inch or more at the time of discharge. Stored or contained storm water that will likely discharge after operating hours due to anticipated precipitation shall be observed prior to the discharge during operating hours.

c. Risk Level 3 dischargers shall conduct visual observations (inspections) during business hours only.

d. Risk Level 3 dischargers shall record the time, date and rain gauge reading of all qualifying rain events.

e. Within 2 business days (48 hours) prior to each qualifying rain event, Risk Level 3 dischargers shall visually observe (inspect):

i. all storm water drainage areas to identify any spills, leaks, or uncontrolled pollutant sources. If needed, the discharger shall implement appropriate corrective actions.

ii. all BMPs to identify whether they have been properly implemented in accordance with the SWPPP/REAP. If needed, the discharger shall implement appropriate corrective actions.

iii. any storm water storage and containment areas to detect leaks and ensure maintenance of adequate freeboard.

f. For the visual observations (inspections) described in c.i. and c.iii above, Risk Level 3 dischargers shall observe the presence or absence of floating and suspended materials, a sheen on the surface, discolorations, turbidity, odors, and source(s) of any observed pollutants.

g. Within two business days (48 hours) after each qualifying rain event, Risk Level 3 dischargers shall conduct post rain event visual observations (inspections) to (1) identify whether BMPs were adequately designed, implemented, and effective, and (2) identify additional BMPs and revise the SWPPP accordingly.

h. Risk Level 3 dischargers shall maintain on-site records of all visual observations (inspections), personnel performing the observations, observation dates, weather conditions, locations observed, and corrective actions taken in response to the observations.

4. **Risk Level 3 – Water Quality Sampling and Analysis**

a. Risk Level 3 dischargers shall collect storm water grab samples from sampling locations, as defined in Section I.5. The storm water grab sample(s) obtained shall be representative of the flow and characteristics of the discharge.

b. At minimum, Risk Level 3 dischargers shall collect 3 samples per day of the qualifying event.

c. Risk Level 3 dischargers shall ensure that the grab samples collected of stored or contained storm water are from discharges subsequent to a qualifying rain event (producing precipitation of ½ inch or more at the time of discharge).

<u>Storm Water Effluent Monitoring Requirements</u>

d. Risk Level 3 dischargers shall analyze their effluent samples for:

i. pH and turbidity.

ii. Any additional parameters for which monitoring is required by the Regional Water Board.

e. Risk 3 dischargers shall electronically submit all storm event sampling results to the State Water Board no later than 10 days after the conclusion of the storm event.

Receiving Water Monitoring Requirements

f. In the event that a Risk Level 3 discharger's effluent exceeds the daily average receiving water monitoring trigger of 500 NTU turbidity or the daily average pH range 6.0-9.0 contained in this General Permit and has a direct discharge into receiving waters, the Risk Level 3 discharger shall subsequently sample receiving waters (RWs) for turbidity, pH (if applicable), and SSC for the duration of coverage under this General Permit. If a Risk Level 3 discharger utilizing ATS with direct discharges into receiving waters discharges effluent that exceeds the NELs in this permit, the discharger shall subsequently sample RWs for turbidity, pH (if applicable), and SSC for the duration of coverage under this General Permit.

g. Risk Level 3 dischargers disturbing 30 acres or more of the landscape and with direct discharges into receiving waters shall conduct or participate in benthic macroinvertebrate bioassessment of RWs prior to commencement of construction activity (See Appendix 3).

h. Risk Level 3 dischargers shall obtain RW samples in accordance with the Receiving Water sampling location section (Section I.5), below.

5. **Risk Level 3 – Storm Water Discharge Water Quality Sampling Locations**

Effluent Sampling Locations

a. Risk Level 3 dischargers shall perform sampling and analysis of storm water discharges to characterize discharges associated with construction activity from the entire project disturbed area.

b. Risk Level 3 dischargers shall collect effluent samples at all discharge points where storm water is discharged off-site.

c. Risk Level 3 dischargers shall ensure that storm water discharge collected and observed represent[5] the effluent in each drainage area based on visual observation of the water and upstream conditions.

d. Risk Level 3 dischargers shall monitor and report site run-on from surrounding areas if there is reason to believe run-on may contribute to an exceedance of NALs.

e. Risk Level 3 dischargers who deploy an ATS on their site, or a portion on their site, shall collect ATS effluent samples and measurements from the discharge pipe or another location representative of the nature of the discharge.

f. Risk Level 3 dischargers shall select analytical test methods from the list provided in Table 3 below.

g. All storm water sample collection preservation and handling shall be conducted in accordance with Section I.7 “Storm Water Sample Collection and Handling Instructions” below.

Receiving Water Sampling Locations

h. **Upstream/up-gradient RW samples**: Risk Level 3 dischargers shall obtain any required upstream/up-gradient receiving water samples from a representative and accessible location as close as possible and upstream from the effluent discharge point.

i. **Downstream/down-gradient RW samples**: Risk Level 3 dischargers shall obtain any required downstream/down-gradient receiving water samples from a representative and accessible location as close as possible and downstream from the effluent discharge point.

j. If two or more discharge locations discharge to the same receiving water, Risk Level 3 dischargers may sample the receiving water at a single upstream and downstream location.

[5] For example, if there has been concrete work recently in an area, or drywall scrap is exposed to the rain, a pH sample shall be taken of drainage from the relevant work area. Similarly, if sediment-laden water is flowing through some parts of a silt fence, samples shall be taken of the sediment laden water even if most water flowing through the fence is clear.

6. **Risk Level 3 – Visual Observation and Sample Collection Exemptions**

   a. Risk Level 3 dischargers shall be prepared to collect samples and conduct visual observation (inspections) until the minimum requirements of Sections I.3 and I.4 above are completed. Risk Level 3 dischargers are not required to physically collect samples or conduct visual observation (inspections) under the following conditions:

      i. During dangerous weather conditions such as flooding and electrical storms.

      ii. Outside of scheduled site business hours.

   b. If no required samples or visual observation (inspections) are collected due to these exceptions, Risk Level 3 dischargers shall include an explanation in their SWPPP and in the Annual Report documenting why the sampling or visual observation (inspections) were not conducted.

7. **Risk Level 3 – Storm Water Sample Collection and Handling Instructions**

   a. Risk Level 3 dischargers shall refer to Table 3 below for test methods, detection limits, and reporting units.

   b. Risk Level 3 dischargers shall ensure that testing laboratories will receive samples within 48 hours of the physical sampling (unless otherwise required by the laboratory), and shall use only the sample containers provided by the laboratory to collect and store samples.

   c. Risk Level 3 dischargers shall designate and train personnel to collect, maintain, and ship samples in accordance with the Surface Water Ambient Monitoring Program's (SWAMP) 2008 Quality Assurance Program Plan (QAPrP).[6]

[6] Additional information regarding SWAMP's QAPrP can be found at http://www.waterboards.ca.gov/water_issues/programs/swamp/.
QAPrP:http://www.waterboards.ca.gov/water_issues/programs/swamp/docs/qapp/swamp_qapp_master090108a.pdf

8. **Risk Level 3 – Monitoring Methods**

   a. Risk Level 3 dischargers shall include a description of the following items in the CSMP:

      i. Visual observation locations, visual observation procedures, and visual observation follow-up and tracking procedures.

      ii. Sampling locations, and sample collection and handling procedures. This shall include detailed procedures for sample collection, storage, preservation, and shipping to the testing lab to assure that consistent quality control and quality assurance is maintained. Dischargers shall attach to the monitoring program an example Chain of Custody form used when handling and shipping samples.

      iii. Identification of the analytical methods and related method detection limits (if applicable) for each parameter required in Section I.4 above.

   b. Risk Level 3 dischargers shall ensure that all sampling and sample preservation are in accordance with the current edition of "Standard Methods for the Examination of Water and Wastewater" (American Public Health Association). All monitoring instruments and equipment (including a discharger's own field instruments for measuring pH and turbidity) should be calibrated and maintained in accordance with manufacturers' specifications to ensure accurate measurements. Risk Level 3 dischargers shall ensure that all laboratory analyses are conducted according to test procedures under 40 CFR Part 136, unless other test procedures have been specified in this General Permit or by the Regional Water Board. With the exception of field analysis conducted by the discharger for turbidity and pH, all analyses should be sent to and conducted at a laboratory certified for such analyses by the State Department of Health Services (SSC exception). Risk Level 3 dischargers shall conduct their own field analysis of pH and may conduct their own field analysis of turbidity if the discharger has sufficient capability (qualified and trained employees, properly calibrated and maintained field instruments, etc.) to adequately perform the field analysis.

9. **Risk Level 3 – Analytical Methods**

   a. Risk Level 3 dischargers shall refer to Table 3 below for test methods, detection limits, and reporting units.

b. **pH**: Risk Level 3 dischargers shall perform pH analysis on-site with a calibrated pH meter or a pH test kit. Risk Level 3 dischargers shall record pH monitoring results on paper and retain these records in accordance with Section I.14, below.

c. **Turbidity**: Risk Level 3 dischargers shall perform turbidity analysis using a calibrated turbidity meter (turbidimeter), either on-site or at an accredited lab. Acceptable test methods include Standard Method 2130 or USEPA Method 180.1. The results will be recorded in the site log book in Nephelometric Turbidity Units (NTU).

d. **Suspended sediment concentration (SSC)**: Risk Level 3 dischargers that exceed the turbidity Receiving Water Monitoring Trigger shall perform SSC analysis using ASTM Method D3977-97.

e. **Bioassessment**: Risk Level 3 dischargers shall perform bioassessment sampling and analysis according to Appendix 3 of this General Permit.

10. **Risk Level 3 - Non-Storm Water Discharge Monitoring Requirements**

a. Visual Monitoring Requirements:

i. Risk Level 3 dischargers shall visually observe (inspect) each drainage area for the presence of (or indications of prior) unauthorized and authorized non-storm water discharges and their sources.

ii. Risk Level 3 dischargers shall conduct one visual observation (inspection) quarterly in each of the following periods: January-March, April-June, July-September, and October-December. Visual observation (inspections) are only required during daylight hours (sunrise to sunset).

iii. Risk Level 3 dischargers shall ensure that visual observations (inspections) document the presence or evidence of any non-storm water discharge (authorized or unauthorized), pollutant characteristics (floating and suspended material, sheen, discoloration, turbidity, odor, etc.), and source. Risk Level 3 dischargers shall maintain on-site records indicating the personnel performing the visual observation (inspections), the dates and approximate time each drainage area and non-storm water discharge was observed, and the response taken to eliminate unauthorized non-storm water discharges and to

reduce or prevent pollutants from contacting non-storm water discharges.

b. Effluent Sampling Locations:

i. Risk Level 3 dischargers shall sample effluent at all discharge points where non-storm water and/or authorized non-storm water is discharged off-site.

ii. Risk Level 3 dischargers shall send all non-storm water sample analyses to a laboratory certified for such analyses by the State Department of Health Services.

iii. Risk Level 3 dischargers shall monitor and report run-on from surrounding areas if there is reason to believe run-on may contribute to an exceedance of NALs.

11. **Risk Level 3 – Non-Visible Pollutant Monitoring Requirements**

a. Risk Level 3 dischargers shall collect one or more samples during any breach, malfunction, leakage, or spill observed during a visual inspection which could result in the discharge of pollutants to surface waters that would not be visually detectable in storm water.

b. Risk Level 3 dischargers shall ensure that water samples are large enough to characterize the site conditions.

c. Risk Level 3 dischargers shall collect samples at all discharge locations that can be safely accessed.

d. Risk Level 3 dischargers shall collect samples during the first two hours of discharge from rain events that occur during business hours and which generate runoff.

e. Risk Level 3 dischargers shall analyze samples for all non-visible pollutant parameters (if applicable) - parameters indicating the presence of pollutants identified in the pollutant source assessment required (Risk Level 3 dischargers shall modify their CSMPs to address these additional parameters in accordance with any updated SWPPP pollutant source assessment).

f. Risk Level 3 dischargers shall collect a sample of storm water that has not come in contact with the disturbed soil or the materials stored or used on-site (uncontaminated sample) for comparison with the discharge sample.

g. Risk Level 3 dischargers shall compare the uncontaminated sample to the samples of discharge using field analysis or through laboratory analysis.[7]

h. Risk Level 3 dischargers shall keep all field /or analytical data in the SWPPP document.

12. **Risk Level 3 – Watershed Monitoring Option**

Risk Level 3 dischargers who are part of a qualified regional watershed-based monitoring program may be eligible for relief from the requirements in Sections I.5. The Regional Water Board may approve proposals to substitute an acceptable watershed-based monitoring program by determining if the watershed-based monitoring program will provide substantially similar monitoring information in evaluating discharger compliance with the requirements of this General Permit.

13. **Risk Level 3 – Particle Size Analysis for Project Risk Justification**

Risk Level 3 dischargers justifying an alternative project risk shall report a soil particle size analysis used to determine the RUSLE K-Factor. ASTM D-422 (Standard Test Method for Particle-Size Analysis of Soils), as revised, shall be used to determine the percentages of sand, very fine sand, silt, and clay on the site.

14. **Risk Level 3 – Records**

Risk Level 3 dischargers shall retain records of all storm water monitoring information and copies of all reports (including Annual Reports) for a period of at least three years. Risk Level 3 dischargers shall retain all records on-site while construction is ongoing. These records include:

a. The date, place, time of facility inspections, sampling, visual observation (inspections), and/or measurements, including precipitation.

b. The individual(s) who performed the facility inspections, sampling, visual observation (inspections), and or measurements.

c. The date and approximate time of analyses.

[7] For laboratory analysis, all sampling, sample preservation, and analyses must be conducted according to test procedures under 40 CFR Part 136. Field discharge samples shall be collected and analyzed according to the specifications of the manufacturer of the sampling devices employed.

d. The individual(s) who performed the analyses.

e. A summary of all analytical results from the last three years, the method detection limits and reporting units, the analytical techniques or methods used, and the chain of custody forms.

f. Rain gauge readings from site inspections.

g. Quality assurance/quality control records and results.

h. Non-storm water discharge inspections and visual observation (inspections) and storm water discharge visual observation records (see Sections I.3 and I.10 above).

i. Visual observation and sample collection exception records (see Section I.6 above).

j. The records of any corrective actions and follow-up activities that resulted from analytical results, visual observation (inspections), or inspections.

15. **Risk Level 3 – NAL Exceedance Report**

a. Risk Level 3 dischargers shall electronically submit all storm event sampling results to the State Water Board no later than 10 days after the conclusion of the storm event. The Regional Boards have the authority to require the submittal of an NAL Exceedance Report.

b. Risk Level 3 dischargers shall certify each NAL Exceedance Report in accordance with the Special Provisions for Construction Activity In this General Permit.

c. Risk Level 3 dischargers shall retain an electronic or paper copy of each NAL Exceedance Report for a minimum of three years after the date the annual report is filed.

d. Risk Level 3 dischargers shall include in the NAL Exceedance Report:

i. The analytical method(s), method reporting unit(s), and method detection limit(s) of each analytical parameter (analytical results that are less than the method detection limit shall be reported as “less than the method detection limit”).

ii. The date, place, time of sampling, visual observation (inspections), and/or measurements, including precipitation.

iii. A description of the current BMPs associated with the effluent sample that exceeded the NAL and the proposed corrective actions taken.

16. **Risk Level 3 – Bioassessment**

a. Risk Level 3 dischargers with a total project-related ground disturbance exceeding 30 acres shall:

i. Conduct bioassessment monitoring, as described in Appendix 3.

ii. Include the collection and reporting of specified in stream biological data and physical habitat.

iii. Use the bioassessment sample collection and Quality Assurance & Quality Control (QA/QC) protocols developed by the State of California's Surface Water Ambient Monitoring Program (SWAMP).[8]

b. Risk Level 3 dischargers qualifying for bioassessment, where construction commences out of an index period for the site location shall:

i. Receive Regional Board approval for the sampling exception.

ii. Conduct bioassessment monitoring, as described in Appendix 3.

iii. Include the collection and reporting of specified instream biological data and physical habitat.

iv. Use the bioassessment sample collection and Quality Assurance & Quality Control (QA/QC) protocols developed by the State of California's Surface Water Ambient Monitoring Program (SWAMP).

OR

v. Make a check payable to: Cal State Chico Foundation (SWAMP Bank Account) or San Jose State Foundation (SWAMP Bank Account) and include the WDID# on the check for the amount calculated for the exempted project.

[8] http://www.waterboards.ca.gov/water_issues/programs/swamp/.

vi. Send a copy of the check to the Regional Water Board office for the site's region.

vii. Invest $**7,500.00 X The number of samples required** into the SWAMP program as compensation (upon regional board approval).

Table 3 – Risk Level 3 Test Methods, Detection Limits, Reporting Units and Applicable NALs

Parameter	Test Method / Protocol	Discharge Type	Min. Detection Limit	Reporting Units	Numeric Action Level	Numeric Effluent Limitation	Receiving Water Monitoring Trigger
pH	Field test with calibrated portable instrument	Risk Level 3 Discharges	0.2	pH units	lower NAL = 6.5 upper NAL = 8.5	N/A	lower limit = 6.0 upper limit = 9.0
Turbidity	EPA 0180.1 and/or field test with calibrated portable instrument	Risk Level 3 Discharges other than ATS	1	NTU	250 NTU	N/A	500 NTU
		For ATS discharges	1	NTU	N/A	10 NTU for Daily Weighted Average & 20 NTU for Any Single Sample	10 NTU for Daily Weighted Average & 20 NTU for Any Single Sample
SSC	ASTM Method D 3977-97[9]	Risk Level 3 (if Receiving Water Monitoring Trigger exceeded)	5	mg/L	N/A	N/A	N/A
Bioassessment	(STE) Level I of (SAFIT),[10] fixed-count of 600 org/sample	Risk Level 3 projects> 30 acres	N/A	N/A	N/A	N/A	N/A

[9] ASTM, 1999, Standard Test Method for Determining Sediment Concentration in Water Samples: American Society of Testing and Materials, D 3977-97, Vol. 11.02, pp. 389-394.

[10] The current SAFIT STEs (28 November 2006) list requirements for both the Level I and Level II taxonomic effort, and are located at: http://www.swrcb.ca.gov/swamp/docs/safit/ste_list.pdf. When new editions are published by SAFIT, they will supersede all previous editions. All editions will be posted at the State Water Board's SWAMP website.

ATTACHMENT F:
Active Treatment System (ATS) Requirements

Table 1 – Numeric Effluent Limitations, Numeric Action Levels, Test Methods, Detection Limits, and Reporting Units

Parameter	Test Method	Discharge Type	Min. Detection Limit	Units	Numeric Action Level	Numeric Effluent Limitation
Turbidity	EPA 0180.1 and/or field test with a calibrated portable instrument	For ATS discharges	1	NTU	N/A	10 NTU for Daily Flow-Weighted Average & 20 NTU for Any Single Sample

A. Dischargers choosing to implement an Active Treatment System (ATS) on their site shall comply with all of the requirements in this Attachment.

B. The discharger shall maintain a paper copy of each ATS specification onsite in compliance with the record retention requirements in the Special Provisions of this General Permit.

C. ATS Design, Operation and Submittals

1. The ATS shall be designed and approved by a Certified Professional in Erosion and Sediment Control (CPESC), a Certified Professional in Storm Water Quality (CPSWQ); a California registered civil engineer; or any other California registered engineer.

2. The discharger shall ensure that the ATS is designed in a manner to preclude the accidental discharge of settled floc[1] during floc pumping or related operations.

3. The discharger shall design outlets to dissipate energy from concentrated flows.

4. The discharger shall install and operate an ATS by assigning a lead person (or project manager) who has either a minimum of five years construction storm

[1] Floc is defined as a clump of solids formed by the chemical action in ATS systems.

water experience or who is a licensed contractors specifically holding a California Class A Contractors license.[2]

5. The discharger shall prepare an ATS Plan that combines the site-specific data and treatment system information required to safely and efficiently operate an ATS. The ATS Plan shall be electronically submitted to the State Water Board at least 14 days prior to the planned operation of the ATS and a paper copy shall be available onsite during ATS operation. At a minimum, the ATS Plan shall include:

   a. ATS Operation and Maintenance Manual for All Equipment.

   b. ATS Monitoring, Sampling & Reporting Plan, including Quality Assurance/Quality Control (QA/QC).

   c. ATS Health and Safety Plan.

   d. ATS Spill Prevention Plan.

6. The ATS shall be designed to capture and treat (within a 72-hour period) a volume equivalent to the runoff from a 10-year, 24-hour storm event using a watershed runoff coefficient of 1.0.

D. Treatment – Chemical Coagulation/Flocculation

1. Jar tests shall be conducted using water samples selected to represent typical site conditions and in accordance with ASTM D2035-08 (2003).

2. The discharger shall conduct, at minimum, six site-specific jar tests (per polymer with one test serving as a control) for each project to determine the proper polymer and dosage levels for their ATS.

3. Single field jar tests may also be conducted during a project if conditions warrant, for example if construction activities disturb changing types of soils, which consequently cause change in storm water and runoff characteristics.

E. Residual Chemical and Toxicity Requirements

1. The discharger shall utilize a residual chemical test method that has a method detection limit (MDL) of 10% or less than the maximum allowable threshold

[2] Business and Professions Code Division 3, Chapter 9, Article 4, Class A Contractor: A general engineering contractor is a contractor whose principal contracting business is in connection with fixed works requiring specialized engineering knowledge and skill. [http://www.cslb.ca.gov/General-Information/library/licensing-classifications.asp].

concentration[3] (MATC) for the specific coagulant in use and for the most sensitive species of the chemical used.

2. The discharger shall utilize a residual chemical test method that produces a result within one hour of sampling.

3. The discharger shall have a California State certified laboratory validate the selected residual chemical test. Specifically the lab will review the test protocol, test parameters, and the detection limit of the coagulant. The discharger shall electronically submit this documentation as part of the ATS Plan.

4. If the discharger cannot utilize a residual chemical test method that meets the requirements above, the discharger shall operate the ATS in Batch Treatment[4] mode.

5. A discharger planning to operate in Batch Treatment mode shall perform toxicity testing in accordance with the following:

   a. The discharger shall initiate acute toxicity testing on effluent samples representing effluent from each batch prior to discharge[5]. All bioassays shall be sent to a laboratory certified by the Department of Health Services (DHS) Environmental Laboratory Accreditation Program (ELAP). The required field of testing number for Whole Effluent Toxicity (WET) testing is E113.[6]

   b. Acute toxicity tests shall be conducted with the following species and protocols. The methods to be used in the acute toxicity testing shall be those outlined for a 96-hour acute test in "Methods for Measuring the Acute Toxicity of Effluents and Receiving Water to Freshwater and Marine Organisms, USEPA-841-R-02-012" for Fathead minnow, *Pimephales promelas* (fathead minnow). Acute toxicity for *Oncorhynchus mykiss* (Rainbow Trout) may be used as a substitute for testing fathead minnows.

   c. All toxicity tests shall meet quality assurance criteria and test acceptability criteria in the most recent versions of the EPA test method for WET testing.

   d. The discharger shall electronically report all acute toxicity testing.

[3] The Maximum Allowable Threshold Concentration (MATC) is the allowable concentration of residual, or dissolved, coagulant/flocculant in effluent. The MATC shall be coagulant/flocculant-specific, and based on toxicity testing conducted by an independent, third-party laboratory. A typical MATC would be:
The MATC is equal to the geometric mean of the NOEC (No Observed Effect Concentration) and LOEC (Lowest Observed Effect Concentration) Acute and Chronic toxicity results for most sensitive species determined for the specific coagulant. The most sensitive species test shall be used to determine the MATC.
[4] Batch Treatment mode is defined as holding or recirculating the treated water in a holding basin or tank(s) until treatment is complete or the basin or storage tank(s) is full.
[5] This requirement only requires that the test be initiated prior to discharge.
[6] http://www.dhs.ca.gov/ps/ls/elap/pdf/FOT_Desc.pdf.

F. Filtration

1. The ATS shall include a filtration step between the coagulant treatment train and the effluent discharge. This is commonly provided by sand, bag, or cartridge filters, which are sized to capture suspended material that might pass through the clarifier tanks.

2. Differential pressure measurements shall be taken to monitor filter loading and confirm that the final filter stage is functioning properly.

G. Residuals Management

1. Sediment shall be removed from the storage or treatment cells as necessary to ensure that the cells maintain their required water storage (i.e., volume) capability.

2. Handling and disposal of all solids generated during ATS operations shall be done in accordance with all local, state, and federal laws and regulations.

H. ATS Instrumentation

1. The ATS shall be equipped with instrumentation that automatically measures and records effluent water quality data and flow rate.

2. The minimum data recorded shall be consistent with the Monitoring and Reporting requirements below, and shall include:

    a. Influent Turbidity

    b. Effluent Turbidity

    c. Influent pH

    d. Effluent pH

    e. Residual Chemical

    f. Effluent Flow rate

    g. Effluent Flow volume

3. Systems shall be equipped with a data recording system, such as data loggers or webserver-based systems, which records each measurement on a frequency no longer than once every 15 minutes.

4. Cumulative flow volume shall be recorded daily. The data recording system shall have the capacity to record a minimum of seven days continuous data.

5. Instrumentation systems shall be interfaced with system control to provide auto shutoff or recirculation in the event that effluent measurements exceed turbidity or pH.

6. The system shall also assure that upon system upset, power failure, or other catastrophic event, the ATS will default to a recirculation mode or safe shut down.

7. Instrumentation (flow meters, probes, valves, streaming current detectors, controlling computers, etc.) shall be installed and maintained per manufacturer's recommendations, which shall be included in the QA/QC plan.

8. The QA/QC plan shall also specify calibration procedures and frequencies, instrument method detection limit or sensitivity verification, laboratory duplicate procedures, and other pertinent procedures.

9. The instrumentation system shall include a method for controlling coagulant dose, to prevent potential overdosing. Available technologies include flow/turbidity proportional metering, periodic jar testing and metering pump adjustment, and ionic charge measurement controlling the metering pump.

I. ATS Effluent Discharge

1. ATS effluent shall comply with all provisions and prohibitions in this General Permit, specifically the NELs.

2. NELs for discharges from an ATS:

   a. Turbidity of all ATS discharges shall be less than 10 NTU for daily flow-weighted average of all samples and 20 NTU for any single sample.

   b. Residual Chemical shall be < 10% of MATC[7] for the most sensitive species of the chemical used.

[7] The Maximum Allowable Threshold Concentration (MATC) is the allowable concentration of residual, or dissolved, coagulant/flocculant in effluent. The MATC shall be coagulant/flocculant-specific, and based on toxicity testing conducted by an independent, third-party laboratory. The MATC is equal to the geometric mean of the NOEC (No Observed Effect Concentration) and LOEC (Lowest Observed Effect Concentration) Acute and Chronic toxicity results for most sensitive species determined for the specific coagulant. The most sensitive species test shall be used to determine the MATC.

3. If an analytical effluent sampling result exceeds the turbidity NEL (as listed in Table 1), the discharger is in violation of this General Permit and shall electronically file the results in violation within 24-hours of obtaining the results.

4. If ATS effluent is authorized to discharge into a sanitary sewer system, the discharger shall comply with any pre-treatment requirements applicable for that system. The discharger shall include any specific criteria required by the municipality in the ATS Plan.

5. Compliance Storm Event:

   Discharges of storm water from ATS shall comply with applicable NELs (above) unless the storm event causing the discharges is determined after the fact to be equal to or larger than the Compliance Storm Event (expressed in inches of rainfall). The Compliance Storm Event for ATS discharges is the 10 year, 24 hour storm, as determined using these maps:

   http://www.wrcc.dri.edu/pcpnfreq/nca10y24.gif
   http://www.wrcc.dri.edu/pcpnfreq/sca10y24.gif

   This exemption is dependent on the submission of rain gauge data verifying the storm event is equal to or larger than the Compliance Storm.

J. Operation and Maintenance Plan

1. Each Project shall have a site-specific Operation and Maintenance (O&M) Manual covering the procedures required to install, operate and maintain the ATS.[8]

2. The O&M Manual shall only be used in conjunction with appropriate project-specific design specifications that describe the system configuration and operating parameters.

3. The O&M Manual shall have operating manuals for specific pumps, generators, control systems,and other equipment.

K. Sampling and Reporting Quality Assurance/ Quality Check (QA/QC) Plan

4. A project-specific QA/QC Plan shall be developed for each project. The QA/QC Plan shall include at a minimum:

   a. Calibration – Calibration methods and frequencies for all system and field instruments shall be specified.

[8] The manual is typically in a modular format covering generalized procedures for each component that is utilized in a particular system.

b. Method Detection Limits (MDLs) – The methods for determining MDLs shall be specified for each residual coagulant measurement method. Acceptable minimum MDLs for each method, specific to individual coagulants, shall be specified.

c. Laboratory Duplicates – Requirements for monthly laboratory duplicates for residual coagulant analysis shall be specified.

L. Personnel Training

1. Operators shall have training specific to using an ATS and liquid coagulants for storm water discharges in California.

2. The training shall be in the form of a formal class with a certificate and requirements for testing and certificate renewal.

3. Training shall include a minimum of eight hours classroom and 32 hours field training. The course shall cover the following topics:

   a. Coagulation Basics –Chemistry and physical processes

   b. ATS System Design and Operating Principles

   c. ATS Control Systems

   d. Coagulant Selection – Jar testing, dose determination, etc.

   e. Aquatic Safety/Toxicity of Coagulants, proper handling and safety

   f. Monitoring, Sampling, and Analysis

   g. Reporting and Recordkeeping

   h. Emergency Response

M. Active Treatment System (ATS) Monitoring Requirements

Any discharger who deploys an ATS on their site shall conduct the following:

1. Visual Monitoring

   a. A designated responsible person shall be on site daily at all times during treatment operations.

b. Daily on-site visual monitoring of the system for proper performance shall be conducted and recorded in the project data log.

   i. The log shall include the name and phone number of the person responsible for system operation and monitoring.

   ii. The log shall include documentation of the responsible person's training.

2. Operational and Compliance Monitoring

   a. Flow shall be continuously monitored and recorded at not greater than 15-minute intervals for total volume treated and discharged.

   b. Influent and effluent pH must be continuously monitored and recorded at not greater than 15-minute intervals.

   c. Influent and effluent turbidity (expressed in NTU) must be continuously monitored and recorded at not greater than 15-minute intervals.

   d. The type and amount of chemical used for pH adjustment, if any, shall be monitored and recorded.

   e. Dose rate of chemical used in the ATS system (expressed in mg/L) shall be monitored and reported 15-minutes after startup and every 8 hours of operation.

   f. Laboratory duplicates – monthly laboratory duplicates for residual coagulant analysis must be performed and records shall be maintained onsite.

   g. Effluent shall be monitored and recorded for residual chemical/additive levels.

   h. If a residual chemical/additive test does not exist and the ATS is operating in a batch treatment mode of operation refer to the toxicity monitoring requirements below.

3. Toxicity Monitoring

   A discharger operating in batch treatment mode shall perform toxicity testing in accordance with the following:

   a. The discharger shall initiate acute toxicity testing on effluent samples representing effluent from each batch prior to discharge.[9] All bioassays shall be sent to a laboratory certified by the Department of Health Services (DHS)

[9] This requirement only requires that the test be initiated prior to discharge.

Environmental Laboratory Accreditation Program (ELAP). The required field of testing number for Whole Effluent Toxicity (WET) testing is E113.[10]

b. Acute toxicity tests shall be conducted with the following species and protocols. The methods to be used in the acute toxicity testing shall be those outlined for a 96-hour acute test in "Methods for Measuring the Acute Toxicity of Effluents and Receiving Water to Freshwater and Marine Organisms, USEPA-841-R-02-012" for Fathead minnow, *Pimephales promelas or* Rainbow trout *Oncorhynchus mykiss* may be used as a substitute for fathead minnow.

c. All toxicity tests shall meet quality assurance criteria and test acceptability criteria in the most recent versions of the EPA test method for WET testing.[11]

4. Reporting and Recordkeeping

At a minimum, every 30 days a LRP representing the discharger shall access the State Water Boards Storm Water Mulit-Application and Report Tracking system (SMARTS) and electronically upload field data from the ATS. Records must be kept for three years after the project is completed .

5. Non-compliance Reporting

a. Any indications of toxicity or other violations of water quality objectives shall be reported to the appropriate regulatory agency as required by this General Permit.

b. Upon any measurements that exceed water quality standards, the system operator shall immediately notify his supervisor or other responsible parties, who shall notify the Regional Water Board.

c. If any monitoring data exceeds any applicable NEL in this General Permit, the discharger shall electronically submit a NEL Violation Report to the State Water Board within 24 hours after the NEL exceedance has been identified.

i. ATS dischargers shall certify each NEL Violation Report in accordance with the Special Provisions for Construction Activity in this General Permit.

ii. ATS dischargers shall retain an electronic or paper copy of each NEL Violation Report for a minimum of three years after the date the annual report is filed.

iii. ATS dischargers shall include in the NEL Violation Report:

[10] http://www.dhs.ca.gov/ps/ls/elap/pdf/FOT_Desc.pdf.
[11] http://www.epa.gov/waterscience/methods/wet/.

(1) The analytical method(s), method reporting unit(s), and method detection limit(s) of each analytical parameter (analytical results that are less than the method detection limit shall be reported as “less than the method detection limit”);

(2) The date, place, time of sampling, visual observation (inspections), and/or measurements, including precipitation; and

(3) A description of the current onsite BMPs, and the proposed corrective actions taken to manage the NEL exceedance.

iv. Compliance Storm Exemption - In the event that an applicable NEL has been exceeded during a storm event equal to or larger than the Compliance Storm Event, ATS dischargers shall report the on-site rain gauge reading and nearby governmental rain gauge readings for verification.

	A	B	C	D	E	F	G	H	I	J	K	L	M
1	Version 8/17/2011												
2		**Risk Determination Worksheet**											
3													
4			**Step 1**	Determine Sediment Risk via one of the options listed:									
5				1. GIS Map Method - EPA Rainfall Erosivity Calculator & GIS map									
6				2. Individual Method - EPA Rainfall Erosivity Calculator & Individual Data									
7			**Step 2**	Determine Receiving Water Risk via one of the options listed:									
8				1. GIS map of Sediment Sensitive Watersheds provided									
9				2. Site Specific Analysis (support documentation required)									
10			**Step 3**	Determine Combined Risk Level									
11													
12													
13													
14													
15													
16													
17													
18													
19													
20													

	A	B	C
1	**Sediment Risk Factor Worksheet**		**Entry**
2	**A) R Factor**		
3	Analyses of data indicated that when factors other than rainfall are held constant, soil loss is directly proportional to a rainfall factor composed of total storm kinetic energy (E) times the maximum 30-min intensity (I30) (Wischmeier and Smith, 1958). The numerical value of R is the average annual sum of EI30 for storm events during a rainfall record of at least 22 years. "Isoerodent" maps were developed based on R values calculated for more than 1000 locations in the Western U.S. Refer to the link below to determine the R factor for the project site.		
4	http://cfpub.epa.gov/npdes/stormwater/LEW/lewCalculator.cfm		
5	**R Factor Value**		0
6	**B) K Factor (weighted average, by area, for all site soils)**		
7	The soil-erodibility factor K represents: (1) susceptibility of soil or surface material to erosion, (2) transportability of the sediment, and (3) the amount and rate of runoff given a particular rainfall input, as measured under a standard condition Fine-textured soils that are high in clay have low K values (about 0.05 to 0.15) because the particles are resistant to detachment. Coarse-textured soils, such as sandy soils, also have low K values (about 0.05 to 0.2) because of high infiltration resulting in low runoff even though these particles are easily detached. Medium-textured soils, such as a silt loam, have moderate K values (about 0.25 to 0.45) because they are moderately susceptible to particle detachment and they produce runoff at moderate rates. Soils having a high silt content are especially susceptible to erosion and have high K values, which can exceed 0.45 and can be as large as 0.65. Silt-size particles are easily detached and tend to crust, producing high rates and large volumes of runoff. Use Site-specific data must be submitted.		
8	Site-specific K factor guidance		
9	**K Factor Value**		0
10	**C) LS Factor (weighted average, by area, for all slopes)**		
11	The effect of topography on erosion is accounted for by the LS factor, which combines the effects of a hillslope-length factor, L, and a hillslope-gradient factor, S. Generally speaking, as hillslope length and/or hillslope gradient increase, soil loss increases. As hillslope length increases, total soil loss and soil loss per unit area increase due to the progressive accumulation of runoff in the downslope direction. As the hillslope gradient increases, the velocity and erosivity of runoff increases. Use the LS table located in separate tab of this spreadsheet to determine LS factors. Estimate the weighted LS for the site prior to construction.		
12	LS Table		
13	**LS Factor Value**		0
14			
15	**Watershed Erosion Estimate (=RxKxLS) in tons/acre**		0
16	**Site Sediment Risk Factor**		**Low**
17	Low Sediment Risk: < 15 tons/acre		
18	Medium Sediment Risk: >=15 and <75 tons/acre		
19	High Sediment Risk: >= 75 tons/acre		
20			
21			
22			
23	**GIS Map Method:**		
24	**1.** The R factor for the project is calculated using the online calculator at:		
25	http://cfpub.epa.gov/npdes/stormwater/LEW/lewCalculator.cfm		
26			
27	**2.** The K and LS factors may be obtained by accessing the GIS maps located on the State Water Board FTP website at:		
28	ftp://swrcb2a.waterboards.ca.gov/pub/swrcb/dwq/cgp/Risk/		
29			

Receiving Water (RW) Risk Factor Worksheet	Entry	Score
A. Watershed Characteristics	**yes/no**	
A.1. Does the disturbed area discharge (either directly or indirectly) to a **303(d)-listed waterbody impaired by sediment** (For help with impaired waterbodies please visit the link below) or has a **USEPA approved TMDL implementation plan for sediment**?:	**no**	**Low**
http://www.waterboards.ca.gov/water_issues/programs/tmdl/integrated2010.shtml		
OR		
A.2. Does the disturbed area discharge to a waterbody with designated beneficial uses of SPAWN & COLD & MIGRATORY? (For help please review the appropriate Regional Board Basin Plan)		
http://www.waterboards.ca.gov/waterboards_map.shtml		
Region 1 Basin Plan		
Region 2 Basin Plan		
Region 3 Basin Plan		
Region 4 Basin Plan		
Region 5 Basin Plan		
Region 6 Basin Plan		
Region 7 Basin Plan		
Region 8 Basin Plan		
Region 9 Basin Plan		

Combined Risk Level Matrix

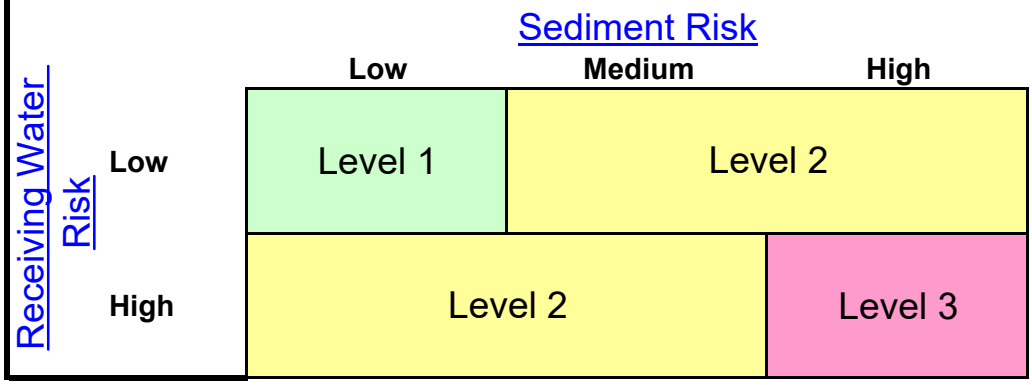

Project Sediment Risk:	**Low**
Project RW Risk:	**Low**
Project Combined Risk:	**Level 1**

Soil Erodibility Factor (K)

The K factor can be determined by using the nomograph method, which requires that a particle size analysis (ASTM D-422) be done to determine the percentages of sand, very fine sand, silt and clay. Use the figure below to determine appropriate K value.

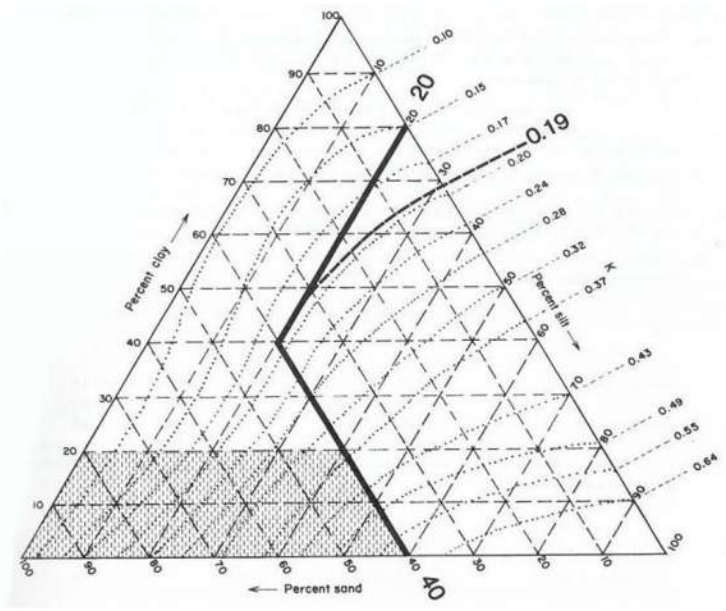

Erickson triangular nomograph used to estimate soil erodibility (K) factor.
The figure above is the USDA nomograph used to determine the K factor for a soil, based on its texture (% silt plus very fine sand, % sand, % organic matter, soil structure, and permeability). *Nomograph from Erickson 1977 as referenced in Goldman et. al., 1986.*

Sheet Flow Length (ft)	Average Watershed Slope (%)																		
	0.2	**0.5**	**1.0**	**2.0**	**3.0**	**4.0**	**5.0**	**6.0**	**8.0**	**10.0**	**12.0**	**14.0**	**16.0**	**20.0**	**25.0**	**30.0**	**40.0**	**50.0**	**60.0**
<3	0.05	0.07	0.09	0.13	0.17	0.20	0.23	0.26	0.32	0.35	0.36	0.38	0.39	0.41	0.45	0.48	0.53	0.58	0.63
6	0.05	0.07	0.09	0.13	0.17	0.20	0.23	0.26	0.32	0.37	0.41	0.45	0.49	0.56	0.64	0.72	0.85	0.97	1.07
9	0.05	0.07	0.09	0.13	0.17	0.20	0.23	0.26	0.32	0.38	0.45	0.51	0.56	0.67	0.80	0.91	1.13	1.31	1.47
12	0.05	0.07	0.09	0.13	0.17	0.20	0.23	0.26	0.32	0.39	0.47	0.55	0.62	0.76	0.93	1.08	1.37	1.62	1.84
15	0.05	0.07	0.09	0.13	0.17	0.20	0.23	0.26	0.32	0.40	0.49	0.58	0.67	0.84	1.04	1.24	1.59	1.91	2.19
25	0.05	0.07	0.10	0.16	0.21	0.26	0.31	0.36	0.45	0.57	0.71	0.85	0.98	1.24	1.56	1.86	2.41	2.91	3.36
50	0.05	0.08	0.13	0.21	0.30	0.38	0.46	0.54	0.70	0.91	1.15	1.40	1.64	2.10	2.67	3.22	4.24	5.16	5.97
75	0.05	0.08	0.14	0.25	0.36	0.47	0.58	0.69	0.91	1.20	1.54	1.87	2.21	2.86	3.67	4.44	5.89	7.20	8.37
100	0.05	0.09	0.15	0.28	0.41	0.55	0.68	0.82	1.10	1.46	1.88	2.31	2.73	3.57	4.59	5.58	7.44	9.13	10.63
150	0.05	0.09	0.17	0.33	0.50	0.68	0.86	1.05	1.43	1.92	2.51	3.09	3.68	4.85	6.30	7.70	10.35	12.75	14.89
200	0.06	0.10	0.18	0.37	0.57	0.79	1.02	1.25	1.72	2.34	3.07	3.81	4.56	6.04	7.88	9.67	13.07	16.16	18.92
250	0.06	0.10	0.19	0.40	0.64	0.89	1.16	1.43	1.99	2.72	3.60	4.48	5.37	7.16	9.38	11.55	15.67	19.42	22.78
300	0.06	0.10	0.20	0.43	0.69	0.98	1.28	1.60	2.24	3.09	4.09	5.11	6.15	8.23	10.81	13.35	18.17	22.57	26.51
400	0.06	0.11	0.22	0.48	0.80	1.14	1.51	1.90	2.70	3.75	5.01	6.30	7.60	10.24	13.53	16.77	22.95	28.60	33.67
600	0.06	0.12	0.24	0.56	0.96	1.42	1.91	2.43	3.52	4.95	6.67	8.45	10.26	13.94	18.57	23.14	31.89	39.95	47.18
800	0.06	0.12	0.26	0.63	1.10	1.65	2.25	2.89	4.24	6.03	8.17	10.40	12.69	17.35	23.24	29.07	40.29	50.63	59.93
1000	0.06	0.13	0.27	0.69	1.23	1.86	2.55	3.30	4.91	7.02	9.57	12.23	14.96	20.57	27.66	34.71	48.29	60.84	72.15

LS Factors for Construction Sites. *Table from Renard et. al., 1997.*

APPENDIX 2:
Post-Construction Water Balance Performance Standard Spreadsheet

The discharger shall submit with their Notice of Intent (NOI) the following information to demonstrate compliance with the New and Re-Development Water Balance Performance Standard.

Map Instructions

The discharger must submit a small-scale topographic map of the site to show the existing contour elevations, pre- and post-construction drainage divides, and the total length of stream in each watershed area. Recommended scales include 1 in. = 20 ft., 1 in. = 30 ft., 1 in. = 40 ft., or 1 in = 50 ft. The suggested contour interval is usually 1 to 5 feet, depending upon the slope of the terrain. The contour interval may be increased on steep slopes. Other contour intervals and scales may be appropriate given the magnitude of land disturbance.

Spreadsheet Instructions

The intent of the spreadsheet is to help dischargers calculate the project-related increase in runoff volume and select impervious area and runoff reduction credits to reduce the project-related increase in runoff volume to pre-project levels.

The discharger has the option of using the spreadsheet (**Appendix 2.1)** or a more sophisticated, watershed process-based model (e.g. Storm Water Management Model, Hydrological Simulation Program Fortran) to determine the project-related increase in runoff volume.

In* Appendix 4.1**, ***you must complete the worksheet for each land use/soil type combination for each project sub-watershed.

Steps 1 through 9 pertain specifically to the Runoff Volume Calculator:

Step 1: Enter the county where the project is located in cell H3.

Step 2: Enter the soil type in cell H6.

Step 3: Enter the existing pervious (dominant) land use type in cell H7.

Step 4: Enter the proposed pervious (dominant) land use type in cell H8.

Step 5: Enter the total project site area in cell H11 or J11.

Step 6: Enter the sub-watershed area in cell H12 or J12.

Step 7: Enter the existing rooftop area in cell H17 or J17, the existing non-rooftop impervious area in cell H18 or J18, the proposed rooftop area in cell H19 or J19, and the proposed non-rooftop impervious area in cell H20 or J20

Step 8: Work through each of the impervious area reduction credits and claim credits where applicable. Volume that cannot be addressed using non-structural practices must be captured in structural practices and approved by the Regional Water Board.

Step 9: Work through each of the impervious volume reduction credits and claim credits where applicable. Volume that cannot be addressed using non-structural practices must be captured in structural practices and approved by the Regional Water Board.

Non-structural Practices Available for Crediting

- ***Porous Pavement***
- ***Tree Planting***
- ***Downspout Disconnection***
- ***Impervious Area Disconnection***
- ***Green Roof***
- ***Stream Buffer***
- ***Vegetated Swales***
- ***Rain Barrels and Cisterns***
- ***Landscaping Soil Quality***

Post-Construction Water Balance Calculator

User may make changes from any cell that is orange or brown in color (similar to the cells to the immediate right). Cells in green are calculated for you.		(Step 1a) If you know the 85th percentile storm event for your location enter it in the box below	(Step 1b) If you can not answer 1a then select the county where the project is located (click on the cell to the right for drop-down): This will determine the average 85th percentile 24 hr. storm event for your site, which will appear under precipitation to left.	***SACRAMENTO***	
			(Step 1c) If you would like a more percise value select the location closest to your site. If you do not recgonize any of these locations, leave this drop-down menu at location. The average value for the County will be used.	**SACRAMENTO FAA ARPT**	
Project Information			***Runoff Calculations***		
Project Name:	***Optional***		(Step 2) Indicate the Soil Type (dropdown menu to right):	***Group C Soils***	**Low infiltration. Sandy clay loam. Infiltration rate 0.05 to 0.15 inch/hr when wet.**
Waste Discharge Identification (WDID):	***Optional***		(Step 3) Indicate the existing **dominant** non-built land Use Type (dropdown menu to right):	***Wood & Grass: <50% ground cover***	
Date:	***Optional***		(Step 4) Indicate the proposed **dominant** non-built land Use Type (dropdown menu to right):	***Lawn, Grass, or Pasture covering more than 75% of the open space***	
Sub Drainage Area Name (from map):	***Optional***			**Complete Either**	
Runoff Curve Numbers				**Sq Ft**	**Acres**	**Acres**
Existing Pervious Runoff Curve Number		**82**	*(Step 5) Total Project Site Area:*		**5.00**	**5.00**
Proposed Development Pervious Runoff Curve Number		**74**	*(Step 6) Sub-watershed Area:*		**5.00**	**5.00**
Design Storm			*Percent of total project :*	**100%**		
Based on the County you indicated above, we have included the 85 percentile average 24 hr event - P85 (in)^ for your area.	**0.62**	**in**				
The Amount of rainfall needed for runoff to occur (Existing runoff curve number -P from existing RCN (in)^)	**0.44**	**In**	***(Step 7) Sub-watershed Conditions***	**Complete Either**		**Calculated Acres**
P used for calculations (in) (the greater of the above two criteria)	**0.62**	**In**	Sub-watershed Area (acres)	**Sq Ft**	**Acres**	**5.00**
^Available at www.cabmphandbooks.com			Existing Rooftop Impervious Coverage		**0**	**0.00**
			Existing Non-Rooftop Impervious Coverage		**0**	**0.00**
			Proposed Rooftop Impervious Coverage		**0**	**0.00**
			Proposed Non-Rooftop Impervious Coverage		**0**	**0.00**
			Credits	**Acres**		**Square Feet**
			Porous Pavement	**0.00**		**0**
			Tree Planting	**0.00**		**0**
Pre-Project Runoff Volume (cu ft)	**247**	**Cu.Ft.**	Downspout Disconnection	**0.00**		**0**
Project-Related Runoff Volume Increase w/o credits (cu ft)	**0**	**Cu.Ft.**	Impervious Area Disconnection	**0.00**		**0**
			Green Roof	**0.00**		**0**
			Stream Buffer	**0.00**		**0**
Project-Related Volume Increase with Credits (cu ft)	**0**	**Cu.Ft.**	Vegetated Swales	**0.00**		**0**
			Subtotal	**0.00**		**0**
			Subtotal Runoff Volume Reduction Credit	**0 Cu. Ft.**		
You have achieved your minimum requirements			***(Step 9) Impervious Volume Reduction Credits***	**Volume (cubic feet)**		
			Rain Barrels/Cisterns	**0 Cu. Ft.**		
			Soil Quality	**0 Cu. Ft.**		
			Subtotal Runoff Volume Reduction	**0 Cu. Ft.**		
			Total Runoff Volume Reduction Credit	**0 Cu. Ft.**		

Porous Pavement Credit Worksheet

Please fill out a porous pavement credit worksheet for each project sub-watershed.

For the PROPOSED Development:

Proposed Porous Pavement	Runoff Reduction*	Fill in either Acres or SqFt		Equivalent Acres
		In SqFt.	In Acres	
Area of **Brick without Grout** on less than 12 inches of base with at least 20% void space over soil	0.45			0.00
Area of **Brick without Grout** on more than 12 inches of base with at least 20% void space over soil	0.90			0.00
Area of **Cobbles** less than 12 inches deep and over soil	0.30			0.00
Area of **Cobbles** less than 12 inches deep and over soil	0.60			0.00
Area of **Reinforced Grass Pavement** on less than 12 inches of base with at least 20% void space over soil	0.45			0.00
Area of **Reinforced Grass Pavement** on at least 12 inches of base with at least 20% void space over soil	0.90			0.00
Area of **Porous Gravel Pavement** on less than 12 inches of base with at least 20% void space over soil	0.38			0.00
Area of **Porous Gravel Pavement** on at least 12 inches of base with at least 20% void space over soil	0.75			0.00
Area of **Poured Porous Concrete or Asphalt Pavement** with less than 4 inches of gravel base (washed stone)	0.40			0.00
Area of **Poured Porous Concrete or Asphalt Pavement** with 4 to 8 inches of gravel base (washed stone)	0.60			0.00
Area of **Poured Porous Concrete or Asphalt Pavement** with 8 to 12 inches of gravel base (washed stone)	0.80			0.00
Area of **Poured Porous Concrete or Asphalt Pavement** with 12 or more inches of gravel base (washed stone)	1.00			0.00

*=1-Rv**

Return to Calculator

**Using Site Design Techniques to meet Development Standards for Stormwater Quality (BASMAA 2003)

**NCDENR Stormwater BMP Manual (2007)

Tree Planting Credit Worksheet
Please fill out a tree canopy credit worksheet for each project sub-watershed.

Tree Canopy Credit Criteria	Number of Trees Planted	Credit (acres)
Number of proposed evergreen trees to be planted (credit = number of trees x 0.005)*	0	0.00
Number of proposed deciduous trees to be planted (credit = number of trees x 0.0025)*		0.00
	Square feet Under Canopy	
Square feet under an existing tree canopy, that will remain on the property, with an average diameter at 4.5 ft above grade (i.e., diameter at breast height or DBH) is LESS than 12 in diameter.		0.00
Square feet under an existing tree canopy that will remain on the property, with an average diameter at 4.5 ft above grade (i.e., diameter at breast height or DBH) is 12 in diameter or GREATER.		0.00
Please describe below how the project will ensure that these trees will be maintained.		

0

Return to Calculator

* credit amount based on credits from Stormwater Quality Design Manual for the Sacramento and South Placer Regions

Downspout Disconnection Credit Worksheet

Please fill out a downspout disconnection credit worksheet for each project subwatershed. If you answer yes to all questions, all rooftop area draining to each downspout will be subtracted from your proposed rooftop impervious coverage.

Downspout Disconnection Credit Criteria					
Do downspouts and any extensions extend at least six feet from a basement and two feet from a crawl space or concrete slab?				○ Yes	◉ No
Is the area of rooftop connecting to each disconnected downspout 600 square feet or less?				○ Yes	◉ No
Is the roof runoff from the design storm event fully contained in a raised bed or planter box or does it drain as sheet flow to a landscaped area large enough to contain the roof runoff from the design storm event?				○ Yes	◉ No
The Stream Buffer and/or Vegetated Swale credits **will not** be taken in this sub-watershed area?				○ Yes	◉ No
Percentage of existing	0.00	Acres	of rooftop surface has disconnected downspouts		
Percentage of the proposed	0.00	Acres	of rooftop surface has disconnected downspouts	50	
				Return to Calculator	

Impervious Area Disconnection Credit Worksheet

Please fill out an impervious area disconnection credit worksheet for each project sub-watershed. If you answer yes to all questions, all non-rooftop impervious surface area will be subtracted from your proposed non-rooftop impervious coverage.

Non-Rooftop Disconnection Credit Criteria	Response
Is the maximum contributing impervious flow path length less than 75 feet or, if equal or greater than 75 feet, is a storage device (e.g. French drain, bioretention area, gravel trench) implemented to achieve the required disconnection length?	◉ Yes ○ No
Is the impervious area to any one discharge location less than 5,000 square feet?	◉ Yes ○ No
The Stream Buffer credit **will not** be taken in this sub-watershed area?	◉ Yes ○ No

Percentage of existing	0.00	Acres non-rooftop surface area disconnected	
Percentage of the proposed	0.00	Acres non-rooftop surface area disconnected	70

Return to Calculator

Green Roof Credit Worksheet

Please fill out a greenroof credit worksheet for each project sub-watershed. If you answer yes to all questions, 70% of the greenroof area will be subtracted from your proposed rooftop impervious coverage.

Green Roof Credit Criteria				Response
Is the roof slope less than 15% or does it have a grid to hold the substrate in place until it forms a thick vegetation mat?				◉ Yes ○ No
Has a professional engineer assessed the necessary load reserves and designed a roof structure to meet state and local codes?				◉ Yes ○ No
Is the irrigation needed for plant establishment and/or to sustain the green roof during extended dry periods, is the source from stored, recycled, reclaimed, or reused water?				◉ Yes ○ No
Percentage of existing	0.00	Acres	rooftop surface area in greenroof	
Percentage of the proposed	0.00	Acres	rooftop surface area in greenroof	

Return to Calculator

Stream Buffer Credit Worksheet

Please fill out a stream buffer credit worksheet for each project sub-watershed. If you answer yes to all questions, you may subtract all impervious surface draining to each stream buffer that has not been addressed using the Downspout and/or Impervious Area Disconnection credits.

Stream Buffer Credit Criteria				Response
Does runoff enter the floodprone width* or within 500 feet (whichever is larger) of a stream channel as sheet flow**?				○ Yes ◉ No
Is the contributing overland slope 5% or less, or if greater than 5%, is a level spreader used?				○ Yes ◉ No
Is the buffer area protected from vehicle or other traffic barriers to reduce compaction?				○ Yes ◉ No
Will the stream buffer be maintained in an ungraded and uncompacted condition and will the vegetation be maintained in a natural condition?				○ Yes ◉ No
Percentage of existing	0.00	Acres	impervious surface area draining into a stream buffer:	
Percentage of the proposed	0.00	Acres	impervious surface area that will drain into a stream buffer:	
Please describe below how the project will ensure that the buffer areas will remain in ungraded and uncompacted condition and that the vegetation will be maintained in a natural condition.				

Return to Calculator

* floodprone width is the width at twice the bankfull depth.
** the maximum contributing length shall be 75 feet for impervious area

Vegetated Swale Credit Worksheet

Please fill out a vegetated swale worksheet for each project subwatershed. If you answer yes to all questions, you may subtract all impervious surface draining to each stream buffer that has not been addressed using the Downspout Disconnection credit.

Vegetated Swale Credit Criteria

Have all vegetated swales been designed in accordance with Treatment Control BMP 30 (TC-30 - Vegetated Swale) from the California Stormwater BMP Handbook, New Development and Redevelopment (available at www.cabmphandbooks.com)?	○ Yes ◉ No
Is the maximum flow velocity for runoff from the design storm event less than or equal to 1.0 foot per second?	○ Yes ◉ No

Percentage of existing	0.00	Acres of impervious area draining to a vegetated swale	
Percentage of the proposed	0.00	Acres of impervious area draining to a vegetated swale	

Return to Calculator

Rain Barrel/Cistern Credit Worksheet

Please fill out a rain barrel/cistern worksheet for each project sub-watershed.

Rain Barrel/Cistern Credit Criteria	Response
Total number of rain barrel(s)/cisterns	
Average capacity of rain barrel(s)/cistern(s) (in gallons)	
Total capacity rain barrel(s)/cistern(s) (in cu ft) [1]	0

[1] accounts for 10% loss

Return to Calculator

Please fill out a soil quality worksheet for each project sub-watershed.

	Response
Will the landscaped area be lined with an impervious membrane?	
Will the soils used for landscaping meet the ideal bulk densities listed in Table 1 below? [1]	○ Yes ◉ No
If you answered yes to the question above, and you know the area-weighted bulk density within the top 12 inches for soils used for landscaping (in g/cm^3)* , fill in the cell to the right and skip to cell G11. If not select from the drop-down menu in G10.	1.3
If you answered yes to the question above, but you do not know the exact bulk density, which of the soil types in the drop down menu to the right best describes the top 12 inches for soils used for landscaping (in g/cm^3).	Sandy loams, loams
What is the average depth of your landscaped soil media meeting the above criteria (inches)?	12
What is the total area of the landscaped areas meeting the above criteria (in acres)?	2.97

Return to Calculator

Table 1

Sands, loamy sands	<1.6
Sandy loams, loams	<1.4
Sandy clay loams, loams, clay loams	<1.4
Silts, silt loams	<1.3
Silt loams, silty clay loams	<1.1
Sandy clays, silty clays, some clay loams (35-45% clay)	<1.1
Clays (>45% clay)	<1.1

Porosity (%) 50.94%

Mineral grains in many soils are mainly quartz and feldspar, so 2.65 a good average for particle density. To determine percent porosity, use the formula: Porosity (%) = (1-Bulk Density/2.65) X 100

[1] USDA NRCS. "Soil Quality Urban Technical Note No.2-Urban Soil Compaction". March 2000. http://soils.usda.gov/sqi/management/files/sq_utn_2.pdf

* To determine how to calculate density see: http://www.globe.gov/tctg/bulkden.pdf?sectionID=94

APPENDIX 3
Bioassessment Monitoring Guidelines

Bioassessment monitoring is required for projects that meet all of the following criteria:

1. The project is rated Risk Level 3 or LUP Type 3
2. The project directly discharges runoff to a freshwater wadeable stream (or streams) that is either: (a) listed by the State Water Board or USEPA as impaired due to sediment, and/or (b) tributary to any downstream water body that is listed for sediment; and/or have the beneficial use SPAWN & COLD & MIGRATORY
3. Total project-related ground disturbance exceeds 30 acres.

For all such projects, the discharger shall conduct bioassessment monitoring, as described in this section, to assess the effect of the project on the biological integrity of receiving waters.
Bioassessment shall include:

1. The collection and reporting of specified instream biological data
2. The collection and reporting of specified instream physical habitat data

<u>Bioassessment Exception</u>
If a site qualifies for bioassessment, but construction commences out of an index period for the site location, the discharger shall:

1. Receive Regional Water Board approval for the sampling exception
2. Make a check payable to: Cal State Chico Foundation (SWAMP Bank Account) or San Jose State Foundation (SWAMP Bank Account) and include the WDID# on the check for the amount calculated for the exempted project.
3. Send a copy of the check to the Regional Water Board office for the site's region
4. Invest **7,500.00 X The number of samples required** into the SWAMP program as compensation (upon Regional Water Board approval).
5. Conduct bioassessment monitoring, as described in Appendix 4
6. Include the collection and reporting of specified instream biological data and physical habitat
7. Use the bioassessment sample collection and Quality Assurance & Quality Control (QA/QC) protocols developed by the State of California's Surface Water Ambient Monitoring Program (SWAMP)

<u>Site Locations and Frequency</u>
Macroinvertebrate samples shall be collected both before ground disturbance is initiated and after the project is completed. The "after" sample(s) shall be collected after at least one winter season resulting in surface runoff has transpired after project-related ground disturbance has ceased. "Before" and "after" samples shall be collected both upstream and downstream of the project's

discharge. Upstream samples should be taken immediately before the sites outfall and downstream samples should be taken immediately after the outfall (when safe to collect the samples). Samples should be collected for each freshwater wadeable stream that is listed as impaired due to sediment, or tributary to a water body that is listed for sediment. Habitat assessment data shall be collected concurrently with all required macroinvertebrate samples.

Index Period (Timing of Sample Collection)
Macroinvertebrate sampling shall be conducted during the time of year (i.e., the "index period") most appropriate for bioassessment sampling, depending on ecoregion. This map is posted on the State Water Board's Website: http://www.waterboards.ca.gov/water_issues/programs/stormwater/construction.shtml

Field Methods for Macroinvertebrate Collections
In collecting macroinvertebrate samples, the discharger shall use the "Reachwide Benthos (Multi-habitat) Procedure" specified in *Standard Operating Procedures for Collecting Benthic Macroinvertebrate Samples and Associated Physical and Chemical Data for Ambient Bioassessments in California* (Ode 2007).[1]

Physical - Habitat Assessment Methods
The discharger shall conduct, concurrently with all required macroinvertebrate collections, the "Full" suite of physical habitat characterization measurements as specified in *Standard Operating Procedures for Collecting Benthic Macroinvertebrate Samples and Associated Physical and Chemical Data for Ambient Bioassessments in California* (Ode 2007), and as summarized in the Surface Water Ambient Monitoring Program's *Stream Habitat Characterization Form — Full Version*.

Laboratory Methods
Macroinvertebrates shall be identified and classified according to the Standard Taxonomic Effort (STE) Level I of the Southwestern Association of Freshwater Invertebrate Taxonomists (SAFIT),[2] and using a fixed-count of 600 organisms per sample.

Quality Assurance
The discharger or its consultant(s) shall have and follow a quality assurance (QA) plan that covers the required bioassessment monitoring. The QA plan shall include, or be supplemented to include, a specific requirement for external QA checks (i.e., verification of taxonomic identifications and correction of data where

[1] This document is available on the Internet at: ~~http://www.swrcb.ca.gov/swamp/docs/phab_sopr6.pdf~~. http://swamp.mpsl.mlml.calstate.edu/wp-content/uploads/2009/04/swamp_sop_bioassessment_collection_020107.pdf.

[2] The current SAFIT STEs (28 November 2006) list requirements for both the Level I and Level II taxonomic effort, and are located at: ~~http://www.swrcb.ca.gov/swamp/docs/safit/ste_list.pdf~~ http://www.safit.org/Docs/ste_list.pdf. When new editions are published by SAFIT, they will supersede all previous editions. All editions will be posted at the State Water Board's SWAMP website.

errors are identified). External QA checks shall be performed on one of the discharger's macroinvertebrate samples collected per calendar year, or ten percent of the samples per year (whichever is greater). QA samples shall be randomly selected. The external QA checks shall be paid for by the discharger, and performed by the California Department of Fish and Game's Aquatic Bioassessment Laboratory. An alternate laboratory with equivalent or better expertise and performance may be used if approved in writing by State Water Board staff.

Sample Preservation and Archiving

The original sample material shall be stored in 70 percent ethanol and retained by the discharger until: 1) all QA analyses specified herein and in the relevant QA plan are completed; and 2) any data corrections and/or re-analyses recommended by the external QA laboratory have been implemented. The remaining subsampled material shall be stored in 70 percent ethanol and retained until completeness checks have been performed according to the relevant QA plan. The identified organisms shall be stored in 70 percent ethanol, in separate glass vials for each final ID taxon. (For example, a sample with 45 identified taxa would be archived in a minimum of 45 vials, each containing all individuals of the identified taxon.) Each of the vials containing identified organisms shall be labeled with taxonomic information (i.e., taxon name, organism count) and collection information (i.e., site name/site code, waterbody name, date collected, method of collection). The identified organisms shall be archived (i.e., retained) by the discharger for a period of not less than three years from the date that all QA steps are completed, and shall be checked at least once per year and "topped off" with ethanol to prevent desiccation. The identified organisms shall be relinquished to the State Water Board upon request by any State Water Board staff.

Data Submittal

The macroinvertebrate results (i.e., taxonomic identifications consistent with the specified SAFIT STEs, and number of organisms within each taxa) shall be submitted to the State Water Board in electronic format. The State Water Board's Surface Water Ambient Monitoring Program (SWAMP) is currently developing standardized formats for reporting bioassessment data. All bioassessment data collected after those formats become available shall be submitted using the SWAMP formats. Until those formats are available, the biological data shall be submitted in MS-Excel (or equivalent) format.[3]

The physical/habitat data shall be reported using the standard format titled *SWAMP Stream Habitat Characterization Form — Full Version*.[4]

[3] Any version of Excel, 2000 or later, may be used.
[4] Available at: http://www.waterboards.ca.gov/water_issues/programs/swamp/docs/reports/fieldforms_fullversion052908.pdf

Invasive Species Prevention

In conducting the required bioassessment monitoring, the discharger and its consultants shall take precautions to prevent the introduction or spread of aquatic invasive species. At minimum, the discharger and its consultants shall follow the recommendations of the California Department of Fish and Game to minimize the introduction or spread of the New Zealand mudsnail.[5]

[5] Instructions for controlling the spread of NZ mudsnails, including decontamination methods, can be found at: http://www.dfg.ca.gov/invasives/mudsnail/
More information on AIS More information on AIS
http://www.waterboards.ca.gov/water_issues/programs/swamp/ais/

Appendix 4 Non Sediment TMDLs

Region 1 Lost River-DIN and CBOD

Region 1 Source: Cal Trans Construction TMDL Completion Date: 12 30 2008 TMDL Type: River, Lake Watershed Area= 2996 mi^2	**Pollutant Stressors/WLA**	
	Dissolved inorganic nitrogen (DIN) (metric tons/yr)	**Carbonaceous biochemical oxygen demand (CBOD) (metric tons/yr)**
Lost River from the Oregon border to Tule Lake	.1	.2
Tule Lake Refuge	.1	.2
Lower Klamath Refuge	.1	.2

Region 2 San Francisco Bay-Mercury

Region 2 Source:Non-Urban Stormwater Runoff TMDL Type: Bay	**Name**	**Pollutant Stressor/WLA**	**TMDL Completion Date**
	San Francisco Bay	Mercury 25 kg/year	08 09 2006

Region 4 Ballona Creek-Metals and Selenium

Region 4 Source: NPDES General Construction TMDL Completion Date: 12 22 2005 TMDL Type: Creek	**Pollutant Stressors/WLA**							
	Copper (Cu)		**Lead (Pb)**		**Selenium (Se)**		**Zinc (Zn)**	
	g/day	g/day/acre	g/day	g/day/acre	g/day	g/day/acre	g/day	g/day/acre
Ballona Creek	4.94E-07 x Daily storm volume (L)	2.20E-10 x Daily storm volume (L)	1.62E-06 x Daily storm volume (L)	7.20E-10 x Daily storm volume (L)	1.37E-07 x Daily storm volume (L)	6.10E-11 x Daily storm volume (L)	3.27E-06 x Daily storm volume (L)	1.45E-09 x Daily storm volume (L)

General Construction Storm Water Permits:
Waste load allocations will be incorporated into the State Board general permit upon renewal or into a watershed-specific general permit developed by the Regional Board.

- Dry-weather Implementation Non-storm water flows authorized by the General Permit for Storm Water Discharges Associated with Construction Activity (Water Quality Order No. 99-08 DWQ), or any successor order, are exempt from the dry-weather waste load allocation equal to zero as long as they comply with the provisions of sections C.3 and A.9 of the Order No. 99-08 DWQ, which state that these authorized non-storm discharges shall be:
  (1) infeasible to eliminate
  (2) comply with BMPs as described in the Storm Water Pollution Prevention Plan prepared by the permittee, and
  (3) not cause or contribute to a violation of water quality standards, or comparable provisions in any successor order.
  Unauthorized non-storm water flows are already prohibited by Order No. 99-08 DWQ.
- Wet-weather Implementation Within seven years of the effective date of the TMDL, the construction industry will submit the results of BMP effectiveness studies to determine BMPs that will achieve compliance with the final waste load allocations assigned to construction storm water permittees.
- Regional Board staff will bring the recommended BMPs before the Regional Board for consideration within eight years of the effective date of the TMDL.
- General construction storm water permittees will be considered in compliance with final waste load allocations if they implement these Regional Board approved BMPs. All permittees must implement the approved BMPs within nine years of the effective date of the TMDL. If no effectiveness studies are conducted and no BMPs are approved by the Regional Board within eight years of the effective date of the TMDL, each general construction storm water permit holder will be subject to site-specific BMPs and monitoring requirements to demonstrate compliance with final waste load allocations.

Region 4 Calleaguas Creek-OC Pesticides, PCBs, and Siltation

Interim Requirements

Region 4 Calleaguas Creek Source: Minor NPDES point sources/WDRs TMDL Completion Date: 3 14 2006 TMDL Type:Creek	**Pollutant Stressor**	**WLA Daily Max (µg/L)**	**WLA Monthly Ave (µg/L)**
	Chlordane	1.2	0.59
	4,4-DDD	1.7	0.84
	4,4-DDE	1.2	0.59
	4,4-DDT	1.2	0.59
	Dieldrin	0.28	0.14
	PCB’s	0.34	0.17
	Toxaphene	0.33	0.16

Final WLA (ng/g)							
Region 4 Calleaguas Creek Source: Stormwater Permittees TMDL Completion Date: 3 14 2006 TMDL Type:Creek	Chlordane	4,4-DDD	4,4-DDE	4,4-DDT	Dieldrin	PCB's	Toxaphene
Mugu Lagoon*	3.3	2.0	2.2	0.3	4.3	180.0	360.0
Callegaus Creek	3.3	2.0	1.4	0.3	0.2	120.0	0.6
Revolon Slough (SW)*	0.9	2.0	1.4	0.3	0.1	130.0	1.0
Arroyo Las posas(SW)*	3.3	2.0	1.4	0.3	0.2	120.0	0.6
Arroyo Simi	3.3	2.0	1.4	0.3	0.2	120.0	0.6
Conejo Creek	3.3	2.0	1.4	0.3	0.2	120.0	0.6
Interim Requirements (ng/g)							
Mugu Lagoon*	25.0	69.0	300.0	39.0	19.0	180.	22900.0
Callegaus Creek	17.0	66.0	470.0	110.0	3.0	3800.0	260.0
Revolon Slough (SW)*	48.0	400.0	1600.0	690.0	5.7	7600.0	790.0
Arroyo Las posas(SW)*	3.3	290.0	950.0	670.0	1.1	25700.0	230.0
Arroyo Simi	3.3	14.0	170.0	25.0	1.1	25700.0	230.0
Conejo Creek	3.4	5.3	20.0	2.0	3.0	3800.0	260.0

*(SW)=Subwatershed

*Mugu Lagoon includes Duck pond/Agricultural Drain/Mugu/Oxnard Drain #2

Compliance with sediment based WLAs is measured as an instream annual average at the base of each subwatershed where the discharges are located.

Region 4 Calleguas Creek-Salts

Final Dry Weather Pollutant WLA (mg/L)					
Region 4 Calleaguas Creek Source Permitted Stormwater Dischargers TMDL Completion Date: 12 2 2008 TMDL Type:Creek	**Critical Condition Flow Rate (mgd)**	**Chloride (lb/day)**	**TDS (lb/day)**	**Sulfate (lb/day)**	**Boron (lb/day)**
Simi	1.39	1738.0	9849.0	2897.0	12.0
Las Posas	0.13	157.0	887.0	261.0	N/A
Conejo	1.26	1576.0	8931.0	2627.0	N/A

Camarillo	0.06	72.0	406.0	119.0	N/A
Pleasant Valley (Calleguas)	0.12	150.0	850.0	250.0	N/A
Pleasant Valley (Revolon)	0.25	314.0	1778.0	523.0	2.0

Dry Weather Interim Pollutant WLA (mg/L)				
	Chloride (mg/L)	**TDS (mg/L)**	**Sulfate (mg/L)**	**Boron (mg/L)**
Simi	230.0	1720.0	1289.0	1.3
Las Posas	230.0	1720.0	1289.0	1.3
Conejo	230.0	1720.0	1289.0	1.3
Camarillo	230.0	1720.0	1289.0	1.3
Pleasant Valley (Calleguas)	230.0	1720.0	1289.0	1.3
Pleasant Valley (Revolon)	230.0	1720.0	1289.0	1.3

- General Construction permittees are assigned a dry weather wasteload allocation equal to the average dry weather critical condition flow rate multiplied by the numeric target for each constituent. Waste load allocations apply in the receiving water at the base of each subwatershed. Dry weather allocations apply when instream flow rates are below the 86th percentile flow and there has been no measurable precipitation in the previous 24 hours.
- Because wet weather flows transport a large mass of salts at low concentrations, these dischargers meet water quality objectives during wet weather.
- Interim limits are assigned for dry weather discharges from areas covered by NPDES stormwater permits to allow time to implement appropriate actions. The interim limits are assigned as concentration based receiving water limits set to the 95th percentile of the discharger data as a monthly average limit except for chloride. The 95th percentile for chloride was 267 mg/L which is higher than the recommended criteria set forth in the Basin Plan for protection of sensitive beneficial uses including aquatic life. Therefore, the interim limit for chloride for Permitted Stormwater Dischargers is set equal to 230 mg/L to ensure protection of sensitive beneficial uses in the Calleguas Creek watershed.

Region 4 San Gabriel River and Tributaries-Metals and Selenium

Region 4 San Gabriel River and Tributaries Source: Construction Stormwater Dischargers TMDL Completion Date: 3 2007 TMDL Type: Creek	**Pollutant Stressor**	**Wet weather Allocations**	**Dry Weather Allocations**	**% of Watershed**

San Gabriel Reach 2	Lead (Pb)	0.7% * 166 µg/l * Daily Storm Vol	N/A	0.7%
San Gabriel Reach 2	Lead (Pb) Mass based	0.8 kg/d	N/A	0.7%
Coyote Creek	Copper (Cu)	0.285 kg/d	0	5.0%
Coyote Creek	Lead (Pb)	1.70 kg/d	N/A	5.0%
Coyote Creek	Zinc (Zn)	2.4 kg/d	N/A	5.0%
San Jose Creek Reach 1 and 2	Selenium	5 µg/L	5 µg/L	5.0%

Wet-weather allocations for lead in San Gabriel River Reach 2. Concentration-based allocations apply to non-stormwater NPDES discharges. Stormwater allocations are expressed as a percent of load duration curve. Mass-based values presented in table are based on a flow of 260 cfs (daily storm volume = 6.4 $x10^{8}$ liters).

There are 1555 acres of water in the entire watershed, 37.4 acres of water in the Reach 1 subwatershed (2.4%), and 269 acres in the Coyote Creek subwatershed (17%).

General Construction Storm Water Permits

Waste load allocations for the general construction storm water permits may be incorporated into the State Board general permit upon renewal or into a watershed-specific general permit developed by the Regional Board. An estimate of direct atmospheric deposition is developed based on the percent area of surface water in the watershed. Approximately 0.4% of the watershed area draining to San Gabriel River Reach 2 is comprised of water and approximately 0.2% of the watershed area draining to Coyote Creek is comprised of water.

Region 4 The Harbor Beaches of Ventura County-Bacteria

The TMDL has a multi-part numeric target based on the bacteriological water quality objectives for marine water to protect the water contact recreation use. These targets are the most appropriate indicators of public health risk in recreational waters. Bacteriological objectives are set forth in Chapter 3 of the Basin Plan. The objectives are based on four bacteria indicators and include both geometric mean limits and single sample limits. The Basin Plan objectives that serve as the numeric targets for this TMDL are:

The General NPDES Construction permit is seen as a minor contributor and is given no allocation

General NPDES permits, individual NPDES permits, the Statewide Industrial Storm Water General Permit, the Statewide Construction Activity Storm Water General Permit, and WDR permittees in the Channel Islands Harbor subwatershed are assigned WLAs of zero (0) days of allowable exceedances for all three time periods and for the single sample limits and the rolling 30-day geometric mean. Any future enrollees under a general NPDES permit, individual NPDES permit, the Statewide Industrial Storm Water General Permit, the Statewide Construction Activity Storm Water General Permit, and WDR will also be subject to a WLA of zero (0) days of allowable exceedances.

Region 4 Resolution No. 03-009 Los Angeles River and Tributaries-Nutrients

Minor Point Sources
Waste loads are allocated to minor point sources enrolled under NPDES or WDR permits including but not limited to Tapia WRP, Whittier Narrows WRP, Los Angeles Zoo WRP, industrial and construction stormwater, and municipal storm water and urban runoff from municipal separate storm sewer systems (MS4s)

Region 4 Minor Point Sources for NPDES/WDR Permits TMDL Completion Date: 7 10 2003 TMDL Type: River	Pollutant Stressor/WLA				
	Total Ammonia (NH_3)		**Nitrate-nitrogen (NO_3-N)**	**Nitrite-nitrogen (NO_2-N)**	**NO_3-N + NO_3-N**
	1 Hr Ave mg/l	30 Day Ave mg/l	30 Day Ave mg/l		30 Day Ave mg/l
LA River Above Los Angeles-Glendale WRP (LAG)	4.7	1.6	8.0	1.0	8.0
LA River Below LAG	8.7	2.4	8.0	1.0	8.0
Los Angeles Tributaries	10.1	2.3	8.0	1.0	8.0

Malibu Creek Attachment A to Resolution No. 2004-019R-Bacteria

12 13 2004 The WLAs for permittees under the NPDES General Stormwater Construction Permit are zero (0) days of allowable exceedances for all three time periods and for the single sample limits and the rolling 30-day geometric mean.

Region 4 Marina del Rey Harbor, Mothers' Beach and Back Basins

Attachment A to Resolution No. 2003-012-Bacteria

8 7 2003 As discussed in "Source Analysis", discharges from general NPDES permits, general industrial storm water permits and general construction storm water permits are not expected to be a significant source of bacteria. Therefore, the WLAs for these discharges are zero (0) days of allowable exceedances for all three time periods and for the single sample limits and the rolling 30-day geometric mean. Any future enrollees under a general NPDES permit, general industrial storm water permit or general construction storm water permit within the MdR Watershed will also be subject to a WLA of zero days of allowable exceedances.

Region 4 San Gabriel River and Tributaries-Metals and Selenium

Dry Weather Selenium WLA
A zero WLA is assigned to the industrial and construction stormwater permits during dry weather. Non-storm water discharges are already prohibited or restricted by existing general permits.

Region 4 General Construction Permittees TMDL Completion Date: 7 13 2006 TMDL Type: River	**Total Recoverable Metals (kg/day)**		
	Copper (Cu) Kg/day	**Lead (Pb) Kg/day**	**Zinc (Zn) Kg/day**
San Gabriel River Reach 2 and upstream reaches/tributaries	**XXXX**	Daily storm volume x 1.24 µg/L	**XXXX**
Coyote Creek and Tributaries	Daily storm volume x 0.7 µg/L	Daily storm volume x 4.3 µg/L	Daily storm volume x 6.2 µg/L

Each enrollee under the general construction stormwater permit receives a WLA on a per acre basis

Region 4 General Construction Permittees TMDL Completion Date: 7 13 2006 TMDL Type: River	**Total Recoverable Metals (kg/day/acre)**		
	Copper (Cu) Kg/acre/day	**Lead (Pb) Kg/acre/day**	**Zinc (Zn) Kg/acre/day**
San Gabriel River Reach 2 and upstream reaches/tributaries	**XXXX**	Daily storm volume x 0.56 µg/L	**XXXX**

Coyote Creek and Tributaries	Daily storm volume x 0.12 µg/L	Daily storm volume x 0.70 µg/L	Daily storm volume x 1.01 µg/L

For the general industrial and construction storm water permits, the daily storm volume is measured at USGS station 11085000 for discharges to Reach 2 and above and at LACDPW flow gauge station F354-R for discharges to Coyote Creek.

General construction storm water permits
WLAs will be incorporated into the State Board general permit upon renewal or into a watershed-specific general permit developed by the Regional Board.

Dry-weather implementation
Non-storm water flows authorized by the General Permit for Storm Water Discharges Associated with Construction Activity (NPDES Permit No. CAS000002), or any successor permit, are exempt from the dry-weather WLA equal to zero as long as they comply with the provisions of sections C.3.and A.9 of the Order No. 99-08 DWQ, which state that these authorized non-storm discharges shall be (1) infeasible to eliminate (2) comply with BMPs as described in the Storm Water Pollution Prevention Plan prepared by the permittee, and (3) not cause or contribute to a violation of water quality standards, or comparable provisions in any successor order. Unauthorized non-storm water flows are already prohibited by Permit No. CAS000002.

Upon permit issuance, renewal, or re-opener
Non-storm water flows not authorized by Order No. 99-08 DWQ, or any successor order, shall achieve dry-weather WLAs. WLAs shall be expressed as NPDES water quality-based effluent limitations specified in accordance with federal regulations and state policy on water quality control. Effluent limitations may be expressed as permit conditions, such as the installation, maintenance, and monitoring of Regional Board-approved BMPs.

Six years from the effective date of the TMDL
The construction industry will submit the results of wet-weather BMP effectiveness studies to the Los Angeles Regional Board for consideration. In the event that no effectiveness studies are conducted and no BMPs are approved, permittees shall be subject to site-specific BMPs and monitoring to demonstrate BMP effectiveness.

Seven years from the effective date of the TMDL
The Los Angeles Regional Board will consider results of the wet weather BMP effectiveness studies and consider approval of BMPs.

Eight years from the effective date of the TMDL
All general construction storm water permittees shall implement Regional Board-approved BMPs.

Total Maximum Daily Loads (TMDLs) for San Diego Creek,
Upper and Lower Newport Bay, Orange County, California

Region 8 NPDES Construction Permit TMDL Completion Date: 1 24 1995 TMDL Type: River. Cr, Bay	Organochlorine Compounds							
	Total DDT		**Chlordane**		**Total PCBs**		**Toxaphene**	
	g/day	g/yr	g/day	g/yr	g/day	g/yr	g/day	g/yr
San Diego Creek	.27	99.8	**.18***	**64.3***	**.09***	**31.5***	.004	1.5
Upper Newport Bay	.11	40.3	.06	23.4	.06	23.2	**X**	**X**
Lower Newport Bay	.04	14.9	.02	8.6	.17	60.7	**X**	**X**

*Red= Informational WLA only, not for enforcement purposes

Organochlorine Compounds TMDLs Implementation Tasks and Schedule

Regional Board staff shall develop a SWPPP Improvement Program that identifies the Regional Board's expectations with respect to the content of SWPPPs, including documentation regarding the selection and implementation of BMPs, and a sampling and analysis plan. The Improvement Program shall include specific guidance regarding the development and implementation of monitoring plans, including the constituents to be monitored, sampling frequency and analytical protocols. The SWPPP Improvement Program shall be completed by (*the date of OAL approval of this BPA*). ***No later than two months*** from completion of the Improvement Program, Board staff shall assure that the requirements of the Program are communicated to interested parties, including dischargers with existing authorizations under the General Construction Permit. Existing, authorized dischargers shall revise their project SWPPPs as needed to address the Program requirements as soon as possible but ***no later than (three months of completion of the SWPPP Improvement Program)***. Applicable SWPPPs that do not adequately address the Program requirements shall be considered inadequate and enforcement by the Regional Board shall proceed accordingly. The Caltrans and Orange County MS4 permits shall be revised as needed to assure that the permittees communicate the Regional Board's SWPPP expectations, based on the SWPPP Improvement Program, with the Standard Conditions of Approval.

Appendix 4 Sediment TMDLs

Implemented Sediment TMDLs in California. Construction was listed as a source in all fo these TMDLs in relation to road construction. Although construction was mentioned as a source, it was not given a specific allocation amount. The closest allocation amount would be for the road activity management WLA. **Implementation Phase** – Adoption process by the Regional Board, the State Water Resources Control Board, the Office of Administrative Law, and the US Environmental Protection Agency completed and TMDL being implemented.

A. Region	**Type**	**Name**	**Pollutant Stressor**	**Potential Sources**	**TMDL Completion Date**	**Watershed Acres**	**WLA** tons mi^2 yr
1 R1.epa.albionfinaltmdl	R	Albion River	Sedimentation	Road Construction	2001	43 acres	See A (table 6)

B Region	**Type**	**Name**	**Pollutant Stressor**	**Potential Sources**	**TMDL Completion Date**	**Watershed Acres**	**WLA** tons mi^2 yr
1 R1.epa.EelR-middle.mainSed.temp	R	Middle Main Eel River and Tributaries (from Dos Rios to the South Fork)	Sedimentation	Road Construction	2005-2006	521 mi^2	100

C Region	**Type**	**Name**	**Pollutant Stressor**	**Potential Sources**	**TMDL Completion Date**	**Watershed Acres**	**WLA** tons mi^2 yr
1 R1.epa.EelRsouth.sed.temp	R	South Fork Eel River	Sedimentation	Road Construction	12 1999	See chart	473

D Region	**Type**	**Name**	**Pollutant Stressor**	**Potential Sources**	**TMDL Completion Date**	**Watershed Acres**	**WLA** tons mi^2 yr
1 R1.epa.bigfinaltmdl	R	Big River	Sedimentation	Road Construction	12 2001	181 mi^2 watershed drainage	TMDL = loading capacity = nonpoint sources + background =

							393 t mi2 yr

E Region	**Type**	**Name**	**Pollutant Stressor**	**Potential Sources**	**TMDL Completion Date**	**Watershed Acres**	**WLA** tons mi^2 yr
1 R1.epa.EelR-lower.Sed.temp-121807-signed	R	Lower Eel River	Sedimentation	Road Construction	12 2007	300 square-mile watershed	898

F Region	**Type**	**Name**	**Pollutant Stressor**	**Potential Sources**	**TMDL Completion Date**	**Watershed Acres**	**WLA** tons mi^2 yr
1 R1.epa.EelR-middle.Sed.temp-	R	Middle Fork Eel River	Sedimentation	Road Construction	12 2003	753 mi^2 (approx. 482,000 acres)	82

G Region	**Type**	**Name**	**Pollutant Stressor**	**Potential Sources**	**TMDL Completion Date**	**Watershed Acres** Mi^2	**WLA** tons mi^2 yr
1 R1.epa.EelRnorth-Sed.temp.final-121807-signed	R	North Fork Eel River	Sedimentation	Road Construction	12 30 2002	289 (180,020 acres)	20

H Region	**Type**	**Name**	**Pollutant Stressor**	**Potential Sources**	**TMDL Completion Date**	**Watershed Acres** Mi^2	**WLA** tons mi^2 yr
1 R1.epa.EelR-upper.mainSed.temp-	R	Upper Main Eel River and Tributaries (including Tomki Creek, Outlet Creek and Lake Pillsbury)	Sedimentation	Road Construction	12 29 2004	688 (approx. 440,384 acres)	14

I Region	Type	Name	Pollutant Stressor	Potential Sources	TMDL Completion Date	Watershed Acres	WLA tons mi^2 yr
1 R1.epa.gualalafinaltmdl	R	Gualala River	Sedimentation	Road Construction	Not sure	300 (191,145 acres)	7

J Region	Type	Name	Pollutant Stressor	Potential Sources	TMDL Completion Date	Watershed Acres mi^2	WLA tons mi^2 yr
1 R1.epa.Mad-sed.turbidity	R	Mad River	Sedimentation	Road Construction	12 21 2007	480	174

K Region	Type	Name	Pollutant Stressor	Potential Sources	TMDL Completion Date	Watershed Acres mi^2	WLA tons mi^2 yr
1 R1.epa.mattole.sediment	R	Mattole River	Sedimentation	Road Construction	12 30 2003	296	27 or 520+27 = 547

L Region	Type	Name	Pollutant Stressor	Potential Sources	TMDL Completion Date	Watershed Acres mi^2	WLA tons mi^2 yr
1 R1.epa.navarro.sed.temp	R	Navarro River	Sedimentation	Road Construction	Not sure	315 (201,600 acres).	50

M Region	Type	Name	Pollutant Stressor	Potential Sources	TMDL Completion Date	Watershed Acres mi^2	WLA tons mi^2 yr
1 R1.epa.noyo.sediment	R	Noyo River	Sedimentation	Road Construction	12 16 1999	113 (72,323 acres)	68 (three areas measured) Table 16 in the TMDL

N Region	**Type**	**Name**	**Pollutant Stressor**	**Potential Sources**	**TMDL Completion Date**	**Watershed Acres** mi^2	**WLA** tons mi^2 yr
1 R1.epa.RedwoodCk.sed	Cr	Redwood Creek	Sedimentation	Road Construction	12 30 1998	278	1900 Total allocation

O Region	**Type**	**Name**	**Pollutant Stressor**	**Potential Sources**	**TMDL Completion Date**	**Watershed Acres** mi^2	**WLA – Roads** tons mi^2 yr
1 R1.epa.tenmile.sed	R	Ten Mile River	Sedimentation	Road Construction	2000	120	9

P Region	**Type**	**Name**	**Pollutant Stressor**	**Potential Sources**	**TMDL Completion Date**	**Watershed Acres** mi^2	**WLA management** tons mi^2 yr
1 R1.epa.trinity.sed	R	Trinity River	Sedimentation	Road Construction	12 20 2001	2000 of 3000 covered in this TMDL	See rows below
1	Cr	Horse Linto Creek	Sedimentation	Road Construction	12 20 2001	64	528
1	Cr	Mill creek and Tish Tang	Sedimentation	Road Construction	12 20 2001	39	210
1	Cr	Willow Creek	Sedimentation	Road Construction	12 20 2001	43	94
1	Cr	Campbell Creek and Supply Creek	Sedimentation	Road Construction	12 20 2001	11	1961
1	Cr	Lower Mainstem and Coon Creek	Sedimentation	Road Construction	12 20 2001	32	63
1	R	Reference	Sedimentation	Road	12 20 2001	434	24

		Subwatershed [1]		Construction			
1	Cr	Canyon Creek	Sedimentation	Road Construction	12 20 2001	64	326
1	R	Upper Tributaries[2]	Sedimentation	Road Construction	12 20 2001	72	67
1	R	Middle Tributaries[3]	Sedimentation	Road Construction	12 20 2001	54	53
1	R	Lower Tributaries[4]	Sedimentation	Road Construction	12 20 2001	96	55
1	Cr	Weaver and Rush Creeks	Sedimentation	Road Construction	12 20 2001	72	169
1	Cr	Deadwood Creek Hoadley Gulch Poker Bar	Sedimentation	Road Construction	12 20 2001	47	68
1	L	Lewiston Lake	Sedimentation	Road Construction	12 20 2001	25	49
1	Cr	Grassvalley Creek	Sedimentation	Road Construction	12 20 2001	37	44
1	Cr	Indian Creek	Sedimentation	Road Construction	12 20 2001	34	81
1	Cr	Reading and Browns Creek	Sedimentation	Road Construction	12 20 2001	104	66
1	Cr	Reference Subwatersheds[5]	Sedimentation	Road Construction	12 20 2001	235	281
1	L, Cr	Westside tributaries[6]	Sedimentation	Road Construction	12 20 2001	93	105
1	R, Cr, G	Upper trinity[7]	Sedimentation	Road Construction	12 20 2001	161	690
1	R, Cr, G	East Fork Tributaries[8]	Sedimentation	Road Construction	12 20 2001	115	65

1
2
3
4
5
6
7
8

1	R, L	Eastside Tributaries[9]	Sedimentation	Road Construction	12 20 2001	89	60

1 New River, Big French, Manzanita, North Fork, East Fork, North Fork
2 Dutch, Soldier, Oregon gulch, Conner Creek
3 Big Bar, Prairie Creek, Little French Creek
4 Swede, Italian, Canadian, Cedar Flat, Mill, McDonald, Hennessy, Quimby, Hawkins, Sharber
5 Stuarts Fork, Swift Creek, Coffee Creek
6 Stuart Arm, Stoney Creek, Mule Creek, East Fork, Stuart Fork, West Side Trinity Lake, Hatchet Creek, Buckeye Creek,
7 Upper Trinity River, Tangle Blue, Sunflower, Graves, Bear Upper Trinity Mainstream, Ramshorn Creek, Ripple Creek, Minnehaha Creek, Snowslide Gulch, Scorpion Creek
8 East Fork Trinity, Cedar Creek, Squirrel Gulch
9 East Side Tributaries, Trinity Lake

Q Region	**Type**	**Name**	**Pollutant Stressor**	**Potential Sources**	**TMDL Completion Date**	**Watershed Acres** mi^2	**WLA** tons mi^2 yr
1 R1.epa.trinity.so.sed	R, Cr	South Fork Trinity River and Hayfork Creek	Sedimentation	Road Construction	12 1998	Not given, 19 miles long	33 (road total)

R Region	**Type**	**Name**	**Pollutant Stressor**	**Potential Sources**	**TMDL Completion Date**	**Watershed Acres** mi^2	**WLA** tons mi^2 yr
1 R1.epa.vanduzen.sed	R, Cr	Van Duzen River and Yager Creek	Sedimentation	Various	12 16 1999	429	1353 total allocation
1		Upper Basin	Sedimentation	Road Construction			7
1		Middle Basin	Sedimentation	Road Construction			22
1		Lower Basin	Sedimentation	Road Construction			20

S Region	**Type**	**Name**	**Pollutant Stressor**	**Potential**	**TMDL**	**Watershed**	**WLA** tons mi^2

[9] 2009-0009-DWQ as amended by 2010-0014-DWQ & 2012-0006-DWQ

				Sources	**Completion Date**	**Acres** mi^2	yr
6 R6.blackwood.sed	Cr	Blackwood Creek (Placer County)	Bedded Sediment	Various	9 2007	11	17272 total

T Region	**Type**	**Name**	**Pollutant Stressor**	**Potential Sources**	**TMDL Completion Date**	**Watershed Acres** mi^2	**WLA** tons mi^2 yr
6 R6.SquawCk.sed	R	Squaw Creek (Placer County)	Sedimentation /controllable sources	Various – basin plan amendment	4 13 2006	8.2	10,900

Adopted TMDLs for Construction Sediment Sources

Region	Type	Name	Pollutant Stressor	Potential Sources	**TMDL Completion Date**	**Watershed Area** mi^2	Waste load Allocation tons mi^2 yr
8	R	Newport Bay San Diego Creek Watershed	Sedimentation	Construction Land Development	1999	2.24 (1432 acres)	125,000 tons per Year (no more than 13,000 tons per year from construction sites)

APPENDIX 5:
Glossary

Active Areas of Construction
All areas subject to land surface disturbance activities related to the project including, but not limited to, project staging areas, immediate access areas and storage areas. All previously active areas are still considered active areas until final stabilization is complete. [The construction activity Phases used in this General Permit are the Preliminary Phase, Grading and Land Development Phase, Streets and Utilities Phase, and the Vertical Construction Phase.]

Active Treatment System (ATS)
A treatment system that employs chemical coagulation, chemical flocculation, or electrocoagulation to aid in the reduction of turbidity caused by fine suspended sediment.

Acute Toxicity Test
A chemical stimulus severe enough to rapidly induce a negative effect; in aquatic toxicity tests, an effect observed within 96 hours or less is considered acute.

Air Deposition
Airborne particulates from construction activities.

Approved Signatory
A person who has been authorized by the Legally Responsible Person to sign, certify, and electronically submit Permit Registration Documents, Notices of Termination, and any other documents, reports, or information required by the General Permit, the State or Regional Water Board, or U.S. EPA. The Approved Signatory must be one of the following:

1. For a corporation or limited liability company: a responsible corporate officer. For the purpose of this section, a responsible corporate officer means: (a) a president, secretary, treasurer, or vice-president of the corporation in charge of a principal business function, or any other person who performs similar policy or decision-making functions for the corporation or limited liability company; or (b) the manager of the facility if authority to sign documents has been assigned or delegated to the manager in accordance with corporate procedures;

2. For a partnership or sole proprietorship: a general partner or the proprietor, respectively;

3. For a municipality, State, Federal, or other public agency: a principal executive officer, ranking elected official, city manager, council president, or any other authorized public employee with managerial responsibility over the

construction or land disturbance project (including, but not limited to, project manager, project superintendent, or resident engineer);

4. For the military: any military officer or Department of Defense civilian, acting in an equivalent capacity to a military officer, who has been designated;

5. For a public university: an authorized university official;

6. For an individual: the individual, because the individual acts as both the Legally Responsible Person and the Approved Signatory; or

7. For any type of entity not listed above (e.g. trusts, estates, receivers): an authorized person with managerial authority over the construction or land disturbance project.

Beneficial Uses
As defined in the California Water Code, beneficial uses of the waters of the state that may be protected against quality degradation include, but are not limited to, domestic, municipal, agricultural and industrial supply; power generation; recreation; aesthetic enjoyment; navigation; and preservation and enhancement of fish, wildlife, and other aquatic resources or preserves.

Best Available Technology Economically Achievable (BAT)
As defined by USEPA, BAT is a technology-based standard established by the Clean Water Act (CWA) as the most appropriate means available on a national basis for controlling the direct discharge of toxic and nonconventional pollutants to navigable waters. The BAT effluent limitations guidelines, in general, represent the best existing performance of treatment technologies that are economically achievable within an industrial point source category or subcategory.

Best Conventional Pollutant Control Technology (BCT)
As defined by USEPA, BCT is a technology-based standard for the discharge from existing industrial point sources of conventional pollutants including biochemical oxygen demand (BOD), total suspended sediment (TSS), fecal coliform, pH, oil and grease.

Best Professional Judgment (BPJ)
The method used by permit writers to develop technology-based NPDES permit conditions on a case-by-case basis using all reasonably available and relevant data.

Best Management Practices (BMPs)
BMPs are scheduling of activities, prohibitions of practices, maintenance procedures, and other management practices to prevent or reduce the discharge of pollutants. BMPs also include treatment requirements, operating procedures,

and practices to control site runoff, spillage or leaks, sludge or waste disposal, or drainage from raw material storage.

Chain of Custody (COC)
Form used to track sample handling as samples progress from sample collection to the analytical laboratory. The COC is then used to track the resulting analytical data from the laboratory to the client. COC forms can be obtained from an analytical laboratory upon request.

Coagulation
The clumping of particles in a discharge to settle out impurities, often induced by chemicals such as lime, alum, and iron salts.

Common Plan of Development
Generally a contiguous area where multiple, distinct construction activities may be taking place at different times under one plan. A plan is generally defined as any piece of documentation or physical demarcation that indicates that construction activities may occur on a common plot. Such documentation could consist of a tract map, parcel map, demolition plans, grading plans or contract documents. Any of these documents could delineate the boundaries of a common plan area. However, broad planning documents, such as land use master plans, conceptual master plans, or broad-based CEQA or NEPA documents that identify potential projects for an agency or facility are not considered common plans of development.

Daily Average Discharge
The discharge of a pollutant measured during any 24-hour period that reasonably represents a calendar day for purposes of sampling. For pollutants with limitations expressed in units of mass, the daily discharge is calculated as the total mass of the pollutant discharged during the day. For pollutants with limitations expressed in other units of measurement (e.g., concentration) the daily discharge is calculated as the average measurement of the pollutant throughout the day (40 CFR 122.2). In the case of pH, the pH must first be converted from a log scale.

Debris
Litter, rubble, discarded refuse, and remains of destroyed inorganic anthropogenic waste.

Direct Discharge
A discharge that is routed directly to waters of the United States by means of a pipe, channel, or ditch (including a municipal storm sewer system), or through surface runoff.

Discharger
The Legally Responsible Person (see definition) or entity subject to this General Permit.

Dose Rate (for ATS)
In exposure assessment, dose (e.g. of a chemical) per time unit (e.g. mg/day), sometimes also called dosage.

Drainage Area
The area of land that drains water, sediment, pollutants, and dissolved materials to a common outlet.

Effluent
Any discharge of water by a discharger either to the receiving water or beyond the property boundary controlled by the discharger.

Effluent Limitation
Any numeric or narrative restriction imposed on quantities, discharge rates, and concentrations of pollutants which are discharged from point sources into waters of the United States, the waters of the contiguous zone, or the ocean.

Erosion
The process, by which soil particles are detached and transported by the actions of wind, water, or gravity.

Erosion Control BMPs
Vegetation, such as grasses and wildflowers, and other materials, such as straw, fiber, stabilizing emulsion, protective blankets, etc., placed to stabilize areas of disturbed soils, reduce loss of soil due to the action of water or wind, and prevent water pollution.

Field Measurements
Testing procedures performed in the field with portable field-testing kits or meters.

Final Stabilization
All soil disturbing activities at each individual parcel within the site have been completed in a manner consistent with the requirements in this General Permit.

First Order Stream
Stream with no tributaries.

Flocculants
Substances that interact with suspended particles and bind them together to form flocs.

Good Housekeeping BMPs
BMPs designed to reduce or eliminate the addition of pollutants to construction site runoff through analysis of pollutant sources, implementation of proper handling/disposal practices, employee education, and other actions.

Grading Phase (part of the Grading and Land Development Phase)
Includes reconfiguring the topography and slope including; alluvium removals; canyon cleanouts; rock undercuts; keyway excavations; land form grading; and stockpiling of select material for capping operations.

Hydromodification
Hydromodification is the alteration of the hydrologic characteristics of coastal and non-coastal waters, which in turn could cause degradation of water resources. Hydromodification can cause excessive erosion and/or sedimentation rates, causing excessive turbidity, channel aggradation and/or degradation.

Identified Organisms
Organisms within a sub-sample that is specifically identified and counted.

Inactive Areas of Construction
Areas of construction activity that are not active and those that have been active and are not scheduled to be re-disturbed for at least 14 days.

Index Period
The period of time during which bioassessment samples must be collected to produce results suitable for assessing the biological integrity of streams and rivers. Instream communities naturally vary over the course of a year,and sampling during the index period ensures that samples are collected during a time frame when communities are stable so that year-to-year consistency is obtained. The index period approach provides a cost-effective alternative to year-round sampling. Furthermore, sampling within the appropriate index period will yield results that are comparable to the assessment thresholds or criteria for a given region, which are established for the same index period. Because index periods differ for different parts of the state, it is essential to know the index period for your area.

K Factor
The soil erodibility factor used in the Revised Universal Soil Loss Equation (RUSLE). It represents the combination of detachability of the soil, runoff potential of the soil, and the transportability of the sediment eroded from the soil.

Legally Responsible Person
The Legally Responsible Person (LRP) will typically be the project proponent. The categories of persons or entities that are eligible to serve as the LRP are set forth below. For any construction or land disturbance project where multiple persons or entities are eligible to serve as the LRP, those persons or entities

shall select a single LRP. In exceptional circumstances, a person or entity that qualifies as the LRP may provide written authorization to another person or entity to serve as the LRP. In such a circumstance, the person or entity that provides the authorization retains all responsibility for compliance with the General Permit. Except as provided in category 2(d), a contractor who does not satisfy the requirements of any of the categories below is not qualified to be an LRP.

The following persons or entities may serve as an LRP:

1. A person, company, agency, or other entity that possesses a real property interest (including, but not limited to, fee simple ownership, easement, leasehold, or other rights of way) in the land upon which the construction or land disturbance activities will occur for the regulated site.

2. In addition to the above, the following persons or entities may also serve as an LRP:

    a. For linear underground/overhead projects, the utility company, municipality, or other public or private company or agency that owns or operates the LUP;

    b. For land controlled by an estate or similar entity, the person who has day-to-day control over the land (including, but not limited to, a bankruptcy trustee, receiver, or conservator);

    c. For pollution investigation and remediation projects, any potentially responsible party that has received permission to conduct the project from the holder of a real property interest in the land; or

    d. For U.S. Army Corp of Engineers projects, the U.S. Army Corps of Engineers may provide written authorization to its bonded contractor to serve as the LRP, provided, however, that the U.S. Army Corps of Engineers is also responsible for compliance with the general permit, as authorized by the Clean Water Act or the Federal Facilities Compliance Act.

Likely Precipitation Event
Any weather pattern that is forecasted to have a 50% or greater chance of producing precipitation in the project area. The discharger shall obtain likely precipitation forecast information from the National Weather Service Forecast Office (e.g., by entering the zip code of the project's location at http://www.srh.noaa.gov/forecast).

Maximum Allowable Threshold Concentration (MATC)
The allowable concentration of residual, or dissolved, coagulant/flocculant in effluent. The MATC shall be coagulant/flocculant-specific, and based on toxicity

testing conducted by an independent, third-party laboratory. A typical MATC would be:

The MATC is equal to the geometric mean of the NOEC (No Observed Effect Concentration) and LOEC (Lowest Observed Effect Concentration) Acute and Chronic toxicity results for most sensitive species determined for the specific coagulant. The most sensitive species test shall be used to determine the MATC.

Natural Channel Evolution
The physical trend in channel adjustments following a disturbance that causes the river to have more energy and degrade or aggrade more sediment. Channels have been observed to pass through 5 to 9 evolution types. Once they pass though the suite of evolution stages, they will rest in a new state of equilibrium.

Non-Storm Water Discharges
Discharges are discharges that do not originate from precipitation events. They can include, but are not limited to, discharges of process water, air conditioner condensate, non-contact cooling water, vehicle wash water, sanitary wastes, concrete washout water, paint wash water, irrigation water, or pipe testing water.

Non-Visible Pollutants
Pollutants associated with a specific site or activity that can have a negative impact on water quality, but cannot be seen though observation (ex: chlorine). Such pollutants being discharged are not authorized.

Numeric Action Level (NAL)
Level is used as a warning to evaluate if best management practices are effective and take necessary corrective actions. Not an effluent limit.

Original Sample Material
The material (i.e., macroinvertebrates, organic material, gravel, etc.) remaining after the subsample has been removed for identification.

pH
Unit universally used to express the intensity of the acid or alkaline condition of a water sample. The pH of natural waters tends to range between 6 and 9, with neutral being 7. Extremes of pH can have deleterious effects on aquatic systems.

Post-Construction BMPs
Structural and non-structural controls which detain, retain, or filter the release of pollutants to receiving waters after final stabilization is attained.

Preliminary Phase (Pre-Construction Phase - Part of the Grading and Land Development Phase)
Construction stage including rough grading and/or disking, clearing and grubbing operations, or any soil disturbance prior to mass grading.

Project

Qualified SWPPP Developer
Individual who is authorized to develop and revise SWPPPs.

Qualified SWPPP Practitioner
Individual assigned responsibility for non-storm water and storm water visual observations, sampling and analysis, and responsibility to ensure full compliance with the permit and implementation of all elements of the SWPPP, including the preparation of the annual compliance evaluation and the elimination of all unauthorized discharges.

Qualifying Rain Event
Any event that produces 0.5 inches or more precipitation with a 48 hour or greater period between rain events.

R Factor
Erosivity factor used in the Revised Universal Soil Loss Equation (RUSLE). The R factor represents the erosivity of the climate at a particular location. An average annual value of R is determined from historical weather records using erosivity values determined for individual storms. The erosivity of an individual storm is computed as the product of the storm's total energy, which is closely related to storm amount, and the storm's maximum 30-minute intensity.

Rain Event Action Plan (REAP)
Written document, specific for each rain event, that when implemented is designed to protect all exposed portions of the site within 48 hours of any likely precipitation event.

Remaining Sub sampled Material
The material (e.g., organic material, gravel, etc.) that remains after the organisms to be identified have been removed from the subsample for identification. (Generally, no macroinvertebrates are present in the remaining subsampled material, but the sample needs to be checked and verified using a complete Quality Assurance (QA) plan)

Routine Maintenance
Activities intended to maintain the original line and grade, hydraulic capacity, or original purpose of a facility.

Runoff Control BMPs
Measures used to divert runon from offsite and runoff within the site.

Run-on
Discharges that originate offsite and flow onto the property of a separate project site.

Revised Universal Soil Loss Equation (RUSLE)
Empirical model that calculates average annual soil loss as a function of rainfall and runoff erosivity, soil erodibility, topography, erosion controls, and sediment controls.

Sampling and Analysis Plan
Document that describes how the samples will be collected, under what conditions, where and when the samples will be collected, what the sample will be tested for, what test methods and detection limits will be used, and what methods/procedures will be maintained to ensure the integrity of the sample during collection, storage, shipping and testing (i.e., quality assurance/quality control protocols).

Sediment
Solid particulate matter, both mineral and organic, that is in suspension, is being transported, or has been moved from its site of origin by air, water, gravity, or ice and has come to rest on the earth's surface either above or below sea level.

Sedimentation
Process of deposition of suspended matter carried by water, wastewater, or other liquids, by gravity. It is usually accomplished by reducing the velocity of the liquid below the point at which it can transport the suspended material.

Sediment Control BMPs
Practices that trap soil particles after they have been eroded by rain, flowing water, or wind. They include those practices that intercept and slow or detain the flow of storm water to allow sediment to settle and be trapped (e.g., silt fence, sediment basin, fiber rolls, etc.).

Settleable Solids (SS)
Solid material that can be settled within a water column during a specified time frame. It is typically tested by placing a water sample into an Imhoff settling cone and then allowing the solids to settle by gravity for a given length of time. Results are reported either as a volume (mL/L) or a mass (mg/L) concentration.

Sheet Flow
Flow of water that occurs overland in areas where there are no defined channels where the water spreads out over a large area at a uniform depth.

Site

Soil Amendment
Any material that is added to the soil to change its chemical properties, engineering properties, or erosion resistance that could become mobilized by storm water.

Streets and Utilities Phase
Construction stage including excavation and street paving, lot grading, curbs, gutters and sidewalks, public utilities, public water facilities including fire hydrants, public sanitary sewer systems, storm sewer system and/or other drainage improvements.

Structural Controls
Any structural facility designed and constructed to mitigate the adverse impacts of storm water and urban runoff pollution

Suspended Sediment Concentration (SSC)
The measure of the concentration of suspended solid material in a water sample by measuring the dry weight of all of the solid material from a known volume of a collected water sample. Results are reported in mg/L.

Total Suspended Solids (TSS)
The measure of the suspended solids in a water sample includes inorganic substances, such as soil particles and organic substances, such as algae, aquatic plant/animal waste, particles related to industrial/sewage waste, etc. The TSS test measures the concentration of suspended solids in water by measuring the dry weight of a solid material contained in a known volume of a sub-sample of a collected water sample. Results are reported in mg/L.

Toxicity
The adverse response(s) of organisms to chemicals or physical agents ranging from mortality to physiological responses such as impaired reproduction or growth anomalies.

Turbidity
The cloudiness of water quantified by the degree to which light traveling through a water column is scattered by the suspended organic and inorganic particles it contains. The turbidity test is reported in Nephelometric Turbidity Units (NTU) or Jackson Turbidity Units (JTU).

Vertical Construction Phase
The Build out of structures from foundations to roofing, including rough landscaping.

Waters of the United States
Generally refers to surface waters, as defined by the federal Environmental Protection Agency in 40 C.F.R. § 122.2.[1]

Water Quality Objectives (WQO)
Water quality objectives are defined in the California Water Code as limits or levels of water quality constituents or characteristics, which are established for the reasonable protection of beneficial uses of water or the prevention of nuisance within a specific area.

[1] The application of the definition of "waters of the United States" may be difficult to determine; there are currently several judicial decisions that create some confusion. If a landowner is unsure whether the discharge must be covered by this General Permit, the landowner may wish to seek legal advice.

APPENDIX 6:
Acronym List

ASBS	Areas of Special Biological Significance
ASTM	American Society of Testing and Materials; Standard Test Method for Particle-Size Analysis of Soils
ATS	Active Treatment System
BASMAA	Bay Area Storm water Management Agencies Association
BAT	Best Available Technology Economically Achievable
BCT	Best Conventional Pollutant Control Technology
BMP	Best Management Practices
BOD	Biochemical Oxygen Demand
BPJ	Best Professional Judgment
CAFO	Confined Animal Feeding Operation
CCR	California Code of Regulations
CEQA	California Environmental Quality Act
CFR	Code of Federal Regulations
CGP	NPDES General Permit for Storm Water Discharges Associated with Construction Activities
CIWQS	California Integrated Water Quality System
CKD	Cement Kiln Dust
COC	Chain of Custody
CPESC	Certified Professional in Erosion and Sediment Control
CPSWQ	Certified Professional in Storm Water Quality
CSMP	Construction Site Monitoring Program
CTB	Cement Treated Base
CTR	California Toxics Rule
CWA	Clean Water Act
CWC	California Water Code
CWP	Center for Watershed Protection
DADMAC	Diallyldimethyl-ammonium chloride
DDNR	Delaware Department of Natural Resources
DFG	Department of Fish and Game
DHS	Department of Health Services
DWQ	Division of Water Quality
EC	Electrical Conductivity
ELAP	Environmental Laboratory Accreditation Program
EPA	Environmental Protection Agency
ESA	Environmentally Sensitive Area
ESC	Erosion and Sediment Control
HSPF	Hydrologic Simulation Program Fortran
JTU	Jackson Turbidity Units
LID	Low Impact Development
LOEC	Lowest Observed Effect Concentration
LRP	Legally Responsible Person
LUP	Linear Underground/Overhead Projects

MATC	Maximum Allowable Threshold Concentration
MDL	Method Detection Limits
MRR	Monitoring and Reporting Requirements
MS4	Municipal Separate Storm Sewer System
MUSLE	Modified Universal Soil Loss Equation
NAL	Numeric Action Level
NEL	Numeric Effluent Limitation
NICET	National Institute for Certification in Engineering Technologies
NOAA	National Oceanic and Atmospheric Administration
NOEC	No Observed Effect Concentration
NOI	Notice of Intent
NOT	Notice of Termination
NPDES	National Pollutant Discharge Elimination System
NRCS	Natural Resources Conservation Service
NTR	National Toxics Rule
NTU	Nephelometric Turbidity Units
O&M	Operation and Maintenance
PAC	Polyaluminum chloride
PAM	Polyacrylamide
PASS	Polyaluminum chloride Silica/sulfate
POC	Pollutants of Concern
PoP	Probability of Precipitation
POTW	Publicly Owned Treatment Works
PRDs	Permit Registration Documents
PWS	Planning Watershed
QAMP	Quality Assurance Management Plan
QA/QC	Quality Assurance/Quality Control
REAP	Rain Event Action Plan
Regional Board	Regional Water Quality Control Board
ROWD	Report of Waste Discharge
RUSLE	Revised Universal Soil Loss Equation
RW	Receiving Water
SMARTS	Storm water Multi Application Reporting and Tracking System
SS	Settleable Solids
SSC	Suspended Sediment Concentration
SUSMP	Standard Urban Storm Water Mitigation Plan
SW	Storm Water
SWARM	Storm Water Annual Report Module
SWAMP	Surface Water Ambient Monitoring Program
SWMM	Storm Water Management Model
SWMP	Storm Water Management Program
SWPPP	Storm Water Pollution Prevention Plan
TC	Treatment Control
TDS	Total Dissolved Solids

TMDL	Total Maximum Daily Load
TSS	Total Suspended Solids
USACOE	U.S. Army Corps of Engineers
USC	United States Code
USEPA	United States Environmental Protection Agency
USGS	United States Geological Survey
WDID	Waste Discharge Identification Number
WDR	Waste Discharge Requirements
WLA	Waste Load Allocation
WET	Whole Effluent Toxicity
WRCC	Western Regional Climate Center
WQBEL	Water Quality Based Effluent Limitation
WQO	Water Quality Objective
WQS	Water Quality Standard

APPENDIX 7:
State and Regional Water Resources Control Board Contacts

NORTH COAST REGION (1)
5550 Skylane Blvd, Ste. A
Santa Rose, CA 95403
(707) 576-2220 FAX: (707)523-0135

SAN FRANCISCO BAY REGION (2)
1515 Clay Street, Ste. 1400
Oakland, CA 94612
(510) 622-2300 FAX: (510) 622-2640

CENTRAL COAST REGION (3)
895 Aerovista Place, Ste 101
San Luis Obispo, CA 93401
(805) 549-3147 FAX: (805) 543-0397

LOS ANGELES REGION (4)
320 W. 4th Street, Ste. 200
Los Angeles, CA 90013
(213) 576-6600 FAX: (213) 576-6640

CENTRAL VALLEY REGION (5S)
11020 Sun Center Dr., #200
Rancho Cordova, CA 95670-6114
(916) 464-3291 FAX: (916) 464-4645

FRESNO BRANCH OFFICE (5F)
1685 E St.
Fresno, CA 93706
(559) 445-5116 FAX: (559) 445-5910

REDDING BRANCH OFFICE (5R)
364 Knollcrest Drive, Ste. 205
Redding, CA 96002
(530) 224-4845 FAX: (530) 224-4857

LAHONTAN REGION (6 SLT)
2501 Lake Tahoe Blvd.
South Lake Tahoe, CA 96150
(530) 542-5400 FAX: (530) 544-2271

VICTORVILLE OFFICE (6V)
14440 Civic Drive, Ste. 200
Victorville, CA 92392-2383
(760) 241-6583 FAX: (760) 241-7308

COLORADO RIVER BASIN REGION (7)
73-720 Fred Waring Dr., Ste. 100
Palm Desert, CA 92260
(760) 346-7491 FAX: (760) 341-6820

SANTA ANA REGION (8)
3737 Main Street, Ste. 500
Riverside, CA 92501-3339
Phone (951) 782-4130 FAX: (951) 781-6288

SAN DIEGO REGION (9)
9174 Sky Park Court, Ste. 100
San Diego, CA 92123-4340
(858) 467-2952 FAX: (858) 571-6972

STATE WATER BOARD
PO Box 1977
Sacramento, CA 95812-1977
stormwater@waterboards.ca.gov

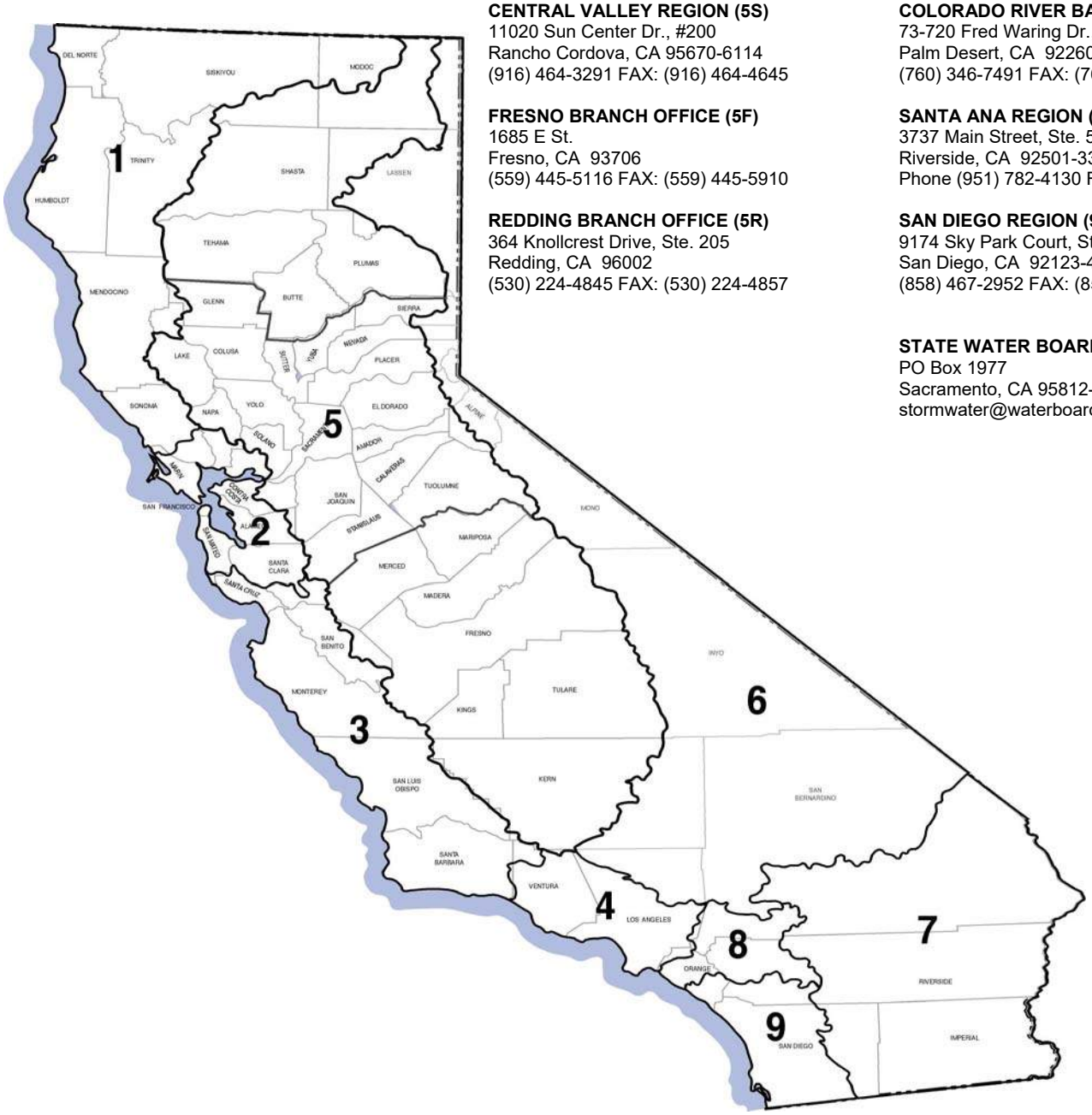

DRAFT FINAL MITIGATED NEGATIVE DECLARATION STORMWATER CAPTURE PARKS PROGRAM

DRAFT
Final Mitigated Negative Declaration
Stormwater Capture Parks Program

Los Angeles Department of Water and Power
Environmental Affairs
111 North Hope Street, Room 1044
Los Angeles, California 90012

July 2021

CEQA Initial Study and Mitigated Negative Declaration

Stormwater Capture Parks Program

July 2021

General Manager

Marty L. Adams

Senior Assistant General Manager
Water System

Richard F. Harasick

Senior Assistant General Manager
External and Regulatory Affairs and Chief Sustainability Officer

Nancy H. Sutley

Director of Environmental Affairs

Mark J. Sedlacek

Manager of Environmental Planning and Assessment

Charles C. Holloway

Prepared by

Los Angeles Department of Water and Power

111 North Hope Street, Room 1044
Los Angeles, CA 90012

Technical Assistance Provided by

ESA

626 Wilshire Blvd., Suite 1100
Los Angeles, CA 90017

TABLE OF CONTENTS

Final Initial Study and Mitigated Negative Declaration for Stormwater Capture Parks Program

Page

Section 3: Comment Letters **3-1**

Comment Letter 1: California Department of Transportation
Comment Letter 2: Luis Suarez
Comment Letter 3: Marie Gordon
Comment Letter 4: Brenda Dalusong
Comment Letter 5: California Department of Fish and Wildlife
Comment Letter 6: Diana Nicole, Sunshine Hills Residents Association
Comment Letter 7: County of Los Angeles Fire Department
Comment Letter 8: Joanne D'Antonio

Section 4: Response to Comments **4-1**

Comment Letter 1: California Department of Transportation
Comment Letter 2: Luis Suarez
Comment Letter 3: Marie Gordon
Comment Letter 4: Brenda Dalusong
Comment Letter 5: California Department of Fish and Wildlife
Comment Letter 6: Diana Nicole, Sunshine Hills Residents Association
Comment Letter 7: County of Los Angeles Fire Department
Comment Letter 8: Joanne D'Antonio

Section 5: Mitigation Monitoring and Reporting Program **5-1**

Appendix AA (not included)

Previously published in the Draft IS/MND

Section 1: Project Description

Section 2: Initial Study/Environmental Checklist

SECTION 3
Comment Letters

The City of Los Angeles Department of Water and Power (LADWP), Department of Public Works Bureau of Engineering (BOE) and Bureau of Sanitation (LASAN), and Department of Recreation and Parks (RAP), are collectively referred to herein as the "City." LADWP acting as Lead Agency circulated the Draft Initial Study/Mitigated Negative Declaration (Draft IS/MND) for the Stormwater Capture Parks Program (Program) for public review for 30 days (January 7, 2021 through February 7, 2021) in accordance with the requirements of the California Environmental Quality Act (CEQA) Guidelines Section 15072(a). BOE, LASAN, and RAP will act as Responsible Agencies. The City received a total of eight comment letters during the public review period, which are listed in **Table 3-1** and are included within this chapter. The letters have been marked with brackets that delineate comments pertaining to environmental issues and the information and analysis contained in the Draft IS/MND. Responses to such comments are provided in Section 4.

TABLE 3-1
COMMENT LETTERS RECEIVED

Comment Letter No.	Commenter	Date of Comment
1	California Department of Transportation	January 13, 2021
2	Luis Suarez	January 15, 2021
3	Marie Gordon	January 22, 2021
4	Brenda Dalusong	February 2, 2021
5	California Department of Fish and Wildlife	February 5, 2021
6	Diana Nicole, Sunshine Hills Residents Association	February 8, 2021
7	County of Los Angeles Fire Department	February 9, 2021
8	Joanne D'Antonio	February 8, 2021

SECTION 4
Response to Comments

4.1 Comments on the Draft IS/MND and Response to Comments

The responses to comments included in this section correspond to each comment letter outlined in Section 3.

Letter 1: Miya Edmonson (California Department of Transportation)

Comment 1-A

The commenter summarizes the project description.

Response 1-A

The comment is noted and will be included in the project record.

Comment 1-B

The commenter states that an encroachment permit would likely be required for any project work, including road closures, done on or near California Department of Transportation's (Caltrans) right of way.

Response 1-B

As noted on page 33 of the Draft IS/MND, the City and/or its contractors will coordinate with Caltrans and will obtain all necessary permits prior to construction activities. In addition, Caltrans is an active partner in the Program, providing some funding and assisting with project level designs.

Comment 1-C

The commenter states that a Caltrans transportation permit is required for transporting any heavy construction equipment and/or materials with oversized-transport vehicles on State Highways.

Response 1-C

The City and/or its contractors will coordinate with Caltrans and will obtain all necessary permits prior to construction activities.

Comment 1-D

The commenter recommends that project construction traffic is limited to off-peak periods to minimize potential impacts on State facilities.

Response 1-D

As outlined in Mitigation Measure TR-1, the City and/or its contractors will coordinate with Los Angeles Department of Transportation (LADOT) in order to prepare a construction traffic management plan (CTMP) for the Program which will include time of day restrictions, and time limitations for construction traffic.

Comment 1-E

The commenter requests submission of a construction traffic management plan to Caltrans for review if State facilities are expected to have delays. The commenter request that the traffic management plan includes details on any traffic delays that would occur on State facilities during construction, and alternate bicycle and pedestrian routes for any routes that would be affected during construction.

Response 1-E

The City will submit the CTMP to Caltrans for review if delays are expected on State facilities.

Comment 1-F

The commenter expresses support for Transportation Demand Management (TDM) strategies which the City has incorporated into the Program and recommends additional options to further reduce Vehicle Miles Traveled (VMT) and greenhouse gas emissions impacts.

Response 1-F

The Draft IS/MND concluded that Program impacts to VMT and greenhouse gas emissions would occur at levels that are below CEQA significance thresholds, without implementation of any mitigation measures.

Letter 2: Luis Suarez

Comment 2-A

The commenter requests more information regarding the environmental impacts that would occur on homes surrounding Fernangeles Park.

Response 2-A

Residents in the vicinity of Program sites may experience temporary impacts related to construction. The City and its construction contractors are required to implement mitigation measures to ensure that nearby residents are notified of tentative construction schedules and that Program impacts remain below the specific impact thresholds identified in Appendix G of the

CEQA Guidelines. For a detailed discussion of anticipated environmental impacts, please refer to the Draft IS/MND. With respect to neighborhood impacts, the IS/MND describes effects to aesthetics on page 46, air quality on page 51, biological resources on page 72, noise on page 122, recreational resources on page 138, and traffic on page 140.

Comment 2-B

The commenter expresses concern regarding the potential for groundwater saturation in surrounding neighborhoods as a result of the proposed infiltration galleries at Fernangeles Park.

Response 2-B

The Program would include construction of underground infiltration galleries, which would capture surface flow and divert stormwater runoff from the Caltrans pump discharge to recharge the San Fernando Groundwater Basin. The infiltration galleries will be constructed of concrete and are designed to retain flows for percolation into the San Fernando Groundwater Basin. The ground surface surrounding the park would be restored to support recreational uses similar to current conditions. The Draft IS/MND evaluates the potential for groundwater mounding to occur that could affect surface infrastructure. A technical analysis prepared by Todd Groundwater Consultants is included as Appendix E. As noted in Table 1 of Appendix E, the infiltration galleries would range from 16 to 29 feet below ground surface and the groundwater levels in the area range from 105 to 335 feet below the ground surface. Mitigation measure GEO-1 has been included to monitor groundwater levels and reduce flow diversions when groundwater is within 50 feet of the surface. With mitigation implemented, the Draft IS/MND concludes that the potential for elevated groundwater levels would be minimized.

Letter 3: Marie Gordon

Comment 3-A

The commenter requests information regarding start and end dates for Program construction activities that would occur near two senior citizen apartment buildings located along Vanowen Street, between Whitsett Avenue and Rhodes Avenue, just south of Whitsett Fields Park North.

Response 3-A

As noted in Table 1-6 on page 40 of the Draft IS/MND, construction activities at Whitsett Fields Park North are expected to take approximately 18 months, starting in June 2025 and ending in November 2026. Construction at Valley Plaza Park North, located east of I-170 on Vanowen Street, is expected to take approximately 17 months, starting in November 2023 and ending in March 2025. Construction work hours would generally be restricted to times between 7 A.M. and 7 P.M., Monday through Friday.

Comment 3-B

The commenter expresses concern regarding construction mitigation measures and their potential to minimize environmental impacts on senior citizens living in nearby apartments. The commenter states that the environmental impacts of prior projects were not effectively mitigated.

Response 3-B

Residents in the vicinity of Program sites may experience temporary impacts related to construction. The City and its construction contractors are required to implement mitigation measures to ensure that nearby residents are notified of tentative construction schedules, and that Program impact levels remain below the specific thresholds identified in Appendix G of the CEQA Guidelines. For a detailed discussion of anticipated environmental impacts, please refer to the Draft IS/MND. With respect to neighborhood impacts, the IS/MND describes effects to aesthetics on page 46, air quality on page 51, biological resources on page 72, noise on page 122, recreational resources on page 138, and traffic on page 140.

Comment 3-C

Commenter states that the Notice of Intent (NOI) for the Program is dated January 7, 2021 but was not received until January 20, 2021.

Response 3-C

The comment is noted and will be included in the project record. The public review period for the Draft IS/MND was from January 7, 2021, to February 7, 2021. The commenter received the NOI within the public review period of the Draft IS/MND in compliance with CEQA.

Letter 4: Brenda Dalusong

Comment 4-A

The commenter requests that the City consider construction of sidewalks around the perimeter of Fernangeles Park as part of the Program's proposed recreational facilities enhancements. The commenter states concern for pedestrian/motor vehicle safety around the park due to the lack of sidewalks available for pedestrian use.

Response 4-A

Figures 1-4 through 1-12 provide architectural drawings for each of the proposed parks that include public access and pedestrian circulation to support existing recreational uses.

Letter 5: Erinn Wilson-Olgin (California Department of Fish and Wildlife)

Comment 5-A

The comment acknowledges that California Department of Fish and Wildlife (CDFW) received the Draft IS/MND for review and to provide comments.

Response 5-A

Comment noted.

Comment 5-B

CDFW disagrees with the City's impact analysis, which finds that the Project's diversion of water would not impact biological resources

The Project would divert dry season flow and stormwater totaling 3,010 acre-feet per year (AFY). The water would otherwise proceed downstream via concrete channels to the Los Angeles River. The Draft IS/MND concluded that "no beneficial uses would be impacted." However, flow reduction could have a significant impact on downstream biological resources, especially during the dry season proceeding after a below-average water year.

Response 5-B

The Draft IS/MND on pages 74 and 77 describes that the Program would reduce dry season flows from the Tujunga Central Branch channel that would reduce water in the Los Angeles River. In response to the comment the sentence on page 77 of the Draft IS/MND has been revised as follows:

> The Los Angeles River currently discharges an average of over 100 cubic feet per second (cfs) to the ocean during dry weather (City of Los Angeles 2018). The volume of water diverted during dry weather flow by the proposed Program would be a small percentage of the current downstream flows (1.4 percent of total annual flow or approximately 4 percent of dry weather flow), and as a result no beneficial uses, including biological resources, would be significantly impacted.

As noted in the comment, the reduction of dry weather flows is itself an impact. Therefore, the changes to the text provided above as requested in the comment are appropriate. The Draft IS/MND identifies the reduced flow impact on page 74, but concludes that no riparian or aquatic habitat would be removed or adversely affected within the downstream reaches of the Los Angeles River. Therefore, since no habitat would be lost or stressed, the flow reduction would be a less than significant impact. The analysis relies on a de minimis impact conclusion. That is, the reduction of 1.4 percent of total flow and approximately 4 percent of dry weather flow in the river would not result in loss of habitat or result in reduced habitat quality. Rather, diverting dry-weather urban runoff would benefit water quality. The Draft IS/MND describes on pages 74 and 77 how beneficial uses are well supported by the remaining dry season flows. This evidence is outlined further below.

The Draft IS/MND describes in Section 1.5 that six of the nine Program sites (see table below) would require insertion of diversion structures within underground storm drain pipes. No habitat values exist within the buried storm drain pipes. The remaining four Program sites would require installation of diversion structures within existing Tujunga Central Branch concrete box channel or reinforced concrete box culvert. The watershed drained by this Tujunga Central Branch

channel is a small portion of the San Fernando Valley adjacent to but outside of the Tujunga Wash drainage area, representing 1.7 percent of the total Los Angeles River watershed.

Infiltration Gallery Location	Diversion Structure Installation
David M. Gonzales Recreation Center	Underground Storm Drain Pipe
FernAngeles Park	Underground Storm Drain Pipe
Whitsett Fields Park North	Underground Storm Drain Pipe
Strathern Park North	Underground Storm Drain Pipe
Valley Plaza Park North	Underground Reinforced Concrete Box Culvert
Valley Plaza Park South	Concrete Channel
Alexandria Park	Concrete Channel
North Hollywood Park	Concrete Channel
Valley Village Park	Underground Storm Drain Pipe

The Draft IS/MND describes on page 74 that the Tujunga Central Branch channel is concrete-lined with no ecological value. As a result, direct impacts to habitat values from installing diversion structures would not adversely affect biological resources. Furthermore, the Draft IS/MND concludes on pages 74 and 77 that the proposed diversions would result in a small reduction of the flow in the Los Angeles River compared to the current flow, including in the dry season, and would not result in measurable effects to biological resources. The Draft IS/MND references the hydrological analysis conducted by the City for the One Water LA Program and cites that currently an average of 100 cubic feet per second (cfs) reaches the ocean in the concrete channel of the Los Angeles River during dry weather (City of Los Angeles 2018). The Program diversions represent an annual average flow of approximately 4 cfs or 4 percent of the dry weather flows to the ocean. The Draft IS/MND concludes on page 77 that the reduction caused by the project would represent 1.4 percent of the total flow in the river on an annual average. Since the river discharges substantial flow to the ocean in the dry season (>100 cfs), the Draft IS/MND concludes that the proposed project's 1.4 percent diversion of total flows and 4 percent of dry season flows would not result in significant impacts to biological resources.

The Draft IS/MND also concludes on page 153 that the flow reductions would not result in a cumulatively significant reduction, including in the dry season. This conclusion is consistent with the One Water LA Study, which provides an overview of stormwater flows in Chapter 3and the Los Angeles River in Chapter 4. (City of Los Angeles 2018).

In addition to the published One Water LA study, the City has been participating in the Los Angeles River Flows Project, a comprehensive new hydrologic study of the river led by the Southern California Coastal Watershed Research Project (SCCWRP) in partnership with the State Water Resources Control Board (SWRCB). This new study is called the Los Angeles River Flows Project and is sponsored by the City of Los Angeles (by and through LADWP and LASAN), Los Angeles Regional Water Quality Control Board (LARWQCB), and the Los Angeles County Sanitation Districts (LACSD). SCCWRP is a quasi-public agency established to

support Southern California governmental agencies with third-party, science-based analysis. The Los Angeles River Flows Project was initiated in 2019 expressly to evaluate potential effects of cumulative flow reductions in the Los Angeles River, including reductions in WRP discharges and future stormwater capture projects such as the proposed Project. CDFW has been actively participating in the Project as a member of the Technical Advisory Committee (TAC).

In May 2021, SCCWRP published a report titled Process and Decision Support Tools for Evaluating Flow Management Targets to Support Aquatic Life and Recreational Beneficial Uses of the Los Angeles River as part of the Los Angeles River Flows Project (LA River Flows Project Final Report) (SCCWRP, 2021b). This new Final report, included by reference with this Final IS/MND, characterizes the environmental attributes of the river channel and evaluates flows that support those attributes, providing flow-ecology relationships helpful in understanding dry season flow reduction impacts on ecological values. The report develops a set of tools to evaluate future flow management scenarios. One of the three objectives noted in the report is to:

> "Produce tools and approaches to help evaluate how potential modified flow regimes in the LA River may affect the likelihood of supporting aquatic life and recreational beneficial uses" (SCCWRP, 2021b)

The results of this study directly confirm the conclusions outlined in the IS/MND, including an evaluation of the effects to focal species of reduced storm flows during the dry season. See response to comment 5-I for more discussion on the new study and the conclusions regarding impacts to ecological values from reduced dry weather flow.

Comment 5-C

The Draft IS/MND does not provide sufficient analysis of the Project's potential biological impacts to allow CDFW to determine the Project's significance or need for mitigation.

Data Source: The Draft IS/MND uses data from the 2015 *Los Angeles River Ecosystem Restoration Integrated Feasibility Report* (USACE 2015). The U.S. Army Corp of Engineers (USACE) report analyzes the feasibility of restoring an 11-mile stretch of the Los Angeles River from Pollywog Park to Downtown Los Angeles, referred to in the report as the ARBOR reach (Area with Restoration Benefits and Opportunities for Revitalization) (USACE 2015). Citing the USACE report, page 77 of the Draft IS/MND states, "USACE estimated that existing water sources provide 211,348 AFY of flow within the Los Angeles River watershed on an annual basis. The proposed diversion would be approximately 1.4 percent of the existing water source […]. The volume of water diverted during dry weather flow by the proposed Program would be a small percentage of the current downstream flows (1.4 percent), and no beneficial uses would be impacted.

The Draft IS/MND may have underestimated the percentage of water diverted from the Los Angeles River in using 211,348 AFY as the basis for deriving 1.4 percent. After factoring in water demand (e.g., infiltration, evaporation, evapotranspiration), the USACE estimated that flow would be reduced from 211,348 AFY to 143,793 AFY annually and 29,166 AFY in the summer

(April through September) (USACE 2015). Based on reduced volumes, the Project's proposed diversion would be approximately 2.2 percent annually, an increase from 1.4 percent. During the summer, diversion would be approximately 10.3 percent. Based on the above, the Draft IS/MND's impact analysis may not have accurately estimated the proportion of water the Project would divert from the Los Angeles River.

Response 5-C

The calculation in the comment asserting a 10.3 percent reduction is inaccurate in that it assumes the entire diversion estimate of the proposed Program (3,010 AFY) will occur between April and September. It would be more appropriate when calculating the six-month dry season percentage from the 29,166 AFY flow assumption to compare half the annual anticipated diversion, which would be 1,505 AFY, calculated as 5.14 percent of the total dry season flow. A different way of calculating the contribution of flows attributed to the Tujunga Central Branch channel is to compare the project's diversion estimates with flow estimates at the ocean. The One Water LA Report (City of Los Angeles 2018) estimates that the river discharges 100 cfs to the ocean during summer months. The Program's proposed diversion of 3,010 AFY would constitute approximately 4 percent of the existing flow to the ocean during the summer months. This would be a conservative assumption since it does not attribute any stormwater capture to the proposed Program. The Draft IS/MND concludes that the contribution of flow to the Los Angeles River from the Tujunga Central Branch channel during the dry season is small (1.4 percent of the total volume and 4 percent of dry weather flow) compared to other sources. Furthermore, the watershed represents only 1.7 percent of the total watershed feeding stormwater to the Los Angeles River. Based on these flow estimates, the Draft IS/MND concludes that the proposed project would not significantly affect the ecology of the river.

The City, including LADWP, is participating in the Los Angeles River Flows Project in partnership with the SWRCB, and in close coordination with CDFW. The Los Angeles River Flows Project has been initiated by SWRCB to better understand the water demands of beneficial uses in the river, and to support future flow management priorities with science-based demand characterizations. See response to comment 5-I for more discussion on the new study.

Comment 5-D

Seasonality: The Draft IS/MND does not thoroughly analyze the potential significance of water diversion depending on the season. During the dry season, typically April through September in southern California, the Los Angeles River is largely maintained by urban runoff and discharge from WRPs. Diverting water could be significant during the dry season and could either significantly reduce water flow or result in complete loss of water flow from the Tujunga Central Branch channel to the Los Angeles River.

Response 5-D

The Draft IS/MND does evaluate the seasonality of the potential effects of the Program on page 74. The assessment describes the effects of the proposed Program on both dry weather flows and

wet weather flows. The Draft IS/MND notes on pages 74 and 77 that dry weather flows would be reduced slightly but would not result in loss of habitat. This is substantiated by the fact that 100 cfs currently discharges to the ocean in dry weather indicating a surplus of flow. Furthermore, the Draft IS/MND also points out that the ecological values of the river would be enhanced with the reduction of pollutant daily loads conveyed in dry weather flow. The water quality benefits of stormwater capture on downstream habitat values are described further in One Water LA, Chapter 4 Los Angeles River Study (City of Los Angeles 2018), as a fundamental benefit of the City's Program, and supports the water quality objectives of the regional Municipal Separate Storm Sewer System (MS4) stormwater NPDES permit of which the City is a participating permittee. See response to comments 5-C and 5-G.

Comment 5-E

Drought: The Draft IS/MND does not analyze the potential significance of water diversion during a below-normal water year. Since 2000, the longest duration of drought in California lasted between 2011 and 2019 (USGS 2021) and in southern California, between 2012 through 2016 (Los Angeles Almanac 2021). The 2017-2018 rainfall season was below normal and the driest for Los Angeles since 2006-2007 (Los Angeles Almanac 2021). Diverting water during a below normal rainfall year may significantly reduce water flow or result in complete loss of water flow.

Response 5-E

Annual rainfall amounts vary in the Los Angeles River watershed, with multi-year droughts likely becoming more common. The City's Stormwater Capture Master Plan states that "although the average annual precipitation in downtown Los Angeles is 15.3 inches, it ranges from a low of 4.69 inches (2007) to a high of 30.6 (1998). The mountains that surround the coastal plain, and are tributary to the City, experience considerably more rainfall than downtown Los Angeles. For example, in Big Tujunga Canyon, annual rainfall ranged from 9.62 inches in 1989 to 53.93 in 1998." (LADWP Stormwater Capture Master Plan, 2015; p. 3) The watershed represents only 1.7 percent of the total LA River watershed. The reduction would not significantly reduce dry season flows. The comment does not provide any additional information not already considered in the Draft IS/MND. See response to comment 5-I.

Comment 5-F

Beneficial Uses: The concrete lined portions of the Los Angeles River support wildlife. These portions of the Los Angeles River are regionally significant, especially in a dense urban environment with substantial loss or alteration of the natural hydrologic regime and river ecosystems. A reduction of flow, especially dry season flow, could directly or indirectly impact biological resources through habitat modifications. Where the Los Angeles River overtops the concrete-lined channel, the resulting sheet flows allow phytoplankton (algae and cyanobacteria), microorganisms, and herbaceous vegetation to establish. The algae provide habitat and a food source for benthic invertebrates, a vital food source for wading birds. The Los Angeles River provides habitat for hundreds of bird species, making these areas birding hotspots. The least Bell's vireo (*Vireo bellii pusillus*), an Endangered Species Act and CESA-listed endangered

species, has been documented within the Glendale Narrows area. Least Bell's vireo depends on willow (*Salix* genus) riparian habitat. The ARBOR reach examined in the USACE report contains soft-bottom channels that support herbaceous and woody vegetation. Dominant species include black willow (*Salix gooddingii*), Fremont cottonwood (*Populus fremontii*), and arroyo willow (*Salix laevigata*) (USACE 2015). The middle reach of the Los Angeles River, specifically Glendale Narrows, supports anadromous fish that includes the Pacific lamprey (*Entosphenus tridentatus*), a California Species of Special Concern.

The Draft IS/MND concludes that "no beneficial uses would be impacted." The Draft IS/MND does not offer a quantitative analysis as to how it determined no impacts would occur. Moreover, the Draft IS/MND does not define what it considered to be "beneficial uses." Diverting water during the dry season could reduce the availability and extent of shallow water sheet flow downstream. This could potentially impact algae, benthic invertebrates, and birds. Willow riparian habitat may be impacted if reduction in flow leads to receding shoreline or lower water depth. Preliminary work of the Los Angeles River Flows Project show that black willow (*Salix gooddingii*) seedling mortality increases as water depth decreases (SWRCB 2019). Loss of suitable habitat may impact sensitive species such as least Bell's vireo. Anadromous fish have specific habitat requirements including water depth, velocity, and vegetation.

Response 5-F

The Draft IS/MND on pages 74-78 describes the valuable biological resources existing in the Los Angeles River that are supported by consistent surface flow. The Draft IS/MND cites the One Water LA Program to substantiate the values found in the river, including all the species described in the comment. The 4 percent reduction of the current 100 cfs in the lower river channel would not reduce habitat from sheet flow in the lower reaches of the river since the flows would continue to be greater than the low flow channel and would continue to overflow and maintain the sheetflow condition. Phytoplankton and herbaceous vegetation would continue to provide a food source for benthic invertebrates, and for wading birds, as noted in the comment. The Draft IS/MND does provide a quantitative assessment of the potential effect of the proposed Program by estimating a 1.4 percent flow reduction. This small average flow reduction would not result in measurable effects to habitat values in the concrete-lined Los Angeles River either in the Arbor Reach or in the concrete-lined portion of the lower river. Furthermore, the Draft IS/MND cites the One Water LA Study that states that far more water exits the Arbor Reach under current conditions than is proposed to be diverted by the proposed Program. That is to say, since more water exits the system than is contributed by stormwater, there would be sufficient quantity of flow to meet the existing ecological demand. The Draft IS/MND concludes that the calculated flow reductions would not impact beneficial uses.

The comment cites information from a report published for the Los Angeles River Flows Project in January 2021 that provides a habitat suitability assessment for species known to occur in the Los Angeles River. The citation notes that black willow seedling mortality increases with water depth reduction. This information is extracted from a life stage suitability curve provided in the report. The Assessment Report does not provide a conclusion on the optimal water flow depth in

the Los Angeles River. Rather, the Habitat Assessment Report (SCCWRP 2021a) provides suitability curves that show a relationship with water depth and different life cycle stages for various species.

The figure below taken from that report shows that willow seedling mortality is more complex than stated in the comment: mortality is at a minimum at mean depths of around 5 cm and then increases with both reductions and increases in flow depth. In other words, germination occurs within a specific range of flow depth.

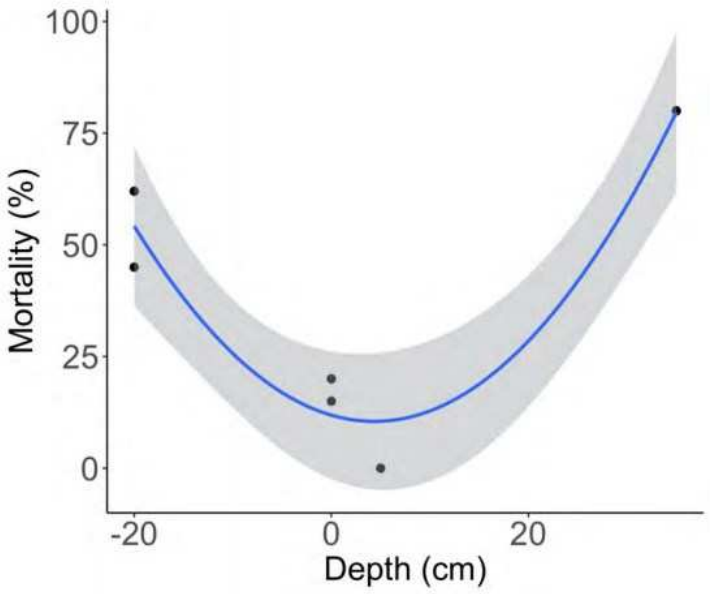

Figure 35. Habitat suitability curve of seedling mortality as a function of inundation/depth from water surface of Salix Gooddingii calculated through quadratic linear regression. Depth is defined as depth from surface i.e., -20 cm = 20 cm below surface, 20 cm = 20 cm above surface. Mean = 5 cm, p = 0.002, n=5.

The second figure, taken from the recently published SCCWRP flow study (SCCWRP 2021b) shows that willow in the Glendale Narrows area of the Los Angeles River can sustain a wide range of flow conditions. The graph shown below from the study shows that WRP discharges could be reduced by 80 percent and still support the existing willow. The WRP flow reduction of 80 percent illustrated, from 75 cfs to 15 cfs, is an order of magnitude greater than the proposed flow reduction from the proposed Program. The graph also shows that if all urban baseflows were captured, WRP discharges could be reduced by up to 68 percent and the existing willow habitat would be maintained. That is to say, a 100 percent reduction in urban baseflow across the Los Angeles River watershed (of which the proposed Program watershed comprises 1.7 percent by area) would still allow for a 68 percent reduction in WRP flow and continue to support willow habitat. This substantiates the conclusion that the proposed Program dry weather flow reductions would not affect downstream beneficial uses significantly, and that it would be unreasonable to assume otherwise.

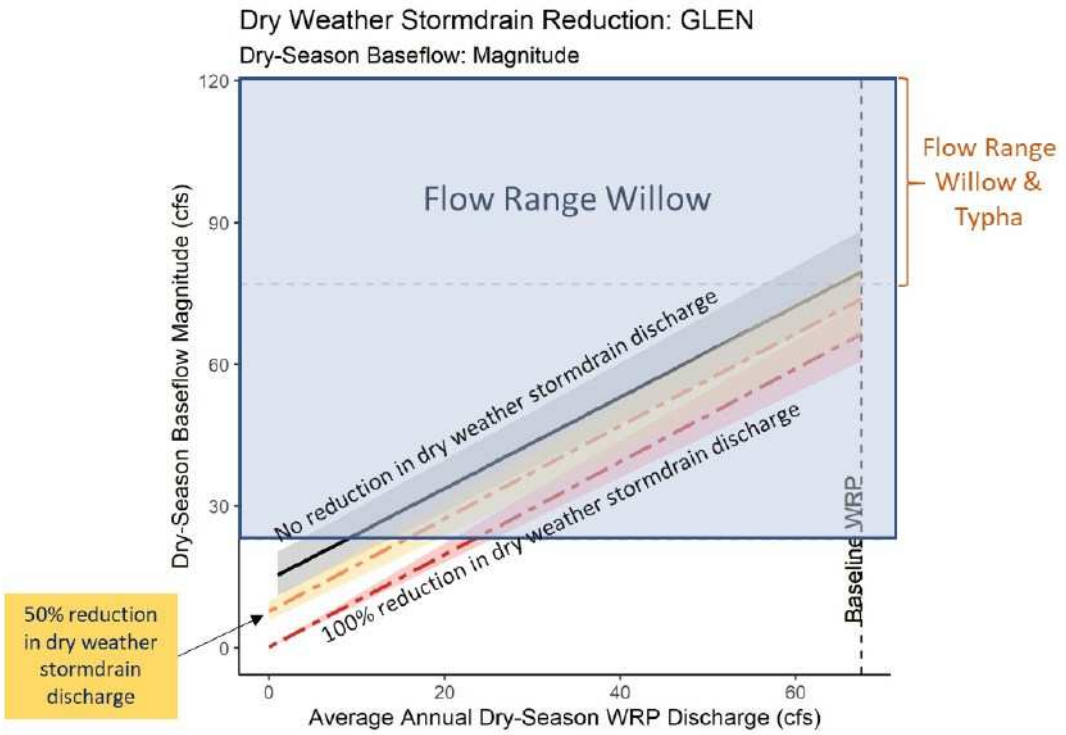

The effect of stormwater diversion would reduce Los Angeles River flows less than 4 cfs in the dry season, compared to the current dry season average of 75 cfs in the Arbor Reach and 100 cfs where the Los Angeles River confluences with the Pacific Ocean. The remaining flow would provide for the needs of willow and other riparian vegetation. The conclusions illustrated in the SCCWRP study for black willow show that surface water depth is not a driving factor in the suitability of black willow habitat in the Los Angeles River. The comment does not identify any other citation supporting water needs for the riparian habitats See response to comment 5-I.

Comment 5-G

Cumulative Flow Reductions: The Draft IS/MND does not analyze whether the Program would result in significant impacts when considered with other existing or proposed water diversion projects in the Los Angeles River watershed. The cities of Burbank, Glendale, and Los Angeles plan to recycle more wastewater and reduce their discharges to the Los Angeles River for this purpose (SWRCB 2019).

Response 5-G

The Draft IS/MND concludes on page 153 that the proposed Program would not result in cumulatively significant effects to the environment. This conclusion is based on the quantitative analysis that 4 percent of dry weather flow (1.4 percent of total annual flow) is too small an amount to result in an appreciable, or measurable change in the habitat values currently exhibited in the Los Angeles River. Furthermore, the City has acknowledged that cumulative flow reductions in the future may include potential reductions in WRP discharges to support regional

recycled water program objectives. To evaluate the effects of cumulative reductions in future flows that may include future diversions of WRP discharges, the SWRCB has conducted the Los Angeles River Flows Project. The study published by SCCWRP through the Los Angeles River Flows Project (SCCWRP 2021b) provides tools to all the river stakeholders to best manage the resource's beneficial uses. Future projects that may propose further diversions in dry weather flow may rely on this study to assess potential direct and cumulative effects of WRP discharge diversions. These future WRP diversions will be subject to Water Code Section 1211 Petitions, approved by the SWRCB.

In January 2021, SCCWRP published a report titled the Assessment of Aquatic Life Use Needs for the Los Angeles River Report (Assessment of Aquatic Life Report) (SCCWRP 2021a). This report characterizes habitat values in the river, and evaluates water demands of riparian and aquatic species known to occur in the river system. Habitat suitability curves have been developed for certain focal species based on the assessment. Habitat suitability curves were developed as part of a technical tool to assist the SWRCB in assessing potential WRP flow reductions in the Los Angeles River, but are not themselves flow recommendations.

The Assessment of Aquatic Life Report outlines habitat suitability criteria for three species: black willow, cattails (*Typha sp.*), and algae (*Cladophora sp.*). The study provides an overview of the cumulative effects of stormwater diversions to the overall flow in the Los Angeles River. The graphic provided in response to comment 5-F above summarizing the relationship between flow in the river and ecological water demands of willow substantiates the conclusion that the proposed Program dry weather flow reductions would not affect downstream beneficial uses significantly, and that it would be unreasonable to assume otherwise.

The City, including LADWP, is committed to maintaining a supportive role in the Los Angeles River Flows Project. See response to comment 5-I.

Comment 5-H

Diverting water from the Los Angeles River may impact biological resources downstream, especially during the dry season proceeding after a below-average water year. Impacts to any sensitive or special status species should be considered significant under CEQA unless they are clearly mitigated below a level of significance. Inadequate avoidance, minimization, and mitigation measures for impacts to sensitive or special status species will result in the Project continuing to have a substantial adverse direct, indirect, and cumulative effect, either directly or through habitat modifications, on any species identified as a candidate, sensitive, or special-status species by CDFW or U.S. Fish and Wildlife Service.

Response 5-H

See responses to comments 5-G and 5-I.

Comment 5-I

Mitigation Measure #1: CDFW recommends LADWP provide additional analysis and evaluation of potential impacts on biological resources as part of the final environmental document. At a minimum, an additional analysis and report should provide the following:

Study Reach

1. CDFW recommends LADWP define the study area as a 15-mile reach of the Los Angeles River, bounded by the Los Angeles River's confluence with the Tujunga Wash tributary and proceeding downstream to the river's confluence with the Arroyo Seco tributary. LADWP should identify all sources of flow input within the study area to estimate the total annual and dry season flow. LADWP should assess potential Project related impacts on biological resources within this study reach.

Changes to Hydrology and Hydraulics

1. Under pre-Project (i.e., baseline) conditions, the volume of water flow from the Tujunga Central Branch channel into the 15-mile study reach during a) the wet (November through March); b) the dry season (April through October); and c) above-average and below-average water year (i.e., wet season/above-average water year, wet season/below-average water year, dry season/above-average water year, and dry season/below-average water year). LADWP should clearly define what it would consider to be above-average or below-average rainfall year.

2. Under proposed Project conditions, the percent reduction in flow from 1) the Tujunga Central Branch channel tributary and 2) 15-mile study reach for a wet season/above-average water year, wet season/below-average water year, dry season/above-average water year, and dry season/below-average water year.

3. An analysis of potential Project-related changes to river hydraulics in both concrete and soft-bottom reaches. This includes water depth (percent change), wetted perimeter (acres gained/lost), and velocity (percent change). CDFW requests a map modeling potential changes to channel hydraulics overlain on a map of plant communities and habitat for sensitive wildlife species and birds.

4. A quantitative analysis comparing the flow from the Tujunga Wash, Burbank Wastewater Reclamation Plant (WRP), Tillman WRP, Verdugo Wash, and Glendale WRP, and their relative contribution to the hydrograph of the 15-mile study reach.

Biological Resources Impact Assessment

5. A map of plant communities and important bird foraging and nesting habitat occurring in the 15-mile study reach. Plant communities should be mapped at the alliance/association level using the Manual of California Vegetation, second edition (Sawyer et al. 2009). Also, CDFW recommends an updated and thorough floristic-based assessment of plant communities, following CDFW's Protocols for Surveying and Evaluating Impacts to Special Status Native Plant Populations and Sensitive Natural Communities (CDFW 2018).

6. A comprehensive list of sensitive and special status plant and wildlife species, and sensitive plant communities, occurring in the 15-mile study reach. CDFW recommends a nine-quad

search of the California Natural Diversity Database (CNDDB) for sensitive and special status biological resources that could occur downstream. For each biological resource, provide:

a. A summary of species-specific habitat requirements;

b. A discussion as to how the species or plant community may be significantly impacted directly or indirectly through habitat modification, as result of changes to hydrology (reduced flow) and hydraulics (water depth, wetted perimeter, velocity); and,

c. A quantitative analysis and/or adequate discussion to evaluate whether the Project would result in those significant impacts.

7. A discussion of whether diversion devices such as rubber dams would have direct and/or indirect impact on biological resources.

8. An adequate discussion to address how the Project may potentially affect on-going habitat recovery and restoration efforts.

9. An adequate discussion of Project-related impacts on biological resources in relation to cumulative flow reductions.

Response 5-I

The IS/MND concludes that based on the evidence provided in the existing literature, the proposed Program would not result in significant impacts to biological resources in the Los Angeles River considering the small contribution of flow provided by the Tujunga Central Branch channel, and that it would be unreasonable to assume otherwise. The IS/MND concludes that since the Program's effects would not result in a significant impact directly or cumulatively, no mitigation is required. However, in response to the comment and request for mitigation, the Los Angeles River Flows Project Final report (LA River Flows Project Final Report), published after the Draft IS/MND was published is incorporated by reference into this Final IS/MND. This robust hydrological, hydraulic, and ecological study of the Los Angeles River conducted by SCCWRP for SWRCB is designed to develop a set of tools and approaches to help evaluate future flow management scenarios. The Project applies the California Environmental Flow Framework (CEFF) approach to evaluating ecological flow relationships in California streams. The City is participating in the Los Angeles River Flows Project to assess how future flow diversions from WRPs may be best managed to support beneficial uses and management priorities in the river.

The LA River Flows Project Final Report is presented in this Final IS/MND to respond to this detailed comment. The Report was conducted over a two-year period, including input from numerous stakeholders including both LADWP and CDFW. The Report assists in evaluating the potential significance of the impacts of stormwater capture projects, such as the proposed Project, and includes all of the elements proposed in the comment and recommended mitigation measure. The following responses address each point in the comment:

Comment 5-Ia: Study Reach

1. CDFW recommends LADWP define the study area as a 15-mile reach of the Los Angeles River, bounded by the Los Angeles River's confluence with the Tujunga Wash tributary and proceeding downstream to the river's confluence with the Arroyo Seco tributary. LADWP should identify all sources of flow input within the study area to estimate the total annual and dry season flow. LADWP should assess potential Project related impacts on biological resources within this study reach.

Response to Comment 5-Ia

With respect to the Study Reach, the Los Angeles River Flows Project includes assessments of habitat values in the entire Los Angeles River from the Sepulveda Dam to the Pacific Ocean. This study area is larger than requested in the comment. The model domain included as Figure 5 in the study is included below. The Tujunga Central Branch channel confluences with the Los Angeles River at approximately node F300 shown in in the figure.

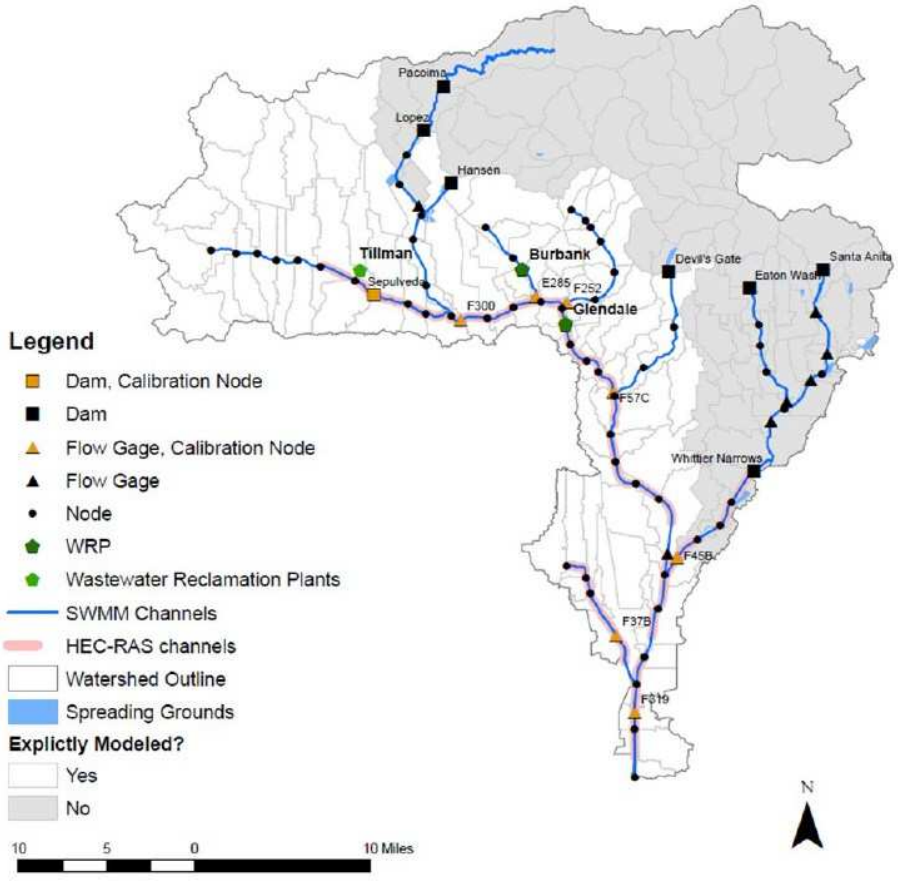

Comment 5-Ib: Hydrology and Hydraulics

2. Under pre-Project (i.e., baseline) conditions, the volume of water flow from the Tujunga Central Branch channel into the 15-mile study reach during a) the wet (November through March); b) the dry season (April through October); and c) above-average and below-average water year (i.e., wet season/above-average water year, wet season/below-average water year, dry season/above-average water year, and dry season/below-average water year). LADWP should clearly define what it would consider to be above-average or below-average rainfall year.

Response to Comment 5-Ib

With respect to Changes to Hydrology and Hydraulics, the Los Angeles River Flows Project includes results from a comprehensive modelling effort that meets all the parameters in the comment. As noted on pages 7 through 9 of the study, estimated flow conditions were modeled using a coupled hydrologic-hydraulic model created in EPA's Storm Water Management Model (SWMM) and the Hydrology Engineering Center's River Analysis System (HEC-RAS). The hydrologic model simulates discharge on the mainstem of the LA River, Compton Creek, and Rio Hondo at an hourly time step from WY 2011 through 2017. The model includes wet season and dry season discharges and uses a dry period to represent conservative flow estimates as shown in the figure below taken from Figure 3 of the study.

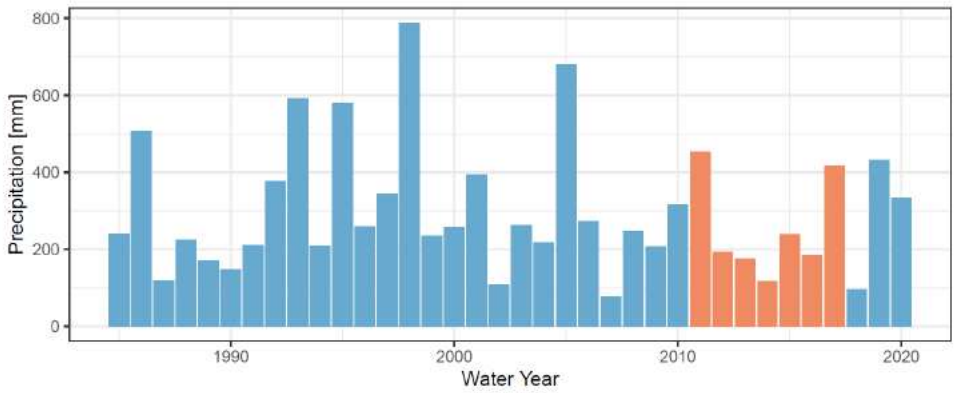

The one-dimensional hydraulic model was created by combining existing HEC-RAS models for the LA River and updating channel geometry and Manning's roughness based on field observations and calibration. The hydraulic model was run under steady-state conditions, which were used to develop rating curves to apply to the simulated hydrographs, producing time series hydraulic data for velocity, maximum channel depth, and shear stress.

Some excerpts from the SCCWRP 2021 report that describes the Flows Project are included here:

> *"We estimated current flow condition in the study area using a coupled hydrologic-hydraulic model created in EPA SWMM and HEC-RAS (ES-2). Current hydrologic conditions are defined as the flows and operations that occurred during water year (WY) 2011 to 2017." (SCCWRP, 2021; p ii)*

"Calculated ranges for the wet season and dry season baseflow metrics increase downstream of the three water reclamation plants, illustrating the contributions of discharges from the water reclamation plants…. The wet season metrics, baseflows from the start of the storm season to the start of the dry season, and dry season metrics, base flows from the start of the dry season to the start of the following wet season, are calculated on an annual basis. Typically, the start of the wet season is between November to January and the start of the dry season is between May to July depending on the climatic conditions for a given water year. The broader ranges and higher values of wet season baseflow metrics reflects the contribution of residual stormdrain discharge following storm events. Rio Hondo and Compton Creek both have the lowest wet season and dry season baseflow magnitudes compared to all other reporting nodes on the mainstem." (SCCWRP, 2021; p iv.)

Comment 5-Ic: Hydrology and Hydraulics

3. Under proposed Project conditions, the percent reduction in flow from 1) the Tujunga Central Branch channel tributary and 2) 15-mile study reach for a wet season/above-average water year, wet season/below-average water year, dry season/above-average water year, and dry season/below-average water year.

Response to Comment 5-Ic

As noted Figure ES-5 of the LA River Flows Project Final Report and excerpted below, dry weather storm flow contributions are a key consideration in the study. The graph illustrates average baseline flows with the black line accompanied by a grey band that indicates the 10 percent and 90 percent percentiles. This grey shading following the black line accounts for extremely dry years. In other words, the analysis represented by this graph takes dry year and wet year flows into consideration.

The graph compares potential future combined flow reductions of both dry weather runoff and WRP reductions with habitat value impacts. The large grey box represents habitat suitability for black willow habitat. The graph shows that a small percentage decline in dry weather storm channel flows (even in very dry years) would not reduce flows in the river below suitability thresholds for willow habitat, resulting in no reductions in habitat acreage or habitat quality. (The flow range for typha [cattails] is also included in the graph to show flow requirements for typha across the entire channel width. The flow rate is needed due to the wide channel width. Less flow could support typha within a narrower side channel such as shown in the HEC-RAS cross section provided in response to comment 5-!d below)As a result, the impact would be less than significant from a direct, indirect and cumulative perspective.

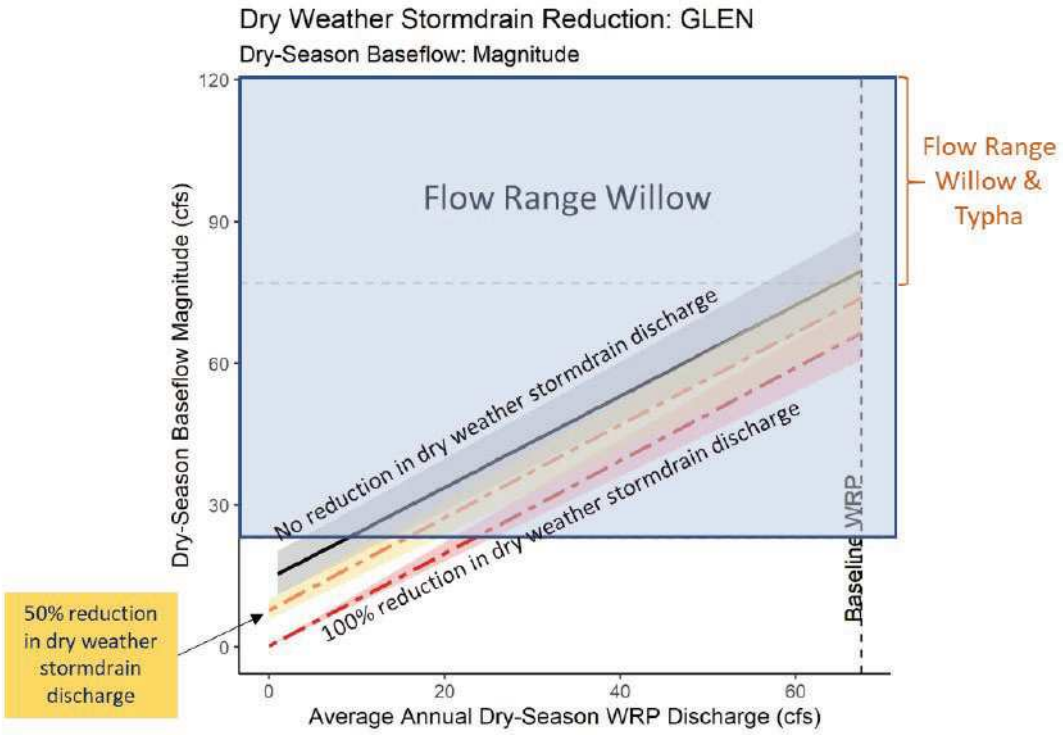

Figure ES-5. Flow-based sensitivity curves illustrating the combined effects of change in WRP discharge and 50% (yellow) and 100% reduction (red) in dry weather stormdrain discharge at GLEN reporting node. Solid and dashed lines represent median values; bounds of the gray and colored bands are the 10th and 90th percentile dry-season instream flows across the modeled period. Optimal flow range in this example is based on a 50% (medium) probability of occurrence of Willow and Typha.

Comment 5-Id: Hydrology and Hydraulics

4. An analysis of potential Project-related changes to river hydraulics in both concrete and soft-bottom reaches. This includes water depth (percent change), wetted perimeter (acres gained/lost), and velocity (percent change). CDFW requests a map modeling potential changes to channel hydraulics overlain on a map of plant communities and habitat for sensitive wildlife species and birds.

Response to Comment 5-Id

The Los Angeles River Flows Project published the "Assessment of Aquatic Life Use Needs for the Los Angeles River" (Assessment of Aquatic Life Report) in February 2021 (Stein, 2021). This document provides a detailed summary of hydraulic HEC-RAS modeling done to support the overall program objectives. Over 1,000 cross sections were generated by the HEC-RAS model in the river that show impacts of flow reductions to depth and wetted perimeter (as requested in the comment). Since the roughness of the Los Angeles river changes over time and greatly influences depth and wetted perimeter in specific locations, the model characterized typical channel dimensions and roughnesses to provide meaningful ecological-flow relationships. An excerpt from page 15 of this study is included below:

> *"Channel hydraulics (i.e., maximum channel depth, velocity, and shear stress) can vastly differ across different sections of the channel at a single site. For every soft-bottom output node in the HEC-RAS model, three output locations were selected at the three most significant morphological zones to capture the variability in hydraulics for each node and were designated as left overbank (LOB), center channel (Main), and right overbank (ROB)"*

The figure below provided on page 15 of the Assessment of Aquatic Life Report shows how channel characteristics were accommodated in the ecological-flow relationship analysis provided in the report. Habitat suitability curves were developed to reflect water depth and velocity requirements of existing habitat within these three different parts of the channel: side channel, main channel, and high floodplain. Although the Assessment of Aquatic Life Report does not provide a map of the habitat within the Los Angeles River associated with each of these cross sections, it does inventory the species and habitat values that occur within the soft-bottom portion of the river (the 15-mile segment highlighted in the comment) and presents a detailed HEC-RAS model that provides depth and width impacts associated with flow reductions at specific cross section locations that were also measured in the field for model calibration purposes. The evaluation of habitat suitability within this segment of the river (see graph provided in response to comment 5-F) is then expressed in cubic feet per second (cfs) impacts rather than depth and width in order to provide a meaningful model for the total 15 miles of the soft-bottom segment.

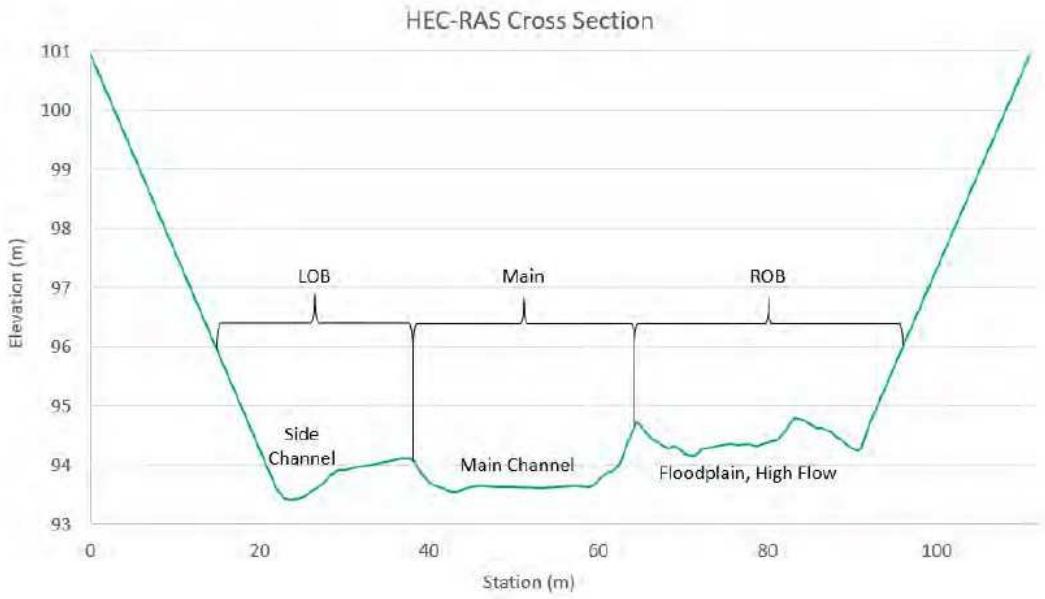

Comment 5-Ie: Hydrology and Hydraulics

5. A quantitative analysis comparing the flow from the Tujunga Wash, Burbank Wastewater Reclamation Plant (WRP), Tillman WRP, Verdugo Wash, and Glendale WRP, and their relative contribution to the hydrograph of the 15-mile study reach.

Response to Comment 5-Ie

As described in responses above, the Assessment of Aquatic Life Report as well as the LA River Flows Project Final Report provide a comprehensive assessment of flow in the Los Angeles River including each of the flow sources noted in the comment. The Assessment of Aquatic Life Report describes average dry season river flows in each segment of the river accounting for contributions from WRPs, groundwater, and storm drain channel inputs.

Comment 5-If: Biological Resources Impact Assessment

1. A map of plant communities and important bird foraging and nesting habitat occurring in the 15-mile study reach. Plant communities should be mapped at the alliance/association level using the Manual of California Vegetation, second edition (Sawyer et al. 2009). Also, CDFW recommends an updated and thorough floristic-based assessment of plant communities, following CDFW's Protocols for Surveying and Evaluating Impacts to Special Status Native Plant Populations and Sensitive Natural Communities (CDFW 2018).

Response to Comment 5-If

The Assessment of Aquatic Life Report provides an inventory of habitat and species occurrences within the 15-mile segment mentioned in the comment. Figure 34 of the Assessment of Aquatic Life Report reproduced below illustrates which reaches exhibit aquatic and riparian habitat values. Habitat mapping was not conducted as part of the study. Rather, flow ranges supporting habitat suitability for all aquatic values were developed, assuming that the entire 15-mile river segment may exhibit habitat values.

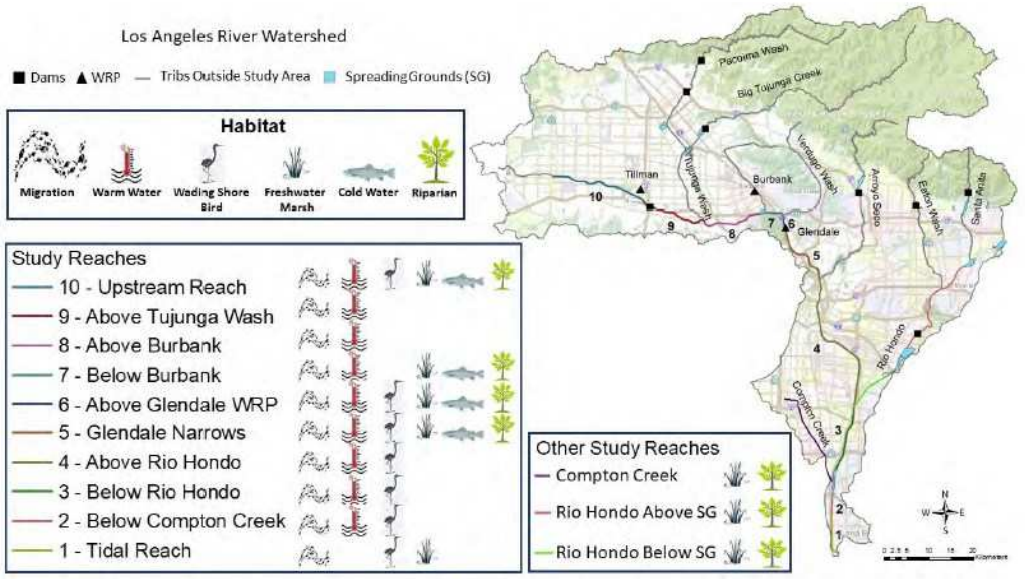

Figure 34. Map of study reaches with identified habitats that could potentially be supported in each reach.

Comment 5-Ig: Biological Resources Impact Assessment

2. A comprehensive list of sensitive and special status plant and wildlife species, and sensitive plant communities, occurring in the 15-mile study reach. CDFW recommends a nine-quad search of the California Natural Diversity Database (CNDDB) for sensitive and special status biological resources that could occur downstream. For each biological resource, provide:

    d. A summary of species-specific habitat requirements;

    e. A discussion as to how the species or plant community may be significantly impacted directly or indirectly through habitat modification, as result of changes to hydrology (reduced flow) and hydraulics (water depth, wetted perimeter, velocity); and,

    f. A quantitative analysis and/or adequate discussion to evaluate whether the Project would result in those significant impacts.

Response to Comment 5-Ig

The Los Angeles River Flows Project Final Report includes a comprehensive inventory and assessment of biological habitat values in the Los Angeles River:

> *"The overarching goal of this project is to consider potential effects of reduced WRP discharge and increased stormwater capture on existing and potential future beneficial uses. Therefore, our analysis included characterizing species and habitats that current occur and those that could reasonably occur in the future (based on a comparison to similar southern California watersheds). "(SCCWRP, 2021; p vii)*
>
> *"The aquatic life use assessment began with a compilation of observational data from the LA River and surrounding watersheds which was used to identify priority focal habitats and endmember species that represent a range of tolerances for each habitat. We then determined the flow conditions necessary to support the life history needs of each species and used those to create "flow-ecology" curves or models relating key hydrologic, hydraulic, and temperature conditions to the probability of occurrence for each focal species, or the probably of being able to complete specific life-history requirements." (SCCWRP, 2021; p vii)*

The Assessment of Aquatic Life Report provides the CNDDB listed species of concern in a concise map excerpted below. Beginning on page 38, the Assessment of Aquatic Life Report provides a summary of "life history needs" for key species within the habitat types. Habitat suitability curves are prepared based on the target vegetation's needs for water as measured by flow in the river (ie., cfs). This analysis defines future water flow reductions as the impact, and provides suitability curves to evaluate significance of the impact. The graph included in response to comment 5-F summarizes the relationship of flow in the river with habitat suitability for willow habitat. Since willow habitat (the key indicator species for riparian values in Southern California) is sustained with substantially less flow than currently exists or is projected to exist with future flow reductions, the contribution of 4 percent flow reduction resulting from the proposed project is considered cumulatively less than significant. That is to say, the scientific analysis contained in the LA Rivers Flows Project Final Report and companion study Assessment of Aquatic Life Report provide the information requested in this comment and support the conclusions of the IS/MND.

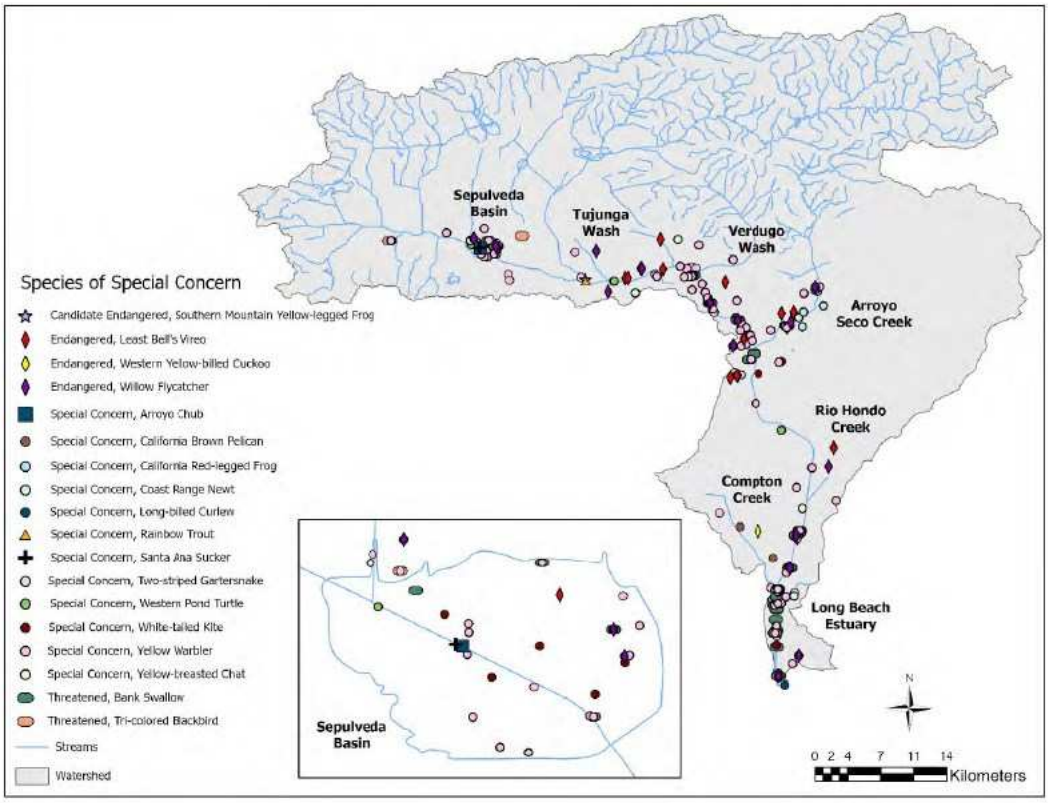

Figure 33. Species observations along the mainstem of the LA River and tributaries included in this study.

Comment 5-Ii: Biological Resources Impact Assessment

3. A discussion of whether diversion devices such as rubber dams would have direct and/or indirect impact on biological resources.

Response to Comment 5-Ii

As described on page 74 of the IS/MND, the proposed diversion structures would not impact any biological resources since they would be installed within either underground storm drain pipes or concrete box channels. The only effect to biological resources that could occur would result from reduced flow to downstream resources. No habitat would be removed as a result of the Project. As described in detail in this response to comment 5-I those effects are determined to be less than significant.

Comment 5-Ij: Biological Resources Impact Assessment

4. An adequate discussion to address how the Project may potentially affect on-going habitat recovery and restoration efforts.

Response to Comment 5-Ij

As described in this response to comment 5-I, the proposed Project would not significantly affect the habitat values within the Los Angeles River. No restoration projects are currently occurring within the river channel that would be adversely affected by the proposed Project.

Comment 5-Ik: Biological Resources Impact Assessment

5. An adequate discussion of Project-related impacts on biological resources in relation to cumulative flow reductions.

Response to Comment 5-Ik

As described in responses to comments 5-F and 5-I, the proposed Project would not significantly affect the habitat values within the Los Angeles River. The LA Flows Project Final Report provides ecology-flow relationship analysis for cumulative reductions including incremental storm flow and WRP reductions. The Project would not contribute to a cumulative reduction in habitat acreage or quality.

Comment 5-J

Mitigation Measure #2: CDFW recommends LADWP develop a discharge operation plan that would always allow sufficient water to pass downstream. CDFW also recommends LADWP develop an Adaptive Management Plan that would direct LADWP to reduce or suspend water diversion if at any point the Project may impact biological resources downstream exceeding a defined threshold/trigger.

Response 5-J

The IS/MND concludes that based on the evidence provided in the existing literature, the proposed Program would not result in significant impacts to biological resources in the Los Angeles River considering the small contribution of flow provided by the Tujunga Central Branch channel. Downstream ecological values would not be measurably affected by the Project. The IS/MND concludes that since the Program's effects would not result in a significant impact directly or cumulatively, no mitigation is required.

LADWP recognizes that the placement of diversion structures within streams and drainages must comply with Fish and Game Code Section 5901 which prohibits installing "any device or contrivance that prevents, impedes, or tends to prevent or impede, the passing of fish up and down stream." Fish and Game Code 5937 requires that operators of dams "allow sufficient water to pass over, around or through the dam, to keep in good condition any fish that may be planted or exist below the dam." Currently, no fish exist within the underground urban storm collection system or concrete box channel. The Tujunga Central Branch channel does not lead to natural stream resources at higher elevation. As a result, the channel would not provide a migratory route for steelhead spawning grounds now or in the future. The entire watershed area is urbanized, mostly within underground storm drain pipes with no ecological values. Future fish migration in the channel is highly unlikely. Furthermore, the instream diversion structures have been designed and operated to allow for storm flows to bypass the diversion mechanism. Each of the diversion structures would include a slide gate. If fish re-colonized the channel in the future these slide gates would be able to allow bypass flows. Therefore, based on the ability to allow for storm flows, the diversion structures would also be able to accommodate fish passage during periods of receding flow when migration opportunities exist, if fish were present. The project would not prevent future habitat restoration or fish occupation in the drainage. The proposed designs would

be compliant with California Fish and Game Code 5901 and 5937. Since no fish are currently in the concrete channel and dry weather flow depths do not accommodate ponding sufficient for fish to survive, there is no reason to prepare a discharge operation plan or adaptive management plan at this time.

See responses to comments 5-G and 5-I.

Comment 5-K

Mitigation Measure #3: CDFW recommends LADWP provide compensatory mitigation at no less than 3:1 for permanent impacts to the concrete-lined Tujunga Central Branch channel due to the installation of diversion structures including (but not limited to) rubber dams and channel drop inlets. CDFW also recommends LADWP provide compensatory mitigation commensurate with the permanent diversion of discharge from Los Angeles River.

Response 5-K

The IS/MND concludes that based on the evidence provided in the existing literature, the proposed Program would not result in significant impacts to biological resources in the Los Angeles River considering the small contribution of flow provided by the Tujunga Central Branch channel. The IS/MND concludes that since the Program's effects would not result in a significant impact directly or cumulatively, no mitigation is required.

The purpose of compensatory mitigation for impacts to waters of the State is to ensure that habitat values and hydrologic functions are maintained at least at the level of the system prior to the initiation of the project. The current concrete channel into which the diversion structures will be placed currently provides no habitat value. Six of the diversion structures will be placed in underground reinforced concrete pipe. The City does not believe that compensation is required for placing diversion structures in underground concrete pipes or concrete channels. As noted on page 74 of the Draft IS/MND, the City will be required to obtain a Lake and Streambed Alteration Agreement (LSAA) from CDFW for the three park projects that will place diversion structures within concrete channels. See response to comment 5-N.

Comment 5-L

Recommendation #1: CDFW recommends the following data and information sources:

- Stream gage data available from Los Angeles County Public Works (LADPW 2021);
- Los Angeles River Master Plan (Geosyntec et al. 2020); and,
- Los Angeles River Flows Project (SWRCB 2019).

Response 5-L

The IS/MND (on page 74) includes annual flow estimates for the Los Angeles River provided by USACE. The data provided in the Draft IS/MND regarding flows is consistent with the river flow data provided in the references cited in the comment. The City is participating in the Los

Angeles River Flows Project which has compiled hydrologic and hydraulic data for the river. The data mentioned in the comment from the County are continuously collected and are indicative of the flow data used by the USACE to ensure flood protection for the City of Los Angeles. The recently published Los Angeles River Master Plan compiles historic river flow data consistent with the USACE and County data. All of this data is consistent with the annual flow totals cited in the IS/MND that document the percentage of flow from the Tujunga Central Branch channel. See response to comments 5-C and 5-G.

Comment 5-M

Recommendation #2: Based on the inadequacy of the Draft IS/MND as elaborated in our preceding comments, CDFW recommends that LADWP revise and recirculate the Draft IS/MND so CDFW may provide more appropriate comments on avoidance, minimization, and mitigation measures (CEQA Guidelines, § 15073.5).

Response 5-M

The comment provides no new information supporting the inadequacy of the analysis in the Draft IS/MND. Re-circulation of the Draft IS/MND is not necessary since existing evidence supports a conclusion that impacts would be less than significant, and that it would be unreasonable to assume otherwise. Furthermore, the study recently published by SCCWRP (SCCWRP 2021b) provides all of the hydrology and hydraulics data and analysis requested in the comment. The study substantiates the conclusions made in the Draft IS/MND, and satisfies CDFW's request for additional information.

Comment 5-N

The Project would potentially alter streams. The Project would divert dry season flow and stormwater. In addition, the Project proposes to install devices within and adjacent to a stream to facilitate water diversion.

The Project would divert water from the Tujunga Central Branch channel and Los Angeles River. The Project proposes to install water diversion structures within or adjacent to the Tujunga Central Branch channel. This includes inflatable rubber dams. Accordingly, the Project may obstruct water flow and change the bed and channel of a stream (confinement).

Fish and Game Code section 1602 requires any person, state or local governmental agency, or public utility to notify CDFW prior to beginning any activity that may do one or more of the following:

- Divert or obstruct the natural flow of any river, stream, or lake;
- Change the bed, channel, or bank of any river, stream, or lake;
- Use material from any river, stream, or lake; or,
- Deposit or dispose of material into any river, stream, or lake.

Response 5-N

The Draft IS/MND states on page 74 that the City would be required to obtain a Streambed Alteration Agreement pursuant to the California Fish and Game Code section 1602. The City will consult with CDFW to obtain a 1602 LSAA for the Program sites that include construction of diversions structures at the Tujunga Central Branch channel. Installation of diversion structures into underground storm drain pipes may require notification, but would not likely result in the need for a full LSAA. The table below identifies LADWP's assumptions of which Program sites may require a LSAA LADWP understands that CDFW will ultimately determine which of these sites will require a LSAA based on information in the initial notification.

Infiltration Gallery Location	Diversion Structure Installation	LSAA Required?
David M. Gonzales Recreation Center	Underground Storm Drain Pipe	No
FernAngeles Park	Underground Storm Drain Pipe	No
Whitsett Fields Park North	Underground Storm Drain Pipe	No
Strathern Park North	Underground Storm Drain Pipe	No
Valley Plaza Park North	Underground Reinforced Concrete Box Culvert	No
Valley Plaza Park South	Concrete Channel	Yes
Alexandria Park	Concrete Channel	Yes
North Hollywood Park	Concrete Channel	Yes
Valley Village Park	Underground Storm Drain Pipe	No

Comment 5-O

Mitigation Measure #1: CDFW has concluded that the [Program] may result in the alteration of streams. As such, the applicant (or "entity") must provide notification to CDFW pursuant to Fish and Game Code, section 1600 *et seq*. Based on this notification and other information, CDFW determines whether an LSAA with the applicant is required prior to conducting the proposed activities. Please visit CDFW's Lake and Streambed Alteration Program webpage to for information about LSAA Notification and online submittal through the Environmental Permit Information Management System Permitting Portal (CDFW 2021a).

Response 5-O

The Draft IS/MND states on page 74 that the City would be required to obtain a LSAA pursuant to the California Fish and Game Code section 1602. A new mitigation measure requiring compliance with regulations is not needed. The City will consult with CDFW to obtain a 1602 LSAA for the Program sites that include construction of diversions structures at the Tujunga Central Branch channel (see table in response 5-N).

Comment 5-P

Mitigation Measure #2: CDFW recommends the LSAA Notification include a hydrological evaluation of the 200, 100, 50, 25, 10, 5, and 2-year frequency storm event for existing and proposed conditions.

Recommendation: CDFW's issuance of an LSAA for a Project that is subject to CEQA will require CEQA compliance actions by CDFW as a Responsible Agency. As a Responsible Agency, CDFW may consider the CEQA document from LADWP for the Project. To minimize additional requirements by CDFW pursuant to Fish and Game Code section 1600 *et seq*. and/or under CEQA, the CEQA document should fully identify the potential impacts to the stream or riparian resources and provide adequate avoidance, mitigation, monitoring, and reporting commitments for issuance of the LSAA. As such, CDFW recommends LADWP consider CDFW's comments and revise the Draft IS/MND. To compensate for any on- and off-site impacts to aquatic and riparian resources, additional mitigation conditioned in any LSAA may include the following: erosion and pollution control measures, avoidance of resources, protective measures for downstream resources, on and/or off-site habitat creation, enhancement or restoration, and/or protection, and management of mitigation lands in perpetuity.

Response 5-P

The Draft IS/MND states on page 74 that the City would be required to obtain a LSAA pursuant to the California Fish and Game Code section 1602(See response to comment 5-N). Hydrologic assessments have been conducted for each of these park projects to determine the capacity of the infiltration galleries and the quantity of feasible wet weather diversions. The rubber dam diversion structures would be lowered when flow rates exceeded the diversion capacity, allowing most of the storm flows in larger storms (including the 2, 5, 10, 25, 50, 100, and 200 year storms) to bypass the diversions. Additional modeling is not necessary to make this conclusion.

Comment 5-Q

CDFW is concerned that the Program may result in significant impacts to bats, including hoary bat (*Lasiurus cinereus*) and silver haired bat (*Lasionycteris Octavian's*).

The Program may result in direct and indirect impacts to bats. Direct impacts include removal of trees and that may provide roosting habitat. Indirect impacts to bats and roosts could result from increased human activity, noise disturbances, dust, vegetation clearing, ground-disturbing activities (e.g., staging, mobilizing, excavating, and grading), and vibrations caused by heavy equipment.

Native and non-native ornamental trees at each park could provide potential roosting habitat for bats. Bats can fit into very small seams, as small as a ¼ inch. Therefore, crevices in buildings and other man-made structures within and adjacent to each park could provide roosting habitat for bats. Despite the availability of potential roosting habitat, the Program concludes that there would not be significant impacts to bats.

Page 60 of Appendix B concludes that while bats "may use western sycamore trees to roost, special-status bat species including hoary bat and silver-haired bat have low potential to occur within all of the project locations, since they are situated in an urban environment with constant ambient nighttime lighting (e.g., street lights, baseball field lights)." The presence of constant ambient lighting may be insufficient to conclude that bats do not occur. Bat response to artificial lighting could vary between species and not all bat species are repelled by light (Longcore and Rich 2004; Opéra et al. 2009). Faster-flying species of bats are attracted to insects that congregate around light sources (Longcore and Rich 2004). Foraging is still possible in the presence of ambient lighting, although forging may be reduced. Also, based on Program site photos in Appendix B, it appears that not all areas within certain parks are illuminated, for instance Valley Plaza North and Valley Plaza South. Based on the above, the probability of bats occurring within each park could be higher than previously concluded.

Accordingly, if bats are present, extra noise, vibration, or the reconfiguration of large objects can lead to the disturbance of roosting bats. Human disturbance can also lead to a change in humidity, temperatures, or the approach to a roost that could force the animals to change their mode of egress and/or ingress to a roost. Modifications to roost sites can have significant impacts on the bats' usability of the roost and can impact the bats' fitness and survivability (Johnston et al. 2004). Although temporary, such disturbances can lead to the abandonment of a maternity roost (Johnston et al. 2004).

Response 5-Q

The Draft IS/MND identifies on page 73 that removal of trees may affect wildlife commonly found in the parks, including bat species, although the Draft IS/MND concludes that the potential for encountering bat roosts in the affected trees is low. Nonetheless, in response to this comment, Mitigation Measure BIO-1 has been modified to require that bat surveys be conducted at each of the Program sites to ascertain whether bats are utilizing the trees to be removed by the Program. With this modification to the BIO-1 mitigation measure, impacts to bats would remain less than significant.

The following text is added to Mitigation Measure BIO-1:

- Prior to removal of trees in any of the Program sites, the City shall retain a qualified bat specialist to conduct bat surveys to confirm whether bats are using the trees as roosting sites. The surveys should encompass a minimum buffer area of 100 feet around the Program sites. The results of the surveys will be provided to CDFW. In the event that bat roosts are identified, an additional bat species survey will be conducted using acoustic survey techniques necessary to confirm the species of bat using the area. If the species survey concludes that sensitive bat species are present, the City shall consult with CDFW pursuant to the California Fish and Game Code section 2081. Removal of special status bats would not be conducted without prior approval from CDFW.

Comment 5-R

Bats are considered non-game mammals and are afforded protection by State law from take and/or harassment (Fish & G. Code, § 4150; Cal. Code of Regs, § 251.1). Additionally, several bat species are considered Species of Special Concern and meet the CEQA definition of rare, threatened, or endangered species (CEQA Guidelines, § 15380). Take of SSC could require a mandatory finding of significance by the Lead Agency (CEQA Guidelines, § 15065).

Response 5-R

See response to comment 5-Q.

Comment 5-S

Mitigation Measure #1: Where Program-related implementation, construction, and activities would occur near potential roosting habitat for bats, CDFW recommends a qualified bat specialist conduct bat surveys within these areas (plus a 100-foot buffer as access allows) in order to identify potential habitat that could provide daytime and/or nighttime roost sites, and any maternity roosts. CDFW recommends using acoustic recognition technology to maximize detection of bats. A discussion of survey results, including negative findings should be provided to LADWP. Depending on the survey results, a qualified bat specialist should discuss potentially significant effects of the Project on bats and include species specific mitigation measures to reduce impacts to below a level of significance (CEQA Guidelines, § 15125). Surveys, reporting, and preparation of robust mitigation measures by a qualified bat specialist should be completed and submitted to the LADWP prior to any Project-related ground-disturbing activities or vegetation removal at or near locations of roosting habitat for bats.

Response 5-S

Mitigation Measure BIO-1 has been modified to accommodate CDFW suggested mitigation requirements. See response to comment 5-Q.

Comment 5-T

Mitigation Measure #2: If bats are not detected, but the bat specialist determines that roosting bats may be present at any time of year and could roost in trees at a given location, during tree removal, trees should be pushed down using heavy machinery rather than felling with a chainsaw. To ensure the optimum warning for any roosting bats that may still be present, trees should be pushed lightly two or three times, with a pause of approximately 30 seconds between each nudge to allow bats to become active. The tree should then be pushed to the ground slowly and remain in place until it is inspected by a bat specialist. Trees that are known to be bat roosts should not be bucked or mulched immediately. A period of at least 24 hours, and preferable 48 hours, should elapse prior to such operations to allow bats to escape.

Response 5-T

Mitigation Measure BIO-1 provides for bat surveys to confirm that bats are not using the trees. If bats are encountered the City will consult with CDFW to ensure an effective bat removal effort in compliance with the California Fish and Game Code. Bats will not be removed from the Program sites without prior CDFW approval. No additional tree removal techniques would be required. No new mitigation is required.

Comment 5-U

Mitigation Measure #3: If maternity roosts are found, to the extent feasible, work should be scheduled between October 1 and February 28, outside of the maternity roosting season when young bats are present but are yet ready to fly out of the roost (March 1 to September 30).

Response 5-U

Mitigation measure BIO-1 has been modified to require approval from CDFW if bats are found to be using the affected trees. As part of any bat removal effort that may be necessary, seasonality of the removal will be a consideration. No additional mitigation measure is required.

Comment 5-V

Mitigation Measure #4: If maternity roosts are found and LADWP determines that impacts are unavoidable, a qualified bat specialist should conduct a preconstruction survey to identify those trees proposed for disturbance that could provide hibernacula or nursery colony roosting habitat. Acoustic recognition technology should be used to maximize the detection of bats. Each tree identified as potentially supporting an active maternity roost should be closely inspected by the bat specialist no more than 7 days prior to tree disturbance to determine the presence or absence of roost bats more precisely. If maternity roosts are detected, trees determined to be maternity roosts should be left in place until the end of the maternity season. Work should not occur within 100 feet of or directly under or adjacent to an active roost. Work should also not occur between 30 minutes before subset and 30 minutes after sunrise.

Response 5-V

As noted in response to comment 5-Q, mitigation measure BIO-1 has been modified to include bat presence surveys. If bats are found, the mitigation measure would require that the City implement a bat removal program in consultation with CDFW.

Comment 5-W

Devices Impeding Fish. The Program includes installation of rubber dams in the stream channel. Per California Fish and Game Code section 5901, it is unlawful to construct or maintain in any stream any device or contrivance the prevents, impedes, or tends to prevent or impeded, the passing of fish up and downstream. Accordingly, LADWP should coordinate with CDFW prior to commencing the Program to ensure that the Program would comply with Fish and Game Code section 5901.

Response 5-W

The concrete pipeline and channel do not support fish species. The Program would not install any devices that would impede fish migration since fish do not occur in the concrete channel and underground pipeline associated with the Tujunga Central Branch channel. The primary impediment for migrating fish under existing conditions is the velocity of the fast-moving storm water in confined pipelines and channels and the lack of refugia habitat at the channel edges. Nonetheless, the in-channel devices for four of the Program sites will require an LSAA from CDFW. The City will consult with CDFW to ensure diversion structures are compliant with Fish and Game Code section 5901.

Comment 5-X

Southern California Black Walnut Tree (*Juglans californica*). According to page 73 in the Draft IS/MND, one Southern California black walnut tree may be removed at North Hollywood Park. Southern California black walnut is a California Rare Plant Rank 4.2 species. If removal of Southern California black walnut is required, CDFW recommends LADWP replace each tree at no less than 3:1 in consideration of the species rarity, temporal loss of black walnut tree canopy and structure while the tree grows, and potential attrition associated with transplanting. Southern California black walnut trees should be replaced with trees of the same species.

Response 5-X

As noted on pages 78-80 of the Draft IS/MND, any protected tree required to be removed would be replaced with 24-inch box size specimens of the same tree species at a ratio of 4:1 in accordance with the City's Tree Protection Ordinance (No.177404) and the RAP's Tree Preservation Policy.

Comment 5-Y

Tree Replacement. In the greater Los Angeles, urban forests and street trees, both native and some non-native species, provide habitat for a high diversity of birds (Wood and Esaian 2020). Some species of raptors have adapted to and exploited urban areas for breeding and nesting (Cooper et al. 2020). For example, raptors (Accipitridae, Falconidae) such as red-tailed hawks (*Buteo jamaicensis*) and Cooper's hawks (*Accipiter cooperii*) can nest successfully in urban sites. Red-tailed hawks commonly nest in ornamental vegetation such as eucalyptus (Cooper et al. 2020). CDFW recommends planting native tree species preferred by birds. This includes coast live oak (*Quercus agrifolia*) and California sycamore (*Platanus racemosa*) (Wood and Esaian 2020). CDFW recommends Audubon Society's Plants for Birds for more information (Audubon Society 2020).

Response 5-Y

The proposed Program would require the removal of existing trees; however, the removal of trees would be replaced on a trunk caliper size basis, 1-inch replaced to 1-inch removed. As noted on pages 78-80 of the Draft IS/MND, any protected tree required to be removed would be replaced

with 24-inch box size specimens at a ratio of 4:1 in accordance with the City's Tree Protection Ordinance (No.177404) and RAP's Tree Preservation Policy. The replacement trees would be planted near the original tree's location, but if there is not adequate space, the City would coordinate with RAP to identify the closest appropriate locations for new plantings. Mitigation Measure BIO-1 is included in the Draft IS/MND to ensure construction activities do not disturb nesting birds. The requirement to replace mature trees would encourage future nesting opportunities for raptors.

Comment 5-Z

Landscaping. CDFW strongly recommends avoiding non-native, invasive plants. CDFW recommends LADWP restrict use of any species, particularly 'Moderate' or 'High' listed by the California Invasive Plant Council (Cal-IPC 2020a). CDFW recommends LADWP use native species found in naturally occurring vegetation communities within or adjacent to the Program sites. Information on alternatives for invasive, non-native, or landscaping plants may be found on the California Invasive Plant Council's, Don't Plant a Pest webpage for southern California (CalIPC 2020b). The California Native Plant Society's Gardening and Xerces Society's PollinatorFriendly Native Plant Lists webpage has information on native plant species that invite insects and pollinators (CNPS 2020; Xerces Society 2020).

Response 5-Z

As noted in the project description, each of the Program sites will be re-landscaped following the installation of the stormwater capture infrastructure. The landscaping plans will use primarily native species to the extent feasible, per RAP landscaping guidelines.

Comment 5-AA

Move Out of Harm's Way. The proposed Program is anticipated to result in clearing of habitats that support wildlife species common in developed areas. CDFW recommends a qualified biological monitor be on site during initial ground disturbing activities and vegetation removal. The qualified biological monitor should move wildlife of low mobility out of harm's way to avoid wildlife injury or mortality.

Response 5-AA

Mitigation Measure BIO-1 would ensure that impacts to any avian species currently utilizing the Program sites would be avoided. As required in mitigation measure BIO-1, contractors will be encouraged to remove vegetation outside of the affected avian or bat nesting seasons. If nesting season cannot be avoided, the mitigation measure provides for measures to ensure impacts to nesting birds is avoided, including delaying activities if necessary. Since the Program sites do not support any native habitat values, a biological monitor is not recommended other than for nesting birds as required in mitigation measure BIO-1.

Comment 5-AB

Data. CEQA requires that information developed in environmental impact reports and negative declarations be incorporated into a database (i.e., California Natural Diversity Database) which may be used to make subsequent or supplemental environmental determinations [Pub. Resources Code, § 21003, subd. (e)]. Accordingly, please report any special status species detected by completing and submitting CNDDB Field Survey Forms (CDFW 2020b). LADWP should ensure the data has been properly submitted, with all data fields applicable filled out, prior to finalizing/adopting the environmental document. LADWP should provide CDFW with confirmation of data submittal.

Response 5-AB

The City acknowledges that survey data identifying special status species should be provided to the CDFW. Appendix B of the Draft IS/MND includes a Biological Technical Report prepared for the Program.

Comment 5-AC

Mitigation and Monitoring Reporting Plan. CDFW recommends LADWP update the Program's proposed Biological Resources Mitigation Measures and condition the environmental document to include mitigation measures recommended in this letter. CDFW provides comments to assist LADWP in developing mitigation measures that are specific, detailed (i.e., responsible party, timing, specific actions, location), and clear in order for a measure to be fully enforceable and implemented successfully via a mitigation monitoring and/or reporting program (CEQA Guidelines, § 15097; Pub. Resources Code, § 21081.6). LADWP is welcome to coordinate with CDFW to further review and refine the Program's mitigation measures. Per Public Resources Code section 21081.6(a)(1), CDFW has provided LADWP with a summary of our suggested mitigation measures and recommendations in the form of an attached Draft Mitigation and Monitoring Reporting Plan (MMRP; Attachment A).

Response 5-AC

The City will adopt the MMRP when approving the Final IS/MND that will include implementation of Mitigation Measure BIO-1.

Comment 5-AD

The Project, as proposed, would have an impact on fish and/or wildlife, and assessment of filing fees is necessary. Fees are payable upon filing of the Notice of Determination by LADWP and serve to help defray the cost of environmental review by CDFW. Payment of the fee is required for the underlying Project approval to be operative, vested, and final (Cal. Code Regs., tit. 14, § 753.5; Fish & G. Code, § 711.4; Pub. Resources Code, § 21089).

Response 5-AD

The City recognizes that the CDFW filing fee for this IS/MND is applicable and the appropriate funds will be included with the Notice of Determination (NOD) when filed with the County Clerk as required by the CEQA Guidelines Section 15094.

Comment 5-AE

The comment includes a table with all of the CDFW proposed Mitigation Measures outlined in the letter.

Response 5-AE

As discussed in the responses to comments 5-A through 5-AE, no new mitigation measures are needed to ensure less than significant effects to biological resources. The MMRP will include the modified Mitigation Measure BIO-1 that reflects CDFW's comments on bat species.

Letter 6: Diana Nicole (Sunshine Hills Residents Association)

Comment 6-A

The commenter expresses concern regarding the diversion of City plans, codes, and funds from parks and tree-oriented initiatives toward green infrastructure.

Response 6-A

The comment does not state a specific concern about the adequacy of the Draft IS/MND or otherwise comment on the contents of the Draft IS/MND analysis. The comment is noted and will be included in the Program record, but a response is not required pursuant to CEQA.

Comment 6-B

The commenter expresses concern regarding the depletion of existing trees/urban forest resources as a result of the Program.

Response 6-B

Once the stormwater capture infiltration galleries are installed, the Program sites will be returned to preconstruction condition with park improvements. The park improvements will include but are not limited to, the addition of green infrastructure elements such as landscape areas with California native drought-tolerant plant material, new irrigation system, shade trees, new lighting. The proposed Program would require the removal of existing trees; however, the removal of trees would be replaced on a trunk caliper size basis, 1-inch replaced to 1-inch removed. Any protected tree required to be removed would be replaced with 24-inch box trees at a ratio of 4:1 in accordance with the City's Tree Protection Ordinance (No.177404) and the RAP's Tree Preservation Policy. The replacement trees would be planted near the original tree's location, but if there is not adequate space, the City would coordinate with RAP to identify the closest appropriate locations for new plantings.

Comment 6-C

The commenter states that the City's protected trees, groves, and related habitat should be subject to higher conservation standards than those that are provided in the Draft IS/MND.

Response 6-C

The City would comply with the existing tree ordinance. See response to 6-B above.

Letter 7: County of Los Angeles Fire Department

Comment 7-A

The commenter provides introduction of the County of Los Angeles Fire Department.

Response 7-A

The comment is noted and will be included in the Program record.

Comment 7-B

The commenter states that since the Program is within the City, the Program would not impact the County of Los Angeles Fire Department.

Response 7-B

The comment is noted and will be included in the Program record.

Comment 7-C

The commenter states that the Program would not have an impact on the County Fire Department Land Development Unit.

Response 7-C

The comment is noted and will be included in the Program record.

Comment 7-D

The comment states that under the Los Angeles County Oak Tree Ordinance, a permit is required to cut, destroy, remove, relocate, inflict damage or encroach into the protected zone of any tree of the Oak genus which is 25 inches or more in circumference (eight inches in diameter), as measured 4 1/2 feet above mean natural grade.

Response 7-D

The Draft IS/MND describes the Oak Tree Ordinance in detail on pages 78-81. The Draft IS/MND concludes that compliance with the ordinance and RAP's Tree Preservation Policy would ensure that impacts to mature trees would not result in significant impacts.

Comment 7-E

The commenter states that the Program would not impact the Health Hazardous Materials Division.

Response 7-E

The comment is noted and will be included in the project record.

Letter 8: Joanne D'Antonio

Comment 8-A

The commenter raises objection to the proposed removal of any mature and healthy trees, most notably the eucalyptus grove at North Hollywood Park. The commenter states that this park has experienced great tree loss during the drought and that all parks are important for the physical and psychological health of residents. They provide much needed shade in the heat-island-effect-plagued San Fernando Valley. The commenters asks where the wildlife will go during construction and how disruptive construction noise may be.

Commenter would like to see the project redesigned to not remove any trees and references several reports on biodiversity and the loss of trees and tree canopy by the City of Los Angeles and Tree People.

Response 8-A

All nine project sites are currently located within developed City parks containing active recreational facilities or open disturbed areas. All nine park project sites will undergo some enhancements and improvements to the park aesthetic and recreational facilities after the installation of the projects. As stated in the IS/MND page 7, park enhancements and improvements are being designed with input from RAP and the community. The City has been coordinating the design effort with RAP and has engaged the local community through several community meetings to solicit input. Conceptual design drawings were included in the IS/MND as Figures 1-4 through 1-12 to depict the current preliminary design associated with each park project site. The stormwater capture facilities are mainly being placed beneath existing ball fields, where feasible, to minimize impacts to landscaped areas within the park. The designs for each park attempt to minimize tree removal where feasible, but as stated in section 2.4, Biological Resources, some trees will be removed in compliance with the City of Los Angeles Tree Protection Ordinance and the RAP Tree Preservation Policy for protection of native and non-native trees. The City has been in coordination with the RAP Forestry Division and none of the parks' mature or healthy trees will be removed without their approval. Revisions to the park designs are being made in coordination with RAP in order to preserve mature trees and any other trees deemed sacred by RAP. RAP has identified two eucalyptus trees at North Hollywood Park that have died and have requested these be removed as part of the project. Tree surveys will be conducted at each part project site prior to tree removal to determine which trees are protected and which trees would need replacement under the RAP Tree Preservation Policy. Further, Mitigation Measure BIO-1was included to protect wildlife species from impacts during

construction. This mitigation measure will require construction activities to occur outside of the nesting bird season or to avoid or minimize impacts to nesting birds and raptors by requiring preconstruction surveys and nest avoidance and/or monitoring during construction.

The City acknowledges that the City of Los Angeles is considered a biodiversity hotspot. As stated in the 2020 Biodiversity Report prepared by the City of Los Angeles and referenced by the commenter, the Program area would fall primarily within Ecotope 20: Los Angeles River Alluvial Plain. As shown in Appendix B, page 428 of the report, only 0.5 percent of the natural vegetation remains across the ecotope, mostly within the Sepulveda Basin. Riparian vegetation is the dominant remaining type of vegetation and provides nesting habitat for the federally endangered least Bell's vireo (*Vireo bellii pusillus*) and potentially the southwestern willow flycatcher (*Empidonax traillii extimus*). The Program site does not include riparian vegetation and is located in an area that is surrounded by a vegetation alliance characterized by urban/developed, and falls mostly within areas characterized by non-native alliances. In addition, the program site is not located within an area characterized as a natural area by the study, and it is located within areas with higher pollution and population percentiles and a lower habitat quality score due to the urban nature of its location. (City of Los Angeles 2020, pages 436 through 442) As such, although the City of Los Angeles is rich in biodiversity, construction within the Program area would not add to the decline of biodiversity in the area.

Comment 8-B

The commenter requests that all trees in the vicinity of construction be protected with orange fencing and no construction material placed under the drip line.

Response 8-B

The construction impact areas will be clearly delineated and trees to be retained will be clearly marked to avoid any impacts to them. As stated in Response 8-A, the City will comply with the City of Los Angeles Tree Protection Ordinance and the RAP Tree Preservation Policy for protection of native and non-native trees that are being retained onsite and/or are being removed.

The RAP Tree Preservation Policy is the primary regulatory tool that gives direction for orderly protection of specified trees, maintains their value, and avoids significant negative effects to the ecosystem. By assuring preservation and protection through regulation and standards of care, these resources will remain significant contributions to the environment and landscape, and continue to add to the unique character of Los Angeles City Parks. (RAP 2004).

As outlined in the Policies for the Installation and Preservation of Landscaping Trees on Public Property of Recreation and Parks Department, included as Appendix M of the City of Los Angeles RAP Urban Forest Program (RAP 2004), "whenever trees are removed, the existing trees' aggregate diameter, measured at breast height (DBH [diameter at breast height], or 4.5-feet above the ground; multi-trunk trees are to be measured immediately below the lowest trunk) shall be replaced at an equal or greater rate of caliper of new trees. Each one-inch DBH of existing tree shall be replaced with a minimum one-inch caliper new tree." For example, if an existing tree with a DBH of 24 inches is removed, the City would need to replace that tree with a newly

planted trees with a total DBH of 24 inches. The replacement tree can have a DBH of 24 inches or if smaller trees are planted, with a DBH of 2 inches, then 12 trees would be planted, or any combination that equates to the 24-inch DBH being replaced.

Comment 8-C

The commenter is concerned about imported soil and improper soil being substituted for naturally occurring soil which create the best environment for replanting. The commenter asks if there is a plan for replanting at the parks to be done with viable new trees. The commenter states that ideally construction projects such as these would not be happening in our parks.

Response 8-C

As stated on page 38 of the IS/MND, once installation of the stormwater system is complete, soils excavated from the site that are stockpiled on-site would be used to backfill the impact areas. Additional imported soils would be used to regrade as needed to return the project impact areas to pre-project conditions. The City will ensure that the soil to backfill the impacted areas would be suitable for the required design elements as shown on preliminary Figures 1-4 through 1-12 of the IS/MND including landscape planting. The City is coordinating with RAP to ensure compliance with park requirements.

Comment 8-D

The commenter states that a one-month comment period is too short to get input from neighborhood councils.

Response 8-D

The comment is noted and will be included in the project record. The CEQA Guidelines require that MNDs be circulated for a total of 30 days per Section 15105(b).

4.2 Changes Made to the Draft IS/MND

The City has made the following changes to the Draft IS/MND and has incorporated them into the Final IS/MND. These modifications clarify, amplify, or make minor changes to the Draft IS/MND. Revisions to the Draft IS/MND have not resulted in new significant impacts or increased the severity of an impact.

Where the responses indicate additions or deletions to the text of the Draft IS/MND, additions are included as <u>underlined text</u>, deletions as ~~stricken text~~. The changes are listed by section and page number.

4.2.1 Changes Made in Response to Comments

Clarification/Revision

The following modifications have been made to page 75 of the Draft IS/MND to augment Mitigation Measure BIO-1 for the inclusion of bat surveys.

Section 2.4, Biological Resources – Page 75

Mitigation Measure

BIO-1: Special-Status Wildlife Species. Construction activities at any of the nine park project sites could result in impacts to the Cooper's hawk (*Accipiter cooperii*), a California Species of Special Concern, where mature trees are present. Similarly, construction activities may also impact other nesting bird species that may nest in a variety of vegetation as well as man-made structures. Construction activities should occur outside of the avian nesting season. If the avian nesting season cannot be avoided and construction or vegetation removal occurs from February 1 to September 1, the City ~~project~~ shall implement the following to avoid and minimize impacts to nesting birds and raptors:

- During the avian breeding season, a qualified biologist shall conduct a preconstruction avian nesting survey no more than 7 days prior to vegetation disturbance or ground-disturbing activities. If construction begins in the non-breeding season and proceeds continuously into the avian nesting season, no surveys are required. However, if there is a break of 7 days or more in construction activities during the nesting season, a new nesting bird survey shall be conducted before construction begins again.
- The preconstruction survey shall cover all reasonably potential nesting locations on and within 100 feet of the construction areas. A 300-foot radius shall be surveyed in areas containing suitable habitat for nesting raptors, such as trees and utility poles.
- If an active nest is found during the preconstruction avian nesting survey, a qualified biologist shall designate a suitable buffer for all passerine birds and raptor species. The nest site area shall not be disturbed until the nest becomes inactive, the young have fledged, the young are no longer being fed by the parents, the young have left the area, and the young will no longer be impacted by the project. Buffer areas may be increased upon recommendation of a qualified biologist if any endangered, threatened, California Fully Protected, or California Species of Special Concern are identified during preconstruction surveys.
- If the nest(s) are found in an area where ground disturbance is scheduled to occur, the City or its contractor shall avoid the area by delaying ground disturbance in the area until a qualified biologist has determined that the birds have fledged and are no longer reliant upon the nest or parental care for survival.
- Prior to removal of trees in any of the Program sites, the City shall retain a qualified bat specialist to conduct bat surveys to confirm whether bats are using the trees as roosting sites. The surveys should encompass a minimum buffer area of 100 feet around the Program sites. The results of the surveys will be provided to CDFW. In the event that bat roosts are identified, an additional bat species survey will be conducted using acoustic survey techniques necessary to confirm the species of bat using the area. If the species survey concludes that sensitive bat species are present, the City shall consult with CDFW pursuant to the California Fish and Game Code section 2081. Removal of special status bats would not be conducted without prior approval from CDFW.

4.2.2 Changes Made by the Lead Agency

Clarification/Revision

The following modifications have been made to page 1 of the Draft IS/MND to include The Metropolitan Water District of Southern California (Metropolitan) as a Responsible Agency of the Program.

Section 1.0, Project Description – Page 1

1.1 Introduction

The City of Los Angeles Department of Water and Power (LADWP), Department of Public Works (Bureau of Engineering [BOE]), Los Angeles Sanitation and Environment (LASAN), and City of Los Angeles Department of Recreation and Parks (RAP), collectively referred to herein as the City, propose to implement the Stormwater Capture Parks Program (Program). The Program would include construction of stormwater capture facilities at nine City-owned parks to help capture surface flow and divert stormwater runoff from the Tujunga Wash Central Branch storm drain to recharge the San Fernando Groundwater Basin. All nine parks are located in the east San Fernando Valley along State Route (SR) 170 (**Figure 1-1**); these parks include: David M. Gonzales Recreation Center; Fernangeles Park; Strathern Park North; Whitsett Fields Park North; Valley Plaza Park North; Valley Plaza Park South; Alexandria Park; North Hollywood Park; and Valley Village Park (**Figure 1-2**).

The City is proposing to obtain financial assistance for the park projects through the Stormwater for Recharge Pilot Program (Recharge Pilot) that is administered by The Metropolitan Water District of Southern California (Metropolitan). The Recharge Pilot encourages development and monitoring of new and existing stormwater recharge projects by providing financial incentives for construction and/or monitoring equipment installation of project and supplemental reporting costs.

Metropolitan offers different incentive amounts for the Recharge Pilot based on project type (New Construction or Monitoring Equipment Installation):

<table>
<tr><td>PROJECT TYPE</td><td colspan="2">FUNDING COMPONENTS</td></tr>
<tr><td></td><td>Construction/Installation</td><td>Monitoring & Reporting</td></tr>
<tr><td rowspan="2">Monitoring Equipment Installation</td><td>Up to $350,000 reimbursement for eligible costs</td><td>$50,000/report</td></tr>
<tr><td colspan="2">Maximum of $500,000</td></tr>
<tr><td rowspan="2">New Construction</td><td>Up to 50% reimbursement of eligible costs, max of $850,000</td><td>$50,000/report</td></tr>
<tr><td colspan="2">Maximum of $1 million</td></tr>
</table>

The City has chosen the New Construction Project Type.

As a Responsible Agency, Metropolitan's Board of Directors will review and consider the proposal and environmental documentation prepared by the City in determining whether or not to approve financial assistance for the Program within the Recharge Pilot administrative process.

The Program would be consistent with Metropolitan's commitment to develop Recharge Pilot activities that would provide a better understanding of the connection between captured stormwater and water supply yield.

Clarification/Revision

The following modifications have been made to pages 82 and 83 of the Draft IS/MND to update the name of the library.

Section 2.5, Cultural Resources – Pages 82 and 83

Page 82

Less than Significant Impact with Mitigation. The cultural resources assessment identified three historic architectural resources within the Program area. These resources include: the David M. Gonzales Recreation Center featuring a clubhouse building dating to the park's period of significance of 1950 located approximately 65 feet from the Program construction footprint; North Hollywood Park featuring a maintenance building and pool house (65 feet and 100 feet from the Program construction footprint, respectively) and the North Hollywood Amelia Earhart Regional ~~Branch~~ Library (located 100 feet from the Program construction footprint) dating to the park's period of significance of 1928–1931; and the 170 Freeway Pedestrian Overpass connecting Valley Plaza Park North and Whitsett Fields Park North located approximately 90 feet from a proposed diversion structure in Valley Plaza Park North. The North Hollywood Amelia Earhart Regional ~~Branch~~ Library is National Register of Historic Places (NRHP)-listed and, therefore qualifies as a historical resource.

Page 83

Mitigation Measures

CUL-1: In the event Program designs are further refined and individual Program site components change to encroach more closely than 50 feet to the North Hollywood Amelia Earhart Regional ~~Branch~~ Library (P-19-167303), the pool house and maintenance building associated with North Hollywood Park, the clubhouse associated with the David M. Gonzales Recreation Center, and/or the 170 Freeway Pedestrian Overpass, the City shall retain a qualified architectural historian meeting the Secretary of the Interior's Standards for Architectural History to review design plans for conformance with the Secretary of the Interior's Standards for the Treatment of Historic Properties (Standards). Should potential Program redesign not conform to the Standards, the City shall work with the qualified architectural historian to mitigate impacts to these resources. Should Program redesign place Program components within 50 feet of these resources, the qualified architectural historian shall also assess potential construction-related impacts resulting from ground-borne vibration. Should ground-borne vibrations have the potential to impact the historical resources, the City and the qualified architectural historian shall develop a plan to monitor ground-borne vibration during construction to ensure it does not exceed thresholds that could damage, or otherwise alter the historical resources.

SECTION 5
Mitigation Monitoring and Reporting Program

The Mitigation Monitoring and Reporting Program (MMRP) for the proposed Program has been prepared in accordance with Public Resources Code section 21081.6 and State CEQA Guidelines section 15091(d). The City will use this MMRP to track compliance with the Program mitigation measures. The City will consider the MMRP during the certification hearing for the Final IS/MND. The MMRP will incorporate all mitigation measures adopted for the proposed Program.

This MMRP summarizes potentially significant impacts and mitigation commitments identified in the Stormwater Capture Parks Program IS/MND. Table 5-1 provides the MMRP which includes all mitigation measures, monitoring/reporting action, monitoring timing, and responsible person(s) for implementation. Impacts and mitigation measures are presented in the same order as in the IS/MND. The columns in the table provide the following information:

- **Mitigation Measures:** The action(s) that will be taken to reduce the impact to a less-than-significant level.
- **Monitoring /Reporting Action:** This column outlines the appropriate steps to implement and verify compliance with the mitigation measures.
- **Monitoring Timing:** This column indicates the general schedule for conducting each monitoring task, either prior to construction, during construction, and/or after construction.
- **Responsible Person(s):** This column lists the agency responsible for ensuring implementation of the mitigation measure.

TABLE 5-1
MITIGATION MONITORING AND REPORTING PROGRAM - STORMWATER CAPTURE PARKS PROGRAM

Mitigation Measure	Monitoring / Reporting Action	Monitoring Timing	Responsible Person(s)
Air Quality			
AQ-1: Construction of the Program shall incorporate the following conditions: a. For all Program sites: The Program shall use off-road diesel-powered construction equipment that meets or exceeds the CARB and USEPA Tier 4 off-road emissions standards for equipment rated at 50 horsepower or greater and not identified under b or c. below. Such equipment will be outfitted with Best Available Control Technology (BACT) devices, including a CARB-certified Level 3 Diesel Particulate Filter or equivalent. These requirements shall be included in applicable bid documents and successful contractor(s) must demonstrate the ability to supply such equipment. b. All dumpers/tenders used on-site shall either be certified Tier 3 with a CARB-certified Level 3 Diesel Particulate Filter or equivalent; certified Tier 4 with a CARB-certified Level 3 Diesel Particulate Filter or equivalent, or alternatively fueled (e.g., gasoline, electric, CNG). c. At a minimum, the following equipment shall be electric: air compressors, cement and mortar mixers, concrete saws, forklifts, pumps. Diesel generators shall be replaced with electricity from the grid either permanent or temporary, or replaced with alternative (non-diesel) fuels. d. Equipment requirements identified under a, b, and c above shall be included in applicable bid documents and successful contractor(s) must demonstrate the ability to supply such equipment. A copy of each unit's certified tier specification or model year specification and CARB or SCAQMD operating permit (if applicable) shall be available upon request at the time of mobilization of each applicable unit of equipment. e. During the site clearing and preparation, grading and excavation, and soil filling, revegetation, and park improvement phases, watering must be conducted a minimum of 4 times per day during dry weather. f. For Valley Plaza Park North only 2 dozers are allowed to operate on any portion of the site at one time. g. The City shall ensure: i. On-road haul trucks including delivery and those conveying excavated material do not exceed the following daily truck limits: 1. 185 trucks when 2 parks are concurrently under construction; 2. 180 trucks when 3 parks are currently under construction; 3. 170 trucks when 4 parks are concurrently under construction; 4. 160 trucks when 5 parks are concurrently under construction; 5. 150 trucks when 6 parks are concurrently under construction; 6. 140 trucks when 7 parks are concurrently under construction. Or;	Site Monitoring	Prior to Construction During Construction	The City Construction Contractor

Mitigation Measure	Monitoring / Reporting Action	Monitoring Timing	Responsible Person(s)
ii. If the fleet is composed of a mix of 2014 or newer trucks, the City shall ensure that on-road haul trucks including delivery and those conveying excavated material do not exceed the following daily truck limits: 1. 240 trucks when 2 parks are concurrently under construction; 2. 230 trucks when 3 parks are concurrently under construction; 3. 220 trucks when 4 parks are concurrently under construction; 4. 210 trucks when 5 parks are concurrently under construction; 5. 200 trucks when 6 parks are concurrently under construction; 6. 190 trucks when 7 parks are concurrently under construction.			
Biological Resources			
BIO-1: Special-Status Wildlife Species. Construction activities at any of the nine park project sites could result in impacts to the Cooper's hawk (*Accipiter cooperii*), a California Species of Special Concern, where mature trees are present. Similarly, construction activities may also impact other nesting bird species that may nest in a variety of vegetation as well as man-made structures. Construction activities should occur outside of the avian nesting season. If the avian nesting season cannot be avoided and construction or vegetation removal occurs from February 1 to September 1, the City shall implement the following to avoid and minimize impacts to nesting birds and raptors: ● During the avian breeding season, a qualified biologist shall conduct a preconstruction avian nesting survey no more than 7 days prior to vegetation disturbance or ground-disturbing activities. If construction begins in the non-breeding season and proceeds continuously into the avian nesting season, no surveys are required. However, if there is a break of 7 days or more in construction activities during the nesting season, a new nesting bird survey shall be conducted before construction begins again. ● The preconstruction survey shall cover all reasonably potential nesting locations on and within 100 feet of the construction areas. A 300-foot radius shall be surveyed in areas containing suitable habitat for nesting raptors, such as trees and utility poles. ● If an active nest is found during the preconstruction avian nesting survey, a qualified biologist shall designate a suitable buffer for all passerine birds and raptor species. The nest site area shall not be disturbed until the nest becomes inactive, the young have fledged, the young are no longer being fed by the parents, the young have left the area, and the young will no longer be impacted by the Program. Buffer areas may be increased upon recommendation of a qualified biologist if any endangered, threatened, California Fully Protected, or California Species of Special Concern are identified during preconstruction surveys. ● If the nest(s) are found in an area where ground disturbance is scheduled to occur, the City or its contractor shall avoid the area by delaying ground disturbance in the area until a qualified biologist has determined that the birds have fledged and are no longer reliant upon the nest or parental care for survival. ● Prior to removal of trees in any of the parks, the City shall retain a qualified bat specialist to conduct bat surveys to confirm whether bats are using the trees as roosting sites. The	Site Survey by a Qualified Biologist	Prior to Construction During Construction	The City

Mitigation Measure	Monitoring / Reporting Action	Monitoring Timing	Responsible Person(s)
surveys should encompass a minimum buffer area of 100 feet around the parks. The results of the surveys will be provided to CDFW. In the event that bat roosts are identified, an additional bat species survey will be conducted using acoustic survey techniques necessary to confirm the species of bat using the area. If the species survey concludes that sensitive bat species are present, the City shall consult with CDFW pursuant to the California Fish and Game Code section 2081. Removal of special status bats would not be conducted without prior approval from CDFW.			
Cultural Resources			
CUL-1: In the event Program designs are further refined and individual park project components change to encroach more closely than 50 feet to the North Hollywood Amelia Earhart Regional Library (P-19-167303), the pool house and maintenance building associated with North Hollywood Park, the clubhouse associated with the David M. Gonzales Recreation Center, and/or the 170 Freeway Pedestrian Overpass, the City shall retain a qualified architectural historian meeting the Secretary of the Interior's Standards for Architectural History to review design plans for conformance with the Secretary of the Interior's Standards for the Treatment of Historic Properties (Standards). Should potential Program redesign not conform to the Standards, the City shall work with the qualified architectural historian to mitigate impacts to these resources. Should Program redesign place Program components within 50 feet of these resources, the qualified architectural historian shall also assess potential construction-related impacts resulting from ground-borne vibration. Should ground-borne vibrations have the potential to impact the historical resources, the City and the qualified architectural historian shall develop a plan to monitor ground-borne vibration during construction to ensure it does not exceed thresholds that could damage, or otherwise alter the historical resources.	Plan Preparation Site Monitoring by a Qualified Archeologist Historian	Prior to Construction During Construction	The City
CUL-2: Prior to the start of ground-disturbing activities, the City shall retain a qualified archaeologist meeting the Secretary of the Interior's Professional Qualifications Standards for archaeology (U.S. Department of the Interior, 2008) to carry out the following cultural resources mitigation measures.	Site Monitoring by a Qualified Archeologist	Prior to Construction During Construction	The City
CUL-3: Prior to start of ground-disturbing activities, the qualified archaeologist shall prepare a cultural resources sensitivity training module to be used as part of the City's Worker Environmental Awareness Program (WEAP) training. All construction personnel shall receive sensitivity training prior to beginning work onsite. Construction personnel should be informed of the types of archaeological resources that may be encountered, and of the proper procedures to be enacted in the event of an inadvertent discovery of archaeological resources or human remains. The City should ensure that construction personnel are made available for and attend the training and retain documentation demonstrating attendance.	Personnel Training by a Qualified Archeologist	Prior to Construction During Construction	The City Construction Contractor
CUL-4: Prior to the start of any project-related ground-disturbing activities, the qualified archaeologist shall prepare a Cultural Resources Monitoring Plan (CRMP) in consultation with Tribes that requested consultation under AB52. The CRMP shall stipulate the location and timing of archaeological and Native American monitoring, which shall include all ground-disturbing activities in each of the nine parks that exceed the depths of undocumented fill as documented by geotechnical testing. The qualified archaeologist shall review engineering plans for each of the nine parks to determine where ground-disturbing activities will exceed the depths of undocumented fill at each park to determine the timing and locations of monitoring to be included in the CRMP. The CRMP shall include monitoring protocols to be carried out during Program-related construction. The CRMP shall stipulate that Native	Plan Preparation Site Monitoring by a Qualified Archeologist	Prior to Construction During Construction Post Construction	The City

Mitigation Measure	Monitoring / Reporting Action	Monitoring Timing	Responsible Person(s)
American monitors associated with any of the Tribes that have been consulted with under AB52 be retained to monitor Program-related ground disturbance stipulated in the CRMP. The CRMP shall contain an allowance that the Qualified Archaeologist, based on observations of subsurface soil stratigraphy or other factors during initial grading, and in coordination with the Native American monitor(s) and the City, may reduce or discontinue monitoring as warranted if it is determined that the possibility of encountering archaeological deposits is low. The CRMP shall outline the appropriate measures to be followed in the event of unanticipated discovery of cultural resources during Program implementation, including that all ground disturbance within 100 feet of an unanticipated discovery shall cease until a treatment plan is developed by the qualified archaeologist in coordination with the City and the Native American monitor(s) and which will consider the resources archaeological and tribal value. The CRMP shall identify avoidance as the preferred manner of mitigating impacts to cultural resources. The CRMP shall establish the criteria utilized to evaluate the significance (per CEQA) of the discoveries, methods of avoidance consistent with CEQA Guidelines Section 15126.4(b)(3), as well as identify the appropriate treatment to mitigate the effect of the Program if avoidance of a significant resource is determined to be infeasible. The CRMP will also include provisions for the treatment of archaeological sites that qualify as unique archaeological resources pursuant to Public Resources Code Section 21083.2, which places limits on the costs of mitigation for unique archaeological resources. The plan shall also require the preparation of a monitoring report following the completion. The monitoring report will be submitted to the City for review and comment and a final copy will be filed at the SCCIC. The CRMP shall be submitted to the City and the appropriate Native American representatives who have been consulted with under AB52 for review prior to the start of Program-related ground disturbance.			
CUL-5: In the event of the unanticipated discovery of archaeological materials during Program implementation, all work shall immediately cease in the area (within approximately 100 feet) of the discovery until it can be evaluated by the qualified archaeologist. Construction shall not resume until the qualified archaeologist has conferred with the City and the Native American monitors on the significance of the resource. If it is determined that the discovered archaeological resource constitutes a significant resource, avoidance and preservation in place is the preferred manner of mitigation. Preservation in place may be accomplished by, but is not limited to, avoidance, incorporating the resource into open space, capping, or deeding the site into a permanent conservation easement. In the event that preservation in place is demonstrated to be infeasible and data recovery through excavation is the only feasible mitigation available, a Cultural Resources Treatment Plan shall be prepared and implemented by the qualified archaeologist in consultation with the City and Native American monitors that provides for the adequate recovery of the scientifically consequential information contained in the archaeological resource. The City shall consult the appropriate Native American representatives in determining treatment and disposition for prehistoric or Native American resources to ensure cultural values ascribed to the resource beyond those that are scientifically important are considered.	Site Monitoring by a Qualified Archeologist	During Construction	The City Construction Contractor
CUL-6: If human remains are encountered, all work shall halt in the vicinity (within 100 feet) of the find and the Los Angeles County Coroner shall be contacted in accordance with PRC Section 5097.98 and Health and Safety Code Section 7050.5. If the County Coroner determines that the remains are Native American, the NAHC will be notified in accordance with Health and Safety Code Section 7050.5, subdivision (c), and PRC Section 5097.98 (as amended by Assembly Bill 2641). The NAHC will designate a Most Likely Descendent (MLD) for the remains per PRC Section 5097.98. Until the landowner has conferred with the MLD, the City shall ensure that the immediate vicinity where the discovery occurred is not disturbed by further activity, is adequately protected according to generally	Site Inspection	During Construction	The City

Mitigation Measure	Monitoring / Reporting Action	Monitoring Timing	Responsible Person(s)
accepted cultural or archaeological standards or practices, and that further activities take into account the possibility of multiple burials.			
Geology and Soils			
GEO-1: The City shall implement the recommendations provided in the geotechnical investigations for each of the park project sites. In the event that the depth to groundwater rises to less than 50 feet bgs as measured in nearby wells, the stormwater infiltration process shall be stopped and the stormwater routed to the surface storm drain system until groundwater depths decrease to below 50 bgs.	Site Monitoring	During Construction Post Construction	The City
GEO-2: Prior to the start of construction activities, the City shall retain a Qualified Paleontologist that meets the standards of the Society of Vertebrate Paleontology (2010) to carry out all mitigation measures related to paleontological resources.	Site Monitoring	Prior to Construction During Construction	The City
GEO-3: Prior to start of any ground-disturbing activities, the Qualified Paleontologist shall contribute to any construction worker cultural resources sensitivity WEAP training materials outlined in Mitigation Measure CUL-2, either in person or via a training module provided to the Qualified Archaeologist. This training shall include information on what types of paleontological resources could be encountered during excavations, what to do in case an unanticipated discovery is made by a worker, and laws protecting paleontological resources. All construction personnel shall be informed of the possibility of encountering fossils and instructed to immediately inform the construction foreman or supervisor if any fossils are unexpectedly unearthed in an area where a paleontological monitor is not present. The City shall ensure that construction personnel are made available for and attend the training and retain documentation demonstrating attendance.	Personnel Training by a Qualified Paleontologist	Prior to Construction During Construction	The City
GEO-4: The Qualified Paleontologist shall supervise a paleontological monitor meeting the Society for Vertebrate Paleontology standards (2010) who shall be present during all excavations exceeding 15 feet. Monitoring shall consist of visually inspecting fresh exposures of rock for larger fossil remains and, where appropriate, collecting wet or dry screened sediment samples of promising horizons for smaller fossil remains. Monitoring can be reduced to part-time inspections or ceased entirely if determined adequate by the Qualified Paleontologist in consultation with the City. Monitoring activities shall be documented in a Paleontological Resources Monitoring Report to be prepared by the Qualified Paleontologist at the completion of construction and shall be provided to the City and filed with the Natural History Museum of Los Angeles County within 6 months of Program completion.	Site Monitoring by a Qualified Paleontologist	During Construction	The City
GEO-5: If a unique geologic feature or paleontological resource is discovered during construction, the paleontological monitor shall be empowered to temporarily divert or redirect grading and excavation activities in the area of the exposed fossil to facilitate evaluation of the discovery. An appropriate buffer area shall be established by the Qualified Paleontologist around the find where construction activities shall not be allowed to continue. Work shall be allowed to continue outside of the buffer area. At the Qualified Paleontologist's discretion and to reduce any construction delay, the grading and excavation contractor shall assist in removing rock samples for initial processing and evaluation of the find. All significant fossils shall be collected by the paleontological monitor and/or the Qualified Paleontologist. Collected fossils shall be prepared to the point of identification and catalogued before they are submitted to their final repository. Any fossils collected shall be curated at a public, non-profit institution with a research interest in the materials, such as the Los Angeles County Natural History	Site Monitoring by a Qualified Paleontologist	During Construction	The City

Mitigation Measure	Monitoring / Reporting Action	Monitoring Timing	Responsible Person(s)
Museum, if such an institution agrees to accept the fossils. If no institution accepts the fossil collection, they shall be donated to a local school in the area for educational purposes. Accompanying notes, maps, and photographs shall also be filed at the repository and/or school.			
Hazards and Hazardous Materials			
HAZ-1: The City or its construction contractor shall ensure that fueling of vehicles or storage of fuel or other chemicals would occur at the furthest extent possible from an existing school site.	Site Monitoring	During Construction	The City Construction Contractor
HAZ-2: For all schools located adjacent to a proposed work area, the City shall coordinate school safety routes, which should include, but not be limited to: ● Maintaining in place all crosswalks along the safe routes to and from the school (for Pacoima Charter School these would include Norris Avenue, Van Nuys Boulevard, Pierce Street, and Herrick Avenue). ● Designating a safe location for school buses and parents to drop off and pick up students. ● Designating a safe parking area for parents to wait for/pick up school children. ● Maintaining sidewalks open to pedestrian traffic during construction. ● Additional safety measures must be adopted during construction to protect the students and the public, including k-railing, secured fencing with screen, clear signing, temporary striping, and a flagger for trucks entering and existing the construction zone. Flaggers should also be considered at crosswalks while students are present. ● Close coordination with the impacted school and the Los Angeles Unified School District for input on the school safety route design and frequent communication during construction. ● Extensive outreach program for the school and the community describing safety measures and construction schedules. ● Restrict construction times to avoid before and after school timeframes while children may be walking to and from school, and while school is in session, as feasible.	Safety Planning Notification Site Monitoring	During Construction	The City Construction Contractor
HAZ-3: The City and its contractor shall conduct further investigation of the nature and extent of landfill materials and contaminated soil at the Strathern Park North site, under the oversight of the City of Los Angeles Local Enforcement Agency (LEA). Undocumented waste shall be delineated and sampled for chemicals of concern related to waste materials. The project shall avoid construction within the delineated waste mass, as feasible. If avoidance of the waste mass is not feasible, the City shall submit a work plan to the LEA that documents the results of the waste delineation, details the specifics of the construction project and how it relates to the onsite waste, describes the procedures for dealing with the waste, and outlines the environmental monitoring procedures that would be implemented during construction. Upon approval of the work plan, the City and its contractor shall remove the landfill materials and any soil with chemical concentrations above regulatory action levels to the satisfaction of the LEA and properly dispose of it at a permitted facility. An as-built report shall be submitted to the LEA after completion of the project.	Site Survey Plan Preparation	Prior to Construction During Construction Post Construction	The City

Mitigation Measure	Monitoring / Reporting Action	Monitoring Timing	Responsible Person(s)
Noise			
NOI-1: For construction activities adjacent to noise-sensitive receptors (e.g., residences and schools), the contractor shall ensure that all construction equipment, fixed or mobile, are equipped with properly operating and maintained noise shielding and muffling devices, consistent with manufacturers' standards. The contractor shall use muffler systems (e.g., absorptive mufflers) that provide a minimum reduction of 5 dBA compared to the same equipment without an installed muffler system, reducing maximum construction noise levels. The contractor shall keep documentation on-site demonstrating that the equipment has been maintained in accordance with the manufacturers' specifications. The contractor shall also keep documentation on-site verifying compliance with this measure.	Site Monitoring	During Construction	The City Construction Contractor
NOI-2: For construction activities adjacent to noise-sensitive receptors (e.g., residences and schools), where physically and technically feasible, the contractor shall provide an 8-foot-tall to 20-foot-tall temporary fence or other barrier placed between the project construction area and the sensitive receptor with a performance standard of achieving a 15 dBA noise level reduction at the sensitive receptors. The temporary fence or barrier shall be used during peak noise-generating construction phases when the use of heavy equipment is prevalent. A noise barrier is not required if it would pose a safety risk or unreasonably prevent access to the construction area as deemed by the on-site construction manager, such as in areas that have limited equipment maneuvering space or access.	Temporary Fence/Barrier Site Monitoring	During Construction	The City Construction Contractor
NOI-3: Limit engine idling of construction equipment (e.g., haul trucks, loaders) to a minimum of 200 feet from any boundary of the nearest sensitive receptors.	Site Monitoring	During Construction	The City Construction Contractor
NOI-4: Prior to commencement of construction activities, the City shall notify in writing adjacent residents, schools and businesses near the various park project sites, of proposed construction activities and the tentative schedule. The notices shall also provide a contact person and hotline where local residents, schools, or business owners can call during active construction with questions or comments. The City shall respond to inquiries regarding construction noise and vibration. Notices and construction signs will include a website address which will be updated quarterly and will include Program-related information.	Notification	Prior to Construction	The City
NOI-5: The operation of construction equipment that generates high levels of vibration, such as large bulldozers and loaded trucks, shall be prohibited within 45 feet of the property lines of existing residential and school uses adjacent to the various park project sites. Instead, rubber-tired equipment not exceeding 247 horsepower shall be used in these areas during construction within 45 feet from the sensitive receptor locations.	Site Monitoring	During Construction	The City Construction Contractor
Transportation			
TR-1: For parks where construction would occur outside of park facilities or that may impact roadways surrounding park areas, a CTMP shall be developed by the City or its contractor and approved by LADOT prior to the start of construction. The CTMP may include, but is not limited to the following:	Plan Preparation Site Survey Notification	Prior to Construction During Construction	The City Construction Contractor

Mitigation Measure	Monitoring / Reporting Action	Monitoring Timing	Responsible Person(s)
• Work area traffic control plans for all in-street construction sites to the satisfaction of LADOT, as appropriate prior to the start of any construction work. The plans shall include such elements as the location of any lane closures, restricted hours during which lane closures would not be allowed, local traffic detours, protective devices and traffic controls (such as pavement markings, barricades, cones, flagmen, lights, warning beacons, temporary traffic signals, turning movement restrictions, warning signs), access to abutting properties, and provisions to maintain emergency access through construction work areas. • The dates and locations where in-street and off-street construction activities are planned. • If any street segments will be limited to one-way traffic, prepare detour plans over parallel routes. • Require signage indicated alternative routes where construction will occur. • Identify and consolidate staging areas for equipment and materials, as feasible. • Consolidate truck trips, such that multiple worksites can be served, as feasible. • Promote carpooling among workers. • Contact emergency service providers in the project vicinity to notify of the location, hours, and duration of in-street construction. Provide advance notice of any lane closures and changes to local access and identity alternative routes where appropriate.			

References

City of Los Angeles, 2015. Stormwater Capture Master Plan. August 2015.

City of Los Angeles, 2018. One Water LA 2040 Plan. Chapters 3 and 4. April 2018.

City of Los Angeles Recreation and Parks Department (RAP), 2004. Urban Forest Program. October 2004.

County of Los Angeles, 2021. LA River Master Plan, January 2021.

Southern California Coastal Water Research Project (SCCWRP), 2021a. Biological Needs Assessment.

SCCWRP, 2021b, Process and Decision Support Tools for Evaluating Flow Management Targets to Support Aquatic Life and Recreational Beneficial Uses of the Los Angeles River *Los Angeles River Environmental Flows Project;* Technical Report #1196

NOTICE OF PROPOSED PROJECT,

FIRST NOTICE

Vishal Mandalia <vishal.mandalia@lacity.org>

First Notice: WO # EW40079D - Fernangeles Park Stormwater Capture Project

Frank Gonzalez <frank.gonzalez@lacity.org> Mon, Nov 1, 2021 at 3:10 PM
To: Vishal Mandalia <vishal.mandalia@lacity.org>

Hi Vishal,

Please use this email as confirmation ITA does not have any conflicts within your improvement area, nor anywhere near it.

Thanks
[Quoted text hidden]

CITY OF LOS ANGELES
DEPARTMENT OF PUBLIC WORKS
BUREAU OF ENGINEERING

Date: November 1, 2021

The Department of Public Works is scheduling the following improvements:

Project Title: **FERNANGELES RECREATION CENTER STORMWATER CAPTURE PROJECT**
Work Order No.: **EW40079D** **Job ID:** **1455**

Work to Be Performed: The Project consists of installing a 1.7-acre underground infiltration gallery to capture and infiltrate stormwater. Construction of the underground infiltration gallery will include installation of three catch basin inlets, pipes, a cross gutter, a pretreatment device, a flow measuring device, level sensors, and educational signage. Runoff will be collected from approximately 317-acre tributary areas and diverted into the infiltration gallery. The galleries shall be sized to store approximately 1,008,000 cf.

The project will include restoration of existing park components as well as new improvements. Park improvements include park improvements such as two (2) improved baseball fields with the following amenities: backstops, dugouts, player benches, batting cage, bullpens, sports lighting, and bleachers. Other improvements include a walking path around the park, landscaping, hydration stations, and an improved irrigation system.

Please fill out the following and return one copy to the Utility Coordination Group by **December 2, 2021**.
PLEASE UPLOAD A COPY OF YOUR AS-BUILT PLANS, IN THE LINK PROVIDED IN THE EMAIL, SHOWING THE LOCATION OF YOUR FACILITIES (IN OR AROUND THE PROJECT AREA).

Your replies will be transmitted to prospective bidders and used in coordinating this project. Please note proper location of any facilities, live or abandoned, that are not shown or are shown incorrectly on the attached plans. The City will not be responsible for any damage to facilities that are not shown or are shown incorrectly on the plans. Failure to reply may deprive you of the protection provided for in the Standard Specifications. Construction delays and/or expenses due to failure in providing accurate information shall result in an assessment of costs to you, per Los Angeles Municipal Code (LAMC) 62.01 or your Franchise Agreement with the City.

Upon receipt and review of your response(s), the City will contact you to formalize your utility relocation (or protect-in-place) plan, with a utility relocation agreement if necessary.

For questions, please contact the Project Manager **Bryan Powell** at (213) 485-5908 or **bryan.powell**@lacity.org .

Thomas Guide Page: 502 Grids: F7
532 F1

Thank you,

Reynaldo Sison, PE
Project Award and Control Division
Bureau of Engineering

☐ (1) Have prior rights. (Submit proof to our office within 30 days.)
☐ (2) Do not have facilities within the proposed project area.
☒ (3) Have facilities that will **not require relocation/adjustment** but will mark them upon request. Protect in place existing LADWP Power facilities
  (a) ☐ The accompanying recorded plans show facilities not delineated on the project plans.
  (b) ☐ The project plans correctly show our present utility locations.
☐ (4) Have facilities that will **require relocation/adjustment**. The facilities are delineated on the enclosed plan.
  (a) ☐ The following work is contemplated: _____
  (b) ☐ Estimated working days required for construction: _____
  (c) ☐ Construction may begin on _____ and conclude on _____
  (d) ☐ Work will **require** coordination with the contractor. (**EXPLAIN FULLY**).

For Paving Clearance, call: _____ Phone: _____ Station: _____

Return one copy of this First Notice to
Attn: Vishal Mandalia
Department of Public Works
Bureau of Engineering,
Project Award and Control Division
Utility Coordination Group (Mail Stop 501)
1149 S. Broadway, Suite 140
Los Angeles, CA 90015-2213
Tel. (213) 485-4506
Email: **vishal.mandalia**@lacity.org

LADWP Power	213-367-2715
Company Name	Phone No.
Gibson Phan	
Representative (Print Name)	
DWPPS.Coordination@ladwp.com	
E-mail Address	
Gibson Phan	12/3/21
Signature	Date

Vishal Mandalia <vishal.mandalia@lacity.org>

First Notice: WO # EW40079D - Fernangeles Park Stormwater Capture Project

SCG-ComptonUtilityRequest <SCG-ComptonUtilityRequest@semprautilities.com> Tue, Nov 9, 2021 at 9:07 AM
To: Vishal Mandalia <vishal.mandalia@lacity.org>

Plan File 44-21-0701

From: Vishal Mandalia <vishal.mandalia@lacity.org>
Sent: Monday, November 1, 2021 2:21 PM
To: Sum, Jason <JSum@socalgas.com>; NorthwestDistributionUtilityRequest <NorthwestDistributionUtilityRequest@semprautilities.com>; SCG-ComptonUtilityRequest <SCG-ComptonUtilityRequest@semprautilities.com>
Subject: [EXTERNAL] First Notice: WO # EW40079D - Fernangeles Park Stormwater Capture Project

*** EXTERNAL EMAIL - Be cautious of attachments, web links, and requests for information ***

Hello SCG-Distribution,

Please find the proposed project above with the link below and download the Notice and plans. Please investigate your utility in the vicinity of this project and mark up the Notice accordingly. Access the link **using only the email address at which you are receiving this link, and according to the directions in the attached PDF. Be sure to sign out of any Microsoft accounts as well as out of any email addresses other than the one to which the link was sent for OneDrive to work properly.**

https://engsvcs.sharepoint.com/:f:/s/UtilityNotices/EkczGFdeQLxDlGnQOTsZtIBB-g-V0ziyRNVNQaR3EqhWQ?e=ThtvRi [engsvcs.sharepoint.com]

The next link below directs you to a folder to upload the marked-up Notice and any additional correspondence, plans, etc. Access the link **using only the email address at which you are receiving this link, and according to the directions in the attached PDF. Be sure to sign out of any Microsoft accounts as well as out of any email addresses other than the one to which the link was sent.**

https://engsvcs.sharepoint.com/:f:/s/UtilityNotices/Ekeear8enOlNtEfbedb_-3UBhFm2CWdKr2OjUSMG3OWt9g?e=gpJ9uy [engsvcs.sharepoint.com]

After clicking on the above links, a new tab will open and will ask to email you the code to access the folder. The code will be sent to the same utility email used here. After clicking "Send Code" and receiving the code via email, enter this code to gain access. It is possible the code number may go to your spam folder so please check this folder as well if you do not see the email in your inbox for a few seconds.

The links above will only be effective for 30 days. Do not forward the links to anyone, as they do not have permission to access the folders for which the links are created.

Thank you

Vishal Mandalia, EIT

Project Award and Control Division | Civil Engineering Associate I

Bureau of Engineering | Department of Public Works

1149 S. Broadway, Suite 140

Los Angeles, CA 90015

Mail Stop 501

Work: 213-485-4506

Vishal.Mandalia@lacity.org



This email originated outside of Sempra. Be cautious of attachments, web links, or requests for information.

Map Print.pdf
1831K

100 0 100 200 300 400 Feet

SHELDON ARLETA PARK

FRANCIS POLYTECHNIC SENIOR HIGH SCHOOL

FERNANGELES RECREATION CENTER

CANYON PLZ SHOPPING CENTER

INTERSTATE 5

SHELDON ST

WICKS ST

SHARP AVE

CRANFORD AVE

ALLEGHENY ST

REMICK AVE

MORTIMART AVE

RINCON AVE

AMBOY AVE

ART ST

ONEILDY AVE

LAUREL CANYON BLVD

PEORIA ST

SoCalGas
Sempra Energy utility

LIABILITY STATEMENT
The facilities and their depiction on these maps are believed to be reasonably accurate, but the maps are not to be used in lieu of field verification or calling USA at 800-422-4133. NO WARRANTY expressed or implied (including of merchantability or of fitness for particular purpose) is made as to any matter, including but not imited to, the design, size, type or location of the facilities, their presence of absence, the accuracy of the maps, the means used to transmit the data, absence of viruses (if transmitted electronically, by disk or diskette), data translation or transmission errors or omissions, compatibility with the user's system or its ability to interpret the data correctly or at all, or any other matter. The Gas Company has no liability for damages (direct, indirect, consequential, incidental or punitive) arising from the transmission, receipt or use by others of the maps or information contained in the maps.

Map Number:	**12150-124280**
Map Type:	**Gas Asset Map**
Printed By:	Sum, Jason
Printed Date:	11/9/2021

100 Feet

N

CITY OF LOS ANGELES
DEPARTMENT OF PUBLIC WORKS
BUREAU OF ENGINEERING

Date: November 1, 2021

The Department of Public Works is scheduling the following improvements:

Project Title: **FERNANGELES RECREATION CENTER STORMWATER CAPTURE PROJECT**
Work Order No.: **EW40079D** **Job ID:** **1455**

Work to Be Performed: The Project consists of installing a 1.7-acre underground infiltration gallery to capture and infiltrate stormwater. Construction of the underground infiltration gallery will include installation of three catch basin inlets, pipes, a cross gutter, a pretreatment device, a flow measuring device, level sensors, and educational signage. Runoff will be collected from approximately 317-acre tributary areas and diverted into the infiltration gallery. The galleries shall be sized to store approximately 1,008,000 cf.

The project will include restoration of existing park components as well as new improvements. Park improvements include park improvements such as two (2) improved baseball fields with the following amenities: backstops, dugouts, player benches, batting cage, bullpens, sports lighting, and bleachers. Other improvements include a walking path around the park, landscaping, hydration stations, and an improved irrigation system.

Please fill out the following and return one copy to the Utility Coordination Group by **December 2, 2021**.
PLEASE UPLOAD A COPY OF YOUR AS-BUILT PLANS, IN THE LINK PROVIDED IN THE EMAIL, SHOWING THE LOCATION OF YOUR FACILITIES (IN OR AROUND THE PROJECT AREA).

Your replies will be transmitted to prospective bidders and used in coordinating this project. Please note proper location of any facilities, live or abandoned, that are not shown or are shown incorrectly on the attached plans. The City will not be responsible for any damage to facilities that are not shown or are shown incorrectly on the plans. Failure to reply may deprive you of the protection provided for in the Standard Specifications. Construction delays and/or expenses due to failure in providing accurate information shall result in an assessment of costs to you, per Los Angeles Municipal Code (LAMC) 62.01 or your Franchise Agreement with the City.

Upon receipt and review of your response(s), the City will contact you to formalize your utility relocation (or protect-in-place) plan, with a utility relocation agreement if necessary.

For questions, please contact the Project Manager **Bryan Powell** at (213) 485-5908 or **bryan.powell**@lacity.org .

Thomas Guide Page: 502 Grids: F7
532 F1

Thank you,

Reynaldo Sison, PE
Project Award and Control Division
Bureau of Engineering

☐ (1) Have prior rights. (Submit proof to our office within 30 days.)
☐ (2) Do not have facilities within the proposed project area.
☒ (3) Have facilities that will **not require relocation/adjustment** but will mark them upon request.
  (a) ☐ The accompanying recorded plans show facilities not delineated on the project plans.
  (b) ☐ The project plans correctly show our present utility locations.
☐ (4) Have facilities that will **require relocation/adjustment**. The facilities are delineated on the enclosed plan.
  (a) ☐ The following work is contemplated: _____
  (b) ☐ Estimated working days required for construction: _____
  (c) ☐ Construction may begin on _____ and conclude on _____
  (d) ☐ Work will **require** coordination with the contractor. (**EXPLAIN FULLY**).

For Paving Clearance, call: _____ Phone: _____ Station: _____

Return one copy of this First Notice to
Attn: Vishal Mandalia
Department of Public Works
Bureau of Engineering,
Project Award and Control Division
Utility Coordination Group (Mail Stop 501)
1149 S. Broadway, Suite 140
Los Angeles, CA 90015-2213
Tel. (213) 485-4506
Email: **vishal.mandalia**@lacity.org

Socalgas.com	213-231-7808
Company Name	Phone No.
Art Alfaro	
Representative (Print Name)	
AAlfaro3@Socalgas.com	
E-mail Address	
AAlfaro	12/1/21
Signature	Date

ANY RELOCATION OR REPLACEMENT OF
SOCALGAS FACILITIES WILL BE COLLECTIBLE
TO THE DEVELOPER, CONTRACTOR OR OWNER
PROTECT IN PLACE ALL SOCALGAS FACILITES.

Transmission Technical
Services Department

9400 Oakdale Ave
Chatsworth, CA 91311
SC9314

November 4, 2021

Vishal Mandalia
City of Los Angeles Department of Public Works
vishal.mandalia@lacity.org

Subject: **WO # EW40079D - Fernangeles Park Stormwater Capture Project**

DCF: **2038-21NC**

The Transmission Department of SoCalGas does not operate any facilities within your proposed improvement. However, the Distribution Department of SoCalGas may maintain and operate facilities within your project scope.

To assure no conflict with the Distribution's pipeline system, please e-mail them at:

NorthwestDistributionUtilityRequest@semprautilities.com

Best Regards,

SoCalGas Transmission Technical Services
SoCalGasTransmissionUtilityRequest@semprautilities.com

NOTICE OF PROPOSED PROJECT **FIRST NOTICE**

CITY OF LOS ANGELES
DEPARTMENT OF PUBLIC WORKS
BUREAU OF ENGINEERING

Date: November 1, 2021

The Department of Public Works is scheduling the following improvements:

Project Title: **FERNANGELES RECREATION CENTER STORMWATER CAPTURE PROJECT**
Work Order No.: **EW40079D** **Job ID: 1455**

Work to Be Performed: The Project consists of installing a 1.7-acre underground infiltration gallery to capture and infiltrate stormwater. Construction of the underground infiltration gallery will include installation of three catch basin inlets, pipes, a cross gutter, a pretreatment device, a flow measuring device, level sensors, and educational signage. Runoff will be collected from approximately 317-acre tributary areas and diverted into the infiltration gallery. The galleries shall be sized to store approximately 1,008,000 cf.

The project will include restoration of existing park components as well as new improvements. Park improvements include park improvements such as two (2) improved baseball fields with the following amenities: backstops, dugouts, player benches, batting cage, bullpens, sports lighting, and bleachers. Other improvements include a walking path around the park, landscaping, hydration stations, and an improved irrigation system.

Please fill out the following and return one copy to the Utility Coordination Group by **December 2, 2021**.
PLEASE UPLOAD A COPY OF YOUR AS-BUILT PLANS, IN THE LINK PROVIDED IN THE EMAIL, SHOWING THE LOCATION OF YOUR FACILITIES (IN OR AROUND THE PROJECT AREA).

Your replies will be transmitted to prospective bidders and used in coordinating this project. Please note proper location of any facilities, live or abandoned, that are not shown or are shown incorrectly on the attached plans. The City will not be responsible for any damage to facilities that are not shown or are shown incorrectly on the plans. Failure to reply may deprive you of the protection provided for in the Standard Specifications. Construction delays and/or expenses due to failure in providing accurate information shall result in an assessment of costs to you, per Los Angeles Municipal Code (LAMC) 62.01 or your Franchise Agreement with the City.

Upon receipt and review of your response(s), the City will contact you to formalize your utility relocation (or protect-in-place) plan, with a utility relocation agreement if necessary.

For questions, please contact the Project Manager **Bryan Powell** at (213) 485-5908 or **bryan.powell**@lacity.org .

Thomas Guide Page: 502 Grids: F7
532 F1

Thank you,

Reynaldo Sison, PE
Project Award and Control Division
Bureau of Engineering

☐ (1) Have prior rights. (Submit proof to our office within 30 days.)
☐ (2) Do not have facilities within the proposed project area.
☐ (3) Have facilities that will **not require relocation/adjustment** but will mark them upon request.
  (a) ☐ The accompanying recorded plans show facilities not delineated on the project plans.
  (b) ☐ The project plans correctly show our present utility locations.
☒ (4) Have facilities that will **require relocation/adjustment**. The facilities are delineated on the enclosed plan.
  (a) ☐ The following work is contemplated: _____
  (b) ☐ Estimated working days required for construction: _____
  (c) ☐ Construction may begin on _____ and conclude on _____
  (d) ☐ Work will **require** coordination with the contractor. (**EXPLAIN FULLY**).

For Paving Clearance, call: _____ Phone: _____ Station: _____

Return one copy of this First Notice to
Attn: Vishal Mandalia
Department of Public Works
Bureau of Engineering,
Project Award and Control Division
Utility Coordination Group (Mail Stop 501)
1149 S. Broadway, Suite 140
Los Angeles, CA 90015-2213
Tel. (213) 485-4506
Email: **vishal.mandalia**@lacity.org

LADOT
Company Name

213-972-8684
Phone No.

MAX EFTEKHARI
Representative (Print Name)

max.eftekhari@lacity.org
E-mail Address

Signature

11/2/21
Date

(Revised 12-17)

SIGNAL STANDARD SCHEDULE

No.	TYPE	FOUND. TYPE	PED. PUSH BUT'N TYPE	PED. PUSH BUT'N PHASE	REMARKS
(X) (1)	332 Cab.	F-332	–	–	SEE NOTE 1
* (X) (2)	CD857	BSL	–	–	
* (X) (3)	CD953	BSL	6"	8	
* (X) (4)	16	F-2	6"	8	
* (6) (5)	1	F-1	–	–	
* (X) (7)	1	F-1	4"	4	
* (X) (8)	16	F-2	6"	4	
* (X) (9)	1	F-1	–	–	
(X) (X)					

* Existing

NOTES:

1. SEMI-ACTUATED OPERATION
   (ATSAC 2070 CONTROLLER)

   ø2 – LAUREL CANYON BLVD. S/B & W/S PED. XING
   ø4 – WICKS ST. W/B & N/S PED. XING
   ø6 – LAUREL CANYON BLVD. N/B & E/S PED. XING
   ø8 – WICKS ST. E/B & S/S PED. XING

   GOLDEN STATE FREEWAY CORRIDOR ATSAC SYSTEM
   ATSAC CABLE INTERCONNECT

2. REMOVE CONTROLLER, CABINET AND FOUNDATION; ABANDON CONDUITS.

3. REMOVE 1-INCH SERVICE CONDUIT AND FUSE BOX. INSTALL A 2-INCH CONDUIT ON THE SAME QUADRANT OF SERVICE POLE NO. 83251M, PER L.A.D.O.T. STD. DWG. S-79.8. WORK ON ANY ELECTRICAL SERVICE EQUIPMENT TO BE DONE ONLY IN CONJUNCTION WITH DEPARTMENT OF WATER AND POWER (DWP) PERSONNEL. CONTACT DWP AT (213) 367-3175, SEVEN (7) WORKING DAYS PRIOR TO REMOVAL OR INSTALLATION OF THE SERVICE LINE.

4. INSTALL A 60-AMP FUSE IN AN IN-LINE WATERPROOF FUSE HOLDER IN THE SERVICE PULLBOX. WORK ON ANY ELECTRICAL SERVICE EQUIPMENT TO BE DONE ONLY IN CONJUNCTION WITH DEPARTMENT OF WATER AND POWER (DWP) PERSONNEL. CONTACT DWP AT (213) 367-3175, SEVEN (7) WORKING DAYS PRIOR TO REMOVAL OR INSTALLATION OF THE SERVICE LINE.

5. DISCONNECT TELEPHONE INTERCONNECT. COORDINATE WITH THE L.A.D.O.T. ATSAC TRAFFIC SIGNAL ELECTRICIAN TEN (10) WORKING DAYS PRIOR TO THE INSTALLATION OR REMOVAL OF TELEPHONE INTERCONNECT EQUIPMENT.

6. REPLACE NON-INTERNATIONAL PEDESTRIAN PUSHBUTTON SIGNS WITH INTERNATIONAL SYMBOL PEDESTRIAN PUSHBUTTON WALKINGMAN SIGNS IN ACCORDANCE WITH L.A.D.O.T. STD. DWGS. S-73.0, S-73.1 OR S-73.2.

7. FOR INTERCONNECT CONSTRUCTION DETAILS, SEE SIGNAL INTERCONNECT PLANS.

ESTIMATED MATERIAL FURNISHED BY LADOT

UNITS	MATERIAL
1	2070 CONTROLLER IN 332 CABINET

ESTIMATED SALVAGE MATERIAL TO BE RETURNED TO LADOT

UNITS	MATERIAL
1	170 CONTROLLER IN 337 CABINET

CONDUCTOR SCHEDULE

SIZE No.	CABLE / WIRE	RUN 1	2	3	4	5	6	7	8	9	10	11	12	13	14	15	16	17	18	19	20	21	22	23	24	25	26	27	28	29	30	31	32	33	34	35
MULTI	3 CONDUCTOR CABLE 3 X #14				1						1		1				1																			
MULTI	5 CONDUCTOR CABLE 5 X #14			2	2				3		3		2		2	2																				
MULTI	9 CONDUCTOR CABLE 8 X #14 & 1 X #12 (COM)																																			
MULTI	13 CONDUCTOR CABLE 12 X #14 & 1 X #12 (COM)				1				1		1				1																					
MULTI	28 CONDUCTOR CABLE 27 X #14 & 1 X #10 (COM)					1			1			1											1	1												
6	SERVICE				2	2			2														2	2												
8	SERVICE																																			
18	DLC (2 PAIR)	1	1	1			1	1		2			1				3		4																	
18	DLC (3 PAIR)																																			
18	DLC (4 PAIR)																																			
14	DLC (EXISTING – 1 PAIR)																																			
22	I/C (12 PR)	1	1	1													1																			
22	I/C (25 PR)																																			
22	I/C (50 PR)																																			
	VIDEO FIBER (4 SM)																																			
	VIDEO FIBER (20 SM)																																			
	VIDEO FIBER (24 SM)																																			
	VIDEO CABLE																																			
	VIDEO SERVICE																																			
	VIDEO SERVICE																																			
	FIBER OPTIC																																			

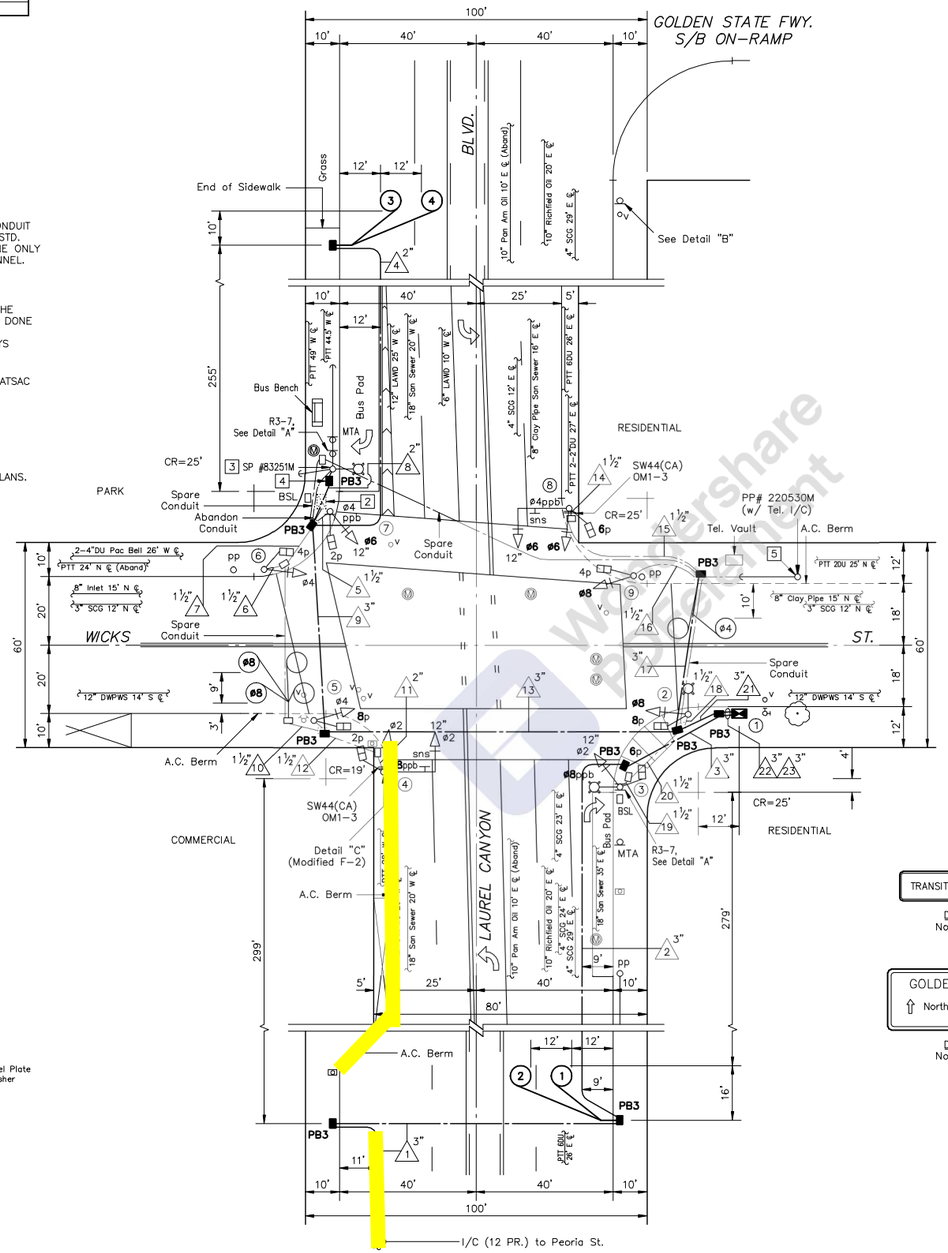

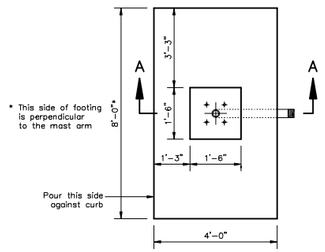

PLAN
Detail "C"
(Not to Scale)

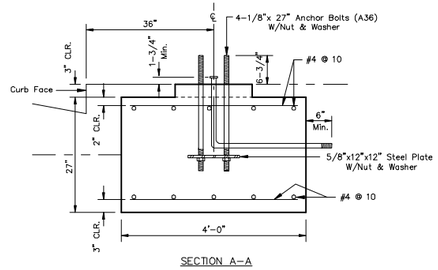

SECTION A-A
MODIFIED F-2 FOUNDATION (EXISTING)
Detail "C"
(Not to Scale)

TRANSIT BUSES EXEMPTED
Detail "A"
Not to Scale

GOLDEN STATE FWY
North 5 South
Detail "B"
Not to Scale

SCALE: 1" = 20'

NOTICE TO CONTRACTOR

1. EXCEPT WHERE OTHERWISE INDICATED, MATERIALS AND INSTALLATION METHODS SHALL CONFORM TO THE LATEST EDITION WITH SUPPLEMENTS, OF THE STANDARD SPECIFICATION FOR PUBLIC WORKS CONSTRUCTION, ADOPTED BY THE CITY OF LOS ANGELES BOARD OF PUBLIC WORKS (LABPW), INCLUDING THE LATEST VERSION OF STANDARD PLAN S-610 ISSUED BY THE LABPW, AND THE LATEST EDITION, WITH AMENDMENTS OF THE SPECIAL PROVISIONS AND STANDARD DRAWINGS FOR THE INSTALLATION AND MODIFICATION OF TRAFFIC SIGNALS, ISSUED BY THE CITY OF LOS ANGELES DEPARTMENT OF TRANSPORTATION (L.A.D.O.T.).

2. THE ATSAC PROJECT ENGINEER, DEPARTMENT OF TRANSPORTATION, CITY OF LOS ANGELES, AT (213) 972-8664 SHALL BE NOTIFIED THREE (3) WORKING DAYS PRIOR TO THE BEGINNING OF CONSTRUCTION.

3. REGULAR TRAFFIC SIGNAL CONTROL SHALL BE MAINTAINED FROM 6:00 A.M. TO 9:00 A.M. AND 3:00 P.M. TO 7:00 P.M. ON WEEKDAYS, EXCEPT NATIONAL HOLIDAYS. FLASHING, DEACTIVATION, AND ACTIVATION OF SIGNALS SHALL BE ACCOMPLISHED ONLY BY A L.A.D.O.T. TRAFFIC SIGNAL ELECTRICIAN. ALL ARRANGEMENTS SHALL BE MADE ONE (1) WORKING DAY PRIOR TO THE START OF ANY CONSTRUCTION BY CONTACTING THE ATSAC PROJECT ENGINEER AT (213) 972-8664 BETWEEN 7:00 A.M. AND 9:00 A.M. WEEKDAYS.

4. ARRANGEMENTS FOR OBTAINING ANY MATERIALS IDENTIFIED TO BE SUPPLIED BY THE L.A.D.O.T. SHALL BE MADE TEN (10) WORKING DAYS IN ADVANCE BY CONTACTING THE L.A.D.O.T. FIELD OPERATIONS AT (213) 928-9620, HOWEVER, TRAFFIC SIGNAL CONTROLLERS REQUIRE THIRTY (30) CALENDAR DAYS ADVANCE NOTICE, AND MUST BE PICKED UP WITHIN FIFTEEN (15) CALENDAR DAYS AFTER NOTIFICATION.

5. ALL SALVAGED TRAFFIC SIGNAL EQUIPMENT SHALL BE RETURNED TO THE L.A.D.O.T. ARRANGEMENTS FOR RETURNING IDENTIFIED SALVAGED EQUIPMENT TO THE L.A.D.O.T. SHALL BE MADE FIVE (5) WORKING DAYS IN ADVANCE BY CONTACTING THE L.A.D.O.T. MATERIAL CONTROL DIVISION AT (213) 928-9639.

6. ALL EXISTING TRAFFIC CONTROL SIGNING SHALL BE MAINTAINED WITH STANDARD SIGN BRACKETS BY THE CONTRACTOR. EXCEPT WHERE OTHERWISE INDICATED, EXISTING LARGE STREET NAME SIGN ON MAST ARM TYPE STANDARD SHALL BE RELOCATED FROM THE VERTICAL POLE TO THE MAST ARM AS PER THE L.A.D.O.T. STANDARD DRAWING NO.S-457.0. ANY TRAFFIC CONTROL SIGNING DAMAGED OR LOST BY THE CONTRACTOR SHALL BE REPLACED AT THE CONTRACTOR'S EXPENSE. ARRANGEMENTS FOR OBTAINING REPLACEMENT SIGNING (WITH SUBSEQUENT BILLING) SHALL BE MADE WITH THE L.A.D.O.T. MATERIAL CONTROL DIVISION AT (213) 928-9639.

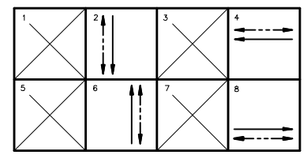

PROPOSED PHASE DIAGRAM

REGISTERED PROFESSIONAL ENGINEER
SEAN SKEHAN
No. 15459
Exp. 06-30-2007
ELECTRICAL
STATE OF CALIFORNIA

GOLDEN STATE FREEWAY CORRIDOR ATSAC SYSTEM

SUBMITTED	RECOMMENDED	APPROVED
May 13, 20 06	May 15, 20 06	June 2, 20 06
Inder Dugal	J.S. Massopust	Sean Skehan
Transportation Engineer	Senior Transportation Engineer	Principal Transportation Engineer

AS BUILT

Date of Installation: _____
LADOT Inspector: _____
Condition As Of: _____
LADOT Engineer: _____
District EAST VALLEY
Thomas Guide 532-F1
References
PROJ. No.
FIELD CHECK

CITY OF LOS ANGELES
DEPARTMENT OF TRANSPORTATION
GLORIA J. JEFF, General Manager

TITLE
LAUREL CANYON BLVD. & WICKS ST.

File Name 29920-GDST1-095
Intersection No. 29920
Proj. No. DES. 74210 CONS. 74211

NOTICE: IF PLAN HAS NOT BEEN IMPLEMENTED WITHIN TWO (2) YEARS OF THE APPROVAL DATE, IT MUST BE RESUBMITTED TO LADOT SIGNAL DESIGN SECTION FOR REVIEW AND APPROVAL.

NO.	REVISION DESCRIPTION	DIV./DIST. ENGR. DATE
	STAR	
	DISTRICT	
	GEOMETRIC	
	ATSAC	
	METRO RAIL	
	TRANSIT PRIORITY	

BY	DATE
BUC	12-29

	BY	DATE
SUPERVISOR	DP'TN	11-21-05
DESIGNER	LH	11-10-05
SR. DRAFTING	JA	11-07-05
DRAFTING	BTC	11-07-05
FIELD	LH	10-13-05
BASE	LAR	08-19-03

SCALES	HORIZ. 1"=	SHEET OF	INDEX NUMBER
	VERT. 1"=		

(LADOT Revised 9/96)

ORIGINAL MAPS SCALE 1" = 20' 1" = 40'

Remove Watermark Wondershare PDFelement

SIGNAL STANDARD SCHEDULE

	No.	TYPE	FOUND. TYPE	PED. PUSH BUT'N TYPE	PHASE	REMARKS
	(1)	351 Cab.	*F-332	–	–	INSTALL ATSAC 2070 CONTROLLER IN 351 CABINET
**	(2)	19-4-100	CIDH	APS(6P)	–	INSTALL 30' M.A., F=15'; INSTALL APS
*	(3)	7	F-7	APS(8P)	–	
*	(4)	26-3-70	CIDH	–	–	45' M.A.
*	(5)	CD953C-7	BSL	APS(8P)	–	
	(6)	1	F-1	APS(2P)	–	
**	(7)	26-4-100	CIDH	APS(2P)	–	INSTALL 40' M.A., F=20'; INSTALL APS
*	(8)	CD953C	BSL	APS(4P)	–	
*	(9)	29-5-100	CIDH	APS(4P)	–	INSTALL 50' M.A., F1=15', F2=12'
*	(10)	CD953C	BSL	APS(6P)	–	

* EXISTING
** PER LADOT STD. DWG. NO. S-52.1.6.

NOTES:

1. SEMI-ACTUATED OPERATION WITH VIDEO CAMERA DETECTION (ATSAC 2070 CONTROLLER IN 351 CABINET)

   ø1 – LAUREL CANYON BLVD. NB LT
   ø2 – LAUREL CANYON BLVD. SB & W/S PED. XING
   ø3 – TIMING ONLY
   ø4 – SHELDON ST. WB & N/S PED. XING
   ø5 – LAUREL CANYON BLVD. SB LT
   ø6 – LAUREL CANYON BLVD. NB & E/S PED. XING
   ø7 – TIMING ONLY
   ø8 – SHELDON ST. EB & S/S PED. XING
   OLA(ø7) – SHELDON ST. WB LT
   OLB(ø3) – SHELDON ST. EB LT

   GOLDEN STATE FREEWAY CORRIDOR ATSAC SYSTEM
   ATSAC CABLE INTERCONNECT

2. REMOVE CONTROLLER AND CABINET; RETAIN FOUNDATION.

3. INSTALL ATSAC 2070 CONTROLLER IN 351 CABINET. THE CONTRACTOR SHALL PROVIDE A COMPLETE FUNCTIONING CONTROLLER ASSEMBLY AND CABINET CONFORMING TO THE LATEST LADOT SPECIFICATION FOR 2070 CONTROLLER AND 351 CABINET, AND SHALL INCLUDE ALL NECESSARY AUXILIARY EQUIPMENT TO PROVIDE A COMPLETE AND FUNCTIONING CONTROLLER. CONTRACTOR TO DELIVER COMPLETELY ASSEMBLED CONTROLLER FOR TESTING TO THE DEPARTMENT OF TRANSPORTATION GENERAL SHOP, PIPER TECHNICAL CENTER, 555 RAMIREZ STREET THIRTY (30) DAYS PRIOR TO INSTALLATION. CONTRACTOR TO PICK UP AND INSTALL CONTROLLER ASSEMBLY ON EXISTING F-332 FOUNDATION.

*OLA & OLB – RA, YA, FYA, GA (4-SECTION HEAD)

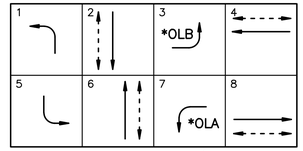

PROPOSED PHASE DIAGRAM

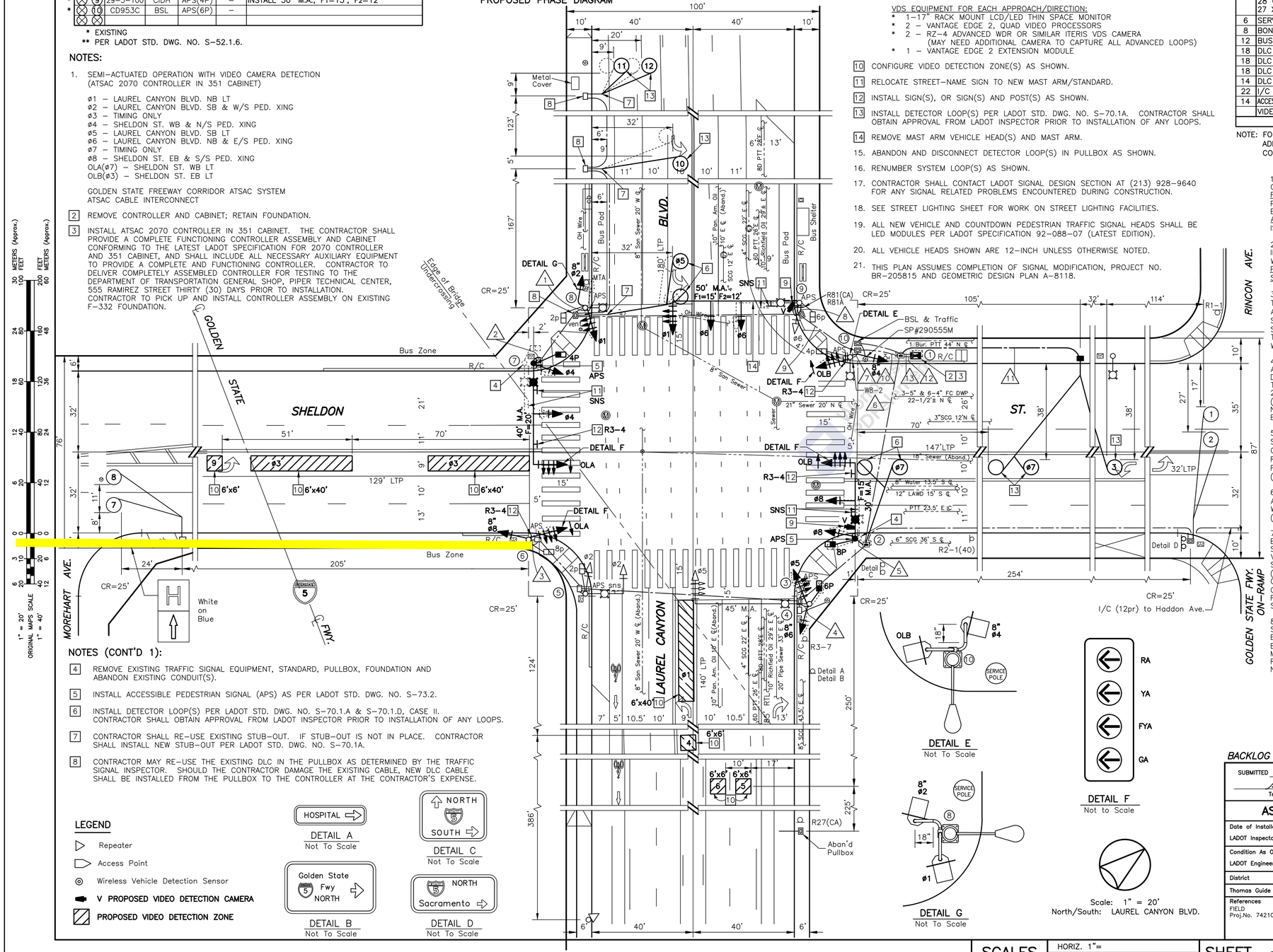

NOTES (CONT'D 1):

4. REMOVE EXISTING TRAFFIC SIGNAL EQUIPMENT, STANDARD, PULLBOX, FOUNDATION AND ABANDON EXISTING CONDUIT(S).

5. INSTALL ACCESSIBLE PEDESTRIAN SIGNAL (APS) AS PER LADOT STD. DWG. NO. S-73.2.

6. INSTALL DETECTOR LOOP(S) PER LADOT STD. DWG. NO. S-70.1.A & S-70.1.D, CASE II. CONTRACTOR SHALL OBTAIN APPROVAL FROM LADOT INSPECTOR PRIOR TO INSTALLATION OF ANY LOOPS.

7. CONTRACTOR SHALL RE-USE EXISTING STUB-OUT. IF STUB-OUT IS NOT IN PLACE. CONTRACTOR SHALL INSTALL NEW STUB-OUT PER LADOT STD. DWG. NO. S-70.1A.

8. CONTRACTOR MAY RE-USE THE EXISTING DLC IN THE PULLBOX AS DETERMINED BY THE TRAFFIC SIGNAL INSPECTOR. SHOULD THE CONTRACTOR DAMAGE THE EXISTING CABLE, NEW DLC CABLE SHALL BE INSTALLED FROM THE PULLBOX TO THE CONTROLLER AT THE CONTRACTOR'S EXPENSE.

LEGEND

- Repeater
- Access Point
- Wireless Vehicle Detection Sensor
- V PROPOSED VIDEO DETECTION CAMERA
- PROPOSED VIDEO DETECTION ZONE

ESTIMATED SALVAGE MATERIAL TO BE RETURNED TO LADOT

UNITS	MATERIAL
1	2070 Controller
2	APS

NOTES (CONT'D 2):

9. CONTRACTOR SHALL INSTALL ITERIS VIDEO DETECTION SYSTEM (VDS). CONTACT LADOT COMMUNICATION ENGINEER AT (213) 978-0150 PRIOR TO PURCHASE FOR VDS SPECIFICATIONS. INSTALL VDS CAMERA ON MAST ARM AS SHOWN. CONTRACTOR SHALL BE RESPONSIBLE FOR COMPLETE INSTALLATION OF VDS SYSTEM. INSTALLATION SHALL BE DONE BY ITERIS OR ITERIS CERTIFIED TECHNICIAN.

   VDS EQUIPMENT FOR EACH APPROACH/DIRECTION:
   * 1-17" RACK MOUNT LCD/LED THIN SPACE MONITOR
   * 2 – VANTAGE EDGE 2, QUAD VIDEO PROCESSORS
   * 2 – RZ-4 ADVANCED WDR OR SIMILAR ITERIS VDS CAMERA (MAY NEED ADDITIONAL CAMERA TO CAPTURE ALL ADVANCED LOOPS)
   * 1 – VANTAGE EDGE 2 EXTENSION MODULE

10. CONFIGURE VIDEO DETECTION ZONE(S) AS SHOWN.

11. RELOCATE STREET-NAME SIGN TO NEW MAST ARM/STANDARD.

12. INSTALL SIGN(S), OR SIGN(S) AND POST(S) AS SHOWN.

13. INSTALL DETECTOR LOOP(S) PER LADOT STD. DWG. NO. S-70.1A. CONTRACTOR SHALL OBTAIN APPROVAL FROM LADOT INSPECTOR PRIOR TO INSTALLATION OF ANY LOOPS.

14. REMOVE MAST ARM VEHICLE HEAD(S) AND MAST ARM.

15. ABANDON AND DISCONNECT DETECTOR LOOP(S) IN PULLBOX AS SHOWN.

16. RENUMBER SYSTEM LOOP(S) AS SHOWN.

17. CONTRACTOR SHALL CONTACT LADOT SIGNAL DESIGN SECTION AT (213) 928-9640 FOR ANY SIGNAL RELATED PROBLEMS ENCOUNTERED DURING CONSTRUCTION.

18. SEE STREET LIGHTING SHEET FOR WORK ON STREET LIGHTING FACILITIES.

19. ALL NEW VEHICLE AND COUNTDOWN PEDESTRIAN TRAFFIC SIGNAL HEADS SHALL BE LED MODULES PER LADOT SPECIFICATION 92-088-07 (LATEST EDITION).

20. ALL VEHICLE HEADS SHOWN ARE 12-INCH UNLESS OTHERWISE NOTED.

21. THIS PLAN ASSUMES COMPLETION OF SIGNAL MODIFICATION, PROJECT NO. BR-205815 AND GEOMETRIC DESIGN PLAN A-8118.

CONDUCTOR SCHEDULE

SIZE No.	CABLE / WIRE	RUN
MULTI	3 CONDUCTOR CABLE 3 X #14	
MULTI	5 CONDUCTOR CABLE 5 X #14	2 3 1 4 3 1 3
MULTI	9 CONDUCTOR CABLE 8 X #14 & 1 X #10 (COM)	1 1 1 1
MULTI	13 CONDUCTOR CABLE 12 X #14 & 1 X #10 (COM)	
MULTI	28 CONDUCTOR CABLE 27 X #18 & 1 X #16 (COM)	1
6	SERVICE	
8	BONDING (GROUND)	
12	BUS DLC (1-PAIR)	
18	DLC (2 PAIR)	1 2 3
18	DLC (3 PAIR)	
18	DLC (4 PAIR)	
14	DLC (EXISTING)	
22	I/C (12 PAIR)	
14	ACCESSIBLE PEDESTRIAN SIGNAL (APS)	2 1
	VIDEO DETECTION CABLE	1 1 1 1 1 2
	CONDUIT SIZE	* 2" * 2" 2" * * * * * 2" * *

NOTE: FOR EXISTING CONDUIT RUNS DESIGNATED WITH AN "*" (ABOVE), THE CONTRACTOR SHALL ADD/INSTALL NEW CONDUCTORS/CABLES AND PROTECT AND MAINTAIN ALL EXISTING CONDUCTORS/CABLES.

NOTICE TO CONTRACTOR

1. EXCEPT WHERE OTHERWISE INDICATED, MATERIALS AND INSTALLATION METHODS SHALL CONFORM TO THE LATEST EDITION, WITH SUPPLEMENTS, OF THE STANDARD SPECIFICATIONS FOR PUBLIC WORKS CONSTRUCTION ADOPTED BY THE CITY OF LOS ANGELES BOARD OF PUBLIC WORKS (LABPW), INCLUDING THE LATEST VERSION OF THE "BROWN BOOK" ISSUED BY THE LABPW, AND THE LATEST EDITION, WITH AMENDMENTS, OF THE SPECIAL PROVISIONS AND STANDARD DRAWINGS FOR THE INSTALLATION AND MODIFICATION OF TRAFFIC SIGNALS, ISSUED BY THE CITY OF LOS ANGELES DEPARTMENT OF TRANSPORTATION (LADOT).

2. ALL TRAFFIC SIGNAL AND/OR RELATED ELECTRICAL WORK SHALL BE PERFORMED AND INSPECTED UNDER THE CONDITIONS OF THE MOST CURRENT AMENDED BOARD OF PUBLIC WORKS "ENHANCED ELECTRICAL SAFETY POLICY" AS REQUIRED IN LADOT'S SPECIAL PROVISIONS AND STANDARD DRAWINGS FOR THE INSTALLATION AND MODIFICATION OF TRAFFIC SIGNALS (RED BOOK), REGARDLESS OF CONTRACT COST.

3. THE LADOT TRAFFIC SIGNAL INSPECTOR AT (818) 779-7433 SHALL BE NOTIFIED THREE (3) WORKING DAYS PRIOR TO THE BEGINNING OF CONSTRUCTION. FOR WORK IN THE AUTOMATED TRAFFIC SURVEILLANCE AND CONTROL (ATSAC) PROJECT AREA, A FIELD MEETING SHALL BE SCHEDULED WITH THE SIGNAL SYSTEM SUPERVISOR AT (213) 473-8286 AND THE SIGNAL MAINTENANCE SUPERVISOR AT (818) 779-7437 THREE (3) WORKING DAYS PRIOR TO THE BEGINNING OF CONSTRUCTION. FULL RESTORATION OF THE ATSAC SYSTEM MUST OCCUR WITHIN FIVE (5) WORKING DAYS AFTER SHUT DOWN.

4. REGULAR TRAFFIC SIGNAL CONTROL SHALL BE MAINTAINED FROM 6:00 A.M. TO 9:00 A.M. AND 3:00 P.M. TO 7:00 P.M. ON WEEKDAYS, EXCEPT NATIONAL HOLIDAYS. FLASHING, DEACTIVATION AND ACTIVATION OF SIGNALS SHALL BE ACCOMPLISHED ONLY BY A LADOT TRAFFIC SIGNAL ELECTRICIAN. ALL ARRANGEMENTS TO DEACTIVATE SIGNALS SHALL BE MADE 24 HOURS IN ADVANCE BY CONTACTING THE LADOT TRAFFIC SIGNAL DEDICATED LINE AT (213) 473-8478 BEFORE 9:00 A.M. ON NON-HOLIDAY WEEKDAYS. THE LADOT PROJECT NUMBER MUST BE GIVEN AT THIS TIME. THE CONTRACTOR WILL BE CHARGED FOR ALL ELECTRICAL AND TRAFFIC CONTROL SERVICE PROVIDED BY LADOT.

5. ARRANGEMENTS FOR OBTAINING ANY MATERIALS IDENTIFIED TO BE SUPPLIED BY LADOT SHALL BE MADE TEN (10) WORKING DAYS IN ADVANCE BY CONTACTING THE LADOT FIELD OPERATIONS DIVISION AT (213) 216-4677. HOWEVER, TRAFFIC SIGNAL CONTROLLERS REQUIRE THIRTY (30) WORKING DAYS ADVANCE NOTICE AND MUST BE PICKED UP WITHIN FIFTEEN (15) WORKING DAYS AFTER NOTIFICATION. CONTACT LADOT SIGNAL SHOP AT (213) 473-8468 TO COORDINATE CONTROLLER DELIVERY AND/OR PICKUP.

6. ALL IDENTIFIED TRAFFIC SIGNAL EQUIPMENT SHALL BE RETURNED TO LADOT. ARRANGEMENTS FOR RETURNING IDENTIFIED EQUIPMENT TO LADOT SHALL BE MADE FIVE (5) WORKING DAYS IN ADVANCE BY CONTACTING THE LADOT MATERIAL CONTROL DIVISION AT (213) 928-9636.

7. ALL EXISTING TRAFFIC CONTROL SIGNING SHALL BE MAINTAINED WITH STANDARD SIGN BRACKETS BY THE CONTRACTOR. EXCEPT WHERE OTHERWISE INDICATED, EXISTING LARGE STREET NAME SIGNS ON MAST ARM TYPE STANDARDS SHALL BE RELOCATED FROM THE VERTICAL POLE TO THE MAST ARM PER LADOT STANDARD DRAWING NO. S-457.0 AND S-486.0. THE CONTRACTOR SHALL COORDINATE WITH LADOT SIGN SHOP AT (213) 473-7954 FOR ANY REQUIRED LARGE STREET NAME SIGNS. ANY TRAFFIC CONTROL SIGNING DAMAGED OR LOST BY THE CONTRACTOR SHALL BE REPLACED AT THE CONTRACTOR'S EXPENSE. SIGNAL CONTRACTOR SHALL INSTALL MAST ARM MOUNTED SIGNS. FOR THE INSTALLATION OF A STREET NAME SIGN ON A TYPE 1 POLE, THE CONTRACTOR SHALL FURNISH AND INSTALL A POLE EXTENSION AS NEEDED.

8. THE CONTRACTOR SHALL FURNISH AND INSTALL, AS SHOWN ON THE PLANS, ALL TRAFFIC SIGNAL EQUIPMENT SUCH AS STANDARDS, MAST ARMS, SIGNAL HEADS, AND OTHER EQUIPMENT AS REQUIRED. ALL SUCH EQUIPMENT SHALL BE NEW. ALL VEHICLE HEAD EQUIPMENT SUPPLIED BY THE CONTRACTOR SHALL HAVE 1-1/2 INCH DIAMETER PIPE FIT MOUNTING HARDWARE, INCLUDING ALL TOP POST MOUNT HEADS. PED HEAD MODULE REPLACEMENTS SHOWN ON THE PLAN SHALL REQUIRE A COMPLETE INSTALLATION, INCLUDING NEW PED HEAD AND TERMINAL COMPARTMENT.

Scale: 1" = 20'
North/South: LAUREL CANYON BLVD.

BACKLOG REDUCTION PROGRAM

SUBMITTED July 26, 20 21 — Transportation Engineer
APPROVED July 26, 20 21 — Senior Transportation Engineer

REGISTERED PROFESSIONAL ENGINEER JOHN VARGHESE No. 59715 CIVIL STATE OF CALIFORNIA

AS BUILT

Date of Installation:
LADOT Inspector:
Condition As Of:
LADOT Engineer:
District EAST VALLEY
Thomas Guide 502-F7
References FIELD Proj.No. 74210

CITY OF LOS ANGELES
DEPARTMENT OF TRANSPORTATION
SELETA J. REYNOLDS, General Manager

TITLE
LAUREL CANYON BLVD. & SHELDON ST.

File Name 29870-2020-2.DWG | Intersection No. 29870 | Project No. BLG29870

NOTICE: IF PLAN HAS NOT BEEN IMPLEMENTED WITHIN TWO (2) YEARS OF THE APPROVAL DATE, IT MUST BE RESUBMITTED TO LADOT SIGNAL DESIGN SECTION FOR REVIEW AND APPROVAL.

SCALES	HORIZ. 1"=	SHEET – OF –	INDEX NUMBER
	VERT. 1"=		

(LADOT Revised 8/14)
(Drafting Std. 11/04)

NO.	REVISION DESCRIPTION	DIV./DIST. ENGR. DATE

SUPERVISOR	DESIGNER	SR. DRAFTING	DRAFTING	FIELD	BASE
CL	BW	---	AC\HM	BW	AC
3-26-21	4-15-20	–	7-02-21	4-14-20	1-16-20

TIMING	DISTRICT	GEOMETRIC	ATSAC	METRO RAIL
EZ	SR			
3-25-21	11-09-20			

Remove Watermark Wondershare PDFelement

NOTICE OF PROPOSED PROJECT **FIRST NOTICE**

CITY OF LOS ANGELES
DEPARTMENT OF PUBLIC WORKS
BUREAU OF ENGINEERING

Date: November 1, 2021

The Department of Public Works is scheduling the following improvements:

Project Title: **FERNANGELES RECREATION CENTER STORMWATER CAPTURE PROJECT**
Work Order No.: **EW40079D** **Job ID:** **1455**

Work to Be Performed: The Project consists of installing a 1.7-acre underground infiltration gallery to capture and infiltrate stormwater. Construction of the underground infiltration gallery will include installation of three catch basin inlets, pipes, a cross gutter, a pretreatment device, a flow measuring device, level sensors, and educational signage. Runoff will be collected from approximately 317-acre tributary areas and diverted into the infiltration gallery. The galleries shall be sized to store approximately 1,008,000 cf.

The project will include restoration of existing park components as well as new improvements. Park improvements include park improvements such as two (2) improved baseball fields with the following amenities: backstops, dugouts, player benches, batting cage, bullpens, sports lighting, and bleachers. Other improvements include a walking path around the park, landscaping, hydration stations, and an improved irrigation system.

Please fill out the following and return one copy to the Utility Coordination Group by **December 2, 2021**.
PLEASE UPLOAD A COPY OF YOUR AS-BUILT PLANS, IN THE LINK PROVIDED IN THE EMAIL, SHOWING THE LOCATION OF YOUR FACILITIES (IN OR AROUND THE PROJECT AREA).

Your replies will be transmitted to prospective bidders and used in coordinating this project. Please note proper location of any facilities, live or abandoned, that are not shown or are shown incorrectly on the attached plans. The City will not be responsible for any damage to facilities that are not shown or are shown incorrectly on the plans. Failure to reply may deprive you of the protection provided for in the Standard Specifications. Construction delays and/or expenses due to failure in providing accurate information shall result in an assessment of costs to you, per Los Angeles Municipal Code (LAMC) 62.01 or your Franchise Agreement with the City.

Upon receipt and review of your response(s), the City will contact you to formalize your utility relocation (or protect-in-place) plan, with a utility relocation agreement if necessary.

For questions, please contact the Project Manager **Bryan Powell** at (213) 485-5908 or **bryan.powell@lacity.org** .

Thomas Guide Page: 502 Grids: F7
532 F1

Thank you,

Reynaldo Sison, PE
Project Award and Control Division
Bureau of Engineering

☐ (1) Have prior rights. (Submit proof to our office within 30 days.)
☐ (2) Do not have facilities within the proposed project area.
☑ (3) Have facilities that will **not require relocation/adjustment** but will mark them upon request.
  (a) ☐ The accompanying recorded plans show facilities not delineated on the project plans.
  (b) ☐ The project plans correctly show our present utility locations.
☐ (4) Have facilities that will **require relocation/adjustment**. The facilities are delineated on the enclosed plan.
  (a) ☐ The following work is contemplated: _____
  (b) ☐ Estimated working days required for construction: _____
  (c) ☐ Construction may begin on _____ and conclude on _____
  (d) ☐ Work will **require** coordination with the contractor. **(EXPLAIN FULLY)**.

For Paving Clearance, call: Daniel Ordonia Phone: (213)847-1568 Station: _____

Return one copy of this First Notice to
Attn: Vishal Mandalia
Department of Public Works
Bureau of Engineering,
Project Award and Control Division
Utility Coordination Group (Mail Stop 501)
1149 S. Broadway, Suite 140
Los Angeles, CA 90015-2213
Tel. (213) 485-4506
Email: **vishal.mandalia**@lacity.org

City of Los Angeles
Bureau of Street Lighting — (213)847-1568
Company Name — Phone No.

Daniel Ordonia
Representative (Print Name)

daniel.ordonia@lacity.org
E-mail Address

Signature — 11/12/21
Date

(Revised 12-17)

November 12, 2021

Re: Fernangeles Recreation Center Stormwater Capture Project –EW40079D

Mr. Mandalia,

The following is the list of plan(s) that would show the street-lighting facilities at your project location:

D16644
D19806
D30359
M2427
P20173
P23835
P26338
P33950
SL10992

D and P plans are available online at http://boe.lacity.org/epps/. I have attached the M and SL plans for your reference. Feel free to contact me if you need any further assistance or have any questions.

Regards,

Daniel Ordonia
Bureau of Street Lighting
1149 S. Broadway, Suite 200
Los Angeles, CA 90015
213.847.1568

CITY OF LOS ANGELES
DEPARTMENT OF PUBLIC WORKS
BUREAU OF ENGINEERING

Date: November 1, 2021

The Department of Public Works is scheduling the following improvements:

Project Title: **FERNANGELES RECREATION CENTER STORMWATER CAPTURE PROJECT**
Work Order No.: **EW40079D** **Job ID:** **1455**

Work to Be Performed: The Project consists of installing a 1.7-acre underground infiltration gallery to capture and infiltrate stormwater. Construction of the underground infiltration gallery will include installation of three catch basin inlets, pipes, a cross gutter, a pretreatment device, a flow measuring device, level sensors, and educational signage. Runoff will be collected from approximately 317-acre tributary areas and diverted into the infiltration gallery. The galleries shall be sized to store approximately 1,008,000 cf.

The project will include restoration of existing park components as well as new improvements. Park improvements include park improvements such as two (2) improved baseball fields with the following amenities: backstops, dugouts, player benches, batting cage, bullpens, sports lighting, and bleachers. Other improvements include a walking path around the park, landscaping, hydration stations, and an improved irrigation system.

Please fill out the following and return one copy to the Utility Coordination Group by **December 2, 2021**.
PLEASE UPLOAD A COPY OF YOUR AS-BUILT PLANS, IN THE LINK PROVIDED IN THE EMAIL, SHOWING THE LOCATION OF YOUR FACILITIES (IN OR AROUND THE PROJECT AREA).

Your replies will be transmitted to prospective bidders and used in coordinating this project. Please note proper location of any facilities, live or abandoned, that are not shown or are shown incorrectly on the attached plans. The City will not be responsible for any damage to facilities that are not shown or are shown incorrectly on the plans. Failure to reply may deprive you of the protection provided for in the Standard Specifications. Construction delays and/or expenses due to failure in providing accurate information shall result in an assessment of costs to you, per Los Angeles Municipal Code (LAMC) 62.01 or your Franchise Agreement with the City.

Upon receipt and review of your response(s), the City will contact you to formalize your utility relocation (or protect-in-place) plan, with a utility relocation agreement if necessary.

For questions, please contact the Project Manager **Bryan Powell** at (213) 485-5908 or **bryan.powell**@lacity.org .

Thomas Guide Page: 502 Grids: F7
532 F1

Thank you,

Reynaldo Sison, PE
Project Award and Control Division
Bureau of Engineering

☐ (1) Have prior rights. (Submit proof to our office within 30 days.)
☐ (2) Do not have facilities within the proposed project area.
☐ (3) Have facilities that will **not require relocation/adjustment** but will mark them upon request.
  (a) ☐ The accompanying recorded plans show facilities not delineated on the project plans.
  (b) ☐ The project plans correctly show our present utility locations.
☑ (4) Have facilities that will **require relocation/adjustment**. The facilities are delineated on the enclosed plan.
  (a) ☐ The following work is contemplated: _____
  (b) ☐ Estimated working days required for construction: _____
  (c) ☐ Construction may begin on _____ and conclude on _____
  (d) ☑ Work will **require** coordination with the contractor. (**EXPLAIN FULLY**). To coordinate Water Systems Field Work. Phone E. Valley District at 818.771.4287

For Paving Clearance, call: _____ Phone: _____ Station: _____

Return one copy of this First Notice to
Attn: Vishal Mandalia
Department of Public Works
Bureau of Engineering,
Project Award and Control Division
Utility Coordination Group (Mail Stop 501)
1149 S. Broadway, Suite 140
Los Angeles, CA 90015-2213
Tel. (213) 485-4506
Email: **vishal.mandalia**@lacity.org

City of Los Angeles
Department of Water and Power - WDEU
Water Distribution Engineering East Valley District

Company Name | Phone No.

Lyndon Tat

Representative (Print Name)

Lyndon.Tat@ladwp.com

E-mail Address

Lyndon Tat

Signature

1.27.22

Date

SUMMARY OF FIRST NOTICE REPLIES

Date: December 6, 2021

CITY OF LOS ANGELES
DEPARTMENT OF PUBLIC WORKS
BUREAU OF ENGINEERING

SUMMARY OF FIRST NOTICE REPLIES

W.O. No.:	Job ID.:	Project Title:
EW40079D	**1455**	**FERNANGELES RECREATION CENTER STORMWATER CAPTURE PROJECT**

Bidders are advised that project plans usually depict the location of substructures as they existed when the project was designed. Present-day information may indicate that new facilities may have been added or are going to be added. Some of those substructures may now be or will be relocated, abandoned, removed, lowered, raised, blanketed, encased, enlarged, protected, or altered in some other way. Bidders are urged to carefully examine the proposed construction site for any evidence of recent surfacing of excavations, or the possible conflict with surface or aerial installations. Contractor should use the latest substructure maps and prepare their bid accordingly. If further information or clarification is desired, bidders are urged to immediately contact the appropriate utility company or the appropriate District Office of the Bureau of Engineering. Contractors may also contact the Utility Coordination Group, 1149 S. Broadway Street, Suite 140, Los Angeles, CA 90015, naajia.jami@lacity.org. The contractor will need to coordinate work with utility companies during construction if necessary.

Based on the confirmation from the following utility companies, they have facilities within the improvement area that will definitely be affected.

LADOT	Max Eftekhari	(213) 972 – 8684

Based on the confirmation from the following utility companies, they have facilities within the improvement area that may not require relocation but will mark them upon request. Notify Underground Service Alert at 1-800-227-2600 two working days prior to excavation to have facilities marked:

BUREAU OF STREET LIGHTING	Daniel Ordonia	(213) 847 – 1568
SOUTHERN CALIFORNIA GAS – DISTRIBUTION	Art Alfaro	(213) 231 – 7808

Based on the confirmation from the following utility companies, there are no facilities within the improvement area that will be affected:

INFORMATION TECHNOLOGY AGENCY	Frank Gonzalez	(213) 978 – 4032
SOUTHERN CALIFORNIA GAS – TRANSMISSION	Ron Silver	(818) 701 – 4536

The following utility companies have not responded to the First Utility Notice, but they may have facilities within the improvement area.

LADWP – POWER	Gibson Phan	(213) 367 – 2715

LADWP – WATER – EAST VALLEY	Glenn Micko	(213) 367 – 1211
ANDEAVOR LOGISTICS CORP.	Cynthia A. Smith	(714) 880 – 1687
AT&T CALIFORNIA	Cathy Hurtado	(626) 817 – 4263
CHARTER COMMUNICATIONS	Lisa N. Law Patrick Houston	(972) 537 – 5323 (972) 537 – 5394

Gregg Vandergriff, PE
Division Engineer
Project Award and Control Division
Bureau of Engineering
Department of Public Works

WATER DISTRIBUTION ENGINEERING ESTIMATE REQUEST

Water Distribution Engineering

ESTIMATE REQUEST

Date January 24, 2022

JOB TITLE : **Fernangles Recreation Center Stormwater Capture Project (EW40079D;Job ID: 145**

Work Description

Fire Hydrant ☑ Main ☐ Service ☐ Other ☐

adjust to grade F-65297 (SW Allegheny and Laurel Cyn)

Relocate Hydrant F-55702 at NW of Morehart and Allegheny (and related costs

adjust service to grade (2-3" Svcs on Laurel Canyon 3281847/3019287)

Applicant : Bryan Powell

Address : bryan.powell@lacity.org

Phone : 213.485.5908 Fax :

See Attachment ☐ Requested By :

Phone :

Estimate of Cost $ 39,963.64

Engineering Remarks

adjust to grade F-65297 (SW Allegheny and Laurel Cyn)	$ 2,531.00
Relocate Hydrant F-55702 at NW of Morehart and Allegheny	$ 24,013.00
6" Cut and Plug associated w/ FH Relocation	$ 10,651.00
Street Damage Restoration Fee (estimated | to be collected by BOE)	
18' x 2' Trench w/ 5' Buffer *$8.24/sqft	$ 2,768.64
	$ 39,963.64

Estimated By : L.Tat Approved By : L.Tat

Comments :

Note: all services within sidewalk improvement must be protected in place or adjusted to grade (if neces

Applicable for services on S/s of Wicks St and W/s of Laurel Canyon

Tract No.

CFN 194-156/196-165

2017-001

Rev. 2/00 AP

ELECTRIC POWER AND WATER DISTRIBUTION MAPPING

NOTICE TO CONTRACTORS

GENERAL NOTES:

1. ALL WORK SHALL CONFORM TO THE LATEST BOARD OF PUBLIC WORKS OF THE CITY OF LOS ANGELES ADOPTED EDITION AND SUPPLEMENTS TO THE "STANDARD SPECIFICATIONS" FOR PUBLIC WORKS CONSTRUCTION AS MODIFIED BY THE CORRESPONDING ISSUE OF STANDARD PLAN S-610, THE LATEST EDITION OF THE BUREAU OF STREET LIGHTING "SPECIAL SPECIFICATIONS", AND THE SPECIAL PROVISIONS.
2. ELECTROLIERS SHALL BE INSTALLED WITH CENTERLINE 30" BEHIND THE CURB FACE, AND WITH LUMINAIRE ARM ORIENTED OVER THE STREET AND PERPENDICULAR TO ITS CENTERLINE, EXCEPT AS OTHERWISE SPECIFIED HEREON.
3. ELECTROLIERS SPECIFIED TO BE RELOCATED INSIDE OF THE CURB RETURN SHALL BE INSTALLED WITH THE CENTER OF THE ELECTROLIER 30 INCHES BEHIND THE CURB FACE MEASURED RADIALLY, AND WITH THE LUMINAIRE ARM ORIENTED OVER THE STREET AND PERPENDICULAR TO THE STREET CENTERLINE.
4. ELECTROLIER DOORS SHALL BE ERECTED SO THAT THE BASE DOOR IS PERPENDICULAR TO THE CURB AND LOCATED ON THE SIDE OF THE ELECTROLIER AWAY FROM ONCOMING TRAFFIC.
5. ALL EXISTING ELECTROLIERS SPECIFIED TO BE REMOVED OR MODIFIED ON THIS PLAN SHALL BE MAINTAINED IN SERVICE UNTIL THE NEW ELECTROLIER LIGHTING SYSTEM IS PLACED IN SERVICE, UNLESS OTHERWISE SPECIFIED HEREON. ALL OTHER ELECTROLIERS ON CIRCUITS AFFECTED BY THIS PLAN SHALL BE MAINTAINED IN SERVICE. CONTRACTOR MAY PROVIDE ALTERNATE LIGHTING IN LIEU OF MAINTAINING EXISTING ELECTROLIER LIGHTS IN SERVICE PROVIDED THAT SUCH ARRANGEMENTS ARE APPROVED BY THE ENGINEER.
6. ALL EQUIPMENT REQUIRED HEREON FOR FURNISHING ELECTRICAL SERVICE FOR EACH CIRCUIT SHALL BE INSTALLED AND INSPECTED PRIOR TO ANY OTHER CONSTRUCTION ON THAT CIRCUIT UNLESS OTHERWISE APPROVED BY THE ENGINEER.
7. THE CONTRACTOR SHALL GIVE WRITTEN NOTICE, 72 HOURS IN ADVANCE OF THE REMOVAL OF AN ELECTROLIER, TO ANY PUBLIC AGENCY MAINTAINING EQUIPMENT SUPPORTED BY THAT ELECTROLIER.
8. FOUNDATIONS AND PULLBOXES NOT REMAINING IN SERVICE SHALL BE REMOVED. THE RESULTING EXCAVATION SHALL BE FILLED WITH MATERIAL SIMILAR TO ADJACENT MATERIAL AND SATISFACTORILY COMPACTED WITH A MECHANICAL COMPACTOR IN LAYERS NOT EXCEEDING 12 INCHES. THE SURFACE SHALL BE FINISHED TO MATCH THE ADJACENT SURFACE.
9. THE CONTRACTOR SHALL REQUEST A BURN TEST BY NOTIFYING THE BUREAU OF CONTRACT ADMINISTRATION PROJECT INSPECTOR A MINIMUM OF 7 CALENDAR DAYS IN ADVANCE OF THE DATE ON WHICH A BURN TEST IS DESIRED.
10. CONTRACTOR SHALL GIVE THREE WORKING DAYS NOTICE (PHONE 323-913-4743) PRIOR TO DELIVERY OF ANY EQUIPMENT SPECIFIED TO BE DELIVERED TO THE BUREAU OF STREET LIGHTING YARD AT 4550 SANTA MONICA BLVD. SUCH DELIVERIES SHALL BE BETWEEN 8:30 AM AND 3:00 PM AND SHALL INCLUDE ALL HANDLING AND LOADING FROM THE TRUCK BY THE CONTRACTOR.
11. PULLBOXES LOCATED ADJACENT TO DRIVEWAYS AND ALLEYS SHALL BE INSTALLED AT A MINIMUM DISTANCE OF FIVE FEET FROM THE TOP OF THE "X" OF A CASE 1 OR CASE 2 DRIVEWAY OR AT A MINIMUM DISTANCE OF TWO FEET FROM THE B.C. OF A CASE 3 OR CASE 4 DRIVEWAY OR FIVE FEET FROM TRAVELED WAY OF THE ALLEY.
12. PULLBOXES INSTALLED AT INTERSECTIONS OF LOCAL STREETS SHALL BE INSTALLED NO CLOSER TO THE INTERSECTIONS THAN THE B.C.R. OF AN ASSUMED FUTURE 25' RADIUS CURB RETURN UNLESS OTHERWISE APPROVED BY THE ENGINEER. PULLBOXES INSTALLED AT INTERSECTIONS WHICH INVOLVE ONE OR MORE MAJOR OR SECONDARY STREETS SHALL BE INSTALLED NO CLOSER TO INTERSECTIONS THAN THE B.C.R. OF AN ASSUMED FUTURE 35' RADIUS CURB RETURN UNLESS OTHERWISE APPROVED BY THE ENGINEER.
13. CONDUIT SHALL BE INSTALLED AROUND ALL EXISTING AND/OR PROPOSED CATCH BASINS PER BUREAU OF STREET LIGHTING STANDARD DRAWING NO. L-304-0 UNLESS OTHERWISE SPECIFIED.
14. ALL SCREWS PROVIDED FOR ELECTROLIER STANDARD BASE DOORS AND BASE COVERS SHALL BE CADMIUM PLATED STEEL, 1/4-20NC MACHINE SCREWS, WITH PHILLIPS RECESSED ROUND HEADS.
15. WARNING: SAFETY CLEARANCE SHALL BE OBTAINED DAILY FROM THE AFFECTED UTILITY COMPANY BEFORE DOING ANY WORK IN CLOSE PROXIMITY TO ANY OVERHEAD ELECTRIC LINE. SEE SECTIONS 16430 AND 2100 OF THE SPECIAL SPECIFICATIONS.
16. "DELETED"
17. CONTRACTOR SHALL BE RESPONSIBLE FOR PRESERVING THE CONDITION OF ALL EXISTING EQUIPMENT TO BE REUSED, MODIFIED OR RETURNED TO THE BUREAU OF STREET LIGHTING YARD.
18. EQUIPMENT INDICATED "DISPOSE" SHALL BECOME THE PROPERTY OF THE CONTRACTOR AND BE DISPOSED OF BY THE CONTRACTOR.
19. ON ALL STREETS POSTED "NO STOPPING", EITHER CONTINUOUSLY OR FOR SPECIFIED HOURS OF THE DAY, THE CONTRACTOR SHALL SCHEDULE HIS OPERATIONS SO AS TO AVOID CONSTRUCTION OR STORAGE OF EQUIPMENT AND MATERIAL WITHIN THE ROADWAY BETWEEN THE HOURS OF 7:00A.M. AND 9:00A.M., AND 4:00P.M. AND 6:00P.M. OR FOR THE SPECIFIED HOURS WHEN STOPPING IS PROHIBITED.
20. STREET LIGHTING CONDUIT SHALL BE INSTALLED BY JACKING OR DRILLING METHODS. INSTALLATION OF CONDUIT BY OPEN TRENCHING IS NOT PERMITTED UNLESS APPROVED BY THE DIRECTOR, BUREAU OF STREET LIGHTING.
21. CONTRACTOR SHALL REPAIR AT HIS COST, THE DAMAGE CAUSED TO EXISTING SPRINKLER SYSTEMS DURING THE CONSTRUCTION OF THIS PROJECT. REPAIRS SHALL BE MADE WITHIN 5 WORKING DAYS AFTER DAMAGE OCCURS.
22. ALL ELECTROLIERS SPECIFIED HEREON SHALL INCLUDE A TYPE 2 PULLBOX, TO BE SUPPLIED AND INSTALLED, UNLESS OTHERWISE SPECIFIED.
23. STREET LIGHTING CONDUIT THAT IS TO BE ABANDONED SHALL HAVE WIRES REMOVED. THE CONDUIT ENDS THAT ARE WITHIN 12" OF THE SURFACE SHALL BE CUT AND REMOVED. BOTH ENDS OF THE REMAINING ABANDONED CONDUIT SHALL BE CRIMPED.

CIRCUIT DIAGRAM LEGEND:

NEW WIRE — NEW LAMP
EXISTING WIRE — EXISTING LAMP
DISCONNECT AND REMOVE WIRE. — REMOVE EXISTING LAMP.
CONNECT WIRE

SERIES CIRCUIT NOTES:

1. WARNING: CLEARANCE SHALL BE OBTAINED DAILY FROM THE SERVING COMPANY (213)367-9908, AND "MEN AT WORK" SIGNS SHALL BE POSTED AT THE SERVICE POINT BEFORE ANY WORK IS DONE OR ANY CONNECTIONS MADE ON AN EXISTING CIRCUIT. SEE SECTIONS 16430 AND 2100 OF THE SPECIAL SPECIFICATIONS.
2. SERIES CIRCUIT WIRE SHALL BE NO. 8 AWG SOLID COPPER CONDUCTOR, INSULATED WITH 0.110" APPROVED POLYETHYLENE COMPOUND RATED FOR 5,000 VOLT OPERATION.
3. TWO OR MORE TURNS OF SELF-ADHESIVE COLORED TAPE WITH A MINIMUM WIDTH OF 1/2 INCH SHALL BE APPLIED TO EACH CABLE IN ALL SERIES CIRCUITS WHERE WORK IS BEING DONE AND WHERE TWO OR MORE CIRCUITS EXIST IN A COMMON PULLBOX OR POST BASE. THE TAPE SHALL BE APPLIED ON THE CABLE BETWEEN THE SPLICES AND THE CONDUIT, USING ONE COLOR FOR EACH CIRCUIT. THE COLORS WHITE, GRAY, GREEN, AND ORANGE SHALL NOT BE USED.
4. CONTRACTOR SHALL GIVE THE BUREAU OF STREET LIGHTING YARD (PHONE: 323-913-4743) TWO WORKING DAYS NOTICE BEFORE ANY WORK IS DONE ON AN EXISTING CIRCUIT.

MULTIPLE CIRCUIT NOTES:

1. WARNING: SAFETY CLEARANCE SHALL BE OBTAINED DAILY FROM THE SERVING COMPANY (213)367-9908 BEFORE DOING ANY WORK OR MAKING ANY CONNECTIONS ON AN EXISTING CIRCUIT. SEE SECTIONS 16430 AND 2100 OF THE SPECIAL SPECIFICATIONS.
2. MULTIPLE CIRCUIT WIRE SHALL BE NO. 6 AWG STRANDED COPPER CONDUCTOR, TYPE THWN/THHN INSULATION. UL APPROVED FOR 600 VOLT OPERATION UNLESS OTHERWISE SPECIFIED HEREON.
3. THREE WIRES (COLOR CODE: 1-RED, 1-BLACK, 1-WHITE) SHALL BE INSTALLED IN ALL MULTIPLE CIRCUIT CONDUIT UNLESS OTHERWISE PROVIDED FOR HEREON. "END RUN" CONDUITS SHALL HAVE ONLY TWO WIRES INSTALLED UNLESS OTHERWISE NOTED. SEE NOTE 4 BELOW.
4. EVEN NUMBERED ELECTROLIERS SHALL BE CONNECTED TO RED AND WHITE WIRES, AND ODD NUMBERED ELECTROLIERS SHALL BE CONNECTED TO BLACK AND WHITE WIRES.
5. ELECTROLIERS SHALL BE WIRED PER TYPICAL MULTIPLE CIRCUIT ELECTROLIER WIRING DETAIL, BUREAU OF STREET LIGHTING STANDARD DRAWING NO. L-301-1, UNLESS OTHERWISE SPECIFIED.
6. MULTIPLE CIRCUITS IN CONDUITS CONTAINING MORE THAN THREE CONDUCTORS SHALL BE APPROPRIATELY IDENTIFIED BY LABELING CONDUCTORS "A", "B", ETC. WITH APPROVED SELF-LAMINATING LETTER TAPE WRAPPED AT LEAST TWICE AROUND THE CONDUCTOR IN EACH PULLBOX. (W.H. BRADY, SPECIAL SELF-LAMINATING WIRE MARKERS OR EQUIVALENT)

LEGEND:

(R) — EXISTING ELECTROLIER TO BE RELOCATED.
EXISTING UTILITARIAN LIGHT ON WOODEN POLE WHICH SHALL BE MAINTAINED IN SERVICE UNTIL THE PERMANENT ELECTROLIER LIGHTING SYSTEM IS PLACED IN SERVICE. CONTRACTOR MAY PROVIDE ALTERNATE LIGHTING IN LIEU OF MAINTAINING EXISTING UTILITARIAN LIGHTS IN SERVICE PROVIDED THAT SUCH ARRANGEMENTS ARE APPROVED BY THE ENGINEER.
EXISTING ELECTROLIER, NOT TO BE REMOVED OR MODIFIED.
PULLBOX TYPE 2 UNLESS OTHERWISE SHOWN HEREON. (STANDARD DRAWING NO. L-201-0). ADDITIONAL PULLBOXES SHALL BE REQUIRED AS SPECIFIED.
EXISTING PULLBOX.
EXISTING CONDUIT.
NEW 1" CONDUIT.
EXISTING 1" CONDUIT.
NEW 1-1/2" CONDUIT.
EXISTING 1-1/2" CONDUIT.
NEW 2" CONDUIT.
EXISTING 2" CONDUIT.
ABANDON CONDUIT. (SEE GENERAL NOTE NO. 8 AND NO. 23)
EXISTING ELECTROLIER FOUNDATION.
FUTURE ELECTROLIER FOUNDATION.
PROPOSED CATCH BASIN.

ELECTROLIER-PULLBOX DETAIL

PLAN DOES NOT DEPICT PULLBOX REQUIRED WITH NEW CONDUIT INSTALLATION. CONTRACTOR SHALL INSTALL ELECTROLIER PULLBOX WITH NEW STUBOUT TO ELECTROLIER PER ELECTROLIER-PULLBOX DETAIL. (CONTRACTOR MAY USE OTHER METHOD OF CONNECTING CONDUIT SUBJECT TO APPROVAL OF THE CONSTRUCTION ENGINEER).

SHOWN ON PLAN (TYP.) ⇒ DETAIL

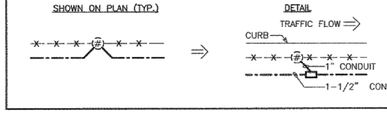

NOTICE TO CONTRACTORS

MATERIAL LIST

FOLLOWING IS A SUMMARY OF LUMINAIRES, CONVERSION KITS, AND OTHER EQUIPMENT WHICH SHALL BE SUPPLIED AND INSTALLED BY THE CONTRACTOR. THIS IS NOT INTENDED TO BE A COMPLETE LIST OF ALL MATERIALS REQUIRED. REFER TO THE SPECIAL PROVISIONS FOR A LIST OF EQUIPMENT APPROVED FOR USE ON THIS PROJECT.

SYMBOL	ITEM	QUANTITY	DESCRIPTION	
L1	LUMINAIRE	56	35W LEOTEK GREENCOBRA 20F	49, 50
L3	LUMINAIRE	166	89W LEOTEK ECOBRA 11M	49, 50
L6	LUMINAIRE	1	163W LEOTEK ECOBRA 18M @ 700mA	49, 50
T2	LAMP	49	36W, 2600K TRULY GREEN SOLUTIONS	49
	LAMP SOCKET	49	E40 BASE MOGUL LAMPHOLDER	26, 49
LS	SOFFIT	55	45W LUMEC SOFFIT	49

TOTAL : 327 LUMINAIRES

REMOTE MONITORING NODE	TOTAL: 223 UNITS
* PE CELL	TOTAL: 4 UNITS

* ELECTROLIER NOS. 121 (SHEET 7), 140 (SHEET 7), 163 (SHEET 10), 186 (SHEET 11) SHALL HAVE PE CELLS INSTALLED IN ADDITION TO REMOTE MONITORING NODES (SEE DETAIL "A" ON SHEET 2).

NOTE:
CONTRACTOR SHALL COORDINATE WITH THE DEPT. OF WATER & POWER TO OBTAIN QUADRANT LOCATIONS FOR MULTIPLE STREET LIGHTING SERVICES PRIOR TO START OF CONSTRUCTION. ANY WORK DONE PRIOR TO RECEIVING QUADRANT LOCATIONS WILL BE AT CONTRACTOR'S OWN RISK.

47 — INSTALL 1-1/2" CONDUIT WITH SEVEN MULTIPLE WIRES: (COLOR CODE: 3-RED, 3-BLACK, 1-WHITE)
46 — INSTALL 1-1/2" CONDUIT WITH FIVE MULTIPLE WIRES: (COLOR CODE: 2-RED, 2-BLACK, 1-WHITE)
45 — INSTALL 1-1/2" CONDUIT WITH THREE MULTIPLE WIRES: (COLOR CODE: 1-RED, 1-BLACK, 1-WHITE)
44 — SERVICE COMPANY TO PROVIDE AND INSTALL BYPASS CONTROL LINE, P.E. & MRWI ON TOP OF POWER POLE FOR MULTI-MULTIPLE SERVICE. INSTALL TWO ADDITIONAL # 10 AWG CONTROL WIRES IN RISER (110' EACH) FOR BYPASS CONTROL, COLOR CODE (1) RED, (1) BLK. INSTALL ONE APPROVED 10 AMP FUSE HOLDER (WITHOUT FUSE) BETWEEN THE TWO WIRES IN THE SERVICE PULLBOX. ROLL AND TAPE LOOSE WIRES AT TOP OF RISER FOR OTHERS. SERVICE COMPANY WILL CONNECT THE OPEN ENDS TO MRWI FOR TESTING BYPASS CONTROL (SEE DETAIL "B" ON SHEET 2). ATTACH W.H. BRADY SELF LAMINATING LABEL ON THE FUSE WITH THIS NOTE; "NORMALLY EMPTY. INSERT FUSE FOR TEST ONLY."
NOTE: FUSE IS TO BE INSTALLED ONLY DURING TESTING WHEN P.E. NEEDS TO BE BYPASSED - EX. FOR DAYTIME BURN TEST.
43 — TEMPORARY TRAFFIC SIGNAL SHUTDOWN MAY BE REQUIRED DURING UPGRADING OF ELECTRICAL SERVICE. CONTRACTOR SHALL NOTIFY AND COORDINATE WITH THE DEPARTMENT OF TRANSPORTATION, TRAFFIC SIGNAL SUPERINTENDENT (TEL. NO. 213-485-2261) 3 WORKING DAYS PRIOR TO START OF CONSTRUCTION AT THIS LOCATION.
42 — BUS SHELTER COORDINATION REQUIREMENTS-- WHEN A CIRCUIT IS CONVERTED FROM SERIES OPERATION TO MULTIPLE, CONTRACTOR SHALL NOTIFY SHELTER MEDIA INC. AT (818) 762-1385, 48 HOURS IN ADVANCE OF WORK ON THE CIRCUIT- SERVICE CHANGES AT SHELTER WILL BE CONSTRUCTED BY SHELTER MEDIA.
41 — LUMINAIRE SHALL PROVIDE A MEDIUM, SEMI-CUTOFF, TYPE 1 DISTRIBUTION.
40 — REMOVE AND DISPOSE OF EXISTING POT HEAD.
39 — DWP TO REMOVE SERVICE. CONTRACTOR SHALL REMOVE EXISTING SERIES SERVICE EQUIPMENT (SERVICE RISER AND PULLBOX).
38 — INTERCEPT EXISTING CONDUIT AND INSTALL TYPE 3 PULLBOX.
37 — REMOVE EXISTING TYPE 2 PULLBOX AND INSTALL NEW TYPE 3 PULLBOX.
36 — REMOVE TWO EXISTING MULTIPLE WIRES AND INSTALL THREE MULTIPLE CIRCUIT WIRES (COLOR CODE : 1-RED, 1-BLACK, 1-WHITE).
35 — REMOVE EXISTING TYPE 2 PULLBOX AND INSTALL NEW TYPE 3 SERVICE PULLBOX.
34 — INSTALL CONNECTING DEVICE PER DELTA NOTE 28, EXCEPT TO ACCOMMODATE FIVE (5) CIRCUITS INSTEAD OF FOUR (4) CIRCUITS - CIRCUITS "A", "B", "C", "D" & "E".
33 — BALLAST SHALL BE DESIGNED TO PROVIDE THE ELECTRICAL CHARACTERISTICS RECOMMENDED BY APPROVED LAMP MANUFACTURERS FOR PROPER STARTING AND OPERATION OF THE DESIGNATED LAMPS. BE LOW LOSS HIGH POWER FACTOR BALLASTED AND WATERPROOFED SATISFACTORY TO THE ENGINEER. PRIMARY LEADS SHALL BE No. 8 A.W.G. AND INSULATED FOR 5000 VOLT OPERATION. SECONDARY LEADS SHALL BE No. 10 A.W.G. AND INSULATED FOR 600 VOLT OPERATION. LEADS SHALL EXTEND AT LEAST 12 INCHES BEYOND THE INSULATED CAPSULE. IF BALLAST IS ENCASED IN METAL, A SATISFACTORY MEANS OF GROUNDING SHALL BE PROVIDED. BALLASTS SHALL BE CAPABLE OF WITHSTANDING A 10,500 VOLT HIGH POTENTIAL TEST.
32 — REMOVE EXISTING WIRES AND INSTALL NEW MULTIPLE CIRCUIT WIRE TO FACILITATE CONVERSION OF SERIES TO MULTIPLE (SEE MULTIPLE CIRCUIT NOTES).
31 — PROVIDE AND INSTALL A LAMP SIZED TO MATCH CONVERSION KIT FOR EACH CONVERSION KIT SPECIFIED.
30 — THE CONTRACTOR SHALL INSTALL ALL REQUIRED PHOTOELECTRIC CONTROLS. THE CONTROLS SHALL BE OBTAINED FROM THE DEPT. OF WATER AND POWER (D.W.P.) STREET LIGHTING MAINTENANCE HEADQUARTER, 611 NORTH HOOVER ST. , AT NO COST TO THE CONTRACTOR. A MINIMUM OF 15 DAYS ADVANCE NOTICE IS REQUIRED TO BE GIVEN TO THE D.W.P. STREET LIGHTING SUPERINTENDENT AT 213-481-4836. THE CONTRACTOR SHALL BE RESPONSIBLE FOR KEEPING ALL PHOTOELECTRIC CONTROLS ISSUED BY THE D.W.P. IN OPERATING CONDITION UNTIL SATISFACTORY COMPLETION OF THE BURN TEST. THE INSTALLED CONTROLS SHALL BE ORIENTED IN THE NORTHERLY DIRECTION.
29 — CONTRACTOR SHALL MODIFY OR REMOVE EXISTING SOCKETS, BRACKET OR TRANSFORMER AS REQUIRED FOR INSTALLATION OF CONVERSION KIT. NEW WIRES IN ELECTROLIER SHALL BE INSTALLED AND CONNECTED WHERE EXISTING WIRES CAN NOT BE USED.
28 — CONTRACTOR SHALL REMOVE EXISTING LUMINAIRE MOUNTING ARM FROM POLE IN ORDER TO OBTAIN THE NECESSARY WIRE WITH WHICH TO CONNECT NEW WIRES TO LUMINAIRE. MOUNTING ARM IS THEN REINSTALLED.
27 — CONTRACTOR SHALL REPLACE EXISTING SERIES EXTERNAL BALLAST OR TRANSFORMER WITH SPECIFIED SERIES EXTERNAL BALLAST AT ITS EXISTING LOCATION (EITHER POST BASE OR PULLBOX).
26 — INSTALLATION OF NEW LAMP SOCKET REQUIRES FABRICATION AND INSTALLATION OF MOUNTING BRACKET. SEE BID PACKAGE FOR ADDITIONAL INFORMATION AND REQUIREMENTS. ANY ADDITIONAL WORK REQUIRED TO COMPLETE INSTALLATION OF MOUNTING BRACKET AND SOCKET SHALL BE DONE BY THE CONTRACTOR. ASSOCIATED COSTS SHALL BE INCLUDED IN THE BID FOR THE "LED POST TOP LAMP" BID ITEM. ADDITIONAL WORK MAY INCLUDE (BUT NOT LIMITED TO):
1. REMOVE EXISTING CONVERSION KIT.
2. FABRICATE NEW MOUNTING BRACKETS AT PROPER HEIGHTS TO MATCH GLOBE SIZE TO ACHIEVE PROPORTIONAL LAMP CENTER HEIGHT AND FIRMLY SECURE TO GLOBE/LANTERN BASE.
3. DRILL OR ENLARGE HOLES AND FURNISH LONGER SCREWS.
4. MODIFY GLOBE OR LANTERN FITTER (BASE SUPPORT)
25 — MULTIPLE COMBINED STREET LIGHTING AND TRAFFIC SIGNAL SERVICE LOCATION. INSTALL SEPARATE TYPE 3 SERVICE PULLBOX FOR STREET LIGHTING WITH 2" CONDUIT CONNECTING EXISTING TRAFFIC SERVICE PULLBOX. INTERCEPT SERVICE WIRES FROM EXISTING TRAFFIC SIGNAL PULLBOX.
24 — TAPE ENDS OF SPARE WIRE.
23 — INSTALL THREE MULTIPLE CIRCUIT WIRES: (COLOR CODE: 1-RED, 1-BLACK, 1-WHITE)
22 — REMOVE EXISTING STREET LIGHTING WIRES.
21 — MULTIPLE SERVICE LOCATION. INTERCEPT CONDUIT INSTALLED BY OTHERS AND INSTALL TYPE 3 SERVICE PULLBOX. VERIFY EXACT LOCATION OF CONDUIT. PHONE DEPT. OF WATER AND POWER UNDERGROUND ENGINEERING FIVE DAYS PRIOR TO START OF WORK AT THIS LOCATION, PHONE: (213) 367-3003.
20 — TRIM TREE (SEE SUPPLEMENTAL NOTE NO. 20).
19 — INSTALL APPROVED CONNECTING DEVICES PER DETAIL "B", BUREAU OF STREET LIGHTING STANDARD DRAWING NO. L-301-1 (CIRCUITS "A", "B", & "C").
18 — INSTALL APPROVED CONNECTING DEVICES PER DETAIL "A", BUREAU OF STREET LIGHTING STANDARD DRAWING NO. L-301-1 (CIRCUITS "A", "B", "C", & "D").
17 — MULTIPLE SERVICE LOCATION. INSTALL 10' OF 2" GALVANIZED CONDUIT SERVICE RISER ON POLE. EXTEND CONDUIT TO THE ALLEY B.C. AND INSTALL TYPE 3 PULLBOX UNLESS OTHERWISE SPECIFIED. INSTALL PULLWIRE.
16 — INSTALL FIVE MULTIPLE CIRCUIT WIRES: (COLOR CODE: 2-RED, 2-BLACK, 1-WHITE)
15 — INSTALL TWO MULTIPLE CIRCUIT WIRES: (COLOR CODE: 1-BLACK, 1-WHITE)
14 — INSTALL TWO MULTIPLE CIRCUIT WIRES: (COLOR CODE: 1-RED, 1-WHITE)
13 — INSTALL 1" CONDUIT BEND.
12 — INSTALL ADDITIONAL 2" CONDUIT BEND FOR TRAFFIC SIGNAL WIRING.
11 — INSTALL ONE APPROVED FUSE HOLDER WITH 30 AMP FUSE BETWEEN EACH SERVICE WIRE (NOT NEUTRAL WIRE) OR SERVICE WIRE CONNECTING DEVICE AND STREET LIGHTING CIRCUIT WIRE. SERVING COMPANY WILL INSTALL SERVICE.
10 — JOIN CONDUIT.
9 — MULTIPLE SERVICE LOCATION. INSTALL TYPE 3 PULLBOX UNLESS OTHERWISE SPECIFIED AND 10' OF 2" GALVANIZED CONDUIT SERVICE RISER ON POLE. INSTALL PULLBOX NO CLOSER THAN 5' AND NO FARTHER THAN 15' FROM THE SERVICE POLE.
8 — SERIES SERVICE POLE. INSTALL ONE TERMINAL CUTOFF BOX PER STANDARD PLAN B-3724 WITH ONE DISCONNECTING SWITCH FOR EACH CIRCUIT. SERVING COMPANY WILL INSTALL SERVICE.
7 — CONSTRUCT CASE 4 DRIVEWAY RETURN PER STANDARD PLAN NO. S-440.
6 — CONSTRUCT CASE 3 DRIVEWAY RETURN PER STANDARD PLAN NO. S-440.
5 — INTERCEPT CONDUIT AND INSTALL PULLBOX.
4 — THREAD AND CAP CONDUIT AT END OF IMPROVEMENT.
3 — INSTALL CONDUIT ONLY.
2 — CONNECT WIRES (PER CIRCUIT DIAGRAM WHERE APPLICABLE).
1 — TERMINATE CONDUIT IN STREET LIGHTING PULLBOX.

THE ABOVE NOTES ARE APPLICABLE ONLY WHERE SPECIFIED ON THIS PLAN.

DELTA NOTES:

53 — INSTALL PE COLLAR GLOBE HOLDER ASSEMBLY ON EXISTING POLE. SEE DETAIL "C" ON SHEET 2.
52 — PHOTOELECTRIC CONTROL ELECTROLIER, USE PE CONTROLLED WIRE (BLUE) TO SWITCH "SSRE" RELAY, SEE DETAIL "B" ON SHEET 2. CONTRACTOR SHALL REPLACE EXISTING POLE CAP WITH MODIFIED PHOTOELECTRIC CONTROL (PE) RECEPTACLE MOUNTED POLE CAP KIT (INCLUDING WIRE RETENTION WEB). CONTRACTOR CAN PICK UP THE KIT AT BSL COUNTER, 1149 S. BROADWAY, 2ND FLOOR AT THE COST OF $50 PER KIT. REFER TO DELTA NOTE 30 FOR PE PICKUP.
51 — PHOTOELECTRIC CONTROL ELECTROLIER, USE PE CONTROLLED WIRE (BLUE) TO POWER ADJACENT LIGHTS, SEE DETAIL "A" ON SHEET 2. CONTRACTOR SHALL REPLACE EXISTING POLE CAP WITH MODIFIED PHOTOELECTRIC CONTROL (PE) RECEPTACLE MOUNTED POLE CAP KIT (INCLUDING WIRE RETENTION WEB). CONTRACTOR MAY PURCHASE THE KIT AT BSL COUNTER, 1149 S. BROADWAY, 2ND FLOOR FOR A NON-REFUNDABLE COST (SEE BID SHEET FOR PRICES). A SEVEN WORKING DAYS NOTICE TO THE CONSTRUCTION ENGINEER IS REQUIRED PRIOR TO PICKING UP THE KITS. REFER TO DELTA NOTE 30 FOR PE PICKUP.
50 — ALL COBRAHEAD LUMINAIRES (REGARDLESS OF WATTAGE) ON LOW VOLTAGE MULTIPLE CIRCUITS SHALL BE EQUIPPED WITH A REMOTE MONITORING NODE. THE UNIT SHOULD BE PICKED UP AT THE BUREAU'S PLAN COUNTER AT 1149 S. BROADWAY STE 200, LOS ANGELES, CA 90015. THE UNIT WILL BE PROVIDED FOR A NON-REFUNDABLE FEE (APPROXIMATELY $155 PER UNIT). THE CONTRACTOR SHALL GIVE SEVEN WORKING DAYS NOTICE (PHONE 213-847-1492) PRIOR TO PICKING UP THE REMOTE MONITORING UNITS. NODES SHALL BE INSTALLED INTO PHOTOELECTRIC CONTROL STANDARD SOCKET PER ANSI/NEMA C-136.10 AND SHALL BE ORIENTED IN A NORTHERLY DIRECTION. A SEPARATE P.E. CELL IS NOT NEEDED FOR LUMINAIRES EQUIPPED WITH A REMOTE MONITORING NODE.
49 — THE CATALOG NUMBERS ARE AS SHOWN BELOW OR BSL APPROVED EQUAL:
LEOTEK GREENCOBRA 20F: GC1-20F-MV-NW-2-GY-530-PCR7
LEOTEK ECOBRA 11M: EC3-11M-MV-NW-3-GY-650-PCR7
LEOTEK ECOBRA 18M @ 700mA: EC7-18M-MV-NW-3-GY-700-PCR7
LUMEC SOFFIT: [RETRO-479]-65W42LED4K-R-LE5F-120-[FAWS-012]-BKTX
TRULY GREEN SOLUTIONS LAMP: 31082, 2600K - 36W NO CHIP TOP E40 BASE
LEVITON E40 BASE MOGUL LAMPHOLDER: 8783-002
THE LUMINAIRES SPECIFIED ON THIS PLAN ARE VALID FOR ONLY 6 MONTHS FROM FINAL PLAN APPROVAL. THE CONTRACTOR SHALL VALIDATE THE CATALOG NUMBERS WITH THE BUREAU OF STREET LIGHTING PRIOR TO CONSTRUCTION.
48 — INSTALL 2" CONDUIT WITH NINE MULTIPLE WIRES: (COLOR CODE: 4-RED, 4-BLACK, 1-WHITE)

ALL CONSTRUCTION IS PROHIBITED ON MAJOR AND SECONDARY STREETS BETWEEN: 6:00 A.M. TO 9:00 A.M. AND 3:30 P.M. TO 7:00 P.M.

SUPPLEMENTAL NOTES:

1. IN THE EVENT THE WORK IS NOT COMPLETED WITHIN SUCH TIME AS SPECIFIED IN THE CONTRACT, LIQUIDATED DAMAGES IN THE AMOUNT STATED THEREIN WILL BE DEDUCTED FROM THE AMOUNT TO BE PAID TO THE CONTRACTOR.
2. TIME SPECIFIED IN THE "PROPOSAL" FOR COMPLETION OF THE WORK INCLUDES TIME FOR PROCUREMENT AND TESTING OF EQUIPMENT TO BE INSTALLED. NOTWITHSTANDING SECTION 6-8.1 OF THE STANDARD SPECIFICATIONS FOR PUBLIC WORKS CONSTRUCTION, NO MATERIAL DELAY WILL BE GRANTED ON THIS PROJECT.
3. ALL ELECTROLIER LOCATIONS ARE AT OR DIMENSIONED FROM BCR UNLESS OTHERWISE SHOWN ON THE PLAN.
4. ALL ELECTROLIER DIMENSIONS SHOWN ON PLAN ARE MEASURED ALONG THE CURB FACE.
5. PROPOSED ELECTROLIER FOUNDATIONS AND PULLBOXES SHALL BE INSTALLED OUTSIDE OF ACCESS RAMP AREAS. EXISTING FOUNDATIONS AND PULLBOXES SHALL BE RECONSTRUCTED TO CLEAR ACCESS RAMPS BY A MINIMUM OF 12". EXISTING CONDUIT SHALL BE LOWERED AS NECESSARY PER SEC. 307-2.5 OF THE STANDARD SPECIFICATIONS FOR PUBLIC WORKS CONSTRUCTION.
6. PULLBOXES SHALL NOT BE PLACED IN ALLEYS. ALL SERVICE PULLBOXES OR OTHER PULLBOXES REQUIRED NEAR ALLEY APPROACHES SHALL BE INSTALLED IN ACCORDANCE WITH GENERAL NOTE NO. 11 HEREON.
7. CONTRACTOR SHALL MAKE ARRANGEMENTS TO DE-ENERGIZE EXISTING STREET LIGHTING SYSTEM AT THE TIME THE NEW SYSTEM IS ENERGIZED.
8. TOTAL UNIT NUMBERS OF EQUIPMENT SPECIFIED TO BE REMOVED AND DISPOSED OF ARE AN APPROXIMATION. ACTUAL NUMBERS SHALL BE VERIFIED BY CONTRACTOR'S FIELD INVESTIGATION.
9. EQUIPMENT IDENTIFIED TO BE SALVAGED IS EXTREMELY FRAGILE. CONTRACTOR SHALL USE EXTREME CARE IN REMOVING AND TRANSPORTING SALVAGE EQUIPMENT. DAMAGED EQUIPMENT WILL NOT BE ACCEPTED TO MEET CONTRACTOR'S SALVAGE REQUIREMENT AND THE REPLACEMENT COST OF SUCH EQUIPMENT WILL BE DEDUCTED FROM CONTRACT COST.
10. TRAFFIC SIGNAL WORK TO BE PERFORMED BY THE CONTRACTOR. THE CONTRACTOR SHALL BE RESPONSIBLE FOR COORDINATING TRAFFIC SIGNAL WORK WITH THE DEPARTMENT OF TRANSPORTATION AND SHALL TAKE THIS INTO CONSIDERATION WHEN SCHEDULING WORK AND MAKING COST ESTIMATES (SEE SUPPLEMENTAL NOTE NO. 12).
11. THE CONTRACTOR SHALL GIVE THE TRAFFIC SIGNAL SUPERINTENDENT (TELEPHONE: 213-485-2261) THREE WORKING DAYS NOTICE BEFORE SCHEDULING WORK THAT WILL REQUIRE COORDINATION WITH THE DEPARTMENT OF TRANSPORTATION. THIS SHALL INCLUDE, BUT NOT BE LIMITED TO, SPECIFIC WORK LOCATIONS INDICATED ON THESE PLANS.
12. CONTRACTOR SHALL BE RESPONSIBLE FOR THE SALVAGE AND REINSTALLATION OF ALL STREET NAME AND NEIGHBORHOOD WATCH SIGNS ON THE PROJECT.
13. CONTRACTOR SHALL PROTECT OR REMOVE AND REPLACE ALL EXISTING IMPROVEMENTS NEAR EXISTING/NEW FOUNDATIONS (i.e., FENCES, BRICK WORK, LANDSCAPING, TERRAZO AND BLOCKWALLS).
14. UTILITIES: UTILITY LINES S

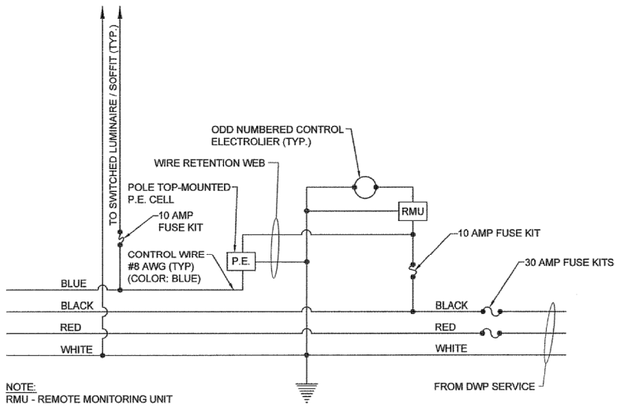

NOTE:
RMU - REMOTE MONITORING UNIT

DETAIL "A"

PE - SWITCHING CIRCUIT DIAGRAM

NOT TO SCALE

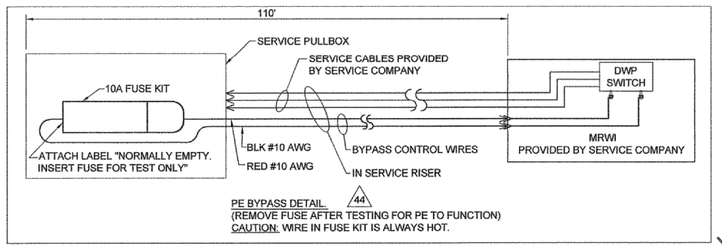

PE BYPASS DETAIL. 44
(REMOVE FUSE AFTER TESTING FOR PE TO FUNCTION)
CAUTION: WIRE IN FUSE KIT IS ALWAYS HOT.

DETAIL "B"

PE - BYPASS CONTROL LINE

NOT TO SCALE

PLAN OF ELECTROLIER LIGHTING SYSTEM

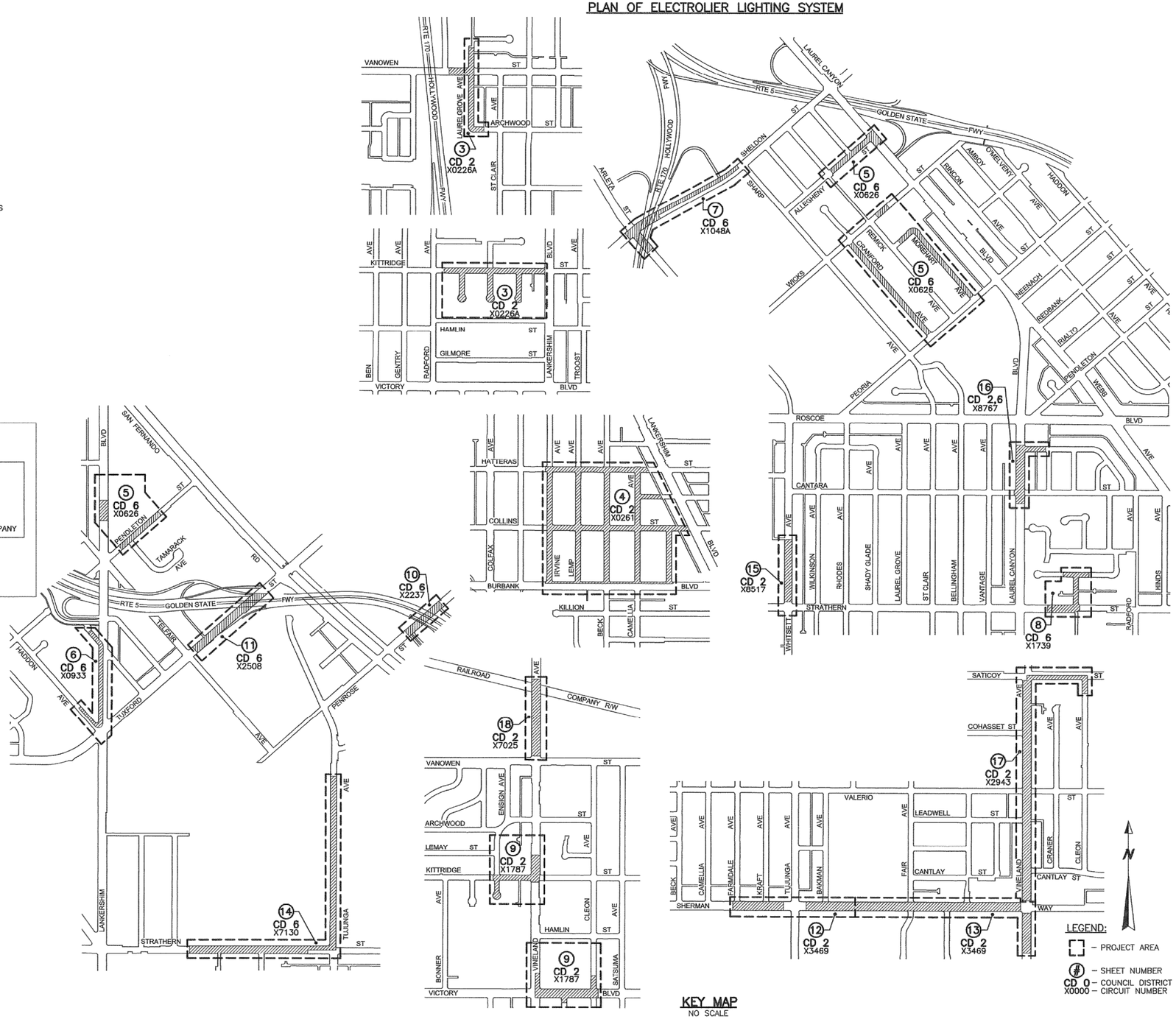

LEGEND:
- PROJECT AREA
- # - SHEET NUMBER
- CD 0 - COUNCIL DISTRICT
- X0000 - CIRCUIT NUMBER

KEY MAP

NO SCALE

SUN VALLEY-NORTH HOLLYWOOD STM, KEY MAP AND DETAILS
HIGH VOLTAGE CONVERSION FY 2015-16

W.O. L1649427

REGISTERED PROFESSIONAL ENGINEER NORMA MARIE ISAHAKIAN E 13696 Exp. 12/17 ELECTRICAL STATE OF CALIFORNIA

CONTRACTOR
INSPECTED BY
DATE ENERGIZED ELECTS. LAMPS:
DATE ENERGIZED ELECTS. LAMPS:
DATE ENERGIZED ELECTS. LAMPS:
CORRECTED TO "AS BUILT" DATE
BY CHECKED

PLAN DRAFTING FILE NO.:
L:\FSDS\ID\STM\Hight Voltage Conversion\SunValley_NorthHollywood\SunValley-NorthHollywood_Kmap and Details.dwg

SYM.	REVISION	DESCRIPTION	DIVISION ENGINEER BUREAU OF ST. LTG.	DATE

CITY OF LOS ANGELES
ED EBRAHIMIAN, DIRECTOR BUREAU OF STREET LIGHTING

STREET LIGHTING

DATE 4-12 2016

DIRECTOR BUREAU OF STREET LIGHTING

SCALE OF ORIGINAL PLAN: NONE 100 50 0 50 100 150 200 feet

SHEET 2 OF 18 SHEETS

INDEX NUMBER M-2427

STREET CLASSIFICATION (M)=MAJOR, (C)=COLLECTOR, (L)=LOCAL	
ARCHWOOD ST	(L)
VANOWEN ST	(M)
LAURELGROVE AVE	(L, C)
KITTRIDGE ST	(C)
HINDS AVE	(L)
MORFLLA AVE	(L)
SIMPSON AVE	(L)

EXISTING LAMP SIZE SHT. 3 ONLY

LAMP SIZE	QUANTITY	CD
70W HPS	14	2
100W HPS	3	2
200W HPS	1	2

TOTAL ITEMS REQUIRED FOR SHT. 3 ONLY

NOTE: SEE MATERIAL INSTALLATION LIST ON SHT. NO 1 FOR DESCRIPTION.

SYMBOL	ITEM	LAMP SIZE	QUANTITY
(L1)	LUMINAIRE	35W LEOTEK GREENCOBRA 20F	17
(L3)	LUMINAIRE	89W LEOTEK ECOBRA 11M	1

CONTRACTOR
INSPECTED BY
DATE ENERGIZED ELECTS. LAMPS:
DATE ENERGIZED ELECTS. LAMPS:
DATE ENERGIZED ELECTS. LAMPS:
CORRECTED TO "AS BUILT" DATE
BY CHECKED

PLAN DRAFTING FILE NO.: D:\Projects\High Voltage Conversion\SunValley_NorthHollywood\X0226A\ \SMD\X0226A.dwg

EXIST. MULT. ST. LT. SVC. NO. 2 (11)
P.P. #41162M
EXISTING CKT. "A": 5-89W LEOTEK 11M
2-98W LEOTEK 14M
REMOVE CKT. "A": 1-89W LEOTEK 11M, NO. P-26312 (7)
INSTALL CKT. "B": 7-35W LEOTEK GREENCOBRA 20F, NOS. 12-18 (32)
TRANSFER TO CKT. "B": 1-89W LEOTEK 11M, NO. P-26312 (7) (FROM CKT. "A")
NOTE: USE NO 8 AWG WIRE

EXIST. MULT. ST. LT. SVC. NO. 1
P.P. #133807M
EXISTING CKT. "A": 5-82W CREE XSP2-C
1-89W LEOTEK 11M
2-117W LEOTEK 18M
EXISTING CKT. "B": 3-82W CREE XSP2-C
EXISTING CKT. "C": 8-82W CREE XSP2-C
1-89W LEOTEK 11M
2-117W LEOTEK 18M
INSTALL CKT. "C": 11-35W LEOTEK GREENCOBRA 20F, NOS. 1-11 (32)
NOTE: USE NO 8 AWG WIRE

EXIST. UTIL. SERIES CKT. X0226A (39)
P.P #43563M
REMOVE ALL EXIST. LAMPS AS SHOWN
DWP TO RELOOP UTIL. X0226A

EXIST. UTIL. SERIES CKT. X0226A (39)
REMOVE ALL EXIST. LAMPS AS SHOWN
DWP TO RELOOP UTIL. X0226A

EXIST. UTIL. SERIES CKT. X0226A (39)
REMOVE ALL EXIST. LAMPS AS SHOWN
DWP TO RELOOP UTIL. X0226A

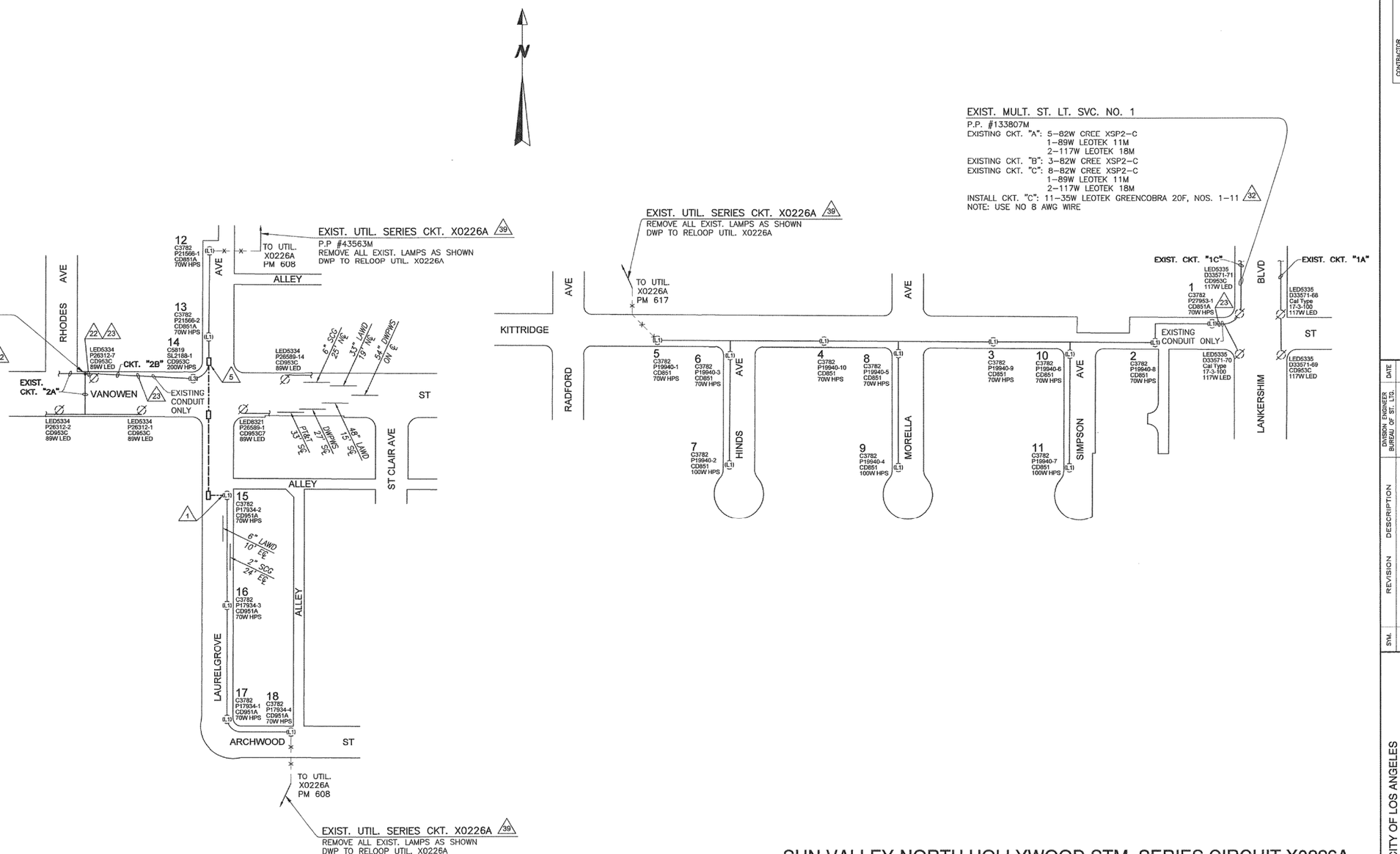

SUN VALLEY-NORTH HOLLYWOOD STM, SERIES CIRCUIT X0226A HIGH VOLTAGE CONVERSION FY 2015-16

W.O. L1649427

REGISTERED PROFESSIONAL ENGINEER NORMA MARIE ISAKHANIAN E 13896 EXP. 6/17 ELECTRICAL STATE OF CALIFORNIA

DIVISION ENGINEER BUREAU OF ST. LTG.

SYM.	REVISION	DESCRIPTION	DATE

CITY OF LOS ANGELES
ED EBRAHIMIAN, DIRECTOR BUREAU OF STREET LIGHTING

STREET LIGHTING

DATE 4-12 20 16

DIRECTOR BUREAU OF STREET LIGHTING

SCALE OF ORIGINAL PLAN: 1"=100' (100 50 0 50 100 150 200 feet)

SHEET 3 OF 18 SHEETS

INDEX NUMBER M-2427

STREET CLASSIFICATION (M)=MAJOR, (C)=COLLECTOR, (L)=LOCAL	
COLLINS ST	(L)
MIRANDA ST	(L)
HATTERAS ST	(C)
IRVINE AVE	(L)
LEMP AVE	(C)
BECK AVE	(L)
CAMELLIA AVE	(L)
FARMDALE AVE	(L)

EXISTING LAMP SIZE SHT. 4 ONLY

LAMP SIZE	QUANTITY	CD
70W HPS	48	2
100W HPS	1	2
200W HPS	1	2

TOTAL ITEMS REQUIRED FOR SHT. 4 ONLY

NOTE: SEE MATERIAL INSTALLATION LIST ON SHT. NO 1 FOR DESCRIPTION.

SYMBOL	ITEM	LAMP SIZE	QUANTITY
(T2)	LAMP	36W, 2600K TRULY GREEN SOLUTIONS	49
(L3)	LUMINAIRE	89W LEOTEK ECOBRA 11M	1

NEW MULTI-MULT. ST. LT. SVC. NO. 3 (11) (44)
P.P. #333198M MRWI (EXISTING MULTIPLE SERVICE)
EXISTING CKT. "A": 1-200W HPS, NO. D-33546 (1)
REMOVE CKT. "A": 1-200W HPS, NO. D-33546 (1)
INSTALL CKT. "A": 28-36W, 2600K TRULY GREEN SOLUTIONS, NOS. 19-46
1-89W LEOTEK ECOBRA 11M, NO. 315
INSTALL CKT. "B": 21-36W, 2600K TRULY GREEN SOLUTIONS, NOS. 47-67
NOTE: USE NO 8 AWG WIRE

EXIST. SERIES CKT. X0261 (39)
P.P. #94293M
REMOVE ALL EXIST. LAMPS

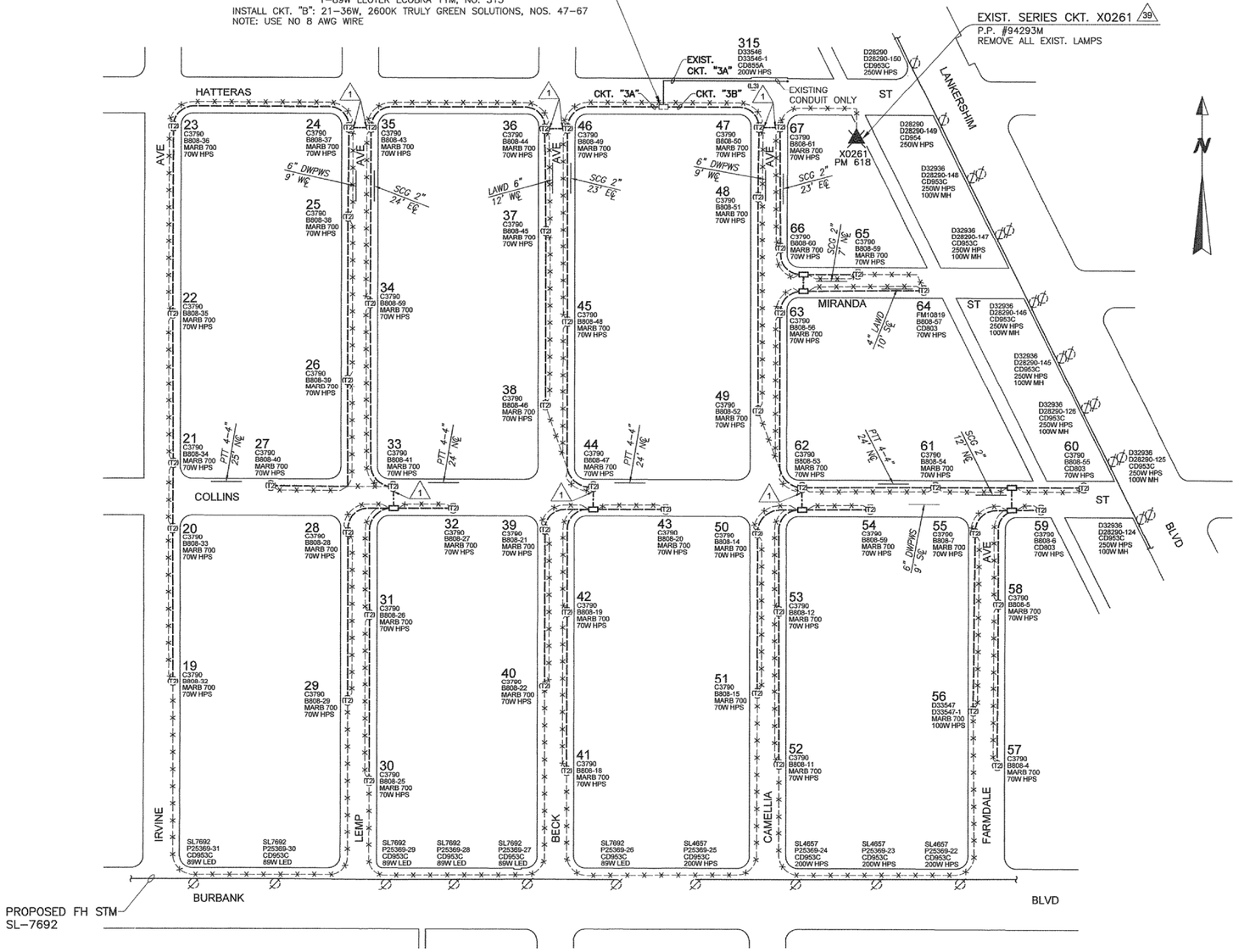

SUN VALLEY-NORTH HOLLYWOOD STM, SERIES CIRCUIT X0261
HIGH VOLTAGE CONVERSION FY 2015-16

W.O. L1649427

CONTRACTOR
INSPECTED BY
DATE ENERGIZED ELECTS. LAMPS:
DATE ENERGIZED ELECTS. LAMPS:
DATE ENERGIZED ELECTS. LAMPS:
CORRECTED TO "AS BUILT" DATE
BY CHECKED

PLAN DRAFTING FILE NO.: L:\FS\GS10\STM\Hight Voltage Conversion\SunValley_NorthHollywood\X0261\DWG\X0261.dwg

SYM.	REVISION	DESCRIPTION	DIVISION ENGINEER BUREAU OF ST. LTG.	DATE

CITY OF LOS ANGELES
ED EBRAHIMIAN, DIRECTOR BUREAU OF STREET LIGHTING

STREET LIGHTING
DATE 4-12 20 16
DIRECTOR BUREAU OF STREET LIGHTING

REGISTERED PROFESSIONAL ENGINEER NORMA MARIE ISAHAKIAN E 13696 Exp. 6/17 ELECTRICAL STATE OF CALIFORNIA

SCALE OF ORIGINAL PLAN: 1"=100' 100 50 0 50 100 150 200 feet

SHEET 4 OF 18 SHEETS

INDEX NUMBER M-2427

STREET CLASSIFICATION (M)=MAJOR, (C)=COLLECTOR, (L)=LOCAL	
ART ST	(L)
WICKS ST	(C)
ALLEGHENY ST	(L)
PENDLETON ST	(C)
LANKERSHIM BLVD	(M)
LAUREL CANYON BLVD	(M)
CRANFORD AVE	(L)
MOREHART AVE	(L)

EXISTING LAMP SIZE SHT. 5 ONLY

LAMP SIZE	QUANTITY	CD
70W HPS	24	6
200W HPS	7	6
400W MV	1	6

TOTAL ITEMS REQUIRED FOR SHT. 5 ONLY

NOTE: SEE MATERIAL INSTALLATION LIST ON SHT. NO 1 FOR DESCRIPTION.

SYMBOL	ITEM	LAMP SIZE	QUANTITY
(L1)	LUMINAIRE	35W LEOTEK GREENCOBRA 20F	24
(L3)	LUMINAIRE	89W LEOTEK ECOBRA 11M	8

EXIST. U.G. MULT. ST. LT. SVC. NO. 5
H.H. 8721 CRANFORD AVE
EXISTING CKT. "A": 6-35W BETA 30 LED
2-52W BETA 30 LED
INSTALL: 10-35W LEOTEK GREENCOBRA 20F, NOS. 78-87
NOTE: USE NO 8 AWG WIRE

EXIST. MULT. ST. LT. SVC. NO. 7
P.P. #124410M
EXISTING CKT. "A": 2-82W CREE XSP2-C
INSTALL: 1-89W LEOTEK ECOBRA 11M, NO. 88
NOTE: USE NO 8 AWG WIRE

EXIST. UTIL. SERIES CKT. X0626
REMOVE ALL EXIST. LAMPS AS SHOWN
DWP TO RELOOP UTIL. X0626

EXIST. MULT. ST. LT. SVC. NO. 8
P.P. #409297M
EXISTING CKT. "A": 5-35W BETA 30 LED
1-52W BETA 30 LED
INSTALL: 4-35W LEOTEK GREENCOBRA 20F, NOS. 96-99
NOTE: USE NO 8 AWG WIRE

NEW MULT. ST. LT. SVC. NO. 6
P.P. #205162M, RISER AT 3:00 C/L OF ALLEGHENY ST
INSTALL CKT. "A": 7-89W LEOTEK ECOBRA 11M, NOS. 89-95
NOTE: USE NO 8 AWG WIRE

EXIST. MULT. ST. LT. SVC. NO. 4
P.P. #165367M
EXISTING CKT. "A": 6-35W BETA 30 LED
INSTALL: 10-35W LEOTEK GREENCOBRA 20F, NOS. 68-77
NOTE: USE NO 8 AWG WIRE

SUN VALLEY-NORTH HOLLYWOOD STM, SERIES CIRCUIT X0626
HIGH VOLTAGE CONVERSION FY 2015-16

W.O. L1649427

REGISTERED PROFESSIONAL ENGINEER NORMA MARIE ISAHAKIAN E 13696 Exp. 6-11 ELECTRICAL STATE OF CALIFORNIA

CONTRACTOR
INSPECTED BY
DATE ENERGIZED ELECTS. LAMPS:
DATE ENERGIZED ELECTS. LAMPS:
DATE ENERGIZED ELECTS. LAMPS:
CORRECTED TO "AS BUILT" DATE
BY CHECKED

PLAN DRAFTING FILE NO.: \\Projects\Projects\High Voltage Conversion\SunValley_NorthHollywood\X0626\CMR\X0626.dwg

SYM.	REVISION	DESCRIPTION	DIVISION ENGINEER BUREAU OF ST. LTG.	DATE

CITY OF LOS ANGELES
ED EBRAHIMIAN, DIRECTOR BUREAU OF STREET LIGHTING

STREET LIGHTING

DATE 4-1-15 20 16

DIRECTOR BUREAU OF STREET LIGHTING

SCALE OF ORIGINAL PLAN: 1"=100' (100 50 0 50 100 150 200 feet)

SHEET 5 OF 18 SHEETS

INDEX NUMBER M-2427

STREET CLASSIFICATION (M)=MAJOR, (C)=COLLECTOR, (L)=LOCAL	
LANKERSHIM BLVD	(M)
HADDON AVE	(L)
KEWEN AVE	(L)

EXISTING LAMP SIZE SHT. 6 ONLY

LAMP SIZE	QUANTITY	CD
70W HPS	3	6
200W HPS	7	6

TOTAL ITEMS REQUIRED FOR SHT. 6 ONLY

NOTE: SEE MATERIAL INSTALLATION LIST ON SHT. NO 1 FOR DESCRIPTION.

SYMBOL	ITEM	LAMP SIZE	QUANTITY
L1	LUMINAIRE	35W LEOTEK GREENCOBRA 20F	3
L3	LUMINAIRE	89W LEOTEK ECOBRA 11M	7

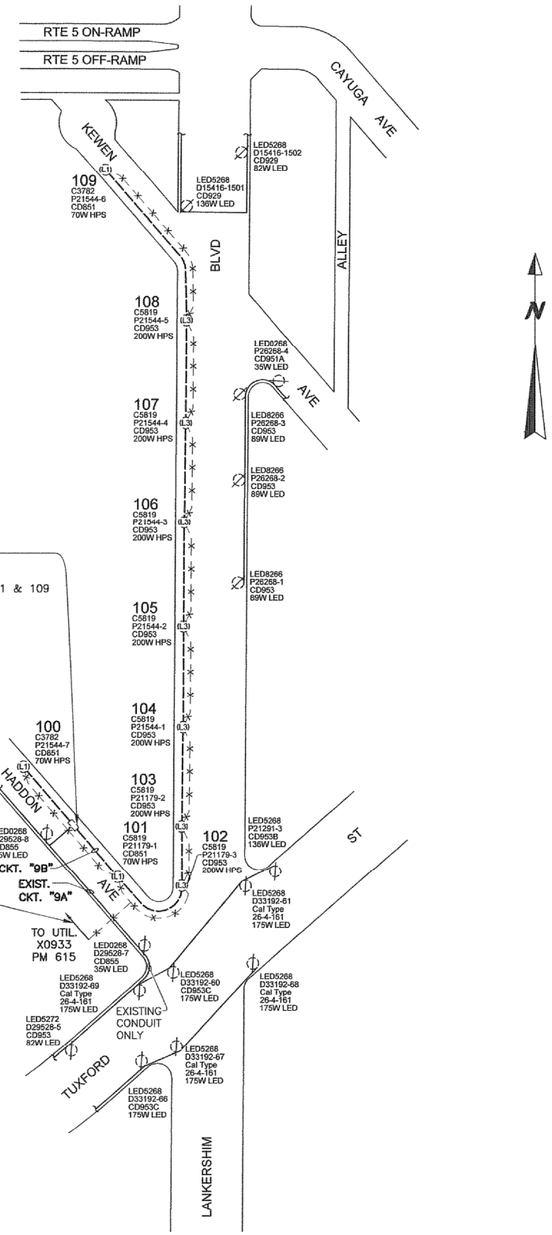

EXIST. MULT. ST. LT. SVC. NO. 9 (11)
P.P. #278825M
EXISTING CKT. "A": 5-35W BETA 30 LED
INSTALL CKT. "B": 3-35W LEOTEK GREENCOBRA 20F, NOS. 100, 101 & 109
7-89W LEOTEK ECOBRA 11M, NOS. 102-108
NOTE: USE NO 8 AWG WIRE

EXIST. UTIL. SERIES CKT. X0933 (39)
P.P. #60183M
REMOVE ALL EXIST. LAMPS AS SHOWN
DWP TO RELOOP UTIL. X0933

SUN VALLEY-NORTH HOLLYWOOD STM, SERIES CIRCUIT X0933
HIGH VOLTAGE CONVERSION FY 2015-16
W.O. L1649427

CONTRACTOR
INSPECTED BY
DATE ENERGIZED ELECTS. LAMPS:
DATE ENERGIZED ELECTS. LAMPS:
DATE ENERGIZED ELECTS. LAMPS:
CORRECTED TO "AS BUILT" DATE
BY CHECKED

PLAN DRAFTING FILE NO.: L:\FS0510\STM\High Voltage Conversion\SunValley_NorthHollywood\X0933\\DWG\X0933.dwg

SYM.	REVISION	DESCRIPTION	DIVISION ENGINEER BUREAU OF ST. LTG.	DATE

CITY OF LOS ANGELES
ED EBRAHIMIAN, DIRECTOR BUREAU OF STREET LIGHTING
STREET LIGHTING
DATE 4-12-16 20
DIRECTOR BUREAU OF STREET LIGHTING

REGISTERED PROFESSIONAL ENGINEER NORMA MARIE ISAHAKIAN E 13696 Exp. 6/17 ELECTRICAL STATE OF CALIFORNIA

SCALE OF ORIGINAL PLAN: 1"=100' 100 50 0 50 100 150 200 feet

SHEET 6 OF 18 SHEETS

INDEX NUMBER M-2427

STREET CLASSIFICATION (M)=MAJOR, (C)=COLLECTOR, (L)=LOCAL	
SHELDON ST	(M)
ARLETA AVE	(M)

EXISTING LAMP SIZE SHT. 7 ONLY

LAMP SIZE	QUANTITY	CD
100W HPS	24	6
200W HPS	7	6
400W HPS	1	6

TOTAL ITEMS REQUIRED FOR SHT. 7 ONLY

NOTE: SEE MATERIAL INSTALLATION LIST ON SHT. NO 1 FOR DESCRIPTION.

SYMBOL	ITEM	LAMP SIZE	QUANTITY
L3	LUMINAIRE	89W LEOTEK ECOBRA 11M	7
L6	LUMINAIRE	163W LEOTEK ECOBRA 18M @ 700mA	1
LS	SOFFIT CONVERSION KIT	45W LUMEC	24

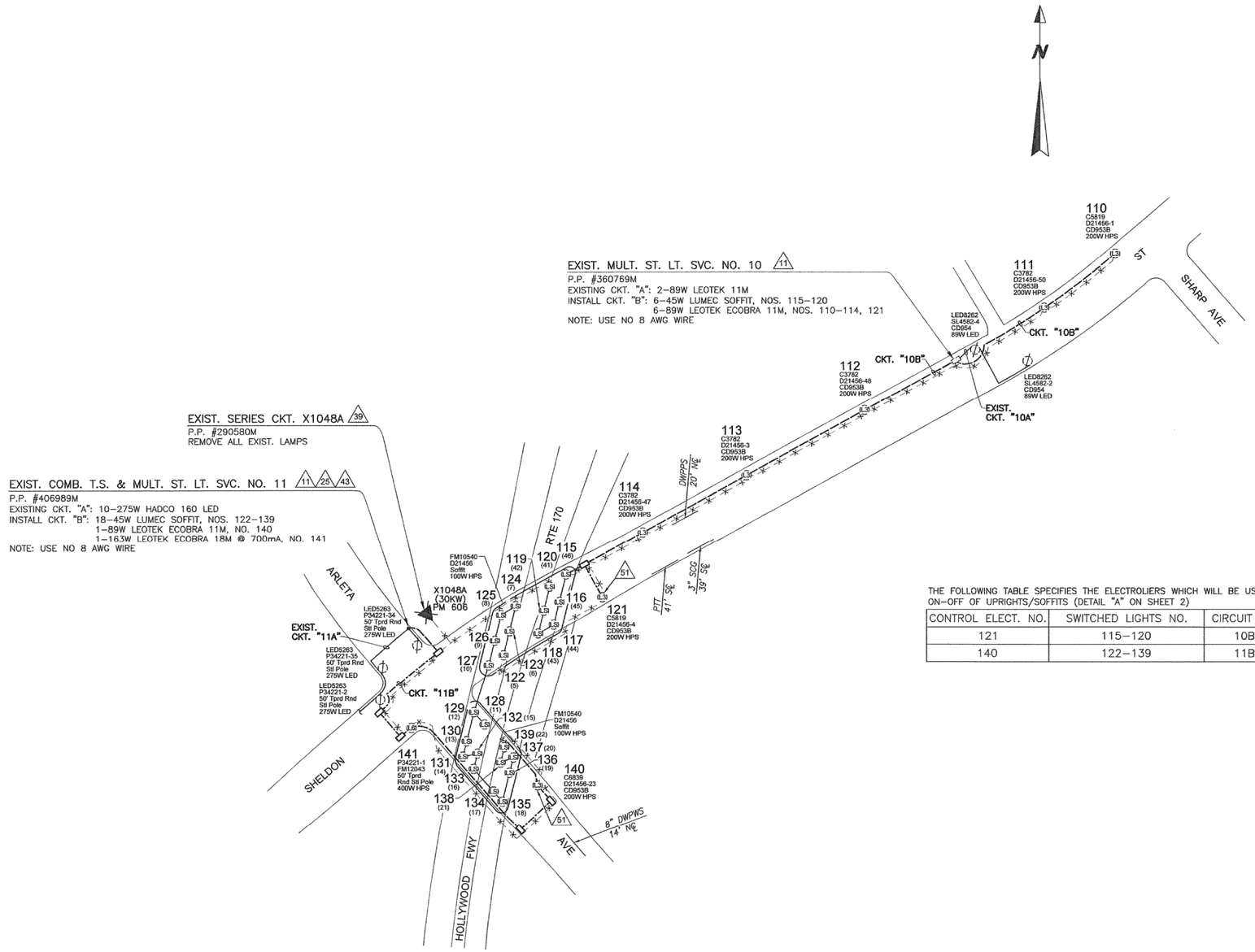

THE FOLLOWING TABLE SPECIFIES THE ELECTROLIERS WHICH WILL BE USED TO CONTROL THE ON-OFF OF UPRIGHTS/SOFFITS (DETAIL "A" ON SHEET 2)

CONTROL ELECT. NO.	SWITCHED LIGHTS NO.	CIRCUIT NO.	SHEET NO.
121	115-120	10B	7
140	122-139	11B	7

SUN VALLEY-NORTH HOLLYWOOD STM, SERIES CIRCUIT X1048A
HIGH VOLTAGE CONVERSION FY 2015-16

W.O. L1649427

REGISTERED PROFESSIONAL ENGINEER NORMA MARIE ISAHAMIAN E 13696 Exp. 6/17 ELECTRICAL STATE OF CALIFORNIA

CONTRACTOR
INSPECTED BY
DATE ENERGIZED ELECTS. LAMPS:
DATE ENERGIZED ELECTS. LAMPS:
DATE ENERGIZED ELECTS. LAMPS:
CORRECTED TO "AS BUILT" DATE
BY CHECKED

PLAN DRAFTING FILE NO.: L:\FS\DSI10\STM\Hight Voltage Conversion\SunValley_NorthHollywood\X1048A\DWG\X1048A.dwg

SYM.	REVISION	DESCRIPTION	DIVISION ENGINEER BUREAU OF ST. LTG.	DATE

CITY OF LOS ANGELES
ED EBRAHIMIAN, DIRECTOR BUREAU OF STREET LIGHTING

STREET LIGHTING
DATE 4/12 20/6
DIRECTOR BUREAU OF STREET LIGHTING

SCALE OF ORIGINAL PLAN: 1"=100' 100 50 0 50 100 150 200 feet

SHEET 7 OF 18 SHEETS

INDEX NUMBER M-2427

STREET CLASSIFICATION (M)=MAJOR, (C)=COLLECTOR, (L)=LOCAL	
STRATHERN ST	(M)
RATNER ST	(L)
BEN AVE.	(L)

EXISTING LAMP SIZE SHT. 8 ONLY

LAMP SIZE	QUANTITY	CD
100W HPS	4	6
200W HPS	3	6

TOTAL ITEMS REQUIRED FOR SHT. 8 ONLY

NOTE: SEE MATERIAL INSTALLATION LIST ON SHT. NO 1 FOR DESCRIPTION.

SYMBOL	ITEM	LAMP SIZE	QUANTITY
(L1)	LUMINAIRE	35W LEOTEK GREENCOBRA 20F	4
(L3)	LUMINAIRE	89W LEOTEK ECOBRA 11M	3

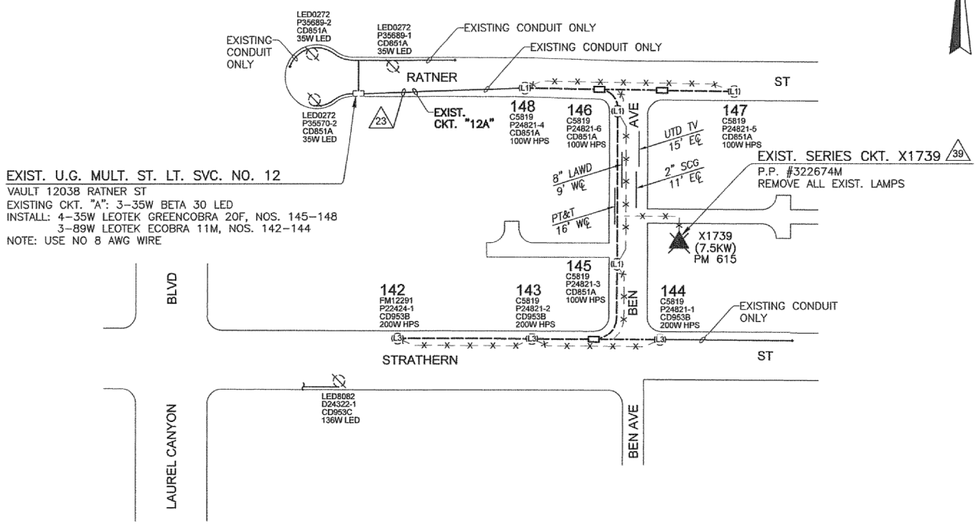

CONTRACTOR
INSPECTED BY
DATE ENERGIZED ELECTS. LAMPS:
DATE ENERGIZED ELECTS. LAMPS:
DATE ENERGIZED ELECTS. LAMPS:
CORRECTED TO "AS BUILT" DATE
BY CHECKED

PLAN DRAFTING FILE NO.:
L:\BSTD\STD\Highvoltage Conversion\SunValley_NorthHollywood\X1739\
\DWG\X1739.dwg

SYM.	REVISION	DESCRIPTION	DATE

DIVISION ENGINEER
BUREAU OF ST. LTG.

SUN VALLEY-NORTH HOLLYWOOD STM, SERIES CIRCUIT X1739
HIGH VOLTAGE CONVERSION FY 2015-16

W.O. L1649427

REGISTERED PROFESSIONAL ENGINEER
NIRMA MARIE ISRAHIAN
E 13696
Exp. 6/17
ELECTRICAL
STATE OF CALIFORNIA

CITY OF LOS ANGELES
ED EBRAHIMIAN, DIRECTOR BUREAU OF STREET LIGHTING

STREET LIGHTING

DATE 6-12-20 16

DIRECTOR BUREAU OF STREET LIGHTING

SCALE OF ORIGINAL PLAN: 1"=100' (100 50 0 50 100 150 200 feet)

SHEET 8 OF 18 SHEETS

INDEX NUMBER M-2427

STREET CLASSIFICATION (M)=MAJOR, (C)=COLLECTOR, (L)=LOCAL	
VICTORY BLVD	(M)
KITTRIDGE ST	(C)
ENSIGN AVE	(L)
VINELAND AVE	(M)
CRANER AVE	(L)
CLEON AVE	(L)

EXISTING LAMP SIZE SHT. 9 ONLY

LAMP SIZE	QUANTITY	CD
70W HPS	3	2
100W HPS	1	2
200W HPS	9	2

TOTAL ITEMS REQUIRED FOR SHT. 9 ONLY

NOTE: SEE MATERIAL INSTALLATION LIST ON SHT. NO 1 FOR DESCRIPTION.

SYMBOL	ITEM	LAMP SIZE	QUANTITY
(L1)	LUMINAIRE	35W LEOTEK GREENCOBRA 20F	4
(L3)	LUMINAIRE	89W LEOTEK ECOBRA 11M	9

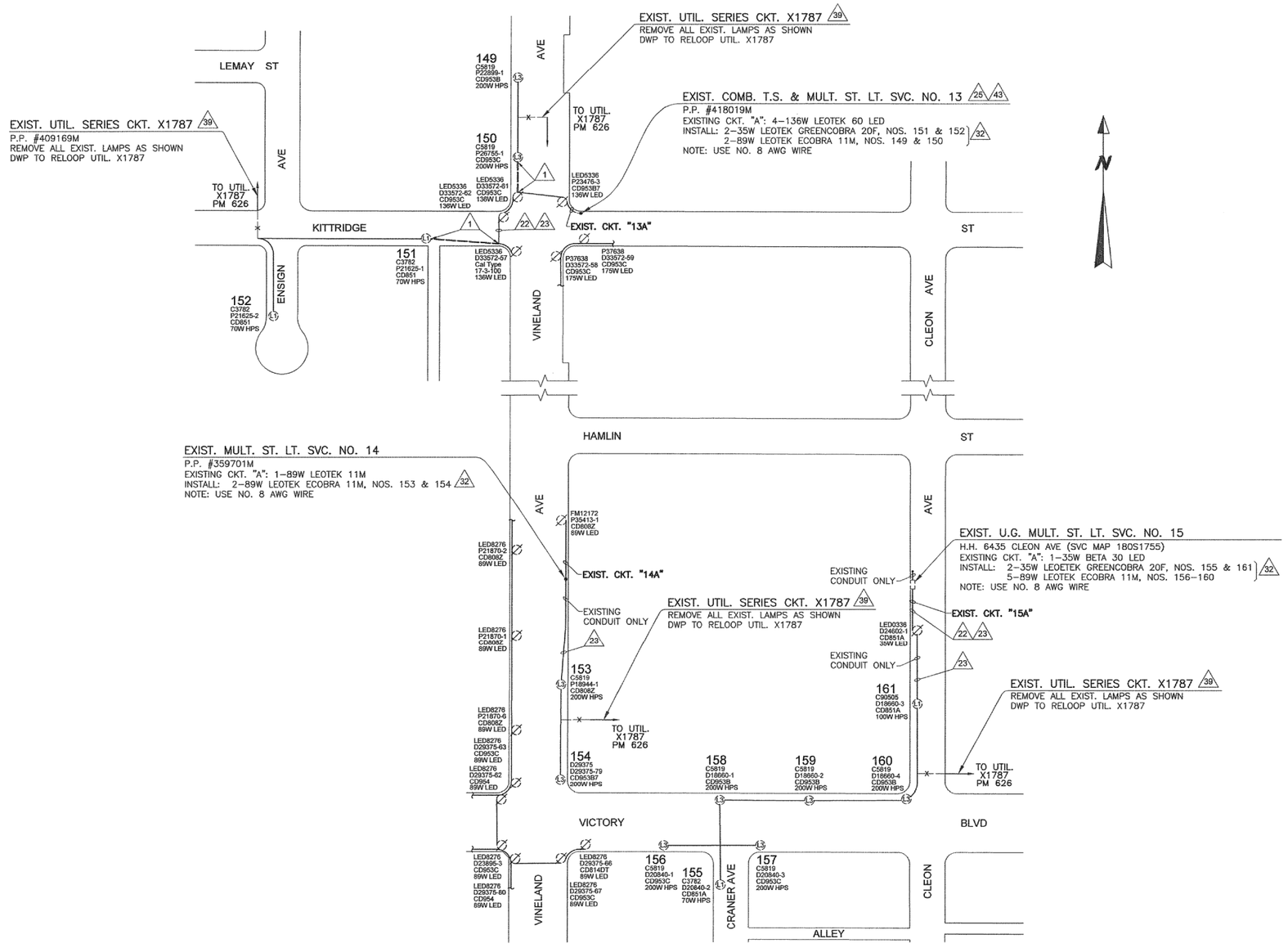

SUN VALLEY-NORTH HOLLYWOOD STM, SERIES CIRCUIT X1787
HIGH VOLTAGE CONVERSION FY 2015-16

W.O. L1649427

REGISTERED PROFESSIONAL ENGINEER NIRMA MARIE ISRAELSEN E 13696 Exp 6-17 ELECTRICAL STATE OF CALIFORNIA

CONTRACTOR _____
INSPECTED BY _____
DATE ENERGIZED _____ ELECTS. _____ LAMPS: _____
DATE ENERGIZED _____ ELECTS. _____ LAMPS: _____
DATE ENERGIZED _____ ELECTS. _____ LAMPS: _____
CORRECTED TO "AS BUILT" _____ DATE _____
BY _____ CHECKED _____

PLAN DRAFTING FILE NO.: L:\LADOT\2015\High Voltage Conversion\Sun Valley...North Hollywood\X1787F\L1649427.dwg

SYM.	REVISION	DESCRIPTION	DATE

DIVISION ENGINEER BUREAU OF ST. LTG.

CITY OF LOS ANGELES
ED EBRAHIMIAN, DIRECTOR BUREAU OF STREET LIGHTING

STREET LIGHTING

DATE 8-12-16

DIRECTOR BUREAU OF STREET LIGHTING

SCALE OF ORIGINAL PLAN: 1"=100'	SHEET 9 OF 18 SHEETS	INDEX NUMBER M-2427

STREET CLASSIFICATION (M)=MAJOR, (S)=SECONDARY, (C)=COLLECTOR, (L)=LOCAL	
PENROSE ST	(M)

EXISTING LAMP SIZE SHT. 10 ONLY

LAMP SIZE	QUANTITY	CD
70W HPS	15	6
200W HPS	4	6

TOTAL ITEMS REQUIRED FOR SHEET 10 ONLY

NOTE: SEE MATERIAL INSTALLATION LIST ON SHT. NO 1 FOR DESCRIPTION.

SYMBOL	ITEMS	LAMP SIZE	QUANTITY
L3	LUMINAIRE	89W LEOTEK ECOBRA 11M	4
LS	SOFFIT CONVERSION KIT	45W LUMEC LED	15

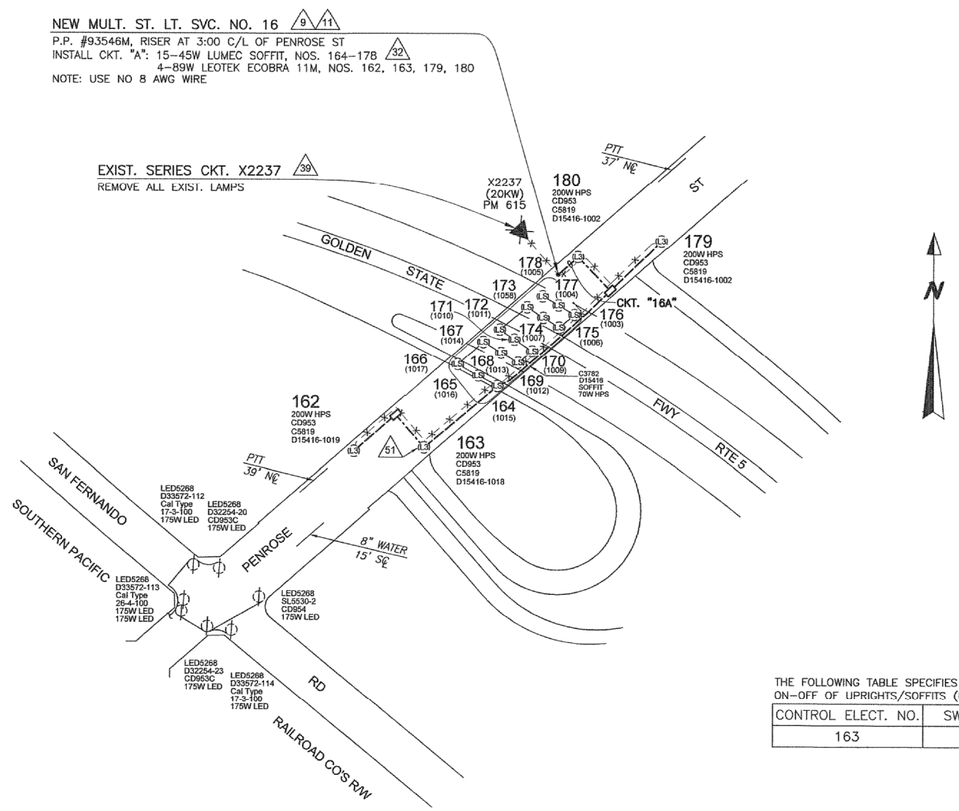

THE FOLLOWING TABLE SPECIFIES THE ELECTROLIERS WHICH WILL BE USED TO CONTROL THE ON-OFF OF UPRIGHTS/SOFFITS (DETAIL "A" ON SHEET 2)

CONTROL ELECT. NO.	SWITCHED LIGHTS NO.	CIRCUIT NO.	SHEET NO.
163	164-178	16A	10

SUN VALLEY-NORTH HOLLYWOOD STM, SERIES CIRCUIT X2237
HIGH VOLTAGE CONVERSION FY 2015-16

W.O. L1649427

REGISTERED PROFESSIONAL ENGINEER NORMA MARIE ISAHAKIAN E 13696 Exp. 6/17 ELECTRICAL STATE OF CALIFORNIA

CONTRACTOR
INSPECTED BY
DATE ENERGIZED ELECTS. LAMPS:
DATE ENERGIZED ELECTS. LAMPS:
DATE ENERGIZED ELECTS. LAMPS:
CORRECTED TO "AS BUILT" DATE
BY CHECKED

PLAN DRAFTING FILE NO.: L:\FSIDSITD\STM\Hight Voltage Conversion\SunValley_NorthHollywood\X2237\DWG\X2237.dwg

SYM.	REVISION	DESCRIPTION	DIVISION ENGINEER BUREAU OF ST. LTG.	DATE

CITY OF LOS ANGELES
ED EBRAHIMIAN, DIRECTOR BUREAU OF STREET LIGHTING

STREET LIGHTING

DATE 4-12 2016

DIRECTOR BUREAU OF STREET LIGHTING

SCALE OF ORIGINAL PLAN: 1"=100' 100 50 0 50 100 150 200 feet

SHEET 10 OF 18 SHEETS

INDEX NUMBER M-2427

STREET CLASSIFICATION (M)=MAJOR, (S)=SECONDARY, (C)=COLLECTOR, (L)=LOCAL	
TUXFORD ST	(M)

EXISTING LAMP SIZE SHT. 11 ONLY

LAMP SIZE	QUANTITY	CD
70W HPS	16	6
200W HPS	10	6
400W MV	1	6

TOTAL ITEMS REQUIRED FOR SHEET 11 ONLY

NOTE: SEE MATERIAL INSTALLATION LIST ON SHT. NO 1 FOR DESCRIPTION.

SYMBOL	ITEMS	LAMP SIZE	QUANTITY
(L3)	LUMINAIRE	89W LEOTEK ECOBRA 11M	11
(LS)	SOFFIT CONVERSION KIT	45W LUMEC LED	16

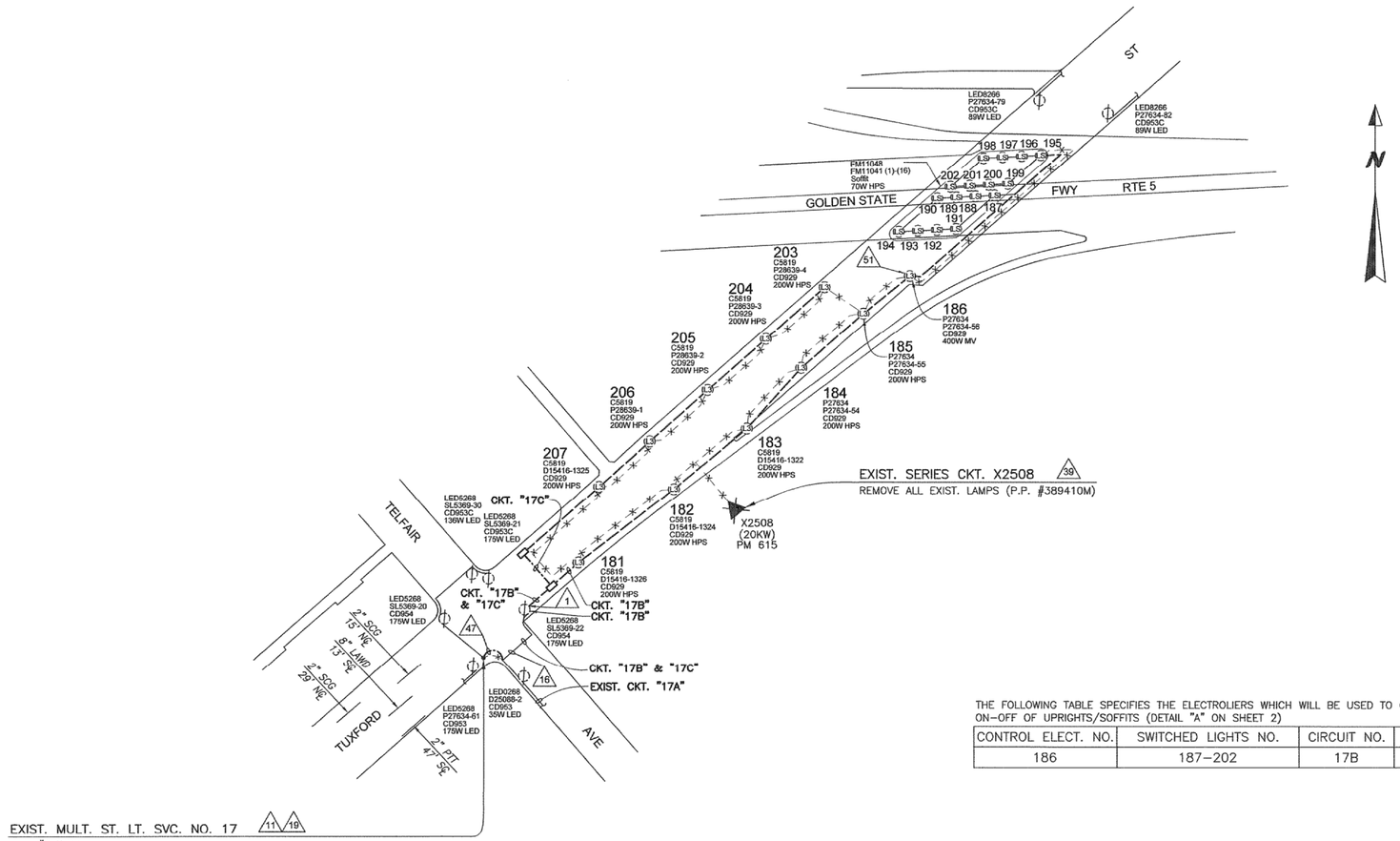

THE FOLLOWING TABLE SPECIFIES THE ELECTROLIERS WHICH WILL BE USED TO CONTROL THE ON–OFF OF UPRIGHTS/SOFFITS (DETAIL "A" ON SHEET 2)

CONTROL ELECT. NO.	SWITCHED LIGHTS NO.	CIRCUIT NO.	SHEET NO.
186	187–202	17B	11

CONTRACTOR
INSPECTED BY
DATE ENERGIZED ELECTS. LAMPS:
DATE ENERGIZED ELECTS. LAMPS:
DATE ENERGIZED ELECTS. LAMPS:
CORRECTED TO "AS BUILT" DATE
BY CHECKED

PLAN DRAFTING FILE NO.: L:\MAS\Overhead\HV Light Voltage Conversion\Sun Valley_NorthHollywood\V2508\L1649427.dwg

SYM.	REVISION	DESCRIPTION	DIVISION ENGINEER BUREAU OF ST. LTG.	DATE

CITY OF LOS ANGELES
ED EBRAHIMIAN, DIRECTOR BUREAU OF STREET LIGHTING

STREET LIGHTING

DATE 4-12 20 16

DIRECTOR BUREAU OF STREET LIGHTING

SUN VALLEY-NORTH HOLLYWOOD STM, SERIES CIRCUIT X2508 HIGH VOLTAGE CONVERSION FY 2015-16

W.O. L1649427

REGISTERED PROFESSIONAL ENGINEER NORMA MARIE TABAGNAN E 13696 Exp 6/17 ELECTRICAL STATE OF CALIFORNIA

SCALE OF ORIGINAL PLAN: 1"=100'	100 50 0 50 100 150 200 feet	SHEET 11 OF 18 SHEETS	INDEX NUMBER	M-2427

STREET CLASSIFICATION (M)=MAJOR, (S)=SECONDARY, (C)=COLLECTOR, (L)=LOCAL
SHERMAN WAY (M)

EXISTING LAMP SIZE SHT. 12 ONLY

LAMP SIZE	QUANTITY	CD
200W HPS	15	2

TOTAL ITEMS REQUIRED FOR SHEET 12 ONLY

NOTE: SEE MATERIAL INSTALLATION LIST ON SHT. NO 1 FOR DESCRIPTION.

SYMBOL	ITEMS	LAMP SIZE	QUANTITY
(L3)	LUMINAIRE	89W LEOTEK ECOBRA 11M	15

EXIST. MULT. ST. LT. SVC. NO. 18
P.P. #201031M
EXISTING CKT. "A": 1-35W BETA 30 LED
3-101W CREE XSP2
1-175W LEOTEK 100 LED
EXISTING CKT. "B": 1-101W CREE XSP2
1-175W LEOTEK 100 LED
INSTALL CKT. "B": 4-89W LEOTEK ECOBRA 11M, NOS. 208-211
EXISTING CKT. "C": 3-101W CREE XSP2
2-175W LEOTEK 100 LED
EXISTING CKT. "D": 1-101W CREE XSP2
1-175W LEOTEK 100 LED
INSTALL CKT. "D": 4-89W LEOTEK ECOBRA 11M, NOS. 247-250
NOTE: USE NO 8 AWG WIRE

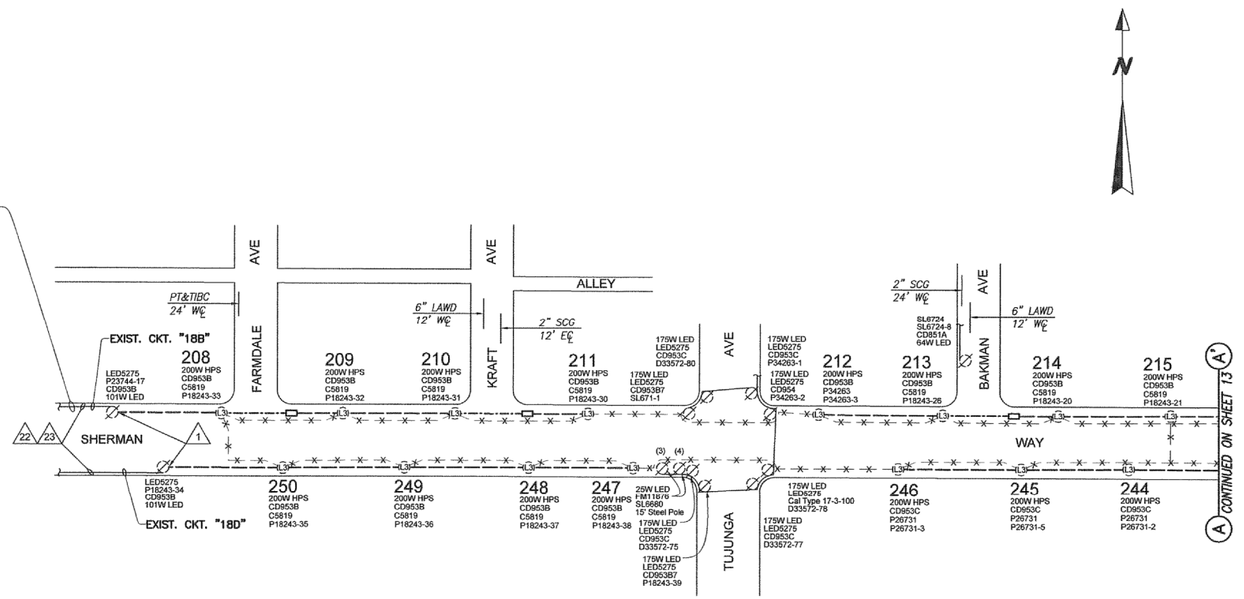

SUN VALLEY-NORTH HOLLYWOOD STM, SERIES CIRCUIT X3469
HIGH VOLTAGE CONVERSION FY 2015-16

W.O. L1649427

CONTRACTOR
INSPECTED BY
DATE ENERGIZED ELECTS. LAMPS:
DATE ENERGIZED ELECTS. LAMPS:
DATE ENERGIZED ELECTS. LAMPS:
CORRECTED TO "AS BUILT" DATE
BY CHECKED

PLAN DRAFTING FILE NO.: L:\FSDS10\STM\Hight Voltage Conversion\SunValley_NorthHollywood\X3469\DWG\X3469.dwg

SYM.	REVISION	DESCRIPTION	DIVISION ENGINEER BUREAU OF ST. LTG.	DATE

CITY OF LOS ANGELES
ED EBRAHIMIAN, DIRECTOR BUREAU OF STREET LIGHTING

STREET LIGHTING
DATE 4-12 20/6
DIRECTOR BUREAU OF STREET LIGHTING

REGISTERED PROFESSIONAL ENGINEER NORMA ABDELSAHANAN E 13696 Exp. 6-17 ELECTRICAL STATE OF CALIFORNIA

SCALE OF ORIGINAL PLAN: 1"=100' 100 50 0 50 100 150 200 feet

SHEET 12 OF 18 SHEETS

INDEX NUMBER M-2427

STREET CLASSIFICATION (M)=MAJOR, (S)=SECONDARY, (C)=COLLECTOR, (L)=LOCAL	
SHERMAN WAY	(M)
VINELAND AVE	(M)

EXISTING LAMP SIZE SHT. 13 ONLY

LAMP SIZE	QUANTITY	CD
200W HPS	28	2

TOTAL ITEMS REQUIRED FOR SHEET 13 ONLY

NOTE: SEE MATERIAL INSTALLATION LIST ON SHT. NO 1 FOR DESCRIPTION.

SYMBOL	ITEMS	LAMP SIZE	QUANTITY
(L3)	LUMINAIRE	89W LEOTEK ECOBRA 11M	28

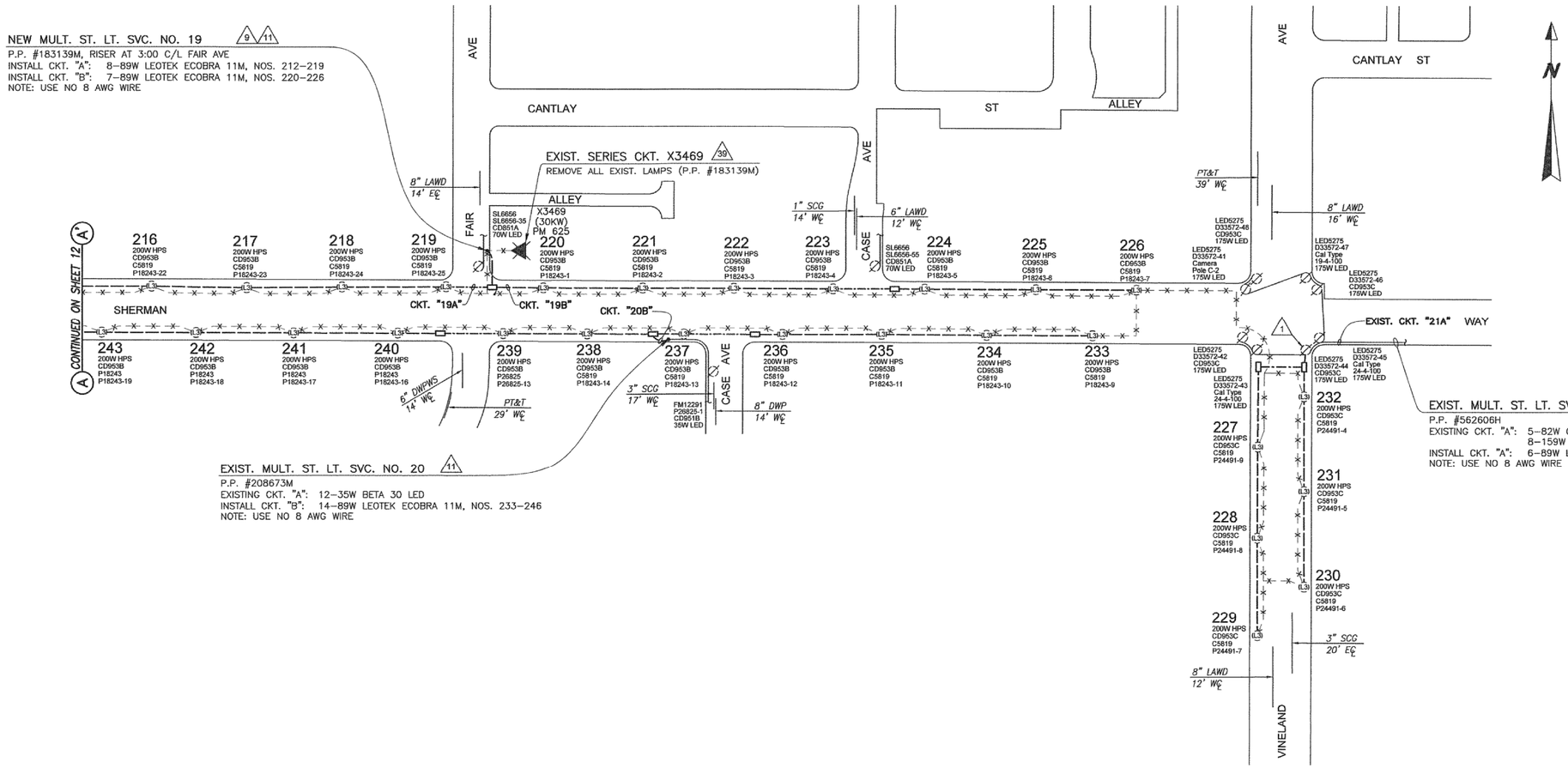

CONTRACTOR
INSPECTED BY
DATE ENERGIZED ELECTS. LAMPS:
DATE ENERGIZED ELECTS. LAMPS:
DATE ENERGIZED ELECTS. LAMPS:
CORRECTED TO "AS BUILT" DATE
BY CHECKED

PLAN DRAFTING FILE NO.: P:\Projects\High Voltage Conversion\Sunvalley_Northhollywood\X3469\ CAD\X3469.dwg

SYM.	REVISION	DESCRIPTION	DIVISION ENGINEER BUREAU OF ST. LTG.	DATE

CITY OF LOS ANGELES
ED EBRAHIMIAN, DIRECTOR BUREAU OF STREET LIGHTING

STREET LIGHTING

DATE 8-12

DIRECTOR BUREAU OF STREET LIGHTING

SUN VALLEY-NORTH HOLLYWOOD STM, SERIES CIRCUIT X3469 HIGH VOLTAGE CONVERSION FY 2015-16

W.O. L1649427

REGISTERED ELECTRICAL ENGINEER NORMA MARIE ISAGANAN E 13696 Exp. 6-17 ELECTRICAL STATE OF CALIFORNIA

SCALE OF ORIGINAL PLAN: 1"=100' (100 50 0 50 100 150 200 feet)	SHEET 13 OF 18 SHEETS	INDEX NUMBER M-2427

STREET CLASSIFICATION (M)=MAJOR, (S)=SECONDARY, (C)=COLLECTOR, (L)=LOCAL	
TUJUNGA AVE	(M)
STRATHERN ST	(M)

EXISTING LAMP SIZE SHT. 14 ONLY

LAMP SIZE	QUANTITY	CD
200W HPS	18	6

TOTAL ITEMS REQUIRED FOR SHEET 14 ONLY

NOTE: SEE MATERIAL INSTALLATION LIST ON SHT. NO 1 FOR DESCRIPTION.

SYMBOL	ITEMS	LAMP SIZE	QUANTITY
(L3)	LUMINAIRE	89W LEOTEK ECOBRA 11M	18

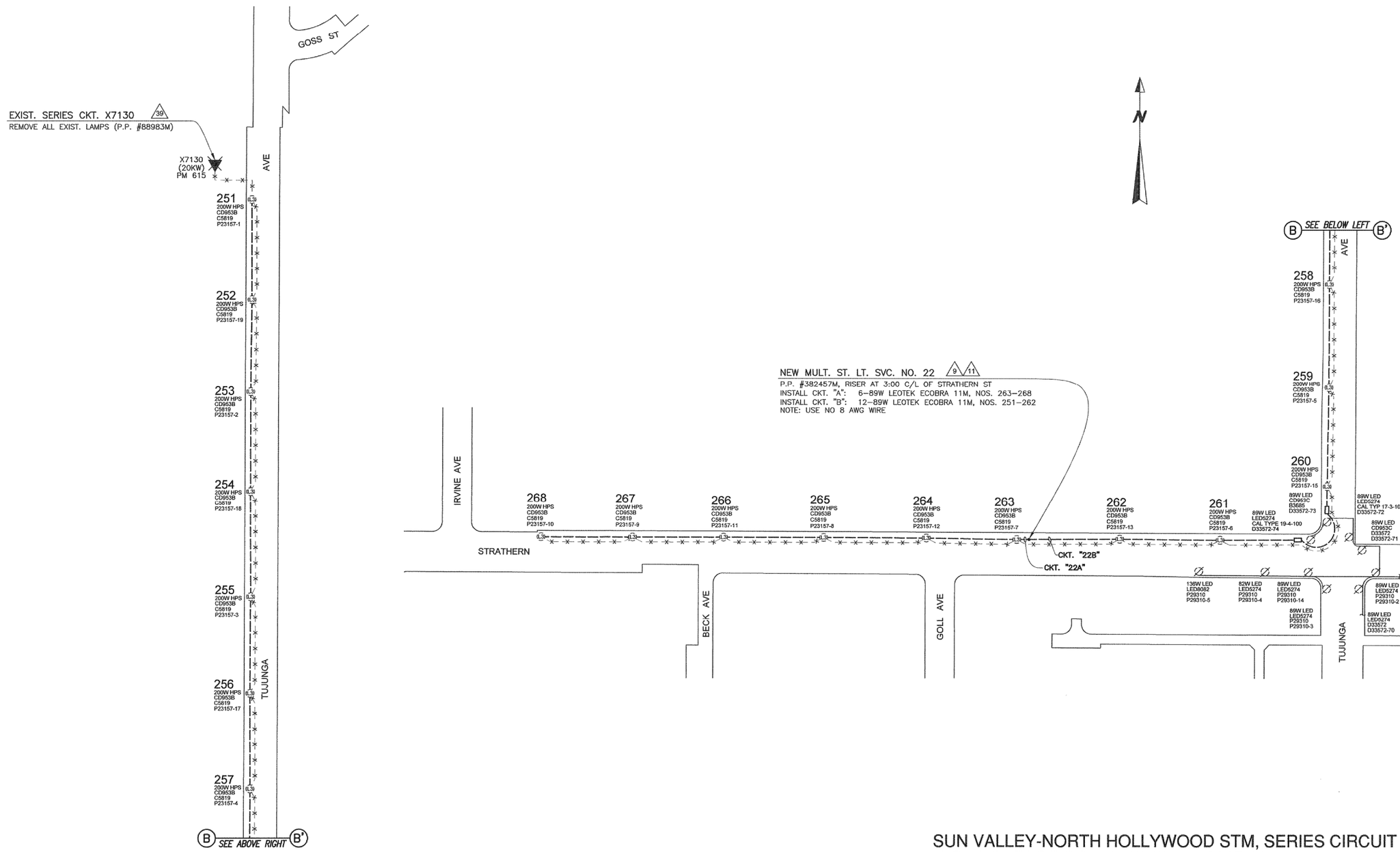

SUN VALLEY-NORTH HOLLYWOOD STM, SERIES CIRCUIT X7130
HIGH VOLTAGE CONVERSION FY 2015-16

W.O. L1649427

REGISTERED PROFESSIONAL ENGINEER NORMA MARIE ISAHAKIAN E 13696 Exp. 6/17 ELECTRICAL STATE OF CALIFORNIA

CONTRACTOR
INSPECTED BY
DATE ENERGIZED ELECTS. LAMPS:
DATE ENERGIZED ELECTS. LAMPS:
DATE ENERGIZED ELECTS. LAMPS:
CORRECTED TO "AS BUILT" DATE
BY CHECKED

PLAN DRAFTING FILE NO.: L:\FSCSID\STM\Hight Voltage Conversion\SunValley_NorthHollywood\X7130\DWG\X7130.dwg

SYM.	REVISION	DESCRIPTION	DIVISION ENGINEER BUREAU OF ST. LTG.	DATE

CITY OF LOS ANGELES
ED EBRAHIMIAN, DIRECTOR BUREAU OF STREET LIGHTING

STREET LIGHTING

DATE 4-12 20/6

DIRECTOR BUREAU OF STREET LIGHTING

SCALE OF ORIGINAL PLAN: 1"=100' 100 50 0 50 100 150 200 feet

SHEET 14 OF 18 SHEETS

INDEX NUMBER M-2427

STREET CLASSIFICATION (M)=MAJOR, (S)=SECONDARY, (C)=COLLECTOR, (L)=LOCAL	
WHITSETT AVE	(M)

EXISTING LAMP SIZE SHT. 15 ONLY

LAMP SIZE	QUANTITY	CD
200W HPS	4	2

TOTAL ITEMS REQUIRED FOR SHEET 15 ONLY

NOTE: SEE MATERIAL INSTALLATION LIST ON SHT. NO 1 FOR DESCRIPTION.

SYMBOL	ITEMS	LAMP SIZE	QUANTITY
(L3)	LUMINAIRE	89W LEOTEK ECOBRA 11M	4

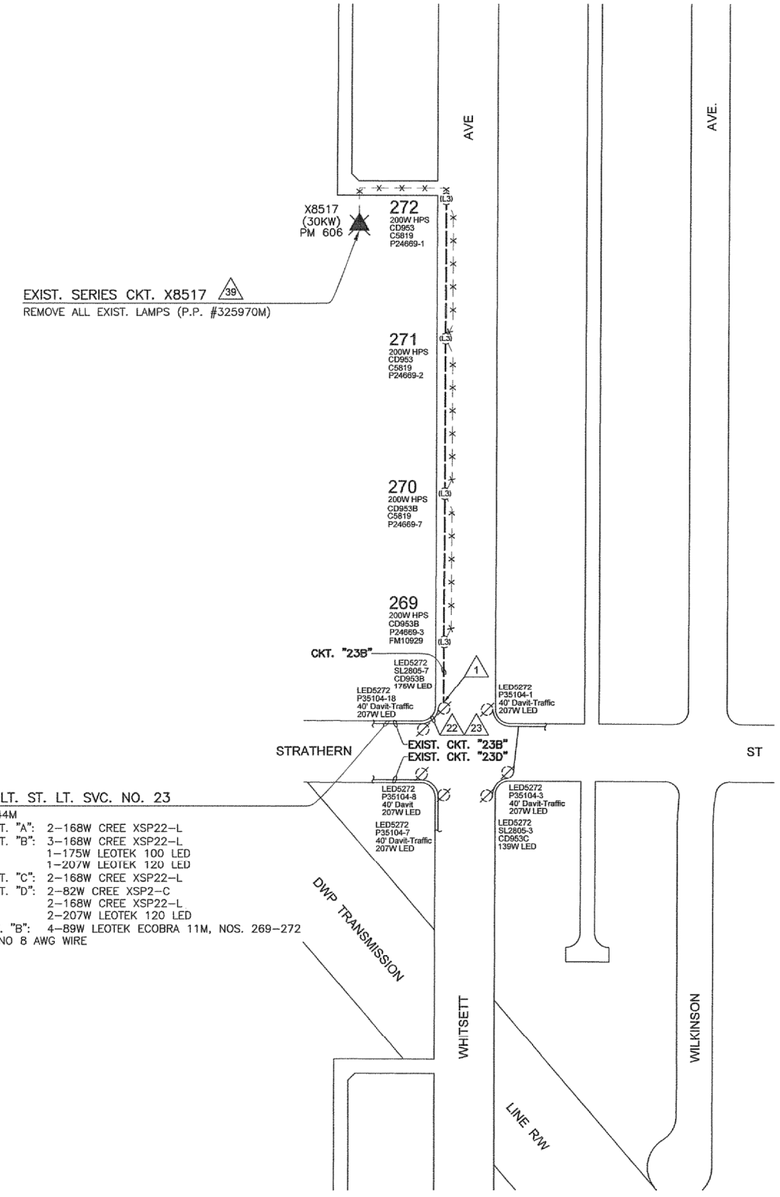

SUN VALLEY-NORTH HOLLYWOOD STM, SERIES CIRCUIT X8517
HIGH VOLTAGE CONVERSION FY 2015-16

W.O. L1649427

REGISTERED PROFESSIONAL ENGINEER NORMA MARIE ISAHAKIAN E 13696 Exp. 6/17 ELECTRICAL STATE OF CALIFORNIA

CONTRACTOR
INSPECTED BY
DATE ENERGIZED ELECTS. LAMPS:
DATE ENERGIZED ELECTS. LAMPS:
DATE ENERGIZED ELECTS. LAMPS:
CORRECTED TO "AS BUILT" DATE
BY CHECKED

PLAN DRAFTING FILE NO.: L:\FSDS\I10\STM\Hight Voltage Conversion\SunValley_NorthHollywood\X8517\DWG\X8517.dwg

SYM.	REVISION	DESCRIPTION	DIVISION ENGINEER BUREAU OF ST. LTG.	DATE

CITY OF LOS ANGELES
ED EBRAHIMIAN, DIRECTOR BUREAU OF STREET LIGHTING

STREET LIGHTING

DATE 4-12 2016

DIRECTOR BUREAU OF STREET LIGHTING

SCALE OF ORIGINAL PLAN: 1"=100' 100 50 0 50 100 150 200 feet

SHEET 15 OF 18 SHEETS

INDEX NUMBER M-2427

STREET CLASSIFICATION (M)=MAJOR, (S)=SECONDARY, (C)=COLLECTOR, (L)=LOCAL	
LAUREL CANYON BLVD	(M)
BURTON ST	(L)

EXISTING LAMP SIZE SHT. 16 ONLY

LAMP SIZE	QUANTITY	CD
100W HPS	1	2
200W HPS	4	2
100W HPS	2	6
200W HPS	3	6

TOTAL ITEMS REQUIRED FOR SHEET 16 ONLY

NOTE: SEE MATERIAL INSTALLATION LIST ON SHT. NO 1 FOR DESCRIPTION.

SYMBOL	ITEMS	LAMP SIZE	QUANTITY
(L1)	LUMINAIRE	35W LEOTEK GREENCOBRA 20F	3
(L3)	LUMINAIRE	89W LEOTEK ECOBRA 11M	7

EXIST. MULT. ST. LT. SVC. NO. 24
P.P. #141013M
EXISTING CKT. "A": 1–82W CREE XSP2–C
1–139W BETA 60 LED
1–175W LEOTEK 100 LED
EXISTING CKT. "B": 1–82W CREE XSP2–C
1–175W LEOTEK 100 LED
EXISTING CKT. "C": 2–139W BETA 60 LED
1–175W LEOTEK 100 LED
EXISTING CKT. "D": 1–82W CREE XSP2–C
1–175W LEOTEK 100 LED
INSTALL CKT. "A": 3–35W LEOTEK GREENCOBRA 20F, NOS. 273, 274, 279
7–89W LEOTEK ECOBRA 11M, NOS. 275–278, 280–282
NOTE: USE NO 8 AWG WIRE

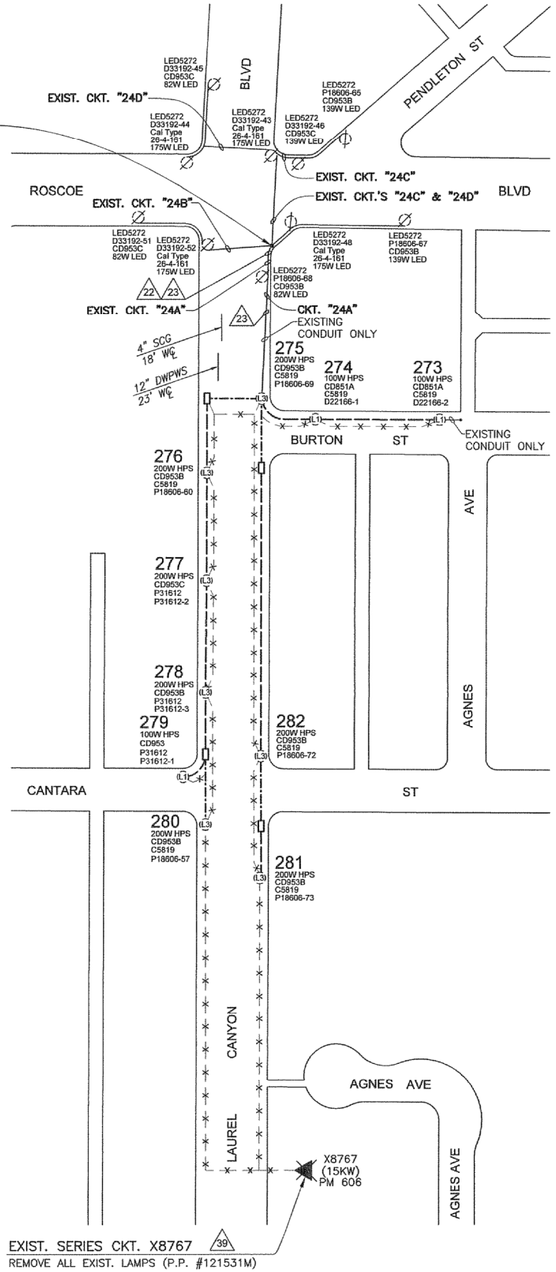

SUN VALLEY-NORTH HOLLYWOOD STM, SERIES CIRCUIT X8767
HIGH VOLTAGE CONVERSION FY 2015-16
W.O. L1649427

CONTRACTOR
INSPECTED BY
DATE ENERGIZED ELECTS. LAMPS:
DATE ENERGIZED ELECTS. LAMPS:
DATE ENERGIZED ELECTS. LAMPS:
CORRECTED TO "AS BUILT" DATE
BY CHECKED

PLAN DRAFTING FILE NO.:
L:\FSIDSI\D\STM\Hight Voltage Conversion\SunValley_NorthHollywood\X8767\
\DWG\X8767.dwg

SYM.	REVISION	DESCRIPTION	DIVISION ENGINEER BUREAU OF ST. LTG.	DATE

CITY OF LOS ANGELES
ED EBRAHIMIAN, DIRECTOR BUREAU OF STREET LIGHTING
STREET LIGHTING
DATE 4-12 2016
DIRECTOR BUREAU OF STREET LIGHTING

REGISTERED PROFESSIONAL ENGINEER NORMA MARIE ISAHAKIAN E 13696 Exp. 6/17 ELECTRICAL STATE OF CALIFORNIA

SCALE OF ORIGINAL PLAN: 1"=100' 100 50 0 50 100 150 200 feet

SHEET 16 OF 18 SHEETS

INDEX NUMBER M-2427

STREET CLASSIFICATION (M)=MAJOR, (C)=COLLECTOR, (L)=LOCAL	
VINELAND AVE	(M)
CLEON AVE	(L)
SATICOY ST	(M)

EXISTING LAMP SIZE SHT. 17 ONLY

LAMP SIZE	QUANTITY	CD
70W HPS	1	2
200W HPS	31	2

TOTAL ITEMS REQUIRED FOR SHT. 17 ONLY

NOTE: SEE MATERIAL INSTALLATION LIST ON SHT. NO 1 FOR DESCRIPTION.

SYMBOL	ITEM	LAMP SIZE	QUANTITY
L1	LUMINAIRE	35W LEOTEK GREENCOBRA 20F	1
L3	LUMINAIRE	89W LEOTEK ECOBRA 11M	31

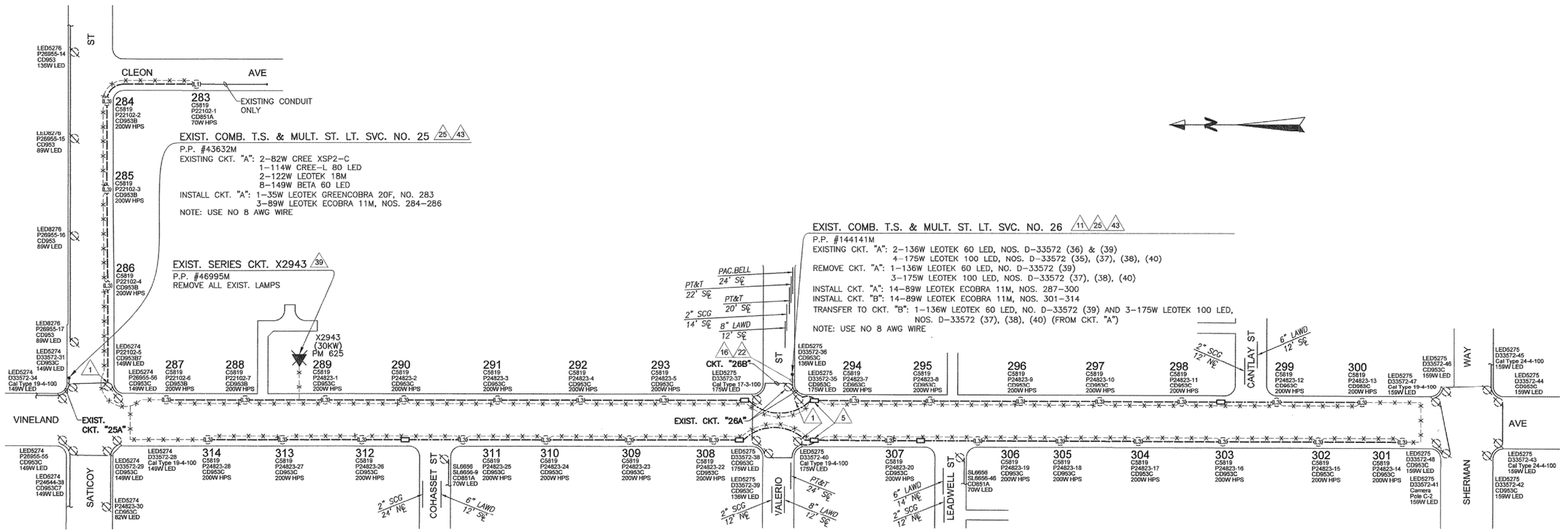

SUN VALLEY-NORTH HOLLYWOOD STM, SERIES CIRCUIT X2943
HIGH VOLTAGE CONVERSION FY 2015-16

W.O. L1649427

CONTRACTOR
INSPECTED BY
DATE ENERGIZED ELECTS. LAMPS:
DATE ENERGIZED ELECTS. LAMPS:
DATE ENERGIZED ELECTS. LAMPS:
CORRECTED TO "AS BUILT" DATE
BY CHECKED

PLAN DRAFTING FILE NO.: L:\FS\SIDSTM\Hight Voltage Conversion\SunValley_NorthHollywood\X2943\DWG\X2943.dwg

SYM.	REVISION	DESCRIPTION	DIVISION ENGINEER BUREAU OF ST. LTG.	DATE

CITY OF LOS ANGELES
ED EBRAHIMIAN, DIRECTOR BUREAU OF STREET LIGHTING

STREET LIGHTING

DATE 4-12 20 16

DIRECTOR BUREAU OF STREET LIGHTING

REGISTERED PROFESSIONAL ENGINEER NORMA MARIE ISAHAGIAN E 13696 Exp. 6/17 ELECTRICAL STATE OF CALIFORNIA

SCALE OF ORIGINAL PLAN: 1"=100' 100 50 0 50 100 150 200 feet

SHEET 17 OF 18 SHEETS

INDEX NUMBER M-2427

STREET CLASSIFICATION (M)=MAJOR, (C)=COLLECTOR, (L)=LOCAL	
VINELAND AVE	(M)

EXISTING LAMP SIZE SHT. 18 ONLY

LAMP SIZE	QUANTITY	CD
200W HPS	12	2

TOTAL ITEMS REQUIRED FOR SHT. 18 ONLY

NOTE: SEE MATERIAL INSTALLATION LIST ON SHT. NO 1 FOR DESCRIPTION.

SYMBOL	ITEM	LAMP SIZE	QUANTITY
(L3)	LUMINAIRE	89W LEOTEK ECOBRA 11M	12

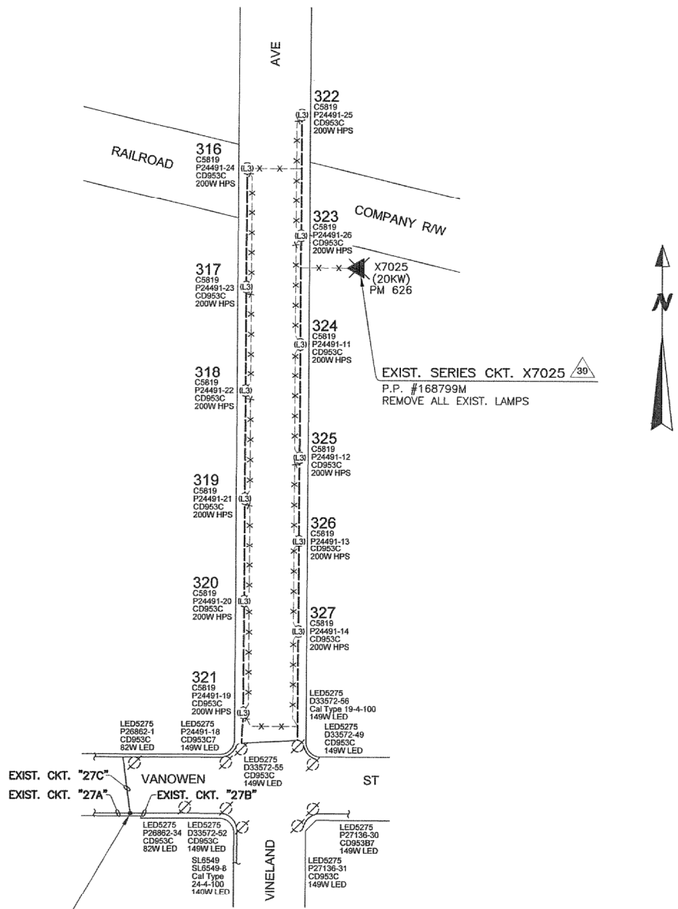

EXIST. SERIES CKT. X7025 (30)
P.P. #168799M
REMOVE ALL EXIST. LAMPS

EXIST. MULT. ST. LT. SVC. NO. 27
P.P. #247716M
EXISTING CKT. "A": 3–46W LEOTEK 40 LED
5–82W CREE XSP2–C
1–136W LEOTEK 60 LED
EXISTING CKT. "B": 1–82W CREE XSP2–C
1–140W BETA 80 LED
1–175W LEOTEK 100 LED
EXISTING CKT. "C": 5–82W CREE XSP2–C
1–136W LEOTEK 60 LED
4–175W LEOTEK 100 LED
INSTALL CKT. "C": 12–89W LEOTEK ECOBRA 11M, NOS. 316–327
NOTE: USE NO 8 AWG WIRE

SUN VALLEY-NORTH HOLLYWOOD STM, SERIES CIRCUIT X7025
HIGH VOLTAGE CONVERSION FY 2015-16

W.O. L1649427

REGISTERED PROFESSIONAL ENGINEER NORMA MARIE ISAHAKIAN E 13696 Exp. 6/17 ELECTRICAL STATE OF CALIFORNIA

CONTRACTOR
INSPECTED BY
DATE ENERGIZED ELECTS. LAMPS:
DATE ENERGIZED ELECTS. LAMPS:
DATE ENERGIZED ELECTS. LAMPS:
CORRECTED TO "AS BUILT" DATE
BY CHECKED

PLAN DRAFTING FILE NO.: L:\FSD\SHD\STM\Hight Voltage Conversion\SunValley_NorthHollywood\X7025\DWG\X7025.dwg

SYM.	REVISION	DESCRIPTION	DIVISION ENGINEER BUREAU OF ST. LTG.	DATE

CITY OF LOS ANGELES
ED EBRAHIMIAN, DIRECTOR BUREAU OF STREET LIGHTING

STREET LIGHTING

DATE 4-12 20/6

DIRECTOR BUREAU OF STREET LIGHTING

SCALE OF ORIGINAL PLAN: 1"=100' 100 50 0 50 100 150 200 feet

SHEET 18 OF 18 SHEETS

INDEX NUMBER M-2427

W/S LAUREL CANYON BLVD. 1/S/O ALLEGHENY ST.
LOS ANGELES, CA. 91352
STREET LIGHT RELOCATION PLAN
SLID 122791

DELTA NOTES

1. INSTALL MODIFIED FOUNDATION PER DETAIL AS SHOWN ON SHEET 2. CAP AT&T STUB-OUT 6" OUTSIDE FOUNDATION AT "6:00" POSITION.
2. INSTALL NEW TYPE 2 PULLBOX.
3. TERMINATE CONDUIT IN EXISTING STREET LIGHTING PULLBOX. REPLACE EXISTING PULLBOX COVER WITH NEW ARMORCAST VANDAL PROOF PULLBOX RETROFIT KIT.
4. JOIN CONDUIT.
5. INSTALL PHILIPS CITY TOUCH OUTDOOR LUMINAIRE CONTROLLER LLC726D OR BSL APPROVED EQUAL.

LEGEND

- EXISTING 1" CONDUIT.
- EXISTING 1 1/2" CONDUIT.
- EXISTING 2" CONDUIT.
- ABANDON EXISTING CONDUIT.
- INSTALL NEW 1" CONDUIT.
- INSTALL NEW 1 1/2" CONDUIT.
- INSTALL NEW 2" CONDUIT.
- EXISTING PULLBOX.
- REMOVE EXISTING PULLBOX.
- NEW TYPE 2 PULLBOX PER STD PLAN NO L-201-0.
- EXISTING ELECTROLIER. (NOT TO BE REMOVED OR MODIFIED).
- (R) RELOCATE EXISTING ELECTROLIER TO NEW LOCATION AS SHOWN ON PLAN. RE-USE EXISTING LUMINAIRE.
- REMOVE EXISTING LAMP.
- (R) EXISTING ELECTROLIER INSTALL SAME LOCATION AS SHOWN ON PLAN. RE-USE EXISTING LUMINAIRE.

GENERAL NOTES TO THE CONTRACTOR

1) STREET LIGHTING WORK TO BE DONE BY THE BUREAU OF STREET LIGHTING FIELD OPERATIONS DIVISION.
2) WARNING: SAFETY CLEARANCE SHALL BE OBTAINED DAILY FROM DWP (TEL: 213-367-9966) BEFORE DOING ANY WORK OR MAKING ANY CONNECTIONS ON AN EXISTING CIRCUIT.
3) ELECTROLIERS SPECIFIED TO BE MAINTAINED IN SERVICE. THE FOD MAY PROVIDE ALTERNATE LIGHTING IN LIEU OF MAINTAINING EXISTING ELECTROLIER IN SERVICE PROVIDED SUCH ARRANGEMENTS ARE APPROVED BY THE ENGINEER.
4) ALL WORK SHALL CONFORM TO THE LATEST BOARD OF PUBLIC WORKS OF THE CITY OF LOS ANGELES ADOPTED EDITION AND SUPPLEMENTS TO THE "GREENBOOK STANDARD SPECIFICATIONS FOR PUBLIC WORKS CONSTRUCTION" AS MODIFIED BY THE CORRESPONDING ISSUE OF THE BROWN BOOK, THE LATEST EDITION OF THE BUREAU OF STREET LIGHTING "SPECIAL SPECIFICATIONS ", AND THE SPECIAL PROVISIONS.

REGISTERED PROFESSIONAL ENGINEER
GIL DELACRUZ
No. E21758
ELECTRICAL
STATE OF CALIFORNIA

REQUESTED BY: AT&T
WIRELESS COMMUNICATION FACILITY

REFERENCE PLAN:	M2427, C5819, P20173
PATROL MAP:	605
DWP OVERHEAD MAP:	196-165
CADASTRAL MAP:	195B165
COUNCIL DISTRICT:	6
THOMAS GUIDE:	502/7F
DESIGNED BY:	SAON KASHEM DATE: 02/13/2019
DRAWN BY:	R. AREVALOS DATE: 02/28/2019

CITY OF LOS ANGELES
BUREAU OF STREET LIGHTING
APPROVED March 8, 2019
for Gil Delacruz
DIV. MANAGER, CO-LOCATION DIVISION

CONTRACTOR: FOD
INSPECTED BY: JOHN LIZARRAGA
DATE REMOVED:
DATE INSTALLED: 4-15-2019
AS-BUILT DATE: 7/23/2019

AT&T SMALL CELL
SITE LOCATION: CYLA7-133A

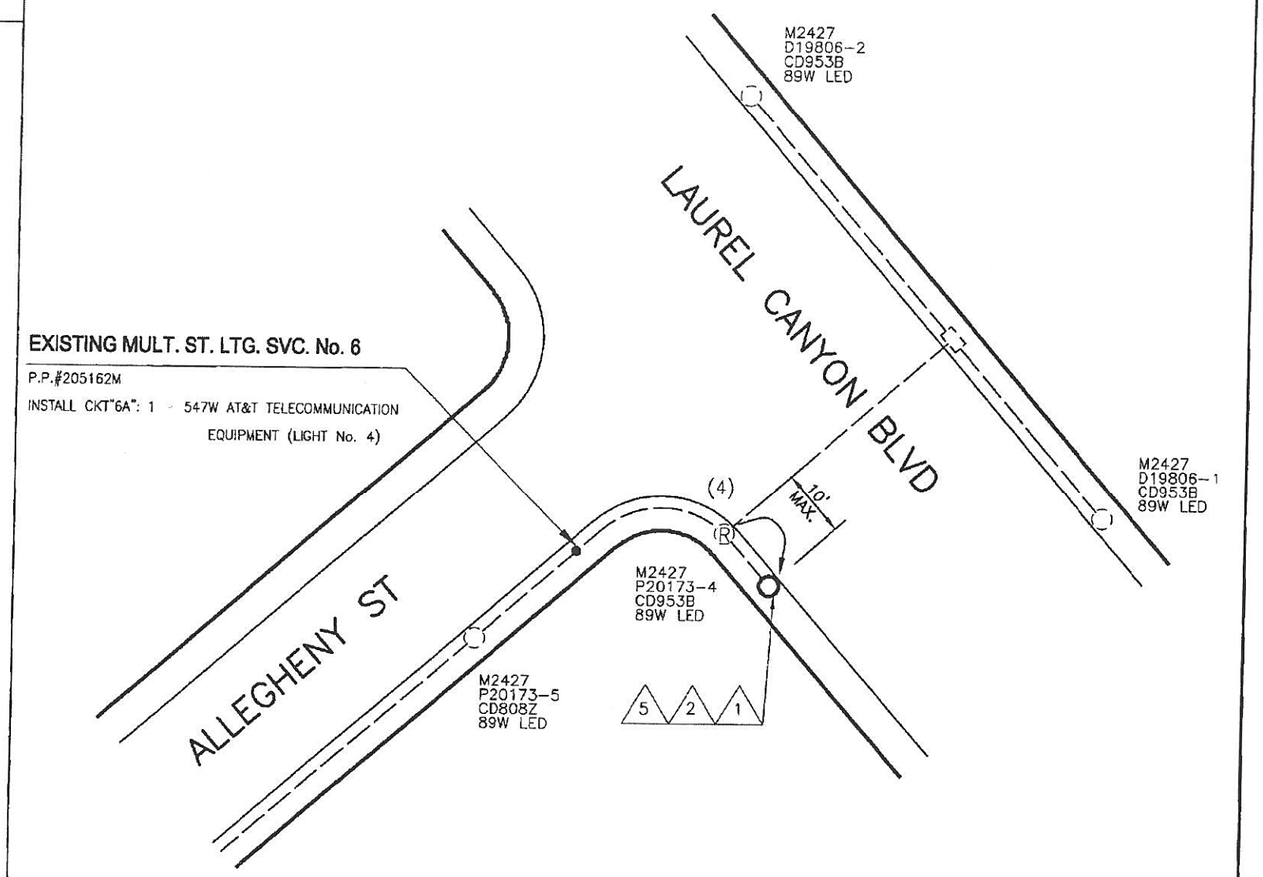

N

NOT TO SCALE

BEFORE WORKING ON AN EXISTING STREET LIGHTING CIRCUIT:

1. CONTRACTOR SHALL GIVE THE BUREAU OF STREET LIGHTING FIELD OPERATIONS DIVISION (PHONE: 323-913-4741, ASSISTANT SUPERINTENDANT) TWO WORKING DAYS NOTICE PRIOR TO START OF WORK.
2. CONTRACTOR SHALL INSTALL BOUCHARD CONCEALMENT AND TELECOMMUNICATIONS EQUIPMENT AS SPECIFIED ON AT&T SITE PLAN AND BSL SITE PERMIT APPLICATION.

W.O.# L1799190
BSL STICKER # 04387

H:\Divisions\COMMUNITY SERVICES DIVISION\AT&T SMALL CELL PROJECT--10_3_2016\SL-10992.dwg

"AS BUILT" SHEET 1 OF 2 SHEETS

INDEX NUMBER SL-10992

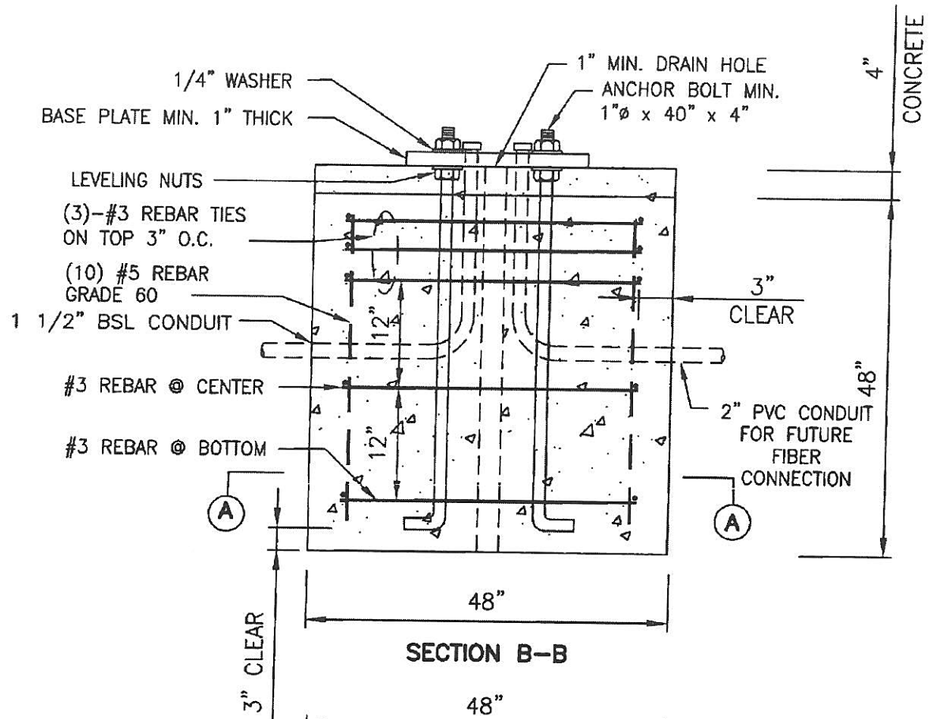

SECTION B–B

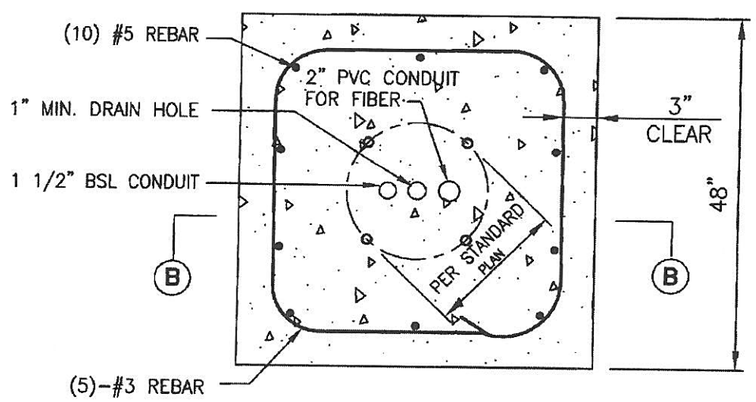

SECTION A–A

FOUNDATION DETAIL

NOT TO SCALE

FOUNDATION NOTES:

1. ALL CONCRETE TO BE 4000 PSI IN 28 DAYS SHALL BE IN ACCORDANCE WITH THE ACI 301-10
2. ALL STEEL SHALL BE GRADE 60
3. ANCHOR BOLT SHALL BE ACCORDING TO ASTM F1554 GRADE 55, NUTS SHALL BE HEXAGON NUTS ACCORDING TO ASTM A563 AND WASHERS SHALL BE ACCORDING TO F436

REGISTERED PROFESSIONAL ENGINEER
RAED ABOULHOSN
No. C 66581
Exp. 08/30/20
CIVIL
STATE OF CALIFORNIA

CONTRACTOR: FOD
INSPECTED BY: JOHN LIZARRAGA
DATE ENERGIZED: 4-15-2019 ELECTS.: 1
DATE ENERGIZED: ELECTS.:
DATE ENERGIZED: ELECTS.:
CORRECTED TO "AS BUILT" 7/23/2019 DATE
BY LILIA MENDOZA CHECKED

W.O.# L1799190
BSL STICKER # 04387

AS BUILT SHEET 2 OF 2 SHEETS

INDEX NUMBER SL-10992

H:\Divisions\COMMUNITY SERVICES DIVISION\AT&T SMALL CELL PROJECT--10_3_2016\SL-10992.dwg

NOTICE TO CONTRACTORS

GENERAL NOTES:

1. ALL WORK SHALL CONFORM TO THE LATEST BOARD OF PUBLIC WORKS OF THE CITY OF LOS ANGELES ADOPTED EDITION AND SUPPLEMENTS TO THE "STANDARD SPECIFICATIONS" FOR PUBLIC WORKS CONSTRUCTION AS MODIFIED BY THE CORRESPONDING ISSUE OF STANDARD PLAN S-610, THE LATEST EDITION OF THE BUREAU OF STREET LIGHTING "SPECIAL SPECIFICATIONS", AND THE SPECIAL PROVISIONS.
2. ELECTROLIERS SHALL BE INSTALLED WITH CENTERLINE 30" BEHIND THE CURB FACE, AND WITH LUMINAIRE ARM ORIENTED OVER THE STREET AND PERPENDICULAR TO ITS CENTERLINE, EXCEPT AS OTHERWISE SPECIFIED HEREON.
3. ELECTROLIERS SPECIFIED TO BE RELOCATED INSIDE OF THE CURB RETURN SHALL BE INSTALLED WITH THE CENTER OF THE ELECTROLIER 30 INCHES BEHIND THE CURB FACE MEASURED RADIALLY, AND WITH THE LUMINAIRE ARM ORIENTED OVER THE STREET AND PERPENDICULAR TO THE STREET CENTERLINE.
4. ELECTROLIERS SHALL BE ERECTED SO THAT THE BASE DOOR IS PERPENDICULAR TO THE CURB AND LOCATED ON THE SIDE OF THE ELECTROLIER AWAY FROM ONCOMING TRAFFIC.
5. ALL EXISTING ELECTROLIERS SPECIFIED TO BE REMOVED OR MODIFIED ON THIS PLAN SHALL BE MAINTAINED IN SERVICE UNTIL THE NEW ELECTROLIER LIGHTING SYSTEM IS PLACED IN SERVICE, UNLESS OTHERWISE SPECIFIED HEREON. ALL OTHER ELECTROLIERS ON CIRCUITS AFFECTED BY THIS PLAN SHALL BE MAINTAINED IN SERVICE. CONTRACTOR MAY PROVIDE ALTERNATE LIGHTING IN LIEU OF MAINTAINING EXISTING ELECTROLIER LIGHTS IN SERVICE PROVIDED THAT SUCH ARRANGEMENTS ARE APPROVED BY THE ENGINEER.
6. ALL EQUIPMENT REQUIRED HEREON FOR FURNISHING ELECTRICAL SERVICE FOR EACH CIRCUIT SHALL BE INSTALLED AND INSPECTED PRIOR TO ANY OTHER CONSTRUCTION ON THAT CIRCUIT UNLESS OTHERWISE APPROVED BY THE ENGINEER.
7. THE CONTRACTOR SHALL GIVE WRITTEN NOTICE, 72 HOURS IN ADVANCE OF THE REMOVAL OF AN ELECTROLIER, TO ANY PUBLIC AGENCY MAINTAINING EQUIPMENT SUPPORTED BY THAT ELECTROLIER.
8. FOUNDATIONS AND PULLBOXES NOT REMAINING IN SERVICE SHALL BE REMOVED. THE RESULTING EXCAVATION SHALL BE FILLED WITH MATERIAL SIMILAR TO ADJACENT MATERIAL AND SATISFACTORILY COMPACTED WITH A MECHANICAL COMPACTOR IN LAYERS NOT EXCEEDING 12 INCHES. THE SURFACE SHALL BE FINISHED TO MATCH THE ADJACENT SURFACE.
9. THE CONTRACTOR SHALL REQUEST A BURN TEST BY NOTIFYING THE BUREAU OF CONTRACT ADMINISTRATION PROJECT INSPECTOR A MINIMUM OF 7 CALENDAR DAYS IN ADVANCE OF THE DATE ON WHICH A BURN TEST IS DESIRED.
10. CONTRACTOR SHALL GIVE THREE WORKING DAYS NOTICE (PHONE 323-913-4743) PRIOR TO DELIVERY OF ANY EQUIPMENT SPECIFIED TO BE DELIVERED TO THE BUREAU OF STREET LIGHTING YARD AT 4550 SANTA MONICA BLVD. SUCH DELIVERIES SHALL BE BETWEEN 8:30 AM AND 3:00 PM AND SHALL INCLUDE ALL HANDLING AND LOADING FROM THE TRUCK BY THE CONTRACTOR.
11. PULLBOXES LOCATED ADJACENT TO DRIVEWAYS AND ALLEYS SHALL BE INSTALLED AT A MINIMUM DISTANCE OF FIVE FEET FROM THE TOP OF THE "X" OF A CASE 1 OR CASE 2 DRIVEWAY OR AT A MINIMUM DISTANCE OF TWO FEET FROM THE B.C. OF A CASE 3 OR CASE 4 DRIVEWAY OR FIVE FEET FROM TRAVELED WAY OF THE ALLEY.
12. PULLBOXES INSTALLED AT INTERSECTIONS OF LOCAL STREETS SHALL BE INSTALLED NO CLOSER TO THE INTERSECTIONS THAN THE B.C.R. OF AN ASSUMED FUTURE 25' RADIUS CURB RETURN UNLESS OTHERWISE APPROVED BY THE ENGINEER. PULLBOXES INSTALLED AT INTERSECTIONS WHICH INVOLVE ONE OR MORE MAJOR OR SECONDARY STREETS SHALL BE INSTALLED NO CLOSER TO INTERSECTIONS THAN THE B.C.R. OF AN ASSUMED FUTURE 35' RADIUS CURB RETURN UNLESS OTHERWISE APPROVED BY THE ENGINEER.
13. CONDUIT SHALL BE INSTALLED AROUND ALL EXISTING AND/OR PROPOSED CATCH BASINS PER BUREAU OF STREET LIGHTING STANDARD DRAWING NO. L-304-0 UNLESS OTHERWISE SPECIFIED.
14. ALL SCREWS PROVIDED FOR ELECTROLIER STANDARD BASE DOORS AND BASE COVERS SHALL BE CADMIUM PLATED STEEL, 1/4-20NC MACHINE SCREWS, WITH PHILLIPS RECESSED ROUND HEADS.
15. WARNING: SAFETY CLEARANCE SHALL BE OBTAINED DAILY FROM THE AFFECTED UTILITY COMPANY BEFORE DOING ANY WORK IN CLOSE PROXIMITY TO ANY OVERHEAD ELECTRIC LINE. SEE SECTIONS 16430 AND 2100 OF THE SPECIAL SPECIFICATIONS.
16. "DELETED"
17. CONTRACTOR SHALL BE RESPONSIBLE FOR PRESERVING THE CONDITION OF ALL EXISTING EQUIPMENT TO BE REUSED, MODIFIED OR RETURNED TO THE BUREAU OF STREET LIGHTING YARD.
18. EQUIPMENT INDICATED "DISPOSE" SHALL BECOME THE PROPERTY OF THE CONTRACTOR AND BE DISPOSED OF BY THE CONTRACTOR.
19. ON ALL STREETS POSTED "NO STOPPING", EITHER CONTINUOUSLY OR FOR SPECIFIED HOURS OF THE DAY, THE CONTRACTOR SHALL SCHEDULE HIS OPERATIONS SO AS TO AVOID CONSTRUCTION OR STORAGE OF EQUIPMENT AND MATERIAL WITHIN THE ROADWAY BETWEEN THE HOURS OF 7:00A.M. AND 9:00A.M., AND 4:00P.M. AND 6:00P.M. OR FOR THE SPECIFIED HOURS WHEN STOPPING IS PROHIBITED.
20. STREET LIGHTING CONDUIT SHALL BE INSTALLED BY JACKING OR DRILLING METHODS. INSTALLATION OF CONDUIT BY OPEN TRENCHING IS NOT PERMITTED UNLESS APPROVED BY THE DIRECTOR, BUREAU OF STREET LIGHTING.
21. CONTRACTOR SHALL REPAIR AT HIS COST, THE DAMAGE CAUSED TO EXISTING SPRINKLER SYSTEMS DURING THE CONSTRUCTION OF THIS PROJECT. REPAIRS SHALL BE MADE WITHIN 5 WORKING DAYS AFTER DAMAGE OCCURS.
22. ALL ELECTROLIERS SPECIFIED HEREON SHALL INCLUDE A TYPE 2 PULLBOX, TO BE SUPPLIED AND INSTALLED, UNLESS OTHERWISE SPECIFIED.
23. STREET LIGHTING CONDUIT THAT IS TO BE ABANDONED SHALL HAVE WIRES REMOVED. THE CONDUIT ENDS THAT ARE WITHIN 12" OF THE SURFACE SHALL BE CUT AND REMOVED. BOTH ENDS OF THE REMAINING ABANDONED CONDUIT SHALL BE CRIMPED.

CIRCUIT DIAGRAM LEGEND:

- NEW WIRE
- EXISTING WIRE
- DISCONNECT AND REMOVE WIRE.
- CONNECT WIRE
- NEW LAMP
- EXISTING LAMP
- REMOVE EXISTING LAMP.

SERIES CIRCUIT NOTES:

1. WARNING: CLEARANCE SHALL BE OBTAINED DAILY FROM THE SERVING COMPANY (213)367-9908, AND "MEN AT WORK" SIGNS SHALL BE POSTED AT THE SERVICE POINT BEFORE ANY WORK IS DONE OR ANY CONNECTIONS MADE ON AN EXISTING CIRCUIT. SEE SECTIONS 16430 AND 2100 OF THE SPECIAL SPECIFICATIONS.
2. SERIES CIRCUIT WIRE SHALL BE NO. 8 AWG SOLID COPPER CONDUCTOR, INSULATED WITH 0.110" APPROVED POLYETHYLENE COMPOUND RATED FOR 5,000 VOLT OPERATION.
3. TWO OR MORE TURNS OF SELF-ADHESIVE COLORED TAPE WITH A MINIMUM WIDTH OF 1/2 INCH SHALL BE APPLIED TO EACH CABLE IN ALL SERIES CIRCUITS WHERE WORK IS BEING DONE AND WHERE TWO OR MORE CIRCUITS EXIST IN A COMMON PULLBOX OR POST BASE. THE TAPE SHALL BE APPLIED ON THE CABLE BETWEEN THE SPLICES AND THE CONDUIT, USING ONE COLOR FOR EACH CIRCUIT. THE COLORS WHITE, GRAY, GREEN, AND ORANGE SHALL NOT BE USED.
4. CONTRACTOR SHALL GIVE THE BUREAU OF STREET LIGHTING YARD (PHONE: 323-913-4743) TWO WORKING DAYS NOTICE BEFORE ANY WORK IS DONE ON AN EXISTING CIRCUIT.

MULTIPLE CIRCUIT NOTES:

1. WARNING: SAFETY CLEARANCE SHALL BE OBTAINED DAILY FROM THE SERVING COMPANY (213)367-9908 BEFORE DOING ANY WORK OR MAKING ANY CONNECTIONS ON AN EXISTING CIRCUIT. SEE SECTIONS 16430 AND 2100 OF THE SPECIAL SPECIFICATIONS.
2. MULTIPLE CIRCUIT WIRE SHALL BE NO. 6 AWG STRANDED COPPER CONDUCTOR, TYPE THWN/THHN INSULATION, UL APPROVED FOR 600 VOLT OPERATION UNLESS OTHERWISE SPECIFIED HEREON.
3. THREE WIRES (COLOR CODE: 1-RED, 1-BLACK, 1-WHITE) SHALL BE INSTALLED IN ALL MULTIPLE CIRCUIT CONDUIT UNLESS OTHERWISE PROVIDED FOR HEREON. "END RUN" CONDUITS SHALL HAVE ONLY TWO WIRES INSTALLED UNLESS OTHERWISE NOTED. SEE NOTE 4 BELOW.
4. EVEN NUMBERED ELECTROLIERS SHALL BE CONNECTED TO RED AND WHITE WIRES, AND ODD NUMBERED ELECTROLIERS SHALL BE CONNECTED TO BLACK AND WHITE WIRES.
5. ELECTROLIERS SHALL BE WIRED PER TYPICAL MULTIPLE CIRCUIT ELECTROLIER WIRING DETAIL, BUREAU OF STREET LIGHTING STANDARD DRAWING NO. L-301-1, UNLESS OTHERWISE SPECIFIED.
6. MULTIPLE CIRCUITS IN CONDUITS CONTAINING MORE THAN THREE CONDUCTORS SHALL BE APPROPRIATELY IDENTIFIED BY LABELING CONDUCTORS "A", "B", ETC. WITH APPROVED SELF-LAMINATING LETTER TAPE WRAPPED AT LEAST TWICE AROUND THE CONDUCTOR IN EACH PULLBOX. (W.H. BRADY, SPECIAL SELF-LAMINATING WIRE MARKERS OR EQUIVALENT)

LEGEND:

- (R) EXISTING ELECTROLIER TO BE RELOCATED.
- EXISTING UTILITARIAN LIGHT ON WOODEN POLE WHICH SHALL BE MAINTAINED IN SERVICE UNTIL THE PERMANENT ELECTROLIER LIGHTING SYSTEM IS PLACED IN SERVICE. CONTRACTOR MAY PROVIDE ALTERNATE LIGHTING IN LIEU OF MAINTAINING EXISTING UTILITARIAN LIGHTS IN SERVICE PROVIDED THAT SUCH ARRANGEMENTS ARE APPROVED BY THE ENGINEER.
- EXISTING ELECTROLIER, NOT TO BE REMOVED OR MODIFIED.
- PULLBOX TYPE 2 UNLESS OTHERWISE SHOWN HEREON. (STANDARD DRAWING NO. L-201-0). ADDITIONAL PULLBOXES SHALL BE REQUIRED AS SPECIFIED.
- EXISTING PULLBOX.
- EXISTING CONDUIT.
- NEW 1" CONDUIT.
- EXISTING 1" CONDUIT.
- NEW 1-1/2" CONDUIT.
- EXISTING 1-1/2" CONDUIT.
- NEW 2" CONDUIT.
- EXISTING 2" CONDUIT.
- ABANDON CONDUIT. (SEE GENERAL NOTE NO. 8 AND NO. 23)
- EXISTING ELECTROLIER FOUNDATION.
- FUTURE ELECTROLIER FOUNDATION.
- PROPOSED CATCH BASIN.

ELECTROLIER-PULLBOX DETAIL

PLAN DOES NOT DEPICT PULLBOX REQUIRED WITH NEW CONDUIT INSTALLATION. CONTRACTOR SHALL INSTALL ELECTROLIER PULLBOX WITH NEW STUBOUT TO ELECTROLIER PER ELECTROLIER-PULLBOX DETAIL. (CONTRACTOR MAY USE OTHER METHOD OF CONNECTING CONDUIT SUBJECT TO APPROVAL OF THE CONSTRUCTION ENGINEER).

SHOWN ON PLAN (TYP.) ⇒ DETAIL

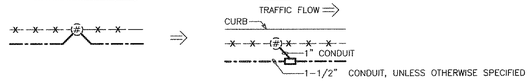

NOTICE TO CONTRACTORS

MATERIAL LIST

FOLLOWING IS A SUMMARY OF LUMINAIRES, CONVERSION KITS, AND OTHER EQUIPMENT WHICH SHALL BE SUPPLIED AND INSTALLED BY THE CONTRACTOR. THIS IS NOT INTENDED TO BE A COMPLETE LIST OF ALL MATERIALS REQUIRED. REFER TO THE SPECIAL PROVISIONS FOR A LIST OF EQUIPMENT APPROVED FOR USE ON THIS PROJECT.

SYMBOL	ITEM	QUANTITY	DESCRIPTION
L1	LUMINAIRE	56	35W LEOTEK GREENCOBRA 20F 49,50
L3	LUMINAIRE	166	89W LEOTEK ECOBRA 11M 49,50
L6	LUMINAIRE	1	163W LEOTEK ECOBRA 18M @ 700mA 49,50
T2	LAMP	49	36W, 2600K TRULY GREEN SOLUTIONS 49
	LAMP SOCKET	49	E40 BASE MOGUL LAMPHOLDER 28,49
LS	SOFFIT	55	45W LUMEC SOFFIT 49

TOTAL : 327 LUMINAIRES

REMOTE MONITORING NODE	TOTAL: 223 UNITS
* PE CELL	TOTAL: 4 UNITS

* ELECTROLIER NOS. 121 (SHEET 7), 140 (SHEET 7), 163 (SHEET 10), 186 (SHEET 11) SHALL HAVE PE CELLS INSTALLED IN ADDITION TO REMOTE MONITORING NODES (SEE DETAIL "A" ON SHEET 2).

NOTE:

CONTRACTOR SHALL COORDINATE WITH THE DEPT. OF WATER & POWER TO OBTAIN QUADRANT LOCATIONS FOR MULTIPLE STREET LIGHTING SERVICES PRIOR TO START OF CONSTRUCTION. ANY WORK DONE PRIOR TO RECEIVING QUADRANT LOCATIONS WILL BE AT CONTRACTOR'S OWN RISK.

47 INSTALL 1-1/2" CONDUIT WITH SEVEN MULTIPLE WIRES: (COLOR CODE: 3-RED, 3-BLACK, 1-WHITE)

46 INSTALL 1-1/2" CONDUIT WITH FIVE MULTIPLE WIRES: (COLOR CODE: 2-RED, 2-BLACK, 1-WHITE)

45 INSTALL 1-1/2" CONDUIT WITH THREE MULTIPLE WIRES: (COLOR CODE: 1-RED, 1-BLACK, 1-WHITE)

44 SERVICE COMPANY TO PROVIDE AND INSTALL BYPASS CONTROL LINE, P.E. & MRWI ON TOP OF POWER POLE FOR MULTI-MULTIPLE SERVICE. INSTALL TWO ADDITIONAL # 10 AWG CONTROL WIRES IN RISER (110' EACH) FOR BYPASS CONTROL, COLOR CODE (1) RED, (1) BLK. INSTALL ONE APPROVED 10 AMP FUSE HOLDER (WITHOUT FUSE) BETWEEN THE TWO WIRES IN THE SERVICE PULLBOX. ROLL AND TAPE LOOSE WIRES AT TOP OF RISER FOR OTHERS. SERVICE COMPANY WILL CONNECT THE OPEN ENDS TO MRWI FOR TESTING BYPASS CONTROL. (SEE DETAIL "B" ON SHEET 2). ATTACH W.H. BRADY SELF LAMINATING LABEL ON THE FUSE WITH THIS NOTE: "NORMALLY EMPTY. INSERT FUSE FOR TEST ONLY."
NOTE: FUSE IS TO BE INSTALLED ONLY DURING TESTING WHEN P.E. NEEDS TO BE BYPASSED - EX. FOR DAYTIME BURN TEST.

43 TEMPORARY TRAFFIC SIGNAL SHUTDOWN MAY BE REQUIRED DURING UPGRADING OF ELECTRICAL SERVICE. CONTRACTOR SHALL NOTIFY AND COORDINATE WITH THE DEPARTMENT OF TRANSPORTATION, TRAFFIC SIGNAL SUPERINTENDENT (TEL. NO. 213-485-2261) 3 WORKING DAYS PRIOR TO START OF CONSTRUCTION AT THIS LOCATION.

42 BUS SHELTER COORDINATION REQUIREMENTS- WHEN A CIRCUIT IS CONVERTED FROM SERIES OPERATION TO MULTIPLE, CONTRACTOR SHALL NOTIFY SHELTER MEDIA INC. AT (818) 762-1385, 48 HOURS IN ADVANCE OF WORK ON THE CIRCUIT- SERVICE CHANGES AT SHELTER WILL BE CONSTRUCTED BY SHELTER MEDIA.

41 LUMINAIRE SHALL PROVIDE A MULTIPLE, SEMI-CUTOFF, TYPE 1 DISTRIBUTION.

40 REMOVE AND DISPOSE OF EXISTING POT HEAD.

39 DWP TO REMOVE SERVICE. CONTRACTOR SHALL REMOVE EXISTING SERIES SERVICE EQUIPMENT (SERVICE RISER AND PULLBOX).

38 INTERCEPT EXISTING CONDUIT AND INSTALL TYPE 3 PULLBOX.

37 REMOVE EXISTING TYPE 2 PULLBOX AND INSTALL NEW TYPE 3 PULLBOX.

36 REMOVE TWO EXISTING MULTIPLE WIRES AND INSTALL THREE MULTIPLE CIRCUIT WIRES (COLOR CODE : 1-RED, 1-BLACK, 1-WHITE).

35 REMOVE EXISTING TYPE 2 PULLBOX AND INSTALL NEW TYPE 3 SERVICE PULLBOX.

34 INSTALL CONNECTING DEVICE PER DELTA NOTE 18, EXCEPT TO ACCOMMODATE FIVE (5) CIRCUITS INSTEAD OF FOUR (4) CIRCUITS - CIRCUITS "A", "B", "C", "D" & "E".

33 BALLAST SHALL BE DESIGNED TO PROVIDE THE ELECTRICAL CHARACTERISTICS RECOMMENDED BY APPROVED LAMP MANUFACTURERS FOR PROPER STARTING AND OPERATION OF THE DESIGNATED LAMPS. BALLASTS SHALL BE ENCAPSULATED AND WATERPROOFED SATISFACTORY TO THE ENGINEER. PRIMARY LEADS SHALL BE No. 8 A.W.G. AND INSULATED FOR 5000 VOLT OPERATION. SECONDARY LEADS SHALL BE No. 10 A.W.G. AND INSULATED FOR 600 VOLT OPERATION. LEADS SHALL EXTEND AT LEAST 12 INCHES BEYOND THE BALLAST CAPSULE. IF BALLAST IS ENCASED IN METAL, A SATISFACTORY MEANS OF GROUNDING SHALL BE PROVIDED. BALLASTS SHALL BE CAPABLE OF WITHSTANDING A 10,500 VOLT HIGH POTENTIAL TEST.

32 REMOVE EXISTING WIRES AND INSTALL NEW MULTIPLE CIRCUIT WIRE TO FACILITATE CONVERSION OF SERIES TO MULTIPLE (SEE MULTIPLE CIRCUIT NOTES).

31 PROVIDE AND INSTALL A LAMP SIZED TO MATCH CONVERSION KIT FOR EACH CONVERSION KIT SPECIFIED.

30 THE CONTRACTOR SHALL INSTALL ALL REQUIRED PHOTOELECTRIC CONTROLS. THE CONTROLS SHALL BE OBTAINED FROM THE DEPT. OF WATER AND POWER (D.W.P.) STREET LIGHTING MAINTENANCE HEADQUARTER, 111 NORTH HOOVER ST., AT NO COST TO THE CONTRACTOR. A MINIMUM OF 15 DAYS ADVANCE NOTICE IS REQUIRED TO BE GIVEN TO THE D.W.P. STREET LIGHTING SUPERINTENDENT AT 213-481-4386. THE CONTRACTOR SHALL BE RESPONSIBLE FOR KEEPING ALL PHOTOELECTRIC CONTROLS ISSUED BY THE D.W.P. IN OPERATING CONDITION UNTIL SATISFACTORY COMPLETION OF THE BURN TEST. THE INSTALLED CONTROLS SHALL BE ORIENTED IN THE NORTHERLY DIRECTION.

29 CONTRACTOR SHALL MODIFY OR REMOVE EXISTING SOCKETS, BRACKET OR TRANSFORMER AS REQUIRED FOR INSTALLATION OF CONVERSION KIT. NEW WIRES IN ELECTROLIER SHALL BE INSTALLED AND CONNECTED WHERE EXISTING WIRES CAN NOT BE USED.

28 CONTRACTOR SHALL REMOVE EXISTING LUMINAIRE MOUNTING ARM FROM POLE IN ORDER TO OBTAIN THE NECESSARY WIRE LENGTH FOR CONNECTIONS TO NEW LUMINAIRE. MOUNTING ARM IS THEN REINSTALLED.

27 CONTRACTOR SHALL REPLACE EXISTING SERIES EXTERNAL BALLAST OR TRANSFORMER WITH SPECIFIED SERIES EXTERNAL BALLAST AT ITS EXISTING LOCATION (EITHER POST BASE OR PULLBOX).

26 INSTALLATION OF NEW LAMP SOCKET REQUIRES FABRICATION AND INSTALLATION OF MOUNTING BRACKET. SEE BID PACKAGE FOR ADDITIONAL INFORMATION AND REQUIREMENTS. ANY ADDITIONAL WORK REQUIRED TO COMPLETE INSTALLATION OF MOUNTING BRACKET AND SOCKET SHALL BE DONE BY THE CONTRACTOR. ASSOCIATED COSTS SHALL BE INCLUDED IN THE BID FOR THE "LED POST TOP LAMP" BID ITEM. ADDITIONAL WORK MAY INCLUDE (BUT NOT LIMITED TO):
1. REMOVE EXISTING CONVERSION KIT.
2. FABRICATE NEW MOUNTING BRACKETS AT PROPER HEIGHTS TO MATCH GLOBE SIZE TO ACHIEVE PROPORTIONAL LAMP CENTER HEIGHT AND FIRMLY SECURE TO GLOBE/LANTERN BASE.
3. DRILL AND ENLARGE HOLES AND FURNISH LONGER SCREWS.
4. MODIFY GLOBE OR LANTERN FITTER (BASE SUPPORT)

25 MULTIPLE COMBINED STREET LIGHTING AND TRAFFIC SIGNAL SERVICE LOCATION. INSTALL SEPARATE TYPE 3 SERVICE PULLBOX FOR STREET LIGHTING WITH 2" CONDUIT CONNECTING EXISTING TRAFFIC SERVICE PULLBOX. INTERCEPT SERVICE WIRES FROM EXISTING TRAFFIC SIGNAL PULLBOX.

24 TAPE ENDS OF SPARE WIRE.

23 INSTALL THREE MULTIPLE CIRCUIT WIRES: (COLOR CODE: 1-RED, 1-BLACK, 1-WHITE)

22 REMOVE EXISTING STREET LIGHTING WIRES.

21 MULTIPLE SERVICE LOCATION. INTERCEPT CONDUIT INSTALLED BY OTHERS AND INSTALL TYPE 3 SERVICE PULLBOX. VERIFY EXACT LOCATION OF CONDUIT. PHONE DEPT. OF WATER AND POWER UNDERGROUND ENGINEERING FIVE DAYS PRIOR TO START OF WORK AT THIS LOCATION, PHONE: (213) 367-3003.

20 TRIM TREE (SEE SUPPLEMENTAL NOTE NO. 20).

19 INSTALL APPROVED CONNECTING DEVICES PER DETAIL "B", BUREAU OF STREET LIGHTING STANDARD DRAWING NO. L-301-1 (CIRCUITS "A", "B", & "C").

18 INSTALL APPROVED CONNECTING DEVICES PER DETAIL "A", BUREAU OF STREET LIGHTING STANDARD DRAWING NO. L-301-1 (CIRCUITS "A", "B", "C", & "D").

17 MULTIPLE SERVICE LOCATION. INSTALL 10' OF 2" GALVANIZED CONDUIT SERVICE RISER ON POLE. EXTEND CONDUIT TO THE ALLEY B.C. AND INSTALL TYPE 3 PULLBOX UNLESS OTHERWISE SPECIFIED. INSTALL PULLWIRE.

16 INSTALL FIVE MULTIPLE CIRCUIT WIRES: (COLOR CODE: 2-RED, 2-BLACK, 1-WHITE)

15 INSTALL TWO MULTIPLE CIRCUIT WIRES: (COLOR CODE: 1-BLACK, 1-WHITE)

14 INSTALL TWO MULTIPLE CIRCUIT WIRES: (COLOR CODE: 1-RED, 1-WHITE)

13 INSTALL 1" CONDUIT BEND.

12 INSTALL ADDITIONAL 2" CONDUIT BEND FOR TRAFFIC SIGNAL WIRING.

11 INSTALL ONE APPROVED FUSE HOLDER WITH 30 AMP FUSE BETWEEN EACH SERVICE WIRE (NOT NEUTRAL WIRE) OR SERVICE WIRE CONNECTING DEVICE AND STREET LIGHTING CIRCUIT WIRE. SERVING COMPANY WILL INSTALL SERVICE.

10 JOIN CONDUIT.

9 MULTIPLE SERVICE LOCATION. INSTALL TYPE 3 PULLBOX UNLESS OTHERWISE SPECIFIED AND 10' OF 2" GALVANIZED CONDUIT SERVICE RISER ON POLE. INSTALL PULLBOX NO CLOSER THAN 5' AND NO FARTHER THAN 15' FROM THE SERVICE POLE.

8 SERIES SERVICE POLE. INSTALL ONE TERMINAL CUTOFF BOX PER STANDARD PLAN B-3724 WITH ONE DISCONNECTING SWITCH FOR EACH CIRCUIT. SERVING COMPANY WILL INSTALL SERVICE.

7 CONSTRUCT CASE 4 DRIVEWAY RETURN PER STANDARD PLAN NO. S-440.

6 CONSTRUCT CASE 3 DRIVEWAY RETURN PER STANDARD PLAN NO. S-440.

5 INTERCEPT CONDUIT AND INSTALL PULLBOX.

4 THREAD AND CAP CONDUIT AT END OF IMPROVEMENT.

3 INSTALL CONDUIT ONLY.

2 CONNECT WIRES (PER CIRCUIT DIAGRAM WHERE APPLICABLE).

1 TERMINATE CONDUIT IN STREET LIGHTING PULLBOX.

THE ABOVE NOTES ARE APPLICABLE ONLY WHERE SPECIFIED ON THIS PLAN.

DELTA NOTES:

SUPPLEMENTAL NOTES:

1. IN THE EVENT THE WORK IS NOT COMPLETED WITHIN SUCH TIME AS SPECIFIED IN THE CONTRACT, LIQUIDATED DAMAGES IN THE AMOUNT STATED THEREIN WILL BE DEDUCTED FROM THE AMOUNT TO BE PAID TO THE CONTRACTOR.
2. TIME SPECIFIED IN THE "PROPOSAL" FOR COMPLETION OF THE WORK INCLUDES TIME FOR PROCUREMENT AND TESTING OF EQUIPMENT TO BE INSTALLED. NOTWITHSTANDING SECTION 6-6.1 OF THE STANDARD SPECIFICATIONS FOR PUBLIC WORKS CONSTRUCTION, NO MATERIAL DELAY WILL BE GRANTED ON THIS PROJECT.
3. ALL ELECTROLIER LOCATIONS ARE AT OR DIMENSIONED FROM BCR UNLESS OTHERWISE SHOWN ON THE PLAN.
4. ALL ELECTROLIER DIMENSIONS SHOWN ON PLAN ARE MEASURED ALONG THE CURB FACE.
5. PROPOSED ELECTROLIER FOUNDATIONS AND PULLBOXES SHALL BE INSTALLED OUTSIDE OF ACCESS RAMP AREAS. EXISTING FOUNDATIONS AND PULLBOXES SHALL BE RECONSTRUCTED TO CLEAR ACCESS RAMPS BY A MINIMUM OF 12". EXISTING CONDUIT SHALL BE LOWERED AS NECESSARY PER SEC. 307-2.5 OF THE STANDARD SPECIFICATIONS FOR PUBLIC WORKS CONSTRUCTION.
6. PULLBOXES SHALL NOT BE PLACED IN ALLEYS. ALL SERVICE PULLBOXES OR OTHER PULLBOXES REQUIRED NEAR ALLEY APPROACHES SHALL BE INSTALLED IN ACCORDANCE WITH GENERAL NOTE NO. 11 HEREON.
7. CONTRACTOR SHALL MAKE ARRANGEMENTS TO DE-ENERGIZE EXISTING STREET LIGHTING SYSTEM AT THE TIME THE NEW SYSTEM IS ENERGIZED.
8. TOTAL UNIT NUMBERS OF EQUIPMENT SPECIFIED TO BE REMOVED AND DISPOSED OF ARE AN APPROXIMATION. ACTUAL NUMBERS SHALL BE VERIFIED BY CONTRACTOR'S FIELD INVESTIGATION.
9. EQUIPMENT IDENTIFIED TO BE SALVAGED IS EXTREMELY FRAGILE. CONTRACTOR SHALL USE EXTREME CARE IN REMOVING AND TRANSPORTING SALVAGE EQUIPMENT. DAMAGED EQUIPMENT WILL NOT BE ACCEPTED TO MEET CONTRACTOR'S SALVAGE REQUIREMENT AND THE REPLACEMENT COST OF SUCH EQUIPMENT WILL BE DEDUCTED FROM CONTRACT COST.
10. TRAFFIC SIGNAL WORK WILL BE PERFORMED BY THE CONTRACTOR. THE CONTRACTOR SHALL BE RESPONSIBLE FOR COORDINATING TRAFFIC SIGNAL WORK WITH THE DEPARTMENT OF TRANSPORTATION AND SHALL TAKE THIS INTO CONSIDERATION WHEN SCHEDULING WORK AND MAKING COST ESTIMATES (SEE SUPPLEMENTAL NOTE NO. 12).
11. THE CONTRACTOR SHALL GIVE THE TRAFFIC SIGNAL SUPERINTENDENT (TELEPHONE: 213-485-2261) THREE WORKING DAYS NOTICE BEFORE SCHEDULING WORK THAT WILL REQUIRE COORDINATION WITH THE DEPARTMENT OF TRANSPORTATION. THIS SHALL INCLUDE, BUT NOT BE LIMITED TO, SPECIFIC WORK LOCATIONS INDICATED ON THESE PLANS.
12. CONTRACTOR SHALL BE RESPONSIBLE FOR THE SALVAGE AND REINSTALLATION OF ALL STREET NAME AND NEIGHBORHOOD WATCH SIGNS ON THE PROJECT.
13. CONTRACTOR SHALL PROTECT OR REMOVE AND REPLACE ALL EXISTING IMPROVEMENTS NEAR EXISTING/NEW FOUNDATIONS (i.e., FENCES, BRICK WORK, LANDSCAPING, TERRAZO AND BLOCKWALLS).
14. UTILITIES: UTILITY LINES SHOWN ON THIS PLANS ARE FOR THE PURPOSE OF INFORMATION ONLY. THEY ARE SHOWN AT LOCATIONS WHERE THEY MAY BE CONFLICTS WITH THE PROPOSED STREET LIGHTING INSTALLATION. THESE LINES ARE LOCATED BY DIMENSION AND ARE NOT DRAWN TO SCALE.
15. IN THE EVENT OF OVERHEAD COMMUNICATION LINE CONFLICT WITH ELECTROLIERS, CONTRACTOR SHALL MAINTAIN A CLEARANCE OF A MINIMUM 12" CLEARANCE.
16. UNDERGROUND SERVICE ALERT: BEFORE COMMENCING ANY EXCAVATION, THE CONTRACTOR SHALL OBTAIN AN UNDERGROUND SERVICE ALERT INQUIRY I.D. NUMBER BY CALLING 1-800-422-4133. TWO WORKING DAYS SHALL BE ALLOWED AFTER THE I.D. NUMBER IS OBTAINED AND BEFORE THE EXCAVATION WORK IS STARTED. THE UTILITY OWNERS CAN BE NOTIFIED. THE I.D. NUMBER MUST BE REPORTED TO THE BUREAU OF CONTRACT ADMINISTRATION, WHEN CALLING FOR INSPECTION: METRO, (213) 580-5080; VALLEY, (818) 756-8335. I.D. NUMBERS WILL NOT BE GIVEN MORE THAN TEN CONSECUTIVE DAYS PRIOR TO STARTING EXCAVATION WORK.
17. UNDERGROUND UTILITIES: CONTRACTOR SHALL LOCATE, PROTECT AND MAINTAIN A MINIMUM 12" CLEARANCE FROM EDGE OF UTILITIES, VERTICAL AND HORIZONTAL. IF FIELD CONDITIONS VARY FROM THAT INDICATED, CONTRACTOR SHALL CONTACT STREET LIGHTING ENGINEER AT (213) 847-1568 FOR INSTRUCTIONS.
18. WHERE ELECTROLIERS ARE BEING CONVERTED FROM SERIES TO MULTIPLE OPERATION, THE NEUTRAL CONDUCTOR SHALL BE GROUNDED (PER MULT. CIRCUIT NOTE NO. 5) BY CLAMPING IT TO THE COPPER BONDING STRAP IN EVERY ELECTROLIER BASE OR ITS ADJACENT PULLBOX. CAUTION: MANY ELECTROLIERS (WITHOUT PULLBOXES) TO BE CONVERTED TO MULT. OPERATION HAVE SMALL HANDHOLES AND / OR LOW CONDUIT STUBS MAKING IT DIFFICULT TO CLAMP THE NEUTRAL CONDUCTOR TO THE COPPER BONDING STRAP. THE CONTRACTOR MAY ELECT TO USE AN ALTERNATE METHOD OF GROUNDING AT NO ADDITIONAL COST TO THE CITY. ALTERNATE METHODS OF GROUNDING SHALL BE APPROVED BY THE ENGINEER PRIOR TO CONSTRUCTION. THE CONTRACTOR SHALL TAKE THIS INTO ACCOUNT WHEN PREPARING HIS/HER BID (ALSO REFER TO ITEM 6 OF "INSTRUCTIONS TO BIDDERS" ON PAGE 1-2A OF THE BID PROPOSAL AS IT RELATES TO THE CONTRACTOR PERFORMING A FIELD CHECK PRIOR TO HIS/HER BID).
19. THE CONTRACTOR WILL BE HELD RESPONSIBLE WHEN WORK IS STARTED ON THE CIRCUIT (UNDER CIRCUIT CLEARANCE) OR WORK IS STARTED IN CLOSE PROXIMITY TO THE EXISTING STREET LIGHTING AND CIRCUIT COMPONENTS.
20. STREET TREE REQUIREMENTS:
   A. TREE TRIM PERMITS: CONTRACTOR SHALL REQUEST A PERMIT TO TRIM TREE(S) BY CALLING BUREAU OF STREET SERVICES, STREET TREE DIVISION AT (213) 485 - 5675. TRIMMING SHALL BE SUPERVISED BY A CERTIFIED ARBORIST AND MEET THE CITY OF LOS ANGELES STREET TREE DIVISION'S STANDARDS, THE INTERNATIONAL SOCIETY OF ARBORICULTURE'S PRUNING GUIDELINES (ISA), AND THE AMERICAN NATIONAL STANDARDS INSTITUTE'S TREE, SHRUB, AND OTHER WOODY PLANT MAINTENANCE STANDAR

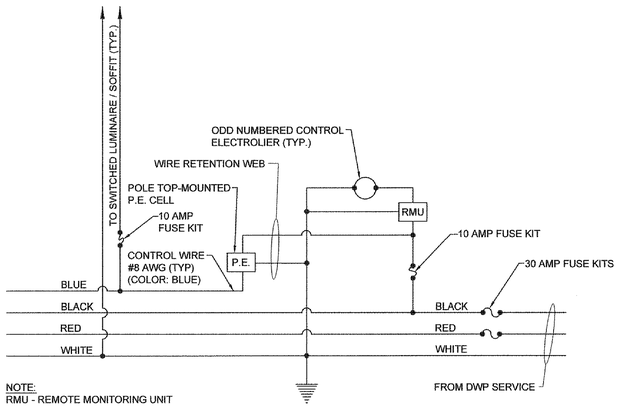

NOTE:
RMU - REMOTE MONITORING UNIT

DETAIL "A"

PE - SWITCHING CIRCUIT DIAGRAM

NOT TO SCALE

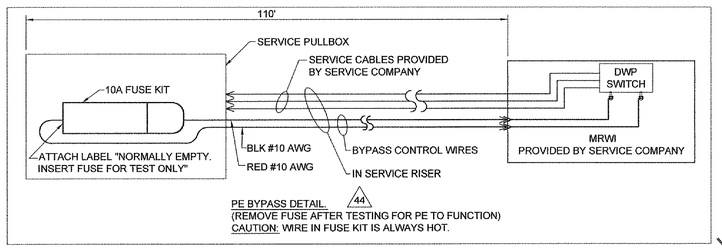

DETAIL "B"

PE - BYPASS CONTROL LINE

NOT TO SCALE

PLAN OF ELECTROLIER LIGHTING SYSTEM

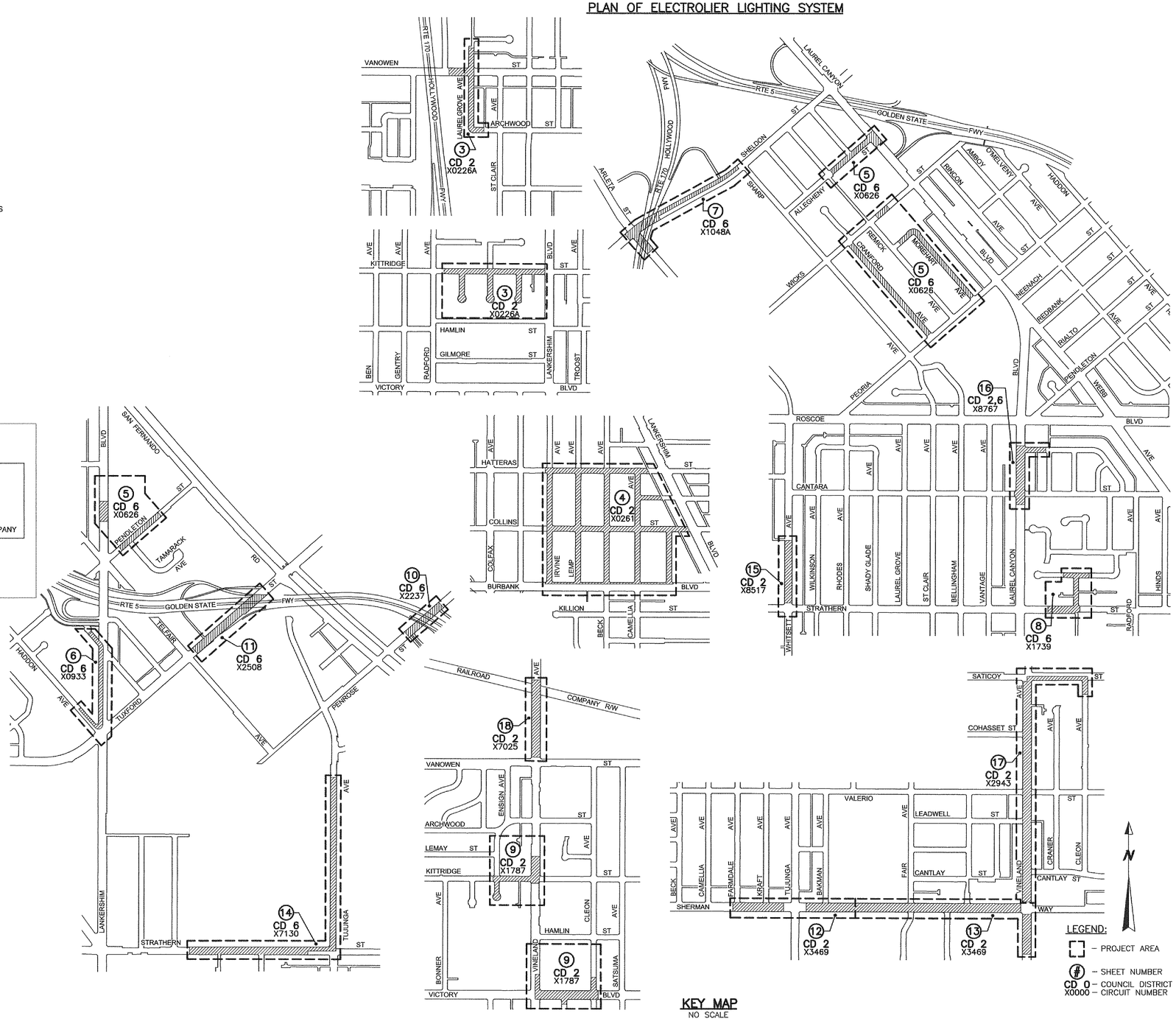

KEY MAP

NO SCALE

SUN VALLEY-NORTH HOLLYWOOD STM, KEY MAP AND DETAILS
HIGH VOLTAGE CONVERSION FY 2015-16

W.O. L1649427

REGISTERED PROFESSIONAL ENGINEER NORMA MARIE ISAHAKIAN E 13696 Exp. 6/17 ELECTRICAL STATE OF CALIFORNIA

CONTRACTOR	
INSPECTED BY	
DATE ENERGIZED	ELECTS. LAMPS:
DATE ENERGIZED	ELECTS. LAMPS:
DATE ENERGIZED	ELECTS. LAMPS:
CORRECTED TO "AS BUILT"	DATE
BY	CHECKED

PLAN DRAFTING FILE NO.: L:\FSDSID\STM\Hight Voltage Conversion\SunValley_NorthHollywood\SunValley-NorthHollywood_Kmap and Details.dwg

SYM.	REVISION	DESCRIPTION	DIVISION ENGINEER BUREAU OF ST. LTG.	DATE

CITY OF LOS ANGELES
ED EBRAHIMIAN, DIRECTOR BUREAU OF STREET LIGHTING

STREET LIGHTING

DATE 4-12 2016

DIRECTOR BUREAU OF STREET LIGHTING

SCALE OF ORIGINAL PLAN: NONE 100 50 0 50 100 150 200 feet

SHEET 2 OF 18 SHEETS

INDEX NUMBER M-2427

STREET CLASSIFICATION (M)=MAJOR, (C)=COLLECTOR, (L)=LOCAL	
ARCHWOOD ST	(L)
VANOWEN ST	(M)
LAURELGROVE AVE	(L, C)
KITTRIDGE ST	(C)
HINDS AVE	(L)
MORELLA AVE	(L)
SIMPSON AVE	(L)

EXISTING LAMP SIZE SHT. 3 ONLY

LAMP SIZE	QUANTITY	CD
70W HPS	14	2
100W HPS	3	2
200W HPS	1	2

TOTAL ITEMS REQUIRED FOR SHT. 3 ONLY

NOTE: SEE MATERIAL INSTALLATION LIST ON SHT. NO 1 FOR DESCRIPTION.

SYMBOL	ITEM	LAMP SIZE	QUANTITY
(L1)	LUMINAIRE	35W LEOTEK GREENCOBRA 20F	17
(L3)	LUMINAIRE	89W LEOTEK ECOBRA 11M	1

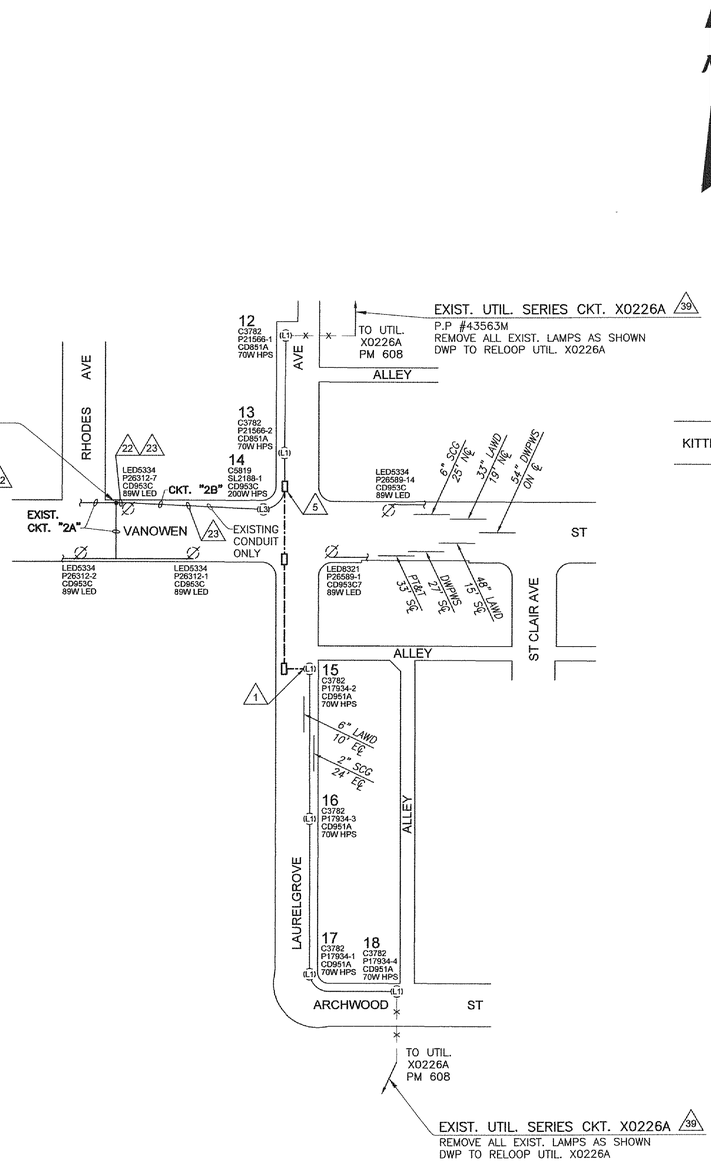

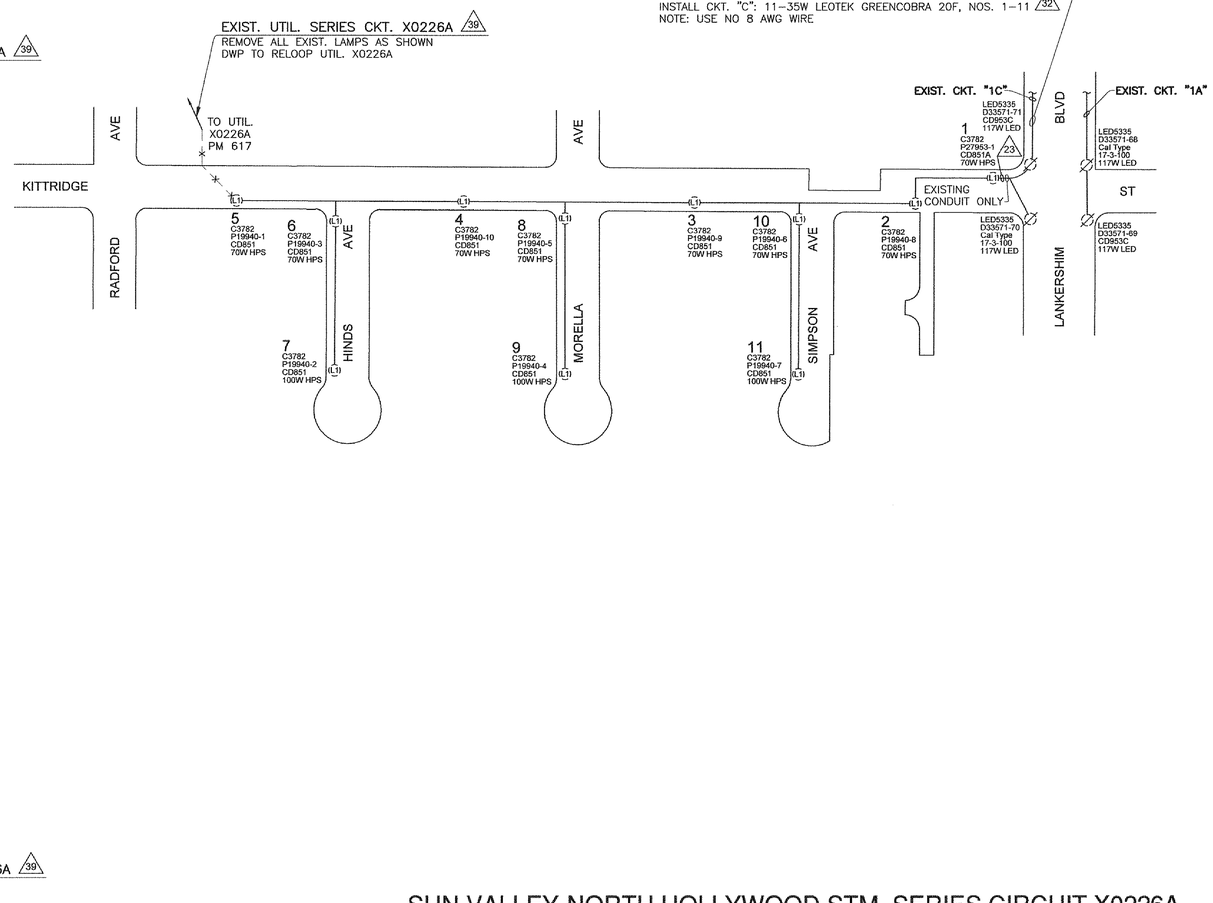

CONTRACTOR
INSPECTED BY
DATE ENERGIZED ELECTS. LAMPS:
DATE ENERGIZED ELECTS. LAMPS:
DATE ENERGIZED ELECTS. LAMPS:
CORRECTED TO "AS BUILT" DATE
BY CHECKED

PLAN DRAFTING FILE NO.: \SUN VALLEY-NORTH HOLLYWOOD STM, SERIES CIRCUIT X0226A High Voltage Conversion\SunValley_NorthHollywood\X0226A\DWG\X0226A.dwg

SYM.	REVISION	DESCRIPTION	DIVISION ENGINEER BUREAU OF ST. LTG.	DATE

SUN VALLEY-NORTH HOLLYWOOD STM, SERIES CIRCUIT X0226A HIGH VOLTAGE CONVERSION FY 2015-16

W.O. L1649427

REGISTERED PROFESSIONAL ENGINEER NORMAN MARIE ISAKSEN E 13898 Exp. 6/17 ELECTRICAL STATE OF CALIFORNIA

CITY OF LOS ANGELES
ED EBRAHIMIAN, DIRECTOR BUREAU OF STREET LIGHTING

STREET LIGHTING

DATE 4-12 20 16

DIRECTOR, BUREAU OF STREET LIGHTING

SCALE OF ORIGINAL PLAN: 1"=100' (100 50 0 50 100 150 200 feet)

SHEET 3 OF 18 SHEETS

INDEX NUMBER M-2427

STREET CLASSIFICATION (M)=MAJOR, (C)=COLLECTOR, (L)=LOCAL	
COLLINS ST	(L)
MIRANDA ST	(L)
HATTERAS ST	(C)
IRVINE AVE	(L)
LEMP AVE	(C)
BECK AVE	(L)
CAMELLIA AVE	(L)
FARMDALE AVE	(L)

EXISTING LAMP SIZE SHT. 4 ONLY

LAMP SIZE	QUANTITY	CD
70W HPS	48	2
100W HPS	1	2
200W HPS	1	2

TOTAL ITEMS REQUIRED FOR SHT. 4 ONLY

NOTE: SEE MATERIAL INSTALLATION LIST ON SHT. NO 1 FOR DESCRIPTION.

SYMBOL	ITEM	LAMP SIZE	QUANTITY
(T2)	LAMP	36W, 2600K TRULY GREEN SOLUTIONS	49
(L3)	LUMINAIRE	89W LEOTEK ECOBRA 11M	1

NEW MULTI-MULT. ST. LT. SVC. NO. 3 (11)(44)
P.P. #333198M MRWI (EXISTING MULTIPLE SERVICE)
EXISTING CKT. "A": 1-200W HPS, NO. D-33546 (1)
REMOVE CKT. "A": 1-200W HPS, NO. D-33546 (1)
INSTALL CKT. "A": 28-36W, 2600K TRULY GREEN SOLUTIONS, NOS. 19-46
1-89W LEOTEK ECOBRA 11M, NO. 315
INSTALL CKT. "B": 21-36W, 2600K TRULY GREEN SOLUTIONS, NOS. 47-67
NOTE: USE NO 8 AWG WIRE

EXIST. SERIES CKT. X0261 (39)
P.P. #94293M
REMOVE ALL EXIST. LAMPS

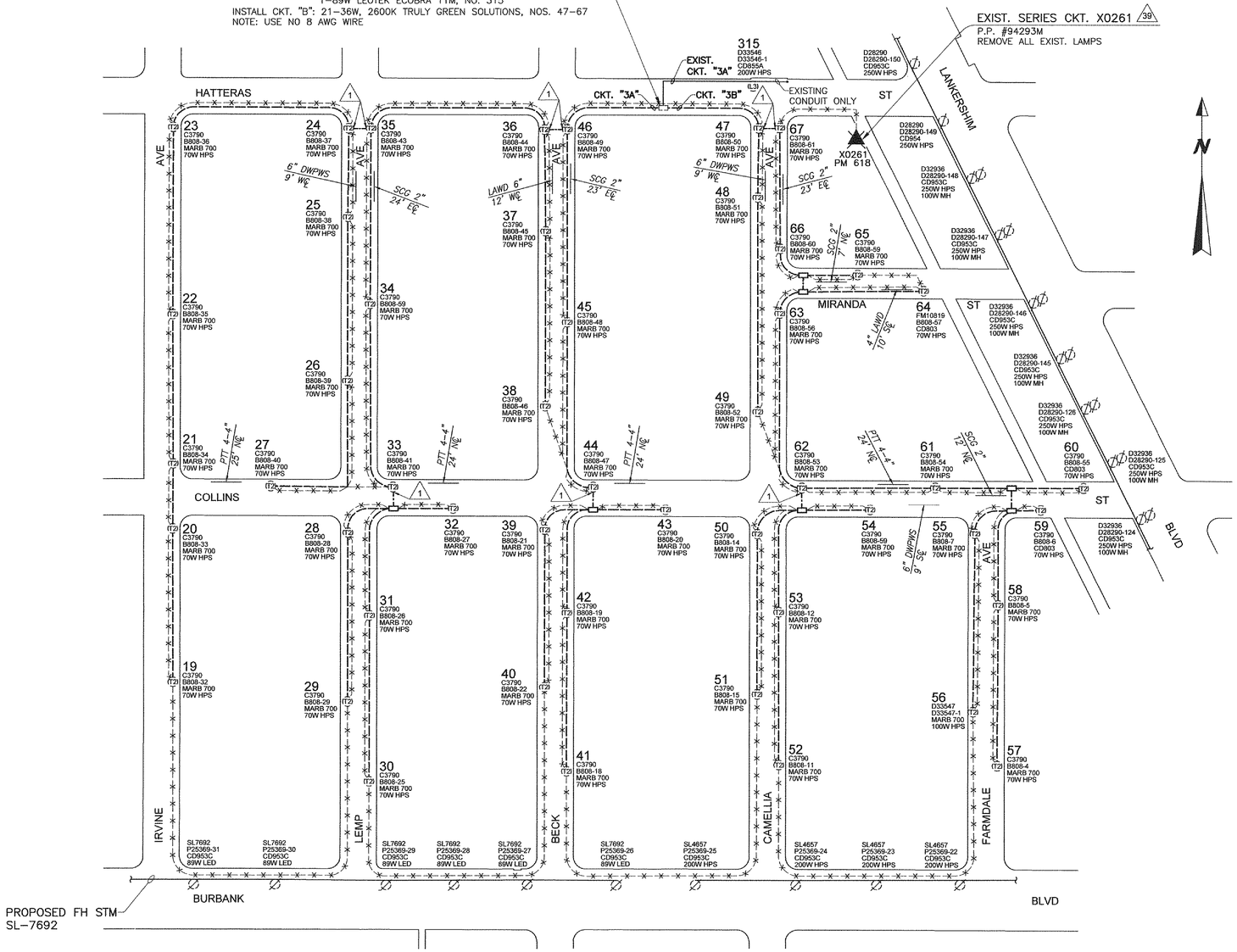

CONTRACTOR
INSPECTED BY
DATE ENERGIZED ELECTS. LAMPS:
DATE ENERGIZED ELECTS. LAMPS:
DATE ENERGIZED ELECTS. LAMPS:
CORRECTED TO "AS BUILT" DATE
BY CHECKED

PLAN DRAFTING FILE NO.: \\Cityfile\Projects\Light Voltage Conversion\Sunvalley_Northhollywood\X0261\LVWO\X0261.dwg

SYM.	REVISION	DESCRIPTION	DATE

DIVISION ENGINEER BUREAU OF ST. LTG.

CITY OF LOS ANGELES
ED EBRAHIMIAN, DIRECTOR BUREAU OF STREET LIGHTING
STREET LIGHTING
DATE 9-12
DIRECTOR BUREAU OF STREET LIGHTING

SUN VALLEY-NORTH HOLLYWOOD STM, SERIES CIRCUIT X0261
HIGH VOLTAGE CONVERSION FY 2015-16

W.O. L1649427

REGISTERED PROFESSIONAL ENGINEER NORMA MARIE ISAMAN E 13696 Exp. 6/17 ELECTRICAL STATE OF CALIFORNIA

SCALE OF ORIGINAL PLAN: 1"=100' (100 50 0 50 100 150 200 feet)

SHEET 4 OF 18 SHEETS

INDEX NUMBER M-2427

STREET CLASSIFICATION (M)=MAJOR, (C)=COLLECTOR, (L)=LOCAL	
ART ST	(L)
WICKS ST	(C)
ALLEGHENY ST	(L)
PENDLETON ST	(C)
LANKERSHIM BLVD	(M)
LAUREL CANYON BLVD	(M)
CRANFORD AVE	(L)
MOREHART AVE	(L)

EXISTING LAMP SIZE SHT. 5 ONLY

LAMP SIZE	QUANTITY	CD
70W HPS	24	6
200W HPS	7	6
400W MV	1	6

TOTAL ITEMS REQUIRED FOR SHT. 5 ONLY

NOTE: SEE MATERIAL INSTALLATION LIST ON SHT. NO 1 FOR DESCRIPTION.

SYMBOL	ITEM	LAMP SIZE	QUANTITY
(L1)	LUMINAIRE	35W LEOTEK GREENCOBRA 20F	24
(L3)	LUMINAIRE	89W LEOTEK ECOBRA 11M	8

EXIST. U.G. MULT. ST. LT. SVC. NO. 5
H.H. 8721 CRANFORD AVE
EXISTING CKT. "A": 6–35W BETA 30 LED
2–52W BETA 30 LED
INSTALL: 10–35W LEOTEK GREENCOBRA 20F, NOS. 78–87
NOTE: USE NO 8 AWG WIRE

EXIST. MULT. ST. LT. SVC. NO. 7
P.P. #124410M
EXISTING CKT. "A": 2–82W CREE XSP2–C
INSTALL: 1–89W LEOTEK ECOBRA 11M, NO. 88
NOTE: USE NO 8 AWG WIRE

EXIST. MULT. ST. LT. SVC. NO. 4
P.P. #165367M
EXISTING CKT. "A": 6–35W BETA 30 LED
INSTALLS: 10–35W LEOTEK GREENCOBRA 20F, NOS. 68–77
NOTE: USE NO 8 AWG WIRE

EXIST. MULT. ST. LT. SVC. NO. 8
P.P. #409297M
EXISTING CKT. "A": 5–35W BETA 30 LED
1–52W BETA 30 LED
INSTALL: 4–35W LEOTEK GREENCOBRA 20F, NOS. 96–99
NOTE: USE NO 8 AWG WIRE

NEW MULT. ST. LT. SVC. NO. 6
P.P. #205162M, RISER AT 3:00 C/L OF ALLEGHENY ST
INSTALL CKT. "A": 7–89W LEOTEK ECOBRA 11M, NOS. 89–95
NOTE: USE NO 8 AWG WIRE

EXIST. UTIL. SERIES CKT. X0626
P.P. #290535M
REMOVE ALL EXIST. LAMPS AS SHOWN
DWP TO RELOOP UTIL. X0626

SUN VALLEY-NORTH HOLLYWOOD STM, SERIES CIRCUIT X0626
HIGH VOLTAGE CONVERSION FY 2015-16

W.O. L1649427

REGISTERED PROFESSIONAL ENGINEER NORMA MARIE ISAHAKIAN E 13696 Exp. 6-11 ELECTRICAL STATE OF CALIFORNIA

CONTRACTOR
INSPECTED BY
DATE ENERGIZED ELECTS. LAMPS:
DATE ENERGIZED ELECTS. LAMPS:
DATE ENERGIZED ELECTS. LAMPS:
CORRECTED TO "AS BUILT" DATE
BY CHECKED

PLAN DRAFTING FILE NO.:
\\Data\Engineering\Design_Storage Conversion\SunValley_NorthHollywood_V2\MSW\
_V2MSW\X0626.dwg

SYM.	REVISION	DESCRIPTION	DATE

DIVISION ENGINEER BUREAU OF ST. LTG.

CITY OF LOS ANGELES
ED EBRAHIMIAN, DIRECTOR BUREAU OF STREET LIGHTING

STREET LIGHTING

DATE 5-1-12

DIRECTOR BUREAU OF STREET LIGHTING

SCALE OF ORIGINAL PLAN: 1"=100' (100 50 0 50 100 150 200 feet)

SHEET 5 OF 18 SHEETS

INDEX NUMBER M-2427

STREET CLASSIFICATION (M)=MAJOR, (C)=COLLECTOR, (L)=LOCAL	
LANKERSHIM BLVD	(M)
HADDON AVE	(L)
KEWEN AVE	(L)

EXISTING LAMP SIZE SHT. 6 ONLY

LAMP SIZE	QUANTITY	CD
70W HPS	3	6
200W HPS	7	6

TOTAL ITEMS REQUIRED FOR SHT. 6 ONLY

NOTE: SEE MATERIAL INSTALLATION LIST ON SHT. NO 1 FOR DESCRIPTION.

SYMBOL	ITEM	LAMP SIZE	QUANTITY
(L1)	LUMINAIRE	35W LEOTEK GREENCOBRA 20F	3
(L3)	LUMINAIRE	89W LEOTEK ECOBRA 11M	7

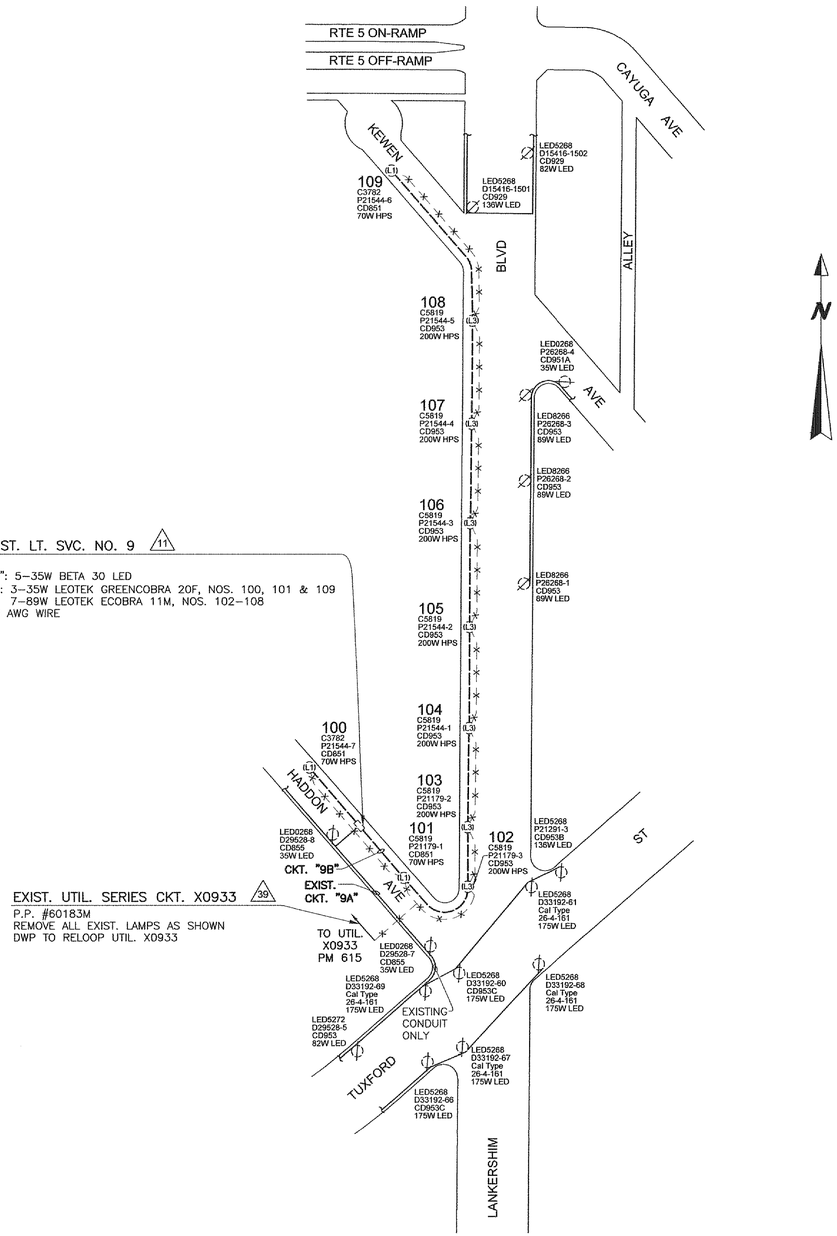

SUN VALLEY-NORTH HOLLYWOOD STM, SERIES CIRCUIT X0933
HIGH VOLTAGE CONVERSION FY 2015-16

W.O. L1649427

REGISTERED PROFESSIONAL ENGINEER NORMA MARIE ISAHAMIAN E 13696 Exp. 6/17 ELECTRICAL STATE OF CALIFORNIA

CONTRACTOR
INSPECTED BY
DATE ENERGIZED ELECTS. LAMPS:
DATE ENERGIZED ELECTS. LAMPS:
DATE ENERGIZED ELECTS. LAMPS:
CORRECTED TO "AS BUILT" DATE
BY CHECKED

PLAN DRAFTING FILE NO.: L:\FSDS10\STM\Hight Voltage Conversion\SunValley_NorthHollywood\X0933\\DWG\X0933.dwg

SYM.	REVISION	DESCRIPTION	DIVISION ENGINEER BUREAU OF ST. LTG.	DATE

CITY OF LOS ANGELES
ED EBRAHIMIAN, DIRECTOR BUREAU OF STREET LIGHTING

STREET LIGHTING

DATE 4-12-16 20

DIRECTOR BUREAU OF STREET LIGHTING

SCALE OF ORIGINAL PLAN: 1"=100' 100 50 0 50 100 150 200 feet

SHEET 6 OF 18 SHEETS

INDEX NUMBER M-2427

STREET CLASSIFICATION (M)=MAJOR, (C)=COLLECTOR, (L)=LOCAL	
SHELDON ST	(M)
ARLETA AVE	(M)

EXISTING LAMP SIZE SHT. 7 ONLY

LAMP SIZE	QUANTITY	CD
100W HPS	24	6
200W HPS	7	6
400W HPS	1	6

TOTAL ITEMS REQUIRED FOR SHT. 7 ONLY

NOTE: SEE MATERIAL INSTALLATION LIST ON SHT. NO 1 FOR DESCRIPTION.

SYMBOL	ITEM	LAMP SIZE	QUANTITY
L3	LUMINAIRE	89W LEOTEK ECOBRA 11M	7
L6	LUMINAIRE	163W LEOTEK ECOBRA 18M @ 700mA	1
LS	SOFFIT CONVERSION KIT	45W LUMEC	24

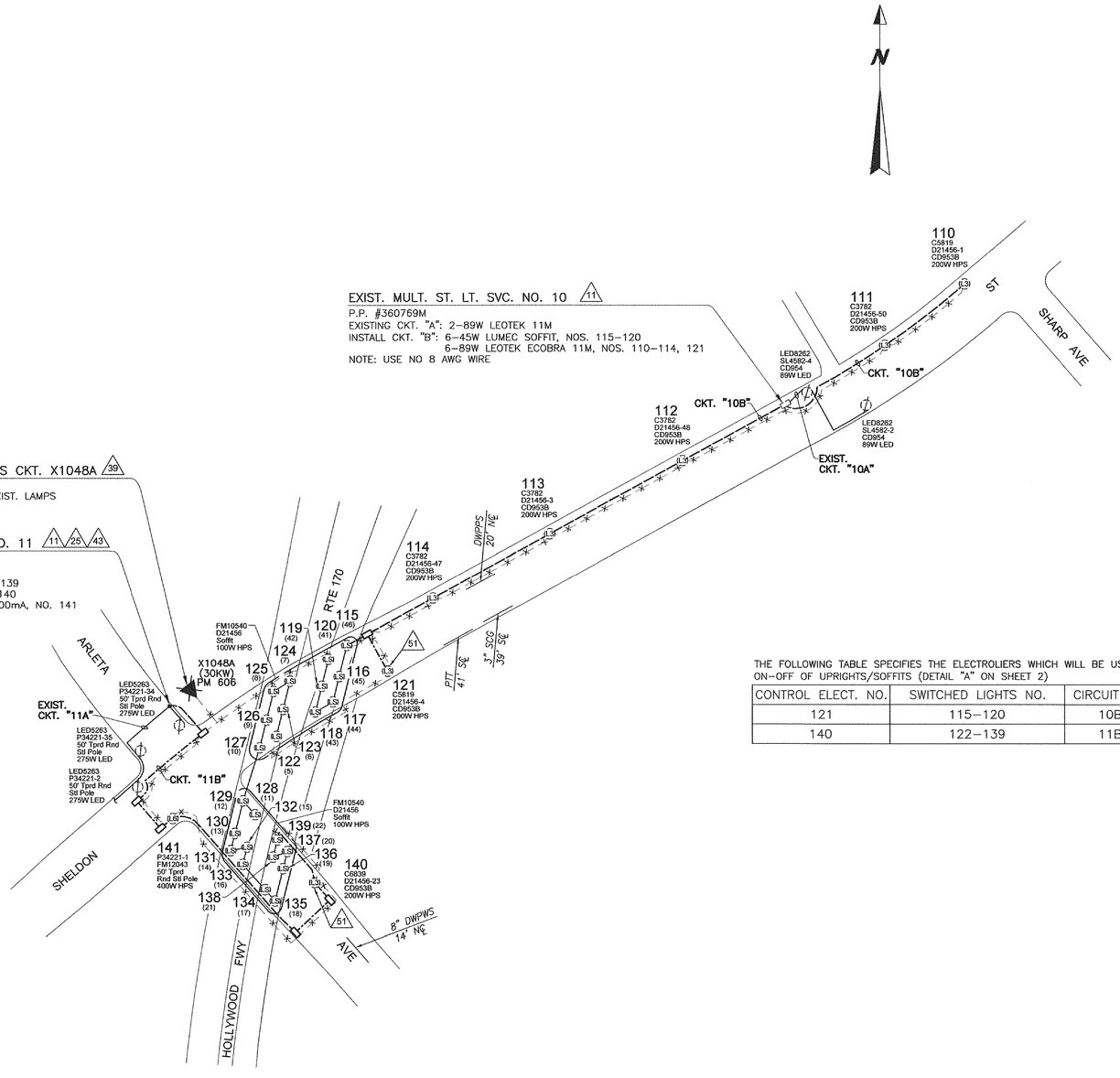

THE FOLLOWING TABLE SPECIFIES THE ELECTROLIERS WHICH WILL BE USED TO CONTROL THE ON-OFF OF UPRIGHTS/SOFFITS (DETAIL "A" ON SHEET 2)

CONTROL ELECT. NO.	SWITCHED LIGHTS NO.	CIRCUIT NO.	SHEET NO.
121	115-120	10B	7
140	122-139	11B	7

SUN VALLEY-NORTH HOLLYWOOD STM, SERIES CIRCUIT X1048A
HIGH VOLTAGE CONVERSION FY 2015-16

W.O. L1649427

REGISTERED PROFESSIONAL ENGINEER NORMA MARIE ISAHAMIAN E 13696 Exp. 6/17 ELECTRICAL STATE OF CALIFORNIA

CONTRACTOR
INSPECTED BY
DATE ENERGIZED ELECTS. LAMPS:
DATE ENERGIZED ELECTS. LAMPS:
DATE ENERGIZED ELECTS. LAMPS:
CORRECTED TO "AS BUILT" DATE
BY CHECKED

PLAN DRAFTING FILE NO.: L:\FS\DSI10\STM\Hight Voltage Conversion\SunValley_NorthHollywood\X1048A\DWG\X1048A.dwg

SYM.	REVISION	DESCRIPTION	DIVISION ENGINEER BUREAU OF ST. LTG.	DATE

CITY OF LOS ANGELES
ED EBRAHIMIAN, DIRECTOR BUREAU OF STREET LIGHTING

STREET LIGHTING
DATE 4/12 20/6
DIRECTOR BUREAU OF STREET LIGHTING

SCALE OF ORIGINAL PLAN: 1"=100' 100 50 0 50 100 150 200 feet

SHEET 7 OF 18 SHEETS

INDEX NUMBER M-2427

STREET CLASSIFICATION (M)=MAJOR, (C)=COLLECTOR, (L)=LOCAL	
STRATHERN ST	(M)
RATNER ST	(L)
BEN AVE	(L)

EXISTING LAMP SIZE SHT. 8 ONLY

LAMP SIZE	QUANTITY	CD
100W HPS	4	6
200W HPS	3	6

TOTAL ITEMS REQUIRED FOR SHT. 8 ONLY

NOTE: SEE MATERIAL INSTALLATION LIST ON SHT. NO 1 FOR DESCRIPTION.

SYMBOL	ITEM	LAMP SIZE	QUANTITY
L1	LUMINAIRE	35W LEOTEK GREENCOBRA 20F	4
L3	LUMINAIRE	89W LEOTEK ECOBRA 11M	3

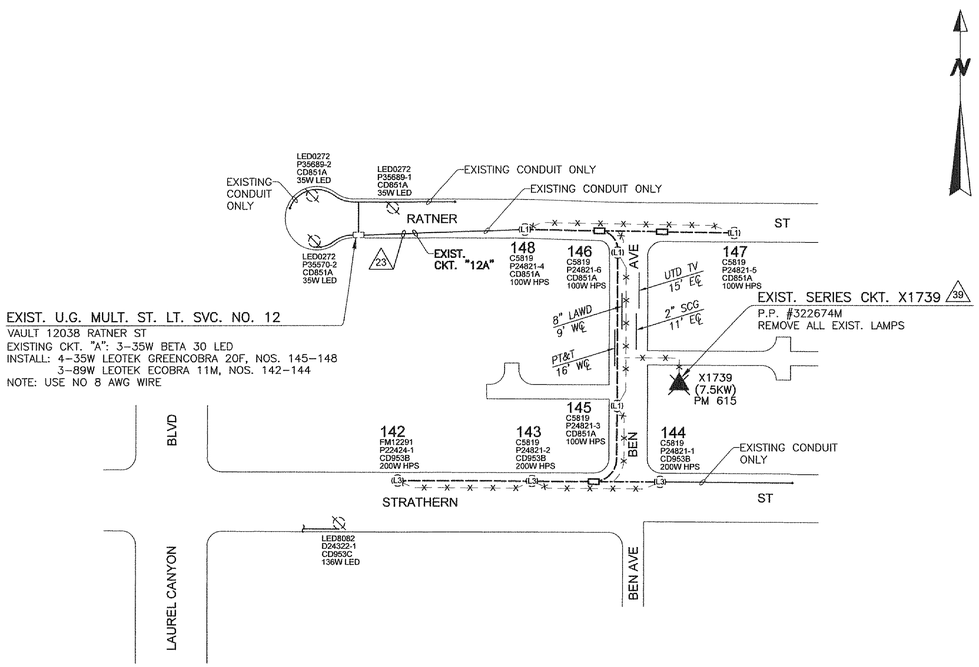

SUN VALLEY-NORTH HOLLYWOOD STM, SERIES CIRCUIT X1739
HIGH VOLTAGE CONVERSION FY 2015-16

W.O. L1649427

REGISTERED PROFESSIONAL ENGINEER NIRMA MARIE ISAHAKIAN E 13896 Exp. 6/17 ELECTRICAL STATE OF CALIFORNIA

CONTRACTOR
INSPECTED BY
DATE ENERGIZED ELECTS. LAMPS:
DATE ENERGIZED ELECTS. LAMPS:
DATE ENERGIZED ELECTS. LAMPS:
CORRECTED TO "AS BUILT" DATE
BY CHECKED

PLAN DRAFTING FILE NO.: L:\FSDS10\STM\Hight Voltage Conversion\SunValley_NorthHollywood\X1739\DWG\X1739.dwg

SYM.	REVISION	DESCRIPTION	DIVISION ENGINEER BUREAU OF ST. LTG.	DATE

CITY OF LOS ANGELES
ED EBRAHIMIAN, DIRECTOR BUREAU OF STREET LIGHTING

STREET LIGHTING

DATE 4-12 20 16

DIRECTOR BUREAU OF STREET LIGHTING

SCALE OF ORIGINAL PLAN: 1"=100' 100 50 0 50 100 150 200 feet

SHEET 8 OF 18 SHEETS

INDEX NUMBER M-2427

STREET CLASSIFICATION (M)=MAJOR, (C)=COLLECTOR, (L)=LOCAL	
VICTORY BLVD	(M)
KITTRIDGE ST	(C)
ENSIGN AVE	(L)
VINELAND AVE	(M)
CRANER AVE	(L)
CLEON AVE	(L)

EXISTING LAMP SIZE SHT. 9 ONLY

LAMP SIZE	QUANTITY	CD
70W HPS	3	2
100W HPS	1	2
200W HPS	9	2

TOTAL ITEMS REQUIRED FOR SHT. 9 ONLY

NOTE: SEE MATERIAL INSTALLATION LIST ON SHT. NO 1 FOR DESCRIPTION.

SYMBOL	ITEM	LAMP SIZE	QUANTITY
(L1)	LUMINAIRE	35W LEOTEK GREENCOBRA 20F	4
(L3)	LUMINAIRE	89W LEOTEK ECOBRA 11M	9

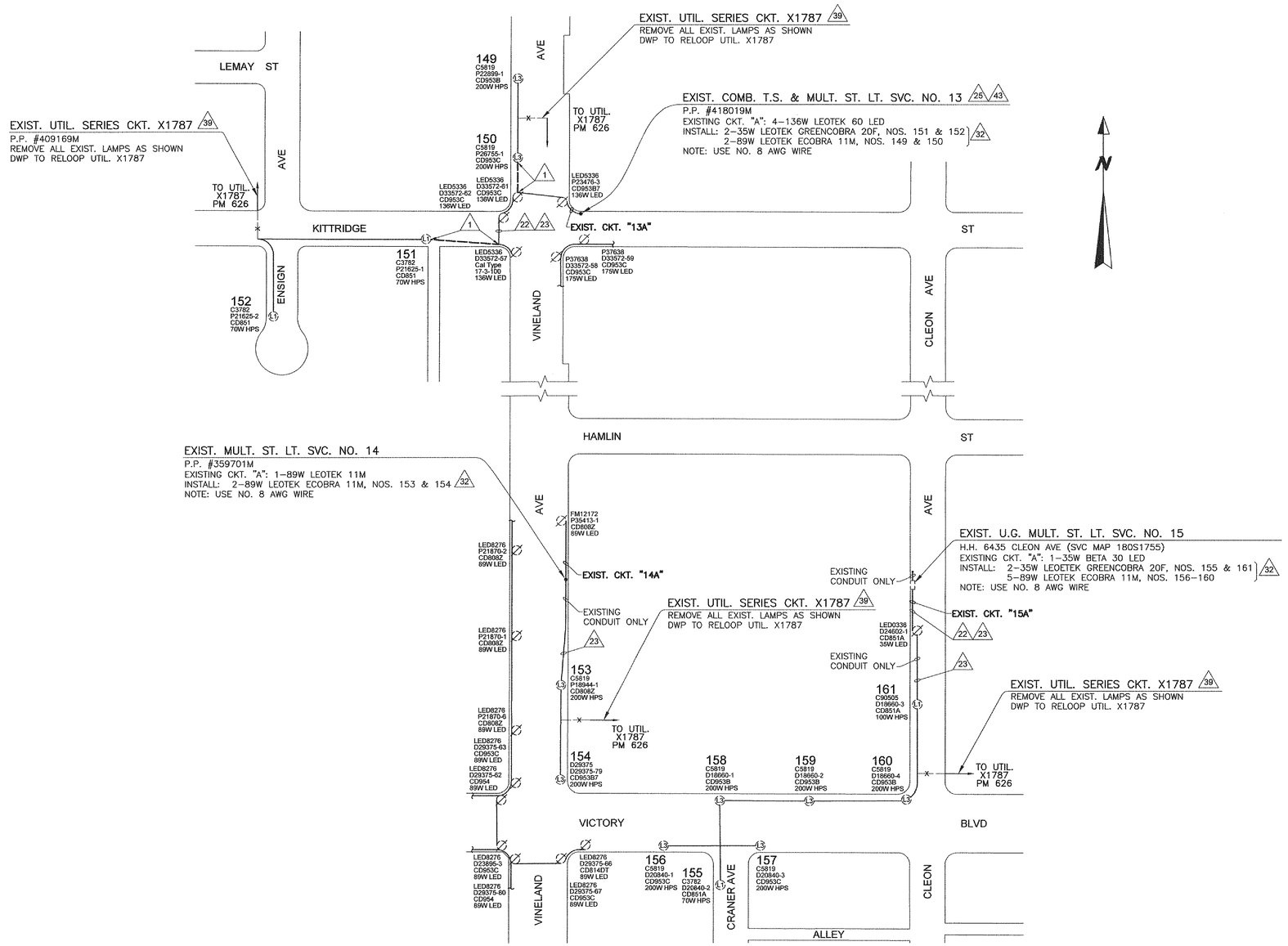

SUN VALLEY-NORTH HOLLYWOOD STM, SERIES CIRCUIT X1787 HIGH VOLTAGE CONVERSION FY 2015-16

W.O. L1649427

CONTRACTOR _____ LAMPS: _____
INSPECTED BY _____ ELECTS. _____ LAMPS: _____
DATE ENERGIZED _____ ELECTS. _____ LAMPS: _____
DATE ENERGIZED _____ ELECTS. _____ LAMPS: _____
CORRECTED TO "AS BUILT" _____ DATE _____
BY _____ CHECKED _____

PLAN DRAFTING FILE NO.: L:\SUN VALLEY-North Hollywood High Voltage Conversion\Sunvalley_NorthHollywood\X1787\ L:\DWG\X1787.dwg

SYM.	REVISION	DESCRIPTION	DATE

DIVISION ENGINEER BUREAU OF ST. LTG. _____ DATE _____

CITY OF LOS ANGELES
ED EBRAHIMIAN, DIRECTOR BUREAU OF STREET LIGHTING

STREET LIGHTING

DATE 8-12-16

DIRECTOR BUREAU OF STREET LIGHTING

REGISTERED PROFESSIONAL ENGINEER NORMA MARIE IBRAHIMIAN E 13696 Exp 6/17 ELECTRICAL STATE OF CALIFORNIA

SCALE OF ORIGINAL PLAN: 1"=100' 100 50 0 50 100 150 200 feet

SHEET 9 OF 18 SHEETS

INDEX NUMBER M-2427

STREET CLASSIFICATION (M)=MAJOR, (S)=SECONDARY, (C)=COLLECTOR, (L)=LOCAL	
PENROSE ST	(M)

EXISTING LAMP SIZE SHT. 10 ONLY

LAMP SIZE	QUANTITY	CD
70W HPS	15	6
200W HPS	4	6

TOTAL ITEMS REQUIRED FOR SHEET 10 ONLY

NOTE: SEE MATERIAL INSTALLATION LIST ON SHT. NO 1 FOR DESCRIPTION.

SYMBOL	ITEMS	LAMP SIZE	QUANTITY
(L3)	LUMINAIRE	89W LEOTEK ECOBRA 11M	4
(LS)	SOFFIT CONVERSION KIT	45W LUMEC LED	15

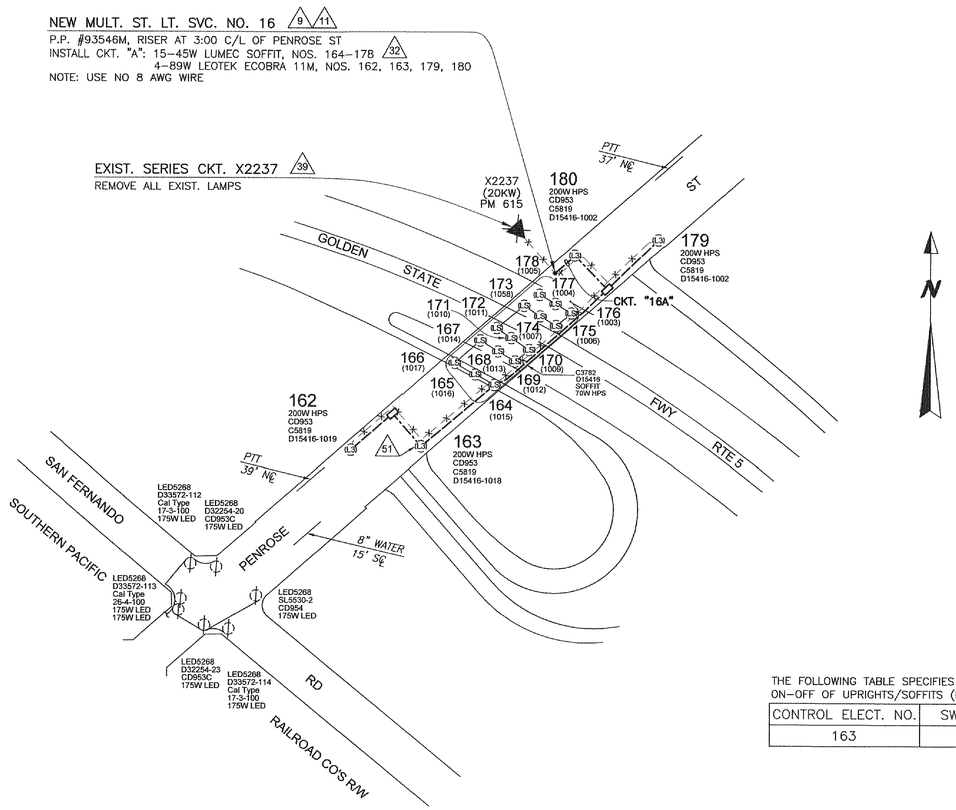

THE FOLLOWING TABLE SPECIFIES THE ELECTROLIERS WHICH WILL BE USED TO CONTROL THE ON-OFF OF UPRIGHTS/SOFFITS (DETAIL "A" ON SHEET 2)

CONTROL ELECT. NO.	SWITCHED LIGHTS NO.	CIRCUIT NO.	SHEET NO.
163	164-178	16A	10

SUN VALLEY-NORTH HOLLYWOOD STM, SERIES CIRCUIT X2237
HIGH VOLTAGE CONVERSION FY 2015-16

W.O. L1649427

CONTRACTOR
INSPECTED BY
DATE ENERGIZED ELECTS. LAMPS:
DATE ENERGIZED ELECTS. LAMPS:
DATE ENERGIZED ELECTS. LAMPS:
CORRECTED TO "AS BUILT" DATE
BY CHECKED

PLAN DRAFTING FILE NO.: L:\FSDSITD\STM\High Voltage Conversion\SunValley_NorthHollywood\X2237\DWG\X2237.dwg

SYM.	REVISION	DESCRIPTION	DIVISION ENGINEER BUREAU OF ST. LTG.	DATE

CITY OF LOS ANGELES
ED EBRAHIMIAN, DIRECTOR BUREAU OF STREET LIGHTING

STREET LIGHTING

DATE 4-12 2016

DIRECTOR BUREAU OF STREET LIGHTING

REGISTERED PROFESSIONAL ENGINEER NORMA MARIE ISAHAKIAN E 13696 Exp. 6/17 ELECTRICAL STATE OF CALIFORNIA

SCALE OF ORIGINAL PLAN: 1"=100' 100 50 0 50 100 150 200 feet

SHEET 10 OF 18 SHEETS

INDEX NUMBER M-2427

STREET CLASSIFICATION (M)=MAJOR, (S)=SECONDARY, (C)=COLLECTOR, (L)=LOCAL	
TUXFORD ST	(M)

EXISTING LAMP SIZE SHT. 11 ONLY

LAMP SIZE	QUANTITY	CD
70W HPS	16	6
200W HPS	10	6
400W MV	1	6

TOTAL ITEMS REQUIRED FOR SHEET 11 ONLY

NOTE: SEE MATERIAL INSTALLATION LIST ON SHT. NO 1 FOR DESCRIPTION.

SYMBOL	ITEMS	LAMP SIZE	QUANTITY
(L3)	LUMINAIRE	89W LEOTEK ECOBRA 11M	11
(LS)	SOFFIT CONVERSION KIT	45W LUMEC LED	16

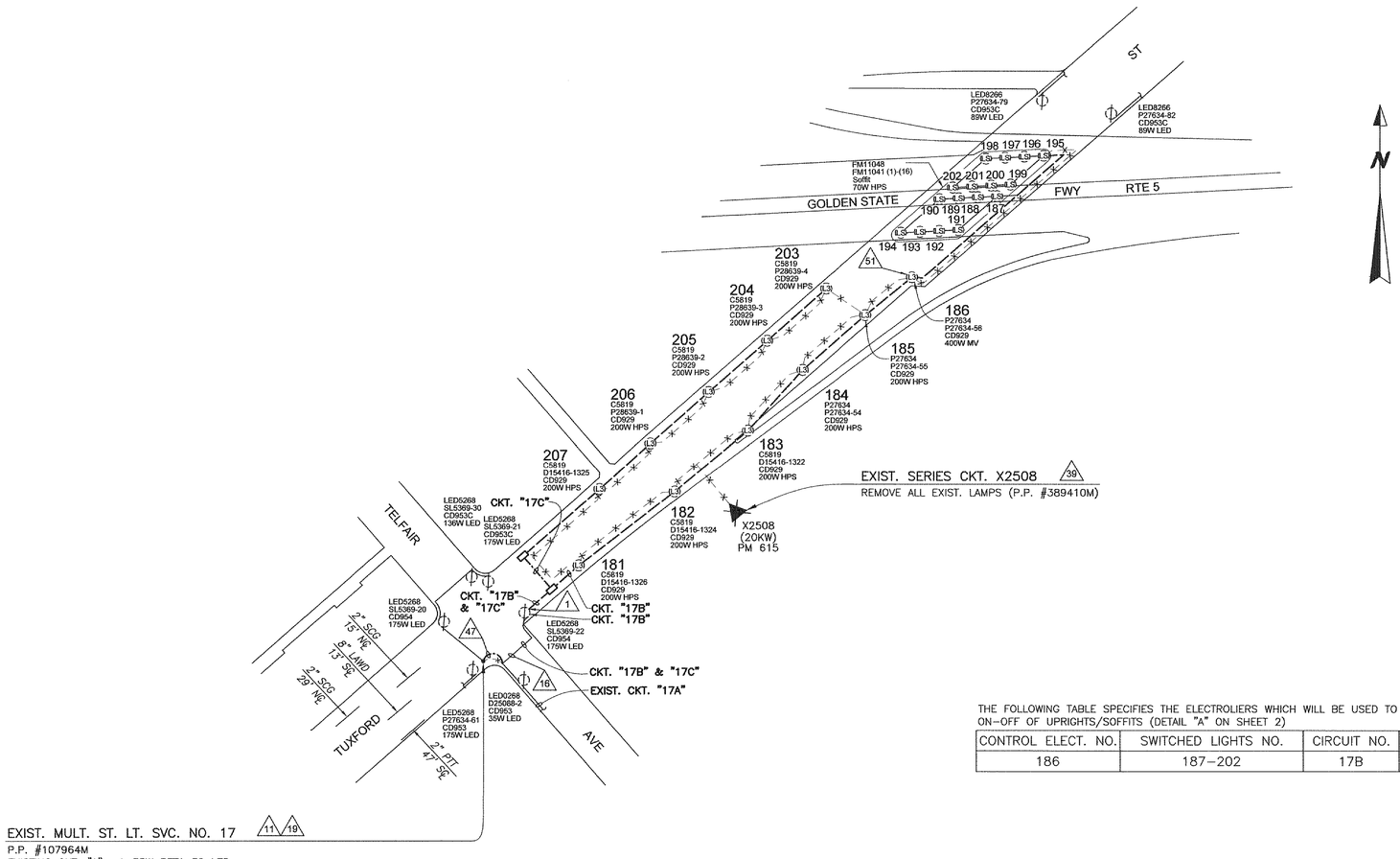

EXIST. MULT. ST. LT. SVC. NO. 17 11 19

P.P. #107964M
EXISTING CKT. "A": 4–35W BETA 30 LED
3–175W LEOTEK 100 LED
1–136W LEOTEK 60 LED
REMOVE: 1–175W LEOTEK 100 LED, NO. SL5369 (22)
TRANSFER: 1–175W LEOTEK 100 LED, NO. SL5369 (22) FROM CKT. "A" TO CKT. "B"
INSTALL CKT. "B": 6–89W LEOTEK ECOBRA 11M, NOS. 181–186
16–45W LUMEC SOFFIT, NOS. 187–202 32
INSTALL CKT. "C": 5–89W LEOTEK ECOBRA 11M, NOS. 203–207
NOTE: USE NO 8 AWG WIRE

THE FOLLOWING TABLE SPECIFIES THE ELECTROLIERS WHICH WILL BE USED TO CONTROL THE ON–OFF OF UPRIGHTS/SOFFITS (DETAIL "A" ON SHEET 2)

CONTROL ELECT. NO.	SWITCHED LIGHTS NO.	CIRCUIT NO.	SHEET NO.
186	187–202	17B	11

CONTRACTOR
INSPECTED BY
DATE ENERGIZED ELECTS. LAMPS:
DATE ENERGIZED ELECTS. LAMPS:
DATE ENERGIZED ELECTS. LAMPS:
CORRECTED TO "AS BUILT" DATE
BY CHECKED

PLAN DRAFTING FILE NO.: L:\PROJECTS\Sun Valley_NorthHollywood\V2508\Layouts\Sheet 11.dwg

SYM.	REVISION	DESCRIPTION	DIVISION ENGINEER BUREAU OF ST. LTG.	DATE

CITY OF LOS ANGELES
ED EBRAHIMIAN, DIRECTOR BUREAU OF STREET LIGHTING

STREET LIGHTING

DATE 5-12 20 16

Yasser Ghobrial
DIRECTOR BUREAU OF STREET LIGHTING

SUN VALLEY-NORTH HOLLYWOOD STM, SERIES CIRCUIT X2508 HIGH VOLTAGE CONVERSION FY 2015-16

W.O. L1649427

REGISTERED PROFESSIONAL ENGINEER NORMA MARIE ISRAELIAN E 13696 Exp 6/17 ELECTRICAL STATE OF CALIFORNIA

SCALE OF ORIGINAL PLAN: 1"=100'	100 50 0 50 100 150 200 feet	SHEET 11 OF 18 SHEETS	INDEX NUMBER	M-2427

STREET CLASSIFICATION (M)=MAJOR, (S)=SECONDARY, (C)=COLLECTOR, (L)=LOCAL	
SHERMAN WAY	(M)

EXISTING LAMP SIZE SHT. 12 ONLY

LAMP SIZE	QUANTITY	CD
200W HPS	15	2

TOTAL ITEMS REQUIRED FOR SHEET 12 ONLY

NOTE: SEE MATERIAL INSTALLATION LIST ON SHT. NO 1 FOR DESCRIPTION.

SYMBOL	ITEMS	LAMP SIZE	QUANTITY
(L3)	LUMINAIRE	89W LEOTEK ECOBRA 11M	15

EXIST. MULT. ST. LT. SVC. NO. 18
P.P. #201031M
EXISTING CKT. "A": 1–35W BETA 30 LED
3–101W CREE XSP2
1–175W LEOTEK 100 LED
EXISTING CKT. "B": 1–101W CREE XSP2
1–175W LEOTEK 100 LED
INSTALL CKT. "B": 4–89W LEOTEK ECOBRA 11M, NOS. 208–211
EXISTING CKT. "C": 3–101W CREE XSP2
2–175W LEOTEK 100 LED
EXISTING CKT. "D": 1–101W CREE XSP2
1–175W LEOTEK 100 LED
INSTALL CKT. "D": 4–89W LEOTEK ECOBRA 11M, NOS. 247–250
NOTE: USE NO 8 AWG WIRE

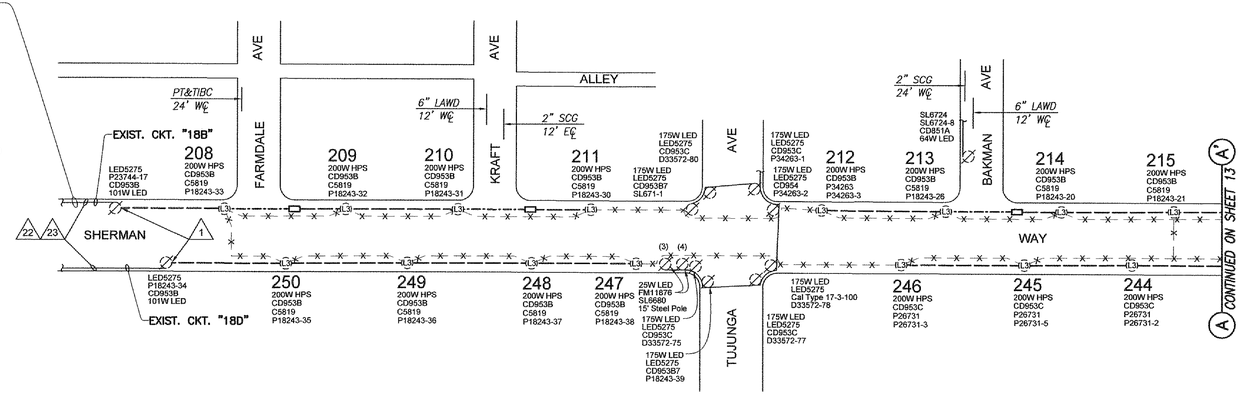

CONTRACTOR
INSPECTED BY
DATE ENERGIZED ELECTS. LAMPS:
DATE ENERGIZED ELECTS. LAMPS:
DATE ENERGIZED ELECTS. LAMPS:
CORRECTED TO "AS BUILT" DATE
BY CHECKED

PLAN DRAFTING FILE NO.: I:\Projects\Sun Valley_North Hollywood\L1649\Drawings\X3469.dwg

SYM.	REVISION	DESCRIPTION	DIVISION ENGINEER BUREAU OF ST. LTG.	DATE

CITY OF LOS ANGELES
ED EBRAHIMIAN, DIRECTOR BUREAU OF STREET LIGHTING

STREET LIGHTING

DATE 4-12 20 16

DIRECTOR BUREAU OF STREET LIGHTING

REGISTERED PROFESSIONAL ENGINEER NORMA MONA ABRAHAM E 13696 Exp. 6-17 ELECTRICAL STATE OF CALIFORNIA

SUN VALLEY-NORTH HOLLYWOOD STM, SERIES CIRCUIT X3469
HIGH VOLTAGE CONVERSION FY 2015-16

W.O. L1649427

SCALE OF ORIGINAL PLAN: 1"=100'	100 50 0 50 100 150 200 feet	SHEET 12 OF 18 SHEETS	INDEX NUMBER	M-2427

STREET CLASSIFICATION (M)=MAJOR, (S)=SECONDARY, (C)=COLLECTOR, (L)=LOCAL	
SHERMAN WAY	(M)
VINELAND AVE	(M)

EXISTING LAMP SIZE SHT. 13 ONLY

LAMP SIZE	QUANTITY	CD
200W HPS	28	2

TOTAL ITEMS REQUIRED FOR SHEET 13 ONLY

NOTE: SEE MATERIAL INSTALLATION LIST ON SHT. NO 1 FOR DESCRIPTION.

SYMBOL	ITEMS	LAMP SIZE	QUANTITY
(L3)	LUMINAIRE	89W LEOTEK ECOBRA 11M	28

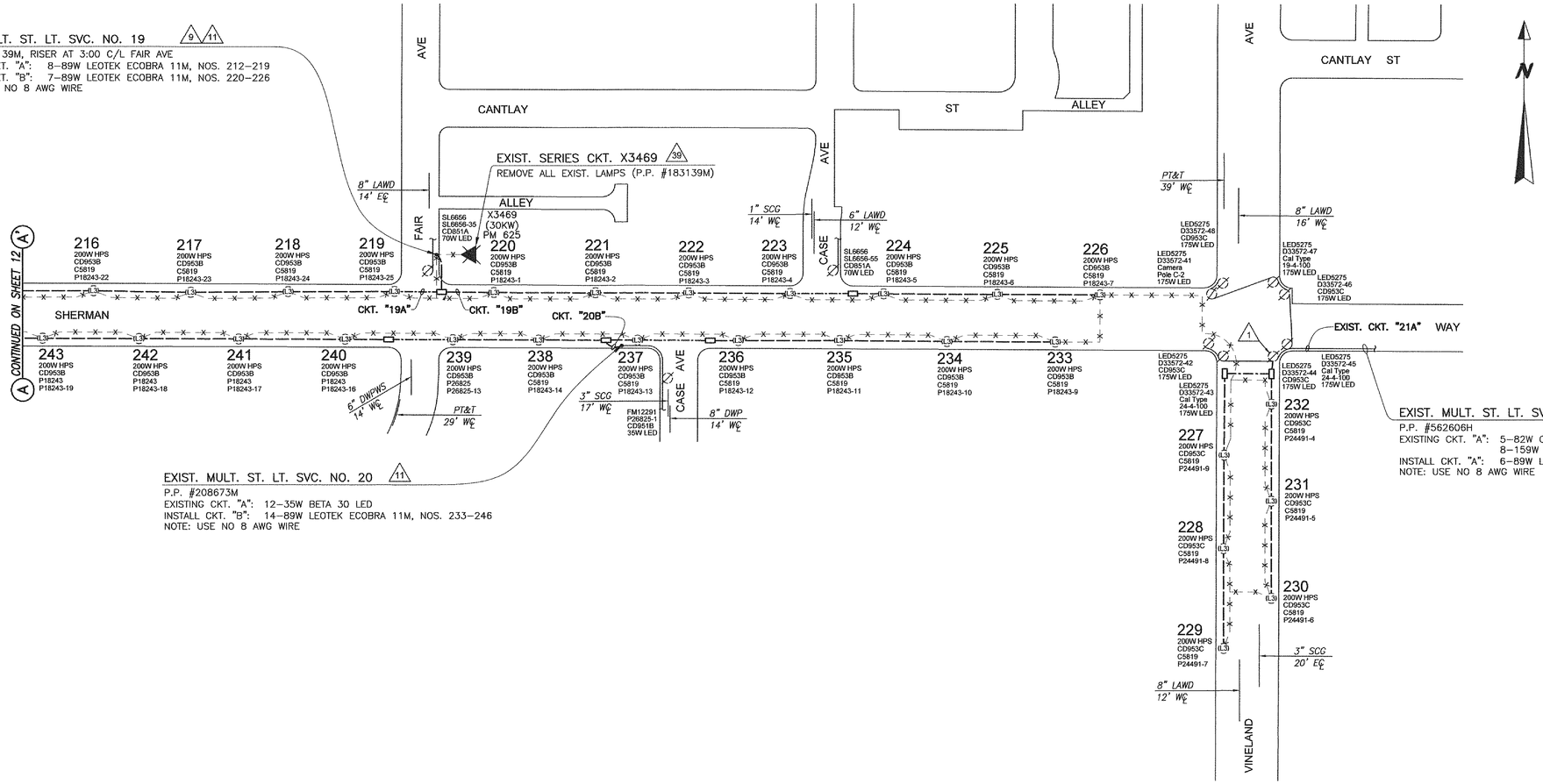

CONTRACTOR
INSPECTED BY
DATE ENERGIZED ELECTS. LAMPS:
DATE ENERGIZED ELECTS. LAMPS:
DATE ENERGIZED ELECTS. LAMPS:
CORRECTED TO "AS BUILT" DATE
BY CHECKED

PLAN DRAFTING FILE NO.: L:\Projects\Voltage Conversion\Sunvalley_Northhollywood\X3469\L\WO\X3469.dwg

SYM.	REVISION	DESCRIPTION	DIVISION ENGINEER BUREAU OF ST. LTG.	DATE

CITY OF LOS ANGELES
ED EBRAHIMIAN, DIRECTOR BUREAU OF STREET LIGHTING

STREET LIGHTING

DATE 4-12 20 16

DIRECTOR BUREAU OF STREET LIGHTING

SUN VALLEY-NORTH HOLLYWOOD STM, SERIES CIRCUIT X3469 HIGH VOLTAGE CONVERSION FY 2015-16

W.O. L1649427

REGISTERED PROFESSIONAL ENGINEER NORMA MARIE ISAKSNOEN E 13696 Exp. 6-17 ELECTRICAL STATE OF CALIFORNIA

SCALE OF ORIGINAL PLAN: 1"=100' (100 50 0 50 100 150 200 feet)

SHEET 13 OF 18 SHEETS

INDEX NUMBER M-2427

STREET CLASSIFICATION (M)=MAJOR, (S)=SECONDARY, (C)=COLLECTOR, (L)=LOCAL	
TUJUNGA AVE	(M)
STRATHERN ST	(M)

EXISTING LAMP SIZE SHT. 14 ONLY

LAMP SIZE	QUANTITY	CD
200W HPS	18	6

TOTAL ITEMS REQUIRED FOR SHEET 14 ONLY

NOTE: SEE MATERIAL INSTALLATION LIST ON SHT. NO 1 FOR DESCRIPTION.

SYMBOL	ITEMS	LAMP SIZE	QUANTITY
(L3)	LUMINAIRE	89W LEOTEK ECOBRA 11M	18

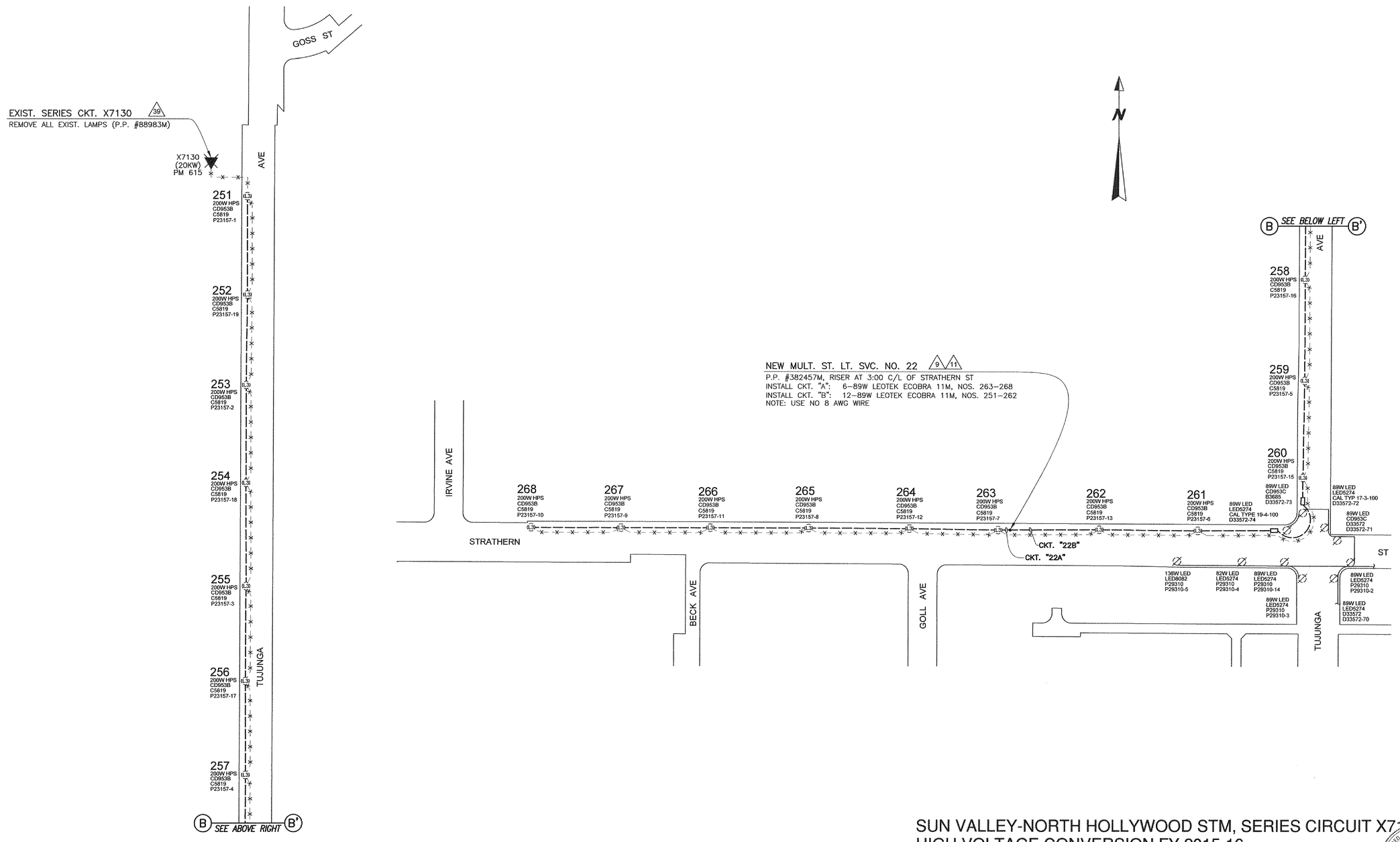

SUN VALLEY-NORTH HOLLYWOOD STM, SERIES CIRCUIT X7130
HIGH VOLTAGE CONVERSION FY 2015-16

W.O. L1649427

REGISTERED PROFESSIONAL ENGINEER NORMA MARIE ISAHAKIAN E 13696 Exp. 6/17 ELECTRICAL STATE OF CALIFORNIA

CONTRACTOR
INSPECTED BY
DATE ENERGIZED ELECTS. LAMPS:
DATE ENERGIZED ELECTS. LAMPS:
DATE ENERGIZED ELECTS. LAMPS:
CORRECTED TO "AS BUILT" DATE
BY CHECKED

PLAN DRAFTING FILE NO.: L:\FSIGSID\STM\High Voltage Conversion\SunValley_NorthHollywood\X7130\DWG\X7130.dwg

SYM.	REVISION	DESCRIPTION	DIVISION ENGINEER BUREAU OF ST. LTG.	DATE

CITY OF LOS ANGELES
ED EBRAHIMIAN, DIRECTOR BUREAU OF STREET LIGHTING

STREET LIGHTING

DATE 4.12 20/L

DIRECTOR BUREAU OF STREET LIGHTING

SCALE OF ORIGINAL PLAN: 1"=100' 100 50 0 50 100 150 200 feet

SHEET 14 OF 18 SHEETS

INDEX NUMBER M-2427

STREET CLASSIFICATION (M)=MAJOR, (S)=SECONDARY, (C)=COLLECTOR, (L)=LOCAL	
WHITSETT AVE	(M)

EXISTING LAMP SIZE SHT. 15 ONLY

LAMP SIZE	QUANTITY	CD
200W HPS	4	2

TOTAL ITEMS REQUIRED FOR SHEET 15 ONLY

NOTE: SEE MATERIAL INSTALLATION LIST ON SHT. NO 1 FOR DESCRIPTION.

SYMBOL	ITEMS	LAMP SIZE	QUANTITY
(L3)	LUMINAIRE	89W LEOTEK ECOBRA 11M	4

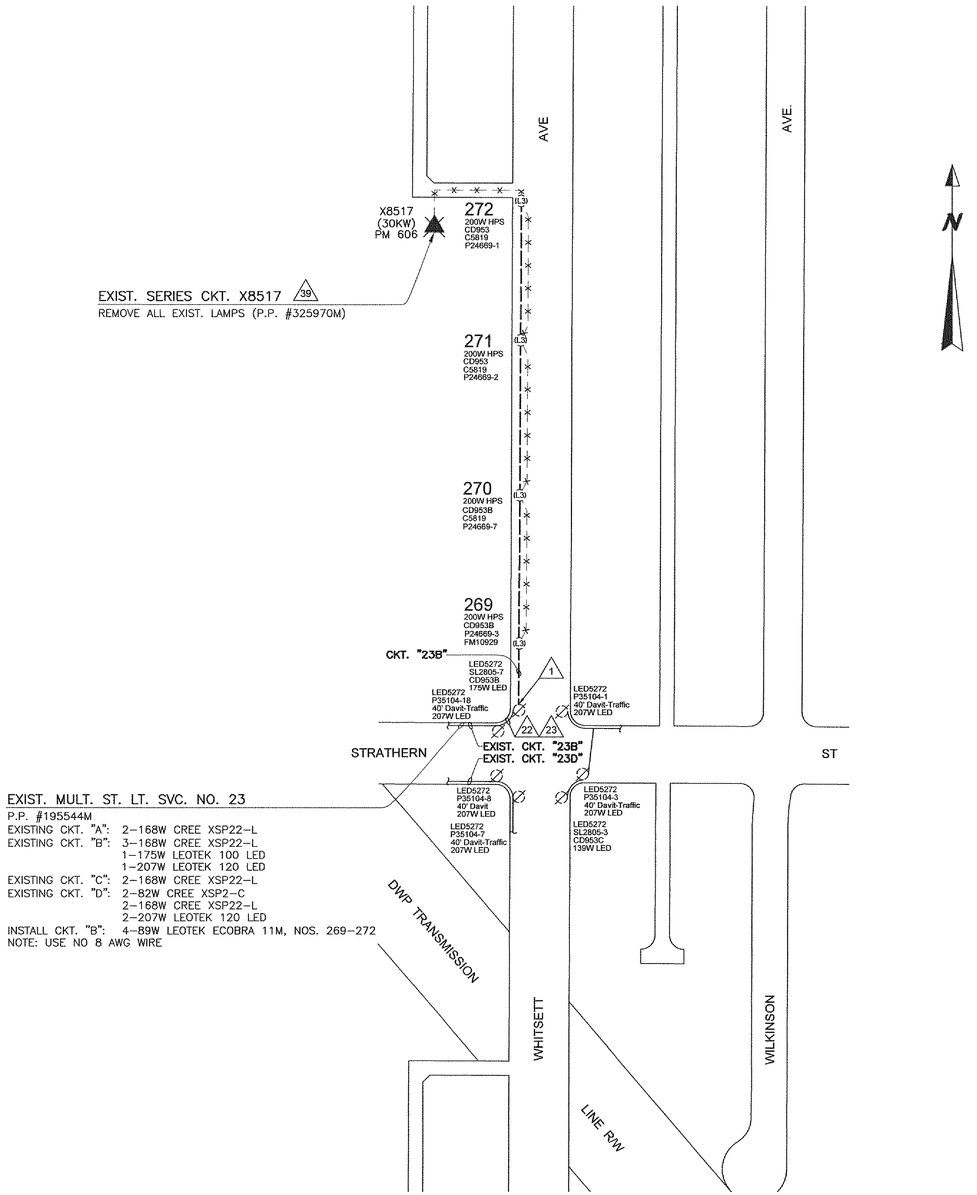

SUN VALLEY-NORTH HOLLYWOOD STM, SERIES CIRCUIT X8517
HIGH VOLTAGE CONVERSION FY 2015-16

W.O. L1649427

REGISTERED PROFESSIONAL ENGINEER NORMA MARIE ISAHANIAN E 13696 Exp. 6/17 ELECTRICAL STATE OF CALIFORNIA

CONTRACTOR
INSPECTED BY
DATE ENERGIZED ELECTS. LAMPS:
DATE ENERGIZED ELECTS. LAMPS:
DATE ENERGIZED ELECTS. LAMPS:
CORRECTED TO "AS BUILT" DATE
BY CHECKED

PLAN DRAFTING FILE NO.: L:\FSOS1D\STM\Hight Voltage Conversion\SunValley_Northhollywood\X8517\DWG\X8517.dwg

SYM.	REVISION	DESCRIPTION	DIVISION ENGINEER BUREAU OF ST. LTG.	DATE

CITY OF LOS ANGELES
ED EBRAHIMIAN, DIRECTOR BUREAU OF STREET LIGHTING

STREET LIGHTING

DATE 4-12 2016

DIRECTOR BUREAU OF STREET LIGHTING

SCALE OF ORIGINAL PLAN: 1"=100' 100 50 0 50 100 150 200 feet

SHEET 15 OF 18 SHEETS

INDEX NUMBER M-2427

STREET CLASSIFICATION (M)=MAJOR, (S)=SECONDARY, (C)=COLLECTOR, (L)=LOCAL	
LAUREL CANYON BLVD	(M)
BURTON ST	(L)

EXISTING LAMP SIZE SHT. 16 ONLY

LAMP SIZE	QUANTITY	CD
100W HPS	1	2
200W HPS	4	2
100W HPS	2	6
200W HPS	3	6

TOTAL ITEMS REQUIRED FOR SHEET 16 ONLY

NOTE: SEE MATERIAL INSTALLATION LIST ON SHT. NO 1 FOR DESCRIPTION.

SYMBOL	ITEMS	LAMP SIZE	QUANTITY
(L1)	LUMINAIRE	35W LEOTEK GREENCOBRA 20F	3
(L3)	LUMINAIRE	89W LEOTEK ECOBRA 11M	7

EXIST. MULT. ST. LT. SVC. NO. 24
P.P. #141013M
EXISTING CKT. "A": 1–82W CREE XSP2–C
1–139W BETA 60 LED
1–175W LEOTEK 100 LED
EXISTING CKT. "B": 1–82W CREE XSP2–C
1–175W LEOTEK 100 LED
EXISTING CKT. "C": 2–139W BETA 60 LED
1–175W LEOTEK 100 LED
EXISTING CKT. "D": 1–82W CREE XSP2–C
1–175W LEOTEK 100 LED
INSTALL CKT. "A": 3–35W LEOTEK GREENCOBRA 20F, NOS. 273, 274, 279
7–89W LEOTEK ECOBRA 11M, NOS. 275–278, 280–282
NOTE: USE NO 8 AWG WIRE

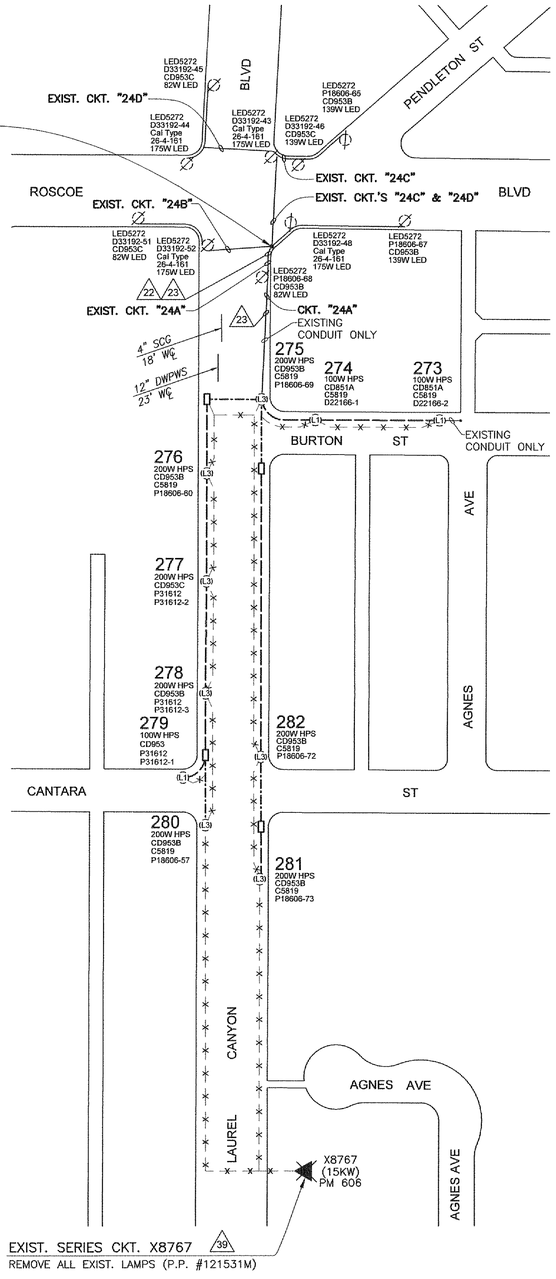

SUN VALLEY-NORTH HOLLYWOOD STM, SERIES CIRCUIT X8767
HIGH VOLTAGE CONVERSION FY 2015-16

W.O. L1649427

CONTRACTOR
INSPECTED BY
DATE ENERGIZED ELECTS. LAMPS:
DATE ENERGIZED ELECTS. LAMPS:
DATE ENERGIZED ELECTS. LAMPS:
CORRECTED TO "AS BUILT" DATE
BY CHECKED

PLAN DRAFTING FILE NO.: L:\FSDS\ID\STM\Hight Voltage Conversion\SunValley_NorthHollywood\X8767\DWG\X8767.dwg

SYM.	REVISION	DESCRIPTION	DIVISION ENGINEER BUREAU OF ST. LTG.	DATE

CITY OF LOS ANGELES
ED EBRAHIMIAN, DIRECTOR BUREAU OF STREET LIGHTING

STREET LIGHTING
DATE 4-12 2016
DIRECTOR BUREAU OF STREET LIGHTING

REGISTERED PROFESSIONAL ENGINEER NORMA MARIE ISAHAKIAN E 13696 Exp. 6/17 ELECTRICAL STATE OF CALIFORNIA

SCALE OF ORIGINAL PLAN: 1"=100' 100 50 0 50 100 150 200 feet

SHEET 16 OF 18 SHEETS

INDEX NUMBER M-2427

STREET CLASSIFICATION (M)=MAJOR, (C)=COLLECTOR, (L)=LOCAL	
VINELAND AVE	(M)
CLEON AVE	(L)
SATICOY ST	(M)

EXISTING LAMP SIZE SHT. 17 ONLY

LAMP SIZE	QUANTITY	CD
70W HPS	1	2
200W HPS	31	2

TOTAL ITEMS REQUIRED FOR SHT. 17 ONLY

NOTE: SEE MATERIAL INSTALLATION LIST ON SHT. NO 1 FOR DESCRIPTION.

SYMBOL	ITEM	LAMP SIZE	QUANTITY
(L1)	LUMINAIRE	35W LEOTEK GREENCOBRA 20F	1
(L3)	LUMINAIRE	89W LEOTEK ECOBRA 11M	31

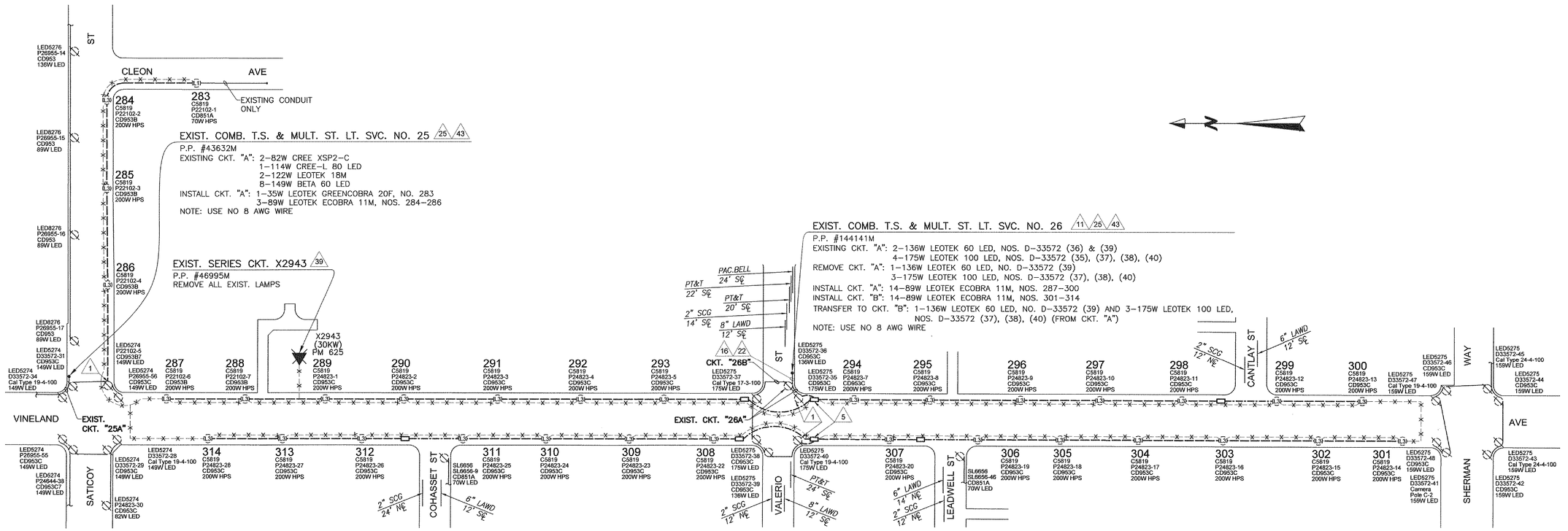

CONTRACTOR
INSPECTED BY
DATE ENERGIZED ELECTS. LAMPS:
DATE ENERGIZED ELECTS. LAMPS:
DATE ENERGIZED ELECTS. LAMPS:
CORRECTED TO "AS BUILT" DATE
BY CHECKED

PLAN DRAFTING FILE NO.: 2016 Sun Valley-North Hollywood High Voltage Conversion\Sun Valley_NorthHollywood\ (X2943\ LWO\X2943.dwg)

SYM.	REVISION	DESCRIPTION	DIVISION ENGINEER BUREAU OF ST. LTG.	DATE

CITY OF LOS ANGELES
ED EBRAHIMIAN, DIRECTOR BUREAU OF STREET LIGHTING

STREET LIGHTING

DATE 4-1-16 20 16

DIRECTOR BUREAU OF STREET LIGHTING

SUN VALLEY-NORTH HOLLYWOOD STM, SERIES CIRCUIT X2943
HIGH VOLTAGE CONVERSION FY 2015-16

W.O. L1649427

REGISTERED PROFESSIONAL ENGINEER NORAIR MINAS ISAAKIAN ELECTRICAL E 13696 Exp. 6/17 STATE OF CALIFORNIA

SCALE OF ORIGINAL PLAN: 1"=100'	SHEET 17 OF 18 SHEETS	INDEX NUMBER M-2427

STREET CLASSIFICATION (M)=MAJOR, (C)=COLLECTOR, (L)=LOCAL	
VINELAND AVE	(M)

EXISTING LAMP SIZE SHT. 18 ONLY

LAMP SIZE	QUANTITY	CD
200W HPS	12	2

TOTAL ITEMS REQUIRED FOR SHT. 18 ONLY

NOTE: SEE MATERIAL INSTALLATION LIST ON SHT. NO 1 FOR DESCRIPTION.

SYMBOL	ITEM	LAMP SIZE	QUANTITY
(L3)	LUMINAIRE	89W LEOTEK ECOBRA 11M	12

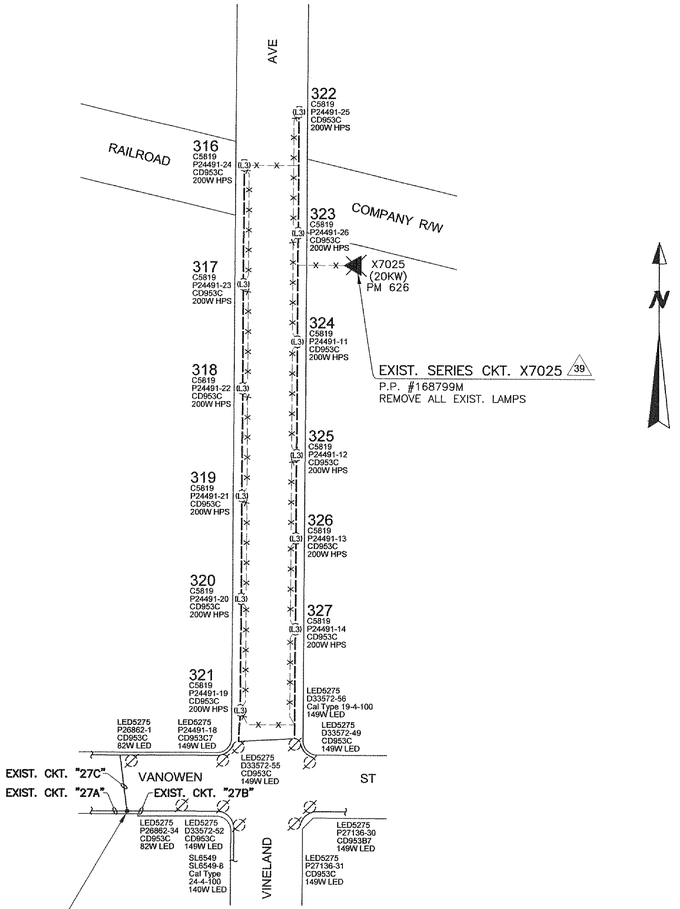

EXIST. MULT. ST. LT. SVC. NO. 27
P.P. #247716M
EXISTING CKT. "A": 3–46W LEOTEK 40 LED
5–82W CREE XSP2–C
1–136W LEOTEK 60 LED
EXISTING CKT. "B": 1–82W CREE XSP2–C
1–140W BETA 80 LED
1–175W LEOTEK 100 LED
EXISTING CKT. "C": 5–82W CREE XSP2–C
1–136W LEOTEK 60 LED
4–175W LEOTEK 100 LED
INSTALL CKT. "C": 12–89W LEOTEK ECOBRA 11M, NOS. 316–327
NOTE: USE NO 8 AWG WIRE

SUN VALLEY-NORTH HOLLYWOOD STM, SERIES CIRCUIT X7025
HIGH VOLTAGE CONVERSION FY 2015-16
W.O. L1649427

REGISTERED PROFESSIONAL ENGINEER NORMA MARIE ISAHAKIAN E 13696 Exp. 6/17 ELECTRICAL STATE OF CALIFORNIA

CONTRACTOR
INSPECTED BY
DATE ENERGIZED ELECTS. LAMPS:
DATE ENERGIZED ELECTS. LAMPS:
DATE ENERGIZED ELECTS. LAMPS:
CORRECTED TO "AS BUILT" DATE
BY CHECKED

PLAN DRAFTING FILE NO.: L:\SDSTD\STM\Hight Voltage Conversion\SunValley_NorthHollywood\X7025\DWG\X7025.dwg

SYM.	REVISION	DESCRIPTION	DIVISION ENGINEER BUREAU OF ST. LTG.	DATE

CITY OF LOS ANGELES
ED EBRAHIMIAN, DIRECTOR BUREAU OF STREET LIGHTING
STREET LIGHTING
DATE 4-12 20 16
DIRECTOR BUREAU OF STREET LIGHTING

SCALE OF ORIGINAL PLAN: 1"=100' 100 50 0 50 100 150 200 feet

SHEET 18 OF 18 SHEETS

INDEX NUMBER M-2427

SIGNAL STANDARD SCHEDULE

	No.	TYPE	FOUND. TYPE	PED. PUSH BUT'N TYPE	PHASE	REMARKS
	(1)	351 Cab.	*F-332	–	–	INSTALL ATSAC 2070 CONTROLLER IN 351 CABINET
**	(2)	19-4-100	CIDH	APS(6P)	–	INSTALL 30' M.A., F=15'; INSTALL APS
*	(3)	7	F-7	APS(8P)	–	
*	(4)	26-3-70	CIDH	–	–	45' M.A.
*	(5)	CD953C-7	BSL	APS(8P)	–	
	(6)	1	F-1	APS(2P)	–	
**	(7)	26-4-100	CIDH	APS(2P)	–	INSTALL 40' M.A., F=20'; INSTALL APS
*	(8)	CD953C	BSL	APS(4P)	–	
*	(9)	29-5-100	CIDH	APS(4P)	–	INSTALL 50' M.A., F1=15', F2=12'
*	(10)	CD953C	BSL	APS(6P)	–	

* EXISTING
** PER LADOT STD. DWG. NO. S-52.1.6.

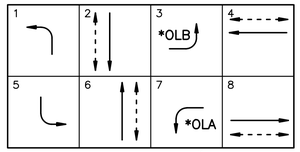

*OLA & OLB – RA, YA, FYA, GA (4-SECTION HEAD)

ESTIMATED SALVAGE MATERIAL TO BE RETURNED TO LADOT

UNITS	MATERIAL
1	2070 Controller
2	APS

CONDUCTOR SCHEDULE

SIZE No.	CABLE / WIRE	RUN
MULTI	3 CONDUCTOR CABLE 3 X #14	
	5 CONDUCTOR CABLE 5 X #14	2 3 1 4 3 1 3
	9 CONDUCTOR CABLE 8 X #14 & 1 X #10 (COM)	1 1 1 1
	13 CONDUCTOR CABLE 12 X #14 & 1 X #10 (COM)	
	28 CONDUCTOR CABLE 27 X #18 & 1 X #16 (COM)	1
6	SERVICE	
8	BONDING (GROUND)	
12	BUS DLC (1-PAIR)	
18	DLC (2 PAIR)	1 2 3
18	DLC (3 PAIR)	
18	DLC (4 PAIR)	
14	DLC (EXISTING)	
22	I/C (12 PAIR)	
14	ACCESSIBLE PEDESTRIAN SIGNAL (APS)	2 1
	VIDEO DETECTION CABLE	1 1 1 1 1 2
	CONDUIT SIZE	* 2" * 2" 2" * * * * * 2" * *

NOTE: FOR EXISTING CONDUIT RUNS DESIGNATED WITH AN "*" (ABOVE), THE CONTRACTOR SHALL ADD/INSTALL NEW CONDUCTORS/CABLES AND PROTECT AND MAINTAIN ALL EXISTING CONDUCTORS/CABLES.

PROPOSED PHASE DIAGRAM

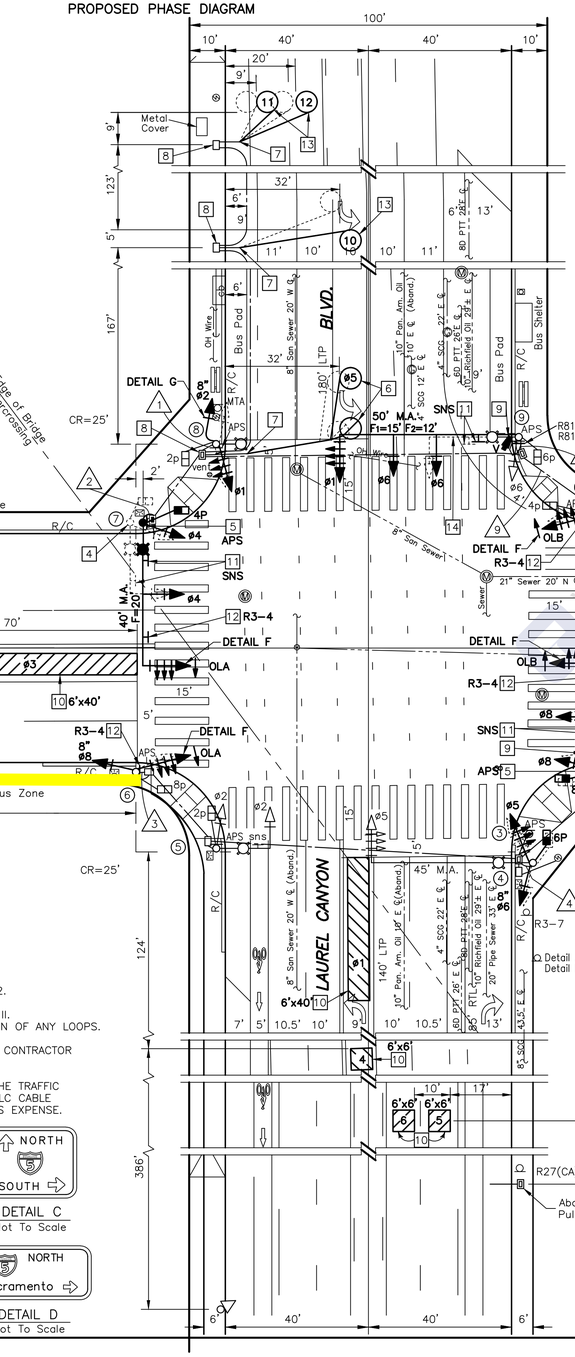

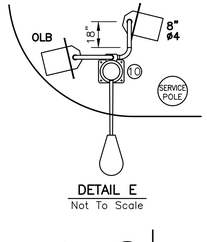

DETAIL E
Not To Scale

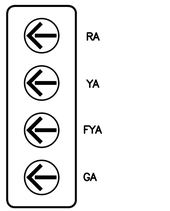

DETAIL F
Not to Scale

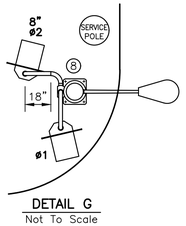

DETAIL G
Not To Scale

Scale: 1" = 20'
North/South: LAUREL CANYON BLVD.

NOTES:

1. SEMI-ACTUATED OPERATION WITH VIDEO CAMERA DETECTION (ATSAC 2070 CONTROLLER IN 351 CABINET)

   ø1 – LAUREL CANYON BLVD. NB LT
   ø2 – LAUREL CANYON BLVD. SB & W/S PED. XING
   ø3 – TIMING ONLY
   ø4 – SHELDON ST. WB & N/S PED. XING
   ø5 – LAUREL CANYON BLVD. SB LT
   ø6 – LAUREL CANYON BLVD. NB & E/S PED. XING
   ø7 – TIMING ONLY
   ø8 – SHELDON ST. EB & S/S PED. XING
   OLA(ø7) – SHELDON ST. WB LT
   OLB(ø3) – SHELDON ST. EB LT

   GOLDEN STATE FREEWAY CORRIDOR ATSAC SYSTEM ATSAC CABLE INTERCONNECT

2. REMOVE CONTROLLER AND CABINET; RETAIN FOUNDATION.

3. INSTALL ATSAC 2070 CONTROLLER IN 351 CABINET. THE CONTRACTOR SHALL PROVIDE A COMPLETE FUNCTIONING CONTROLLER ASSEMBLY AND CABINET CONFORMING TO THE LATEST LADOT SPECIFICATION FOR 2070 CONTROLLER AND 351 CABINET, AND SHALL INCLUDE ALL NECESSARY AUXILIARY EQUIPMENT TO PROVIDE A COMPLETE AND FUNCTIONING CONTROLLER. CONTRACTOR TO DELIVER COMPLETELY ASSEMBLED CONTROLLER FOR TESTING TO THE DEPARTMENT OF TRANSPORTATION GENERAL SHOP, PIPER TECHNICAL CENTER, 555 RAMIREZ STREET THIRTY (30) DAYS PRIOR TO INSTALLATION. CONTRACTOR TO PICK UP AND INSTALL CONTROLLER ASSEMBLY ON EXISTING F-332 FOUNDATION.

NOTES (CONT'D 1):

4. REMOVE EXISTING TRAFFIC SIGNAL EQUIPMENT, STANDARD, PULLBOX, FOUNDATION AND ABANDON EXISTING CONDUIT(S).

5. INSTALL ACCESSIBLE PEDESTRIAN SIGNAL (APS) AS PER LADOT STD. DWG. NO. S-73.2.

6. INSTALL DETECTOR LOOP(S) PER LADOT STD. DWG. NO. S-70.1.A & S-70.1.D, CASE II. CONTRACTOR SHALL OBTAIN APPROVAL FROM LADOT INSPECTOR PRIOR TO INSTALLATION OF ANY LOOPS.

7. CONTRACTOR SHALL RE-USE EXISTING STUB-OUT. IF STUB-OUT IS NOT IN PLACE. CONTRACTOR SHALL INSTALL NEW STUB-OUT PER LADOT STD. DWG. NO. S-70.1A.

8. CONTRACTOR MAY RE-USE THE EXISTING DLC IN THE PULLBOX AS DETERMINED BY THE TRAFFIC SIGNAL INSPECTOR. SHOULD THE CONTRACTOR DAMAGE THE EXISTING CABLE, NEW DLC CABLE SHALL BE INSTALLED FROM THE PULLBOX TO THE CONTROLLER AT THE CONTRACTOR'S EXPENSE.

NOTES (CONT'D 2):

9. CONTRACTOR SHALL INSTALL ITERIS VIDEO DETECTION SYSTEM (VDS). CONTACT LADOT COMMUNICATION ENGINEER AT (213) 978-0150 PRIOR TO PURCHASE FOR VDS SPECIFICATIONS. INSTALL VDS CAMERA ON MAST ARM AS SHOWN. CONTRACTOR SHALL BE RESPONSIBLE FOR COMPLETE INSTALLATION OF VDS SYSTEM. INSTALLATION SHALL BE DONE BY ITERIS OR ITERIS CERTIFIED TECHNICIAN.

   VDS EQUIPMENT FOR EACH APPROACH/DIRECTION:
   * 1-17" RACK MOUNT LCD/LED THIN SPACE MONITOR
   * 2 – VANTAGE EDGE 2, QUAD VIDEO PROCESSORS
   * 2 – RZ-4 ADVANCED WDR OR SIMILAR ITERIS VDS CAMERA (MAY NEED ADDITIONAL CAMERA TO CAPTURE ALL ADVANCED LOOPS)
   * 1 – VANTAGE EDGE 2 EXTENSION MODULE

10. CONFIGURE VIDEO DETECTION ZONE(S) AS SHOWN.

11. RELOCATE STREET-NAME SIGN TO NEW MAST ARM/STANDARD.

12. INSTALL SIGN(S), OR SIGN(S) AND POST(S) AS SHOWN.

13. INSTALL DETECTOR LOOP(S) PER LADOT STD. DWG. NO. S-70.1A. CONTRACTOR SHALL OBTAIN APPROVAL FROM LADOT INSPECTOR PRIOR TO INSTALLATION OF ANY LOOPS.

14. REMOVE MAST ARM VEHICLE HEAD(S) AND MAST ARM.

15. ABANDON AND DISCONNECT DETECTOR LOOP(S) IN PULLBOX AS SHOWN.

16. RENUMBER SYSTEM LOOP(S) AS SHOWN.

17. CONTRACTOR SHALL CONTACT LADOT SIGNAL DESIGN SECTION AT (213) 928-9640 FOR ANY SIGNAL RELATED PROBLEMS ENCOUNTERED DURING CONSTRUCTION.

18. SEE STREET LIGHTING SHEET FOR WORK ON STREET LIGHTING FACILITIES.

19. ALL NEW VEHICLE AND COUNTDOWN PEDESTRIAN TRAFFIC SIGNAL HEADS SHALL BE LED MODULES PER LADOT SPECIFICATION 92-088-07 (LATEST EDITION).

20. ALL VEHICLE HEADS SHOWN ARE 12-INCH UNLESS OTHERWISE NOTED.

21. THIS PLAN ASSUMES COMPLETION OF SIGNAL MODIFICATION, PROJECT NO. BR-205815 AND GEOMETRIC DESIGN PLAN A-8118.

NOTICE TO CONTRACTOR

1. EXCEPT WHERE OTHERWISE INDICATED, MATERIALS AND INSTALLATION METHODS SHALL CONFORM TO THE LATEST EDITION, WITH SUPPLEMENTS, OF THE STANDARD SPECIFICATIONS FOR PUBLIC WORKS CONSTRUCTION ADOPTED BY THE CITY OF LOS ANGELES BOARD OF PUBLIC WORKS (LABPW), INCLUDING THE LATEST VERSION OF THE "BROWN BOOK" ISSUED BY THE LABPW, AND THE LATEST EDITION, WITH AMENDMENTS, OF THE SPECIAL PROVISIONS AND STANDARD DRAWINGS FOR THE INSTALLATION AND MODIFICATION OF TRAFFIC SIGNALS, ISSUED BY THE CITY OF LOS ANGELES DEPARTMENT OF TRANSPORTATION (LADOT).

2. ALL TRAFFIC SIGNAL AND/OR RELATED ELECTRICAL WORK SHALL BE PERFORMED AND INSPECTED UNDER THE CONDITIONS OF THE MOST CURRENT AMENDED BOARD OF PUBLIC WORKS "ENHANCED ELECTRICAL SAFETY POLICY" AS REQUIRED IN LADOT'S SPECIAL PROVISIONS AND STANDARD DRAWINGS FOR THE INSTALLATION AND MODIFICATION OF TRAFFIC SIGNALS (RED BOOK), REGARDLESS OF CONTRACT COST.

3. THE LADOT TRAFFIC SIGNAL INSPECTOR AT (818) 779-7433 SHALL BE NOTIFIED THREE (3) WORKING DAYS PRIOR TO THE BEGINNING OF CONSTRUCTION. FOR WORK IN THE AUTOMATED TRAFFIC SURVEILLANCE AND CONTROL (ATSAC) PROJECT AREA, A FIELD MEETING SHALL BE SCHEDULED WITH THE SIGNAL SYSTEM SUPERVISOR AT (213) 473-8286 AND THE SIGNAL MAINTENANCE SUPERVISOR AT (818) 779-7437 THREE (3) WORKING DAYS PRIOR TO THE BEGINNING OF CONSTRUCTION. FULL RESTORATION OF THE ATSAC SYSTEM MUST OCCUR WITHIN FIVE (5) WORKING DAYS AFTER SHUT DOWN.

4. REGULAR TRAFFIC SIGNAL CONTROL SHALL BE MAINTAINED FROM 6:00 A.M. TO 9:00 A.M. AND 3:00 P.M. TO 7:00 P.M. ON WEEKDAYS, EXCEPT NATIONAL HOLIDAYS. FLASHING, DEACTIVATION AND ACTIVATION OF SIGNALS SHALL BE ACCOMPLISHED ONLY BY A LADOT TRAFFIC SIGNAL ELECTRICIAN. ALL ARRANGEMENTS TO DEACTIVATE SIGNALS SHALL BE MADE 24 HOURS IN ADVANCE BY CONTACTING THE LADOT TRAFFIC SIGNAL DEDICATED LINE AT (213) 473-8478 BEFORE 9:00 A.M. ON NON-HOLIDAY WEEKDAYS. THE LADOT PROJECT NUMBER MUST BE GIVEN AT THIS TIME. THE CONTRACTOR WILL BE CHARGED FOR ALL ELECTRICAL AND TRAFFIC CONTROL SERVICE PROVIDED BY LADOT.

5. ARRANGEMENTS FOR OBTAINING ANY MATERIALS IDENTIFIED TO BE SUPPLIED BY LADOT SHALL BE MADE TEN (10) WORKING DAYS IN ADVANCE BY CONTACTING THE LADOT FIELD OPERATIONS DIVISION AT (213) 216-4677. HOWEVER, TRAFFIC SIGNAL CONTROLLERS REQUIRE THIRTY (30) WORKING DAYS ADVANCE NOTICE AND MUST BE PICKED UP WITHIN FIFTEEN (15) WORKING DAYS AFTER NOTIFICATION. CONTACT LADOT SIGNAL SHOP AT (213) 473-8468 TO COORDINATE CONTROLLER DELIVERY AND/OR PICKUP.

6. ALL IDENTIFIED TRAFFIC SIGNAL EQUIPMENT SHALL BE RETURNED TO LADOT. ARRANGEMENTS FOR RETURNING IDENTIFIED EQUIPMENT TO LADOT SHALL BE MADE FIVE (5) WORKING DAYS IN ADVANCE BY CONTACTING THE LADOT MATERIAL CONTROL DIVISION AT (213) 928-9636.

7. ALL EXISTING TRAFFIC CONTROL SIGNING SHALL BE MAINTAINED WITH STANDARD SIGN BRACKETS BY THE CONTRACTOR, EXCEPT WHERE OTHERWISE INDICATED, EXISTING LARGE STREET NAME SIGNS ON MAST ARM TYPE STANDARDS SHALL BE RELOCATED FROM THE VERTICAL POLE TO THE MAST ARM PER LADOT STANDARD DRAWING NO. S-457.0 AND S-486.0. THE CONTRACTOR SHALL COORDINATE WITH LADOT SIGN SHOP AT (213) 473-7954 FOR ANY REQUIRED LARGE STREET NAME SIGNS. ANY TRAFFIC CONTROL SIGNING DAMAGED OR LOST BY THE CONTRACTOR SHALL BE REPLACED AT THE CONTRACTOR'S EXPENSE. SIGNAL CONTRACTOR SHALL INSTALL MAST ARM MOUNTED SIGNS. FOR THE INSTALLATION OF A STREET NAME SIGN ON A TYPE 1 POLE, THE CONTRACTOR SHALL FURNISH AND INSTALL A POLE EXTENSION AS NEEDED.

8. THE CONTRACTOR SHALL FURNISH AND INSTALL, AS SHOWN ON THE PLANS, ALL TRAFFIC SIGNAL EQUIPMENT SUCH AS STANDARDS, MAST ARMS, SIGNAL HEADS, AND OTHER EQUIPMENT AS REQUIRED. ALL SUCH EQUIPMENT SHALL BE NEW. ALL VEHICLE HEAD EQUIPMENT SUPPLIED BY THE CONTRACTOR SHALL HAVE 1-1/2 INCH DIAMETER PIPE FIT MOUNTING HARDWARE, INCLUDING ALL TOP POST MOUNT HEADS. PED HEAD MODULE REPLACEMENTS SHOWN ON THE PLAN SHALL REQUIRE A COMPLETE INSTALLATION, INCLUDING NEW PED HEAD AND TERMINAL COMPARTMENT.

LEGEND

- Repeater
- Access Point
- Wireless Vehicle Detection Sensor
- V PROPOSED VIDEO DETECTION CAMERA
- PROPOSED VIDEO DETECTION ZONE



DETAIL A
Not To Scale

DETAIL C
Not To Scale



DETAIL B
Not To Scale

DETAIL D
Not To Scale

BACKLOG REDUCTION PROGRAM

SUBMITTED July 26, 20 21 — Transportation Engineer
APPROVED July 26, 20 21 — Senior Transportation Engineer

REGISTERED PROFESSIONAL ENGINEER JOHN VARGHESE No. 59715 CIVIL STATE OF CALIFORNIA

AS BUILT

Date of Installation:
LADOT Inspector:
Condition As Of:
LADOT Engineer:
District EAST VALLEY
Thomas Guide 502-F7
References FIELD Proj.No. 74210

CITY OF LOS ANGELES
DEPARTMENT OF TRANSPORTATION
SELETA J. REYNOLDS, General Manager

TITLE
LAUREL CANYON BLVD. & SHELDON ST.

File Name	Intersection No.	Project No.
29870-2020-2.DWG	29870	BLG29870

NOTICE: IF PLAN HAS NOT BEEN IMPLEMENTED WITHIN TWO (2) YEARS OF THE APPROVAL DATE, IT MUST BE RESUBMITTED TO LADOT SIGNAL DESIGN SECTION FOR REVIEW AND APPROVAL.

SCALES	HORIZ. 1"=	SHEET – OF –	INDEX NUMBER
	VERT. 1"=		

(LADOT Revised 8/14)
(Drafting Std. 11/04)

NO.	REVISION DESCRIPTION	DATE

	BY	DATE
SUPERVISOR	CL	3-26-21
DESIGNER	BW	4-15-20
SR. DRAFTING	---	–
DRAFTING	AC\HM	7-02-21
FIELD	BW	4-14-20
BASE	AC	1-16-20

	BY	DATE
TIMING	EZ	3-25-21
DISTRICT	SR	11-09-20
GEOMETRIC		
ATSAC		
METRO RAIL		

Remove Watermark
Wondershare PDFelement

W/S LAUREL CANYON BLVD. 1/S/O ALLEGHENY ST.
LOS ANGELES, CA. 91352
STREET LIGHT RELOCATION PLAN
SLID 122791

DELTA NOTES

1. INSTALL MODIFIED FOUNDATION PER DETAIL AS SHOWN ON SHEET 2. CAP AT&T STUB-OUT 6" OUTSIDE FOUNDATION AT **"6:00"** POSITION.
2. INSTALL NEW TYPE 2 PULLBOX.
3. TERMINATE CONDUIT IN EXISTING STREET LIGHTING PULLBOX. REPLACE EXISTING PULLBOX COVER WITH NEW ARMORCAST VANDAL PROOF PULLBOX RETROFIT KIT.
4. JOIN CONDUIT.
5. INSTALL PHILIPS CITY TOUCH OUTDOOR LUMINAIRE CONTROLLER LLC726D OR BSL APPROVED EQUAL.

LEGEND

- EXISTING 1" CONDUIT.
- EXISTING 1 1/2" CONDUIT.
- EXISTING 2" CONDUIT.
- ABANDON EXISTING CONDUIT.
- INSTALL NEW 1" CONDUIT.
- INSTALL NEW 1 1/2" CONDUIT.
- INSTALL NEW 2" CONDUIT.
- EXISTING PULLBOX.
- REMOVE EXISTING PULLBOX.
- NEW TYPE 2 PULLBOX PER STD PLAN NO L-201-0.
- EXISTING ELECTROLIER. (NOT TO BE REMOVED OR MODIFIED).
- RELOCATE EXISTING ELECTROLIER TO NEW LOCATION AS SHOWN ON PLAN. RE-USE EXISTING LUMINAIRE.
- REMOVE EXISTING LAMP.
- EXISTING ELECTROLIER INSTALL SAME LOCATION AS SHOWN ON PLAN. RE-USE EXISTING LUMINAIRE.

GENERAL NOTES TO THE CONTRACTOR

1) STREET LIGHTING WORK TO BE DONE BY THE BUREAU OF STREET LIGHTING FIELD OPERATIONS DIVISION.
2) WARNING: SAFETY CLEARANCE SHALL BE OBTAINED DAILY FROM DWP (TEL: 213-367-9966) BEFORE DOING ANY WORK OR MAKING ANY CONNECTIONS ON AN EXISTING CIRCUIT.
3) ELECTROLIERS SPECIFIED TO BE MAINTAINED IN SERVICE. THE FOD MAY PROVIDE ALTERNATE LIGHTING IN LIEU OF MAINTAINING EXISTING ELECTROLIER IN SERVICE PROVIDED SUCH ARRANGEMENTS ARE APPROVED BY THE ENGINEER.
4) ALL WORK SHALL CONFORM TO THE LATEST BOARD OF PUBLIC WORKS OF THE CITY OF LOS ANGELES ADOPTED EDITION AND SUPPLEMENTS TO THE "GREENBOOK STANDARD SPECIFICATIONS FOR PUBLIC WORKS CONSTRUCTION" AS MODIFIED BY THE CORRESPONDING ISSUE OF THE BROWN BOOK, THE LATEST EDITION OF THE BUREAU OF STREET LIGHTING "SPECIAL SPECIFICATIONS ", AND THE SPECIAL PROVISIONS.

REGISTERED PROFESSIONAL ENGINEER
GIL DELACRUZ
No. E21758
ELECTRICAL
STATE OF CALIFORNIA

REQUESTED BY: AT&T
WIRELESS COMMUNICATION FACILITY

REFERENCE PLAN:	M2427, C5819, P20173
PATROL MAP:	605
DWP OVERHEAD MAP:	196-165
CADASTRAL MAP:	195B165
COUNCIL DISTRICT:	6
THOMAS GUIDE:	502/7F
DESIGNED BY:	SAON KASHEM DATE: 02/13/2019
DRAWN BY:	R. AREVALOS DATE: 02/28/2019

CITY OF LOS ANGELES
BUREAU OF STREET LIGHTING

APPROVED March 8, 2019

for Gil Delacruz

DIV. MANAGER, CO-LOCATION DIVISION

CONTRACTOR: FOD

INSPECTED BY: JOHN LIZARRAGA

DATE REMOVED:

DATE INSTALLED: 4-15-2019

AS-BUILT DATE: 7/23/2019

AT&T SMALL CELL
SITE LOCATION: CYLA7-133A

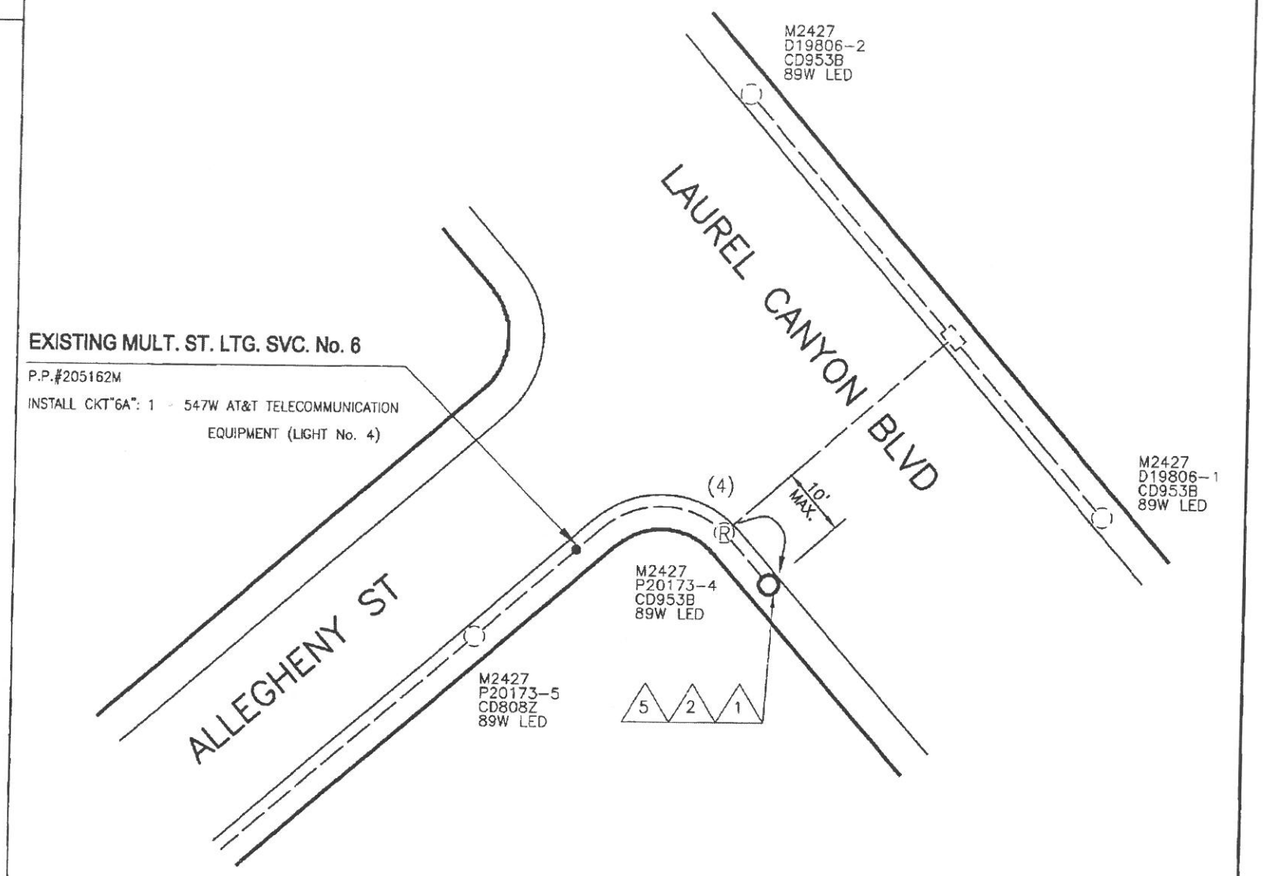

NOT TO SCALE

BEFORE WORKING ON AN EXISTING STREET LIGHTING CIRCUIT:

1. CONTRACTOR SHALL GIVE THE BUREAU OF STREET LIGHTING FIELD OPERATIONS DIVISION (PHONE: 323-913-4741, ASSISTANT SUPERINTENDANT) TWO WORKING DAYS NOTICE PRIOR TO START OF WORK.
2. CONTRACTOR SHALL INSTALL BOUCHARD CONCEALMENT AND TELECOMMUNICATIONS EQUIPMENT AS SPECIFIED ON AT&T SITE PLAN AND BSL SITE PERMIT APPLICATION.

W.O.# L1799190
BSL STICKER # 04387

"AS BUILT" SHEET 1 OF 2 SHEETS

INDEX NUMBER SL-10992

H:\Divisions\COMMUNITY SERVICES DIVISION\AT&T SMALL CELL PROJECT--10_3_2016\SL-10992.dwg

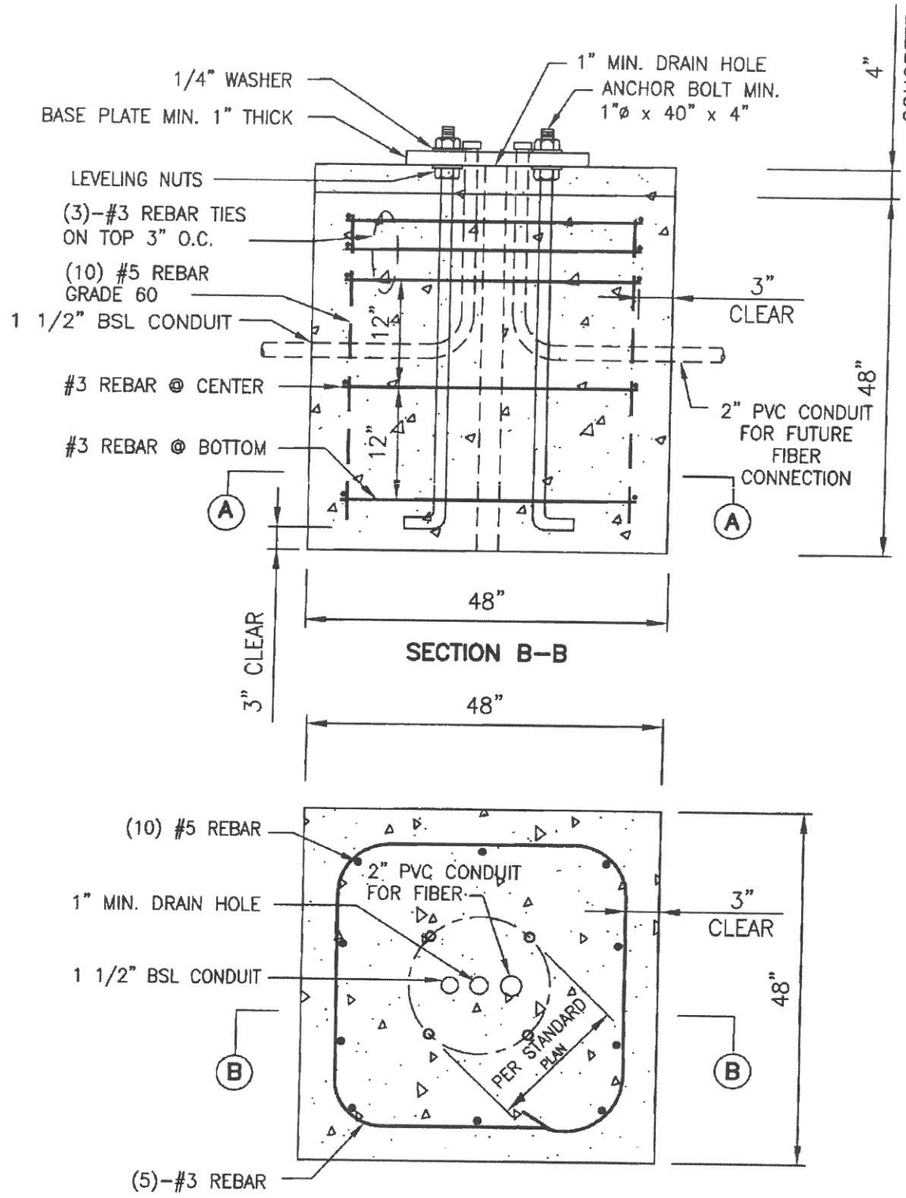

FOUNDATION DETAIL

NOT TO SCALE

FOUNDATION NOTES:

1. ALL CONCRETE TO BE 4000 PSI IN 28 DAYS SHALL BE IN ACCORDANCE WITH THE ACI 301-10
2. ALL STEEL SHALL BE GRADE 60
3. ANCHOR BOLT SHALL BE ACCORDING TO ASTM F1554 GRADE 55, NUTS SHALL BE HEXAGON NUTS ACCORDING TO ASTM A563 AND WASHERS SHALL BE ACCORDING TO F436

REGISTERED PROFESSIONAL ENGINEER
RAED ABOULHOSN
No. C 66581
Exp. 08/30/20
CIVIL
STATE OF CALIFORNIA

CONTRACTOR:	FOD	
INSPECTED BY:	JOHN LIZARRAGA	
DATE ENERGIZED:	4-15-2019	ELECTS.: 1
DATE ENERGIZED:		ELECTS.:
DATE ENERGIZED:		ELECTS.:
CORRECTED TO "AS BUILT"		7/23/2019 DATE
BY	LILIA MENDOZA	CHECKED

W.O.# L1799190
BSL STICKER # 04387

AS BUILT SHEET 2 OF 2 SHEETS

INDEX NUMBER SL-10992

H:\Divisions\COMMUNITY SERVICES DIVISION\AT&T SMALL CELL PROJECT--10_3_2016\SL-10992.dwg

W194-165

196-165

194-162

194-168

192-165

GS 197-162

GS 197-168

N.1,904,220

E.6,438,935

WaterGIS

LEGEND MAP	SYMBOLS AND NOTATIONS						FIRE HYDRANTS	REFERENCES		WATER GEOGRAPHIC INFORMATION SYSTEMS & GRAPHICS GROUP
SCALE 1" = 1500'	AS SHOWN	SCALE: 1" = 100'	PLOTTED	DATE	CHK'D.	DATE	2 1/2" SINGLE	MAPS REPLACED	GATE BK:	DEPARTMENT OF WATER AND POWER
		MAP	NAME	xx-xx-xxxx	NAME	xx-xx-xxxx	2 1/2" S. BUILT UP	1204 OS , 1206 OS	197-162 , 197-168	CITY OF LOS ANGELES
		CONVERTED MAINS	NAME	xx-xx-xxxx	NAME	xx-xx-xxxx	2 1/2" DOUBLE	1212 OS , 1213 OS		WATER SERVICE MAP
		CONVERTED SERVICES	R.EUSEBIO	03-21-2006	NAME	xx-xx-xxxx	4" SINGLE	1653 NS	LANDBASE:	SERVICE ZONE ELEVATION / DISTRICT: EAST VALLEY
		MISC	NAME	xx-xx-xxxx	NAME	xx-xx-xxxx	4" S. BUILT UP		1928165 , 1958165	194-165
							4" DOUBLE	DATUM: N.A. 1983, ZONE 5		
		APPROVED					2 1/2" x 4" DOUBLE	LEVELS: U.S.G.S.		

Questions or Comments, contact: Water GIS Group, Room 1439, JFB

8/13/2019 3:17:42 PM, dlee

W196-165

198-165

196-162

196-168

GS 197-162

GS 197-168

GOLDEN STATE FWY

RTE 5

N.1,906,219

E.6,438,942

194-165

WaterGIS

LEGEND MAP SCALE 1" = 1500'	SYMBOLS AND NOTATIONS	SCALE: 1" = 100'	PLOTTED	DATE	CHKD.	DATE
	AS SHOWN	MAP	NAME	xx-xx-xxxx	NAME	xx-xx-xxxx
		CONVERTED MAINS	NAME	xx-xx-xxxx	NAME	xx-xx-xxxx
		CONVERTED SERVICES	R.EUSEBIO	07-27-2006	NAME	xx-xx-xxxx
		MISC	NAME	xx-xx-xxxx	NAME	xx-xx-xxxx
		APPROVED				

FIRE HYDRANTS	
2 1/2" SINGLE	
2 1/2" S. BUILT UP	
2 1/2" DOUBLE	
4" SINGLE	
4" S. BUILT UP	
4" DOUBLE	
2 1/2" x 4" DOUBLE	

REFERENCES	
MAPS REPLACED	GATE BK:
1213 , 1212 , 1575 NS	197-162 , 197-168
1206	
	LANDBASE:
	1958165
DATUM: N.A. 1983, ZONE 5	
LEVELS: U.S.G.S	

WATER GEOGRAPHIC INFORMATION SYSTEMS & GRAPHICS GROUP
DEPARTMENT OF WATER AND POWER
CITY OF LOS ANGELES

WATER SERVICE MAP

SERVICE ZONE ELEVATION: 1134 / 0000 / 0000 / 0000

DISTRICT: EAST VALLEY

196-165

Questions or Comments, contact: Water GIS Group, Room 1439, JFB

8/14/2019 2:46:37 PM, dlee

FERNANGELES TRANSFER AGREEMENT

TRANSFER AGREEMENT BETWEEN THE LOS ANGELES COUNTY FLOOD CONTROL DISTRICT AND LOS ANGELES DEPARTMENT OF WATER AND POWER AGREEMENT NO. 2020RPULAR04 SAFE, CLEAN WATER PROGRAM – REGIONAL PROGRAM

This Transfer Agreement, hereinafter referred to as "Agreement," is entered into as of October 29, 2020 by and between the Los Angeles County Flood Control District, hereinafter referred to as "District," and Los Angeles Department of Water and Power for Fernangeles Park Stormwater Capture Project, hereinafter referred to as "Recipient."

WHEREAS, District, pursuant to the Los Angeles Region Safe, Clean Water (SCW) Program ordinance (Chapter 16 of the Los Angeles County Flood Control District Code) and the SCW Program Implementation Ordinance (Chapter 18 of the Los Angeles County Flood Control District Code), administers the SCW Program for the purpose of funding Projects and Programs to increase stormwater and urban runoff capture and reduce stormwater and urban runoff pollution in the District;

WHEREAS, Recipient proposes to implement a Funded Activity (as hereafter defined) that is eligible for funding under the SCW Program;

WHEREAS, the Funded Activity is included in a Stormwater Investment Plan (SIP) that has been approved by the County of Los Angeles Board of Supervisors;

WHEREAS, the Board approved a standard template Agreement as required by and in accordance with Section 18.09 of the Los Angeles County Flood Control District Code;

NOW, THEREFORE, in consideration of the promises, mutual representations, covenants and agreements in this Agreement, the District and the Recipient, each binding itself, its successors and assigns, do mutually promise, covenant, and agree as follows:

I. Definitions

The definitions set forth in Sections 16.03 and 18.02 of the Los Angeles County Flood Control District Code shall apply to this Agreement. In addition, the following definitions shall also apply:

"Activity Completion" means that the Funded Activity is complete to the reasonable satisfaction of the District based on review of reports and other documentation as deemed appropriate by the District. If the Funded Activity is an Infrastructure Program Project on District Right-of-Way a separate use and maintenance agreement is required.

"Activity Costs" means the total costs necessary to achieve Activity Completion. The Activity Costs for the Funded Activity are described in Exhibit A.

"Agreement" means this Transfer Agreement, including all exhibits and attachments hereto.

"Budget Plan" means a Recipient's plan for funding Activity Completion, including a description of all sources of funds for Activity Costs and a description of how the SCW Program Contribution will be allocated among the tasks identified in the Scope of Work within each fiscal year. Recipient's Budget Plan is described in Exhibit A.

"Days" means calendar days unless otherwise expressly indicated.

"Fiscal Year" means the period of twelve (12) months terminating on June 30 of any year.

"Funded Activity" means the Infrastructure Program Project, or Scientific Study described in Exhibit A – Scope of Work, including the Stakeholder and Community Outreach Plan and all other tasks and activities described in Exhibit A.

"Safe Clean Water (SCW) Program Contribution" means the portion of the Activity Costs to be paid for with Regional Program funds provided by the District from the SCW Program as described in the Budget Plan.

"Year" means calendar year unless otherwise expressly indicated.

II. Party Contacts

The District and the Recipient designate the following individuals as the primary points of contact and communication regarding the Funded Activity and the administration and implementation of this Agreement.

Los Angeles County Flood Control District		Recipient: Los Angeles Department of Water and Power	
Name:	CJ Caluag	Name:	Peter Tonthat
Address:	11th Floor, PO Box 1460, Alhambra, CA 91802-1460	Address:	111 North Hope Street, Room 318, Los Angeles CA 90012
Phone:	(626) 458-4037	Phone:	213-367-1166
Email:	CCALUAG@dpw.lacounty.gov	Email:	peter.tonthat@ladwp.com

Either party to this Agreement may change the individual identified above by providing written notice of the change to the other party.

III. Exhibits Incorporated BY REFERENCE

The following exhibits to this Agreement, including any amendments and supplements hereto, are hereby incorporated herein and made a part of this Agreement:

EXHIBIT A – SCOPE OF WORK

EXHIBIT B – GENERAL TERMS AND CONDITIONS

EXHIBIT C – SPECIAL CONDITIONS

EXHIBIT D – ADDENDUM TO AGREEMENT

EXHIBIT E – NATURE-BASED SOLUTIONS (Best Management Practices)

EXHIBIT F – OPERATIONS AND MAINTENANCE GUIDANCE DOCUMENT

IV. Activity Completion

A. The Recipient shall implement and complete the Funded Activity in accordance with the work schedule described in Exhibit A,

B. The Recipient shall comply with the terms and conditions in Exhibits A, B, C, D, E, and F of this Agreement, and all applicable provisions of Chapters 16 and 18 of the Code.

C. The Recipient shall fulfill all assurances, declarations, representations, and commitments made by the Recipient in its application for SCW Program Contributions, accompanying documents, and communications filed in support of its application for SCW Program Contributions.

V. SCW PROGRAM FUNDING FOR FUNDED ACTIVITY

A. The District shall disburse the SCW Program Contribution for the 2020-2021 Fiscal Year as described in the corresponding approved Stormwater Investment Plan (SIP) within 45-days of receipt of the signed executed Agreement.

B. If the Funded Activity is included in a duly approved SIP for a subsequent Fiscal Year, the parties shall enter into an addendum to this Agreement, in the form attached as Exhibit D, regarding the disbursement of the SCW Program Contribution for that subsequent Fiscal Year. The Recipient expressly acknowledges and agrees that the District is not obligated to disburse any SCW Program Contributions to Recipient for any Fiscal Year beyond the 2020-21 Fiscal Year unless the Funded Activity is included in a duly approved SIP for a subsequent Fiscal Year , the Recipient has complied with the provisions related to the California Environmental Quality Act in Exhibit C, and the parties have duly executed an addendum to this Agreement for that Fiscal Year.

C. Notwithstanding any other provision of this Agreement, no disbursement shall be made at any time or in any manner that is in violation of or in conflict with federal, state, County laws, policies, or regulations.

D. All disbursements shall be subject to and be made in accordance with the terms and conditions in this Agreement and Chapters 16 and 18 of the Code.

E. The Recipient shall submit the scope of work described in Exhibit A 45-days after approval of the SIP. If the Funded Activity is included in a duly approved SIP for a subsequent Fiscal Year, and there are any changes to the Scope of Work, Budget Plan or any other portions of Exhibit A for that Fiscal Year, a revised Exhibit A will be required as part of the addendum to this Agreement for that Fiscal Year.

VI. Execution of Agreement

This Agreement may be executed simultaneously or in any number of counterparts, including both counterparts that are executed manually on paper and counterparts that are in the form of electronic records and are executed electronically, whether digital or

encrypted, each of which shall be deemed an original and together shall constitute one and the same instrument.

The District and the Recipient hereby agree to regard facsimile/electronic representations of original signatures of authorized officers of each party, when appearing in appropriate places on this Agreement and on any addenda or amendments thereto, delivered or sent via facsimile or electronic mail or other electronic means, as legally sufficient evidence that such original signatures have been affixed to this Agreement and any addenda or amendments thereto such that the parties need not follow up facsimile/electronic transmissions of such documents with subsequent (non-facsimile/electronic) transmission of "original" versions of such documents.

Further, the District and the Recipient: (i) agree that an electronic signature of any party may be used to authenticate this Agreement or any addenda or amendment thereto, and if used, will have the same force and effect as a manual signature; (ii) acknowledge that if an electronic signature is used, the other party will rely on such signature as binding the party using such signature, and (iii) hereby waive any defenses to the enforcement of the terms of this agreement based on the foregoing forms of signature.

IN WITNESS WHEREOF, this Agreement has been executed by the parties hereto.

DEPARTMENT OF WATER AND POWER
OF THE CITY OF LOS ANGELES BY
BOARD OF WATER AND POWER COMMISSIONERS

By: _____
MARTIN L. ADAMS
General Manager and Chief Engineer

Date: 10/4/2021

And: _____
YVETTE L. FURR
Acting Board Secretary

AUTHORIZED BY RES. 022 028
SEP 14 2021

APPROVED AS TO FORM AND LEGALITY
MICHAEL N. FEUER, CITY ATTORNEY

AUG 27 2021

BY _____
JOHN A. CARVALHO
DEPUTY CITY ATTORNEY

IN WITNESS WHEREOF, this Agreement has been executed by the parties hereto.

LOS ANGELES COUNTY
FLOOD CONTROL DISTRICT:

By: _____

Name: Carolina T Hernandez

Title: Assistant Deputy Director

For: Mark Pestrella

Date: 11/01/2021

EXHIBIT A – SCOPE OF WORK

A-1. Budget Plan

The Recipient shall submit a detailed Budget Plan for all eligible expenditures (those incurred after November 7, 2018) for all phases and tasks included in the work schedule for the Funded Activity. The Recipient shall include a summary of leveraged funds and in-kind services for the Funded Activity. For a Funded Activity that will be performed over more than one Fiscal Year, the Budget Plan must clearly identify the amount of SCW Program Contribution for each Fiscal Year.

A-2. Consistent with SCW Program Goals

By signing this Agreement, the Recipient shall provide certification that the Budget Plan is consistent with SCW Program Goals as described in Chapter 18.04 of the Code.

The Recipient shall include a summary of how the identified SCW Program Goals are expected to be achieved through the Funded Activity, including quantitative targets and corresponding metrics for subsequent reporting of all applicable parameters.

A-3. Estimated Reasonable Total Activity Cost

The Recipient shall submit a detailed estimate total Activity Cost for all phases and tasks included in the work schedule for the Funded Activity.

A-4. Funded Activity Description and Scope of Work

The Recipient shall provide a general description of the Funded Activity and a detailed scope of work. The scope of work may include:

1. Project Management, including required reporting
2. General Compliance Requirements/Project Effectiveness and Performance
3. Permitting and Environmental Compliance
4. Planning, Design, and Engineering
5. Stakeholder and Community Outreach/Engagement Activities
6. Right of Way Acquisition
7. Construction and Implementation
8. Operation and Maintenance

A-5. Operations and Maintenance (O&M) Plan

Where the Funded Activity is an Infrastructure Program Project, the Recipient shall submit a plan describing the activities that are expected to be necessary to perform O&M for the

Infrastructure Program Project to ensure it remains in good working order throughout the useful life of the Infrastructure Program Project using SCW Program Contributions. The O&M plan shall address the activities described in Exhibit F to the greatest extent feasible and in as much detail as possible based on the completeness of the Project design and construction. The Recipient shall update the O&M plan in connection with each Addenda until completion of the Infrastructure Program Project and the submittal of a final O&M plan.

The Recipient shall specifically identify the entity that will be performing the O&M for the lifetime of the Project. If this is not the Recipient, the Recipient shall submit a letter of commitment from the entity that will be performing the O&M (See Exhibit F, for example activities). The letter of commitment shall include details demonstrating how the provider is qualified and capable of providing the necessary ongoing O&M services.

The Recipient may elect to request the local Municipality or District to provide O&M for the useful life of the Infrastructure Program Project using SCW Program Contributions. If the Recipient does not elect to seek the District's services or if the District is unable to provide the services as requested, the Recipient shall include in the letter of commitment reference to the above details demonstrating how the provider is qualified and capable of providing the necessary ongoing O&M services.

A-6. Post-Construction Monitoring

Where the Funded Activity is an Infrastructure Program Project, stormwater quality monitoring data shall be collected and reported in a manner consistent with the SWRCB database, the CEDEN for a period of three years. The Recipient shall submit a post-construction monitoring plan when the design phase is complete. The post-construction monitoring plan will evaluate the effectiveness of stormwater treatment facilities and include the project description; quality objectives; sampling design; sampling procedures; quality control; data management verification, and reporting; data quality assessment; and data analysis procedures.

A-7. Sustainability Rating

Where the Funded Activity is an Infrastructure Program Project that has applied for Institute for Sustainable Infrastructure (ISI) verification, the Recipient shall submit the final score and Envision award level.

A-8. Stakeholder and Community Outreach/Engagement Plan

The Recipient shall submit a Stakeholder and Community Outreach/Engagement Plan for Infrastructure Program Projects and include a discussion of how local NGOs or CBOs will be involved, if applicable, and if not, why. Additional outreach/engagement activities, even if funded by other sources, should be referenced to provide an overview of anticipated overall project approach. The plan shall, at a minimum include:

1. Community outreach activities to provide information to residents and information about upcoming meetings or other engagement activity event is scheduled.

Outreach methods used should be appropriate in scale and type to the community being served. Outreach methods include but are not limited to: Online Media Outreach (email blasts, social media, publication on a website) Local Media Outreach (newsletters, local and regional newspapers, and local radio and television) and/or Grassroots Outreach (door-to-door canvassing, phone banking, surveys and focus groups, and distribution of flyers or other printed materials). The District will support outreach efforts through web-based platforms if requested at least four weeks prior to the requested publish date. The District should be included in all social media outreach and notified of all meetings and other engagement events.

2. Community engagement activities solicit, address and seek input from community members for Funded Activities. These events may occur as part of any public meeting with multiple agenda items such as council, commission or committee meetings where public input is invited; or at festivals, fairs, or open houses where a table or booth may be set up.

3. Stakeholder and Community Outreach/Engagement Plan requirements:

   Stakeholder and Community Outreach/Engagement Plan activities should occur at the onset of the project, during the design phase, and during construction.

Infrastructure Program Project Funds	Required Activity 1	Required Activity 2
Up to $2 M	Outreach or Engagement	
Up to $10 M	Outreach	≥1 Engagement
Over $10 M	Outreach	≥ 2 Engagements

4. If the Funded Activity is for the O&M of an Infrastructure Program Project Stakeholder and Community Outreach/Engagement Plan activities should occur biennially to remind communities of the SCW Program Contribution.

5. Activities and measures to mitigate against displacement and gentrification. This includes, as applicable, an acknowledgment that the Funded Activity will be fully subject to and comply with any County-wide displacement policies as well as with any specific anti-displacement requirements associated with other funding sources.

A-9. Tracking Infrastructure Program Project Benefits

The Recipient shall submit an overview of the benefits achieved upon the Activity Completion. SOW shall include quantitative targets and corresponding metrics for subsequent reporting of all applicable parameters.

A-10. Work Schedule and Completion Date

The Recipient shall submit a detailed schedule, including start and completion dates for all phases and tasks of the scope of work for the Funded Activity. For Funded Activities that will be performed over more than one Fiscal Year, the work schedule must clearly identify the phases and tasks that will be performed in each Fiscal Year.

EXHIBIT B – GENERAL TERMS AND CONDITIONS

B-1. Accounting and Deposit of Funding Disbursement

1. SCW Program Contributions distributed to the Recipient shall be held in a separate interest-bearing account and shall not be combined with other funds. Interest earned from each account shall be used by the Recipient only for eligible expenditures consistent with the requirements of the SCW Program.

2. The Recipient shall not be entitled to interest earned on undisbursed SCW Program Contributions; interest earned prior to disbursement is property of the District.

3. The Recipient shall operate in accordance with Generally Accepted Accounting Principles (GAAP).

4. The Recipient shall be strictly accountable for all funds, receipts, and disbursements related to all SCW Program Contributions made to the Recipient.

B-2. Acknowledgement of Credit and Signage

The Recipient shall include appropriate acknowledgement of credit to the District for its support when promoting the Funded Activity or using any data and/or information developed under this Agreement. When the Funded Activity involves the construction phase of an Infrastructure Program Project, signage shall be posted in a prominent location at Project site(s) or at the Recipients headquarters and shall include the Safe, Clean Water Program color logo and the following disclosure statement: "Funding for this project has been provided in full or in part from the Los Angeles County Flood Control District's Safe, Clean Water Program." At a minimum the sign shall be 2' x 3' in size. The Recipient shall also include in each of its contracts for work under this Agreement a provision that incorporates the requirements stated within this paragraph.

When the Funded Activity involves a scientific study, the Recipient shall include the following statement in the study report: "Funding for this study has been provided in full or in part from the Los Angeles County Flood Control District's Safe, Clean Water Program." The Recipient shall also include in each of its contracts for work under this Agreement a provision that incorporates the requirements stated within this paragraph.

B-3. Acquisition of Real Property – Covenant

Any real property acquired in whole or in part with SCW Program funds shall be used for Projects and Programs that are consistent with the SCW Program Goals and with the provisions of Chapter 16 and 18 of the Code.

Any Recipient that acquires the fee title to real property using, in whole or in part, SCW Program funds shall record a document in the office of the Registrar-Recorder/County Clerk containing a covenant not to sell or otherwise convey the real property without the prior express written consent of the District, which consent shall not be unreasonably withheld.

B-4. Amendment

Except as provided in Section II of the Agreement, no amendment or variation of the terms of this Agreement shall be valid unless made in writing and signed by the parties. No oral or written understanding or agreement not incorporated in this Agreement is binding on any of the parties.

B-5. Assignment

The Recipient will not assign this Agreement without the prior consent of the District.

B-6. Audit and Recordkeeping

1. The Recipient shall retain for a period of seven (7) years after Activity Completion, all records necessary in accordance with Generally Accepted Accounting Principles to determine the amounts expended, and eligibility of Projects implemented using SCW Program Contributions. The Recipient, upon demand by authorized representatives of the District, shall make such records available for examination and review or audit by the District or its authorized representatives. Records shall include accounting records, written policies and procedures, contract files, original estimates, correspondence, change order files, including documentation covering negotiated settlements, invoices, and any other supporting evidence deemed necessary to substantiate charges related to SCW Program Contributions and expenditures.

2. The Recipient is responsible for obtaining an independent audit to determine Funded Activity compliance with the terms and conditions of this Agreement and all requirements applicable to the Recipient contained in chapters 16 and 18 of the Code promptly upon Activity Completion. For a Funded Activity that will be performed over the course of a period exceeding three years, the District may also perform an interim independent audit every three (3) years until Activity Completion. Audits shall be funded with Regional Program funds.

3. Recipient shall file a copy of the Activity Completion audit report with the District by the end of the ninth (9th) month from Activity Completion. Recipient shall file a copy of all interim audit reports by the ninth (9th) month from the end of each three (3) year period. Audit reports shall be posted on the District's publicly accessible website.

End-of-Activity		Every Third Fiscal Year		
Projected End Date	**Audit Report Due to District**	**SIP Fiscal Year**	**Audit Period**	**Audit Report Due to District**
1/15/2022	No later than 10/31/2022	2020-21	7/1/2020 to 6/30/2023	No later than 3/31/2024

4. Upon reasonable advanced request, the Recipient shall permit the Chief Engineer, at the District's cost and expense, to examine the Funded Activity. The Recipient shall permit the authorized District representative, including the Auditor-Controller, at the District's cost and expense, to examine, review, audit, and transcribe any and all audit reports, other reports, books, accounts, papers, maps, and other records that relate to the Funded Activity.

5. Expenditures determined by an audit to be in violation of any provision of Chapters 16 or 18 of the Code, or of this Agreement, shall be subject to the enforcement and remedy provisions of Section 18.14 of the Code.

If at any time the Funded Activity cannot fulfill the provisions outlined in Exhibit A, the accounts and books of the Recipient may be reviewed or audited by the District.

B-7. Availability of Funds

District's obligation to disburse the SCW Program Contribution is contingent upon the availability of sufficient funds to permit the disbursements provided for herein. If sufficient funds are not available for any reason including, but not limited to, failure to fund allocations necessary for disbursement of the SCW Program Contribution, the District shall not be obligated to make any disbursements to the Recipient under this Agreement. This provision shall be construed as a condition precedent to the obligation of the District to make any disbursements under this Agreement. Nothing in this Agreement shall be construed to provide the Recipient with a right of priority for disbursement over any other recipient. If any disbursements due the Recipient under this Agreement are deferred because sufficient funds are unavailable, it is the intention of the District that such disbursement will be made to the Recipient when sufficient funds do become available, but this intention is not binding. If this Agreement's funding for any fiscal year is reduced or deleted by order of the Board, the District shall have the option to either cancel this Agreement with no liability occurring to the District or offer an amendment to the Recipient to reflect the reduced amount.

1. The Recipient will not seek disbursement of any Activity Costs that will be disbursed or reimbursed from other funding sources.

2. The Recipient agrees that it will not request a disbursement unless that cost is allowable, reasonable, and allocable.

B-8. Choice of Law

The laws of the State of California govern this Agreement.

B-9. Claims

Any claim of the Recipient is limited to the rights, remedies, and claims procedures provided to the Recipient under this Agreement. Recipient expenditures of a SCW Program Contribution that involves the District shall utilize a separate and specific

agreement to that Project that includes appropriate indemnification superseding that in this Agreement.

B-10. Completion of Funded Activity by the Recipient

The Recipient agrees to pay any and all Activity Costs in excess of the SCW Program Contribution necessary for Activity Completion. The Recipient expressly acknowledges and agrees that if the SCW Program Contribution is not sufficient to pay the Activity Costs in full, the Recipient shall nonetheless complete the Funded Activity and pay that portion of the Activity Costs in excess of the SCW Program Contribution, subject to the provisions of Exhibit C, as applicable.

B-11. Compliance with Law, Regulations, etc.

The Recipient shall, at all times, comply with and require its contractors and subcontractors to comply with all applicable County, state and federal laws, rules, guidelines, regulations, and requirements. Without limitation of the foregoing, the Recipient agrees that, to the extent applicable, the Recipient shall comply with the Code.

B-12. Competitive Bidding and Procurements

The Recipient's contracts with other entities for the acquisition of goods and services and construction of public works with SCW Program Contributions must be in writing and shall comply with all applicable laws and regulations regarding the securing of competitive bids and undertaking competitive negotiations. If the Recipient does not have a written policy to award contracts through a competitive bidding or sole source process, the State Contracting Manual rules must be followed and are available at: https://www.dgs.ca.gov/OLS/Resources/Page-Content/Office-of-Legal-Services-Resources-List-Folder/State-Contracting#@ViewBag.JumpTo

B-13. Continuous Use of Funded Activity; Lease or Disposal of Funded Activity

Where the Funded Activity involves an Infrastructure Program Project, the Recipient shall not abandon, substantially discontinue use of, lease, or dispose of all or a significant part or portion of the Funded Activity during the useful life of 30 years of the Funded Activity without prior written approval of the District. Such approval may be conditioned as determined to be appropriate by the District, including a condition requiring repayment of pro rata amount of all disbursed SCW Program Contributions together with interest on said amount accruing from the date of abandonment, substantial discontinuance, lease or disposal of the Project.

B-14. Default Provisions

The Recipient will be in default under this Agreement under any of the following circumstances:

1. The Recipient has made or makes any false warranty, representation, or statement with respect to this Agreement, any addendum or the application filed to obtain this Agreement;

2. The Recipient materially breaches this Agreement or any addendum, including but not limited to:

    a. Fails to operate or maintain Project in accordance with this Agreement;

    b. Fails to submit timely Quarterly Progress/Expenditure Reports.

    c. Fails to remain in Good Standing (see Section B-34, below).

    d. The Recipient fails to maintain reasonable progress toward SCW Program Goals as described in Section 18.04 of the Code, following an opportunity to cure.

    e. The Recipient fails to maintain reasonable progress toward Project Completion.

    f. Use of SCW Program Contributions for ineligible expenses and/or activities not consistent with the Agreement.

    g. Inappropriate use of SCW Program Contributions, as deemed by the District

Should an event of default occur, the District shall provide a notice of default to the Recipient and shall give the Recipient at least ten calendar days or such longer period as the District, in its reasonable discretion, may authorize, to cure the default from the date the notice is sent via first-class mail to the Recipient. If the Recipient fails to cure the default within the time prescribed by the District, the District may do any of the following:

1. Declare the SCW Program Contribution be immediately repaid, with interest, which shall be equal to the State of California general obligation bond interest rate in effect at the time of the default.

2. Terminate any obligation to make future payments to the Recipient.

3. Terminate the Agreement.

4. Take any other action that it deems necessary to protect its interests.

The Recipient shall not be in default under this Agreement as a result of any breach of this Agreement by the Recipient that is the direct result of the District's failure to make a SCW Program Contribution for any Fiscal Year. Under these circumstances the District may, in its reasonable discretion, terminate this Agreement by providing the Recipient with a written notice of termination. If this Agreement is terminated pursuant to this

paragraph, the parties shall thereafter have no further obligations to each other in connection with the Funded Activity except that the Recipient's indemnification obligations shall survive the termination of this Agreement and continue in full force and effect.

B-15. Disputes

Should a dispute arise between the parties, the party asserting the dispute will notify the other parties in writing of the dispute. The parties will then meet and confer within 21 calendar days of the notice in a good faith attempt to resolve the dispute.

If the matter has not been resolved through the process set forth in the preceding paragraph, any party may initiate mediation of the dispute. Mediation will be before a retired judge or mediation service mutually agreeable to the parties. All costs of the mediation, including mediator fees, will be paid one-half by the District and one-half by the Recipient. SCW Program Contributions shall not be used to pay for any costs of the mediation.

The parties will attempt to resolve any dispute through the process set forth above before filing any action relating to the dispute in any court of law.

B-16. Final Inspection and Certification of Registered Professional

Where the Funded Activity is an Infrastructure Program Project, upon completion of the design phase and before construction, the Recipient shall provide certification by a California Registered Professional (i.e., Professional Civil Engineer, Engineering Geologist) that the design has been completed.

Where the Funded Activity is an Infrastructure Program Project, upon completion of the Project, the Recipient shall provide for a final inspection and certification by a California Registered Professional (i.e., Professional Civil Engineer, Engineering Geologist), that the Project has been completed in accordance with submitted final plans and specifications and any modifications thereto and in accordance with this Agreement.

B-17. Force Majeure.

In the event that Recipient is delayed or hindered from the performance of any act required hereunder by reason of strikes, lockouts, labor troubles, inability to procure materials not related to the price thereof, riots, insurrection, war, or other reasons of a like nature beyond the control of the Recipient, then performance of such acts shall be excused for the period of the delay, and the period for the performance of any such act shall be extended for a period equivalent to the period of such delay.

B-18. Funded Activity Access

When the Funded Activity involves an Infrastructure Program Project the Recipient shall, upon receipt of reasonable advance notice from the District, ensure that the District or

any authorized representative of the foregoing, will have safe and suitable access to the site of the Funded Activity at all reasonable times through Activity Completion.

B-19. Funding Considerations and Exclusions

1. All expenditures of the SCW Program Contribution by Recipient must comply with the provisions of Chapters 16 and 18 of the Code, including but not limited to the provisions regarding eligible expenditures contained in Section 16.05.A.2 and the provision regarding ineligible expenditures contained in Section 16.05.A.3.

2. SCW Program Contributions shall not be used in connection with any Funded Activity implemented as an Enhanced Compliance Action ("ECA") and/or Supplemental Environmental Project ("SEP") as defined by State Water Resources Control Board Office of Enforcement written policies, or any other Funded Activity implemented pursuant to the settlement of an enforcement action or to offset monetary penalties imposed by the State Water Resources Control Board, a Regional Water Quality Control Board, or any other regulatory authority; provided, however, that SCW funds may be used for a Funded Activity implemented pursuant to a time schedule order ("TSO") issued by the Los Angeles Regional Water Quality Control Board if, at the time the TSO was issued, the Funded Activity was included in an approved watershed management program (including enhanced watershed management programs) developed pursuant to the MS4 Permit.

   Recipient certifies that: (a) the Funded Activity is not being implemented as an ECA or SEP; (b) the Funded Activity is not being implemented pursuant to the settlement of an enforcement action or to offset monetary penalties imposed by the State Water Resources Control Board, a Regional Water Quality Control Board, or any other regulatory authority; and (c) the Funded Activity is not being implemented pursuant to a TSO issued by the Los Angeles Regional Water Quality Control Board unless, at the time the TSO was issued, the Funded Activity was included in an approved watershed management program (including enhanced watershed management programs) developed pursuant to the MS4 Permit.

B-20. Indemnification

The Recipient shall indemnify, defend and hold harmless the District and their elected and appointed officers, agents, and employees from and against any and all liability and expense arising from any act or omission of the Recipient, its officers, employees, agents, or subconsultants or contractors in conjunction with Recipient's performance under or pursuant to this Agreement, including defense costs, legal fees, claims, actions, and causes of action for damages of any nature whatsoever, including but not limited to bodily injury, death, personal injury, or property damage.

B-21. Independent Actor

The Recipient, and its agents and employees, if any, in the performance of this Agreement, shall act in an independent capacity and not as officers, employees, or agents of the District.

The Recipient shall not contract work with a contractor who is in a period of debarment from any agency within the District. (LACC Chapter 2.202)

B-22. Integration

This is an integrated Agreement. This Agreement is intended to be a full and complete statement of the terms of the agreement between the District and Recipient, and expressly supersedes any and all prior oral or written agreements, covenants, representations and warranties, express or implied, concerning the subject matter of this Agreement.

B-23. Lapsed Funds

1. The Recipient shall be able to carry over uncommitted Special Parcel Tax funds for up to five (5) years from the end of the fiscal year in which those funds are transferred from the District to the Recipient.

2. If the Recipient is unable to expend the SCW Program Contribution within five (5) years from the end of the Fiscal Year in which those funds are transferred from the District to the Recipient, then lapsed funding procedures will apply. Lapsed funds are funds that were transferred to the Recipient but were not committed to eligible expenditures by the end of the fifth (5th) fiscal year after the fiscal year in which those funds were transferred from the District.

3. Lapsed funds shall be allocated by the Watershed Area Steering Committee of the respective Watershed Area to a new Project with benefit to that Municipality or Watershed Area.

4. In the event that funds are to lapse, due to circumstances beyond the Recipient's control, then the Recipient may request an extension of up to twelve (12) months in which to commit the funds to eligible expenditures. Extension Requests must contain sufficient justification and be submitted to the District in writing no later than three (3) months before the funds are to lapse.

5. The decision to grant an extension is at the sole discretion of the District.

6. Funds still uncommitted to eligible expenditures after an extension is granted will be subject to lapsed funding procedures without exception.

7. Example:

Fiscal Year Transferred	Funds Lapse After	Extension Request Due	Commit By

2020–21	6/30/2026	No later than 3/31/2026	No later than 6/30/2027

B-24. Modification

This Agreement may be amended or modified only by mutual written consent of the Board and Recipient.

B-25. Non-Discrimination

The Recipient agrees to abide by all federal, state, and County laws, regulations, and policies regarding non-discrimination in employment and equal employment opportunity.

B-26. No Obligation of the District

The District will transfer the SCW Program Contribution to the Recipient for the funding of the Funded Activity. The District will have no further obligation, other than to transfer the funds, with respect to the Funded Activity itself.

B-27. No Third-Party Rights

The parties to this Agreement do not create rights in, or grant remedies to, any third party as a beneficiary of this Agreement, or of any duty, covenant, obligation, or undertaking established herein

B-28. Notice

1. The Recipient shall notify the District in writing within five (5) working days of the occurrence of the following:

    a. Bankruptcy, insolvency, receivership or similar event of the Recipient; or

    b. Actions taken pursuant to State law in anticipation of filing for bankruptcy.

2. The Recipient shall notify the District within ten (10) working days of any litigation pending or threatened against the Recipient regarding its continued existence, consideration of dissolution, or disincorporation.

3. The Recipient shall notify the District promptly of the following:

    a. Any significant deviation from in the submitted scope of the Funded Activity for the current Fiscal Year, including discussion of any major changes to the scope of the Funded Activity, noteworthy delays in implementation, anticipated reduction in benefits, and/or modifications that change the SCW Program Goals intended to be accomplished by the Funded Activity. Under no circumstances may the Recipient make changes to the scope of the Funded Activity without receiving prior approval.

b. Cessation of work on the Funded Activity where such cessation of work is expected to or does extend for a period of thirty (30) days or more;

c. Any circumstance, combination of circumstances, or condition, which is expected to or does delay Activity Completion;

d. Discovery of any potential archaeological or historical resource. Should a potential archaeological or historical resource be discovered during construction, the Recipient agrees that all work in the area of the find will cease until a qualified archaeologist has evaluated the situation and made recommendations regarding preservation of the resource. When the District is acting as the Lead Agency under CEQA for the Funded Activity, all work in the area of the find will remain suspended until the District has determined what actions should be taken to protect and preserve the resource and the Recipient agrees to implement appropriate actions as directed by the District;

e. Any public or media event publicizing the accomplishments and/or results of this Agreement and provide the opportunity for attendance and participation by District representatives with at least fourteen (14) days' notice to the District;

f. Activity completion.

B-29. Public Records

The Recipient acknowledges that, except for a subset of information regarding archaeological records, the Funded Activity records and locations are public records including, but not limited to, all of the submissions accompanying the application, all of the documents incorporated by reference into this Agreement, and all reports, disbursement requests, and supporting documentation submitted hereunder.

B-30. Recipient's Responsibility for Work

The Recipient shall be responsible for all work and for persons or entities engaged in work performed pursuant to this Agreement including, but not limited to, contractors, subcontractors, suppliers, and providers of services. The Recipient shall be responsible for responding to any and all disputes arising out of its contracts for work on the Project. The District will not mediate disputes between the Recipient and any other entity concerning responsibility for performance of work.

B-31. Related Litigation

The Recipient is prohibited from using the SCW Program Contribution to pay costs associated with any litigation described in Section 16.05.A.3. of the Code. Regardless of whether the Project or any eventual related project is the subject of litigation, the Recipient agrees to complete the Project funded by the Agreement or to repay all the SCW Program Contribution plus interest to the District.

B-32. Remaining Balance

In the event that the Recipient does not spend all the SCW Program Contribution disbursed for the Funded Activity, Recipient shall promptly return the unspent SCW Program Contribution to the District.

B-33. Reporting

The Recipient shall be subject to and comply with all applicable requirements of the District regarding reporting requirements. Recipients shall report available data through the SCW Reporting Module, once available.

- Quarterly Progress/Expenditure Reports. The Recipient shall submit Quarterly Progress/Expenditure Reports, using a format provided by the District, within forty-five (45) days following the end of the calendar quarter (March, June, September, and December) to the District. The Quarterly Progress/Expenditure Reports shall be posted on the District's publicly accessible website. The Quarterly Progress/Expenditure Report shall include:

    a. Amount of funds received;

    b. Percent overall Funded Activity completion estimate;

    c. Breakdown of how the SCW Program Contribution has been expended;

    d. Documentation that the SCW Program Contribution was used for eligible expenditures in accordance with Chapters 16 and 18 of the Code;

    e. Description of activities that have occurred, milestones achieved, and progress made to date, during the applicable reporting period including comparison to Exhibit A submission and corresponding metrics;

    f. Identification of any phases or tasks of the scope of work that were scheduled to be started or completed during the reporting period (according to the work schedule), but which were delayed, and a discussion of the reasons for the delay, and of lessons learned;

    g. Scheduling concerns and issues encountered that may delay completion of the task;

    h. Work anticipated for the next reporting period;

    i. Any anticipated schedule or budget modifications;

    j. Photo documentation (e.g. photos of community outreach events, stakeholder meetings, groundbreaking ceremonies, and project site that may be used on the publicly accessible District website) of the phases or tasks of the Project completed during the reporting period, as appropriate;

    k. Additional financial or project-related information as required by the District;

l. Certification from a California Registered Professional (Civil Engineer or Geologist, as appropriate), that the Project was conducted in accordance with Exhibit A;

m. Status of Recipient's insurance; and

n. Description of post-performance for each completed infrastructure project is required after the first operational year and for a total of three years after the project begins operation. Post-performance reports shall focus on how each project is actually performing compared to its expected performance; whether the project is operated and maintained and providing intended benefits as proposed. A post-performance template will be provided by the District.

- Quarterly Progress/Expenditure Reports shall be submitted to the District Program Manager no later than forty-five days following the end of the calendar quarter as follows:

Quarter	End of Quarter	Report Due
First Quarter	September	15 November
Second Quarter	December	15 February
Third Quarter	March	15 May
Fourth Quarter	June	15 August

- Annually, a summary of the Quarterly Progress/Expenditure Reports shall be submitted to the Watershed Area Steering Committees to explain the previous year's Quarterly Progress/Expenditure Reports by the Recipient. The summary report shall be submitted six (6) months after the close of the Fourth Quarter. The summary report shall include:

  - Description of the Water Quality Benefits, Water Supply Benefits, and Community Investment Benefits and a summary of how funds have been allocated to achieve SCW Program Goals as articulated in Chapter 18.04 of the Code for the prior year. This includes comparisons to Exhibit A and alignment with corresponding specific quantitative targets and metrics (note that SCW Reporting Module will facilitate graphical representation of pertinent data).

  - When the Funded Activity is an Infrastructure Program Project, include a description of how the County's Local and Targeted Worker Hire Policy has been applied and enforced; or if the Recipient is a Municipality and has adopted its own policy, include a description of how its policy was applied and enforced.

  - Where the Funded Activity is an Infrastructure Program Project that has applied for Institute for Sustainable Infrastructure (ISI) verification, include

a description of the final score and Envision award level. Annually, the Recipient shall prepare and provide members of the public with up-to-date information on the actual and budgeted use of the SCW Program Contribution.

- As Needed Information or Reports. The Recipient agrees to promptly provide such reports, data, and information as may be reasonably requested by the District including, but not limited to material necessary or appropriate for evaluation of the SCW Program or to fulfill any reporting requirements of the County, state or federal government.

B-34. Representations, Warranties, and Commitments

The Recipient represents, warrants, and commits as follows:

1. Authorization and Validity. The execution and delivery of this Agreement, including all incorporated documents, by the individual signing on behalf of Recipient, has been duly authorized by the governing individual(s), board or body of Recipient, as applicable. This Agreement constitutes a valid and binding obligation of the Recipient, enforceable in accordance with its terms, except as such enforcement may be limited by law.

2. No Violations. The execution, delivery, and performance by the Recipient of this Agreement, including all incorporated documents, do not violate any provision of any law or regulation in effect as of the date set forth on the first page hereof, or result in any breach or default under any contract, obligation, indenture, or other instrument to which the Recipient is a party or by which the Recipient is bound as of the date set forth on the first page hereof.

3. No Litigation. There are no pending or, to the Recipient's knowledge, threatened actions, claims, investigations, suits, or proceedings before any governmental authority, court, or administrative agency which affect the Recipient's ability to complete the Funded Activity.

4. Solvency. None of the transactions contemplated by this Agreement will be or have been made with an actual intent to hinder, delay, or defraud any present or future creditors of the Recipient. As of the date set forth on the first page hereof, the Recipient is solvent and will not be rendered insolvent by the transactions contemplated by this Agreement. The Recipient is able to pay its debts as they become due.

5. Legal Status and Eligibility. The Recipient is duly organized and existing and in good standing under the laws of the State of California and will remain so through Activity Completion. The Recipient shall at all times maintain its current legal existence and preserve and keep in full force and effect its legal rights and authority through Activity Completion.

6. Insurance. The Recipient shall follow the Insurance Manual prepared by the Risk Management Office of the Los Angeles County Chief Executive Office. For Infrastructure Program Projects the Recipient shall provide General Liability, Automobile Liability, Worker's Compensation and Employer's Liability, Builder's Risk Course of Construction Insurance, and Professional Liability as specified in the Insurance Manual: https://riskmanagement.lacounty.gov/wp-content/uploads/2019/06/Insurance-Manual-revised-May-2019.pdf

B-35. Requirements for Good Standing

The Recipient must currently be in compliance with the District requirements set forth in this Agreement. The Recipient must demonstrate it has not failed to comply with previous County and/or District audit disallowances within the preceding five years.

B-36. Requirements Related to Recipient's Contractors

1. The Recipient shall apply and enforce provisions mirroring those set forth in the then-current version of the County's Local and Targeted Worker Hire Policy (LTWHP) as to contractors performing work on such a Project. Alternatively, if the Recipient is a Municipality and has adopted its own policy that is substantially similar to the LTWHP, the Recipient may, at its election, choose to apply and enforce the provisions of its own such policy as to contractors performing work on such a Project in lieu of the provisions of the LTWHP.

2. The Recipient shall apply and enforce provisions mirroring those set forth in Los Angeles County Code (LACC) Chapter 2.211 (Disabled Veteran Business Enterprise Preference Program), LACC, Chapter 2.204 (Local Small Business Enterprise Preference Program), LACC, Chapter 2.205 (Social Enterprise Preference Program), LACC, Chapter 2.203 (Contractor Employee Jury Service Ordinance), LACC Chapter 2.206 (Defaulted Tax Program), LACC, Chapter 2.200 (Child Support Compliance Program, LACC, Chapter 2.160 (County Lobbyist Ordinance), Safely Surrendered Baby Law, and Zero Tolerance Policy on Human Trafficking, as to contractors performing work on such an Infrastructure Program Project, subject to statutory authorization for such preference program(s), and subject to applicable statutory limitations for such preference(s); and, furthermore, the Recipient shall take actions to promote increased contracting opportunities for Women-Owned Businesses on the Project, subject to applicable State or federal constitutional limitations.

3. The Recipient shall obtain all necessary approvals, entitlements, and permits required to implement the Project. Failure to obtain any necessary approval, entitlement, or permit shall constitute a breach of a material provision of this Agreement.

4. With respect to a Project funded with SCW Program Contributions through the Regional Program, if the Project has an estimated capital cost of over twenty-five million dollars ($25,000,000),as adjusted periodically by the Chief Engineer in

accordance with changes in the Consumer Price Index for all urban consumers in the Los Angeles area, or other appropriate index, a provision that the Infrastructure Program Project Developer for such a Project must require that all contractors performing work on such a Project be bound by the provisions of: (1) a County-wide Project Labor Agreement (Community Workforce Agreement), if such an agreement has been successfully negotiated between the County and the Trades and is approved by the Board, or (2) a Project Labor Agreement ("PLA") mirroring the provisions of such Community Workforce Agreement.

5. With respect to a Project funded with SCW Program Contributions through the Regional Program, if one or more of the Municipalities that is a financial contributor to a Project has its own PLA, a provision that the Infrastructure Program Project Developer for the Project must require that contractors performing work on the Project are bound to such PLA. If more than one of the contributing Municipalities to a capital project has a PLA, the Project Developer shall determine which of the PLAs will be applied to the Project.

6. Payment Bond. Payment bonds for exceeding twenty-five thousand dollars are required. A payment bond is defined as a surety bond posted by a contractor to guarantee that its subcontractors and material suppliers on the Project will be paid.

7. Performance Bond. Where contractors are used, the Recipient shall not authorize construction to begin until each contractor has furnished a performance bond in favor of the Recipient in the following amounts: faithful performance (100%) of contract value, and labor and materials (100%) of contract value. This requirement shall not apply to any contract for less than $25,000.00. Any bond issues pursuant to this paragraph must be issued by a California-admitted surety. (Pub. Contract Code, 7103; Code Civ. Proc. 995.311.)

8. Prevailing Wage. The Recipient agrees to be bound by all the provisions of Sections 1771 and 1774 of the California Labor Code regarding prevailing wages and requires each of subcontractors to also comply. The Recipient shall monitor all contracts resulting from this Agreement to assure that the prevailing wage provisions of the Labor Code are being met. The Recipient affirms that it is aware of the provisions of section 3700 of the Labor Code, which requires every employer to be insured against liability for workers' compensation or to undertake self-insurance, and the Recipient affirms that it will comply with such provisions before commencing the performance of the work under this Agreement and will make it contractors and subcontractors aware of this provision .

9. Public Funding. This Funded Activity is publicly funded. Any service provider or contractor with which the Recipient contracts must not have any role or relationship with the Recipient, that, in effect, substantially limits the Recipient's ability to exercise its rights, including cancellation rights, under the contract, based on all the facts and circumstances.

B-37. Travel

Any reimbursement for necessary ground transportation and lodging shall be at rates not to exceed those set by the California Department of Human Resources; per diem costs will not be eligible expenses. These rates may be found at http://www.calhr.ca.gov/employees/Pages/travel-reimbursements.aspx. Reimbursement will be at the State travel amounts that are current as of the date costs are incurred by the Recipient. No travel outside the Los Angeles County Flood Control District region shall be reimbursed unless prior written authorization is obtained from the Program Manager.

B-38. Unenforceable Provision

In the event that any provision of this Agreement is determined by a court of competent jurisdiction to be unenforceable, the parties agree that all other provisions of this Agreement have force and effect and shall not be affected thereby.

EXHIBIT C – SPECIAL CONDITIONS

[If the Recipient is a public agency]

C-1. The Recipient acknowledges and agrees that the Recipient is the "lead agency" regarding compliance with the California Environmental Quality Act (CEQA) in connection with the Funded Activity and shall be responsible for the preparation of all documentation, analysis and other work and any mitigation necessary to comply with CEQA in connection with the Funded Activity. By entering into this Agreement, the District is not approving any activity that would be considered a project under CEQA.

C-2. Upon the completion of the documentation, analysis and other work necessary to comply with CEQA as described in section C-1, the Recipient shall promptly provide such documentation, analysis and work to the District. The Recipient acknowledges that the District is a Responsible Agency under CEQA in connection with the Funded Activity and that the District will not disburse the SCW Program Contribution for any activities that meet the definition of a project under CEQA until the Recipient has provided such documentation, analysis and other work to the District and the District has complied with its obligations as a Responsible Agency under CEQA.

C-3. In addition to its other indemnification obligations pursuant to this Agreement, the Recipient hereby agrees to indemnify, defend, and hold harmless District, the County of Los Angeles and their officers, employees, and agents from and against any and all claims and/or actions related to the Funded Activity that may be asserted by any third party or public agency alleging violations of CEQA or the State CEQA Guidelines or the NEPA.

C-4. Notwithstanding any other provision of this Agreement, if any documentation or other analysis pursuant to CEQA discloses that the Funded Activity, or portion thereof, will have one or more significant environmental impacts that cannot be feasibly mitigated, the Recipient shall promptly notify and consult with the District. With the District's approval, the Recipient may determine to terminate or modify the implementation of all or any portion of the Funded Activity in order to avoid such environmental impacts.

C-5. In the event the parties, pursuant to the preceding paragraph, determine to terminate the implementation of the entirety of the Funded Activity, the Recipient shall promptly return all previously disbursed but unspent SCW Program Contributions and the Recipient shall thereafter have no further obligation under this Agreement to implement the Funded Activity. In the event the parties determine to terminate the implementation of a portion of the Funded Activity, the Recipient shall promptly return all previously disbursed but unspent SCW Program Contributions for the terminated portion of the Funded Activity and the Recipient shall thereafter have no further obligation under this Agreement to implement the terminated portion of the Funded Activity, but this Agreement shall remain in full force and effect as to the portion of the Funded Activity not terminated.

[If the Recipient is not a public agency]

C-1. The Recipient shall be responsible for the preparation of all documentation, analysis and other work including any mitigation, necessary to comply with the California Environmental Quality Act (CEQA) in connection with the Funded Activity. Environmental documentation prepared in connection with the Funded Activity will be subject to the review and analysis of the District. Any decisions based on the documentation prepared by the Recipient will reflect the independent judgment of District. By entering into this Agreement, the District is not approving any activity that would be considered a project under CEQA and the Recipient acknowledges that the District will not disburse the SCW Program Contribution for any activities that meet the definition of a project under CEQA until the Recipient has prepared the documentation, analysis and other work necessary to comply with CEQA to the District's satisfaction.

C-2. In addition to its other indemnification obligations pursuant to this Agreement, the Recipient hereby agrees to indemnify, defend, and hold harmless District, the County of Los Angeles and their officers, employees, and agents from and against any and all claims and/or actions related to the Funded Activity that may be asserted by any third party or public agency alleging violations of CEQA or the CEQA Guidelines or the NEPA.

C-3. Notwithstanding any other provision of this Agreement, if any documentation or other analysis pursuant to CEQA discloses that the Funded Activity or any portion thereof will have one or more significant environmental impacts that cannot be feasibly mitigated, the District, after consultation with the Recipient, may terminate the SCW Program Contribution for all or any portion of the Funded Activity or may request that the Funded Activity be modified in order to avoid such environmental impact(s).

C-4. In the event that the District terminates the SCW Program Contribution for the entirety of the Funded Activity, the Recipient shall promptly return all previously disbursed but unspent SCW Program Contributions and the Recipient shall thereafter have no further obligation under this Agreement to implement the Funded Activity. In the event the District terminates the SCW Program Contribution for a portion on of the Funded Activity, the Recipient shall promptly return all previously disbursed but unspent SCW Program Contributions for the terminated portion of the Funded Activity and the Recipient shall thereafter have no further obligation under this Agreement to implement the terminated portion of the Funded Activity, but this Agreement shall remain in full force and effect as to the portion of the Funded Activity for which the SCW Program Contribution was not terminated.

EXHIBIT D – ADDENDUM TO AGREEMENT

-DRAFT TEMPLATE-

ADDENDUM NO. ___ TO
TRANSFER AGREEMENT NO. _____ BETWEEN
THE LOS ANGELES COUNTY FLOOD CONTROL DISTRICT
AND (*INSERT PROJECT DEVELOPER*)
SAFE, CLEAN WATER PROGRAM – REGIONAL PROGRAM

This Addendum No. ___ to Transfer Agreement No. _____, hereinafter referred to as "Addendum No. ___", is entered into as of _____ by and between the Los Angeles County Flood Control District, hereinafter referred to as "District," and ___*(Project Developer/Scientific Studies Applicant)*___, hereinafter referred to as "Recipient."

WHEREAS, District and Recipient entered into Transfer Agreement No. _____, hereinafter referred to as "Agreement", pertaining generally to the transfer of a SCW Program Contribution (as therein defined) from District to Recipient for the implementation by Recipient of a Funded Activity (as therein defined) to increase stormwater and/or urban runoff capture and/or reduce stormwater and/or urban runoff pollution, on _____;

WHEREAS, the Agreement provides for the disbursement of the SCW Program Contribution for the 2020-21 Fiscal Year (as therein defined), and further provides that if the Funded Activity is included in a duly approved Stormwater Investment Plan (as therein defined) for a subsequent Fiscal Year, the parties shall enter into an addendum to the Agreement regarding the disbursement of the SCW Program Contribution for that subsequent Fiscal Year;

WHEREAS, the Funded Activity has been included in a duly approved Stormwater Investment Plan for Fiscal Year _____;

NOW, THEREFORE, in consideration of the promises, mutual representations, covenants and agreements in this Agreement, the District and the Recipient, each binding itself, its successors and assigns, do mutually promise, covenant, and agree as follows:

1. The definitions set forth in Sections 16.03 and 18.02 of the Los Angeles County Flood Control District Code together with the definitions set forth in the Agreement shall apply to this Addendum No. ___.

2. The District shall disburse the SCW Program Contribution for the _____ Fiscal Year as described in the Budget Plan within ___ days of the execution of this Addendum by the last party to sign.

3. All terms and conditions of the Agreement shall remain in full force and effect.

IN WITNESS WHEREOF, this Addendum No. ___ has been executed by the parties hereto.

_____(*Recipient*)_____:

By: _____

Name:

Title:

Date: _____

LOS ANGELES COUNTY
FLOOD CONTROL DISTRICT:

By: _____

Name:

Title:

Date: _____

EXHIBIT E – NATURE BASED SOLUTIONS (NBS) Best Management Practices

Nature-based solutions (NBS) refers to the sustainable management and use of nature for undertaking socio-environmental challenges, including climate change, water security, water pollution, food security, human health, and disaster risk management. As this environmental management practice is increasingly incorporated into projects for the SCW Program, this guidance document may be expanded upon to further quantify NBS practices based on benefits derived from their incorporation on projects.

The SCW Program defines NBS as a Project that utilizes natural processes that slow, detain, infiltrate or filter Stormwater or Urban Runoff. These methods may include relying predominantly on soils and vegetation; increasing the permeability of Impermeable Areas; protecting undeveloped mountains and floodplains; creating and restoring riparian habitat and wetlands; creating rain gardens, bioswales, and parkway basins; enhancing soil through composting, mulching; and, planting trees and vegetation, with preference for native species. NBS may also be designed to provide additional benefits such as sequestering carbon, supporting biodiversity, providing shade, creating and enhancing parks and open space, and improving quality of life for surrounding communities. NBS include Projects that mimic natural processes, such as green streets, spreading grounds and planted areas with water storage capacity. NBS may improve water quality, collect water for reuse or aquifer recharge, or to support vegetation growth utilizing natural processes.

Recipients are to consider using Nature-Based Solutions for infrastructure projects and include in each Quarterly Progress/Expenditure Report and annual summary whether and how their project achieves a good, better, or best for each of the 6 NBS methods in accordance with the guidance below. Additionally, Quarterly Progress/Expenditure Reports should include discussion on any considerations taken to maximize the class within each method. If at least 3 methods score within a single class, the overall project can be characterized as that class. Recipients must attach a copy of the matrix for each Project with the good, better, or best column indicated for each method, to facilitate District tracking of methods being utilized.

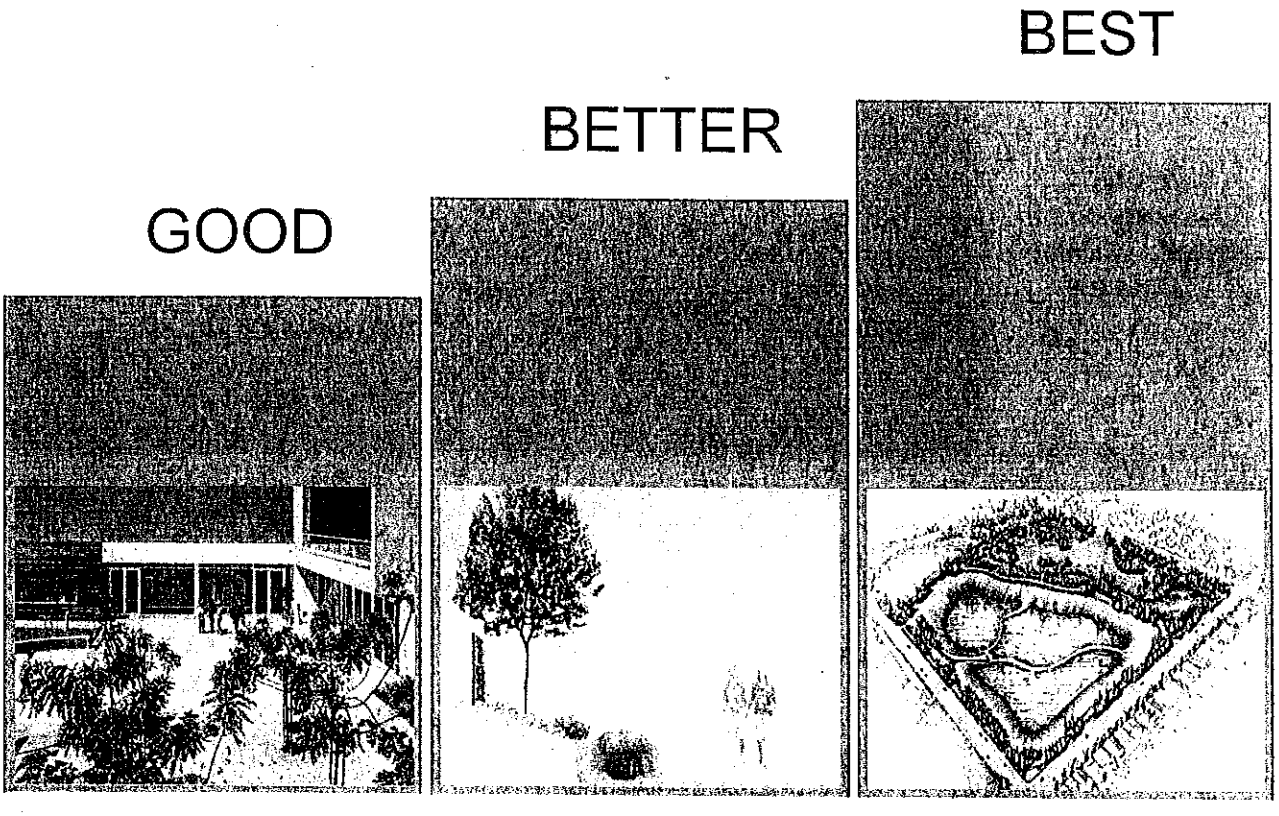

METHODS	GOOD	BETTER	BEST
Vegetation/Green Space	Use of climate-appropriate, eco-friendly vegetation (groundcover, shrubs, and trees) / green space 5%-15% covered by new climate-appropriate vegetation	Use of native, climate-appropriate, eco-friendly vegetation (groundcover, shrubs, and trees) / green space 16%-35% covered by new native vegetation	Establishment of plant communities with a diversity of native vegetation (groundcover, shrubs, and trees) / green space that is both native and climate-appropriate. More than 35% covered by new native vegetation
Increase of Permeability	Installation of vegetated landscape – 25%-49% paved area removed. Redesign of existing impermeable surfaces and/or installation of permeable surfaces (e.g. permeable pavement and infiltration trenches)	Installation of vegetated landscape – 50%-74% paved area removed. Improvements of soil health (e.g. compaction reduction)	Installation of vegetated landscape – 75%-100% paved area removed. Creation of well-connected and self-sustained natural landscapes with healthy soils, permeable surfaces, and appropriate vegetation.
Protection of Undeveloped Mountains & Floodplains	• Preservation of native vegetation • Minimal negative impact to existing drainage system	• Preservation of native vegetation • Installation of new feature(s) to improve existing drainage system	• Creation of open green space • Installation of features to improve natural hydrology
Creation & Restoration of Riparian Habitat & Wetlands	• Partial restoration of existing riparian habitat and wetlands • Planting of climate-appropriate vegetation between 5 and 15 different climate-appropriate or native plant species newly planted • No potable water used to sustain the wetland	• Full restoration of existing riparian habitat and wetlands • Planting of native vegetation – between 16 and 30 different native plant species newly planted • No potable water used to sustain the wetland	• Full restoration and expansion of existing riparian habitat and wetlands • Planting of plant communities with a diversity of native vegetation – greater than 31 native plant species newly planted • No potable water used to sustain the wetland

New Landscape Elements	Elements designed to capture runoff for other simple usage (e.g. rain gardens and cisterns), capturing the 85th percentile 24-hour storm event for at least 50% of the entire parcel	Elements that design to capture/redirect runoff and filter pollution (e.g. bioswales and parkway basins), capturing the 85th percentile 24-hour storm event from the entire parcel	Large sized elements that capture and treat runoff to supplement or replace existing water systems (e.g. wetlands, daylighting streams, groundwater infiltration, floodplain reclamation), capturing the 90th percentile 24-hour storm event from the entire parcel and/or capturing off-site runoff
Enhancement of Soil	Use of soil amendments such as mulch and compost to retain moisture in the soil and prevent erosion Planting of new climate-appropriate vegetation to enhance soil organic matter	Use of soil amendments such as mulch and compost that are locally generated to retain moisture in the soil, prevent erosion, and support locally based composting and other soil enhancement activities Planting of new native, climate-appropriate vegetation to enhance soil organic matter	Use of soil amendments such as mulch and compost that are locally generated, especially use of next-generation design with regenerative adsorbents (e.g. woodchips, biochar) to retain moisture in the soil, prevent erosion, and support on-site composting and other soil enhancement activities Planting of new native, climate appropriate vegetation to enhance soil organic matter

EXHIBIT F – OPERATIONS AND MAINTENANCE GUIDANCE DOCUMENT

Recipient or approved Project operator shall operate and maintain infrastructure projects for the useful life of the project and are to consider using the following guidance for operations and maintenance. Operational maintenance is the care and upkeep of Projects that may require detailed technical knowledge of the Project's function and design. Project specific operational and maintenance plans shall consider the activities listed below and set forth specific activities and frequencies (not limited to those below) as determined to be appropriate by the Municipalities and best practices, including stakeholder engagement as applicable. Operational maintenance is to be performed by the operator of the Project with a purpose to make the operator aware of the state of readiness of the Project to deliver stormwater and urban runoff benefits.

1. Litter Control
    - Regularly removal of litter, nonhazardous waste materials, and accumulated debris near planted areas, rock areas, decomposed granite areas, rest areas, fence perimeters, adjoining access roads and driveways, drains, pedestrian trails, viewing stations, shelter houses, and bicycle pathways.
    - Regularly inspection and maintenance of pet waste stations
    - Maintaining trash receptacles
    - Removal of trash, debris, and blockages from bioswales
    - Inspection and cleaning of trash booms
    - Inspection of weir gates and stop logs to clean debris, as required.

2. Vegetation Maintenance

    - Weed control
        - Recognition and removal of weeds, such as perennial weeds, morning glory, vine-type weeds, ragweed, and other underground spreading weeds.
        - Avoiding activities that result in weed seed germination (e.g. frequent soil cultivation near trees or shrubs)
        - Regularly removal of weeds from landscape areas, including from berms, painted areas, rock areas, gravel areas, pavement cracks along access roads and driveways, drains, pedestrian trails, viewing stations, park shelters, and bicycle paths.

    - Tree and shrubbery trimming and care
        - Removal of dead trees and elimination of diseased/damaged growth
        - Prevent encroachment of adjacent property and provide vertical clearance
        - Inspect for dead or diseased plants regularly

    - Wetland vegetation and landscape maintenance
        - Installation and maintenance of hydrophytic and emergent plants in perennially wet and seasonal, intermittent habitats.
        - Draining and drawdown of wetland and excessive bulrush removal

- Weed and nuisance plant control
- Removal of aquatic vegetation (e.g. algae and primrose) using appropriate watercraft and harvesting equipment
- Wildflower and meadow maintenance
- Grass, sedge, and yarrow management
- Removal of unwanted hydroseed

3. Wildlife Management

- Exotic species control
- Provide habitat management; promote growth of plants at appropriate densities and promote habitat structure for animal species
- Protect sensitive animal species (e.g. protection during critical life stages including breeding and migration)
- Avoid disturbances to nesting birds
- Avoid spread of invasive aquatic species

4. Facility Inspection

- Inspect project sites for rodent and insect infestations on a regular basis
- Inspect for and report graffiti in shelter houses, viewing stations, benches, paving surfaces, walls, fences, and educational and directional signs
- Inspect facilities for hazardous conditions on roads and trails (e.g. access roads and trails, decomposed granite pathways, and maintenance roads)
- Inspect shade structures for structural damage or defacement
- Inspect hardscapes
- Inspect and maintain interpretive and informational signs
- Inspect site furnishings (e.g. benches, hitching posts, bicycle racks)
- Maintain deck areas (e.g. benches, signs, decking surfaces)
- Visually inspect weirs and flap gates for damage; grease to prevent locking.
- Inspect all structures after major storm events, periodically inspect every 3 months, and operate gates through full cycles to prevent them from locking up.

5. Irrigation System Management

- Ensuring automatic irrigation controllers are functioning properly and providing various plant species with proper amount of water.
    - Cycle controller(s) through each station manually and automatically to determine if all facets are functioning properly.
    - Inspection should be performed at least monthly.
    - Recover, replace, or refasten displaced or damaged valve box covers.
    - Inspect and repair bubbler heads.

  - Repair and replace broken drip lines or emitters causing a loss of water (to prevent ponding and erosion).
  - Maintain drip system filters to prevent emitters from clogging. Inspection and cleaning should occur at least monthly.
  - Inspect and clean mainline filters, wye strainers, basket filters, and filters at backflow devices twice a year.
  - Maintain and check function of the drip system.

- Keeping irrigation control boxes clear of vegetation
- Operating irrigation system to ensure it does not cause excessively wet, waterlogged areas, and slope failure
- Utilizing infrequent deep watering techniques to encourage deep rooting, drought tolerant plant characteristics to promote a self-sustaining, irrigation free landscape
- Determine watering schedules based on season, weather, variation in plant size, and plant varieties. At least four times a year (e.g. change of season), reschedule controller systems.
- Turn off irrigation systems at the controller at the beginning of the rainy season, or when the soil has a high enough moisture content.
- Use moisture sensing devices to determine water penetration in soil.

6. Erosion Management and Control

- Inspect slopes for erosion during each maintenance activity
- Inspect basins for erosion
- Take corrective measures as needed, including filling eroded surfaces, reinstalling or extending bank protection, and replanting exposed soil.

7. Ongoing Monitoring Activities

- Monitor controllable intake water flow and water elevation
- Examine inflow and outflow structures to ensure devices are functioning properly and are free of obstructions.
- Water quality sampling (quarterly, unless justified otherwise)
- Checking telemetry equipment
- Tracking and reporting inspection and maintenance records

8. Vector and Nuisance Insect Control

- Monitoring for the presence of vector and nuisance insect species
- Adequate pretreatment of influent wastewater to lessen production of larval mosquitos
- Managing emergent vegetation
- Using hydraulic control structures to rapidly dewater emergent marsh areas
- Managing flow velocities to reduce propagation of vectors

CITY OF LOS ANGELES
DEPARTMENT OF PUBLIC WORKS
BUREAU OF ENGINEERING

CIP NO. SCP0003 - STRATHERN PARK NORTH STORMWATER CAPTURE PROJECT

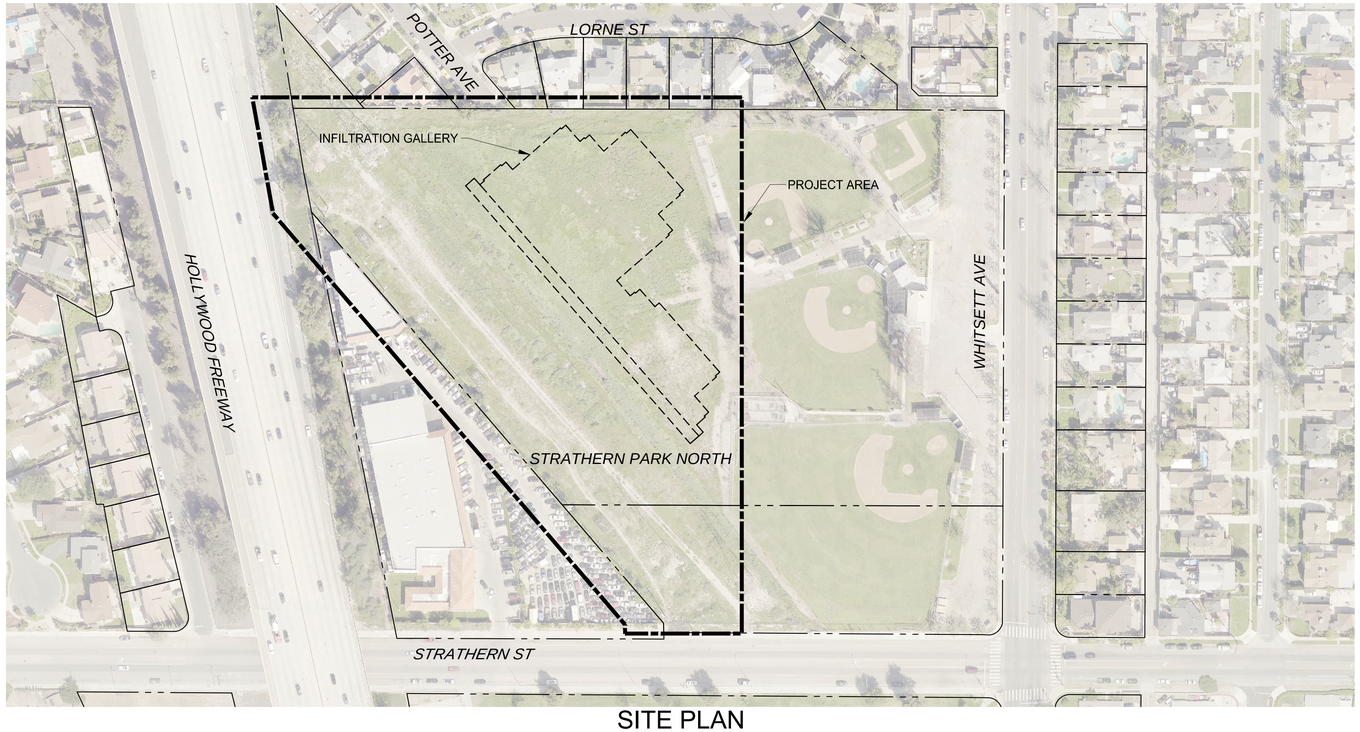

SITE PLAN

NOT TO SCALE

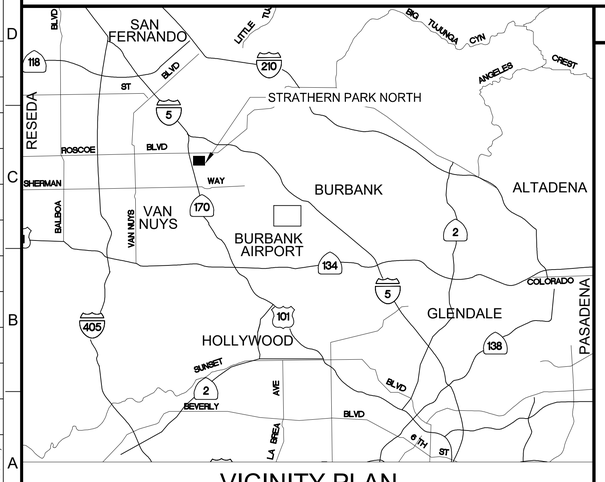

VICINITY PLAN

NOT TO SCALE

PROJECT TEAM

CLIENT:
LOS ANGELES DEPARTMENT OF WATER AND POWER
JANISSE QUINONES
CHIEF EXECUTIVE OFFICER AND CHIEF ENGINEER
ART CASTRO, P.E.
WATERSHED MANAGEMENT MANAGER
PETER TONTHAT, P.E.
PROJECT MANAGER

DEPARTMENT OF RECREATION AND PARKS
JIMMY KIM
GENERAL MANAGER
DARRYL FORD
SUPERINTENDENT

PROJECT MANAGEMENT:
CLEAN WATER DIVISION
CHRISTOPHER F. JOHNSON, P.E., G.E.
DIVISION ENGINEER
ROSHANAK VARJAVAND, Ph.D., P.E.
SENIOR PROJECT MANAGER
EDUARDO HERNANDEZ, P.E.
PROJECT MANAGER
THOMAS LANG
PROJECT ENGINEER
JOSEPH GARCIA
PROJECT ENGINEER

DESIGN SUPPORT:
BUREAU OF ENGINEERING - ARCHITECTUAL DIVISION
STEVEN FIERCE, AIA
PRINCIPAL ARCHITECT
RICHARD FISHER, ASLA
LANDSCAPE ARCHITECT

DESIGN MANAGEMENT/ CIVIL:
CDM SMITH, INC.
HALA TITUS, P.E.
PRINCIPAL IN CHARGE
ANTHONY DELLINGER, P.E.
PROJECT MANAGER
ARTHUR GOH, P.E.
PROJECT ENGINEER

CIVIL SITE:
MA ENGINEERING
JAVIER TISCARENO, P.E.
SENIOR ENGINEER

LANDSCAPE:
NUVIS LANDSCAPE ARCHITECTURE
PERRY CARDOZA, D.B.E, S.B.E.
PRESIDENT
LAMONT KLECKER, P.L.A.
SENIOR ASSOCIATE

SURVEY:
COAST SURVEYING, INC.
KURT HOEHN, P.L.S.
PROJECT SURVEYOR

GEOTECHNICAL:
NINYO & MOORE
DANIEL CHU, PhD, P.E., G.E.
PRINCIPAL ENGINEER
SPENCER MARCINEK, P.E., G.E.
SENIOR PROJECT ENGINEER
GREG CORSON, P.G., C.E.G.
PRINCIPAL GEOLOGIST

STRUCTURAL:
CDM SMITH INC.
JORDAN MORRIS, P.E., S.E., D.B.I.A.
STRUCTURAL ENGINEER

ELECTRICAL:
PROJECTLINE
ROBERT GETTER, P.E.
ELECTRICAL ENGINEER

BID AND AWARD:
PROJECT AWARD AND CONTROL DIVISION
ARSEN VOSKERCHYAN, P.E.
DIVISION MANAGER

CONSTRUCTION MANAGEMENT:
CONSTRUCTION MANAGEMENT DIVISION
MEGHAN ALDRICH, P.E.
DIVISION ENGINEER

THE CITY OF LOS ANGELES OR ITS OFFICERS OR AGENTS SHALL NOT BE RESPONSIBLE FOR THE ACCURACY OR COMPLETENESS OF ELECTRONIC COPIES OF THIS PLAN SHEET.

REVISION DATES (DESIGN STAGE ONLY)

Sheet Version 4.0

C:\CDMEXT\HUCKABEES\D0499408\GI001.DWG 12/24/2024 9:12 AM

ENGINEERING
CITY OF LOS ANGELES

• THIS PLAN WAS ELECTRONICALLY SIGNED AND STAMPED •

BUREAU OF ENGINEERING
VERTICAL CONTROL: BENCH MARK 18-0221S NAVD 88
HORIZONTAL CONTROL: CALIFORNIA STATE PLANE ZONE V, 1983 NAD
SHEET TITLE: TITLE SHEET
PROJECT: STRATHERN PARK NORTH STORMWATER CAPTURE PROJECT
ADDRESS: STRATHERN PARK NORTH 8041 WHISETT AVE, NORTH HOLLYWOOD, CA 91605

DEPARTMENT OF PUBLIC WORKS
NO. REVISIONS: DATE: BY:

CIP NO. SCP0003
SHEET TYPE: GENERAL
INDEX NO.

CITY OF LOS ANGELES
TED ALLEN, P.E.
CITY ENGINEER
DEPUTY CITY ENGINEER/PROGRAM MANAGER
DATE
CITY ENGINEER
DATE

WORK ORDER NO. EW40080F

SHEET NAME GI01
SHEET 1 OF 85 SHEETS

SHEET INDEX

SHEET NO.		DESCRIPTION
GENERAL		
1	GI01	TITLE SHEET
2	GI02	DRAWING INDEX
2A	GI02A	STORMWATER AND GROUNDWATER DOCUMENTATION 1
2B	GI02B	STORMWATER AND GROUNDWATER DOCUMENTATION 2
3	GI03	GENERAL NOTES I
4	GI04	GENERAL NOTES II
5	GI05	OVERALL PROJECT SITE PLAN
6	GI06	HYDRAULIC PROFILE
SURVEY		
7	VF01	SITE SURVEY
DEMOLITION		
8	DM01	SITE DEMOLITION PLAN
CIVIL		
9	CG01	CIVIL ABBREVIATIONS, SYMBOLS, AND LEGEND
10	CS01	EXISTING SITE PLAN
11	CS02	TREE PROTECTION ZONE/LIMITS OF EXCAVATION
12	CS03	GRADING PLAN 1
13	CS04	GRADING PLAN 2
14	CS05	GRADING SECTIONS
15	CS06	HORIZONTAL CONTROL COORDINATE TABLE
16	CS07	EROSION CONTROL PLAN
17	CU01	STORMWATER CONVEYANCE PLAN AND PROFILE
18	CI01	DESILTING AND INFILTRATION GALLERIES PLAN
19	CI02	DESILTING BASIN SECTION
20	CI03	INFILTRATION GALLERY SECTION 1
21	CI04	INFILTRATION GALLERY SECTION 2
22	CI05	INFILTRATION GALLERY SECTION 3
23	CI06	ENLARGED PLAN AND PARTIAL SECTIONS 1
24	CI07	ENLARGED PLAN AND PARTIAL SECTIONS 2
25	CI08	ENLARGED PLAN AND PARTIAL SECTIONS 3
26	CI09	ENLARGED PLAN AND PARTIAL SECTIONS 4
27	CI10	ENLARGED PLAN AND PARTIAL SECTIONS 5
28	CI11	DIVERSION STRUCTURE PLAN AND SECTIONS
29	CI12	GATE VAULT & FLOW METER MAINTENANCE HOLE PLANS AND SECTIONS
30	CI13	INLET STRUCTURE AND HYDRODYNAMIC SEPARATOR PLAN AND SECTIONS
31	CI14	CIVIL DETAILS 1
LANDSCAPE ARCHITECTURE		
32	LS01	LANDSCAPE SITE CONSTRUCTION PLAN
33	LS02	LANDSCAPE SITE CONSTRUCTION DETAIL 1
34	LS03	LANDSCAPE SITE CONSTRUCTION DETAIL 2
35	LS04	LANDSCAPE SITE CONSTRUCTION DETAIL 3
36	LS05	LANDSCAPE SITE CONSTRUCTION DETAIL 4
37	LS06	LANDSCAPE SITE CONSTRUCTION DETAIL 5
38	LS07	LANDSCAPE SITE CONSTRUCTION DETAIL 6
39	LS08	LANDSCAPE SITE CONSTRUCTION DETAIL 7
40	LS09	LANDSCAPE SITE CONSTRUCTION DETAIL 8
41	LS10	LANDSCAPE SITE CONSTRUCTION DETAIL 9
42	LS11	LANDSCAPE SITE CONSTRUCTION DETAIL 10
43	LP01	LANDSCAPE PLANTING PLAN
44	LP02	LANDSCAPE PLANTING LEGEND AND DETAILS
45	LP03	TREE PROTECTION GUIDELINES
46	LP04	TREE INVENTORY
47	LI01	IRRIGATION PLAN
48	LI02	IRRIGATION LEGEND AND NOTES
49	LI03	IRRIGATION DETAILS 1
50	LI04	IRRIGATION DETAILS 2
51	LI05	IRRIGATION DETAILS 3
52	LI06	IRRIGATION DETAILS 4
53	LI07	IRRIGATION DETAILS 5
54	LI08	IRRIGATION CALCULATIONS

SHEET NO.		DESCRIPTION
STRUCTURAL		
55	SG01	GENERAL STRUCTURAL NOTES
56	SG02	SPECIAL INSPECTION
57	SB01	GATE VAULT PLANS AND SECTIONS
58	SB02	INLET STRUCTURE PLANS AND SECTIONS
59	SB03	DIVERSION STRUCTURE PLANS AND SECTIONS
60	SB04	STANDARD DETAILS I
61	SB05	STANDARD DETAILS II
ELECTRICAL		
62	EG01	ELECTRICAL GENERAL NOTES
63	EG02	ELECTRICAL SYMBOLS
64	ES01	ELECTRICAL SINGLE LINE DIAGRAM
65	ES02	ELECTRICAL PANEL SCHEDULES
66	ES03	ELECTRICAL SITE PLAN
67	EP01	SB-1, LCP-01, LDC-1, LCMS PLAN AND ELEVATION
68	EP02	UMC-1, SB-1, LDC-1, LCMS, AND LCP-01 INTERIOR ELEVATION
69	EP03	OVERALL ELECTRICAL POWER AND INSTRUMENTATION PLAN
70	EP04	ELECTRICAL POWER AND INSTRUMENTATION DETAIL PLAN
71	EP05	ELECTRICAL GROUNDING DETAILS
72	EP06	ELECTRICAL SECTIONS AND DETAILS 1 OF 2
73	EP07	ELECTRICAL SECTIONS AND DETAILS 2 OF 2
74	EP08	ELECTRICAL CONTROL SCHEMATIC DIAGRAM - SLIDE GATE
75	EP09	TYPICAL POWER DISTRIBUTION SCHEDMATIC DIAGRAM - LCP-01
76	EP10	LADWP PAD MOUNTED TRANSFORMER REQUIREMENT AT STRATHERN PARK
77	EL01	LIGHTING PLAN
78	EL02	LIGHTING PHOTOMETRIC PLAN
79	EL03	LIGHTING CONTROL SPECIFICATION
80	EL04	LIGHTING POWER AND CONTROL DIAGRAM
INSTRUMENTATION		
81	IG01	INSTRUMENTATION LEGEND AND SYMBOLS 1 OF 2
82	IG02	INSTRUMENTATION SYMBOLS 2 OF 2
83	IP01	INFILTRATION GALLERY - P&ID
84	IP02	INSTRUMENTATION SCHEDULE AND I/O LISTS
85	IP03	LOCAL CONTROL PANEL (LCP-01) LAYOUT

THE CITY OF LOS ANGELES OR ITS OFFICERS OR AGENTS SHALL NOT BE RESPONSIBLE FOR THE ACCURACY OR COMPLETENESS OF ELECTRONIC COPIES OF THIS PLAN SHEET.

REVISION DATES (DESIGN STAGE ONLY)

ENGINEERING
CITY OF LOS ANGELES

REGISTERED PROFESSIONAL ENGINEER S. TED ALLEN No. C 48973 EXP. 08/31/2026 CIVIL STATE OF CALIFORNIA
04/11/2023

THIS PLAN WAS ELECTRONICALLY • SIGNED AND STAMPED

BUREAU OF ENGINEERING

VERTICAL CONTROL: BENCH MARK 18-02215 NAVD 88
HORIZONTAL CONTROL: CALIFORNIA STATE PLANE ZONE V, 1983 NAD

SHEET TITLE: DRAWING INDEX

PROJECT: STRATHERN PARK NORTH
STORMWATER CAPTURE PROJECT

ADDRESS: STRATHERN PARK NORTH
8041 WHISETT AVE, NORTH HOLLYWOOD, CA 91605

NO.	REVISIONS	DATE	BY
		YY/MM/DD	
		YY/MM/DD	
		YY/MM/DD	
		YY/MM/DD	

CIP NO. SCP0003

INDEX NO.

CITY OF LOS ANGELES DEPARTMENT OF PUBLIC WORKS

CITY ENGINEER: TED ALLEN, P.E. — DATE: 04/11/2023

DESIGN GROUP		DATE
ENGINEER:	CDM SMITH INC.	04/11/2023
ARCHITECT:	NA	**04/11/2023**
DESIGNED BY:	C. RICE	04/11/2023
DRAWN BY:	C. BILDERBACK	04/11/2023
CHECKED BY:	P. TAURASI	04/11/2023
APPROVED BY:	A. DELLINGER	04/11/2023

WORK ORDER
EW40080F

SHEET NAME
GI02

SHEET 2 OF 85 SHEETS

BOARD OF BUILDING AND SAFETY COMMISSIONERS
JAVIER NUNEZ, PRESIDENT
ELVIN W. MOON, VICE PRESIDENT
JOSELYN GEAGA-ROSENTHAL
LAUREL GILLETTE
GEORGE HOVAGUIMIAN

CITY OF LOS ANGELES
CALIFORNIA

ERIC GARCETTI
MAYOR

DEPARTMENT OF BUILDING AND SAFETY
201 NORTH FIGUEROA STREET
LOS ANGELES, CA 90012

OSAMA YOUNAN, P.E.
GENERAL MANAGER
SUPERINTENDENT OF BUILDING

JOHN WEIGHT
EXECUTIVE OFFICER

GEOLOGY AND SOILS REPORT APPROVAL LETTER

November 16, 2022

LOG #123515
SOILS/GEOLOGY FILE - 2

City of Los Angeles, Department of Recreation and Parks
221 N. Figueroa Street, Ste. 400
Los Angeles, CA 90012

TRACT: 1212
LOTS: FR 12 (Arb. 1) & PT 13 (Arb. 1)
LOCATION: 8041 N. Whitsett Avenue

CURRENT REFERENCE REPORT/LETTER(S)	REPORT No.	DATE OF DOCUMENT	PREPARED BY
Geology/Soils Report	211294001	08/31/2020	Ninyo & Moore

The Grading Division of the Department of Building and Safety has reviewed the referenced report that provides recommendations for a proposed stormwater capture and infiltration system to be constructed at Strathern Park North. According to the report, the proposed facility is intended to capture up to 968,000 cubic-feet of stormwater runoff by diversion structures, water storage structures and infiltration devices. Several alternative designs are being considered. The first of which is a subterranean infiltration gallery about 73,000 square feet in area with an internal height of 14 feet and an invert depth of about 18 feet.

The earth materials at the subsurface exploration locations consist of 3 to 13 feet of uncertified fill underlain by alluvium. The alluvium consists generally of poorly graded sand with variable silt and gravel. Exploration consisted of nine hollow-stem auger (HSA) borings from 17.5 to 70.5 feet in depth, six CPT soundings from about 48 to 50 feet in depth, and six test pits from 9.5 to 10 feet in depth. Six percolation tests were conducted in the borings. Percolation test results ranged from 11.2 to 41.5 inches/hour, based on constant head percolation tests. Given a long-term reduction factor, the design percolation rate is 4 inches/hour.

According to the consultants, groundwater was not encountered to the maximum depth explored of 70.5 feet, and historically highest groundwater level is between 110 and 120 feet below the ground surface. The site is relatively level.

The consultants recommend to support the proposed structure(s) on conventional and mat foundations bearing on native undisturbed soils and/or properly placed fill. Temporary excavations

of about 20 feet are to be trimmed at a gradient of 1.5:1 (H:V). Shoring recommendations are provided for deeper excavations.

The referenced report is acceptable, provided the following conditions are complied with during site development:

(Note: Numbers in parenthesis ( ) refer to applicable sections of the 2020 City of LA Building Code. P/BC numbers refer the applicable Information Bulletin. Information Bulletins can be accessed on the internet at LADBS.ORG.)

1. The geologist and soils engineer shall review and approve the detailed plans prior to issuance of any permits. This approval shall be by signature on the plans that clearly indicates the geologist and soils engineer have reviewed the plans prepared by the design engineer; and, that the plans include the recommendations contained in their reports (7006.1).
2. All recommendations of the report(s) that are in addition to or more restrictive than the conditions contained herein shall be incorporated into the plans.
3. A copy of the subject and appropriate referenced reports and this approval letter shall be attached to the District Office and field set of plans (7006.1). Submit one copy of the above reports to the Building Department Plan Checker prior to issuance of the permit.
4. A grading permit shall be obtained for all structural fill and retaining wall backfill (106.1.2).
5. All man-made fill shall be compacted to a minimum 90 percent of the maximum dry density of the fill material per the latest version of ASTM D 1557. Where cohesionless soil having less than 15 percent finer than 0.005 millimeters is used for fill, it shall be compacted to a minimum of 95 percent relative compaction based on maximum dry density. Placement of gravel in lieu of compacted fill is only allowed if complying with LAMC Section 91.7011.3.
6. If import soils are used, no footings shall be poured until the soils engineer has submitted a compaction report containing in-place shear test data and settlement data to the Grading Division of the Department; and, obtained approval (7008.2).
7. Compacted fill shall extend beyond the footings a minimum distance equal to the depth of the fill below the bottom of footings or a minimum of three feet, whichever is greater (7011.3).
8. Existing uncertified fill shall not be used for support of footings, concrete slabs or new fill (1809.2, 7011.3).
9. Drainage in conformance with the provisions of the Code shall be maintained during and subsequent to construction (7013.12).
10. Grading shall be scheduled for completion prior to the start of the rainy season, or detailed temporary erosion control plans shall be filed in a manner satisfactory to the Grading Division of the Department and the Department of Public Works, Bureau of Engineering, B-Permit Section, for any grading work in excess of 200 cubic yards (7007.1).

6262 Van Nuys Blvd. Ste 351, Van Nuys (818) 374-4605

11. **The applicant is advised that the approval of this report does not waive the requirements for excavations contained in the General Safety Orders of the California Department of Industrial Relations (3301.1).**
12. **Temporary excavations that remove lateral support to the public way, adjacent property, or adjacent structures shall be supported by shoring, as recommended. Note: Lateral support shall be considered to be removed when the excavation extends below a plane projected downward at an angle of 45 degrees from the bottom of a footing of an existing structure, from the edge of the public way or an adjacent property. (3307.3.1)**
13. **Prior to the issuance of any permit that authorizes an excavation where the excavation is to be of a greater depth than are the walls or foundation of any adjoining building or structure and located closer to the property line than the depth of the excavation, the owner of the subject site shall provide the Department with evidence that the adjacent property owner has been given a 30-day written notice of such intent to make an excavation (3307.1).**
14. **The soils engineer shall review and approve the shoring plans prior to issuance of the permit (3307.3.2).**
15. **Prior to the issuance of the permits, the soils engineer and/or the structural designer shall evaluate the surcharge loads used in the report calculations for the design of the retaining walls and shoring. If the surcharge loads used in the calculations do not conform to the actual surcharge loads, the soil engineer shall submit a supplementary report with revised recommendations to the Department for approval.**
16. **Unsurcharged temporary excavations up to 20 feet shall be trimmed back at a gradient not exceeding 1.5:1, as recommended.**
17. **Shoring shall be designed for the lateral earth pressures specified on Figures 9 and 10 of the 08/31/2020 report; all surcharge loads shall be included into the design. Total lateral load on shoring piles shall be determined by multiplying the recommended EFP by the pile spacing.**
18. **Shoring shall be designed for a maximum lateral deflection of 1 inch, provided there are no structures within a 1:1 plane projected up from the base of the excavation. Where a structure is within a 1:1 plane projected up from the base of the excavation, shoring shall be designed for a maximum lateral deflection of ½ inch, or to a lower deflection determined by the consultant that does not present any potential hazard to the adjacent structure.**
19. **A shoring monitoring program shall be implemented to the satisfaction of the soils engineer.**
20. **All foundations shall derive entire support from native undisturbed soils and/or properly placed fill, as recommended and approved by the geologist and soils engineer by inspection.**
21. **Footings supported on approved compacted fill or expansive soil shall be reinforced with a minimum of four (4), ½-inch diameter (#4) deformed reinforcing bars. Two (2) bars shall be placed near the bottom and two (2) bars placed near the top of the footing.**

22. **The seismic design shall be based on a Site Class D, as recommended. All other seismic design parameters shall be reviewed by LADBS building plan check.**
23. **The seismic design parameters shown on Table 2 (page 20) of the 08/31/2020 report may be used in the design.**
24. **Retaining walls shall be designed for the lateral earth pressures specified on Figure 11 of the 08/31/2020 report. All surcharge loads shall be included into the design.**
25. **All retaining walls shall be provided with a standard surface backdrain system and all drainage shall be conducted in a non-erosive device to the street in an acceptable manner (7013.11).**
26. **With the exception of retaining walls designed for hydrostatic pressure, all retaining walls shall be provided with a subdrain system to prevent possible hydrostatic pressure behind the wall. Prior to issuance of any permit, the retaining wall subdrain system recommended in the soils report shall be incorporated into the foundation plan which shall be reviewed and approved by the soils engineer of record (1805.4).**
27. **Installation of the subdrain system shall be inspected and approved by the soils engineer of record and the City grading/building inspector (108.9).**
28. **Prefabricated drainage composites (Miradrain, Geotextiles) may be only used in addition to traditionally accepted methods of draining retained earth.**
29. **The infiltration facility design and construction shall comply with the minimum requirements specified in the Information Bulletin P/BC 2020-118.**
30. **The infiltration system shall be constructed at the location shown on the drawing attached to the current report.**
31. **The construction of the infiltration system shall be provided under the inspection and approval of the soils engineer.**
32. **An overflow outlet shall be provided to conduct water to the street in the event that the infiltration system capacity is exceeded. (P/BC 2020-118)**
33. **Approval for the proposed infiltration system from the Bureau of Sanitation, Department of Public Works shall be secured.**
34. **A minimum distance of 10 feet (in any direction) shall be provided from adjacent proposed/existing footings to the discharge of the proposed infiltration system. A minimum distance of 10 feet horizontally shall be provided from private property lines to the proposed infiltration system.**
35. **In the event dry wells are planned, then the dry well area between the blank casing and the surround soils shall be sealed to a minimum depth of 10 feet below the bottom of any adjacent foundation with bentonite slurry (or equivalent) to prevent unintended leakage or horizontal infiltration.**
36. **All concentrated drainage shall be conducted in an approved device and disposed of in a manner approved by the LADBS (7013.10).**

37. Any recommendations prepared by the geologist and/or the soils engineer for correction of geological hazards found during grading shall be submitted to the Grading Division of the Department for approval prior to use in the field (7008.2, 7008.3).
38. The geologist or soils engineer shall inspect all excavations to determine that conditions anticipated in the report have been encountered and to provide recommendations for the correction of hazards found during grading (7008, 1705.6 & 1705.8).
39. Prior to pouring concrete, a representative of the consulting soils engineer shall inspect and approve the footing excavations. The representative shall post a notice on the job site for the LADBS Inspector and the Contractor stating that the work inspected meets the conditions of the report. No concrete shall be poured until the LADBS Inspector has also inspected and approved the footing excavations. A written certification to this effect shall be filed with the Grading Division of the Department upon completion of the work. (108.9 & 7008.2)
40. Prior to excavation an initial inspection shall be called with the LADBS Inspector. During the initial inspection, the sequence of construction; shoring; protection fences; and, dust and traffic control will be scheduled (108.9.1).
41. Installation of shoring shall be performed under the inspection and approval of the soils engineer and deputy grading inspector (1705.6, 1705.8).
42. Prior to the placing of compacted fill, a representative of the soils engineer shall inspect and approve the bottom excavations. The representative shall post a notice on the job site for the LADBS Inspector and the Contractor stating that the soil inspected meets the conditions of the report. No fill shall be placed until the LADBS Inspector has also inspected and approved the bottom excavations. A written certification to this effect shall be included in the final compaction report filed with the Grading Division of the Department. All fill shall be placed under the inspection and approval of the soils engineer. A compaction report together with the approved soil report and Department approval letter shall be submitted to the Grading Division of the Department upon completion of the compaction. In addition, an Engineer's Certificate of Compliance with the legal description as indicated in the grading permit and the permit number shall be included (7011.3).
43. No footing/slab shall be poured until the compaction report is submitted and approved by the Grading Division of the Department.

DANIEL C. SCHNEIDEREIT
Engineering Geologist II

GLEN RAAD
Geotechnical Engineer I

DCS/GR:dcs/gr
Log No. 123515
213-482-0480

cc: Paul Caswell, Applicant
Ninyo & Moore, Project Consultant
VN District Office

CITY OF LOS ANGELES
DEPARTMENT OF BUILDING AND SAFETY
Grading Division

District: VN Log No.: 123515

APPLICATION FOR REVIEW OF TECHNICAL REPORTS

INSTRUCTIONS
A. Address all communications to the Grading Division, LADBS, 221 N. Figueroa St., 12th Fl., Los Angeles, CA 90012
Telephone No. (213)482-0480.
B. Submit two copies (three for subdivisions) of reports, one "pdf" copy of the report on a CD-Rom or flash drive, and one copy of application with items "1" through "10" completed.
C. Check should be made to the City of Los Angeles.

1. LEGAL DESCRIPTION
Tract: TR 1212
Block: Lots: 12
3. OWNER: City of LA
Address: 0 PO Box 51111
City: Los Angeles Zip: 90051
Phone (Daytime):

2. PROJECT ADDRESS:
8041NWhitsettAve
4. APPLICANT: Paul Caswell
Address: 600 Wilshire Blvd
City: Los Angeles Zip: 90029
Phone (Daytime): 2134572170
E-mail address: caswellpb@cdmsmith.com

5. Report(s) Prepared by: Ninyo & Moore
6. Report Date(s): August 31, 2020
7. Status of project: ☑ Proposed ☐ Under Construction ☐ Storm Damage
8. Previous site reports? ☐ YES If yes, give date(s) of report(s) and name of company who prepared report(s)
9. Previous Department actions? ☐ YES If yes, provide dates and attach a copy to expedite processing.
Dates:
10. Applicant Signature: Position: Engineer

[DEPARTMENT USE ONLY]

REVIEW REQUESTED	FEES	REVIEW REQUESTED	FEES
☐ Soils Engineering		No. of Lots	
☐ Geology		No. of Acres	
☑ Combined Soils Engr. & Geol.	726	☐ Division of Land	
☐ Supplemental		Other	
☐ Combined Supplemental		☑ Expedite	363
☐ Import-Export Route		☐ Response to Correction	
Cubic Yards:		☐ Expedite ONLY	
		Sub-total	1089 —
		Surcharge	249.58
		TOTAL FEE	1338.58

Fee Due: 1338.58
Fee Verified By: ML Date: 10/6/22
(Cashier Use Only)
receipt # 1414274H
pd 10/18/22

ACTION BY:
THE REPORT IS: ☐ NOT APPROVED
☐ APPROVED WITH CONDITIONS ☐ BELOW ☐ ATTACHED

For Geology Date

For Soils Date

PC-GI040 Appl1 (Rev 01/01/2017) Page 1 of 1 www.ladbs.org

THIS PLAN WAS ELECTRONICALLY • SIGNED AND STAMPED

ENGINEERING
CITY OF LOS ANGELES

REGISTERED PROFESSIONAL ENGINEER
TED S. ALLEN
No. C 48973
EXP. 09/30/2026
CIVIL
STATE OF CALIFORNIA
04/04/2023

BUREAU OF ENGINEERING

VERTICAL CONTROL:	BENCH MARK 08-30460 (NAVD 88)
HORIZONTAL CONTROL:	CALIFORNIA STATE PLANE ZONE V, 1983 NAD
SHEET TITLE:	STORMWATER AND GROUNDWATER DOCUMENTATION 1
PROJECT:	STRATHERN PARK NORTH STORMWATER CAPTURE PROJECT
ADDRESS:	STRATHERN PARK NORTH 8041 WHISETT AVE, NORTH HOLLYWOOD, CA 91605

NO.	REVISIONS	DATE	BY
		YY/MM/DD	
		YY/MM/DD	
		YY/MM/DD	
		YY/MM/DD	

CIP NO. SCP0003

INDEX NO.

CITY OF LOS ANGELES DEPARTMENT OF PUBLIC WORKS

CITY ENGINEER: TED ALLEN, P.E. DATE

DESIGN GROUP

ENGINEER:
ARCHITECT:
DESIGNED BY:
DRAWN BY:
CHECKED BY:
APPROVED BY:

WORK ORDER
EW40080F

SHEET NAME
GI02A
SHEET 2A OF 85 SHEETS

THE CITY OF LOS ANGELES OR ITS OFFICERS OR AGENTS SHALL NOT BE RESPONSIBLE FOR THE ACCURACY OR COMPLETENESS OF ELECTRONIC COPIES OF THIS PLAN SHEET.

REVISION DATES (DESIGN STAGE ONLY)

SHEET VERSION 4.0.1 FILE PATH: C:\CDMEXT\VINODA\D0499408\GI002A.DWG PLOT DATE: 10/9/2024 3:57 PM SAVED: 10/7/2024 12:39 PM SAVED BY:VINODA

Low Impact Development (LID)
Post Construction Stormwater Mitigation
Best Management Practices (BMPs)

STORMWATER BMP(s) VERIFICATION

Upon installation of the approved stormwater BMPs, a Stormwater Observation Report (SOR) Form shall be submitted to Department of Public Works, Bureau of Sanitation. 201 N. Figueroa, 3rd floor, station 18. The SOR Form must be with filed and approved by the Bureau of Sanitation prior to the issuance of a Certificate of Occupancy.

Project Address: 041 Whitsett Ave, North Hollywood, CA 91605

RESIDENTIAL (4 UNITS OR LESS, <10,000SF, < 2,500 SF within a ESA)

Item #	Stormwater BMP	Description (Units, total)	Reference Sheet(s)* (Sheet #)
1	Rain Tank(s) – 55 to 130 gal each		
2	Rain Tank(s) – > 130 gal min		
3	Shade Tree - min 15 gal		
4	Flow thru Planter(s)		
5	Permeable pavers / Porous concrete (min 10% open space)	☐ Incidental; _____ total SF ☐ Infiltration; _____ total SF	
6	Rain Garden	☐ #____ - Lined; _____ total SF ☐ #____ - Unlined; _____ total SF	
7	Dry Well		
8	SUMP Pump (modification was not required)		

ALL OTHER DEVELOPMENT
(Residential: 5 ≥ units, 10,000 ≥ SF, within a ESA and ≥2,500SF)

	Item #	Stormwater BMP	Description (Units, total)	Reference Sheet(s)* (Sheet #)
Infiltration	1	Infiltration Basin / Trench	Underground Infiltration Gallery (66,767 SF)	CI01 - CI21
	2	Dry Well		
	3	Permeable pavers / Porous concrete (min 10% open space)	☐ Incidental; _____ total SF ☐ Infiltration; _____ total SF	
Capture & Use	4	Rain Tank(s) – 530 gal min		
	5	Cistern	☐ Above Grade ☐ Below Grade	
Treat & Discharge	6	Flow thru Planter(s)		
	7	Biofiltration	☐ #____ - Lined; _____ total SF ☐ #____ - Unlined; _____ total SF	
	8	Vegetative Swale / Filter Strip		
	9	Hydrodynamic Separator	20' x 10' x 15'	CU01, CI13
	10	Trench Drain Filter(s)		
	11	Down Spout Filter(s)		
	12	SUMP Pump (modification was not required)		

* At a minimum: Site Plan, Architectural Elevations, Roof Plan, Civil Sheets and Detail

LA DWP Los Angeles Department of Water & Power
CUSTOMERS FIRST

Eric Garcetti, Mayor

Board of Commissioners
Mel Levine, President
Cynthia McClain-Hill, Vice President
Jill Banks Barad
Christina E. Noonan
Susana Reyes
Susan A. Rodriguez, Secretary

Martin L. Adams, General Manager and Chief Engineer

November 25, 2019

Safe, Clean Water Program
Upper Los Angeles River WASC
900 South Fremont Avenue
Alhambra, California 91803

Dear SCW Program Administrators:

Subject: Strathern Park North Stormwater Capture Project Water Supply Benefits

The Strathern Park North Stormwater Capture Project (Project) is located north of Strathern Street and west of Whitsett Avenue in the Sun Valley Neighborhood of the San Fernando Valley. This Project will treat and capture stormwater runoff from a 485-acre tributary area in the upper Tujunga Wash Watershed and help recharge the San Fernando Groundwater Basin.

The Project is part of the Los Angeles Department of Water and Power's Stormwater Capture Program (Program), an important element to the overall long term plan to enhance the local water supply. The principle of the Program involves capturing precious rainfall and runoff from open space and urban lands for either direct use or infiltration to help improve the health of the groundwater basins.

The Project will capture and infiltrate stormwater through a diversion structure, catch basin, hydrodynamic separator, pump station, and an underground infiltration gallery to recharge the San Fernando Groundwater Basin. The Project's estimated annual capture volume was modeled using the EPA's Storm Water Management Model (SWMM 5.1) using 10-year historical rain data (1997-2007) from the City of Burbank's Valley Pumping Plant rain gage (COOP:041194). The simulation estimated a wet weather yield of 271 acre-feet per year (AFY), while dry weather runoff was estimated to be 23 AFY. This is based on low flow diversion monitoring data from 2012 to 2016, where the median value for dry weather runoff is approximately 84 gallons per day per impervious acre of land. The combined total estimated runoff is 294 AFY. SWMM results are attached in Section 2.4.

STORMWATER OBSERVATION REPORT FORM

(Residential ≥ 5 units & All other Development)

LOW IMPACT DEVELOPMENT

IN THE EVENT THAT THE APPROVED STORMWATER BMP CANNOT BE BUILT PER PLANS (OR ANY MODIFICATION), CONSULT WITH BUREAU OF SANITATION STAFF PRIOR TO ANY PLAN MODIFICATIONS. FAILURE TO DO SO MAY DELAY OBTAINING A FINAL APPROVAL AND CERTIFICATE OF OCCUPANCY (C OF O).

STORMWATER OBSERVATION *means the visual observation of the stormwater related Best Management Practices (BMPs) for conformance with the approved LID Plan at significant construction stages and at completion of the project. Stormwater observation does not include or waive the responsibility for the inspections required by Section 108 or other sections of the City of Los Angeles Building Code.*

STORMWATER OBSERVATION *must be performed by the engineer or architect responsible for the approved LID Plan or designated staff in their employment.* ***As part of the observation, provide photos of the BMPs taken during various construction phases.***

STORMWATER OBSERVATION REPORT *must be signed and stamped (see below) by the engineer or architect responsible for the approved LID Plan and submitted to the city prior to the issuance to the certificate of occupancy.* ***PRIOR TO CERTIFICATE OF OCCUPANCY (C of O), SOR FORM, PRINTED PHOTOS OF THE BMPS TAKEN DURING VARIOUS CONSTRUCTION PHASES AND APPROVED STAMPED PLANS BY THE BUREAU OF SANITATION MUST BE SUBMITTED TO THE PUBLIC COUNTER FOR STAFF APPROVAL.***

Project Address:	Building Permit No.:
8041 Whitsett Ave, North Hollywood, CA 91605	22030-10000-04538
Name of Engineer/Architect responsible for the approved LID Plan: Anthony S. Dellinger	Phone Number: (213) 792-4591

List all BMPs installed as part of the project: Coordinates of the most significant (or typical) BMPs:

Underground Infiltration Gallery BMP Type: 62,174 SF # of units: 1 Lat: 34.22939 ; Long: -118.40271	Hydrodynamic Separator BMP Type: 20' x 10' x 15' # of units: 1 Lat: 34.217765 ; Long: -118.40795
BMP Type: _____ # of units: ____ Lat: _____ ; Long: _____	BMP Type: _____ # of units: ____ Lat: _____ ; Long: _____

I DECLARE THAT THE FOLLOWING STATEMENTS ARE TRUE TO THE BEST OF MY KNOWLEDGE:

1. I am the engineer or architect responsible for the approved LID Plan, and;
2. I, or designated staff under my responsible charge, has preformed the required site visits at each significant construction stage and at the completion to verify that the Best Management Practices (BMPs) as shown on approved plans have been constructed and installed in accordance with the approved LID Plan.

Wet Stamp of Engineer or Architect

Signature Date

SCW Program Administrators
November 25, 2019
Page 2

The infiltration substructure was sized to retain the 85th percentile, 24 hour volume, using the Los Angeles County Department of Public Works HydroCalc Calculator software (version 1.0.3). The Project's peak inflow rate was estimated to be 28.9 cubic feet per second (cfs) and has a total 24 hour clear runoff volume of 22.4 acre-feet (AF). The Project will be designed to capture the 28.9 cfs inflow rate and 22.4 AF runoff volume parameters.

Fully endorsed by the Upper Los Angeles River Area (ULARA) Watermaster, projects such as the Strathern Park North Stormwater Capture Project are key to restoring and maintaining the health of the San Fernando Basin. This Project provides excellent capture, water supply, and other multi-benefits to help achieve the objectives of the Los Angeles County, as defined by the Safe, Clean Water Program Ordinance.

If you have any questions or require additional information, please contact me at (213) 367-1289.

Sincerely,

Rafael Villegas,
Manager of Water Rights and Groundwater Management

CM:lb
c: Rafael Villegas
Conor Mossavi

THIS PLAN WAS ELECTRONICALLY • SIGNED AND STAMPED

ENGINEERING
CITY OF LOS ANGELES

REGISTERED PROFESSIONAL ENGINEER ANTHONY S. DELLINGER No. C 48973 EXP. 06/30/2026 STATE OF CALIFORNIA
04/04/2023

BUREAU OF ENGINEERING

VERTICAL CONTROL: BENCH MARK 08-30460 (NAVD 88)
HORIZONTAL CONTROL: CALIFORNIA STATE PLANE ZONE V, 1983 NAD

SHEET TITLE: STORMWATER AND GROUNDWATER DOCUMENTATION 2
PROJECT: STRATHERN PARK NORTH STORMWATER CAPTURE PROJECT
ADDRESS: STRATHERN PARK NORTH 8041 WHISETT AVE, NORTH HOLLYWOOD, CA 91605

NO	REVISIONS	DATE	BY
		YY/MM/DD	
		YY/MM/DD	
		YY/MM/DD	
		YY/MM/DD	

CIP NO. SCP0003

INDEX NO.

CITY OF LOS ANGELES DEPARTMENT OF PUBLIC WORKS

CITY ENGINEER: TED ALLEN, P.E. DATE

DESIGN GROUP
ENGINEER:
ARCHITECT:
DESIGNED BY:
DRAWN BY:
CHECKED BY:
APPROVED BY:

WORK ORDER EW40080F

SHEET NAME GI02B

SHEET 2B OF 85 SHEETS

THE CITY OF LOS ANGELES OR ITS OFFICERS OR AGENTS SHALL NOT BE RESPONSIBLE FOR THE ACCURACY OR COMPLETENESS OF ELECTRONIC COPIES OF THIS PLAN SHEET.

REVISION DATES (DESIGN STAGE ONLY)

SHEET VERSION 4.0.1 FILE PATH: C:\CDMEXT\VINODA\D0499408\GI002B.DWG PLOT DATE: 10/9/2024 3:58 PM SAVED: 10/7/2024 12:39 PM SAVED BY:PAVITHRAB

GENERAL NOTES

1. THESE IMPROVEMENTS CONSIST OF WORK CALLED FOR ONLY ON THIS PLAN. THE PLAN REFERS TO THE CONTRACT DRAWINGS, SPECIFICATIONS, AND SCHEDULE OF WORK INCLUDED HEREIN.
2. THE CONTRACTOR SHALL CONFORM TO THE GENERAL CONDITIONS AND GENERAL REQUIREMENTS, THE LATEST EDITION AND SUPPLEMENTS OF THE STANDARD SPECIFICATIONS FOR PUBLIC WORKS CONSTRUCTION, SSPWC PARTS 2-6, HEREINAFTER ADOPTED BY THE BOARD OF PUBLIC WORKS AND THE CITY OF LOS ANGELES INCLUDING THE CITY OF LOS ANGELES DEPARTMENT OF PUBLIC WORKS SSPWC ADDITIONS AND AMENDMENTS (BROWN BOOK), LATEST EDITION.
3. THE CONTRACTOR IS REQUIRED TO PARTICIPATE AT ALL PUBLIC RELATIONS AND COMMUNITY MEETINGS UNLESS EXCUSED BY THE CITY.
4. ALL CONSTRUCTION SHALL CONFORM TO THE 2020 CITY OF LOS ANGELES BUILDING CODE.
5. THE CONTRACTOR SHALL COMPLY WITH ALL APPLICABLE ADA REQUIREMENTS FROM THE 2021 STANDARDS FOR ACCESSIBLE DESIGN.
6. ALIGNMENT AND LOCATION OF EXISTING STRUCTURES AND UTILITIES HAVE BEEN COMPILED WITH THE MOST ACCURATE INFORMATION AVAILABLE. ACTUAL DIMENSIONS, LOCATIONS, ELEVATIONS, ETC. MAY VARY. THE CONTRACTOR SHALL VERIFY EXISTING FIELD CONDITIONS AND BASE WORK ON ACTUAL ON-SITE CONDITIONS AND MEASUREMENTS. ANY DISCREPANCIES, OMISSIONS OR ERRORS ON THE DRAWINGS SHALL BE BROUGHT TO THE ATTENTION OF THE ENGINEER WITH 14 DAYS NOTICE OF CONSTRUCTION IN THAT LOCATION. THE CONTRACTOR SHALL ASSUME FULL RESPONSIBILITY OF ALL REVISIONS DUE TO FAILURE TO GIVE SUCH NOTICE.
7. THE CONTRACTOR IS REQUIRED TO TAKE DUE PRECAUTIONARY MEASURES TO PROTECT THE UTILITY LINES SHOWN AND OTHER STRUCTURES NOT ON RECORD OR NOT SHOWN ON THESE PLANS. WHERE CONSTRUCTION, INCLUDING UTILITY LINES, CROSSES OR IS ADJACENT TO EXISTING UTILITY LINES (FUEL, WATER, SEWER, TELECOMMUNICATION, GAS, OR ELECTRIC), THE CONTRACTOR SHALL DIG TEST PITS AND CAREFULLY HAND EXCAVATE SO AS TO LOCATE, MARK, AND PROTECT THE UTILITY LINES AGAINST DISTURBANCE OR DAMAGE.
8. THE CONTRACTOR IS REQUIRED TO CONTACT UNDERGROUND SERVICE ALERT (USA) FOR UTILITY MARKINGS. CONTACTING USA AT 8-1-1 DOES NOT RELIEVE THE CONTRACTOR OF CONTACTING OWNERS OF NON-PRESSURE CONDUITS, WHO MAY NOT BE REQUIRED TO BE MEMBERS OF USA. THEREFORE, INDIVIDUAL CONTACTS TO SUCH OWNERS ARE REQUIRED.
9. THE CONTRACTOR SHALL GIVE A 30 DAY NOTICE TO PROPERTY OWNERS OR OCCUPANTS OF THE PROPOSED IMPROVEMENTS FRONTING THEIR PROPERTY. THE CONTRACTOR SHALL OBTAIN A CITY-APPROVED "NOTICE OF PROPOSED UTILITY WORK" FROM THE ENGINEER AND DISTRIBUTE COPIES NO LATER THAN 10 CALENDAR DAYS PRIOR TO COMMENCEMENT OF CONSTRUCTION IN ACCORDANCE WITH THE REQUIREMENTS OF THE PROJECT MANUAL. NOTICES ARE NOT TO BE PLACED IN OR ATTACHED TO MAIL BOXES.
10. FOR DESCRIPTION OF SUBSURFACE CONDITIONS, REFER TO THE FOLLOWING NINYO AND MOORE REPORT: GEOTECHNICAL EVALUATION LABOE TOS NO. 25 STORMWATER CAPTURE PARKS PROGRAM STRATHERN PARK NORTH, DATED AUGUST 31, 2020, IN THE SPECIFICATION APPENDIX.
11. THE CONTRACTOR SHALL CONTACT NINYO AND MOORE (949) 753-7070 AT LEAST TWO WORKING DAYS IN ADVANCE OF REQUIRED OBSERVATIONS OR INSPECTIONS BY THE GEOTECHNICAL ENGINEER.
12. UNLESS OTHERWISE SPECIFIED IN CONTRACT DOCUMENTS, ALL WORK SHALL CONFORM TO REQUIREMENTS OF THE SSPWC PARTS 2-6, THE BROWN BOOK (THE CITY'S SUPPLEMENT TO THE SSPWC), AND CITY STANDARD PLANS.
13. GEOTECHNICAL OBSERVATION AND TESTING OF MATERIALS SHALL BE DONE IN ACCORDANCE WITH SPECIFICATIONS SECTION 01453 SAMPLING, TESTING, AND FABRICATION AND SECTION 01712 SUBSURFACE CONDITIONS.
14. REFER TO GENERAL REQUIREMENTS SECTION 01452 OF THE SPECIFICATIONS FOR INSPECTION REQUIREMENTS.
15. IT IS EXPECTED THAT THE CONTRACTOR MUST PROVIDE SPECIAL PRECAUTIONS FOR WORKER PROTECTION. THESE DEVICES MAY INCLUDE BUT ARE NOT LIMITED TO PROTECTIVE CANOPIES AND SHORING.
16. THE CONTRACTOR SHALL BE RESPONSIBLE FOR ADEQUATELY BRACING AND PROTECTING ALL WORK DURING CONSTRUCTION AGAINST DAMAGE, BREAKAGE, COLLAPSE, DISTORTIONS AND OFF ALIGNMENTS ACCORDING TO CODES AND STANDARDS OF GOOD PRACTICE.
17. AT LEAST THIRTY (30) DAYS BEFORE THE START OF CONSTRUCTION, THE CONTRACTOR/ENGINEER SHALL CONTACT THE BUREAU OF STREET SERVICES, COORDINATING SECTION AT (213) 485-5691 TO VERIFY THAT THERE IS NO PROPOSED PROJECT IN THIS AREA.
18. SURVEY MONUMENT PRESERVATION IS REQUIRED AND SHALL INCLUDE SUBMITTAL OF PRE AND POST CONSTRUCTION SURVEY MONUMENT TIES TO THE ENGINEER AS SPECIFIED IN SPECIFICATION SECTION 01722.
19. THE CONTRACTOR MUST MAINTAIN FLOOD CAPACITY AT ALL TIMES DURING CONSTRUCTION. THE CONTRACTOR SHALL BE RESPONSIBLE FOR THE ACCEPTANCE AND CONTROL OF ALL SURFACE AND SUBSURFACE DRAINAGE AND GROUNDWATER ENTERING THE PROJECT AREA. REFER TO SECTION 02235 OF THE SPECIFICATIONS FOR DEWATERING REQUIREMENTS; AND GENERAL REQUIREMENTS SECTION 01112 FOR STORM DRAIN AND DRY WEATHER FLOWS.
20. THE CONTRACTOR SHALL CONDUCT ALL GRADING AND PLANTING OPERATIONS IN ACCORDANCE WITH ALL REQUIRED PERMITS. FOR A LIST OF THE PERMITS, REFER TO SPECIFICATIONS SECTION 01112.
21. CONTRACTOR IS RESPONSIBLE FOR STAKING THE LINE AND GRADE SHOWN ON THE DRAWINGS, PRIOR TO PROCEEDING WITH CONSTRUCTION. THIS WORK INCLUDES, BUT IS NOT LIMITED TO, LOCATION OF ALL PLANTING TYPES. ANY ERRORS OR OMISSIONS ON THE CONSTRUCTION DRAWINGS SHALL BE BROUGHT TO THE IMMEDIATE ATTENTION OF THE ENGINEER. FAILURE TO DO SO DOES NOT RELIEVE THE CONTRACTOR FROM COMPLETING THE WORK AS REQUIRED. ENGINEER WILL REVIEW AND APPROVE IN WRITING PLANTING LAYOUT IN THE FIELD.
22. THE PHYSICAL FEATURES WITHIN THE LIMITS OF THE MAPPING HAVE BEEN SHOWN BASED ON PHOTOGRAMMETRIC MAPPING PROCEDURES AND NATIONAL STANDARDS. DISCONTINUITIES IN CONTOURS ARE THE RESULT OF MAPPING PRODUCED AT DIFFERENT DATES AND USING ALTERNATIVE METHODS (FOR EXAMPLE, AERIAL PHOTOGRAPHY, GROUND SURVEYS, AND ONE (1) FOOT VERSUS FIVE (5) FOOT CONTOUR MAPPING ACCURACIES.)
23. THE CONTRACTOR SHALL BE RESPONSIBLE FOR RESETTING SURVEY CONTROL MONUMENTS DISTURBED BY CONSTRUCTION AS NECESSARY.
24. THE CONTRACTOR SHALL LIMIT CONSTRUCTION AND ANCILLARY ACTIVITIES TO THOSE AREAS WITHIN THE LIMITS OF GRADING AS INDICATED BY THE DAYLIGHT LINE SHOWN ON THE PLANS AND CROSS SECTIONS WITH THE EXCEPTION OF LANDSCAPE AND RESTORATION ACTIVITIES OUTSIDE LIMITS OF GRADING. ANY DISTURBANCE BEYOND THESE LIMITS SHALL BE RESTORED TO ORIGINAL CONDITION BY THE CONTRACTOR AT HIS EXPENSE.
25. PRIOR TO STARTING ANY CONSTRUCTION ACTIVITY, THE CONTRACTOR SHALL COORDINATE AND ATTEND A PRE-CONSTRUCTION MEETING. REFER TO SECTION 01312 IN THE SPECIFICATIONS FOR MEETING REQUIREMENTS.
26. THE TOP ELEVATION OF ALL EXISTING HANDHOLES, MANHOLES, CATCH BASINS, VALVE BOXES, AND FILL CAPS COVERS LOCATED WITHIN THE CONSTRUCTION AREA SHALL BE FLUSH WITH THE PROPOSED GRADE. IF ANY STRUCTURE IS TO BE RESET, CONTRACTOR TO NOTIFY THE ENGINEER IMMEDIATELY PRIOR TO RESETTING.
27. UNSUITABLE MATERIAL, REMOVED VEGETATION, CONSTRUCTION DEBRIS, ETC. SHALL BE PROPERLY REMOVED AND DISPOSED OF OFF-SITE IN ACCORDANCE WITH APPLICABLE FEDERAL, STATE AND LOCAL CODES, ORDINANCES, AND LAWS.
28. THE CONTRACTOR SHALL BE RESPONSIBLE FOR DETERMINING ADEQUATE METHODS AND MEANS OF COMPLETION OF THE WORK PRIOR TO THE COMMENCEMENT OF CONSTRUCTION AND NOTIFY THE ENGINEER IF A CONFLICT IS IDENTIFIED.
29. THE CONTRACTOR SHALL REPLACE ALL PAVING, STABILIZING EARTH, DRIVEWAYS, SIDEWALKS, CONCRETE CURB, ETC. WITH THE SAME TYPE OF MATERIAL THAT WAS DAMAGED DURING CONSTRUCTION OR AS DIRECTED BY THE ENGINEER.
30. ANY POTENTIAL PERMITS FOR DEWATERING ARE THE RESPONSIBILITY OF THE CONTRACTOR, INCLUDING THE PROPER USE AND DISCHARGE OF DEWATERING FLOWS TO MEET ALL WATER QUALITY REQUIREMENTS. THE CONTRACTOR MAY NOT DRAW DOWN GROUNDWATER LEVELS OFFSITE UNLESS PERMITTED BY THE APPLICABLE AGENCIES AND WITH PERMISSION OF THE AFFECTED LANDOWNERS. IF DEWATERING IS NEEDED, A DEWATERING PLAN SIGNED AND STAMPED BY A CALIFORNIA CERTIFIED HYDROGEOLOGIST SHALL BE REVIEWED BY THE BOE-GEOLOGIST. REFER TO SPECIFICATION SECTION 02235 FOR DEWATERING REQUIREMENTS. THE CONTRACTOR SHALL BE RESPONSIBLE FOR CONTROLLING, TREATMENT, AND DISPOSAL OF ALL GROUNDWATER ENCOUNTERED DURING CONSTRUCTION.
31. REFER TO SPECIFICATION SECTION 01562 FOR REQUIRED ENVIRONMENTAL MITIGATION MEASURES AND CONSTRUCTION CONSTRAINTS. MITIGATION MEASURES INCLUDE MEASURES TO REDUCE CONSTRUCTION IMPACT ON AIR QUALITY, BIOLOGICAL RESOURCES, CULTURAL RESOURCES; POTENTIAL HAZARDOUS MATERIAL IMPACTS; IMPACT OF DAYTIME CONSTRUCTION NOISE, AND TRAFFIC.
32. THE CONTRACTOR SHALL COMPLY WITH ALL APPLICABLE RULES AND REGULATIONS. SAFETY IS THE SOLE RESPONSIBILITY OF THE CONTRACTOR.
33. ALL STRUCTURES SHALL COMPLY WITH FEDERAL EMERGENCY MANAGEMENT AGENCY (FEMA) TECHNICAL BULLETIN 2-08 FOR FLOOD PROOFING.
34. STANDARD SPECIFICATIONS: ALL WORK SHALL CONFORM TO THE LATEST EDITION AND SUPPLEMENTS OF THE STANDARD SPECIFICATIONS FOR PUBLIC WORKS CONSTRUCTION (SSPWC) ADOPTED BY THE BOARD PUBLIC WORKS OF THE CITY OF LOS ANGELES AS MODIFIED BY THE CORRESPONDING ISSUE OF THE LATEST STANDARD PLAN S-610, AND SPECIAL PROVISIONS, AND THE CURRENT LOS ANGELES BUILDING CODE (L.A.B.C.)
35. THE CONTRACTOR IS RESPONSIBLE FOR DESIGN, IMPLEMENTATION, MAINTENANCE, AND COST OF THE SHORING INCLUDING ITS PERMIT AND PERMIT PROCESS. CONTRACTOR SHALL SUBMIT THE SHORING DESIGN TO BOE FOR REVIEW AND APPROVAL.
36. THE CONTRACTOR IS RESPONSIBLE TO OBTAIN A HAULING PERMIT AS THE EXPORT AND IMPORT IS GREATER THAN 1,000 CY.
37. THE CONTRACTOR IS REQUIRED TO VIDEO TAPE AND PHOTOGRAPH EXISTING CONDITIONS THROUGHOUT THE NEIGHBORHOOD AND PARK PRIOR TO THE START OF WORK.
38. THE CONTRACTOR SHALL IMPLEMENT THE TREE PROTECTION AND OTHER REQUIREMENTS ON SHEETS LP03 AND LP04 FOR EVERY TREE WITHIN THE CONSTRUCTION SITE PRIOR TO STARTING WORK AT THE PARK.
39. THE CONTRACTOR IS RESPONSIBLE FOR POTHOLING ALONG THE AREAS OF WORK/ALIGNMENTS TO CLEAR ANY OBSTRUCTIONS AND VERIFY EXISTING CONDITIONS INCLUDING INVERT ELEVATIONS. THE CONTRACTOR SHALL PERFORM A MINIMUM OF 1 POTHOLE EVERY 20 FEET ALONG THE ALIGNMENT AND AT ALL CATCH BASINS.
40. ALL AREAS USED BY THE CONTRACTOR AS LAYDOWN AREAS SHALL BE RESTORED WITH NEW SOD.
41. THE CONTRACTOR IS RESPONSIBLE FOR DETOURING FOOT TRAFFIC AROUND THE CONSTRUCTION AND CAPTURE THIS IS THE TRAFFIC CONTROL PLANS.
42. AS A MINIMUM THE CONTRACTOR SHALL SUBMIT THE FOLLOWING DEFERRED SUBMITTALS: TEMPORARY SHORING (CONTRACTOR TO DESIGN AND BUILD), MODULAR BURIED STORMWATER INFILTRATION SYSTEM (CONTRACTOR SHALL DESIGN AND BUILD), SEDIMENTATION BASIN, HYDRODYNAMIC SEPARATORS, VENT STRUCTURES, AND INFILTRATION FILTER SYSTEMS.
43. STORMWATER MANAGEMENT DURING CONSTRUCTION SHALL BE IN ACCORDANCE WITH THE STORMWATER POLLUTION PREVENTION PLAN.
44. TOTAL ESTIMATED EXCAVATION AREA FOR THE PROJECT IS 1.8 ACRES. THIS QUANTITY IS FOR PERMITTING PURPOSES AND SHALL NOT BE USED FOR THE CONTRACTOR'S BID.
45. THE CONTRACTOR IS RESPONSIBLE FOR STAKING ALL PROPERTY LINES BY A LICENSED SURVEYOR.
46. OVERHEAD POWER LINES LOCATION SHOWN ON PLAN IS APPROXIMATED, CONTRACTOR TO FIELD VERITY ACTURAL LOCATION AND HEIGHT.
47. THE CONTRACTOR SHALL BE RESPONSIBLE FOR BARRICADING ITS WORK AREA TO PREVENT VEHICLES FROM PARKING IN THE PROPOSED LINE OF OPERATIONS. ANY DAMAGE TO PARKED VEHICLES CAUSED BY THE CONSTRUCTION OPERATIONS SHALL BE THE CONTRACTORS LIABILITY.ALL TRAFFIC CONTROLS IN THE WORK AREA SHALL CONFORM TO THE "WORK ARE TRAFFIC CONTROL HANDBOOK" (W.A.T.C.H) LATEST EDITION AND THE CALIFORNIA MUTCP.
48. BEFORE CONSTRUCTION IS STARTED, CONTRACTOR SHALL COORDINATE WITH THE OWNER OF EACH UTILITY AND DEFINE THE REQUIREMENTS AND METHODS TO ACCOMMODATE THE PROTECTION, TEMPORARY SUPPORT, ADJUSTMENT, OR RELOCATION OF ANY UTILITIES AFFECTED BY THE PROPOSED NEW WORK.
49. CONTRACTOR TO PROVIDE TEMPORARY COVER FOR TRENCH, MANHOLES, VAULTS ETC WITH TRENCH PLATES INSTALLATION PER GREENBOOK REQUIREMENTS AND USE THE APPROVED PRODUCTS BY THE CITY WITH COMPLIANCE TO THE CITY STANDARD PLAN S-601-3.
50. CONTRACTOR TO PROVIDE TREE PROTECTION FOR EVERY TREE WITHIN THE CONSTRUCTION SITE (EXCEPT THOSE BEING REMOVED) PRIOR TO THE START OF WORK AND FOLLOW THE RECREATION AND PARK REQUIREMENTS INCLUDED IN THE LANDSCAPE ARCHITECTURE DRAWINGS AND SPECIFICATIONS.
51. CONTRACTOR SHALL PROTECT EXISTING IMPROVEMENTS WITHIN PROJECT WORK AREA PER GREENBOOK SECTION 400 - PROTECTION AND RESTORATION. CONTRACTOR SHALL RESTORE EXISTING IMPROVEMENTS WITHIN PUBLIC RIGHT-OF-WAY NOT MARKED FOR REMOVAL WHICH ARE DAMAGED OR REMOVED AT CONTRACTOR'S OWN COST.
52. ALL STRUCTURES AND HATCHES SHALL BE AASHTO AND ACI HS-20 RATED. ALL HATCHES TO HAVE FALL PROTECTION GRATING.
53. CONTRACTOR SHALL PREPARE A CONSTRUCTION MANAGEMENT PLAN FOR ACCEPTANCE BY THE ENGINEER PRIOR TO THE START OF CONSTRUCTION ACTIVITIES ON THE SITE. THIS PLAN IS TO INCLUDE THE FOLLOWING ITEMS RELATED TO THE CONSTRUCTION ACTIVITIES:
    A. MITIGATION MEASURES AND CONSTRUCTION CONTROLS
    B. PUBLIC FEEDBACK MECHANISMS IN ACCORDANCE WITH CITY POLICIES
    C. TREE PROTECTION
    D. SOIL MANAGEMENT AND REUSE PLAN FOR TOP SOIL AND NATIVE SOILS THAT ARE EXCAVATED
    E. PUBLIC ACCESS AND SIGNAGE TO ADDRESS CLOSURE OF PARK AND MAINTAIN THE RECREATION CENTER OPEN WITH SAFE PUBLIC ACCESS
    F. SITE SECURITY FOR CONSTRUCTION WORKS
    G. TRAFFIC MANAGEMENT PLAN FOR THE RECREATION CENTER SITE
54. CONTRACTOR SHALL PREPARE A CULTURAL RESOURCES MANAGEMENT PLAN FOR ACCEPTANCE BY THE ENGINEER PRIOR TO THE START OF CONSTRUCTION ACTIVITIES ON THE SITE. THIS PLAN IS TO INCLUDE A DESCRIPTION OF HISTORICAL RESOURCES PRESENT WITHIN THE PROJECT AREA, AND DEFINED OPERATIONAL AND PRESERVATION GOALS AND PRIORITIES PLANNED DURING THE CONSTRUCTION.
55. CONTRACTOR SHALL DOCUMENT CONTROL, CONTAINMENT OR SUPPRESSION ACTIVITIES DURING CONSTRUCTION OF MAJOR INVASIVE PLANT INFESTATIONS.
56. HOURS OF CONSTRUCTION ACTIVITIES SHALL BE WITHIN THE ALLOWED HOURS OF 7:00 AM TO 5:00 PM MONDAY THROUGH FRIDAYS.
57. DRAINS FROM ALL ACCESS HATCHES TO BE DIRECTED TO A 3 FTx3FTx3FT SUBSURFACE VOLUME OF 3/4" CRUSHED STONE PROVIDED AND INSTALLED BY THE CONTRACTOR.
58. THE ENGINEER DOES NOT WARRANT THE ACCURACY OF THE SCALED DIMENSIONS. ALL DIMENSIONS SHALL BE AS DESIGNATED ON THE PLANS.
59. THE CONTRACTOR SHALL BRING TO THE ENGINEER'S ATTENTION ANY OMISSIONS OR CONFLICTS BETWEEN VARIOUS ELEMENTS OF THE DRAWINGS, NOTES AND DETAILS PRIOR TO PROCEEDING WITH THE WORK.
60. THE CONTRACTOR SHALL VERIFY ALL DIMENSIONS AND CONDITIONS IN THE FIELD BEFORE STARTING WORK. NOTIFY THE ENGINEER IMMEDIATELY OF AND DISCREPANCIES.
61. THE CONTRACTOR SHALL PROTECT ALL PUBLIC AND PRIVATE PROPERTY INSOFAR AS IT MAY BE ENDANGERED BY HIS/HER OPERATIONS FOR THE PROJECT. THE CONTRACTOR SHALL TAKE EVERY NECESSARY PRECAUTION TO AVOID DAMAGE TO EXISTING STRUCTURES AND ENSURE THE SAFETY OF PEDESTRIANS IN THE PROXIMITY OF THE WORK. THE CONTRACTOR SHALL FURNISH AND INSTALL APPROPRIATE SIGNS AND ADEQUATE WARNING DEVICES TO ADVISE THE PUBLIC OF CONSTRUCTION HAZARDS, AND UPON COMPLETION OF THE WORK SHALL PROMPTLY REMOVE THEM. ANY DAMAGE TO THE EXISTING STRUCTURES CAUSED BY THE CONTRACTOR'S OPERATIONS SHALL BE REPAIRED TO THE SATISFACTION OF THE ENGINEER AT NO COST TO THE CITY.
62. THE CONTRACTOR SHALL EXERCISE CARE THAT NO EXCAVATED MATERIAL OR DEBRIS RESULTING FROM HIS OPERATION SHALL RUN DOWN THE EXISTING SLOPE AND STREET OR OTHER PROPERTIES. EXISTING TREES AND SHRUBBERY, WHEN NOT IN DIRECT CONFLICT WITH CONSTRUCTION ACTIVITIES, SHALL BE PROTECTED.
63. EXISTING ABANDONED IMPROVEMENTS AS INDICATED BY THE ENGINEER THAT INTERFERE WITH THE PROPOSED CONSTRUCTION SHALL BE REMOVED AND DISPOSED OF BY THE CONTRACTOR UNLESS OTHERWISE NOTED. ALL MATERIAL SUCH AS VEGETATION, TIMBER, ROCKS, CONCRETE AND ASPHALT.
64. ANY TRENCHING FOR SUBDRAIN SHALL BE PLACED PROGRESSIVELY IN 20 FOOT LENGTHS. TRENCH SHALL BE EXCAVATED IN 20 FOOT LENGTHS AND SHALL BE BACKFILLED PRIOR TO EXCAVATION OF NEXT 20 FOOT SECTION.
65. CONTRACTOR SHALL SUBMIT SITE SPECIFIC PLANS FOR PROPOSED LAYOUT OF TEMPORARY EROSION CONTROL. OBTAIN GRADING INSPECTORS AND DEPARTMENT OF PUBLIC WORKS APPROVAL OF PROPOSED PROCEDURES. (L.A.B.C. SECTION 91.7007.1).
66. THE CONTRACTOR SHALL MAINTAIN ROADWAY ACCESS TO NEIGHBORHOOD PRIVATE PROPERTIES DURING THE NORMAL WORKING HOURS FROM 7:00 AM TO 4:00 PM AND SHALL REMOVE ALL WORKING EQUIPMENT FROM ROADWAY ACCESS BETWEEN HOUR OF 4:00 PM TO 7:00 AM OF THE FOLLOWING MORNING.
67. AT LEAST 10 DAYS BEFORE START OF CONSTRUCTION, THE CONTRACTOR SHALL GIVE THE NOTICE TO THE OCCUPANTS OF ADJACENT PROPERTIES OF THE PROPOSED CONSTRUCTION DATE PER SECTION 7-10 IN BROWNBOOK 7TH EDITION (LATEST).
68. THE CONTRACTOR SHALL NOTIFY HOMEOWNERS, TENANTS, AND PUBLIC EMERGENCY SERVICES (FIRE DEPARTMENT, RECREATION AND PARKS, AND POLICE DEPARTMENT) AFFECTED BY THIS WORK AT LEAST ONE WEEK PRIOR TO MOBILIZATION.
69. THE PERMIT SET OF STAMPED PLANS APPROVED BY BUILDING AND SAFETY SHALL BE ON THE JOB SITE AT ALL TIMES.
70. FILL SLOPES SHALL BE OVER BUILT AT LEAST 2 TO TO 3 FEET AND TRIMMED BACK TO EXPOSE A FIRM COMPACTED SURFACE ON THE SLOPE FACE.
71. NO FILL TO BE PLACED UNTIL STRIPPING OF VEGETATION, REMOVAL OF UNSUITABLE SOILS AND INSTALLATION OF SUBDRAINS (IF ANY) HAS BEEN INSPECTED AND APPROVED BY THE GEO SOILS ENGINEER.
72. NO ROCK OR SIMILAR MATERIAL GREATER THAN 6" IN DIAMETER SHALL BE PLACED IN THE FILL UNLESS RECOMMENDATION FOR SUCH PLACEMENT HAVE BEEN SUBMITTED BY THE SOIL ENGINEER IN ADVANCE AND APPROVED.
73. UNDERGROUND SERVICE ALERT: BEFORE COMMENCING ANY EXCAVATION , THE CONTRACTOR SHALL OBTAIN AN UNDERGROUND SERVICE ALERT (USA) INQUIRY I.D. NUMBER BY CALLING (800) 227-2600. TWO WORKING DAYS SHALL BE ALLOWED AFTER THE I.D. NUMBER IS OBTAINED AND BEFORE THE CONTRACTOR STARTS THE EXCAVATION WORK SO THAT UTILITY OWNERS CAN BE NOTIFIED. IF THE UTILITY OWNER IS THE CITY OF LOS ANGELES, A CONFIRMATION NUMBER INDICATION THE CITY HAS BEEN NOTIFIES SHALL BE OBTAINED BY USA AND/OR THE CONTRACTOR FROM THE APPROPRIATE CITY DEPARTMENT. THE I.D. NUMBER TOGETHER WITH THE DATE ACQUIRED SHALL BE REPORTED TO THE BUREAU OF CONTRACT ADMINISTRATION WHEN CALLING FOR INSPECTION. I.D. NUMBERS WILL NOT BE GIVEN MORE THAT 10 DAYS BEFORE STARTING EXCAVATION WORK.
74. THE CONTRACTOR SHALL PREPARE AND SUBMIT STORM DRAIN BYPASS PLANS FOR THE EXISTING 45 INCH STORM DRAIN 30 DAYS PRIOR TO THE START OF CONSTRUCTION OF THE DIVERSION STRUCTURE.
75. CONTRACTOR SHALL COMPLY WITH THE STATE OF CALIFORNIA INTEGRATED REGIONAL WATER MANAGEMENT GRANT PROGRAM AND THE COUNTY OF LOS ANGELES SAFE, CLEAN WATER PROGRAM CONDITIONS AND REQUIREMENTS AS SPECIFIED IN THE GRANT AGREEMENTS IN THE SPECIFICATION APPENDIX ATTACHMENTS.
76. EACH HATCH PER THIS CONTRACT TO BE PROVIDED WITH A SAFETY GRATE.
77. WITHIN THREE WEEKS OF THE BID AWARD CONTRACTOR TO SURVEY AND CONFIRM ELEVATIONS OF EXISTING 45" RCP STORM DRAIN AT THE DIVERSION STRUCTURE AND PROVIDE THESE ELEVATIONS TO THE ENGINEER.

THE CITY OF LOS ANGELES OR ITS OFFICERS OR AGENTS SHALL NOT BE RESPONSIBLE FOR THE ACCURACY OR COMPLETENESS OF ELECTRONIC COPIES OF THIS PLAN SHEET.

REVISION DATES (DESIGN STAGE ONLY)

ENGINEERING
CITY OF LOS ANGELES

THIS PLAN WAS ELECTRONICALLY • SIGNED AND STAMPED

PROFESSIONAL ENGINEER
TED S. ALLEN
No. C 48973
EXP. 08/31/2026
REGISTERED
CIVIL
STATE OF CALIFORNIA
04/11/2023

BUREAU OF ENGINEERING

VERTICAL CONTROL: BENCH MARK: 18-02215 NAVD 88
HORIZONTAL CONTROL: CALIFORNIA STATE PLANE ZONE V, 1983 NAD

SHEET TITLE: GENERAL NOTES I

PROJECT: STRATHERN PARK NORTH
STORMWATER CAPTURE PROJECT

ADDRESS: STRATHERN PARK NORTH
8041 WHISETT AVE, NORTH HOLLYWOOD, CA 91605

NO.	REVISIONS	DATE	BY
		YY/MM/DD	
		YY/MM/DD	
		YY/MM/DD	
		YY/MM/DD	

CIP NO. SCP0003

INDEX NO.

CITY OF LOS ANGELES DEPARTMENT OF PUBLIC WORKS

CITY ENGINEER: TED ALLEN, P.E. — DATE: 04/11/2023

	DESIGN GROUP	DATE
ENGINEER:	CDM SMITH INC.	04/11/2023
ARCHITECT:	NA	04/11/2023
DESIGNED BY:	C. RICE	04/11/2023
DRAWN BY:	C. BILDERBACK	04/11/2023
CHECKED BY:	P. TAURASI	04/11/2023
APPROVED BY:	A. DELLINGER	04/11/2023

WORK ORDER
EW40080F

SHEET NAME
GI03

SHEET 3 OF 86 SHEETS

SUBGRADE WASTE FOR REMOVAL AND DISPOSAL

THE STRATHERN SITE IN THE AREA OF THE FACILITIES FOR THIS PROJECT HAVE BEEN FOUND TO HAVE SUBSURFACE CONSTRUCTION AND BURNT WASTES THAT WILL NEED SPECIAL DISPOSAL FROM THE SITE. CONTRACTOR TO FOLLOW THE REMOVAL AND DISPOSAL REQUIREMENTS PER THE *ADDITIONAL PHASE II ENVIRONMENTAL SITE ASSESSMENT, LABOE TOS NO. 25, STORMWATER CAPTURE PROGRAM, PORTION OF STRATHERN PARK NORTH, JULY 30, 2021* PROVIDED IN THE APPENDICES OF THE SPECIFICATIONS.

SUBGRADE PREPARATION FOR DESILTING BASIN WITH INLET STRUCTURE AND INFILTRATION GALLERY

ALLUVIUM IS ANTICIPATED AT THE BOTTOM OF THE PLANNED INFILTRATION GALLERY, DESILTING BASIN INLET STRUCTURES AND DESILTING BASINS THAT SHOULD BE SUITABLE FOR SUPPORT OF THE STRUCTURES AND OVERLYING COMPACTED FILL. THE EXCAVATION BOTTOM SHOULD BE EVALUATED BY THE ENGINEER DURING THE EXCAVATION WORK. IN THE EVENT THAT UNSUITABLE MATERIAL IS ENCOUNTERED ALONG THE BOTTOM OF THE EXCAVATION, INCLUDING UNDOCUMENTED FILL AND/OR WASTE, THE UNSUITABLE MATERIAL ENCOUNTERED AT THE BOTTOM OF THE STRUCTURE EXCAVATION SHALL BE REMOVED AND REPLACED WITH LOOSELY-PACKED CLEAN SAND OR GRAVEL, SUCH AS ADDITIONAL CRUSHED STONE. THE DECISION FOR REMOVAL AND REPLACEMENT SHALL BE BASED ON THE ENGINEER FIELD OBSERVATIONS. UNLESS DIRECTED BY THE ENGINEER, NO COMPACTION IS TO BE PERFORMED ON THE EXPOSED SUBGRADE, MATERIALS USED TO REPLACE UNSUITABLE MATERIALS (IF NEEDED), AND AND/OR CRUSHED STONE PLACED BENEATH THE STRUCTURES. THE CRUSHED STONE BLANKET SHALL CONSIST OF OPEN-GRADED GRAVEL OF 3/4-INCH TO 1 1/2-INCH DIAMETER ROCK. THE CRUSHED STONE LAYERS SHALL BE FREE OF FINES, DEBRIS, TRASH, ETC. FOR ADDITIONAL INFORMATION SEE GEOTECHNICAL EVALUATION LABOE TOS NO.25 STORMWATER CAPTURE PARKS PROGRAM STRATHERN PARK NORTH BY NINYO & MOORE DATED AUGUST 31,2020.

SUBGRADE PREPARATION FOR ALL OTHER STRUCTURES

IN ORDER TO PROVIDE SUITABLE SUPPORT FOR PROPOSED BURIED AND/OR AT-GRADE STRUCTURES, OTHER THAN INFILTRATION GALLERY AND DESILTING BASINS WITH INLET STRUCTURES, THE EXISTING UNDOCUMENTED FILL AND UPPER LOOSE ALLUVIAL DEPOSITS SHALL BE REMOVED FROM BENEATH THE STRUCTURES. IN ADDITION, THE STRUCTURE FOUNDATIONS SHOULD BE FOUNDED ON 2 FEET OF NEWLY COMPACTED STRUCTURAL FILL MATERIAL. THE OVER EXCAVATION SHALL REMOVE UNDOCUMENTED FULL AND EXPOSE RELATIVELY DENSE ALLUVIAL DEPOSITS. ADDITIONAL OVER-EXCAVATION OF LOOSE, SOFT, AND/OR WET AREAS MAY BE APPROPRIATE. THE EXCAVATION BOTTOM SHALL BE EVALUATED BY THE ENGINEER DURING THE EXCAVATION WORK AND ADDITIONAL RECOMMENDATIONS, IF NEEDED, BE BASED ON FIELD OBSERVATIONS. THE LIMITS OF REMOVAL SHALL EXTEND APPROXIMATELY 2 FEET BEYOND THE FOOTPRINT OF THE FOUNDATIONS. PRIOR TO PLACING COMPACTED STRUCTURAL FILL AND/OR DRAINAGE ROCK, THE UPPER APPROXIMATELY 8 INCHES OF THE EXPOSED BOTTOM SHALL BE SCARIFIED, MOISTURE-CONDITIONED TO NEW OPTIMUM MOISTURE CONTENT, AND RECOMPACTED TO A RELATIVE COMPACTION OF 90 PERCENT AS EVALUATED BY ASTM D 1557. FOR ADDITIONAL INFORMATION SEE GEOTECHNICAL EVALUATION LABOE TOS NO.25 STORMWATER CAPTURE PARKS PROGRAM STRATHERN PARK NORTH BY NINYO & MOORE DATED AUGUST 31,2020.

FILL MATERIAL, FILL PLACEMENT AND COMPACTION

IN GENERAL, THE ON-SITE SOILS SHALL BE SUITABLE FOR REUSE AS STRUCTURAL FILL AND FILL MATERIALS, PROVIDED THEY ARE FREE OF TRASH, DEBRIS, OVERSIZE MATERIAL, OR OTHER DELETERIOUS MATERIALS. FILL SHALL BE FREE OF ROCKS OR LUMPS OF MATERIAL IN EXCESS OF 4 INCHES IN DIAMETER. ROCKS OR HARD LUMPS LARGER THAN APPROXIMATELY 4 INCHES IN DIAMETER SHALL BE BROKEN INTO SMALLER PIECES OR SHALL BE REMOVED FROM THE SITE.

IMPORTED FILL MATERIAL, AS NEEDED AND DIRECTED BY THE ENGINEER, SHALL ALSO CONSIST OF CLEAN, GRANULAR MATERIAL WITH A LOW EXPANSION POTENTIAL, CORRESPONDING TO AN EXPANSION INDEX OF 50 OR LESS. THE SOIL SHALL ALSO BE TESTED FOR CORROSIVE PROPERTIES PRIOR TO IMPORTING. THE IMPORTED MATERIALS SHALL SATISFY THE CALTRANS (2018) CRITERIA FOR NON-CORROSIVE SOILS (i.e., SOILS HAVING A CHLORIDE CONCENTRATION OF 500 PARTS PER MILLION [ppm] OR LESS, A SOLUBLE SULFATE CONTENT OF APPROXIMATELY 0.15 PERCENT (1,500 ppm) OR LESS, A pH VALUE OF 5.5 OR HIGHER, OR AN ELECTRICAL RESISTIVITY OF 1,100 OHM-CENTIMETERS OR MORE). MATERIALS FOR USE AS STRUCTURAL FILL AND FILL WILL BE EVALUATED BY THE ENGINEER PRIOR TO IMPORTING. THE CONTRACTOR SHALL BE RESPONSIBLE FOR THE UNIFORMITY OF IMPORT MATERIAL BROUGHT TO THE SITE.

FILL MATERIAL, INCLUDING STRUCTURAL FILL BENEATH STRUCTURES, BACKFILL AROUND THE PERIMETER AND ABOVE STRUCTURES, AND OTHER, SHALL BE MOISTURE-CONDITIONED AND COMPACTED IN HORIZONTAL LIFTS TO A RELATIVE COMPACTION OF 9 0 PERCENT OR MORE AS EVALUATED BY ASTM D 1557. FILL MATERIAL WITH LESS THAN 5 PERCENT FINES (PASSING NO.200 SIEVE) SHALL BE COMPACTED TO 95 PERCENT RELATIVE COMPACTION IN ACCORDANCE WITH CITY OF LOS ANGELES GUIDELINES AS EVALUATED BY ASTM D 1557. FILL MATERIAL SHALL BE MOISTURE-CONDITIONED TO SLIGHTLY ABOVE THE LABORATORY OPTIMUM MOISTURE CONTENT. THE LIFT THICKNESS SHALL NOT EXCEED 8 INCHES IN LOOSE THICKNESS. PLACEMENT AND COMPACTION OF THE FILL SOILS SHALL BE IN GENERAL ACCORDANCE WITH LOCAL GRADING ORDINANCES AND GOOD CONSTRUCTION PRACTICE.

CONTRACTOR SHALL FOLLOW THE REQUIREMENTS OF THE DESILTING BASIN AND INFILTRATION GALLERY SUPPLIERS FOR SOIL COMPACTION OPERATIONS REGARDING ANY MACHINERY LIMITATIONS, PROTECTIONS AND MONITORING, ETC. NEEDED TO PROPERLY PROTECT THE IN PLACE STRUCTURES. FOR ADDITIONAL INFORMATION SEE GEOTECHNICAL EVALUATION LABOE TOS NO.25 STORMWATER CAPTURE PARKS PROGRAM STRATHERN PARK NORTH BY NINYO & MOORE DATED AUGUST 31,2020.

STREET LIGHTING

THE CONTRACTOR SHALL PROTECT AND MAINTAIN ALL STREET LIGHTING FACILITIES WITHIN THE WORK AREA. SHOULD ANY DAMAGE TO THE EXISTING STREET LIGHTING SYSTEM OCCUR, THE CONTRACTOR SHALL IMMEDIATELY NOTIFY THE BUREAU OF STREET LIGHTING, FIELD OPERATION DIVISION, BY TELEPHONING (323) 913-4743; OR AFTER 4:30 PM (3:30 PM ON FRIDAYS), CONTACT THE ELECTRIC TROUBLE BOARD OF DWP AT (800) 821-5278 WITHIN THE (213) AND (310) AREA CODES OF LOS ANGELES. THE CONTRACTOR SHALL ARRANGE FOR IMMEDIATE REPAIR AND RESTORATION TO SERVICE OF THE DAMAGED LIGHTING SYSTEM AT NO COST TO THE CITY. A LICENSED ELECTRICAL CONTRACTOR IS REQUIRED TO MAKE ALL REPAIRS. ALL STREET LIGHTING WORK SHOULD BE MADE IN ACCORDANCE WITH THE LATEST EDITION AND SUPPLEMENTS OF THE "STANDARD SPECIFICATION FOR PUBLIC WORKS CONSTRUCTION," ADOPTED BY THE CORRESPONDING ISSUE OF THE BROWN BOOK AND THE BUREAU OF STREET LIGHTING "SPECIAL SPECIFICATIONS" INCLUDING LATEST REVISIONS.

SIGNS AND MARKINGS MAINTENANCE

1. THE CONTRACTOR SHALL FOLLOW THE GREEN BOOK SECTION 400 PROTECTION AND RESTORATION AND MAKE ARRANGEMENTS FOR THE RESTORATION OF ALL OBLITERATED PAVEMENT MARKINGS AND FOR THE REINSTALLATION OF ALL MISSING OR DAMAGED SIGNS, CURB MARKINGS, STAMPED CROSSWALKS, PARKING METERS, ETC. IN SOME CASES, THE CONTRACTOR MAY BE REQUIRED TO INSTALL OBLITERATED AND RELATED PAVEMENT MARKINGS AS WELL AS MISSING, DAMAGED AND/OR RELATED SIGNS, TO THE SATISFACTION OF LADOT.
2. ALL STRIPING AND PAVEMENT MARKINGS SHALL BE INSTALLED UTILIZING THERMOPLASTIC MATERIALS PER LADOT SPECIFICATIONS. THE CONTRACTOR SHALL CONTACT LADOT'S WESTERN DISTRICT OFFICE AT (310) 575-8138 PRIOR TO COMMENCING ANY WORK THAT REQUIRES SIGN AND/OR MARKING MAINTENANCE.
3. IN ADDITION TO SIGNS REQUIRED BY THE REVISIONS OF THE "WORK AREA TRAFFIC CONTROL HANDBOOK" (WATCH), LATEST EDITION, FURNISH AND PLACE SIGNS FOR GIVING ADVANCE NOTICE TO MOTORISTS OF TRAFFIC DISRUPTION AS PART OF THIS PROJECT IN ACCORDANCE WITH SECTION 01581 OF THE SPECIFICATIONS. THE CONTRACTOR IS RESPONSIBLE TO DESIGN, OBTAIN, PAY AND IMPLEMENT A WORK SITE TRAFFIC CONTROL PLAN AND THE CONTRACTOR SHALL MAINTAIN/ADJUST THE PLAN AS IT IS NEEDED FOR THE WORK.

STANDARD CONDITIONS FOR CONSTRUCTION WITHIN LADWP ELECTRICAL EASEMENT

1. ENERGIZED TRANSMISSION LINES CAN PRODUCE ELECTRICAL EFFECTS INCLUDING, BUT NOT LIMITED TO, INDUCED VOLTAGES AND CURRENTS IN PERSONS AND OBJECTS. CONSENTEE HEREBY ACKNOWLEDGES A DUTY TO CONDUCT ACTIVITIES IN SUCH MANNER THAT WILL NOT EXPOSE PERSONS TO INJURY OR PROPERTY TO DAMAGE FROM SUCH EFFECTS.
2. THE LOS ANGELES DEPARTMENT OF WATER AND POWER (LADWP) PERSONNEL SHALL HAVE ACCESS TO THE RIGHT OF WAY AT ALL TIMES.
3. UNAUTHORIZED PARKING OF VEHICLES OR EQUIPMENT SHALL NO BE ALLOWED ON THE RIGHT OF WAY AT ANY TIME.
4. UNAUTHORIZED STORAGE OF EQUIPMENT OR MATERIAL SHALL NOT BE ALLOWED ON THE RIGHT OF WAY AT ANY TIME.
5. FUELING OF VEHICLES OR EQUIPMENT SHALL NOT BE ALLOWED ON THE RIGHT OF WAY AT ANY TIME.
6. PATROL ROADS AND/OR THE GROUND SURFACES OF THE RIGHT OF WAY SHALL BE RESTORED BY THE CONSENTEE TO ORIGINAL CONDITIONS, OR BETTER.
7. ALL TRASH, DEBRIS, WASTE, AND EXCESS EARTH SHALL BE REMOVED FROM THE RIGHT OF WAY UPON COMPLETION OF THE PROJECT, OR THE LADWP MAY DO SO AT THE SOLE RISK AND EXPENSE OF THE CONSENTEE.
8. ALL CUT AND FILL SLOPES WITHIN THE RIGHT OF WAY SHALL CONTAIN ADEQUATE BERMS, BENCHES, AND INTERCEPTOR TERRACES. REVEGETATION MEASURES SHALL ALSO BE PROVIDED FOR DUST AND EROSION CONTROL PROTECTION OF THE RIGHT OF WAY.
9. ALL PAVING, DRIVEWAYS, BRIDGES, CROSSINGS, AND SUBSTRUCTURES LOCATED WITHIN THE RIGHT OF WAY SHALL BE DESIGNED TO WITHSTAND THE AMERICAN ASSOCIATION OF STATE HIGHWAY AND TRANSPORTATION OFFICIALS' VEHICULAR LOADING H20-44 OR HL-93. THE DESIGN SHALL ALSO COMPLY WITH APPLICABLE DESIGN STANDARDS.
10. GENERAL GROUNDING CONDITION
    ALL ABOVEGROUND METAL STRUCTURES INCLUDING, BUT NOT LIMITED TO, PIPES, DRAINAGE DEVICES, FENCES, AND BRIDGE STRUCTURES LOCATED WITHIN OR ADJOINING THE RIGHT OF WAY SHALL BE PROPERLY GROUNDED, AND SHALL BE INSULATED FROM ANY FENCING OR OTHER CONDUCTIVE MATERIALS LOCATED OUTSIDE OF THE RIGHT OF WAY. FOR SAFETY OF PERSONNEL AND EQUIPMENT, ALL EQUIPMENT AND STRUCTURES SHALL BE GROUNDED IN ACCORDANCE WITH STATE OF CALIFORNIA CODE OF REGULATION, TITLE 8, SECTION 2941, AND NATIONAL ELECTRIC CODE, ARTICLE 250.
11. CONSENTEE SHALL NEITHER HOLD THE LADWP LIABLE FOR NOR SEEK INDEMNITY FROM THE LADWP FOR ANY DAMAGE TO THE CONSENTEE'S PROJECT DUE TO THE FUTURE CONSTRUCTION OR RECONSTRUCTION BY THE LADWP WITHIN THE RIGHT OF WAY.
12. FIRES AND BURNING OF MATERIALS IS NOT ALLOWED ON THE RIGHT OF WAY.
13. CONSENTEE SHALL CONTROL DUST BY DUST-ABATEMENT PROCEDURES APPROVED BY THE LADWP, SUCH AS THE APPLICATION OF A DUST PALLIATIVE OR WATER.
14. THE RIGHT OF WAY CONTAINS HIGH-VOLTAGE ELECTRICAL CONDUCTORS; THEREFORE, THE CONSENTEE SHALL UTILIZE ONLY SUCH EQUIPMENT, MATERIAL, AND CONSTRUCTION TECHNIQUES THAT ARE PERMITTED UNDER APPLICABLE SAFETY ORDINANCES AND STATUTES, INCLUDING THE FOLLOWING: STATE OF CALIFORNIA CODE OF REGULATIONS, TITLE 8, INDUSTRIAL RELATIONS, CHAPTER 4, DIVISION OF INDUSTRIAL SAFETY, SUBCHAPTER 5, ELECTRICAL SAFETY ORDERS; AND CALIFORNIA PUBLIC UTILITIES COMMISSION, GENERAL ORDER NO. 95, RULES FOR OVERHEAD ELECTRIC LINE CONSTRUCTION.
15. CONSENTEE IS HEREBY NOTIFIED THAT GROUNDING WIRES MAY BE BURIED IN THE RIGHT OF WAY; THEREFORE, THE CONSENTEE SHALL NOTIFY THE LADWP'S TRANSMISSION CONSTRUCTION AND MAINTENANCE BUSINESS GROUP AT (818) 771-5014, OR (818) 771-5076, AT LEAST 48 HOURS PRIOR TO THE START OF ANY CONSTRUCTION ACTIVITIES IN THE RIGHT OF WAY.
16. VEHICLE PARKING
    AN AREA WITHIN 50 FEET AROUND THE BASE OF EACH TOWER MUST REMAIN OPEN AND UNOBSTRUCTED FOR MAINTENANCE AND EMERGENCIES, INCLUDING PERIODIC WASHING OF INSULATORS BY HIGH-PRESSURE WATER SPRAY. CLEARANCES OF 100 FEET MAY BE REQUIRED UNDER CIRCUMSTANCES WHERE ACCESS IS LIMITED.
17. DETAILED PLANS FOR ANY GRADING, PAVING, AND CONSTRUCTION WORK WITHIN THE RIGHT OF WAY SHALL BE SUBMITTED FOR APPROVAL TO THE REAL ESTATE SERVICES, 221 N. FIGUEROA ST., SUITE 1600, LOS ANGELES, CALIFORNIA 90012, NO LATER THAN 45 DAYS PRIOR TO THE START OF ANY GRADING, PAVING, OR CONSTRUCTION WORK. NOTWITHSTANDING ANY OTHER NOTICES GIVEN BY CONSENTEE REQUIRED HEREIN, CONSENTEE SHALL NOTIFY THE LADWP'S TRANSMISSION CONSTRUCTION AND MAINTENANCE BUSINESS GROUP AT (818) 771-5014, OR (818) 771-5076, NO EARLIER THAN 14 DAYS AND NO LATER THAN TWO DAYS PRIOR TO THE START OF ANY GRADING, PAVING, OR CONSTRUCTION WORK.
18. IN THE EVENT THAT CONSTRUCTION WITHIN THE RIGHT OF WAY IS DETERMINED UPON INSPECTION BY THE LADWP TO BE UNSAFE OR HAZARDOUS TO THE LADWP FACILITIES, THE LADWP MAY ASSIGN A LINE PATROL MECHANIC AT THE CONSENTEE'S EXPENSE.
19. IF THE LADWP DETERMINES AT ANY TIME DURING CONSTRUCTION THAT THE CONSENTEE'S EFFORTS ARE HAZARDOUS OR DETRIMENTAL TO THE LADWP FACILITIES, THE LADWP SHALL HAVE THE RIGHT TO IMMEDIATELY TERMINATE SAID CONSTRUCTION.
20. ALL CONCENTRATED SURFACE WATER WHICH IS DRAINING AWAY FROM THE CONSENTEE'S ACTIVITY SHALL BE DIRECTED TO AN APPROVED STORM DRAIN SYSTEM WHERE ACCESSIBLE, OR OTHERWISE RESTORED TO SHEET FLOW BEFORE BEING RELEASED WITHIN OR FROM THE RIGHT OF WAY.
21. DRAINAGE FROM THE PAVED PORTIONS OF THE RIGHT OF WAY SHALL NOT ENTER THE UNPAVED AREA UNDER THE TOWERS. DRAINAGE DIVERSIONS SUCH AS CURBS SHALL BE USED ON THREE SIDES OF EACH TOWER. THE OPEN SIDE OF EACH TOWER SHALL BE THE LOWEST ELEVATION SIDE TO ALLOW STORM WATER WHICH FALLS UNDER THE TOWER TO DRAIN. THE AREA UNDER THE TOWERS SHALL BE MANUALLY GRADED TO SHEET FLOW OUT FROM UNDER THE TOWERS.
22. PONDING OR FLOODING CONDITIONS WITHIN THE RIGHT OF WAY SHALL NOT BE ALLOWED, ESPECIALLY AROUND THE TRANSMISSION TOWERS. ALL DRAINAGE SHALL FLOW OFF OF THE RIGHT OF WAY.
23. CONSENTEE SHALL COMPLY WITH ALL LOS ANGELES COUNTY MUNICIPAL STORM WATER PERMIT ND STANDARD URBAN STORM WATER MITIGATION PLAN REQUIREMENTS.
24. FILLS, INCLUDING BACKFILLS, SHALL BE IN HORIZONTAL, UNIFORM LAYERS NOT TO EXCEED SIX INCHES IN THICKNESS BEFORE COMPACTION, THEN COMPACTED TO 90 PERCENT RELATIVE COMPACTION IN ACCORDANCE WITH THE AMERICAN SOCIETY FOR TESTING AND MATERIALS D1557.
25. THE TOP TWO INCHES TO SIX INCHES OF THE CONCRETE FOOTINGS OF THE TOWERS SHALL REMAIN EXPOSED AND NOT COVERED OVER BY ANY FILL FROM GRADING OPERATIONS.
26. THE CONSENTEE SHALL OBTAIN AND PAY FOR ALL PERMITS AND LICENSES REQUIRED FOR PERFORMANCE OF THE WORK AND SHALL COMPLY WITH ALL LAWS, ORDINANCES, RULES, ORDERS, OR REGULATIONS INCLUDING, BUT NOT LIMITED TO, THOSE OF ANY AGENCIES, DEPARTMENTS, DISTRICTS, OR COMMISSIONS OF THE STATE, COUNTY, OR CITY HAVING JURISDICTION THEREOVER.
27. CONSENTEE SHALL INSTALL K-RAILS AT A DISTANCE OF TEN FEET FROM EACH SIDE OF THE TOWER BASE FOR PROTECTION OF TOWERS. A DISTANCE OF FIVE FEET FROM THE TOWER BASE MAY BE ACCEPTABLE IN LOCATIONS WHERE THE PATROL ROADS WOULD BE OBSTRUCTED.
28. CONSENTEE SHALL INSTALL REMOVABLE PIPE BOLLARDS, SPACED FOUR FEET APART, AND AT A DISTANCE OF TEN FEET FROM EACH SIDE OF THE TOWER BASE FOR PROTECTION OF TOWERS. A DISTANCE OF FIVE FEET FROM THE TOWER BASE MAY BE ACCEPTABLE IN LOCATIONS WHERE THE PATROL ROADS WOULD BE OBSTRUCTED.
29. CONSENTEE SHALL PROVIDE AND MAINTAIN A MINIMUM 20-FOOT WIDE TRANSITION RAMP FOR THE PATROL ROADS FROM THE PAVEMENT TO THE GROUND SURFACE. THE RAMP SHALL NOT EXCEED A SLOPE OF TEN PERCENT.
30. CONSENTEE SHALL PROVIDE AND MAINTAIN A MINIMUM 20-FOOT WIDE DRIVEWAY AND GATE AT ALL LOCATIONS WHERE THE (ROAD/STREET) CROSSES THE LADWP'S PATROL ROADS. THE DESIGNED GATES MUST BE CAPABLE OF BEING INTERLOCKED WITH AN LADWP PADLOCK TO ALLOW ACCESS TO THE RIGHT OF WAY BY THE LADWP.
31. CONSENTEE SHALL POST A SIGN ON THE ENTRANCE GATE TO THE RIGHT OF WAY, OR IN A VISIBLE LOCATION INSIDE THE ENTRANCE GATE, IDENTIFYING THE CONTACT PERSON'S NAME AND TELEPHONE NUMBER FOR THE PROMPT MOVING OF (VEHICLES/TRUCKS/TRAILERS/CONTAINERS) AT TIMES OF LADWP MAINTENANCE OR EMERGENCY ACTIVITIES, OR ANY OTHER EVENT THAT (VEHICLES/TRUCKS/TRAILERS/CONTAINERS) MUST BE MOVED. IN EMERGENCY CONDITIONS, THE LADWP RESERVES ALL RIGHTS AT ANY TIME TO MOVE OR TOW (VEHICLES/TRUCKS/TRAILERS/ CONTAINERS) OUT OF SPECIFIC AREAS FOR ANY TRANSMISSION OPERATION OR MAINTENANCE PURPOSES.

CUT AND FILL ESTIMATES
TOTAL CUT VOLUME OF 80,000 CY
TOTAL FILL VOLUME OF 25,000 CY

NOTE: THESE QUANTITIES ARE ROUGH ESTIMATES FOR PERMITTING PURPOSES AND SHALL NOT BE USED FOR THE CONTRACTOR'S BID

THE CITY OF LOS ANGELES OR ITS OFFICERS OR AGENTS SHALL NOT BE RESPONSIBLE FOR THE ACCURACY OR COMPLETENESS OF ELECTRONIC COPIES OF THIS PLAN SHEET.

REVISION DATES (DESIGN STAGE ONLY)

ENGINEERING
CITY OF LOS ANGELES

PROFESSIONAL ENGINEER — REGISTERED — No. C 48973 — EXP. 08/31/2026 — STATE OF CALIFORNIA — CIVIL — 04/11/2023

THIS PLAN WAS ELECTRONICALLY • SIGNED AND STAMPED

BUREAU OF ENGINEERING

VERTICAL CONTROL: BENCH MARK: 18-02215 NAVD 88
HORIZONTAL CONTROL: CALIFORNIA STATE PLANE ZONE V, 1983 NAD

SHEET TITLE: GENERAL NOTES II

PROJECT: STRATHERN PARK NORTH STORMWATER CAPTURE PROJECT

ADDRESS: STRATHERN PARK NORTH 8041 WHISETT AVE, NORTH HOLLYWOOD, CA 91605

NO.	REVISIONS	DATE	BY
		YY/MM/DD	
		YY/MM/DD	
		YY/MM/DD	
		YY/MM/DD	

CIP NO. SCP0003

INDEX NO.

CITY OF LOS ANGELES DEPARTMENT OF PUBLIC WORKS

CITY ENGINEER: TED ALLEN, P.E. — DATE: 04/11/2023

DESIGN GROUP		DATE
ENGINEER:	CDM SMITH INC.	04/11/2023
ARCHITECT:	NA	04/11/2023
DESIGNED BY:	C. RICE	04/11/2023
DRAWN BY:	C. BILDERBACK	04/11/2023
CHECKED BY:	P. TAURASI	04/11/2023
APPROVED BY:	A. DELLINGER	04/11/2023

WORK ORDER
EW40080F

SHEET NAME
GI04

SHEET 4 OF 86 SHEETS

NOTE

1. CROSS FENCING TO BE PROVIDED BY CONTRACTOR WITHIN THE EASEMENT TO SEPARATE CONTRACTOR STAGING TO THE WEST OF THE FENCE AND VEHICLE STORAGE BY CITY ON THE EAST.

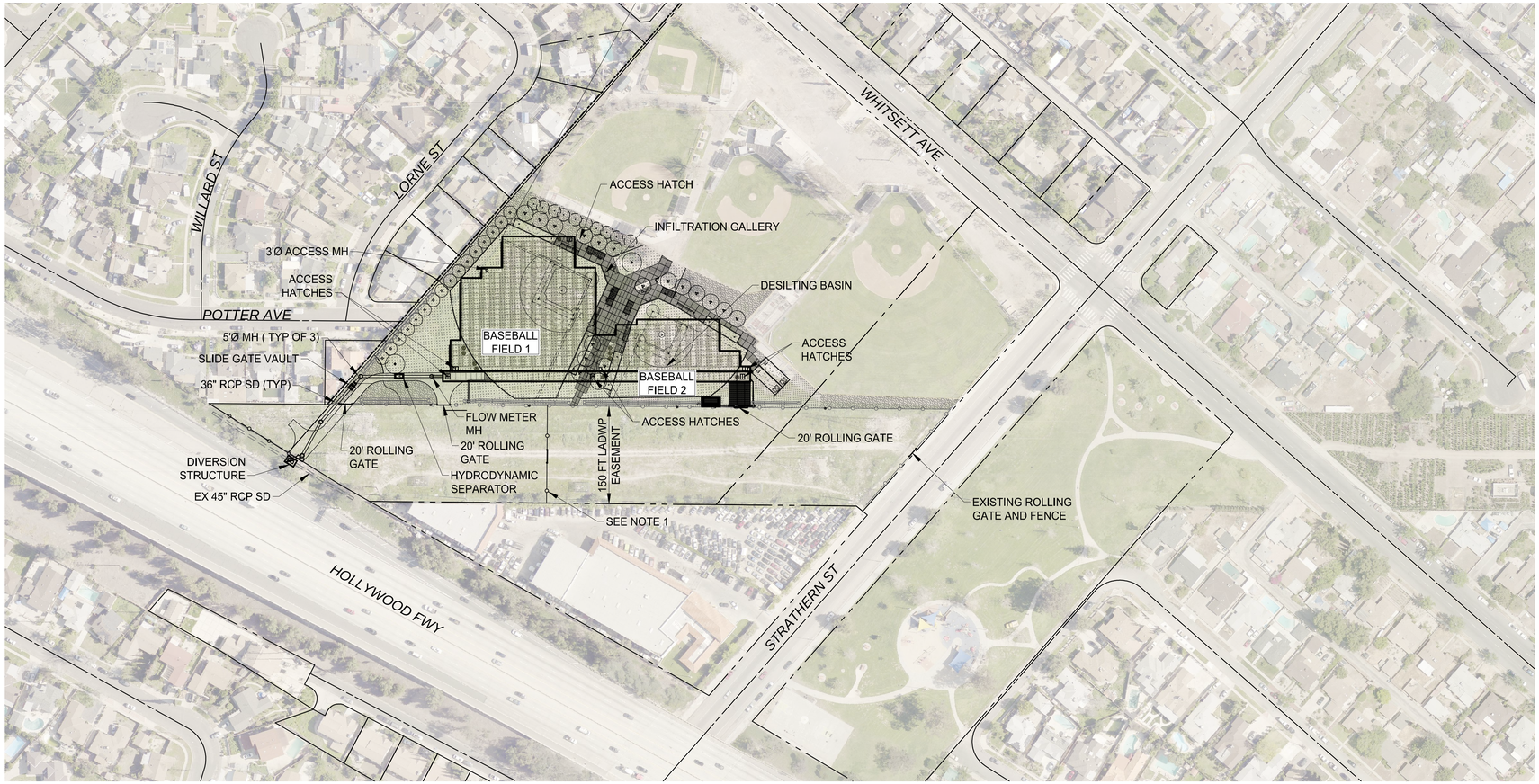

PLAN
1" = 100'

100' 0 100' 200'
1" = 100'

THE CITY OF LOS ANGELES OR ITS OFFICERS OR AGENTS SHALL NOT BE RESPONSIBLE FOR THE ACCURACY OR COMPLETENESS OF ELECTRONIC COPIES OF THIS PLAN SHEET.

REVISION DATES (DESIGN STAGE ONLY)

ENGINEERING
CITY OF LOS ANGELES

PROFESSIONAL ENGINEER
S. TED ALLEN
No. C 48973
EXP. 08/31/2026
REGISTERED
STATE OF CALIFORNIA
04/11/2023

THIS PLAN WAS ELECTRONICALLY • SIGNED AND STAMPED •

CITY OF LOS ANGELES DEPARTMENT OF PUBLIC WORKS BUREAU OF ENGINEERING

VERTICAL CONTROL: BENCH MARK: 18-0221S NAVD 88
HORIZONTAL CONTROL: CALIFORNIA STATE PLANE ZONE V, 1983 NAD

SHEET TITLE: OVERALL PROJECT SITE PLAN

PROJECT: STRATHERN PARK NORTH STORMWATER CAPUTRE PROJECT

ADDRESS: STRATHERN PARK NORTH 8041 WHISETT AVE, NORTH HOLLYWOOD, CA 91605

NO.	REVISIONS	DATE	BY
		YY/MM/DD	
		YY/MM/DD	
		YY/MM/DD	
		YY/MM/DD	

CIP NO. SCP0003

INDEX NO.

CITY ENGINEER: TED ALLEN, P.E. — DATE: 04/11/2023

DESIGN GROUP		DATE
ENGINEER:	CDM SMITH INC.	04/11/2023
ARCHITECT:	NA	04/11/2023
DESIGNED BY:	C. RICE	04/11/2023
DRAWN BY:	C. BILDERBACK	04/11/2023
CHECKED BY:	P. TAURASI	04/11/2023
APPROVED BY:	A. DELLINGER	04/11/2023

WORK ORDER
EW40080F

SHEET NAME
GI05

SHEET 5 OF 85 SHEETS

NOTE

1. HGL FOR 32 CFS FLOW DURING THE FILLING OF INFILTRATION GALLERY.

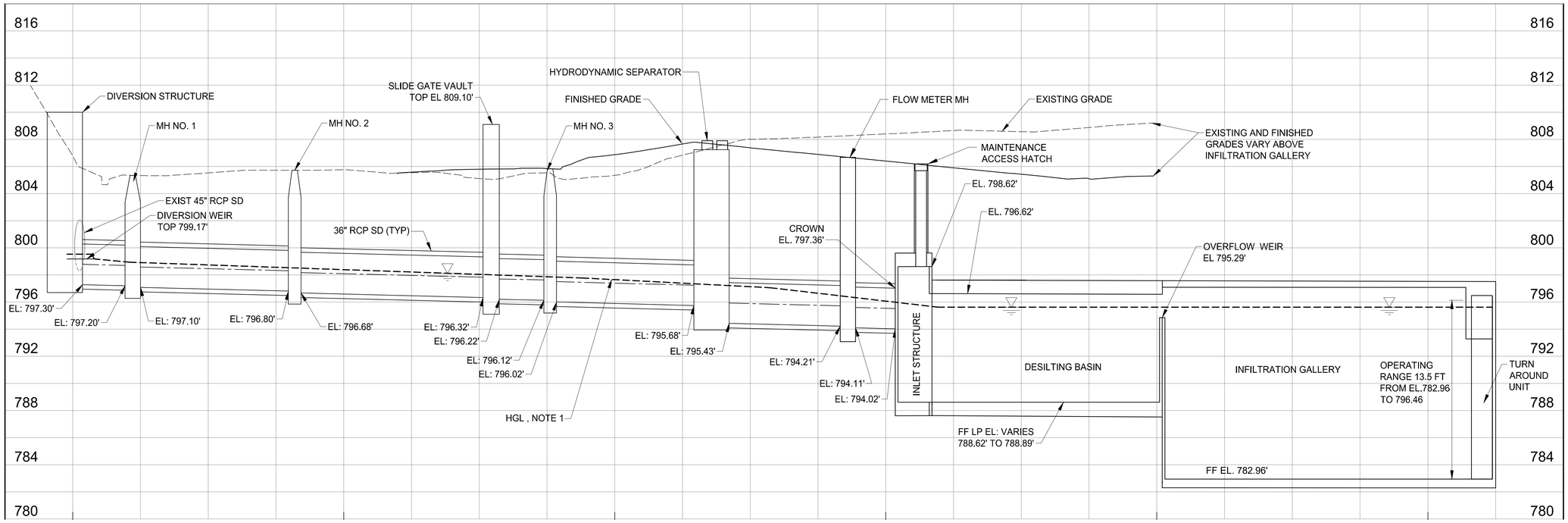

HYDRAULIC PROFILE

NTS H; 1" = 4'V

THE CITY OF LOS ANGELES OR ITS OFFICERS OR AGENTS SHALL NOT BE RESPONSIBLE FOR THE ACCURACY OR COMPLETENESS OF ELECTRONIC COPIES OF THIS PLAN SHEET.

REVISION DATES (DESIGN STAGE ONLY)

ENGINEERING
CITY OF LOS ANGELES

REGISTERED PROFESSIONAL ENGINEER
S. TED ALLEN
No. C 48973
EXP. 06/30/2026
STATE OF CALIFORNIA
04/11/2023

THIS PLAN WAS ELECTRONICALLY • SIGNED AND STAMPED •

BUREAU OF ENGINEERING

VERTICAL CONTROL: BENCH MARK 18-02215 NAVD 88
HORIZONTAL CONTROL: CALIFORNIA STATE PLANE ZONE V, 1983 NAD

SHEET TITLE: HYDRAULIC PROFILE

PROJECT: STRATHERN PARK NORTH STORMWATER CAPTURE PROJECT

ADDRESS: STRATHERN PARK NORTH 8041 WHISETT AVE, NORTH HOLLYWOOD, CA 91605

NO.	REVISIONS	DATE	BY
		YY/MM/DD	
		YY/MM/DD	
		YY/MM/DD	
		YY/MM/DD	

CIP NO. SCP0003

INDEX NO.

CITY OF LOS ANGELES DEPARTMENT OF PUBLIC WORKS

CITY ENGINEER: TED ALLEN, P.E. — DATE: 04/11/2023

DESIGN GROUP		DATE
ENGINEER:	CDM SMITH INC.	04/11/2023
ARCHITECT:	NA	04/11/2023
DESIGNED BY:	C. RICE	04/11/2023
DRAWN BY:	C. BILDERBACK	04/11/2023
CHECKED BY:	P. TAURASI	04/11/2023
APPROVED BY:	A. DELLINGER	04/11/2023

WORK ORDER
EW40080F

SHEET NAME
GI06

SHEET 6 OF 85 SHEETS

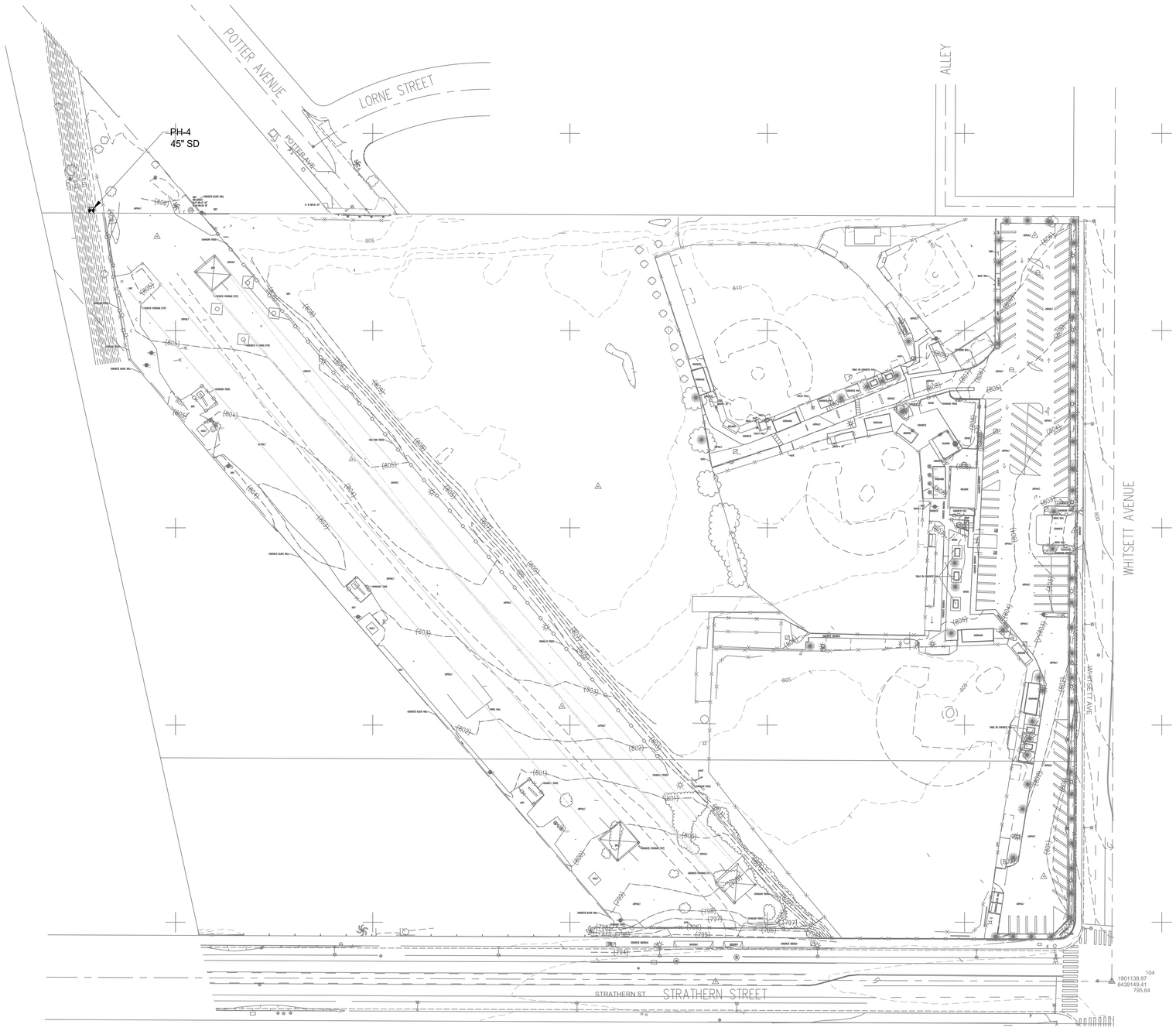

SURVEY PLAN
NTS

NOTES

1. COORDINATES SHOWN ARE BASED ON THE CALIFORNIA COORDINATE SYSTEM (CCS83), ZONE V, 1983 NAD (2017.50 EPOCH)
2. BEARINGS ARE BASED ON THE BEARING BETWEEN CALIFORNIA SPATIAL REFERENCE CENTER CONTINUOUS GPS STATIONS "SILK" TO "WMAP" BEING N38 24 47.9"W
3. ELEVATIONS ARE BASED ON CITY OF LOS ANGELES BENCH MARK "08-30460", DESCRIBED AS "SPK.; E. CURB WHITSETT AVE., 4.8 FT. S/O BCR S/O CANTARA ST".
   = 808.204 FEET (NAVD 88, YEAR OF ADJUSTMENT, 2000)

DATE OF SURVEY: JUNE, 2020

LEGEND

- LOCAL BENCHMARK
- SET BENCHMARK
- TRAFFIC SIGNAL POLE
- TRAFFIC SIGNAL POLE WITHOUT MASTARM
- STREET LIGHT POLE
- UTILITY POLE
- FIRE HYDRANT
- UTILITY PULL BOX
- COMMUNICATION PULL BOX (COMM)
- ELECTRICAL BOX (E)
- STREET LIGHT PULL BOX (SLPB)
- TELEPHONE PULL BOX (TPB)
- TRAFFIC SIGNAL PULL BOX (TSPB)
- GATE VALVE (GTV)
- IRRIGATION CONTROL VALVE
- QUICK COUPLER VALVE (QCV)
- REMOTE CONTROL VALVE (RCV)
- WATER VALVE
- GAS VALVE
- MANHOLE (M)
- STORM DRAIN MANHOLE (D)
- TELECOMMUNICATIONS MANHOLE (T)
- ELECTRICAL MANHOLE (E)
- SEWER MANHOLE (S)
- CATCH BASIN ACCESS COVER (D)
- TREE (UNCLASSIFIED)
- TREE (PALM)
- VENT (V)
- GUARDPOST (G)
- SIGN
- GUYWIRE
- PARKING METER
- BICYCLE RACK
- WATER METER (W)
- MONITORING WELL
- SANITARY CLEANOUT
- WATER VALVE BOX (W)
- FIRE HYDRANT VALVE
- GAS METER
- POSTAL DROP BOX (PB)

THE CITY OF LOS ANGELES OR ITS OFFICERS OR AGENTS SHALL NOT BE RESPONSIBLE FOR THE ACCURACY OR COMPLETENESS OF ELECTRONIC COPIES OF THIS PLAN SHEET.

REVISION DATES (DESIGN STAGE ONLY)

ENGINEERING
CITY OF LOS ANGELES

PROFESSIONAL ENGINEER
REGISTERED
S. TED ALLEN
No. C 48973
EXP. 08/31/2026
STATE OF CALIFORNIA
04/11/2023

THIS PLAN WAS ELECTRONICALLY • SIGNED AND STAMPED •

CITY OF LOS ANGELES **DEPARTMENT OF PUBLIC WORKS** **BUREAU OF ENGINEERING**

VERTICAL CONTROL: BENCH MARK 18-02215 NAVD 88
HORIZONTAL CONTROL: CALIFORNIA STATE PLANE ZONE V, 1983 NAD

SHEET TITLE: SITE SURVEY

PROJECT: STRATHERN PARK NORTH STORMWATER CAPUTRE PROJECT

ADDRESS: STRATHERN PARK NORTH 8041 WHISETT AVE, NORTH HOLLYWOOD, CA 91605

NO.	REVISIONS	DATE	BY
		YY/MM/DD	
		YY/MM/DD	
		YY/MM/DD	
		YY/MM/DD	

CIP NO. SCP0003

INDEX NO.

CITY ENGINEER	DATE
TED ALLEN, P.E.	04/11/2023

DESIGN GROUP	
ENGINEER:	CDM SMITH INC.
ARCHITECT:	NA
DESIGNED BY:	C. RICE
DRAWN BY:	C. BILDERBACK
CHECKED BY:	P. TAURASI
APPROVED BY:	A. DELLINGER

04/11/2023	
04/11/2023	
04/11/2023	
04/11/2023	
04/11/2023	

WORK ORDER
EW40080F

SHEET NAME
VF01

SHEET 7 OF 85 SHEETS

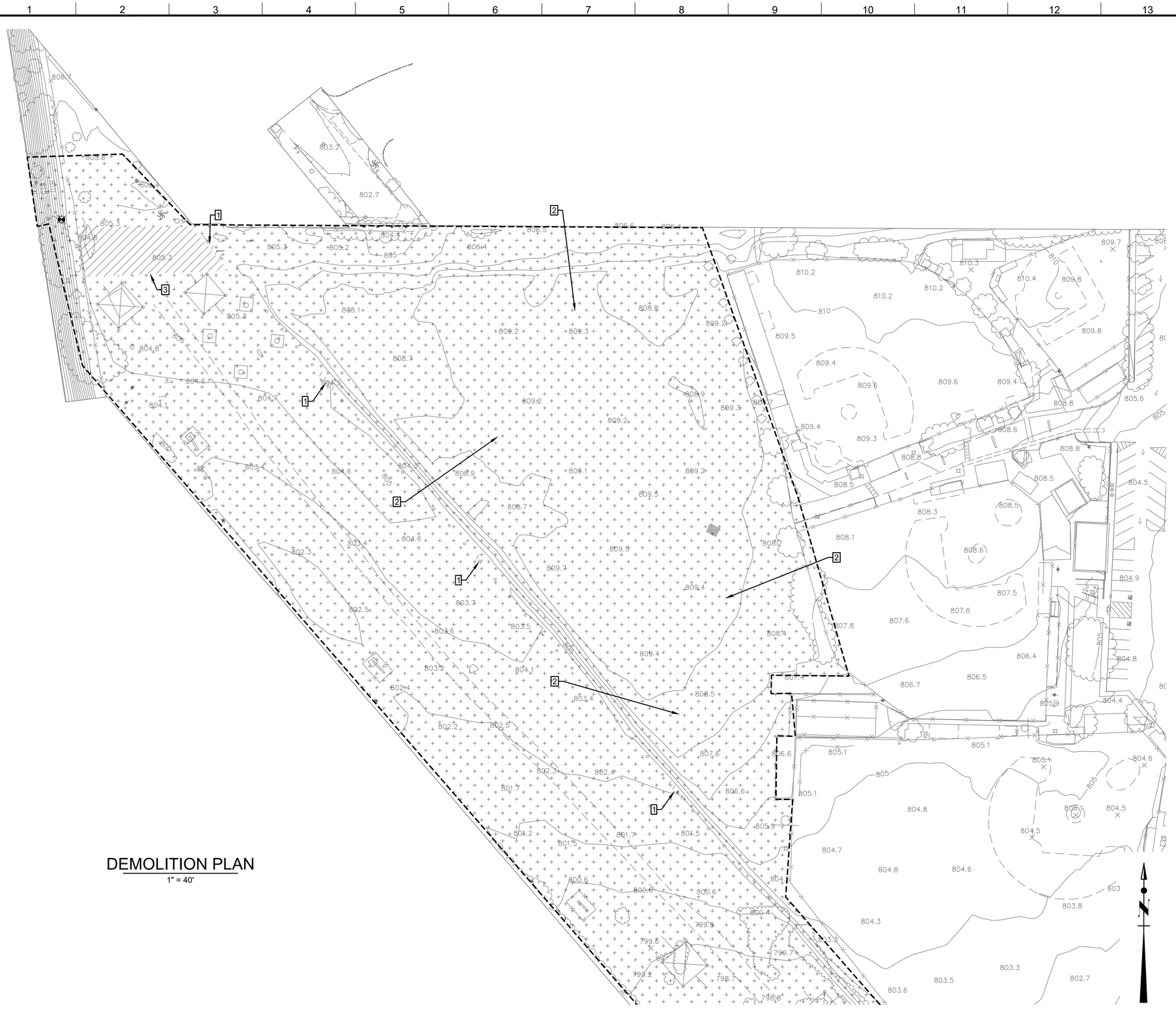

DEMOLITION PLAN

1" = 40'

CONSTRUCTION SYMBOLS

- CONSTRUCT
- EXISTING
- REMOVE
- REMODEL EXISTING
- REMOVE & CONSTRUCT
- WORK BY OTHERS

ITEM NO.	DESCRIPTION
1.	FENCE TO ALLOW NEW GATE
2.	TURF
3.	ASPHALT PAVEMENT

LEGEND

LIMIT OF DISTURBANCE - SEE CS07

NOTES:

1. EXISTING TREES TO REMAIN IN PLACE. SEE LP01, LP03, AND LP04.
2. REPLACE ASPHALT PAVEMENT IN KIND.

THE CITY OF LOS ANGELES OR ITS OFFICERS OR AGENTS SHALL NOT BE RESPONSIBLE FOR THE ACCURACY OR COMPLETENESS OF ELECTRONIC COPIES OF THIS PLAN SHEET.

REVISION DATES (DESIGN STAGE ONLY)

ENGINEERING
CITY OF LOS ANGELES

REGISTERED PROFESSIONAL ENGINEER S. TED ALLEN No. C 48973 EXP. 06/30/2026 STATE OF CALIFORNIA CIVIL 04/11/2023

THIS PLAN WAS ELECTRONICALLY • SIGNED AND STAMPED

CITY OF LOS ANGELES DEPARTMENT OF PUBLIC WORKS BUREAU OF ENGINEERING

VERTICAL CONTROL: BNCH MARK 18-02215 NAVD 88
HORIZONTAL CONTROL: CALIFORNIA STATE PLANE ZONE V, 1983 NAD

SHEET TITLE: SITE DEMOLITION PLAN

PROJECT: STRATHERN PARK NORTH STORMWATER CAPUTRE PROJECT

ADDRESS: STRATHERN PARK NORTH 8041 WHISETT AVE, NORTH HOLLYWOOD, CA 91605

NO.	REVISIONS	DATE	BY
		YY/MM/DD	
		YY/MM/DD	
		YY/MM/DD	
		YY/MM/DD	

CIP NO. SCP0003

INDEX NO.

CITY ENGINEER

	DESIGN GROUP	DATE
TED ALLEN, P.E.		
ENGINEER:	CDM SMITH INC.	04/11/2023
ARCHITECT:	NA	04/11/2023
DESIGNED BY:	C. RICE	04/11/2023
DRAWN BY:	C. BILDERBACK	04/11/2023
CHECKED BY:	P. TAURASI	04/11/2023
APPROVED BY:	A. DELLINGER	04/11/2023

WORK ORDER EW40080F

SHEET NAME DM01

SHEET 8 OF 85 SHEETS

SHEET VERSION 4.0.1 FILE PATH: C:\CDMEXT\VINODA\D0491590\DM101.DWG PLOT DATE: 10/9/2024 4:31 PM SAVED: 10/7/2024 1:33 PM SAVED BY:PAVITHRAB

DESILTING BASIN MODULE LEGEND

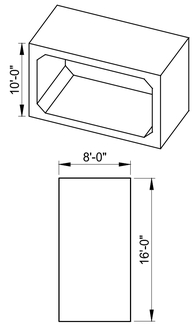

PLAN

TYPE A1

NOT USED

TYPE A2

NOT USED

TYPE A3

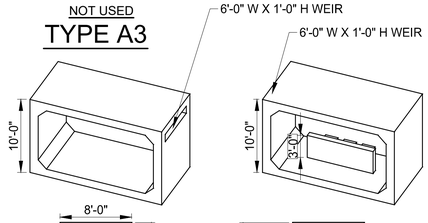

PLAN

TYPE A6

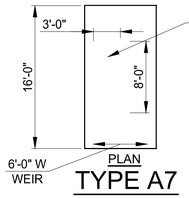

PLAN

TYPE A7

NOT USED

TYPE A4

NOT USED

TYPE A5

NOT USED

TYPE A8

INFILTRATION MODULE LEGEND

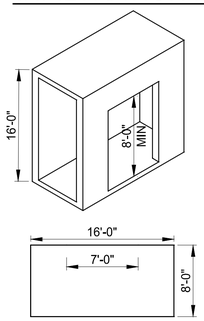

PLAN

TYPE B1

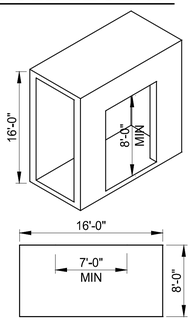

PLAN

TYPE B2

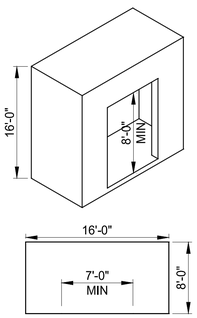

PLAN

TYPE B3

NOT USED

TYPE B4

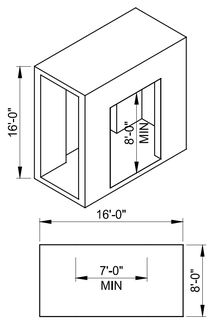

PLAN

TYPE B5

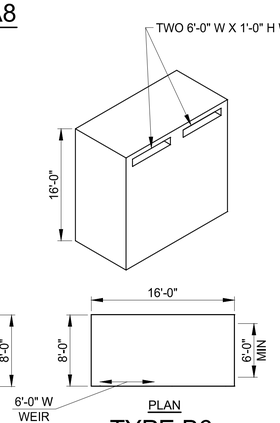

PLAN

TYPE B6

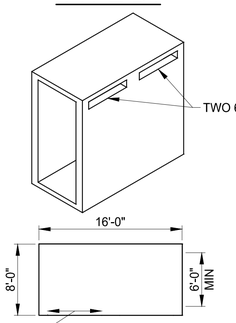

PLAN

TYPE B7

NOT USED

TYPE B8

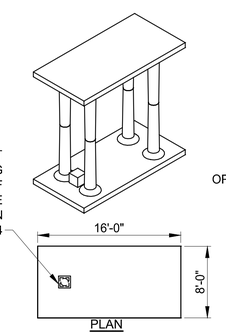

PLAN

TYPE C1

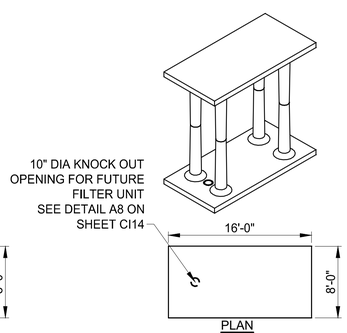

PLAN

TYPE C2

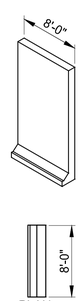

PLAN

TYPE D

THE CITY OF LOS ANGELES OR ITS OFFICERS OR AGENTS SHALL NOT BE RESPONSIBLE FOR THE ACCURACY OR COMPLETENESS OF ELECTRONIC COPIES OF THIS PLAN SHEET.

REVISION DATES (DESIGN STAGE ONLY)

MISCELLANEOUS

REVISION TAG

KEYNOTE

TIE-IN

COLUMN GRID

SECTIONS

CALLOUT SECTION-JOGGED — A / CI02

CALLOUT SECTION — A / —

VIEW TITLE SECTION — A / CI02 — SECTION — SCALE: 3/8"=1'-0"

ELEVATION

CALLOUT ELEVATION — A / CI02

VIEW TITLE ELEVATION — N / AI02 — ELEVATION — SCALE: 3/8"=1'-0"

BOE NORTH ARROW

DETAIL

CALLOUT DETAIL — H4 / SG07

VIEW TITLE DETAIL

SCALE: 3/8" = 1'-0"	CB01

SCALE BAR

CIVIL

10' 0 10' 20'

1" = 10'

ISOMETRIC

SW / SSO3

N / AI02 — ISOMETRIC — SCALE: 3/8"=1'-0"

INSET-VIEW

INSET VIEW — A — A

CALLOUT INSET VIEW — –

ENLARGED PLAN

CALLOUT ENLARGED PLAN — 1 / SS02

VIEW TITLE ON ENLARGED PLAN

VIEW TITLE ENLARGED PLAN

1 / SS02 — ENLARGED PLAN — SCALE: 3/8" = 1'-0"

ENLARGEMENT BUBBLE

ENLARGEMENT BUBBLE

LEGEND

- Ⓓ STORM DRAIN MAINTENANCE HOLE
- Ⓢ SANITARY SEWER MAINTENANCE HOLE
- PROPERTY LINE
- ROAD CENTERLINE
- P-5 / TD=30.8 — BORING/PERCOLATION TEST: TD= TOTAL DEPTH IN FEET
- B-5 / TD=30.8 — BORING: TD= TOTAL DEPTH IN FEET
- PH-1 / 2" SCG (3.0) — POTHOLE: UTILITY (DEPTH OF COVER IN FEET)

NOTE:

INFILTRATION MODULE TYPES: TYPE B ARE ACCESS AND TURN-AROUND UNITS; TYPE C ARE INFILTRATION AND STORAGE UNITS; TYPE D ARE END WALLS FOR FILTRATION AND STORAGE UNITS.

ABBREVIATIONS

AVE	AVENUE
BC	BEGIN CURVE
BLVD	BOULEVARD
CL	CENTERLINE
CFS	CUBIC FEET PER SECOND
CONC	CONCRETE
DET	DETAIL
DIA	DIAMETER
DWG	DRAWING
EC	END CURVE
EOP	EDGE OF PAVEMENT
EL, ELEV	ELEVATION
EXIST	EXISTING
FF	FINISH FLOOR
HGL	HYDRAULIC GRADE LINE
INV	INVERT
LAT	LATERAL
MAX	MAXIMUM
MH	MAINTENANCE HOLE
NO	NUMBER
RCP	REINFORCED CONCRETE PIPE
REQ'D	REQUIRED
RP	RADIUS POINT
S	SLOPE
SD	STORM DRAIN
SF	SQUARE FEET
SS	SANITARY SEWER
ST	STREET
STA	STATION
TOC	TOP OF CONCRETE
TYP	TYPICAL
W	WATER
WSE	WATER SURFACE ELEVATION

BUREAU OF ENGINEERING • THIS PLAN WAS ELECTRONICALLY • SIGNED AND STAMPED

ENGINEERING — CITY OF LOS ANGELES

REGISTERED PROFESSIONAL ENGINEER — TED S. ALLEN — No. C 48973 — EXP. 08/31/2026 — STATE OF CALIFORNIA — 04/04/2023

VERTICAL CONTROL: BENCH MARK 18-02215 NAVD 88
HORIZONTAL CONTROL: CALIFORNIA STATE PLANE ZONE V, 1983 NAD

SHEET TITLE: CIVIL ABBREVIATIONS, SYMBOLS, AND LEGEND

PROJECT: STRATHERN PARK NORTH STORMWATER CAPUTRE PROJECT

ADDRESS: STRATHERN PARK NORTH 8041 WHISETT AVE, NORTH HOLLYWOOD, CA 91605

NO.	REVISIONS	DATE	BY
		YY/MM/DD	
		YY/MM/DD	
		YY/MM/DD	
		YY/MM/DD	

CIP NO. SCP0003

INDEX NO.

CITY OF LOS ANGELES DEPARTMENT OF PUBLIC WORKS

CITY ENGINEER: TED ALLEN, P.E. — DATE: 04/11/2023

DESIGN GROUP	
ENGINEER:	CDM SMITH INC.
ARCHITECT:	NA
DESIGNED BY:	C. RICE
DRAWN BY:	C. BILDERBACK
CHECKED BY:	P. TAURASI
APPROVED BY:	A. DELLINGER

WORK ORDER EW40080F

SHEET NAME CG01

SHEET 9 OF 85 SHEETS

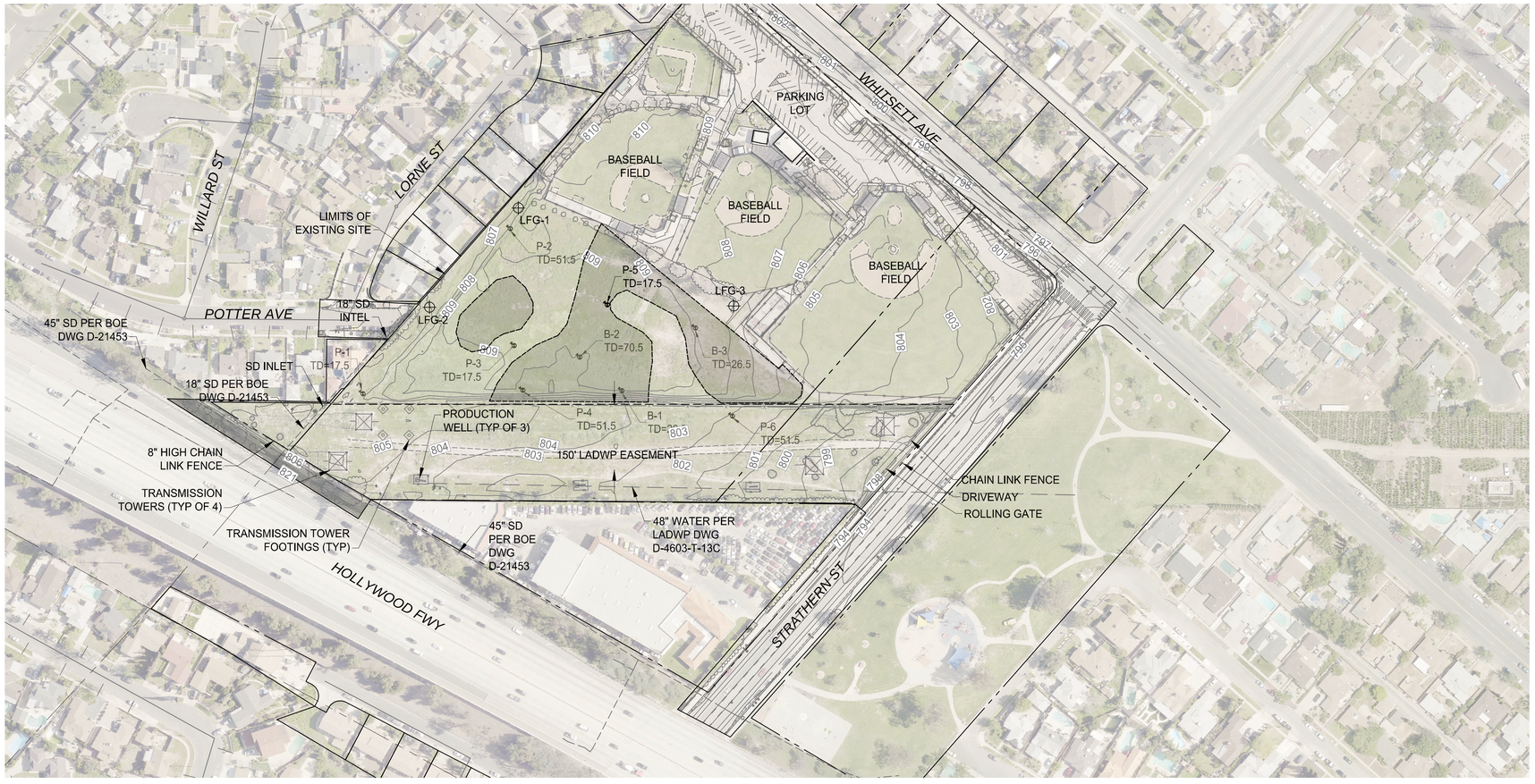

EXISTING SITE PLAN

1" = 100'

NOTES

1. BORING LOCATIONS ARE APPROXIMATE. SEE GEOTECHNICAL REPORT IN APPENDIX FOR MORE DETAILS.
2. DELINEATION OF WASTE AREAS ARE APPROXIMATE. SEE PHASE II ESA REPORT IN APPENDIX FOR MORE DETAILS.
3. CONTRACTOR TO INSTALL 3 LANDFILL GAS MONITORING WELLS PRIOR TO EXCAVATION OF WASTE FROM THE SITE. SEE *ADDITIONAL PHASE II ENVIRONMENTAL SITE ASSESSMENT, STORMWATER CAPTURE PARKS PROGRAM, PORTION OF STRATHERN SITE* IN THE SPECIFICATION APPENDIX.

LEGEND

ESTIMATED WASTE DISPOSAL AREA FROM PHASE II ESA (2021)

LFG-# - LAND FILL GAS MONITORING WELL SEE NOTE 3

100' 0 100' 200'

1" = 100'

THE CITY OF LOS ANGELES OR ITS OFFICERS OR AGENTS SHALL NOT BE RESPONSIBLE FOR THE ACCURACY OR COMPLETENESS OF ELECTRONIC COPIES OF THIS PLAN SHEET.

REVISION DATES (DESIGN STAGE ONLY)

ENGINEERING
CITY OF LOS ANGELES

PROFESSIONAL ENGINEER
REGISTERED
No. C 48973
EXP. 06/30/2026
STATE OF CALIFORNIA
04/11/2023

THIS PLAN WAS ELECTRONICALLY • SIGNED AND STAMPED

CITY OF LOS ANGELES DEPARTMENT OF PUBLIC WORKS BUREAU OF ENGINEERING

VERTICAL CONTROL: BENCH MARK: 18-02215 NAVD 88
HORIZONTAL CONTROL: CALIFORNIA STATE PLANE ZONE V, 1983 NAD

SHEET TITLE: EXISTING SITE PLAN

PROJECT: STRATHERN PARK NORTH STORMWATER CAPUTRE PROJECT

ADDRESS: STRATHERN PARK NORTH 8041 WHISETT AVE, NORTH HOLLYWOOD, CA 91605

NO.	REVISIONS	DATE	BY
		YY/MM/DD	
		YY/MM/DD	
		YY/MM/DD	
		YY/MM/DD	

CIP NO. SCP0003

INDEX NO.

CITY ENGINEER

	DESIGN GROUP	DATE
TED ALLEN, P.E.		04/11/2023
ENGINEER:	CDM SMITH INC.	04/11/2023
ARCHITECT:	NA	04/11/2023
DESIGNED BY:	C. RICE	04/11/2023
DRAWN BY:	C. BILDERBACK	04/11/2023
CHECKED BY:	P. TAURASI	04/11/2023
APPROVED BY:	A. DELLINGER	04/11/2023

WORK ORDER EW40080F

SHEET NAME CS01

SHEET 10 OF 85 SHEETS

SHEET VERSION 4.0.1 FILE PATH: C:\CDMEXT\VINODA\D0491590\CS101.DWG PLOT DATE: 10/9/2024 4:21 PM SAVED: 10/7/2024 1:33 PM SAVED BY:PAVITHRAB

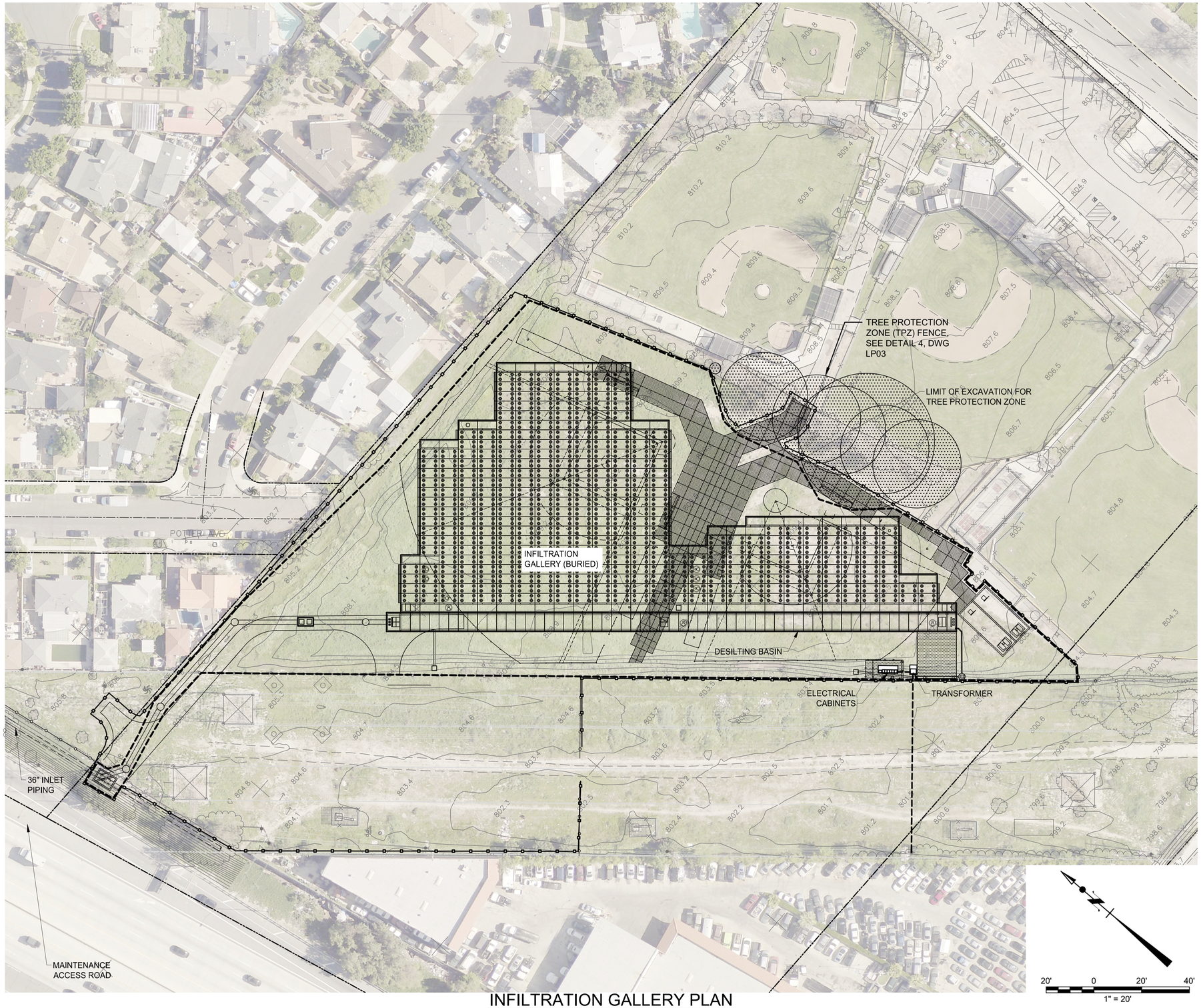

INFILTRATION GALLERY PLAN

1" = 20'

20' 0 20' 40'

1" = 20'

LEGEND

- TREE TO BE REMOVED
- TRD_12" — TREE DIAMETER
- TREE CANOPY
- TREE TO BE PROTECTED
- TREE PROTECTION ZONE (EVERY 1" OF TREE DIAMETER EQUALS 1.5' OF PROTECTION ZONE) MEASURED FROM THE OUTSIDE EDGE OF THE TREE TRUNK AT A HEIGHT OF 3.5 FT FROM THE GROUND
- LIMITS OF TREE PROTECTION ZONE (TPZ) FENCING
- LIMITS OF TEMPORARY CONTRACTOR FENCING DURING CONSTRUCTION

NOTES:

1. SEE LANDSCAPE PLANS FOR ADDITIONAL SITE IMPROVEMENTS WITHIN LIMIT OF WORKS. CONTRACTOR SHALL PROTECT EXISTING TREES PER TREE PROTECTION REQUIREMENTS IN SHEET LP03.
2. LAYDOWN AREA AND TEMPORARY STORAGE SITE IS NOT ALLOWED WITHIN THE TPZ AREAS.
3. TREES TO BE REMOVED SHALL BE COORDINATED WITH THE LANDSCAPE ARCHITECT PRIOR TO REMOVAL.
4. SEE LIMITS OF CONSTRUCTION FENCING FOR THE OVERALL CONSTRUCTION ON SHEET CS07.

THE CITY OF LOS ANGELES OR ITS OFFICERS OR AGENTS SHALL NOT BE RESPONSIBLE FOR THE ACCURACY OR COMPLETENESS OF ELECTRONIC COPIES OF THIS PLAN SHEET.

REVISION DATES (DESIGN STAGE ONLY)

ENGINEERING — CITY OF LOS ANGELES

PROFESSIONAL ENGINEER — REGISTERED — SCOTT S. TELLINGHUISEN — No. C 48973 — EXP. 08/31/2026 — STATE OF CALIFORNIA — 04/11/2023

THIS PLAN WAS ELECTRONICALLY • SIGNED AND STAMPED

BUREAU OF ENGINEERING

VERTICAL CONTROL: BENCH MARK 18-02215 NAVD 88
HORIZONTAL CONTROL: CALIFORNIA STATE PLANE ZONE V, 1983 NAD

SHEET TITLE: TREE PROTECTION ZONE/ LIMITS OF EXCAVATION

PROJECT: STRATHERN PARK NORTH STORMWATER CAPUTRE PROJECT

ADDRESS: STRATHERN PARK NORTH 8041 WHISETT AVE, NORTH HOLLYWOOD, CA 91605

NO.	REVISIONS	DATE	BY
		YY/MM/DD	
		YY/MM/DD	
		YY/MM/DD	
		YY/MM/DD	

CIP NO. SCP0003

INDEX NO.

CITY OF LOS ANGELES DEPARTMENT OF PUBLIC WORKS

CITY ENGINEER: TED ALLEN, P.E.

DESIGN GROUP	DATE
ENGINEER: CDM SMITH INC.	04/11/2023
ARCHITECT: NA	04/11/2023
DESIGNED BY: C. RICE	04/11/2023
DRAWN BY: C. BILDERBACK	04/11/2023
CHECKED BY: P. TAURASI	04/11/2023
APPROVED BY: A. DELLINGER	04/11/2023

WORK ORDER EW40080F

SHEET NAME CS02

SHEET 11 OF 85 SHEETS

THE CITY OF LOS ANGELES OR ITS OFFICERS OR AGENTS SHALL NOT BE RESPONSIBLE FOR THE ACCURACY OR COMPLETENESS OF ELECTRONIC COPIES OF THIS PLAN SHEET.

REVISION DATES (DESIGN STAGE ONLY)

TREE PROTECTION ZONE
EXISTING BASEBALL FIELD
TREE PROTECTION ZONE
BASEBALL FIELD, SEE LANDSCAPING PLANS
POTTER AVE
POTTER AVE
ROW
ROW
SWALE B=1', Z=3, D=1', W=7'
MAINTENANCE ACCESS ROAD
ACCESS HATCH
ACCESS ROAD
SWALE B=1', Z=3, D=1', W=7'
SWALE B=1', Z=2, D=1',W=5'
SWING GATE PER NOTE 2
SWING GATE PER NOTE 2
SWING GATE PER NOTE 2
DECORATIVE CONCRETE PAVING, SEE LANDSCAPING PLANS
1.0% MIN
20'
18'

138 807.00 FL
139 805.09 FL
135 804.36 HP/FL
131 804.00 FL/GB
134 803.00 FL/GB
133 803.00 FL/GB
132 803.84 FL/GB
130 804.53 HP/FL
142 805.83 RIM
143 805.82 HATCH
144 805.81 HATCH
136 805.93 ' GB
45 806.00 '
122 804.76 HP/FL
2 805.59 '
1 805.79 '
137 805.69 FS
123 803.88 FL
8 805.19 '
147 802.43 TG
7 805.32 '
124 802.43 FL
148 802.60 FL
149 803.09 FL
125 804.12 HP/FL
47 804.55 '
46 804.53 '
126 803.68 HP/FL
81 804.93 '
22 806.99 FS
25 807.25 FS
44 807.55 FS
26 807.50 FS
107 807.63 FS
104 807.87 FS
105 807.68 FS
106 807.59 FS
45 808.20 FS
24 807.04 '
20 806.70 '
21 806.66 '
23 807.40 FS
43 808.06 FS
12 807.71 FS
19 807.78 FS
39 807.82 FS
18 807.79 FS
42 807.88 FS
17 807.83 FS
40 807.54 FS
13 807.57 FS
156 808.25 FS
54 807.45 FS
53 807.29 FS
55 807.49 FS
14 807.37 FS
52 807.15 FS
16 807.36 FS
57 807.16 FS
35 806.52 FS
15 807.21 FS
50 806.32 FS
51 806.50 FS
36 806.66 FS
33 806.54 FS
38 805.73 FS
100 805.36 '
34 806.01 FS
37 805.75 FS
101 805.37 '
31 805.11 FS
11 805.15 FS
29 805.17 FS
102 805.21
32 805.08 FS
10 804.97 FS
150 804.65 FL
103 805.24 '
48 804.81 FS
30 804.90 '
28 805.11 '
9 805.35 FS
40 804.81 FS
27 804.93 '
97 805.90 FS
96 805.65 FS
98 806.06 FS
99 805.85 FS
84 806.31 FS
5 807.24 FS
140 807.90 FS
141 807.66 FS
85 806.19 FS
86 806.15 FS
87 806.03 FS
6 807.06 FS
108 807.04 '
4 805.90 FS

NOTES

1. **GRADING/RETAINING WALL/SHORING PLAN CORRECTION SHEETS (2017 LABC)** ITEM **C-5.**
   a. ALL GRADING SLOPES SHALL BE PLANTED AND SPRINKLERED. (7012.1).
   b. STANDARD 12 INCH HIGH BERM IS REQUIRED AT TOP OF ALL GRADED SLOPES. (7013.3).
   c. NO FILL TO BE PLACED, UNTIL THE CITY GRADING INSPECTOR HAS INSPECTED AND APPROVED THE BOTTOM EXCAVATION.
   d. MAN-MADE FILL SHALL BE COMPACTED TO A MINIMUM RELATIVE COMPACTION OF 90% MAX. DRY DENSITY WITHIN 40 FEET BELOW FINISH GRADE AND 93% OF MAX. DRY DENSITY DEEPER THAN 40 FEET BELOW FINISH GRADE, UNLESS A LOWER RELATIVE COMPACTION (NOT LESS THAN 90% OF MAX. DRY DENSITY) IS JUSTIFIED BY THE SOILS ENGINEER.
   e. TEMPORARY EROSION CONTROL TO BE INSTALLED DURING THE WET SEASON (BETWEEN OCTOBER 1 AND APRIL 15). OBTAIN GRADING INSPECTOR'S AND DEPARTMENT OF PUBLIC WORKS APPROVAL OF PROPOSED PROCEDURES. [>200 CY] (7007.1).
2. INSTALL GATE PER STANDARD 600-4. FIELD VERIFY HEIGHT AND MATCH. APPROXIMATE HEIGHT IS 8 FT.
3. FIELD VERIFY JOINS.

LEGEND

- JOIN EXIST
- FLOW LINE
- CONCRETE PER LANDSCAPE ARCHITECTURE PLAN
- TURF PER LANDSCAPE ARCHITECTURE PLAN
- SHRUBS PER LANDSCAPE ARCHITECTURE PLAN
- MULCH PER LANDSCAPE ARCHITECTURE PLAN

20' 0 20' 40'
1" = 20'

SHEET VERSION 4.0.1 FILE PATH: C:\CDMEXT\JVARELA@M-AENGINEERING.COM\D0491590\CB01 THRU CB03.DWG PLOT DATE: 2/3/2023 10:42 AM SAVED: 2/3/2023 10:42 AM SAVED BY:JUAN VARELA

CITY OF LOS ANGELES DEPARTMENT OF PUBLIC WORKS BUREAU OF ENGINEERING • THIS PLAN WAS ELECTRONICALLY • SIGNED AND STAMPED

ENGINEERING CITY OF LOS ANGELES

PROFESSIONAL ENGINEER JAMES A. TOSCANO No. 18741 Exp. 03-31-24 CIVIL STATE OF CALIFORNIA REGISTERED 01-27-23

VERTICAL CONTROL: BENCH MARK 18-02215 NAVD 88
HORIZONTAL CONTROL: CALIFORNIA STATE PLANE ZONE V, 1983 NAD

SHEET TITLE: GRADING PLAN 1
PROJECT: STRATHERN PARK NORTH STORMWATER CAPUTRE PROJECT
ADDRESS: STRATHERN PARK NORTH 804 1 WHISETT AVE, NORTH HOLLYWOOD, CA 91605

NO.	REVISIONS	DATE	BY
		YY/MM/DD	
		YY/MM/DD	
		YY/MM/DD	
		YY/MM/DD	

CIP NO.

INDEX NO.

CITY ENGINEER

DESIGN GROUP		DATE
ENGINEER:	CDM SMITH INC.	01/27/2023
ARCHITECT:	NA	01/27/2023
DESIGNED BY:	C. RICE	01/27/2023
DRAWN BY:	C. BILDERBACK	01/27/2023
CHECKED BY:	P. TAURASI	01/27/2023
APPROVED BY:	A. DELLINGER	01/27/2023

TED ALLEN, P.E.

WORK ORDER
EW40080F

SHEET NAME
CS03
SHEET 12 OF 85 SHEETS

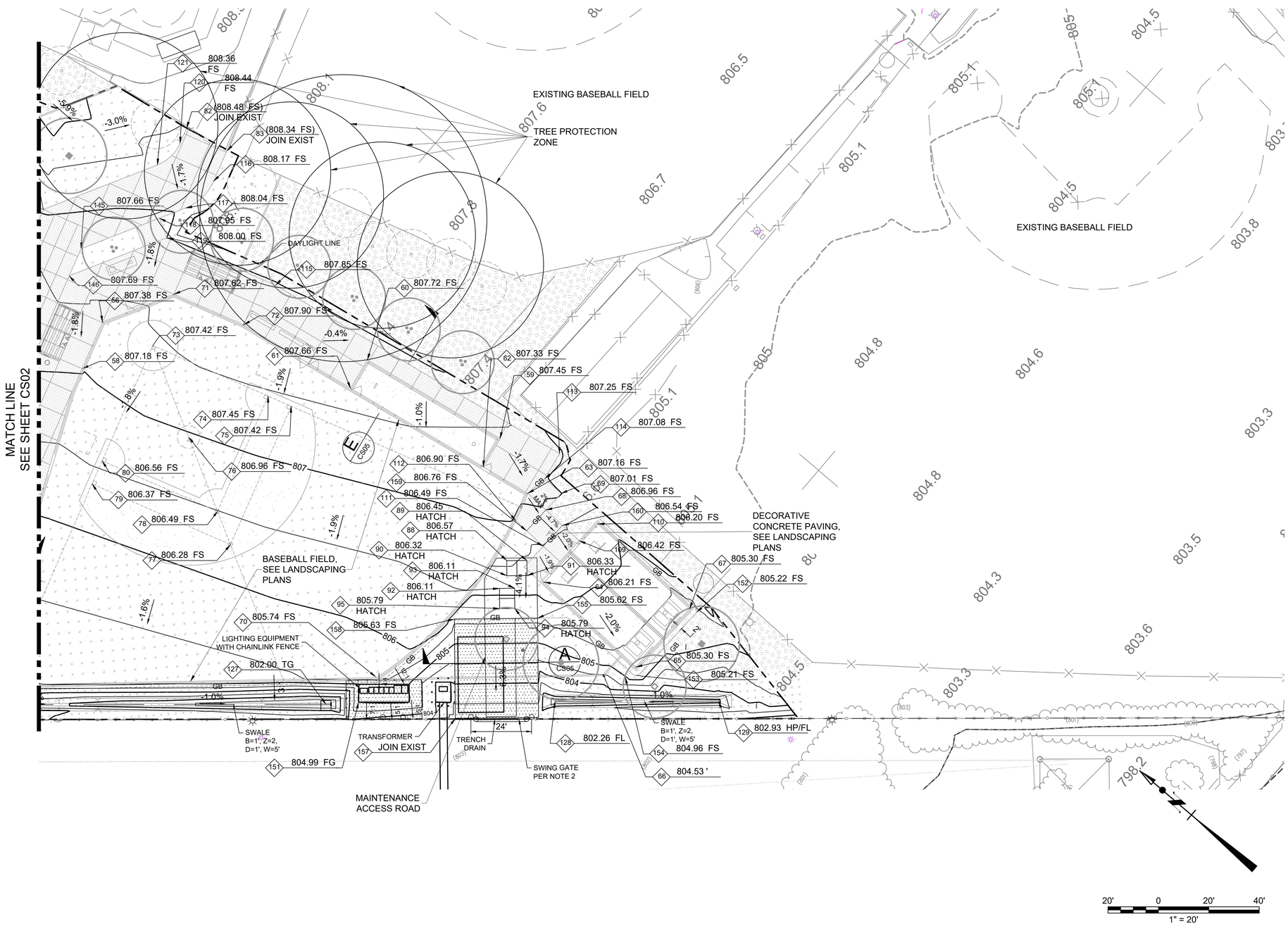

NOTES

1. **GRADING/RETAINING WALL/SHORING PLAN CORRECTION SHEETS (2017 LABC)** ITEM **C-5.**
   a. ALL GRADING SLOPES SHALL BE PLANTED AND SPRINKLERED. (7012.1).
   b. STANDARD 12 INCH HIGH BERM IS REQUIRED AT TOP OF ALL GRADED SLOPES. (7013.3).
   c. NO FILL TO BE PLACED, UNTIL THE CITY GRADING INSPECTOR HAS INSPECTED AND APPROVED THE BOTTOM EXCAVATION.
   d. MAN-MADE FILL SHALL BE COMPACTED TO A MINIMUM RELATIVE COMPACTION OF 90% MAX. DRY DENSITY WITHIN 40 FEET BELOW FINISH GRADE AND 93% OF MAX. DRY DENSITY DEEPER THAN 40 FEET BELOW FINISH GRADE, UNLESS A LOWER RELATIVE COMPACTION (NOT LESS THAN 90% OF MAX. DRY DENSITY) IS JUSTIFIED BY THE SOILS ENGINEER.
   e. TEMPORARY EROSION CONTROL TO BE INSTALLED DURING THE WET SEASON (BETWEEN OCTOBER 1 AND APRIL 15). OBTAIN GRADING INSPECTOR'S AND DEPARTMENT OF PUBLIC WORKS APPROVAL OF PROPOSED PROCEDURES. [>200 CY] (7007.1).
2. INSTALL GATE PER STANDARD 600-4. FIELD VERIFY HEIGHT AND MATCH. APPROXIMATE HEIGHT IS 8 FT.
3. FIELD VERIFY JOINS.

LEGEND

- JOIN EXIST
- FLOW LINE
- CONCRETE PER LANDSCAPE ARCHITECTURE PLAN
- TURF PER LANDSCAPE ARCHITECTURE PLAN
- SHRUBS PER LANDSCAPE ARCHITECTURE PLAN
- MULCH PER LANDSCAPE ARCHITECTURE PLAN

THIS PLAN WAS ELECTRONICALLY SIGNED AND STAMPED

ENGINEERING
CITY OF LOS ANGELES

REGISTERED PROFESSIONAL ENGINEER
JAVIER A. TISCARENO
No. 81784
Exp. 03-31-24
STATE OF CALIFORNIA
01-27-23

BUREAU OF ENGINEERING

VERTICAL CONTROL: BENCH MARK 18-02215 NAVD 88
HORIZONTAL CONTROL: CALIFORNIA STATE PLANE ZONE V, 1983 NAD

SHEET TITLE: GRADING PLAN 2

PROJECT: STRATHERN PARK NORTH STORMWATER CAPUTRE PROJECT

ADDRESS: STRATHERN PARK NORTH 8041 WHISETT AVE, NORTH HOLLYWOOD, CA 91605

CITY OF LOS ANGELES DEPARTMENT OF PUBLIC WORKS

NO.	REVISIONS	DATE	BY
		YY/MM/DD	
		YY/MM/DD	
		YY/MM/DD	
		YY/MM/DD	

CIP NO.

INDEX NO.

CITY ENGINEER

	DESIGN GROUP	DATE
ENGINEER:	CDM SMITH INC.	01/27/2023
ARCHITECT:	NA	01/27/2023
DESIGNED BY:	C. RICE	01/27/2023
DRAWN BY:	C. BILDERBACK	01/27/2023
CHECKED BY:	P. TAURASI	01/27/2023
APPROVED BY:	A. DELLINGER	01/27/2023

TED ALLEN, P.E.

WORK ORDER
EW40080F

SHEET NAME
CS04

SHEET 13 OF 85 SHEETS

THE CITY OF LOS ANGELES OR ITS OFFICERS OR AGENTS SHALL NOT BE RESPONSIBLE FOR THE ACCURACY OR COMPLETENESS OF ELECTRONIC COPIES OF THIS PLAN SHEET.

REVISION DATES (DESIGN STAGE ONLY)

SHEET VERSION 4.0.1 FILE PATH: C:\CDMEXT\JVARELA@M-AENGINEERING.COM\D0491590\CB01 THRU CB03.DWG PLOT DATE: 2/3/2023 10:02 AM SAVED: 2/3/2023 10:01 AM SAVED BY:JUAN VARELA

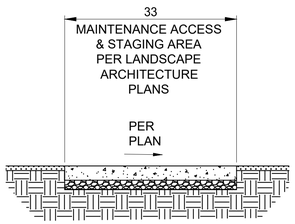

SECTION A
NTS

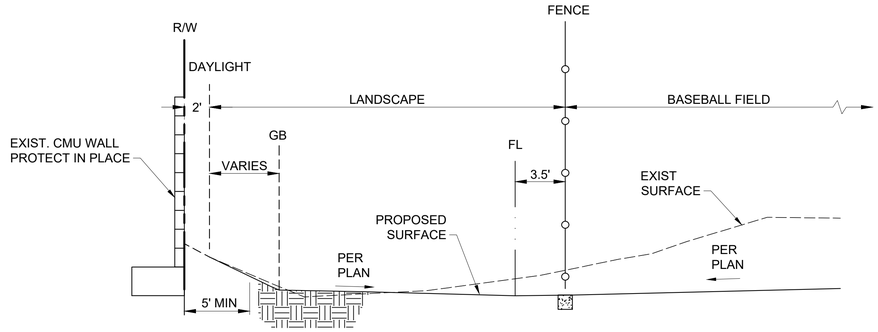

SECTION B
NTS

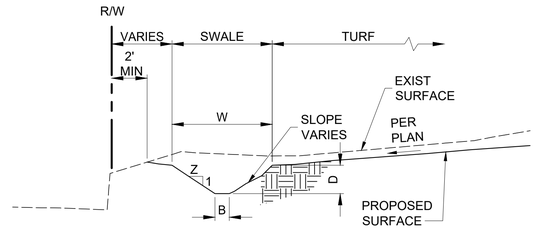

SECTION C
NTS

NOTES

1. **GRADING/RETAINING WALL/SHORING PLAN CORRECTION SHEETS (2017 LABC)** ITEM **C-5.**
   a. ALL GRADING SLOPES SHALL BE PLANTED AND SPRINKLERED. (7012.1).
   b. STANDARD 12 INCH HIGH BERM IS REQUIRED AT TOP OF ALL GRADED SLOPES. (7013.3).
   c. NO FILL TO BE PLACED, UNTIL THE CITY GRADING INSPECTOR HAS INSPECTED AND APPROVED THE BOTTOM EXCAVATION.
   d. MAN-MADE FILL SHALL BE COMPACTED TO A MINIMUM RELATIVE COMPACTION OF 90% MAX. DRY DENSITY WITHIN 40 FEET BELOW FINISH GRADE AND 93% OF MAX. DRY DENSITY DEEPER THAN 40 FEET BELOW FINISH GRADE, UNLESS A LOWER RELATIVE COMPACTION (NOT LESS THAN 90% OF MAX. DRY DENSITY) IS JUSTIFIED BY THE SOILS ENGINEER.
   e. TEMPORARY EROSION CONTROL TO BE INSTALLED DURING THE WET SEASON (BETWEEN OCTOBER 1 AND APRIL 15). OBTAIN GRADING INSPECTOR'S AND DEPARTMENT OF PUBLIC WORKS APPROVAL OF PROPOSED PROCEDURES. [>200 CY] (7007.1).

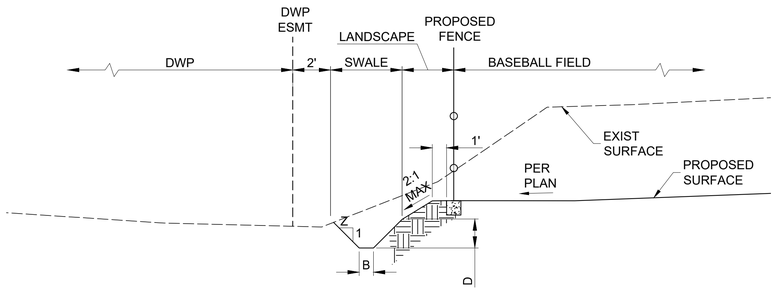

SECTION D
NTS

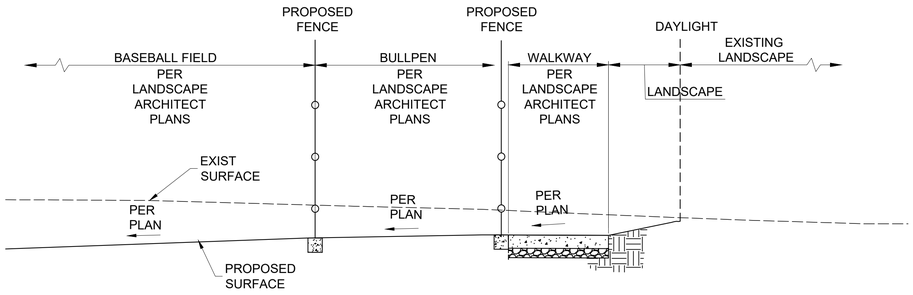

SECTION E
NTS

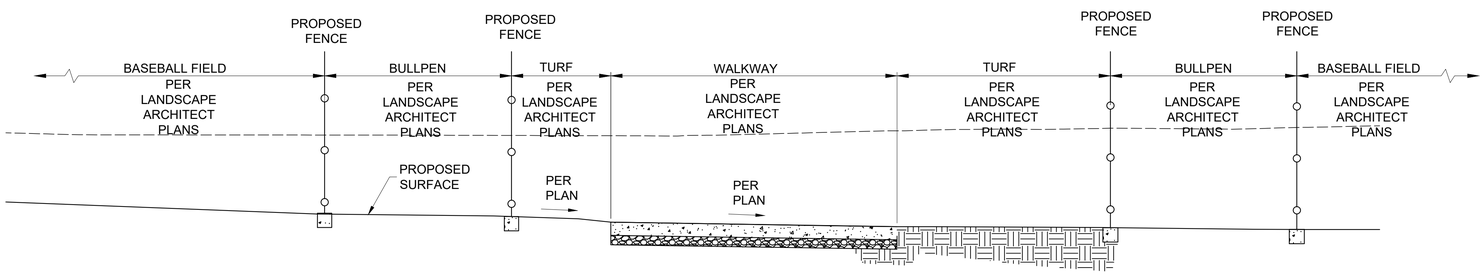

SECTION F
NTS

THE CITY OF LOS ANGELES OR ITS OFFICERS OR AGENTS SHALL NOT BE RESPONSIBLE FOR THE ACCURACY OR COMPLETENESS OF ELECTRONIC COPIES OF THIS PLAN SHEET.

REVISION DATES
(DESIGN STAGE ONLY)

ENGINEERING
CITY OF LOS ANGELES

PROFESSIONAL ENGINEER ★ REGISTERED ★ STATE OF CALIFORNIA
JAVIER A. TOSCANO
No. 81764
Exp. 01-31-24
01-27-23

THIS PLAN WAS ELECTRONICALLY • SIGNED AND STAMPED

BUREAU OF ENGINEERING

VERTICAL CONTROL: BENCH MARK 18-02215 NAVD 88
HORIZONTAL CONTROL: CALIFORNIA STATE PLANE ZONE V, 1983 NAD

SHEET TITLE: GRADING SECTIONS

PROJECT: STRATHERN PARK NORTH
STORMWATER CAPUTRE PROJECT

ADDRESS: STRATHERN PARK NORTH
8041 WHISETT AVE, NORTH HOLLYWOOD, CA 91605

NO.	REVISIONS	DATE	BY
		YY/MM/DD	
		YY/MM/DD	
		YY/MM/DD	
		YY/MM/DD	

CIP NO.

INDEX NO.

CITY OF LOS ANGELES DEPARTMENT OF PUBLIC WORKS

CITY ENGINEER: TED ALLEN, P.E. — DATE: 01/27/2023

DESIGN GROUP		DATE
ENGINEER:	CDM SMITH INC.	01/27/2023
ARCHITECT:	NA	01/27/2023
DESIGNED BY:	C. RICE	01/27/2023
DRAWN BY:	C. BILDERBACK	01/27/2023
CHECKED BY:	P. TAURASI	01/27/2023
APPROVED BY:	A. DELLINGER	01/27/2023

WORK ORDER
EW40080F

SHEET NAME
CS05

SHEET 14 OF 85 SHEETS

POINT TABLE		
POINT #	NORTHING	EASTING
1	1901900.850	6438241.747
2	1901888.743	6438251.791
3	1901900.743	6438283.176
4	1901888.743	6438283.145
5	1901886.207	6438316.881
6	1901876.993	6438309.213
7	1901790.083	6438336.272
8	1901774.929	6438349.248
9	1901773.891	6438400.846
10	1901759.586	6438413.559
11	1901767.495	6438422.457
12	1901804.028	6438621.122
13	1901778.986	6438563.055
14	1901783.777	6438554.115
15	1901716.770	6438574.367
16	1901721.552	6438580.413
17	1901738.911	6438637.848
18	1901737.022	6438641.373
19	1901796.345	6438620.489
20	1901890.487	6438595.008

POINT TABLE		
POINT #	NORTHING	EASTING
21	1901890.487	6438592.036
22	1901891.487	6438621.435
23	1901816.711	6438644.035
24	1901883.964	6438623.716
25	1901887.397	6438635.217
26	1901820.419	6438656.371
27	1901890.487	6438482.985
28	1901705.319	6438423.213
29	1901658.075	6438465.201
30	1901595.676	6438520.659
31	1901612.224	6438525.944
32	1901601.241	6438530.787
33	1901636.147	6438580.150
34	1901625.166	6438584.996
35	1901678.146	6438580.173
36	1901690.638	6438576.397
37	1901670.289	6438509.154
38	1901658.836	6438512.620
39	1901740.508	6438667.066
40	1901713.699	6438652.701

POINT TABLE		
POINT #	NORTHING	EASTING
41	1901735.131	6438689.058
42	1901710.828	6438676.036
43	1901701.316	6438678.947
44	1901822.852	6438662.596
45	1901918.782	6438225.598
46	1901633.264	6438470.553
47	1901624.795	6438477.795
48	1901641.033	6438496.956
49	1901631.461	6438499.849
50	1901652.727	6438587.493
51	1901641.986	6438590.767
52	1901686.323	6438629.523
53	1901704.927	6438623.900
54	1901695.002	6438658.240
55	1901672.936	6438654.359
56	1901654.329	6438660.198
57	1901667.117	6438635.224
58	1901648.483	6438640.855
59	1901504.275	6438727.484
60	1901564.629	6438717.044

POINT TABLE		
POINT #	NORTHING	EASTING
61	1901562.402	6438704.171
62	1901502.044	6438714.615
63	1901481.821	6438718.114
64	1901453.951	6438695.525
65	1901404.446	6438693.605
66	1901412.367	6438682.906
67	1901403.225	6438725.029
68	1901472.105	6438717.748
69	1901471.755	6438726.686
70	1901480.387	6438623.528
71	1901639.965	6438687.007
72	1901610.991	6438695.764
73	1901633.127	6438666.090
74	1901585.266	6438680.556
75	1901575.693	6438683.449
76	1901598.751	6438647.671
77	1901558.335	6438626.015
78	1901570.800	6438632.694
79	1901615.769	6438608.656
80	1901618.662	6438618.229

POINT TABLE		
POINT #	NORTHING	EASTING
81	1901590.550	6438525.214
82	1901678.956	6438740.419
83	1901660.953	6438743.972
84	1901811.021	6438381.441
85	1901806.497	6438385.382
86	1901805.766	6438375.409
87	1901801.242	6438379.350
88	1901470.839	6438692.387
89	1901464.807	6438697.642
90	1901466.898	6438687.863
91	1901460.866	6438693.118
92	1901465.875	6438682.123
93	1901461.351	6438686.064
94	1901456.096	6438680.032
95	1901460.620	6438676.091
96	1901803.962	6438402.263
97	1901809.994	6438397.008
98	1901806.093	6438392.531
99	1901800.061	6438397.786
100	1901641.511	6438529.113

POINT TABLE		
POINT #	NORTHING	EASTING
101	1901636.987	6438533.055
102	1901636.256	6438523.081
103	1901631.732	6438527.022
104	1901803.056	6438670.208
105	1901799.130	6438665.695
106	1901805.185	6438660.457
107	1901809.090	6438664.954
108	1901841.162	6438341.058
109	1901454.114	6438717.050
110	1901452.729	6438726.949
111	1901463.546	6438706.154
112	1901478.374	6438706.729
113	1901482.466	6438738.302
114	1901480.499	6438727.025
115	1901611.619	6438715.945
116	1901657.133	6438731.331
117	1901658.649	6438716.099
118	1901663.923	6438706.257
119	1901656.574	6438702.319
120	1901677.067	6438734.169

POINT TABLE		
POINT #	NORTHING	EASTING
121	1901678.301	6438721.769
122	1901880.674	6438266.180
123	1901806.288	6438329.968
124	1901758.120	6438370.995
125	1901639.738	6438470.934
126	1901617.810	6438491.501
127	1901488.358	6438602.417
128	1901419.966	6438662.348
129	1901370.588	6438704.670
130	1901910.494	6438302.461
131	1901910.494	6438436.936
132	1901910.494	6438357.683
133	1901910.494	6438390.309
134	1901910.494	6438402.309
135	1901910.494	6438461.715
136	1901900.759	6438276.874
137	1901888.759	6438276.842
138	1901910.801	6438622.284
139	1901911.305	6438479.557
140	1901871.426	6438330.027

POINT TABLE		
POINT #	NORTHING	EASTING
141	1901863.637	6438321.083
142	1901908.058	6438291.373
143	1901908.112	6438275.616
144	1901908.134	6438269.116
145	1901679.714	6438676.786
146	1901676.324	6438665.571
147	1901756.616	6438372.228
148	1901744.093	6438384.737
149	1901708.321	6438413.271
150	1901643.925	6438492.354
151	1901479.044	6438611.496
152	1901400.195	6438725.750
153	1901402.084	6438691.140
154	1901404.975	6438687.729
155	1901446.682	6438682.927
156	1901759.928	6438598.624
157	1901445.691	6438631.526
158	1901471.577	6438661.241
159	1901472.541	6438706.505
160	1901463.110	6438717.395

THE CITY OF LOS ANGELES OR ITS OFFICERS OR AGENTS SHALL NOT BE RESPONSIBLE FOR THE ACCURACY OR COMPLETENESS OF ELECTRONIC COPIES OF THIS PLAN SHEET.

REVISION DATES (DESIGN STAGE ONLY)

ENGINEERING
CITY OF LOS ANGELES

PROFESSIONAL ENGINEER ★ REGISTERED ★ STATE OF CALIFORNIA
JAMES A. TOSKENO
No. 16794
Exp. 03-31-24
CIVIL
01-27-23

THIS PLAN WAS ELECTRONICALLY SIGNED AND STAMPED

BUREAU OF ENGINEERING

VERTICAL CONTROL: BENCH MARK 18-02215 NAVD 88
HORIZONTAL CONTROL: CALIFORNIA STATE PLANE ZONE V, 083 NAD

SHEET TITLE: HORIZONTAL CONTROL COORDINATE TABLE

PROJECT: STRATHERN PARK NORTH STORMWATER CAPUTRE PROJECT

ADDRESS: STRATHERN PARK NORTH 8041 WHISETT AVE, NORTH HOLLYWOOD, CA 91605

NO.	REVISIONS	DATE	BY
		YY/MM/DD	
		YY/MM/DD	
		YY/MM/DD	
		YY/MM/DD	

CIP NO.

INDEX NO.

CITY OF LOS ANGELES DEPARTMENT OF PUBLIC WORKS

CITY ENGINEER: TED ALLEN, P.E. DATE 01/27/2023

DESIGN GROUP		
ENGINEER:	CDM SMITH INC.	01/27/2023
ARCHITECT:	NA	01/27/2023
DESIGNED BY:	C. RICE	01/27/2023
DRAWN BY:	C. BILDERBACK	01/27/2023
CHECKED BY:	XXX	01/27/2023
APPROVED BY:	XXX	01/27/2023

WORK ORDER
EW40080F

SHEET NAME
CS06

SHEET 15 OF 85 SHEETS

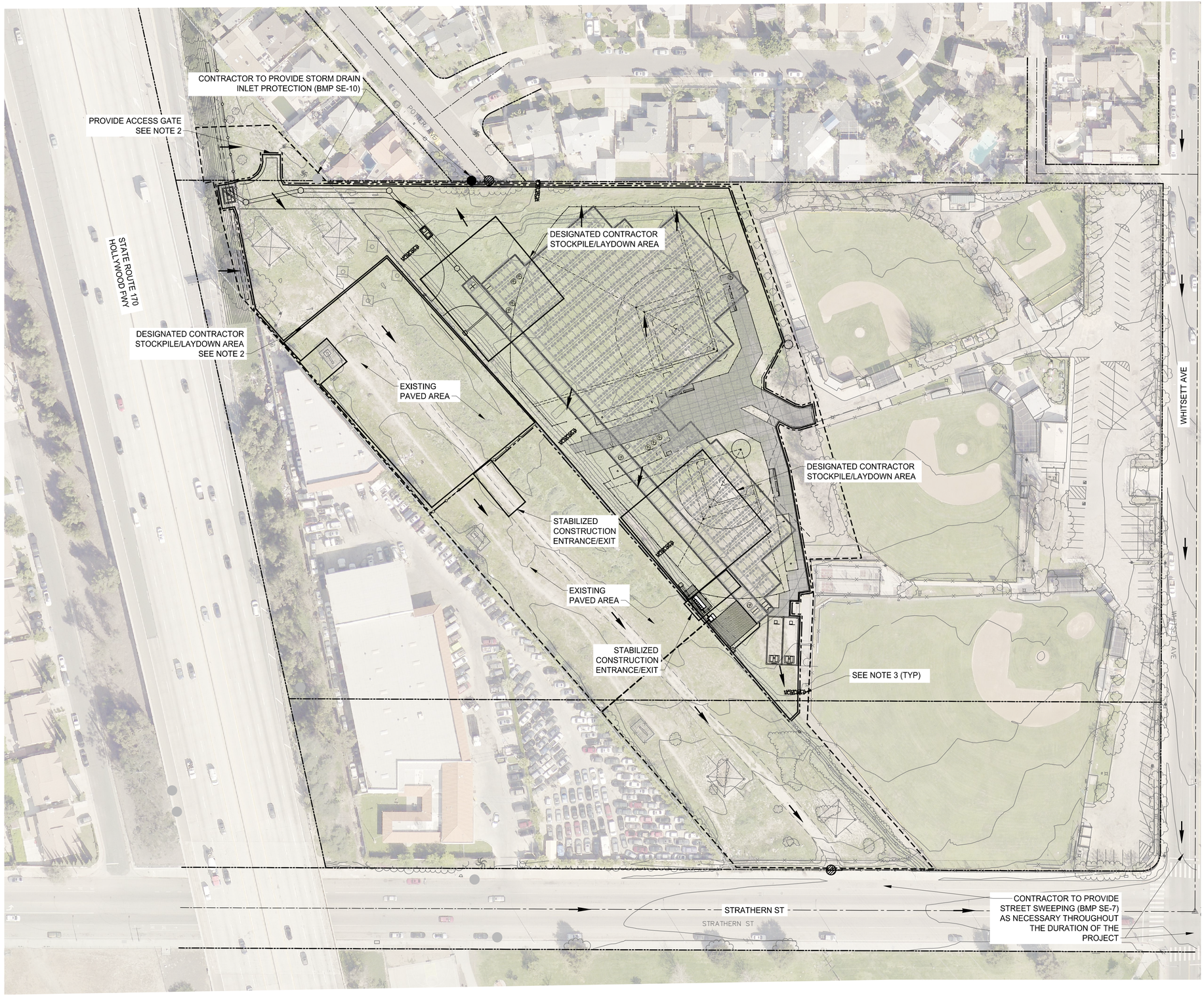

LEGEND:

- PROJECT SITE BOUNDARY
- STORM DRAIN CATCH BASIN
- STORM DRAIN CULVERT
- AREAS OF SOIL DISTURBANCE
- FIBER ROLLS
- SAMPLE LOCATION
- RUNOFF FLOW DIRECTION
- CHECK DAM

NOTES:

1. THIS EROSION CONTROL PLAN IS NOT ALL INCLUSIVE AND CONTRACTOR TO FOLLOW ALL REQUIREMENTS IN THIS SWPPP PLAN.
2. CONTRACTOR TO PROVIDE ACCESS AT ALL TIMES TO LADWP TO ELECTRICAL EASEMENT INCLUDING CONTRACTOR STOCKPILE/LAYDOWN AREA. SEE GI04 FOR STANDARD CONDITIONS FOR CONSTRUCTION WITHIN LADWP ELECTRICAL EASEMENT.
3. CONTRACTOR TO PROVIDE CHECK DAMS (BMP SE-4) ON EXISTING DRAINAGE DITCHES AND CONSTRUCTED DRAINAGE SWALES. CONTRACTOR TO REMOVE THE CHECK DAMS AT THE END OF CONSTRUCTION.

1" = 50'
25 0 50

THE CITY OF LOS ANGELES OR ITS OFFICERS OR AGENTS SHALL NOT BE RESPONSIBLE FOR THE ACCURACY OR COMPLETENESS OF ELECTRONIC COPIES OF THIS PLAN SHEET.

REVISION DATES (DESIGN STAGE ONLY)

ENGINEERING
CITY OF LOS ANGELES

THIS PLAN WAS ELECTRONICALLY • SIGNED AND STAMPED

REGISTERED PROFESSIONAL ENGINEER
S. TED ALLEN
No. C 48973
EXP. 06/30/2026
STATE OF CALIFORNIA
04/11/2023

CITY OF LOS ANGELES DEPARTMENT OF PUBLIC WORKS
BUREAU OF ENGINEERING

VERTICAL CONTROL: BENCH MARK: 18-02215 NAVD 88
HORIZONTAL CONTROL: CALIFORNIA STATE PLANE ZONE V, 1983 NAD

SHEET TITLE: STRATHERN PARK NORTH EROSION CONTROL PLAN
PROJECT: STRATHERN PARK NORTH STORMWATER CAPUTRE PROJECT
ADDRESS: STRATHERN PARK NORTH 8041 WHISETT AVE, NORTH HOLLYWOOD, CA 91605

NO.	REVISIONS	DATE	BY
		YY/MM/DD	
		YY/MM/DD	
		YY/MM/DD	
		YY/MM/DD	

CIP NO. SCP0003

INDEX NO.

CITY ENGINEER

	DESIGN GROUP	DATE
TED ALLEN, P.E.		
ENGINEER:	CDM SMITH INC.	04/11/2023
ARCHITECT:	NA	04/11/2023
DESIGNED BY:	P. TAURASI	04/11/2023
DRAWN BY:	C. BILDERBACK	04/11/2023
CHECKED BY:	P. TAURASI	04/11/2023
APPROVED BY:	A. DELLINGER	04/11/2023

WORK ORDER
EW40080F

SHEET NAME
CS07

SHEET 16 OF 85 SHEETS

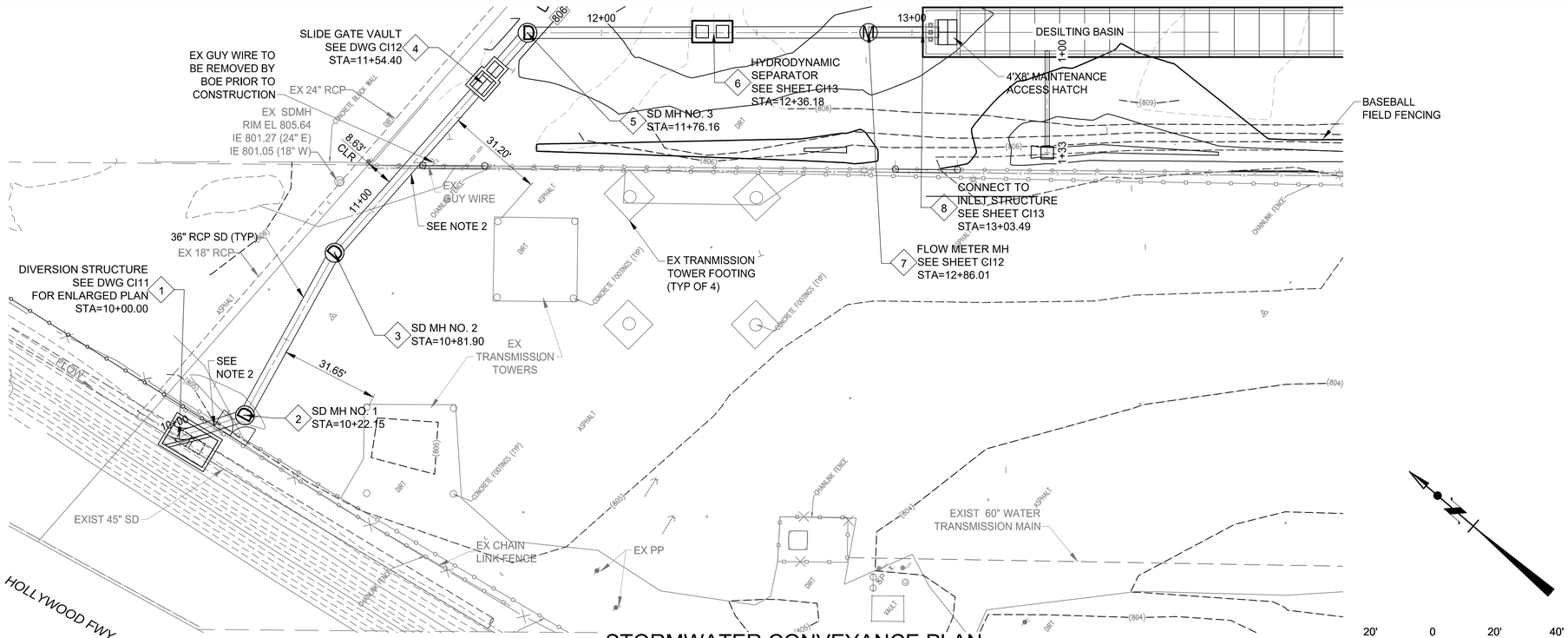

STORMWATER CONVEYANCE PLAN

1" = 20'

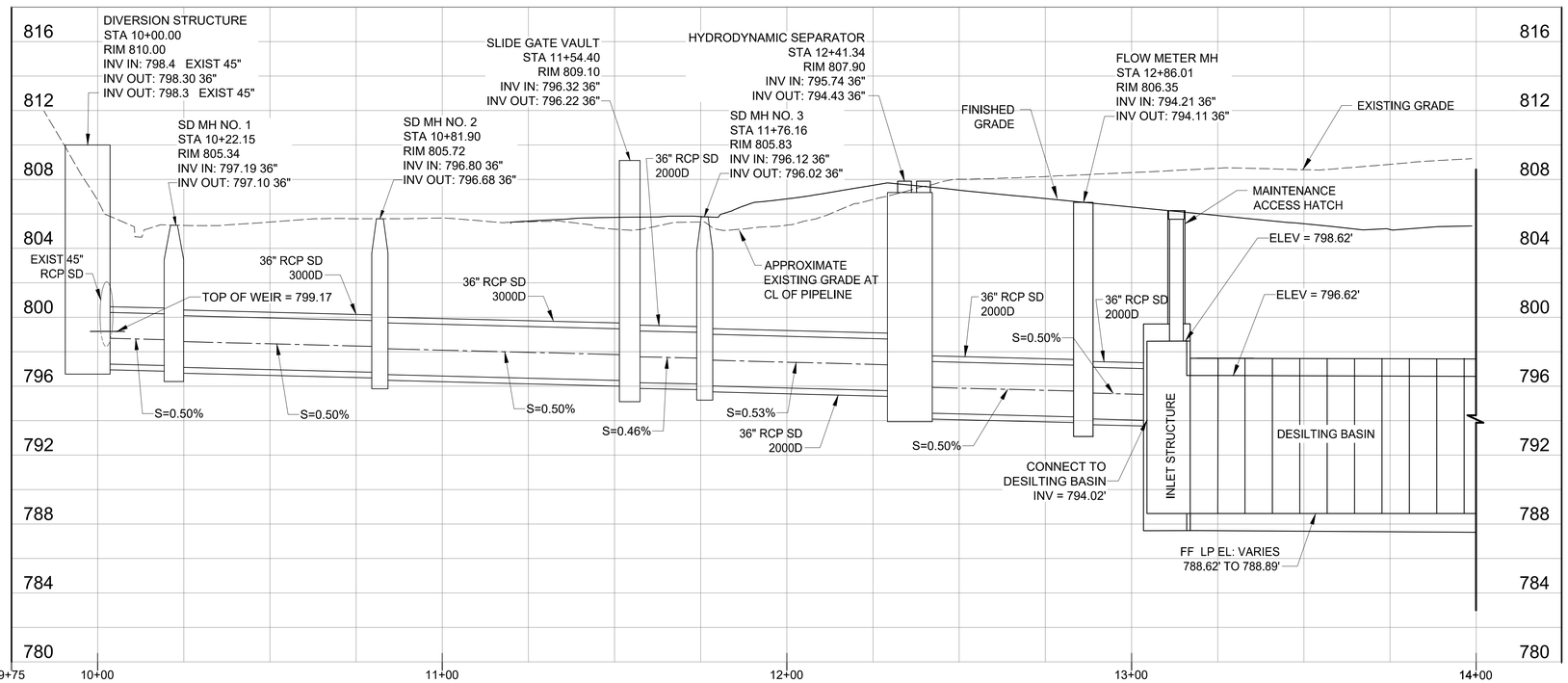

STORMWATER CONVEYANCE PROFILE

1" = 20' H; 1" = 4' V

NOTE

1. MAINTENANCE HOLES SHALL BE 60" PRECAST CONCRETE PER BOE STANDARD DETAIL S-140-0 AND S-150-0. MAINTENANCE HOLE FRAME AND COVER SHALL BE 30-INCH CLEAR OPENING WITH A "D" LETTER PER BOE STANDARD DETAIL S-284-2. NO PICKHOLES SHALL BE DRILLED OR PUNCHED INTO COVER DURING CASTING.
2. CONTRACTOR TO REPAIR/RESTORE EXISTING CHAIN LINK FENCE AS NEEDED.

POINT TABLE		
POINT #	NORTHING	EASTING
1	1901907.174	6438119.578
2	1901895.912	6438138.674
3	1901908.378	6438197.119
4	1901908.132	6438269.614
5	1901908.058	6438291.373
6	1901862.837	6438330.833
7	1901825.289	6438363.597
8	1901812.154	6438375.130

THE CITY OF LOS ANGELES OR ITS OFFICERS OR AGENTS SHALL NOT BE RESPONSIBLE FOR THE ACCURACY OR COMPLETENESS OF ELECTRONIC COPIES OF THIS PLAN SHEET.

REVISION DATES (DESIGN STAGE ONLY)

ENGINEERING
CITY OF LOS ANGELES

PROFESSIONAL ENGINEER
TED S. ALLEN
No. C 48973
EXP. 08/31/2024
REGISTERED CIVIL ENGINEER
STATE OF CALIFORNIA
04/11/2023

THIS PLAN WAS ELECTRONICALLY • SIGNED AND STAMPED

BUREAU OF ENGINEERING

VERTICAL CONTROL: BENCH MARK: 18-02215 NAVD 88
HORIZONTAL CONTROL: CALIFORNIA STATE PLANE ZONE V, 1983 NAD

SHEET TITLE: STORMWATER CONVEYANCE PLAN AND PROFILE

PROJECT: STRATHERN PARK NORTH STORMWATER CAPUTRE PROJECT

ADDRESS: STRATHERN PARK NORTH 8041 WHISETT AVE, NORTH HOLLYWOOD, CA 91605

NO.	REVISIONS	DATE	BY
		YY/MM/DD	
		YY/MM/DD	
		YY/MM/DD	
		YY/MM/DD	

CIP NO. SCP0003

INDEX NO.

CITY OF LOS ANGELES DEPARTMENT OF PUBLIC WORKS

CITY ENGINEER: TED ALLEN, P.E. — DATE: 04/11/2023

DESIGN GROUP	
ENGINEER:	CDM SMITH INC.
ARCHITECT:	NA
DESIGNED BY:	C. RICE
DRAWN BY:	C. BILDERBACK
CHECKED BY:	P. TAURASI
APPROVED BY:	A. DELLINGER

(all dated 04/11/2023)

WORK ORDER
EW40080F

SHEET NAME
CU01

SHEET 17 OF 85 SHEETS

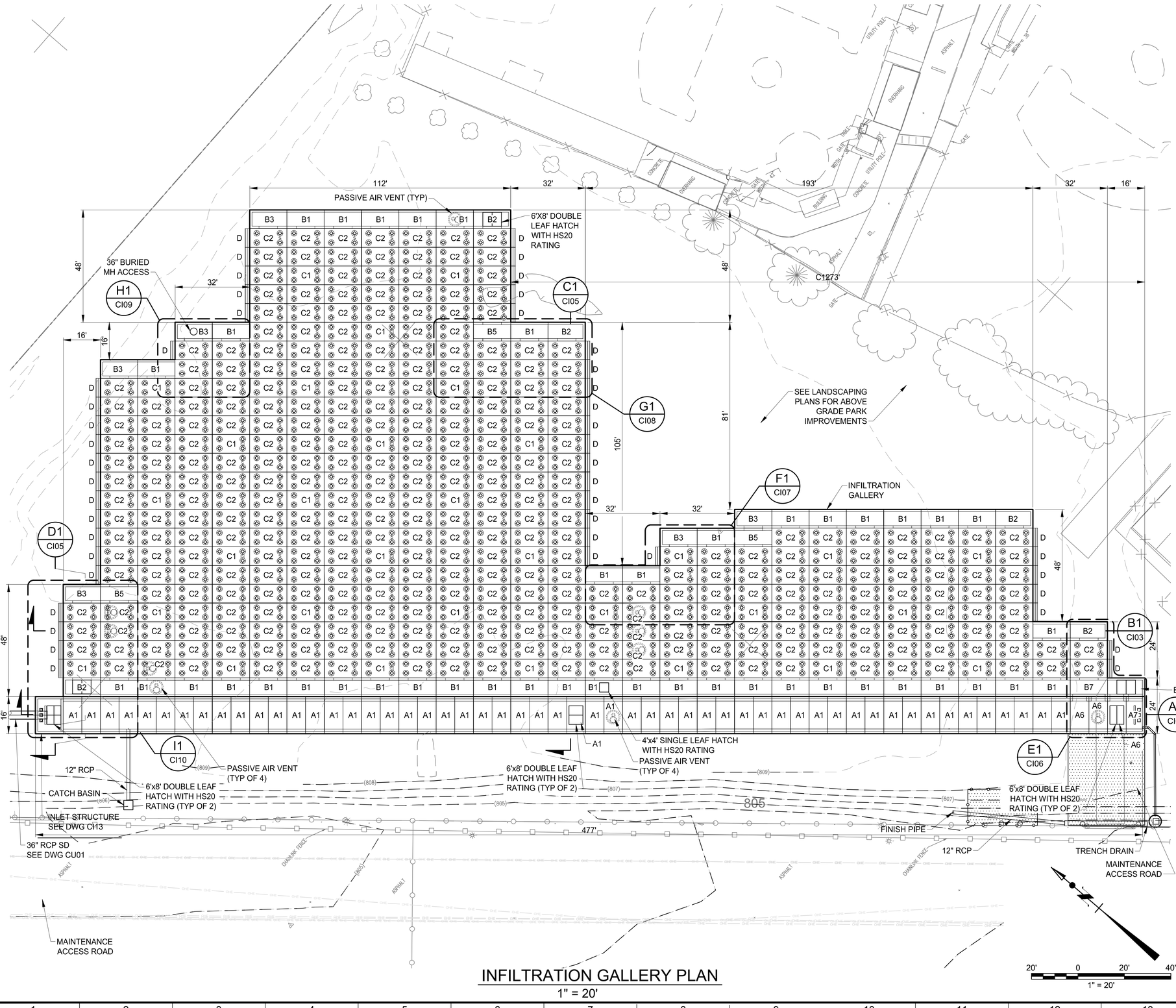

INFILTRATION GALLERY PLAN

1" = 20'

NOTES:

1. OVERALL DIMENSIONS ARE APPROXIMATE. FINAL DIMENSIONS SHALL BE DETERMINED BASED ON SUPPLIER SHOP DRAWING SUBMITTALS.
2. FINISHED GRADE NOT SHOWN FOR CLARITY.
3. INFILTRATION DESIGN CRITERIA TO BE BE MET BY INFILTRATION GALLERY SUPPLIER:

   MINIMUM TOTAL VOLUME OF STORAGE WITH 1 FT OF FREEBOARD= 663,000 CF

   MINIMUM TOTAL VOLUME OF STORAGE WITH NO FREEBOARD= 712,000 CF

   MINIMUM AREA OF INFILTRATION BENEATH THE GALLERY INCLUDING STONE BLANKET 2 FT BEYOND PERIMETER = 64,000 SF

   PEAK INFLUENT FLOW RATES THROUGH SLIDE GATE VAULT IS 31 CFS

   PROVIDE INTERIOR ACCESS THROUGH MECHANIZED/ELECTRIC VEHICLE (BY OTHERS) WITH A MINIMUM TRAVEL WIDTH OF 4 FEET THAT ALLOWS THE VEHICLE TO CONTINUALLY ACCESS ALL PRECAST UNITS WITH A MAXIMUM OF 32 FEET VEHICLE BACKUP DISTANCE TO EXIT A DEAD END LOCATION. SEE DETAIL BELOW FOR AN ALTERNATE INTERIOR TURN-AROUND ARRANGEMENT.

   PROVIDE ALL ACCESS HATCHES AND MANHOLE ACCESS IN SIZES AND LOCATIONS ON PLAN.

   ALL UNITS OF THE INFILTRATION GALLERY SHALL BE DESIGNED FOR HS-20 LOADING.
4. DESILTING BASINS TO BE PROVIDED AS SHOWN ON THE DRAWINGS AND SHALL BE DESIGNED FOR HS-20 LOADING.

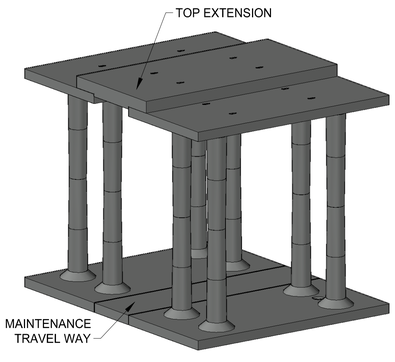

4'-0" MAINTENANCE TRAVEL WAY ISOMETRIC VIEW

THIS PLAN WAS ELECTRONICALLY • SIGNED AND STAMPED

REGISTERED PROFESSIONAL ENGINEER — TED S. ALLEN — No. C 48973 — EXP. 08/31/2026 — CIVIL — STATE OF CALIFORNIA

01/31/2023

ENGINEERING — CITY OF LOS ANGELES

BUREAU OF ENGINEERING

VERTICAL CONTROL: BENCH MARK 18-02215 NAVD 88
HORIZONTAL CONTROL: CALIFORNIA STATE PLANE ZONE V, 1983 NAD

SHEET TITLE: DESILTING AND INFILTRATION GALLERIES PLAN

PROJECT: STRATHERN PARK NORTH STORMWATER CAPUTRE PROJECT

ADDRESS: STRATHERN PARK NORTH 8041 WHISETT AVE, NORTH HOLLYWOOD, CA 91605

NO.	REVISIONS	DATE	BY
		YY/MM/DD	
		YY/MM/DD	
		YY/MM/DD	
		YY/MM/DD	

CIP NO. SCP0003

INDEX NO.

CITY OF LOS ANGELES DEPARTMENT OF PUBLIC WORKS

CITY ENGINEER — DATE

TED ALLEN, P.E. — 04/11/2023

DESIGN GROUP	
ENGINEER:	CDM SMITH INC.
ARCHITECT:	NA
DESIGNED BY:	C. RICE
DRAWN BY:	C. BILDERBACK
CHECKED BY:	P. TAURASI
APPROVED BY:	A. DELLINGER

WORK ORDER EW40080F

SHEET NAME CI01

SHEET 18 OF 85 SHEETS

THE CITY OF LOS ANGELES OR ITS OFFICERS OR AGENTS SHALL NOT BE RESPONSIBLE FOR THE ACCURACY OR COMPLETENESS OF ELECTRONIC COPIES OF THIS PLAN SHEET.

REVISION DATES (DESIGN STAGE ONLY)

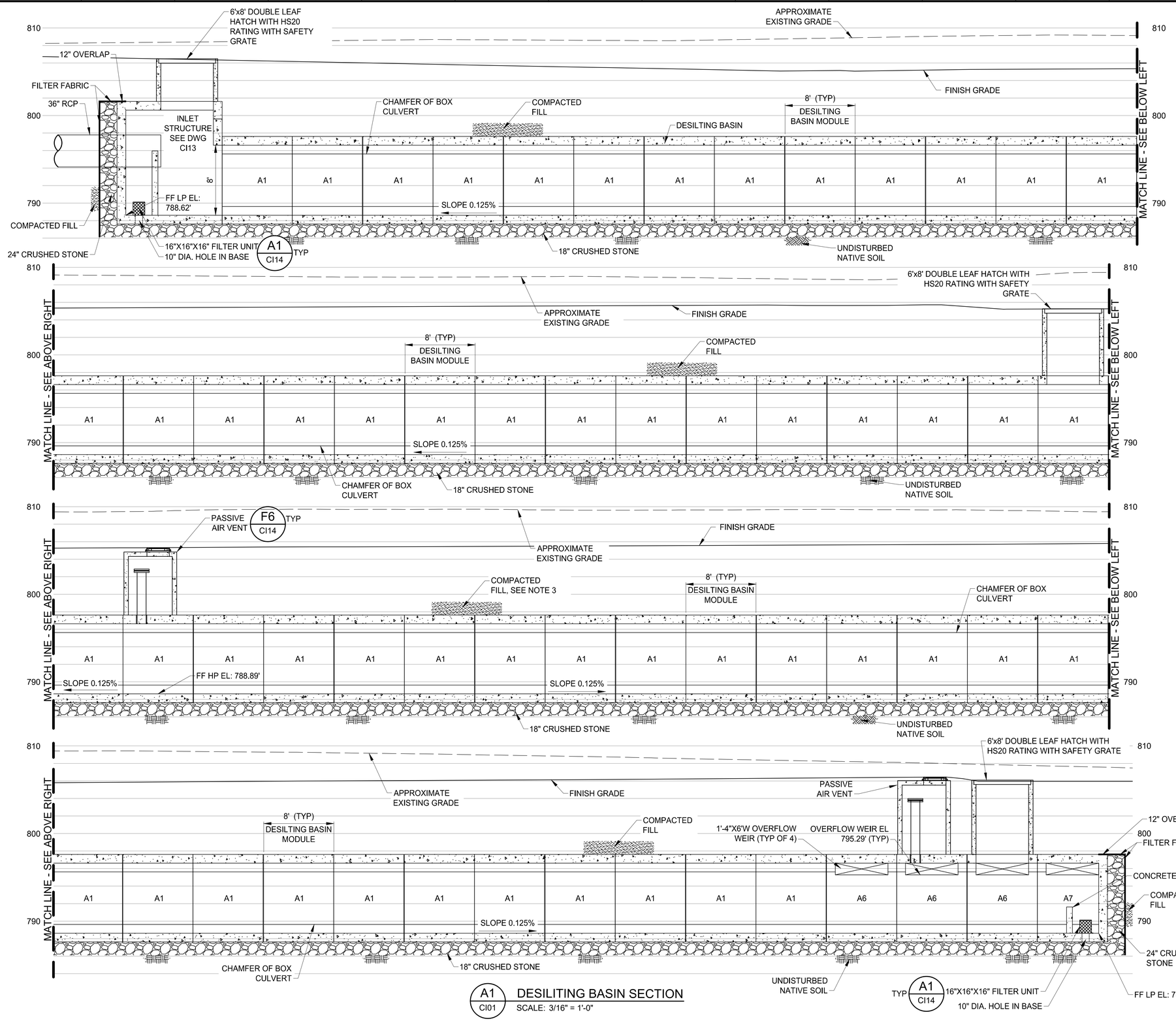

A1 CI01 DESILITING BASIN SECTION
SCALE: 3/16" = 1'-0"

4' 0 4' 8'
3/16" = 1'-0"

NOTES

1. SEE SHEET GI04 FOR FILL REQUIREMENTS AROUND THE PERIMETER AND TOP OF THE DESILTING BASINS AND INFILTRATION GALLERIES.
2. SEE SPECIFICATION SECTION 13200 FOR ADDITIONAL INFORMATION ON THE BURIED STORMWATER INFILTRATION SYSTEM.
3. FILTER FABRIC TO COVER SIDES AND TOP OF CRUSHED STONE WITH OVERLAP SHOWN. INSTALL STAKES TO HOLD FILTER FABRIC IN PLACE PER FILTER FABRIC MANUFACTURER RECOMMENDATIONS.
4. JOINTS ON INFILTRATION GALLERY AND DESILTING BASIN UNITS ARE TO BE GASKETED, FILLED AND SEALED PER SECTION 13200.

THE CITY OF LOS ANGELES OR ITS OFFICERS OR AGENTS SHALL NOT BE RESPONSIBLE FOR THE ACCURACY OR COMPLETENESS OF ELECTRONIC COPIES OF THIS PLAN SHEET.

REVISION DATES (DESIGN STAGE ONLY)

CITY OF LOS ANGELES DEPARTMENT OF PUBLIC WORKS
BUREAU OF ENGINEERING

ENGINEERING
CITY OF LOS ANGELES

THIS PLAN WAS ELECTRONICALLY • SIGNED AND STAMPED

REGISTERED PROFESSIONAL ENGINEER TED S. ALLEN No. C 48973 EXP. 06/30/2026 CIVIL STATE OF CALIFORNIA 04/11/2023

NO.	REVISIONS	DATE	BY
		YY/MM/DD	
		YY/MM/DD	
		YY/MM/DD	
		YY/MM/DD	

CIP NO. SCP0003

INDEX NO.

CITY ENGINEER

	DESIGN GROUP	DATE
TED ALLEN, P.E.		04/11/2023
ENGINEER:	CDM SMITH INC.	04/11/2023
ARCHITECT:	NA	04/11/2023
DESIGNED BY:	C. RICE	04/11/2023
DRAWN BY:	C. BILDERBACK	04/11/2023
CHECKED BY:	P. TAURASI	04/11/2023
APPROVED BY:	A. DELLINGER	04/11/2023

VERTICAL CONTROL: BENCH MARK 18-02215 NAVD 88
HORIZONTAL CONTROL: CALIFORNIA STATE PLANE ZONE V, 1983 NAD

SHEET TITLE: DESILTING BASIN SECTION

PROJECT: STRATHERN PARK NORTH STORMWATER CAPTURE PROJECT

ADDRESS: STRATHERN PARK NORTH 8041 WHISETT AVE, NORTH HOLLYWOOD, CA 91605

WORK ORDER EW40080F

SHEET NAME CI02

SHEET 19 OF 85 SHEETS

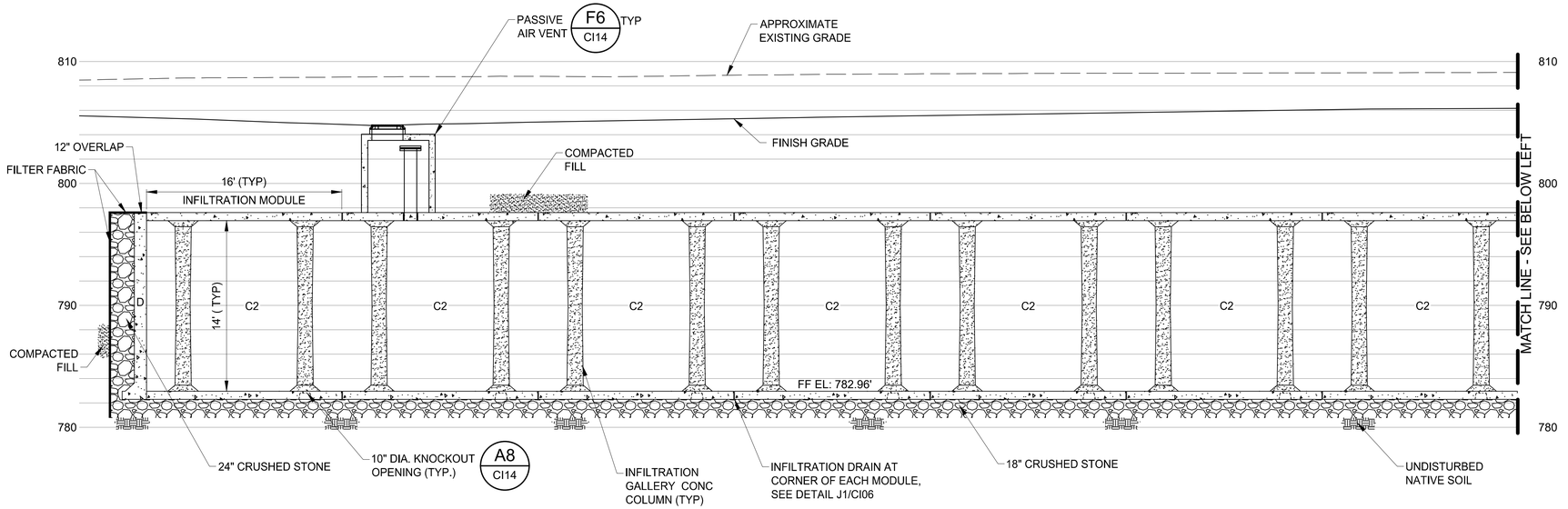

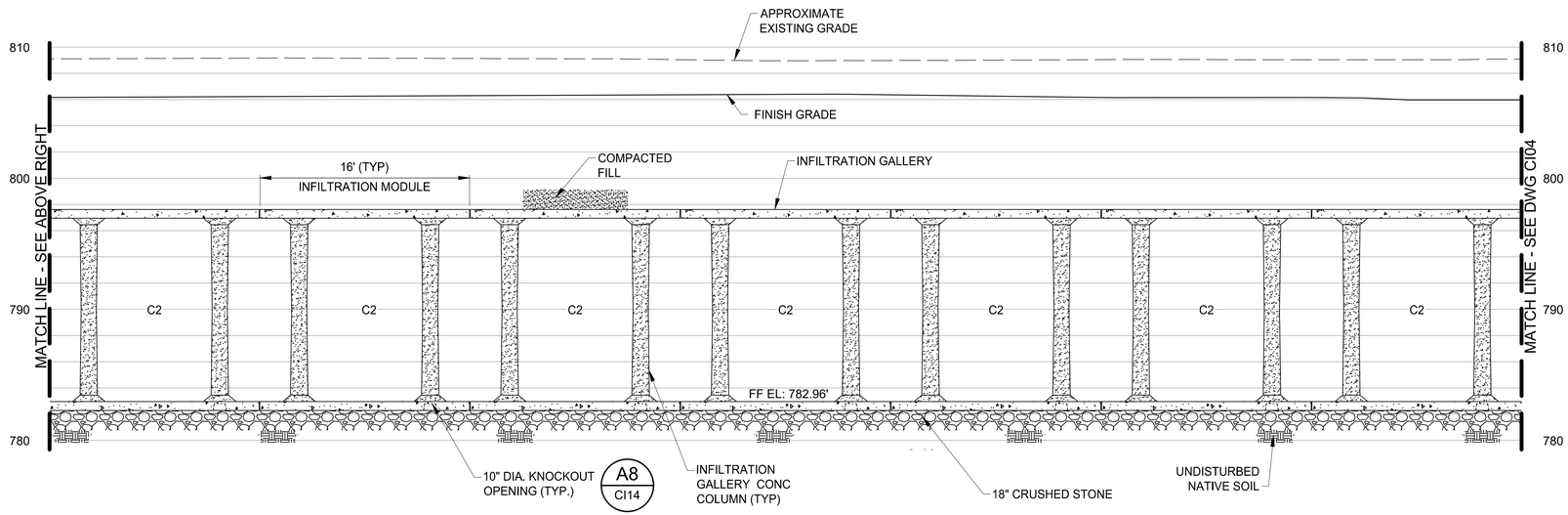

B1 / CI01 INFILTRATION GALLERY SECTION

SCALE: 3/16" = 1'-0"

NOTES

1. SEE SHEET GI04 FOR FILL REQUIREMENTS AROUND THE PERIMETER AND TOP OF THE DESILTING BASINS AND INFILTRATION GALLERIES.
2. SEE SPECIFICATION SECTION 13200 FOR ADDITIONAL INFORMATION ON THE BURIED STORMWATER INFILTRATION SYSTEM.
3. FILTER FABRIC TO COVER SIDES AND TOP OF CRUSHED STONE WITH OVERLAP SHOWN. INSTALL STAKES TO HOLD FILTER FABRIC IN PLACE PER FILTER FABRIC MANUFACTURER RECOMMENDATIONS.
4. JOINTS ON INFILTRATION GALLERY AND DESILTING BASIN UNITS ARE TO BE GASKETED, FILLED AND SEALED PER SECTION 13200.

4' 0 4' 8'
3/16" = 1'-0"

THE CITY OF LOS ANGELES OR ITS OFFICERS OR AGENTS SHALL NOT BE RESPONSIBLE FOR THE ACCURACY OR COMPLETENESS OF ELECTRONIC COPIES OF THIS PLAN SHEET.

REVISION DATES (DESIGN STAGE ONLY)

CITY OF LOS ANGELES DEPARTMENT OF PUBLIC WORKS
BUREAU OF ENGINEERING
THIS PLAN WAS ELECTRONICALLY • SIGNED AND STAMPED

ENGINEERING
CITY OF LOS ANGELES

REGISTERED PROFESSIONAL ENGINEER S. TED ALLEN No. C 48973 EXP. 06/30/2026 STATE OF CALIFORNIA 04/11/2023

VERTICAL CONTROL: BENCH MARK 18-02215 NAVD 88
HORIZONTAL CONTROL: CALIFORNIA STATE PLANE ZONE V, 1983 NAD

SHEET TITLE: INFILTRATION GALLERY SECTION 1
PROJECT: STRATHERN PARK NORTH STORMWATER CAPTURE PROJECT
ADDRESS: STRATHERN PARK NORTH 8041 WHISETT AVE, NORTH HOLLYWOOD, CA 91605

NO.	REVISIONS	DATE	BY
		YY/MM/DD	
		YY/MM/DD	
		YY/MM/DD	
		YY/MM/DD	

CIP NO. SCP0003

INDEX NO.

CITY ENGINEER: TED ALLEN, P.E. — DATE 04/11/2023

DESIGN GROUP		DATE
ENGINEER:	CDM SMITH INC.	04/11/2023
ARCHITECT:	NA	04/11/2023
DESIGNED BY:	C. RICE	04/11/2023
DRAWN BY:	C. BILDERBACK	04/11/2023
CHECKED BY:	P. TAURASI	04/11/2023
APPROVED BY:	A. DELLINGER	04/11/2023

WORK ORDER EW40080F

SHEET NAME CI03

SHEET 20 OF 85 SHEETS

SHEET VERSION 4.0.1 FILE PATH: C:\CDMEXT\VINODA\D0491590\CI302.DWG PLOT DATE: 10/9/2024 4:10 PM SAVED: 10/7/2024 3:18 PM SAVED BY:PAVITHRAB

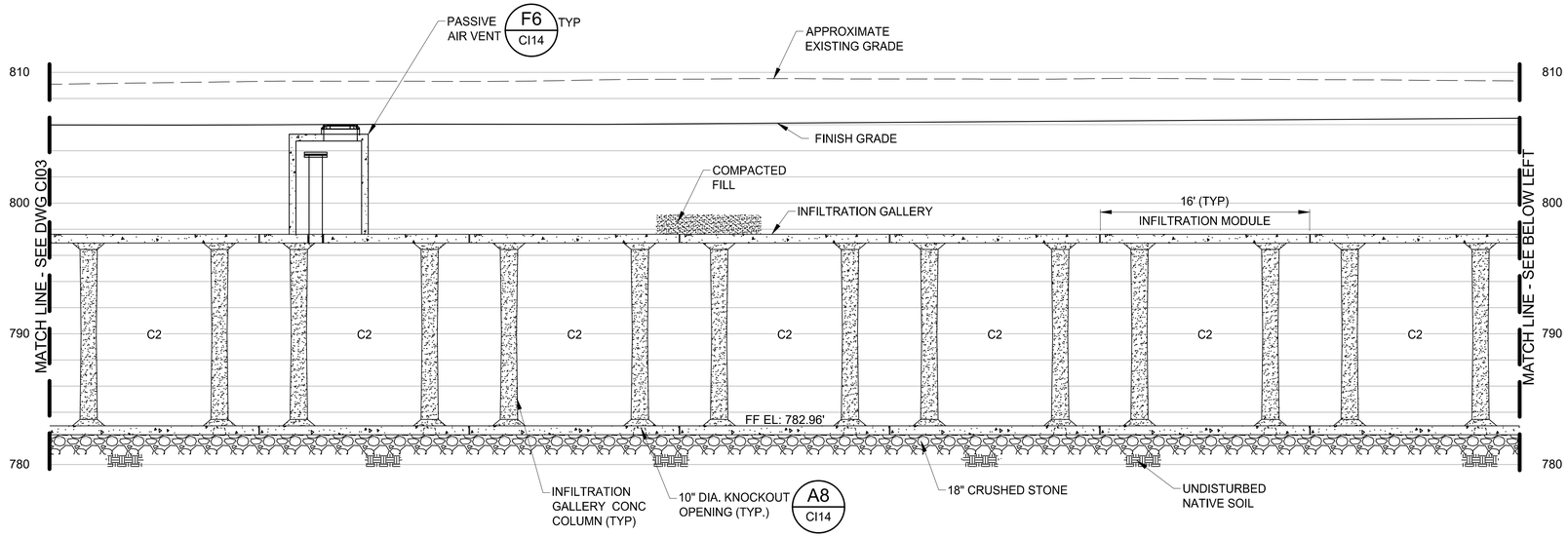

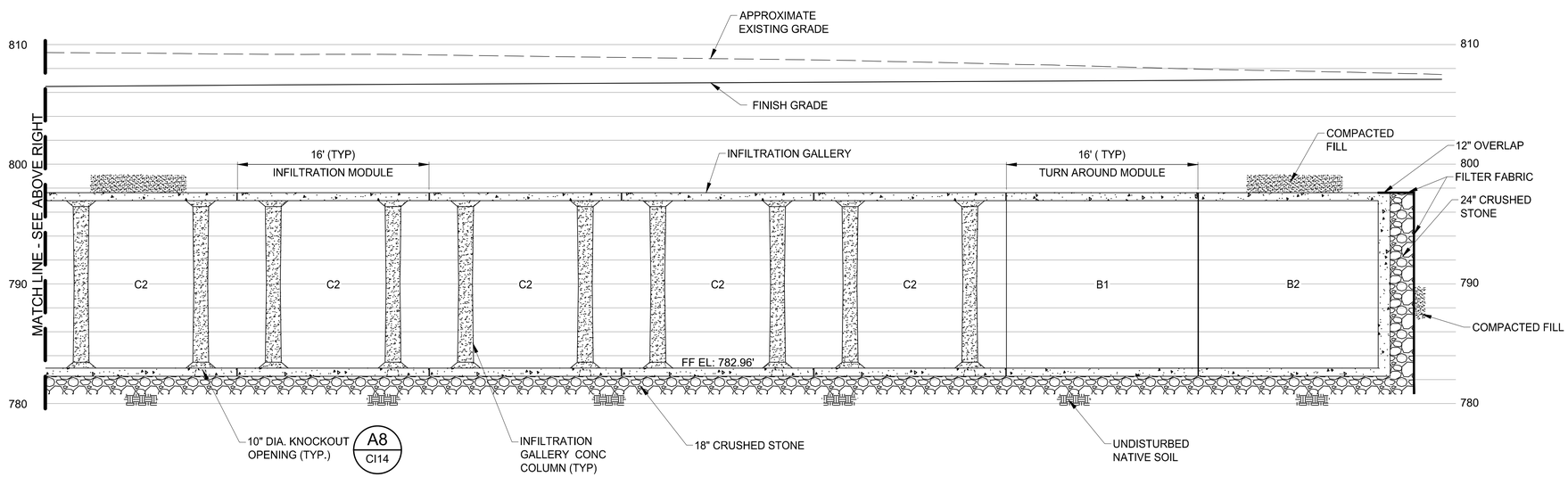

B1 / CI01 INFILTRATION GALLERY SECTION CONTINUED

SCALE: 3/16" = 1'-0"

NOTES

1. SEE SHEET GI04 FOR FILL REQUIREMENTS AROUND THE PERIMETER AND TOP OF THE DESILTING BASINS AND INFILTRATION GALLERIES.
2. SEE SPECIFICATION SECTION 13200 FOR ADDITIONAL INFORMATION ON THE BURIED STORMWATER INFILTRATION SYSTEM.
3. FILTER FABRIC TO COVER SIDES AND TOP OF CRUSHED STONE WITH OVERLAP SHOWN. INSTALL STAKES TO HOLD FILTER FABRIC IN PLACE PER FILTER FABRIC MANUFACTURER RECOMMENDATIONS.
4. JOINTS ON INFILTRATION GALLERY AND DESILTING BASIN UNITS ARE TO BE GASKETED, FILLED AND SEALED PER SECTION 13200.

4' 0 4' 8'
3/16" = 1'-0"

THE CITY OF LOS ANGELES OR ITS OFFICERS OR AGENTS SHALL NOT BE RESPONSIBLE FOR THE ACCURACY OR COMPLETENESS OF ELECTRONIC COPIES OF THIS PLAN SHEET.

REVISION DATES (DESIGN STAGE ONLY)

ENGINEERING
CITY OF LOS ANGELES

PROFESSIONAL ENGINEER
TED S. ALLEN
No. C 48973
EXP. 08/31/2026
STATE OF CALIFORNIA
04/11/2023

THIS PLAN WAS ELECTRONICALLY • SIGNED AND STAMPED

BUREAU OF ENGINEERING

VERTICAL CONTROL: BENCH MARK: 18-02215 NAVD 88
HORIZONTAL CONTROL: CALIFORNIA STATE PLANE ZONE V, 1983 NAD

SHEET TITLE: INFILTRATION GALLERY SECTION 2
PROJECT: STRATHERN PARK NORTH STORMWATER CAPTURE PROJECT
ADDRESS: STRATHERN PARK NORTH 8041 WHISETT AVE, NORTH HOLLYWOOD, CA 91605

NO.	REVISIONS	DATE	BY
		YY/MM/DD	
		YY/MM/DD	
		YY/MM/DD	
		YY/MM/DD	

CIP NO. SCP0003

INDEX NO.

CITY OF LOS ANGELES DEPARTMENT OF PUBLIC WORKS

CITY ENGINEER: TED ALLEN, P.E. — DATE: 04/11/2023

DESIGN GROUP		
ENGINEER:	CDM SMITH INC.	04/11/2023
ARCHITECT:	NA	04/11/2023
DESIGNED BY:	C. RICE	04/11/2023
DRAWN BY:	C. BILDERBACK	04/11/2023
CHECKED BY:	P. TAURASI	04/11/2023
APPROVED BY:	A. DELLINGER	04/11/2023

WORK ORDER
EW40080F

SHEET NAME
CI04

SHEET 21 OF 85 SHEETS

SHEET VERSION 4.0.1 FILE PATH: C:\CDMEXT\VINODA\D0491590\CI303.DWG PLOT DATE: 10/9/2024 4:11 PM SAVED: 10/7/2024 2:01 PM SAVED BY:PAVITHRAB

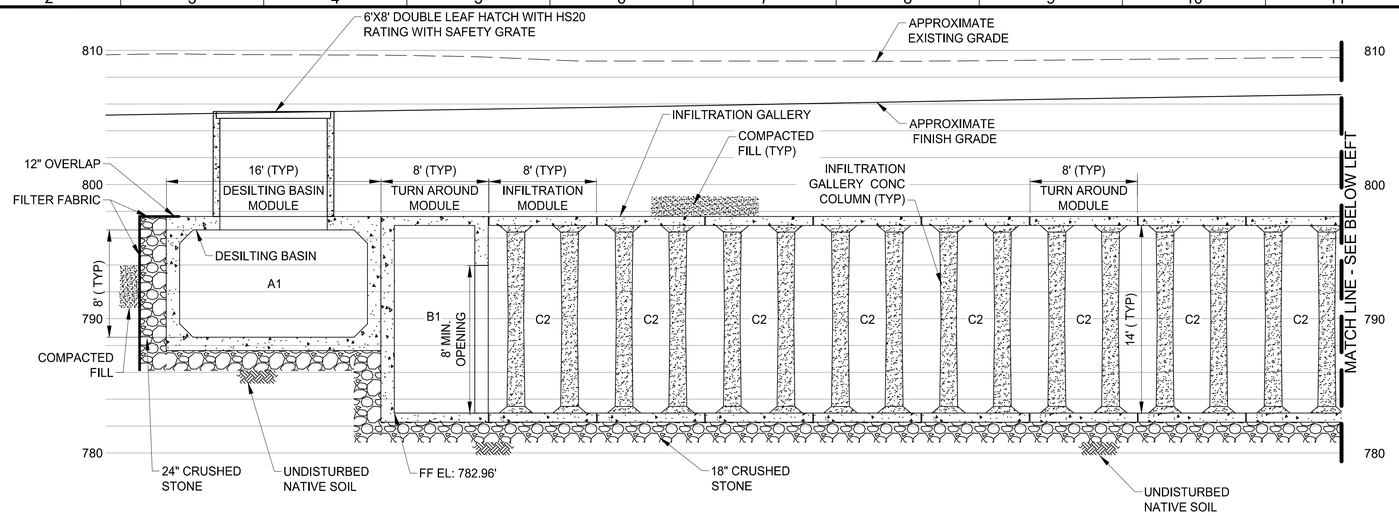

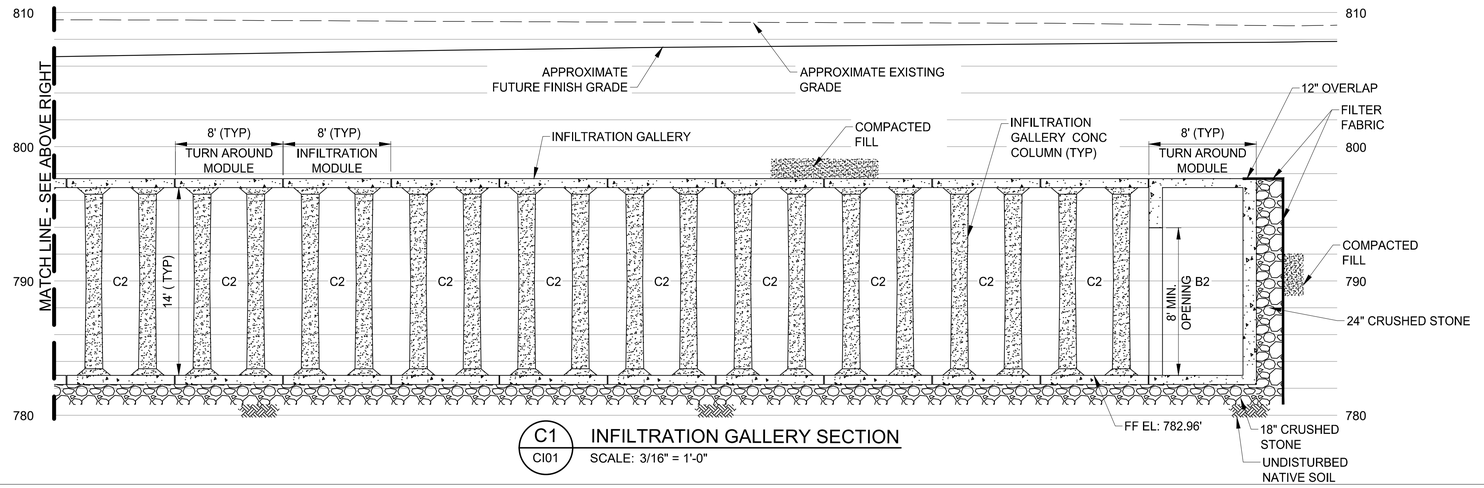

C1 CI01 **INFILTRATION GALLERY SECTION**
SCALE: 3/16" = 1'-0"

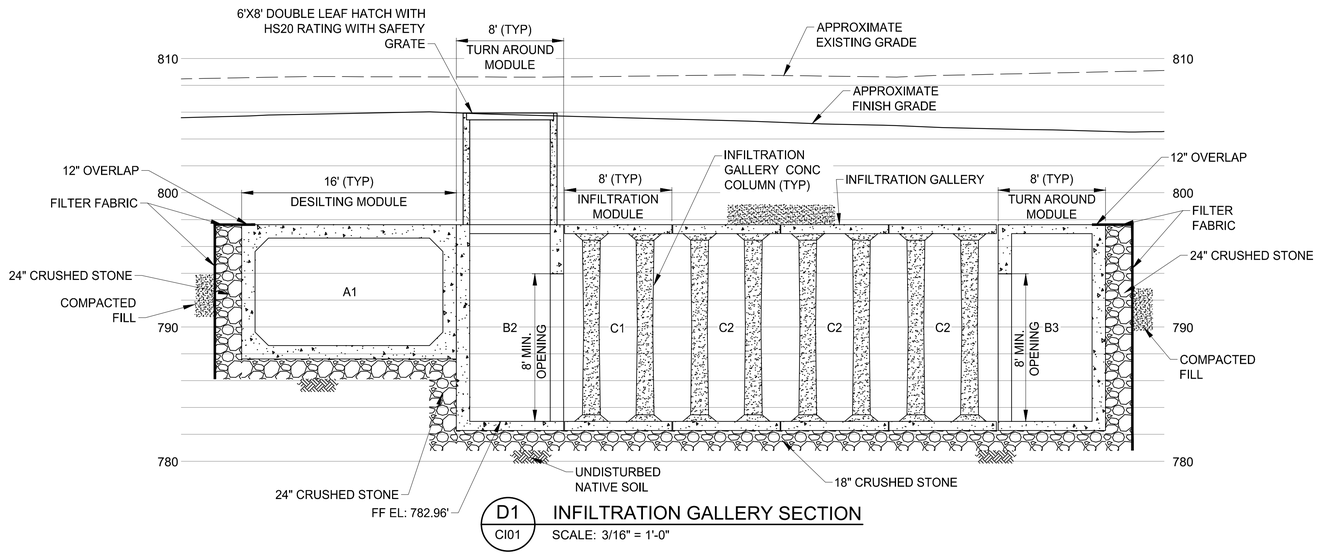

D1 CI01 **INFILTRATION GALLERY SECTION**
SCALE: 3/16" = 1'-0"

4' 0 4' 8'
3/16" = 1'-0"

NOTES

1. SEE SHEET GI04 FOR FILL REQUIREMENTS AROUND THE PERIMETER AND TOP OF THE DESILTING BASINS AND INFILTRATION GALLERIES.
2. SEE SPECIFICATION SECTION 13200 FOR ADDITIONAL INFORMATION ON THE BURIED STORMWATER INFILTRATION SYSTEM.
3. FILTER FABRIC TO COVER SIDES AND TOP OF CRUSHED STONE WITH OVERLAP SHOWN. INSTALL STAKES TO HOLD FILTER FABRIC IN PLACE PER FILTER FABRIC MANUFACTURER RECOMMENDATIONS.
4. JOINTS ON INFILTRATION GALLERY AND DESILTING BASIN UNITS ARE TO BE GASKETED, FILLED AND SEALED PER SECTION 13200.

THE CITY OF LOS ANGELES OR ITS OFFICERS OR AGENTS SHALL NOT BE RESPONSIBLE FOR THE ACCURACY OR COMPLETENESS OF ELECTRONIC COPIES OF THIS PLAN SHEET.

REVISION DATES (DESIGN STAGE ONLY)

ENGINEERING
CITY OF LOS ANGELES

THIS PLAN WAS ELECTRONICALLY • SIGNED AND STAMPED

PROFESSIONAL ENGINEER
TED S. ALLEN
No. C 48973
EXP. 08/31/2026
REGISTERED
CIVIL
STATE OF CALIFORNIA
04/11/2023

BUREAU OF ENGINEERING

VERTICAL CONTROL: BENCH MARK 18-02215 NAVD 88
HORIZONTAL CONTROL: CALIFORNIA STATE PLANE ZONE V, 1983 NAD

SHEET TITLE: INFILTRATION GALLERY SECTION 3
PROJECT: STRATHERN PARK NORTH STORMWATER CAPTURE PROJECT
ADDRESS: STRATHERN PARK NORTH 8041 WHISETT AVE, NORTH HOLLYWOOD, CA 91605

NO.	REVISIONS	DATE	BY
		YY/MM/DD	
		YY/MM/DD	
		YY/MM/DD	
		YY/MM/DD	

CIP NO. SCP0003

INDEX NO.

CITY OF LOS ANGELES DEPARTMENT OF PUBLIC WORKS

CITY ENGINEER: TED ALLEN, P.E.

DESIGN GROUP	DATE
ENGINEER: CDM SMITH INC.	04/11/2023
ARCHITECT: NA	04/11/2023
DESIGNED BY: C. RICE	04/11/2023
DRAWN BY: C. BILDERBACK	04/11/2023
CHECKED BY: P. TAURASI	04/11/2023
APPROVED BY: A. DELLINGER	04/11/2023

WORK ORDER EW40080F

SHEET NAME CI05

SHEET 22 OF 85 SHEETS

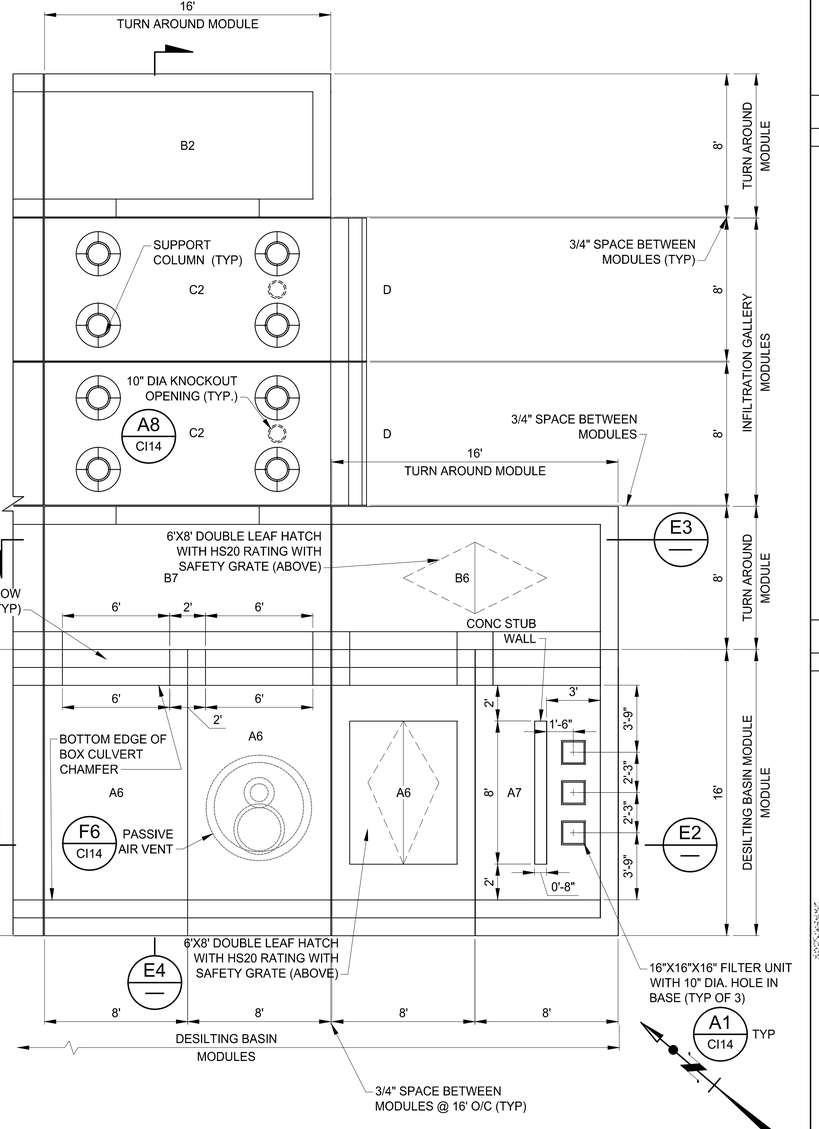

E1 CI01 **DESILTING BASIN/INFILTRATION GALLERY ENLARGED PLAN EL 796**

SCALE: 1/4" = 1'-0"

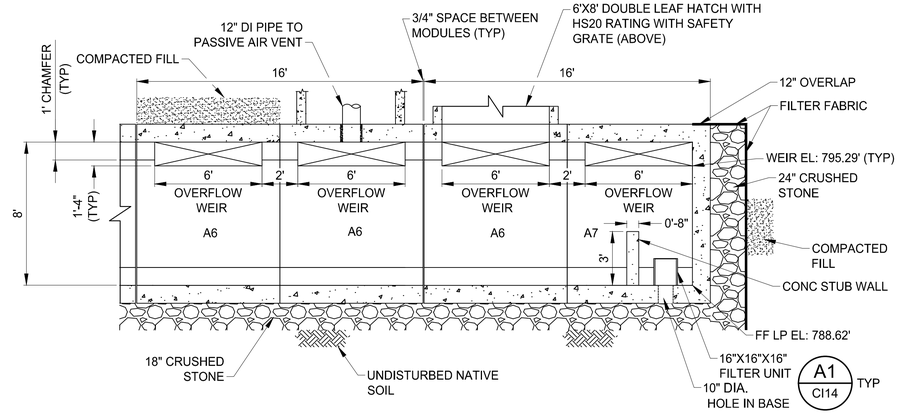

E2 **PARTIAL SECTION**

SCALE: 1/4" = 1'-0"

E3 **PARTIAL SECTION**

SCALE: 1/4" = 1'-0"

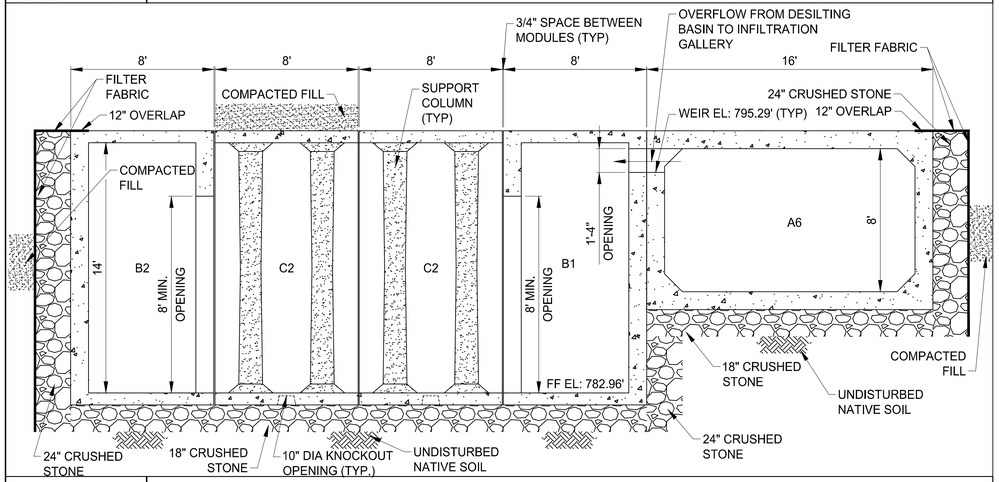

E4 **PARTIAL SECTION**

SCALE: 1/4" = 1'-0"

NOTES

1. SEE SHEET GI04 FOR FILL REQUIREMENTS AROUND THE PERIMETER AND TOP OF THE DESILTING BASINS AND INFILTRATION GALLERIES.
2. SEE SPECIFICATION SECTION 13200 FOR ADDITIONAL INFORMATION ON THE BURIED STORMWATER INFILTRATION SYSTEM.
3. FILTER FABRIC TO COVER SIDES AND TOP OF CRUSHED STONE WITH OVERLAP SHOWN. INSTALL STAKES TO HOLD FILTER FABRIC IN PLACE PER FILTER FABRIC MANUFACTURER RECOMMENDATIONS.
4. JOINTS ON INFILTRATION GALLERY AND DESILTING BASIN UNITS ARE TO BE GASKETED, FILLED AND SEALED PER SECTION 13200.

4' 0 4' 8'
¼" = 1'-0"

THE CITY OF LOS ANGELES OR ITS OFFICERS OR AGENTS SHALL NOT BE RESPONSIBLE FOR THE ACCURACY OR COMPLETENESS OF ELECTRONIC COPIES OF THIS PLAN SHEET.

REVISION DATES (DESIGN STAGE ONLY)

ENGINEERING
CITY OF LOS ANGELES

PROFESSIONAL ENGINEER
REGISTERED
S. TED ALLEN
No. C 48973
EXP. 08/31/2026
STATE OF CALIFORNIA
04/11/2023

THIS PLAN WAS ELECTRONICALLY • SIGNED AND STAMPED

CITY OF LOS ANGELES DEPARTMENT OF PUBLIC WORKS BUREAU OF ENGINEERING

VERTICAL CONTROL: BENCH MARK: 18-02215 NAVD 88
HORIZONTAL CONTROL: CALIFORNIA STATE PLANE ZONE V, 1983 NAD

SHEET TITLE: ENLARGED PLAN AND PARTIAL SECTIONS 1
PROJECT: STRATHERN PARK NORTH STORMWATER CAPTURE PROJECT
ADDRESS: STRATHERN PARK NORTH 8041 WHISETT AVE, NORTH HOLLYWOOD, CA 91605

NO.	REVISIONS	DATE	BY
		YY/MM/DD	
		YY/MM/DD	
		YY/MM/DD	
		YY/MM/DD	

CIP NO. SCP0003

INDEX NO.

CITY ENGINEER	DATE
TED ALLEN, P.E.	04/11/2023

DESIGN GROUP	
ENGINEER:	CDM SMITH INC.
ARCHITECT:	NA
DESIGNED BY:	C. RICE
DRAWN BY:	C. BILDERBACK
CHECKED BY:	P. TAURASI
APPROVED BY:	A. DELLINGER

WORK ORDER EW40080F

SHEET NAME CI06

SHEET 23 OF 85 SHEETS

SHEET VERSION 4.0.1 FILE PATH: C:\CDMEXT\VINODA\D0491590\CI401.DWG PLOT DATE: 10/9/2024 4:13 PM SAVED: 10/7/2024 2:00 PM SAVED BY:PAVITHRAB

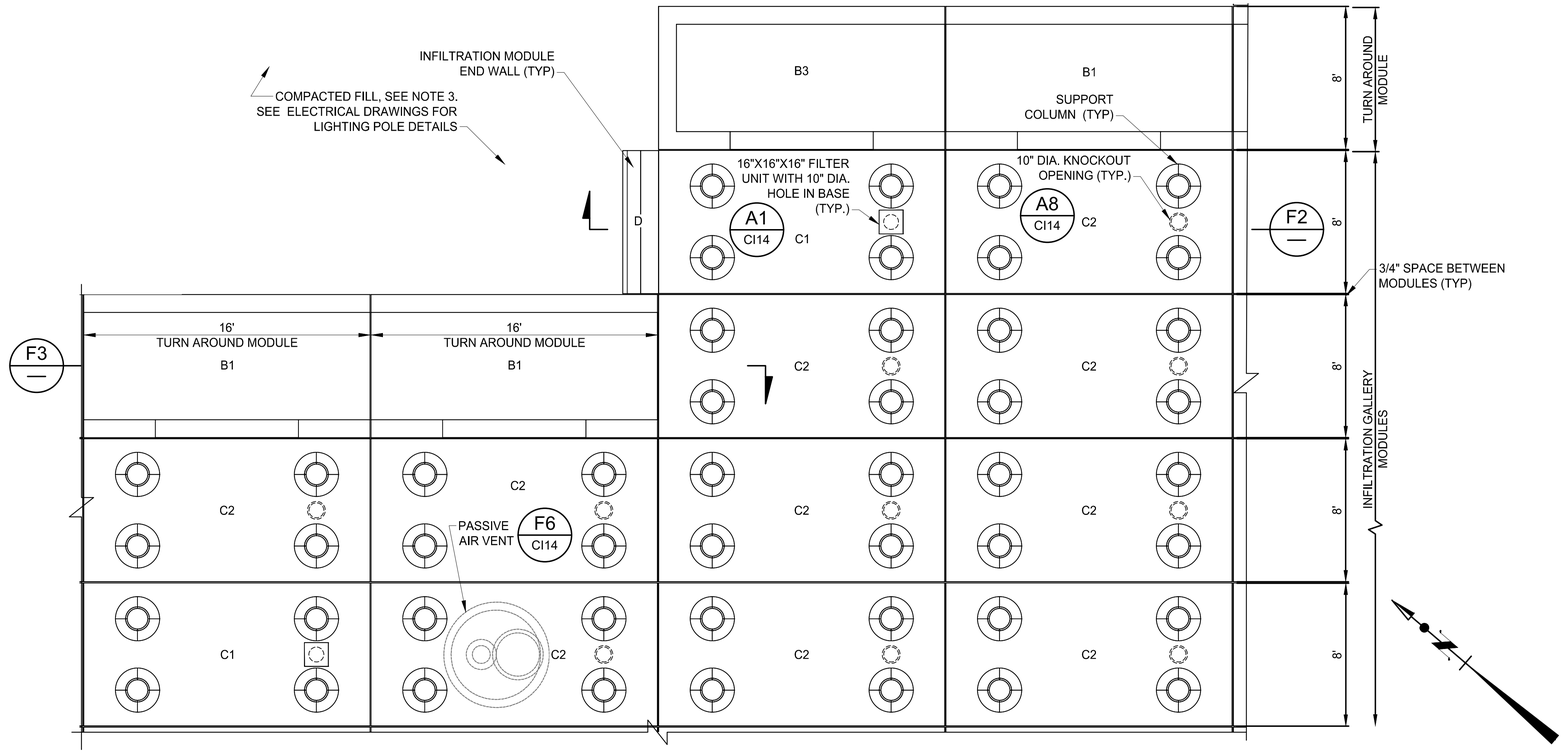

F1 CI01 INFILTRATION GALLERY ENLARGED PLAN EL 793

SCALE: 1/4" = 1'-0"

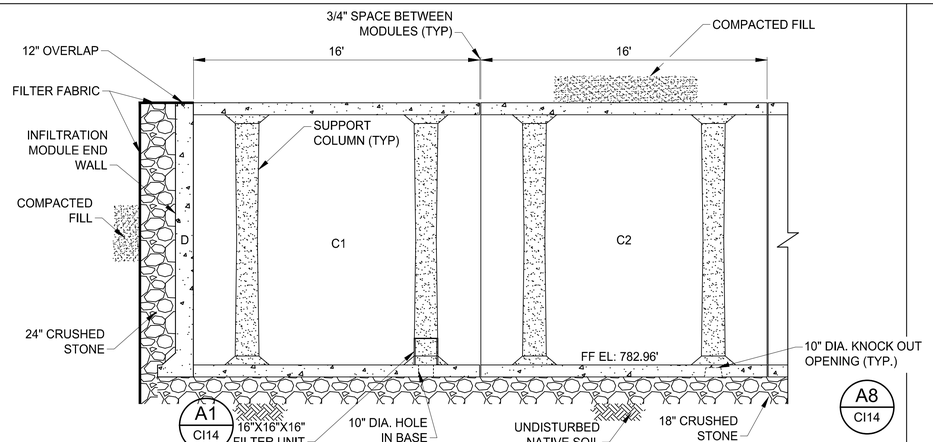

F2 PARTIAL SECTION

SCALE: 1/4" = 1'-0"

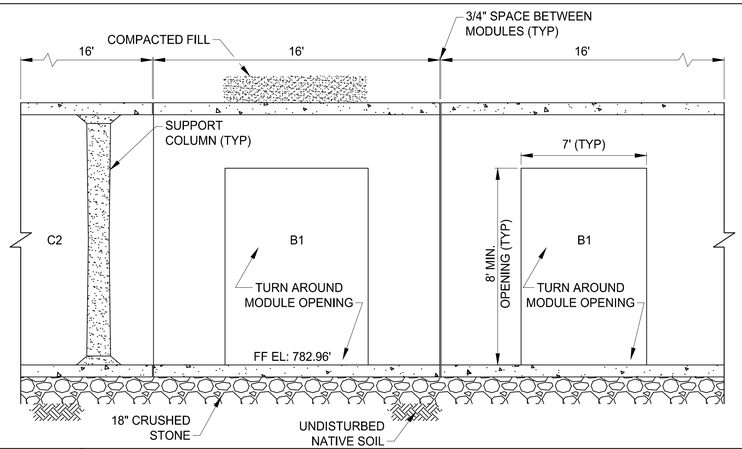

F3 PARTIAL SECTION

SCALE: 1/4" = 1'-0"

4' 0 4' 8'

¼" = 1'-0"

NOTES

1. SEE SHEET GI04 FOR FILL REQUIREMENTS AROUND THE PERIMETER AND TOP OF THE DESILTING BASINS AND INFILTRATION GALLERIES.
2. SEE SPECIFICATION SECTION 13200 FOR ADDITIONAL INFORMATION ON THE BURIED STORMWATER INFILTRATION SYSTEM.
3. FILTER FABRIC TO COVER SIDES AND TOP OF CRUSHED STONE WITH OVERLAP SHOWN. INSTALL STAKES TO HOLD FILTER FABRIC IN PLACE PER FILTER FABRIC MANUFACTURER RECOMMENDATIONS.
4. JOINTS ON INFILTRATION GALLERY AND DESILTING BASIN UNITS ARE TO BE GASKETED, FILLED AND SEALED PER SECTION 13200.

THE CITY OF LOS ANGELES OR ITS OFFICERS OR AGENTS SHALL NOT BE RESPONSIBLE FOR THE ACCURACY OR COMPLETENESS OF ELECTRONIC COPIES OF THIS PLAN SHEET.

REVISION DATES (DESIGN STAGE ONLY)

ENGINEERING
CITY OF LOS ANGELES

REGISTERED PROFESSIONAL ENGINEER S. TED ALLEN No. C 48973 EXP. 06/30/2026 STATE OF CALIFORNIA 04/11/2023

THIS PLAN WAS ELECTRONICALLY • SIGNED AND STAMPED

CITY OF LOS ANGELES DEPARTMENT OF PUBLIC WORKS BUREAU OF ENGINEERING

VERTICAL CONTROL: BENCH MARK: 18-02215 NAVD 88
HORIZONTAL CONTROL: CALIFORNIA STATE PLANE ZONE V, 1983 NAD

SHEET TITLE: ENLARGED PLAN AND PARTIAL SECTIONS 2

PROJECT: STRATHERN PARK NORTH STORMWATER CAPTURE PROJECT

ADDRESS: STRATHERN PARK NORTH 8041 WHISETT AVE, NORTH HOLLYWOOD, CA 91605

NO.	REVISIONS	DATE	BY
		YY/MM/DD	
		YY/MM/DD	
		YY/MM/DD	
		YY/MM/DD	

CIP NO. SCP0003

INDEX NO.

CITY ENGINEER: TED ALLEN, P.E.

DESIGN GROUP		DATE
ENGINEER:	CDM SMITH INC.	04/11/2023
ARCHITECT:	NA	04/11/2023
DESIGNED BY:	C. RICE	04/11/2023
DRAWN BY:	C. BILDERBACK	04/11/2023
CHECKED BY:	P. TAURASI	04/11/2023
APPROVED BY:	A. DELLINGER	04/11/2023

WORK ORDER EW40080F

SHEET NAME CI07

SHEET 24 OF 85 SHEETS

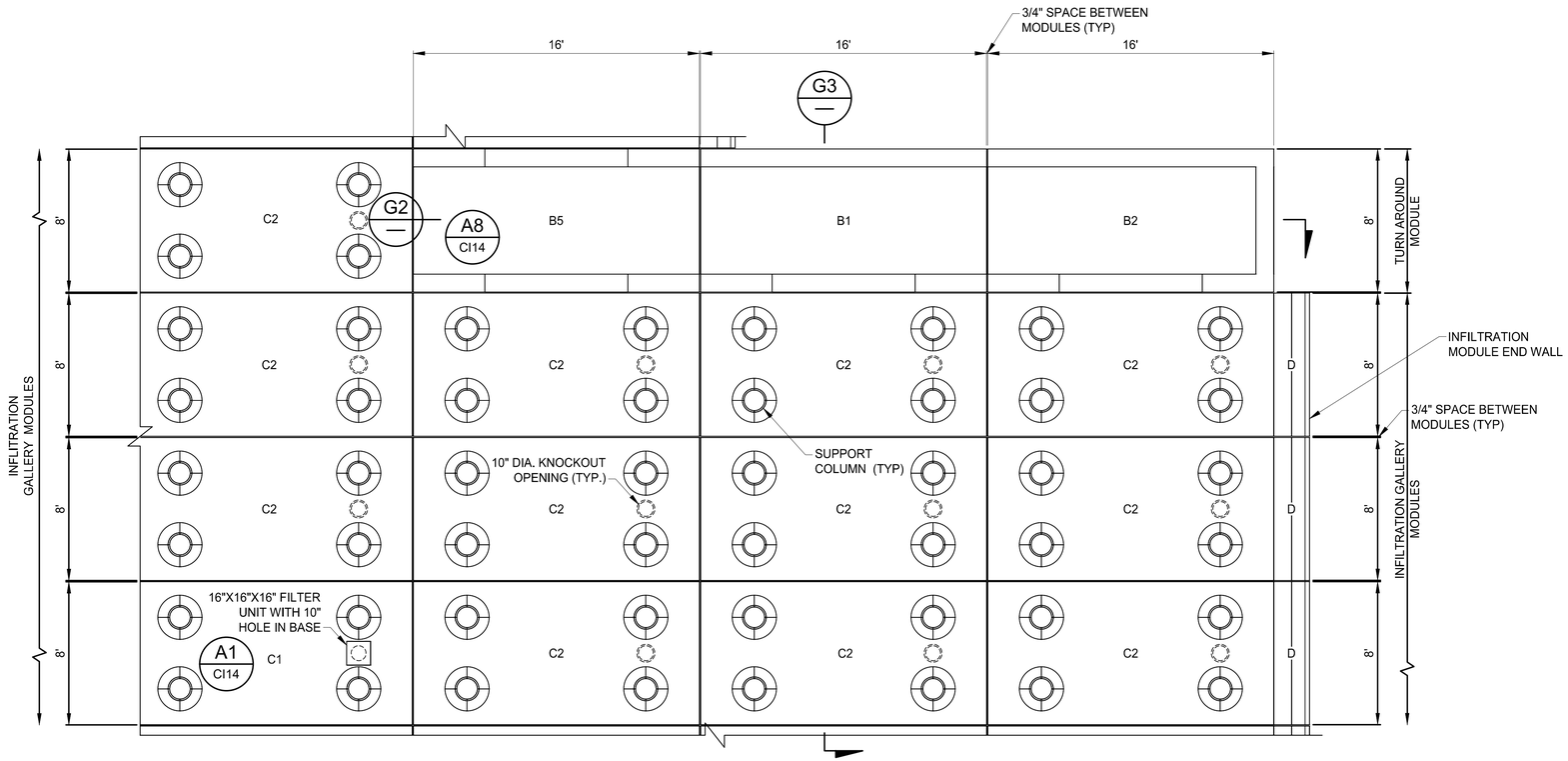

NOTES

1. SEE SHEET GI04 FOR FILL REQUIREMENTS AROUND THE PERIMETER AND TOP OF THE DESILTING BASINS AND INFILTRATION GALLERIES.
2. SEE SPECIFICATION SECTION 13200 FOR ADDITIONAL INFORMATION ON THE BURIED STORMWATER INFILTRATION SYSTEM.
3. FILTER FABRIC TO COVER SIDES AND TOP OF CRUSHED STONE WITH OVERLAP SHOWN. INSTALL STAKES TO HOLD FILTER FABRIC IN PLACE PER FILTER FABRIC MANUFACTURER RECOMMENDATIONS.
4. JOINTS ON INFILTRATION GALLERY AND DESILTING BASIN UNITS ARE TO BE GASKETED, FILLED AND SEALED PER SECTION 13200.

G1 / CI01 — INFILTRATION GALLERY ENLARGED PLAN EL 796

SCALE: 1/4" = 1'-0"

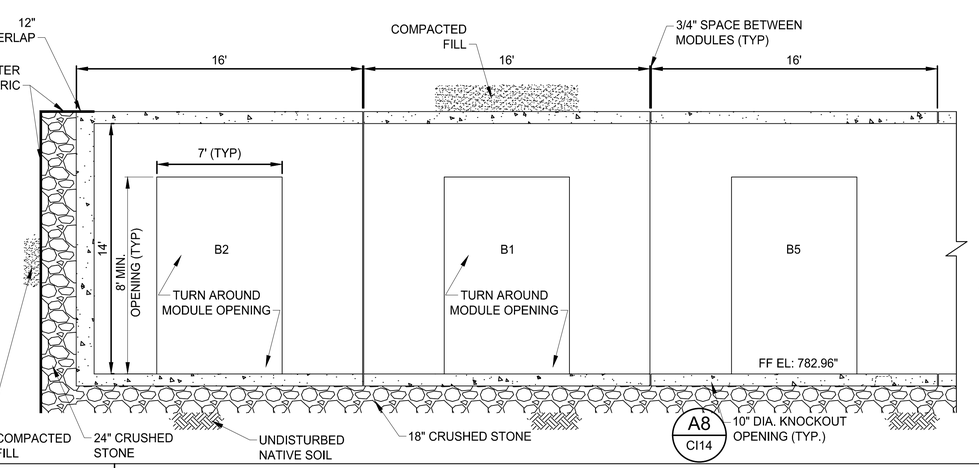

G2 — PARTIAL SECTION

SCALE: 1/4" = 1'-0"

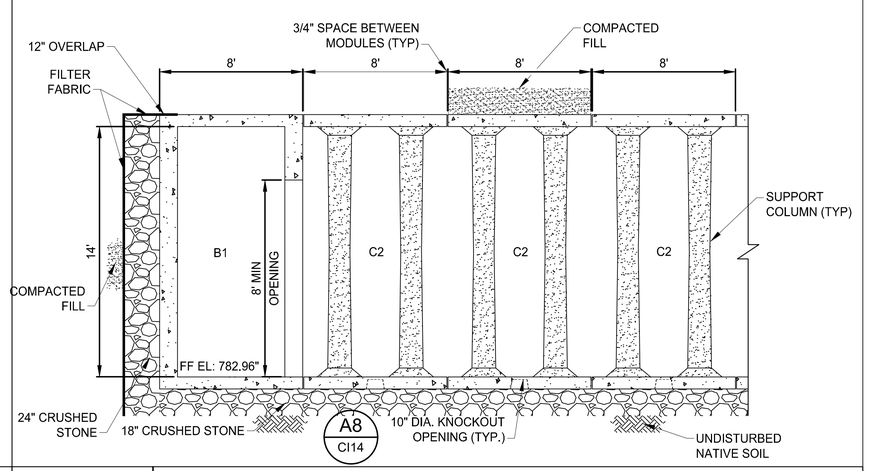

G3 — PARTIAL SECTION

SCALE: 1/4" = 1'-0"

4' 0 4' 8'

¼" = 1'-0"

THE CITY OF LOS ANGELES OR ITS OFFICERS OR AGENTS SHALL NOT BE RESPONSIBLE FOR THE ACCURACY OR COMPLETENESS OF ELECTRONIC COPIES OF THIS PLAN SHEET.

REVISION DATES (DESIGN STAGE ONLY)

CITY OF LOS ANGELES DEPARTMENT OF PUBLIC WORKS

BUREAU OF ENGINEERING

ENGINEERING — CITY OF LOS ANGELES

THIS PLAN WAS ELECTRONICALLY SIGNED AND STAMPED

REGISTERED PROFESSIONAL ENGINEER — SCOTT S. TELLINGHUISEN — No. C 48973 — EXP. 06/30/2026 — STATE OF CALIFORNIA — 04/11/2023

CITY ENGINEER: TED ALLEN, P.E.

	DESIGN GROUP	DATE
ENGINEER:	CDM SMITH INC.	04/11/2023
ARCHITECT:	NA	04/11/2023
DESIGNED BY:	C. RICE	04/11/2023
DRAWN BY:	C. BILDERBACK	04/11/2023
CHECKED BY:	P. TAURASI	04/11/2023
APPROVED BY:	A. DELLINGER	04/11/2023

NO.	REVISIONS	DATE	BY
		YY/MM/DD	
		YY/MM/DD	
		YY/MM/DD	
		YY/MM/DD	
		YY/MM/DD	

VERTICAL CONTROL: BENCH MARK: 18-0222 15 NAVD 88
HORIZONTAL CONTROL: CALIFORNIA STATE PLANE ZONE V, 1983 NAD

SHEET TITLE: ENLARGED PLAN AND PARTIAL SECTIONS 3

PROJECT: STRATHERN PARK NORTH STORMWATER CAPTURE PROJECT

ADDRESS: STRATHERN PARK NORTH 8041 WHISETT AVE, NORTH HOLLYWOOD, CA 91605

CIP NO. SCP0003

INDEX NO.

WORK ORDER EW40080F

SHEET NAME CI08

SHEET 25 OF 85 SHEETS

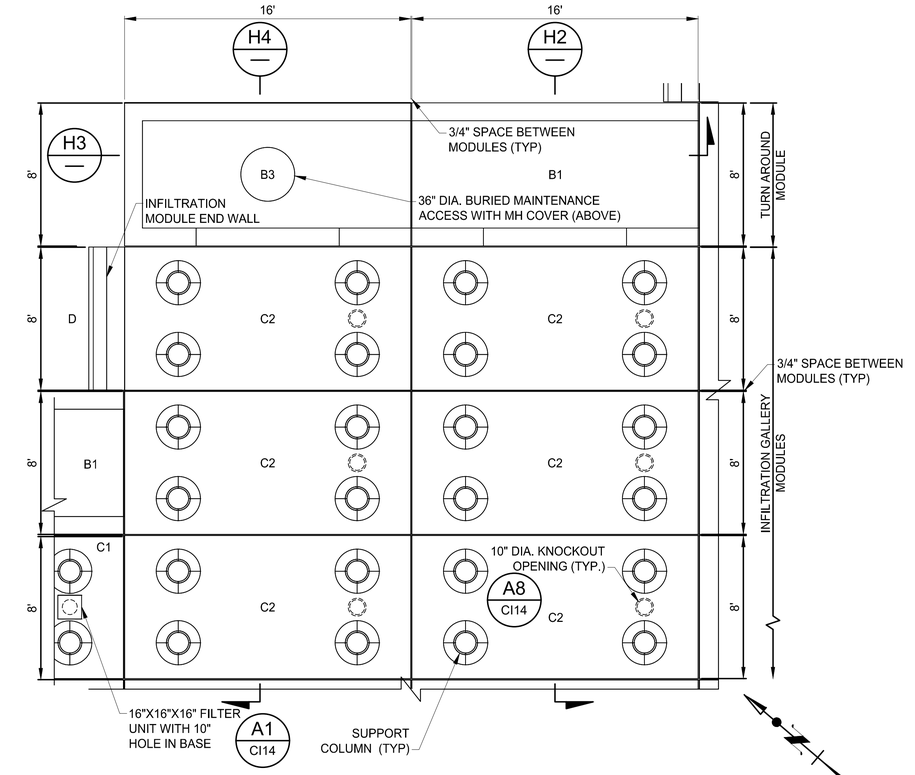

H1 / CI01 — INFILTRATION GALLERY ENLARGED PLAN EL 793

SCALE: 1/4" = 1'-0"

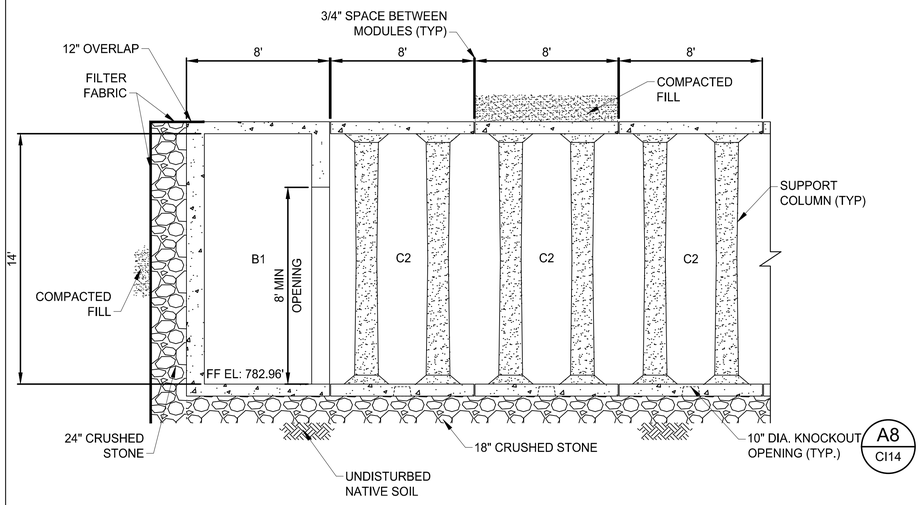

H2 — PARTIAL SECTION

SCALE: 1/4" = 1'-0"

NOTES

1. SEE SHEET GI04 FOR FILL REQUIREMENTS AROUND THE PERIMETER AND TOP OF THE DESILTING BASINS AND INFILTRATION GALLERIES.
2. SEE SPECIFICATION SECTION 13200 FOR ADDITIONAL INFORMATION ON THE BURIED STORMWATER INFILTRATION SYSTEM.
3. FILTER FABRIC TO COVER SIDES AND TOP OF CRUSHED STONE WITH OVERLAP SHOWN. INSTALL STAKES TO HOLD FILTER FABRIC IN PLACE PER FILTER FABRIC MANUFACTURER RECOMMENDATIONS.
4. JOINTS ON INFILTRATION GALLERY AND DESILTING BASIN UNITS ARE TO BE GASKETED, FILLED AND SEALED PER SECTION 13200.

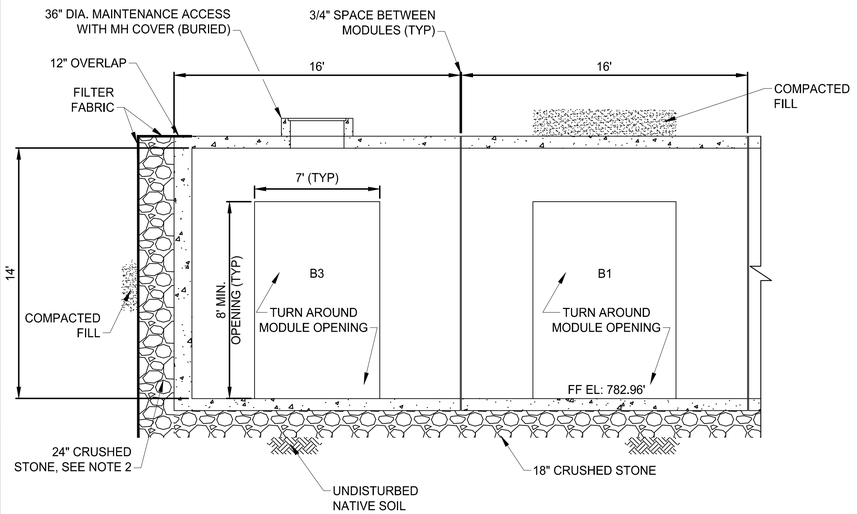

H3 — PARTIAL SECTION

SCALE: 1/4" = 1'-0"

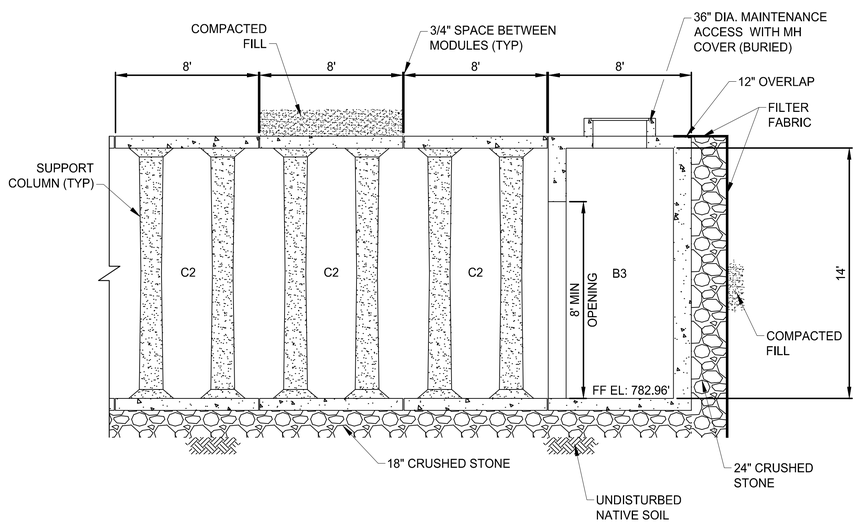

H4 — PARTIAL SECTION

SCALE: 1/4" = 1'-0"

4' 0 4' 8'

¼" = 1'-0"

THE CITY OF LOS ANGELES OR ITS OFFICERS OR AGENTS SHALL NOT BE RESPONSIBLE FOR THE ACCURACY OR COMPLETENESS OF ELECTRONIC COPIES OF THIS PLAN SHEET.

REVISION DATES (DESIGN STAGE ONLY)

ENGINEERING
CITY OF LOS ANGELES

PROFESSIONAL ENGINEER — REGISTERED — S. TED ALLEN — No. C 48973 — EXP. 08/31/2024 — STATE OF CALIFORNIA — CIVIL — 04/11/2023

THIS PLAN WAS ELECTRONICALLY • SIGNED AND STAMPED

BUREAU OF ENGINEERING

VERTICAL CONTROL: BENCH MARK: 18-0221S NAVD 88
HORIZONTAL CONTROL: CALIFORNIA STATE PLANE ZONE V, 1983 NAD

SHEET TITLE: ENLARGED PLAN AND PARTIAL SECTIONS 4

PROJECT: STRATHERN PARK NORTH STORMWATER CAPTURE PROJECT

ADDRESS: STRATHERN PARK NORTH 8041 WHISETT AVE, NORTH HOLLYWOOD, CA 91605

NO.	REVISIONS	DATE	BY
		YY/MM/DD	
		YY/MM/DD	
		YY/MM/DD	
		YY/MM/DD	

INDEX NO.

CITY OF LOS ANGELES DEPARTMENT OF PUBLIC WORKS

CITY ENGINEER: TED ALLEN, P.E. — DATE: 04/11/2023

DESIGN GROUP	
ENGINEER:	CDM SMITH INC.
ARCHITECT:	NA
DESIGNED BY:	C. RICE
DRAWN BY:	C. BILDERBACK
CHECKED BY:	P. TAURASI
APPROVED BY:	A. DELLINGER

CIP NO. SCP0003

WORK ORDER EW40080F

SHEET NAME CI09

SHEET 26 OF 85 SHEETS

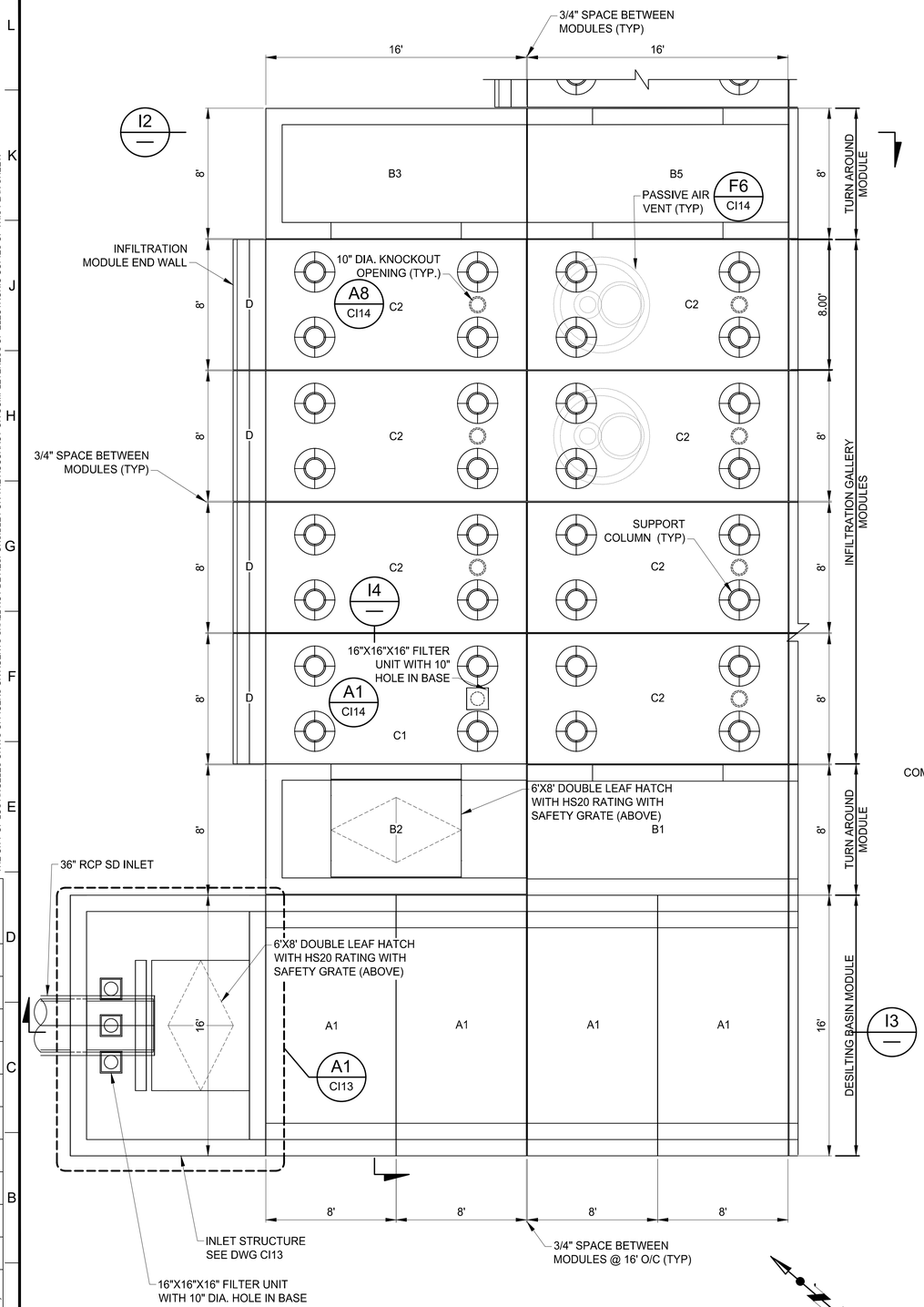

I1 / CI01 — DESILITING BASIN/INFILTRATION GALLERY ENLARGED PLAN EL 793

SCALE: 1/4" = 1'-0"

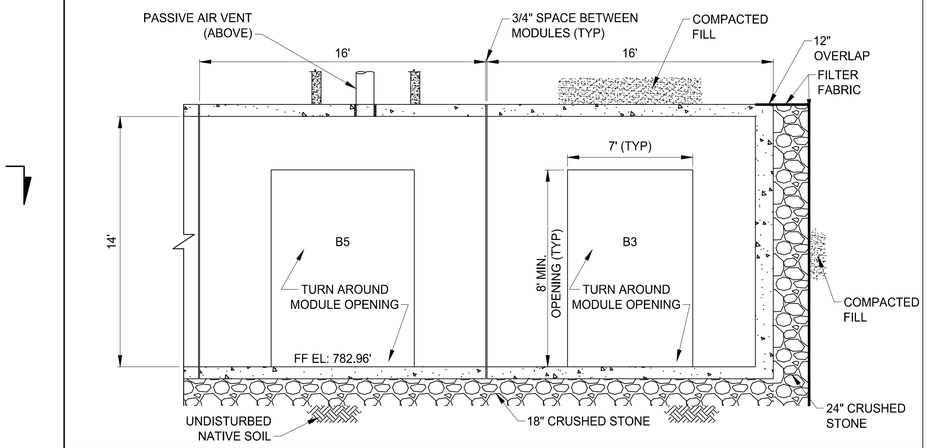

I2 — PARTIAL SECTION

SCALE: 1/4" = 1'-0"

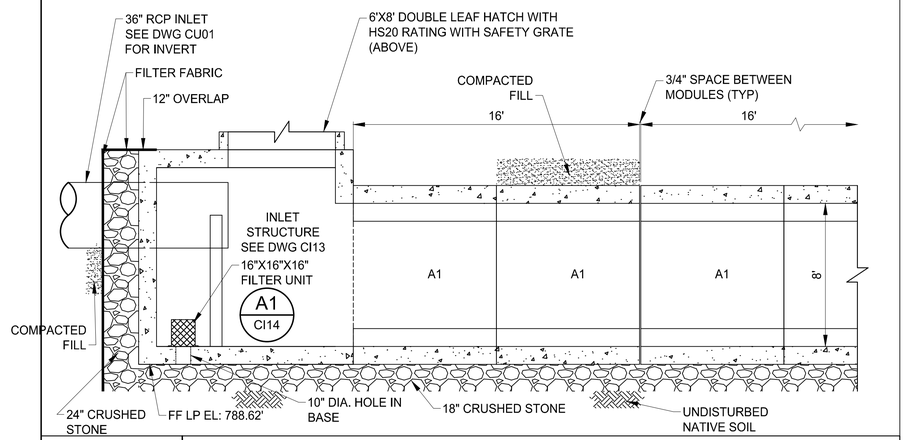

I3 — PARTIAL SECTION

SCALE: 1/4" = 1'-0"

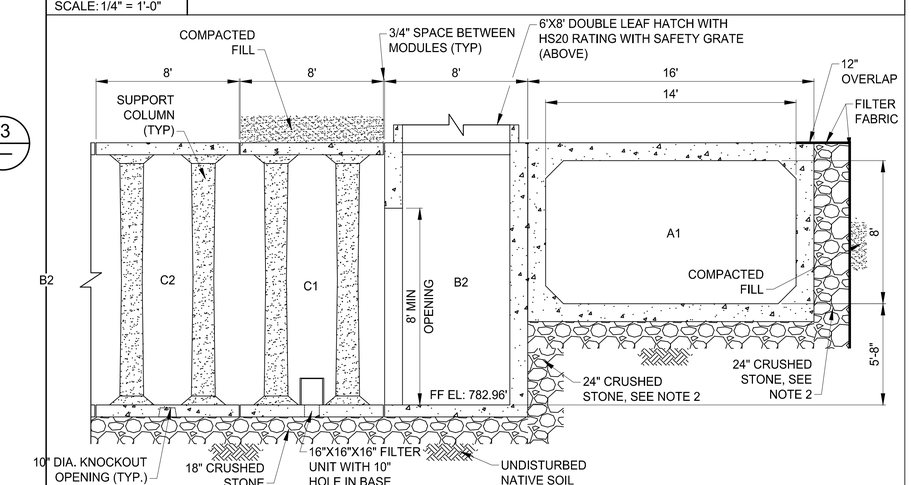

I4 — PARTIAL SECTION

SCALE: 1/4" = 1'-0"

NOTES

1. SEE SHEET GI04 FOR FILL REQUIREMENTS AROUND THE PERIMETER AND TOP OF THE DESILTING BASINS AND INFILTRATION GALLERIES.
2. SEE SPECIFICATION SECTION 13200 FOR ADDITIONAL INFORMATION ON THE BURIED STORMWATER INFILTRATION SYSTEM.
3. FILTER FABRIC TO COVER SIDES AND TOP OF CRUSHED STONE WITH OVERLAP SHOWN. INSTALL STAKES TO HOLD FILTER FABRIC IN PLACE PER FILTER FABRIC MANUFACTURER RECOMMENDATIONS.
4. JOINTS ON INFILTRATION GALLERY AND DESILTING BASIN UNITS ARE TO BE GASKETED, FILLED AND SEALED PER SECTION 13200.

4' 0 4' 8'

¼" = 1'-0"

THE CITY OF LOS ANGELES OR ITS OFFICERS OR AGENTS SHALL NOT BE RESPONSIBLE FOR THE ACCURACY OR COMPLETENESS OF ELECTRONIC COPIES OF THIS PLAN SHEET.

REVISION DATES (DESIGN STAGE ONLY)

ENGINEERING — CITY OF LOS ANGELES

PROFESSIONAL ENGINEER — REGISTERED — S. TED ALLEN — No. C 48973 — EXP. 08/31/2026 — STATE OF CALIFORNIA — 04/11/2023

THIS PLAN WAS ELECTRONICALLY • SIGNED AND STAMPED

BUREAU OF ENGINEERING

VERTICAL CONTROL: BENCH MARK: 18-02215 NAVD 88
HORIZONTAL CONTROL: CALIFORNIA STATE PLANE ZONE V, 1983 NAD

SHEET TITLE: ENLARGED PLAN AND PARTIAL SECTIONS 5

PROJECT: STRATHERN PARK NORTH STORMWATER CAPTURE PROJECT

ADDRESS: STRATHERN PARK NORTH 8041 WHISETT AVE, NORTH HOLLYWOOD, CA 91605

NO.	REVISIONS	DATE	BY
		YY/MM/DD	
		YY/MM/DD	
		YY/MM/DD	
		YY/MM/DD	

CIP NO. SCP0003

INDEX NO.

CITY OF LOS ANGELES DEPARTMENT OF PUBLIC WORKS

CITY ENGINEER: TED ALLEN, P.E.

DESIGN GROUP		DATE
ENGINEER:	CDM SMITH INC.	04/11/2023
ARCHITECT:	NA	04/11/2023
DESIGNED BY:	C. RICE	04/11/2023
DRAWN BY:	C. BILDERBACK	04/11/2023
CHECKED BY:	P. TAURASI	04/11/2023
APPROVED BY:	A. DELLINGER	04/11/2023

WORK ORDER EW40080F

SHEET NAME CI10

SHEET 27 OF 85 SHEETS

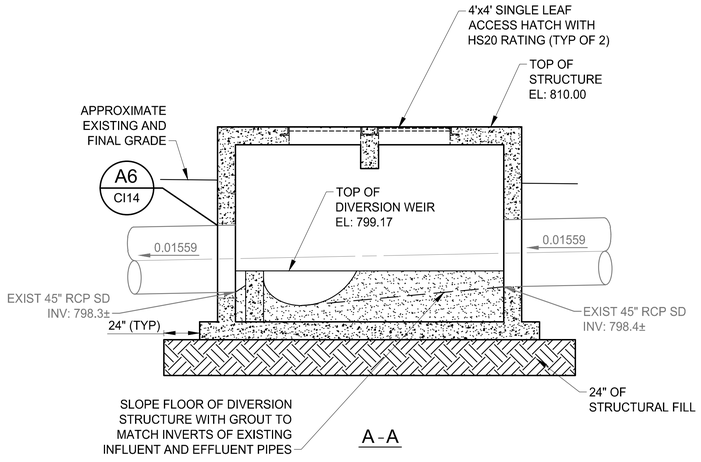

A-A

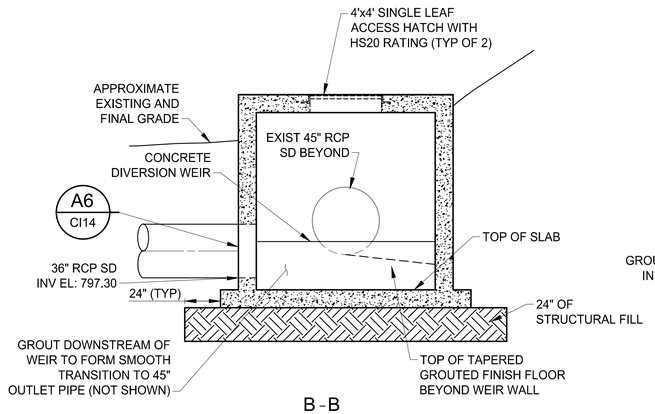

B-B

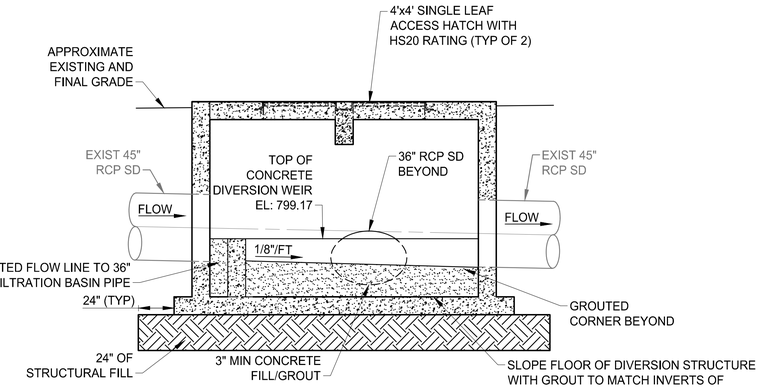

C-C

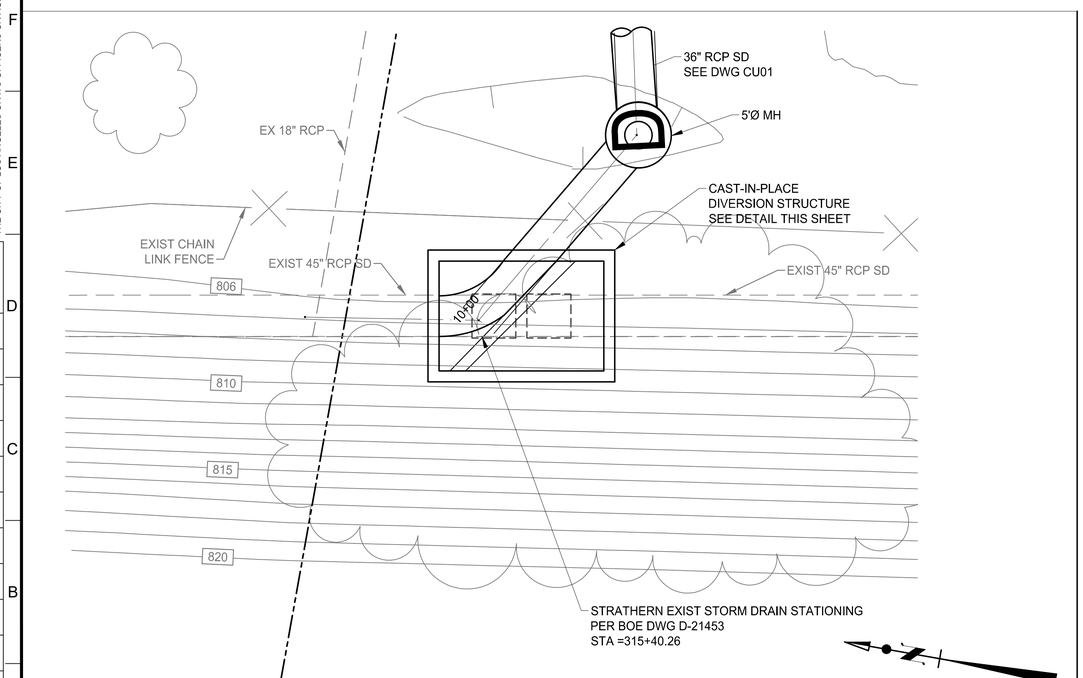

PLAN

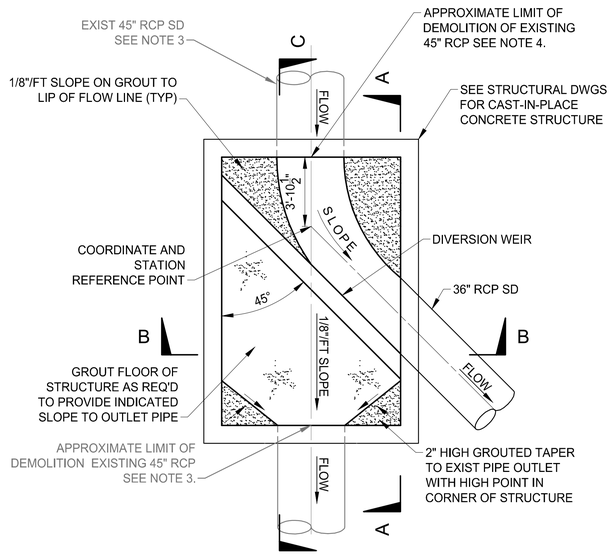

PLAN

NOTES:

1. SEE STRUCTURAL DRAWINGS FOR CAST-IN-PLACE STRUCTURE.
2. RESTORE FENCING TO MATCH EXISTING.
3. EXISTING 45" SD TO REMAIN IN OPERATION AND CONTRACTOR TO DETERMINE AND IMPLEMENT BYPASS FOR THIS STORMWATER FLOW DURING CONSTRUCTION.
4. FROM PROJECT 07-031334, NORTH HOLLYWOOD CITY OF LOS ANGELES, STATE OF CALIFORNIA DEPARTMENT OF PUBLIC WORKS, MAY 1967, NO. D-21453.
5. SAFETY GRATES TO BE PROVIDED WITH ALL HATCHES.



J1	DIVERSION STRUCTURE ENLARGED SITE PLAN		J2	DIVERSION STRUCTURE PLAN & SECTIONS
SCALE: 1"=10'	CU01		SCALE: 1/4" = 1'-0"	CI01

THE CITY OF LOS ANGELES OR ITS OFFICERS OR AGENTS SHALL NOT BE RESPONSIBLE FOR THE ACCURACY OR COMPLETENESS OF ELECTRONIC COPIES OF THIS PLAN SHEET.

REVISION DATES (DESIGN STAGE ONLY)

BUREAU OF ENGINEERING • THIS PLAN WAS ELECTRONICALLY SIGNED AND STAMPED •

ENGINEERING CITY OF LOS ANGELES

REGISTERED PROFESSIONAL ENGINEER S. TED ALLEN No. C 48973 EXP. 06/30/2026 STATE OF CALIFORNIA 04/11/2023

VERTICAL CONTROL: BENCH MARK 18-02215 NAVD 88
HORIZONTAL CONTROL: CALIFORNIA STATE PLANE ZONE V, 1983 NAD

SHEET TITLE: DIVERSION STRUCTURE PLAN AND SECTIONS

PROJECT: STRATHERN PARK NORTH STORMWATER CAPUTRE PROJECT

ADDRESS: STRATHERN PARK NORTH 8041 WHISETT AVE, NORTH HOLLYWOOD, CA 91605

NO.	REVISIONS	DATE	BY
		YY/MM/DD	
		YY/MM/DD	
		YY/MM/DD	
		YY/MM/DD	

CIP NO. SCP0003

INDEX NO.

CITY OF LOS ANGELES DEPARTMENT OF PUBLIC WORKS

CITY ENGINEER: TED ALLEN, P.E. — DATE: 04/11/2023

DESIGN GROUP		DATE
ENGINEER:	CDM SMITH INC.	04/11/2023
ARCHITECT:	NA	04/11/2023
DESIGNED BY:	C. RICE	04/11/2023
DRAWN BY:	C. BILDERBACK	04/11/2023
CHECKED BY:	P. TAURASI	04/11/2023
APPROVED BY:	A. DELLINGER	04/11/2023

WORK ORDER EW40080F

SHEET NAME CI11

SHEET 28 OF 85 SHEETS

SHEET VERSION 4.0.1 FILE PATH: C:\CDMEXT\VINODA\D0491590\CI501.DWG PLOT DATE: 10/9/2024 4:16 PM SAVED: 10/7/2024 2:00 PM SAVED BY:PAVITHRAB

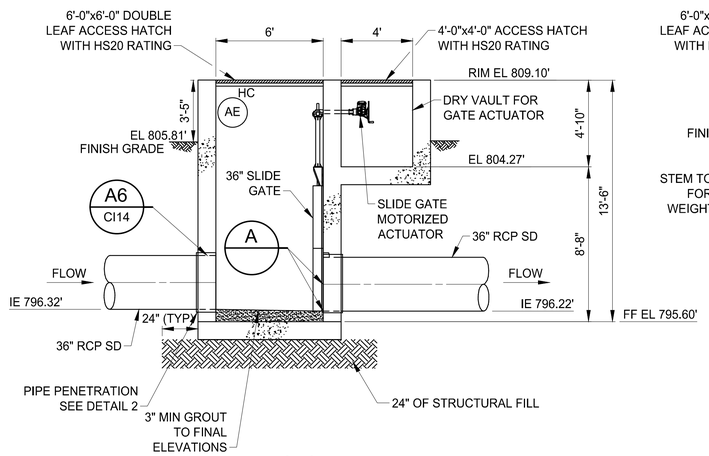

A-A

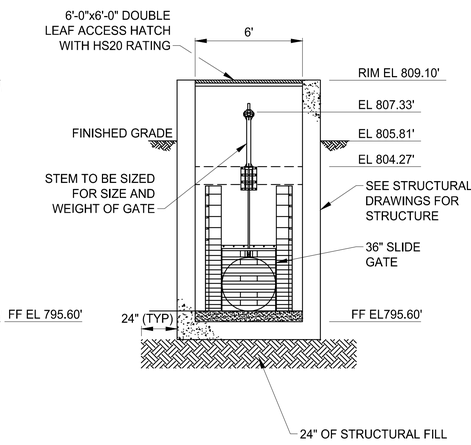

B-B

B

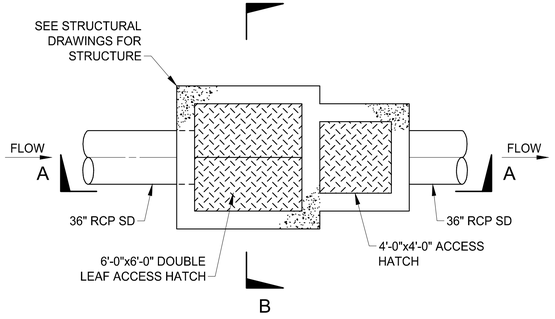

TOP PLAN

NOTE:

1. SEE STRUCTURAL DRAWINGS FOR CAST-IN-PLACE STRUCTURE.

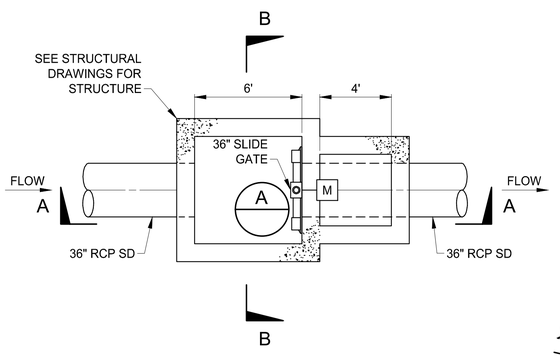

BOTTOM PLAN

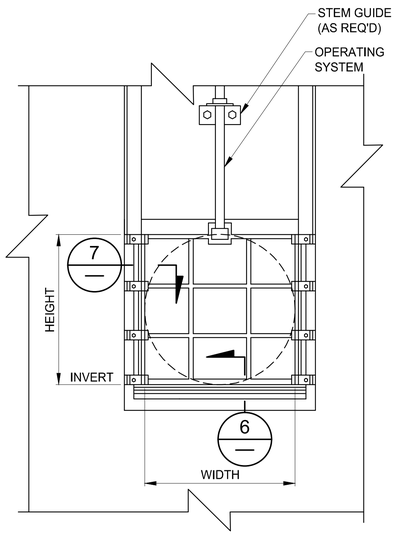

FRONT VIEW

FACE MOUNTED

6 - 6

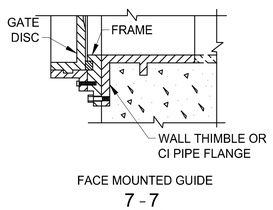

FACE MOUNTED GUIDE

7 - 7

SLIDE GATE

DETAIL A

NTS

NOTES:

1. SEE SHEET GI04 FOR SUBGRADE PREPARATION, STRUCTURAL FILL AND FILL REQUIREMENTS.
2. SAFETY GRATES TO BE PROVIDED WITH ALL HATCHES.

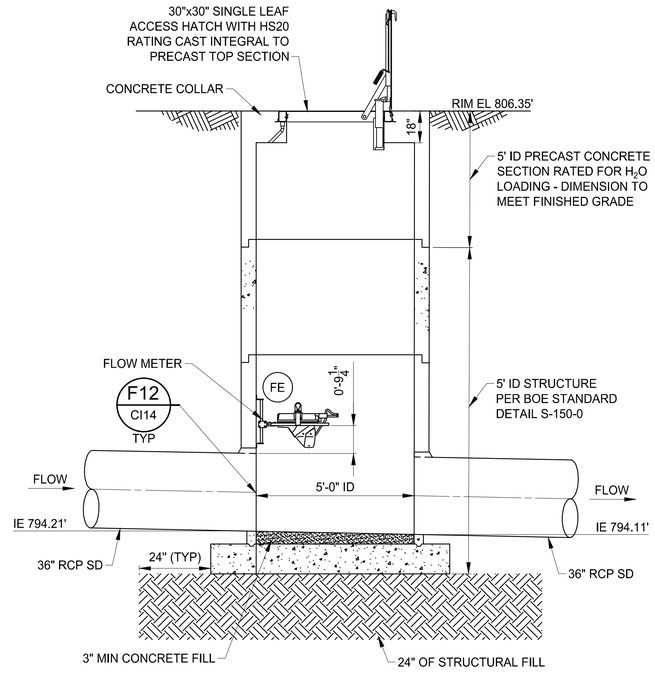

A-A

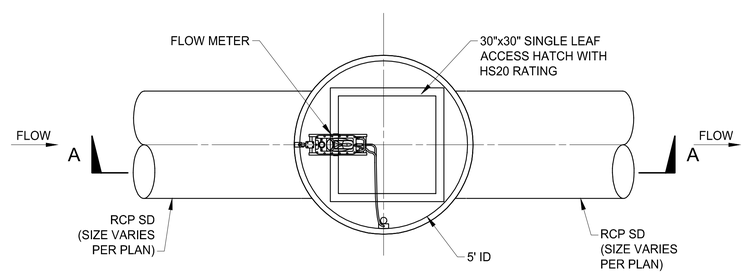

TOP PLAN

2' 0 4' 8'

½" = 1'-0"

A1	SLIDE GATE STRUCTURE	A10	FLOW METER MH
SCALE: 1/4" = 1'-0"	CU01	SCALE: 1/2" = 1'-0"	CI01

THE CITY OF LOS ANGELES OR ITS OFFICERS OR AGENTS SHALL NOT BE RESPONSIBLE FOR THE ACCURACY OR COMPLETENESS OF ELECTRONIC COPIES OF THIS PLAN SHEET.

REVISION DATES (DESIGN STAGE ONLY)

ENGINEERING
CITY OF LOS ANGELES

REGISTERED PROFESSIONAL ENGINEER TED S. ALLEN No. C 48973 EXP. 08/31/2026 STATE OF CALIFORNIA CIVIL 04/11/2023

THIS PLAN WAS ELECTRONICALLY • SIGNED AND STAMPED

BUREAU OF ENGINEERING

VERTICAL CONTROL: BENCH MARK 18-02215 NAVD 88
HORIZONTAL CONTROL: CALIFORNIA STATE PLANE ZONE V, 1983 NAD

SHEET TITLE: GATE VAULT & FLOW METER MAINTENANCE HOLE, PLANS AND SECTIONS

PROJECT: STRATHERN PARK NORTH STORMWATER CAPUTRE PROJECT

ADDRESS: STRATHERN PARK NORTH 8041 WHISETT AVE, NORTH HOLLYWOOD, CA 91605

NO.	REVISIONS	DATE	BY
		YY/MM/DD	
		YY/MM/DD	
		YY/MM/DD	
		YY/MM/DD	

CIP NO. SCP0003

INDEX NO.

CITY OF LOS ANGELES DEPARTMENT OF PUBLIC WORKS

CITY ENGINEER: TED ALLEN, P.E. — DATE: 04/11/2023

DESIGN GROUP		DATE
ENGINEER:	CDM SMITH INC.	04/11/2023
ARCHITECT:	NA	04/11/2023
DESIGNED BY:	C. RICE	04/11/2023
DRAWN BY:	C. BILDERBACK	04/11/2023
CHECKED BY:	P. TAURASI	04/11/2023
APPROVED BY:	A. DELLINGER	04/11/2023

WORK ORDER EW40080F

SHEET NAME CI12

SHEET 29 OF 86 SHEETS

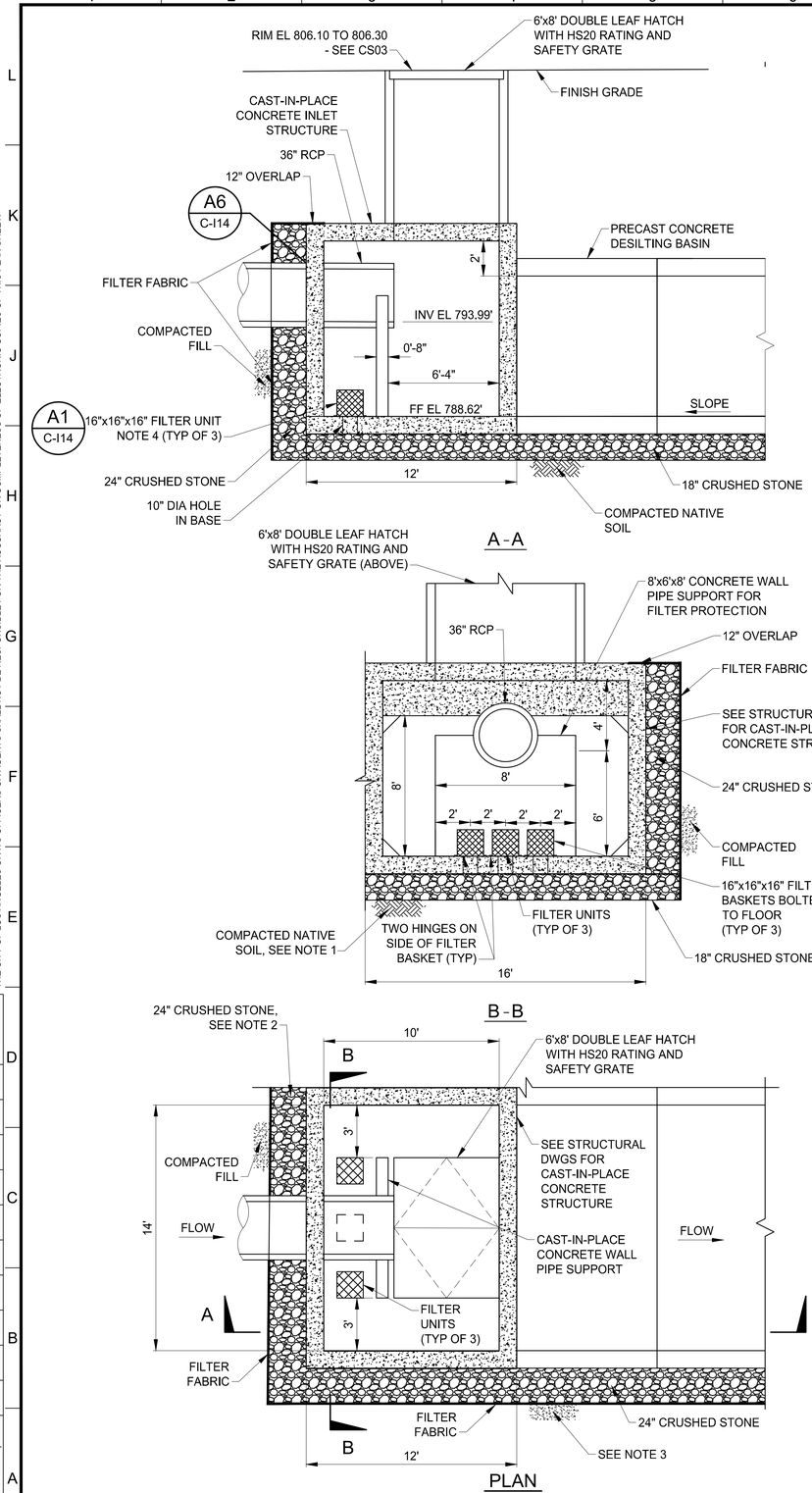

A-A

B-B

PLAN

4' 0 4' 8'
¼" = 1'-0"

NOTES

1. SEE SHEET GI04 FOR FILL REQUIREMENTS AROUND THE PERIMETER AND TOP OF THE DESILTING BASINS AND INFILTRATION GALLERIES.
2. SEE SPECIFICATION SECTION 13200 FOR ADDITIONAL INFORMATION ON THE BURIED STORMWATER INFILTRATION SYSTEM.
3. FILTER FABRIC TO COVER SIDES AND TOP OF CRUSHED STONE WITH OVERLAP SHOWN. INSTALL STAKES TO HOLE FILTER FABRIC IN PLACE PER FILTER FABRIC MANUFACTURER RECOMMENDATIONS.

M1 | INLET STRUCTURE

SCALE: 1/4" = 1'-0" | CU01

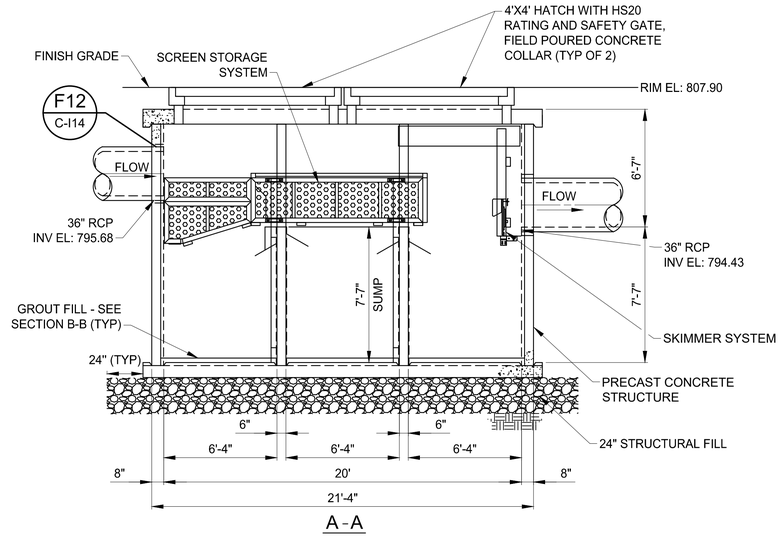

A-A

NOTES

1. HYDRODYNAMIC SEPARATOR SHALL BE NSBB-1020-TC BY OLD CASTLE OR APPROVED EQUAL.
2. DESIGN CRITERIA:
   A. HS-20 TRAFFIC RATED
   B. DEPTH FROM GRADE TO BOTTOM OF SUMP SHALL NOT EXCEED 25 FEET
   C. MINIMUM TREATMENT CAPACITY = 45 CFS FOR 80% REMOVAL OF 150 MICRON
   D. MINIMUM STORAGE CAPACITY = 570 CF.
3. HDS MUST CARRY CURRENT STATE WATER RESOURCES CONTROL BOARD CERTIFICATION FOR FULL TRASH CAPTURE INCLUDING MOSQUITO AND VECTOR CONTROL ASSOCIATION (MVCAC) VERIFICATIONS.

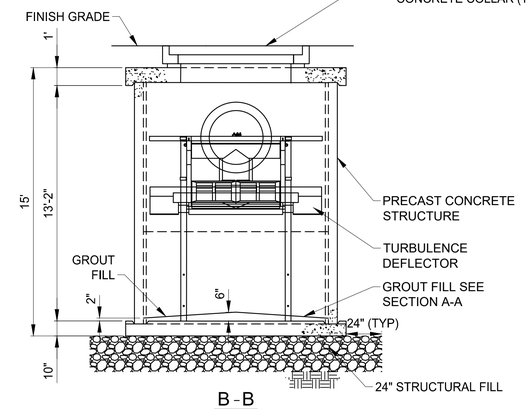

B-B

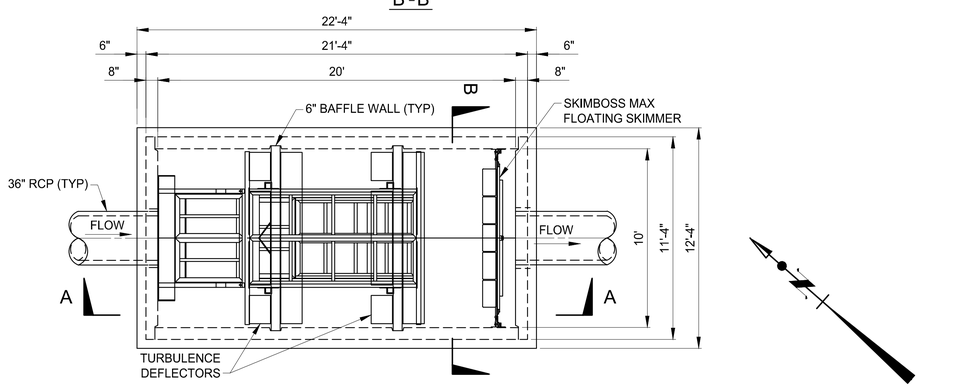

PLAN

4' 0 4' 8'
¼" = 1'-0"

N1 | HYDRODYNAMIC SEPARATOR

SCALE: 1/4" = 1'-0"

THE CITY OF LOS ANGELES OR ITS OFFICERS OR AGENTS SHALL NOT BE RESPONSIBLE FOR THE ACCURACY OR COMPLETENESS OF ELECTRONIC COPIES OF THIS PLAN SHEET.

REVISION DATES (DESIGN STAGE ONLY)

ENGINEERING
CITY OF LOS ANGELES

THIS PLAN WAS ELECTRONICALLY • SIGNED AND STAMPED

REGISTERED PROFESSIONAL ENGINEER
S. TED ALLEN
No. C 48973
EXP. 06/30/2026
CIVIL
STATE OF CALIFORNIA
04/11/2023

BUREAU OF ENGINEERING

VERTICAL CONTROL: BENCH MARK: 18-02215 (NAVD 88)
HORIZONTAL CONTROL: CALIFORNIA STATE PLANE ZONE V, 1983 NAD

SHEET TITLE: INLET STRUCTURE AND HYDRODYNAMIC SEPARATOR PLAN AND SECTIONS

PROJECT: STRATHERN PARK NORTH STORMWATER CAPUTRE PROJECT

ADDRESS: STRATHERN PARK NORTH
8041 WHISETT AVE, NORTH HOLLYWOOD, CA 91605

NO.	REVISIONS	DATE	BY
		YY/MM/DD	
		YY/MM/DD	
		YY/MM/DD	
		YY/MM/DD	

CIP NO. SCP0003

INDEX NO.

CITY OF LOS ANGELES DEPARTMENT OF PUBLIC WORKS

CITY ENGINEER: TED ALLEN, P.E. — DATE: 04/11/2023

DESIGN GROUP	
ENGINEER:	CDM SMITH INC.
ARCHITECT:	NA
DESIGNED BY:	C. RICE
DRAWN BY:	C. BILDERBACK
CHECKED BY:	P. TAURASI
APPROVED BY:	A. DELLINGER

WORK ORDER
EW40080F

SHEET NAME
CI13

SHEET 30 OF 86 SHEETS

THE CITY OF LOS ANGELES OR ITS OFFICERS OR AGENTS SHALL NOT BE RESPONSIBLE FOR THE ACCURACY OR COMPLETENESS OF ELECTRONIC COPIES OF THIS PLAN SHEET.

F1 KNOCK OUT OPENING FOR FUTURE FILTER UNIT

SCALE: 1/2"=1'

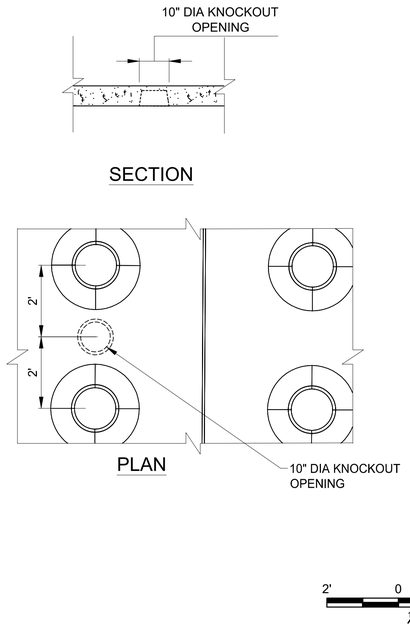

F6 PASSIVE AIR VENT

SCALE: NTS

CU01

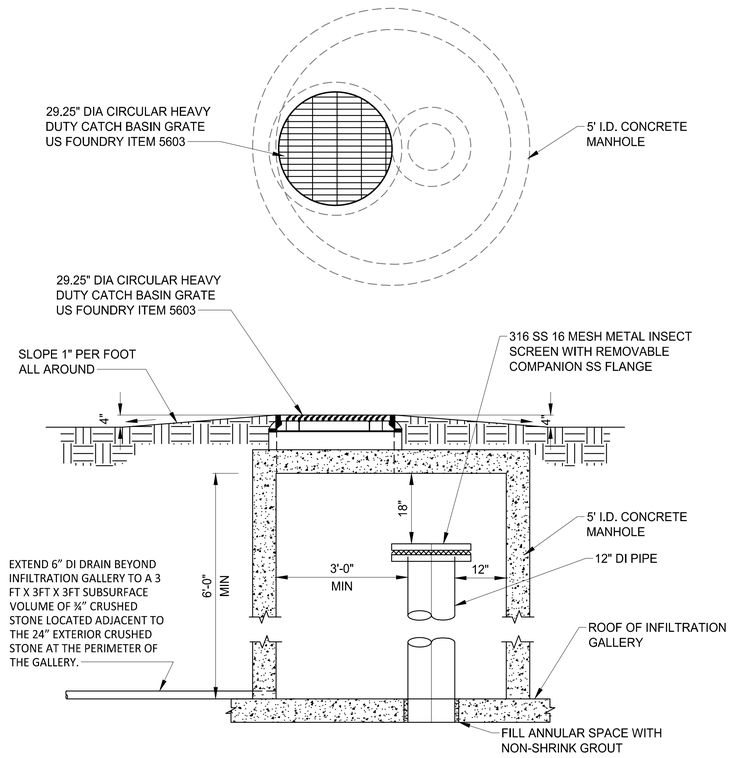

F12 PIPE CONNECTION TO PRECAST CONCRETE STRUCTURE

SCALE: NTS

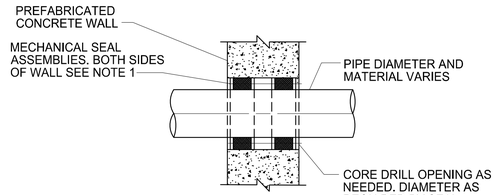

NOTES:

1. PROVIDE ONE MECHANICAL SEAL FOR CONCRETE WALLS 6 INCHES AND SMALLER. PROVIDE TWO MECHANICAL SEALS FOR CONCRETE WALLS GREATER THAN 6 INCHES.

A1 FILTER UNIT AND INFILTRATION HOLE IN BASE DETAIL

SCALE: 1/2"=1'

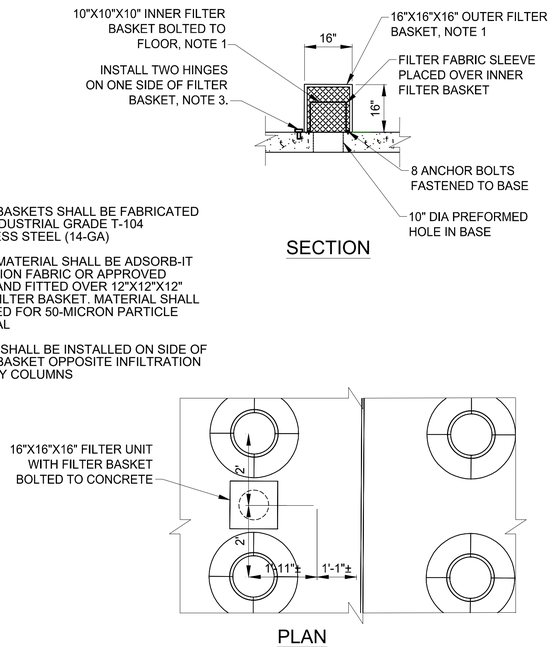

A6 PIPE CONNECTION TO CAST-IN PLACE CONCRETE STRUCTURE

SCALE: NTS

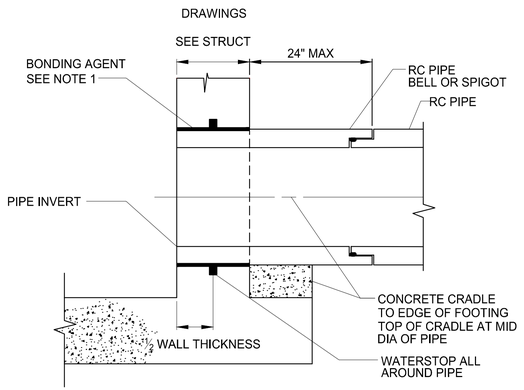

NOTES:

1. THOROUGHLY CLEAN AREA WITH OIL-FREE COMPRESSED AIR, THEN POUR AND CURE THE CONCRETE WALL AROUND THE PIPE.

A12 PROTECTION OF EXPOSED REBAR IN EXISTING RCP PIPE

SCALE: NTS

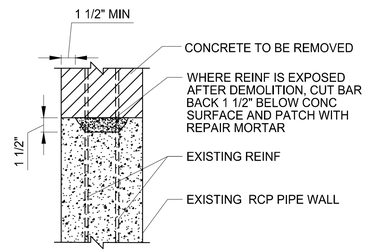

REVISION DATES (DESIGN STAGE ONLY)

CITY OF LOS ANGELES DEPARTMENT OF PUBLIC WORKS
BUREAU OF ENGINEERING
ENGINEERING CITY OF LOS ANGELES
THIS PLAN WAS ELECTRONICALLY • SIGNED AND STAMPED •
REGISTERED PROFESSIONAL ENGINEER TED S. ALLEN No. C 48973 EXP. 06/30/2026 STATE OF CALIFORNIA 01/31/2023

VERTICAL CONTROL:	BENCH MARK: 18-02215 NAVD 88
HORIZONTAL CONTROL:	CALIFORNIA STATE PLANE ZONE V, 1983 NAD
SHEET TITLE:	CIVIL DETAILS 1
PROJECT:	STRATHERN PARK NORTH STORMWATER CAPTURE PROJECT
ADDRESS:	STRATHERN PARK NORTH 8041 WHISETT AVE, NORTH HOLLYWOOD, CA 91605

NO.	REVISIONS	DATE	BY
		YY/MM/DD	
		YY/MM/DD	
		YY/MM/DD	
		YY/MM/DD	

CIP NO. SCP0003

INDEX NO.

CITY ENGINEER	DATE
TED ALLEN, P.E.	04/11/2023

DESIGN GROUP	
ENGINEER:	CDM SMITH INC.
ARCHITECT:	NA
DESIGNED BY:	C. RICE
DRAWN BY:	C. BILDERBACK
CHECKED BY:	P. TAURASI
APPROVED BY:	A. DELLINGER

WORK ORDER EW40080F

SHEET NAME CI14

SHEET 31 OF 85 SHEETS

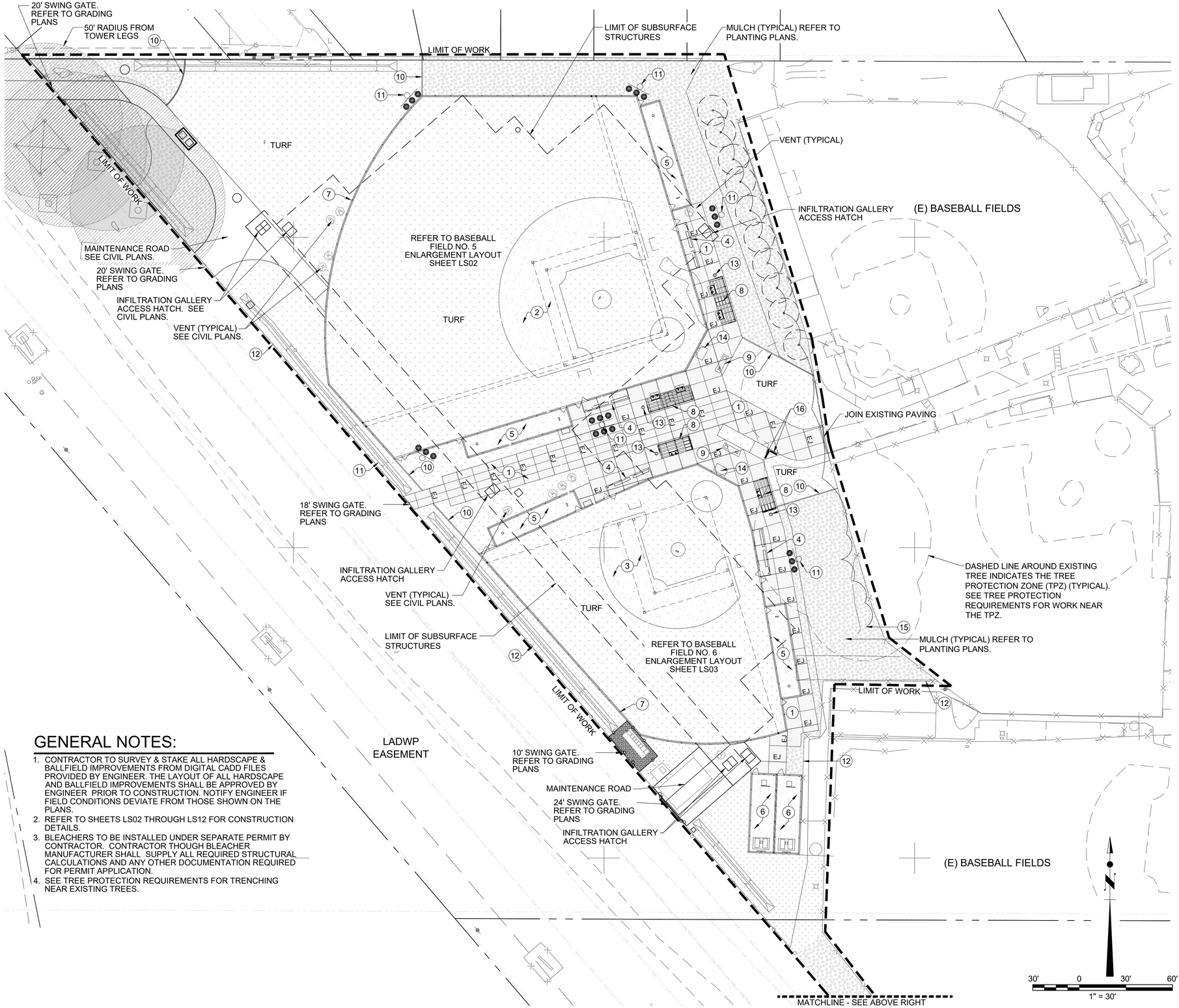

CONSTRUCTION LEGEND

1. FURNISH AND INSTALL CONCRETE PAVING
   COLOR: NATURAL GRAY
   FINISH: MEDIUM BROOM
   REFER TO DETAILS 1& 2, SHEET LS04.
2. BASEBALL FIELD NO.5
   REFER TO BASEBALL FIELD ENLARGEMENT. SEE DETAIL 1, SHEET LSO2.
3. BASEBALL FIELD NO.6
   REFER TO BASEBALL FIELD ENLARGEMENT. SEE DETAIL 1, SHEET LS03.
4. DUGOUT
   REFER TO RAP STANDARD PLAN.
   SEE DETAIL 2, SHEET LS09.
5. BULLPEN
   REFER TO RAP STANDARD PLAN. SEE DETAIL 1, SHEET LS09.
6. BATTING CAGE
   REFER TO RAP STANDARD PLAN. SEE DETAIL 1, SHEET LS08. INSTALL 120VAC ELECTRICAL SERVICE FOR EXTERIOR OUTLET.
7. FENCING AND GATES -
   REFER TO BASEBALL FIELD NO.5 AND NO.6 ENLARGEMENTS , SEE DETAIL 1 SHEET LS02 AND DETAIL 1 SHEET LS03.
8. BLEACHERS
   REFER TO BASEBALL FIELD ENLARGEMENTS. SEE DETAIL 1, SHEET LS02 AND DETAIL 1 SHEET LS03.
9. FURNISH AND INSTALL DRINKING FOUNTAIN
   REFER TO RAP STANDARD PLAN. SEE DETAIL 1, SHEET LS10.
10. 6" WIDE CONCRETE MOWSTRIP -
    REFER TO DETAIL 3, SHEET LS04.
11. FIELD LIGHTING
    REFER TO ELECTRICAL PLANS
12. EXISTING CHAIN LINK FENCE
    TO REMAIN AND SHALL BE PROTECTED IN PLACE UNLESS NOTED OTHERWISE.
13. TRASH RECEPTACLE
    KEYSTONE RIDGE RE3D-55 "READING" ROUND LITTER RECEPTACLE WITH LOCKABLE TABS, SIDE ACCESS DOOR, SURFACE MOUNT WITH FLAT LID-NO LINER. SURFACE-MOUNT INSTALL PER MANUFACTURER'S INSTRUCTIONS. COLOR: TBD
14. ANNOUNCER'S AREA
    REFER TO BASEBALL FIELD ENLARGEMENTS 1, SHEET LSO2 AND DETAIL 1, SHEET LS03. INSTALL 120VAC ELECTRICAL SERVICE WITH EXTERIOR RECEPTACLE & LOCKING COVER. CONFIRM LOCATION PRIOR TO INSTALLATION.
15. EXISTING TREES
    TO REMAIN AND BE PROTECTED IN PLACE. REFER TO TREE PROTECTION REQUIREMENTS, SHEET LP03 AND LP04. REFER TO TREE SURVEY PLAN AND PLANTING PLANS FOR ADDITIONAL INFORMATION.
16. EDUCATIONAL SIGNS
    (2) TOTAL. REFER TO DETAIL 1002, SHEET LS10 APPROXIMATE LOCATION SHOWN. LOCATION TO BE APPROVED BY ENGINEER PRIOR TO INSTALLATION.

EJ CONCRETE PAVING EXPANSION JOINTS
REFER TO DETAIL 401, SHEET LS04 FOR ADDITIONAL INFORMATION.

CONCRETE PAVING TOOLED SCORELINE
REFER TO DETAIL 401, SHEET LS04 FOR ADDITIONAL INFORMATION.

SODDED TURF. REFER TO PLANTING PLAN SHEET LP01.

SHRUB PLANTING. REFER TO PLANTING SHEET LP01.

3" LAYER OF COMPOSTED WOOD MULCH. REFER TO PLANTING SHEET LP01

4" LAYER OF 3/4" CRUSHED GRAVEL. INSTALL OVER DEWITT WEED BARRIER PRO 3 OZ NON WOVEN FABRIC OR APPROVED EQUAL.

GENERAL NOTES:

1. CONTRACTOR TO SURVEY & STAKE ALL HARDSCAPE & BALLFIELD IMPROVEMENTS FROM DIGITAL CADD FILES PROVIDED BY ENGINEER. THE LAYOUT OF ALL HARDSCAPE AND BALLFIELD IMPROVEMENTS SHALL BE APPROVED BY ENGINEER PRIOR TO CONSTRUCTION. NOTIFY ENGINEER IF FIELD CONDITIONS DEVIATE FROM THOSE SHOWN ON THE PLANS.
2. REFER TO SHEETS LS02 THROUGH LS12 FOR CONSTRUCTION DETAILS.
3. BLEACHERS TO BE INSTALLED UNDER SEPARATE PERMIT BY CONTRACTOR. CONTRACTOR THOUGH BLEACHER MANUFACTURER SHALL SUPPLY ALL REQUIRED STRUCTURAL CALCULATIONS AND ANY OTHER DOCUMENTATION REQUIRED FOR PERMIT APPLICATION.
4. SEE TREE PROTECTION REQUIREMENTS FOR TRENCHING NEAR EXISTING TREES.

THE CITY OF LOS ANGELES OR ITS OFFICERS OR AGENTS SHALL NOT BE RESPONSIBLE FOR THE ACCURACY OR COMPLETENESS OF ELECTRONIC COPIES OF THIS PLAN SHEET.

REVISION DATES (DESIGN STAGE ONLY)

ENGINEERING
CITY OF LOS ANGELES

LANDSCAPE ARCHITECT
LICENSED IN THE STATE OF CALIFORNIA
REG. 5789
RAMIN GHAZI
6/30/2023
1010 SOUTH FLOWER STREET
SUITE 302
LOS ANGELES, CA 90015
213.847.3083

THIS PLAN WAS ELECTRONICALLY
• SIGNED AND STAMPED

BUREAU OF ENGINEERING

VERTICAL CONTROL: BENCH MARK: 18-02215 NAVD 88
HORIZONTAL CONTROL: CALIFORNIA STATE PLANE ZONE V, 1983 NAD

SHEET TITLE: LANDSCAPE SITE CONSTRUCTION PLAN

PROJECT: STRATHERN PARK NORTH
STORMWATER CAPTURE PROJECT

ADDRESS: STRATHERN PARK NORTH
8041 WHISETT AVE, NORTH HOLLYWOOD, CA 91605

NO.	REVISIONS	DATE	BY
		YY/MM/DD	
		YY/MM/DD	
		YY/MM/DD	
		YY/MM/DD	

CIP NO. SCP0003

INDEX NO.

CITY OF LOS ANGELES DEPARTMENT OF PUBLIC WORKS

CITY ENGINEER: TED ALLEN, P.E.

DESIGN GROUP		DATE
ENGINEER:	CDM SMITH INC.	01/31/2023
ARCHITECT:	NUVIS LANDSCAPE ARCHITECTURE	01/31/2023
DESIGNED BY:	P. CARDOZA	01/31/2023
DRAWN BY:	L. KLECKER	01/31/2023
CHECKED BY:	P. CARDOZA	01/31/2023
APPROVED BY:	A.DELLINGER	01/31/2023

WORK ORDER
EW4008F

SHEET NAME
LS01

SHEET 32 OF 85 SHEETS

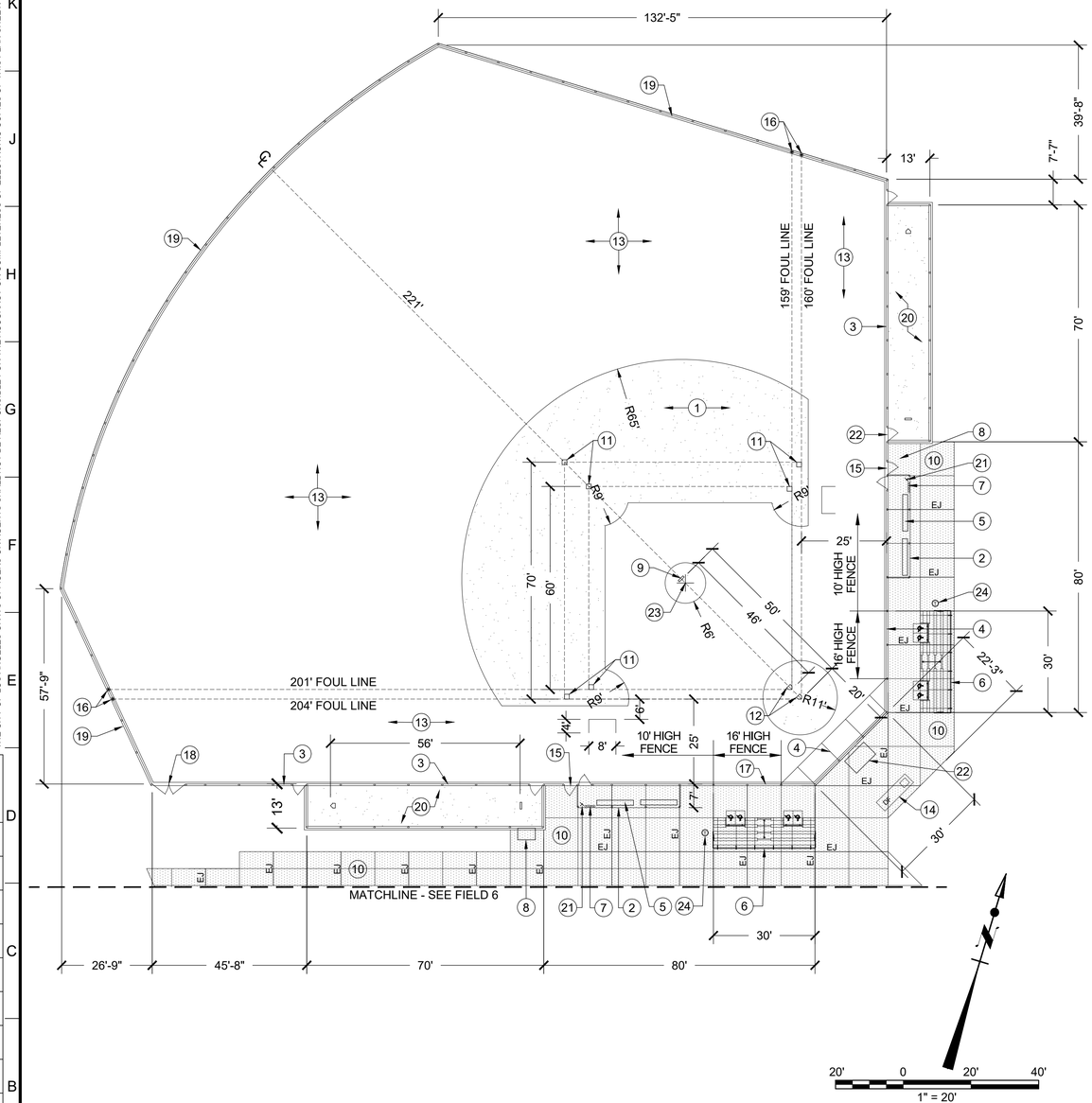

BASEBALL FIELD NO. 5 PLAN
FIELD SIZE 60' AND 70' BASE DISTANCE

CONSTRUCTION LEGEND

1. INSTALL 4" - 6" LAYER OF "PRO-GOLD SOFTBALL MIX" PER PLANS AND SPECIFICATIONS, OR APPROVED EQUAL. SUPPLIED BY GAIL MATERIALS: 951-667-6106, WWW.GAILMATERIALS.NET.
2. INSTALL 8' HIGH CHAIN LINK FENCE DUGOUT WITH ALUMINUM ROOF PER DETAIL 901, SHEET LS09.
3. INSTALL 10' HIGH CHAIN LINK SIDE LINE FENCE WITH CONCRETE MOW STRIP PER DETAIL 701, SHEET LS07.
4. INSTALL BACKSTOP: MODEL LA1644T (4-1/2" POSTS, FRONT 23'6" HIGH X 44' WIDE; REAR 16' HIGH X 30' WIDE; SIDES 16' HIGH X 10' WIDE, 7'6" DEEP). FROM LA STEELCRAFT. CONTACT: 866-210-5316. INSTALL PER MANUFACTURER'S INSTRUCTIONS. REFER TO DETAIL 1101, SHEET LS11 FOR ADDITIONAL INFORMATION.
5. INSTALL (2) 12' PLAYERS BENCHES, PER DUGOUT. MODEL # PE-12, AVAILABLE FROM NATIONAL RECREATION SYSTEMS, CONTACT: NATE YOUNKER (858) 344-0445, INSTALL PER MANUFACTURER'S INSTRUCTIONS.
6. INSTALL (2) 30', 5-TIER BLEACHERS WITH WHEELCHAIR CUTOUTS, MODEL # NA-0530-ADA-VP, AVAILABLE FROM NATIONAL RECREATION SYSTEMS, CONTACT: NATE YOUNKER (858) 344-0445, INSTALL PER MANUFACTURER'S INSTRUCTIONS.
7. INSTALL (1) BAT RACK PER DUGOUT (2) TOTAL PER FIELD, MODEL # BR-8, AVAILABLE FROM L.A. STEELCRAFT, AVAILABLE FROM NATIONAL RECREATION SYSTEMS, CONTACT: NATE YOUNKER (858) 344-0445, INSTALL PER MANUFACTURER'S INSTRUCTIONS.
8. INFIELD STORAGE BOX, PER DETAIL 706, SHEET LS07.
9. INSTALL BOLCO STEP-DOWN' PITCHERS RUBBER, YOUTH SIZE 4" X 18" SKU# 1236392, AVAILABLE FROM: BSNSPORTS.COM, (800) 856-3488. INSTALL PER MANUFACTURER'S INSTRUCTIONS. FURNISH (1) PITCHER'S RUBBER FOR FIELD NO. 5.
10. INSTALL CONCRETE PAVING PER DETAIL 401 & 402, SHEET LS04.
11. INSTALL 'HOLLYWOOD IMPACT' BASE (SKU# 1236439) WITH GROUND ANCHORS (SKU# 1236507) AND BASE PLUGS (SKU# BBRPLUGS), AVAILABLE FROM: BSNSPORTS.COM, (800) 856-3488. INSTALL PER MANUFACTURER'S INSTRUCTIONS. FURNISH (1) SET OF BASES FOR FIELD NO. 6. INSTALL AT DISTANCES SHOWN ON PLANS.
12. INSTALL 'HOLLYWOOD' HOME PLATE, SKU# 1236477,AVAILABLE FROM: BSNSPORTS.COM, (800) 856-3488. INSTALL PER MANUFACTURER'S INSTRUCTIONS. FURNISH (1) HOME PLATE FOR FIELD NO. 6.
13. INSTALL OUTFIELD TURF PER PLANTING PLAN AND SPECIFICATIONS.
14. INSTALL MURDOCK HI-LO DRINKING FOUNTAIN PER DETAIL 1001, SHEET LS10.
15. INSTALL 4' WIDE SINGLE CHAIN LINK GATES WHERE INDICATED. PER DETAIL 702, SHEET LS07.
16. INSTALL (2) 20' HIGH FOUL POLES. MODEL# FLP-20 IN-GROUND MOUNT. AVAILABLE FROM L.A. STEELCRAFT, AVAILABLE FROM NATIONAL RECREATION SYSTEMS, CONTACT: NATE YOUNKER (858) 344-0445, INSTALL PER MANUFACTURER'S INSTRUCTIONS.
17. INSTALL 16' HIGH CHAIN LINK SIDE LINE FENCE WITH CONCRETE MOW STRIP PER DETAIL 501, SHEET LS05.
18. INSTALL 10' HIGH X 10' WIDE DOUBLE CHAIN LINK GATE., PER DETAIL 705, SHEET LS07.
19. INSTALL 6' HIGH CHAIN LINK OUTFIELD FENCE WITH FENCE CAP AND CONCRETE MOW STRIP PER DETAIL 704, SHEET LS07.
20. INSTALL BULLPEN WITH 8' HIGH CHAIN LINK FENCE ON A 12" CONCRETE MOWSTRIP WITH A 4' PEDESTRIAN GATE, DECOMPOSED GRANITE PAVING, ONE HOMEPLATE AND ONE PITCHER'S RUBBER FOR EACH BULLPEN PER DETAIL 901, SHEET LS09.
21. PROVIDE (1) SURFACE MOUNT HELMET RACK PER DUGOUT, (2) TOTAL PER FIELD. SKU# 1238464. AVAILABLE FROM: BSNSPORTS.COM, (800) 856-3488. INSTALL PER MANUFACTURER'S INSTRUCTIONS.
22. ANNOUNCERS AREA. PROVIDE 12VAC ELECTRICAL SERVICE WITH EXTERIOR RECEPTABLE AND LOCKING COVER.
23. INSTALL PITCHER'S MOUND PER DETAIL 401, SHEET LS04.
24. FURNISH AND INSTALL KEYSTONE RIDGE RE3D-55 "READING" ROUND LITTER RECEPTACLE WITH LOCKABLE TABS, SIDE ACCESS DOOR, SURFACE MOUNT WITH FLAT LID-NO LINER. SURFACE MOUNT-INSTALL PER MANUFACTURER'S INSTRUCTIONS. COLOR: TBD

EJ — CONCRETE PAVING EXPANSION JOINT. REFER TO DETAIL 401, SHEET LS04.

CONCRETE PAVING TOOLED SCORELINE. REFER TO DETAIL 401, SHEET LS04.

NOTE:
ALL FENCING ADJACENT TO PAVING SHALL HAVE PAVING EXTEND BENEATH THE FENCE. ALL OTHER FENCING SHALL HAVE CONCRETE MOW STRIP.

1	BASEBALL FIELD PLAN
N.T.S.	

REVISION DATES (DESIGN STAGE ONLY)

THE CITY OF LOS ANGELES OR ITS OFFICERS OR AGENTS SHALL NOT BE RESPONSIBLE FOR THE ACCURACY OR COMPLETENESS OF ELECTRONIC COPIES OF THIS PLAN SHEET.

ENGINEERING
CITY OF LOS ANGELES

THIS PLAN WAS ELECTRONICALLY • SIGNED AND STAMPED •

REGISTERED LANDSCAPE ARCHITECT — LANDSCAPE ARCHITECT — No. 5962 — STATE OF CALIFORNIA — EXPIRATION DATE: 08-31-2024

BUREAU OF ENGINEERING

VERTICAL CONTROL:	BENCH MARK: 18-02215 NAVD 88
HORIZONTAL CONTROL:	CALIFORNIA STATE PLANE ZONE V, 1983 NAD
SHEET TITLE:	LANDSCAPE SITE CONSTRUCTION DETAILS 1
PROJECT:	STRATHERN PARK NORTH STORMWATER CAPTURE PROJECT
ADDRESS:	STRATHERN PARK NORTH 8041 WHISETT AVE, NORTH HOLLYWOOD, CA 91605

NO.	REVISIONS	DATE	BY
		YY/MM/DD	
		YY/MM/DD	
		YY/MM/DD	
		YY/MM/DD	
		YY/MM/DD	

CIP NO. SCP0003

INDEX NO.

CITY OF LOS ANGELES DEPARTMENT OF PUBLIC WORKS

CITY ENGINEER: TED ALLEN, P.E.

DESIGN GROUP	DATE
ENGINEER: CDM SMITH INC.	01/31/2023
ARCHITECT: NUVIS LANDSCAPE ARCHITECTURE	01/31/2023
DESIGNED BY: P. CARDOZA	01/31/2023
DRAWN BY: L. KLECKER	01/31/2023
CHECKED BY: P. CARDOZA	01/31/2023
APPROVED BY: A.DELLINGER	01/31/2023

WORK ORDER
EW4008F

SHEET NAME
LS02

SHEET 33 OF 85 SHEETS



BASEBALL FIELD NO. 6 PLAN
FIELD SIZE 50' AND 60' BASE DISTANCE

CONSTRUCTION LEGEND

1. INSTALL 4" - 6" LAYER OF "PRO-GOLD SOFTBALL MIX" PER PLANS AND SPECIFICATIONS, OR APPROVED EQUAL. SUPPLIED BY GAIL MATERIALS: 951-667-6106, WWW.GAILMATERIALS.NET.
2. INSTALL 8' HIGH CHAIN LINK FENCE DUGOUT WITH ALUMINUM ROOF PER DETAIL 902, SHEET LS09.
3. INSTALL 10' HIGH CHAIN LINK SIDE LINE FENCE WITH CONCRETE MOW STRIP PER DETAIL 701, SHEET LS07.
4. INSTALL BACKSTOP: MODEL LA1644T (4-1/2" POSTS, FRONT 23'6" HIGH X 44' WIDE; REAR 16' HIGH X 30' WIDE; SIDES 16' HIGH X 10' WIDE, 7'6" DEEP). FROM LA STEELCRAFT. CONTACT: 866-210-5316. INSTALL PER MANUFACTURER'S INSTRUCTIONS. REFER TO DETAIL 1101, SHEET LS11 FOR ADDITIONAL INFORMATION.
5. INSTALL (2) 12' PLAYERS BENCHES, PER DUGOUT. MODEL # PE-12, AVAILABLE FROM NATIONAL RECREATION SYSTEMS, CONTACT: NATE YOUNKER (858) 344-0445, INSTALL PER MANUFACTURER'S INSTRUCTIONS.
6. INSTALL (2) 21', 5-TIER BLEACHERS WITH WHEELCHAIR CUTOUTS, MODEL # NA-0521-ADA-VP, AVAILABLE FROM NATIONAL RECREATION SYSTEMS, CONTACT: NATE YOUNKER (858) 344-0445, INSTALL PER MANUFACTURER'S INSTRUCTIONS.
7. INSTALL (1) BAT RACK PER DUGOUT (2) TOTAL PER FIELD, MODEL # BR-8, AVAILABLE FROM L.A. STEELCRAFT, AVAILABLE FROM NATIONAL RECREATION SYSTEMS, CONTACT: NATE YOUNKER (858) 344-0445, INSTALL PER MANUFACTURER'S INSTRUCTIONS.
8. INFIELD STORAGE BOX, PER DETAIL 706, SHEET LS07.
9. INSTALL BOLCO STEP-DOWN' PITCHERS RUBBER, YOUTH SIZE 4" X 18" SKU# 1236392, AVAILABLE FROM: BSNSPORTS.COM, (800) 856-3488. INSTALL PER MANUFACTURER'S INSTRUCTIONS. FURNISH (1) FOR FIELD NO. 6.
10. INSTALL CONCRETE PAVING PER DETAIL 401 & 402, SHEET LS04.
11. INSTALL 'HOLLYWOOD IMPACT' BASE (SKU# 1236439) WITH GROUND ANCHORS (SKU# 1236507) AND BASE PLUGS (SKU# BBRPLUGS), AVAILABLE FROM: BSNSPORTS.COM, (800) 856-3488. INSTALL PER MANUFACTURER'S INSTRUCTIONS. FURNISH (1) SETS OF BASES FOR FIELD NO. 6. INSTALL AT DISTANCES SHOWN ON PLANS.
12. INSTALL 'HOLLYWOOD' HOME PLATE, SKU# 1236477,AVAILABLE FROM: BSNSPORTS.COM, (800) 856-3488. INSTALL PER MANUFACTURER'S INSTRUCTIONS. FURNISH (1) FOR FIELD NO. 6.
13. INSTALL OUTFIELD TURF PER PLANTING PLAN AND SPECIFICATIONS.
14. INSTALL MURDOCK HI-LO DRINKING FOUNTAIN PER DETAIL 1001, SHEET LS10.
15. INSTALL 4' WIDE SINGLE CHAIN LINK GATES WHERE INDICATED. PER DETAIL 702, SHEET LS07.
16. INSTALL (2) 20' HIGH FOUL POLES. MODEL# FLP-20 IN-GROUND MOUNT. AVAILABLE FROM L.A. STEELCRAFT, AVAILABLE FROM NATIONAL RECREATION SYSTEMS, CONTACT: NATE YOUNKER (858) 344-0445, INSTALL PER MANUFACTURER'S INSTRUCTIONS.
17. INSTALL 16' HIGH CHAIN LINK SIDE LINE FENCE WITH CONCRETE MOW STRIP PER DETAIL 501, SHEET LS05.
18. INSTALL 10' HIGH X 10' WIDE DOUBLE CHAIN LINK GATE., PER DETAIL 705, SHEET LS07.
19. INSTALL 6' HIGH CHAIN LINK OUTFIELD FENCE WITH FENCE CAP AND CONCRETE MOW STRIP PER DETAIL 504, SHEET LS05.
20. INSTALL BULLPEN WITH 8' HIGH CHAIN LINK FENCE ON A 12" CONCRETE MOWSTRIP WITH A 4' PEDESTRIAN GATE, DECOMPOSED GRANITE PAVING, ONE HOMEPLATE AND ONE PITCHER'S RUBBERS FOR EACH BULLPEN PER DETAIL 901, SHEET LS09.
21. PROVIDE (1) SURFACE MOUNT HELMET RACK PER DUGOUT, (2) TOTAL PER FIELD. SKU# 1238464. AVAILABLE FROM: BSNSPORTS.COM, (800) 856-3488. INSTALL PER MANUFACTURER'S INSTRUCTIONS.
22. ANNOUNCERS AREA. PROVIDE 12VAC ELECTRICAL SERVICE WITH EXTERIOR RECEPTABLE AND LOCKING COVER.
23. INSTALL PITCHER'S MOUND PER DETAIL 401, SHEET LS04.
24. FURNISH AND INSTALL KEYSTONE RIDGE RE3D-55 "READING" ROUND LITTER RECEPTACLE WITH LOCKABLE TABS, SIDE ACCESS DOOR, SURFACE MOUNT WITH FLAT LID-NO LINER. SURFACE MOUNT-INSTALL PER MANUFACTURER'S INSTRUCTIONS. COLOR: TBD

EJ — CONCRETE PAVING EXPANSION JOINT. REFER TO DETAIL 401, SHEET LS04.

CONCRETE PAVING TOOLED SCORELINE. REFER TO DETAIL 401, SHEET LS04.

NOTE:
ALL FENCING ADJACENT TO PAVING SHALL HAVE PAVING EXTEND BENEATH THE FENCE. ALL OTHER FENCING SHALL HAVE CONCRETE MOW STRIP.

1	BASEBALL FIELD PLAN
N.T.S.	

REVISION DATES (DESIGN STAGE ONLY)

THE CITY OF LOS ANGELES OR ITS OFFICERS OR AGENTS SHALL NOT BE RESPONSIBLE FOR THE ACCURACY OR COMPLETENESS OF ELECTRONIC COPIES OF THIS PLAN SHEET.

ENGINEERING
CITY OF LOS ANGELES

LANDSCAPE ARCHITECT — LICENSE NO. 5962 — REGISTERED — STATE OF CALIFORNIA
EXPIRATION DATE: 08-31-2024

THIS PLAN WAS ELECTRONICALLY • SIGNED AND STAMPED •

BUREAU OF ENGINEERING

VERTICAL CONTROL:	BENCH MARK: 18-02215 NAVD 88
HORIZONTAL CONTROL:	CALIFORNIA STATE PLANE ZONE V, 1983 NAD
SHEET TITLE:	LANDSCAPE SITE CONSTRUCTION DETAILS 2
PROJECT:	STRATHERN PARK NORTH STORMWATER CAPTURE PROJECT
ADDRESS:	STRATHERN PARK NORTH 8041 WHISETT AVE, NORTH HOLLYWOOD, CA 91605

NO.	REVISIONS	DATE	BY
		YY/MM/DD	
		YY/MM/DD	
		YY/MM/DD	
		YY/MM/DD	
		YY/MM/DD	

CIP NO. SCP0003

INDEX NO.

CITY OF LOS ANGELES DEPARTMENT OF PUBLIC WORKS

CITY ENGINEER: TED ALLEN, P.E. — DATE: 01/31/2023

DESIGN GROUP		DATE
ENGINEER:	CDM SMITH INC.	01/31/2023
ARCHITECT:	NUVIS LANDSCAPE ARCHITECTURE	01/31/2023
DESIGNED BY:	P. CARDOZA	01/31/2023
DRAWN BY:	L. KLECKER	01/31/2023
CHECKED BY:	P. CARDOZA	01/31/2023
APPROVED BY:	A.DELLINGER	01/31/2023

WORK ORDER
EW4008F

SHEET NAME
LS03
SHEET 34 OF 85 SHEETS

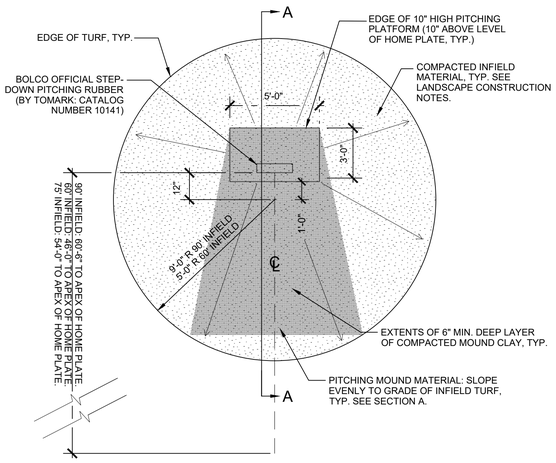

PLAN VIEW: LAYOUT

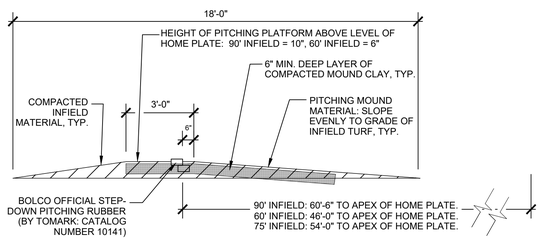

SECTION A

NOTES:

1.) LOCATE THE PITCHING PLATFORM EXTENTS (ASSURE EXACT MEASUREMENTS: THE INSIDE EDGE SHOULD BE POSITIONED 6 INCHES IN FRONT OF THE RUBBER, 24 INCHES IN THE BACK OF THE RUBBER AND 18 INCHES ON EACH SIDE OF THE RUBBER.)

2.) LOOSEN AND REMOVE EXISTING SOIL WITHIN THE OUTLINE TO THE APPROPRIATE DEPTH.ÊTHE MOUND CLAYÊSHOULD BEÊMINIMUM 6 INCHESÊTHICK - SEE LAYOUT ABOVE. LOOSEN OR SCARIFY THE SOIL AT THE BASE OF THE HOLE. ONCE OUTLINE IS IN PLACE, ADD MOUND CLAY (BY TURFACE OR APPROVED EQUAL.

3.) ADD MOUND CLAY IN 1" LIFTS AND TAMP FIRM (OR USE A VIBRATING COMPACTOR). SCRATCH UP THE EXISTING SOIL AND MIX WITH THE FIRST INCH OF MOUND CLAY TO ASSURE A GOOD BOND. LIGHTLY WATER AND TAMP EACH 1-INCH LAYER UNTIL REACHING THE REQUIRED HEIGHT.

4.) INSTALL PITCHING RUBBER AT APPROPRIATE DEPTH AND CONTINUE MOUND CLAY TO 1" BELOW FINAL GRADE.

5.) AFTER THE MOUND CLAY BASE IS COMPLETELY CONSTRUCTED, BACKFILL AROUND BASE WITH INFIELD MATERIAL PER LANDSCAPE CONSTRUCTION NOTES, AND SLOPE TO CORRECT GRADE PER DETAIL ABOVE. RAKE A 1" COATING OF INFIELD MIX AVER COMPACTED COMPLETED MOUND BASE, AND GRADE TO FINISH LEVEL.

405	PITCHING MOUND LAYOUT AND CONSTRUCTION	
N.T.S.		RP DETAIL 5450

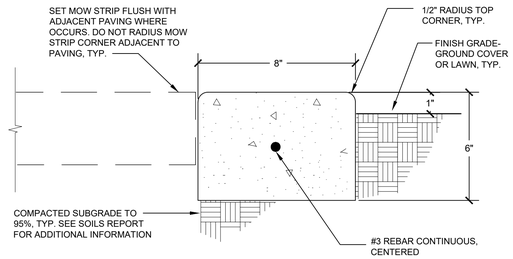

SECTION

NOTES:
1. SCORE MOW STRIP AT 10' O.C. MAX. AND AT ALL CHANGES IN DIRECTION SIMILAR TO CONCRETE PAVING DETAIL.
2. WHEN MOW STRIP IS INSTALLED ADJACENT TO EXISTING A.C. PAVING, THE EXISTING A.C. PAVING SHALL BE SAW-CUT 12" FROM THE EDGE OF THE MOW STRIP AND NEW ASPHALT CONCRETE PLACED AFTER MOW STRIP IS IN PLACE.

403	CONCRETE MOW STRIP	
N.T.S.	BOE VERSION Feb/08 - RF,SD	RP DETAIL L3200

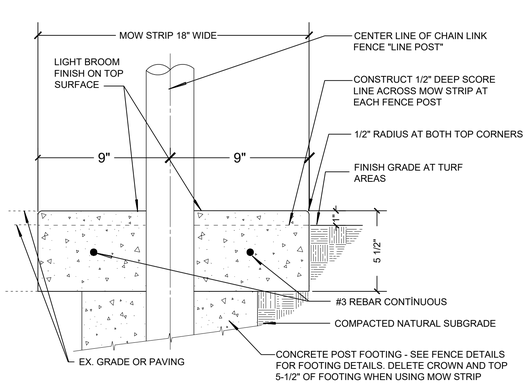

NOTES:
1. PLACE PLASTIC CONTROL JOINTS AT ALL CHANGES IN DIRECTION.
2. WHEN MOW STRIP IS INSTALLED ADJACENT TO EXISTING A.C. PAVING,THE EXISTING A.C. PAVING SHALL BE SAW CUT 12" FROM THE EDGE OF THE MOW STRIP AND NEW ASPHALT CONCRETE PLACED AFTER MOW STRIP IS IN PLACE.
3. CONCRETE SHALL BE NATURAL COLOR UNLESS OTHERWISE NOTED.

RP VERSION 12-09-04, SLG

404	CONCRETE MOW STRIP AT CHAINLINK FENCE	
N.T.S.		RP DETAIL 321

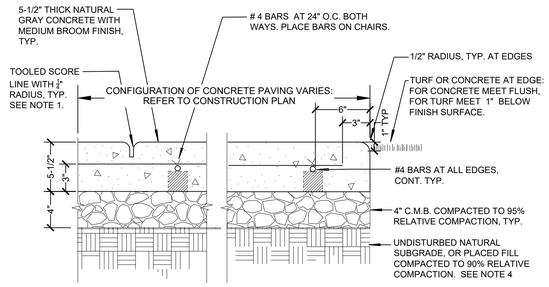

NOTES:
1. PROVIDE TOOLED SCORE LINES, 1" DEEP, AT LOCATIONS SHOWN ON CONSTRUCTION PLAN. SAW-CUT SCORE LINES MAY BE APPROVED AS AN ALTERNATE METHOD AT THE DISCRETION OF THE PROJECT MANAGER.
2. EXPANSION JOINTS SHALL BE CONSTRUCTED PER DETAIL AT LOCATIONS SHOWN ON PLAN.
3. PROVIDE ISOLATION JOINT PER DETAIL AGAINST PREVIOUSLY CONSTRUCTED FIXED ELEMENTS.
4. END OF POUR JOINTS - SEE LANDSCAPE CONSTRUCTION NOTES.

401	CONC. PAVING W/CM BASE, NO THICK. EDGE	
N.T.S	RP REVISED 7-2-13 RWF	RP DETAIL L3020

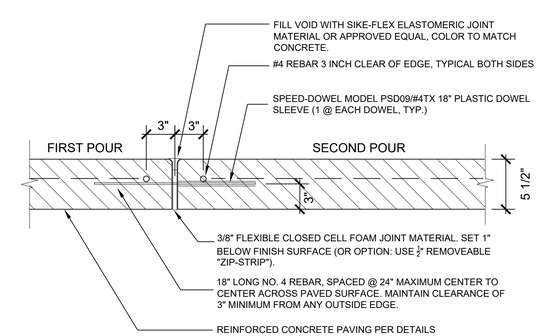

SECTION

NOTE:
1. MAINTAIN LINE AND GRADE AT EXPANSION JOINTS.
2. EXPANSION JOINT SHALL BE PLACE AT MAX. SPACING OF EVERY 20' UNLESS OTHERWISE SPECIFIED ON THE CONSTRUCTION PLAN.

402	DOWELED EXPANSION JOINT	
N.T.S.		RP DETAIL L3070

CONSTRUCTION DETAIL NOTES

1. THE FOLLOWING NOTES APPLY TO ALL DETAILS AS SHOWN IN THIS SET OF DOCUMENTS, UNLESS OTHERWISE NOTED.
2. FOR ADDITIONAL INFORMATION REFER TO CONSTRUCTION NOTES.
3. REFER TO CONSTRUCTION LEGEND FOR INFORMATION RELATIVE TO COLOR, TYPE AND FINISH.
4. UNLESS OTHERWISE NOTED, NEW FINISH SURFACE SHALL BE FLUSH WITH ADJACENT EXISTING SURFACES.
5. FINISH GRADE SHALL BE 1" BELOW FINISH SURFACE AT ALL PLANTER OR TURF AREAS.
6. FINAL LOCATION OF CONSTRUCTION ELEMENTS, DRAINAGE DEVICES, SITE AMENITIES, IRRIGATION EQUIPMENT, AND PLANT MATERIAL MAY REQUIRE ADJUSTMENT DUE TO FIELD CONDITIONS AND SHALL BE APPROVED PRIOR TO CONSTRUCTION.
7. CONTRACTOR SHALL VERIFY ALL MATCHING MATERIALS AND COLORS PRIOR TO INSTALLATION. CONTRACTOR SHALL NOTIFY LANDSCAPE ARCHITECT OF ANY DISCREPANCIES PRIOR TO INSTALLATION.
8. CONTRACTOR SHALL SUBMIT AND OBTAIN BUILDING PERMIT FOR ALL FENCING OVER 10' HIGH. CONTRACTOR SHALL PROVIDE ALL REQUIRED ENGINEERING AND CALCULATIONS FOR FOOTINGS.

THE CITY OF LOS ANGELES OR ITS OFFICERS OR AGENTS SHALL NOT BE RESPONSIBLE FOR THE ACCURACY OR COMPLETENESS OF ELECTRONIC COPIES OF THIS PLAN SHEET.

REVISION DATES (DESIGN STAGE ONLY)

ENGINEERING
CITY OF LOS ANGELES

THIS PLAN WAS ELECTRONICALLY • SIGNED AND STAMPED

REGISTERED LANDSCAPE ARCHITECT — CALIFORNIA — RAMON VASQUEZ — LA 5967 — EXP. 08-31-2024 — 10-27-2022 — 01-27-2023

BUREAU OF ENGINEERING

VERTICAL CONTROL: BENCH MARK: 18-02215 NAVD 88
HORIZONTAL CONTROL: CALIFORNIA STATE PLANE ZONE V, 1983 NAD

SHEET TITLE: LANDSCAPE SITE CONSTRUCTION DETAILS 3

PROJECT: STRATHERN PARK NORTH STORMWATER CAPTURE PROJECT

ADDRESS: STRATHERN PARK NORTH 8041 WHISETT AVE, NORTH HOLLYWOOD, CA 91605

CITY OF LOS ANGELES DEPARTMENT OF PUBLIC WORKS

CITY ENGINEER	DESIGN GROUP	DATE
TED ALLEN, P.E.		
	ENGINEER: CDM SMITH INC.	01/31/2023
	ARCHITECT: NUVIS LANDSCAPE ARCHITECTURE	01/31/2023
	DESIGNED BY: P. CARDOZA	01/31/2023
	DRAWN BY: L. KLECKER	01/31/2023
	CHECKED BY: P. CARDOZA	01/31/2023
	APPROVED BY: A.DELLINGER	01/31/2023

NO.	REVISIONS	DATE	BY
		YY/MM/DD	
		YY/MM/DD	
		YY/MM/DD	
		YY/MM/DD	
		YY/MM/DD	

CIP NO. SCP0003

INDEX NO.

WORK ORDER EW4008F

SHEET NAME LS04

SHEET 35 OF 85 SHEETS

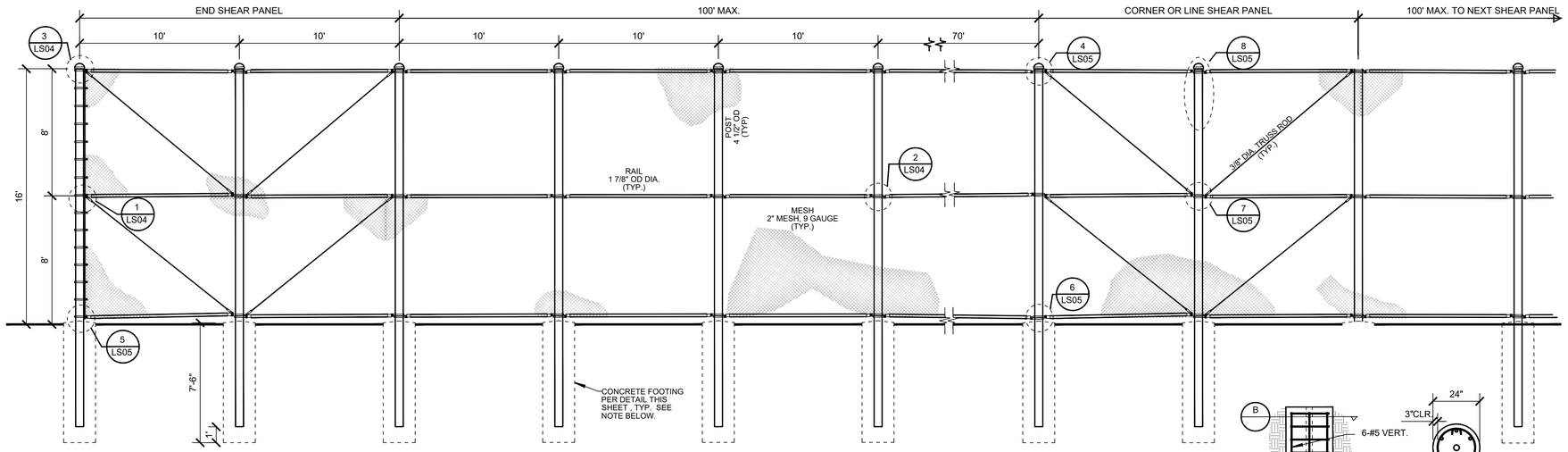

ELEVATION

NOTE:
CONTRACTOR SHALL SUBMIT AND OBTAIN BUILDING PERMIT FOR ALL FENCING OVER 10' HIGH. CONTRACTOR SHALL PROVIDE ALL REQUIRED ENGINEERING AND CALCULATIONS FOR FOOTINGS.

REFER TO SHEET LS04 FOR ADDITIONAL FENCING DETAILS.

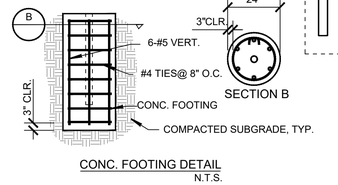

CONC. FOOTING DETAIL
N.T.S.

FENCE CONSTRUCTION NOTES

REFER TO THE SPECIFICATIONS SECTION FOR CHAIN LINK FENCING AND INSTALLATION OF CHAIN LINK FENCE FABRIC PER SSPWC 206-6, 304-3 FOR CHAIN LINK FENCE CONSTRUCTION.

CONTRACTOR SHALL SUBMIT AND OBTAIN BUILDING PERMIT FOR ALL FENCING OVER 10' HIGH. CONTRACTOR SHALL PROVIDE ALL REQUIRED ENGINEERING AND CALCULATIONS FOR FOOTINGS.

MATERIALS:
1. BRACE BANDS & OFFSET TENSION BANDS: 1/8" X 1" HEAVY W/ 3/8" CARRIAGE BOLTS.
2. THREADED TRUSS RODS: 3/8" DIAMETER ASTM A36 STEEL, 6" LONG THREAD BOTH ENDS. DOUBLE NUT EACH END. NO SPLICES ALLOWED.
3. TRUSS TIGHTENER: 5 3/4" X 1" X 5/16" INDUSTRIAL, 0.59 LB./EACH. (BOTH ENDS OF TRUSS ROD)
4. LINE PANEL RAIL END: 1 7/8" OD 1-HOLE OFFSET, PRESSED STEEL, 0.39 LB./EACH.
5. SHEAR PANEL RAIL END: 1 7/8" OD 2-HOLE PRESSED STEEL, 0.59 LB./EACH.
6. CAPS: CAST IRON, 4 1/2" OD = 2.25 LB.
7. POST & RAIL FABRIC TIES, HOG RINGS: 9 GA. STEEL.
8. TENSION BARS: 1/4" X 3/4" 132" CONTINUOUS.
9. CHAIN LINK FABRIC: SEE ELEVATION.
10. POST AND RAILS: ASTM A120, SCH. 40 CLASS 1 OR ASTM F1083
11. ALL 20' FENCE MATERIALS, FABRIC, POSTS ETC. SHALL BE GALVANIZED FINISH, TYP.

CONCRETE:
1. FOOTING CONCRETE DESIGN FC'=2000 PSI: FOR DURABILITY THE CONTRACTOR SHALL PROVIDE 520-C-2500, 4" SLUMP CONCRETE. PORTLAND CEMENT SHALL BE TYPE II PER SSPWC 201-1.2; COMBINED AGGREGATE GRADING SHALL CONFORM WITH SSPW 201-1.3.2.
2. PRIOR TO PROCEEDING WITH INSTALLATION OF FENCE FRAME AND FABRIC, THE CONTRACTOR SHALL ALLOW 7 DAYS FOR THE FOOTING CONCRETE TO CURE.
3. SUBMITTAL - EACH TRUCKLOAD SHALL BE ACCOMPANIED BY A DELIVERY RECEIPT SHOWING SUPPLIER, LOAD WEIGHT, AND MIX COMPOSITION BY WEIGHT. PRIOR TO PLACING CONCRETE, THE CONTRACTOR SHALL PROVIDE THE PROJECT INSPECTOR WITH A COPY OF THE DELIVERY RECEIPT.

DESIGN SOIL STRENGTH VALUES:
LATERAL BEARING: 100 PSF/FT TO 1500 PSF MAX. FOR DESIGN OF ISOLATED POLES, THE ALLOWABLE LATERAL BEARING HAS BEEN INCREASED BY 100 PERCENT.

CHAIN LINK FABRIC FIELD INSTALLATION:
1. FABRIC SHALL BE CONTINUOUS IN THE LONGITUDINAL DIRECTION BY WEAVING CLOSURE TIES, OF THE SAME MATERIAL AS THE FENCE FABRIC, THROUGH BOTH VERTICAL ENDS.
2. FABRIC SHALL BE FASTENED TO THE RAILS AND LINE POSTS WITH TIE WIRES AT 1'-6" ON CENTER.
3. THE HORIZONTAL SEAM (BETWEEN THE TOP & BOTTOM PANEL) SHALL HAVE A 2" LAP AND SHALL BE FASTENED TOGETHER WITH HOG RINGS 1'-6" OC SPACED EVENLY BETWEEN RAIL TIES.
4. FABRIC SHALL BE STRETCHED TIGHTLY AND KNUCKELED TOP AND BOTTOM.
5. FABRIC SHALL BE PLACED 1" ABOVE THE FINISHED SURFACE.

FENCE FRAME FIELD INSTALLATION
1. * POSTS AND RAILS SHALL BE FABRICATED FROM CONTINUOUS PIPE, EXCEPT FOR POST FIELD SPLICE AS SHOWN ON THE PLAN.
2. * FITTINGS SHALL BE FABRICATED FROM A36 STEEL EXCEPT AS OTHERWISE INDICATED HEREIN. ALL POSTS SHALL BE INSTALLED IN A VERTICAL POSITION,
3. * THE BOTTOM RAIL SHALL BE INSTALLED ON A STRAIGHT GRADE BETWEEN POSTS BY EXCAVATING THE HIGH POINTS OF GROUND TO PROVIDE A UNIFORM 2" CLEARANCE .

CONTRACTOR SHALL SUBMIT AND OBTAIN BUILDING PERMIT FOR ALL FENCING OVER 10' HIGH. CONTRACTOR SHALL PROVIDE ALL REQUIRED ENGINEERING AND CALCULATIONS FOR FOOTINGS.

501	16' HIGH CHAIN LINK FENCE	
N.T.S.		RP DETAIL 5040

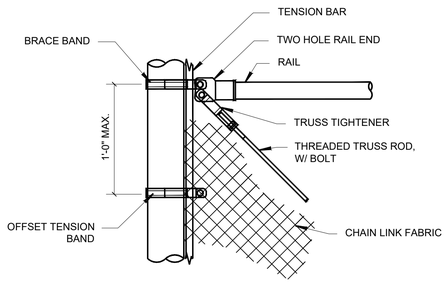

1 CONNECTION AT POST
N.T.S.

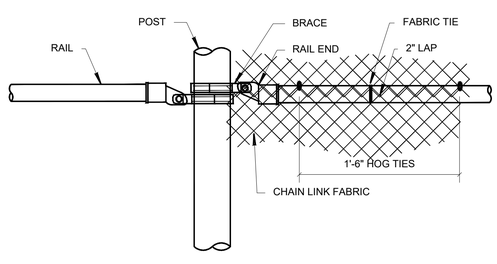

2 RAIL CONNECTION TO POST & CHAIN LINK FABRIC OVER LAP
N.T.S.

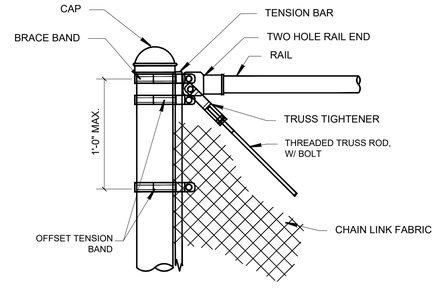

3 CONNECTION AT POST
N.T.S.

THE CITY OF LOS ANGELES OR ITS OFFICERS OR AGENTS SHALL NOT BE RESPONSIBLE FOR THE ACCURACY OR COMPLETENESS OF ELECTRONIC COPIES OF THIS PLAN SHEET.

REVISION DATES (DESIGN STAGE ONLY)

CITY OF LOS ANGELES DEPARTMENT OF PUBLIC WORKS BUREAU OF ENGINEERING • THIS PLAN WAS ELECTRONICALLY SIGNED AND STAMPED •

ENGINEERING
CITY OF LOS ANGELES

REGISTERED LANDSCAPE ARCHITECT PAUL CARDOZA No. 5962 STATE OF CALIFORNIA 10/31/2023 RENEWAL 08/31/2025

VERTICAL CONTROL: BENCH MARK: 18-02215 NAVD 88
HORIZONTAL CONTROL: CALIFORNIA STATE PLANE ZONE V, 1983 NAD

SHEET TITLE: LANDSCAPE SITE CONSTRUCTION DETAILS 4
PROJECT: STRATHERN PARK NORTH STORMWATER CAPTURE PROJECT
ADDRESS: STRATHERN PARK NORTH 8041 WHISETT AVE, NORTH HOLLYWOOD, CA 91605

NO.	REVISIONS	DATE	BY
		YY/MM/DD	
		YY/MM/DD	
		YY/MM/DD	
		YY/MM/DD	

CIP NO. SCP0003

INDEX NO.

CITY ENGINEER: TED ALLEN, P.E. DATE: 01/31/2023

DESIGN GROUP		DATE
ENGINEER:	CDM SMITH INC.	01/31/2023
ARCHITECT:	NUVIS LANDSCAPE ARCHITECTURE	01/31/2023
DESIGNED BY:	P. CARDOZA	01/31/2023
DRAWN BY:	L. KLECKER	01/31/2023
CHECKED BY:	P. CARDOZA	01/31/2023
APPROVED BY:	A.DELLINGER	01/31/2023

WORK ORDER EW4008F

SHEET NAME LS05

SHEET 36 OF 85 SHEETS

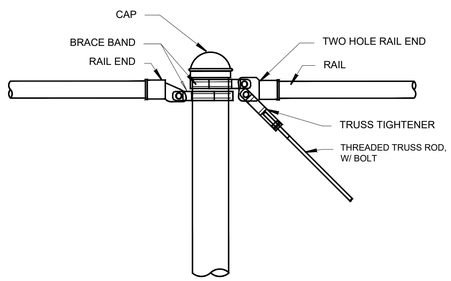

4 RAIL & TRUSS CONNECTION AT POST

N.T.S.

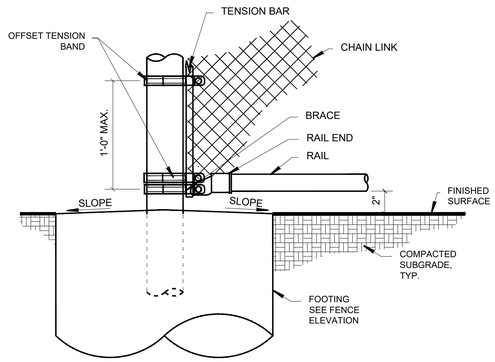

5 CONNECTION AT POST

N.T.S.

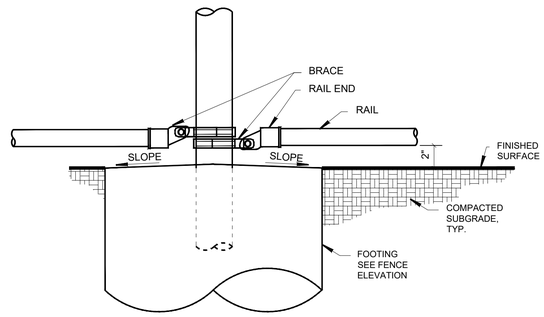

6 RAIL & POST CONNECTION AT FOOTING

N.T.S.

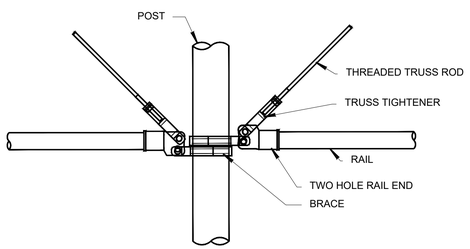

7 RAIL & TRUSS CONNECTION TO POST

N.T.S.

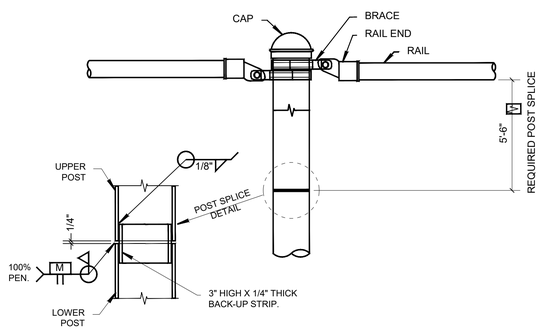

POST SPLICE SECTION
NTS

8 POST SPLICE & RAIL TO POST CONNECTION

N.T.S.

FENCE CONSTRUCTION NOTES

REFER TO THE SPECIFICATIONS SECTION FOR CHAIN LINK FENCING AND INSTALLATION OF CHAIN LINK FENCE FABRIC PER SSPWC 206-6, 304-3 FOR CHAIN LINK FENCE CONSTRUCTION.

CONTRACTOR SHALL SUBMIT AND OBTAIN BUILDING PERMIT FOR ALL FENCING OVER 10' HIGH. CONTRACTOR SHALL PROVIDE ALL REQUIRED ENGINEERING AND CALCULATIONS FOR FOOTINGS.

MATERIALS:

1. BRACE BANDS & OFFSET TENSION BANDS: 1/8" X 1" HEAVY W/ 3/8" CARRIAGE BOLTS.
2. THREADED TRUSS RODS: 3/8" DIAMETER ASTM A36 STEEL, 6" LONG THREAD BOTH ENDS. DOUBLE NUT EACH END. NO SPLICES ALLOWED.
3. TRUSS TIGHTENER: 5 3/4" X 1" X 5/16" INDUSTRIAL, 0.59 LB./EACH. (BOTH ENDS OF TRUSS ROD)
4. LINE PANEL RAIL END: 1 7/8" OD 1-HOLE OFFSET, PRESSED STEEL, 0.39 LB./EACH.
5. SHEAR PANEL RAIL END: 1 7/8" OD 2-HOLE PRESSED STEEL, 0.59 LB./EACH.
6. CAPS: CAST IRON, 4 1/2" OD = 2.25 LB.
7. POST & RAIL FABRIC TIES, HOG RINGS: 9 GA. STEEL.
8. TENSION BARS: 1/4" X 3/4" 132" CONTINUOUS.
9. CHAIN LINK FABRIC: SEE ELEVATION.
10. POST AND RAILS: ASTM A120, SCH. 40 CLASS 1 OR ASTM F1083
11. ALL 20' FENCE MATERIALS, FABRIC, POSTS ETC. SHALL BE GALVANIZED FINISH, TYP.

CONCRETE:

1. FOOTING CONCRETE DESIGN FC'=2000 PSI: FOR DURABILITY THE CONTRACTOR SHALL PROVIDE 520-C-2500, 4" SLUMP CONCRETE. PORTLAND CEMENT SHALL BE TYPE II PER SSPWC 201-1.2; COMBINED AGGREGATE GRADING SHALL CONFORM WITH SSPW 201-1.3.2.
2. PRIOR TO PROCEEDING WITH INSTALLATION OF FENCE FRAME AND FABRIC, THE CONTRACTOR SHALL ALLOW 7 DAYS FOR THE FOOTING CONCRETE TO CURE.
3. SUBMITTAL - EACH TRUCKLOAD SHALL BE ACCOMPANIED BY A DELIVERY RECEIPT SHOWING SUPPLIER, LOAD WEIGHT, AND MIX COMPOSITION BY WEIGHT. PRIOR TO PLACING CONCRETE, THE CONTRACTOR SHALL PROVIDE THE PROJECT INSPECTOR WITH A COPY OF THE DELIVERY RECEIPT.

DESIGN SOIL STRENGTH VALUES:

LATERAL BEARING: 100 PSF/FT TO 1500 PSF MAX. FOR DESIGN OF ISOLATED POLES, THE ALLOWABLE LATERAL BEARING HAS BEEN INCREASED BY 100 PERCENT.

CHAIN LINK FABRIC FIELD INSTALLATION:

1. FABRIC SHALL BE CONTINUOUS IN THE LONGITUDINAL DIRECTION BY WEAVING CLOSURE TIES, OF THE SAME MATERIAL AS THE FENCE FABRIC, THROUGH BOTH VERTICAL ENDS.
2. FABRIC SHALL BE FASTENED TO THE RAILS AND LINE POSTS WITH TIE WIRES AT 1'-6" ON CENTER.
3. THE HORIZONTAL SEAM (BETWEEN THE TOP & BOTTOM PANEL) SHALL HAVE A 2" LAP AND SHALL BE FASTENED TOGETHER WITH HOG RINGS 1'-6" OC SPACED EVENLY BETWEEN RAIL TIES.
4. FABRIC SHALL BE STRETCHED TIGHTLY AND KNUCKELED TOP AND BOTTOM.
5. FABRIC SHALL BE PLACED 1" ABOVE THE FINISHED SURFACE.

FENCE FRAME FIELD INSTALLATION

1. * POSTS AND RAILS SHALL BE FABRICATED FROM CONTINUOUS PIPE, EXCEPT FOR POST FIELD SPLICE AS SHOWN ON THE PLAN.
2. * FITTINGS SHALL BE FABRICATED FROM A36 STEEL EXCEPT AS OTHERWISE INDICATED HEREIN. ALL POSTS SHALL BE INSTALLED IN A VERTICAL POSITION,
3. * THE BOTTOM RAIL SHALL BE INSTALLED ON A STRAIGHT GRADE BETWEEN POSTS BY EXCAVATING THE HIGH POINTS OF GROUND TO PROVIDE A UNIFORM 2" CLEARANCE .

CONTRACTOR SHALL SUBMIT AND OBTAIN BUILDING PERMIT FOR ALL FENCING OVER 10' HIGH. CONTRACTOR SHALL PROVIDE ALL REQUIRED ENGINEERING AND CALCULATIONS FOR FOOTINGS.

THE CITY OF LOS ANGELES OR ITS OFFICERS OR AGENTS SHALL NOT BE RESPONSIBLE FOR THE ACCURACY OR COMPLETENESS OF ELECTRONIC COPIES OF THIS PLAN SHEET.

REVISION DATES (DESIGN STAGE ONLY)

ENGINEERING
CITY OF LOS ANGELES

REGISTERED LANDSCAPE ARCHITECT — STATE OF CALIFORNIA — 5962 — 01/31/2023 — 1/31/2024

THIS PLAN WAS ELECTRONICALLY • SIGNED AND STAMPED •

BUREAU OF ENGINEERING

VERTICAL CONTROL: BENCH MARK: 18-02215 NAVD 88
HORIZONTAL CONTROL: CALIFORNIA STATE PLANE ZONE V, 1983 NAD

SHEET TITLE: LANDSCAPE SITE CONSTRUCTION DETAILS 5

PROJECT: STRATHERN PARK NORTH STORMWATER CAPTURE PROJECT

ADDRESS: STRATHERN PARK NORTH 8041 WHISETT AVE, NORTH HOLLYWOOD, CA 91605

CITY OF LOS ANGELES DEPARTMENT OF PUBLIC WORKS

NO.	REVISIONS	DATE	BY
		YY/MM/DD	
		YY/MM/DD	
		YY/MM/DD	
		YY/MM/DD	

CIP NO. SCP0003

INDEX NO.

		DATE
CITY ENGINEER	TED ALLEN, P.E.	01/31/2023
DESIGN GROUP		
ENGINEER:	CDM SMITH INC.	01/31/2023
ARCHITECT:	NUVIS LANDSCAPE ARCHITECTURE	01/31/2023
DESIGNED BY:	P. CARDOZA	01/31/2023
DRAWN BY:	L. KLECKER	01/31/2023
CHECKED BY:	P. CARDOZA	01/31/2023
APPROVED BY:	A.DELLINGER	01/31/2023

WORK ORDER
EW4008F

SHEET NAME
LS06

SHEET 37 OF 85 SHEETS

705 10' HIGH X 10' WIDE CHAIN LINK ACCESS GATES

N.T.S. | RP DETAIL 5220

OPTIONS (OPTIONS CHECKED SHALL PREVAIL)

☐ VINYL COATED CHAIN LINK FABRIC SHALL BE AS SPECIFIED IN THE SPECIFICATIONS. ALL FENCE MATERIALS SHALL BE AS INDICATED HEREON AND PAINTED PER SPECIFICATIONS TO MATCH FABRIC COLOR. THE COLOR SHALL BE BLACK.

☒ ALL FENCING SHALL HAVE A STANDARD GALVANIZED FINISH.

☒ INSTALL CONCRETE MOW STRIP UNDER FENCE.

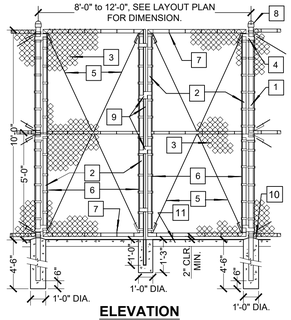

ELEVATION

GATE MATERIALS

1. POSTS: POSTS 3-1/2" O.D. WITH 1' DIA. x 4'-6" DEEP FOOTINGS.
2. GATE FRAMES: TOP, BOTTOM AND SIDE MEMBERS 2-3/8" O.D., MID RAIL 1 5/8" O.D. MITER GATE FRAME CORNERS WELD AND GRIND SMOOTH.
3. FABRIC: 9 GAUGE, 2" MESH, KNUCKLE TOP AND BOTTOM, PLACE ON ACTIVITY OR LAWN SIDE OF GATES.
4. HINGES: INDUSTRIAL BULLDOG HINGE (180¼ SWING), 2 HINGES PER GATE, ONE AT TOP AND BOTTOM.
5. TRUSS ROD: 3/8" DIAM. THREADED AT BOTH ENDS AND TENSIONED WITH TWO INDUSTRIAL TRUSS TIGHTENERS SECURED TO GATE FRAME.
6. STRETCHER BAR: 3/16" X 3/4" WITH 1/8 " x 1" TENSION BANDS AT 1'-0" O.C.
7. TIE WIRES: 11 GAUGE AT 1'-6" O.C. AT GATE FRAME TOP, BOTTOM AND MID RAILS.
8. POST CAPS SHALL BE MALLEABLE IRON OR PRESSED STEEL.
9. CAST ALUMINUM FORK LATCH.
10. PROVIDE A 1" CROWN AT TOP OF ALL POST FOOTINGS. (MODIFY FOR MOW STRIP OPTION).
11. INSTALL CONCRETE MOW STRIP TO MATCH ADJACENT FENCING IF SPECIFIED.

NOTES:
1. CHAIN LINK FENCE MATERIALS SHALL CONFORM TO THE CHAIN LINK FENCING SECTION OF THE SPECIFICATIONS.
2. CONCRETE FOOTINGS SHALL BE ALLOWED TO SET FOR SEVEN DAYS PRIOR TO INSTALLATION OF GATES.

706 BASEBALL INFIELD STORAGE BOX

N.T.S. | RP DETAIL 542

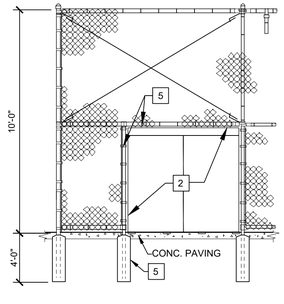

ELEVATION

NOTES:

1. FOR FENCE MATERIALS AND METHODS OF CONSTRUCTION, SEE DETAIL E9/L402.
2. INSTALL INFIELD STORAGE BOX. CAPITOL ENTERPRISES (626-357-3768) "BALL BOX" MODEL # IS 7256 OR APPROVED EQUAL. COLOR: GREEN. INCLUDE ESCAPE LATCH LOCKING DEVICE.
3. STORAGE BOX SHALL BE INSTALLED PER THE MANUFACTURER'S RECOMMENDATION. THE FRONT OF THE BOX SHALL OPEN TOWARDS THE INFIELD AND SHALL BE FLUSH WITH THE FENCE.
4. LOCATE STORAGE BOX ADJACENT TO THE LINE POST. ALL FENCE FABRIC SHALL BE INSTALLED AS TIGHTLY TO THE BOX AS POSSIBLE.
5. INSTALL ADDITIONAL POST, FOOTING, STRETCHER BAR, TENSION BANDS, AND TIE WIRES.
6. INSTALL A 5" THICK CONCRETE PAD, 7' LONG X 5' WIDE, IF STORAGE BOX IS TO BE PLACED IN TURF AREA. SLOPE CONCRETE PAD TOWARD INFIELD @ 2%.

RP VERSION 9/29/94 BSL ; REV. RWF 9/19/06

703 EIGHT FOOT CHAINLINK FENCE

N.T.S. | RP DETAIL 5030

OPTIONS (OPTIONS CHECKED SHALL PREVAIL)

☐ VINYL COATED CHAIN LINK FABRIC SHALL BE PER SPECIFICATIONS. ALL FENCE MATERIALS SHALL BE AS INDICATED HEREON AND PAINTED PER SPECIFICATIONS TO MATCH THE FABRIC COLOR. THE COLOR SHALL BE: BLACK.

☒ ALL FENCING SHALL HAVE A GALVANIZED FINISH.

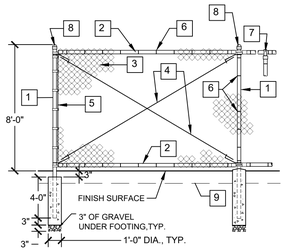

ELEVATION

FENCING MATERIALS

1. POSTS: END, CORNER AND SLOPE POSTS 2-7/8 IN. O.D., LINE POSTS 2-3/8 IN. O.D. POST SPACING TO BE 10'-0" MAX.
2. RAILS: TOP AND BOTTOM RAILS 1-5/8 IN. O.D.
3. FABRIC: 9 GAUGE, 2 IN. MESH, KNUCKLE TOP AND BOTTOM, PLACE ON PATH OR EXTERIOR SIDE OF POSTS.
4. TRUSS ROD: 3/8 IN. DIAM. THREADED AT BOTH ENDS AND TENSIONED WITH TWO INDUSTRIAL TRUSS TIGHTENERS SECURED TO RAIL ENDS. TRUSS PANEL SHALL BE LOCATED AT END AND CORNER PANELS OF 30" OR GREATER TURN AND AT INTERVALS NOT TO EXCEED 100' . HOG RING FABRIC TO RODS AT MAX. 3'-0" O.C.
5. STRETCHER BAR: 3/16" X ¾" WITH ⅛" X 1" TENSION BANDS AT 1'-0" O.C.
6. TIE WIRES: 11 GAUGE AT 1'-6" O.C. AT TOP, BOTTOM AND LINE POSTS.
7. LINE POST EYE TOPS & RAIL ENDS SHALL BE MALLEABLE IRON OR PRESSED STEEL. SECURE RAIL ENDS TO POSTS WITH ⅛" X 1" BRACE BANDS.
8. POST CAPS SHALL BE MALLEABLE IRON OR PRESSED STEEL.
9. REQUIRED MOW-STRIP IN TURF AREAS.

NOTES:

1. SEE SPECIFICATIONS SECTION FOR CHAIN LINK FENCE CONSTRUCTION FOR ADDITONAL INFORMATION.
2. CONCRETE FOOTINGS SHALL BE ALLOWED TO SET FOR SEVEN (7) DAYS PRIOR TO INSTALLATION OF FABRIC OR HARDWARE.
3. THE BOTTOM OF THE FABRIC SHALL BE POSITIONED ONE INCH ABOVE FINISH GRADE.
4. IN PAVED AREAS TOP OF CONC. FTG. TO BE 3" BELOW FINISH SURFACE TO ALLOW FOR PAVING ABOVE.
5. IN LANDSCAPED AREAS, TOP OF FOOTING SHALL BE 1" ABOVE FINISH GRADE WITH A 1" CROWN ON TOP OF FTG.
6. INSIDE OR ADJACENT TO TURF AREAS, ALL FENCES SHALL HAVE A 12" WIDE X 6" DEEP CONCRETE MOW-STRIP WITH #4 REBAR CENTERED, TYP. MOW STRIP SHALL BE CENTERED ON FENCE.
7. CONC. FTG. TO BE 2500 PSI @ 28 DAYS. PROVIDE 3" OF GRAVEL UNDER CONC. FTG., TYP.

704 SIX FOOT CHAINLINK FENCE

N.T.S. | RP DETAIL 5020

OPTIONS (OPTIONS CHECKED SHALL PREVAIL)

☐ VINYL COATED CHAIN LINK FABRIC SHALL BE INDICATED IN SPECIFICATIONS. ALL FENCE MATERIALS SHALL BE AS INDICATED HEREON AND PAINTED PER LANDSCAPE CONSTRUCTION NOTES (LCN) TO MATCH THE FABRIC COLOR. THE COLOR SHALL BE - MATCH EXISTING.

☒ ALL FENCING SHALL HAVE A GALVANIZED FINISH.

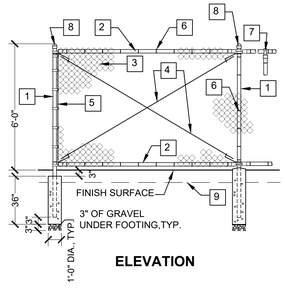

ELEVATION

FENCING MATERIALS

1. POSTS: END, CORNER AND SLOPE POSTS 2-7/8 IN. O.D., LINE POSTS 2-3/8 IN. O.D. POST SPACING TO BE 10'-0" MAX.
2. RAILS: TOP AND BOTTOM RAILS 1-5/8 IN. O.D.
3. FABRIC: 9 GAUGE, 2 IN. MESH, KNUCKLE TOP AND BOTTOM, PLACE ON PATH OR EXTERIOR SIDE OF POSTS.
4. TRUSS ROD: 3/8 IN. DIAM. THREADED AT BOTH ENDS AND TENSIONED WITH TWO INDUSTRIAL TRUSS TIGHTENERS SECURED TO RAIL ENDS. TRUSS PANEL SHALL BE LOCATED AT END AND CORNER PANELS OF 30° OR GREATER TURN AND AT INTERVALS NOT TO EXCEED 100'. HOG RING FABRIC TO RODS AT MAX. 3'-0" O.C.
5. STRETCHER BAR: 3/16" X ¾" WITH ⅛" X 1" TENSION BANDS AT 1'-0" O.C.
6. TIE WIRES: 11 GAUGE AT 1'-6" O.C. AT TOP, BOTTOM AND LINE POSTS.
7. LINE POST EYE TOPS & RAIL ENDS SHALL BE MALLEABLE IRON OR PRESSED STEEL. SECURE RAIL ENDS TO POSTS WITH ⅛" X 1" BRACE BANDS.
8. POST CAPS SHALL BE MALLEABLE IRON OR PRESSED STEEL.
9. REQUIRED MOW-STRIP IN TURF AREAS.

NOTES:

1. SEE SPECIFICATIONS SECTION FOR CHAIN LINK FENCE CONSTRUCTION FOR ADDITONAL INFORMATION.
2. CONCRETE FOOTINGS SHALL BE ALLOWED TO SET FOR SEVEN (7) DAYS PRIOR TO INSTALLATION OF FABRIC OR HARDWARE.
3. THE BOTTOM OF THE FABRIC SHALL BE POSITIONED ONE INCH ABOVE FINISH GRADE.
4. IN PAVED AREAS TOP OF CONC. FTG. TO BE 3" BELOW FINISH SURFACE TO ALLOW FOR PAVING ABOVE.
5. IN LANDSCAPED AREAS, TOP OF FOOTING SHALL BE 1" ABOVE FINISH GRADE WITH A 1" CROWN ON TOP OF FTG.
6. INSIDE OR ADJACENT TO TURF AREAS, ALL FENCES SHALL HAVE A 12" WIDE X 6" DEEP CONCRETE MOW-STRIP WITH #4 REBAR CENTERED, TYP. MOW STRIP SHALL BE CENTERED ON FENCE.
7. CONC. FTG. TO BE 2500 PSI @ 28 DAYS. PROVIDE 3" OF GRAVEL UNDER CONC. FTG., TYP.

702 10' HIGH CHAIN LINK FENCE PEDESTRIAN GATE

N.T.S. | RP DETAIL 5210

OPTIONS (OPTIONS CHECKED SHALL PREVAIL)

☐ VINYL COATED CHAIN LINK FABRIC SHALL BE AS SPECIFIED IN THE SPECIFICATIONS. ALL FENCE MATERIALS SHALL BE AS INDICATED HEREON AND PAINTED PER SPECIFICATIONS TO MATCH FABRIC COLOR. THE COLOR SHALL BE BLACK.

☒ ALL FENCING SHALL HAVE A STANDARD GALVANIZED FINISH.

☐ INSTALL CONCRETE MOW STRIP UNDER FENCE.

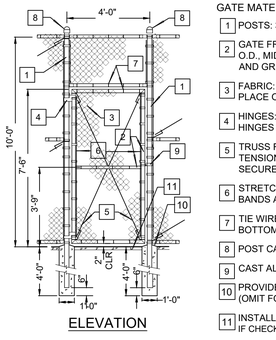

ELEVATION

GATE MATERIALS

1. POSTS: 3-1/2 IN. O.D. WITH 1 FT. DIA. x 4'-0" DEEP FTGS.
2. GATE FRAMES: TOP, BOTTOM AND SIDE MEMBERS 2-3/8 IN. O.D., MID RAIL 1 5/8" O.D. MITER GATEFRAMECORNERS WELD AND GRIND SMOOTH.
3. FABRIC: 9 GAUGE, 2 IN. MESH, KNUCKLE TOP AND BOTTOM, PLACE ON ACTIVITY ON LAWN SIDE OF GATES.
4. HINGES: INDUSTRIAL BULLDOG HINGE (180¡ SWING), 2 HINGES PER GATE, ONE AT TOP AND BOTTOM.
5. TRUSS ROD: 3/8 IN. DIAM. THREADED AT BOTH ENDS AND TENSIONED WITH TWO INDUSTRIAL TRUSS TIGHTENERS SECURED TO GATE FRAME.
6. STRETCHER BAR: 3/16 X 3/4 IN. WITH 1/8 x 1 IN. TENSION BANDS AT 1'-0" O.C.
7. TIE WIRES: 11 GAUGE AT 1'-6" O.C. AT GATE FRAME TOP, BOTTOM AND MID RAILS.
8. POST CAPS: MALLEABLE IRON OR PRESSED STEEL.
9. CAST ALUMINUM FORK LATCH.
10. PROVIDE A 1 IN. CROWN AT TOP OF ALL POST FOOTINGS. (OMIT FOR MOW STRIP OPTION).
11. INSTALL CONCRETE MOW STRIP TO MATCH ADJACENT FENCING IF CHECKED UNDER OPTIONS ABOVE.

NOTES:
1. CHAIN LINK FENCE MATERIALS SHALL CONFORM TO THE CHAIN LINK FENCE SPECITICATIONS.
2. CONCRETE FOOTINGS SHALL BE ALLOWED TO SET FOR SEVEN DAYS PRIOR TO INSTALLATION OF GATES.

701 10' TALL CHAIN LINK FENCE

N.T.S. | RP DETAIL 5040

OPTIONS (OPTIONS CHECKED SHALL PREVAIL)

☐ VINYL COATED CHAIN LINK FABRIC SHALL BE AS SPEC'S. ALL FENCE MATERIALS SHALL BE AS INDICATED HEREON AND PAINTED PER SPEC'S TO MATCH FABRIC COLOR. COLOR SHALL BE BLACK.

☒ ALL FENCING SHALL HAVE A STANDARD GALV. FINISH.

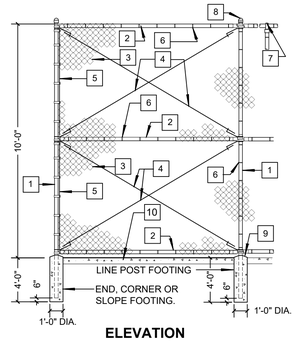

ELEVATION

FENCING MATERIALS

1. POSTS: END, CORNER AND SLOPE POSTS 2-7/8" O.D., LINE POSTS 2-3/8" O.D. POST SPACING TO BE 10'-0" MAX.
2. RAILS: TOP ,MID AND BOTTOM RAILS 1-5/8" O.D.
3. FABRIC: 9 GAUGE, 2" MESH, KNUCKLE TOP AND BOTTOM. PLACE ON ACTIVITY OR LAWN SIDE OF POSTS.
4. TRUSS ROD: 3/8" DIA. THREADED AT BOTH ENDS AND TENSIONED WITH TWO INDUSTRIAL TRUSS TIGHTENERS SECURED TO RAIL ENDS. TRUSS PANEL SHALL BE LOCATED AT END AND CORNER PANELS OF 30° OR GREATER TURN AND AT INTERVALS NOT TO EXCEED 100'. HOG RING FABRIC TO RODS AT MAX. 3'-0" O.C.
5. STRETCHER BAR: 3/16" X 3/4" WITH 1/8" X 1" TENSION BANDS AT 1'-0" O.C.
6. TIE WIRES: 11 GAUGE AT 1'-6" O.C. AT TOP, MID, BOTTOM RAILS AND LINE POSTS.
7. LINE POST EYE TOPS & RAIL ENDS SHALL BE MALLEABLE IRON OR PRESSED STEEL.SECURE RAIL ENDS TO POSTS WITH 1/8" X 1" BRACE BANDS.
8. POST CAPS SHALL BE MALLEABLE IRON OR PRESSED STEEL.
9. PROVIDE A 1" CROWN AT TOP OF ALL POST FOOTINGS. (MODIFY FOR MOW STRIP OPTION).
10. INSTALL 12" WIDE X 6" DEEP CONCRETE MOW STRIP WITH #4 REBAR CONT. IF REQUIRED. SEE NOTES.

NOTES:

1. SEE SPECIFICATIONS SECTION FOR CHAIN LINK FENCE CONSTRUCTION FOR ADDITONAL INFORMATION.
2. CONCRETE FOOTINGS SHALL BE ALLOWED TO SET FOR SEVEN (7) DAYS PRIOR TO INSTALLATION OF FABRIC OR HARDWARE.
3. THE BOTTOM OF THE FABRIC SHALL BE POSITIONED ONE INCH ABOVE FINISH GRADE.
4. IN PAVED AREAS TOP OF CONC. FTG. TO BE 3" BELOW FINISH SURFACE TO ALLOW FOR PAVING ABOVE.
5. IN LANDSCAPED AREAS, TOP OF FOOTING SHALL BE 1" ABOVE FINISH GRADE WITH A 1" CROWN ON TOP OF FTG.
6. INSIDE OR ADJACENT TO TURF AREAS, ALL FENCES SHALL HAVE A 12" WIDE X 6" DEEP CONCRETE MOW-STRIP WITH #4 REBAR CENTERED, TYP. MOW STRIP SHALL BE CENTERED ON FENCE.
7. CONC. FTG. TO BE 2500 PSI @ 28 DAYS. PROVIDE 3" OF GRAVEL UNDER CONC. FTG., TYP.

CONSTRUCTION DETAIL NOTES

1. THE FOLLOWING NOTES APPLY TO ALL DETAILS AS SHOWN IN THIS SET OF DOCUMENTS, UNLESS OTHERWISE NOTED.
2. FOR ADDITIONAL INFORMATION REFER TO CONSTRUCTION NOTES.
3. REFER TO CONSTRUCTION LEGEND FOR INFORMATION RELATIVE TO COLOR, TYPE AND FINISH.
4. UNLESS OTHERWISE NOTED, NEW FINISH SURFACE SHALL BE FLUSH WITH ADJACENT EXISTING SURFACES.
5. FINISH GRADE SHALL BE 1" BELOW FINISH SURFACE AT ALL PLANTER OR TURF AREAS.
6. FINAL LOCATION OF CONSTRUCTION ELEMENTS, DRAINAGE DEVICES, SITE AMENITIES, IRRIGATION EQUIPMENT, AND PLANT MATERIAL MAY REQUIRE ADJUSTMENT DUE TO FIELD CONDITIONS AND SHALL BE APPROVED PRIOR TO CONSTRUCTION.
7. CONTRACTOR SHALL VERIFY ALL MATCHING MATERIALS AND COLORS PRIOR TO INSTALLATION. CONTRACTOR SHALL NOTIFY LANDSCAPE ARCHITECT OF ANY DISCREPANCIES PRIOR TO INSTALLATION.
8. CONTRACTOR SHALL SUBMIT AND OBTAIN BUILDING PERMIT FOR ALL FENCING OVER 10' HIGH. CONTRACTOR SHALL PROVIDE ALL REQUIRED ENGINEERING AND CALCULATIONS FOR FOOTINGS.

THIS PLAN WAS ELECTRONICALLY • • SIGNED AND STAMPED

ENGINEERING
CITY OF LOS ANGELES

REGISTERED LANDSCAPE ARCHITECT — No. 3962 — STATE OF CALIFORNIA — 01/31/2023

BUREAU OF ENGINEERING

VERTICAL CONTROL: BENCH MARK: 18-02215 NAVD 88
HORIZONTAL CONTROL: CALIFORNIA STATE PLANE ZONE V, 1983 NAD

SHEET TITLE: LANDSCAPE SITE CONSTRUCTION DETAILS 6

PROJECT: STRATHERN PARK NORTH STORMWATER CAPTURE PROJECT

ADDRESS: STRATHERN PARK NORTH 8041 WHISETT AVE, NORTH HOLLYWOOD, CA 91605

NO.	REVISIONS	DATE	BY
		YY/MM/DD	
		YY/MM/DD	
		YY/MM/DD	
		YY/MM/DD	

CIP NO. SCP0003

INDEX NO.

CITY OF LOS ANGELES DEPARTMENT OF PUBLIC WORKS

CITY ENGINEER: TED ALLEN, P.E. — DATE: 01/31/2023

DESIGN GROUP		DATE
ENGINEER:	CDM SMITH INC.	01/31/2023
ARCHITECT:	NUVIS LANDSCAPE ARCHITECTURE	01/31/2023
DESIGNED BY:	P. CARDOZA	01/31/2023
DRAWN BY:	L. KLECKER	01/31/2023
CHECKED BY:	P. CARDOZA	01/31/2023
APPROVED BY:	A.DELLINGER	01/31/2023

WORK ORDER EW4008F

SHEET NAME LS07

SHEET 38 OF 85 SHEETS

THE CITY OF LOS ANGELES OR ITS OFFICERS OR AGENTS SHALL NOT BE RESPONSIBLE FOR THE ACCURACY OR COMPLETENESS OF ELECTRONIC COPIES OF THIS PLAN SHEET.

REVISION DATES (DESIGN STAGE ONLY)

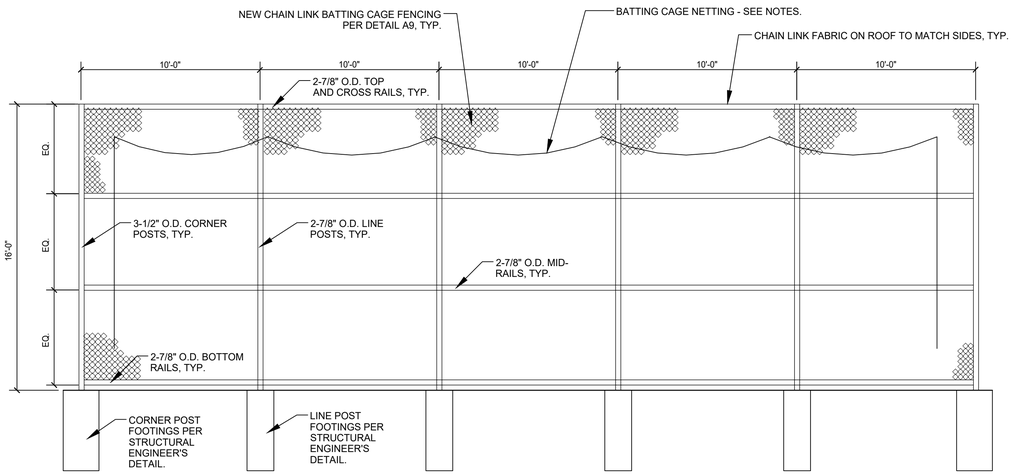

SIDE ELEVATION
SCALE: 1/2" = 1'-0"

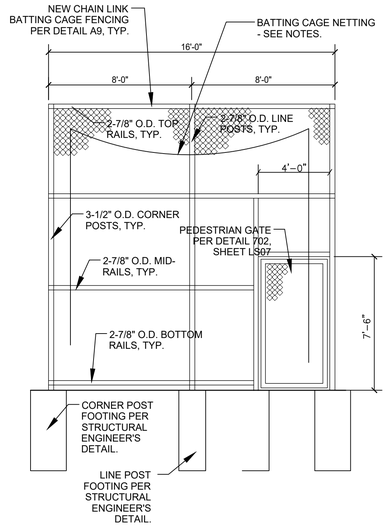

NORTH ELEVATION
SCALE: 1/2" = 1'-0"

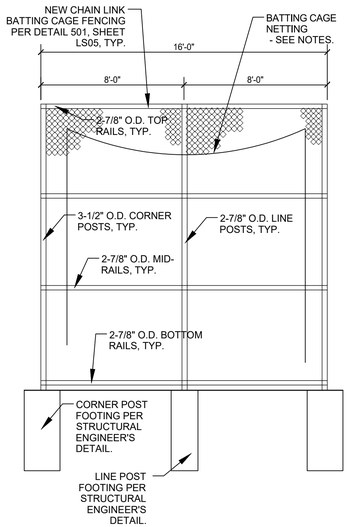

SOUTH ELEVATION
SCALE: 1/2" = 1'-0"

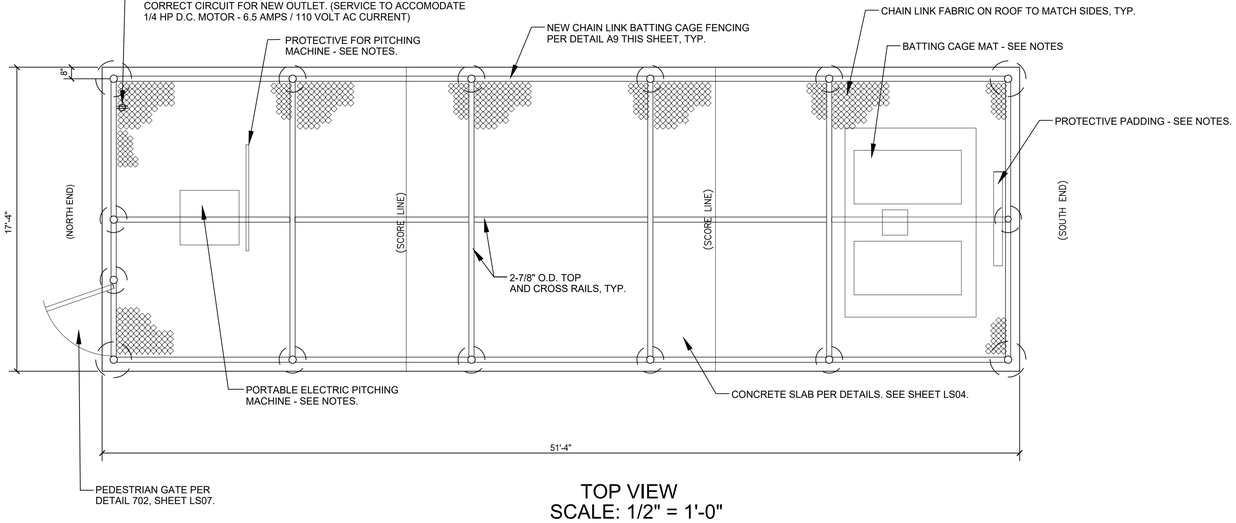

TOP VIEW
SCALE: 1/2" = 1'-0"

BATTING CAGE EQUIPMENT NOTES

CONTRACTOR SHALL SUPPLY AND INSTALL THE FOLLOWING ITEMS PER MANUFACTURER'S INSTRUCTIONS:

PORTABLE ELECTRIC PITCHING MACHINE: "BULLDOG PITCHING MACHINE", CATALOG NUMBER TB-K12130. AVALABLE FROM TOMARK SPORTS, P.O. BOX 1088, CORONA, CA 92878, PHONE: (800) 959-1844, OR APPROVED EQUAL.

PROTECTIVE SCREEN: "DELUXE L-SHAPED PITCHER'S PROTECTIVE SCREEN", CATALOG NUMBER TB-K13621. AVALABLE FROM TOMARK SPORTS, P.O. BOX 1088, CORONA, CA 92878, PHONE: (800) 959-1844, OR APPROVED EQUAL.

BATTING CAGE MAT: "DIAMONDTURF HOMEPLATE MAT", CATALOG NUMBER TB-KI3843. AVALABLE FROM TOMARK SPORTS, P.O. BOX 1088, CORONA, CA 92878, PHONE: (800) 959-1844, OR APPROVED EQUAL.

FENCE PADDING: "CAGE SAVER DELUXE MODEL", 27 OZ VINYL, CATALOG NUMBER TB-K12003. AVALABLE FROM TOMARK SPORTS, P.O. BOX 1088, CORONA, CA 92878, PHONE: (800) 959-1844, OR APPROVED EQUAL.

BATTING CAGE NETTING: "ENDURO BATTING CAGE NET", 14' WIDE X 12' HIGH, CATALOG NUMBER TB-K14550. AVALABLE FROM TOMARK SPORTS, P.O. BOX 1088, CORONA, CA 92878, PHONE: (800) 959-1844, OR APPROVED EQUAL.

CONTRACTOR SHALL SUBMIT AND OBTAIN BUILDING PERMIT FOR ALL FENCING OVER 10' HIGH. CONTRACTOR SHALL PROVIDE ALL REQUIRED ENGINEERING AND CALCULATIONS FOR FOOTINGS.

801	BATTING CAGE
N.T.S.	

REVISION DATES (DESIGN STAGE ONLY)

THE CITY OF LOS ANGELES OR ITS OFFICERS OR AGENTS SHALL NOT BE RESPONSIBLE FOR THE ACCURACY OR COMPLETENESS OF ELECTRONIC COPIES OF THIS PLAN SHEET.

ENGINEERING
CITY OF LOS ANGELES

THIS PLAN WAS ELECTRONICALLY • SIGNED AND STAMPED •

REGISTERED LANDSCAPE ARCHITECT — STATE OF CALIFORNIA — RAMON VASQUEZ — No. 5900 — EXPIRATION DATE 08/31/2024

BUREAU OF ENGINEERING

VERTICAL CONTROL: BENCH MARK: 18-02215 NAVD 88
HORIZONTAL CONTROL: CALIFORNIA STATE PLANE ZONE V, 1983 NAD

SHEET TITLE: LANDSCAPE SITE CONSTRUCTION DETAILS 7

PROJECT: STRATHERN PARK NORTH STORMWATER CAPTURE PROJECT

ADDRESS: STRATHERN PARK NORTH 8041 WHISETT AVE, NORTH HOLLYWOOD, CA 91605

NO.	REVISIONS	DATE	BY
		YY/MM/DD	
		YY/MM/DD	
		YY/MM/DD	
		YY/MM/DD	

CIP NO. SCP0003

INDEX NO.

CITY OF LOS ANGELES DEPARTMENT OF PUBLIC WORKS

CITY ENGINEER: TED ALLEN, P.E. — DATE: 01/31/2023

DESIGN GROUP	
ENGINEER:	CDM SMITH INC.
ARCHITECT:	NUVIS LANDSCAPE ARCHITECTURE
DESIGNED BY:	P. CARDOZA
DRAWN BY:	L. KLECKER
CHECKED BY:	P. CARDOZA
APPROVED BY:	A.DELLINGER

(all dates 01/31/2023)

WORK ORDER EW4008F

SHEET NAME LS08

SHEET 39 OF 85 SHEETS

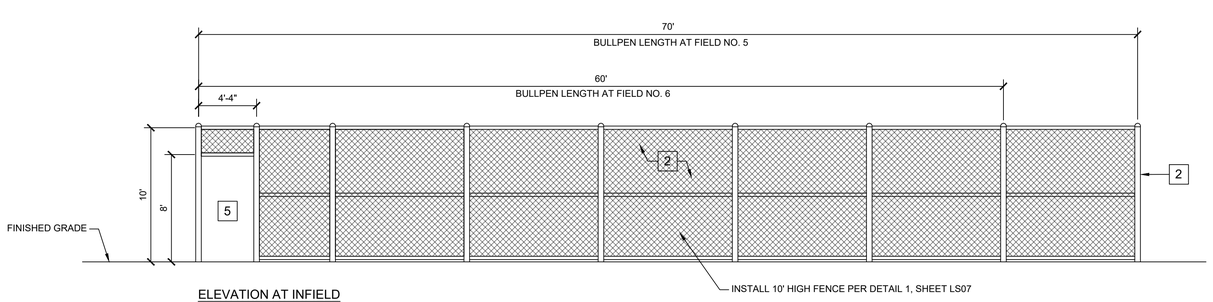

ELEVATION AT INFIELD

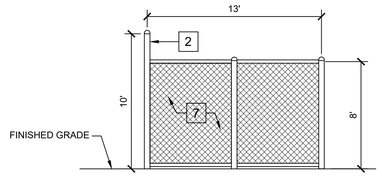

END VIEW

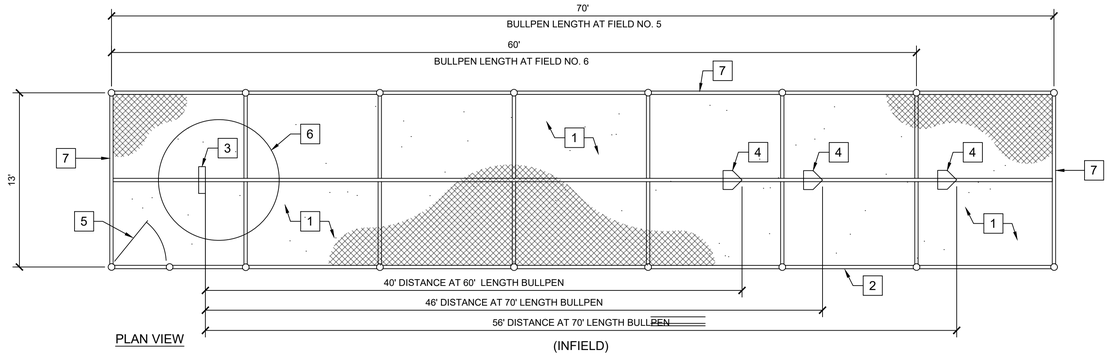

PLAN VIEW

1. INSTALL 4" - 6" LAYER OF "PRO-GOLD SOFTBALL MIX" PER PLANS AND SPECIFICATIONS, OR APPROVED EQUAL. SUPPLIED BY GAIL MATERIALS: 951-667-6106, WWW.GAILMATERIALS.NET.
2. INSTALL 10' HIGH CHAIN LINK SIDE LINE FENCE WITH CONCRETE MOW STRIP PER DETAIL 1, SHEET LS07.
3. INSTALL BOLCO STEP-DOWN' PITCHERS RUBBER, YOUTH SIZE 4" X 18" SKU# 1236392, AVAILABLE FROM: BSNSPORTS.COM, (800) 856-3488. INSTALL PER MANUFACTURER'S INSTRUCTIONS.
4. INSTALL 'HOLLYWOOD' HOME PLATE, SKU# 1236477,AVAILABLE FROM: BSNSPORTS.COM, (800) 856-3488. INSTALL PER MANUFACTURER'S INSTRUCTIONS. INSTALL (1) PER EACH BULLPEN AT EACH FIELD.
5. INSTALL 4' WIDE SINGLE CHAIN LINK GATES WHERE INDICATED. PER DETAIL 2, SHEET LS07.
6. INSTALL PITCHER'S MOUND PER DETAIL 5, SHEET LS04.
7. INSTALL 8' HIGH CHAIN LINK FENCE WITH CONCRETE MOW STRIP PER DETAIL 3, SHEET LS07.

NOTE: CHAIN LINK FENCE POST FOOTINGS SHALL BE PER DETAIL 3, SHEET LS07.

901	BASEBALL BULLPEN
N.T.S.	

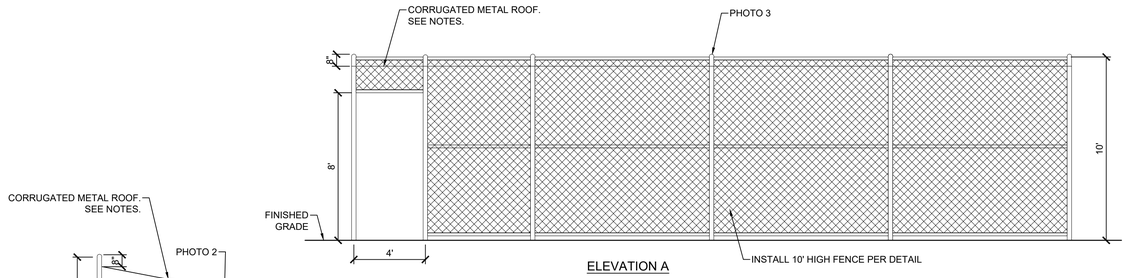

ELEVATION A

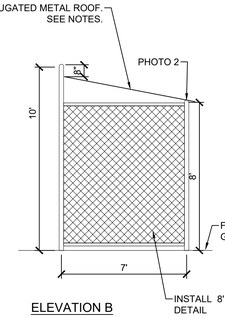

ELEVATION B

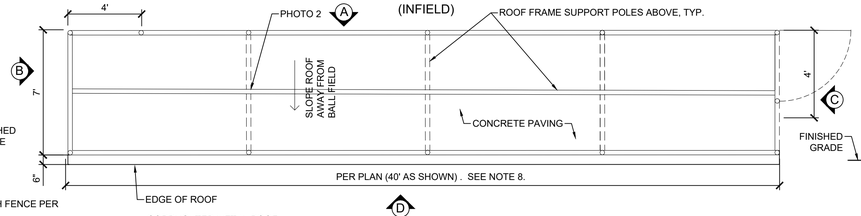

PLAN VIEW

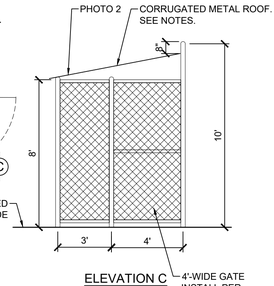

ELEVATION C

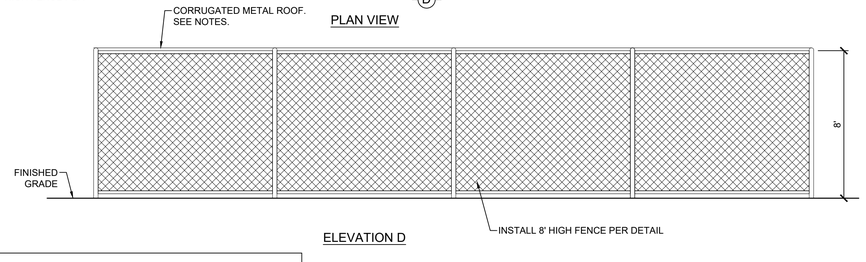

ELEVATION D

NOTES:

1. DUGOUT ROOF COVER IS TO BE 2 ½" X ½", 20 GAUGE, CORRUGATED METAL (ALUMINUM), (CLASS A ROOF) ATTACHED TO ROOF SUPPORT POLES WITH ⅜" X 1 ¼" TEC SCREWS AND RUBBER WASHER AT 24" O.C.
2. CORRUGATED METAL SHEETS SHALL HAVE 6" MINIMUM OVERLAPS WHEN STACK JOINING 2 PIECES.
3. DUGOUT ROOF FRAME POST SIZE TO BE SAME SIZE AS TOP AND BOTTOM RAILS OF 8' CHAIN LINK FENCE DETAIL J9/L410.
4. DUGOUT ROOF FRAME POSTS TO BE WELDED TOGETHER. SEE PHOTO 1.
5. WELD DUGOUT ROOF FRAME TO SIDE OF 10' HIGH FENCE POSTS, 8" BELOW TOP OF POST AND ON TOP OF 8' HIGH DUGOUT FENCE POST CAPS. SEE PHOTO 2 & PHOTO 3.
6. SLOPE DUGOUT ROOF TO DRAIN WATER AWAY FROM BALL FIELD.
7. SEE LANDSCAPE CONSTRUCTION NOTES (CHAIN LINK FENCING) FOR ADDITIONAL REQUIREMENTS.
8. FOR 30' DUGOUTS (AS NOTED PER PLAN), OMIT ONE MIDDLE 10' SECTIONS OF FENCING AND ROOFING.
9. DUGOUT FLOOR SHALL BE CONCRETE PAVING PER DETAIL 1, SHEET LS04. COLOR AND FINISH TO MATCH THROUGHOUT.

REFER TO SHEET LS11, DETAIL 1102 FOR BASEBALL DUGOUT IMAGES

902	BASEBALL DUGOUT
N.T.S.	

CONSTRUCTION DETAIL NOTES

1. THE FOLLOWING NOTES APPLY TO ALL DETAILS AS SHOWN IN THIS SET OF DOCUMENTS, UNLESS OTHERWISE NOTED.
2. FOR ADDITIONAL INFORMATION REFER TO CONSTRUCTION NOTES.
3. REFER TO CONSTRUCTION LEGEND FOR INFORMATION RELATIVE TO COLOR, TYPE AND FINISH.
4. UNLESS OTHERWISE NOTED, NEW FINISH SURFACE SHALL BE FLUSH WITH ADJACENT EXISTING SURFACES.
5. FINISH GRADE SHALL BE 1" BELOW FINISH SURFACE AT ALL PLANTER OR TURF AREAS.
6. FINAL LOCATION OF CONSTRUCTION ELEMENTS, DRAINAGE DEVICES, SITE AMENITIES, IRRIGATION EQUIPMENT, AND PLANT MATERIAL MAY REQUIRE ADJUSTMENT DUE TO FIELD CONDITIONS AND SHALL BE APPROVED PRIOR TO CONSTRUCTION.
7. CONTRACTOR SHALL VERIFY ALL MATCHING MATERIALS AND COLORS PRIOR TO INSTALLATION. CONTRACTOR SHALL NOTIFY LANDSCAPE ARCHITECT OF ANY DISCREPANCIES PRIOR TO INSTALLATION.
8. CONTRACTOR SHALL SUBMIT AND OBTAIN BUILDING PERMIT FOR ALL FENCING OVER 10' HIGH. CONTRACTOR SHALL PROVIDE ALL REQUIRED ENGINEERING AND CALCULATIONS FOR FOOTINGS.

THE CITY OF LOS ANGELES OR ITS OFFICERS OR AGENTS SHALL NOT BE RESPONSIBLE FOR THE ACCURACY OR COMPLETENESS OF ELECTRONIC COPIES OF THIS PLAN SHEET.

REVISION DATES (DESIGN STAGE ONLY)

ENGINEERING
CITY OF LOS ANGELES

THIS PLAN WAS ELECTRONICALLY • SIGNED AND STAMPED

REG. LICENSED LANDSCAPE ARCHITECT 5962 STATE OF CALIFORNIA

BUREAU OF ENGINEERING

VERTICAL CONTROL: BENCH MARK: 18-02215 NAVD 88
HORIZONTAL CONTROL: CALIFORNIA STATE PLANE ZONE V, 1983 NAD

SHEET TITLE: LANDSCAPE SITE CONSTRUCTION DETAILS 8

PROJECT: STRATHERN PARK NORTH STORMWATER CAPTURE PROJECT

ADDRESS: STRATHERN PARK NORTH 8041 WHISETT AVE, NORTH HOLLYWOOD, CA 91605

NO.	REVISIONS	DATE	BY
		YY/MM/DD	
		YY/MM/DD	
		YY/MM/DD	
		YY/MM/DD	

CIP NO. SCP0003

INDEX NO.

CITY OF LOS ANGELES DEPARTMENT OF PUBLIC WORKS

CITY ENGINEER: TED ALLEN, P.E. DATE 01/31/2023

DESIGN GROUP		DATE
ENGINEER:	CDM SMITH INC.	01/31/2023
ARCHITECT:	NUVIS LANDSCAPE ARCHITECTURE	01/31/2023
DESIGNED BY:	P. CARDOZA	01/31/2023
DRAWN BY:	L. KLECKER	01/31/2023
CHECKED BY:	P. CARDOZA	01/31/2023
APPROVED BY:	A.DELLINGER	01/31/2023

WORK ORDER EW4008F

SHEET NAME LS09

SHEET 40 OF 85 SHEETS

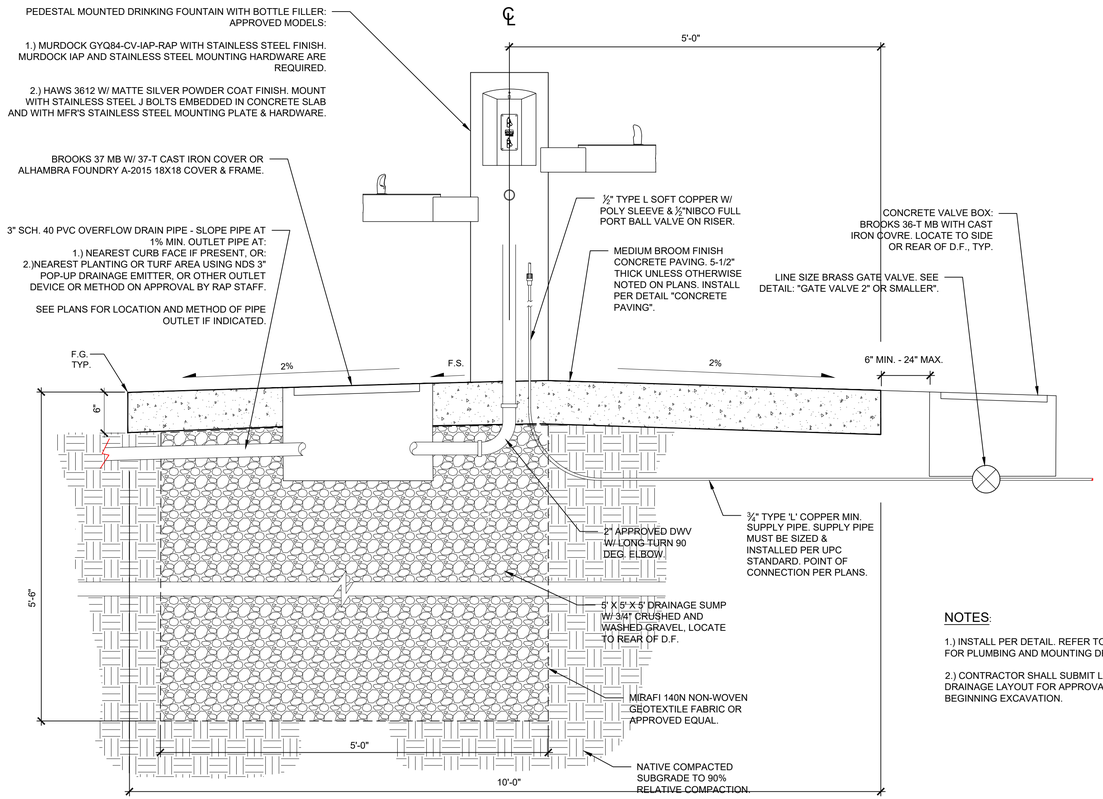

	ACCESSIBLE DRINKING FOUNTAIN	
N.T.S.	BOE Version Feb/22	RP DETAIL L1732

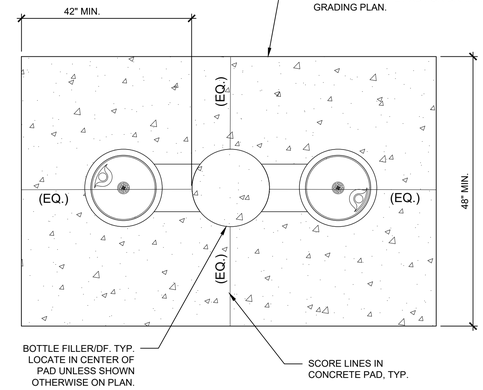

PLAN VIEW - LAYOUT
NOT TO SCALE

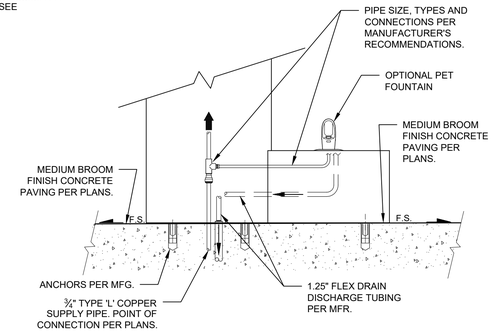

OPTIONAL PET FOUNTAIN
SIDE VIEW - SECTION
NOT TO SCALE

NOTES:

1.) INSTALL PER DETAIL. REFER TO MANUFACTURER'S INSTRUCTION FOR PLUMBING AND MOUNTING DRINKING FOUNTAIN UNIT.

2.) CONTRACTOR SHALL SUBMIT LOCATION FOR SUMP AND OVERFLOW DRAINAGE LAYOUT FOR APPROVAL BY PROJECT MANAGER PRIOR TO BEGINNING EXCAVATION.

DOMESTIC LINE STERILIZATION PROCEDURE:

1.) FLUSH DOMESTIC WATER LINES COMPLETELY.
2.) USING A PROPORTIONING PUMP, INJECT SODIUM HYPOCHLORITE LIQUID DISINFECTANT INTO THE DOMESTIC LINE THROUGH A ¾" SERVICE COCK AT A POINT AS CLOSE TO THE WATER METER AS POSSIBLE.
3.) OPEN BUBBLERS ON ALL D.F. UNITS INSTALLED TO DISTRIBUTE DISINFECTANT THROUGHOUT THE DOMESTIC LINE SYSTEM.
4.) VERIFY BY TESTING THAT A MINIMUM CONCENTRATION OF 50 PPM OF DISINFECTANT IS ACHIEVED AT EACH D.F. UNIT.
5.) DISINFECTANT SHALL REMAIN IN THE SYSTEM FOR 24 HOURS MINIMUM.
6.) AT THE END OF THE 24 HOUR PERIOD, THE RESIDUAL LEVEL OF DISINFECTANT SHALL NOT BE LESS THAN 10 PPM.
7.) ALL LINES SHALL BE FLUSHED THOROUGHLY AFTER DISINFECTION IS COMPLETED.
8.) A WATER SAMPLE AT EACH D.F. UNIT SHALL BE TESTED BY AN APPROVED TESTING LABORATORY. REQUIRED RESULTS ARE:
- COLIFORM-AEROGENES ORGANISMS: NEGATIVE
- TOTAL BACTERIA PLATE COUNT: LESS THAN 100 PER CUBIC CENTIMETER
- WATER POTABILITY: SAFE TO USE
IF THE REQUIRED RESULTS ARE NOT MET, STERILIZATION PROCESS LISTED ABOVE SHALL BE REPEATED UNTIL THE REQUIRED TEST RESULTS ARE MET.

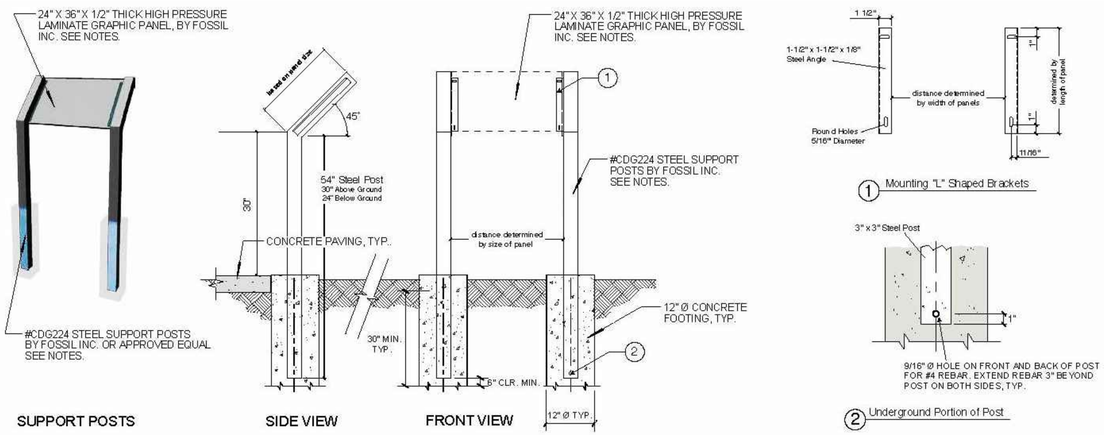

INTERPRETIVE PANEL NOTES:

1.) CONTRACTOR SHALL PROVIDE AND INSTALL (2) INDIVIDUAL INTERPRETIVE SIGN PANELS AND SUPPORTS PER PLAN AND DETAIL. FINAL LOCATION OF EACH PANEL SHALL BE APPROVED BY ENGINEER PRIOR TO INSTALLATION.

2.) 24" X 36" X 1/2" THICK SIGN PANELS MUST BE MANUFACTURED AS DIGITAL HIGH PRESSURE LAMINATE (DHPL) COMPOSED OF SEVERAL LAYERS OF PHENOLIC RESIN IMPREGNATED KRAFT FILLER PAPER, A DIGITALLY IMAGED EMBEDDED GRAPHIC, A LAYER OF MELAMINE RESIN, AND SURFACED BY A LAYER OF TRANSLUCENT EXTERIOR UV / GRAFFITI-RESISTANT OVERLAY PROTECTION AS SUPPLIED BY FOSSIL INDUSTRIES, INC., (631) 245-4172, WWW.FOSSILGRAPHICS.COM, OR APPROVED EQUAL.

3.) THE ENTIRE PANEL, INCLUDING EXTERIOR OVERLAY, MUST BE BONDED UNDER HEAT AND EXTREME PRESSURE TO FORM A COMPOSITE PANEL. THE FINISH MUST BE SMOOTHLY TEXTURED WITH REFLECTIVITY OF 30 +OR (5) GLOSS UNITS. THE DHPL GRAPHICS MUST BE WARRANTED FOR A MINIMUM OF 10 YEARS AGAINST FADING, DE-LAMINATION AND WEATHER DETERIORATION.

4.) EMBEDDED GRAPHICS MUST BE MADE USING A 12-COLOR HIGH-DEFINITION PRINT AT 200 DPI.

5.) GRAPHIC IMAGE FILES AS NECESSARY FOR PRODUCTION OF EACH INDIVIDUAL SIGN PANEL SPECIFIED WILL BE SUPPLIED BY THE PROJECT MANAGER AT THE TIME OF FABRICATION.

6.) SIGN PANEL MANUFACTURER SHALL PROVIDE A PRODUCTION QUALITY SAMPLE FROM A SUPPLIED GRAPHIC FILE FOR APPROVAL PRIOR TO FINAL FABRICATION AND DELIVERY.

1002	INTERPRETIVE SIGN PANEL
N.T.S.	

NOTES:

1. GRANT FUNDS SIGN:
   ONE (1) SIGN SHALL BE PROVIDED FOR GRANT FUNDS. GRANT FUNDS SIGN SHALL INCLUDE COLOR LOGO AND DISCLOSURE STATEMENT FROM COUNTY OF LOS ANGELES SAFE, CLEAN WATER PROGRAM. COLOR LOGO AND DISCLOSURE STATEMENT SHALL BE EQUALLY PROMINENT ON THE SIGN. THE SIGN SHALL BE PREPARED IN A PROFESSIONAL MATTER. THE CONTRACTOR SHALL CREATE A GRANT FUNDS SIGN AT LEAST TWO (2) FEET TALL BY THREE (3) FEET WIDE MADE OF 3/4" THICK EXTERIOR GRADE PLYWOOD OR OTHER APPROVED MATERIAL IN A PROMINENT LOCATION ON THE PROJECT SITE AND SHALL MAINTAIN THE SIGN IN GOOD CONDITION FOR THE DURATION OF THE CONSTRUCTION PERIOD. THE CONTRACTOR SHALL SUBMIT A SHOP DRAWING OF THE GRANT FUNDS SIGN FOR APPROVAL. THE CONTENTS OF THE SIGN WILL INCLUDE: "FUNDING FOR THIS PROJECT HAS BEEN PROVIDED IN FULL OR IN PART FROM THE LOS ANGELES COUNTY FLOOD CONTROL DISTRICT'S SAFE, CLEAN WATER PROGRAM."
2. CONTRACTOR SHALL INSTALL EDUCATIONAL SIGNS PER 2019 CALIFORNIA BUILDING CODE SECTION 11B-216, 11B-302, AND 11B-703, IF APPLICABLE. CONTRACTOR SHALL SUBMIT SHOP DRAWINGS FOR REVIEW AND APPROVAL BY THE ENGINEER PRIOR TO INSTALLATION PER SPECIFICATION SECTION 01330 SHOP DRAWINGS/SUBMITTALS OF THE GENERAL REQUIREMENTS.
3. GRAPHIC IMAGE FOR THE SIGN SHALL BE PROVIDED BY THE ENGINEER. SIGN GRAPHIC BELOW IS A DRAFT PLACEHOLDER, FINAL GRAPHIC IMAGE SHALL BE PROVIDED BY THE ENGINEER.



CONSTRUCTION DETAIL NOTES

1. THE FOLLOWING NOTES APPLY TO ALL DETAILS AS SHOWN IN THIS SET OF DOCUMENTS, UNLESS OTHERWISE NOTED.
2. FOR ADDITIONAL INFORMATION REFER TO CONSTRUCTION NOTES.
3. REFER TO CONSTRUCTION LEGEND FOR INFORMATION RELATIVE TO COLOR, TYPE AND FINISH.
4. UNLESS OTHERWISE NOTED, NEW FINISH SURFACE SHALL BE FLUSH WITH ADJACENT EXISTING SURFACES.
5. FINISH GRADE SHALL BE 1" BELOW FINISH SURFACE AT ALL PLANTER OR TURF AREAS.
6. FINAL LOCATION OF CONSTRUCTION ELEMENTS, DRAINAGE DEVICES, SITE AMENITIES, IRRIGATION EQUIPMENT, AND PLANT MATERIAL MAY REQUIRE ADJUSTMENT DUE TO FIELD CONDITIONS AND SHALL BE APPROVED PRIOR TO CONSTRUCTION.
7. CONTRACTOR SHALL VERIFY ALL MATCHING MATERIALS AND COLORS PRIOR TO INSTALLATION. CONTRACTOR SHALL NOTIFY LANDSCAPE ARCHITECT OF ANY DISCREPANCIES PRIOR TO INSTALLATION.
8. CONTRACTOR SHALL SUBMIT AND OBTAIN BUILDING PERMIT FOR ALL FENCING OVER 10' HIGH. CONTRACTOR SHALL PROVIDE ALL REQUIRED ENGINEERING AND CALCULATIONS FOR FOOTINGS.

THE CITY OF LOS ANGELES OR ITS OFFICERS OR AGENTS SHALL NOT BE RESPONSIBLE FOR THE ACCURACY OR COMPLETENESS OF ELECTRONIC COPIES OF THIS PLAN SHEET.

REVISION DATES (DESIGN STAGE ONLY)

ENGINEERING
CITY OF LOS ANGELES

THIS PLAN WAS ELECTRONICALLY • SIGNED AND STAMPED

REG. LANDSCAPE ARCHITECT RAMON VARGAS LANDSCAPE ARCHITECT No. 5962 STATE OF CALIFORNIA

BUREAU OF ENGINEERING

VERTICAL CONTROL: BENCH MARK: 18-02215 NAVD 88
HORIZONTAL CONTROL: CALIFORNIA STATE PLANE ZONE V, 1983 NAD

SHEET TITLE: LANDSCAPE SITE CONSTRUCTION DETAILS 9

PROJECT: STRATHERN PARK NORTH STORMWATER CAPTURE PROJECT

ADDRESS: STRATHERN PARK NORTH 8041 WHISETT AVE, NORTH HOLLYWOOD, CA 91605

CIP NO. SCP0003

INDEX NO.

V'NO.	REVISIONS	DATE	BY
		YY/MM/DD	
		YY/MM/DD	
		YY/MM/DD	
		YY/MM/DD	

CITY OF LOS ANGELES DEPARTMENT OF PUBLIC WORKS

CITY ENGINEER	TED ALLEN, P.E.	01/31/2023
DESIGN GROUP		
ENGINEER:	CDM SMITH INC.	01/31/2023
ARCHITECT:	NUVIS LANDSCAPE ARCHITECTURE	01/31/2023
DESIGNED BY:	P. CARDOZA	01/31/2023
DRAWN BY:	L. KLECKER	01/31/2023
CHECKED BY:	P. CARDOZA	01/31/2023
APPROVED BY:	A.DELLINGER	01/31/2023

WORK ORDER
EW4008F

SHEET NAME
LS10
SHEET 41 OF 85 SHEETS

STEELCRAFT PRODUCTS	MODEL	SHEET
P.O. Box 90365 - Pasadena, CA 91103 PHN 626-798-7401 FAX 626-798-1482	BS 1644T BASEBALL BACKSTOP	1 OF 4

DO NOT SCALE DRAWING

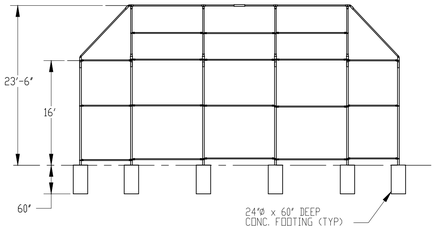

FRONT ELEVATION

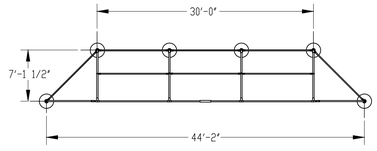

PLAN VIEW

Monday, August 2, 2021 6:18:36 AM | TIW | DATE 9/23/02 | DWG. NO. BS1644TA-1

STEELCRAFT PRODUCTS	MODEL	SHEET
P.O. Box 90365 - Pasadena, CA 91103 PHN 626-798-7401 FAX 626-798-1482	BS 1644T BASEBALL BACKSTOP	2 OF 4

DO NOT SCALE DRAWING

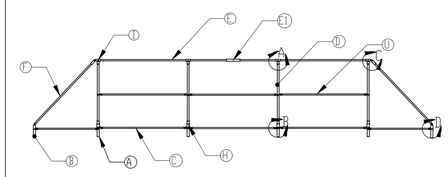

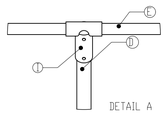

DETAIL A

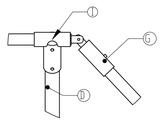

DETAIL C

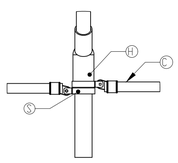

DETAIL B

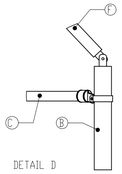

DETAIL D

Monday, August 2, 2021 6:18:36 AM | TIW | DATE 3/14/02 | DWG. NO. BS1644TA-2

STEELCRAFT PRODUCTS	MODEL	SHEET
P.O. Box 90365 - Pasadena, CA 91103 PHN 626-798-7401 FAX 626-798-1482	BS 1644T BASEBALL BACKSTOP	3 OF 4

PARTS LIST

ITEM	QUANT	PART NO.	DESCRIPTION
A	4	F04BS288	BACK POSTS 2-7/8" OD GALV. PIPE @ 19'-0"
B	2	F04BS289	FRONT POSTS 2-7/8" OD GALV. PIPE @ 19'-0" w/ LUGS
C	15	F04BS151	HORIZ. BRACES 1-5/8" OD GALV. PIPE @ 9'-5 1/2"
D	4	F04BS256	HOOD SUPPORT 2-3/8" OD GALV. PIPE @ 9'-9"
E	2	F04BS257	HOOD FRONT TIE 2-3/8" OD GALV. PIPE @ 15'-2-1/2"
E1	1	F04BS259	HOOD FRONT TIE 2-7/8" OD GALV. PIPE @ 18" w/ SET SCRW
F	2	F04BS258	TRIANGLE SUPPORT 2-3/8" OD GALV. PIPE @ 9'-6 1/4" w/ LU
G	2	F04BS355	SWIVEL TUBE
H	4	F04BS356	BACK POST ANGLE FITTING w/ SET SCREWS
I	4	F04BS358	"T" FITTING FOR FRONT HORIZONTAL
J	2	P06BS412	ROLL OF 9 ga 50' X 8' CHAIN LINK FABRIC
K	1	P06BS211	ROLL OF 11 ga 50' X 10' CHAIN LINK FABRIC (HOOD)
M	6	P06BS310	3/4" X 10'-0" TENSION BARS (FOR HOOD)
N	60	P06BS270	2-7/8" TENSION BANDS
O	30	P06BS230	2-3/8" TENSION BANDS
P	300	P06BS001	ALUMINUM TIE WIRES
Q	36	P06BS011	1-5/8" RAIL END FITTINGS
R	6	P06BS231	2-3/8" BRACE BANDS
S	22	P06BS271	2-7/8" BRACE BANDS
T	12	P06BS351	TENSION BARS @ 7'-0"
U	3	F04BS359	TOP HORIZ BRACES 1-5/8" OD X 9'-6 1/4"
V	8	P06BS351	3-1/2" BRACE BANDS (ANGLE FITTINGS)

DO NOT SCALE DRAWING | DATE 9/23/02 | DWG. NO. BS1644TA-3

STEELCRAFT PRODUCTS	MODEL	SHEET
P.O. Box 90365 - Pasadena, CA 91103 PHN 626-798-7401 FAX 626-798-1482	BS 1644T BASEBALL BACKSTOP	4 OF 4

ASSEMBY INSTRUCTIONS

1. Dig six (6) holes @ 60" deep and 24" diam as shown on the plan view.
2. Place the four 2-7/8" od back posts (A) in the four back holes.
3. Place the two 2-7/8" od end posts (B) in the end holes with lugs parallel to the front opening.
4. Each post shall be 16'-0" above ground and 19'-0" on center. Place a horizontal brace (C) on the ground between each of the posts. Place a rail end fitting on each end of these braces. Place a brace band over each post adjacent to each rail end fitting. Bolt rail end fitting to the corresponding brace band. Make sure the horizontal brace fits into the rail end fittings at least 1". If they don't, adjust the posts accordingly.
   **NOTE: All carriage bolt heads are facing the playing field.
5. With the proper spacing assured, plumb all posts and pour the concrete footings. Allow 24 hrs. for concrete to set and then proceed as follows.
6. Attach four angle fittings (H) to back posts (A).
7. Hood Post Erection: Insert the four hood support posts (D) into open end of the four angle fittings (H) on back posts, with bent portion toward the playing field.
8. Tighten set screws holding hood posts in place.
9. Install mid (C) and front (E) horizontal tie members, using four "T" fitting (i). Attach triangle supports (F).
10. Install horizontal braces (C) between the posts above ground. These braces can be installed in a manner similar to directions in item 4. Larger size bands are furnished for use on the angle fittings.
11. Unroll the 9 ga wire (J) from end of roll. Stretch the wire for measuring and open the knuckle on each side of the roll at 9'-7" and weave out one strand of wire.
12. Weave a tension bar (T) through the last bars on the un-knuckled sides. Place this wire against playing field side of one of the wing panels with the tension bars parallel to the uprights.
13. Stretch wire on the wing panels. Slip 6 tension bands (N) over each post adjacent to the tension bars. The tension bars must be offset so that the wire will be stretched on the playing field side (inside) of the backstop. Equally space the 6 tension band up and down the posts on each side of the wire panel and bolt into position.

    **NOTE: If the wire is too loose, remove a strand of wire as in item 11 above or, if the wire is too tight to fasten into position, reweave into panel, the strand of wire removed in item 11 above.
14. Stretch Wire Back Panel The back two panels will be stretched in one piece between outside back posts (A). The length of the wire needed should be 3" shorter than the distance between the inside of the two corner posts (A). (Make sure wire is stretched when measuring)
15. Place this wire against the playing field side of the backstop with the tension bars parallel and adjacent to posts (A). Stretch and secure into position with 6 tension bands on each post.
16. Install and stretch wire in the opposite wing as described in items 12 and 13 above.
17. Stretch Wire - Hood Panels Install wire on hood, one panel at a time. Measure out the 11 ga chain link (J) wire as in item 12 above. and install as in item 13.
    **NOTE: Wire goes on the outside (top) of hood.
18. Stretch Wire - Corner Panels Install wire on corner panels using 11 ga chain link (K) wire. Cut off extra wire where necessary. Tie at 12" along top side panels.
19. Use tie wire (O) and tie all chain link to the adjacent horizontal braces at approx. 18" apart.
20. Tighten all set screws and bolts & nuts.

DO NOT SCALE DRAWING | DATE 9/23/02 | DWG. NO. BS1644TA-4

NOTE: BASEBALL BACKSTOP DETAILS AND NOTES ARE FOR REFERENCE ONLY. CONTRACTOR SHALL CONTACT LA STEELCRAFT FOR RECOMMENDATIONS FOR INSTALLATION. LA STEELCRAFT, PASADENA CA. lasteelcraft.com 1-800-851-0865

1101 BASEBALL BACKSTOP
N.T.S.







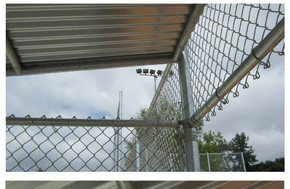



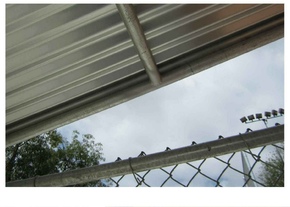











1102 BASEBALL DUGOUT DETAIL IMAGES
N.T.S.

CONSTRUCTION DETAIL NOTES

1. THE FOLLOWING NOTES APPLY TO ALL DETAILS AS SHOWN IN THIS SET OF DOCUMENTS, UNLESS OTHERWISE NOTED.
2. FOR ADDITIONAL INFORMATION REFER TO CONSTRUCTION NOTES.
3. REFER TO CONSTRUCTION LEGEND FOR INFORMATION RELATIVE TO COLOR, TYPE AND FINISH.
4. UNLESS OTHERWISE NOTED, NEW FINISH SURFACE SHALL BE FLUSH WITH ADJACENT EXISTING SURFACES.
5. FINISH GRADE SHALL BE 1" BELOW FINISH SURFACE AT ALL PLANTER OR TURF AREAS.
6. FINAL LOCATION OF CONSTRUCTION ELEMENTS, DRAINAGE DEVICES, SITE AMENITIES, IRRIGATION EQUIPMENT, AND PLANT MATERIAL MAY REQUIRE ADJUSTMENT DUE TO FIELD CONDITIONS AND SHALL BE APPROVED PRIOR TO CONSTRUCTION.
7. CONTRACTOR SHALL VERIFY ALL MATCHING MATERIALS AND COLORS PRIOR TO INSTALLATION. CONTRACTOR SHALL NOTIFY LANDSCAPE ARCHITECT OF ANY DISCREPANCIES PRIOR TO INSTALLATION.
8. CONTRACTOR SHALL SUBMIT AND OBTAIN BUILDING PERMIT FOR ALL FENCING OVER 10' HIGH. CONTRACTOR SHALL PROVIDE ALL REQUIRED ENGINEERING AND CALCULATIONS FOR FOOTINGS.

THE CITY OF LOS ANGELES OR ITS OFFICERS OR AGENTS SHALL NOT BE RESPONSIBLE FOR THE ACCURACY OR COMPLETENESS OF ELECTRONIC COPIES OF THIS PLAN SHEET.

REVISION DATES (DESIGN STAGE ONLY)

ENGINEERING
CITY OF LOS ANGELES

THIS PLAN WAS ELECTRONICALLY • SIGNED AND STAMPED

REGISTERED LANDSCAPE ARCHITECT — No. 5967 — STATE OF CALIFORNIA — 01-31-2023 — 01-31-2024

BUREAU OF ENGINEERING

VERTICAL CONTROL: BENCH MARK: 18-02215 NAVD 88
HORIZONTAL CONTROL: CALIFORNIA STATE PLANE ZONE V, 1983 NAD

SHEET TITLE: LANDSCAPE SITE CONSTRUCTION DETAILS 1

PROJECT: STRATHERN PARK NORTH STORMWATER CAPTURE PROJECT

ADDRESS: STRATHERN PARK NORTH 8041 WHISETT AVE, NORTH HOLLYWOOD, CA 91605

CITY OF LOS ANGELES DEPARTMENT OF PUBLIC WORKS

NO.	REVISIONS	DATE	BY
		YY/MM/DD	
		YY/MM/DD	
		YY/MM/DD	
		YY/MM/DD	

CIP NO. SCP0003

INDEX NO.

CITY ENGINEER

	DESIGN GROUP	DATE
TED ALLEN, P.E.		01/31/2023
ENGINEER:	CDM SMITH INC.	01/31/2023
ARCHITECT:	NUVIS LANDSCAPE ARCHITECTURE	01/31/2023
DESIGNED BY:	P. CARDOZA	01/31/2023
DRAWN BY:	L. KLECKER	01/31/2023
CHECKED BY:	P. CARDOZA	01/31/2023
APPROVED BY:	A.DELLINGER	01/31/2023

WORK ORDER EW4008F

SHEET NAME LS11

SHEET 42 OF 85 SHEETS

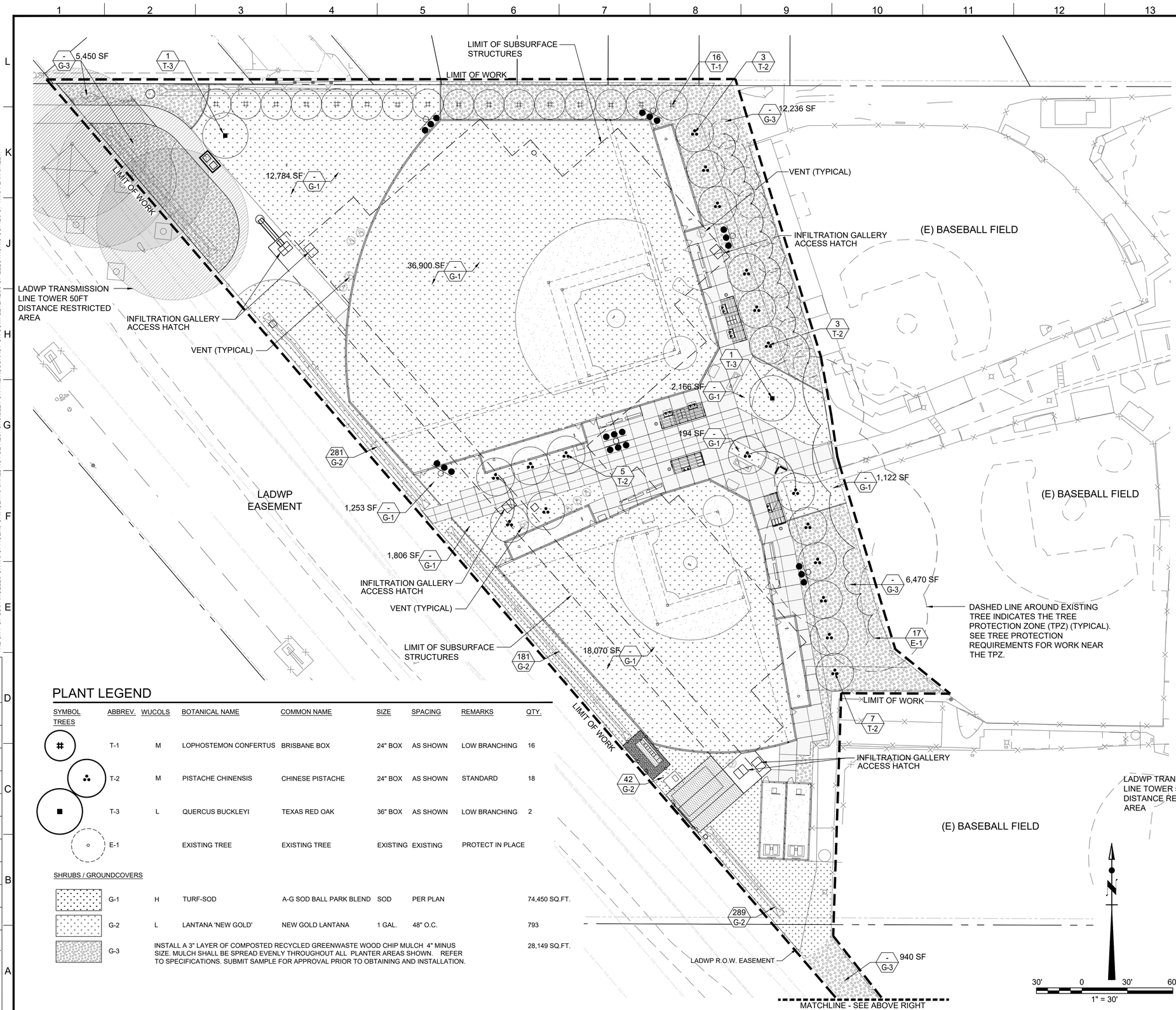

PLANT LEGEND

SYMBOL	ABBREV.	WUCOLS	BOTANICAL NAME	COMMON NAME	SIZE	SPACING	REMARKS	QTY.
TREES								
#	T-1	M	LOPHOSTEMON CONFERTUS	BRISBANE BOX	24" BOX	AS SHOWN	LOW BRANCHING	16
♣	T-2	M	PISTACHE CHINENSIS	CHINESE PISTACHE	24" BOX	AS SHOWN	STANDARD	18
■	T-3	L	QUERCUS BUCKLEYI	TEXAS RED OAK	36" BOX	AS SHOWN	LOW BRANCHING	2
○	E-1		EXISTING TREE	EXISTING TREE	EXISTING	EXISTING	PROTECT IN PLACE	
SHRUBS / GROUNDCOVERS								
G-1	G-1	H	TURF-SOD	A-G SOD BALL PARK BLEND	SOD	PER PLAN		74,450 SQ.FT.
G-2	G-2	L	LANTANA 'NEW GOLD'	NEW GOLD LANTANA	1 GAL.	48" O.C.		793
G-3	G-3	INSTALL A 3" LAYER OF COMPOSTED RECYCLED GREENWASTE WOOD CHIP MULCH 4" MINUS SIZE. MULCH SHALL BE SPREAD EVENLY THROUGHOUT ALL PLANTER AREAS SHOWN. REFER TO SPECIFICATIONS. SUBMIT SAMPLE FOR APPROVAL PRIOR TO OBTAINING AND INSTALLATION.						28,149 SQ.FT.

PLANTING PLAN NOTES

1. CONTRACTOR SHALL PROVIDE ALL LABOR, MATERIALS, AND EQUIPMENT NECESSARY TO FURNISH AND INSTALL PLANT MATERIAL AS SHOWN ON THE DRAWINGS AND AS DESCRIBED IN THE SPECIFICATIONS.
2. ALL WORK ON THE IRRIGATION SYSTEM, INCLUDING HYDROSTATIC, COVERAGE, AND OPERATIONAL TESTS AND THE BACKFILLING AND COMPACTION OF TRENCHES SHALL BE PERFORMED PRIOR TO PLANTING OPERATIONS.
3. PLANT LIST ON THE DRAWINGS SHALL BE USED AS A GUIDE ONLY. CONTRACTOR SHALL TAKEOFF AND VERIFY SIZES AND QUANTITIES BY PLAN CHECK.
4. LOCATIONS OF PLANT MATERIAL SHALL BE REVIEWED ON SITE BY THE CITY/OWNER'S AUTHORIZED REPRESENTATIVE PRIOR TO INSTALLATION.
5. TREES SHALL BE PLANTED NO CLOSER THAN TEN FEET (10') FROM UTILITIES.
6. IF, DURING PLANTING OPERATIONS THERE SEEMS TO BE MINIMAL OR NO PERCOLATION IN PLANTING PITS, CONTRACTOR SHALL CEASE PLANTING OPERATIONS AND IMMEDIATELY NOTIFY THE CITY/OWNER'S AUTHORIZED REPRESENTATIVE TO DISCUSS ALTERNATIVE TO MAINTAINING POSITIVE ROOTBALL DRAINAGE MEASURES.
7. SEE LANDSCAPE PLANTING SPECIFICATIONS FOR SOIL PREPARATION REQUIREMENTS.

KEY NOTES

1. ALL AREAS DISTURBED BY CONSTRUCTION ACTIVITY WILL REQUIRE TURF REPLACEMENT AND REMEDIATION FOR SOIL COMPACTION. REFER TO TURF NOTE, SHEET LP02.

THE CITY OF LOS ANGELES OR ITS OFFICERS OR AGENTS SHALL NOT BE RESPONSIBLE FOR THE ACCURACY OR COMPLETENESS OF ELECTRONIC COPIES OF THIS PLAN SHEET.

REVISION DATES (DESIGN STAGE ONLY)

THIS PLAN WAS ELECTRONICALLY • SIGNED AND STAMPED

ENGINEERING
CITY OF LOS ANGELES

REGISTERED LANDSCAPE ARCHITECT — No. 2962 — STATE OF CALIFORNIA
RENEWAL 08/31/2023
10/31/2021
10/31/2023
10/31/2025

CITY OF LOS ANGELES DEPARTMENT OF PUBLIC WORKS
BUREAU OF ENGINEERING

VERTICAL CONTROL: BENCH MARK: 18-02215 NAVD 88
HORIZONTAL CONTROL: CALIFORNIA STATE PLANE ZONE V, 1983 NAD

SHEET TITLE: LANDSCAPE PLANTING PLAN
PROJECT: STRATHERN PARK NORTH STORMWATER CAPTURE PROJECT
ADDRESS: STRATHERN PARK NORTH 8041 WHISETT AVE, NORTH HOLLYWOOD, CA 91605

NO.	REVISIONS	DATE	BY
		YY/MM/DD	
		YY/MM/DD	
		YY/MM/DD	
		YY/MM/DD	

CIP NO. SCP0003

INDEX NO.

CITY ENGINEER: TED ALLEN, P.E.

DESIGN GROUP		DATE
ENGINEER:	CDM SMITH INC.	01/31/2023
ARCHITECT:	NUVIS LANDSCAPE ARCHITECTURE	01/31/2023
DESIGNED BY:	P. CARDOZA	01/31/2023
DRAWN BY:	L. KLECKER	01/31/2023
CHECKED BY:	P. CARDOZA	01/31/2023
APPROVED BY:	A.DELLINGER	01/31/2023

WORK ORDER EW4008F

SHEET NAME LP01

SHEET 43 OF 85 SHEETS

NOTE: TURF AREAS

THE CONSTRUCTION SHALL CONSIST OF TWO PRIMARY STAGES.

STAGE 1: CIVIL CONSTRUCTION OF ALL THE STORM WATER RELATED ELEMTNES AND THE SITE IMPROVEMENTS SHOWN INSIDE THE PRIMARY LIMITS OF WORK. (I.E. CONSTRUCTION FENCING).

A. DURING THIS STAGE, ALL EXISTING TURF AND LANDSCAPING TO REMAIN OUTSIDE THE PRIMARY CONSTRUCTION AREA (I.E. CONSTRUCTION FENCING) SHALL REMAIN ACCESSIBLE TO THE PUBLIC AND WILL BE MAINTAINED BY THE PARKS DEPARTMENT STAFF. DURING THIS PERIOD, THE CONTRACTOR SHALL NOT INTERRUPT THE EXISTING IRRIGATION WATER SUPPLY TO THESE AREAS AND SHALL ASSURE THE EXISTING CONTROL SYSTEM REMAINS IN OPERATION. ANY DISRUPTION TO IRRIGATION IN THESE AREAS THAT CAUSES DAMAGE TO THE EXISTING TURF HEALTH OR COVERAGE WILL BE REPAIRED AT THE CONTRACTOR'S EXPENSE BY OVERSEEDING WITH A SEED MIX OF SIMILAR COMPOSITION AS THE TURF TO BE REPAIRED/REPLACED AND FERTILIZED WITH A BALANCED LONG-RELEASE TURF FERTILIZER.

B. THE NEW IRRIGATION AND PLANTING WORK INSIDE THE PRIMARY WORK AREA MAY BE INCLUDED IN THIS STAGE AT THE CONTRACTOR'S DISCRETION.

C. INSIDE THE PRIMARY LIMITS OF WORK, AREAS OF EXISTING TURF TO BE RETAINED DURING CONSTRUCTION SHALL BE IRRIGATED AND MAINTAINED BY THE CONTRACTOR AS NEEDED. AFTER THE COMPLETION OF PRIMARY CONSTRUCTION, ANY EXISTING TURF AREAS WHICH ARE DEAD OR DAMAGED BY CONSTRUCTION ACTIVITY (INCLUDING ANY AREAS USED FOR PARKING, STORAGE, LAYDOWN, IRRIGATION TRENCHING ETC.) MUST BE REPLACED WITH THE SOD SPECIFIED AFTER THE AREA HAS BEEN DE-COMPACTED TO THE SATISFACTION OF THE ENGINEER AND AMENDED PER THE LANDSCAPE PLANTING SPECIFICATIONS. ANY AREAS OF EXISTING TURF REMAINING WITH BARE AREAS LARGER THAN 12" X12" SHALL BE REPAIRED BY OVERSEEDING. DEAD OR BARE AREAS LARGER THAN 36" X36" SHALL BE REPAIRED WITH SOD. AT COMPLETION OF THE MAINTENANCE AND ESTABLISHMENT PERIOD (SEE LANDSCAPE PLANTING SPECIFICATIONS), A FULL HEALTHY AND CONTINUOUS COVER OF TURF IS EXPECTED.

D. ALL TURF AREAS DAMAGED OR REMOVED BY CONSTRUCTION ACTIVITY SHALL BE DE-COMPACTED (IF OUTSIDE OF EXCAVATION LIMITS) AND AMENDED PER THE LANDSCAPE PLANTING SPECIFICATIONS, THEN PLANTED WITH SOD AS SPECIFIED IN THE PLANTING LEGEND.

STAGE 2: DURING THIS STAGE (AFTER SUBSTANTIAL COMPLETION OF STAGE 1), ADDITIONAL SITE AND IRRIGATION IMPROVEMENTS OUTSIDE THE PRIMARY LIMITS OF WORK (SEE IRRIGATION PLANS) SHALL BE COMPLETED IN THE REMAINDER OF THE PARK AREAS AS INDICATED ON THE PLANS. ANY AREAS OF EXISTING TURF DAMAGED BY CONSTRUCTION OR IRRIGATION TRENCHING SHALL BE REPAIRED AT THE CONTRACTOR'S EXPENSE BY OVERSEEDING WITH A SEED MIX OF SIMILAR COMPOSITION AS THE TURF TO BE REPLACED AND FERTILIZED WITH A BALANCED LONG-RELEASE TURF FERTILIZER.

PLANT LEGEND

SYMBOL	ABBREV.	WUCOLS	BOTANICAL NAME	COMMON NAME	SIZE	SPACING	REMARKS	QTY.
TREES								
	T-1	M	LOPHOSTEMON CONFERTUS	BRISBANE BOX	24" BOX	AS SHOWN	LOW BRANCHING	16
	T-2	M	PISTACHE CHINENSIS	CHINESE PISTACHE	24" BOX	AS SHOWN	STANDARD	18
	T-3	L	QUERCUS BUCKLEYI	TEXAS RED OAK	36" BOX	AS SHOWN	LOW BRANCHING	2
	E-1		EXISTING TREE	EXISTING TREE	EXISTING	EXISTING	PROTECT IN PLACE	
SHRUBS / GROUNDCOVERS								
	G-1	H	TURF-SOD	A-G SOD BALL PARK BLEND	SOD	PER PLAN		74,450 SQ.FT.
	G-2	L	LANTANA 'NEW GOLD'	NEW GOLD LANTANA	1 GAL.	48" O.C.		793
	G-3		INSTALL A 3" LAYER OF COMPOSED RECYCLED GREENWASTE WOOD CHIP MULCH 4" MINUS SIZE. MULCH SHALL BE SPREAD EVENLY THROUGHOUT ALL PLANTER AREAS SHOWN. REFER TO SPECIFICATIONS. SUBMIT SAMPLE FOR APPROVAL PRIOR TO OBTAINING AND INSTALLATION.					28,149 SQ.FT.

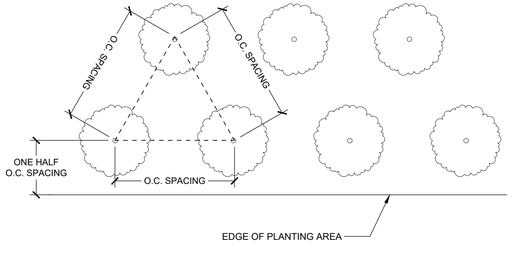

NOTES:
1. ALL SHRUBS/GROUNDCOVER TO BE TRIANGULAR SPACED UNLESS SHOWN OTHERWISE. SEE PLANTING LEGEND FOR O.C. SPACING.

ON-CENTER TRIANGULAR PLANT SPACING

N.T.S. | BOE VERSION Sep/07 | RP DETAIL L2060

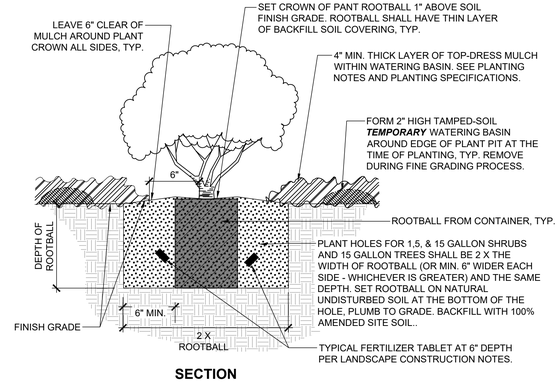

SECTION

NOTES:
1. PLANTING FINISH GRADE SHALL BE DEFINED AS TOP OF SOIL.
2. IN ALL CASES THE PLANT ROOTBALL SHALL BE COMPLETELY COVERED WITH BACKFILL SOIL - NO PORTION OF THE ROOTHBALL SHALL BE LEFT EXPOSED TO AIR OR SUNLIGHT ***BEFORE APPLICATION OF MULCH***.
3. DELETE FERTILIZER TABLETS FOR CERTAIN CALIF. NATIVE PLANTS - SEE PLANTING LEGEND.

SHRUB PLANTING

N.T.S. | BOE VERSION OCT/19 | RP DETAIL L2030

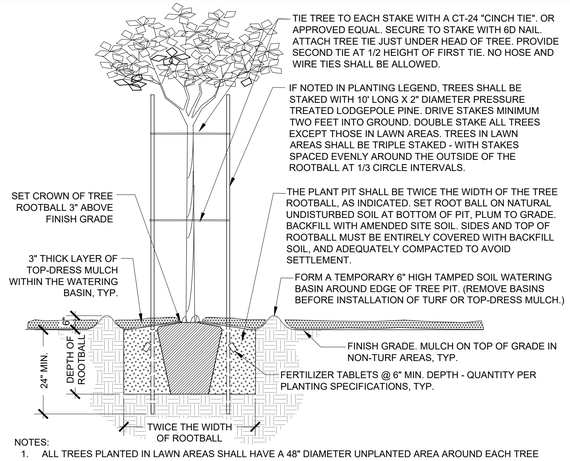

NOTES:
1. ALL TREES PLANTED IN LAWN AREAS SHALL HAVE A 48" DIAMETER UNPLANTED AREA AROUND EACH TREE TRUNK. INSTALL 4" TOP-DRESS MULCH INSIDE CIRCLE.
2. WHEN PLANTING TREES IN AREAS TO RECEIVE SOD, CONTRACTOR SHALL COMPENSATE FOR THE THICKNESS OF THE SOD AND SET TOP OF TREE ROOTBALL APPROPRIATELY TO AVOID A LOW AREA AND PONDING OF WATER.

TREE PLANTING AND STAKING

N.T.S. | BOE VERSION DEC/19 | RP DETAIL L2000

THE CITY OF LOS ANGELES OR ITS OFFICERS OR AGENTS SHALL NOT BE RESPONSIBLE FOR THE ACCURACY OR COMPLETENESS OF ELECTRONIC COPIES OF THIS PLAN SHEET.

REVISION DATES (DESIGN STAGE ONLY)

CITY OF LOS ANGELES DEPARTMENT OF PUBLIC WORKS
BUREAU OF ENGINEERING
THIS PLAN WAS ELECTRONICALLY SIGNED AND STAMPED

ENGINEERING
CITY OF LOS ANGELES

REGISTERED LANDSCAPE ARCHITECT — No. 5962 — STATE OF CALIFORNIA — 03/31/2023 — 10/31/2023 — 01/31/2024

VERTICAL CONTROL: BENCH MARK: 18-02215 NAVD 88
HORIZONTAL CONTROL: CALIFORNIA STATE PLANE ZONE V, 1983 NAD

SHEET TITLE: LANDSCAPE PLANTING LEGEND AND DETAILS

PROJECT: STRATHERN PARK NORTH
STORMWATER CAPTURE PROJECT

ADDRESS: STRATHERN PARK NORTH
8041 WHISETT AVE, NORTH HOLLYWOOD, CA 91605

NO.	REVISIONS	DATE	BY
		YY/MM/DD	
		YY/MM/DD	
		YY/MM/DD	
		YY/MM/DD	

CIP NO. SCP0003

INDEX NO.

CITY ENGINEER

	DESIGN GROUP	DATE
ENGINEER:	CDM SMITH INC.	01/31/2023
ARCHITECT:	NUVIS LANDSCAPE ARCHITECTURE	01/31/2023
DESIGNED BY:	P. CARDOZA	01/31/2023
DRAWN BY:	L. KLECKER	01/31/2023
CHECKED BY:	P. CARDOZA	01/31/2023
APPROVED BY:	A.DELLINGER	01/31/2023

TED ALLEN, P.E.

WORK ORDER EW4008F

SHEET NAME LP02

SHEET 44 OF 85 SHEETS

TREE PROTECTION – EXISTING TREES
All trees to remain in place shall be protected using the following guidelines:

TREE PROTECTION SPECIFICATIONS
These tree protection specifications shall be followed to protect all trees whose dripline is encroached upon either directly or indirectly by construction within City parks.

ANY FAILURE BY THE CONTRACTOR TO ADHERE TO THE REQUIREMENTS SPECIFIED BELOW WILL RESULT IN THE SUSPENSION OF ALL CONSTRUCTION ACTIVITIES, TO BE DONE AT THE CONTRACTOR'S EXPENSE. THE CONTRACTOR SHALL BE RESPONSIBLE FOR REPLACEMENT OF OR PAYMENT FOR ANY TREES DAMAGED THROUGH NON-COMPLIANCE WITH THESE SPECIFICATIONS. THE MONETARY OR REPLACEMENT VALUE OF IMPACTED TREES WILL BE DETERMINED BY A RECREATION AND PARKS (RAP) ARBORIST OR BY A RAP APPROVED ISA CERTIFIED ARBORIST.

A Recreation and Parks Arborist shall be invited to the Job Start Meeting and also notified 48-hours prior to construction. Contact Steve Dunlap (213) 485-4826.

All trees that occur within the area of work, as shown on the plans, and *NOT* specifically designated for removal, shall be protected by the following means:

1. **Defining the Tree Protection Zone (TPZ)** - The **radius** (not the diameter) of the TPZ, measured from the outside of the tree trunk, shall be calculated according to the following:
   (a) **Single trunk trees -** multiply the trunk diameter in inches, measured 4.5' above grade, by 1.5 feet.
   (b) **Multi trunk trees -** multiply the sum of the diameters of all trunks in inches, measured 4.5' above grade, by 1.5 feet.
   (c) **Palm trees -** 5' from the base of the trunk.
   (d) **If a TPZ is delineated on the plans, the size and shape shown on the plans shall supercede the above requirements.**

2. The contractor shall install a 5' high temporary chain link fence with one pedestrian access gate along the boundary of the TPZ. See detail for temporary chain link fence on detail sheet.

3. The contractor shall provide one sign per each 20 lineal ft. of fence surrounding the TPZ indicating that fencing shall not be removed. See TPZ sign detail.

4. No work is permitted within the TPZ without the approval of: 1) the project Landscape Architect, 2) the Project Manager, and 3) RAP Forestry staff. Any work authorized by RAP Forestry staff within the TPZ must be done in accordance with the recommendations of RAP Forestry and under the supervision of a Monitoring Arborist. The Monitoring Arborist shall be supplied by the Contractor at his own expense, and be an ISA Certified Arborist or a Registered Consulting Arborist with verifiable experience in protecting trees. The Monitoring Arborist must be approved by RAP Forestry prior to commencement of work.

5. Within the TPZ, the contractor shall adhere to the following requirements, including, but not limited to:
   (a) No stockpiling or storage of any material, debris, or soil.
   (b) No storage of any construction equipment.
   (c) No vehicular access.
   (d) No un-approved trenching, excavation or disturbance of soil will be allowed.
   (e) No objects of any kind shall be attached to tree trunks.
   (f) For any approved excavation or trenching, no cutting of roots over 2" diameter will be allowed. Contractor shall use a pneumatic drill (a.k.a. "air spade") to excavate under woody roots larger than 2" in diameter. If any roots are unintentionally severed, remedial cuts are to be made under the supervision the Monitoring arborist, and soil backfilled immediately.

6. Within the boundaries of the construction zone (including the TPZ), the contractor shall be responsible for mitigating construction-related dust accumulation on all trees by spraying the trunks, limbs, and foliage with water to a maximum height of 30 feet during the months of April through November, at monthly intervals.

7. Beyond the TPZ, the contractor shall also be responsible for protecting all existing trees to remain in place within the boundaries of the construction zone, including vehicular access areas, lay down areas, and any other areas impacted by construction activities. Any damage to trees in these areas shall also be subject to the same monetary or replacement requirements specified below. Any necessary root cutting in this area must be approved in advance by either RAP Forestry or by a RAP approved ISA certified arborist employed by the Contractor. See also the General Conditions for any damage done by the contractor to landscaping or other park amenities that fall outside the boundaries of the construction zone.

8. Irrigation to all existing trees NOT specifically designated for removal shall be kept in operation for the duration of the project. Contractor shall be responsible for hand watering all impacted trees if necessitated by temporary shutdowns to or demolition of existing irrigation systems. Trees are to be irrigated deeply and as often as required such that soil moisture is detectable at a minimum depth of 18" using a soil probe.

9. Upon completion of all trenching, grading, excavation and soil preparation work, contractor shall remove all items installed to protect trees during the construction process with approval of the Project Manager.

10. Any of the following Southern California native tree species fall under Ordinance No. 177404 of the Los Angeles Municipal Code:
    (a) Oaks, including Valley Oak (*Quercus lobata)*, California Live Oak (*Quercus agrifolia)*, or any other tree of the oak genus indigenous to California but excluding Scrub Oak *(Quercus dumosa/Q. berberidifolia);*
    (b) Southern California Black Walnut *(Juglans californica* var. *californica);*
    (c) Western Sycamore *(Platanus racemosa);*
    (d) California Bay *(Umbellularia californica).*

Contractor shall comply with the requirements of the ordinance found at: http://cityplanning.lacity.org/Code_Studies/Other/ProtectedTreeOrd.pdf.

DAMAGES
If a tree that is designated to remain is removed or caused to be irreversibly damaged as determined by the Recreation and Parks Arborist, install a replacement tree matching in size, quality and variety using an installer designated by the Recreation and Parks Arborist. If an acceptable replacement tree is not available, pay damages to the City for the value of the damaged tree as assessed by the tree value formula in the ISA Guide for Establishing Value of Trees and Other Plants.

FENCING MATERIALS

1. POSTS: O.D., LINE POSTS 2-3/8 IN. O.D. POST SPACING TO BE 10'-0" MAX. POSTS TO BE DRIVEN 2' BELOW RELATIVE GRADE.
2. FABRIC: 9 GAUGE, 2 IN. MESH, KNUCKLE TOP AND BOTTOM, PLACE ON OUTER SIDE OF POST.
3. TIE WIRES: 11 GAUGE AT 12" O.C.
4. POST TOPS MALLEABLE IRON OR PRESSED STEEL.
5. 24"x18" SIGN. ATTACH WITH TIE WIRES. SIGN TO BE PROVIDED BY RAP.
6. HINGES: INDUSTRIAL BULLDOG HINGE (180 SWING) 2 HINGES PER GATE, ONE TOP AND ONE BOTTOM.
7. GATE FRAME: SIDES, 2-3/8" DIA
8. LOCKABLE CAST ALUMINUM FORK LATCH POST TOPS MALLEABLE IRON OR PRESSED STEEL.

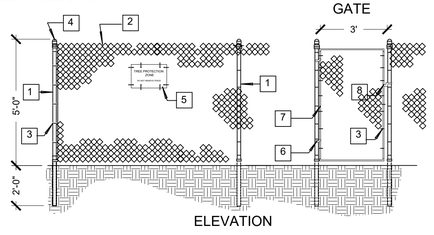

NOTES:
1. THE BOTTOM OF THE FABRIC SHALL BE POSITIONED ONE INCH ABOVE FINISH GRADE.
2. PROVIDE FOR ONE 3' WIDE GATE PER ENCLOSURE.
3. ALL FENCING TO HAVE A STANDARD GALVANIZED FINISH.

4 | 5' HIGH TREE PROTECTION FENCE
N.T.S. | RP DETAIL 500.1

THE CITY OF LOS ANGELES OR ITS OFFICERS OR AGENTS SHALL NOT BE RESPONSIBLE FOR THE ACCURACY OR COMPLETENESS OF ELECTRONIC COPIES OF THIS PLAN SHEET.

REVISION DATES (DESIGN STAGE ONLY)

ENGINEERING
CITY OF LOS ANGELES

THIS PLAN WAS ELECTRONICALLY • SIGNED AND STAMPED •

REGISTERED LANDSCAPE ARCHITECT — No. 5962 — STATE OF CALIFORNIA — 01/31/2023

BUREAU OF ENGINEERING

VERTICAL CONTROL: BENCH MARK: 18-02215 NAVD 88
HORIZONTAL CONTROL: CALIFORNIA STATE PLANE ZONE V, 1983 NAD

SHEET TITLE: TREE PROTECTION GUIDELINES
PROJECT: STRATHERN PARK NORTH STORMWATER CAPTURE PROJECT
ADDRESS: STRATHERN PARK NORTH 8041 WHISETT AVE, NORTH HOLLYWOOD, CA 91605

NO.	REVISIONS	DATE	BY
		YY/MM/DD	
		YY/MM/DD	
		YY/MM/DD	
		YY/MM/DD	

CIP NO. SCP0003

INDEX NO.

CITY OF LOS ANGELES DEPARTMENT OF PUBLIC WORKS

CITY ENGINEER: TED ALLEN, P.E. — DATE: 01/31/2023

	DESIGN GROUP	DATE
ENGINEER:	CDM SMITH INC.	01/31/2023
ARCHITECT:	NUVIS LANDSCAPE ARCHITECTURE	01/31/2023
DESIGNED BY:	P. CARDOZA	01/31/2023
DRAWN BY:	L. KLECKER	01/31/2023
CHECKED BY:	P. CARDOZA	01/31/2023
APPROVED BY:	A.DELLINGER	01/31/2023

WORK ORDER EW4008F

SHEET NAME LP03

SHEET 45 OF 85 SHEETS

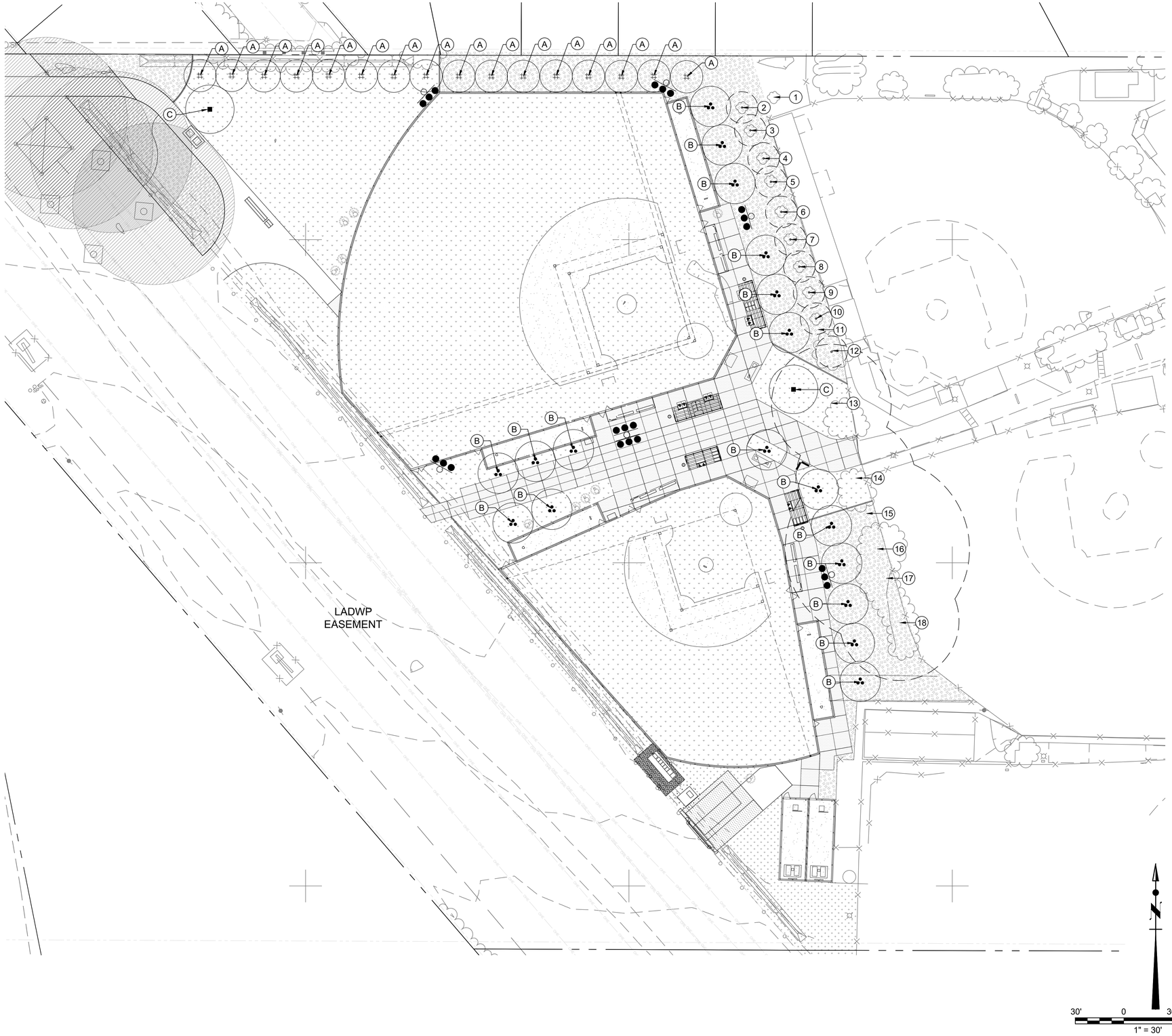

TREE INVENTORY

NO.	BOTANICAL NAME	COMMON NAME	DIA.	REMARKS
1	LOPHOSTEMON CONFERTUS	BRISBANE BOX	3"	
2	LOPHOSTEMON CONFERTUS	BRISBANE BOX	3"	
3	LOPHOSTEMON CONFERTUS	BRISBANE BOX	3"	
4	LOPHOSTEMON CONFERTUS	BRISBANE BOX	2"	
5	LOPHOSTEMON CONFERTUS	BRISBANE BOX	3"	
6	LOPHOSTEMON CONFERTUS	BRISBANE BOX	4"	
7	LOPHOSTEMON CONFERTUS	BRISBANE BOX	3"	
8	LOPHOSTEMON CONFERTUS	BRISBANE BOX	3"	
9	LOPHOSTEMON CONFERTUS	BRISBANE BOX	3"	
10	LOPHOSTEMON CONFERTUS	BRISBANE BOX	3"	
11	PLATANUS RACEMOSA	CALIFORNIA SYCAMORE	10"	
12	POPULUS FREMONTII	FREMONT COTTONWOOD	21"	
13	POPULUS FREMONTII	FREMONT COTTONWOOD	21"	
14	POPULUS FREMONTII	FREMONT COTTONWOOD	17"	
15	POPULUS FREMONTII	FREMONT COTTONWOOD	32"	
16	POPULUS FREMONTII	FREMONT COTTONWOOD	18"	
17	POPULUS FREMONTII	FREMONT COTTONWOOD	25"	
18	POPULUS FREMONTII	FREMONT COTTONWOOD	15"	

TOTAL REMOVED CALIPER INCHES: 0

PROPOSED TREES

NO.	BOTANICAL NAME	COMMON NAME	DIA.	QUANTITY
A	LOPHOSTEMON CONFERTUS	BRISBANE BOX	2"	16
B	PISTACHE CHINENSIS	CHINESE PISTACHE	2"	18
C	QUERCUS BUCKLEYI	TEXAS RED OAK	2"	2

TOTAL PROPOSED CALIPER INCHES: 72*

* NOTE: PROPOSED CALIPER DIA. INCH IS BASED ON THE FOLLOWING:
15 GALLON TREE = 1" CALIPER
24" BOX TREE= 2" CALIPER
36" BOX TREE = 3" CALIPER
48" BOX TREE = 4" CALIPER

THE CITY OF LOS ANGELES OR ITS OFFICERS OR AGENTS SHALL NOT BE RESPONSIBLE FOR THE ACCURACY OR COMPLETENESS OF ELECTRONIC COPIES OF THIS PLAN SHEET.

REVISION DATES (DESIGN STAGE ONLY)

CITY OF LOS ANGELES DEPARTMENT OF PUBLIC WORKS BUREAU OF ENGINEERING

THIS PLAN WAS ELECTRONICALLY • SIGNED AND STAMPED •

ENGINEERING
CITY OF LOS ANGELES

REG. STAMP: LANDSCAPE ARCHITECT, LAMONT V. PAK, 5962, 01/31/2023, 10/31/2024, STATE OF CALIFORNIA

VERTICAL CONTROL: BENCH MARK: 18-02215 NAVD 88
HORIZONTAL CONTROL: CALIFORNIA STATE PLANE ZONE V, 1983 NAD

SHEET TITLE: TREE INVENTORY

PROJECT: STRATHERN PARK NORTH STORMWATER CAPTURE PROJECT

ADDRESS: STRATHERN PARK NORTH 8041 WHISETT AVE, NORTH HOLLYWOOD, CA 91605

NO.	REVISIONS	DATE	BY
		YY/MM/DD	
		YY/MM/DD	
		YY/MM/DD	
		YY/MM/DD	

CIP NO. SCP0003

INDEX NO.

CITY ENGINEER: TED ALLEN, P.E. — DATE: 01/31/2023

DESIGN GROUP	
ENGINEER:	CDM SMITH INC.
ARCHITECT:	NUVIS LANDSCAPE ARCHITECTURE
DESIGNED BY:	P. CARDOZA
DRAWN BY:	L. KLECKER
CHECKED BY:	P. CARDOZA
APPROVED BY:	A.DELLINGER

(all dates 01/31/2023)

WORK ORDER
EW4008F

SHEET NAME
LP04

SHEET 46 OF 85 SHEETS

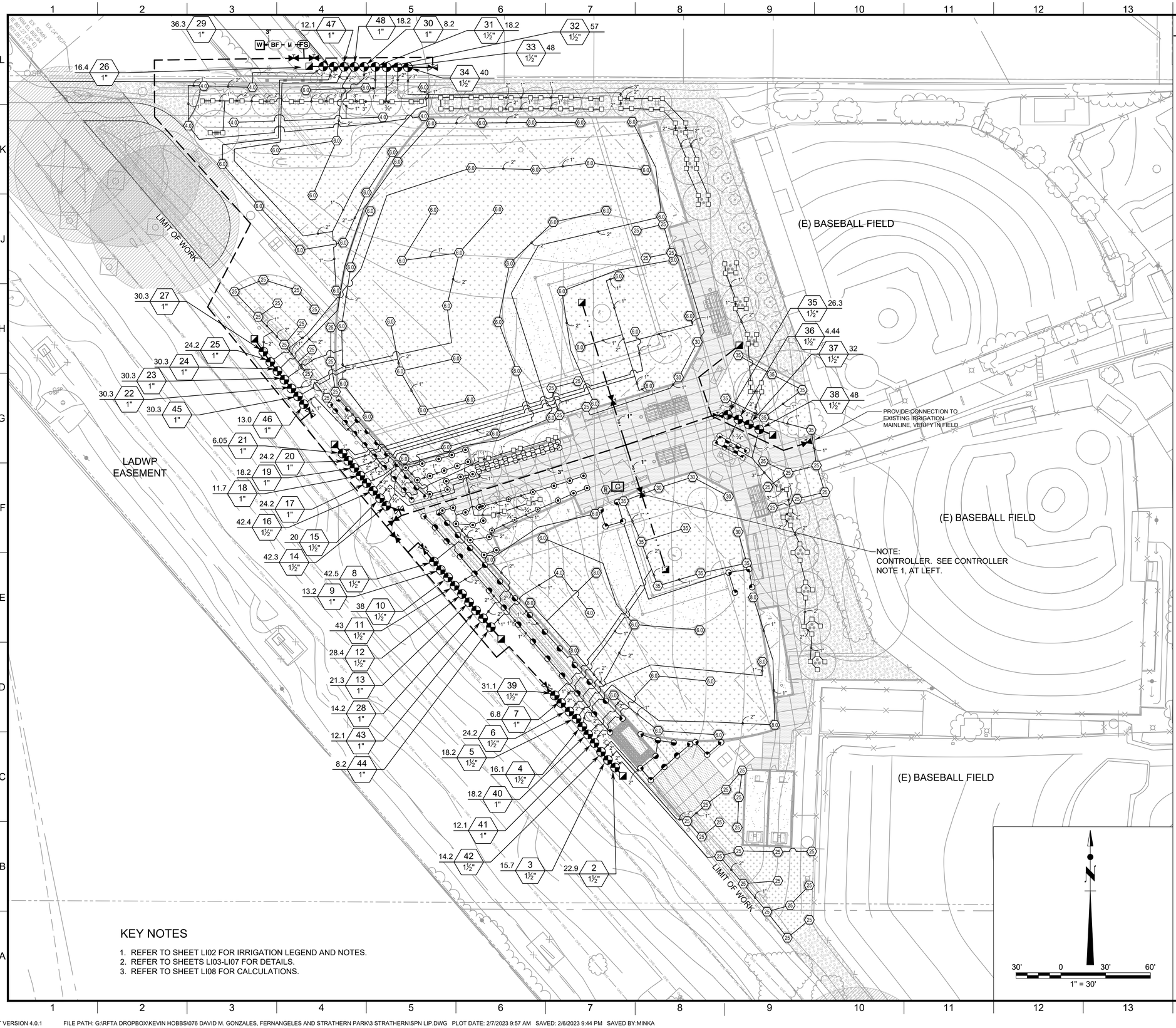

KEY NOTES

1. REFER TO SHEET LI02 FOR IRRIGATION LEGEND AND NOTES.
2. REFER TO SHEETS LI03-LI07 FOR DETAILS.
3. REFER TO SHEET LI08 FOR CALCULATIONS.

IRRIGATION SCHEDULE

SYMBOL	MANUFACTURER/MODEL/DESCRIPTION
Q T H TT TQ F	TORO 570Z-6P-PRX 8 SERIES TURF SPRAY, 6" POP-UP WITH BUILT IN-RISER PRESSURE REGULATOR, AND X-FLOW WATER SHUT-OFF DEVICE. ALSO INCLUDES THE ZERO FLUSH WIPER SEAL. 1/2" FEMALE-THREADED INLET.
Q T H TT TQ F	TORO 570Z-6P-PRX 10 SERIES TURF SPRAY, 6" POP-UP WITH BUILT IN-RISER PRESSURE REGULATOR, AND X-FLOW WATER SHUT-OFF DEVICE. ALSO INCLUDES THE ZERO FLUSH WIPER SEAL. 1/2" FEMALE-THREADED INLET.
Q T H TT TQ F	TORO 570Z-6P-PRX 15 SERIES TURF SPRAY, 6" POP-UP WITH BUILT IN-RISER PRESSURE REGULATOR, AND X-FLOW WATER SHUT-OFF DEVICE. ALSO INCLUDES THE ZERO FLUSH WIPER SEAL. 1/2" FEMALE-THREADED INLET.
8 10 12 15	TORO 570Z-6P-PRX ADJUSTABLE ARC TURF SPRAY, 6" POP-UP WITH BUILT IN-RISER PRESSURE REGULATOR, AND X-FLOW WATER SHUT-OFF DEVICE. ALSO INCLUDES THE ZERO FLUSH WIPER SEAL. 1/2" FEMALE-THREADED INLET.
1401 1402 1404 1408	RAIN BIRD RWS-B-C W/ RWS-SOCK 1401 ROOT WATERING SYSTEM WITH 4" DIAMETER X 36" LONG WITH LOCKING GRATE. SEMI-RIGID MESH TUBE. CHECK VALVE AND SAND SOCK. RAIN BIRD BUBBLER OPTION AS INDICATED: 1401 0.25 GPM, 1402 0.5 GPM, 1404 1.0 GPM, 1408 2 GPM.

SYMBOL	MANUFACTURER/MODEL/DESCRIPTION
25	RAINBIRD 5000 SERIES ROTOR WITH MPR NOZZLE 25 TURF ROTOR WITH SWING JOINT PER DETAIL 502/LI05.
30	RAINBIRD 5000 SERIES ROTOR WITH MPR NOZZLE 30 TURF ROTOR WITH SWING JOINT PER DETAIL 502/LI05.
35	RAINBIRD 5000 SERIES ROTOR WITH MPR NOZZLE 35 TURF ROTOR WITH SWING JOINT PER DETAIL 502/LI05.
4.0	TORO T5 RAPIDSET SS 4.0 SERIES TURF ROTOR WITH RAINBIRD SWING JOINT PER DETAIL 302/LI03. PROVIDE LA (LOW ANGLE) WITH 12" BODY AT SHRUB AREAS
6.0	TORO T5 RAPIDSET SS 6.0 SERIES TURF ROTOR WITH RAINBIRD SWING JOINT PER DETAIL 302/LI03. PROVIDE LA (LOW ANGLE) WITH 12" BODY AT SHRUB AREAS
8.0	TORO T5 RAPIDSET SS 8.0 SERIES TURF ROTOR WITH RAINBIRD SWING JOINT PER DETAIL 302/LI03. PROVIDE LA (LOW ANGLE) WITH 12" BODY AT SHRUB AREAS

SYMBOL	MANUFACTURER/MODEL/DESCRIPTION
	TORO 220 BRASS REMOTE CONTROL VALVE (RCV), SIZE AS SHOWN. INSTALL PER DETAIL 401/LI04
	RAIN BIRD 44-LRC 1" QUICK COUPLER VALVE WITH LOCKING VINYL COVER PER DETAIL 405/LI04
	MANIFOLD GATE VALVE 3"X 6" GASKET X MALE SWIVEL LATERAL ISOLATION VALVE. (HARCO PT # 8413062PN)
	NIBCO PCR-619-RW IPS 3" INSTALL PER DETAIL 404/LI04
M	BUCKNER-SUPERIOR 3100 2" 2" NORMALLY OPEN MASTER VALVE. INSTALL PER DETAIL 304/LI03
BF	FEBCO LF860-NRS 2" REDUCED PRESSURE ZONE ASSEMBLY BACKFLOW DEVICE.
C	RAIN MASTER EAGLE PLUS 2-WIRE CONTROLLER ASSEMBLY WITH MODEL TW-D-1 (EGP-TW, EGP-ICENTRAL, EGP-ISVC5Y) 2-WIRE DECODERS AND MODEL TW-LA-1 LIGHTNING ARRESTOR EVERY 600 FT. INSTALL CONTROLLER WITHIN STRONG BOX MODEL SB-24SS FRONT OPENING STAINLESS STEEL ENCLOSURE. VERIFY PRECISE LOCATION WITH PROJECT MANAGER BEFORE INSTALLATION OF ELECTRICAL SUPPLY LINE.
R	HUNTER MINI-CLIK RAIN SENSOR
FS	TORO TFS-200 2" FLOW SENSOR. INSTALL PER DETAIL 304/LI03. WIRE DIRECTLY TO CONTROLLER USING RAINMASTER SEND-CAB-14 SENSOR CABLE IN SCH 80 PVC CONDUIT. CONNECT TO CONTROLLER PER MFR`S INSTRUCTIONS.
	IRRIGATION LATERAL LINE: IRRIGATION LATERAL LINE: IRRIGATION LATERAL LINE PVC LATERAL PIPE SCH. 40, SOLVENT WELD WITH SCH. 40 PVC FITTINGS
	IRRIGATION MAINLINE: PVC MAINLINE CLASS 200 BELL AND GASKET. 3" AND LARGER WITH DUCTILE IRON PUSH-ON FITTINGS AND MECHANICAL JOINT RESTRAINTS. 30" MIN. COVER.
	IRRIGATION MAINLINE: PVC MAINLINE. SCH. 40 - 2" AND SMALLER WITH SOLVENT WELD FITTINGS. 24" MIN. COVER.

Valve Callout
Valve Number
Valve Flow
#" Valve Size

THE CITY OF LOS ANGELES OR ITS OFFICERS OR AGENTS SHALL NOT BE RESPONSIBLE FOR THE ACCURACY OR COMPLETENESS OF ELECTRONIC COPIES OF THIS PLAN SHEET.

REVISION DATES (DESIGN STAGE ONLY)

ENGINEERING
CITY OF LOS ANGELES

REGISTERED LANDSCAPE ARCHITECT V. HOBBS No. 5962 STATE OF CALIFORNIA
07/31/2023 RENEWAL 08/31/2025

THIS PLAN WAS ELECTRONICALLY • SIGNED AND STAMPED

CITY OF LOS ANGELES DEPARTMENT OF PUBLIC WORKS
BUREAU OF ENGINEERING

VERTICAL CONTROL: BENCH MARK: 18-02215 NAVD 88
HORIZONTAL CONTROL: CALIFORNIA STATE PLANE ZONE V. 1983 NAD

SHEET TITLE: IRRIGATION PLAN
PROJECT: STRATHERN PARK NORTH STORMWATER CAPTURE PROJECT
ADDRESS: STRATHERN PARK NORTH 804 1 WHISETT AVE, NORTH HOLLYWOOD, CA 91605

NO.	REVISIONS	DATE	BY
		YY/MM/DD	
		YY/MM/DD	
		YY/MM/DD	
		YY/MM/DD	

CIP NO. SCP0003

INDEX NO.

CITY ENGINEER

DESIGN GROUP	DATE
ENGINEER: CDM SMITH INC.	01/31/2023
ARCHITECT: NUVIS LANDSCAPE ARCHITECTURE	01/31/2023
DESIGNED BY: P. CARDOZA	01/31/2023
DRAWN BY: L. KLECKER	01/31/2023
CHECKED BY: P. CARDOZA	01/31/2023
APPROVED BY: A.DELLINGER	01/31/2023

TED ALLEN, P.E.

WORK ORDER EW4008F

SHEET NAME LI01

SHEET 47 OF 85 SHEETS

SHEET VERSION 4.0.1 FILE PATH: G:\RFTA DROPBOX\KEVIN HOBBS\076 DAVID M. GONZALES, FERNANGELES AND STRATHERN PARK\3 STRATHERN\SPN LIP.DWG PLOT DATE: 2/7/2023 9:57 AM SAVED: 2/6/2023 9:44 PM SAVED BY:MINKA

IRRIGATION SCHEDULE

SYMBOL	MANUFACTURER/MODEL/DESCRIPTION	QTY	PSI
Q T H TT TQ F	TORO 570Z-6P-PRX 8 SERIES TURF SPRAY, 6" POP-UP WITH BUILT IN-RISER PRESSURE REGULATOR, AND X-FLOW WATER SHUT-OFF DEVICE. ALSO INCLUDES THE ZERO FLUSH WIPER SEAL. 1/2" FEMALE-THREADED INLET.	20	30
Q T H TT TQ F	TORO 570Z-6P-PRX 10 SERIES TURF SPRAY, 6" POP-UP WITH BUILT IN-RISER PRESSURE REGULATOR, AND X-FLOW WATER SHUT-OFF DEVICE. ALSO INCLUDES THE ZERO FLUSH WIPER SEAL. 1/2" FEMALE-THREADED INLET.	28	30
Q T H TT TQ F	TORO 570Z-6P-PRX 15 SERIES TURF SPRAY, 6" POP-UP WITH BUILT IN-RISER PRESSURE REGULATOR, AND X-FLOW WATER SHUT-OFF DEVICE. ALSO INCLUDES THE ZERO FLUSH WIPER SEAL. 1/2" FEMALE-THREADED INLET.	48	30
8 10 12 15	TORO 570Z-6P-PRX ADJUSTABLE ARC TURF SPRAY, 6" POP-UP WITH BUILT IN-RISER PRESSURE REGULATOR, AND X-FLOW WATER SHUT-OFF DEVICE. ALSO INCLUDES THE ZERO FLUSH WIPER SEAL. 1/2" FEMALE-THREADED INLET.	38	30
1401 1402 1404 1408	RAIN BIRD RWS-B-C W/ RWS-SOCK 1401 ROOT WATERING SYSTEM WITH 4" DIAMETER X 36" LONG WITH LOCKING GRATE. SEMI-RIGID MESH TUBE . CHECK VALVE AND SAND SOCK. RAIN BIRD BUBBLER OPTION AS INDICATED: 1401 0.25 GPM, 1402 0.5 GPM, 1404 1.0 GPM, 1408 2 GPM.	112	30

SYMBOL	MANUFACTURER/MODEL/DESCRIPTION	QTY	PSI
25	RAINBIRD 5000 SERIES ROTOR WITH MPR NOZZLE 25 TURF ROTOR WITH SWING JOINT PER DETAIL 502/LI05.	48	45
30	RAINBIRD 5000 SERIES ROTOR WITH MPR NOZZLE 30 TURF ROTOR WITH SWING JOINT PER DETAIL 502/LI05.	6	45
35	RAINBIRD 5000 SERIES ROTOR WITH MPR NOZZLE 35 TURF ROTOR WITH SWING JOINT PER DETAIL 502/LI05.	12	45
4.0	TORO T5 RAPIDSET SS 4.0 SERIES TURF ROTOR WITH RAINBIRD SWING JOINT PER DETAIL 302/LI03. PROVIDE LA (LOW ANGLE) WITH 12" BODY AT SHRUB AREAS	8	45
6.0	TORO T5 RAPIDSET SS 6.0 SERIES TURF ROTOR WITH RAINBIRD SWING JOINT PER DETAIL 302/LI03. PROVIDE LA (LOW ANGLE) WITH 12" BODY AT SHRUB AREAS	66	45
8.0	TORO T5 RAPIDSET SS 8.0 SERIES TURF ROTOR WITH RAINBIRD SWING JOINT PER DETAIL 302/LI03. PROVIDE LA (LOW ANGLE) WITH 12" BODY AT SHRUB AREAS	6	45

MAX SPACING SHALL NOT EXCEED MANUFACTURER STATED RADIUS AT AVAILABLE OPERATING PRESSURE.

SYMBOL	MANUFACTURER/MODEL/DESCRIPTION	QTY
	TORO 220 BRASS REMOTE CONTROL VALVE (RCV), SIZE AS SHOWN. INSTALL PER DETAIL 401/LI04	47
	RAIN BIRD 44-LRC 1" QUICK COUPLER VALVE WITH LOCKING VINYL COVER PER DETAIL 405/LI04	9
	MANIFOLD GATE VALVE 3"X 6" GASKET X MALE SWIVEL LATERAL ISOLATION VALVE, (HARCO PT # 8413062PN)	6
	NIBCO PCR-619-RW IPS 3" INSTALL PER DETAIL 404/LI04	7
M	BUCKNER-SUPERIOR 3100 2" 2" NORMALLY OPEN MASTER VALVE. INSTALL PER DETAIL 304/LI03	1
BF	FEBCO LF860-NRS 2" REDUCED PRESSURE ZONE ASSEMBLY BACKFLOW DEVICE.	1
C	RAIN MASTER EAGLE PLUS 2-WIRE CONTROLLER ASSEMBLY WITH MODEL TW-D-1 (EGP-TW, EGP-ICENTRAL, EGP-ISVC5Y) 2-WIRE DECODERS AND MODEL TW-LA-1 LIGHTNING ARRESTOR EVERY 600 FT. INSTALL CONTROLLER WITHIN STRONG BOX MODEL SB-24SS FRONT OPENING STAINLESS STEEL ENCLOSURE. VERIFY PRECISE LOCATION WITH PROJECT MANAGER BEFORE INSTALLATION OF ELECTRICAL SUPPLY LINE.	1
R	HUNTER MINI-CLIK RAIN SENSOR	1
FS	TORO TFS-200 2" FLOW SENSOR. INSTALL PER DETAIL 304/LI03. WIRE DIRECTLY TO CONTROLLER USING RAINMASTER SEND-CAB-14 SENSOR CABLE IN SCH 80 PVC CONDUIT. CONNECT TO CONTROLLER PER MFR'S INSTRUCTIONS.	1
	IRRIGATION LATERAL LINE: IRRIGATION LATERAL LINE: IRRIGATION LATERAL LINE PVC LATERAL PIPE SCH. 40, SOLVENT WELD WITH SCH. 40 PVC FITTINGS	10,751 L.F.
	IRRIGATION MAINLINE: PVC MAINLINE CLASS 200 BELL AND GASKET. 3" AND LARGER WITH DUCTILE IRON PUSH-ON FITTINGS AND MECHANICAL JOINT RESTRAINTS. 30" MIN. COVER.	1,625 L.F.
	IRRIGATION MAINLINE: PVC MAINLINE, SCH. 40 - 2" AND SMALLER WITH SOLVENT WELD FITTINGS. 24" MIN. COVER.	184.9 L.F.

Valve Callout

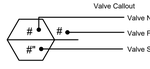

NO SYMBOL	AS APPROVED	1-1/4" SCH. 40 PVC, GRAY ELECTRICAL CONDUIT FOR FLOW SENSOR / MASTER VALVE WIRES OR CENTRAL CONTROL COMMUNICATION CABLE, PROVIDE PULL BOX AT A MAXIMUM OF 200 FEET ON CENTER FOR A 3 FOOT WIRE LOOP OR ANY SPLICES. INSTALL INSIDE A STANDARD RECTANGULAR VALVE BOX.
NO SYMBOL	PAIGE OR EQUAL	INSULTED CONDUCTORS FOR A 2-WIRE SYSTEM. REFER TO IRRIGATION SYSTEM PROJECT SPECIFICATION MANUAL FOR MORE INFORMATION.
NO SYMBOL	RAIN MASTER	TW-SPLICE-14 14-GUAGE WATER TIGHT CONNECTOR
NO SYMBOL	RAIN BIRD	ALL VALVE BOXES SHALL BE PER DETAILS AND IRRIGATION SYSTEM PROJECT SPECIFICATION MANUAL. FOR USE IN NON-VEHICULAR TRAFFIC SITUATIONS ONLY. DO NOT INSTALL IN CONCRETE OR ASPHALT. ALL BOXES INSTALLED IN PLANTER AREAS.
NO SYMBOL	AS APPROVED	ALL SOLVENT WELD MAINLINES ABOVE 2" IN SIZE SHALL HAVE CONCRETE THRUST BLOCKING INSTALLED AT ALL DIRECTIONAL CHANGES INCLUDING ELBOWS (45° AND 90°) AND TEES. MAINLINE PIPES UNDER 2" SIZE AND ALL LATERAL LINES DO NOT REQUIRE THRUST BLOCKING. SEE THRUST BLOCK DETAIL 504/LI05.
NO SYMBOL	AS APPROVED	VALVE BOX BASE FILL 0.75" CRUSHED GRAVEL
NO SYMBOL	CHRISTY'S OR EQUAL	MODEL STND IDENTIFICATION TAGS
NO SYMBOL	HARCO	EPOXY COATED DUCTILE IRON FITTINGS WITH STAINLESS STEEL HARDWARE. REFER TO SPECIFICATIONS

POINT OF CONNECTION NOTE 1:

POINT OF CONNECTION SHALL BE EXISTING WATER METER AT APPROXIMATE LOCATION SHOWN. VERIFY THE ACTUAL LOCATION, SIZE AND WATER PRESSURE IN THE FIELD PRIOR TO STARTING WORK. IF ANY OF THE POC INFORMATION SHOWN ON THESE DRAWINGS IS FOUND TO BE DIFFERENT THAN THE ACTUAL POC INFORMATION GATHERED IN THE FIELD, IMMEDIATELY NOTIFY THE ENGINEER. SHOULD THE CONTRACTOR FAIL TO VERIFY THE POC INFORMATION ANY CHANGES REQUIRED BY LOW PRESSURE OR VOLUME SHALL BE THE SOLE RESPONSIBILITY OF THE CONTRACTOR.

CONTROLLER NOTE 2:

REMOVE EXISTING CONTROLLER AND INSTALL NEW CONTROLLER PER IRRIGATION LEGEND AND DETAIL. REFER TO MANUFACTURER'S RECOMMENDATIONS. CONTACT OWNER'S AUTHORIZED REPRESENTATIVE FOR LOCATION APPROVAL PRIOR TO INSTALLATION. CONNECT TO EXISTING 120 VAC POWER SUPPLY

NOTE:
THE IRRIGATION SYSTEM WAS DESIGNED FOR A STATIC WATER PRESSURE OF 71 PSI MINIMUM. CONTRACTOR SHALL VERIFY EXISTING STATIC WATER PRESSURE PRIOR TO COMMENCING WORK. IF STATIC WATER PRESSURE IS LESS THAN 73 PSI, THEN CONTRACTOR SHALL NOTIFY THE ENGINEER IMMEDIATELY FOR DIRECTION ON HOW TO PROCEED. FAILURE TO NOTIFY ENGINEER SHALL PLACE ALL REQUIRED REPAIRS/EQUIPMENT AND OTHER RELATED COST AS THE FULL RESPONSIBILITY OF THE IRRIGATION CONTRACTOR.

IRRIGATION NOTES

1. IRRIGATION SYSTEM COMPONENTS ARE SHOWN DIAGRAMMATICALLY. CONTRACTOR SHALL MARK MAINLINE ROUTING AND MANIFOLD LOCATIONS IN THE FIELD FOR REVIEW AND APPROVAL BY ENGINEER. LATERAL LINE LOCATIONS SHALL BE ROUTED WHEN POSSIBLE TO AVOID TREE PROTECTION ZONES. SEE TREE PROTECTION SPECIFICATIONS FOR TRENCHING REQUIREMENTS INSIDE TPZ'S.

2. AT ALL TIMES DURING CONSTRUCTION, CONTRACTOR SHALL MAINTAIN TEMPORARY WATER SUPPLY AND CONTROLLER CONNECTED TO AREAS WITH PLANT MATERIAL TO REMAIN, OR PROVIDE ALTERNATE METHOD OF IRRIGATION. SEE TURF PROTECTION NOTES AND TREE PROTECTION REQUIREMENTS..

3. ANY EXISTING IRRIGATION SYSTEM COMPONENTS DEPICTED HEREIN ARE BASED UPON AS-BUILT RECORD DRAWINGS, AND ARE SHOWN HERE FOR INFORMATIONAL PURPOSES ONLY. CONTRACTOR SHALL VERIFY THE LOCATION OF ALL EXISTING SYSTEM COMPONENTS TO REMAIN PRIOR TO ENGAGING IN CONSTRUCTION ACTIVITIES. CONTRACTOR SHALL IMMEDIATELY NOTIFY PROJECT MANAGER OF ANY DISCREPANCIES BETWEEN AS-BUILT AND EXISTING CONDITIONS.

4. THE CONTRACTOR SHALL VERIFY THE LOCATIONS OF ALL EXISTING UTILITIES, STRUCTURES AND SERVICES BEFORE COMMENCING WORK. THE LOCATIONS OF ANY UTILITIES, STRUCTURES AND SERVICES SHOWN IN THESE PLANS ARE APPROXIMATE ONLY. ANY DISCREPANCIES BETWEEN THESE PLANS AND ACTUAL FIELD CONDITIONS SHALL BE REPORTED TO THE PROJECT MANAGER IMMEDIATELY. THE CONTRACTOR SHALL PROMPTLY REPAIR OR REPLACE ANY EXISTING OR NEWLY CONSTRUCTED UTILITIES OR SITE FEATURES DAMAGED BY THEIR WORK AT THEIR OWN EXPENSE.

5. THE CONTRACTOR SHALL NOT WILLFULLY INSTALL ANY EQUIPMENT AS SHOWN ON THE PLANS WHEN IT IS OBVIOUS IN THE FIELD THAT CONDITIONS OR OBSTRUCTIONS EXIST THAT WERE UNKNOWN AT THE TIME THESE PLANS WERE PREPARED. CONTRACTOR SHALL IMMEDIATELY NOTIFY THE PROJECT MANAGER OF ANY SUCH CONDITIONS PRIOR TO PERFORMING ANY AFFECTED WORK. IN THE EVENT THAT THIS NOTIFICATION IS NOT GIVEN, THE CONTRACTOR SHALL ASSUME FULL RESPONSIBILITY FOR ANY NECESSARY MODIFICATIONS TO COMPLETED WORK.

6. CONTRACTOR SHALL COORDINATE THEIR WORK WITH OTHER CONTRACTORS FOR THE LOCATION AND INSTALLATION OF PIPE SLEEVES AND LATERALS UNDER PAVING IN A TIMELY MANNER. SEE TRENCHING DETAIL FOR SLEEVING REQUIREMENTS. PLACE SLEEVES IN ACCORDANCE WITH APPLICABLE CODES. IRRIGATION CONTRACTOR SHALL BE RESPONSIBLE FOR COORDINATING THE INSTALLATION OF SLEEVES AND CONDUITS OF SUFFICIENT SIZE WITHIN ALL PAVED AREAS IN ADDITION TO SLEEVES AND CONDUITS SHOWN ON THE DRAWINGS.

7. THE CONTRACTOR SHALL FLUSH AND PRESSURE TEST ALL MAINLINES PER LANDSCAPE CONSTRUCTION NOTES. CONTRACTOR SHALL FLUSH ALL LATERAL LINES AND IRRIGATION HEADS PER THE LANDSCAPE CONSTRUCTION NOTES.

8. THE INTENT OF THESE IRRIGATION PLANS IS TO PROVIDE HEAD-TO-HEAD COVERAGE TO ALL TURF AREAS. **WHERE NEW IRRIGATION SYSTEMS INTERFACE WITH EXISTING HEADS TO REMAIN, ACTUAL LOCATIONS OF EXISTING HEADS SHALL BE VERIFIED IN THE FIELD. IF REQUIRED, HEAD LAYOUT IN NEW CONSTRUCTION AREAS WILL BE ADJUSTED IN THE FIELD UNDER THE DIRECTION OF THE ENGINEER AS NEEDED TO ACHIEVE THE REQUIRED COVERAGE**. AS PART OF THE SCOPE OF WORK, THE CONTRACTOR SHALL PROVIDE ANY ADDITIONAL HEADS AND/OR ALTERNATE NOZZLES REQUIRED TO ACHIEVE PROPER COVERAGE WITH A MINIMUM OF OVERSPRAY AT NO ADDITIONAL COST TO THE CITY.

9. UPON COMPLETION OF INSTALLATION, CONTRACTOR SHALL CONDUCT A COVERAGE TEST PER IRRIGATION SPECIFICATIONS. CONTRACTOR SHALL NOTIFY PROJECT MANAGER TO REQUEST THE TEST, WHICH WILL BE SCHEDULED AT THE SOONEST DATE POSSIBLE PER AVAILABILITY OF RAP AND LADWP STAFF.

10. REFER TO IRRIGATION SYSTEMS SPECIFICATIONS FOR ADDITIONAL INFORMATION REGARDING THIS SECTION OF WORK.

11. NOTIFY PROJECT MANAGER OF ANY ASPECTS OF LAYOUT THAT WILL PROVIDE INCOMPLETE OR INSUFFICIENT WATER COVERAGE OF PLANT MATERIAL AND DO NOT PROCEED UNTIL THEIR INSTRUCTIONS ARE OBTAINED.

12. EQUIPMENT SHOWN IN HARDSCAPE AREAS ARE FOR DESIGN CLARIFICATION ONLY AND SHALL BE INSTALLED WHENEVER POSSIBLE WITHIN PLANTED AREAS A REASONABLE, REACHABLE DISTANCE FROM HARDSCAPE OR TURF AREAS.
LOCATION OF MAINLINE ROUTING, MANIFOLDS AND CONTROL WIRE CONDUIT & PULL BOXES SHALL BE LAID OUT BY CONTRACTOR FOR APPROVAL OF RAP STAFF AND PROJECT ENGINEER PRIOR TO EXCAVATION. CONTRACTOR MAY BE REQUIRED TO MODIFY PROPOSED ROUTING AND LOCATIONS AT NO ADDITIONAL COST TO CITY.

13. DUE TO THE SCALE OF THE DRAWINGS, IT IS NOT POSSIBLE TO INDICATE ALL OFFSETS, FITTINGS, SLEEVES, ETC., WHICH MAY BE REQUIRED. CAREFULLY INVESTIGATE THE STRUCTURAL AND FINISHED CONDITIONS AFFECTING ALL WORK AND PLAN WORK ACCORDINGLY, FURNISHING SUCH FITTINGS, ETC., AS MAY BE REQUIRED TO MEET SUCH CONDITIONS. THE WORK SHALL BE INSTALLED IN SUCH A MANNER AS TO AVOID CONFLICTS BETWEEN IRRIGATION SYSTEMS, PLANTING, AND ARCHITECTURAL FEATURES.

14. LOCATION OF TREE PLANTING AND ASSOCIATED IRRIGATION HEADS MAY BE MODIFIED BY THE CITY AT THE TIME OF LAYOUT AT NO ADDITIONAL COST TO THE CITY. MAXIMUM CHANGE IN LOCATION SHALL BE LESS THAN 25'.

TRENCHING NOTES:

1. SEE TREE PROTECTION REQUIREMENTS SHEET LP03 FOR TRENCHING IN TREE PROTECTION ZONES.

2. SPECIAL TRENCHING METHODS INCLUDING BUT NOT LIMITED TO HAND-EXCAVATION MAY BE REQUIRED INSIDE TREE PROTECTION ZONES INCLUDING HAND TRENCHING AT THE DISCRETION OF RAP FORESTRY AND/OR CONTRACTORS' MONITORING ARBORIST.

CRITICAL ANALYSIS

Generated: 2022-12-12 12:46

P.O.C. NUMBER: 01
Water Source Information: NEW 3" WATER METER AT APPROXIMATE LOCATION SHOWN. VERIFY LOCATION, SIZE, AVAILABLE STATIC PRESSURE, AND CONDITION PRIOR TO START OF WORK

FLOW AVAILABLE

Water Meter Size:	3"
Flow Available	225 GPM

PRESSURE AVAILABLE

Static Pressure at POC:	73 PSI
Elevation Change:	5.00 ft
Service Line Size:	4"
Length of Service Line:	20 ft
Pressure Available:	71 PSI

DESIGN ANALYSIS

Maximum Station Flow:	57 GPM
Flow Available at POC:	225 GPM
Residual Flow Available:	168 GPM
Critical Station:	29
Design Pressure:	45 PSI
Friction Loss:	3 PSI
Fittings Loss:	0.3 PSI
Elevation Loss:	0 PSI
Loss through Valve:	7.64 PSI
Pressure Req. at Critical Station:	55.9 PSI
Loss for Fittings:	0 PSI
Loss for Main Line:	0.25 PSI
Loss for POC to Valve Elevation:	0 PSI
Loss for Backflow:	12.4 PSI
Loss for Master Valve:	0.53 PSI
Loss for Water Meter:	1 PSI
Critical Station Pressure at POC:	70.1 PSI
Pressure Available:	71 PSI
Residual Pressure Available:	0.89 PSI

THE CITY OF LOS ANGELES OR ITS OFFICERS OR AGENTS SHALL NOT BE RESPONSIBLE FOR THE ACCURACY OR COMPLETENESS OF ELECTRONIC COPIES OF THIS PLAN SHEET.

REVISION DATES (DESIGN STAGE ONLY)

ENGINEERING
CITY OF LOS ANGELES

THIS PLAN WAS ELECTRONICALLY • SIGNED AND STAMPED

LANDSCAPE ARCHITECT
LICENSED
No. 5962
REGISTERED
STATE OF CALIFORNIA
01/31/2023
01/31/2023
01/31/2023
01/31/2023

BUREAU OF ENGINEERING

VERTICAL CONTROL: BENCH MARK: 18-02215 NAVD 88
HORIZONTAL CONTROL: CALIFORNIA STATE PLANE ZONE V, 1983 NAD

SHEET TITLE: IRRIGATION LEGEND AND NOTES

PROJECT: STRATHERN PARK NORTH
STORMWATER CAPTURE PROJECT

ADDRESS: STRATHERN PARK NORTH
804 1 WHISETT AVE, NORTH HOLLYWOOD, CA 91605

NO.	REVISIONS	DATE	BY
		YY/MM/DD	
		YY/MM/DD	
		YY/MM/DD	
		YY/MM/DD	

CIP NO. SCP0003

INDEX NO.

CITY OF LOS ANGELES DEPARTMENT OF PUBLIC WORKS

CITY ENGINEER: TED ALLEN, P.E.

	DESIGN GROUP	DATE
ENGINEER:	CDM SMITH INC.	01/31/2023
ARCHITECT:	NUVIS LANDSCAPE ARCHITECTURE	01/31/2023
DESIGNED BY:	P. CARDOZA	01/31/2023
DRAWN BY:	L. KLECKER	01/31/2023
CHECKED BY:	P. CARDOZA	01/31/2023
APPROVED BY:	A.DELLINGER	01/31/2023

WORK ORDER
EW4008F

SHEET NAME
LI02
SHEET 48 OF 85 SHEETS

SHEET VERSION 4.0.1 FILE PATH: G:\RFTA DROPBOX\KEVIN HOBBS\076 DAVID M. GONZALES, FERNANGELES AND STRATHERN PARK\3 STRATHERN\SPN LID LEGEND.DWG PLOT DATE: 2/6/2023 9:43 PM SAVED: 12/12/2022 11:53 AM SAVED BY:MINKA

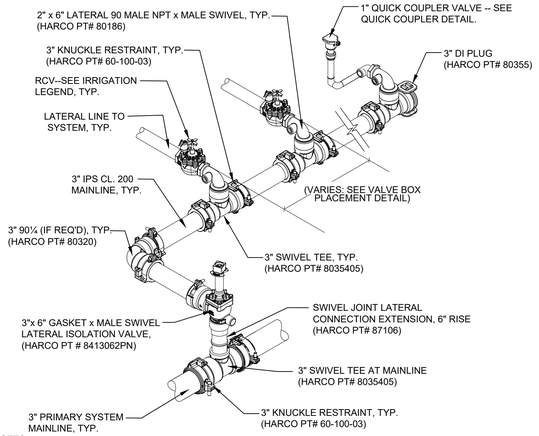

NOTES:
1.) ALL FITTINGS AND RESTRAINTS ARE AS AS MANUFACTURED BY HARCO FITTINGS (www.harcofittings.com) OR APPROVED EQUAL. INSTALL ALL FITTINGS AND RESTRAINTS PER MANUFACTURER'S INSTRUCTIONS.
2.) SEE VALVE BOX PLACEMENT, RCV INSTALLATION, AND QUICK COUPLER INSTALLATION DETAILS FOR ADDITIONAL INFORMATION.

305	VALVE MANIFOLD ASSEMBLY	
N.T.S.	BOE VERSION 02/16/18 RWF	RP DETAIL 135

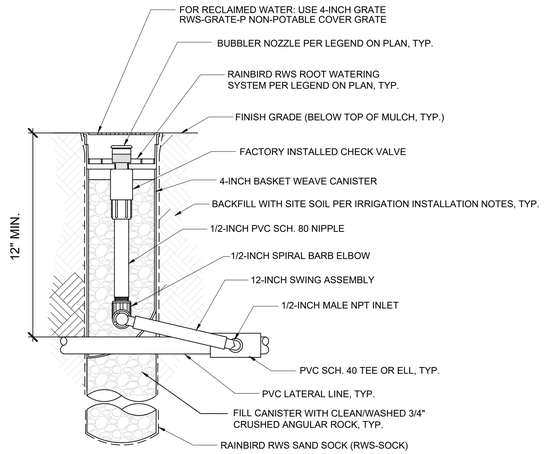

NOTE: ALWAYS LOCATE RWS CANISTERS WITHIN 12" OR LESS FROM EDGE OF TREE ROOTBALL.

303	ROOT WATERING SYSTEM BUBBLER ASSEMBLY	
N.T.S.	BOE VERSION Sep/07 - RF	RAP DETAIL L1660

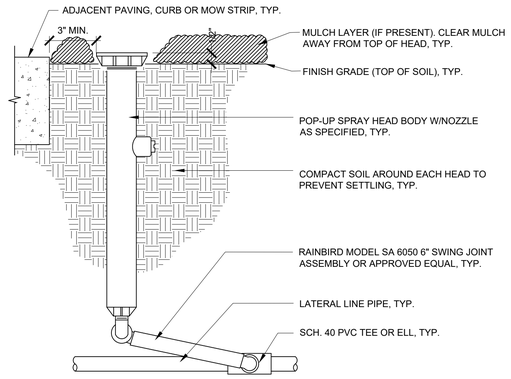

NOTES:
1. PLACE ALL HEADS 1/4" ABOVE FINISH GRADE AT INITIAL INSTALLATION. SET HEADS 3" AWAY FROM WALKS, CURBS, OR MOW STRIPS.
2. INSTALL ALL HEADS PERPENDICULAR TO FINISH GRADE.
3. THOROUGHLY FLUSH ALL LATERAL LINE PIPES TO REMOVE DIRT AND DEBRIS BEFORE INSTALLATION OF NOZZLES.
4. ADJUST ALL HEADS TO PROPER ARC AND RADIUS AS NECESSARY TO ACHIEVE PROPER COVERAGE AND UNIFORMITY. IF PROPER COVERAGE AND UNIFORMITY IS NOT ACHIEVED WITH THE SPECIFIED NOZZLE, CONTRACTOR SHALL CHANGE NOZZLE AS NEEDED IN CONSULTATION WITH LANDSCAPE ARCHITECT UNTIL DESIRED PERFORMANCE IS ACHIEVED.

301	POP-UP SPRAY HEAD INSTALLATION	
N.T.S.	REVISED: 6/09/20 RWF	RP DETAIL 1622

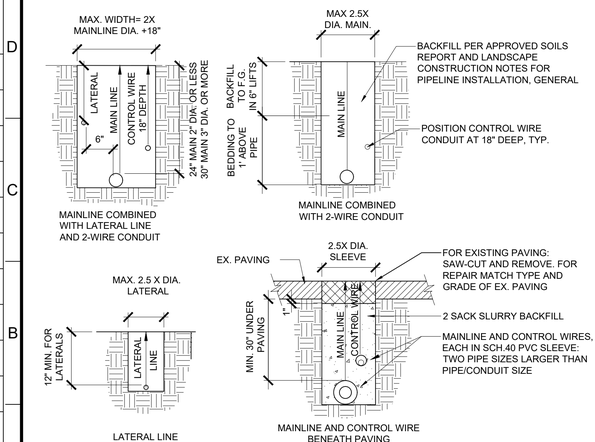

NOTE:
1. PIPE AND CONTROL WIRE CROSSING UNDER PAVING OR WALKWAY OVER 8' WIDE SHALL BE SLEEVED AS INDICATED ABOVE.
2. PIPE BEDDING AND BACKFILL SHALL BE PER APPROVED SOILS REPORT AND LANDSCAPE CONSTRUCTION NOTES, PIPELINE INSTALLATION GENERAL.

306	IRRIGATION TRENCHING DETAIL - 2 WIRE	
N.T.S.	BOE VERSION 02/08/18	RP DETAIL 1350

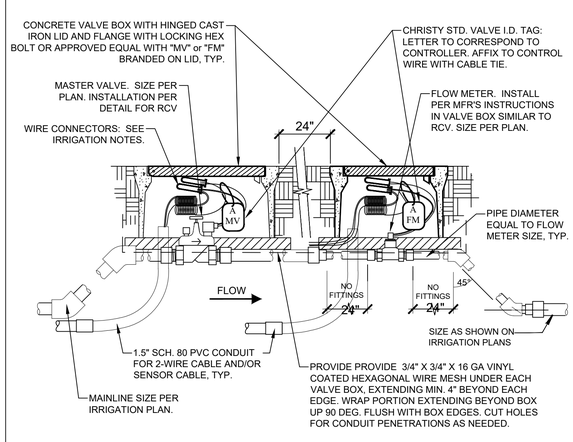

NOTES:
1. CONNECT FLOW METER LEADS TO SENSOR DECODER OR SENSOR CABLE PER CONTROLLER MFR'S INSTRUCTIONS.
2. CONNECT MASTER VALVE LEADS TO SENSOR DECODER PER CONTROLLER MFR'S INSTRUCTIONS.
3. ALL WIRE CONNECTIONS SHALL BE MADE WITH A WIRE CONNECTOR PER IRRIGATION NOTES.

304	FLOW METER AND MASTER VALVE, 2-WIRE SYSTEM	
N.T.S.		RAP DETAIL L1512

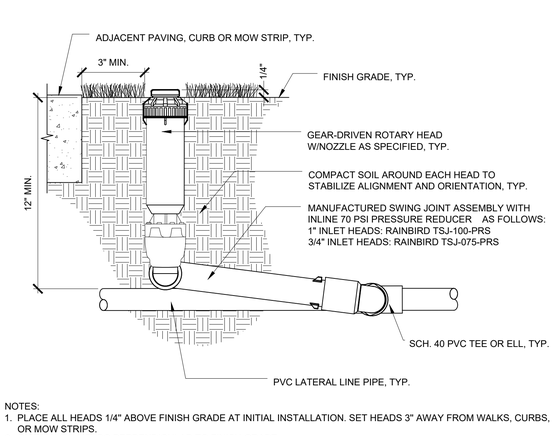

NOTES:
1. PLACE ALL HEADS 1/4" ABOVE FINISH GRADE AT INITIAL INSTALLATION. SET HEADS 3" AWAY FROM WALKS, CURBS, OR MOW STRIPS.
2. INSTALL ALL HEADS PERPENDICULAR TO FINISH GRADE.
3. THOROUGHLY FLUSH ALL LATERAL LINE PIPES TO REMOVE DIRT AND DEBRIS BEFORE INSTALLATION OF NOZZLES.
4. ADJUST ALL HEADS TO PROPER ARC AND RADIUS AS NECESSARY TO ACHIEVE PROPER COVERAGE AND UNIFORMITY. IF PROPER COVERAGE AND UNIFORMITY IS NOT ACHIEVED WITH THE SPECIFIED NOZZLE, CONTRACTOR SHALL CHANGE NOZZLE AS NEEDED IN CONSULTATION WITH LANDSCAPE ARCHITECT UNTIL DESIRED PERFORMANCE IS ACHIEVED.

REVISED: 6/14/06 RWF/SLG

302	GEAR-DRIVEN ROTOR HEAD INSTALLATION	
N.T.S.		RP DETAIL 162

THE CITY OF LOS ANGELES OR ITS OFFICERS OR AGENTS SHALL NOT BE RESPONSIBLE FOR THE ACCURACY OR COMPLETENESS OF ELECTRONIC COPIES OF THIS PLAN SHEET.

REVISION DATES (DESIGN STAGE ONLY)

CITY OF LOS ANGELES DEPARTMENT OF PUBLIC WORKS
BUREAU OF ENGINEERING
THIS PLAN WAS ELECTRONICALLY • SIGNED AND STAMPED •

ENGINEERING
CITY OF LOS ANGELES

REGISTERED LANDSCAPE ARCHITECT — No. 5982 — STATE OF CALIFORNIA — 10/31/2023 — 01/31/2024 — 01/31/2023

NO.	REVISIONS	DATE	BY
		YY/MM/DD	
		YY/MM/DD	
		YY/MM/DD	
		YY/MM/DD	

INDEX NO.

CITY ENGINEER: TED ALLEN, P.E.

DESIGN GROUP	DATE
ENGINEER: CDM SMITH INC.	01/31/2023
ARCHITECT: NUVIS LANDSCAPE ARCHITECTURE	01/31/2023
DESIGNED BY: P. CARDOZA	01/31/2023
DRAWN BY: L. KLECKER	01/31/2023
CHECKED BY: P. CARDOZA	01/31/2023
APPROVED BY: A.DELLINGER	01/31/2023

VERTICAL CONTROL: BENCH MARK 18-02215 NAVD 88
HORIZONTAL CONTROL: CALIFORNIA STATE PLANE ZONE V, 1983 NAD

SHEET TITLE: IRRIGATION DETAILS 1

PROJECT: STRATHERN PARK NORTH STORMWATER CAPTURE PROJECT

ADDRESS: STRATHERN PARK NORTH 804 1 WHISETT AVE, NORTH HOLLYWOOD, CA 91605

CIP NO. SCP0003

WORK ORDER EW4008F

SHEET NAME LI03

SHEET 49 OF 85 SHEETS

SHEET VERSION 4.0.1 FILE PATH: G:\RFTA DROPBOX\KEVIN HOBBS\076 DAVID M. GONZALES, FERNANGELES AND STRATHERN PARK\3 STRATHERN\SPN LID DETAILS.DWG PLOT DATE: 2/6/2023 9:45 PM SAVED: 12/13/2022 1:04 PM SAVED BY:MINKA

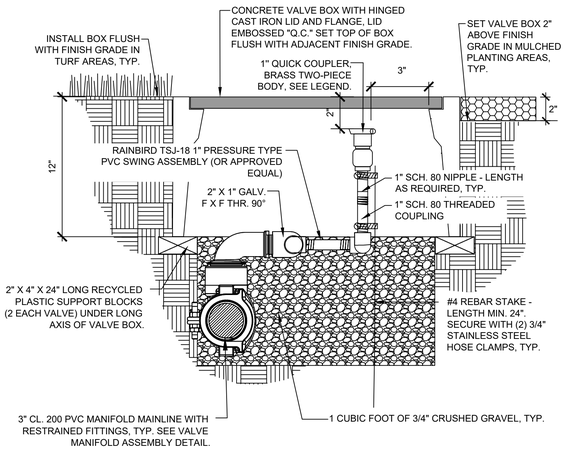

NOTES:
1) SEE RELATED DETAIL FOR MANIFOLD PIPE & FITTINGS.

VERSION 05/16/17 RWF/gm

405	QUICK COUPLING VALVE INSTALLATION DETAIL	
N.T.S.		RP DETAIL L1201

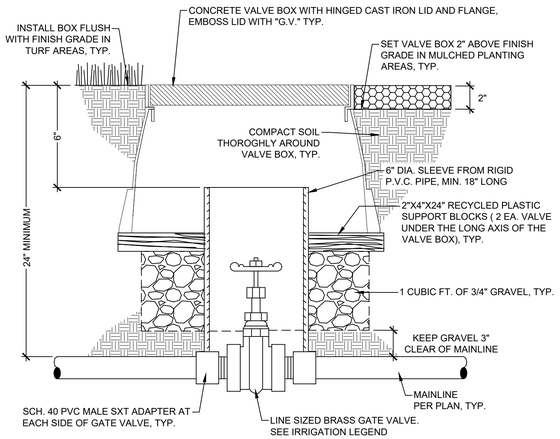

SECTION

NOTE: FOR 3" GATE VALVES AND LARGER REFER TO RP DETAIL L1101

8/9/18 GM

403	GATE VALVE INSTALLATION, 3/4" TO 2"	
N.T.S.		RP DETAIL 1100

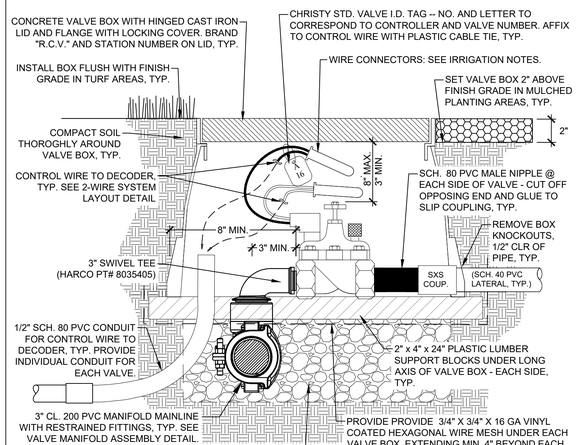

NOTES:
1. SEE APPLICABLE DETAILS FOR 2-WIRE DECODER AND CABLE INSTALLATION

1/14/20 RWF

401	RCV INSTALLATION DETAIL, 2-WIRE SYSTEM	
N.T.S.		RP DETAIL 1402

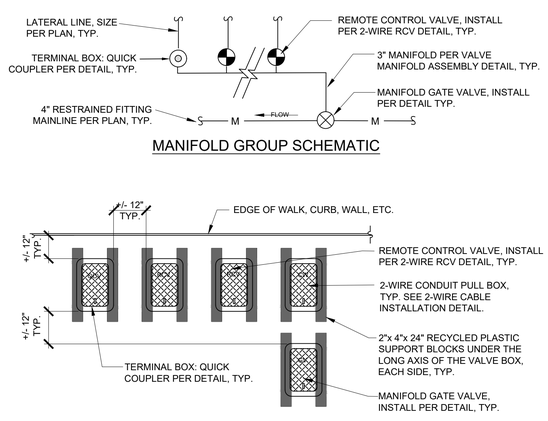

MANIFOLD GROUP SCHEMATIC

NOTES:
1. ALL VALVES SHALL BE INSTALLED IN A MANIFOLD GROUP SIMILAR TO THAT SHOWN IN ABOVE SCHEMATIC. SEE PLANS FOR NUMBER OF RCV/QCV FOR EACH MANIFOLD, TYP.
2. ALL BOXES SHALL BE SQUARE TO ONE ANOTHER AND TO THE EDGES OF ADJACENT FIXED OBJECTS WHERE PRESENT.

406	VALVE BOX PLACEMENT	
N.T.S.	BOE_VERSION_FEB/18	RP DETAIL 1410

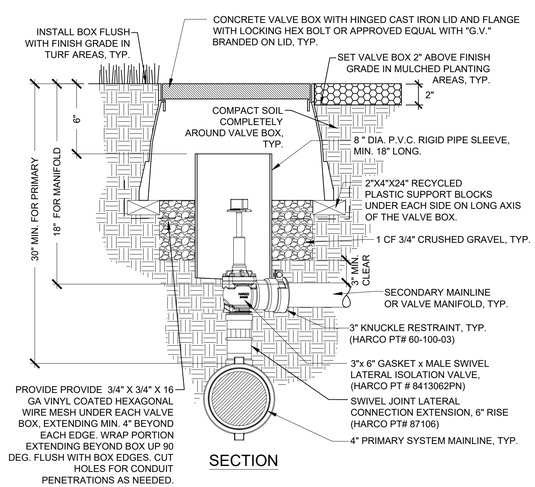

SECTION

404	MANIFOLD GATE VALVE, 3" and Larger Mainline	
N.T.S.	BOE VERSION 02/14/18 - RF	RP DETAIL L1102

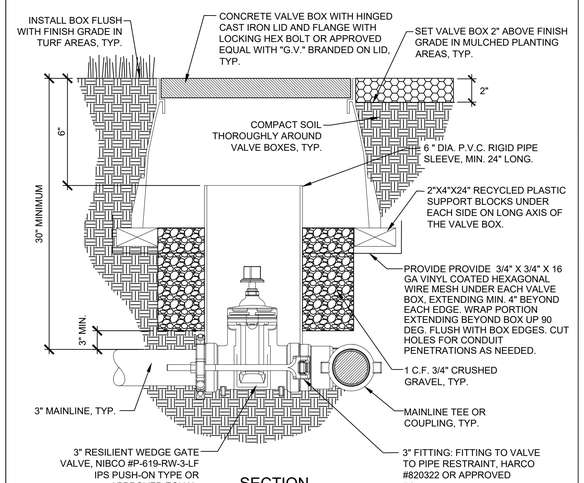

SECTION

402	3" MAINLINE ISOLATION VALVE	
N.T.S.	BOE VERSION May/17 - RF/gm	RP DETAIL L1101

THE CITY OF LOS ANGELES OR ITS OFFICERS OR AGENTS SHALL NOT BE RESPONSIBLE FOR THE ACCURACY OR COMPLETENESS OF ELECTRONIC COPIES OF THIS PLAN SHEET.

REVISION DATES (DESIGN STAGE ONLY)

ENGINEERING
CITY OF LOS ANGELES

REGISTERED LANDSCAPE ARCHITECT — No. 5982 — STATE OF CALIFORNIA — RENEWAL 08/31/2024

THIS PLAN WAS ELECTRONICALLY • SIGNED AND STAMPED •

BUREAU OF ENGINEERING

VERTICAL CONTROL: BENCH MARK 18-02215 NAVD 88
HORIZONTAL CONTROL: CALIFORNIA STATE PLANE ZONE V, 1983 NAD

SHEET TITLE: IRRIGATION DETAILS 2

PROJECT: STRATHERN PARK NORTH STORMWATER CAPTURE PROJECT

ADDRESS: STRATHERN PARK NORTH 8041 WHISETT AVE, NORTH HOLLYWOOD, CA 91605

CITY OF LOS ANGELES DEPARTMENT OF PUBLIC WORKS

NO.	REVISIONS	DATE	BY
		YY/MM/DD	
		YY/MM/DD	
		YY/MM/DD	
		YY/MM/DD	

CIP NO. SCP0003

INDEX NO.

CITY ENGINEER: TED ALLEN, P.E.

DESIGN GROUP		DATE
ENGINEER:	CDM SMITH INC.	01/31/2023
ARCHITECT:	NUVIS LANDSCAPE ARCHITECTURE	01/31/2023
DESIGNED BY:	P. CARDOZA	01/31/2023
DRAWN BY:	L. KLECKER	01/31/2023
CHECKED BY:	P. CARDOZA	01/31/2023
APPROVED BY:	A.DELLINGER	01/31/2023

WORK ORDER EW4008F

SHEET NAME LI04

SHEET 50 OF 85 SHEETS

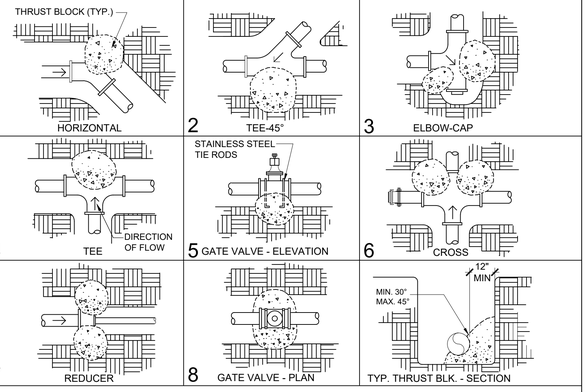

1. PLASTIC PIPE SHALL BE INSTALLED PER IRRIGATION INSTALLATION NOTES AND TRENCHING DETAIL.
2. THE PORTLAND CEMENT CONCRETE USED FOR THRUST BLOCKS SHALL BE MIN. 470-B-2000 CONC.
3. ALL ANCHOR RODS SHALL BE GALVANIZED STEEL MIN. 1/2" INCH IN DIAMETER.
4. SIZE OF THRUST BLK.: 4" PIPE = 4 CU. FT. CONC., 6" PIPE = 6 CU. FT., 8" PIPE = 8 CU. FT.
5. WRAP ALL FITTINGS WITH SIX MIL PLASTIC BEFORE POURING THRUST BLOCKS.
6. POOR SOIL CONDITIONS : USE THRUST BLOCKS FOR 3" PIPE AT SIZE SHOWN FOR 4" PIPE.
7. ALL THRUST BLOCKS SHALL BEAR AGAINST UNDISTURBED SOIL.

RAP VERSION 3/1/92 RCM, JPH

504	THRUST BLOCK INSTALLATION	
N.T.S.	BOE VERSION Sep/07	RP DETAIL L1340

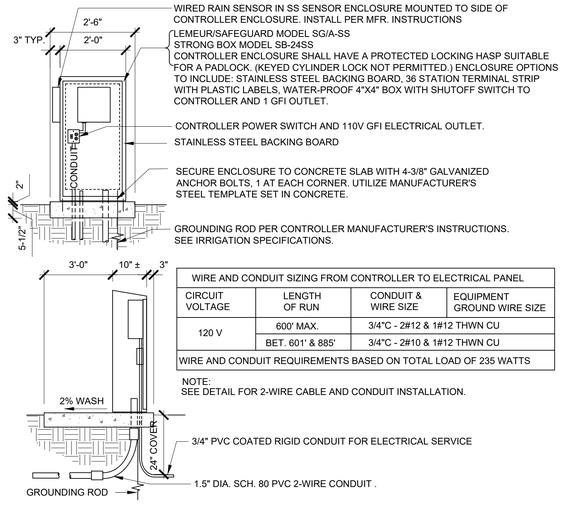

WIRED RAIN SENSOR IN SS SENSOR ENCLOSURE MOUNTED TO SIDE OF CONTROLLER ENCLOSURE. INSTALL PER MFR. INSTRUCTIONS

LEMEUR/SAFEGUARD MODEL SG/A-SS
STRONG BOX MODEL SB-24SS
CONTROLLER ENCLOSURE SHALL HAVE A PROTECTED LOCKING HASP SUITABLE FOR A PADLOCK. (KEYED CYLINDER LOCK NOT PERMITTED.) ENCLOSURE OPTIONS TO INCLUDE: STAINLESS STEEL BACKING BOARD, 36 STATION TERMINAL STRIP WITH PLASTIC LABELS, WATER-PROOF 4"X4" BOX WITH SHUTOFF SWITCH TO CONTROLLER AND 1 GFI OUTLET.

CONTROLLER POWER SWITCH AND 110V GFI ELECTRICAL OUTLET.

STAINLESS STEEL BACKING BOARD

SECURE ENCLOSURE TO CONCRETE SLAB WITH 4-3/8" GALVANIZED ANCHOR BOLTS, 1 AT EACH CORNER. UTILIZE MANUFACTURER'S STEEL TEMPLATE SET IN CONCRETE.

GROUNDING ROD PER CONTROLLER MANUFACTURER'S INSTRUCTIONS. SEE IRRIGATION SPECIFICATIONS.

WIRE AND CONDUIT SIZING FROM CONTROLLER TO ELECTRICAL PANEL			
CIRCUIT VOLTAGE	LENGTH OF RUN	CONDUIT & WIRE SIZE	EQUIPMENT GROUND WIRE SIZE
120 V	600' MAX.	3/4"C - 2#12 & 1#12 THWN CU	
	BET. 601' & 885'	3/4"C - 2#10 & 1#12 THWN CU	
WIRE AND CONDUIT REQUIREMENTS BASED ON TOTAL LOAD OF 235 WATTS			

NOTE:
SEE DETAIL FOR 2-WIRE CABLE AND CONDUIT INSTALLATION.

3/4" PVC COATED RIGID CONDUIT FOR ELECTRICAL SERVICE

1.5" DIA. SCH. 80 PVC 2-WIRE CONDUIT .

503	CONTROLLER AND ENCLOSURE	
N.T.S.	BOE VERSION Feb/18	RAP DETAIL L1470

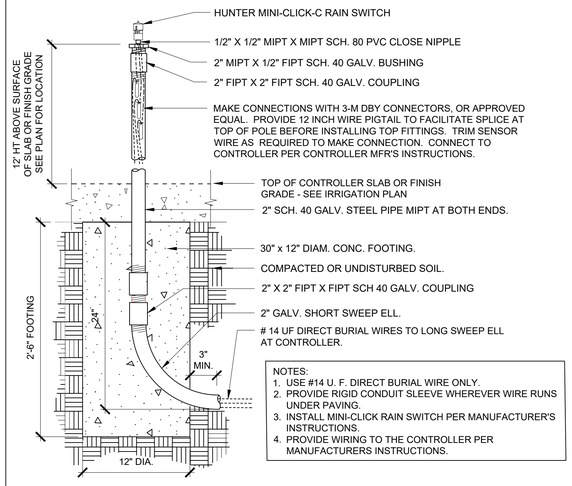

HUNTER MINI-CLICK-C RAIN SWITCH

1/2" X 1/2" MIPT X MIPT SCH. 80 PVC CLOSE NIPPLE

2" MIPT X 1/2" FIPT SCH. 40 GALV. BUSHING

2" FIPT X 2" FIPT SCH. 40 GALV. COUPLING

MAKE CONNECTIONS WITH 3-M DBY CONNECTORS, OR APPROVED EQUAL. PROVIDE 12 INCH WIRE PIGTAIL TO FACILITATE SPLICE AT TOP OF POLE BEFORE INSTALLING TOP FITTINGS. TRIM SENSOR WIRE AS REQUIRED TO MAKE CONNECTION. CONNECT TO CONTROLLER PER CONTROLLER MFR'S INSTRUCTIONS.

TOP OF CONTROLLER SLAB OR FINISH GRADE - SEE IRRIGATION PLAN

2" SCH. 40 GALV. STEEL PIPE MIPT AT BOTH ENDS.

30" x 12" DIAM. CONC. FOOTING.

COMPACTED OR UNDISTURBED SOIL.

2" X 2" FIPT X FIPT SCH 40 GALV. COUPLING

2" GALV. SHORT SWEEP ELL.

14 UF DIRECT BURIAL WIRES TO LONG SWEEP ELL AT CONTROLLER.

NOTES:
1. USE #14 U. F. DIRECT BURIAL WIRE ONLY.
2. PROVIDE RIGID CONDUIT SLEEVE WHEREVER WIRE RUNS UNDER PAVING.
3. INSTALL MINI-CLICK RAIN SWITCH PER MANUFACTURER'S INSTRUCTIONS.
4. PROVIDE WIRING TO THE CONTROLLER PER MANUFACTURERS INSTRUCTIONS.

501	POLE MOUNTED RAIN SWITCH	
N.T.S.	BOE VERSION DEC/21	RP DETAIL L1460

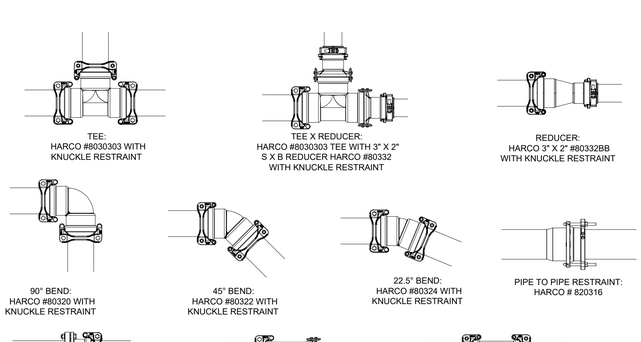

NOTE: ADDITIONAL PIPE & FITTING CONFIGURATIONS MAY BE NECESSARY TO COMPLETE WORK SHOWN ON PLANS DUE TO UNFORSEEN SITE CONDITIONS. CONSULT MANUFACTURER FOR ADDITIONAL INFORMATION. USE #60-100-03 KNUCKLE RESTRAINT ON FITTINGS WHERE DESIGNATED.

505	RESTRAINED FITTINGS FOR 3" MAINLINE	
N.T.S.	BOE VERSION DEC/08 - RF	RP DETAIL 1312

MAINLINE PIPE FITTINGS:

1.) DUCTILE IRON FITTINGS WILL BE REQUIRED FOR ALL MAINLINE PIPE CONNECTIONS (CONSTANT PRESSURE) FOR 3" OR LARGER PIPE UNDER THE FOLLOWING CONDITIONS:

A. AS SHOWN ON OTHER DETAILS INCLUDED WITHIN IN THESE PLANS AND SPECIFICATIONS.

B. AT ALL DIRECTIONAL FITTINGS SUCH AS TEES, ELBOWS, ETC., AND REDUCERS, ADAPTERS AND COUPLINGS AS NOTED OR DETAILED.

2.) DUCTILE IRON FITTINGS SHALL BE A "PUSH-ON" TYPE FOR IPS SIZED PVC PIPE BY HARCO FITTINGS (www.harcofittings.com) OR APPROVED EQUAL.

3.) ALL GASKETED PVC PIPE JOINTS WITHIN 25' OF DUCTILE IRON DIRECTIONAL FITTINGS SHALL BE RESTRAINED USING PIPE TO PIPE RESTRAINT SHOWN. FOR END CAPS AND TERMINAL GATE VALVES, ALL GASKETED PVC PIPE JOINTS WITHIN 40' SHALL BE RESTRAINED USING PIPE TO PIPE RESTRAINT SHOWN. REFER TO MANUFACTURERS FITTING RESTRAINT GUIDE FOR ADDITIONAL INFORMATION.

4.) ALL BOLTS ON FITTING RESTRAINTS SHALL BE TIGHTENED USING A TORQUE WRENCH ONLY FOLLOWING THE MANUFACTURER'S SPECIFICATIONS. THE CONTRACTOR SHALL BE PREPARED TO VERIFY THE TORQUE OF THE BOLTS WITH A TORQUE WRENCH IN THE PRESENCE OF THE BOA INSPECTOR AND SHALL HAVE A TORQUE WRENCH AVAILABLE ON SITE UNTIL JOB ACCEPTANCE.

5.) GLUED JOINTS **SHALL NOT BE** USED IN ANY MAINLINE PVC FITTINGS OR PIPE 3" OR LARGER IN DIAMETER UNLESS SPECIFICALLY DENOTED ON PLANS OR DETAILS INCLUDED IN THIS DRAWING SET.

6.) THRUST BLOCKS **SHALL ONLY BE** USED FOR MAINLINE FITTINGS WHERE SPECIFICALLY DESIGNATED IN PLANS OR DETAILS.

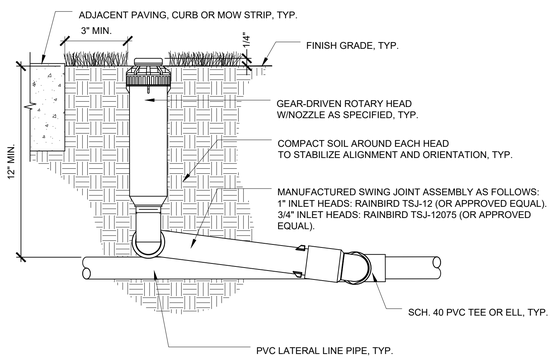

FINISH GRADE, TYP.

GEAR-DRIVEN ROTARY HEAD W/NOZZLE AS SPECIFIED, TYP.

COMPACT SOIL AROUND EACH HEAD TO STABILIZE ALIGNMENT AND ORIENTATION, TYP.

MANUFACTURED SWING JOINT ASSEMBLY AS FOLLOWS:
1" INLET HEADS: RAINBIRD TSJ-12 (OR APPROVED EQUAL).
3/4" INLET HEADS: RAINBIRD TSJ-12075 (OR APPROVED EQUAL).

NOTES:
1. PLACE ALL HEADS 1/4" ABOVE FINISH GRADE AT INITIAL INSTALLATION. SET HEADS 3" AWAY FROM WALKS, CURBS, OR MOW STRIPS.
2. INSTALL ALL HEADS PERPENDICULAR TO FINISH GRADE.
3. THOROUGHLY FLUSH ALL LATERAL LINE PIPES TO REMOVE DIRT AND DEBRIS BEFORE INSTALLATION OF NOZZLES.
4. ADJUST ALL HEADS TO PROPER ARC AND RADIUS AS NECESSARY TO ACHIEVE PROPER COVERAGE AND UNIFORMITY. IF PROPER COVERAGE AND UNIFORMITY IS NOT ACHIEVED WITH THE SPECIFIED NOZZLE, CONTRACTOR SHALL CHANGE NOZZLE AS NEEDED IN CONSULTATION WITH LANDSCAPE ARCHITECT UNTIL DESIRED PERFORMANCE IS ACHIEVED.

REVISED: 6/14/06 RWF/SLG

502	GEAR-DRIVEN ROTOR HEAD INSTALLATION	
N.T.S.	REFINFO	RP DETAIL 1621

THE CITY OF LOS ANGELES OR ITS OFFICERS OR AGENTS SHALL NOT BE RESPONSIBLE FOR THE ACCURACY OR COMPLETENESS OF ELECTRONIC COPIES OF THIS PLAN SHEET.

REVISION DATES (DESIGN STAGE ONLY)

ENGINEERING
CITY OF LOS ANGELES

LANDSCAPE ARCHITECT
LICENSED
No. 5982
RICK SUSSMAN
STATE OF CALIFORNIA
EXPIRATION DATE
08-31-2023
10-31-2023
01-31-2024
01-31-2025

THIS PLAN WAS ELECTRONICALLY • SIGNED AND STAMPED •

BUREAU OF ENGINEERING

VERTICAL CONTROL: BENCH MARK 18-02215 NAVD 88
HORIZONTAL CONTROL: CALIFORNIA STATE PLANE ZONE V, 1983 NAD

SHEET TITLE: IRRIGATION DETAILS 3

PROJECT: STRATHERN PARK NORTH STORMWATER CAPTURE PROJECT

ADDRESS: STRATHERN PARK NORTH 804 1 WHISETT AVE, NORTH HOLLYWOOD, CA 91605

CITY OF LOS ANGELES DEPARTMENT OF PUBLIC WORKS

NO.	REVISIONS	DATE	BY
		YY/MM/DD	
		YY/MM/DD	
		YY/MM/DD	
		YY/MM/DD	

CIP NO. SCP0003

INDEX NO.

CITY ENGINEER
TED ALLEN, P.E.

DESIGN GROUP		DATE
ENGINEER:	CDM SMITH INC.	01/31/2023
ARCHITECT:	NUVIS LANDSCAPE ARCHITECTURE	01/31/2023
DESIGNED BY:	P. CARDOZA	01/31/2023
DRAWN BY:	L. KLECKER	01/31/2023
CHECKED BY:	P. CARDOZA	01/31/2023
APPROVED BY:	A.DELLINGER	01/31/2023

WORK ORDER
EW4008F

SHEET NAME
LI05

SHEET 51 OF 85 SHEETS

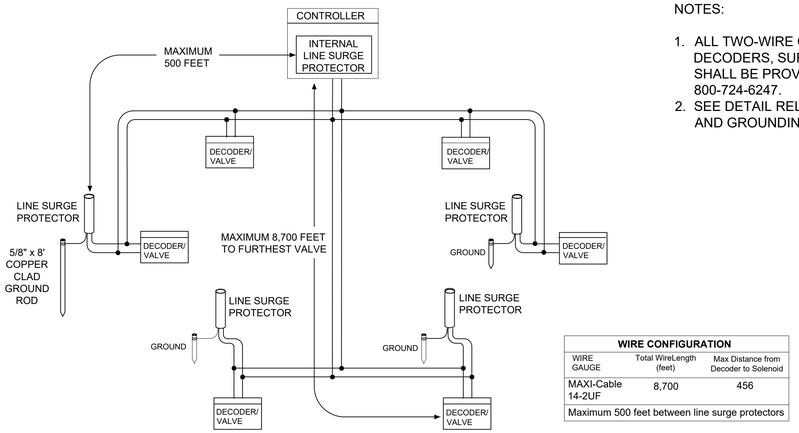

NOTES:

1. ALL TWO-WIRE COMPONENTS (WIRE, DECODERS, SURGE PROTECTORS, ETC.) SHALL BE PROVIDED BY RAINBIRD, 800-724-6247.
2. SEE DETAIL RELATED DETAILS FOR WIRING AND GROUNDING CONNECTIONS.

WIRE CONFIGURATION

WIRE GAUGE	Total WireLength (feet)	Max Distance from Decoder to Solenoid
MAXI-Cable 14-2UF	8,700	456
Maximum 500 feet between line surge protectors		

602 2-WIRE SYSTEM LAYOUT

N.T.S. B.O.E. 02/16/18 L1372

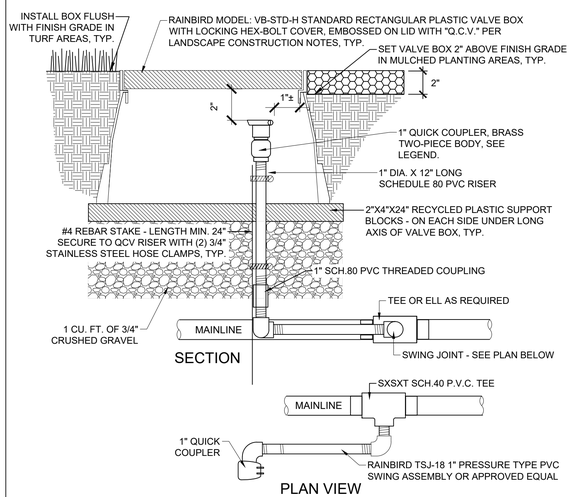

601 QUICK COUPLER INSTALLATION (2" MAINLINE OR SMALLER)

N.T.S. BOE VERSION Dec/08 RF RP DETAIL L1200

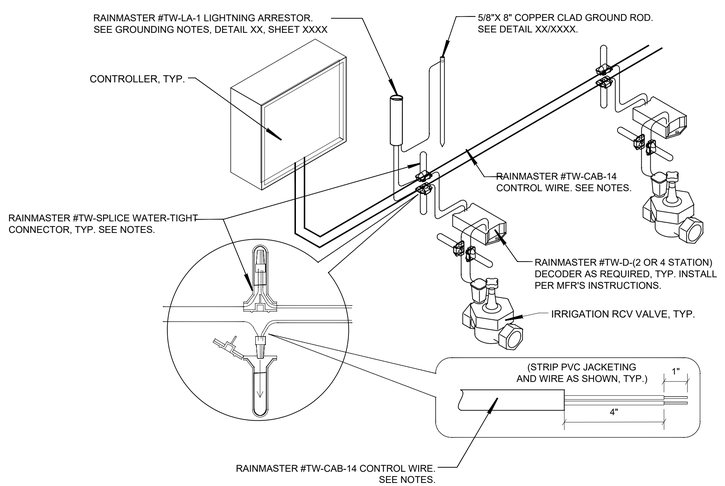

WIRING NOTES:
1.) CONTROL WIRE SHALL BE RAINMASTER #TW-CAB-14 OR APPROVED EQUAL: POLYETHYLENE DOUBLE-JACKETED OR UF-B UL PVC DOUBLE-JACKETED TWO-CONDUCTOR SOLID CORE DESIGNED FOR DIRECT BURIAL WITH INSULATION 3/16 INCH (.060Ó) THICK, HIGH DENSITY, SUNLIGHT RESISTANT INCASED IN AN OUTER JACKET OF POLYETHYLENE OR PVC CONFORMING TO ICEA S-GL-402 OR NEMA WC5, HAVING A MINIMUM WALL THICKNESS OF .045 INCHES. (TWO-WIRE POLYETHYLENE "TWISTED" CABLE OR SINGLE STRAND 14-GAUGE PVC IRRIGATION WIRE DOES NOT CONFORM TO THESE SPECIFICATIONS AND WILL NOT BE ACCEPTED).

2.) ALL WIRE INSULATION SHALL BE INTACT AND FREE OF NICKS AND CUTS

3.) ATTACHING DECODERS:

- TWIST WIRES TO PROVIDE A SOLID MECHANICAL CONNECTION BEFORE SECURING THE ATTACHMENT BY ADDING THE WIRE NUT.
- RAINMASTER #TW-SPLICE-14 OR APPROVED EQUAL (SURESPLICE, TRADEMARKED) GEL FILLED CONNECTORS (OR SIMILAR) SHALL BE USED ON ALL CONNECTIONS.
- GREASE FILLED WIRE NUTS WILL NOT BE ACCEPTED.
- TEST ALL CONNECTIONS BEFORE IMMERSING THE WIRE NUT IN THE GEL-FILLED CAP.
- ADHERE TO ALL LOCAL AND NATIONAL BUILDING AND ELECTRICAL CODES.
- CONTRACTOR SHALL GUARANTEE ALL WIRE CONNECTIONS TO BE ABSOLUTELY WATER TIGHT.

4.) ALL EQUIPMENT SHALL BE INSTALLED PER THE MANUFACTURER'S SPECIFICATIONS.

603 2-WIRE IRRIGATION SYSTEM WIRING (RAINMASTER OR EQUAL)

N.T.S.

THE CITY OF LOS ANGELES OR ITS OFFICERS OR AGENTS SHALL NOT BE RESPONSIBLE FOR THE ACCURACY OR COMPLETENESS OF ELECTRONIC COPIES OF THIS PLAN SHEET.

REVISION DATES (DESIGN STAGE ONLY)

ENGINEERING
CITY OF LOS ANGELES

REGISTERED LANDSCAPE ARCHITECT R. 982 STATE OF CALIFORNIA
RENEWAL 08/31/2024

THIS PLAN WAS ELECTRONICALLY • SIGNED AND STAMPED

BUREAU OF ENGINEERING

VERTICAL CONTROL: BENCH MARK 18-02215 NAVD 88
HORIZONTAL CONTROL: CALIFORNIA STATE PLANE ZONE V, 1983 NAD

SHEET TITLE: IRRIGATION DETAILS 4

PROJECT: STRATHERN PARK NORTH STORMWATER CAPTURE PROJECT

ADDRESS: STRATHERN PARK NORTH 804 1 WHISETT AVE, NORTH HOLLYWOOD, CA 91605

NO.	REVISIONS	DATE	BY
		YY/MM/DD	
		YY/MM/DD	
		YY/MM/DD	
		YY/MM/DD	

CIP NO. SCP0003

INDEX NO.

CITY OF LOS ANGELES DEPARTMENT OF PUBLIC WORKS

CITY ENGINEER: TED ALLEN, P.E. DATE 01/31/2023

DESIGN GROUP		DATE
ENGINEER:	CDM SMITH INC.	01/31/2023
ARCHITECT:	NUVIS LANDSCAPE ARCHITECTURE	01/31/2023
DESIGNED BY:	P. CARDOZA	01/31/2023
DRAWN BY:	L. KLECKER	01/31/2023
CHECKED BY:	P. CARDOZA	01/31/2023
APPROVED BY:	A.DELLINGER	01/31/2023

WORK ORDER EW4008F

SHEET NAME LI06

SHEET 52 OF 85 SHEETS

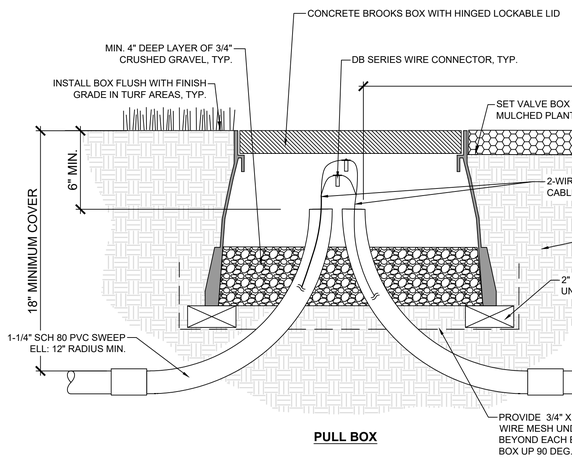

PULL BOX

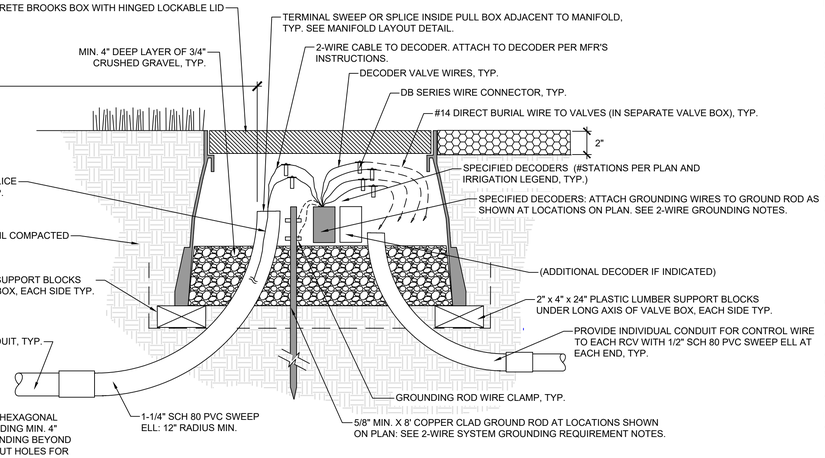

TERMINAL OR MANIFOLD BOX

701	2-WIRE CABLE INSTALLATION AND GROUNDING	
N.T.S.		RP DETAIL L1430

NOTES:

1. ALL CONDUIT AND FITTINGS SHALL BE SCHEDULE 80 PVC. CHANGES IN DIRECTION OF CONDUIT PATH SHALL NOT EXCEED 360 DEG. FOR EACH SECTION BETWEEN PULL BOXES.
2. MAXIMUM DISTANCE BETWEEN PULL BOXES SHALL BE 200 FEET.
3. MAXIMUM LENGTH OF SECONDARY WIRE PATH (14 AWG) FROM FIELD DECODER TO SOLENOID IS 450 FEET.
4. PROVIDE A COIL OF MIN. 24" OF 2-WIRE CABLE AT EACH SPLICE OR DECODER CONNECTION POINT.

TWO-WIRE SYSTEM GROUNDING REQUIREMENTS:

SURGE PROTECTION USING PROPER GROUNDING RODS IS REQUIRED FOR PROTECTION AGAINST SURGE DAMAGE DUE TO LIGHTNING OR OTHER ELECTRICAL SURGE EVENTS. CONFORMANCE TO THIS SURGE SUPPRESSION SPECIFICATION IS NECESSARY TO RETAIN WARRANTY PROTECTION UNDER MANUFACTURER'S WARRANTY TERMS.

THE INSTALLATION SHALL CONFORM TO MANUFACTURER'S INSTRUCTIONS, AND MUST MEET OR EXCEED THE AMERICAN SOCIETY OF IRRIGATION CONSULTANTS (ASIC) EARTH GROUNDING GUIDELINE 100-2002.
HTTP://WWW.ASIC.ORG/UPLOADS/ASSETS/011007_121320_ASIC_GROUNDING_GUIDELINES.DOC

GROUND RODS AS REFERRED TO IN THIS SPECIFICATION SHALL CONFORM TO THE FOLLOWING STANDARDS:

1.) ALL GROUNDING RODS SHALL BE BARE COPPER OF 5/8" DIAMETER OR GREATER, AND 8' LENGTH OR GREATER.

2.) A MEASURED RESISTANCE READING OF NO MORE THAN 10 OHMS IS NECESSARY AT EACH LIGHTNING ARRESTOR. ASIC SPEC: SECTION 7.0 - MEASURING RESISTANCE, ITEM A.

GROUND RODS SHALL BE LOCATED AT A MINIMUM DISTANCE TO ASSURE THAT THE TWO-WIRE PATH IS OUTSIDE OF THE ELECTRODE SPHERE OF INFLUENCE FOR THE GROUNDING ROD: THE GROUND ROD MUST BE CONNECTED AT LEAST 8' AWAY FROM THE TWO-WIRE PATH, AT A RIGHT ANGLE TO THE TWO-WIRE PATH.

UNDER NO CIRCUMSTANCES SHOULD A GROUND ROD BE INSTALLED IN OR UNDER A VALVE BOX, METER BOX OR ELECTRICAL BOX.

CONNECTIONS TO GROUNDING RODS:
ALL CONNECTIONS TO GROUND RODS SHALL CONFORM TO ASIC EARTH GROUNDING GUIDELINE 100-2002, AND SHALL CONSIST OF A SCREW CLAMP TYPE OF CONNECTION.

ANY WIRE EXTENSIONS REQUIRED TO CONNECT FROM A GROUND ROD TO A LIGHTNING ARRESTOR OR ENCLOSURE GROUND LUG SHALL BE BARE COPPER, AND SHALL NOT HAVE ANY SHARP BENDS OR KINKS. WIRE EXTENSIONS CONNECTED TO LIGHTNING ARRESTORS SHALL USE A CADWELD TYPE OR SCREW CLAMP TYPE CONNECTION WHERE THE BARE COPPER GROUND WIRE MEETS THE GREEN GROUNDING WIRE FROM THE LIGHTNING ARRESTOR.

THIS PLAN WAS ELECTRONICALLY • SIGNED AND STAMPED •

ENGINEERING
CITY OF LOS ANGELES

LANDSCAPE ARCHITECT — KEVIN STRONG — LICENSE NO. 5982 — REGISTERED — 10/31/2024 — 01/31/2023 — STATE OF CALIFORNIA

BUREAU OF ENGINEERING

VERTICAL CONTROL: BENCH MARK 18-02215 (NAVD 88)
HORIZONTAL CONTROL: CALIFORNIA STATE PLANE ZONE V, 1983 NAD

SHEET TITLE: IRRIGATION DETAILS 5

PROJECT: STRATHERN PARK NORTH STORMWATER CAPTURE PROJECT

ADDRESS: STRATHERN PARK NORTH 8041 WHISETT AVE, NORTH HOLLYWOOD, CA 91605

NO.	REVISIONS	DATE	BY
		YY/MM/DD	
		YY/MM/DD	
		YY/MM/DD	
		YY/MM/DD	

CIP NO. SCP0003

INDEX NO.

CITY OF LOS ANGELES DEPARTMENT OF PUBLIC WORKS

CITY ENGINEER: TED ALLEN, P.E. — DATE: 01/31/2023

DESIGN GROUP	
ENGINEER:	CDM SMITH INC.
ARCHITECT:	NUVIS LANDSCAPE ARCHITECTURE
DESIGNED BY:	P. CARDOZA
DRAWN BY:	L. KLECKER
CHECKED BY:	P. CARDOZA
APPROVED BY:	A.DELLINGER

(all DATE: 01/31/2023)

WORK ORDER
EW4008F

SHEET NAME
LI07

SHEET 53 OF 85 SHEETS

REVISION DATES (DESIGN STAGE ONLY)

THE CITY OF LOS ANGELES OR ITS OFFICERS OR AGENTS SHALL NOT BE RESPONSIBLE FOR THE ACCURACY OR COMPLETENESS OF ELECTRONIC COPIES OF THIS PLAN SHEET.

CONTROLLER SCHEDULE

IRRIGATION CONTROLLER SCHEDULE- ESTABLISHMENT PERIOD

DATE: 2/1/2022
PROJECT: Strathern Park
CLIENT: City of Los Angeles
PREPARED BY: NUVIS

CITY: Los Angeles
CIMIS Zone 9

REVISION HISTORY:
REVISED BY:

CONTROLLER 'H'

E.T. DATA

	JAN	FEB	MAR	APR	MAY	JUN	JUL	AUG	SEP	OCT	NOV	DEC
MONTHLY	2.17	2.80	4.03	5.10	5.89	6.60	7.44	6.82	5.70	4.03	2.70	1.86
WEEKLY	0.50	0.65	0.94	1.19	1.37	1.53	1.73	1.59	1.33	0.94	0.63	0.43
DAILY	0.07	0.10	0.13	0.17	0.19	0.22	0.24	0.22	0.19	0.13	0.09	0.06

SCHEDULING DATA

%of ET	Efficiency Rate	Days Per Week
1.25	0.81	6

IRRIGATION SCHEDULE- MINUTES PER DAY

STATION

JAN	FEB	MAR	APR	MAY	JUN	JUL	AUG	SEP	OCT	NOV	DEC
25	33	47	59	68	77	87	79	66	47	31	22

STATION	PRECIP. RATE	CROP COEF.
2,3,4,8,9,15,16,17,19,26, 27,38,39,53,56,58,63,64	0.25	0.8

IRRIGATION CONTROLLER SCHEDULE- ESTABLISHED

DATE: 2/1/2022
PROJECT: David M. Gonzales Recreation Center
CLIENT: City of Los Angeles
PREPARED BY: NUVIS

CITY: Los Angeles
CIMIS Zone 9

REVISION HISTORY:
REVISED BY:

CONTROLLER 'H'

E.T. DATA

	JAN	FEB	MAR	APR	MAY	JUN	JUL	AUG	SEP	OCT	NOV	DEC
MONTHLY	2.17	2.80	4.03	5.10	5.89	6.60	7.44	6.82	5.70	4.03	2.70	1.86
WEEKLY	0.50	0.65	0.94	1.19	1.37	1.53	1.73	1.59	1.33	0.94	0.63	0.43
DAILY	0.07	0.10	0.13	0.17	0.19	0.22	0.24	0.22	0.19	0.13	0.09	0.06

SCHEDULING DATA

%of ET	Efficiency Rate	Days Per Week
1	0.81	3

IRRIGATION SCHEDULE- MINUTES PER DAY

STATION

JAN	FEB	MAR	APR	MAY	JUN	JUL	AUG	SEP	OCT	NOV	DEC
40	52	75	95	110	123	138	127	106	75	50	35

STATION	PRECIP. RATE	CROP COEF.
2,3,4,8,9,15,16,17,19,26, 27,38,39,53,56,58,63,64	0.25	0.8

WATER EFFICIENT LANDSCAPE WORKSHEET

California Water Efficient Landscape Worksheet

Reference Evapotranspiration (ET_o): 61.5 — Project Type: Non-Residential — ETAF: 0.45

Hydrozone # / Planting Description[a]	Plant Factor (PF)	Irrigation Method[b]	Irrigation Efficiency (IE)[c]	ETAF (PF/IE)	Landscape Area (Sq. Ft.)	ETAF x Area	Estimated Total Water Use (ETWU)[d]
Regular Landscape Areas							
TURF AREA (SLA)	0	Overhead	0.75	0.00	90180	0	0
TURF NO MOW (SLA)	0	Overhead	0.75	0.00	30460	0	0
TREE BUBBLER	0.5	Overhead	0.75	0.67	1500	1000	38130
SHRUB AREA	0.2	Overhead	0.75	0.27	41338	11023	420325
			0.75	0.00		0	0
			0.75	0.00		0	0
			0.75	0.00		0	0
			0.75	0.00		0	0
			0.75	0.00		0	0
			0.75	0.00		0	0
			0.75	0.00		0	0
			0.75	0.00		0	0
			0.75	0.00		0	0
			0.75	0.00		0	0
			0.75	0.00		0	0
			0.75	0.00		0	0
			0.75	0.00		0	0
			0.75	0.00		0	0
			0.75	0.00		0	0
			0.75	0.00		0	0
			0.75	0.00		0	0
			0.75	0.00		0	0
			0.75	0.00		0	0
			0.75	0.00		0	0
			0.75	0.00		0	0
			0.75	0.00		0	0
			0.75	0.00		0	0
			0.75	0.00		0	0
			0.75	0.00		0	0
			0.75	0.00		0	0
			0.75	0.00		0	0
				Totals	163478	12023	458455
Special Landscape Areas							
[redacted]				1		0	0
				1		0	0
				Totals	0	0	0
						ETWU Total	458455
						Maximum Allowed Water Allowance (MAWA)[e]	2805037

WATER CONSERVATION NOTES

1. THE IRRIGATION IS SUPPLIED BY A POTABLE WATER CONNECTIONS.
2. LOCKS SHALL BE INSTALLED ON ALL PUBLICLY ACCESSIBLE EXTERIOR FAUCETS AND HOSE BIBS.
3. A FINAL REPORT FOR THE TESTING AND ADJUSTING OF ALL NEW SYSTEMS SHALL BE COMPLETED PRIOR TO FINAL APPROVAL BY THE FIELD INSPECTOR. THIS REPORT SHALL BE SIGNED BY THE INDIVIDUAL RESPONSIBLE FOR PERFORMING THESE SERVICES.
4. THERE IS NO SPECIAL LANDSCAPE AREA (SLA) AS PART OF THESE PLANS
5. RECIRCULATING WATER SYSTEMS SHALL BE USED FOR WATER FEATURES.
6. PRESSURE REGULATING DEVICES ARE REQUIRED IF WATER PRESSURE IS BELOW OR EXCEEDS THE RECOMMENDED PRESSURE OF THE SPECIFIED IRRIGATION DEVICES.
7. CHECK VALVES OR ANTI-DRAIN VALVES ARE REQUIRED ON ALL SPRINKLER HEADS WHERE LOW POINT DRAINAGE COULD OCCUR.
8. A DIAGRAM OF THE IRRIGATION PLAN SHOWING HYDROZONES SHALL BE KEPT WITH THE IRRIGATION CONTROLLER FOR SUBSEQUENT MANAGEMENT PURPOSES.
9. A CERTIFICATE OF COMPLETION SHALL BE FILLED OUT AND CERTIFIED BY EITHER THE SIGNER OF THE LANDSCAPE PLANS, THE SIGNER OF THE IRRIGATION PLANS, OR THE LICENSED LANDSCAPE CONTRACTOR FOR THE PROJECT.
10. AN IRRIGATION AUDIT REPORT SHALL BE COMPLETED AT THE TIME OF FINAL INSPECTION.
11. AT THE TIME OF FINAL INSPECTION, THE PERMIT APPLICANT MUST PROVIDE THE OWNER OF THE PROPERTY WITH A CERTIFICATE OF COMPLETION, CERTIFICATE OF INSTALLATION, IRRIGATION SCHEDULE AND A SCHEDULE OF LANDSCAPE AND IRRIGATION MAINTENANCE.
12. A FINAL REPORT FOR THE TESTING AND ADJUSTING OF ALL NEW SYSTEMS SHALL BE COMPLETED PRIOR TO FINAL APPROVAL BY THE FIELD INSPECTOR. THIS REPORT SHALL BE SIGNED BY THE INDIVIDUAL RESPONSIBLE FOR PREFORMING THESE SERVICES.
13. AN OPERATIONS AND SYSTEMS MANUAL SHALL BE PROVIDED TO THE OWNER OR REPRESENTATIVE AND TO THE FIELD INSPECTOR AT THE TIME OF FINAL INSPECTION.

THE PORTIONS OF THE PLANS REGARDING IRRIGATION DESIGN ASPECTS OF THE PROJECT HAVE BEEN REVIEWED AND APPEAR TO BE IN SUBSTANTIAL CONFORMANCE WITH THE RECOMMENDATIONS CONTAINED IN THE CURRENT CITY OF TUSTIN AND STATE MODEL WATER EFFICIENT LANDSCAPE ORDINANCE. WE MAKE NO REPRESENTATIONS OF THE ACCURACY OF THE DIMENSIONS, MEASUREMENTS, CALCULATIONS OR ANY PORTION OF THE DESIGN.

"I HAVE COMPLIED WITH THE CRITERIA OF THE ORDINANCE AND APPLIED THEM ACCORDINGLY FOR THE EFFICIENT USE OF WATER IN THE IRRIGATION DESIGN PLAN."

BY: NUVIS — DATE: 11/18/2022
RLA # 3943
EXP. 10/31/23

I AGREE TO COMPLY WITH THE REQUIREMENTS OF THE WATER EFFICIENT LANDSCAPE ORDINANCE AND SUBMIT A COMPLETE LANDSCAPE DOCUMENT PACKAGE.

BY: NUVIS — DATE: 11/18/2022
RLA # 3943
EXP. 10/31/23

LANDSCAPE QUANTITIES

LOW WATER USE LANDSCAPE AREA (SPRAY IRRIGATION):	3.884 S.F.	(01.73%)
MEDIUM WATER USE LANDSCAPE AREA (BUBBLER IRRIGATION):	1.500 S.F.	(00.67%)
SLA WATER USE LANDSCAPE AREA (TURF IRRIGATION):	218,144 S.F.	(97.60%)
TOTAL:	223,528 S.F.	(100%)

THE CITY OF LOS ANGELES OR ITS OFFICERS OR AGENTS SHALL NOT BE RESPONSIBLE FOR THE ACCURACY OR COMPLETENESS OF ELECTRONIC COPIES OF THIS PLAN SHEET.

REVISION DATES (DESIGN STAGE ONLY)

ENGINEERING
CITY OF LOS ANGELES

LANDSCAPE ARCHITECT — REGISTERED — P. CARDOZA — No. 3943 — 10/31/2023 — STATE OF CALIFORNIA

THIS PLAN WAS ELECTRONICALLY • SIGNED AND STAMPED

BUREAU OF ENGINEERING

VERTICAL CONTROL: BENCH MARK: 18-02215 NAVD 88
HORIZONTAL CONTROL: CALIFORNIA STATE PLANE ZONE V, 1983 NAD

SHEET TITLE: IRRIGATION CALCULATIONS

PROJECT: STRATHERN PARK NORTH
STORMWATER CAPTURE PROJECT

ADDRESS: STRATHERN PARK NORTH
804 1 WHISETT AVE, NORTH HOLLYWOOD, CA 91605

CITY OF LOS ANGELES DEPARTMENT OF PUBLIC WORKS

NO.	REVISIONS	DATE	BY
		YY/MM/DD	
		YY/MM/DD	
		YY/MM/DD	
		YY/MM/DD	

CIP NO. SCP0003

INDEX NO.

CITY ENGINEER: TED ALLEN, P.E. — DATE: 01/31/2023

DESIGN GROUP		DATE
ENGINEER:	CDM SMITH INC.	01/31/2023
ARCHITECT:	NUVIS LANDSCAPE ARCHITECTURE	01/31/2023
DESIGNED BY:	P. CARDOZA	01/31/2023
DRAWN BY:	L. KLECKER	01/31/2023
CHECKED BY:	P. CARDOZA	01/31/2023
APPROVED BY:	A.DELLINGER	01/31/2023

WORK ORDER
EW4008F

SHEET NAME
LI08

SHEET 54 OF 85 SHEETS

DESIGN CRITERIA:

CODES:
CBC-2019 (CALIFORNIA BUILDING CODE 2019)

ACI 318-14 (BUILDING CODE REQUIREMENTS FOR STRUCTURAL CONCRETE)

ACI 350-06 (CODE REQUIREMENTS FOR ENVIRONMENTAL ENGINEERING CONCRETE STRUCTURES)

DESIGN LOADS:

DEAD LOADS:
INCLUDE WEIGHT OF ALL MATERIALS OF CONSTRUCTION

LIVE LOADS:
TOP SLABS 200 PSF (NON-REDUCIBLE)

RISK CATEGORY III

WIND DESIGN DATA:

BASIC WIND SPEED V_{ULT} 101 MPH (ULTIMATE)
V_{ASD} 78 MPH (NOMINAL)

EXPOSURE CATEGORY C

SEISMIC DESIGN DATA:

SOIL SITE CLASS D
MAPPED SPECTRAL RESPONSE ACCELERATIONS
SHORT PERIOD Ss = 1.935g
ONE SECOND PERIOD S1 = 0.658g
SPECTRAL RESPONSE COEFFICIENTS
SHORT PERIOD Sds = 1.455g
ONE SECOND PERIOD Sd1 = 1.180g
SEISMIC DESIGN CATEGORY D
SEISMIC IMPORTANCE FACTOR Ie = 1.25

SNOW:

GROUND SNOW LOAD Pg 0 PSF (NON-REDUCIBLE)

FOUNDATIONS:

FOR GEOTECHNICAL INFORMATION, REFER TO "STORMWATER CAPTURE PARKS PROGRAM – STRATHERN PARK NORTH GEOTECHNICAL INVESTIGATION" DATED AUGUST 31ST, 2020 BY NINYO & MOORE IRVINE, CA

ALLOWABLE BEARING PRESSURE = 4000 PSF (MAT FOUNDATION)
1/3 INCREASE IN BEARING PRESSURE FOR SHORT TERM LOADING IS ALLOWED

ALL EXTERIOR FOUNDATIONS SHALL EXTEND TO A DEPTH = 18"

LATERAL SOIL PRESSURES:
AT-REST = 57 PSF
PASSIVE = 300 PSF
SEISMIC = 46*H PSF (TRIANGULAR - WHERE H IS HEIGHT OF SOIL)
SURCHARGE COEFFICIENT = 0.47
STRUCTURAL FILL COMPACTION = 90% (ASTM D1557)

FOUNDATION PREPARATION:

FOUNDATION SHALL BE PLACED ON A MINIMUM OF 2 FT OF NEW STRUCTURAL FILL.
SEE CIVIL DRAWINGS FOR STRUCTURAL FILL AND OVER EXCAVATION REQUIREMENTS.

SEISMIC REQUIREMENTS - NON-STRUCTURAL COMPONENTS:

IN ACCORDANCE WITH THE REQUIREMENTS OF THE CBC AND BY REFERENCE ASCE 7-16, ALL MECHANICAL, ELECTRICAL AND NON-STRUCTURAL COMPONENTS AND EQUIPMENT AND ANCHORAGES SHALL BE DESIGNED IN ACCORDANCE WITH THE REQUIREMENTS OF SECTION 13 OF ASCE 7 WITH A COMPONENT IMPORTANCE FACTOR Ip=1.0

FOR THIS PURPOSE, ALL COMPONENTS AND EQUIPMENT SHALL BE CONSIDERED TO HAVE THE SAME SEISMIC DESIGN CATEGORY AS THAT OF THE STRUCTURE THEY OCCUPY.

GENERAL CONDITIONS:

ALL STRUCTURAL DRAWINGS SHALL BE USED IN CONJUNCTION WITH THE OTHER PROJECT DRAWINGS AND SPECIFICATIONS.

SEE MECHANICAL, ELECTRICAL, AND CIVIL DRAWINGS FOR ANCHORS, PIPE SLEEVES, CONDUITS OR OTHER ITEMS TO BE EMBEDDED IN OR PASS THROUGH THE STRUCTURE MEMBERS. IN GENERAL, EMBEDMENTS AND PENETRATIONS LESS THAN 12 INCHES IN DIAMETER ARE NOT SHOWN ON STRUCTURAL DRAWINGS.

STANDARD DETAILS SHALL BE USED AT ALL APPLICABLE LOCATIONS, UNLESS NOTED OTHERWISE ON DRAWINGS.

SEE CIVIL SITE PLANS FOR STRUCTURE LOCATION COORDINATES.

FIELD VERIFY ALL EXISTING DIMENSIONS PRIOR TO CONSTRUCTION.

WRITTEN DIMENSIONS SHALL TAKE PRECEDENCE OVER SCALED SIZES.

CONSTRUCTION NOTES:

TEMPORARY SHORING SHALL NOT BE REMOVED UNTIL THE FULL STRENGTH (f'c) ACHIEVED.

PRIOR TO INSTALLATION OF EQUIPMENT COORDINATE AND CONFIRM THE ANCHORAGE REQUIREMENTS WITH THE MANUFACTURER. THE ANCHORAGE SYSTEM SHALL NOT DAMAGE THE CONCRETE.

CONTRACTOR SHALL VERIFY ALL DIMENSIONS IN THE FIELD. THE ENGINEER SHALL BE NOTIFIED OF ANY DISCREPANCY BETWEEN DRAWINGS IMMEDIATELY UPON DISCOVERY.

CAST-IN-PLACE CONCRETE:

REINFORCED CONCRETE SHALL CONFORM TO ACI 318, ACI 350, ACI 301 & ACI 350.5.

REINFORCING STEEL FABRICATION SHALL BE IN ACCORDANCE WITH THE LATEST EDITION OF THE CRSI MANUAL OF STANDARD PRACTICE.

ALL EXPOSED CORNERS OF CONCRETE SHALL HAVE 3/4" CHAMFER, UNLESS OTHERWISE NOTED.

WALL REINFORCEMENT AT CORNERS OR JUNCTIONS OF WALLS SHALL BE CONTINUOUS, LAPPED, OR TERMINATED IN AN ACI STANDARD 90 DEGREE STANDARD HOOK DETAIL. LAP SPLICES SHALL CONFORM WITH THE TABLE ON THE STANDARD DETAIL SHEETS.

UNLESS OTHERWISE INDICATED ON THE DRAWINGS, BARS SHALL BE DOWELED. DOWELS SHALL BE THE SAME SIZE AND SPACING AS THE REINFORCEMENT WHICH IS SPLICED UNLESS OTHERWISE NOTED.

SLAB, BEAM, AND COLUMN REINFORCING BARS SHALL HAVE A MINIMUM EXTENSION OR ANCHORAGE INTO SUPPORTS IN ACCORDANCE WITH ACI 318 AND ACI 350.

STIRRUP SUPPORT BARS SHALL BE PROVIDED AS REQUIRED TO SECURE TOP BARS AGAINST DISPLACEMENT.

UNLESS OTHERWISE INDICATED ON THE DRAWINGS, CONCRETE COVER OVER #11 AND SMALLER REINF BARS SHALL BE AS FOLLOWS:

SLABS:
FORMED CONCRETE SURFACES AND UNFORMED TOP SURFACES FOR DRY CONDITIONS.....2"
FORMED CONCRETE SURFACES AND UNFORMED TOP SURFACES EXPOSED TO WEATHER, IN CONTACT WITH SOIL OR FLUIDS, OR LOCATED OVER FLUIDS.....2"
AT UNFORMED CONCRETE SURFACES CAST AGAINST THE SOIL OR CONCRETE WORK MATS..... 3"
BEAMS:
FORMED CONCRETE SURFACES FOR DRY CONDITIONS:
STIRRUPS, SPIRALS AND TIES.....2"
PRINCIPAL REINFORCEMENT.....2 1/2"
FORMED CONCRETE SURFACES EXPOSED TO WEATHER, IN CONTACT WITH SOIL OR FLUIDS, OR BEAMS LOCATED OVER FLUIDS:
STIRRUPS AND TIES.....2"
PRINCIPAL REINFORCEMENT.....2 1/2"
WALLS:
FORMED CONCRETE SURFACES FOR DRY CONDITIONS..... 2"
FORMED CONCRETE SURFACES EXPOSED TO WEATHER OR IN CONTACT WITH SOIL OR FLUIDS.....2"

CONCRETE COVER IS THE LEAST DISTANCE BETWEEN EMBEDDED REINFORCEMENT AND THE SURFACE OF THE CONCRETE. THE SURFACE OF THE CONCRETE IS THE BOTTOM OF RUSTICATION OR REVEAL STRIPS WHEN USED.

NO BACKFILL SHALL BE PLACED AGAINST WALLS UNTIL CONCRETE HAS REACHED THE SPECIFIED STRENGTH AND ALL CONNECTING SLABS AND BEAMS PROVIDING SUPPORT TO THE WALLS HAVE BEEN CAST AND HAVE REACHED THE SPECIFIED STRENGTH. BACKFILL MATERIALS AND TECHNIQUE SHALL FOLLOW THE GEOTECHNICAL REPORT RECOMMENDATIONS.

CONCRETE ANCHORS AND POST-INSTALLED REBAR:

CONTRACTOR SHALL LOCATE EXISTING REINFORCING USING NON-DESTRUCTIVE METHODS PRIOR TO DRILLING HOLES FOR ADHESIVE AND EXPANSION ANCHORS. ADJUST SPACING OF ANCHORS TO MISS REINFORCING, AND SUBMIT FOR APPROVAL OF THE ENGINEER.

ADHESIVE FOR EMBEDDED DOWELS AND ANCHORS IN CONCRETE SHALL BE HILTI HIT-HY-200 (ICC EVALUATION REPORT 3187), OR APPROVED EQUAL. ALL DRILLED HOLES SHALL BE SIZED ACCORDING TO MANUFACTURER'S RECOMMENDATIONS.

EXPANSION ANCHORS IN CONCRETE SHALL BE HILTI KWIK BOLT TZ, (ICC EVALUATION REPORT 1917) OR APPROVED EQUAL.

CONCRETE JOINTS:

CONSTRUCTION JOINTS SHALL NOT BE PLACED AT LOCATIONS OTHER THAN THOSE SHOWN ON THE DRAWINGS WITHOUT THE PRIOR WRITTEN APPROVAL OF THE ENGINEER.

CONSTRUCTION JOINTS AND SURFACES SHALL BE PREPARED IN ACCORDANCE WITH SPECIFICATIONS.

MISCELLANEOUS METALS:

ANCHORS AND FASTENERS FOR ALUMINUM CONSTRUCTION SHALL BE TYPE 316 STAINLESS STEEL UNLESS NOTES OTHERWISE.

ALL ANGLE FRAMES ARE TO BE MITERED AND WELDED OR MOLDED AT CORNERS.

HOT-DIP GALVANIZING, SHOP PAINTING AND FIELD PAINTING, WHERE REQUIRED, SHALL BE IN ACCORDANCE WITH THE SPECIFICATIONS.

PROVIDE ANTI-SEIZE COMPOUND FOR STAINLESS STEEL OR ALUMINUM HARDWARE.

TYPICAL STRUCTURAL MATERIALS:

SEE PROJECT SPECIFICATIONS AND NOTES ON DRAWINGS FOR INDIVIDUAL STRUCTURES FOR DETAILED OR SPECIAL REQUIREMENTS.

CONCRETE
STRUCTURAL CONCRETE: f'c = 4500 PSI
SITE WORK CONCRETE, INCLUDING FILL DUCT ENCASEMENT AND MISC. CIVIL STRUCTURES, WHERE NOTED: f'c = 3000 PSI
REINFORCING STEEL: ASTM A615, GRADE 60 (Fy = 60,000 PSI)
CEMENT: ASTM C150, TYPE II

STRUCTURAL STEEL:
MISC PLATES AND BARS - ASTM A36
ANCHOR RODS: ASTM F1554, 3/4" MINIMUM UNO (Fy 36 KSI)
WELDING ELECTRODES: E70XX (Ft = 70 KSI)

STRUCTURAL ALUMINUM:
ALLOY: 6061-T6
SHAPES: ASTM B308
SHEET: ASTM B209
BOLTS, NUTS AND WASHERS: TYPE 316 STAINLESS STEEL OR TYPE 2024-T4
WELDING FILLER MATERIAL: 5356

ABBREVIATIONS:

ABBREVIATIONS AND DESIGNATIONS FOR STEEL MEMBERS MAY BE FOUND IN THE CURRENT MANUAL OF STEEL CONSTRUCTION MANUAL BY AISC.

ABBREVIATIONS OF TECHNICAL SOCIETIES AND TRADE ASSOCIATIONS MAY BE FOUND IN THE SPECIFICATIONS.

WELDING SYMBOLS AND ABBREVIATIONS MAY BE FOUND IN AWS 2.4.

&	AND
@	AT
	DIAMETER
#	NUMBER
AB	ANCHOR BOLT
ABV	ABOVE
ADDL	ADDITIONAL
AGG	AGGREGATE
AL	ALUMINUM
ALT	ALTERNATE (ING)
APPROX	APPROXIMATE (LY)
ARCH	ARCHITECT (URAL) (URE)
B TO B	BACK TO BACK
BEV	BEVEL (ED)
BLK	BLOCK
BLKG	BLOCKING
BOT	BOTTOM
BRG	BEARING
C TO C	CENTER TO CENTER
CIRC	CIRCUMFERENTIAL
CJ	CONSTRUCTION JOINT
℄ OR CL	CENTERLINE
CLJ	CONTROL JOINT
CLR	CLEAR
COL	COLUMN
COMP	COMPRESSIBLE
CONC	CONCRETE
CONN	CONNECTION
CONT	CONTINUOUS
CPLG	COUPLING
CSK	COUNTERSINK
CTG	COATING
CTR	CENTER (ED)
d	PENNEY
DET	DETAIL
DIA	DIAMETER
DIAG	DIAGONAL
DIR	DIRECTION
DL	DEAD LOAD
DO	DITTO
DWG	DRAWING
DWL	DOWEL
EA	EACH
EB	EXPANSION BOLT
EF	EACH FACE
EL	ELEVATION
ELEC	ELECTRIC (AL)
EMBED	EMBEDMENT
EQ	EQUAL (LY)
EQPT	EQUIPMENT
ES	EACH SIDE
EW	EACH WAY
EXP JT	EXPANSION JOINT
EXST	EXISTING
EXT	EXTERIOR
f'c	CONCRETE COMPRESSION STRESS
FAB	FABRICATE (OR) (ED)
FD	FLOOR DRAIN
FDN	FOUNDATION
FF	FAR FACE
FIN	FINISH (ED)
FL	FLOOR
FLG	FLANGE (ED)
FT	FEET/FOOT
FTG	FOOTING/FITTING
GA	GAGE
GALV	GALVANIZED
GI	GALVANIZED IRON
GR	GRADE
GRTG	GRATING
HAS	HEADED ANCHOR STUD
HD	HEAVY DUTY
HDR	HEADER
HOR	HORIZONTAL
HP	HIGH POINT
HR	HANDRAIL
IAW	IN ACCORDANCE WITH
ID	INSIDE DIAMETER
IF	INSIDE FACE
IN	INCH
INT	INTERIOR
INVT	INVERT
JT	JOINT
KO	KNOCKOUT
L	ANGLE DESIGNATION OR LENGTH
LLH	LONG LEG HORIZONTAL
LLV	LONG LEG VERTICAL
LOC	LOCATION/LOCATED
LONG	LONGITUDINAL
LP	LOW POINT
LT	LEFT
LW	LIGHTWEIGHT
MATL	MATERIAL
MAX	MAXIMUM
MB	MACHINE BOLTS
MECH	MECHANICAL
MFD	MANUFACTURED
MFG	MANUFACTURING
MFR	MANUFACTURER
MIN	MINIMUM
MISC	MISCELLANEOUS
NF	NEAR FACE
NSG	NON-SHRINK GROUT
NTS	NOT TO SCALE
OC	ON CENTER
OD	OUTSIDE DIAMETER
OF	OUTSIDE FACE
OPNG	OPENING
OPP	OPPOSITE
OPP HD	OPPOSITE HAND
OPT	OPTIONAL

DEFERRED DESIGN

THE FOLLOWING PORTIONS OF THE PROJECT ARE DEFERRED DESIGN ITEMS AND HAVE NOT BEEN DESIGNED BY THE ENGINEER OF RECORD:

a. PRECAST STRUCTURES AND CONNECTIONS
b. PIPE SUPPORTS AND ANCHORAGE
c. EQUIPMENT AND ELECTRICAL GEAR ANCHORAGE
d. METAL STAIRS
e. METAL RAILINGS

DEFERRED DESIGN ITEMS SHALL BE SUBMITTED TO THE ENGINEER FOR REVIEW DURING THE CONSTRUCTION PHASE OF THE PROJECT.

DEFERRED DESIGN ITEMS SHALL BE STAMPED AND SEALED BY A REGISTERED CALIFORNIA CIVIL OR STRUCTURAL ENGINEER.

DEFERRED DESIGN ITEMS SHALL NOT BE ERECTED OR INSTALLED UNTIL ENGINEER OF RECORD HAS REVIEWED THE SUBMITTAL DOCUMENTS AND INDICATED THAT THEY HAVE BEEN FOUND TO BE IN GENERAL CONFORMANCE WITH THE DESIGN OF THE STRUCTURE.

LEAK TEST FOR LIQUID CONTAINING STRUCTURES

LEAK TESTING SHALL BE PREFORMED ON LIQUID CONTAINING CONCRETE BASINS IN ACCORDANCE WITH ACI 350.1. LEAK TEST SHALL BE PERFORMED PRIOR TO BACKFILLING AND WITH ROOF SLAB INSTALLED. WATER LEVEL FOR TESTING SHALL BE TO THE FOLLOWING ELEVATIONS:

a. GATE STRUCTURE = EL 809.10
b. DIVERSION STRUCTURE = EL 806.55
c. INLET STRUCTURE = NOT REQUIRED

PCF	POUNDS PER CUBIC FOOT
PCJ	PARTIAL CONTRACTION JOINT
PJF	PREMOLDED JOINT FILLER
OR PL	PLATE
PLYWD	PLYWOOD
PRCST	PRECAST
PREFAB	PRE-FABRICATED
PSF	POUNDS PER SQUARE FOOT
PSI	POUNDS PER SQUARE INCH
PVMT	PAVEMENT
R	RISER (S)
RAD	RADIUS
RC	REINFORCED CONCRETE
RCP	REINFORCED CONCRETE PIPE
REF	REFERENCE/REFER
REINF	REINFORCE (D) (ING) (MENT)
REQD	REQUIRED
REV	REVISION
RLG	RAILING
RO	ROUGH OPENING
RT	RIGHT
SCHED	SCHEDULE
SCJ	SLAB CONTROL JOINT
SECT	SECTION
SFR	SYNTHETIC FIBER REINFORCED
SIM	SIMILAR
SP	SPACE (S) (D)
SPEC	SPECIFICATION/SPECIFIED
SQ	SQUARE
SST	STAINLESS STEEL
STD	STANDARD
STIF	STIFFENER
STIR	STIRRUP (S)
SYM	SYMMETRICAL
T	TREAD (S)
T&B	TOP AND BOTTOM
TF	TOP FACE
THD	THREADED
THK	THICK (NESS)
TOC	TOP OF CONCRETE
TOS	TOP OF STEEL
TOW	TOP OF WALL
TRNSV	TRANSVERSE
TSL	TOP OF SLAB
TYP	TYPICAL
UNO	UNLESS NOTED OTHERWISE
VB	VAPOR BARRIER
VERT	VERTICAL
VIF	VERIFY IN FIELD
W	WIDE FLANGE
W/	WITH
W/O	WITHOUT
WP	WORKING POINT
WS	WATERSTOP
WWF	WELDED WIRE FABRIC

THE CITY OF LOS ANGELES OR ITS OFFICERS OR AGENTS SHALL NOT BE RESPONSIBLE FOR THE ACCURACY OR COMPLETENESS OF ELECTRONIC COPIES OF THIS PLAN SHEET.

REVISION DATES (DESIGN STAGE ONLY)

CITY OF LOS ANGELES DEPARTMENT OF PUBLIC WORKS
BUREAU OF ENGINEERING

ENGINEERING
CITY OF LOS ANGELES

THIS PLAN WAS ELECTRONICALLY • SIGNED AND STAMPED

REGISTERED PROFESSIONAL ENGINEER JOSEPH ANIL MORRIS C 80907 CIVIL STATE OF CALIFORNIA
01/31/2023

VERTICAL CONTROL: BENCH MARK: 18-02215 NAVD 88
HORIZONTAL CONTROL: CALIFORNIA STATE PLANE ZONE V, 1983 NAD

SHEET TITLE: GENERAL STRUCTURAL NOTES
PROJECT: STRATHERN PARK NORTH STORMWATER CAPTURE PROJECT
ADDRESS: STRATHERN PARK NORTH 8041 WHISETT AVE, NORTH HOLLYWOOD, CA 91605

NO.	REVISIONS	DATE	BY
		YY/MM/DD	
		YY/MM/DD	
		YY/MM/DD	
		YY/MM/DD	

CIP NO. SCP0003

INDEX NO.

CITY ENGINEER

	DESIGN GROUP	DATE
TED ALLEN, P.E.		
ENGINEER:	CDM SMITH INC.	11/18/2022
ARCHITECT:	NA	11/18/2022
DESIGNED BY:	S. SURESH	11/18/2022
DRAWN BY:	P. BALA	11/18/2022
CHECKED BY:	J. BAUCHMOYER	11/18/2022
APPROVED BY:	J. MORRIS	11/18/2022

WORK ORDER
EW40080F

SHEET NAME
SG01
SHEET 55 OF 85 SHEETS

STRUCTURAL OBSERVATION:

STRUCTURAL OBSERVATIONS SHALL BE CONDUCTED IN ACCORDANCE WITH THE REQUIREMENTS SET FORTH IN CHAPTER 17 OF THE CBC.

IN ACCORDANCE WITH THE REQUIREMENTS OF CHAPTER 1704 OF THE CBC, THE OWNER SHALL EMPLOY A REGISTERED DESIGN PROFESSIONAL TO PERFORM STRUCTURAL OBSERVATIONS FOR SEISMIC RESISTANCE. SITE VISITS SHALL BE MADE TO OBSERVE GENERAL COMPLIANCE WITH THE APPROVED STRUCTURAL PLANS, SPECIFICATIONS AND CHANGE ORDERS. THE REGISTERED DESIGN PROFESSIONAL SHALL SUBMIT A STATEMENT IN WRITING TO THE BUILDING OFFICIAL AND OWNER STATING THAT THE SITE VISITS HAVE BEEN MADE AND IDENTIFY ANY REPORTED DEFICIENCIES THAT, TO THE BEST OF THE STRUCTURAL OBSERVER'S KNOWLEDGE, HAVE NOT BEEN RESOLVED. STRUCTURAL OBSERVATIONS DO NOT INCLUDE OR WAIVE THE INSPECTIONS REQUIRED BY SECTIONS 109, 1705 OR OTHER SECTIONS OF THE CODE.

PER CBC 1704.6, ALL CAST-IN-PLACE CONCRETE STRUCTURES ARE SUBJECT TO STRUCTURAL OBSERVATION AT A FREQUENCY OF ONCE PER STRUCTURE PER ELEMENT DURING REINFORCMENT INSTALLATION FOR EACH OF THE FOLLOWING ELEMENTS: FOUNDATIONS, WALLS, AND TOP SLABS.

SCHEDULE OF SPECIAL INSPECTIONS

1. THIS DRAWING IS PROVIDED TO OUTLINE THE MINIMUM LEVEL OF SPECIAL INSPECTIONS DURING CONSTRUCTION TO ENSURE CONFORMANCE TO THE REQUIREMENTS OF THE CONTRACT DOCUMENTS. A STATEMENT OF SPECIAL INSPECTIONS WILL BE PREPARED BY A REGISTERED DESIGN PROFESSIONAL AND SUBMITTED WITH THE BUILDING PERMIT APPLICATION.

2. SPECIAL INSPECTIONS WILL BE CONDUCTED IN ACCORDANCE WITH THE REQUIREMENTS SET FORTH IN CHAPTER 17 OF THE CALIFORNIA BUILDING CODE (CBC).

3. IN ACCORDANCE WITH THE REQUIREMENTS OF CHAPTER 17 OF THE CALIFORNIA BUILDING CODE, THE OWNER WILL PROVIDE A SPECIAL INSPECTOR (AN APPROVED AGENCY OR AGENCIES, INDEPENDENT FROM THE CONTRACTOR AND EMPLOYING QUALIFIED PERSONNEL) TO PERFORM SPECIAL INSPECTIONS IDENTIFIED IN THE STATEMENT OF SPECIAL INSPECTIONS. THE SPECIAL INSPECTOR WILL FURNISH INSPECTION REPORTS TO THE ENGINEER AND BUILDING OFFICIAL.

4. SPECIAL INSPECTIONS SHALL NOT RELIEVE THE CONTRACTOR OF RESPONSIBILITY FOR QUALITY CONTROL OF THE WORK OR FOR CONFORMANCE TO THE REQUIREMENTS OF THE CONTRACT DOCUMENTS. DETECTION, OR FAILURE TO DETECT, DEFECTS IN THE WORK SHALL NOT RELIEVE THE CONTRACTOR OF RESPONSIBILITY TO CORRECT ALL DEFECTS IN THE WORK, WHETHER DETECTED OR NOT, AND OF RESPONSIBILITY FOR CONFORMANCE TO THE REQUIREMENTS OF THE CONTRACT DOCUMENTS.

5. REMOVE AND REPLACE, OR REPAIR, DEFECTS IN THE WORK AND WORK NOT IN CONFORMANCE WITH THE REQUIREMENTS OF THE CONTRACT DOCUMENTS AT NO ADDITIONAL COST TO THE OWNER. CONTRACTOR SHALL BEAR THE COSTS FOR THE INSPECTION OF ANY REPLACED OR REPAIRED PORTIONS OF THE WORK.

6. CONTRACTOR SHALL COOPERATE WITH SPECIAL INSPECTIONS BY PROVIDING SUFFICIENT NOTICE FOR THE SCHEDULING OF PERSONNEL AND BY ALLOWING FREE AND SAFE ACCESS TO THE WORK FOR OBSERVATION, VERIFICATION, SAMPLING AND INSPECTION. PROVIDE AND PERMIT THE USE OF LADDERS, SCAFFOLDING, INCIDENTAL EQUIPMENT, AND SAFETY EQUIPMENT AS MAY BE REQUIRED TO CONDUCT SPECIAL INSPECTIONS. ALL SUCH PROVISIONS FOR FREE AND SAFE ACCESS AND EQUIPMENT SHALL BE SAFE, IN GOOD WORKING CONDITION, AND ERECTED, MAINTAINED, AND HANDLED BY QUALIFIED PERSONNEL.

7. SPECIAL INSPECTIONS DO NOT APPLY TO CONTRACTOR'S EQUIPMENT, TEMPORARY STRUCTURES USED FOR CONSTRUCTION, MEANS AND METHODS OF CONSTRUCTION, OR SITE SAFETY. CONTRACTOR SHALL REMAIN RESPONSIBLE FOR ADEQUACY AND SAFETY OF EQUIPMENT, TEMPORARY STRUCTURES USED FOR CONSTRUCTION, MEANS AND METHODS OF CONSTRUCTION AND SITE SAFETY.

STRUCTURAL LEGEND AND SYMBOLS

GRATING OR PLANK SPAN DIRECTION

EARTH FILL

UNDISTURBED EARTH

CONCRETE

EXPANSION JOINT

GROUT

GRANULAR FILL

GRATING

CHECKERED PLATE

TABLE 1 - REQUIRED SPECIAL INSPECTIONS AND TESTS OF SOILS (CBC, TABLE 1705.6)

VERIFICATION AND INSPECTION	CBC REFERENCE	INSPECTION FREQUENCY		REFERENCE STANDARD	REMARKS
		CONTINUOUS	PERIODIC		
VERIFY MATERIALS BELOW SHALLOW FOUNDATIONS ARE ADEQUATE TO ACHIEVE THE DESIGN BEARING CAPACITY	1705.6		X	CONTRACT DOCUMENTS AND GEOTECHNICAL REPORT	REFER TO THE FOLLOWING TABLES FOR ADDITIONAL RELATED SPECIAL INSPECTIONS
VERIFY EXCAVATIONS ARE EXTENDED TO PROPER DEPTH AND HAVE REACHED PROPER MATERIAL			X		
PERFORM CLASSIFICATION AND TESTING OF COMPACTED FILL MATERIALS			X		
VERIFY USE OF PROPER MATERIALS, DENSITIES AND LIFT THICKNESSES DURING PLACEMENT AND COMPACTION OF COMPACTED FILL		X			
PRIOR TO PLACEMENT OF COMPACTED FILL, INSPECT SUBGRADE AND VERIFY THAT SITE HAS BEEN PREPARED PROPERLY			X		

TABLE 2 - REQUIRED VERIFICATION AND INSPECTION OF CONCRETE CONSTRUCTION (CBC, TABLE 1705.3)

VERIFICATION AND INSPECTION	CBC REFERENCE	INSPECTION FREQUENCY		REFERENCE STANDARD
		CONTINUOUS	PERIODIC	
INSPECTION OF REINFORCING STEEL AND PLACEMENT	1705.3 1908.4		X	ACI 318: CH 20, 25.2, 25.3, 26.5.1-26.5.3
INSPECT ANCHORS CAST IN CONCRETE	1705.3		X	ACI 318: 17.8.2
INSPECT ANCHORS POST-INSTALLED IN HARDENED CONCRETE MEMBERS	1705.3			
a. ADHESIVE ANCHORS		X		ACI 318: 17.8.2.4
b. MECHANICAL ANCHORS			X	ACI 318: 17.8.2
VERIFICATION AND INSPECTION OF MECHANICAL REINFORCING STEEL COUPLING SYSTEM (WHEN SPECIFIED OR APPROVED IN WRITING). PRODUCT NAME AND MODEL NUMBER/TYPE, REINFORCING STEEL GRADE AND BAR DIAMETER(S) TO BE SPLICED. THREADED SYSTEMS: END PLUGS INSTALLED OVER INTERNALLY THREADED ENDS, INTERNAL AND EXTERNAL THREAD CONDITION AND CLEANLINESS, PROPER LENGTH OF INSERTION, AND TIGHTENED TO MANUFACTURER'S RECOMMENDED TORQUE. SET SCREW TYPE SYSTEMS: PROPER LENGTH OF INSERTION, SET SCREWS TIGHTENED TO MANUFACTURER'S RECOMMENDED TORQUE. OTHER TYPES OF MECHANICAL REINFORCING STEEL COUPLING SYSTEMS OR SUBSTITUTIONS: VERIFICATION AND INSPECTION REQUIREMENTS WILL BE ESTABLISHED BY THE ENGINEER.		X		PER ICC TEST REPORT FOR COUPLING SYSTEM
VERIFYING USE OF REQUIRED DESIGN MIX	1705.3 1904.1 1904.2 1908.2 1908.3		X	ACI 318: CH 19, 26.4.3, 26.4.4
PRIOR TO CONCRETE PLACEMENT, FABRICATE SPECIMENS FOR STRENGTH TESTS, PERFORM SLUMP AND AIR CONTENT TESTS, AND DETERMINE THE TEMPERATURE OF THE CONCRETE	1705.3 1908.10	X		ACI 318: 26.4.5, 26.12 ASTM C172 ASTM C31
INSPECT CONCRETE PLACEMENT FOR PROPER APPLICATION TECHNIQUES	1705.3 1908.6 1908.7 1908.8	X		ACI 318: 26.4.5
VERIFY MAINTENANCE OF SPECIFIED CURING TEMPERATURE AND TECHNIQUES	1705.3 1908.9		X	ACI 318: 26.10.1(b)
INSPECT FORMWORK FOR SHAPE, LOCATION AND DIMENSIONS OF THE CONCRETE MEMBER BEING FORMED	1705.3		X	ACI 318: 26.10.1(b)

THE CITY OF LOS ANGELES OR ITS OFFICERS OR AGENTS SHALL NOT BE RESPONSIBLE FOR THE ACCURACY OR COMPLETENESS OF ELECTRONIC COPIES OF THIS PLAN SHEET.

REVISION DATES (DESIGN STAGE ONLY)

BUREAU OF ENGINEERING • THIS PLAN WAS ELECTRONICALLY • SIGNED AND STAMPED

ENGINEERING CITY OF LOS ANGELES

REGISTERED PROFESSIONAL ENGINEER JUDAH ALL MORRIS C 80907 CIVIL STATE OF CALIFORNIA 01/31/2023

VERTICAL CONTROL: BENCH MARK: 18-02215 NAVD 88
HORIZONTAL CONTROL: CALIFORNIA STATE PLANE ZONE V, 1983 NAD

SHEET TITLE: SPECIAL INSPECTION

PROJECT: STRATHERN PARK NORTH STORMWATER CAPTURE PROJECT

ADDRESS: STRATHERN PARK NORTH 8041 WHISETT AVE, NORTH HOLLYWOOD, CA 91605

NO.	REVISIONS	DATE	BY
		YY/MM/DD	
		YY/MM/DD	
		YY/MM/DD	
		YY/MM/DD	
		YY/MM/DD	

CIP NO. SCP0003

INDEX NO.

CITY OF LOS ANGELES DEPARTMENT OF PUBLIC WORKS

CITY ENGINEER: TED ALLEN, P.E. — DATE: 11/18/2022

DESIGN GROUP		DATE
ENGINEER:	CDM SMITH INC.	11/18/2022
ARCHITECT:	NA	11/18/2022
DESIGNED BY:	S. SURESH	11/18/2022
DRAWN BY:	P. BALA	11/18/2022
CHECKED BY:	J. BAUCHMOYER	11/18/2022
APPROVED BY:	J. MORRIS	11/18/2022

WORK ORDER EW40080F

SHEET NAME SG02

SHEET 56 OF 85 SHEETS

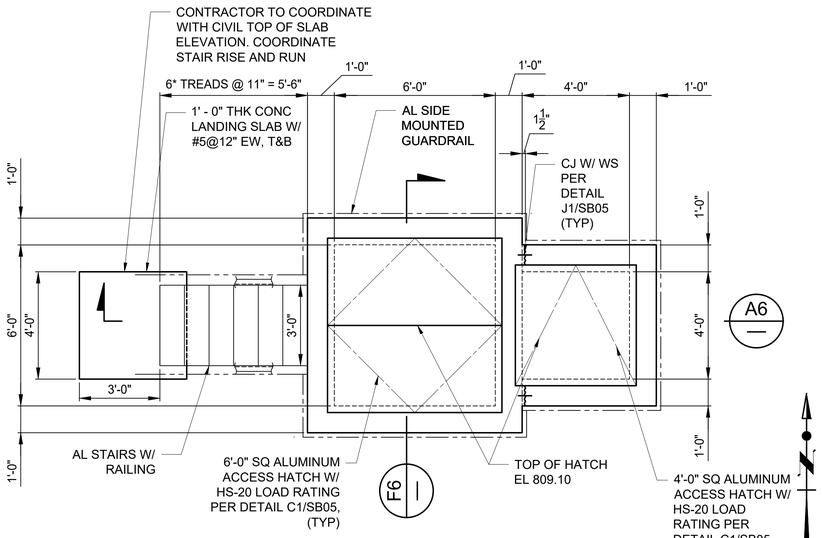

TOP PLAN
3/8"=1'-0"

2' 0 2' 4'
⅜" = 1'-0"

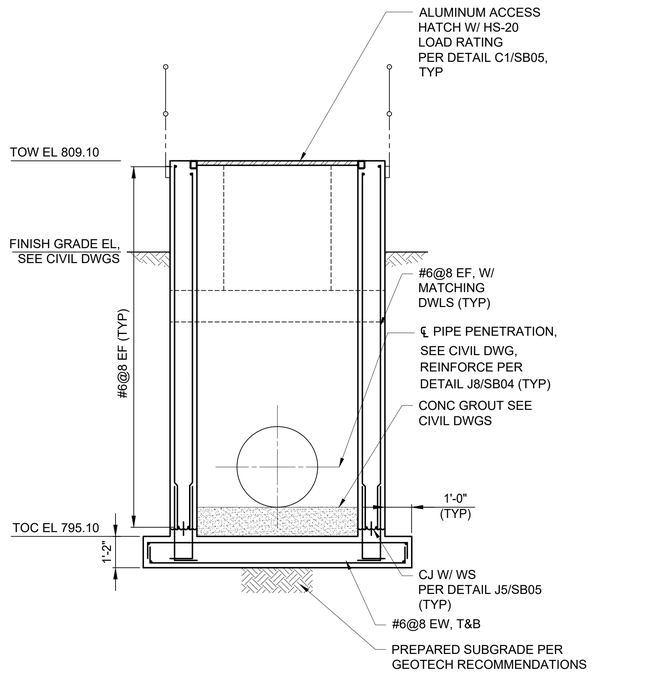

F6 — SECTION
SCALE: 3/8"=1'-0"

2' 0 2' 4'
⅜" = 1'-0"

NOTES:

1. * INDICATES DIMENSIONS AND /OR INFORMATION TO BE COORDINATED BY THE CONTRACTOR WITH THE CIVIL DRAWINGS PRIOR TO FABRICATION AND CONSTRUCTION.
2. ACCESS BOX FOR GATE ACTUATOR IS DESIGNED TO BE GRADE SUPPORTED. THE WETWELL SHALL BE CONSTRUCTED, LEAK TESTED AND BACKFILLED PRIOR TO CONSTRUCTION OF ACTUATOR BOX.
3. SEE CIVIL DRAWINGS FOR STRUCTURAL FILL AND OVER EXCAVATION REQUIREMENTS.
4. FOR STAIRS, SEE SPECIFICATION 05500 AND STANDARD DETAILS ON SHEET SB05.

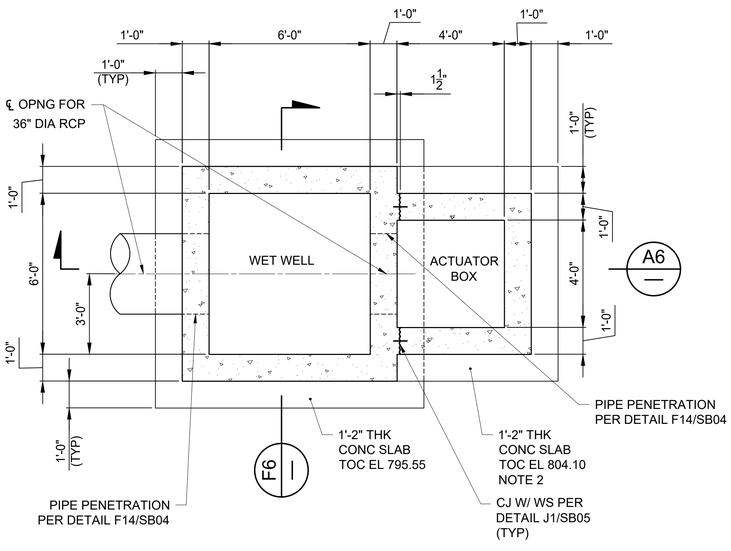

FOUNDATION PLAN
3/8"=1'-0"

2' 0 2' 4'
⅜" = 1'-0"

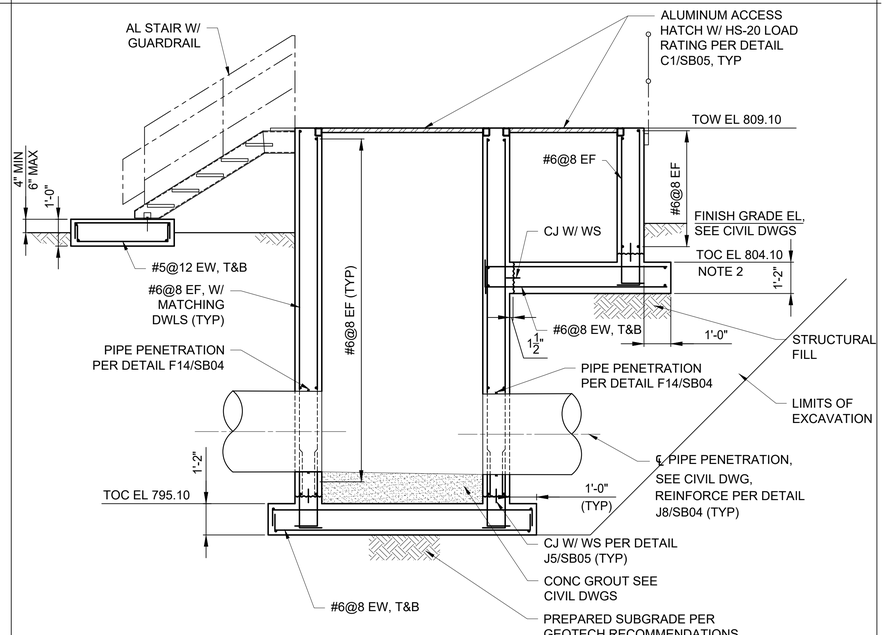

A6 — SECTION
SCALE: 3/8"=1'-0"

2' 0 2' 4'
⅜" = 1'-0"

THE CITY OF LOS ANGELES OR ITS OFFICERS OR AGENTS SHALL NOT BE RESPONSIBLE FOR THE ACCURACY OR COMPLETENESS OF ELECTRONIC COPIES OF THIS PLAN SHEET.

REVISION DATES (DESIGN STAGE ONLY)

ENGINEERING
CITY OF LOS ANGELES

REGISTERED PROFESSIONAL ENGINEER — STRUCTURAL — MORRIS — C 80907 — CIVIL — STATE OF CALIFORNIA — 01/31/2023

THIS PLAN WAS ELECTRONICALLY • SIGNED AND STAMPED

CITY OF LOS ANGELES DEPARTMENT OF PUBLIC WORKS BUREAU OF ENGINEERING

VERTICAL CONTROL: BENCH MARK: 18-02215 NAVD 88
HORIZONTAL CONTROL: CALIFORNIA STATE PLANE ZONE V, 1983 NAD

SHEET TITLE: GATE VAULT PLANS AND SECTIONS
PROJECT: STRATHERN PARK NORTH STORMWATER CAPTURE PROJECT
ADDRESS: STRATHERN PARK NORTH 8041 WHISETT AVE, NORTH HOLLYWOOD, CA 91605

NO.	REVISIONS	DATE	BY
		YY/MM/DD	
		YY/MM/DD	
		YY/MM/DD	
		YY/MM/DD	

CIP NO. SCP0003

INDEX NO.

CITY ENGINEER	DATE
TED ALLEN, P.E.	04/11/2023
DESIGN GROUP	
ENGINEER: CDM SMITH INC.	04/11/2023
ARCHITECT: NA	04/11/2023
DESIGNED BY: S. SURESH	04/11/2023
DRAWN BY: P. BALA	04/11/2023
CHECKED BY: J. BAUCHMOYER	04/11/2023
APPROVED BY: J. MORRIS	04/11/2023

WORK ORDER
EW40080F

SHEET NAME
SB01
SHEET 57 OF 85 SHEETS

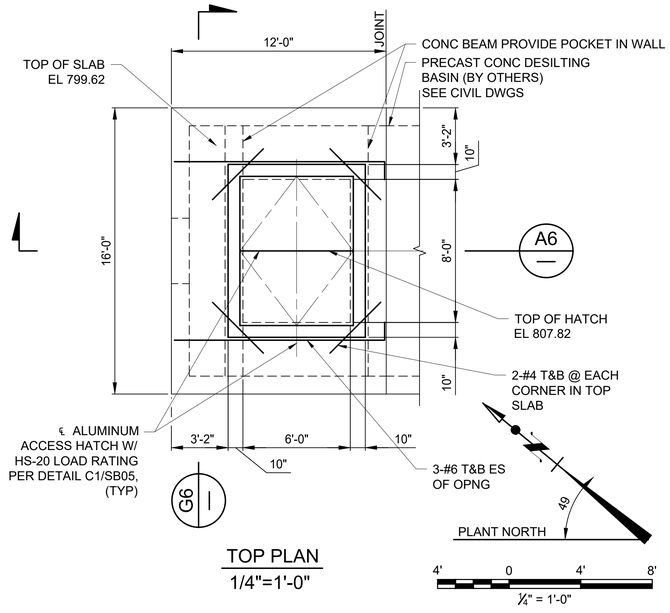

TOP PLAN

1/4"=1'-0"

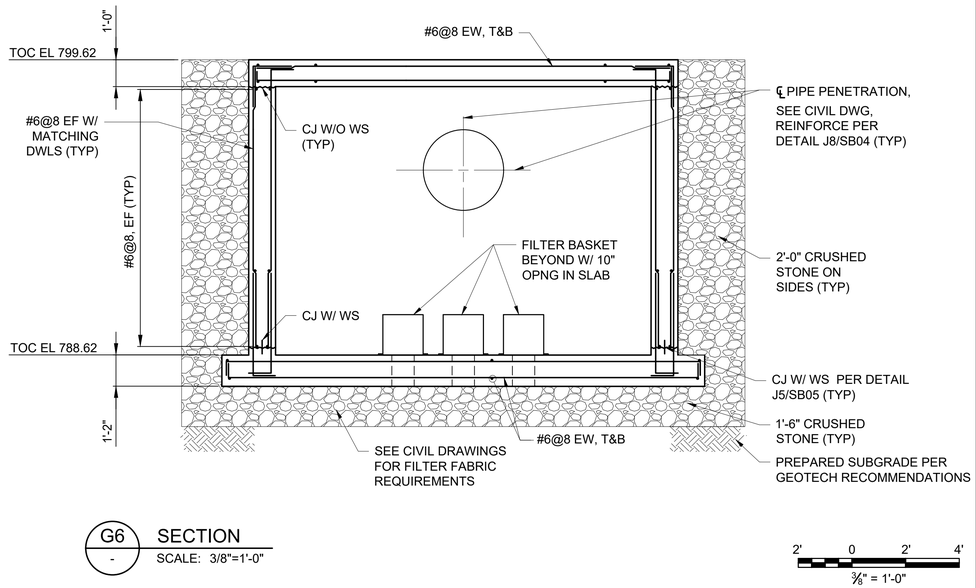

G6 - SECTION

SCALE: 3/8"=1'-0"

NOTES:

1. * INDICATES DIMENSIONS AND /OR INFORMATION TO BE COORDINATED BY THE CONTRACTOR WITH THE CIVIL DRAWINGS PRIOR TO FABRICATION AND CONSTRUCTION.
2. CONTRACTOR TO CONFIRM AND COORDINATE CONNECTION BETWEEN PRECAST AND INLET STRUCTURE PRIOR TO CONSTRUCTION.
3. SEE CIVIL DRAWINGS FOR CRUSHED STONE REQUIREMENTS.

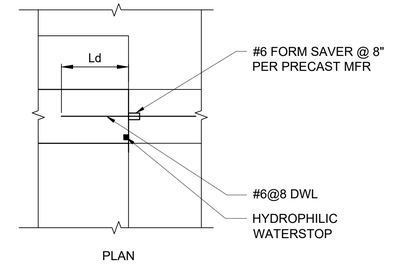

G13 - PRECAST TO CAST-IN-PLACE WALL CONNECTION

SCALE: 3/8"=1'-0"

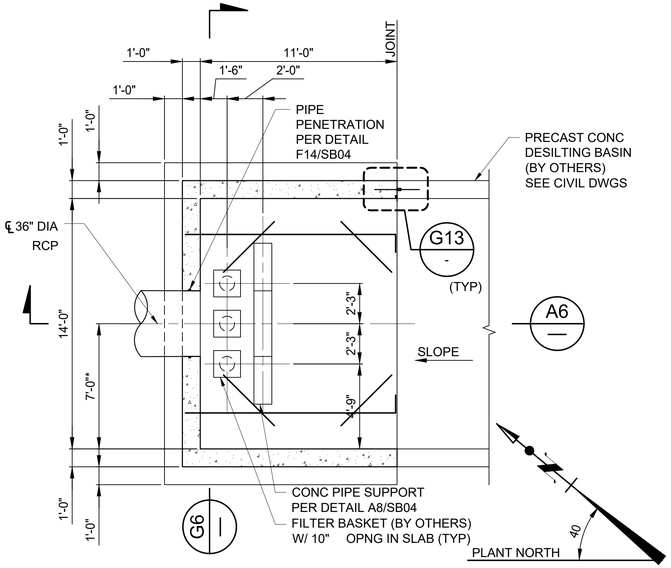

FOUNDATION PLAN

1/4"=1'-0"

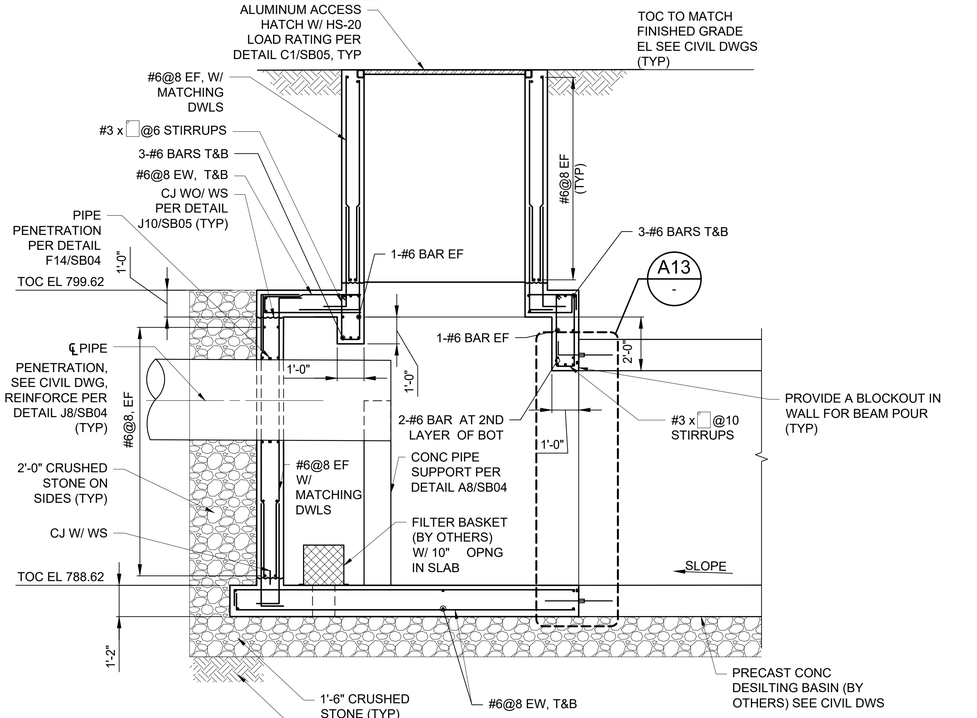

A6 - SECTION

SCALE: 3/8"=1'-0"

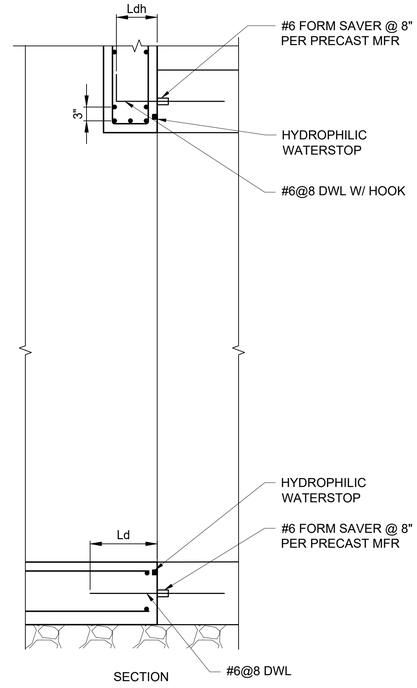

A13 - PRECAST TO CAST-IN-PLACE SLAB/BEAM CONNECTION

SCALE: 3/8"=1'-0"

THE CITY OF LOS ANGELES OR ITS OFFICERS OR AGENTS SHALL NOT BE RESPONSIBLE FOR THE ACCURACY OR COMPLETENESS OF ELECTRONIC COPIES OF THIS PLAN SHEET.

REVISION DATES (DESIGN STAGE ONLY)

BUREAU OF ENGINEERING • THIS PLAN WAS ELECTRONICALLY SIGNED AND STAMPED •

CITY OF LOS ANGELES DEPARTMENT OF PUBLIC WORKS

ENGINEERING CITY OF LOS ANGELES

REGISTERED PROFESSIONAL ENGINEER JONATHAN L. MORRIS C 80907 CIVIL STATE OF CALIFORNIA 01/31/2023

VERTICAL CONTROL: BENCH MARK: 18-02215 NAVD 88
HORIZONTAL CONTROL: CALIFORNIA STATE PLANE ZONE V, 1983 NAD

SHEET TITLE: INLET STRUCTURE PLANS AND SECTION
PROJECT: STRATHERN PARK NORTH STORMWATER CAPTURE PROJECT
ADDRESS: STRATHERN PARK NORTH 8041 WHISETT AVE, NORTH HOLLYWOOD, CA 91605

NO.	REVISIONS	DATE	BY
		YY/MM/DD	
		YY/MM/DD	
		YY/MM/DD	
		YY/MM/DD	

CIP NO. SCP0003

INDEX NO.

CITY ENGINEER: TED ALLEN, P.E. — DATE 01/31/2023

DESIGN GROUP

ENGINEER:	CDM SMITH INC.
ARCHITECT:	NA
DESIGNED BY:	S. SURESH
DRAWN BY:	P. BALA
CHECKED BY:	J. BAUCHMOYER
APPROVED BY:	J. MORRIS

WORK ORDER EW40080F

SHEET NAME SB02

SHEET 58 OF 85 SHEETS

SHEET VERSION 4.0.1 FILE PATH: C:\CDMEXT\BAUCHMOYERJMI\D0611903\SB02.DWG PLOT DATE: 4/10/2023 10:28 AM SAVED: 11/28/2022 6:17 AM SAVED BY:RAJENDRANK

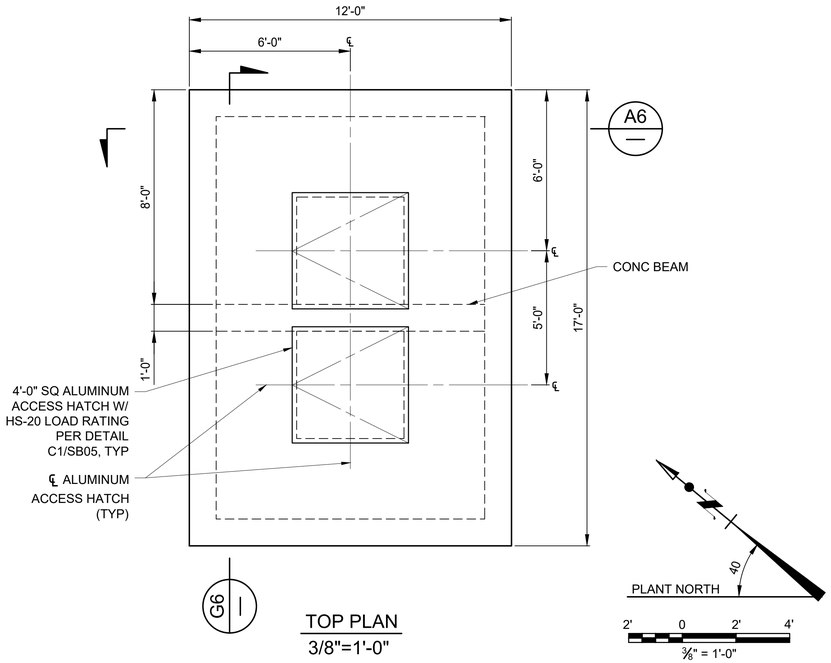

TOP PLAN
3/8"=1'-0"

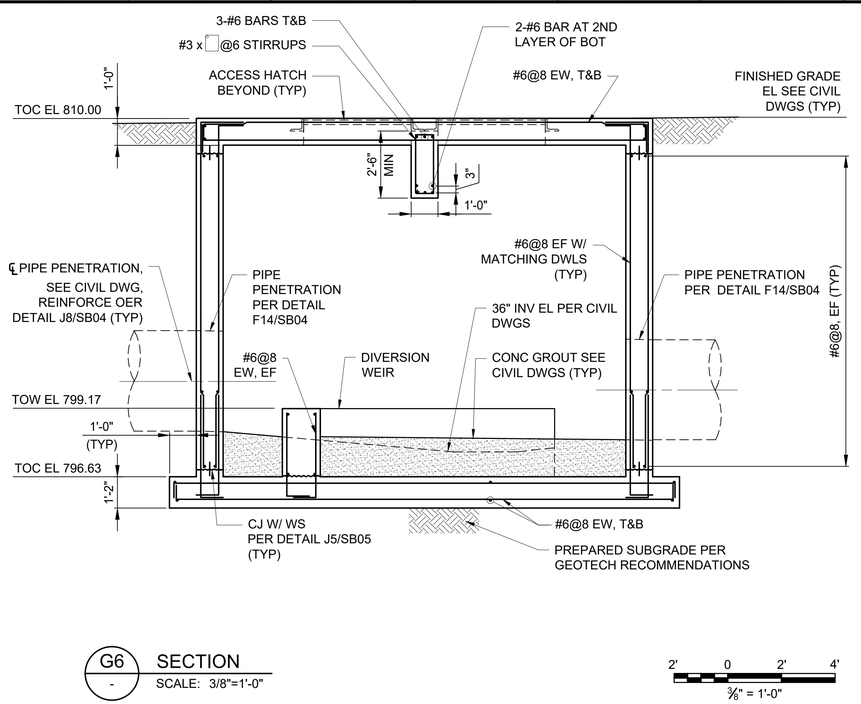

G6 SECTION
SCALE: 3/8"=1'-0"

NOTES:

1. * INDICATES DIMENSIONS AND /OR INFORMATION TO BE COORDINATED BY THE CONTRACTOR WITH THE CIVIL DRAWINGS PRIOR TO FABRICATION AND CONSTRUCTION.
2. SEE CIVIL DRAWINGS FOR STRUCTURAL FILL AND OVER EXCAVATION REQUIREMENTS.

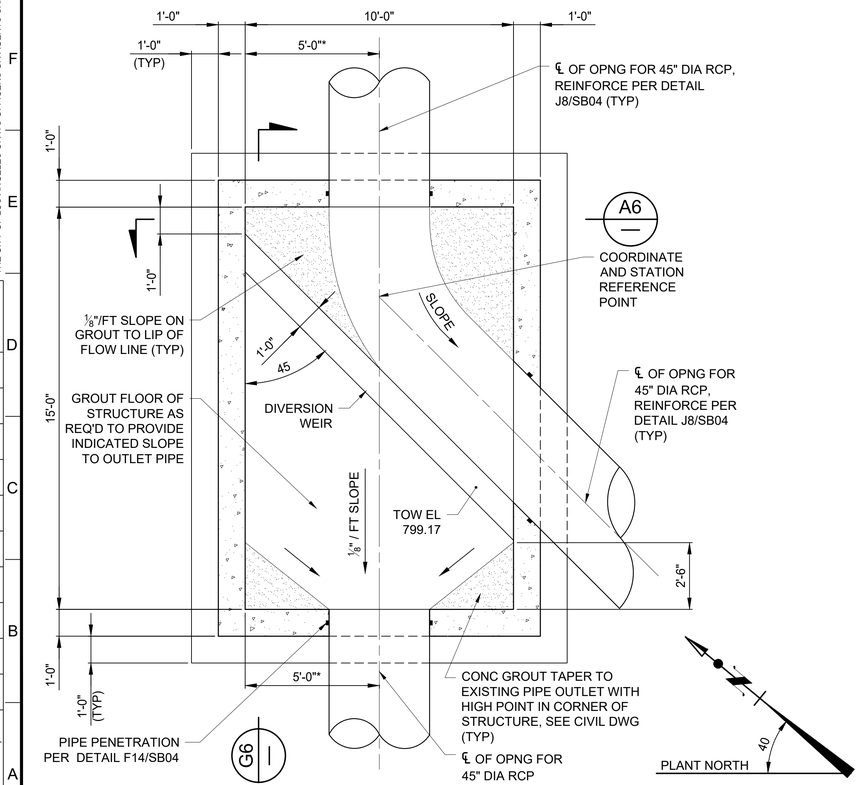

FOUNDATION PLAN
3/8"=1'-0"

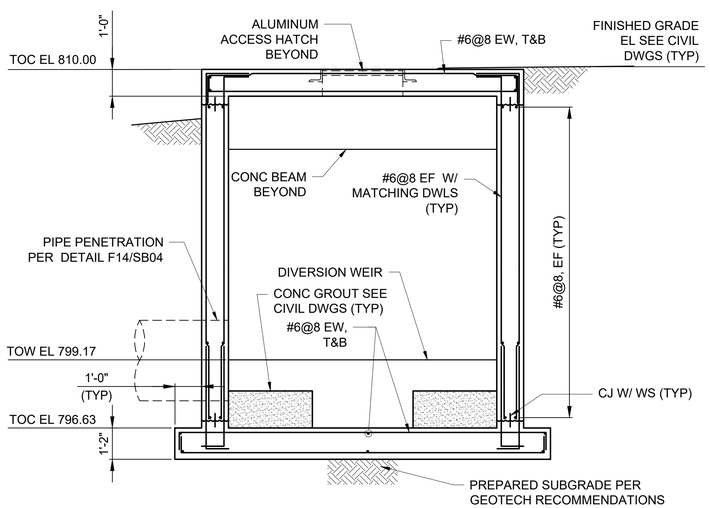

A6 SECTION
SCALE: 3/8"=1'-0"

THE CITY OF LOS ANGELES OR ITS OFFICERS OR AGENTS SHALL NOT BE RESPONSIBLE FOR THE ACCURACY OR COMPLETENESS OF ELECTRONIC COPIES OF THIS PLAN SHEET.

REVISION DATES (DESIGN STAGE ONLY)

ENGINEERING
CITY OF LOS ANGELES

PROFESSIONAL ENGINEER — JOSHUA MORRIS — C 80907 — CIVIL — STATE OF CALIFORNIA — 01/31/2023

THIS PLAN WAS ELECTRONICALLY • SIGNED AND STAMPED

BUREAU OF ENGINEERING

VERTICAL CONTROL: BENCH MARK: 18-02215 NAVD 88
HORIZONTAL CONTROL: CALIFORNIA STATE PLANE ZONE V, 1983 NAD

SHEET TITLE: DIVERSION STRUCTURE PLANS AND SECTIONS
PROJECT: STRATHERN PARK NORTH STORMWATER CAPTURE PROJECT
ADDRESS: STRATHERN PARK NORTH 8041 WHISETT AVE, NORTH HOLLYWOOD, CA 91605

NO.	REVISIONS	DATE	BY
		YY/MM/DD	
		YY/MM/DD	
		YY/MM/DD	
		YY/MM/DD	

CIP NO. SCP0003

INDEX NO.

CITY ENGINEER: TED ALLEN, P.E. — DATE: 04/11/2023

	DESIGN GROUP	DATE
ENGINEER:	CDM SMITH INC.	04/11/2023
ARCHITECT:	NA	04/11/2023
DESIGNED BY:	S. SURESH	04/11/2023
DRAWN BY:	P. BALA	04/11/2023
CHECKED BY:	J. BAUCHMOYER	04/11/2023
APPROVED BY:	J. MORRIS	04/11/2023

CITY OF LOS ANGELES DEPARTMENT OF PUBLIC WORKS

WORK ORDER
EW40080F

SHEET NAME
SB03

SHEET 59 OF 85 SHEETS

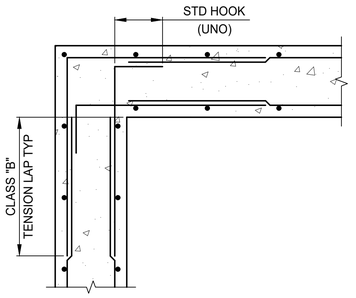

J1 WALL CORNER REINFORCING

SCALE: NTS | -

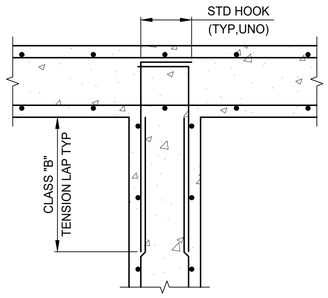

J4 WALL INTERSECTION REINFORCING

SCALE: NTS | -

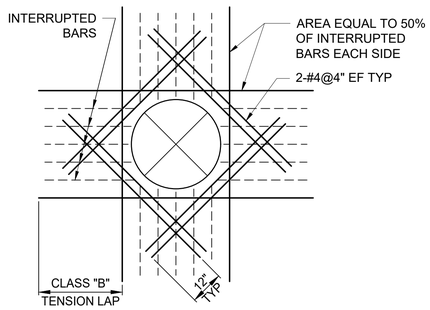

NOTE:
1. WHERE OPENING IS WITHIN 4'-0" OF BASE SLAB PROVIDE MATCHING DOWELS FOR ADDITIONAL BARS.

J8 REINFORCEMENT AT CIRCULAR OPENINGS 12" OR GREATER

SCALE: NTS | -

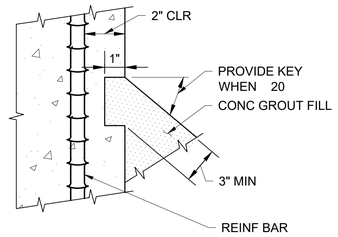

J14 CONCRETE GROUT FILL KEY

SCALE: NTS | -

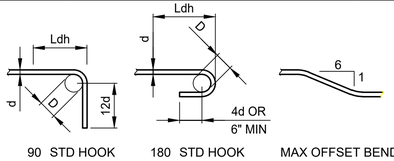

D=6d FOR #3 TO #8
D=8d FOR #9 TO #11
D=12d FOR #14 AND #18

PRINCIPAL REINFORCING

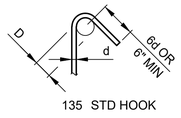

MIN D=1 1/2" FOR #3
MIN D=2" FOR #4
MIN D=2 1/2" FOR #5

STIRRUPS AND TIES

BAR SIZE	DIAMETER (d_b) (INCHES)	STD HOOK (Ldh) (INCHES)
#3	0.375	6
#4	0.5	7
#5	0.625	9
#6	0.75	10
#7	0.875	12
#8	1.0	14
#9	1.125	15
#10	1.25	17
#11	1.375	19

NOTES:
1. ALL BENDS SHALL BE MADE COLD.
2. #14 AND #18 BARS SHALL BE BEND TESTED AND LAB APPROVED PRIOR TO BENDING.

F1 BAR BENDS

SCALE: NTS | -

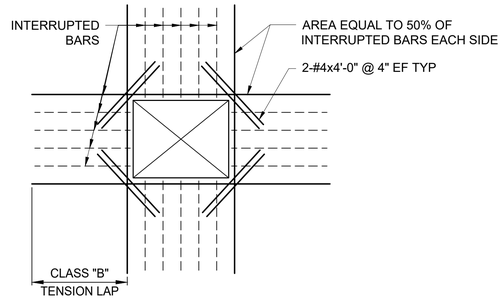

NOTE:
1. WHERE OPENING IS WITHIN 4'-0" OF BASE SLAB PROVIDE MATCHING DOWELS FOR ADDITIONAL BARS.

F8 REINFORCEMENT AT RECTANGULAR OPENINGS 12" OR GREATER

SCALE: NTS | -

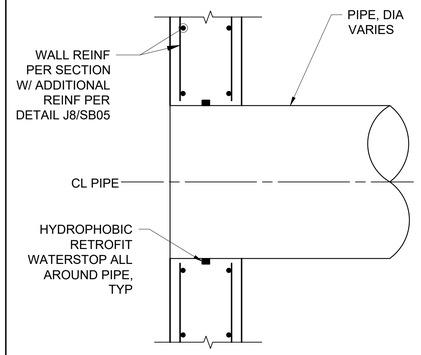

F14 PIPE PENETRATION

SCALE: NTS | -

		WALLS AND SLABS				BEAMS AND COLUMNS			
		DEVELOPMENT LENGTH (L_d) (INCHES)		CLASS B LAP SPLICE (INCHES)		DEVELOPMENT LENGTH (L_d) (INCHES)		CLASS B LAP SPLICE (INCHES)	
BAR SIZE	DIAMETER (db) (INCHES)	"TOP" BARS	OTHER	"TOP" BARS	OTHER	"TOP" BARS	OTHER	"TOP" BARS	OTHER
		REINFORCING BARS IN TENSION							
#3	0.375	12	12	16	16	19	15	24	19
#4	0.5	15	12	20	16	25	19	32	25
#5	0.625	19	15	24	19	31	24	40	31
#6	0.75	22	17	29	22	37	29	48	37
#7	0.875	33	25	42	33	54	42	70	54
#8	1.0	37	29	48	37	62	48	80	62
#9	1.125	46	36	60	46	70	54	91	70
#10	1.25	57	44	74	57	79	61	102	79
#11	1.375	68	53	89	68	87	67	113	87

NOTES:
1. "TOP" BARS ARE HORIZONTAL REINFORCEMENT PLACED SO THAT MORE THAN 12" OF FRESH CONCRETE IS CAST IN THE MEMBER BELOW THE DEVELOPMENT LENGTH OR SPLICE.
2. CENTER TO CENTER SPACING OF BARS BEING DEVELOPED OD SPLICED SHALL A) NOT BE LESS THAN 3db, WITH CLEAR COVER NOT LESS THAN 1 1/2". WHERE db = DIAMETER OF REINFORCING BAR.
3. TABLE IS BASED ON f'c = 4000 PSI AND fy = 60,000 PSI. LAP SPLICE AND DEVELOPMENT LENGTHS SHALL BE INCREASED FOR LOWER CONCRETE COMPRESSIVE STRENGTH AS FOLLOWS:

	MULTIPLIER
f'c 2500 PSI	1.27
f'c 3000 PSI	1.16
f'c 4500 PSI	0.94

A1 STANDARD HOOK AND LAP SPLICE IN CONCRETE

SCALE: NTS | -

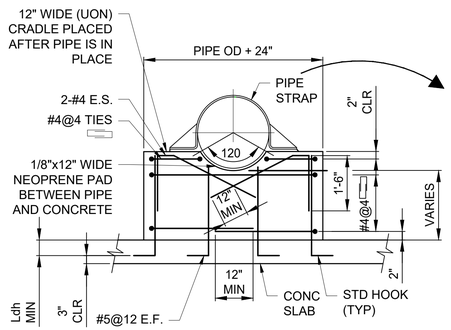

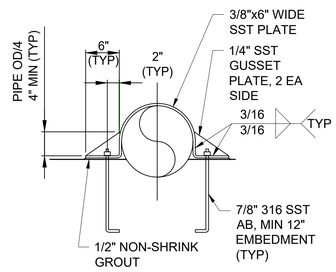

A8 TYPICAL CONCRETE PIPE CRADLE

SCALE: NTS | -

THE CITY OF LOS ANGELES OR ITS OFFICERS OR AGENTS SHALL NOT BE RESPONSIBLE FOR THE ACCURACY OR COMPLETENESS OF ELECTRONIC COPIES OF THIS PLAN SHEET.

REVISION DATES (DESIGN STAGE ONLY)

CITY OF LOS ANGELES DEPARTMENT OF PUBLIC WORKS BUREAU OF ENGINEERING • THIS PLAN WAS ELECTRONICALLY • SIGNED AND STAMPED

ENGINEERING CITY OF LOS ANGELES

REGISTERED PROFESSIONAL ENGINEER JONATHAN L. MORRIS C 80907 CIVIL STATE OF CALIFORNIA 01/31/2023

VERTICAL CONTROL: BENCH MARK: 18-02215 NAVD 88
HORIZONTAL CONTROL: CALIFORNIA STATE PLANE ZONE V, 1983 NAD

SHEET TITLE: STANDARD DETAILS I

PROJECT: STRATHERN PARK NORTH STORMWATER CAPTURE PROJECT

ADDRESS: STRATHERN PARK NORTH 8041 WHISETT AVE, NORTH HOLLYWOOD, CA 91605

NO.	REVISIONS	DATE	BY
		YY/MM/DD	
		YY/MM/DD	
		YY/MM/DD	
		YY/MM/DD	

CIP NO. SCP0003

INDEX NO.

CITY ENGINEER: TED ALLEN, P.E.

DESIGN GROUP		DATE
ENGINEER:	CDM SMITH INC.	11/18/2022
ARCHITECT:	NA	11/18/2022
DESIGNED BY:	S. SURESH	11/18/2022
DRAWN BY:	P. BALA	11/18/2022
CHECKED BY:	J. BAUCHMOYER	11/18/2022
APPROVED BY:	J. MORRIS	11/18/2022

WORK ORDER EW40080F

SHEET NAME SB04

SHEET 60 OF 85 SHEETS

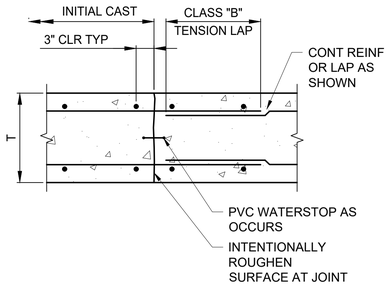

J1	SLAB/WALL CONSTRUCTION JOINT (CJ)
SCALE:NTS	-

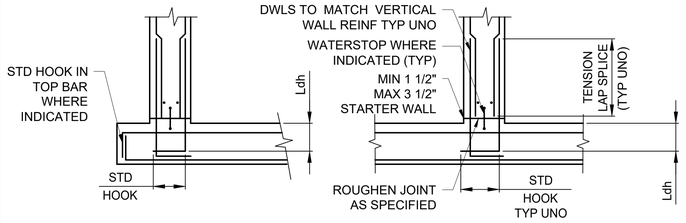

END WALL INTERMEDIATE WALL

NOTES:
1. STARTER WALL MAY BE ELIMINATED AT JOINTS WITHOUT WATERSTOP.
2. SEE INTERMEDIATE WALL FOR INFORMATION NOT GIVEN FOR END WALL.
3. PROVIDE ADDITIONAL REINFORCEMENT EF IN BOT 3'-0" OF WALL WHERE NOTED ON DRAWINGS. BARS SHALL BE SAME SIZE AS AND LOCATED HALFWAY BETWEEN TYPICAL HORIZ REINFORCEMENT.

J5	WALL CONSTRUCTION JOINT AT BASE SLAB
SCALE:NTS	-

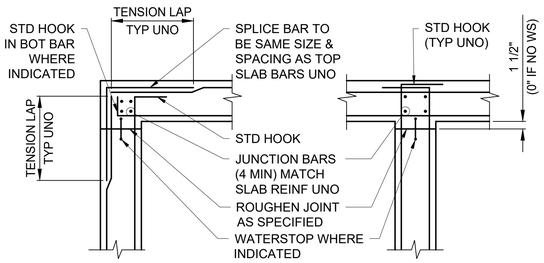

END WALL INTERMEDIATE WALL

J10	WALL CONSTRUCTION JOINT AT TOP SLAB
SCALE:NTS	-

GENERAL NOTES FOR METAL STAIRS AND RAILINGS:

1. ALL CONSTRUCTION IS ALUMINUM PER SPECIFICATIONS, UNLESS NOTED OTHERWISE.
2. RISERS: 7" MAXIMUM, UNLESS NOTED OTHERWISE. TREADS: 11" MAXIMUM, PLUS 1" NOSING UNLESS NOTED OTHERWISE.
3. TYPICAL STAIR WIDTH IS 3'-0" UNLESS NOTED OTHERWISE.
4. STRINGER LENGTH IS LESS THAN 10'-0".
5. ALUMINUM EMBEDDED IN CONCRETE MUST BE PAINTED WITH ONE SHOP COAT OF HEAVY BITUMASTIC.
6. MINIMUM MEMBERS SIZES ARE AS FOLLOWS. FOR ALUMINUM STAIRS, USE C12x8.64 STRINGERS AND 3" SQUARE x 1/4" ALUMINUM POST.
7. ASTM F593 SS BOLTS SHALL BE USED WHERE CONNECTING AL MEMBERS.
8. MEMBER SIZES INDICATED IN PLANS ARE MINIMUM. FINAL SIZES TO BE DETERMINED BY STAIR ENGINEER. ALL CLIP ANGLES SHALL BE 3 1/2" x 3 1/2" x 3/8" MINIMUM, UNO.

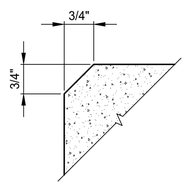

NOTES:
1. SEE CAST-IN-PLACE CONCRETE NOTES.
2. NO CHAMFER REQUIRED WHERE FLUSH EXTERIOR CMU OR BRICK MASONRY ABOVE.

F1	CHAMFER
SCALE:NTS	-

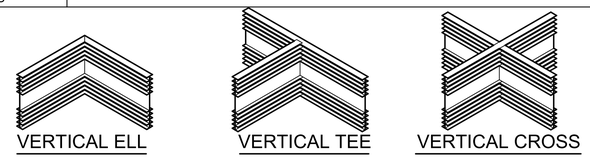

NOTES:
1. PVC WATERSTOPS SHOWN, SIMILAR FOR STAINLESS STEEL AND THERMOPLASTIC ELASTOMERIC RUBBER WATERSTOPS.
2. ALL FITTINGS SHALL BE FACTORY MADE OR SHOP WELDED IN ACCORDANCE WITH MANUFACTURERS RECOMMENDATIONS.
3. ONLY STRAIGHT BUTT SPLICES MAY BE MADE IN FIELD.

F5	WATERSTOP FITTINGS
SCALE:NTS	-

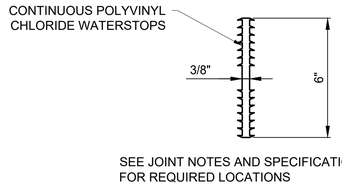

SEE JOINT NOTES AND SPECIFICATIONS FOR REQUIRED LOCATIONS

F10	PVC JOINT WATERSTOP
SCALE:NTS	-

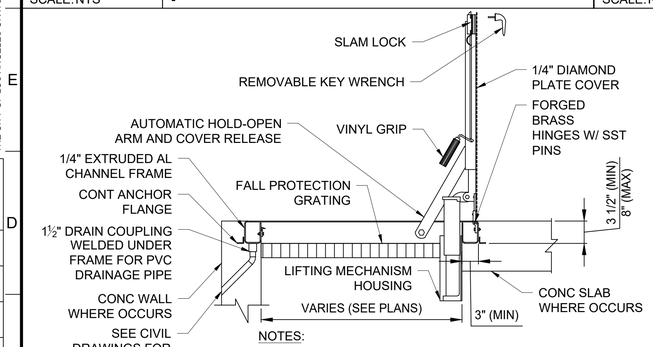

NOTES:
1. SINGLE LEAF MODEL SHOWN, SIZE INDICATED ON PLANS, MAY BE SINGLE OR DOUBLE LEAF.

C1	ALUMINUM ACCESS HATCH
SCALE:NTS	-

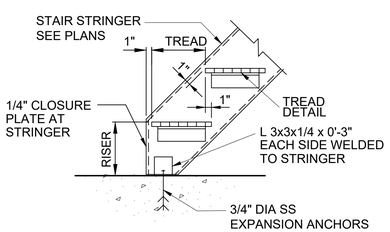

NOTES:
1. ALL ALUMINUM CONSTRUCTION.
2. STAIR TREADS SHALL BE A MINIMUM OF 11" AND STAIR RISERS SHALL BE A MAXIMUM OF 7".
3. DETAIL IS ILLUSTRATIVE AND REQUIRES CONFIRMATION FROM STAIR MFR.

C5	STRINGER CONNECTION AT CONCRETE
SCALE:NTS	-

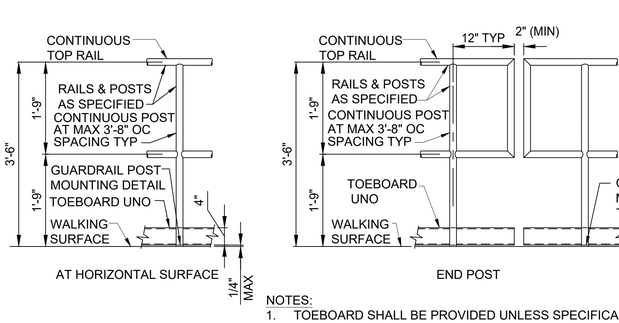

NOTES:
1. TOEBOARD SHALL BE PROVIDED UNLESS SPECIFICALLY NOTED OTHERWISE ON PLANS OR IN SPECS. TOEBOARD NOT REQUIRED WHEN CONCRETE CURBS 4" OR HIGHER ARE PROVIDED.

C9	GUARDRAIL
SCALE:NTS	-

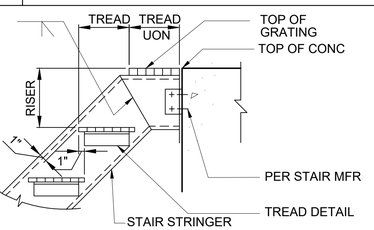

A1	STRINGER CONNECTION AT CONCRETE WALL/SLAB
SCALE:NTS	-

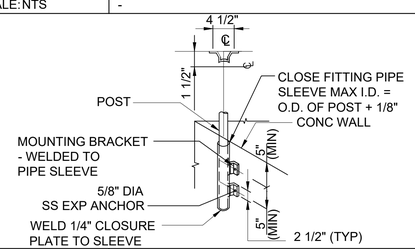

A5	REMOVABLE SIDE MOUNTED GUARDRAIL
SCALE:NTS	-

THE CITY OF LOS ANGELES OR ITS OFFICERS OR AGENTS SHALL NOT BE RESPONSIBLE FOR THE ACCURACY OR COMPLETENESS OF ELECTRONIC COPIES OF THIS PLAN SHEET.

REVISION DATES (DESIGN STAGE ONLY)

CITY OF LOS ANGELES DEPARTMENT OF PUBLIC WORKS BUREAU OF ENGINEERING

ENGINEERING
CITY OF LOS ANGELES

REGISTERED PROFESSIONAL ENGINEER JOSHUA NEIL MORRIS C 80907 CIVIL STATE OF CALIFORNIA
01/31/2023

THIS PLAN WAS ELECTRONICALLY • SIGNED AND STAMPED

VERTICAL CONTROL: BENCH MARK 18-02215 NAVD 88
HORIZONTAL CONTROL: CALIFORNIA STATE PLANE ZONE V, 1983 NAD

SHEET TITLE: STANDARD DETAILS II

PROJECT: STRATHERN PARK NORTH STORMWATER CAPTURE PROJECT

ADDRESS: STRATHERN PARK NORTH 8041 WHISETT AVE, NORTH HOLLYWOOD, CA 91605

NO.	REVISIONS	DATE	BY
		YY/MM/DD	
		YY/MM/DD	
		YY/MM/DD	
		YY/MM/DD	

CIP NO. SCP0003

INDEX NO.

CITY ENGINEER: TED ALLEN, P.E.

DESIGN GROUP	DATE
ENGINEER: CDM SMITH INC.	11/18/2022
ARCHITECT: NA	11/18/2022
DESIGNED BY: S. SURESH	11/18/2022
DRAWN BY: P. BALA	11/18/2022
CHECKED BY: J. BAUCHMOYER	11/18/2022
APPROVED BY: J. MORRIS	11/18/2022

WORK ORDER EW40080F

SHEET NAME SB05

SHEET 61 OF 85 SHEETS

ABBREVIATIONS

A	AMPERE, AUTO, AMMETER	MBS	MAINTENANCE BYPASS SWITCH
AC	ALTERNATING CURRENT	MCC	MOTOR CONTROL CENTER
AF	AMPERE FRAME SIZE OF CIRCUIT BREAKERS	MCP	MOTOR CIRCUIT PROTECTOR
		MECH	MECHANICAL
AFF	ABOVE FINISHED FLOOR	MR	MULTIPLE RATIO
AMP	AMPERES, AMPERAGE	MFR	MANUFACTURER
APPROX	APPROXIMATE	MH+	MOUNTING HEIGHT
ASYM	ASYMMETRIC,ASYMMETRICAL	MH	MAINTENANCE HOLE
AT	AMPERE TRIP	MIN	MINUTES, MINIMUM
ATS	AUTOMATIC TRANSFER SWITCH	MISC	MISCELLANEOUS
AUTO	AUTOMATIC	MLO	MAIN LUGS ONLY
AUX	AUXILIARY	MOV	MOTOR OPERATED VALVE
AWG	AMERICAN WIRE GAUGE	MS	MANUAL MOTOR STARTER
		MSA	MAIN SERVICE ENTRANCE EQUIPMENT "A"
BC	BARE COPPER		
BKR	BREAKER	MSDA	MAIN DISTRIBUTION SWITCHBOARD "A"
BLDG	BUILDING	MTG	MOUNTING
		MTR	MOTOR
C	CONDUIT, CLOSED CLOSING RELAY OR CONTACTOR	(N)	NEW
		N	NEUTRAL
CAB	CABINET	NA	NON-AUTOMATIC
CAP	CAPACITOR, CAPACITY	NC	NORMALLY CLOSED
CAT	CATALOG	NF	UNFUSED, NON-FUSED
CB	CIRCUIT BREAKER	NO, NOS	NUMBER, NUMBERS
CKT	CIRCUIT	NIC	NOT IN CONTRACT
CM	CIRCULAR MIL	NTS	NOT TO SCALE
CO	CONDUIT ONLY		
COAX	COAXIAL (CABLE)	OC	ON CENTER
COMM	COMMUNICATION	OD	OUTSIDE DIAMETER
CONN	CONNECTION, CONNECTOR	OL	OVERLOAD RELAY
COT'N	CONTINUATION		
CP	CONTROL PANEL	P	POLE, POWER OR PRESSURE
CPT	CONTROL POWER TRANSFORMER	PB	PULL BOX, PUSHBUTTON
		PB STA	PUSHBUTTON STATION
CR	CONTROL RELAY	PCM	PROCESS CONTROL MODULE
CS	CONTROL SWITCH	PH,Ø	PHASE
CSI	CONTROL SYSTEM INTERFACE	PM	POWER MONITOR
CT	CONTROL TRANSFORMER	PMM	PROCESS MONITORING MODULE
CU	COPPER	PNL	PANEL
		POS	POSITIVE
DBS	DEPARTMENT OF BUILDING AND SAFETY	PQM	POWER QUALITY METER
		PS	PRESSURE SWITCH
DC	DIRECT CURRENT	PT	POTENTIAL TRANSFORMER
DIA	DIAMETER	PV	PHOTOVOLTAIC
DIAG	DIAGRAM	PVC	POLYVINYL CHLORIDE
DIM	DIMENSION	PWR	POWER
DISC	DISCONNECT	P & ID	PROCESS & INSTRUMENTATION DIAGRAM
DISTR	DISTRIBUTION		
DN	DOWN		
DS	DISCONNECT SWITCH	R	REACTOR OR RECTIFIER
DWG	DRAWING	REC	RECEPTACLE
		RECPTS	RECEPTACLES
EA	EACH	REF	REFERENCE
EL	ELEVATION (HEIGHT)	REQ'D	REQUIRED
ELEV	ELEVATION (VIEW)	REV	REVERSE CONTACTOR COIL
EMLA	EMERGENCY LIGHTING PANEL "A"	RGS	RIGID GALVANIZED STEEL
EMT	ELECTRICAL METALLIC TUBING	RM	ROOM
ENCL	ENCLOSURE		
EP	EXPLOSION PROOF	SBDB	STANDBY DISTRIBUTION BOARD
EPL	ETHERNET PRIVATE LINE	SEC	SECOND OR SECONDARY
EQPT	EQUIPMENT	SC	SHORT CIRCUIT
ER	CONDUCTANCE LEVEL RELAY	SCH	SCHEDULE
EXIST		SEC	SECONDS, SECONDARY
OR (E)	EXISTING	SECT	SECTION
		SEL SW	SELECTOR SWITCH
FA	FIRE ALARM	SEQ	SEQUENCE
FACP	FIRE ALARM CONTROL PANEL	SHLD	SHIELDED
FC	FOOT CANDLE	SHT	SHEET
FDR	FEEDER	SN	SOLID NEUTRAL
FIG	FIGURE	SOL	SOLENOID
FIN	FINISHED	SP	SPARE
FIXT	FIXTURE	SST	STAINLESS STEEL
FLEX	FLEXIBLE	STA	STATION
FLA	FULL LOAD AMPS	STD	STANDARD
FT	FOOT	STL	STEEL
FTG	FOOTING	SV	SOLENOID VALVE
FUT	FUTURE	SW	SWITCH
		SWBD	SWITCHBOARD
GALV	GALVANIZED	SWGR	SWITCHGEAR
GFCI	GROUND FAULT CIRCUIT INTERRUPT	SYMM	SYMMETRICAL
GRD, GND	GROUND	SYS	SYSTEM
HOA	HAND - OFF - AUTOMATIC	TB	TERMINAL BOX
HP	HORSEPOWER	TEMP	TEMPERATURE
HZ	HERTZ	TERM	TERMINAL
HGT	HEIGHT	TR	TRANSFORMER
HV	HIGH VOLTAGE	TYP	TYPICAL
HS	HANDSWITCH		
		UG	UNDERGROUND
IC	INTERRUPTING CAPACITY	UPS	UNINTERRUPTABLE POWER SUPPLY
ID	INSIDE DIAMETER		
I/O	INPUT/OUTPUT	UNO	UNLESS NOTED OTHERWISE
INSTR	INSTRUMENT	UST	UNIT SUBSTATION TRANSFORMER
JB	JUNCTION BOX	VA	VOLT-AMPS
		V	VOLTAGE, VOLTS
KCMIL	KILO-CIRCULAR MILS	VFD	VARIABLE FREQUENCY DRIVE
KHZ	KILOHERTZ	VSD	VARIABLE SPEED DRIVE (OTHER THAN VFD)
KV	KILOVOLT		
KVA	KILO VOLT AMPERE	W	WATTS, WIRE
KVAR	KILOVAR	WP	WEATHERPROOF
KW	KILOW ATT	XFMR	TRANSFORMER
LCP	LOCAL CONTROL PANEL	MISCELLANEOUS	
LED	LIGHT EMITTING DIODE		
LOC	LOCAL	1/C	SINGLE CONDUCTOR
LOS	LOCKOUT STOP	2/C	TWO CONDUCTOR
LS	LEVEL SWITCH	3P	THREE-POLE
LTG	LIGHTING	3PH	THREE PHASE
LACEC	LOS ANGELES CITY ELECTRICAL CODE	3W	THREE WIRE
		4/C	FOUR CONDUCTOR
M	MOTOR CONTACTOR COIL	4P	FOUR-POLE
MA	MILLIAMPERE	% IMP	PERCENT IMPEDANCE
MAX	MAXIMUM		

GENERAL NOTES

RACEWAYS

1. CONDUIT RUNS WHERE SHOWN ARE DIAGRAMMATIC, AND SHOULD BE RUN TO SUIT SITE CONDITIONS EXCEPT WHERE SHOWN DIMENSIONED ON THE DRAWINGS. THE RACEWAY SYSTEM SHALL COMPLY WITH ALL CODES, INCLUDING BUT NOT LIMITED TO:
   a. NEC.
   b. CITY OF LA ELECTRICAL CODES AND PLAN CHECK REQUIREMENTS.
   c. GROUNDING PER NEC ARTICLE 250.
2. CONTRACTOR SHALL PROVIDE AND INSTALL ALL NECESSARY CONDUITS, FITTINGS, JUNCTION BOXES AND ALL NECESSARY COMPONENTS WHETHER SHOWN OR NOT ON THE DRAWINGS. TO MAKE ELECTRICAL INSTALLATION COMPLETE AND OPERATIONAL.
3. ALL ELECTRICAL CONDUITS ARE SHOWN DIAGRAMMATICALLY AND PANEL AND EQUIPMENT LOCATIONS SHALL BE PLACED TO SUIT FIELD CONDITIONS.
4. ELECTRICAL CONTRACTOR TO LIMIT THE NUMBER OF 90° BENDS BETWEEN PULL POINTS TO COMPLY WITH THE REQUIREMENTS OF THE CALIFORNIA ELECTRICAL SAFETY ORDERS, THE NATIONAL ELECTRICAL CODE AND THE LOS ANGELES CITY ELECTRICAL CODE.
5. PROVIDE 30" (MAXIMUM) LENGTH OF FLEXIBLE CONDUIT WHERE RIGID CONDUIT TERMINATES AT EQUIPMENT SUBJECT TO MOVEMENT FROM VIBRATION, EXPANSION AND CONTRACTION.
6. ELECTRICAL CONTRACTOR SHALL PROVIDE GALVANIZE STEEL SUPPORTS FOR ALL ELECTRICAL WORK (CONDUIT, PANELS, BOXES ETC.)
7. CONDUITS TERMINATED AT MOTOR CONTROL CENTER, SWITCHGEAR CONTROL CABINETS, ETC, SHALL BE EQUIPPED WITH GROUNDING BUSHINGS AND SHALL BE EFFECTIVELY BONDED TO GROUNDING BUSES.
8. ALL OUTDOOR ELECTRICAL DEVICES AND ENCLOSURES SHALL BE WEATHERPROOF AND CORROSION RESISTANT (NEMA 4X OR 3R) ALL INDOOR DEVICES AND ENCLOSURES SHALL BE NEMA 12.
9. SWITCHGEAR, MOTOR CONTROL CENTERS, AND ALL OUTDOOR FREE STANDING CABINETS/PANELS SHALL BE SET ON A 4" HIGH MINIMUM CONCRETE PAD.
10. ALL SWITCHES, PULL BOXES, ETC. SHALL BE MOUNTED 48" ABOVE FLOOR SURFACES UNLESS NOTED OTHERWISE.
11. ALL BENDS IN CABLES SHALL BE MADE SO THAT THE PROTECTIVE COVERING OF THE CABLE WILL NOT BE INJURED. NO BEND SHALL HAVE A RADIUS LESS THAN THE MINIMUM RECOMMENDED BY THE CABLE MANUFACTURER.
12. THE MINIMUM SIZE OF CONDUIT INSTALLED ABOVE GRADE SHALL BE 3/4" UNLESS OTHERWISE NOTED.
13. INSTALLATIONS SHALL BE IN ACCORDANCE WITH ALL CODES AND STANDARDS. ALL LIGHTING AND RECEPTACLE CIRCUITS SHALL INCLUDE 1#12 GROUND WIRE.
14. ALL ABOVE GRADE CONDUITS AND FITTINGS SHALL BE RIGID GALVANIZED STEEL. USE RIGID STEEL CONDUIT, INCLUDING BUSHINGS, COUPLINGS, ELBOWS, NIPPLES, AND OTHER FITTINGS, GALVANIZED BY HOT-DIPPING, AND MEETING THE REQUIREMENTS OF ANSI C80.1, ANSI C80.4, UL, AND THE LAEC. DO NOT USE SETSCREW TYPE COUPLINGS, BUSHINGS, BENDS, NIPPLES, AND OTHER FITTINGS, UNLESS APPROVED BY THE ENGINEER OR THE INSPECTOR. FACTORY BENDS ARE NOT PERMITTED UNLESS APPROVED BY THE ENGINEER OR THE INSPECTOR.
15. REQUIRE ALL INSTALLED UNDERGROUND CONDUITS, ENCASED IN CONCRETE SHALL BE PVC SCHEDULE 40 AS A MINIMUM. ALL UNDERGROUND CONDUIT SHALL BE BURIED A MINIMUM OF 24 INCHES BELOW GRADE WITH TRACEABLE WARNING TAPE 12" ABOVE CONDUIT. SEE TYPICAL CONDUIT PLACEMENT IN TRENCH DETAIL (SEE SHEET EP07, DETAIL E-16).

CONDUCTORS

1. PROVIDE CONDUCTORS WITH TYPE THW OR TYPE THHWN INSULATION, EXCEPT FOR SIZES NO. 6 AND LARGER SHALL HAVE WITH XHHW INSULATION.
2. ALL POWER AND CONTROL CABLES SHALL BE COPPER. NETWORK CABLES SHALL BE FIBER OPTIC CABLE WHERE SPECIFIED.
3. PROVIDE CABLE THAT IS UL LISTED TYPE TC AND CONFORMS TO THE REQUIREMENTS OF UL 1277 AND NEC ARTICLE 340, OR UL LISTED POWER LIMITED CIRCUIT CABLE THAT CONFORMS TO THE REQUIREMENTS OF ARTICLE 725 OF THE LAEC. PROVIDE CABLES PERMANENTLY AND LEGIBLY MARKED WITH THE MANUFACTURER'S NAME, THE MAXIMUM WORKING VOLTAGE FOR WHICH THE CABLE WAS TESTED, THE TYPE OF CABLE, AND LABELED UL (OR SUBMIT EVIDENCE OF UL LISTING).
4. ACCEPTABLE MANUFACTURERS: SOUTHWIRE, HOUSTON WIRE AND CABLE COMPANY, BELDEN ALPHA WIRE COMPANY, GENERAL CABLE OR EQUAL.

TYPE 1 (600-VOLT MULTI-CONDUCTOR CONTROL CABLE, TYPE TC)

1. MULTI-CONDUCTOR CONTROL CIRCUIT INTERCONNECTION CABLE WITH GROUND. SUITABLE FOR INSTALLATION IN OPEN AIR, IN CABLE TRAYS, CONDUIT, OR OTHER APPROVED RACEWAYS. MAXIMUM CABLE TEMPERATURE RATING 90 DEGREES C DRY LOCATIONS, 75 DEGREES C WET LOCATIONS. PASSES VERTICAL TRAY FLAME TEST.

TYPE 2 (600-VOLT NO. 16 AWG TWISTED, SHIELDED PAIR INSTRUMENTATION CABLE, TYPE TC)

1. SINGLE PAIR INSTRUMENTATION CABLE DESIGNED FOR NOISE REJECTION FOR PROCESS CONTROL, COMPUTER, OR DATA LOG APPLICATIONS. SUITABLE FOR INSTALLATION IN CABLE TRAYS, CONDUIT, OR OTHER APPROVED RACEWAYS. MAXIMUM CABLE TEMPERATURE RATING SHALL BE 90 DEGREES C DRY LOCATIONS, 75 DEGREES C WET LOCATIONS.
2. INDIVIDUAL CONDUCTORS: BARE SOFT ANNEALED COPPER, CLASS B, 7-STRAND CONCENTRIC PER ASTM B 8; 20 AWG, 7-STRAND TINNED COPPER DRAIN WIRE.

TYPE 3 (600-VOLT MULTI-CONDUCTOR POWER CABLE, TYPE TC):

1. 3 OR 4 -CONDUCTOR, WITH GROUND AND OVERALL JACKET. SUITABLE FOR INSTALLATION IN OPEN AIR, IN CABLE TRAYS, CONDUIT, OR OTHER APPROVED RACEWAYS. MAXIMUM CABLE TEMPERATURE RATING 90 DEGREES C DRY LOCATIONS, 75 DEGREES C WET LOCATIONS.
2. INDIVIDUAL CONDUCTORS: CLASS B STRANDED, COATED, OR UNCOATED COPPER.

TYPE 4 (600-VOLT NO. 16 TWISTED, SHIELDED TRIAD INSTRUMENTATION CABLE, TYPE TC):

1. SINGLE TRIAD INSTRUMENTATION CABLE DESIGNED FOR NOISE REJECTION FOR PROCESS CONTROL, COMPUTER, OR DATA LOG APPLICATIONS. SUITABLE FOR INSTALLATION IN CABLE TRAY, CONDUIT, OR OTHER APPROVED RACEWAYS. MAXIMUM CABLE TEMPERATURE RATING SHALL BE 90 DEGREES C DRY LOCATIONS, 75 DEGREES C WET LOCATIONS.
2. CONDUCTORS: BARE SOFT ANNEALED COPPER, CLASS B, 7-STRAND CONCENTRIC PER ASTM B 8; 20 AWG, 7-STRAND, TINNED COPPER DRAIN WIRE.

TYPE 5 (600-VOLT NO. 18 AWG, MULTI-TWISTED SHIELDED PAIRS WITH A COMMON OVERALL SHIELD INSTRUMENTATION CABLE, TYPE TC):

1. TWISTED, SHIELDED PAIRS OF INSTRUMENT CABLES, GROUPED IN A SINGLE CABLE, DESIGNED FOR USE AS INSTRUMENTATION, PROCESS CONTROL, AND COMPUTER CABLE. SUITABLE FOR INSTALLATION IN CABLE TRAY, CONDUIT, OR OTHER APPROVED RACEWAYS. MAXIMUM CABLE TEMPERATURE RATING SHALL BE 90 DEGREES C DRY LOCATIONS, 75 DEGREES C WET LOCATIONS.
2. BARE SOFT ANNEALED COPPER, CLASS B, 7-STRAND, CONCENTRIC PER ASTM B 8. TINNED COPPER DRAIN WIRES. PAIR DRAIN WIRE SIZE AWG 20, GROUP DRAIN WIRE SIZE AWG 18.

GROUNDING

1. ALL METALLIC STRUCTURES AND EQUIPMENT SUCH AS STRUCTURAL STEEL, GENERATOR AND MOTOR FRAMES, ENCLOSURES, CABINETS FOR SWITCHGEAR AND OTHER ELECTRIC EQUIPMENT, METALLIC CONDUITS, CABLE TRAYS, STAIRS, FENCES AND HANDRAILS SHALL BE PERMANENTLY AND EFFECTIVELY GROUNDED. THE GROUND CONNECTION SHALL BE MADE TO THE PLANT GROUND GRID. REFER TO STANDARD DETAILS.
2. ALL GROUNDING CONDUCTORS SHALL BE BARE STRANDED SOFT DRAWN COPPER, CLASS B, UNLESS OTHERWISE NOTED.
3. THE GROUND CABLE SHALL BE INSTALLED, WHERE POSSIBLE, BENEATH SLABS, ATTACHED TO BUILDING STEEL OR RUN IN RACEWAYS AS SHOWN.
4. BURIED GROUND CABLES SHALL BE A MINIMUM OF 18" BELOW GRADE EXCEPT UNDER BUILDINGS WHERE THEY SHALL BE A MINIMUM OF 6" BELOW BOTTOM OF SLAB.
5. CONDUIT RUNS SHALL BE BONDED TOGETHER TO FORM A CONTINUOUS ELECTRICAL CONDUCTOR.
6. WHERE SEAL-TIGHT FLEXIBLE CONDUIT FOR MOTOR CONNECTION IS USED, PROVIDE GROUNDING JUMPER BETWEEN THE RIGID STEEL CONDUIT (MOTOR FEEDER) AND THE MOTOR BOX OR FRAME.
7. GENERATOR CASINGS, EXCITERS, SWITCHGEARS, MOTOR CONTROL CENTERS, LARGE METAL TANKS, TRANSFORMER CORES, AND MOTOR FRAMES LARGER THAN 150HP SHALL BE GROUNDED AT TWO POINTS.
8. THE FRAMES OF MOTORS SMALLER THAN 150HP SHALL BE GROUNDED DIRECTLY TO THE GROUND GRID OR TO THE STEEL COLUMN CONNECTED TO THE GROUND LOOP WITH COPPER WIRE OF SIZE AS REQUIRED BY THE LOS ANGELES CITY ELECTRICAL CODE.
9. ALL EQUIPMENT GROUND TERMINAL LUGS SHALL BE OF THE MECHANICAL TYPE.
10. BENDS IN GROUND CABLE SHALL BE GREATER THAN 12 TIMES THE CABLE OUTSIDE DIAMETER.
11. GROUNDING CONDUCTOR PIGTAIL AND INSERT LOCATIONS ARE APPROXIMATE ONLY. CONTRACTOR SHALL VERIFY IN THE FIELD AND LOCATE THEM CLOSE TO MOTOR, EQUIPMENT, GENERATOR, OR METAL STRUCTURE SERVED.
12. GROUNDING PIGTAIL SHALL BE THE SAME SIZE AS THE PHASE WIRE BUT NO LESS THAN NUMBER 8 AWG.
13. WHERE BARE GROUND CONDUCTORS ARE EXPOSED, CONTRACTOR SHALL PROVIDE PVC SCHEDULE 80 CONDUITS WITH ULTRA-VIOLET LIGHT PROTECTION.
14. ALL FLEXIBLE MOTOR CONDUITS SHALL HAVE OUTER GROUND CONDUCTOR.

EQUIPMENT AND DEVICES

1. ALL EQUIPMENT DIMENSIONS SHOWN ON PLANS AND ELEVATIONS ARE APPROXIMATE ONLY. THE CONTRACTOR SHALL USE THE SHOP DRAWINGS FOR PROPER FOUNDATION AND PAD LAYOUT, ETC. FOR FINAL INSTALLATION WITHOUT ANY ADDITIONAL COST TO THE CITY.
2. IT IS INCUMBENT UPON THE CONTRACTOR TO COORDINATE WITH HIS SUBCONTRACTORS TO MAKE SURE THAT EQUIPMENT SUPPLIERS PROVIDE ALL NECESSARY ELECTRICAL INFORMATION TO THE ELECTRICAL SUBCONTRACTOR FOR INCLUSION OF COSTS IN BID PACKAGE. ALL NECESSARY MATERIALS AND LABOR TO COMPLETE ELECTRICAL INSTALLATION SHALL BE PROVIDED WHETHER SHOWN OR NOT SHOWN ON THE DRAWINGS. ALL ELECTRICAL WORK SHALL BE IN ACCORDANCE WITH ALL CODES AND STANDARDS PER SPECIFICATION.
3. SWITCHGEARS, SWITCHBOARDS, MOTOR CONTROL CENTERS AND ALL FREE STANDING PANELS SHALL BE SET WITH LEVELING CHANNELS UNLESS OTHERWISE NOTED.
4. CONTRACTOR TO PROVIDE DESIGNS AND DETAILS FOR ALL MOUNTING AND ANCHORAGE OF EQUIPMENT IN ACCORDANCE WITH CHAPTER 23 OF THE LATEST EDITION OF THE UNIFORM BUILDING CODE AND LOS ANGELES BUILDING CODE.

MISCELLANEOUS

1. THE CONTRACTOR TO CONFIRM EXISTING CONDITIONS INCLUDING CONDUIT RUNS. ELECTRICAL DESIGN UPGRADE IS BASED ON CITY-PROVIDED, EXISTING "AS-BUILT" DRAWINGS WHICH MAY NOT BE ENTIRELY ACCURATE.
2. IN CASE OF INTERFERENCE BETWEEN ELECTRICAL EQUIPMENT AND OTHER EQUIPMENT THE CONTRACTOR SHALL NOTIFY THE ENGINEER IN WRITING AND THE ENGINEER SHALL REVIEW PROPOSED CHANGES BEFORE THEY ARE MADE.
3. ALL RECEPTACLES SHALL BE MOUNTED 18" ABOVE FLOOR SURFACE, UNLESS OTHERWISE NOTED ON THE DRAWINGS.
4. ALL RECEPTACLES IN OUTDOOR AND ANTICIPATED WET AREAS SHALL BE GROUND FAULT INTERRUPTER TYPE RECEPTACLES WITH WEATHER PROOF COVER PLATES.
5. PROVIDE MAINTENANCE HOLES OR PULL BOXES WHEREVER THEY ARE REQUIRED TO MAKE A WORKABLE INSTALLATION.
6. CIRCUITS OF DIFFERENT SERVICE VOLTAGE RANGES SHALL BE INSTALLED IN SEPARATE RACEWAYS, PULLBOXES AND JUNCTION BOXES. THE VOLTAGE AND SERVICE LEVELS ARE:
   (1) 120V-480VOLT
   (2) INSTRUMENTATION AND CONTROL LESS THAN 50VDC
      a) ANALOG
      b) SIGNAL
   (3) TELEPHONE AND COMMUNICATIONS.
   (4) FIBER OPTICS
7. RECEPTACLES, LIGHTING AND CONTROL CIRCUITS SHALL BE TYPE THHN/THWN WIRE.
8. ALL ELECTRICAL EQUIPMENT AND DEVICES SHALL BE UL APPROVED OR OTHER INDEPENDENT AGENCIES APPROVED BY THE CITY OF LOS ANGELES.
9. NO PIPING, DUCTS OR FOREIGN EQUIPMENT SHALL BE PERMITTED TO BE LOCATED WITHIN THE DEDICATED SPACE ABOVE THE ELECTRICAL EQUIPMENT.

MINIMUM SUBMITTAL REQUIREMENTS FOR SCHEMATIC DIAGRAMS:

1. ALL CONTROLS SHOWN DE-ENERGIZED.
2. CONTRACTOR SHALL INCORPORATE NECESSARY FUNCTIONS FOR PROPER OPERATIONS AND PROTECTION OF SYSTEMS.
3. SLAVE OR INTERPOSING RELAYS SHALL BE ADDED WHERE REQUIRED TO PROVIDE ALL NECESSARY CONTACTS REQUIRED FOR THE SCHEMATIC DIAGRAM SHOWN.
4. ALL DEVICES SHOWN ON MOTOR STARTER SCHEMATIC DIAGRAMS SHALL BE MOUNTED IN MOTOR STARTER CUBICLES, UNLESS OTHERWISE NOTED.

ELECTRICAL STUDIES

1. CONTRACTOR IS RESPONSIBLE FOR PREPARING A POWER SYSTEM ANALYSIS REPORT INCLUDING SHORT CIRCUIT CALCULATIONS, A PROTECTIVE DEVICE COORDINATION STUDY, ARC-FLASH STUDY, AND A HARMONIC ANALYSIS. THE STUDY SHALL BEGIN WITH THE UTILITY COMPANY'S FEEDER PROTECTIVE DEVICE AND INCLUDE ALL OF THE ELECTRICAL DISTRIBUTION EQUIPMENT DOWN TO AND INCLUDING LOW VOLTAGE MOTOR CONTROL CENTERS, POWER DISTRIBUTION PANEL BOARDS AND LIGHTING PANELS AND TRANSFORMERS.
2. ALL INFORMATION REQUIRED TO PERFORM THE STUDY SHALL BE OBTAINED BY THE ENTITY PERFORMING THE STUDY. ALL COSTS FOR THIS WORK INCLUDING FIELD SETTINGS OF DEVICES, ADJUSTMENTS, AND MODIFICATIONS TO EQUIPMENT THAT ARE REQUIRED FOR CONFORMANCE WITH THE APPROVED STUDY SHALL BE INCLUDED IN THE CONTRACTOR BID PROPOSAL AND IS NOT REIMBURSABLE BY THE CITY.
3. PROVIDE AND INSTALL ARC-FLASH AWARENESS WARNING LABELS ON EACH ELECTRICAL EQUIPMENT PANEL AS REQUIRED.

ELECTRIC MOTORS

1. UNLESS OTHERWISE SPECIFIED, ALL 3-PHASE MOTORS SHALL BE TEFC, SQUIRREL-CAGE INDUCTION, CONSTANT SPEED, HAVE ANTI-FRICTION BEARINGS AND CLASS F INSULATION, AND BE IN ACCORDANCE WITH ALL NEMA STANDARDS. MOTORS SHALL HAVE A MINIMUM SERVICE FACTOR OF 1.15 AT 40°C AMBIENT, AND STAINLESS STEEL AUTOMATIC BREATHER-DRAINS AT THE LOWEST POINT OF THE MOTOR ENCLOSURE.
2. ALL SINGLE-PHASE MOTORS, UNLESS OTHERWISE SPECIFIED, SHALL MEET ALL NEMA STANDARDS, BE TEFC, WITH ANTI-FRICTION BEARINGS, CLASS F INSULATION, AND HAVE A 1.15 SERVICE FACTOR AT 40°C AMBIENT.
3. ALL MOTORS LARGER THAN 3 HORSEPOWER SHALL BE PREMIUM EFFICIENCY, CAST IRON, CORROSIVE RESISTANT, HOSTILE ENVIRONMENT DESIGN, BALDOR "ECP", RELIANCE "XE", U. S. MOTORS "CORRO-DUTY", OR EQUAL. MOTORS LESS THAN 3 HORSEPOWER SHALL BE OF CAST IRON, STEEL OR ALUMINUM CONSTRUCTION, PREMIUM EFFICIENCY, AND CORROSIVE RESISTANT, HOSTILE ENVIRONMENT DESIGN.
4. MOTORS AND CONTROLS SHALL BE ADEQUATELY SIZED SO THE NAMEPLATE RATING WILL NOT BE EXCEEDED UNDER THE MAXIMUM DESIGN CAPACITY OF THE EQUIPMENT SUPPLIED.
5. ALL MOTOR NAMEPLATES SHALL BE STAINLESS STEEL, PERMANENTLY SECURED TO THE MOTOR, AND PROVIDE THE FOLLOWING INFORMATION: (1) NEMA DESIGN LETTER, (2) VOLTAGE, (3) PHASES, (4) FREQUENCY, (5) HORSEPOWER, (6) FULL LOAD CURRENT, (7) CLASS OF INSULATION, (8) FULL LOAD RPM, (9) AMBIENT TEMPERATURE/SERVICE FACTOR, (10) TIME RATING, (11) KVA CODE, (12) FRAME SIZE, (13) MFG. TYPE OR MODEL, (14) MFG. CATALOG NUMBER WITH DATE CODE, AND (15) SERIAL NUMBER.

SCOPE OF WORK

1. ADDITION OF 480V, 3 PHASE, ELECTRICAL SERVICE TRANSFORMER TO THE SITE.
2. ADDITION OF ELECTRICAL SERVICE AND DISTRIBUTION PANELS.
3. POWER AND CONTROL WIRING FOR STORMWATER DIVERSION EQUIPMENT.
4. POWER AND CONTROL WIRING FOR SPORT LIGHTING SYSTEMS.
5. SUPERVISORY CONTROL AND DATA ACQUISITION (SCADA) CONTROL PANEL FOR STORMWATER DIVERSION PROGRAMMABLE CONTROLLER, AND FOR RADIO COMMUNICATION EQUIPMENT.

THE CITY OF LOS ANGELES OR ITS OFFICERS OR AGENTS SHALL NOT BE RESPONSIBLE FOR THE ACCURACY OR COMPLETENESS OF ELECTRONIC COPIES OF THIS PLAN SHEET.

REVISION DATES (DESIGN STAGE ONLY)

ENGINEERING — CITY OF LOS ANGELES

REGISTERED PROFESSIONAL ENGINEER — ROBERT D. GETTER — No. E 21884 — Exp. 06-30-23 — ELECTRICAL — STATE OF CALIFORNIA
01/31/2023

THIS PLAN WAS ELECTRONICALLY • SIGNED AND STAMPED

CITY OF LOS ANGELES DEPARTMENT OF PUBLIC WORKS BUREAU OF ENGINEERING

NO	REVISIONS	DATE	BY
		YY/MM/DD	
		YY/MM/DD	
		YY/MM/DD	
		YY/MM/DD	

CIP NO. SCP0003

INDEX NO.

CITY ENGINEER: TED ALLEN, P.E.

DESIGN GROUP	DATE
ENGINEER: PROJECTLINE TECHNICAL SERVICES	01/31/2023
ARCHITECT: NA	01/31/2023
DESIGNED BY: JUSTIN CHIN	01/31/2023
DRAWN BY: JUSTIN CHIN	01/31/2023
CHECKED BY: ROBERT GETTER	01/31/2023
APPROVED BY: ROBERT GETTER	01/31/2023

VERTICAL CONTROL: BENCH MARK: 18-02215 NAVD 88
HORIZONTAL CONTROL: CALIFORNIA STATE PLANE ZONE V, 1983 NAD

SHEET TITLE: ELECTRICAL GENERAL NOTES
PROJECT: STRATHERN PARK NORTH STORMWATER CAPTURE PROJECT
ADDRESS: STRATHERN PARK NORTH 8041 WHITSETT AVE. NORTH HOLLYWOOD, CA. 91605

WORK ORDER EW40080F

SHEET NAME EG01

SHEET 62 OF 85 SHEETS

E L E C T R I C A L S Y M B O L S

P L A N

- CONDUIT RUN EXPOSED
- CONDUIT RUN, UNDERGROUND
- CONDUIT RUN, CONCEALED IN CEILING OR WALL.
- CONDUIT RUN, CHANGE IN ELEVATION
- CONDUIT BENDS UP OR TOWARD OBSERVER
- CONDUIT BENDS DOWN OR AWAY FROM OBSERVER
- T — CONDUIT CONTAINING: T=TELEPHONE, FA=FIRE ALARM, S=SIGNAL, ET=EMERGENCY TELEPHONE, PA=PUBLIC ADDRESS
- FLEXIBLE CONDUIT
- CONDUIT FITTING
- CONDUIT CAPPED
- CONDUIT SEAL
- ¾"C WITH 8 NO.12 WIRES MAX. AS SHOWN. NO CIRCUIT # NOTED, CONDUIT RUNS NOT MARKED ARE ¾"C WITH 2#12 WIRES ONLY. WIRE SIZES OTHER THAN #12 ARE MARKED. PROVIDE 1#12 WIRE FOR GROUNDING
- LPA-1/3/5, 2/4,7 — CROSS MARKS ON CONDUIT WITH CKT.# NOTED INDICATE NUMBER OF NO. 12 WIRES IN¾"C HOMERUN ONLY,3/4" CONDUIT WITH 9 NO.12 WIRES SHOWN, CIRCUITS 1,3 & 5 WITH COMMON NEUTRAL CIRCUITS 2 & 4 WITH COMMON NEUTRAL & CIRCUIT 7 WITH SEPARATE NEUTRAL HOMERUN TO PANEL `LPA'.
- P15 — CONDUIT NUMBER, SEE CONDUIT SCHEDULE P = POWER, C = CONTROL, S = SIGNAL; 15 =ARBITRARY SEQUENTIAL NUMBER
- 3/4"C- 2#10 — CONDUIT RUNS NOT LISTED IN CONDUIT SCHEDULE ARE NOTED AS SHOWN.
- JUNCTION BOX
- GROUND INSERT
- GROUND WIRE, MAIN LOOP (UNDERGROUND)
- GROUND WIRE, TAP EXPOSED
- UNDERGROUND TAP
- GROUND ROD
- GROUND WELL AND ROD FOR PAVED AREAS
- GROUND WELL AND ROD FOR UNPAVED AREAS
- GROUNDING CONDUCTOR PIGTAILED ABOVE FINISHED FLOOR
- LIGHTNING PROTECTION SYS., AIR TERMINAL
- 2A — CEILING OR PENDANT MTD. LTG. FIXTURE "2" INDICATES CIRCUIT NUMBER. "a" INDICATES FIXTURE CONTROLLED BY SW "a".
- 2 — CEILING OR PENDANT MTD. LED LTG. FIXTURE "2" INDICATES CIRCUIT NO.
- WALL MOUNTED LED LTG. FIXTURE
- EMERGENCY LED LIGHTING FIXTURE
- 1 — LIGHTING FIXTURE CONNECTED TO EMERGENCY CIRCUIT "1" INDICATES CIRCUIT NO.
- LED STRIP LIGHTING FIXTURE
- LED STRIP EMERGENCY LIGHTING FIXTURE
- LED STRIP LIGHTING FIXTURE TANDEM WIRED
- WALL MOUNTED LIGHTING FIXTURE
- FLOODLIGHT
- STREETLIGHT
- E — EMERGENCY LIGHTING UNIT, SELF CHARGING BATTERY TYPE WITH LOW VOLTAGE SEALED LAMPS
- EXIT LIGHT
- RE — RECESSED EXIT LIGHT
- A, 2/40, 3, ±8'-6" — LTG. FIXTURE TYPE 'A', 2-40 WATT LAMPS, 3=NUMBER OF FIXTURES; 8'-6"=ACTUAL MOUNTING HEIGHT
- 3/4"C-(2)TSP#16 3/4"C-2#12 + 1#12 GND; 3/4"C-(2)TSP#16 3/4"C-2#12 + 1#12 GND — (2)JUNCTION BOXES AND CORRESPONDING CONDUITS AS SHOWN

- T — THERMOSTAT
- C — CLOCK HANGER, RECEPTACLE
- 120V, 1Ø ELECTRIC MOTOR
- HORIZONTAL MOTOR
- VERTICAL MOTOR
- H — HEATER
- SS — PUSHBUTTON STATION; "SS"=START-STOP, LOS=LOCK-OUT-STOP, "SLOS"=START-LOCK-OUT-STOP
- H-O-A — SELECTOR SWITCH H-O-A=HAND, OFF, AUTOMATIC, L-O-R=LOCAL OFF REMOTE
- TELEPHONE OUTLET, PUBLIC
- TELEPHONE OUTLET, PRIVATE
- BELL
- BUZZER
- PA — H=HORN, S=SPEAKER, SN=SIREN, P=PUBLIC ADDRESS
- S — SPEAKER, CEILING MOUNTED - SURFACE MOUNTED
- LIGHTING PANEL/POWER PANEL
- CONTROL PANEL
- MOTOR CONTROL CENTER
- TC — TERMINAL CABINET
- MH — MAINTENANCE HOLE
- HH — HANDHOLE
- PB — PULLBOX
- FA — FIRE ALARM MANUAL STATION
- T — TRANSFORMER
- MAGNETIC MOTOR STARTER
- MAGNETIC CONTACTOR
- F — DISCONNECT SWITCH, N=NON FUSIBLE, F=FUSIBLE
- EMERGENCY TELEPHONE STATION
- TC — TELEPHONE TERMINAL CABINET
- $a — SINGLE POLE SWITCH. "a" INDICATES CIRCUIT CONTROLLED
- $3 — THREE-WAY SWITCH
- $P — SWITCH AND PILOT LIGHT
- $MC — MANUAL MOTOR STARTER
- $WP — WEATHERPROOF SWITCH

WALL	FLOOR	
		120V SINGLE RECEPTACLE, NEMA CONFIGURATION 5-20.
		120V DUPLEX RECEPTACLE, NEMA CONFIGURATION 5-20
		SPECIAL PURPOSE RECEPTACLE (INDICATE RATING)
WP	VP	POWER RECEPTACLE, XP=EXPLOSION PROOF, WP=WEATHERPROOF, VP=VAPORTIGHT

- LS(T) — DEVICE AS IDENTIFIED ON P&ID:
  LS (T) = LEVEL SWITCH (TRANSMITTER)
  TS (T) = TEMPERATURE SWITCH (TRANSMITTER)
  FS (T) = FLOW SWITCH (TRANSMITTER)
  PS (T) = PRESSURE SWITCH (TRANSMITTER)
  TE = THERMAL ELEMENT (THERMOCOUPLE)
  LMS = LIMIT SWITCH
  SV = SOLENOID VALVE
  TI = TEMPERATURE INDICATOR
  LX = TRANSDUCER
  :OR REFER TO THE I&C LEGEND AND SYMBOLS.
- 1 / O–E–3 — DETAIL #1, ON DWG. 0-E-3
- DELTA-WYE CONNECTION
- ZIG-ZAG CONNECTION FOR GRD. XFMR
- B — "B" DENOTES SECTION LETTER 0-E-3 DENOTES REFERENCE TO DRAWING ON WHICH DETAIL IS SHOWN.

O N E L I N E D I A G R A M

- N — N — NETWORK
- BUS
- POWER CONDUCTOR
- CONTROL METERING, SIGNAL OR INDICATING LIGHT CONDUCTOR
- ELECTRIC INPUT (OR FUTURE)
- K — INTERLOCK (K=MECHANICAL KEY)
- E — ELECTRIC INTERLOCK
- BUS-DUCT, AMPERE RATING & NO. OF CONDUCTOR SHOWN
- CROSSING OF CONDUCTOR NOT CONNECTED
- CONNECTION OF CONDUCTORS
- CABLE TERMINATION
- SEPARABLE CONNECTOR (DRAW-OUT TYPE)
- THERMAL OVERLOAD
- GROUND CONNECTION
- LIGHTNING ARRESTOR
- SURGE CAPACITOR
- M — HIGH OR LOW VOLTAGE DISCONNECT SWITCH, AIR BREAK M=MOTOR OPERATED
- FUSE
- FUSED DISCONNECT SWITCH
- RECTIFIER
- RES — RESISTOR
- SPACE HEATER
- RHEOSTAT, ADJUSTABLE RESISTOR
- BATTERY (MULTICELL)
- CONTACT, NORMALLY OPEN
- CONTACT, NORMALLY CLOSED
- POWER RECEPTACLE
- 400AF / 600AT — E — AIR CIRCUIT BREAKER AF=AMPERE FRAME RATING, AT=AMPERE TRIP RATING E=ELECTRIC OPERATED, ST=SHUNT TRIP, NO=NORMALLY OPEN, NC=NORMALLY CLOSED WITHOUT CIRCLE = MANUALLY OPERATED.
- 1200A 52 NA — AIR OR VACUUM CIRCUIT BREAKER (GENERAL) HIGH OR MEDIUM VOLTAGE 34.5KV, 13.8KV OR 4.8KV (DEVICE NO. 52) NA=NON AUTOMATIC AC=AMPERE CAPACITY, IC=INTERRUPTING CAPACITY.
- STC 3 — 3=QUANTITY REQUIRED (INDICATE CURRENT RATIO), STC=SATURATED CURRENT XFMR.
- 3 — POTENTIAL TRANSFORMER 3=QUANTITY REQ'D. CPT=CONTROL POWER TRANSFORMER, PPT=POTENTIAL POWER TRANSFORMER, PST=PHASE SHIFT TRANSFORMER
- ZERO SEQUENCE CURRENT TRANSFORMER
- 1200 / 5 / MR 3 — BUSHING TYPE CURRENT TRANSFORMER 3=QUANTITY REQUIRED. 1200/5 SIGNIFIES CT RATIO MR SIGNIFIES MULTIPLE RATIOS OF CT
- POWER TRANSFORMER TWO WINDINGS.
- WINDING , GENERAL SYMBOL OR REACTOR
- WYE CONNECTION SYMBOL WITH SOLID GROUNDING NEUTRAL.
- WYE CONNECTION SYMBOL WITH NEUTRAL GROUNDING RESISTOR
- WYE CONNECTION SYMBOL WITH NEUTRAL GROUNDING TRANSFORMER AND SEC. SHUNT RESISTOR.

- GENERATOR, WITH SEPARATE EXCITER
- 10 / 2S — 3Ø INDUCTION MOTOR, 10 HORSEPOWER, 2S=2 SPEED WINDING, 2S2W=2 SPEED 2 WINDINGS
- 30 — 3Ø WOUND ROTOR INDUCTION MOTOR 10 HORSEPOWER.
- 51 — PROTECTIVE RELAY FUNCTION NUMBERS PER ANSI STANDARD C37.2 51 = AC TIME OVERCURRENT RELAY.
- 50 / 51 — MULTI-FUNCTION PROTECTIVE RELAY 50 = INSTANTANEOUS OVERCURRENT RELAY 51 = TIME OVERCURRENT RELAY.
- A — INSTRUMENT A=AMMETER, V=VOLTMETER, W=WATTMETER, KWH=KILOWATT HOUR METER, PF=POWER FACTOR METER, VAR=VARMETER, mA= MILLIAMPERE, AH=AMPERE-HOUR, uA=MICROAMMETER, FM=FREQUENCY METER SI=SPEED INDICATOR ETM=ELAPSED TIME METER AR=RECORDER, AMPS VR=RECORDER, VOLTS WR=RECORDER, WATTS WHD=WATT-HOUR DEMAND METER
- A / VAR — TRANSDUCER, A=CURRENT, W=WATT F=FREQUENCY, V=VOLTAGE, VAR=VAR
- SELECTOR SWITCH, HOA=HAND-OFF-AUTOMATIC, LOR=LOCAL-OFF-REMOTE SPSEL=HIGH-OFF-LOW
- ST,SP,J — PUSHBUTTON STATION, 3=NUMBER OF STATIONS, RES=RESET, OP=OPEN, CL=CLOSE EX=EXTEND, RT=RETRACT, ST=START SP=STOP, F=FORWARD, R=REVERSE, L=LEFT, R=RIGHT, J=JOG, U=UP, D=DOWN, FA=FAST, SL=SLOW, H=HAND O=OFF, A=AUTO.
- E — AUTOMATIC TRANSFER SWITCH
- THMS — EQUIPMENT AUXILIARIES: RTD= RESISTANCE TEMPERATURE DETECTOR THMS = THERMISTOR VIB = VIBRATION SWITCH TC = THERMOCOUPLE
- A — INDICATING LIGHT A=AMBER, B=BLUE C=CLEAR, G=GREEN, NE=NEON, O=ORANGE, OP=OPALESCENT, P=PURPLE, R=RED, W=WHITE, Y=YELLOW.
- VR — VOLTAGE REGULATOR
- A — INTERLOCK K=KEY, R=RELAY, ARROW TERMINATES AT DEVICE
- AS — INSTRUMENT & CONTROL SWITCHES AS=AMMETER SWITCH VS=VOLTMETER SWITCH TS=TEST SWITCH SS=SYNCHRONIZING SWITCH SEL=SELECTOR SWITCH CS=CONTROL SWITCH
- VFD — VARIABLE FREQUENCY DRIVE EQUIPMENT
- P — PULSER
- TD — TIME DELAY RELAY
- 1 / R — MAGNETIC STARTER FULL VOLTAGE. R=REVERSING, RV=REDUCED VOLTAGE, 2S=TWO SPEED, 2SR= TWO SPEED REVERSING 2=NEMA SIZE OF CONTACTOR
- 3A MCP / 1 / R — COMBINATION MAGNETIC STARTER AND CIRCUIT BREAKER 3A=CONTINUOUS RATING IN AMPERES 1=DENOTES STARTER SIZE MCP=DENOTES MOTOR CIRCUIT PROTECTOR R=REVERSING

- COMBINATION MAGNETIC STARTER AND FUSED DISCONNECT SWITCH-LOW VOLTAGE.
- MAGNETIC STARTER, MEDIUM VOLTAGE
- 3 — POTENTIAL TRANSFORMER AND DRAWOUT FUSE. 3=QUANTITY REQUIRED.
- DISCONNECT SWITCH AND FUSE
- ADJUSTABLE OR VARIABLE FUNCTION
- 3-PHASE, DELTA CONNECTION
- 3-PHASE, 3-WIRE, GROUNDED CORNER DELTA
- 3-PHASE, OPEN DELTA
- 3-PHASE, OPEN DELTA, GROUNDED AT COMMON POINT.
- TIP-P022A/B/C — CABLE TAG NUMBER: TIP = AREA DESIGNATION 022 = ARBITRARY SEQUENTIAL NUMBER P = POWER A/B/C = PHASES AND CABLE COUNT C = CONTROL I = INSTRUMENTATION AL = ALARM CC = COMMUNICATION DC = DIRECT CURRENT FO = FIBER OPTICS
- EQUIPMENT OR DEVICE LOCATED IN CENTRAL CONTROL ROOM.
- EQUIPMENT OR DEVICE LOCATED IN SWITCHGEAR OR MOTOR CONTROLLER
- EQUIPMENT OR DEVICE LOCATED IN LOCAL CABINET
- DA / 123A — DIGITAL ALARM INPUT (HARD-WIRED) TO ANNUNCIATOR PANEL.
- 4753 UA 123A — DIGITAL ALARM INPUT TO SCADA SYSTEM 4753 INDICATES LOOP NUMBER
- 4753 UI 123A — IMPULSE OR ANALOG INPUT TO SCADA SYSTEM 4753 - INDICATES LOOP NUMBER
- EQUIPMENT OR DEVICE LOCATED IN CSI
- 2 — SPECIAL NOTE DESIGNATION
- KWH — UTILITY COMPANY ELECTRICAL METER
- PM — ELECTRONIC POWER METER

THE CITY OF LOS ANGELES OR IT'S OFFICERS OR AGENTS SHALL NOT BE RESPONSIBLE FOR THE ACCURACY OR COMPLETENESS OF ELECTRONIC COPIES OF THIS PLAN SHEET.

REVISION DATES (DESIGN STAGE ONLY)

ENGINEERING — CITY OF LOS ANGELES

REGISTERED PROFESSIONAL ENGINEER — ROBERT D. GETTER — No. E 21884 — Exp. 06-30-23 — ELECTRICAL — STATE OF CALIFORNIA — 01/31/2023

THIS PLAN WAS ELECTRONICALLY • SIGNED AND STAMPED

BUREAU OF ENGINEERING

VERTICAL CONTROL: BENCH MARK: 18-02215 NAVD 88
HORIZONTAL CONTROL: CALIFORNIA STATE PLANE ZONE V, 1983 NAD

SHEET TITLE: ELECTRICAL SYMBOLS
PROJECT: STRATHERN PARK NORTH STORMWATER CAPTURE PROJECT
ADDRESS: STRATHERN PARK NORTH 8041 WHITSETT AVE. NORTH HOLLYWOOD, CA. 91605

NO.	REVISIONS	DATE	BY
		YY/MM/DD	
		YY/MM/DD	
		YY/MM/DD	
		YY/MM/DD	

CIP NO. SCP0003

INDEX NO.

CITY OF LOS ANGELES DEPARTMENT OF PUBLIC WORKS

CITY ENGINEER	DESIGN GROUP	DATE
TED ALLEN, P.E.		
ENGINEER:	PROJECTLINE TECHNICAL SERVICES	01/31/2023
ARCHITECT:	NA	01/31/2023
DESIGNED BY:	JUSTIN CHIN	01/31/2023
DRAWN BY:	JUSTIN CHIN	01/31/2023
CHECKED BY:	ROBERT GETTER	01/31/2023
APPROVED BY:	ROBERT GETTER	01/31/2023

WORK ORDER EW40080F

SHEET NAME EG02

SHEET 63 OF 85 SHEETS

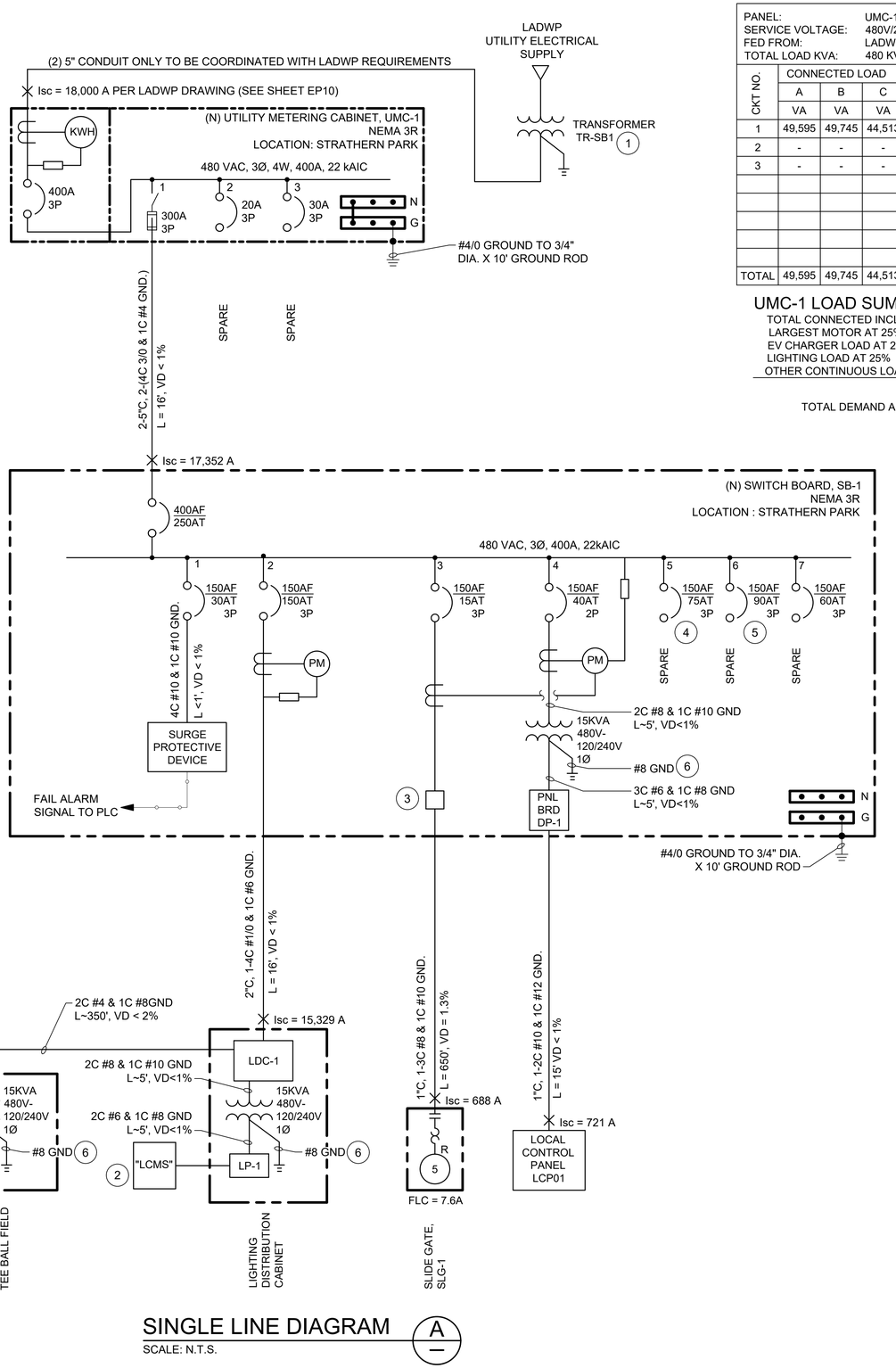

SINGLE LINE DIAGRAM

SCALE: N.T.S.

PANEL:	UMC-1	LOCATION:	STRATHERN PARK	MOUNTING:	SURFACE MOUNT
SERVICE VOLTAGE:	480V/277V	BUS SIZE:	600A	AIC RATING:	22KA
FED FROM:	LADWP XFM-1	MAIN BREAK:	250A	TYPE:	NEMA 3R
TOTAL LOAD KVA:	480 KVA	WIRE:	4W		

CKT NO.	CONNECTED LOAD A (VA)	CONNECTED LOAD B (VA)	CONNECTED LOAD C (VA)	PANEL BREAKERS POLES	PANEL BREAKERS AMPS	SERVICE
1	49,595	49,745	44,513	3	400	SB-1
2	-	-	-	3	20	SPARE
3	-	-	-	3	30	SPARE
TOTAL	49,595	49,745	44,513			

UMC-1 LOAD SUMMARY

TOTAL CONNECTED INCLUDING FUTURE LOAD (VA) = (A) + (B) + (C) =		143,853 VA
LARGEST MOTOR AT 25%	=	1,580 VA
EV CHARGER LOAD AT 25%	=	18,450 VA
LIGHTING LOAD AT 25%	=	15,175 VA
OTHER CONTINUOUS LOAD AT 25%	=	750 VA
		179,807 VA

TOTAL DEMAND AMPS CALCULATION = 179,807 / 480 / 1.732 = 216 A

PANEL:	SB-1	LOCATION:	STRATHERN PARK	MOUNTING:	SURFACE MOUNT
SERVICE VOLTAGE:	480V/277V	BUS SIZE:	600A	AIC RATING:	22KA
FED FROM:	UMC-1	MAIN BREAK:	400A	TYPE:	NEMA 3R
TOTAL LOAD KVA:	67 KVA	WIRE:	4W		

SB-1 SECTION	CONNECTED LOAD A (VA)	CONNECTED LOAD B (VA)	CONNECTED LOAD C (VA)	PANEL BREAKERS POLES	PANEL BREAKERS AMPS	SERVICE
3C	-	-	-	3	30	SURGE PROTECTIVE DEVICE, SPD-1
4B	2,106	2,106	2,106	3	15	SLIDE GATE, SG-1 (5 HP)
4D	-	-	-	3	60	SPARE BREAKER (60A)
4M	-	1,500	1,500	2	40	DISTRIBUTION PANEL, DP-1
5B	24,089	19,139	17,507	3	100	LDC-1 BREAKER
5D	3,600	7,200	3,600	3	70	(FUTURE LEVEL 2 EV CHARGERS)
5F	19,800	19,800	19,800	3	90	(FUTURE LEVEL 3 EV FAST CHARGER)
TOTAL	49,595	49,745	44,513			

SB-1 LOAD SUMMARY

TOTAL CONNECTED INCLUDING FUTURE LOAD (VA) = (A) + (B) + (C) =		143,853 VA
LARGEST MOTOR AT 25%	=	1,580 VA
EV CHARGER LOAD AT 25%	=	18,450 VA
LIGHTING LOAD AT 25%	=	15,175 VA
OTHER CONTINUOUS LOAD AT 25%	=	750 VA
		179,807 VA

TOTAL DEMAND AMPS CALCULATION = 179,807 / 480 / 1.732 = 216 A

KEYNOTES

1. PROPOSED TRANSFORMER BY LADWP.
2. SEE SHEET EL04 FOR LIGHTING POWER AND CONTROL DIAGRAM.
3. PROVIDE DISCONNECT SWITCH FOR SLIDE GATE, SLG-1 AT THE MCC. PROVIDE LOCAL CONTROLS FOR SLIDE GATE, SLG-1 AT DRY WELL VAULT. SEE CHEMATIC DIAGRAM FOR CONTROLS FOR SLIDE GATE, SLG-1. SEE SCHEMATIC DIAGRAM FOR CONTROLS ON DRAWING SHEET EP08.
4. FUTURE LEVEL 2 EV CHARGERS (45 KVA, 3PH XFM).
5. 90A BREAKER FOR FUTURE LEVEL 3, FAST CHARGER.
6. SEPARATELY DERIVED SYSTEM SHALL BE GROUNDED PER NEC ARTICLE 250.30 (A) AND COMPLY WITH 250.20 AND 250.26.

THE CITY OF LOS ANGELES OR ITS OFFICERS OR AGENTS SHALL NOT BE RESPONSIBLE FOR THE ACCURACY OR COMPLETENESS OF ELECTRONIC COPIES OF THIS PLAN SHEET.

REVISION DATES (DESIGN STAGE ONLY)

ENGINEERING
CITY OF LOS ANGELES

REGISTERED PROFESSIONAL ENGINEER
ROBERT D. GETTER
No. E 21884
Exp. 06-30-23
ELECTRICAL
STATE OF CALIFORNIA
01/31/2023

THIS PLAN WAS ELECTRONICALLY • SIGNED AND STAMPED

BUREAU OF ENGINEERING

VERTICAL CONTROL: BENCH MARK 18-02215 NAVD 88
HORIZONTAL CONTROL: CALIFORNIA STATE PLANE ZONE V, 1983 NAD

SHEET TITLE: ELECTRICAL SINGLE LINE DIAGRAM

PROJECT: STRATHERN PARK NORTH
STORMWATER CAPTURE PROJECT
STRATHERN PARK NORTH

ADDRESS: 8041 WHITSETT AVE. NORTH HOLLYWOOD, CA. 91605

CITY OF LOS ANGELES DEPARTMENT OF PUBLIC WORKS

NO.	REVISIONS	DATE	BY
		YY/MMDD	
		YY/MMDD	
		YY/MMDD	
		YY/MMDD	

CIP NO. SCP0003

INDEX NO.

CITY ENGINEER

	DESIGN GROUP	DATE
TED ALLEN, P.E.		
ENGINEER:	ROBERT GETTER	01/31/2023
ARCHITECT:	NA	01/31/2023
DESIGNED BY:	JUSTIN CHIN	01/31/2023
DRAWN BY:	JUSTIN CHIN	01/31/2023
CHECKED BY:	ROBERT GETTER	01/31/2023
APPROVED BY:	ROBERT GETTER	01/31/2023

WORK ORDER
EW4008F

SHEET NAME
ES01
SHEET 64 OF 85 SHEETS

PANEL: LDC-1 | LOCATION: STRATHERN PARK | MOUNTING: SURFACE MOUNT
SERVICE VOLTAGE: 480V | BUS SIZE: 225A | AIC RATING: 22KA
FED FROM: SWITCHBOARD SB-1 | MAIN BREAK: 150A | TYPE: NEMA 3R
TOTAL LOAD KVA: 63.6 KVA | WIRE: 4W

LOAD IN VA A	LOAD IN VA B	LOAD IN VA C	CIRCUIT DESCRIPTION	NOTE	TRIP	BRK POLES	CKT	CKT	BRK TRIP	BRK POLES	NOTE	CIRCUIT DESCRIPTION	LOAD IN VA A	LOAD IN VA B	LOAD IN VA C
1447.2			LCMS-C1		30		1	2	30			LCMS-C2	1687.2		
	1687.2		AT POLE A1	ZONE 1		3	3	4			ZONE 1	AT POLE A2		1339.2	
		1339.2					5	6		3					1447.2
3252			LCMS-C3		30		7	8	30			LCMS-C4	3223.2		
	3360		AT POLE B1	ZONE 1			9	10			ZONE 1	AT POLE B2		2373.6	
		2364				3	11	12		3					2025.6
3552			LCMS-C7		30		13	14	30			LCMS-C5	3552		
	2904		AT POLE A3	ZONE 2			15	16			ZONE 1	AT POLE C1		2904	
		2904				3	17	18		3					2904
2904			LCMS-C6		30		19	20	15	1	ZONE 3	LCMS-C8 AT POLE B2	135.73		
	2664		AT POLE A1	ZONE 2			21	22	15	1	ZONE 4	LCMS-C9 AT POLE A2		135.73	
		2016				3	23	24	15	1	ZONE 5	LCMS-C10 AT POLE A1/B1			407.19
2700			PANEL LP-1		40		25	26	15	1	ZONE 6	LCMS-C11 AT POLE C1	135.73		
	1500					2	27	28	15	1	ZONE 7	LCMS-C12 AT POLE A3		271.46	
		2100	PANEL DP-2		40		29	30							
1500						2	31	32							
							33	34							
							35	36							
							37	38							
							39	40							
							41	42							
15355	12115	10723	PHASE TOTAL									PHASE TOTAL	8734	7024	6784
			TOTAL CONNECTED LOAD = 60.7 KVA					BALANCED LINE CURRENT = 73 A							
			25% OF LIGHTING LOAD = 15.2 KVA					25% OF LIGHTING LOAD =18.3 A							
			TOTAL DEMAND = 75.9 KVA					BALANCED DEMAND CURRENT = 91.3 A							

PANEL: LP-1 | LOCATION: STRATHERN PARK | MOUNTING: SURFACE MOUNT
SERVICE VOLTAGE: 240V/120V | PHASE: 1 Ø | AIC RATING: 10K
FED FROM: LDC-1 | MAIN BREAK: 40A | TYPE: NEMA 1
TOTAL LOAD KVA: 4.3 KVA | WIRE: 3W

LOAD IN VA A	LOAD IN VA B	CIRCUIT DESCRIPTION	NOTE	TRIP	BRK POLES	CKT	CKT	BRK TRIP	BRK POLES	NOTE	CIRCUIT DESCRIPTION	LOAD IN VA A	LOAD IN VA B
1500		BATTING CAGE 1 RECEPTACLE		20	1	1	2	15	1		LCMS LIGHTING CONTROLLER	1200	
	1500	BATTING CAGE 2 RECEPTACLE		20	1	3	4	20	1				
				15	1	5	6	20	1				
				15	1	7	8	15	1				
				15	1	9	10	15	1				
						11	12						
1500	1500	PHASE TOTAL									PHASE TOTAL	1200	0
		TOTAL CONNECTED LOAD = 4.2 KVA					BALANCED LINE CURRENT = 17.5A						

PANEL: DP-2 | LOCATION: TEE BALL FIELD AT STRATHERN PARK | MOUNTING: SURFACE MOUNT
SERVICE VOLTAGE: 240V/120V | PHASE: 1 Ø | AIC RATING: 10K
FED FROM: LDC-1 | MAIN BREAK: 40A | TYPE: NEMA 1
TOTAL LOAD KVA: 4.3 KVA | WIRE: 3W

LOAD IN VA A	LOAD IN VA B	CIRCUIT DESCRIPTION	NOTE	TRIP	BRK POLES	CKT	CKT	BRK TRIP	BRK POLES	NOTE	CIRCUIT DESCRIPTION	LOAD IN VA A	LOAD IN VA B
1500		PA SYSTEM AT TEE BALL FIELD		20	1	1	2	15	1		IRRIGATION CONTROLLER	600	
	1500	PA SYSTEM AT BASE BALL FIELD		20	1	3	4	20	1				
				15	1	5	6	20	1				
				15	1	7	8	15	1				
				15	1	9	10	15	1				
						11	12						
1500	1500	PHASE TOTAL									PHASE TOTAL	600	0
		TOTAL CONNECTED LOAD = 3.6 KVA					BALANCED LINE CURRENT = 15A						

PANEL: DP-1 | LOCATION: STRATHERN PARK | MOUNTING: SURFACE MOUNT
SERVICE VOLTAGE: 240V/120V | PHASE: 1 Ø | AIC RATING: 10K
FED FROM: SWITCHBOARD, SB-1 | MAIN BREAK: 40A | TYPE: NEMA 1
TOTAL LOAD KVA: 3 KVA | WIRE: 3W

LOAD IN VA A	LOAD IN VA B	CIRCUIT DESCRIPTION	NOTE	TRIP	BRK POLES	CKT	CKT	BRK TRIP	BRK POLES	NOTE	CIRCUIT DESCRIPTION	LOAD IN VA A	LOAD IN VA B
3000		LOCAL CONTROL PANEL		30	1	1	2	20	1		SPARE		
		SPARE		20	1	3	4	15	1		SPARE		
				15	1	5	6	20	1				
				15	1	7	8	15	1				
				15	1	9	10	15	1				
						11	12						
3000	0	PHASE TOTAL									PHASE TOTAL	0	0
		TOTAL CONNECTED LOAD = 3 KVA					BALANCED LINE CURRENT = 12.5A						

THE CITY OF LOS ANGELES OR ITS OFFICERS OR AGENTS SHALL NOT BE RESPONSIBLE FOR THE ACCURACY OR COMPLETENESS OF ELECTRONIC COPIES OF THIS PLAN SHEET.

REVISION DATES (DESIGN STAGE ONLY)

ENGINEERING
CITY OF LOS ANGELES

REGISTERED PROFESSIONAL ENGINEER
ROBERT D. GETTER
No. E 21884
Exp. 06-30-23
ELECTRICAL
STATE OF CALIFORNIA
01/31/2023

THIS PLAN WAS ELECTRONICALLY SIGNED AND STAMPED

BUREAU OF ENGINEERING

VERTICAL CONTROL: BENCH MARK 18-02215 NAVD 88
HORIZONTAL CONTROL: CALIFORNIA STATE PLANE ZONE V, 1983 NAD

SHEET TITLE: ELECTRICAL PANEL SCHEDULES
PROJECT: STRATHERN PARK NORTH STORMWATER CAPTURE PROJECT
ADDRESS: STRATHERN PARK NORTH 8041 WHITSETT AVE. NORTH HOLLYWOOD, CA. 91605

CITY OF LOS ANGELES DEPARTMENT OF PUBLIC WORKS

CITY ENGINEER	DESIGN GROUP	DATE
TED ALLEN, P.E.		
	ENGINEER: ROBERT GETTER	01/31/2023
	ARCHITECT: NA	01/31/2023
	DESIGNED BY: JUSTIN CHIN	01/31/2023
	DRAWN BY: JUSTIN CHIN	01/31/2023
	CHECKED BY: ROBERT GETTER	01/31/2023
	APPROVED BY: ROBERT GETTER	01/31/2023

V NO.	REVISIONS	BY	DATE
			YY/MM/DD
			YY/MM/DD
			YY/MM/DD
			YY/MM/DD

CIP NO. SCP0003

INDEX NO.

WORK ORDER EW4008F

SHEET NAME ES02

SHEET 65 OF 85 SHEETS



NOTE:

1. ROLLING GATE TO BE GROUNDED BY THE CONTRACTOR. SEE KEYNOTE 12 ON EP01 AND DETAIL E-13 ON EP06.
2. PRIMARY AND SECONDARY DUCTBANKS SHALL BE INSTALLED BY CONTRACTOR PER EP10 (PRIMARY WITH MIN 36" COVER). DUCTBANKS SHALL SLOPE TO DRAIN.
3. TRANSFORMER PAD SHALL BE INSTALLED BY CONTRACTOR PER EP10.

ELECTRICAL SITE PLAN (A)
SCALE: 1" = 40'-0"

40' 0 40' 80'
1" = 40'

THE CITY OF LOS ANGELES OR ITS OFFICERS OR AGENTS SHALL NOT BE RESPONSIBLE FOR THE ACCURACY OR COMPLETENESS OF ELECTRONIC COPIES OF THIS PLAN SHEET.

REVISION DATES (DESIGN STAGE ONLY)

ENGINEERING
CITY OF LOS ANGELES

REGISTERED PROFESSIONAL ENGINEER
ROBERT D. GETTER
No. E 21884
Exp. 06-30-23
ELECTRICAL
STATE OF CALIFORNIA
01/31/2023

THIS PLAN WAS ELECTRONICALLY • SIGNED AND STAMPED

BUREAU OF ENGINEERING

VERTICAL CONTROL: BENCH MARK 18-02215 NAVD 88
HORIZONTAL CONTROL: CALIFORNIA STATE PLANE ZONE V, 1983 NAD

SHEET TITLE: ELECTRICAL SITE PLAN
PROJECT: STRATHERN PARK NORTH STORMWATER CAPTURE PROJECT
ADDRESS: STRATHERN PARK NORTH 8041 WHITSETT AVE. NORTH HOLLYWOOD, CA. 91605

CITY OF LOS ANGELES DEPARTMENT OF PUBLIC WORKS

NO.	REVISIONS	DATE	BY
		YY/MM/DD	
		YY/MM/DD	
		YY/MM/DD	
		YY/MM/DD	

CIP NO. SCP0003

INDEX NO.

CITY ENGINEER
TED ALLEN, P.E.

DESIGN GROUP		DATE
ENGINEER:	PROJECTLINE TECHNICAL SERVICES	01/31/2023
ARCHITECT:	NA	01/31/2023
DESIGNED BY:	JUSTIN CHIN	01/31/2023
DRAWN BY:	JUSTIN CHIN	01/31/2023
CHECKED BY:	ROBERT GETTER	01/31/2023
APPROVED BY:	ROBERT GETTER	01/31/2023

WORK ORDER
EW40080F

SHEET NAME
ES03
SHEET 66 OF 85 SHEETS

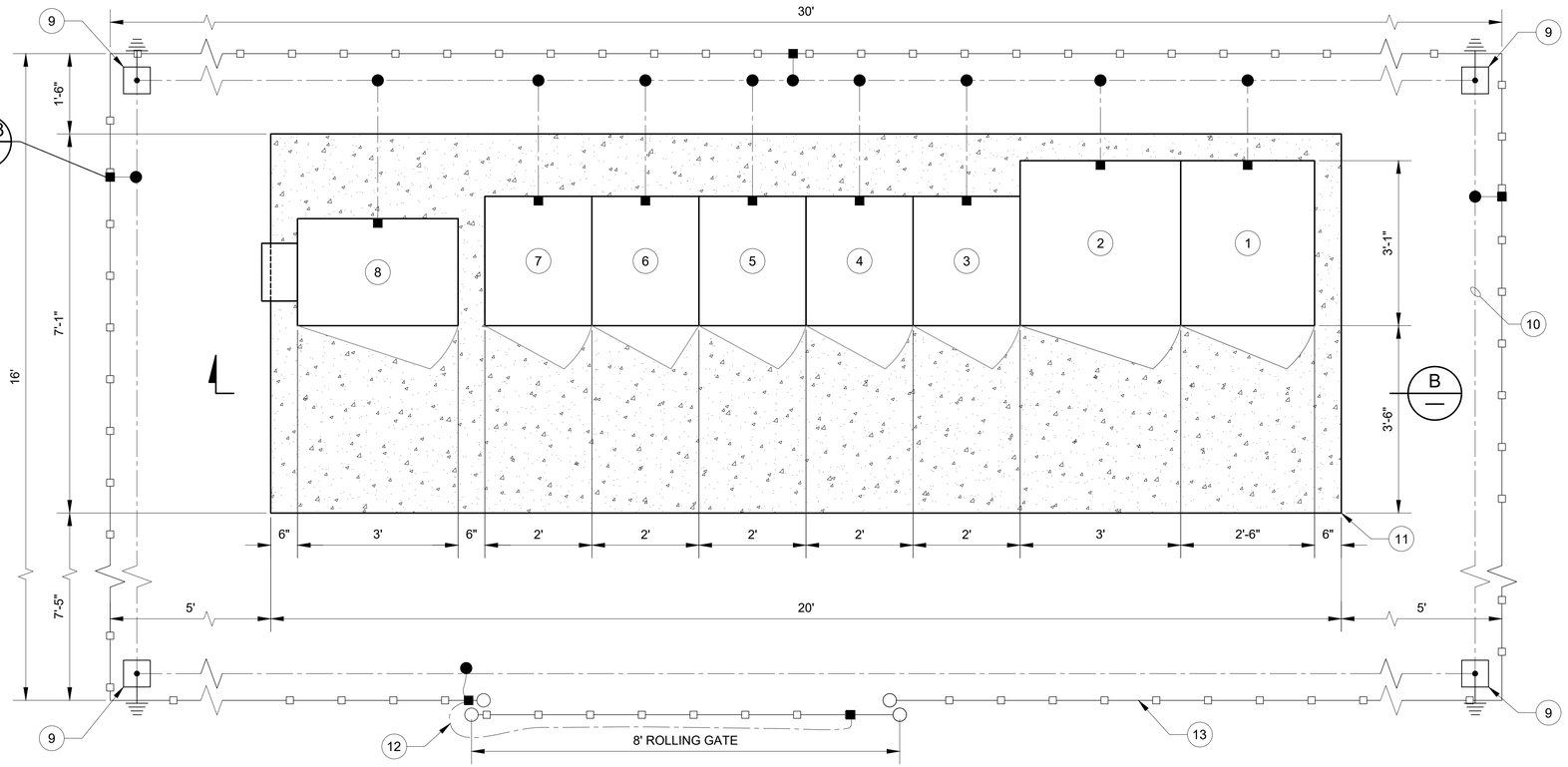

UMC-1, SB-1, LDC-1, LCMS, AND LCP-01 PLAN

SCALE: 3/4" = 1'-0"

A / ES-03

KEY NOTES:

1	LADWP APPROVED ELECTRICAL UTILITY METERING CABINET (UMC-1), SEE UMC-1 INTERIOR ELEVATION SHEET EP-02 AT DETAIL A, NEMA 3R, 316 SS CABINET. SEE CURRENT ELECTRICAL SERVICE REQUIREMENTS MANUAL.
2	LADWP APPROVED ELECTRICAL UTILITY METERING CABINET (UMC-1), SEE UMC-1 INTERIOR ELEVATION SHEET EP-02 AT DETAIL A, NEMA 3R, 316 SS CABINET. SEE CURRENT ELECTRICAL SERVICE REQUIREMENTS MANUAL.
3	MAIN BREAKER DISCONNECT, SURGE PROTECTIVE DEVICE, SPD-1, SEE SWITCHBOARD SB-1 INTERIOR ELEVATION, NEMA 3R, 316 SS CABINET.
4	SLIDE GATE (SG-1) BREAKER, DP-1 PANEL, SEE SWITCHBOARD SB-1 INTERIOR ELEVATION, NEMA 3R, 316 SS CABINET.
5	LDC-1 BREAKER, SPARE BREAKER, SEE SWITCHBOARD SB-1 INTERIOR ELEVATION, NEMA 3R, 316 SS CABINET.
6	LIGHTING DISTRIBUTION CABINET, (LDC-1) NEMA 3R SS CABINET.
7	LIGHTING CONTROL CABINET (LCMS-1) NEMA 3R SS CABINET.
8	LCP-01 CABINET, NEMA 4X, 316 SS CABINET. SEE SHEET IP03 FOR INTERIOR LAYOUT OF LCP-01.
9	3/4" D x 10' COPPER CLAD GROUND ROD INSTALL IN GROUND WELL SEE SHEET EP05 AT DETAIL E-01 AND E-03.
10	#4/0 BARE SOFT DRAWN COPPER GROUNDING CONDUCTOR. BURY A MINIMUM DEPTH OF 2'-6" BELOW GRADE. CADWELD GROUND TAP CONNECTIONS AND CONNECTION AT GROUND ELECTRODE.
11	EQUIPMENT CONCRETE PAD DETAIL. (SEE SHEET EP07 AT DETAIL E-14)
12	PROVIDE GROUNDING FOR 8 FEET W ROLLING GATE USING FESTOON-TYPE SYSTEM (HUBBELL MODEL BCR05302, OR EQUAL).
13	10' TALL PLASTIC COATED CHAIN LINK FENCE ENCLOSURE WITH 8' WIDE DOUBLE DOOR AND TOP COVER. SEE CIVIL DRAWING DETAIL FOR FENCE ENCLOSURE DETAIL.
14	CELLULAR ANTENNA PROVIDED BY SERVICE PROVIDER AND INSTALLED BY CONTRACTOR.

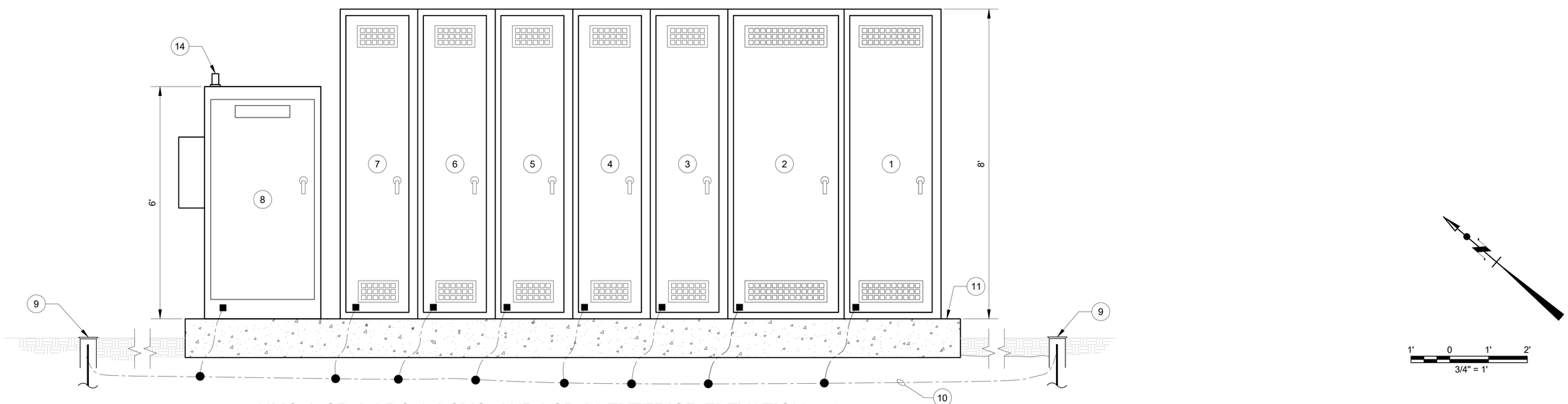

UMC-1, SB-1, LDC-1, LCMS, AND LCP-01 EXTERIOR ELEVATION

SCALE: 3/4" = 1'-0"

B / —

ENGINEERING
CITY OF LOS ANGELES

REGISTERED PROFESSIONAL ENGINEER
ROBERT D. GETTER
No. E 21884
Exp. 06-30-23
ELECTRICAL
STATE OF CALIFORNIA
01/31/2023

THIS PLAN WAS ELECTRONICALLY • SIGNED AND STAMPED

BUREAU OF ENGINEERING

VERTICAL CONTROL: BENCH MARK 18-02215 NAVD 88
HORIZONTAL CONTROL: CALIFORNIA STATE PLANE ZONE V, 1983 NAD

SHEET TITLE: SB-1, LCP-01, LDC-1, LCMS PLAN AND ELEVATION

PROJECT: STRATHERN PARK NORTH STORMWATER CAPTURE PROJECT

ADDRESS: STRATHERN PARK NORTH 8041 WHITSETT AVE. NORTH HOLLYWOOD, CA. 91605

CITY OF LOS ANGELES DEPARTMENT OF PUBLIC WORKS

NO.	REVISIONS	DATE	BY
		YY/MM/DD	
		YY/MM/DD	
		YY/MM/DD	
		YY/MM/DD	

CIP NO. SCP0003

INDEX NO.

CITY ENGINEER
TED ALLEN, P.E.

	DATE
DESIGN GROUP	
ENGINEER: PROJECT/LINE TECHNICAL SERVICES	01/31/2023
ARCHITECT: NA	01/31/2023
DESIGNED BY: JUSTIN CHIN	01/31/2023
DRAWN BY: JUSTIN CHIN	01/31/2023
CHECKED BY: ROBERT GETTER	01/31/2023
APPROVED BY: ROBERT GETTER	01/31/2023

WORK ORDER
EW40080F

SHEET NAME
EP01

SHEET 67 OF 85 SHEETS

THE CITY OF LOS ANGELES OR ITS OFFICERS OR AGENTS SHALL NOT BE RESPONSIBLE FOR THE ACCURACY OR COMPLETENESS OF ELECTRONIC COPIES OF THIS PLAN SHEET.

REVISION DATES (DESIGN STAGE ONLY)

7	6	5	4	3	2	1
LIGHTING CONTROL AND MONITORING CABINET (LCMS)	480V/277V THREE PHASE LIGHTING DISTRIBUTION PANEL (LDC-1)	(LDC-1) BREAKER	SLIDE GATE (SG-1) CP	SURGE PROTECTIVE DEVICE, SPD-1		UTILITY PULL SECTION
		75A SPARE BREAKER	60A SPARE BREAKER		SPACE	
		90A SPARE BREAKER	SPACE	MAIN BREAKER DISCONNECT	METERING PANEL	
	15KVA 480V/120-240V SINGLE PHASE MINI POWER CENTER WITH LP-1	SPACE	15 KVA 480V/120-240V SINGLE PHASE MINI POWER CENTER, DP-1	METERING PANEL	MAIN SWITCH	SPACE

UMC-1, SB-1, LDC-1, LCMS, AND LCP-01 INTERIOR ELEVATION

A

SCALE: 3/4" = 1'-0"

KEY NOTES:

1	LADWP APPROVED ELECTRICAL UTILITY METERING CABINET (UMC-1), SEE UMC-1 INTERIOR ELEVATION SHEET EP-02 AT DETAIL A, NEMA 3R, 316 SS CABINET. SEE CURRENT ELECTRICAL SERVICE REQUIREMENTS MANUAL.
2	LADWP APPROVED ELECTRICAL UTILITY METERING CABINET (UMC-1), SEE UMC-1 INTERIOR ELEVATION SHEET EP-02 AT DETAIL A, NEMA 3R, 316 SS CABINET. SEE CURRENT ELECTRICAL SERVICE REQUIREMENTS MANUAL.
3	MAIN BREAKER DISCONNECT, SURGE PROTECTIVE DEVICE, SPD-1, SEE SWITCHBOARD SB-1 INTERIOR ELEVATION, NEMA 3R, 316 SS CABINET.
4	SLIDE GATE (SG-1) CONTROL PANEL, 60A SPARE BREAKER, DP-1 PANEL, SEE SWITCHBOARD SB-1 INTERIOR ELEVATION, NEMA 3R, 316 SS CABINET.
5	LDC-1 BREAKER, SPARE BREAKERS, SEE SWITCHBOARD SB-1 INTERIOR ELEVATION, NEMA 3R, 316 SS CABINET.
6	LIGHTING DISTRIBUTION CABINET, (LDC-1) NEMA 3R SS CABINET.
7	LIGHTING CONTROL CABINET (LCMS-1) NEMA 3R SS CABINET.
8	LCP-01 CABINET, NEMA 4X, 316 SS CABINET. SEE SHEET IP03 FOR INTERIOR LAYOUT OF LCP-01.
9	3/4" D x 10' COPPER CLAD GROUND ROD INSTALL IN GROUND WELL SEE SHEET EP05 AT DETAIL E-01 AND E-03.
10	#4/0 BARE SOFT DRAWN COPPER GROUNDING CONDUCTOR. BURY A MINIMUM DEPTH OF 2'-6" BELOW GRADE. CADWELD GROUND TAP CONNECTIONS AND CONNECTION AT GROUND ELECTRODE.
11	EQUIPMENT CONCRETE PAD DETAIL. (SEE SHEET EP07 AT DETAIL E-14)
12	ROLLING GATE GROUNDING PER DMC POWER OR EQUAL.
13	10' TALL PLASTIC COATED CHAIN LINK FENCE ENCLOSURE WITH 8' WIDE DOUBLE DOOR AND TOP COVER. SEE LANDSCAPE SHEET XX FOR FENCE ENCLOSURE DETAIL.

THE CITY OF LOS ANGELES OR ITS OFFICERS OR AGENTS SHALL NOT BE RESPONSIBLE FOR THE ACCURACY OR COMPLETENESS OF ELECTRONIC COPIES OF THIS PLAN SHEET.

REVISION DATES (DESIGN STAGE ONLY)

ENGINEERING
CITY OF LOS ANGELES

REGISTERED PROFESSIONAL ENGINEER
ROBERT D. GETTER
No. E 21884
Exp. 06-30-23
ELECTRICAL
STATE OF CALIFORNIA
01/31/2023

THIS PLAN WAS ELECTRONICALLY SIGNED AND STAMPED

BUREAU OF ENGINEERING

VERTICAL CONTROL: BENCH MARK 18-0222 15 NAVD 88
HORIZONTAL CONTROL: CALIFORNIA STATE PLANE ZONE V, 1983 NAD

SHEET TITLE: UMC-1, SB-1, LDC-1, LCMS, AND LCP-01 INTERIOR ELEVATION

PROJECT: STRATHERN PARK NORTH STORMWATER CAPTURE PROJECT

ADDRESS: STRATHERN PARK NORTH 8041 WHITSETT AVE. NORTH HOLLYWOOD, CA. 91605

CITY OF LOS ANGELES DEPARTMENT OF PUBLIC WORKS

CITY ENGINEER: TED ALLEN, P.E. DATE 01/31/2023

DESIGN GROUP	
ENGINEER:	PROJECTLINE TECHNICAL SERVICES
ARCHITECT:	NA
DESIGNED BY:	JUSTIN CHIN
DRAWN BY:	JUSTIN CHIN
CHECKED BY:	ROBERT GETTER
APPROVED BY:	ROBERT GETTER

DATE	BY
YY/MM/DD	
YY/MM/DD	
YY/MM/DD	
YY/MM/DD	

NO.	REVISIONS

CIP NO. SCP0003

INDEX NO.

WORK ORDER EW40080F

SHEET NAME EP02

SHEET 68 OF 85 SHEETS

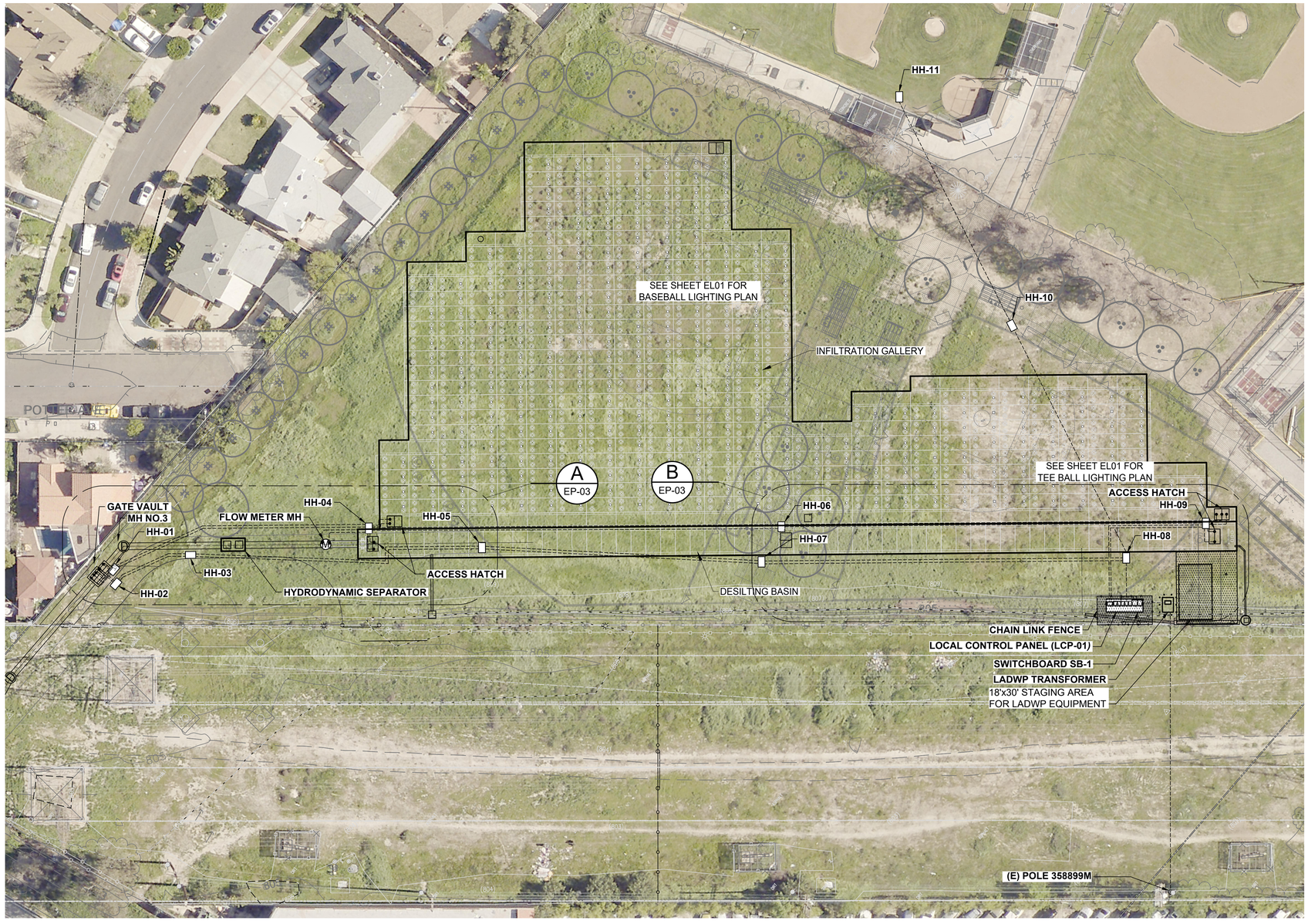

ELECTRICAL POWER AND INSTRUMENTATION PLAN

SCALE: 1" = 30'-0"

30' 0 30' 60'
1" = 30'

LEGEND

TRE_12" — TREE DIAMETER
TREE CANOPY
TREE TO BE PROTECTED
TREE PROTECTION ZONE (EVERY 1" OF TREE DIAMETER EQUALS 1.5' OF PROTECTION ZONE)

ELECTRICAL NOTES:

1. TREE PROTECTION ZONES ARE IDENTIFIED HEREIN ON THE PLANS WITH CIRCLES AROUND EXISTING TREES. CONTRACTOR SHALL AVOID CONSTRUCTION WITHIN TREE PROTECTION ZONES AS MUCH AS PRACTICAL, AND ASSIST THE CITY IN PROTECTING EXISTING TREES. CONDUIT ROUTING SHOWN HEREIN IS DIAGRAMMATIC, AND CONTRACTOR SHALL PREPARE DETAILED CONDUIT AND EQUIPMENT LOCATION PLANS FOR CITY REVIEW, INCLUDING PROPOSED CONDUIT ROUTING THAT PROTECTS TREES. WHERE REQUIRED TO ROUTE CONDUITS OUTSIDE TREE PROTECTION ZONES, CONTRACTOR SHALL PROVIDE UP TO 10 ADDED BURIED ELECTRICAL PULLBOXES, IN ADDITION TO THOSE SHOWN ON THE PLANS HEREIN, AT NO ADDED COST TO THE CITY.
2. CONTRACTOR SHALL COORDINATE FLOW METER INSTALLATION ARRANGEMENTS AND DETAILS WITH FLOW METER MANUFACTURER, AND SUBMIT MANUFACTURER'S CERTIFICATION IN WRITING THAT INSTALLATION ARRANGEMENTS ARE HYDRAULICALLY ACCEPTABLE FOR ALL FLOW METERS. MANUFACTURER SHALL PROVIDE UP TO ONE DAY OF FIELD INSTALLATION AND SUPPORT AS NEEDED TO REFINE FLOW METER INSTALLATION AND TUNING.
3. PROVIDE JUNCTION BOX INSIDE BASIN ABOVE WATER LEVEL & ACCESSIBLE FROM HATCH FOR BOTH INTRUSION SWITCH & LEVEL TRANSMITTER. SECURE LEVEL TX VENT TUBE IN JUNCTION BOX AS MANUFACTURERS INSTRUCTIONS.
4. PROVIDE JUNCTION BOX FOR FLOAT SWITCH INSIDE BASIN.
5. PROVIDE JUNCTION BOX INSIDE FLOW METER VAULT. CABLE AS SPECIFIED BY MANUFACTURER. SEE SHEET CI20 DETAIL A9 FOR FLOW METER MOUNTING DETAIL.
6. BURIED ELECTRICAL PULLBOXES AND HANDHOLES SHALL BE PRECAST CONCRETE WITH CAST IRON OR CORROSION RESISTANT STEEL LIDS ON METAL FRAMES, SUCH THAT THEY CAN BE WELDED SHUT AND COMPLY WITH NEC 314.30, AND BE UL LISTED. LID SHALL BE MARKED AS "POWER" OR "SIGNAL" AS APPROPRIATE AND TOP OF LID TO BE FLUSH WITH FINISHED GRADE. PROVIDE ALL PULLBOXES AND HANDHOLES MINIMUM SIZES AT 10" x17"x30" DEEP. PROVIDE LIDS WITH H20 TRAFFIC RATING. PULLBOXES AND HANDHOLES SHALL BE BY CHRISTY, OLDCASTLE, AND JENSEN OR EQUAL.

HANDHOLE ID	VENDOR	PART NUMBER
HH-04, 04, 09	OLD CASTLE	B1730BOX B1730-51JH
HH-02, 03, 05 06, 07, 08, 10	OLD CASTLE	B1324BOX B1324-51JH

THE CITY OF LOS ANGELES OR ITS OFFICERS OR AGENTS SHALL NOT BE RESPONSIBLE FOR THE ACCURACY OR COMPLETENESS OF ELECTRONIC COPIES OF THIS PLAN SHEET.

REVISION DATES (DESIGN STAGE ONLY)

ENGINEERING — CITY OF LOS ANGELES

REGISTERED PROFESSIONAL ENGINEER — ROBERT D. GETTER — No. E 21884 — Exp. 06-30-23 — ELECTRICAL — STATE OF CALIFORNIA — 01/31/2023

THIS PLAN WAS ELECTRONICALLY SIGNED AND STAMPED

BUREAU OF ENGINEERING

VERTICAL CONTROL: BENCH MARK 18-02215 NAVD 88
HORIZONTAL CONTROL: CALIFORNIA STATE PLANE ZONE V, 1983 NAD

SHEET TITLE: OVERALL ELECTRICAL POWER AND INSTRUMENTATION PLAN

PROJECT: STRATHERN PARK NORTH STORMWATER CAPTURE PROJECT

ADDRESS: STRATHERN PARK NORTH 8041 WHITSETT AVE. NORTH HOLLYWOOD, CA. 91605

NO.	REVISIONS	BY	DATE
			YY/MM/DD
			YY/MM/DD
			YY/MM/DD
			YY/MM/DD

CIP NO. SCP0003

INDEX NO.

CITY OF LOS ANGELES DEPARTMENT OF PUBLIC WORKS

TED ALLEN, P.E. CITY ENGINEER

DESIGN GROUP		DATE
ENGINEER:	PROJECTLINE TECHNICAL SERVICES	01/31/2023
ARCHITECT:	NA	01/31/2023
DESIGNED BY:	JUSTIN CHIN	01/31/2023
DRAWN BY:	JUSTIN CHIN	01/31/2023
CHECKED BY:	ROBERT GETTER	01/31/2023
APPROVED BY:	ROBERT GETTER	01/31/2023

WORK ORDER EW40080F

SHEET NAME EP03

SHEET 69 OF 85 SHEETS

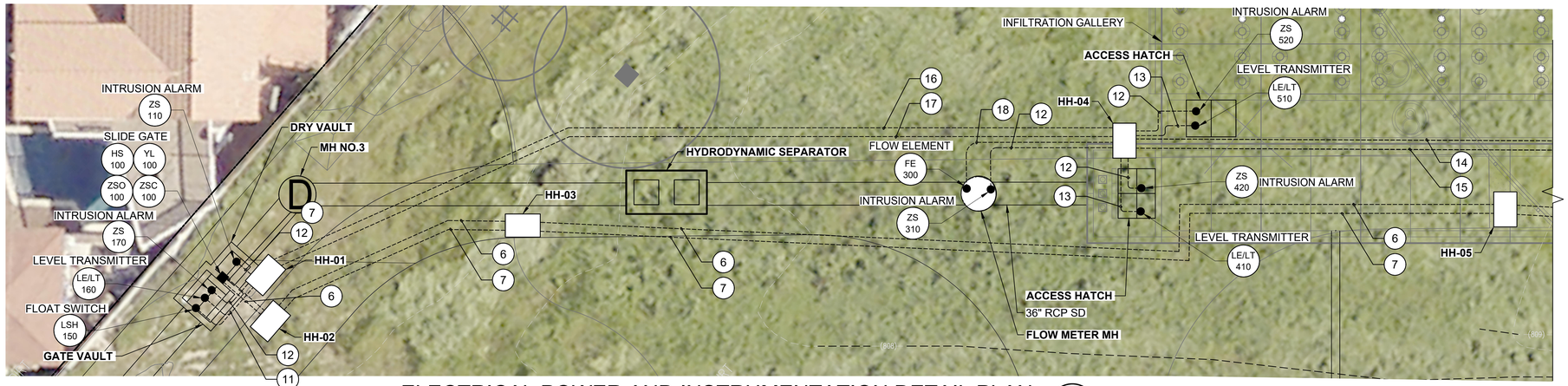

ELECTRICAL POWER AND INSTRUMENTATION DETAIL PLAN (A)

SCALE: 1" = 10'-0"

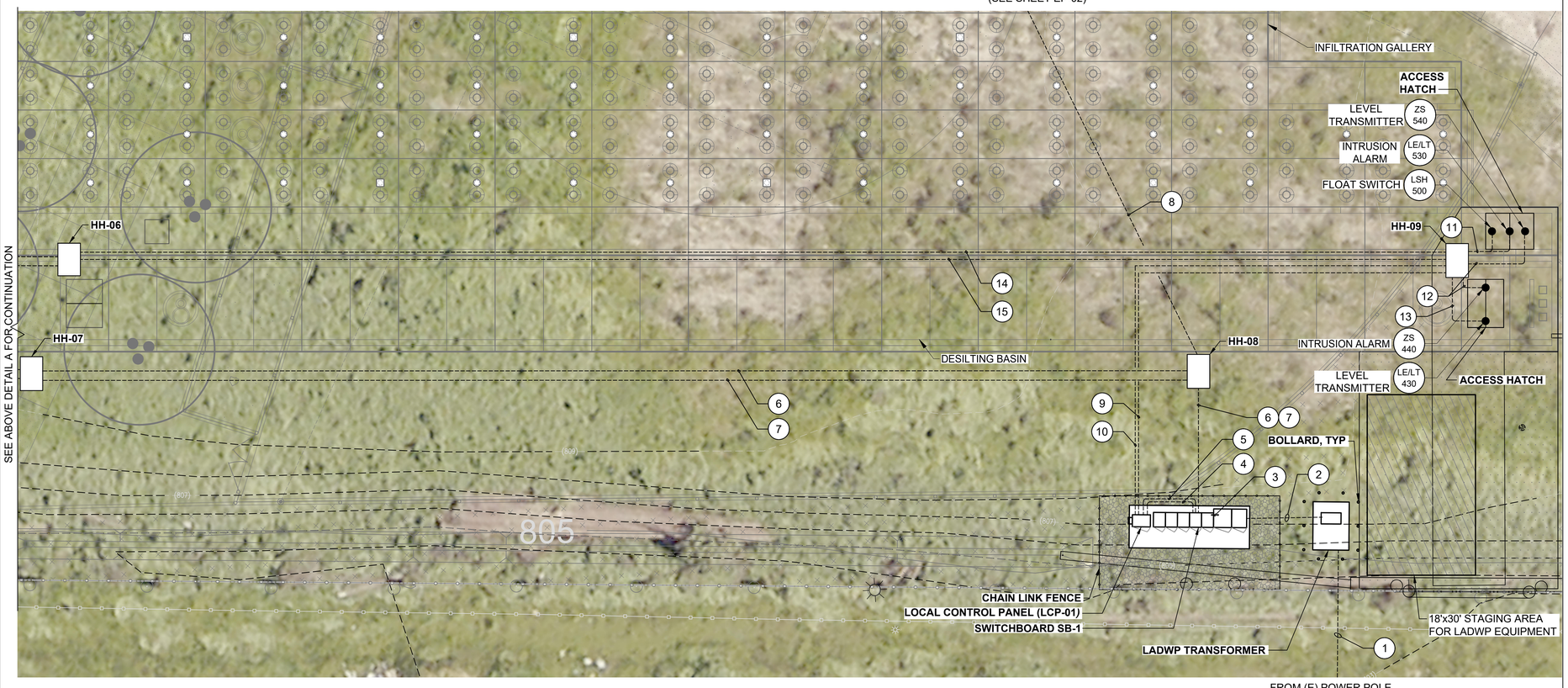

ELECTRICAL POWER AND INSTRUMENTATION DETAIL PLAN (B)

SCALE: 1" = 10'-0"

KEY NOTES

1. 2-4" CONDUIT TO BE COORDINATED WITH LADWP REQUIREMENTS (480V, POWER FROM EXISTING 4.8KV LADWP TRANSFORMER TO NEW 480V, 3 PHASE, 400A LADWP TRANSFORMER LOCATED INSIDE FENCE ENCLOSURE). PROVIDE 2" CONDUIT FOR INTERNET SERVICE PROVIDER TO CONNECT CELLULAR MODEM AT LCP-01 PANEL.
2. 2-5" CONDUITS TO BE COORDINATED WITH LADWP REQUIREMENTS (480V, POWER FROM NEW PAD MOUNTED LADWP TRANSFORMER TO UTILITY METERING CABINET, UMC-1). PROVIDE 2"C FOR ISP CONNECTION TO LCP-01.
3. 2-5"C, 4C#3/0, 1C#4 GND (480V, POWER FROM UTILITY METERING CABINET, UMC-1 TO SWITCHBOARD, SB-1).
4. 1"C, 1-5C#14 (120VAC, PLC SIGNALS FROM LCP-01 TO SG-1 CP AT SB-1-4B).
   1"C, 1-8C#16 (24VDC, GATE STATUS FROM LCP-01 TO SG-1 CP AT SB-1-4B).
5. 1"C, 1-2C#12, 1C#12 GND (120V, POWER FROM DP-2 AT SB-1-4M TO LCP-01).
6. 1"C, 1-3C#8, 1C#10 GND (480V, POWER) FROM SG-1 CP AT SB-1-4B TO SLIDE GATE ACTUATOR AT DRY VAULT.
7. 1"C, 1-12C#12,(120V, CMD & STATUS SIGNALS) FROM SG-1 CP AT SB-1-4B TO SLIDE GATE ACTUATOR AT DRY VAULT.
8. PROVIDE 2-2" CONDUIT FOR FUTURE INSTALLATION OF SPORT LIGHTING FIXTURES FOR EXISTING SPORT FIELDS.
9. 3"C, 1 MANUFACTURER'S CABLE (FLOW METER SIGNAL) 2-4TSP #16 (4-20MA, 2 LEVEL + 2 FLOAT SIGNALS), 3-2TSP #16 (4-20MA, 3 LEVEL SIGNALS).
10. 2"C, 7-4C#12 (24V, 7 INTRUSION ALARMS).
11. 1"C, 1-4TSP #16 (4-20MA, 1 LEVEL + 1 FLOAT SIGNALS),
12. 1"C, 1-4C#14 (24VDC, 1 INTRUSION ALARM)
13. 1"C, 1-2TSP#16 (4-20MA, 1 LEVEL SIGNAL).
14. 3"C, 1 MANUFACTURER'S CABLE (FLOW METER SIGNAL) 1-4TSP #16 (4-20MA, 2 LEVEL + 2 FLOAT SIGNALS), 2-2TSP #16 (4-20MA, 3 LEVEL SIGNALS).
15. 1.5"C, 5-4C#12 (24V, 5 INTRUSION ALARMS).
16. 1"C, 1-4TSP #16 (4-20MA, 1 LEVEL + 1 FLOAT SIGNALS),
17. 1.5"C, 2-4C#12 (24V, 2 INTRUSION ALARM).
18. 1"C, 1 MANUFACTURER'S CABLE FROM FLOW METER MH NO.1 TO LCP-01. FLOW SENSOR TO BE INSTALLED BY MANUFACTURER'S RECOMMENDATION.

10' 0 10' 20'
1" = 10'

THE CITY OF LOS ANGELES OR ITS OFFICERS OR AGENTS SHALL NOT BE RESPONSIBLE FOR THE ACCURACY OR COMPLETENESS OF ELECTRONIC COPIES OF THIS PLAN SHEET.

REVISION DATES (DESIGN STAGE ONLY)

ENGINEERING
CITY OF LOS ANGELES

REGISTERED PROFESSIONAL ENGINEER
ROBERT D. GETTER
No. E 21884
Exp. 06-30-23
ELECTRICAL
STATE OF CALIFORNIA
01/31/2023

THIS PLAN WAS ELECTRONICALLY • SIGNED AND STAMPED

BUREAU OF ENGINEERING

VERTICAL CONTROL: BENCH MARK 18-02215 NAVD 88
HORIZONTAL CONTROL: CALIFORNIA STATE PLANE ZONE V, 1983 NAD

SHEET TITLE: ELECTRICAL POWER AND INSTRUMENTATION DETAIL PLAN
PROJECT: STRATHERN PARK NORTH STORMWATER CAPTURE PROJECT
ADDRESS: STRATHERN PARK NORTH 8041 WHITSETT AVE. NORTH HOLLYWOOD, CA. 91605

NO.	REVISIONS	DATE	BY
		YY/MM/DD	
		YY/MM/DD	
		YY/MM/DD	
		YY/MM/DD	

CIP NO. SCP0003

INDEX NO.

CITY OF LOS ANGELES DEPARTMENT OF PUBLIC WORKS

CITY ENGINEER: TED ALLEN, P.E.

	DESIGN GROUP	DATE
ENGINEER:	PROJECTLINE TECHNICAL SERVICES	01/31/2023
ARCHITECT:	NA	01/31/2023
DESIGNED BY:	JUSTIN CHIN	01/31/2023
DRAWN BY:	JUSTIN CHIN	01/31/2023
CHECKED BY:	ROBERT GETTER	01/31/2023
APPROVED BY:	ROBERT GETTER	01/31/2023

WORK ORDER
EW40080F

SHEET NAME
EP04
SHEET 70 OF 85 SHEETS

THE CITY OF LOS ANGELES OR ITS OFFICERS OR AGENTS SHALL NOT BE RESPONSIBLE FOR THE ACCURACY OR COMPLETENESS OF ELECTRONIC COPIES OF THIS PLAN SHEET.

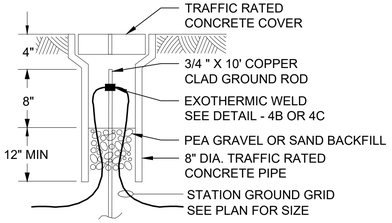

NOTE:
1. PROVIDE MINIMUM OF FOUR GROUND RODS IN GROUND WELLS.

GROUND WELL | E-01

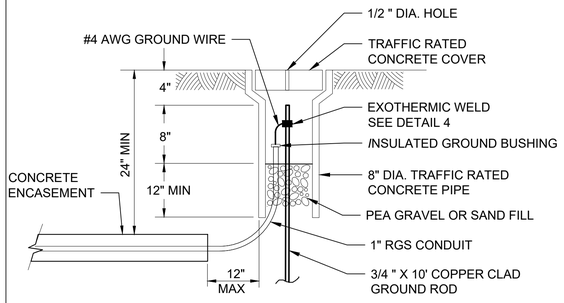

INSULATED GROUND CABLE MOUNTING IN GROUND WELL | E-02

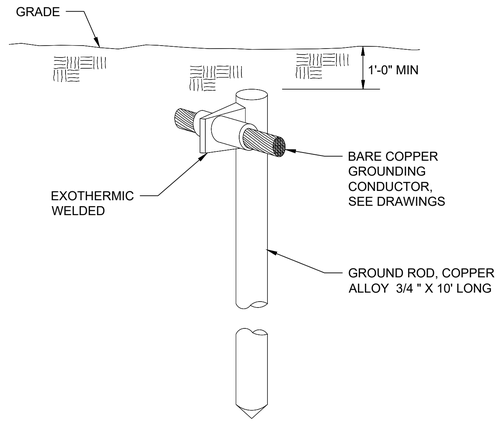

NOTE:
1. CONTRACTOR SHALL PROVIDE UP TO FOUR GROUND RODS CONNECTED TO GROUND LOOPS AROUND ELECTRICAL ENCLOSURE. CONTRACTOR SHALL SUBMIT PROPOSED GROUNDING PLAN FOR APPROVAL.

BURIED GROUND ROD | E-03

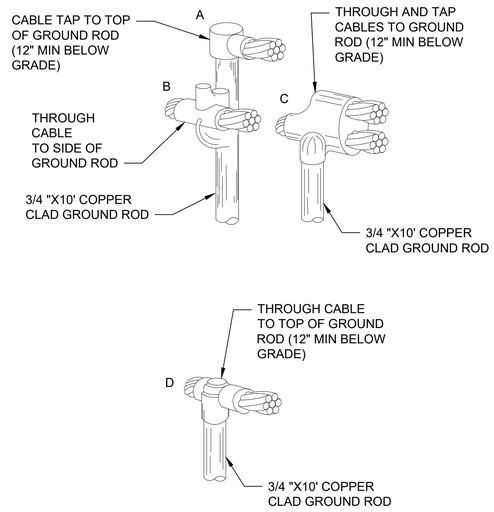

EXOTHERMIC WELDS CABLE TO GROUND ROD | E-04

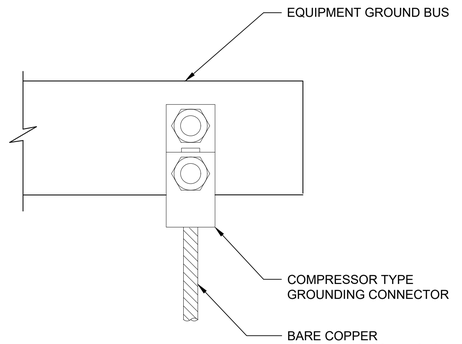

TYPICAL GROUND BUS CONNECTION | E-05

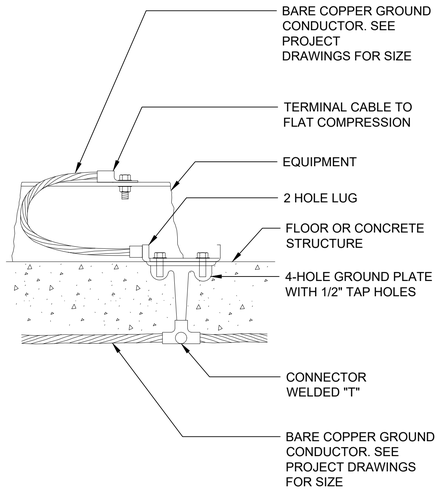

TYPICAL GROUND EQUIPMENT CONNECTION | E-06

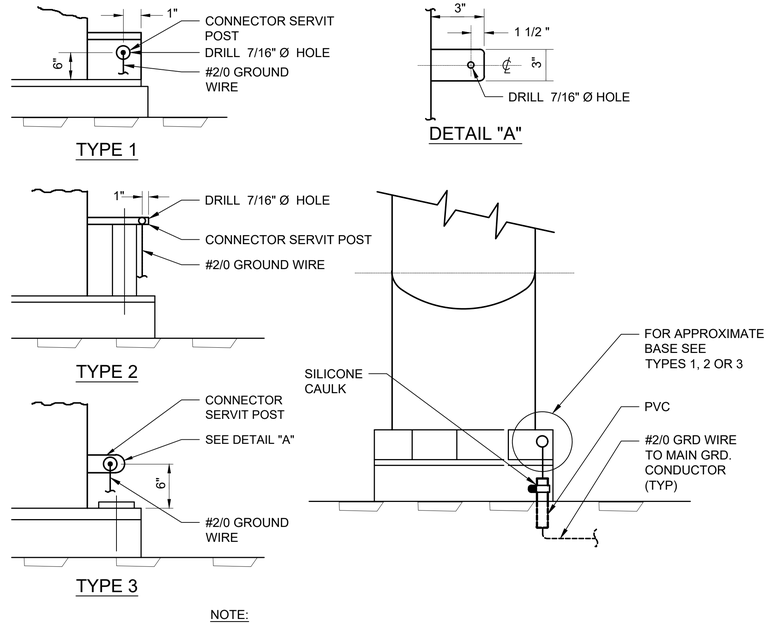

NOTE:
1. ALL TANKS, LADDERS AND HANDRAILS TO BE GROUNDED.

TYPICAL EQUIPMENT GROUNDING | E-07

REVISION DATES
(DESIGN STAGE ONLY)

ENGINEERING
CITY OF LOS ANGELES

REGISTERED PROFESSIONAL ENGINEER
ROBERT D. GETTER
No. E 21884
Exp. 06-30-23
ELECTRICAL
STATE OF CALIFORNIA
01/31/2023

THIS PLAN WAS ELECTRONICALLY
• SIGNED AND STAMPED

BUREAU OF ENGINEERING

VERTICAL CONTROL: BENCH MARK 18-02215 NAVD 88
HORIZONTAL CONTROL: CALIFORNIA STATE PLANE ZONE V. 1983 NAD

SHEET TITLE: ELECTRICAL GROUNDING DETAILS
PROJECT: STRATHERN PARK NORTH STORMWATER CAPTURE PROJECT
ADDRESS: STRATHERN PARK NORTH
8041 WHITSETT AVE. NORTH HOLLYWOOD, CA. 91605

CITY OF LOS ANGELES DEPARTMENT OF PUBLIC WORKS

TED ALLEN, P.E.
CITY ENGINEER

NO.	REVISIONS	DATE	BY
		YY/MM/DD	
		YY/MM/DD	
		YY/MM/DD	
		YY/MM/DD	

DESIGN GROUP
ENGINEER: PROJECTLINE TECHNICAL SERVICES 01/31/2023
ARCHITECT: NA 01/31/2023
DESIGNED BY: JUSTIN CHIN 01/31/2023
DRAWN BY: JUSTIN CHIN 01/31/2023
CHECKED BY: ROBERT GETTER 01/31/2023
APPROVED BY: ROBERT GETTER 01/31/2023

CIP NO. SCP0003

INDEX NO.

WORK ORDER
EW40080F

SHEET NAME
EP05
SHEET 71 OF 85 SHEETS

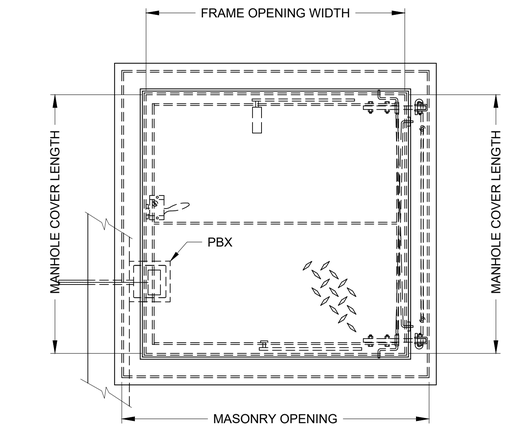

PLAN

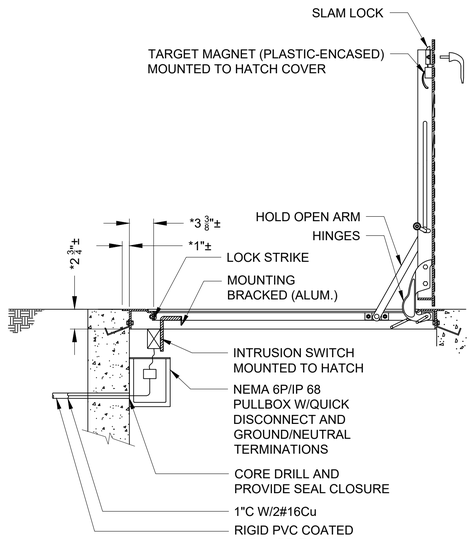

* VERIFY ALL DIMENSIONS

SECTION A-A

* VERIFY TYPICAL FRAME DIMENSIONS

NOTES:

1. PROVIDE SERIES II (SQUARE BODY) TOPWORX GO SWITCH BY EMERSON OR EQUAL (CLASS I, DIV 2). PROVIDE AMP3 TARGET MAGNET, NEMA 4X SST BODY, AND MINI QUICK DISCONNECT. INSTALL PER MANUFACTURER'S RECOMMENDATIONS.
2. FASTEN TARGET TO UNDERSIDE OF ACCESS HATCH. PROVIDE MOUNTING BRACKETS WHERE REQUIRED TO PLACE TARGET WITHIN RANGE OF SENSING AREA. MECHANICALLY FASTEN MOUNTING BRACKET TO HATCH COVER, AND SWITCH TO VAULT STRUCTURE.
3. ALL MOUNTING HARDWARE SHALL BE TYPE 316 SST. PROVIDE MIN. 1/4" DIA. BOLTS FOR ATTACHMENTS.
4. ADJUST DETAIL AS REQUIRED FOR FIELD INSTALLATION ARRANGEMENT
5. PROVIDE SEPARATION BETWEEN DISSIMILAR METALS TO PREVENT GALVANIC CORROSION.

DETAIL - VAULT HATCH COVER | E-11

SWITCH LOCATION	TAG
DIVERSION STRUCT	ZS-110
BAFFLE BOX	ZS-200
INFILTR BASIN	ZS-520 ZS-540

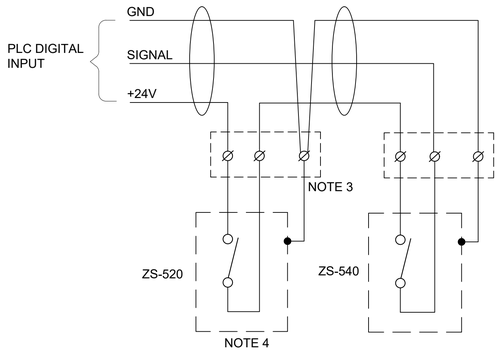

NOTES:

1. SEE PROXIMITY SWITCH INSTALLATION DETAIL E-11.
2. PROVIDE SEPARATE PLC DIGITAL INPUTS FOR DIVERSION STRUCTURE, BAFFLE BOX & INFILTRATION BASIN.
3. PROVIDE NEMA 4X, SS JUNCTION BOX LOCATED INSIDE BASIN/ BOX
4. INTRUSION SWITCH CONTACT CLOSED WHEN HATCH CLOSED.

DETAIL - HATCH INTRUSION ALARM TYPICAL WIRING DIAGRAM (WIRING FOR BASIN SHOWN) | E-08

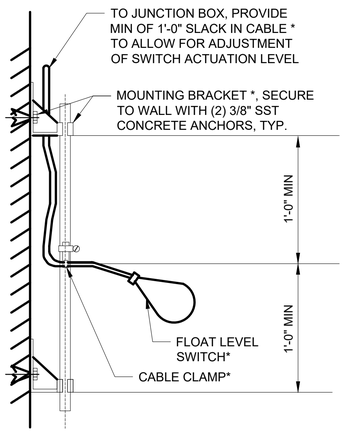

NOTE:
1. COMPONENTS DESIGNATED BY * ARE SUPPLIED BY INSTRUMENT MANUFACTURER.

TYPICAL FLOAT TYPE LEVEL SWITCH INSTALLATION | E-09

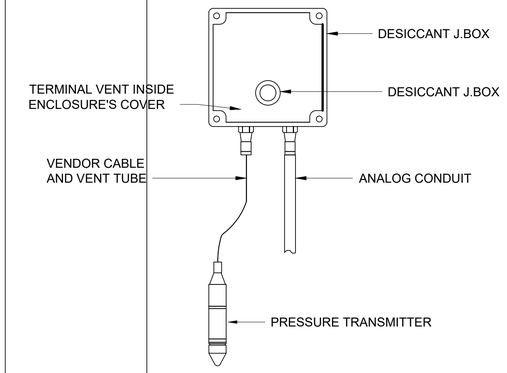

DROP-IN PRESSURE TRANSMITTER DESICCANT J-BOX DETAIL | E-10

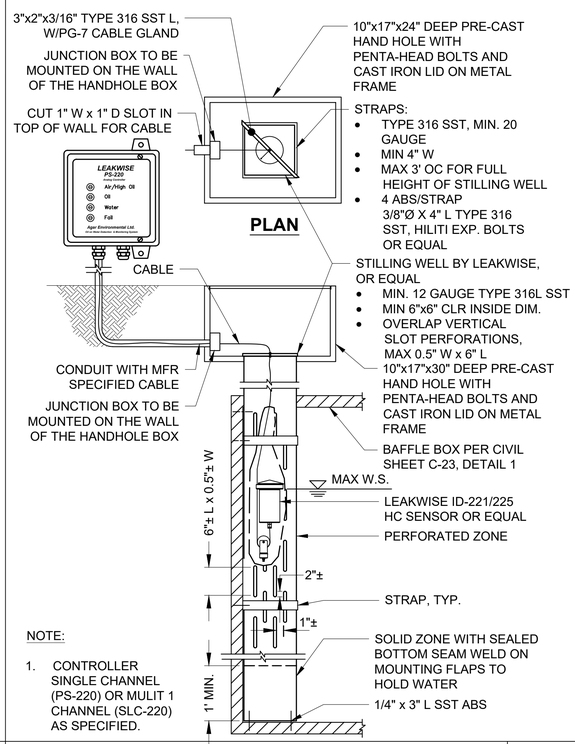

NOTE:
1. CONTROLLER SINGLE CHANNEL (PS-220) OR MULIT 1 CHANNEL (SLC-220) AS SPECIFIED.

HC SENSOR WITH STILLER DETAIL | E-12

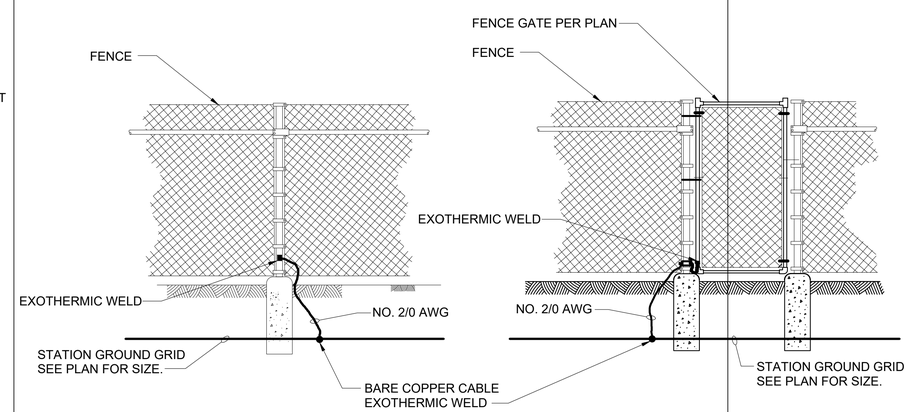

FENCE GROUNDING

FENCE GROUNDING WITH GATE

NOTE:
1. PROVIDE GROUNDING FOR 20 FT W ROLLING FENCE GATE USING FESTOON-TYPE SYSTEM (HUBBELL MODEL BCR05302, OR EQUAL).

FENCE GROUNDING WITH GATE | E-13

THE CITY OF LOS ANGELES OR ITS OFFICERS OR AGENTS SHALL NOT BE RESPONSIBLE FOR THE ACCURACY OR COMPLETENESS OF ELECTRONIC COPIES OF THIS PLAN SHEET.

REVISION DATES (DESIGN STAGE ONLY)

CITY OF LOS ANGELES DEPARTMENT OF PUBLIC WORKS
BUREAU OF ENGINEERING • THIS PLAN WAS ELECTRONICALLY SIGNED AND STAMPED
ENGINEERING CITY OF LOS ANGELES

REGISTERED PROFESSIONAL ENGINEER ROBERT D. GETTER No. E 21884 Exp. 06-30-23 STATE OF CALIFORNIA ELECTRICAL
01/31/2023

VERTICAL CONTROL: BENCH MARK: 18-02215 NAVD 88
HORIZONTAL CONTROL: CALIFORNIA STATE PLANE ZONE V, 1983 NAD

SHEET TITLE: ELECTRICAL SECTIONS AND DETAILS 1 OF 2
PROJECT: STRATHERN PARK NORTH STORMWATER CAPTURE PROJECT
ADDRESS: STRATHERN PARK NORTH 8041 WHITSETT AVE. NORTH HOLLYWOOD, CA. 91605

NO.	REVISIONS	DATE	BY
		YY/MM/DD	
		YY/MM/DD	
		YY/MM/DD	
		YY/MM/DD	

CIP NO. SCP0003

INDEX NO.

CITY ENGINEER

	DESIGN GROUP	DATE
TED ALLEN, P.E.		01/31/2023
ENGINEER:	PROJECT/LINE TECHNICAL SERVICES	01/31/2023
ARCHITECT:	NA	01/31/2023
DESIGNED BY:	JUSTIN CHIN	01/31/2023
DRAWN BY:	JUSTIN CHIN	01/31/2023
CHECKED BY:	ROBERT GETTER	01/31/2023
APPROVED BY:	ROBERT GETTER	01/31/2023

WORK ORDER EW40080F

SHEET NAME EP06

SHEET 72 OF 85 SHEETS

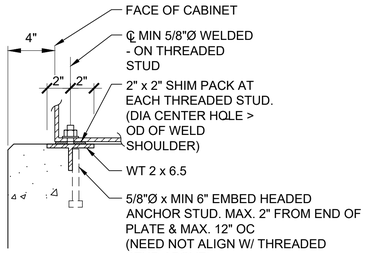

CAST-IN-ANCHOR (A)

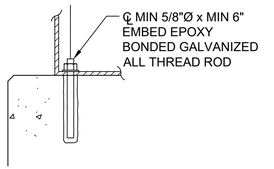

POST-INSTALLED ANCHOR (B)

NOTE: ANCHOR BOLTS AND MOUNTING HARDWARE SHALL BE HOT-DIP GALVANIZED.

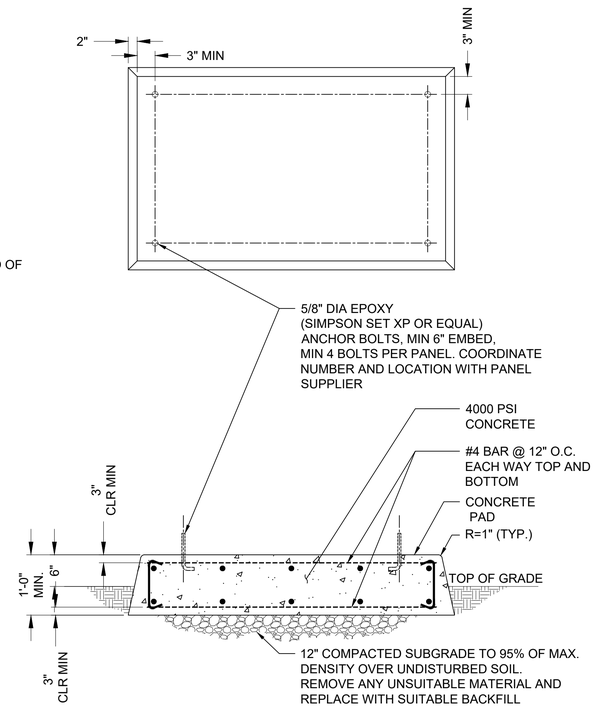

EQUIPMENT ENCLOSURE PAD | E-14

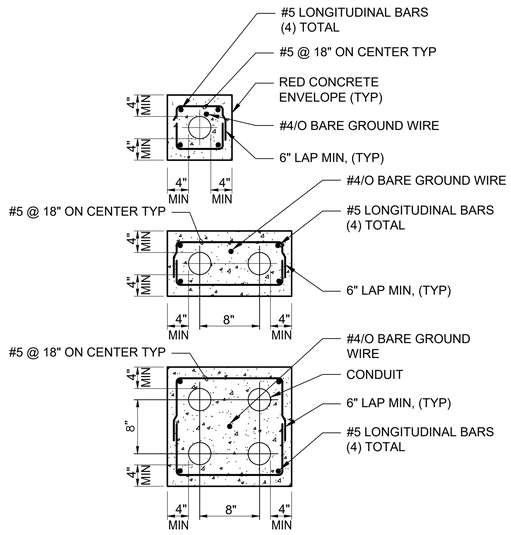

NOTES:
1. TYPICAL REINFORCEMENT DETAILS FOR ALL DUCT BANKS EVEN IF NUMBER OF CONDUITS AND CONFIGURATION VARIES.
2. ALL UNDERGROUND CONDUIT SHALL BE ENCASED IN CONCRETE DUCTS.

DUCT BANKS DETAIL | E-15

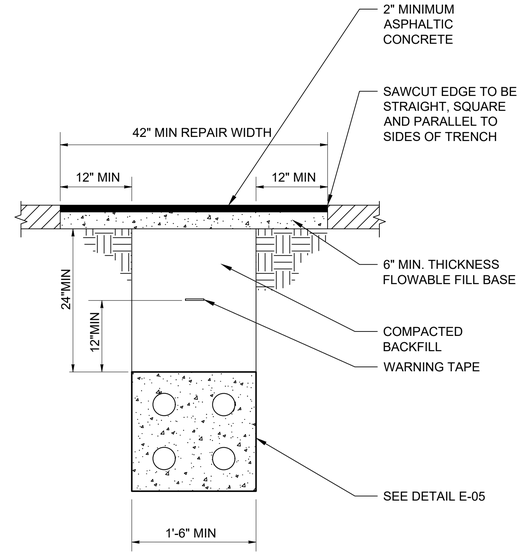

CONDUIT PLACEMENT IN TRENCH | E-16

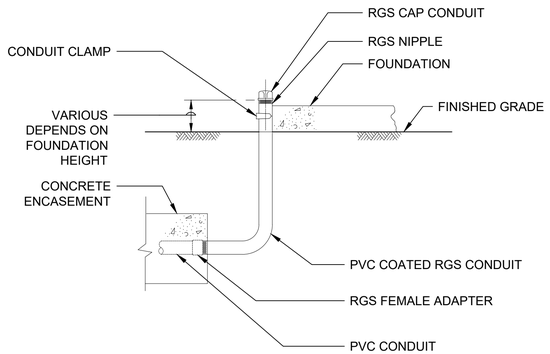

TYPICAL CONDUIT STUB-UP | E-17

THE CITY OF LOS ANGELES OR ITS OFFICERS OR AGENTS SHALL NOT BE RESPONSIBLE FOR THE ACCURACY OR COMPLETENESS OF ELECTRONIC COPIES OF THIS PLAN SHEET.

REVISION DATES (DESIGN STAGE ONLY)

ENGINEERING
CITY OF LOS ANGELES

REGISTERED PROFESSIONAL ENGINEER
ROBERT D. GETTER
No. E 21884
Exp. 06-30-23
ELECTRICAL
STATE OF CALIFORNIA
01/31/2023

THIS PLAN WAS ELECTRONICALLY • SIGNED AND STAMPED

BUREAU OF ENGINEERING

VERTICAL CONTROL: BENCH MARK: 18-0222 15 NAVD 88
HORIZONTAL CONTROL: CALIFORNIA STATE PLANE ZONE V, 1983 NAD

SHEET TITLE: ELECTRICAL SECTIONS AND DETAILS 2 OF 2

PROJECT: STRATHERN PARK NORTH STORMWATER CAPTURE PROJECT

ADDRESS: STRATHERN PARK NORTH 8041 WHITSETT AVE. NORTH HOLLYWOOD, CA. 91605

NO.	REVISIONS	BY	DATE
			YY/MM/DD
			YY/MM/DD
			YY/MM/DD
			YY/MM/DD

CIP NO. SCP0003

INDEX NO.

CITY OF LOS ANGELES DEPARTMENT OF PUBLIC WORKS

CITY ENGINEER: TED ALLEN, P.E. — DATE: 01/31/2023

	DESIGN GROUP	DATE
ENGINEER:	PROJECTLINE TECHNICAL SERVICES	01/31/2023
ARCHITECT:	NA	01/31/2023
DESIGNED BY:	JUSTIN CHIN	01/31/2023
DRAWN BY:	JUSTIN CHIN	01/31/2023
CHECKED BY:	ROBERT GETTER	01/31/2023
APPROVED BY:	ROBERT GETTER	01/31/2023

WORK ORDER EW40080F

SHEET NAME EP07

SHEET 73 OF 85 SHEETS

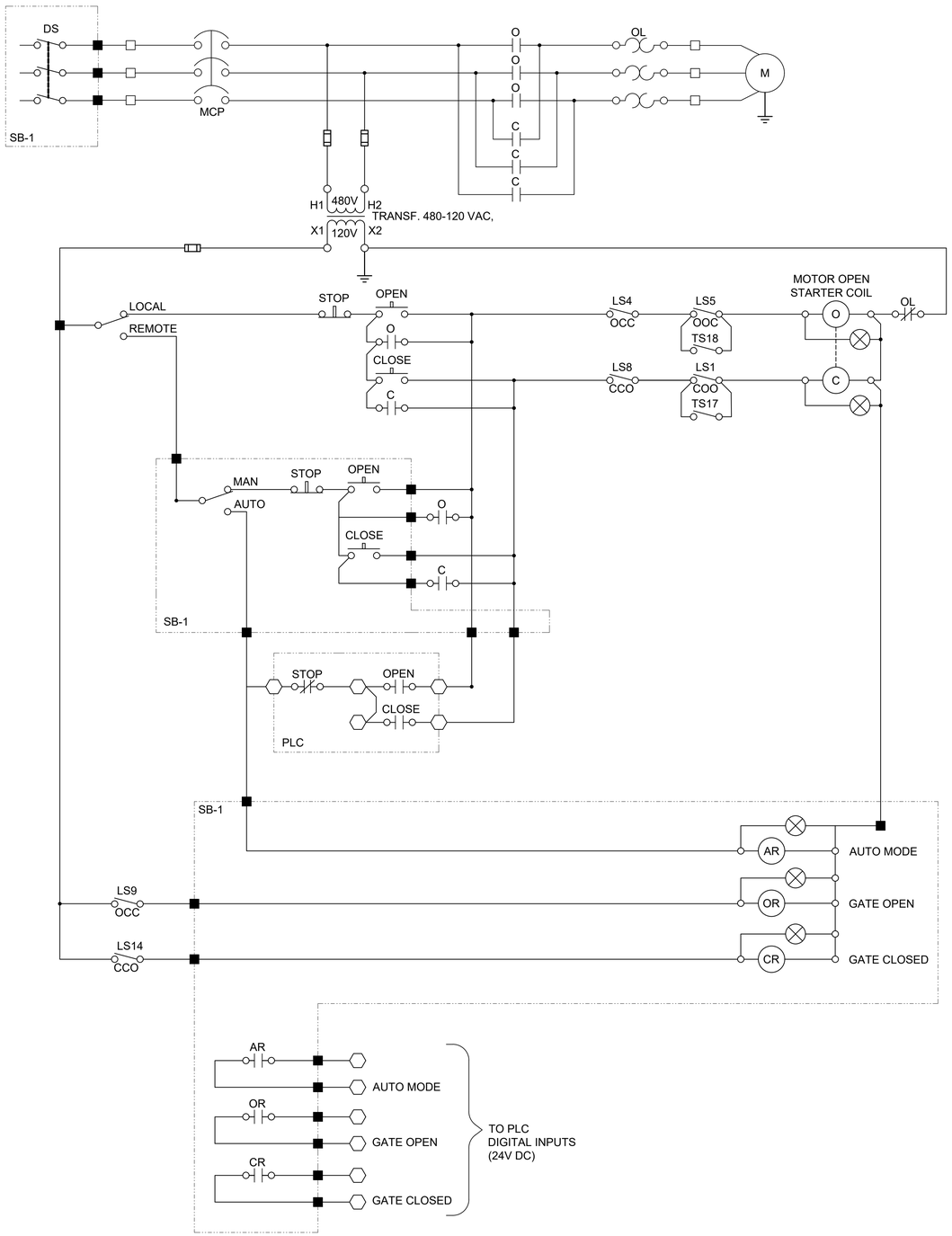

TYPICAL CONTROL SCHEMATIC - SLIDE GATE OPERATOR AT DRY VAULT (A)

SCALE: N.T.S.

SLIDE GATE LIMIT SWITCH CONTACT DEVELOPMENT				
CONTACT	GATE FULLY OPEN	GATE INTERMEDIATE POSITION	GATE FULLY CLOSED	CONTACT FUNCTION
1	CLOSED	OPEN	OPEN	BYPASS CTRL
2	CLOSED	OPEN	OPEN	INDICATION
3	OPEN	CLOSED	CLOSED	INDICATION
4	OPEN	CLOSED	CLOSED	OPEN LIMIT
5	OPEN	OPEN	CLOSED	BYPASS CIR
6	OPEN	OPEN	CLOSED	INDICATION
7	CLOSED	CLOSED	OPEN	SPARE
8	CLOSED	CLOSED	OPEN	CLOSE LIMIT
9	CLOSED	OPEN	OPEN	INDICATION
10	CLOSED	OPEN	OPEN	SPARE
11	OPEN	CLOSED	CLOSED	SPARE
12	OPEN	CLOSED	CLOSED	SPARE
13	OPEN	OPEN	CLOSED	SPARE
14	OPEN	OPEN	CLOSED	INDICATION
15	CLOSED	CLOSED	OPEN	INDICATION
16	CLOSED	CLOSED	OPEN	SPARE
17	CLOSING THRUST SWITCH INTERRUPTS CONTROL CIRCUIT IF MECHANICAL OVERLOAD OCCURS DURING CLOSING CYCLE.			
18	OPENING THRUST SWITCH INTERRUPTS CONTROL CIRCUIT IF MECHANICAL OVERLOAD OCCURS DURING OPENING CYCLE.			

LEGEND

- ☐ TERMINAL BLOCK IN ELECTRIC ACTUATOR
- ■ TERMINAL BLOCK IN SB-1
- ⬡ TERMINAL BLOCK IN PLC

MCC	MOTOR CONTROL CENTER
PLC	PROGRAMMABLE LOGIC CONTROLLER
COO	CLOSED WHEN GATE IS FULLY OPENED
OOC	CLOSED WHEN GATE IS FULLY CLOSED
CCO	OPEN WHEN GATE IS FULLY CLOSED
OCC	OPEN WHEN GATE IS FULLY OPENED
LSX	LIMIT SWITCH IN GATE SWITCH COMPARTMENT
TSX	TORQUE SWITCH IN GATE SWITCH COMPARTMENT
X	SWITCH IDENTIFICATION NUMBER IN GATE SWITCH COMPARTMENT

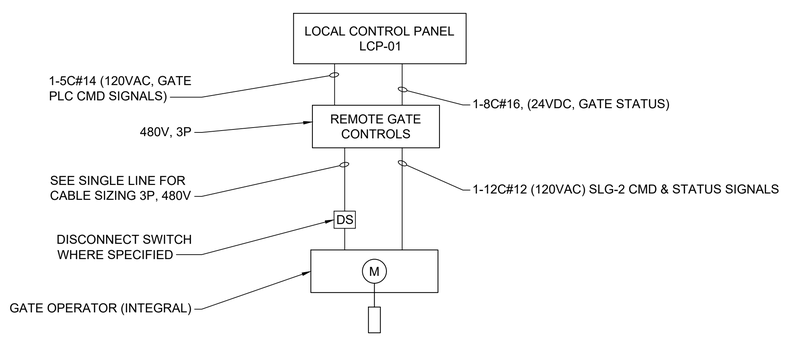

CABLE BLOCK DIAGRAM (B)

SCALE: N.T.S.

THE CITY OF LOS ANGELES OR ITS OFFICERS OR AGENTS SHALL NOT BE RESPONSIBLE FOR THE ACCURACY OR COMPLETENESS OF ELECTRONIC COPIES OF THIS PLAN SHEET.

REVISION DATES (DESIGN STAGE ONLY)

ENGINEERING
CITY OF LOS ANGELES

REGISTERED PROFESSIONAL ENGINEER
ROBERT D. GETTER
No. E 21884
Exp. 06-30-23
ELECTRICAL
STATE OF CALIFORNIA
01/31/2023

THIS PLAN WAS ELECTRONICALLY • SIGNED AND STAMPED

BUREAU OF ENGINEERING

VERTICAL CONTROL: BENCH MARK 18-02215 NAVD 88
HORIZONTAL CONTROL: CALIFORNIA STATE PLANE ZONE V, 1983 NAD

SHEET TITLE: ELECTRICAL CONTROL SCHEMATIC DIAGRAM - SLIDE GATE

PROJECT: STRATHERN PARK NORTH STORMWATER CAPTURE PROJECT

ADDRESS: STRATHERN PARK NORTH
8041 WHITSETT AVE. NORTH HOLLYWOOD, CA. 91605

CITY OF LOS ANGELES DEPARTMENT OF PUBLIC WORKS

NO.	REVISIONS	BY	DATE
			YY/MM/DD
			YY/MM/DD
			YY/MM/DD
			YY/MM/DD

CIP NO. SCP0003

INDEX NO.

CITY ENGINEER
TED ALLEN, P.E.

	DESIGN GROUP	DATE
ENGINEER:	PROJECTLINE TECHNICAL SERVICES	01/31/2023
ARCHITECT:	NA	01/31/2023
DESIGNED BY:	JUSTIN CHIN	01/31/2023
DRAWN BY:	JUSTIN CHIN	01/31/2023
CHECKED BY:	ROBERT GETTER	01/31/2023
APPROVED BY:	ROBERT GETTER	01/31/2023

WORK ORDER
EW40080F

SHEET NAME
EP08

SHEET 74 OF 85 SHEETS

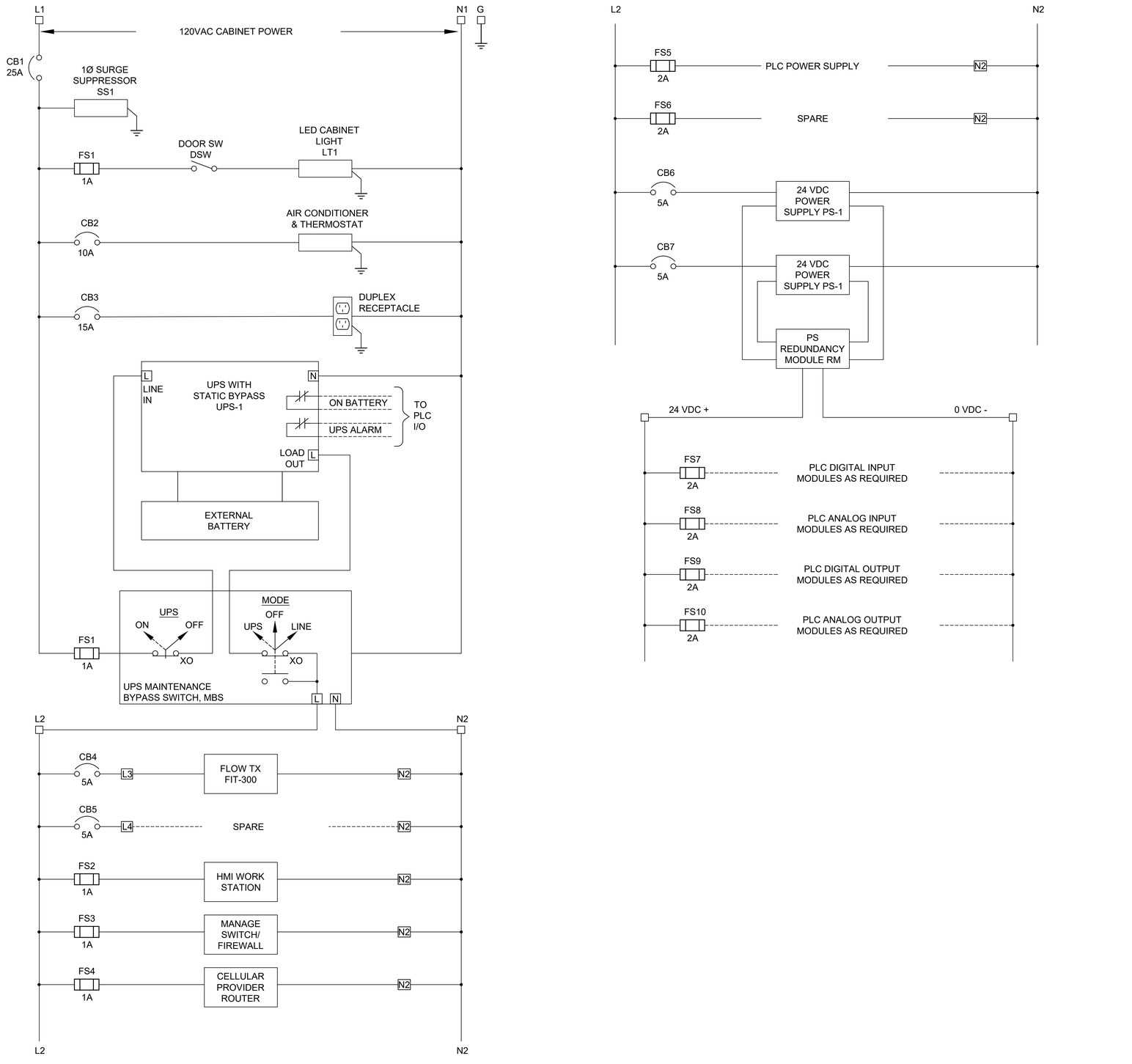

TYPICAL POWER DISTRIBUTION - LOCAL CONTROL PANEL

A
—

THE CITY OF LOS ANGELES OR ITS OFFICERS OR AGENTS SHALL NOT BE RESPONSIBLE FOR THE ACCURACY OR COMPLETENESS OF ELECTRONIC COPIES OF THIS PLAN SHEET.

REVISION DATES
(DESIGN STAGE ONLY)

ENGINEERING
CITY OF LOS ANGELES

REGISTERED PROFESSIONAL ENGINEER
ROBERT D. GETTER
No. E 21884
Exp. 06-30-23
ELECTRICAL
STATE OF CALIFORNIA
01/31/2023

THIS PLAN WAS ELECTRONICALLY
• SIGNED AND STAMPED

BUREAU OF ENGINEERING

VERTICAL CONTROL: BENCH MARK 18-02215 NAVD 88
HORIZONTAL CONTROL: CALIFORNIA STATE PLANE ZONE V, 1983 NAD

SHEET TITLE: TYPICAL POWER DISTRIBUTION
SCHEMATIC DIAGRAM - LCP-01

PROJECT: STRATHERN PARK NORTH
STORMWATER CAPTURE PROJECT

ADDRESS: STRATHERN PARK NORTH
8041 WHITSETT AVE. NORTH HOLLYWOOD, CA. 91605

NO.	REVISIONS	BY	DATE
			YY/MM/DD
			YY/MM/DD
			YY/MM/DD
			YY/MM/DD

CIP NO. SCP0003

INDEX NO.

CITY OF LOS ANGELES DEPARTMENT OF PUBLIC WORKS

CITY ENGINEER
TED ALLEN, P.E.

DESIGN GROUP		DATE
ENGINEER:	PROJECTLINE TECHNICAL SERVICES	01/31/2023
ARCHITECT:	NA	01/31/2023
DESIGNED BY:	JUSTIN CHIN	01/31/2023
DRAWN BY:	JUSTIN CHIN	01/31/2023
CHECKED BY:	ROBERT GETTER	01/31/2023
APPROVED BY:	ROBERT GETTER	01/31/2023

WORK ORDER
EW40080F

SHEET NAME
EP09
SHEET 75 OF 85 SHEETS

CUST	1
ENGR (DR)	2
ESR (112)	2
DDFT	1
FILE	1
TOTAL	7

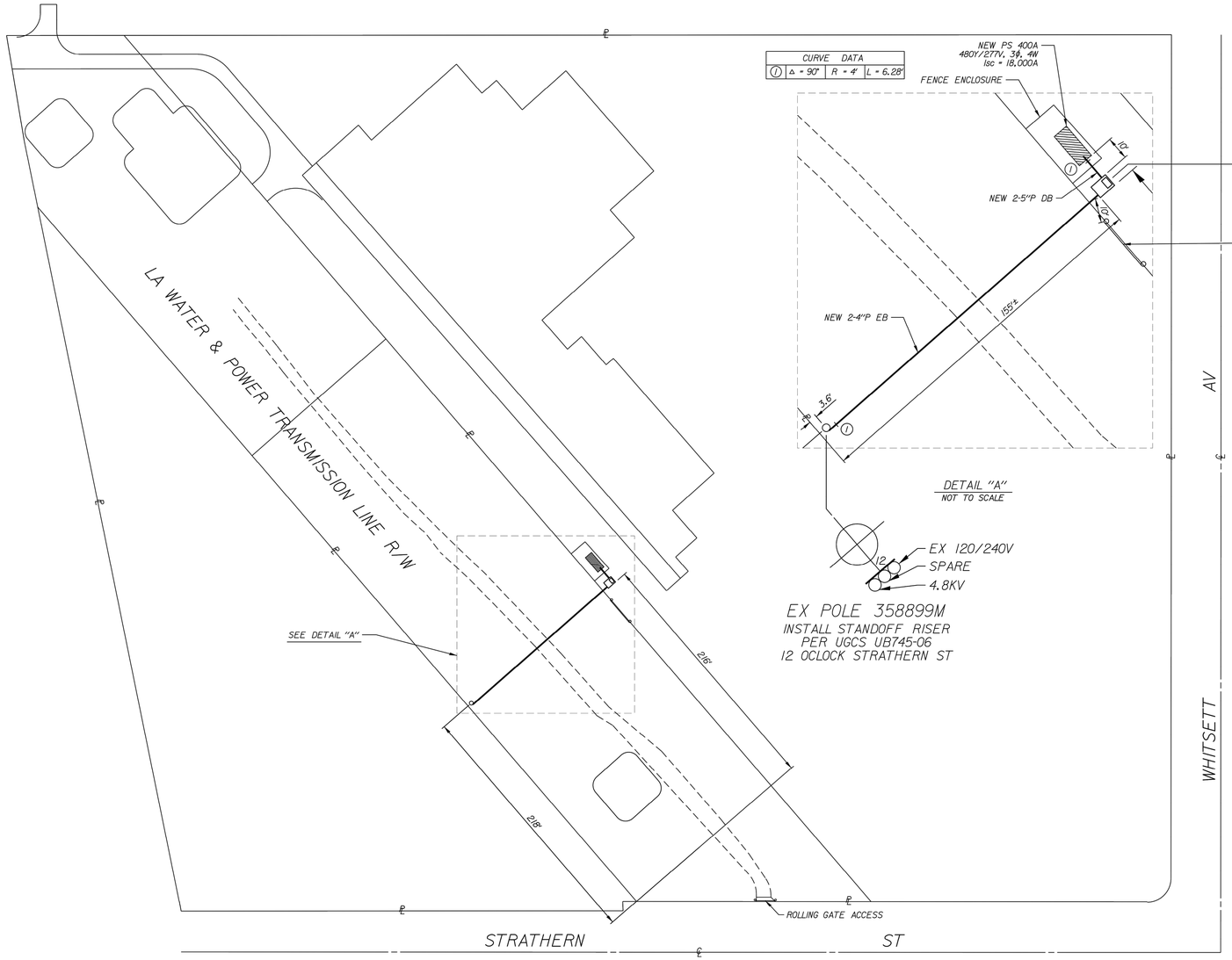

CURVE DATA			
①	Δ = 90°	R = 4'	L = 6.28'

DETAIL "A"
NOT TO SCALE

EX POLE 358899M
INSTALL STANDOFF RISER
PER UGCS UB745-06
12 OCLOCK STRATHERN ST

THIS COMMITMENT IS VALID FOR SIX MONTHS ONLY,
ANY CHANGE IN LOAD OR DESIGN WILL REQUIRE
REVISED PLANS TO BE SUBMITTED FOR RE-EVALUATION

1"=50'

INSPECTION

1. FULL INSPECTION AND APPROVAL BY A DEPARTMENT OF WATER AND POWER (DWP) ELECTRIC SERVICE REPRESENTATIVE IS REQUIRED PRIOR TO THE INSTALLATION OF CABLE AND EQUIPMENT.
2. NOTIFY THE DWP ELECTRIC SERVICE REPRESENTATIVE FOR AREA 112 TELEPHONE NUMBER (818) 771-4032, FIVE (5) NORMAL WORKING DAYS IN ADVANCE OF CONSTRUCTION.
3. THE CUSTOMER SHALL ARRANGE FOR ELECTRICAL INSPECTION BY THE LOS ANGELES DEPARTMENT OF BUILDING AND SAFETY FOR HIS ELECTRICAL WORK. THE SERVICE WILL NOT BE ENERGIZED UNTIL NOTIFICATION OF APPROVAL HAS BEEN RECEIVED BY THE DWP.

GENERAL

1. ALL FACILITIES MUST BE PROVIDED AND INSTALLED IN ACCORDANCE WITH THE DWP'S ELECTRIC SERVICE REQUIREMENTS.
2. CONDUITS AND STRUCTURES SHALL BE INSTALLED PER DWP'S UNDERGROUND SPECIFICATION 104 AND APPENDIX I AS LAST REVISED.

SCHEDULE

1. IN ORDER TO AVOID SCHEDULING DELAYS IN THE INSTALLATION OF DWP EQUIPMENT FOR YOUR PROJECT, THE CUSTOMER MUST COMPLETE THE INSTALLATION AND DWP'S INSPECTION OF THE CONDUIT, TRANSFORMER PAD AND SWITCHBOARD A MINIMUM OF SIX (6) WEEKS PRIOR TO THE RELEASE FROM THE DEPARTMENT OF BUILDING AND SAFETY.
2. DWP WILL INSTALL ELECTRICAL METERS AND ENERGIZE THE ELECTRICAL SERVICE TYPICALLY WITHIN TEN (10) WORKING DAYS, AFTER ALL RELEASES HAVE BEEN OBTAINED FROM BOTH DWP AND THE DEPARTMENT OF BUILDING AND SAFETY.

CONDUIT

1. PRIMARY CONDUITS: 2-4" PLASTIC ENCASED BURIED TYPE (EB-35) CONDUITS ENCASED IN 3" OF CONCRETE. MINIMUM COVER FROM TOP OF CONCRETE ENVELOPE TO FINISHED GRADE, EXCEPT AT TRANSFORMER PAD, SHALL BE 30 INCHES IN PAVED AREAS AND 36 INCHES IN LANDSCAPED AREAS. WHEN TERMINATING CONDUIT FOR SUBSEQUENT CONNECTION BY THE DWP, THE DEPTH AT THE PROPERTY LINE MUST BE A MINIMUM OF 30 INCHES IN AREAS SUPPLIED FROM UNDERGROUND DISTRIBUTION FACILITIES OR 36 INCHES IN AREAS SUPPLIED FROM OVERHEAD DISTRIBUTION FACILITIES. DEPTH MEASUREMENTS AT PROPERTY LINE ARE TO BE TAKEN FROM GUTTER GRADE.
2. SECONDARY CONDUITS: 2-5" PLASTIC DIRECT BURIED TYPE (DB-120) CONDUITS. CONDUITS SHALL HAVE A MINIMUM COVER OF 24 INCHES.
3. WHEN THE PRIMARY CONDUITS ARE BEING INSTALLED ON FILLED GROUND, FOUR #4 REINFORCING BARS SHALL BE INSTALLED IN THE CONCRETE ENVELOPE.
4. ALL PLASTIC CONDUITS SHALL BE IN ACCORDANCE WITH RECOGNIZED STANDARDS. FOR PVC THE STANDARD IS ASTM F-512 AS LAST REVISED. CONDUIT MAY BE SUBJECTED TO TESTING BY THE DWP AT THE REQUEST OF THE DWP ELECTRIC SERVICE REPRESENTATIVE.
5. CONDUIT SHALL BE MANDRELLED WITH A MANDREL PROVIDED BY THE DWP. INSTALL A FLAT, WOVEN MULTI-FIBER POLYESTER RIBBON, MINIMUM 3/8-INCH NOMINAL WIDTH AND 1250 POUND MINIMUM TENSILE STRENGTH PULLING TAPE IN ALL DUCTS. THE PULLING TAPE SHALL BE PRINTED WITH THE RATED TENSILE STRENGTH AND SEQUENTIAL FOOTAGE MARKINGS WITH LEGIBLE AND STABLE PRINT. THE TAPE SHALL BE IN ONE CONTINUOUS LENGTH THROUGH EACH DUCT WITH NO CUTS, SPLICES OR TIES ALLOWED.

STRUCTURE

1. PROVIDE AND INSTALL ONE 8'X 8' TRANSFORMER PAD WITH HANDHOLE AND PROTECTIVE BARRIERS IN ACCORDANCE WITH DWP DRAWINGS P721-00-00.8) AND UB721-03 GROUP I AS LAST REVISED.
2. THE CONDUIT, STRUCTURE AND SERVICE POINT SHALL BE LOCATED AS SHOWN UNLESS CHANGES ARE APPROVED BY THE DWP DESIGN ENGINEER AND CONFIRMED BY THE CUSTOMER.

FAULT CURRENT

THE MAXIMUM AVAILABLE SYMMETRICAL FAULT CURRENT AT THE SERVICE POINT WILL BE:

SERVICE	AMPS	VOLTAGE	PHASE	WIRE	FAULT CURRENT
PS	400A	480/277V	3φ	4W	18,000A

CUSTOMER CHARGES

1. THE DWP WILL BILL THE CUSTOMER $_____.00 FOR TRANSFORMER DEPOSIT FEE. DEPOSIT FEE ELIGIBLE FOR REFUND AFTER FIVE YEARS PER DWP RULE 16-E, ELECTRIC SYSTEM OF THE RULES GOVERNING WATER AND ELECTRIC SERVICE.
2. THE DWP WILL BILL THE CUSTOMER $_____.00 FOR EXCESS PRIMARY CABLE.

PROPERTY AND EASEMENT LINES

PROPERTY LINES ARE TO BE LOCATED BY THE CUSTOMER'S SURVEYOR.

NOTE:
THIS DRAWING PRESENTS LADWP'S PRELIMINARY DESIGN FOR ELECTRICAL SERVICES TO THE SITE, WHICH WILL BE UPDATED WITH THE LATEST BASE THAT DOES NOT INCLUDE PARKING LOT ON LADWP EASEMENT.

No.	DATE	INIT'L	REVISION	APP'V'D

CITY OF LOS ANGELES
DEPARTMENT OF
WATER AND POWER
POWER SYSTEM ENGINEERING

DESIGN	D RIVERA	PHONE	(818) 771-4286
D.K.		DRAFTING	M AUDIJE
APPROVED		DATE	APR 7, 2022

WR #	PROJECT #	TG #
2186630	P296422	532-A4

4.8KV CUSTOMER REQUIREMENTS
12531 STRATHERN ST
STRATHERN STORMWATER CAPTURE
PARK PROJECT

21P0707 | SHEET 1 OF 1

CITY OF LOS ANGELES DEPARTMENT OF PUBLIC WORKS
BUREAU OF ENGINEERING
THIS PLAN WAS ELECTRONICALLY • SIGNED AND STAMPED

ENGINEERING
CITY OF LOS ANGELES

REGISTERED PROFESSIONAL ENGINEER
ROBERT D. GETTER
No. E 21884
Exp. 06-30-23
ELECTRICAL
STATE OF CALIFORNIA
01/31/2023

VERTICAL CONTROL: BENCH MARK 18-0221S NAVD 88
HORIZONTAL CONTROL: CALIFORNIA STATE PLANE ZONE V, 1983 NAD

SHEET TITLE: LADWP PAD MOUNTED TRANSFORMER REQUIREMENT AT STRATHERN PARK
PROJECT: STRATHERN PARK NORTH STORMWATER CAPTURE PROJECT
ADDRESS: STRATHERN PARK NORTH
8041 WHITSETT AVE. NORTH HOLLYWOOD, CA. 91605

NO.	REVISIONS	DATE	BY
		YY/MM/DD	
		YY/MM/DD	
		YY/MM/DD	
		YY/MM/DD	

CIP NO. SCP0003

INDEX NO.

CITY ENGINEER
TED ALLEN, P.E.

DESIGN GROUP		DATE
ENGINEER:	PROJECTLINE TECHNICAL SERVICES	01/31/2023
ARCHITECT:	NA	01/31/2023
DESIGNED BY:	JUSTIN CHIN	01/31/2023
DRAWN BY:	JUSTIN CHIN	01/31/2023
CHECKED BY:	ROBERT GETTER	01/31/2023
APPROVED BY:	ROBERT GETTER	01/31/2023

WORK ORDER
EW40080F

SHEET NAME
EP10
SHEET 76 OF 85 SHEETS

THE CITY OF LOS ANGELES OR ITS OFFICERS OR AGENTS SHALL NOT BE RESPONSIBLE FOR THE ACCURACY OR COMPLETENESS OF ELECTRONIC COPIES OF THIS PLAN SHEET.

REVISION DATES (DESIGN STAGE ONLY)

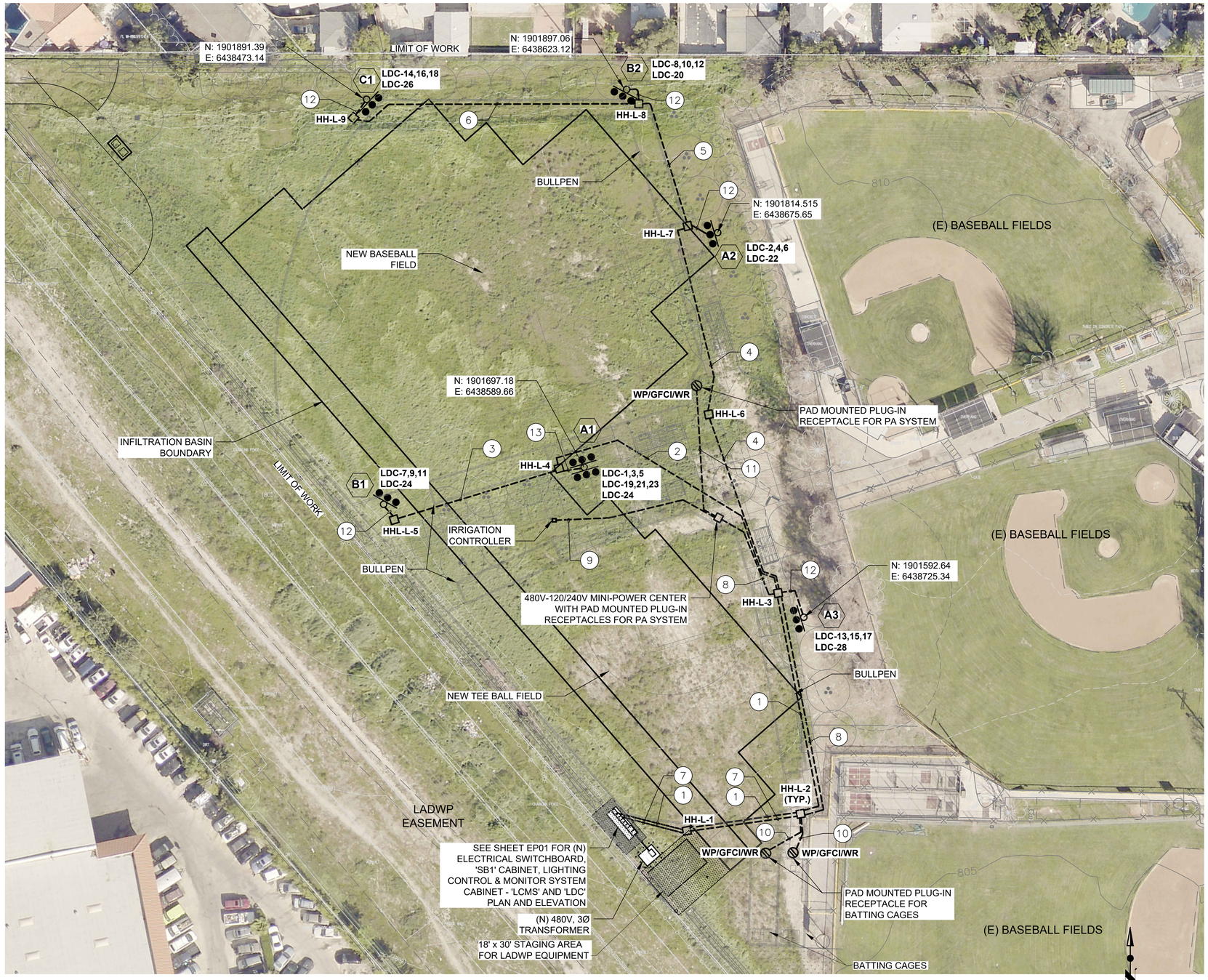

LIGHTING PLAN

Scale: 1" = 30'-0"

GENERAL NOTES

1. PROVIDE LIGHTING SYSTEMS IN ACCORDANCE WITH SPEC SECTION 16360. SPORTS LIGHTING POLES AND POLE BASES SHALL BE INSTALLED PER CITY DBS PLAN-CHECK APPROVED DESIGNS. CONTRACTOR SHALL PREPARE AND SUBMIT POLE AND POLE BASE DESIGN CALCULATIONS AND DETAILS SIGNED AND STAMPED BY CA REGISTERED SE, AND OBTAIN PLAN CHECK APPROVAL, PRIOR TO SUBMITTING FOR ENGINEER APPROVAL. TYPICAL SPORTS LIGHTING POLE AND POLE BASE DETAILS ARE INCLUDED AS ATTACHMENT TO SPEC SECTION 16360.

2. REFER TO ES AND EP DRAWINGS FOR ELECTRICAL DETAILS AND NOTES, AND FOR ARRANGEMENT OF LIGHTING CONTROL PANEL.

3. BURIED ELECTRICAL PULLBOXES AND HANDHOLES SHALL BE PRECAST CONCRETE WITH CAST IRON OR CORROSION RESISTANT STEEL LIDS ON METAL FRAMES, SUCH THAT THEY CAN BE WELDED SHUT AND COMPLY WITH NEC 314.30, AND BE UL LISTED. LID SHALL BE MARKED AS "POWER" OR "SIGNAL" AS APPROPRIATE AND TOP OF LID TO BE FLUSH WITH FINISHED GRADE. PROVIDE ALL PULLBOXES AND HANDHOLES MINIMUM SIZES AT 10" X17"X30" DEEP AND PENTA-HEAD BOLTS. PROVIDE LIDS WITH H20 TRAFFIC RATING. PULLBOXES AND HANDHOLES SHALL BE BY CHRISTY, OLDCASTLE, AND JENSEN OR EQUAL.

HANDHOLE-ID	SIZE	DEPTH
HH-L-1	36"X24"	44"
HH-L-2 TO HH-L-9	20"X20"	44"

KEY NOTES

(1) (1) 2"C, 21#8, & 7#10 GND (480V POWER TO LIGHTING POLES)
TYPE B1 - TO LCMS-C3 VIA LDC- 7,9,11
TYPE A1 - TO LCMS-C1 VIA LDC- 1,3,5
TYPE A1 - TO LCMS-C6 VIA LDC- 19,21,23
TYPE A3 - TO LCMS-C7 VIA LDC- 13,15,17
TYPE C1 - TO LCMS-C5 VIA LDC-14,16,18
TYPE B2 - TO LCMS-C4 VIA LDC-8,10,12
TYPE A2 - TO LCMS-C2 VIA LDC-2,4,6
(1)1.5"C, 10 #10 & 5 #12 GND (277V POWER TO CREE)
SECURITY LIGHTS (CREE) ON TYPE A1, A2, A,3, B1, B2, & C1 TO LDC-20, 22, 24, 26, 28

(2) (1)1.5"C, 9#8, & 3 #10 GND (480V POWER TO LIGHTING POLES)
TYPE A1 - TO LCMS-C1 VIA LDC- 1,3,5
TYPE A1 - TO LCMS-C6 VIA LDC- 19,21,23
TYPE B1 - TO LCMS-C3 VIA LDC- 7,9,11
(1)1"C, 2#10 & 1#12 GND (277V POWER TO CREE)
SECURITY LIGHTS TYPE A1 - TO LCMS-C10 VIA LDC-24
SECURITY LIGHTS TYPE B1 - TO LCMS-C10 VIA LDC-24

(3) (1)1"C, 3#8, &1#10 GND (480V POWER TO LIGHTING POLES)
TYPE B1 - TO LCMS-C3 VIA LDC- 7,9,11
(1)1" C, 3 #10 & 1 #12 GND (277 V. POWER TO CREE)
SECURITY LIGHTS TYPE B1 - TO LCMS-C10 VIA LDC-24

(4) (1)1.5"C, 9#8, & 3#10 GND (480V POWER TO LIGHTING POLES)
TYPE C1 - TO LCMS-C5 VIA LDC-14,16,18
TYPE B2 - TO LCMS-C4 VIA LDC-8,10,12
TYPE A2 - TO LCMS-C2 VIA LDC-2,4,6
(1)1.5"C, 6#10 & 3#12 GND (277V POWER TO CREE)
SECURITY LIGHTS (CREE) ON TYPE A2, B2,C1 TO LDC-20, 22, 26

(5) (1)1.5"C, 6#8, & 2#10 GND (480V POWER TO LIGHTING POLES)
TYPE C1 - TO LCMS-C5 VIA LDC-14,16,18
TYPE B2 - TO LCMS-C4 VIA LDC-8,10,12
(1)1.5"C, 4#10 & 2#12 GND (277V POWER TO CREE)
SECURITY LIGHTS (CREE) ON TYPE B2 & C1 TO LDC-20, 26

(6) (1)2"C, 3#8, & 1#10 GND (480V POWER TO LIGHTING POLES)
TYPE C1 - TO LCMS-C5 VIA LDC-14,16,18
(1)1.5"C, 2#10 & 1#12 GND (277V POWER TO CREE)
SECURITY LIGHTS (CREE) ON TYPE C1 TO LDC-26

(7) (1)1"C, 2#8, 1#10 GND (480V, SINGLE PHASE, TO DP-2).
(2)1"C, 2#6, 1#8 GND (120V, POWER TO BATTING CAGE'S RECEPTACLES).

(8) (1)1"C, 2#6, 1#8 GND (480V, SINGLE PHASE, TO DP-2).

(9) (1)1"C, 2#10, 1#12 GND (120V, SINGLE PHASE FROM DP-2 TO IRRIGATION CONTROLLER.

(10) (1)1"C, 2#6, 1#8 GND (120V, POWER TO BATTING CAGE'S RECEPTACLES).

(11) (1)1"C, 2#8, 1#10 GND (120V, POWER FROM DP-2 TO BASEBALL'S PA SYSTEM'S RECEPTACLES).

(12) (1)1"C, 3#8, & 1#10 GND (480V POWER TO LIGHTING POLES)
(1)1"C, 3#10, & 1#12 GND (277V POWER TO CREE)

(13) (2)1" C, 3#8, & 1#10 GROUND (480V POWER TO A1 POLE)
(2) 1" C, 3#10, & 1#12 GROUND (277V POWER TO CREE).

THE CITY OF LOS ANGELES OR ITS OFFICERS OR AGENTS SHALL NOT BE RESPONSIBLE FOR THE ACCURACY OR COMPLETENESS OF ELECTRONIC COPIES OF THIS PLAN SHEET.

REVISION DATES (DESIGN STAGE ONLY)

ENGINEERING
CITY OF LOS ANGELES

REGISTERED PROFESSIONAL ENGINEER
ROBERT D. GETTER
No. E 21884
Exp. 06-30-23
ELECTRICAL
STATE OF CALIFORNIA
01/31/2023

THIS PLAN WAS ELECTRONICALLY SIGNED AND STAMPED

BUREAU OF ENGINEERING

VERTICAL CONTROL:	BENCH MARK 18-02215 NAVD 88
HORIZONTAL CONTROL:	CALIFORNIA STATE PLANE ZONE V, 1983 NAD
SHEET TITLE:	LIGHTING PLAN
PROJECT:	STRATHERN PARK NORTH STORMWATER CAPTURE PROJECT
ADDRESS:	STRATHERN PARK NORTH 8041 WHITSETT AVE. NORTH HOLLYWOOD, CA. 91605

CITY OF LOS ANGELES DEPARTMENT OF PUBLIC WORKS

NO.	REVISIONS	DATE	BY
		YY/MM/DD	
		YY/MM/DD	
		YY/MM/DD	
		YY/MM/DD	

CIP NO. SCP0003

INDEX NO.

CITY ENGINEER		DATE
TED ALLEN, P.E.	DESIGN GROUP	
ENGINEER:	PROJECTLINE TECHNICAL SERVICES	01/31/2023
ARCHITECT:	NA	01/31/2023
DESIGNED BY:	JUSTIN CHIN	01/31/2023
DRAWN BY:	CALVIN PHAM	01/31/2023
CHECKED BY:	ROBERT GETTER	01/31/2023
APPROVED BY:	ROBERT GETTER	01/31/2023

WORK ORDER
EW40080F

SHEET NAME
EL01
SHEET 77 OF 85 SHEETS

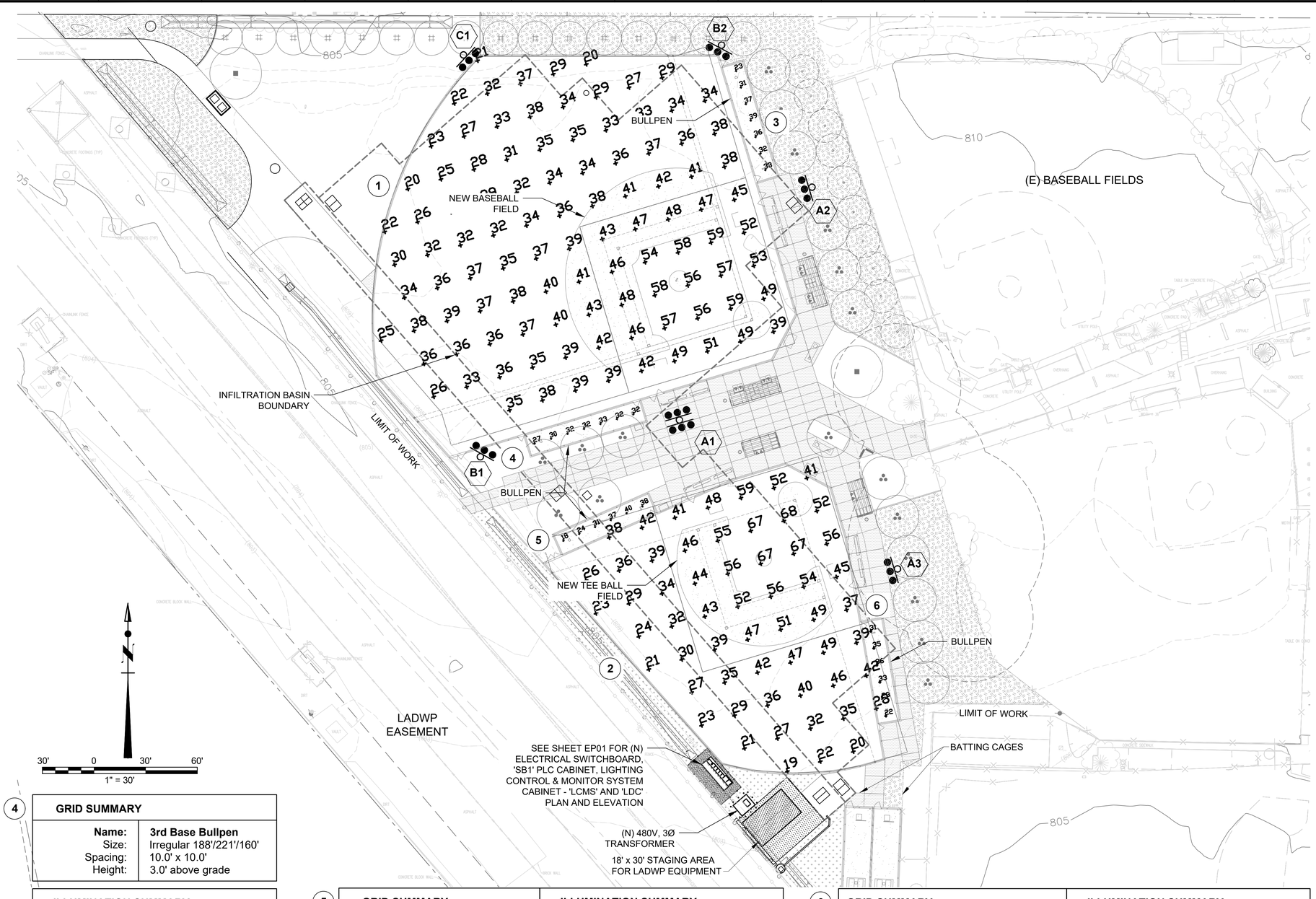

1

GRID SUMMARY

Name:	Baseball
Size:	Irregular 188'/221'/160'
Spacing:	20.0' X 20.0'
Height:	3.0' above grade

ILLUMINATION SUMMARY

MAINTAINED HORIZONTAL FOOTCANDLES

	Infield	Outfield
Guaranteed Average:	**50**	**30**
Scan Average:	50.7	33.6
Maximum:	59	43
Minimum:	39	20
Avg / Min:	1.31	1.68
Max / Min:	**1.52**	**2.17**
UG (adjacent pts):	1.27	1.53
CU:	0.60	
No. of Points:	25	75
LUMINAIRE INFORMATION		
Applied Circuits:	A	
No. of Luminaires: 40	**28**	
Total Load:	24.1 kW	

2

GRID SUMMARY

Name:	Tee Ball
Size:	Irregular 159'/143'/148'
Spacing:	20.0' X 20.0'
Height:	3.0' above grade

ILLUMINATION SUMMARY

MAINTAINED HORIZONTAL FOOTCANDLES

	Infield	Outfield
Guaranteed Average:	**50**	**30**
Scan Average:	51.6	32.2
Maximum:	68	49
Minimum:	37	19
Avg / Min:	1.39	1.68
Max / Min:	**1.83**	**2.54**
UG (adjacent pts):	1.31	1.73
CU:	0.62	
No. of Points:	25	32
LUMINAIRE INFORMATION		
Applied Circuits:	B	
No. of Luminaires: 40	**11**	
Total Load:	13.67 kW	

3

GRID SUMMARY

Name:	**1st Base Bullpen**
Size:	Irregular 188'/221'/160'
Spacing:	10.0' x 10.0'
Height:	3.0' above grade

ILLUMINATION SUMMARY

MAINTAINED HORIZONTAL FOOTCANDLES

	Entire Grid
Scan Average:	**33.0**
Maximum:	39
Minimum:	23
Avg / Min:	1.44
Max / Min:	1.68
UG (adjacent pts):	1.35
CU:	0.01
No. of Points:	7
LUMINAIRE INFORMATION	
Applied Circuits:	A
No. of Luminaires: 40	**28**
Total Load:	24.1 kW

4

GRID SUMMARY

Name:	**3rd Base Bullpen**
Size:	Irregular 188'/221'/160'
Spacing:	10.0' x 10.0'
Height:	3.0' above grade

ILLUMINATION SUMMARY

MAINTAINED HORIZONTAL FOOTCANDLES

	Entire Grid
Scan Average:	**31.0**
Maximum:	33
Minimum:	27
Avg / Min:	1.15
Max / Min:	1.21
UG (adjacent pts):	1.12
CU:	0.01
No. of Points:	7
LUMINAIRE INFORMATION	
Applied Circuits:	A
No. of Luminaires: 40	**28**
Total Load:	24.1 kW

5

GRID SUMMARY

Name:	**1st Base Bullpen**
Size:	Irregular 159'/143'/148'
Spacing:	10.0' x 10.0'
Height:	3.0' above grade

ILLUMINATION SUMMARY

MAINTAINED HORIZONTAL FOOTCANDLES

	Entire Grid
Scan Average:	**31.2**
Maximum:	40
Minimum:	18
Avg / Min:	1.72
Max / Min:	2.21
UG (adjacent pts):	1.31
CU:	0.01
No. of Points:	6
LUMINAIRE INFORMATION	
Applied Circuits:	B
No. of Luminaires: 40	**11**
Total Load:	13.67 kW

6

GRID SUMMARY

Name:	**3rd Base Bullpen**
Size:	Irregular 159'/143'/148'
Spacing:	10.0' x 10.0'
Height:	3.0' above grade

ILLUMINATION SUMMARY

MAINTAINED HORIZONTAL FOOTCANDLES

	Entire Grid
Scan Average:	**30.9**
Maximum:	36
Minimum:	22
Avg / Min:	1.40
Max / Min:	1.65
UG (adjacent pts):	1.25
CU:	0.01
No. of Points:	6
LUMINAIRE INFORMATION	
Applied Circuits:	B
No. of Luminaires: 40	**11**
Total Load:	13.67 kW

THE CITY OF LOS ANGELES OR ITS OFFICERS OR AGENTS SHALL NOT BE RESPONSIBLE FOR THE ACCURACY OR COMPLETENESS OF ELECTRONIC COPIES OF THIS PLAN SHEET.

REVISION DATES (DESIGN STAGE ONLY)

ENGINEERING
CITY OF LOS ANGELES

REGISTERED PROFESSIONAL ENGINEER
ROBERT D. GETTER
No. E 21884
Exp. 06-30-23
ELECTRICAL
STATE OF CALIFORNIA
01/31/2023

THIS PLAN WAS ELECTRONICALLY • SIGNED AND STAMPED

BUREAU OF ENGINEERING

VERTICAL CONTROL: BENCH MARK 18-02215 NAVD 88
HORIZONTAL CONTROL: CALIFORNIA STATE PLANE ZONE V, 1983 NAD

SHEET TITLE: LIGHTING PHOTOMETRIC PLAN

PROJECT: STRATHERN PARK NORTH
STORMWATER CAPTURE PROJECT

ADDRESS: STRATHERN PARK NORTH
8041 WHITSETT AVE. NORTH HOLLYWOOD, CA. 91605

NO.	REVISIONS	DATE	BY
		YY/MM/DD	
		YY/MM/DD	
		YY/MM/DD	
		YY/MM/DD	

CIP NO. SCP0003

INDEX NO.

CITY OF LOS ANGELES DEPARTMENT OF PUBLIC WORKS

CITY ENGINEER: TED ALLEN, P.E.

DESIGN GROUP	DATE
ENGINEER: PROJECTLINE TECHNICAL SERVICES	01/31/2023
ARCHITECT: NA	01/31/2023
DESIGNED BY: JUSTIN CHIN	01/31/2023
DRAWN BY: CALVIN PHAM	01/31/2023
CHECKED BY: ROBERT GETTER	01/31/2023
APPROVED BY: ROBERT GETTER	01/31/2023

WORK ORDER EW40080F

SHEET NAME EL02

SHEET 78 OF 85 SHEETS

LIGHTING SYSTEM

SPORT LIGHTING POLE/ FIXTURE SUMMARY					
POLE ID	POLE HEIGHT	MTG HEIGHT	FIXTURE QTY	LUMINAIRE TYPE	LOAD
A1	70'	70'	4	TLC-LED-1500	5.72 kW
		70'	1	TLC-LED-400	0.40 kW
		70'	1	TLC-LED-400	0.40 kW
		70'	3	TLC-LED-900	2.67 kW
		16'	1	TLC-BT-575	0.58 kW
		27'	2	CREE OSQ	0.26 kW
A2	70'	70'	1	TLC-LED-400	0.40 kW
		70'	3	TLC-LED-900	2.67 kW
		16'	1	TLC-BT-575	0.58 kW
		27'	1	CREE OSQ	0.13 kW
A3	70'	70'	5	TLC-LED-1500	7.15 kW
		70'	1	TLC-LED-400	0.40 kW
		27'	2	CREE OSQ	0.26 kW
B1	70'	70'	4	TLC-LED-1500	5.72 kW
		70'	1	TLC-LED-400	0.40 kW
		16'	2	TLC-BT-575	1.15 kW
		27'	1	CREE OSQ	0.13 kV
B2	70'	70'	2	TLC-LED-1500	2.86 kW
		70'	1	TLC-LED-400	0.40 kW
		70'	2	TLC-LED-900	1.78 kW
		16'	2	TLC-BT-575	1.15 kW
		27'	1	CREE OSQ	0.13 kW
C1	70'	70'	1	TLC-LED-1200	1.17 kW
		70'	1	TLC-LED-400	0.40 kW
		70'	2	TLC-LED-900	1.78 kW
		27'	1	CREE OSQ	0.13 kW
6			***47***		***38.81 kW***

ZONE SUMMARY FOR ELECTRICAL LOADS			
ZONE	DESCRIPTION	LOAD	FIXTURE QTY
1	Baseball	24.1 kW	28
2	Tee Ball	13.67kW	11
3	Security B2	0.49 kW	1
4	Security A2	0.49 kW	1
5	Security A1/B1	0.49 kW	3
6	Security C1	0.49 kW	1
7	Security A3	0.98 kW	2

FIXTURE TYPE SUMMARY							
TYPE	SOURCE	WATTAGE	LUMENS	L90	L80	L70	QUANTITY
TLC-LED-1500	LED 5700K - 75 CRI	1430W	160,000	>120,000	>120,000	>120,000	15
TLC-LED-1200	LED 5700K - 75 CRI	1170W	136,000	>120,000	>120,000	>120,000	1
TLC-BT-575	LED 5700K - 75 CRI	575W	52,000	>120,000	>120,000	>120,000	6
TLC-LED-900	LED 5700K - 75 CRI	890W	89,600	>120,000	>120,000	>120,000	10
TLC LED 400	LED 5700K 75 CRI	400W	46,500	>120,000	>120,000	>120,000	7
CREE OSQ	LED 5700K - 70 CRI	130W	16,599	--	--	--	8

LIGHT LEVEL SUMMARY

CALCULATION GRID SUMMARY							
		ILLUMINATION					
GRID NAME	CALCULATION METRIC	AVE	MIN	MAX	MAX/ MIN	AVE/ MIN	FIXTURE QTY
1st Base Bullpen	Horizontal	33	23	39	1.68	1.43	28
3rd Base Bullpen	Horizontal	31	27	33	1.21	1.15	28
Baseball (Infield)	Horizontal Illuminance	50.7	39	59	1.52	1.30	28
Baseball (Outfield)	Horizontal Illuminance	33.6	20	43	2.17	1.68	28
Security	Horizontal	0.70	0	7	2342.61		8
Spill	Horizontal	0.96	0	3.84	4840.72		47
Spill	Max Candela (by Fixture)	6374	434	14823	34.18	14.70	47
Spill	Max Vertical Illuminance Metric	1.24	0.01	4.53	458.68	123.70	47
Tee Ball (Infield)	Horizontal Illuminance	51.6	37	68	1.83	1.39	11
Tee Ball (Outfield)	Horizontal Illuminance	32.2	19	49	2.54	1.69	11

CIRCUIT SUMMARY BY ZONE							
POLE	CIRCUIT DESCRIPTION	# OF FIXTURES	# OF DRIVERS	*FULL LOAD AMPS	CONTACTOR SIZE (AMPS)	CONTACTOR ID	ZONE
A1	Baseball	4	4	6.1	30	C1	1
A2	Baseball	4	4	6.1	30	C2	1
B1	Baseball	5	5	11.7	30	C3	1
B2	Baseball	4	4	10.9	30	C4	1
C1	Baseball	5	5	5.5	30	C5	1
A1	Tee ball	5	5	10.5	30	C6	2
A3	Tee ball	6	6	12.8	30	C7	2
B2	Security	1	1	0.5	30	C8	3
A2	Security	1	1	0.5	30	C9	4
A1, B1	Security	3	3	1.5	30	C10	5
C1	Security	1	1	0.5	30	C11	6
A3	Security	2	2	1.0	30	C12	7

ZONE SCHEDULE				
			CIRCUIT DESCRIPTION	
ZONE	SELECTOR SWITCH	ZONE DESCRIPTION	POLE	CONTACTOR ID
ZONE 1	1	Baseball	A1	C1
			A2	C2
			B1	C3
			B2	C4
			C1	C5
ZONE 2	2	Tee ball	A1	C6
			A2	C7
ZONE 3	3	Security	B2	C8
ZONE 4	4	Security	A2	C9
ZONE 5	5	Security	A1	C10
		Security	B1	C10
ZONE6	6	Security	C1	C11
ZONE 7	7	Security	A3	C12

SINGLE LUMINAIRE AMPERAGE DRAW CHART							
BALLAST SPECIFICATIONS (.90 min power factor)	LINE AMPERAGE PER LUMINAIRE (max draw)						
Single Phase Voltage	208 (60)	220 (60)	240 (60)	277 (60)	347 (60)	380 (60)	480 (60)
TLC-LED-1500	8.5	8.1	7.4	6.4	5.1	4.7	3.7
TLC-LED -1200	5.3	5.0	4.6	4.0	3.2	2.9	2.3
TLC -BT-575	2.3	2.2	2.0	1.7	1.4	1.3	1.0
TLC-LED-900	7.0	6.6	6.1	5.2	4.2	4.0	3.0
TLC-LED-400	3.4	3.2	2.9	2.5	2.0	1.8	1.5
Cree OSQ	-	-	-	-	0.4	-	0.3

THE CITY OF LOS ANGELES OR ITS OFFICERS OR AGENTS SHALL NOT BE RESPONSIBLE FOR THE ACCURACY OR COMPLETENESS OF ELECTRONIC COPIES OF THIS PLAN SHEET.

REVISION DATES (DESIGN STAGE ONLY)

ENGINEERING
CITY OF LOS ANGELES

REGISTERED PROFESSIONAL ENGINEER
ROBERT D. GETTER
No. E 21884
Exp. 06-30-23
ELECTRICAL
STATE OF CALIFORNIA
01/31/2023

THIS PLAN WAS ELECTRONICALLY • SIGNED AND STAMPED

BUREAU OF ENGINEERING

VERTICAL CONTROL: BENCH MARK 18-02215 NAVD 88
HORIZONTAL CONTROL: CALIFORNIA STATE PLANE ZONE V, 1983 NAD

SHEET TITLE: LIGHTING CONTROL SPECIFICATION
PROJECT: STRATHERN PARK NORTH STORMWATER CAPTURE PROJECT
ADDRESS: STRATHERN PARK NORTH 8041 WHITSETT AVE. NORTH HOLLYWOOD, CA. 91605

CITY OF LOS ANGELES DEPARTMENT OF PUBLIC WORKS

CITY ENGINEER	DESIGN GROUP	DATE
TED ALLEN, P.E.		
	ENGINEER: PROJECTLINE TECHNICAL SERVICES	01/31/2023
	ARCHITECT: NA	01/31/2023
	DESIGNED BY: JUSTIN CHIN	01/31/2023
	DRAWN BY: CALVIN PHAM	01/31/2023
	CHECKED BY: ROBERT GETTER	01/31/2023
	APPROVED BY: ROBERT GETTER	01/31/2023

BY	DATE	REVISIONS	NO.
	YY/MM/DD		
	YY/MM/DD		
	YY/MM/DD		
	YY/MM/DD		

CIP NO. SCP0003

INDEX NO.

WORK ORDER EW40080F

SHEET NAME EL03

SHEET 79 OF 85 SHEETS

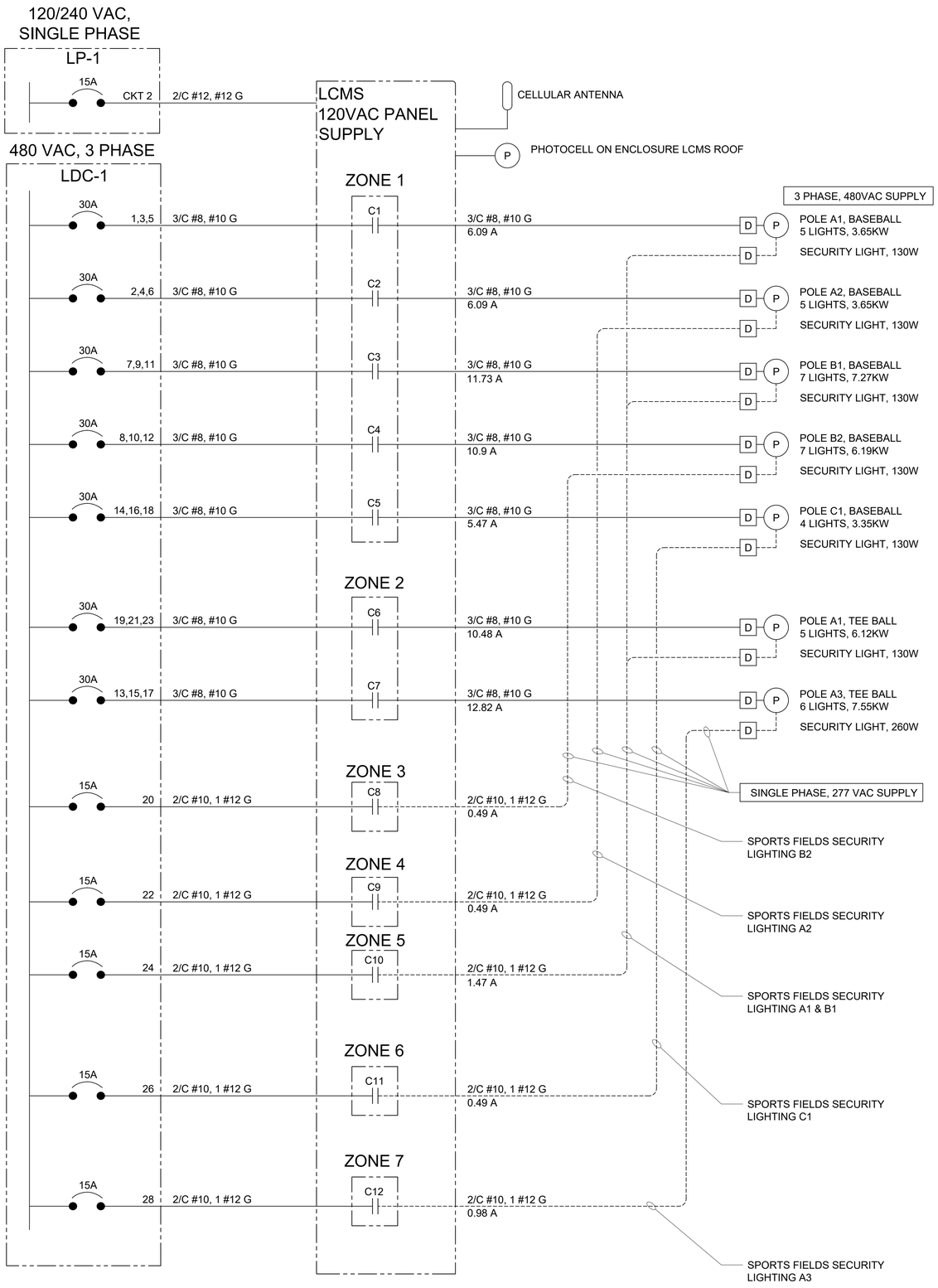

LEGENDS:

D — DRIVER PANEL REQUIRED BY MANUFACTURE AS RECOMMENDED

P — SINGLE POLE

NOTES:

1. SEE DRAWINGS EL01 AND EL02 FOR LIGHTING PLANS.
2. PROVIDE CONTROLS AT PANEL LCMS TO ALLOW OWNER TO DIM LIGHTS BY ZONE, EITHER MANUALLY AT LCMS OR REMOTELY VIA INTERNET CONNECTION.

THE CITY OF LOS ANGELES OR ITS OFFICERS OR AGENTS SHALL NOT BE RESPONSIBLE FOR THE ACCURACY OR COMPLETENESS OF ELECTRONIC COPIES OF THIS PLAN SHEET.

REVISION DATES (DESIGN STAGE ONLY)

ENGINEERING
CITY OF LOS ANGELES

REGISTERED PROFESSIONAL ENGINEER
ROBERT D. GETTER
No. E 21884
Exp. 06-30-23
ELECTRICAL
STATE OF CALIFORNIA
01/31/2023

THIS PLAN WAS ELECTRONICALLY SIGNED AND STAMPED

BUREAU OF ENGINEERING

VERTICAL CONTROL: BENCH MARK 18-02215 NAVD 88
HORIZONTAL CONTROL: CALIFORNIA STATE PLANE ZONE V, 1983 NAD

SHEET TITLE: LIGHTING POWER AND CONTROL DIAGRAM

PROJECT: STRATHERN PARK NORTH STORMWATER CAPTURE PROJECT

ADDRESS: STRATHERN PARK NORTH
8041 WHITSETT AVE. NORTH HOLLYWOOD, CA. 91605

CITY OF LOS ANGELES DEPARTMENT OF PUBLIC WORKS

NO.	REVISIONS	DATE	BY
		YY/MM/DD	
		YY/MM/DD	
		YY/MM/DD	
		YY/MM/DD	

INDEX NO.

CIP NO. SCP0003

CITY ENGINEER
TED ALLEN, P.E.

	DESIGN GROUP	DATE
ENGINEER:	PROJECTLINE TECHNICAL SERVICES	01/31/2023
ARCHITECT:	NA	01/31/2023
DESIGNED BY:	JUSTIN CHIN	01/31/2023
DRAWN BY:	CALVIN PHAM	01/31/2023
CHECKED BY:	ROBERT GETTER	01/31/2023
APPROVED BY:	ROBERT GETTER	01/31/2023

WORK ORDER
EW40080F

SHEET NAME
EL04

SHEET 80 OF 85 SHEETS

INSTRUMENTATION CALL - OUT

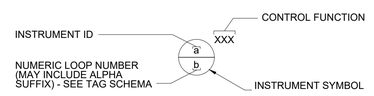

INSTRUMENT SYMBOLS

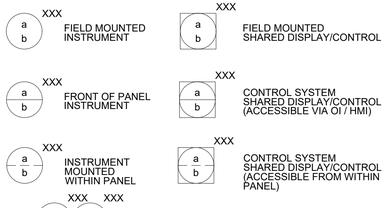

a INSTRUMENT IDENTIFICATION/TAG NUMBER (SEE MODIFIED ISA TABLE FOR MORE INFO)

b INSTRUMENT LOOP NUMBER

XXX CONTROL FUNCTION

XXXV PRIMARY ELECTRICAL POWER (e.g. 24VDC, 120VAC, 220VAC, 480VAC)

NOTE1: IF INSTRUMENT POWER NOT INDICATED, REFER TO INSTRUMENT SCHEDULE FOR CONFIRMATION.

* REFER TO PROJECT CONTROL PHILOSOPHY FOR DETAILS.

CONTROL FUNCTION DESIGNATIONS

AHC	AUTO / HOLD / CLOSE	OLH	OFF / LOW / HIGH
AM	AUTO / MANUAL	O/O	ON / OFF
AS	AIR SUPPLY	O/R	OVERRIDE
BEAR	BEARING	OOR	OUT OF RANGE
CLSD	CLOSED	OSC	OPEN / STOP / CLOSE
CV	CONTROL VARIABLE	PID	PROPORTIONAL / INTEGRAL / DERIVATIVE
DEV	DEVIATION	POT	POTENTIOMETER
E-STOP	EMERGENCY STOP	PV	PROCESS VARIABLE
ETM	ELAPSED TIME METER	RDY	READY
FOR	FORWARD / OFF / REVERSE	R/L	RAISE / LOWER
HML	HIGH / MID / LOW	RSL	RAISE / STOP / LOWER
HOA	HAND / OFF / AUTO	RST	RESET
HOR	HAND / OFF / REMOTE	RTD	RESISTANCE TEMPERATURE DETECTOR
LEAK	MOISTURE INSTRUSION	SD	SHUTDOWN
LOR	LOCAL / OFF / REMOTE	SEL	SELECT
L/R	LOCAL / REMOTE	SP	SET POINT
LSR	LOCAL / STOP / REMOTE	S/R	START / RESET
MOA	MANUAL / OFF / AUTO	S/S	START / STOP
MN	MAINTENANCE / NORMAL	STR	START
O/C	OPEN / CLOSE	STP	STOP
OCA	OPEN / CLOSE / AUTO	TMR	TIMER
OL	OVERLOAD	WIND	WINDING

NOTE:

1. REFER TO DRAWING GI-2 FOR ANALYTICAL INSTRUMENT DESIGNATIONS.

INSTRUMENT SYMBOLS - CONT

COMPUTING OR CONVERTING FUNCTIONS



COMPUTING

SUMMING		DERIVATIVE		EXPONENTIAL	
MULTIPLYING		AVERAGING		BIAS	
DIVIDING		RATIO	1:1	HIGH LIMITING	
SQ ROOT EXTRACTION		DIFFERENCE		LOW LIMITING	
PROPORTIONAL	P	HIGH SELECTING		LINEARIZER	
INTEGRAL	I	LOW SELECTING			



CONVERTING

E	VOLTAGE	R	RESISTANCE (ELECT)	A	ANALOG
I	CURRENT	D	DIGITAL	B	BINARY
P	PNEUMATIC			H	HYDRAULIC

PLC / REMOTE I/O POINTS

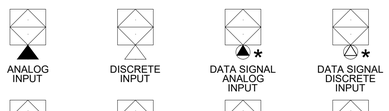

* FIELD NETWORK INTERFACE. SEE SPECIFICATION FOR MORE INFORMATION

INSTRUMENTATION LINE SYMBOLOGY



INSTRUMENT LINE DEFINITIONS
(UNLESS SPECIFICALLY NOTED OTHERWISE PER DRAWING LEGEND)

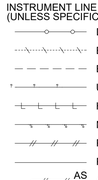

COMMUNICATION LINE DEFINITIONS
(UNLESS SPECIFICALLY NOTED OTHERWISE PER DRAWING LEGEND)

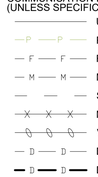

SIGNAL AND PROCESS OFF-PAGE CONNECTORS

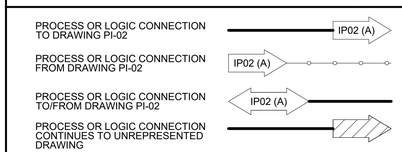

NOTE: REFER TO INSTRUMENTATION LINE SYMBOLOGY FOR PROCESS AND LOGIC LINESTYLE DEFINITION.

ISA TABLE (MODIFIED)

	FIRST LETTER		SUCCEEDING LETTER(S)		
	MEASURED OR INITIATING VARIABLE	MODIFIER	READOUT OR PASSIVE FUNCTION	OUTPUT FUNCTION	MODIFIER
A	ANALYSIS		ALARM		
B	BURNER, COMBUSTION				
C	CONDUCTIVITY			CONTROL	CLOSED
D	DENSITY	DIFFERENTIAL			
E	VOLTAGE		SENSOR (PRIMARY ELEMENT)		
F	FLOW RATE	RATIO (FRACTION)			FORWARD
G			GAUGE, GLASS, VIEWING DEVICE		
H	HAND				HIGH
I	CURRENT (ELECTRICAL)		INDICATE		
J	POWER	SCAN			
K	TIME, TIME SCHEDULE	TIME RATE OF CHANGE		CONTROL STATION	
L	LEVEL		LIGHT		LOW
M	MOISTURE	MOMENTARY			MIDDLE, INTERMEDIATE
N	TORQUE		ISOLATE	ISOLATOR	
O			ORIFICE, RESTRICTION		OPEN
P	PRESSURE, VACUUM		POINT (TEST) CONNECTION		
Q	QUANTITY	INTEGRATE, TOTALIZE			
R	RADIATION		RECORD		REVERSE
S	SPEED, FREQUENCY	SAFETY		SWITCH	
T	TEMPERATURE			TRANSMIT	
U	MULTIVARIABLE		MULTIFUNCTION	MULTIFUNCTION	MULTIFUNCTION
V	VIBRATION, MECHANICAL ANALYSIS			VALVE, DAMPER, LOUVER	
W	WEIGHT, FORCE		WELL		
X	INTRUSION	X AXIS			
Y	EVENT, STATE, OR PRESENCE	Y AXIS		COMPUTE, CONVERT	
Z	POSITION, DIMENSION	Z AXIS		DRIVER, ACTUATOR, FINAL CONTROL ELEMENT	

TAG SCHEMA

TYPICAL INSTRUMENT & CONTROL VALVE TAGGING

TYPICAL PIPE LINE TAG FORMAT

TYPICAL VALVE TAG / SPEC FORMAT

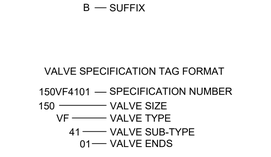

TYPICAL MANUAL VALVE TAG FORMAT

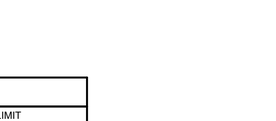

VALVE SPECIFICATION TAG FORMAT

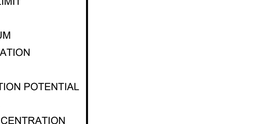

ANALYTICAL INSTRUMENTS

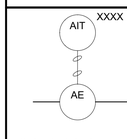

FLOW THROUGH ANALYZING ELEMENT WITH REMOTE TRANSMITTER

ALK	ALKALINITY
CL_2	CHLORINE CONCENTRATION
COMB	COMBUSTIBLE GAS
COND	CONDUCTIVITY
DO	DISSOLVED OXYGEN
TEMP	TEMPERATURE
NH_2CL	MONO-CHLORAMINE

LEL	LOWER EXPLOSIVE LIMIT
NO_3 / NO_2	NITRATE / NITRITE
NH_3 / NH_4	AMMONIA / AMMONIUM
O_2	OXYGEN CONCENTRATION
O_3	OZONE
ORP	OXIDATION - REDUCTION POTENTIAL
PC	PARTICLE COUNTER
pH	HYDROGEN ION CONCENTRATION
SCU	STREAMING CURRENT UNIT
SO_2	SULFUR DIOXIDE
TKN	TOTAL KJELDAHL NITROGEN
TN	TOTAL NITROGEN
TOC	TOTAL ORGANIC CARBON
TURB	TURBIDITY
TSS	TOTAL SUSPENDED SOLIDS
UVI	ULTRA VIOLET INTENSITY
UVT	ULTRA VIOLET TRANSMITTANCE

ABBREVIATIONS

ATM	ATMOSPHERE
APF	AWPF PROCESS FEED
ATC	AUTO TRANSFER CONTROLLER
CT	CONTACT TIME
CP	CONTROL PANEL
DCS	DISTRIBUTED CONTROL SYSTEM
DOL	DIRECT ONLINE STARTER
DR	DRAIN
FC	FAIL CLOSED
FOC	FIBER OPTIC CABLE
FOT	FIBER OPTIC TRANSCEIVER
FVNR	FULL VOLTAGE NON-REVERSING STARTER
HMI	HUMAN MACHINE INTERFACE
LC	LOCKED CLOSED
LCP	LOCAL CONTROL PANEL
LCS	LOCAL CONTROL STATION
LO	LOCKED OPEN
LSA	LIGHTNING SURGE ARRESTOR
MCC	MOTOR CONTROL CENTER
MCP	MAIN CONTROL PANEL
MFAS	MF AIR SCOUR
MFBWS	MF BACKWASH SUPPLY
MFBWW	MF BACKWASH WASTE
MFCIPR	MF CIP RETURN
MFCIPS	MF CIP SUPPLY
MFF	MF FILTRATE
MFS	MF SUPPLY
MS	MULTIMODE FIBER
MTR	MOTOR STARTER
MK##	MOTOR
N/A	MARK (MECH DETAIL REFERENCE)
NC	NOT APPLICABLE NORMALLY CLOSED
NIC	NOT IN CONTRACT
NO	NORMALLY OPEN
OI	OPERATOR INTERFACE
OIT	OPERATOR INTERFACE TERMINAL
PC	PERSONAL COMPUTER
PLC	PROGRAMMABLE LOGIC CONTROLLER
PCN	PLANT CONTROL NETWORK
PDU	POWER DISTRIBUTION UNIT
PW	PRODUCT WATER
RIO	REMOTE I/O
ROCIPF	RO CIP FEED
ROCIPP	RO CIP PERMEATE RETURN
ROCIPR	RO CIP RETURN
ROF	RO FEED
ROFL	RO FLUSH SUPPLY
ROI	RO INTERSTAGE
RVSS	REDUCED VOLTAGE SOLID-STATE STARTER
RTU	REMOTE TERMINAL UNIT
SAM	SAMPLE
SBWW	STRAINER BACKWASH WASTE
SCADA	SUPERVISORY CONTROL AND DATA ACQUISITION
SMF	SINGLE MODE FIBER
SSM	SOLID STATE METER
STP	SHIELDED TWISTED PAIR
TC	THERMOCOUPLE
UPS	UNINTERRUPTABLE POWER SUPPLY
UTP	UNSHIELDED TWISTED PAIR
UVE	UV EFFLUENT
UVF	UV FEED
VCP	VENDOR CONTROL PANEL
VFD	VARIABLE FREQUENCY DRIVE
VSD	VARIABLE SPEED DRIVE

THE CITY OF LOS ANGELES OR ITS OFFICERS OR AGENTS SHALL NOT BE RESPONSIBLE FOR THE ACCURACY OR COMPLETENESS OF ELECTRONIC COPIES OF THIS PLAN SHEET.

REVISION DATES (DESIGN STAGE ONLY)

BUREAU OF ENGINEERING • THIS PLAN WAS ELECTRONICALLY SIGNED AND STAMPED •

ENGINEERING
CITY OF LOS ANGELES

REGISTERED PROFESSIONAL ENGINEER
ROBERT D. GETTER
No. E 21884
Exp. 06-30-23
ELECTRICAL
STATE OF CALIFORNIA
01/31/2023

VERTICAL CONTROL: BENCH MARK: 18-02215 NAVD 88
HORIZONTAL CONTROL: CALIFORNIA STATE PLANE ZONE V, 1983 NAD

SHEET TITLE: INSTRUMENTATION LEGEND AND SYMBOLS 1 OF 2

PROJECT: STRATHERN PARK NORTH STORMWATER CAPTURE PROJECT

ADDRESS: STRATHERN PARK NORTH 8041 WHITSETT AVE. NORTH HOLLYWOOD, CA. 91605

CITY OF LOS ANGELES DEPARTMENT OF PUBLIC WORKS

CITY ENGINEER: TED ALLEN, P.E.

DESIGN GROUP	DATE
PROJECT/LINE TECHNICAL SERVICES	01/31/2023
ENGINEER: NA	01/31/2023
ARCHITECT: NA	01/31/2023
DESIGNED BY: JUSTIN CHIN	01/31/2023
DRAWN BY: JUSTIN CHIN	01/31/2023
CHECKED BY: ROBERT GETTER	01/31/2023
APPROVED BY: ROBERT GETTER	01/31/2023

NO.	REVISIONS	DATE	BY
		YY/MM/DD	
		YY/MM/DD	
		YY/MM/DD	
		YY/MM/DD	

CIP NO. SCP0003

INDEX NO.

WORK ORDER EW40080F

SHEET NAME IG01

SHEET 81 OF 85 SHEETS

SHEET VERSION 4.0.1 FILE PATH: C:\CDMEXT\JCHIN@PROJECTLINETS.COM\D0615120\IG01.DWG PLOT DATE: 2/7/2023 4:43 PM SAVED: 1/30/2023 10:25 PM SAVED BY:JCHIN

PROCESS ABBREVIATIONS

ANTISCALANT	AS
AIR	A
AQUEOUS AMMONIA	AA
ALUM	AL
AIR VENT	AV
AUTOMATIC SPRINKER RISER	ASR
BLEND	B
BIOLOGICALLY ACTIVATED CARBON	BAC
BAC AIR SCOUR	BACAS
BAC BACKWASH SUPPLY	BACBWS
BAC BACKWASH WASTE	BACBWW
BAC EFFLUENT	BACE
BAC FEED	BACF
BYPASS	BP
BACKWASH WATER	BW
CONDENSATE	C
CALCIUM HYDROXIDE (HYDRATED LIME)	CAH
CALCIUM OXIDE (QUICK LIME)	CAO
CARBON SOURCE	CA
CHANNEL AGITATION WATER	CAW
CALCIUM CHLORIDE	CC
MEMBRANE CLEANING CONCENTRATE RETURN	CCR
CHEMICAL DRAIN	CD
CONDENSER WATER RETURN	CDR
CONDENSER WATER SUPPLY	CDS
CHILLED WATER RETURN	CHR
CHILLED WATER SUPPLY	CHS
CHILLED WATER	CHW
CHEMICAL INHIBITOR SOL	CIS
CHLORINE GAS	CLG
CHLORINE LIQUID	CLL
CHLORINE SOLUTION	CLS
COAGULANT	COA
CAUSTIC SODA	CS
CHEMICAL CONTAINMENT	CP
CLEANING PERMEATE RETURN	CPR
CIRCULATED SLUDGE	CSL
CITRIC ACID	CTA
CHLORINATOR VENT AND DETECTION	CV
CHEMICAL VENT	CVT
CHEMICAL VENT THRU ROOF	CVTR
COAGULATED WATER	CW
COOLING WATER RETURN	CWR
COOLING WATER SUPPLY	CWS
DEFOAMING CHEMICAL	DC
DOMESTIC COLD WATER	DCW
DIESEL FUEL OIL	DFO
DISINFECTED MEMBRANE FILTRATE	DMF
DEIONIZED WATER	DI
DEMINERALIZED WATER	DMW
DECANT	DN
DRY POLYMER SOLUTION	DPOL
DRAIN	DR
DIGESTED SLUDGE	DSL
DOMESTIC HOT WATER RETURN	DWR
DOMESTIC HOT WATER SUPPLY	DWS
ENGINE EXHAUST	EE
ENGINE COOLING WATER RETURN	EWR
ENGINE COOLING WATER SUPPLY	EWS
FLUOROSILICIC ACID	FA
FILTER AIR WASH	FAW
FILTER BACKWASH	FBW
FINAL EFFLUENT	FE
FERRIC CHLORIDE	FC
FERRIC SULFATE	FES
FUEL GAS	FG
FILTER INFLUENT	FI
FORCE MAIN	FM
FIRE PROTECTION	FP
FROTH	FR
FROTH SPRAY	FS
FILTER SURFACE WASHWATER	FSW
FILTER TO WASTE	FTW
FILTERED WATER	FW
FILTER WASTE WASHWATER	FWW
GRIT	G
GRANULAR ACTIVATED CARBON	GAC
GAC BACKWAS SUPPLY	GACBWS
GAC CONTACTED WATER	GACCW
GAC BACKWASH WASTE	GACWW
GASEOUS OXYGEN	GOX
GRAY WATER	GW
HYDROCHLORIC ACID	HCA
HYDROGEN PEROXIDE	HP
HYDROFLUROSILICIC ACID	HFA
POTABLE HOT WATER	HW
HOT WATER RETURN	HWR
HOT WATER SUPPLY	HWS
INSTRUMENT AIR	IA
IRRIGATION WATER	IRW
LIQUID AMMONIA SULPHATE	LAS
LANDFILL GAS	LFG
LUBE OIL	LO
LIQUID OXYGEN	LOX
LIQUEFIED PETROLEUM	LP
LIQUEFIED PETROLEUM GAS	LPG
LIQUID POLYMER	LPOL
MEMBRANE BACKWASH WASTE	MBW
MEMBRANE CONCENTRATE	MC
MEMBRANE CLEANING RETURN	MCR
MEMBRANE CLEANING SUPPLY	MCS
MEMBRANE CLEANING WASTE	MCW
MECHANICAL DEWATERING POLYMER	MDP
MEMBRANE FILTRATION	MF
MEMBRANE FILTRATION AIR SCOUR	MFAS
MEMBRANE FILTRATION BACKWASH SUPPLY	MFBWS
MEMBRANE FILTRATION BACKWASH WASTE	MFBWW
MEMBRANE FILTRATION CLEAN-IN-PLACE RETURN	MFCIPR
MEMBRANE FILTRATION CLEAN-IN-PLACE SUPPLY	MFCIPS
MEMBRANE FILTRATION CLEANING WASTE	MFCW
MEMBRANE FILTRATION EFFLUENT	MFE
MEMBRANE FILTRATION FEED	MFF
METHANE GAS	MG
MIXED LIQUOR	ML
MIXED LIQUOR RECYCLE	MLR
MEMBRANE PERMEATE	MP
MAKE-UP WATER	MW
NITROGEN	N
NATURAL GAS	NG
OZONE CONTACTOR	OC
OVERFLOW	OF
OFFGAS	OG
OXIDATION TOWER EFFLUENT	OTE
OXYGEN (GAS)	OX
OZONE	OZ
PLANT AIR	PA
POWDERED ACTIVATED CARBON	PAC
POLYALUMINUM CHLORIDE	PCL
PHOSPHORIC ACID	PHA
PROCESS DRAIN	PD
PLANT DRAIN	PDR
PRIMARY EFFLUENT	PE
PLANT INFLUENT	PI
PLANT EFFLUENT	PLE
PLANT OVERFLOW	PO
ANIONIC POLYMER	POA
CATIONIC POLYMER	POC
FILTER AID POLYMER	POF
NONIONIC POLYMER	PON
THICKENER POLYMER	POT
PRESSURIZED RECYCLE	PRR
PRESSATE	PRS
PRODUCT WATER	PRW
POTASSIUM PERMANGANATE	PTP
POTABLE WATER	PW

PROCESS ABBREVIATIONS

RETURN ACTIVATED SLUDGE	RAS
REVERSE OSMOSIS CLEAN-IN-PLACE FEED	RCIPF
REVERSE OSMOSIS CLEAN-IN-PLACE PERMEATE	RCIPP
REVERSE OSMOSIS CLEAN-IN-PLACE RETURN	RCIPR
RECLAIMED WATER	REW
REFRIGERANT LIQUID	RFL
REFRIGERANT SUCTION	RFS
RO CONCENTRATE	ROC
REVERSE OSMOSIS FEED	ROF
REVERSE OSMOSIS FLUSH	ROFL
REVERSE OSMOSIS FLUSH WASTE	ROFW
REVERSE OSMOSIS INTERSTAGE	ROI
REVERSE OSMOSIS PERMEATE	ROP
RETURN SECONDARY SLUDGE	RSS
RAW WATER	RW
RAW WATER RETURN	RWR
RAW WATER SUPPLY	RWS
RECLAIMED WASHWATER	RWW
SULPHURIC ACID	SA
SAMPLE LINE	SAM
SCUM	S
SCREENED EFFLUENT	SE
SCREENINGS	SC
SUBNATANT	SBN
SUBNATANT OVERFLOW	SBO
SANITARY DRAIN	SD
SODIUM BISULFITE	SDB
SODIUM HYDROXIDE (CAUSTIC SODA)	SDH
STORM DRAIN	SDR
SANITARY DRAIN VENT	SDV
SECONDARY EFFLUENT	SE
SLUDGE FILTRATE	SF
SULFURIC ACID	SFA
SOFT WATER	SFW
SLUDGE GAS	SG
SODIUM HYPOCHLORITE	SHC
SCALE INHIBITOR	SI
SLUDGE	SLG
SUPERNATANT	SN
SAND SLURRY	SND
SULFUR DIOXIDE (GAS OR LIQUID)	SO
SULFUR DIOXIDE SOLUTION	SOS
SULFUR DIOXIDE GAS UNDER VACUUM	SOV
SPARE	SP
SUMP PUMP DISCHARGE	SPD
SANITARY SEWER	SS
SODIUM SILICOFLUORIDE	SSF
STEAM	STM
SUBDRAIN	SUBD
STRUCTURE UNDERDRAIN	SU
STRUCTURE UNDERDRAIN COLLECTOR	SUC
SERVICE WATER	SW
TRICKLING FILTER EFFLUENT	TFE
TRICKLING FILTER INFLUENT	TFI
TRICKLING FILTER RECYCLE	TFR
THICKENED SLUDGE	TS
THICKENED SUPERNATANT	TSN
TREATED WATER	TW
UNDERDRAIN	UD
ULTRAVIOLET EFFLUENT	UVE
ULTRAVIOLET FEED	UVF
UTILITY WATER	UW
USED WASHWATER	UWW
VENT	VT
VACUUM	VC
WASTE ACTIVATED SLUDGE	WAS
WASTE LUBE OIL	WLO
WASTE SECONDARY SLUDGE	WSS

EQUIPMENT ABBREVIATIONS

AIR COMPRESSOR	ACP
AIR COMPRESSOR PACKAGE	ACPP
AIR DAMPER	AD
AIR DRYER	ADR
AIR FILTER	AF
AFTER COOLER	AFC
AIR HANDLING UNIT	AHU
AIR RELEASE VALVE	ARV
BACK FLOW PREVENTER	BFP
BACK PRESSURE VALVE	BPV
BLOWER	B
BULK STORAGE TANK	BTK
CARTRIDGE FILTER	CF
CLEAN IN PLACE	CIP
CONVEYOR	CN
DAY TANK	DTK
DEGASIFIER	DG
ELECTRIC FAN / EXHAUST	EF
EYE WASH	EW
FLOW CONTROL VALVE	FCV
FILTER (GENERAL)	FTR
SLIDE GATE / SLUICE GATE	G
HEATER	H
LINE FILTER (STRAINER)	LF
LEVEL CONTROL VALVE	LCV
MECHANICAL EQUIPMENT (GENERAL)	ME
MIXER	MX
MOTOR OPERATOR VALVE	MOV
PRESSURE CONTROL VALVE	PCV
PNEUMATIC OPERATOR VALVE	POV
PRESSURE REDUCING OR REGULATING VALVE	PRV
PRESSURE SAFETY VALVE	PSV
PUMP	P
RUPTURE DISK	RD
SLIDE GATE	SG
SOLENOID OPERATOR VALVE	SOV
TEMPERATURE CONTROL VALVE	TCV
TANK	TK
VALVE (MANUAL)	V
POSITION CONTROL VALVE	ZCV

VALVE ABBREVIATIONS

GATE VALVE	VG
BALL VALVE	VB
BUTTERFLY VALVE	VF
CHECK VALVE	VC
DIAPHRAGM VALVE	VD
GLOBE VALVE	VO
NEEDLE VALVE	VN
PLUG VALVE	VP
SPECIALITY VALVES	VX

VALVES

- 3 WAY MULTI-PORT VALVE
- 4 WAY MULTI-PORT VALVE
- AIR VACUUM, AIR RELEASE, OR COMBINATION AIR VACUUM AND AIR RELEASE ASSEMBLY
- ANGLE VALVE
- BACK-PRESSURE VALVE
- BACKFLOW PREVENTER VALVE
- BALL VALVE
- BUTTERFLY VALVE
- CHECK VALVE
- CONE VALVE
- DIAPHRAGM VALVE
- FLAP VALVE
- GATE VALVE
- GLOBE VALVE
- HOSE BIBB VALVE
- NEEDLE VALVE
- PINCH VALVE
- PLUG VALVE
- PRESSURE REGULATING VALVE
- PRESSURE RELIEF VALVE
- SLEEVE VALVE
- TELESCOPING VALVE
- FLOAT VALVE

VALVE AND GATE ACTUATORS

- DIAPHRAGM ACTUATOR
- E/H = ELECTROHYDRAULIC, P = PNEUMATIC, S = SOLENOID
- MOTOR ACTUATOR
- PISTON ACTUATOR
- WEIGHT BALANCED ACTUATOR

GATES

- SLIDE GATE
- STOP GATE OR SHEAR GATE

WASTEWATER EQUIPMENT

- BELT FILTER PRESS
- SHAFTLESS CONVEYOR
- SCREW CONVEYOR
- CENTRIFUGE
- GRAVITY BELT THICKENER
- BELT CONVEYOR
- SLUDGE GRINDER

PUMPS & COMPRESSORS

- SLUDGE DIAPHRAGM PUMP
- HORIZONTAL CENTRIFUGAL PUMP
- GENERIC PUMP
- CHEMICAL METERING PUMP
- DRUM PUMP
- ROTARY GEAR PUMP
- SPLIT-CASE PUMP
- HOSE / PERISTALTIC PUMP
- PLUNGER / PISTON PUMP
- PROGRESSIVE CAVITY PUMP
- ROTARY LOBE PUMP
- SUBMERSIBLE SUMP PUMP
- SUBMERSIBLE TURBINE PUMP
- VERTICAL TURBINE PUMP
- VERTICAL CENTRIFUGAL PUMP
- INCLINED ARCHIMEDES SCREW PUMP
- VERTICAL SUMP PUMP
- RECIPROCATING COMPRESSOR
- ROTARY SCREW COMPRESSOR

HVAC

- AIR CONDITIONING UNIT
- DUCT AIR FILTER
- AIR HANDLING UNIT
- NON-MOTORIZED DAMPER
- MOTORIZED DAMPER
- DEHUMIDIFIER
- DUCT SMOKE DETECTOR
- EVAPORATIVE COOLER
- HEATER
- HVAC BOILER
- HVAC FAN
- VENT FAN
- HVAC LOUVER
- THERMOSTAT
- STEAM GENERATOR
- UNIT HEATER
- WATER HEATER
- AFTER COOLER

PIPING ACCESSORIES

- ANNULAR SEAL
- ATMOSPHERIC VENT
- BLIND FLANGE
- CAP - BREATHER
- CAP - SCREW / THREADED
- CAP - WELDED
- CAP - QUICK DISCONNECT
- CHLORINE INJECTOR OR CHEMICAL EDUCTOR
- DIAPHRAGM SEAL
- DRAIN
- EXPANSION CHAMBER WITH RUPTURE DISK
- EDUCTOR
- FLANGED
- OR FLEXIBLE CONNECTION - BELLOWS TYPE
- FLAME ARRESTOR
- FCO FLOOR CLEANOUT
- FILTER
- HUB DRAIN
- INLINE MIXER
- PIPE MATERIAL CHANGE
- PULSATION DAMPENER
- REDUCER - CONCENTRIC
- REDUCER - ECCENTRIC
- REMOVABLE SPOOL PIECE
- UNION
- RUPTURE DISK
- STRAINER - BASKET TYPE
- STRAINER - DUPLEX BASKET TYPE
- STRAINER - WYE TYPE
- SLOPE
- TRAP
- OR WCO WALL CLEANOUT
- TP TIE-IN POINT

BLOWERS

- AERATOR
- BLOWER
- POSITIVE DISPLACEMENT BLOWER
- SINGLE STAGE CENTRIFUGAL BLOWER

MISCELLANEOUS

- BRIDGE CRANE
- CALIBRATION COLUMN
- CONTAINER SCALE
- CARTRIDGE FILTER
- DEMISTOR
- FIRE HYDRANT
- GAS BOTTLE
- HEAT EXCHANGER - PLATE TYPE
- HEAT EXCHANGER - STRAIGHT TYPE
- HEAT EXCHANGER - U TUBE
- HEATER
- HORN
- PANEL-MOUNTED HORN
- BEACON
- MISCELLANEOUS EQUIPMENT
- MIXER
- M MOTOR SYMBOL
- HORIZONTAL PRESSURE VESSEL
- VERTICAL PRESSURE VESSEL
- RADIO ANTENNA
- REFRIGERATOR DRYER
- SAMPLE COOLER
- AUTO-BACKWASHING STRAINER
- TANK WITH CONE SHAPED ROOF
- TANK WITH DOME ROOF
- TANK WITH FLOATING COVER
- TANK, VESSEL, OR BIN
- TEMPERING TANK
- TOTE TANK
- WATER LEVEL
- GENERATOR
- PARTICULATE FILTER

THE CITY OF LOS ANGELES OR ITS OFFICERS OR AGENTS SHALL NOT BE RESPONSIBLE FOR THE ACCURACY OR COMPLETENESS OF ELECTRONIC COPIES OF THIS PLAN SHEET.

REVISION DATES (DESIGN STAGE ONLY)

ENGINEERING — CITY OF LOS ANGELES

REGISTERED PROFESSIONAL ENGINEER — ROBERT D. GETTER — No. E 21884 — Exp. 06-30-23 — ELECTRICAL — STATE OF CALIFORNIA
01/31/2023

THIS PLAN WAS ELECTRONICALLY • SIGNED AND STAMPED

BUREAU OF ENGINEERING

VERTICAL CONTROL: BENCH MARK: 18-02215 NAVD 88
HORIZONTAL CONTROL: CALIFORNIA STATE PLANE ZONE V, 1983 NAD

SHEET TITLE: INSTRUMENTATION SYMBOLS 2 OF 2
PROJECT: STRATHERN PARK NORTH STORMWATER CAPTURE PROJECT
ADDRESS: STRATHERN PARK NORTH 8041 WHITSETT AVE. NORTH HOLLYWOOD, CA. 91605

CITY OF LOS ANGELES DEPARTMENT OF PUBLIC WORKS

NO.	REVISIONS	DATE	BY
		YY/MM/DD	
		YY/MM/DD	
		YY/MM/DD	
		YY/MM/DD	

CITY ENGINEER: TED ALLEN, P.E. — DATE: 01/31/2023

DESIGN GROUP:	PROJECTLINE TECHNICAL SERVICES	01/31/2023
ENGINEER:	NA	01/31/2023
ARCHITECT:		
DESIGNED BY:	JUSTIN CHIN	01/31/2023
DRAWN BY:	JUSTIN CHIN	01/31/2023
CHECKED BY:	ROBERT GETTER	01/31/2023
APPROVED BY:	ROBERT GETTER	01/31/2023

CIP NO. SCP0003

INDEX NO. 69

WORK ORDER EW40080F

SHEET NAME IG02

SHEET 82 OF 85 SHEETS

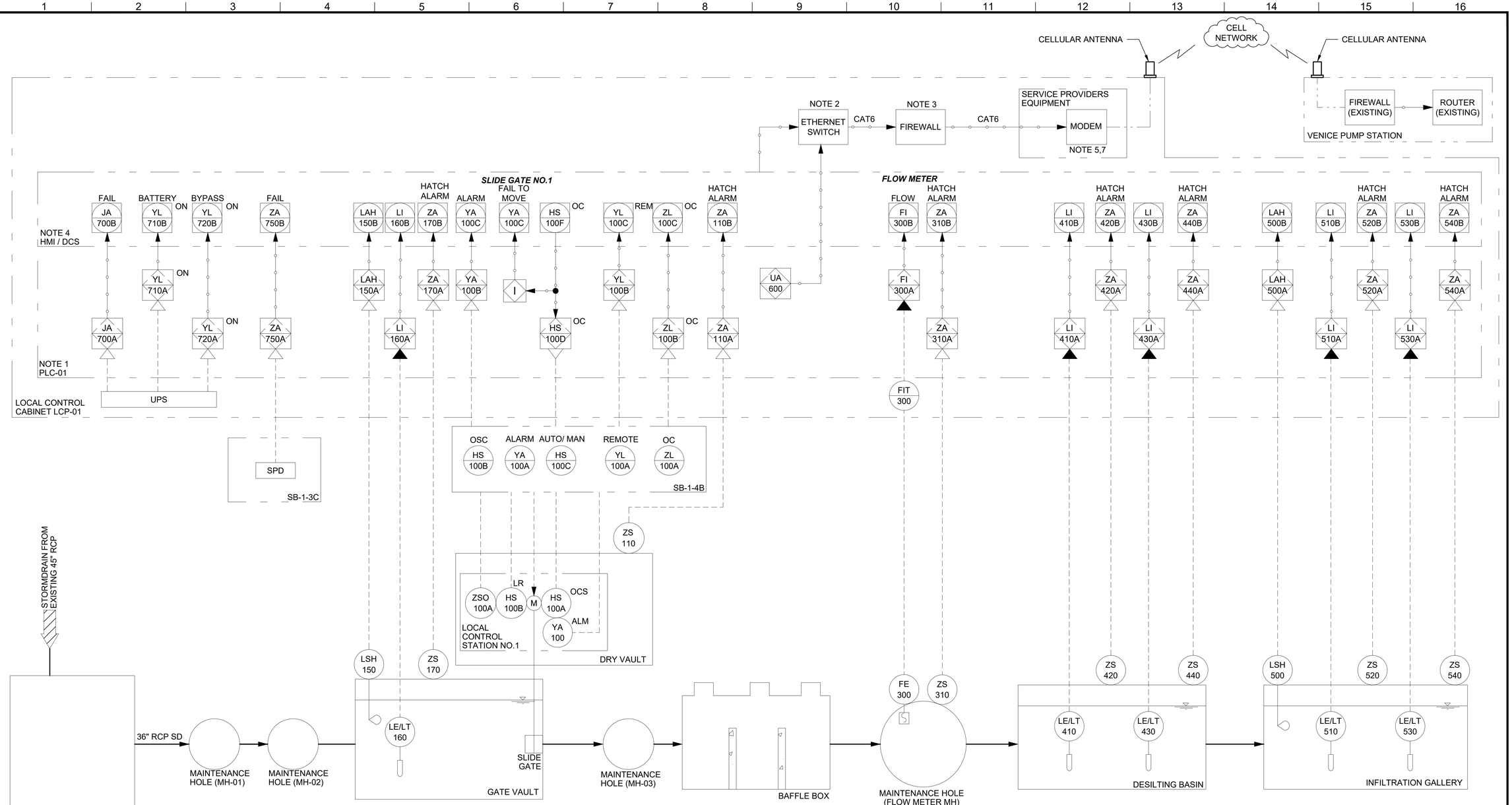

CONTROL SEQUENCE:

1. CONTROL SYSTEM WILL INCLUDE LOCAL AND REMOTE MODES OF OPERATION. REMOTE MODE WILL INCLUDE AUTOMATIC AND MANUAL MODES OF OPERATION. IN LOCAL MODE, GATES WILL BE OPERATED FROM THE LOCAL GATE CONTROLS. IN REMOTE/MANUAL MODE, GATES WILL BE OPERATED MANUALLY FROM THE HMI.
2. REMOTE/AUTOMATIC CONTROL SEQUENCE FOR FLOW INLET INTO INFILTRATION GALLERY:
   - INLET GATE WILL BE NORMALLY OPEN (AND WILL ALSO FAIL OPEN).
   - INLET GATE WILL CLOSE WHEN INFILTRATION GALLERY WATER LEVEL (ANY LEVEL DEVICE) REACHES HIGH HIGH (ADJUSTABLE). BACKUP FLOAT WILL CAUSE THE GATE TO SHUT AT HIGH HIGH LEVEL.
   - THE INLET GATE WILL THEN OPEN WHEN THE WATER SURFACE IN THE INFILTRATION GALLERY REACHES LOW LEVEL (ADJUSTABLE).
3. ALTERNATIVE CONTROL SEQUENCE WILL APPLY TO INLET GATE AT START OF STORM EVENT. THIS ALTERNATIVE SEQUENCE NEEDS TO WORK IN CONJUNCTION WITH THE SEQUENCE ABOVE, AND IS INTENDED TO "HOLD BACK" THE FIRST FLUSH AT THE START OF A STORM EVENT:
   - WHEN FLOW METER READS 10 GALLONS PER MINUTE (ADJUSTABLE) THE GATE (GATE VAULT) WILL CLOSE AND REMAIN CLOSED FOR 10 MINUTES (ADJUSTABLE). IT WILL THEN OPEN AND FOLLOW THE MAIN SEQUENCE ABOVE.
   - ALTERNATIVE FLOW SEQUENCE WILL BE ENABLED AS EITHER ON OR OFF IN THE CONTROL SYSTEM.

NOTES:

1. HONEYWELL CONTROLEDGE PLC WITH UNIT OPERATIONS CONTROLLER (UOC). NO EXCEPTIONS.
2. UNMANAGED ETHERNET SWITCH. REFERENCE SPECIFICATIONS SECTION 17450 "NETWORKS AND COMMUNICATIONS".
3. INDUSTRIAL FIREWALL . CISCO ISA 3000 FIREWALL, SFPS, 5 YR THREAT DEFENSE, MALWARE LICENSE, AND POWER SUPPLY.
4. 15" HONEYWELL HMI 900 SERIES CONTROL STATION WITH TOUCH SCREEN AND ETHERNET PORT.
5. CELLULAR MODEM CONNECTION TO VENICE PUMP STATION. MOUNTED IN CABINET LCP-01.
6. CISCO INDUSTRIAL SWITCH IE-4000 SERIES. PROVIDED BY CONTRACTOR. SEE SPECIFICATION 17450 " NETWORK AND COMMUNICATIONS" FOR ADDITIONAL REQUIREMENTS. NO EXCEPTIONS.
7. COORDINATE WITH THE CITY OF LA INFORMATION TECHNOLOGY AGENCY (ITA) TO COORDINATE AN AT&T FIRSTNET CELLULAR CONNECTION TO VENICE PUMP STATION MOUNT CELLULAR MODEM INSIDE CONTROL CABINET UNLESS DIRECTED OTHERWISE BY AT&T. MOUNT CELLULAR ANTENNA ON TOP OF CABINET AND CONNECT.
8. SEE DRAWING EP09 FOR TYPICAL CABINET POWER DISTRIBUTION SCHEMATIC DIAGRAM.
9. FOR HMI DISPLAYS REQUIRED AT LCP-01 AND VENICE PUMP STATION.
10. SEE SHEET EP08 FOR CONTROL SCHEMATIC FOR SLIDE GATE.
11. SEE CIVIL SHEET CXX, DETAIL A1 FOR FLOW METER MOUNTING DETAIL.
12. SEE SHEET IP02 FOR INSTRUMENTATION SIGNAL DESCRIPTIONS.

THE CITY OF LOS ANGELES OR ITS OFFICERS OR AGENTS SHALL NOT BE RESPONSIBLE FOR THE ACCURACY OR COMPLETENESS OF ELECTRONIC COPIES OF THIS PLAN SHEET.

REVISION DATES (DESIGN STAGE ONLY)

ENGINEERING
CITY OF LOS ANGELES

REGISTERED PROFESSIONAL ENGINEER
ROBERT D. GETTER
No. E 21884
Exp. 06-30-23
ELECTRICAL
STATE OF CALIFORNIA
01/31/2023

THIS PLAN WAS ELECTRONICALLY SIGNED AND STAMPED

BUREAU OF ENGINEERING

VERTICAL CONTROL: BENCH MARK 18-0222 15 NAVD 88
HORIZONTAL CONTROL: CALIFORNIA STATE PLANE ZONE V, 1983 NAD

SHEET TITLE: INFILTRATION GALLERY - P&ID

PROJECT: STRATHERN PARK NORTH STORMWATER CAPTURE PROJECT

ADDRESS: STRATHERN PARK NORTH
8041 WHITSETT AVE. NORTH HOLLYWOOD, CA. 91605

CITY OF LOS ANGELES DEPARTMENT OF PUBLIC WORKS

CITY ENGINEER	DESIGN GROUP	DATE
TED ALLEN, P.E.	ENGINEER: PROJECTLINE TECHNICAL SERVICES	01/31/2023
	ARCHITECT: NA	01/31/2023
	DESIGNED BY: JUSTIN CHIN	01/31/2023
	DRAWN BY: JUSTIN CHIN	01/31/2023
	CHECKED BY: ROBERT GETTER	01/31/2023
	APPROVED BY: ROBERT GETTER	01/31/2023

NO.	REVISIONS	DATE	BY
		YY/MM/DD	
		YY/MM/DD	
		YY/MM/DD	
		YY/MM/DD	

CIP NO. SCP0003

INDEX NO.

WORK ORDER EW40080F

SHEET NAME IP01

SHEET 83 OF 85 SHEETS

LEVEL SWITCH - FLOAT

INSTRUMENT TAG	DESCRIPTION/ LOCATION	DWG NO.	SERVICE	TYPE	HEIGHT	CONTACT OPEN ON	REMARKS
LSH-150	FLOAT SWITCH/ GATE VAULT	IP01	STORM WATER	FLOAT	EL 801.0 FT	INCREASING LEVEL	CLOSED SLIDE GATE
LSH-500	FLOAT SWITCH/ INFILTRATION GALLERY	IP01	STORM WATER	FLOAT	EL 797.0 FT	INCREASING LEVEL	CLOSED SLIDE GATE

LEVEL TRANSMITTER SCHEDULE

INSTRUMENT TAG	DESCRIPTION/ LOCATION	DWG NO.	SERVICE	TYPE	INSTRUMENT RANGE	CALIBRATED RANGE	REMARKS
LE/LT-160	LEVEL ELEMENT/ LEVEL TRANSMITTER AT GATE VAULT	IP01	STORM WATER	SUBMERSIBLE PRESSURE	0' TO 15'	EL 806.0 FT TO EL 797.0 FT	MANUFACTURER CABLE
LE/LT-410	LEVEL ELEMENT/ LEVEL TRANSMITTER AT DESILTING BASIN	IP01	STORM WATER	SUBMERSIBLE PRESSURE	0' TO 30'	EL 806.0 FT TO EL 790.0 FT	MANUFACTURER CABLE
LE/LT-430	LEVEL ELEMENT/ LEVEL TRANSMITTER AT DESILTING BASIN	IP01	STORM WATER	SUBMERSIBLE PRESSURE	0' TO 30'	EL 806.0 FT TO EL 790.0 FT	MANUFACTURER CABLE
LE/LT-510	LEVEL ELEMENT/ LEVEL TRANSMITTER INFILTRATION GALLERY	IP01	STORM WATER	SUBMERSIBLE PRESSURE	0' TO 30'	EL 806.0 FT TO EL 783.5 FT	MANUFACTURER CABLE
LE/LT-530	LEVEL ELEMENT/ LEVEL TRANSMITTER INFILTRATION GALLERY	IP01	STORM WATER	SUBMERSIBLE PRESSURE	0' TO 30'	EL 806.0 FT TO EL 783.5 FT	MANUFACTURER CABLE

PROXIMITY SWITCH

INSTRUMENT TAG	DESCRIPTION/ LOCATION	DWG NO.	SERVICE	TYPE	INSTRUMENT RANGE	CALIBRATED RANGE	REMARK
ZS-110	PROXIMITY SWITCH/ DRY VAULT	IP01	HATCH OPEN/ CLOSE	INDUCTIVE	0 TO 1.5"	0 TO 1"	2 Wire, 24 VDC
ZS-170	PROXIMITY SWITCH/ GATE VAULT	IP01	HATCH OPEN/ CLOSE	INDUCTIVE	0 TO 1.5"	0 TO 1"	2 Wire, 24 VDC
ZS-310	PROXIMITY SWITCH/ FLOW METER MH	IP01	HATCH OPEN/ CLOSE	INDUCTIVE	0 TO 1.5"	0 TO 1"	2 Wire, 24 VDC
ZS-420	PROXIMITY SWITCH/ DESILTING BASIN	IP01	HATCH OPEN/ CLOSE	INDUCTIVE	0 TO 1.5"	0 TO 1"	2 Wire, 24 VDC
ZS-440	PROXIMITY SWITCH/ DESILTING BASIN	IP01	HATCH OPEN/ CLOSE	INDUCTIVE	0 TO 1.5"	0 TO 1"	2 Wire, 24 VDC
ZS-520	PROXIMITY SWITCH/ INFILTRATION GALLERY	IP01	HATCH OPEN/ CLOSE	INDUCTIVE	0 TO 1.5"	0 TO 1"	2 Wire, 24 VDC
ZS-540	PROXIMITY SWITCH/ INFILTRATION GALLERY	IP01	HATCH OPEN/ CLOSE	INDUCTIVE	0 TO 1.5"	0 TO 1"	2 Wire, 24 VDC

FLOW METER

INSTRUMENT TAG	DESCRIPTION/ LOCATION	DWG NO.	SERVICE	TYPE	SENSOR HEIGHT	INSTRUMENT RANGE (GPM)	CALIBRATED SCALE (GPM)
FE-300	FLOW ELEMENT/ FLOW METER MH	IP01	STORM WATER	DOPPLER RADAR VELOCITY AND ULTRASONIC	6" ABOVE TOP OF THE PIPE	0 TO 30,000	-
FIT-300	FLOW TRANSMITTER/ LOCAL CONTROL PANEL, LCP-01	IP01	STORM WATER	DOPPLER RADAR VELOCITY AND ULTRASONIC	-	-	0 TO 30,000

PROGRAMMABLE LOGIC CONTROLLER (PLC) INPUT/OUTPUT LIST

INSTRUMENT TAG	P&ID DRAWING NO.	SERVICE DESCRIPTION	IO TYPE	LOCATION
ZA-110A	IP-01	DRY VAULT - INTRUSION ALARM	DI	DRY VAULT
ZLO-100B	IP-01	SLIDE GATE - OPEN STATUS	DI	DRY VAULT
ZLC-100B	IP-01	SLIDE GATE - CLOSED STATUS	DI	DRY VAULT
HS-100D	IP-01	SLIDE GATE - OPEN COMMAND	DO	DRY VAULT
HS-100E	IP-01	SLIDE GATE - CLOSED COMMAND	DO	DRY VAULT
YA-100B	IP-01	SLIDE GATE - COMMON TROUBLE ALARM	DI	DRY VAULT
YL-100B	IP-01	SLIDE GATE - REMOTE MODE	DI	DRY VAULT
LAH-150A	IP-01	FLOAT SWITCH - VAULT HI-HI LEVEL ALARM	DI	GATE VAULT
LI-160	IP-01	GATE VAULT - LEVEL	AI	GATE VAULT
ZA-170A	IP-01	GATE VAULT - INTRUSION ALARM	DI	INFILTRATION GALLERY
FI-300	IP-01	STORMWATER FLOW FROM EXISTING 45" RCP	AI	FLOW METER MH
ZA-310A	IP-01	MAINTENANCE HOLE INTRUSION ALARM	DI	FLOW METER MH
LI-410	IP-01	DESILTING BASIN - LEVEL 1	AI	DESILTING BASIN
LI-430	IP-01	DESILTING BASIN - LEVEL 2	AI	DESILTING BASIN
ZA-420A	IP-01	BASIN INTRUSION ALARM	DI	DESILTING BASIN
ZA-440A	IP-01	BASIN INTRUSION ALARM	DI	DESILTING BASIN
LAH-500A	IP-01	FLOAT SWITCH - GALLERY HI-HI LEVEL ALARM	DI	INFILTRATION GALLERY
LI-510	IP-01	INFILTRATION GALLERY - LEVEL 1	AI	INFILTRATION GALLERY
LI-530	IP-01	INFILTRATION GALLERY - LEVEL 2	AI	INFILTRATION GALLERY
ZA-520A	IP-01	BASIN INTRUSION ALARM	DI	INFILTRATION GALLERY
ZA-540A	IP-01	BASIN INTRUSION ALARM	DI	INFILTRATION GALLERY
JA-700	IP-01	UPS POWER FAIL ALARM	DI	LOCAL CONTROL PANEL
YL-710	IP-01	UPS BATTERY ON	DI	LOCAL CONTROL PANEL
DISCRETE OUTPUTS				
HS-100D	IP-01	SLIDE GATE OPEN COMMAND	DO	DRY VAULT
ANALOG INPUTS				
LI-160A	IP-01	LEVEL INDICATOR	AI	GATE VAULT
FI-300A	IP-01	FLOW TRANSMITTER	AI	MAINTENANCE HOLE
LI-410A	IP-01	LEVEL INDICATOR	AI	DESALTING BASIN
LI-430A	IP-01	LEVEL INDICATOR	AI	DESALTING BASIN
LI-510A	IP-01	LEVEL INDICATOR	AI	INFILTRATION GALLERY
LI-530A	IP-01	LEVEL INDICATOR	AI	INFILTRATION GALLERY

THE CITY OF LOS ANGELES OR ITS OFFICERS OR AGENTS SHALL NOT BE RESPONSIBLE FOR THE ACCURACY OR COMPLETENESS OF ELECTRONIC COPIES OF THIS PLAN SHEET.

REVISION DATES (DESIGN STAGE ONLY)

ENGINEERING
CITY OF LOS ANGELES

REGISTERED PROFESSIONAL ENGINEER
ROBERT D. GETTER
No. E 21884
Exp. 06-30-23
ELECTRICAL
STATE OF CALIFORNIA
01/31/2023

THIS PLAN WAS ELECTRONICALLY • SIGNED AND STAMPED

BUREAU OF ENGINEERING

VERTICAL CONTROL: BENCH MARK 18-02215 NAVD 88
HORIZONTAL CONTROL: CALIFORNIA STATE PLANE ZONE V, 1983 NAD

SHEET TITLE: INSTRUMENTATION SCHEDULE AND I/O LIST
PROJECT: STRATHERN PARK NORTH STORMWATER CAPTURE PROJECT
ADDRESS: STRATHERN PARK NORTH 8041 WHITSETT AVE. NORTH HOLLYWOOD, CA. 91605

CITY OF LOS ANGELES DEPARTMENT OF PUBLIC WORKS

NO.	REVISIONS	DATE	BY
		YY/MM/DD	
		YY/MM/DD	
		YY/MM/DD	
		YY/MM/DD	

CIP NO. SCP0003

INDEX NO.

CITY ENGINEER: TED ALLEN, P.E. DATE 01/31/2023

		DATE
DESIGN GROUP		
ENGINEER:	PROJECTLINE TECHNICAL SERVICES	01/31/2023
ARCHITECT:	NA	01/31/2023
DESIGNED BY:	JUSTIN CHIN	01/31/2023
DRAWN BY:	JUSTIN CHIN	01/31/2023
CHECKED BY:	ROBERT GETTER	01/31/2023
APPROVED BY:	ROBERT GETTER	01/31/2023

WORK ORDER EW40080F

SHEET NAME IP02

SHEET 84 OF 85 SHEETS

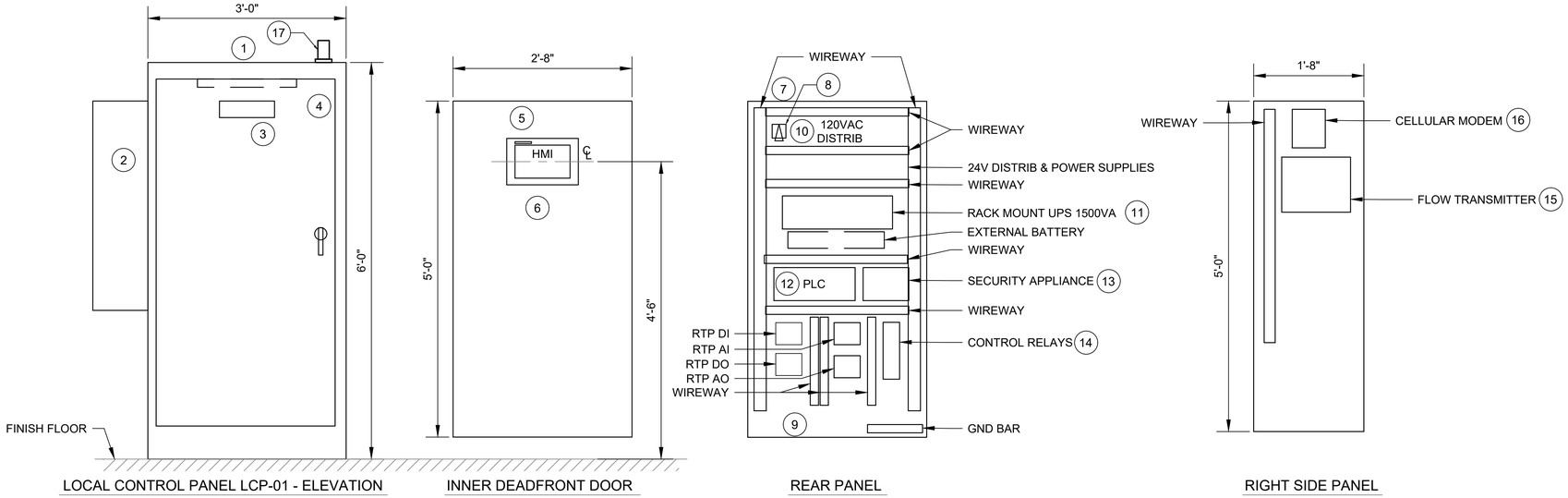

LOCAL CONTROL PANEL LCP-01 - ELEVATION | INNER DEADFRONT DOOR | REAR PANEL | RIGHT SIDE PANEL

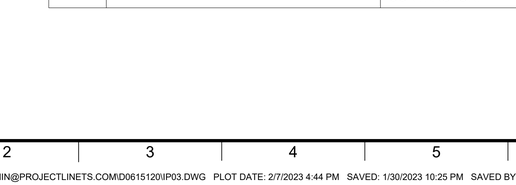

LOCAL CONTROL PANEL LCP-01 - PLAN

KEY NOTES:

ITEM	DESCRIPTION	REMARKS
1	NEMA 4X, 316 SS CABINET	72"(H) X 36"(W) X 24"(D). 3 POINT LATCHING
2	AIR CONDITIONER, OUTDOOR NEMA 4X, 316 SS	SIZE FOR MAXIMUM AMBIENT OF 110 DEG F
3	NAMEPLATE: LINE 1: " ELECTRICAL CONTROL". LINE 2: "WATER TREATMENT"	ENGRAVED TEXT 3/8" HIGH, BLACK LETTERING ON WHITE
4	CABINET INTERNAL LED LIGHT	WITH DOOR SWITCH
5	INNER DEADFRONT DOOR	STEEL. POWDER COATED WHITE
6	OPERATOR INTERFACE TERMINAL	HONEYWELL, 900 SERIES, 15" TOUCHSCREEN AND KEYPAD. ETHERNET PORT. 65 K COLOR DISPLAY
7	CABINET BACK PANEL	STEEL. POWDER COATED WHITE
8	CABINET 120VAC DISCONNECT	SEE SHEET ES01 FOR POWER CONNECTION FROM PANEL BOARD DP-1
9	GFCI RECEPTACLE	15 AMP WITH INDICATOR
10	120 VAC DISTRIBUTION	PROVIDE CIRCUIT BREAKERS FOR ALL SUBCIRCUITS SEE DRWG EP09.
11	RACK MOUNT UPS, 1500VA MINIMUM.	SIZE TO MATCH LOAD WITH 60 MINUTE RUN TIME AT CALCULATED LOAD, EXCLUDING AIR CONDITIONER.
	EXTERNAL BATTERY IF REQUIRED.	
12	PROGRAMMABLE LOGIC CONTROLLER	HONEYWELL CONTROLEDGE PLC, NO EXCEPTIONS
		8 SLOT MAIN BASE MINIMUM, WITH CPU, COMMUNICATIONS AND I/O MODULES
13	INDUSTRIAL SECURITY APPLIANCE	CISCO 4000 SERIES.
14	REMOTE TERMINATION PANELS FOR I/O	HONEYWELL RTP MATCHING I/O MODULES PROVIDED
15	FLOW TRANSMITTERS	AS REQUIRED
16	CELLULAR MODEM AT&T FIRSTNET	PROVIDED BY SERVICE PROVIDER & INSTALLED BY CONTRACTOR.
17	CELLULAR ANTENNA	PROVIDED BY SERVICE PROVIDER & INSTALLED BY CONTRACTOR.

THE CITY OF LOS ANGELES OR ITS OFFICERS OR AGENTS SHALL NOT BE RESPONSIBLE FOR THE ACCURACY OR COMPLETENESS OF ELECTRONIC COPIES OF THIS PLAN SHEET.

REVISION DATES (DESIGN STAGE ONLY)

ENGINEERING
CITY OF LOS ANGELES

REGISTERED PROFESSIONAL ENGINEER
ROBERT D. GETTER
No. E 21884
Exp. 06-30-23
ELECTRICAL
STATE OF CALIFORNIA
01/31/2023

THIS PLAN WAS ELECTRONICALLY SIGNED AND STAMPED

BUREAU OF ENGINEERING

VERTICAL CONTROL: BENCH MARK 18-02215 NAVD 88
HORIZONTAL CONTROL: CALIFORNIA STATE PLANE ZONE V, 1983 NAD

SHEET TITLE: LOCAL CONTROL PANEL (LCP-01) LAYOUT

PROJECT: STRATHERN PARK NORTH
STORMWATER CAPTURE PROJECT

ADDRESS: STRATHERN PARK NORTH
8041 WHITSETT AVE. NORTH HOLLYWOOD, CA. 91605

NO.	REVISIONS	DATE	BY
		YY/MM/DD	
		YY/MM/DD	
		YY/MM/DD	
		YY/MM/DD	

CIP NO. SCP0003

INDEX NO.

CITY OF LOS ANGELES DEPARTMENT OF PUBLIC WORKS

CITY ENGINEER: TED ALLEN, P.E.

	DESIGN GROUP	DATE
ENGINEER:	PROJECTLINE TECHNICAL SERVICES	01/31/2023
ARCHITECT:	NA	01/31/2023
DESIGNED BY:	JUSTIN CHIN	01/31/2023
DRAWN BY:	JUSTIN CHIN	01/31/2023
CHECKED BY:	ROBERT GETTER	01/31/2023
APPROVED BY:	ROBERT GETTER	01/31/2023

WORK ORDER
EW40080F

SHEET NAME
IP03

SHEET 85 OF 85 SHEETS

BUREAU OF ENGINEERING

STRATHERN PARK NORTH STORMWATER CAPTURE PROJECT WORK ORDER NO. EW40080F

GENERAL CONDITIONS
GENERAL REQUIREMENTS
TECHNICAL SPECIFICATIONS
APPENDICES

APRIL 8, 2025

City of Los Angeles
California

Department of Public Works
Bureau of Engineering

BUREAU OF ENGINEERING

STRATHERN PARK NORTH STORMWATER CAPTURE PROJECT WORK ORDER NO. EW40080F

MASTER GENERAL CONDITIONS

APRIL 8, 2025

City of Los Angeles
California

Department of Public Works
Bureau of Engineering

MASTER TABLE OF CONTENTS

DIVISION 00 - GENERAL CONDITIONS
00001 SPECIFICATIONS COVER
00002 MASTER TABLE OF CONTENTS
00010 GENERAL CONDITIONS

DIVISION 01 - GENERAL REQUIREMENTS
01000 MASTER GENERAL REQUIREMENTS COVER
01050 TABLE OF CONTENTS
01111 ABBREVIATIONS AND REFERENCE STANDARDS
01112 DESCRIPTION OF WORK
01113 DIVISIONS OF TECHNICAL SECTIONS OF PROJECT MANUAL
01114 ISSUANCE OF DRAWINGS AND THE PROJECT MANUAL
01115 MANDATORY PROVISIONS (BOE)
01116 ELECTRONIC DOCUMENT CONTROL
01120 INTERFACE / COORDINATION REQUIREMENTS
01140 CONTRACTOR'S USE OF THE PREMISES
01150 STORAGE OF MATERIALS AND EQUIPMENT
01212 FIXED CASH ALLOWANCE ITEMS
01251 CHANGE ORDER REQUESTS
01252 CONSTRUCTION INCENTIVE CHANGE PROPOSAL
01253 DIFFERING SITE CONDITION
01254 CHANGE ORDERS
01255 PRICE REDUCTION FOR DEFECTIVE COST OR PRICING DATA
01270 MEASUREMENT OF QUANTITIES FOR UNIT PRICE WORK
01280 MEASUREMENT AND PAYMENT
01291 NOTICE TO WITHHOLD AND/OR STOP NOTICE
01292 PAYMENTS
01298 SCHEDULE OF VALUES / CONTRACT PRICE BREAKDOWN
01311 PRECONSTRUCTION SAFETY CONFERENCE
01312 PROJECT MEETINGS
01313 WORK BY CITY OR OTHERS
01321 CONTRACTOR'S CONSTRUCTION SCHEDULE AND REPORTS
01322 CONSTRUCTION PROGRESS PHOTOGRAPHY
01323 CONSTRUCTION STATUS REPORTS
01330 SHOP DRAWINGS / SUBMITTALS
01350 AUDIT AND ACCESS TO RECORDS
01351 ESCROW BID DOCUMENTS
01353 OPPORTUNITY TO PARTNER
01410 REGULATORY REQUIREMENTS
01411 CONFINED SPACE ENTRY
01420 UNITS OF MEASURE
01421 SYMBOLS
01430 MANUFACTURER'S FIELD SERVICE
01452 INSPECTION OF THE WORK
01453 SAMPLING, TESTING AND FABRICATION INSPECTION
01454 WEIGHING AND METERING EQUIPMENT
01455 CALIBRATION OF TESTING EQUIPMENT
01561 ENVIRONMENTAL CONTROL
01562 ENVIRONMENTAL MITIGATION
01563 POLLUTION CONTROL -SEWAGE SPILL PREVENTION AND RESPONSE REQUIREMENTS
01571 STORMWATER POLLUTION CONTROL MEASURES FOR CONSTRUCTION ACTIVITIES

01572 CONSTRUCTION AND DEMOLITION WASTE MANAGEMENT
01573 EXCAVATION SHORING, FORMS, AND FALSEWORK
01581 PROJECT SIGNS
01601 BUY CLEAN CALIFORNIA ACT
01611 GUARANTY / WARRANTY
01630 SUBSTITUTIONS AND "OR EQUAL" SUBMITTAL
01711 SITE INVESTIGATION
01712 SUBSURFACE DATA
01721 MOBILIZATION
01722 SURVEYING
01723 RIGHT OF WAY
01731 CUTTING AND PATCHING
01732 ADDITIONAL POTHOLING
01740 REMOVAL, CLEANUP, AND DEMOBILIZATION
01750 STARTUP ASSISTANCE
01770 PROJECT CLOSEOUT
01781 SPARE PARTS
01782 TECHNICAL MANUALS
01783 PROJECT RECORD DOCUMENT
01810 FUNDAMENTAL COMMISSIONING REQUIREMENTS
01813 PREFUNCTIONAL CHECKLISTS
01820 OPERATIONS AND MAINTENANCE TRAINING

DIVISION 02 – SITE WORKS
02000 TECHINCAL SPECIFICATIONS COVER
02001 TABLE OF CONTENTS TECHNICAL SPECIFICATIONS
02210 CLEARING, GRUBBING AND STRIPPING
02235 DEWATERING
02240 SHEETING, SHORING, AND BRACING SYSTEMS
02310 EARTHWORK
02545 STORM DRAIN SYSTEM
02550 LINED REINFORCED CONCRETE PIPE
02585 MAINTENANCE MANHOLE AND PRECAST VAULT CONSTRUCTION
02600 DUCTILE-IRON VENT PIPING
02710 YARD WORK AND STREET WORK
02730 PERMEABLE PAVING
02752 CONCRETE PAVING
02795 BALLFIELD INFIELD SURFACE
02810 IRRIGATION
02820 CHAIN LINK FENCING AND GATES
02840 CONCRETE WHEEL BUMPERS
02932 LANDSCAPE PLANTING

DIVISION 03 – CONCRETE
03100 CONCRETE FORMWORK
03200 REINFORCEMENT STEEL
03250 CONCRETE ACCESSORIES
03290 JOINTS IN CONCRETE
03300 CAST-IN-PLACE CONCRETE
03315 GROUT
03370 CONCRETE CURING
03400 PRECAST CONCRETE
03740 CONCRETE REPAIR

DIVISION 04 – MASONRY

(NOT USED)

DIVISION 05 – METALS
05500 MISCELLANOUS METAL WORK
05600 FLOOR ACCESS HATCHES

DIVISION 06 – WOOD AND PLASTICS
06100 ROUGH CARPENTRY

DIVISION 07 – CONCRETE
07290 WATERPROOFING
07900 JOINT SEALANT
07920 CAULKING AND SEALANTS

DIVISION 08 – DOORS AND WINDOWS
(NOT USED)

DIVISION 09 – FINISHES
09800 PROTECTIVE COATINGS

DIVISION 10 – SPECIALTIES
10443 DISABLED ACCESSIBILTIY PARKING SIGNAGE

DIVISION 11 – EQUIPMENT
11815 SLIDE/STOP GATES

DIVISION 12 – FURNISHINGS
(NOT USED)

DIVISION 13 – SPECIAL CONSTRUCTION
13200 MODULAR BURIED STORMWATER INFILTRATION AND DESILTING BASIN SYSTEM

DIVISION 14 – CONVEYING EQUIPMENT
(NOT USED)

DIVISION 15 – MECHANICAL/PLUMBING
15270 MECHANICAL SYSTEMS COMMISSIONING
15280 MECHANICAL TESTING REQUIREMENTS
15320 ELECTRICAL REQUIREMENTS FOR MECHANICAL EQUIPMENT

DIVISION 16 – ELECTRICAL
16020 MUNICIPAL FACILITIES GENERAL ELECTRICAL REQUIREMENTS
16100 BASIC MATERIALS AND METHODS
16110 RACEWAYS
16160 CONDUCTORS
16170 CABINETS AND RACKS
16180 WIRING DEVICES
16190 ELECTRICAL IDENTIFICATION
16200 MOTOR CONTROL CENTERS
16210 SWITCHES, DISCONNECT, AND SAFETY
16270 SERVICE AND DISTRIBUTION SWITCHBOARD
16280 SHORT CIRCUIT AND COORDINATION REPORT
16290 MUNICIPAL FACILITIES GROUNDING SYSTEMS
16320 TRANSFORMERS

16330 PANELBOARDS
16340 LOW VOLTAGE MOTOR CONTROL
16360 MUNICIPAL FACILITES LIGHTING
16380 MUNICIPAL FACILITES UNINTERRUPTIBLE POWER SYSTEM
16490 ELECTRIC MOTORS
16560 MUNICIPAL FACILITIES ELECTRICAL SYSTEMS COMMISSIONING
16570 MUNICIPAL FACILITIES ELECTRICAL TESTING REQUIREMENTS

DIVISION 17 – INSTRUMENTATION
17100 METERS, GENERAL
17240 AV FLOW METERS – FIELD MOUNTED
17400 PROCESS INSTRUMENTATION AND CONTROL
17450 SCADA, PLCSM NETWORK AND COMMUNICATIONS

APPENDICES
GEOTECHNICAL EVALUATION REPORT STRATHERN PARK NORTH
LIMITED PHASE II ENVIRONMENTAL SITE ASSESSMENT
ADDITIONAL PHASE II ENVIRONMENTAL SITE ASSESSMENT
DRAFT STORMWATER POLLUTION PREVENTION PLAN FOR CONSTRUCTION ACTIVITIES
UTILITY LOCATION REPORT
DRAFT FINAL MITIGATED NEGATIVE DECLARATION STORMWATER CAPTURE PARKS PROGRAM
NOTICE OF PROPOSED PROJECT FIRST NOTICE
SUMMARY OF FIRST NOTICE REPLIES
TRANSFER AGREEMENT BETWEEN LACFCD AND LADWP (TO BE PROVIDED LATER)
STATE TRANSFER AGREEMENT (TO BE PROVIDED LATER)

END OF SECTION

GENERAL CONDITIONS
TABLE OF CONTENTS

ARTICLE Page

00100 DEFINITIONS (9/18/07) 3
00101 – 00199 NOT USED 8
00200 SCOPE (10/17/01) 8
00201 AUTHORITY OF THE BOARD, ENGINEER, AND INSPECTOR (5/2/02) 8
00202 INTENT OF CONTRACT DOCUMENTS (2/09/95) 8
00203 NOT USED (9/18/07) 9
00204 PLANS AND SPECIFICATIONS (9/18/07) 9
00205 PRECEDENCE OF CONTRACT DOCUMENTS (9/18/07) 9
00206 ACCURACY OF PLANS AND SPECIFICATIONS (12/6/01) 10
00207 EXAMINATION OF COVERED WORK (12/6/01) 10
00208 UNNOTICED DEFECTS (10/17/01) 10
00209 CODES AND REGULATIONS (10/17/01) 10
00210 LENGTH OF WORKDAY AND WORK WEEK (9/18/07) 11
00211 PAYMENT OF EMPLOYEES (12/6/01) 11
00212 CONVICT-MADE MATERIALS (12/6/01) 11
00213 SALES OR USE TAX / EXEMPTION FROM FEDERAL EXCISE TAX (10/17/01) 11
00214 NONDISCRIMINATION IN EMPLOYMENT (10/17/01) 12
00215 APPRENTICE UTILIZATION (4/12/95) 12
00216 LAWS AND REGULATIONS (9/18/07) 12
00217 PERMITS AND CONSTRUCTION EASEMENTS (9/18/07) 12
00218 PARTIES EXCLUDED FROM FEDERAL PROCUREMENT AND NON PROCUREMENT PROGRAMS (10/17/01) 13
00219 BUSINESS TAX REGISTRATION CERTIFICATES (11/21/01) 13
00220 CONTRACTOR PROPOSED ALTERNATES AND “OR EQUALS” (12/6/01) 13
00221 CONTRUCTION AND DEMOLITION WASTE MANAGEMENT (8/12/11) 14
00222 – 00299 NOT USED 14
00300 FINANCIAL LIABILITY (4/12/95) 14
00301 CONTRACTOR’S OBLIGATIONS (3/21/14) 14
00302 CONTRACTOR’S REPRESENTATIVE AT THE SITE (1/30/03) 15
00303 FAMILIARITY WITH PLANS AND SPECIFICATIONS (9/18/07) 16
00304 JOB CONDITIONS (9/18/07) 16
00305 JOB BULLETIN BOARD (11/27/01) 17
00306 RESPONSIBILITY FOR SITE (10/17/01) 17

00307 WORKMANSHIP AND MATERIALS (4/12/95) 17
00308 INJURY AND ILLNESS PREVENTION - SAFETY MEASURES (9/18/07) 17
00309 PROTECTION OF PERSONS AND PROPERTY AND RESTORATION OF EXISTING IMPROVEMENTS (9/18/07) 18
00310 NON-CONFORMING WORK (1/30/03) 21
00311 SUBCONTRACTORS AND SUB-SUBCONTRACTORS (10/28/14) 21
00312 RESPONSIBILITY OF CONTRACTOR TO ACT IN EMERGENCY (11/21/01) 26
00313 ASSIGNMENT (2/09/95) 26
00314 NOTIFICATION OF HAZARDOUS SUBSTANCES (10/17/01) 26
00315 INDEPENDENT CONTRACTOR (10/21/99) 27
00316 INDEMNIFICATION (10/17/01) 27
00317 INSURANCE (1/05/10) 28
00318 SERVICE OF NOTICE (2/09/94) 32
00319 AGENT TO ACCEPT SERVICE (10/21/99) 33
00320 – 00399 NOT USED 33
00400 TEMPORARY SUSPENSION OR DELAY OF WORK (9/18/07) 33
00401 UNAVOIDABLE DELAY (10/17/01) 34
00402 ARCHAEOLOGICAL AND PALEONTOLOGICAL DISCOVERIES (9/18/07) 34
00403 COORDINATION WITH OTHER CONTRACTS (1/30/03) 34
00404 TERMINATION OF CONTRACT BY CITY (CONTRACTOR NOT AT FAULT) (9/18/07) 35
00405 TERMINATION OF CONTRACT BY CITY (CONTRACTOR DEFAULT) (9/18/07) 37
00406 PARTIAL ACCEPTANCE (9/18/07) 38
00407 FINAL ACCEPTANCE (02/21/08) 39
00408 LIQUIDATED DAMAGES (9/18/07) 39
00409 – 00499 NOT USED 40
00500 CHANGES AND EXTRA WORK (9/18/07) 40
00501 DIFFERING SITE CONDITIONS (9/18/07) 41
00502 – 00599 NOT USED 41
00600 CLAIMS AND PROTESTS (9/18/07) 42
00601 COMMENCEMENT OF STATUTE OF LIMITATIONS (11/21/01) 44
00602 GOVERNING LAW (11/21/01) 44
00603 VENUE (2/09/95) 44
00604 NO WAIVER OF RIGHTS (4/12/95) 44
00605 ACCEPTANCE OF FINAL PAYMENT CONSTITUTES RELEASE (4/12/95) 44
00606 PATENTS AND COPYRIGHTS (10/17/01) 44
00607 PUBLIC RECORDS ACT (4/06/00) 45

00100 DEFINITIONS (9/18/07)

Unless otherwise stated, the words "directed, required, permitted, ordered, instructed, designated, considered necessary, prescribed, approved, acceptable, satisfactory," or words of like meaning, refer to actions, statements, judgments, conclusions, and decisions within the responsibility of the Engineer or the Inspector.

Addenda: Written documents issued during the Bidding Period which modify, supersede, or supplement the original Contract Documents.

Additions and Amendments to the Standard Specifications for Public Works Construction (SSPWC): Also known as the “Brownbook”. Previous editions of the document were titled Standard Plan S-610.

“as shown”, “as indicated”, or “as specified”: These words are understood to be followed by the phrase "in the Contract Documents."

Bid: The offer of the Bidder submitted on the prescribed forms setting forth the price(s) for the Work.

Bid Proposal: The notice that informs prospective Bidders of the opportunity to submit a Bid, bidding procedures and other requirements.

Bid Guaranty: The certified check or Bidder’s Surety Bond accompanying the Bid as a guaranty that the Bidder will enter into a contract with the Board for the performance of the Work.

Bidder: The person or persons, partnership, firm or corporation submitting a Bid or proposal for the Work defined in the Contract Documents.

Bidding Period: The time period allocated to the Bidder to enable preparation of a Bid.

Board: The Board of Public Works, of the City of Los Angeles.

Bond: Bid bond, performance and payment bond or other instrument of security.

“Brownbook”: City of Los Angeles, Department of Public Works, Additions and Amendments to the SSPWC.

Calendar day: All days beginning with the date specified in the Notice to Proceed, and ending with the date the City issues the Statement of Completion.

Change Order: A written order to the Contractor signed by the Engineer directing an addition, deletion or revision in the Work, or an adjustment in the Contract Price or time which is issued after the effective date of the Contract and effects less modification than is effected by a Supplemental Agreement. A Change Order may or may not also be signed by the Contractor.

County Sealer: The Director of Weights & Measures of the County of Los Angeles.

City: The City of Los Angeles, a municipal corporation.

Claim: A written demand or assertion by one of the parties seeking, as a matter of right, an interpretation of the Contract Documents, payment of money, extension of time or other relief. The party asserting the Claim must set forth the facts and circumstances for which the other party is responsible.

Code: Codes of the State of California as well as any other Federal or local law, statute, ordinance, rule or regulation.

Contract: The agreement between the City and the Contractor for the Work described in the Contract Documents.

Contract Documents: Includes, but is not limited to, the Notice Inviting Bids, Bid Proposal, Notice(s) to Bidders, Contractor's Bid, Performance bond, Payment bond, General and Supplementary Conditions, Special Provisions, General Requirements, Federal and State Requirements, Standard and Reference Specifications, Technical and Nontechnical Specifications, Geotechnical Baseline Report, Geotechnical Design Summary Report, Soil Reports and Subsurface Investigation Reports, Standard Plans, Plans, Summary of First Notice Replies, and Addenda, Plan Clarifications, Request for Information, Supplemental Agreements, Change Orders issued after Contract award and other documents designated by the Engineer.

Contract Price: The total amount of money for which the Contract is awarded.

Contract Unit Price: The amount stated in the Bid for a single unit of an item of Work.

Contractor: A person or persons, partnership, firm or corporation licensed by the State of California as a general contractor. The terms "Prime Contractor" and Contractor are synonymous.

Contractor's Representative: A representative of the Contractor present at the site to supervise, organize, coordinate and direct daily construction activities and who is authorized to receive and fulfill instructions from the Engineer or Inspector.

"days": Consecutive calendar days unless otherwise specifically stated.

Drawings: See Plans.

"easement": Permission to access or utilize property not owned by the City.

Engineer: The City Engineer, head of the Bureau of Engineering, or an authorized representative.

Equal: See "or equal".

Final Field Acceptance: Verification by the Final Inspector that all physical corrections required by the Final Inspection Correction List have been completed. This verification will be evidenced by issuance of a Statement of Completion, which will establish the date of the completion of the Work.

GBR: See Geotechnical Baseline Report.

GDR: See Geotechnical Data Report.

General Conditions: Instructions to the Contractor setting forth its responsibilities and the City's responsibilities for proper execution of the Work indicated herein.

General Requirements: Division 1 of the Specifications.

Geotechnical Baseline Report: This report establishing the baselines for geotechnical conditions anticipated to be encountered during underground and subsurface construction. This report establishes the basis for identification of changed site/ground conditions.

Geotechnical Data Report: This report contains factual information gathered during exploration and design. It may include logs of exploratory borings, laboratory test data, and geologic, seismic or environmental data.

“Greenbook”: Standard Specifications for Public Works Construction (SSPWC) published by Public Works Standards, Inc, latest edition.

“holiday”: In reference to days, the holidays and dates as observed by the City. A list of such holidays is available from the Board office.

Illegal Subcontractor Substitution: Anyone other than the Bid-listed or approved subcontractor(s) performing any portion of the Work designated to be performed by said subcontractor without prior approval of the Inspector.

“immediately notify”: The obligation to cause verbal notification of Engineer and Inspector of some condition or event as soon as possible upon discovery or knowledge of the condition or event and in all instances, no more than two (2) hours.

Inspector: The Inspector of Public Works, (Director of the Bureau of Contract Administration), or an authorized representative designated by the Bureau of Contract Administration.

“jobsite”: The area upon or in which the Contractor’s operations are carried on and such other areas adjacent thereto as may be designated as such by the Contract Documents.

“law”: Any Federal, State or local law, statute, ordinance, rule, regulation or Code.

“liquidated damages”: The amount the Contractor shall pay to the City, as determined by rates and amounts as fixed in the Contract Documents, due to the Contractor’s failure to complete the Work within the time specified.

“non-conforming work”: Unapproved construction, defective work or damaged materials that does not fully comply with the Contract Documents.

Notice of Award: The written notice by the City to the successful Bidder stating that upon compliance by the successful Bidder of required conditions, the City will execute the Contract.

Notice to Proceed: The written notice by the City to the successful Bidder stating that the Work or portions of the Work shall commence.

Notice to Withhold: The written notice by the City to the Contractor advising that certain payments shall be withheld due to unacceptable execution of the Work by the Contractor.

“or equal”: In reference to products, equipment, or materials proposed by the Contractor for use in the Work.

Partial Acceptance: Any portion of the Work that has been completed in accordance with the plans and specifications and has been accepted in writing by the Inspector ("Statement of Partial Completion" form).

“person”: Any individual, firm, association, partnership, corporation, trust, joint venture, or other legal entity.

Plans: The drawings, profiles, cross sections, shop drawings, and supplemental drawings, or reproductions thereof, issued or approved by the Engineer, which show the location, character, dimensions or details of the Work.

Private Contract: Work subject to City inspection, control, and approval, involving private funds, not administered by the City.

Project: The Work and/or construction operations executed through the performance of this Contract.

Project Manual: See Contract Documents.

Protest: See Claim.

Reference Specifications: Those bulletins, standards, rules, methods of analysis or test, codes, and specifications of other agencies, engineering societies, or industrial associations referred to in the Contract Documents. These refer to the edition, including amendments in effect and published at the time of advertising the project, adopted by the Board, if applicable, unless specifically referred to by edition, volume, or date.

“right of entry”: Written permission from an owner of a facility or property to access the facility or property for a specific purpose.

Special Provisions: Any provision which supplements or modifies the Specifications.

Specifications: Written requirements describing the commercial, legal, technical and nontechnical aspects of the project. Specifications include but are not limited to Terms, Provisions, General Conditions, General Requirements, Technical Specifications, Equipment Schedules, and all revisions made to the specifications in Addenda, and Change Orders.

Standard Plans or “Std. Plan”: Details of standard structures, devices or instructions referred to on the Plans or in the Specifications by title or number.

State: The State of California.

Statement of Completion: A form issued by the Bureau of Contract Administration following Final Inspection and upon completion of all physical corrections required by the Final Inspection Correction List. This shall signify the acceptance of all field work and establish the date of completion of the Work.

Statement of Partial Completion: A form issued by the Bureau of Contract Administration following Partial Final Inspection and upon completion of all physical corrections required by the Partial Final Inspection Correction List. This shall signify the acceptance of a specific portion, or portions, of the Work to be so utilized or otherwise placed into service.

Subcontractor: Any individual, firm, or corporation, other than an employee of the Contractor, having a direct contract with the Contractor or with any other subcontractor for the performance of the Work. A Subcontractor is a contractor who is licensed pursuant to California Business and Professions Code, Section 7000 et. seq. A Subcontractor does not have any direct contract with the City related to the project.

Subcontractor Substitution: Anyone other than the Bid-listed or approved subcontractor(s), including the Contractor, performing any portion of the Work designated to be performed by said subcontractor.

Sub-subcontractor: A "Sub-Subcontractor" is a Subcontractor, within the definition of that term, who has a contract with a Subcontractor and has no Contract with the City related to the project.

Supervision: With reference to supervision by the Engineer, the performance of obligations, and the exercise of rights, specifically imposed upon and granted to the City in becoming a party to the Contract. Except as specifically stated herein, supervision by the City shall not mean active and direct superintendence of details of the Work.

Supplemental Agreement: A written amendment of the Contract Documents, signed by the Contractor and City.

Supplier: An individual, organization, or firm who may not be required for the purposes of the Work to be licensed pursuant to California Business and Professions Code as a contractor, or subcontractor, within the meanings of those terms as defined herein above, who provides equipment and/or materials for the Work, to the Contractor, a Subcontractor, or a Sub-Subcontractor, including that fabricated to a special design, but who does not perform labor at the site except for labor or labor supervision required by some manufacturers as part of their equipment installation for warranty or other purposes. The term "supplier" also includes fabricator, manufacturer, or vendor.

Surety: Any individual, firm or corporation bound with and for the Contractor for the acceptable performance, execution and completion of the Work, and for the satisfaction of all obligations incurred.

Unauthorized Subcontractor Substitution: Any reduction, increase, or other change to any Subcontractor dollar amount without written approval by the Inspector.

Unavoidable Delay: Delay arising from causes beyond the control and without the fault or negligence of the Contractor and its Subcontractors at all tiers, and solely due to acts of God, acts of government in its sovereign capacity, riots, insurrections, wars, fires, floods, earthquakes, tidal waves, epidemics, quarantine restrictions, industry-wide strikes, freight embargoes, or unusually severe weather.

Work: Includes all material, labor, utility services, tools, expendable equipment, and all appliances, machinery, transportation, appurtenances and specified services necessary to perform and complete the Contract; and such additional items not specifically indicated or described that can be reasonably inferred as belonging to the item described or indicated and as required by good practice to provide a complete and operable satisfactory system or structure. As used herein, "provide" shall be understood to mean "furnish and install, complete in place."

Workday: All days beginning with the date specified in the Notice to Proceed, and ending with the date the City issues the Statement of Completion, except for the following days:

A) Saturday,

B) Sunday,

C) any day designated as a holiday by the City,

D) any day designated as a holiday in a Master Labor Agreement binding the Contractor,

E) any day the Contractor is prevented from working for cause as established by “Unavoidable Delay” of these General Conditions; and

F) any day the Contractor is prevented from working during the first five (5) hours of the workday with at least sixty percent (60%) of the normal Work force for cause as established by “Unavoidable Delay” of these General Conditions.

Worksite: See "jobsite."

00101 – 00199 NOT USED

00200 SCOPE (10/17/01)

The work to be performed under this Contract shall consist of furnishing all tools, equipment, materials, supplies and manufactured articles, all transportation, services, including fuel, power and water, and essential communications, and the performance of all labor, Work, required calculations testing, inspections or operations, or operations required for the fulfillment of the Contract, in strict accordance with the specifications, schedules, and Plans, all of which are made a part hereof, and including such detail sketches as may be furnished by the Engineer from time to time during the construction in explanation of said Plans. The Work shall be complete and all material, and services incidentals, quality or not specifically called for quality and conditions noted, in the Specifications, or not shown on the Plans, which may be necessary for complete and proper construction to carry out the Contract in good faith and a satisfactory manner shall be performed, furnished, and installed by the Contractor at no increase in cost to the City.

00201 AUTHORITY OF THE BOARD, ENGINEER, AND INSPECTOR (5/2/02)

The Board has the final authority in all matters affecting the Work. The Contractor shall promptly comply with instructions from the Engineer or the Inspector.

The Engineer is authorized to require performance of the Work consistent with the meaning of the Plans and the Contract Documents. On all questions related to the interpretation of Plans or Specifications, the decision of the Engineer is final and binding. As authorized by the Board, the Engineer may issue Change Orders to increase, decrease or modify the scope of work.

The Inspector is authorized to enforce compliance with the Contract Documents, to determine the acceptability, quality and quantity of materials and workmanship, administer requirements with respect to subcontracts, and to prepare and process progress payment estimates. Unless otherwise ordered by the Board, the Inspector’s determination of satisfactory performance is a condition precedent to payment under this Contract. For such matters, the decision of the Inspector is final and binding. In the event of a dispute between the Contractor and the Inspector, the latter is authorized to reject materials or suspend the Work until any questions at issue can be referred to and decided by the Board or, in engineering matters, by the Engineer.

The Inspector is authorized to sample and test all materials to be incorporated into the Work. The Inspector may delegate this authority to sample materials and perform tests to the Department of General Services, Standards Division, or other approved agencies.

The Engineer may delegate street lighting matters to the Director of the Bureau of Street Lighting.

00202 INTENT OF CONTRACT DOCUMENTS (2/09/95)

The Contract Documents are complementary, and what is called for by one part shall be as binding as if called for by all. The intent of the Documents is to include all Work consistent therewith and reasonably inferable therefrom as being necessary for completion of the contract. Materials or Work described in words that indicate the proper execution and a well known technical or trade designation shall be held to refer to such recognized standards.

It is understood and agreed that the written terms and provisions of the Contract Documents represent the entire and integrated agreement between the parties hereto and supersede all prior negotiations, representations, or agreements, either written or oral. The Contract Documents shall not be construed to create any contractual relationship of any kind between the Engineer (or the Inspector) and the Contractor.

00203 NOT USED (9/18/07)

00204 PLANS AND SPECIFICATIONS (9/18/07)

As shown on the Plans or described in the Specifications, each element of the Work must be furnished complete, finished and functional. Whether shown or not, include all materials and ancillary equipment necessary to provide a complete installation. The Plans, Specifications and other Contract Documents are intended to be complementary and cooperative to describe and provide for a complete project. Anything in the Specifications and not on the Plans, or on the Plans and not in the Specifications, shall be as though shown or mentioned in both. Details shown for an item of Work are typical and shall apply to similar items of Work.

Do not deviate from the Plans and Specifications without written authorization from the Engineer.

The Engineer does not warrant the accuracy of scaled dimensions. Dimensions indicated by figures or numerals shall govern. Larger scale drawings shall take precedence over smaller scale drawings. Detailed drawings will take precedence over general drawings.

The Engineer may furnish additional details pertaining to the Work and the same shall be considered part of the Contract.

References made to other specifications and codes refer to the edition including amendments in effect and published at the time of advertising the project, unless specifically referred to by edition, volume, or date as noted in the Contract Documents.

00205 PRECEDENCE OF CONTRACT DOCUMENTS (9/18/07)

In resolving inconsistencies or ambiguities among two (2) or more components of the Contract Documents, the more stringent requirements shall prevail. The secondary priority will be based upon the precedence of the documents. The precedence shall be:

1. Permits from other agencies as may be required by law.

2. Bid Proposal

3. General Conditions

4. General Requirements

5. Technical Specifications

6. Plans

7. Geotechnical Baseline Report

8. Geotechnical Data Report

9. Brownbook

10. Greenbook

11. Standard Plans

12. Reference Specifications

13. Reference Plans

Supplemental Agreements, Change Orders, Engineer's written interpretations and clarifications, and Addenda, will take precedence over all other components of the Contract Documents.

00206 ACCURACY OF PLANS AND SPECIFICATIONS (12/6/01)

Omissions from the Plans and Specifications shall not relieve the Contractor from the responsibility of furnishing, making, or installing all items required by law or usually furnished, made, or installed in a project of the scope and character indicated by the Plans and Specifications.

The Plans show conditions as they are supposed or believed by the Engineer to exist, but it is not intended or to be inferred that the conditions as shown thereon constitute a representation or warranty, expressed or implied, by the City or its officers, that such conditions are actually existent, nor shall the City, or any of its officers, be liable for any loss sustained by the Contractor as a result of any variance between conditions as shown on the Plans, and the actual conditions revealed during progress of the Work or otherwise, except as indicated in "Differing Site Conditions" of these General Conditions.

00207 EXAMINATION OF COVERED WORK (12/6/01)

If any Work is covered without inspection, approval or consent of the Inspector, an examination may be required by the Inspector. The cost for uncovering the work, inspection, testing required by the Inspector, remedial work and restoring the work is at the Contractor's expense.

00208 UNNOTICED DEFECTS (10/17/01)

The Contractor is responsible for ensuring that all Work complies with the Contract Documents. Upon discovery, all defective or noncompliant Work must be immediately repaired or replaced by the Contractor. Failure by the Engineer or the Inspector to condemn or reject non-conforming Work shall not constitute acceptance or implied acceptance of such Work.

00209 CODES AND REGULATIONS (10/17/01)

The Contractor shall perform the Work in accordance with all applicable regulations, laws, and ordinances, even though such requirements may not be specifically mentioned in the Specifications or shown on the Plans.

It is not the responsibility of the Contractor to ensure that the Contract Documents comply with applicable laws, statutes, codes and regulations. If the Contractor believes that any part of the Contract Documents does not comply, the Contractor shall promptly notify the Engineer in writing. Do not proceed with those affected Work items until the Engineer issues written instructions to the Contractor.

If the Contractor proceeds with those Work items without written instruction from the Engineer, the Contractor will bear the costs and impacts of any corrective work.

00210 LENGTH OF WORKDAY AND WORK WEEK (9/18/07)

Eight (8) hours of labor shall constitute a calendar day's work for employees of the Contractor under this Contract. Said employees shall be paid not less than the prevailing wage rate for the first eight (8) hours work of each day.

Unless noted elsewhere in the Contract documents, a working day shall be Monday through Friday, and work shall be between 7:00 a.m. and 4:00 p.m., unless otherwise approved by the Engineer or the Board or revised by City Ordinance.

When work in excess of eight (8) hours per day, or forty (40) hours during any one (1) week is performed, wages for all hours over eight (8) hours in any day or over forty (40) hours during any one (1) week shall be paid at the prevailing wage rate, as required by City, state and federal requirements.

00211 PAYMENT OF EMPLOYEES (12/6/01)

The Contractor and each Subcontractor shall pay each employee engaged in Work on the project under this Contract in compliance with the Federal and State wage provisions indicated on the appropriate page of the Bid Proposal (General Instruction and Information for Bidders), and “Length of Workday and Work Week” of these General Conditions.

The certified payroll and the Statement of Compliance shall be submitted to the Inspector by the Contractor and all Subcontractors performing Work on the project, regardless of dollar amount or type of contract.

If there is a difference between the Federal and State minimum wage rates for similar classifications of labor, the Contractor and its Subcontractors shall pay not less than the higher wage rate. When the Contractor intends to use a craft or classification not shown on the general prevailing wage determinations, it will be required to pay the wage rate of that craft or classification most closely related to it as shown in the general prevailing wage determinations. In case of disagreement between the Contractor and the City, the Inspector shall make the final determination as to the prevailing wages for the Work.

00212 CONVICT-MADE MATERIALS (12/6/01)

Unless otherwise noted, no materials manufactured or produced in a penal or correctional institution shall be incorporated in the project under this Contract.

00213 SALES OR USE TAX / EXEMPTION FROM FEDERAL EXCISE TAX (10/17/01)

Purchases of materials and equipment which will be incorporated or installed permanently in the Work, or which will be used in the operation of the Contractor or Subcontractors, and not incorporated in the Work, are not exempt from City of Los Angeles and California State Sales or Use Taxes as applicable.

Purchase of materials and equipment which will be incorporated or installed permanently in the Work are exempt from Federal excise tax in effect at the time of purchase, as applicable. Prices included in the Contract amount shall reflect such exemptions. A Federal Tax Exemption Certificate will be furnished by the City, on request, as acknowledgment that materials and equipment for which exemption is requested by the Contractor, is valid where provided for the exclusive use of the City. Lists of exempt articles provided by the Contractor and Subcontractor shall be submitted to the City by the Contractor. Purchases of materials and equipment which will be used in the operations of the Contractor or Subcontractors and not incorporated in the Work are not exempt from excise tax.

00214 NONDISCRIMINATION IN EMPLOYMENT (10/17/01)

The Contractor shall comply with all of the provisions of the Los Angeles Administrative Code, Mandatory Provision Pertaining to Nondiscrimination in Employment.

The Contractor shall submit Monthly Ethnic Composition of Work Force Reports to the Inspector indicating the number of employees in the various work categories and ethnic groups and gender on forms furnished by the City.

Nondiscrimination Clause: "The Contractor shall not discriminate during the performance of this Contract against any employee or applicant for employment because of employee's or applicant's race, religion, national origin, ancestry, sex, age, sexual orientation or physical handicap." The Contractor shall include the same Nondiscrimination Clause in all subcontracts awarded under this Contract.

If conflicts exist between these provisions and the Federal Rules and Regulations governing the same, the more stringent requirements shall prevail.

00215 APPRENTICE UTILIZATION (4/12/95)

Any Contract awarded hereunder will require the Contractor to comply with the provisions of the California Labor Code relating to apprentice employment and training; and will require the Contractor to assume full responsibility for compliance with said section with respect to all Apprenticing Occupations involved in the Project. (Compliance with said Apprentice Utilization provisions of the Labor Code is not required for Public Works contracts involving less than $30,000 or less than twenty (20) Working days in duration).

00216 LAWS AND REGULATIONS (9/18/07)

The Contractor shall observe and comply with all Federal, State, and local laws, ordinances, Codes, orders, and regulations which in any manner affect those engaged or employed on the Work, the materials used in the Work, or the conduct of the Work. If any discrepancy or inconsistency should be discovered in this Contract in relation to any such law, ordinance, Code, order, or regulation, the Contractor shall report the same in writing to the Engineer. The Contractor shall indemnify and hold harmless the City, and its officers, agents, and employees, against all claims or liability arising from violation of any such law, ordinance, Code, order, or regulation, whether by itself or by its employees or Subcontractors as stated in these Contract Documents. Any particular law or regulation specified or referred to elsewhere in these specifications shall not in any way limit the obligation of the Contractor to comply with all other provisions of Federal, State, and local laws and regulations.

00217 PERMITS AND CONSTRUCTION EASEMENTS (9/18/07)

The Contractor shall obtain and pay for all permits necessary for performance of the Work. Within thirty (30) calendar days after the Notice to Proceed, the Contractor shall obtain and pay all costs incurred and submit to the Engineer copies of all permits required for the construction and installation of all Work called for on this project.

When the Bid Proposal provides an allowance for “Permits”, only certain types of permits and certain permit fees are reimbursable. The reimbursable permit must be exclusively for permanent Work shown on the Plans and reimbursement will be limited to the actual permit fee shown on the permit’s receipt. The allowance for “Permits” cannot be used for any other costs such as those necessary to physically obtain the permit. The allowance for “Permits” also cannot be used for contractor-designed items, annual permits, temporary construction, or general permits that are useable for other projects. The Contractor will only be reimbursed for those permits that are included in the list below, unless otherwise specified:

1) Night Work, overload, grading, excavation, demolition, foundation, and building permits.

2) Electrical permits.

3) Mechanical permits.

4) Plumbing permits.

5) South Coast Air Quality Management District permits.

6) Fire sprinkler permit.

7) All Federal, State, County and City issued permits.

Rights of ways, easements, or rights of entry for the Work will be provided by the City. The Contractor shall make arrangements, pay for, and assume all responsibility for acquiring, using, and disposing of Work areas and facilities temporarily required which are necessary in addition to those provided by the City. The Contractor shall indemnify and hold the City harmless for all claims for damages caused by such actions.

00218 PARTIES EXCLUDED FROM FEDERAL PROCUREMENT AND NON PROCUREMENT PROGRAMS (10/17/01)

A list of individuals, firms and organizations which have been debarred, suspended or have voluntarily excluded themselves from Federal Procurement and Non Procurement Program is maintained by US General Services Administration. A copy can be obtained from Superintendent of Documents, US Government Printing Office, Washington, DC 20402, Tel: (202) 783-3238.

The City will not conduct business with an individual, firm or organization, and the Contractor shall not employ or otherwise utilize any Subcontractor, supplier or equipment vendor at any tier which is on the U.S. General Services Administration "List of Parties Excluded from Federal Procurement and Non Procurement Programs". The Contractor shall not utilize or otherwise employ any Subcontractors or suppliers on the list of nonresponsible bidders maintained by the City Bureau of Contract Administration.

00219 BUSINESS TAX REGISTRATION CERTIFICATES (11/21/01)

The Contractor represents that it has, or will obtain upon award, the Business Tax Registration Certificate(s) required by the Los Angeles City Business Tax Ordinance. The Contractor shall maintain, or obtain as necessary, all such Certificates required of it under said Ordinance and shall not cause or allow any such Certificate to be revoked or suspended.

The City requires all firms that have business activity within the City of Los Angeles to pay City business taxes.

Payments for goods or services will be withheld unless proof of tax compliance is provided to the City. All firms and individuals that do business with the City will be required to provide a Business Tax Registration Certificate number or an exemption number as proof of compliance with Los Angeles City business tax requirements in order to receive payment for goods or services.

The Tax and Permit Division of the City Office of Finance has the sole authority to determine whether a firm is covered by business tax requirements.

00220 CONTRACTOR PROPOSED ALTERNATES AND “OR EQUALS” (12/6/01)

Unless otherwise noted, the Contractor may propose products, equipment, or materials to be an "or equal" to those specified in the Contract. These proposals must be submitted within thirty (30) days after Notice to Proceed along with sufficient substantiating data for the Engineer to determine equivalence. The substantiating data must demonstrate equivalence in terms of function, performance, reliability, quality, and general configuration to the items specified in the Contract Documents. The Engineer will be the sole arbiter of equivalence. Proposals that are submitted late or with incomplete substantiation are "Not Equal" and subject to summary rejection.

Contractor-proposed "or equals" that are accepted by the Engineer shall be coordinated with other items of Work and incorporated into the Work without time extensions and at no additional cost to the City.

00221 CONTRUCTION AND DEMOLITION WASTE MANAGEMENT (8/12/11)

The Contractor shall divert all Construction and Demolition (C&D) waste generated from the project in accordance with the City's C&D Waste Recycling Ordinance. Los Angeles Municipal Code requires that all mixed C&D waste material generated within the City of Los Angeles be taken to a City Certified C&D Waste Processor. Further, mixed C&D waste can only be legally collected, removed, or transported by City of Los Angeles Permitted Solid Waste Haulers. If the Contractor plans on collecting, removing, or transporting its own waste, it must first apply for and obtain a Solid Waste Hauler Permit from the Solid Resources Citywide Recycling Division of the Bureau of Sanitation.

Failure to meet the C&D waste recycling requirements as detailed above will result in the assessment of penalties up to $5,000 per each load of C&D waste not taken to City Certified Processors. Further, collecting, removing or transporting C&D waste within the City without a valid Solid Waste Hauler Permit is a criminal misdemeanor subject to fines and/or imprisonment.

Other sections of the Specification may require specific recycling rates in addition to the Los Angeles Municipal Code requirements.

00222 – 00299 NOT USED

00300 FINANCIAL LIABILITY (4/12/95)

The City's liability under this Contract shall not exceed the City's appropriation to fund the Contract at the time of Contract award. However, if the City shall appropriate funds for any successive years, the City's maximum liability shall not exceed the extent of such appropriation, subject to the terms and conditions of this Contract.

00301 CONTRACTOR'S OBLIGATIONS (3/21/14)

Only competent workers shall be employed on the Work.

Any person employed who is found by the Engineer or the Inspector to be incompetent, disorderly or otherwise objectionable, or who fails or refuses to perform Work properly, acceptably and as directed shall be immediately removed from the Work by the Contractor and not be reemployed on the Work.

The Contractor, at its sole cost and expense, shall perform all labor and services and furnish all the materials, tools, and appliances, except as hereinafter otherwise definitely provided, necessary or proper for performing and completing the Work required, in the manner and within the time stipulated in these specifications. The Contractor shall furnish, erect, maintain, and remove the construction plant and such temporary works as may be required. If, at any time before the commencement or during the progress of the Work or any part of it, the Contractor's methods or appliances appear to the Engineer or the Inspector to be unsafe, inefficient, or inadequate for securing the safety of the workers, the quality of the Work required, or the rate of progress stipulated, the Engineer or the Inspector may order the Contractor to

increase their safety and efficiency or to improve their character, and the Contractor shall comply with such orders at its own expense. Neither the making of such demands by the Engineer nor the failure to make such demands shall relieve the Contractor of its obligation to secure the safe conduct of the Work, the quality of Work required, and the rate of progress stipulated in the Contract. The Contractor shall be fully responsible for the safety, efficiency, and adequacy of its plant, appliances, and methods, and for any damage which may result from their failure or their improper construction, maintenance, or operation.

All of the labor shall be performed and materials furnished pursuant to and in strict conformance with the Contract Documents, and in accordance with approved shop drawings. The Contractor shall complete the entire Work to the satisfaction of the Inspector and in accordance with the Specifications and Plans herein mentioned, at the prices fixed in the Contract.

Where articles or materials are especially manufactured or fabricated for delivery under these specifications, the Contractor shall at all times employ such workforce, plant, materials, and tools as will be sufficient to complete the performance of the Contract and every part thereof within the time limits stipulated herein. If the Contractor fails to employ sufficient workforce, plant, materials, tools, or to maintain adequate progress, the Engineer may require an increase in progress at any point or points or a modification of Plans and procedure in such a manner as to accelerate the Work. Failure to adequately staff the project shall be just cause for the City to terminate the Contract.

00302 CONTRACTOR'S REPRESENTATIVE AT THE SITE (1/30/03)

A technically qualified and English-speaking project representative shall be designated in writing as the Contractor's Representative at the job site, who shall supervise the Work and shall provide competent supervision of the Work until its completion. The Contractor's Representative shall be assigned full time and exclusively to this project. Alternate representatives with qualifications equal to or better than the previous representative may be designated. The Contractor's Representatives shall have at least five (5) years of verifiable experience as the person primarily responsible for supervision of the Work on projects of the same or similar size and nature as this project. Within five (5) days after the Notice of Award the Contractor shall provide a statement to the Engineer and the Inspector with the following:

1) Identification and resume, showing the qualifications and experience of the Contractor's Representative and the alternate appointed to act in the place of the Contractor's Representative.

2) References of not less than two (2) previous projects on which the Contractor's Representative and the alternate had supervisory responsibility on a project of a similar nature and at least one-half or more of the cost of this project. Such references shall include names, addresses, and telephone numbers of owner representatives who worked on the project as well as project information such as project type, size, location and duration.

The Engineer and the Inspector reserve the right to disapprove any candidate named as the Contractor's Representative or alternate who fails to meet the provisions set forth herein. The Engineer and the Inspector reserve the right to remove, without any right to work on the project, either the Contractor's Representative or alternate, who in the sole opinion of the Engineer or the Inspector, has demonstrated incompetence, lack of ability, or other unsuitability to perform supervision of the Work.

If the Contractor's Representative or alternate leave the employ of the Contractor, the Contractor will be required to replace the individual(s) and fulfill the requirements of this Article within fifteen (15) calendar days. In no event shall any Work proceed in the absence of an approved representative.

The Contractor's Representative or alternate shall have full authority to act on behalf of the Contractor, including, but not limited to final approval of Change Orders and Supplemental Agreements. All directions given by the Engineer or the Inspector to said representative or alternate shall be considered as having been given to the Contractor. Such instructions given by the Engineer or the Inspector to the Contractor's Representative or alternate will be confirmed in writing. All instructions and directions given by the

Engineer or the Inspector will be limited to matters properly falling within the Engineer's or the Inspector's authority as specified in "Authority of the Board, Engineer and Inspector" of these General Conditions.

The Contractor's Representative or alternate shall be present at the worksite at all times while Work is in progress. Failure to observe this requirement constitutes a suspension of the Work by the Contractor, until such time the Contractor's Representative or alternate is again present at the worksite. All Work performed while the Contractor's Representative or alternate is absent from the worksite is ineligible for payment. Work performed in violation of these provisions shall be removed and reconstructed, refabricated, or reinstalled under the required supervision. The Contractor is ineligible for time extensions or additional payment for costs or impact that directly or indirectly are caused by said suspension. Those ineligible costs and impacts include what the Contractor may incur for slowdown, delays, idled equipment, removals, reconstruction, refabricating, reinstalling and other. During such periods of noncompliance when the Contractor's Representative is not on site, written instructions issued by the Engineer or the Inspector to *any* employee of the Contractor is considered adequate notice to the Contractor.

Whenever the Work is defined as being suspended under the provisions of this Article, any such suspension in excess of ten (10) calendar days shall constitute just cause for the City to terminate the Contract under the provisions of "Termination of Contract by City (Contractor Default)" of these General Conditions.

00303 FAMILIARITY WITH PLANS AND SPECIFICATIONS (9/18/07)

It shall be the responsibility of the Contractor to be thoroughly familiar with all details of the Project, including the work of the Contractor's forces and all Subcontractors. The Contractor shall call the following to the attention of both the Engineer and the Inspector in writing within twenty-four (24) hours of discovery, before any Work is performed:

1) Errors and omissions in the Plans and Specifications, including, but not limited to, code violations, typographical errors and notational errors where ambiguity or inadequate description exists;

2) Work on the Plans or in the Specifications which, if so constructed, would result in a conflict or interference with other Work or the Work of other trades, including the location of fixtures and equipment;

3) Existing improvements visible at the job site, for which no existing disposition is made on the Plans or in the Specifications but which could reasonably be assumed to interfere with the satisfactory completion of the improvements contemplated by the Plans and Specifications.

Failure to notify shall constitute a waiver by the Contractor of any claim for delay or other damages occasioned by such defect. If the Contractor proceeds with the Work without instructions from the Engineer, the incorrect Work shall be removed and corrections made to comply with the Engineer's instructions, at no cost to the City.

00304 JOB CONDITIONS (9/18/07)

The Contractor shall determine the nature and types of work to be performed, ascertain all conditions affecting construction procedure and sequencing of Work operations in the execution of the Work, including condition of available roads and streets, or clearances, restrictions and other limitations affecting transportation and ingress and egress to the job site. This determination must be made during the Bidding Period with any costs and impact included within the Bid.

The Contractor shall observe any "Site Security" restrictions described in the General Requirements or the Plans.

Whenever the Work requires entry into an operating plant, occupied building, working facility or other secured location, observe the following unless otherwise noted:

1) No vehicles are allowed except delivery trucks and Contractor's identified vehicles and equipment.

2) It shall be the Contractor's sole responsibility to arrange and pay for offsite employee parking and to provide transportation from the parking area to the Work site.

3) The Contractor shall fully cooperate with all authorities on the job site and other contractors not related to the Work of this Contract who might be at the job site.

4) The Contractor shall fully comply with all regulations in force at the job site.

00305 JOB BULLETIN BOARD (11/27/01)

When a Field Office is required, the Contractor shall provide and mount a Job Bulletin Board at the field office in a location where it can be readily seen by all of the Contractor employees. The bulletin board shall be substantially built to a minimum size of 900 mm high x 1200 mm wide (3' x 4') shall be fitted with a framed safety glass door and lock. The glass on the outside shall be protected with a 12 mm x 12 mm (½" x ½") galvanized wire mesh screen permanently attached to the frame. The bulletin board shall be finished inside and outside with two (2) coats of an exterior paint.

00306 RESPONSIBILITY FOR SITE (10/17/01)

The Contractor is in full charge of and responsible for the job site and the Work. The "Interface/ Coordination Requirements" of the General Requirements describe interfaces with other contractors working on the job site. No other operations of any nature shall be performed except as specifically authorized in the Contract Documents or as authorized by the Engineer.

The Contractor shall exercise care not to damage improvements and adjacent land. The Contractor shall correct any damage caused within seventy-two (72) hours by restoring the land and improvements damaged to their original condition and shall indemnify and hold the City harmless for any such damage as specified in "Indemnification" of these General Conditions.

00307 WORKMANSHIP AND MATERIALS (4/12/95)

All materials, parts and equipment furnished by the Contractor for the Work shall be new, high grade and free from defects. Materials and work quality shall be subject to the Inspector's approval.

00308 INJURY AND ILLNESS PREVENTION - SAFETY MEASURES (9/18/07)

Safety is the responsibility of the Contractor. The Contractor shall observe and comply with the safety provisions of all applicable laws, building and construction Codes, safety and health regulations of the California Code of Regulations, and with applicable City Safety Policies.

Every employer (Prime Contractor and/or Subcontractor) employed on the Project shall establish, implement, and maintain an effective Injury and Illness Prevention Program in accordance with Section 3203 of the General Industry Safety Orders.

Each Contractor/Subcontractor shall make the applicable Injury and Illness Prevention Program specific for site conditions and type of Work to be performed on the Project.

Each prime Contractor and Subcontractor working on the Project shall make its Injury and Illness Prevention Program available to the Inspector and the Engineer prior to beginning any Work on the Project.

If a work procedure or site condition exists that violates the Contractor's/Subcontractor's Injury and Illness Prevention Program or any other safety standard, the Engineer or Inspector may order the Contractor to immediately comply with said safety provisions, and the Contractor shall comply with such orders at its own expense. If the Contractor fails to act promptly, the Engineer or Inspector is authorized to suspend the Work. Failure of the Engineer or the Inspector to make such demands shall not relieve the Contractor of its obligations to secure the safe conduct of the Work.

If a work procedure or site condition creates an immediate hazard to the health or safety of the public, City employees, property, or a licensee, the City may suspend all work on the project. Without prior notice, the City may also correct such hazardous conditions using other forces or contractors, at the Contractor's sole expense. Any delays or impacts arising on the Work as a result of such an emergency shall be at the sole expense of the Contractor with no time extension, additional reimbursement for extended overhead, or interest on monies due, allowed for the Contractor.

First aid facilities and supplies shall be kept and maintained by the Contractor at the site of the Work.

The Contractor shall cause all persons within the construction area to wear protective helmets. In addition, all employees of the Contractor and its Subcontractors shall be provided with, and required to use, personal protective and life saving equipment set forth in California Construction Safety Orders and the OSHA Safety and Health Standards for Construction.

The Contractor shall provide safety equipment, material, and assistance to City personnel to properly inspect all phases of the Work, including final inspection. Such equipment, material and assistance shall include, but not be limited to testing for the presence of explosive or toxic gases and oxygen deficiency in confined spaces, blowers, ventilators, first aid supplies and equipment, ladders, scaffolds, shoring, and personnel for standby assistance as required. Personal safety devices such as harnesses, lanyards, and self-contained breathing apparatus will be provided by the Bureau of Contract Administration, unless otherwise noted. When the Work requires specialized safety equipment, the Contractor shall provide new sets of such equipment, the training deemed necessary by the Inspector, and maintenance of such equipment. When asbestos is being removed, the requirements of the CCR, Title 8, Div. 1, Chapter 4, Subchapter 4, "Construction Safety Orders," and Subchapter 7, "General Industry Safety Orders," shall be implemented.

In cases involving exposure of City personnel to toxic/hazardous materials and/or elements, the City Personnel Department, Occupational Safety Office, shall have field review authority over the Contractor's operations.

For additional requirements, refer to "Safety and Preconstruction Safety Conference" of the General Requirements.

00309 PROTECTION OF PERSONS AND PROPERTY AND RESTORATION OF EXISTING IMPROVEMENTS (1/05/10)

The Contractor shall not destroy, remove, or otherwise disturb any existing survey monuments or reference points without authorization from the Engineer. No pavement breaking or excavation shall be started until all survey monuments or other reference points that will be disturbed by the construction operations have been properly referenced by the Engineer. It shall be the Contractor's responsibility to notify the Engineer and the Inspector of the time and location that Work will be done. Such notification shall be sufficiently in advance of construction so that there will be no delay due to waiting for survey points to be satisfactorily referenced for restoration. All survey monuments or reference points disturbed,

without authorization by the Engineer, shall be accurately restored by the City at the Contractor's sole expense after all street or roadway resurfacing has been completed.

Unless otherwise noted, all construction operations shall preserve existing drainage paths, vehicular and pedestrian access. The Contractor shall also regularly attend to dust, mud, trash, noise, debris, and etceteras, caused by their construction operations to prevent a public nuisance.

All paved areas including asphalt concrete berms cut or damaged as a result of construction shall be replaced with similar materials and of equal thickness to match the existing adjacent undisturbed areas, except where specific resurfacing requirements have been called for in the Contract Documents or in the requirements of the agency issuing the permit. All temporary and permanent pavement shall conform to the requirements of the affected pavement owner. All pavement which is subject to partial removal shall be neatly saw cut in straight lines.

In order to obtain a satisfactory junction with adjacent surfaces, the Contractor shall saw cut back and trim the edge so as to provide a clean, sound, vertical joint before permanent replacement of an excavated or damaged portion of pavement. Damaged edges of pavement along excavations and elsewhere shall be trimmed back by saw cutting in straight lines. All pavement restoration and other facilities restoration shall be constructed to finish grades compatible with adjacent undisturbed pavement.

Where sidewalks have been removed for purposes of construction, the Contractor shall place suitable temporary sidewalks, properly protected, promptly after backfilling and shall maintain them in satisfactory condition until the final restoration thereof has been made.

When existing planted areas are regraded, or removed and replaced because of the Contractor's operations, the soil in these areas shall be prepared and the area replanted-in-kind. All landscape materials shall conform to the requirements of the owner of the affected planted area.

All utilities encountered along the line of the Work shall be maintained continuously in service during all the operations under the Contract, unless other arrangements satisfactory to the Engineer are made. Utilities shall include, but not be limited to, all above or below-ground conduit, pipes, ducts, cables, and appurtenances associated with oil, gas, water, steam, irrigation, process, sewer, storm drain, wastewater, air, electrical, power, instrumentation, communication, telephone, cable, TV, and lighting systems, whether or not owned by the City.

The Contractor shall protect all existing utilities and improvements not designated for removal. Potholing for utilities and structures shown or addressed on the drawings shall be accomplished at the Contractor's expense. The Contractor shall determine the exact locations and depths of all utilities indicated on the Drawings. The Contractor shall make exploratory excavations of all utilities. The Contractor, in conformance with City Ordinance No. 150,478, shall pothole existing subsurface installations carrying unstable substances to determine their locations and elevations before commencing excavation. All such exploratory excavations shall be performed as soon as practicable after award of the Contract and in any event, a sufficient time in advance of construction to avoid possible delays to the Contractor's Work. When such exploratory excavations show the utility location as indicated on the Drawings to be in error, the Contractor shall so notify the Inspector and the Engineer. The Contractor should not rely upon plan designation of location of underground utilities. The number of exploratory excavations and extent of potholing required shall be that number which is sufficient to determine the alignment and grade of the utility. These costs are a part of the Bid.

Prior to any excavation in the vicinity of any existing underground facilities, the Contractor shall notify the Inspector and the Engineer, and the respective authorities representing the owners or agencies responsible for such facilities, not less than three (3) Workdays, nor more than five (5) Workdays, of their intention to begin excavation. The Contractor shall make arrangements for and provide access such that a representative of said owners or agencies may be present during such Work. If the proposed excavation is within 10 feet of a high priority subsurface installation, as defined by Section 4216 of the

California Government Code, the Contractor shall conduct an onsite meeting with the owner of the utility to determine actions or activities required to verify the location of the high priority subsurface installation before proceeding with any excavation activities.

Before commencing any excavation, the Contractor shall obtain an Underground Service Alert (USA) inquiry I.D. number. Two workdays, shall be allowed after the I.D. number is obtained and before the excavation work is started so that utility owners can be notified. If the utility owner is the City, a confirmation number indicating the City has been notified shall be obtained by USA and/or the Contractor from the appropriate City department. The I.D. number together with the date acquired shall be reported to the Inspector when calling for inspection. I.D. numbers will not be given more than ten (10) Workdays before starting excavation work.

Unless otherwise indicated on the Plans or Specifications, where the proper completion of the Work requires the temporary or permanent removal and/or relocation of an existing utility or other improvement, which is shown on the Plans, the Contractor shall, at its own expense, remove and, without unnecessary delay, temporarily replace or relocate such utility or improvement to a place and in a manner as directed by the Engineer, and the owner of the facility. In all cases of such temporary removal or relocation, restoration to former location shall be accomplished by the Contractor in a manner that will restore or replace the utility or improvement as nearly as possible to its former locations and to as good or better condition than found prior to removal. When utilities that are to be removed are encountered within the area of operations, the Contractor shall notify the Engineer not less than fifteen (15) days in advance for necessary measures to be taken to prevent interruption of service.

The Contractor shall notify the Engineer thirty (30) calendar days in advance of any proposed connection, and shall notify the Engineer and the Inspector twenty-four (24) hours prior to the actual connection, to any existing utility.

Any utility or improvement which is damaged by the Contractor shall be immediately repaired at the Contractor's expense, to a condition equal to, or better than, the condition it was in prior to such damage or temporary relocation. If the Contractor fails or refuses to promptly repair the utility or improvement, the City may perform the necessary Work at the Contractor's expense. The Contractor will also not be entitled to any time extension, additional reimbursement, extended overhead, or interest on monies due. The Contractor is not relieved of provisions of this Article even in the event such damage occurs after backfilling or is not discovered until after completion of backfilling.

All repairs to a damaged improvement shall be inspected and approved by the Inspector and an authorized representative of the improvement owner before being concealed by backfill or other Work. In case of damage, which in the opinion of the Engineer or the Inspector, threatens the safety of persons or property, the Contractor shall immediately make all repairs necessary for removal of the hazard. Should the Contractor fail to promptly take all necessary action, the City has the option to remove any hazard resulting from damages caused by the Contractor at the Contractor's expense without waiving any other rights the City may have. The Contractor will also not be entitled to any time extension, additional reimbursement, extended overhead, or interest on monies due.

In the event that the Contractor damages any existing utilities that are not shown on the Plans or the locations of which are not made known to the Contractor prior to excavation, the Contractor shall immediately notify the Inspector and take all measures necessary to prevent further damage. The Contractor shall then immediately make a written report to the Engineer and shall make repairs as directed by the Engineer.

Notwithstanding that an existing utility or substructure is not shown on the original Plans and Specifications, if the existence and location thereof was made known to the Contractor prior to excavation, the utility or substructure constitutes an existing known condition, and the Contractor is responsible for protecting the utility or substructure.

Damage to a utility known to the Contractor shall be repaired at the Contractor's expense.

00310 NON-CONFORMING WORK (1/30/03)

Except as set forth in this Article, all non-conforming Work and materials, in place or not, shall be removed immediately from the site or corrected to conform to all requirements of the Contract Documents, by the Contractor, at the sole expense of the Contractor.

If the Contractor fails to remove, replace or correct any non-conforming Work or materials within seventy-two (72) hours of discovery, the Inspector or the Engineer may cause such Work or materials to be removed and replaced. Such removal and replacement shall be at the sole expense of the Contractor with no entitlement to time extensions, additional reimbursement, extended overhead, or interest on monies due. In addition, all such cost shall be deducted from any amounts that are due or may become due to the Contractor.

Failure of the Inspector or the Engineer to notify the Contractor of any non-conforming Work shall not constitute acceptance of any non-conforming Work. The Contractor's obligation to remove, replace or correct any non-conforming Work, whenever discovered, shall continue to the end of the guaranty-warranty period provided for in "Guaranty-Warranty" of the General Requirements. The City reserves and retains all rights and remedies at law against the Contractor and their Surety for correction of any and all latent defects discovered after the guaranty-warranty period.

Any delays or impacts arising on the Work as a result of construction, fabrication or delivery of non-conforming work or materials shall be at the Contractor's sole expense, with no time extension, additional reimbursement for extended overhead, or interest on monies due allowed.

Examination of covered Work may be ordered by the Engineer or the Inspector for any reason. The Work shall be uncovered by the Contractor and if such Work is found to be in accordance with the Contract Documents, the City will issue a Change Order authorizing payment for the cost of examination and replacement. If such Work is found to be not in conformance with the Contract Documents, the Contractor shall correct the non-conforming Work and the cost of examination and correction of the non-conforming Work shall be borne solely by the Contractor.

Failure of the Contractor to comply with the requirements of this Article shall constitute default of the Contract by the Contractor and the City may terminate the Contract as provided for in Termination of Contract by City (Contractor Default).

00311 SUBCONTRACTORS AND SUB-SUBCONTRACTORS (10/28/14)

The Contractor shall perform on the site and with its own organization not less than fifty percent (50%) of the total Contract Price, unless a different percentage is designated in the Bid Proposal. Any items designated "specialty items" in the Bid Proposal may be performed by subcontract and the amount of all such "specialty items" may be deducted from the Contract Price before computing the amount of Work required to be performed by the Contractor with its own organization. The dollar value included in the percentage performed by the Contractor shall include the value of labor, materials and equipment to be incorporated or used in the Work and directly purchased by the Contractor and shall not include the value of Work, including labor, materials and equipment, incorporated or used in the Work, performed or provided by Subcontractors.

To be eligible for award of this Project, the Board requires Bidders to subcontract a minimum of its total Bid to qualified Subcontractors, as discussed in the "Mandatory Subcontracting Minimum (MSM) Requirements" of the Bid Proposal. Failure to list Subcontractors and the subcontracted dollar amounts on the applicable pages of the Bid Proposal to satisfy the MSM is cause for the Bid to be declared nonresponsive and rejected by the Board.

Bidders must list all Subcontractors in the Bid, regardless of the dollar amount of the work to be performed, if the Bidder wishes to have the Subcontract amount credited toward meeting both the MSM and MBE/WBE levels of participation of the Project. Subcontractors added to the project following acceptance of the Bid and award of the Project will not be credited toward meeting the required MSM and/or MBE/WBE levels of participation for this Project.

MSM credit will not be given to a joint venture partner listed as a Subcontractor by a joint venture.

Listed vendors and/or Suppliers will be limited to 60% of their listed dollar value toward achieving both the MSM and the anticipated MBE/WBE levels of participation for this Project, unless the vendor and/or Supplier manufactures or substantially alters the materials/supplies.

The designated percentage of the total Contract Price the Contractor is to perform may not be reduced below that level by the addition of Subcontractor's added after Award of the Project.

The Inspector, acting on behalf of the Board, will be responsible for approval of all Subcontractors, whether Bid-listed or not, and all Sub-subcontractors, at any level, employed on the Project.

Each Subcontractor who will perform Work or render services in an amount in excess of one-half of 1 percent of the Contractor's total Bid or $10,000.00, whichever is greater, must be listed in the original Bid.

Subletting or Subcontracting of any portion of the Work in excess of one-half of 1 percent of the Contractor's original total Bid or $10,000.00, whichever is greater, for which no Subcontractor was designated in the original Bid shall only be permitted in cases of public emergency or necessity, and then only after a finding reduced to writing as a public record of the Inspector setting forth the facts constituting the emergency or necessity.

If the Contractor fails to specify a Subcontractor, or if the Contractor specifies more than one Subcontractor for the same portion of Work to be performed under the Contract in excess of one-half of 1 percent of the Contractor's total original Bid or $10,000.00, whichever is greater, the Contractor agrees that it is fully qualified to perform that portion of Work itself, and that it shall perform that portion itself.

The Contractor shall set forth in its Bid the following: The name, location of the place of business, telephone number, California State Contractor's License Number and dollar amount of each Subcontractor who will perform Work, labor, service, supply specifically fabricated materials or equipment in an amount in excess of one-half of 1 percent of the Contractor's total Bid, or $10,000.00, whichever is greater.

The Contractor shall list only one Subcontractor for each portion of Work as defined by the Contractor in its Bid.

Acceptance by the Board of its Bid is dependent upon each Bid listed Subcontractor, and all subsequently approved additional Subcontractors, performing the dollar value of Work listed or approved. Any reduction, increase, or other change to any Subcontract amount without prior approval is considered an Unauthorized Subcontractor Substitution and is subject to a penalty of ten (10) percent of the Subcontract amount, whether Bid-listed or not. A Subcontract dollar value increased or reduced as the result of a Change Order issued by the Engineer to add or delete from the original scope of Work shall not be subject to a penalty for an Unauthorized Subcontract Substitution.

Acceptance by the Board of its Bid shall not entitle Subcontractors to recognition for any direct or contractual relationship with the City, nor shall it constitute approval of the use of any materials other than those specified.

The Contractor shall be responsible for all acts of all Subcontractors at all tiers. The Contractor shall coordinate all work performed by subcontractors in the interest of the City.

All Subcontractors, at all tiers, who will be working on the Project shall be approved in writing by the Inspector prior to beginning Work, regardless of the dollar amount of Work to be performed, and whether or not they were listed in the original Bid.

Requests for approval of all Subcontractors, or request for substitution of a Subcontractor, shall be made in writing to the Inspector, and said request shall contain the following information for each Subcontractor:

1) Project Name

2) Project Work Order Number

3) Subcontractor's Name

4) Subcontractor's Address

5) Subcontractor's Phone Number

6) Subcontractor's Status (WBE, MBE, OBE)

7) Subcontractor's State of California Contractor License Number

8) Subcontractor's City Business Tax Registration Certificate Number (BTRC)

9) Dollar amount of Subcontract work to be performed

10) Description of Subcontract work to be performed

Failure to provide any of the information listed will result in denial of approval until such time as the information is provided.

Failure to obtain approval of the Inspector prior to each Subcontractor, at any level, performing Work on the Project may result in suspension of Work by that Subcontractor, removal of Work performed by unapproved Subcontractors, assessment of penalties, and possible sanctions against the Contractor. Failure to obtain approval of any Subcontractor or Sub-subcontractor at any level is subject to a penalty of ten (10) percent of the total amount of work performed by said Subcontractor.

Additional Subcontractors may be added after the time of original Bid. The value of Work to be performed by additional Subcontractors may not be greater than one-half of 1 percent of the Contractor's original total Bid or ten thousand dollars ($10,000.00), whichever is greater, unless the Subcontractor will be performing Work added by Change Order causing changes or deviations from the original Contract.

The Contractor shall provide the dollar amount of Work to be performed in all requests for additional Subcontractors and/or Sub-subcontractors. Failure to specify a dollar amount of Work to be performed will result in denial of additional Subcontractors until such time as the amount is provided.

Failure of the Contractor to request and obtain approval for a reduction in either a Bid-listed Subcontract amount or the Subcontract amount of a Subcontract added after the original Bid shall result in a penalty of ten percent of the Subcontract amount.

A Contractor whose Bid is accepted may not:

1) Substitute any person as Subcontractor in place of a Subcontractor listed in the original Bid, except that the Inspector, acting on behalf of the Board, may consent to the substitution of another Subcontractor for one of the following situations:

A) When the Subcontractor listed in the original Bid or proposal after having had a reasonable opportunity to do so fails or refuses to execute a written contract, when that written contract, based upon the general terms, conditions, plans and specifications for the project involved or the terms of that Subcontractor's written bid, is presented to the subcontractor by the Contractor.

B) When the listed Subcontractor becomes bankrupt or insolvent.

C) When the listed Subcontractor fails or refuses to perform its subcontract.

D) When the listed Subcontractor fails or refuses to meet the bond requirements of the Contractor as set forth herein.

E) When the Contractor demonstrates to the Inspector's satisfaction that the name of the Subcontractor was listed as a result of an inadvertent clerical error.

F) When the listed Subcontractor is not licensed pursuant to the State of California Contractor's License Law.

G) When the listed Subcontractor refuses to obtain a City of Los Angeles Business Tax Receipt Certificate (BTRC).

H) When the Inspector concurs with the Contractor that the Work being performed by the listed Subcontractor is unsatisfactory and not in substantial accordance with the Contract Documents, or the listed Subcontractor is delaying or disrupting the progress of the work.

I) When the listed Subcontractor fails to submit an Affirmative Action Plan acceptable to the Inspector.

J) When the Board determines that a listed Subcontractor is not a responsible contractor.

2) Permit a Subcontract to be voluntarily assigned or transferred or allow it to be performed by anyone other than the original Subcontractor listed in the original Bid, without the consent of the Inspector.

3) Other than in the performance of Change Orders causing changes or deviations from the original Contract, sublet or Subcontract any portion of the Work in excess of one half of 1 percent of the Contractor's total Bid as to which its original Bid did not designate a Subcontractor.

4) Reduce the dollar amount of a Bid-listed Subcontract without the written approval of the Inspector.

A request for substitution of any Subcontractor, at any level, whether Bid-listed or not, must be made in writing to the Inspector and must include letter(s) of explanation as to the reason for the requested substitution.

It is considered a substitution if anyone other than the Bid-listed and/or approved Subcontractor(s), including the Contractor, performs any portion of the Work designated to be performed by said Subcontractor.

Failure to obtain approval for a Subcontractor substitution may result in rejection of the affected Work, a penalty of ten (10) percent of the total amount of the Subcontract, and possible sanctions by the City.

All substitutions of Subcontractors, whether MBE/WBE or not, shall be approved in writing by the Board prior to any Work being performed by the substituting Subcontractor.

The Contractor shall conduct a Good Faith Effort prior to approval of any requested Subcontractor substitution, regardless of the status (WBE/MBE/OBE/DBE) of the contractor being substituted for. For MBE/WBE/OBE Subcontractor substitution requests, the Contractor shall comply with the Good Faith Effort requirements of Part III (F) (2) of the Bid Proposal. The Good Faith Effort for any requested Subcontractor substitution must be reviewed and approved by the Special Research and Investigation Section of the General Services Division of the Bureau of Contract Administration, whether the Subcontractor was Bid listed or approved after the Award of the Project.

There shall be no decrease in dollar value of Work to be performed by Subcontractors approved as a substitute for a Bid-listed Subcontractor without a change in scope of the Work to be performed by the originally Bid-listed Subcontractor. Written evidence of a change of scope must be provided by the Engineer prior to approval of a change in dollar value of a Bid-listed Subcontractor.

Prior to approval of the Contractor's request for substitution, the Inspector shall give notice in writing to the Subcontractor affected by the Contractor's request to substitute and of the reasons for the request. The notice shall be served by certified or registered mail to the last known address of the Subcontractor. The listed Subcontractor who has been so notified shall have five (5) Workdays within which to submit written objections to the substitution. Failure to file these written objections within five (5) Workdays of notification shall constitute the listed Subcontractor's consent to the substitution. Notification by the Inspector may be made by phone in lieu of written notification via certified or registered mail if agreed to by the listed Subcontractor and followed by written request. Upon notification by phone, the listed Subcontractor may file written objections within five (5) days of notification.

If written objections are filed, the Inspector shall give notice of at least five (5) Workdays to the listed Subcontractor of a hearing on the Contractor's request for substitution.

The Contractor, as a condition to assert a claim of Inadvertent Clerical Error in the listing of a Subcontractor, shall within two Workdays after the time of the original Bid opening by the Board give written notice to the Inspector and copies of such notice to both the Subcontractor he claims to have listed in error and the intended Subcontractor who had bid to the Contractor prior to Bid opening.

Written notice of an Inadvertent Clerical Error shall be forwarded within two (2) days after the time of the original Bid opening by every Contractor claiming such an error. Failure to forward such notice within the time prescribed shall make any such subsequent claim of Inadvertent Clerical Error invalid.

Any listed Subcontractor who has been notified by the Contractor of an Inadvertent Clerical Error shall be allowed six (6) Workdays from the time of the Bid opening to submit to the Inspector and to the Contractor written objection to the Contractor's claim of Inadvertent Clerical Error. Failure of such listed Subcontractor to file such written notice within the six (6) Workdays shall constitute agreement that an advertent clerical error was made.

The Inspector shall, in the absence of compelling reasons to the contrary, consent to the requested substitution based on an Inadvertent Clerical Error if:

1) The Contractor, the Subcontractor listed in error, and the intended Subcontractor each submit an affidavit to the Inspector along any additional information as the parties may wish to submit that an Inadvertent Clerical Error was in fact made, provided that the affidavits from each of the three parties are filed within eight (8) Workdays from the time of the original Bid opening, or

2) If such affidavits are filed by both the Contractor and the intended Subcontractor within eight days of the original Bid opening but the Subcontractor whom the Contractor claims to have listed in

error does not submit within six (6) Workdays, to the Inspector and to the Contractor, written objection to the Contractor's claim of Inadvertent Clerical Error as provided in this article.

If such affidavits are filed by both the Contractor and the intended Subcontractor but the listed Subcontractor has, within six (6) Workdays from the time of the original Bid opening, submitted to the Inspector and to the Contractor written objection to the Contractor's claim of Inadvertent Clerical Error, the Inspector shall investigate the claims of all parties and schedule a public hearing before the Board to determine the validity of such claims. Any determination shall be based on the facts contained in the declarations submitted under penalty of perjury by all three parties and supported by testimony given to the Board. The Board may, on its motion or that of any other party, admit testimony of other Contractors, any Bid registries or depositories, or any other party in possession of facts, which may have a bearing on the decision of the Board. The findings of the Board shall be final.

The Contractor shall pay its Subcontractors, within seven (7) days of receipt of each progress payment, the respective amounts allowed the Contractor on account of the work performed by its Subcontractors, to the extent of each Subcontractor's interest therein. Payments to Subcontractors shall be made based on the payment estimate approved for payment by the Inspector.

The Contractor shall forward to the Inspector a monthly report indicating the date and amount of each payment made to its Subcontractors from the most recent progress payment. If the Contractor has a written agreement with any Subcontractor allowing for payment later than 7 days after receipt of each progress payment, the Contractor shall include the written agreement(s) in its monthly report.

00312 RESPONSIBILITY OF CONTRACTOR TO ACT IN EMERGENCY (11/21/01)

When an emergency arises creating an imminent hazard to persons or threatening the loss or damage to property, the Contractor shall take prudent action without instruction from the City. The Contractor shall immediately notify the Engineer and the Inspector of any emergency action taken. During such emergencies, if the Contractor fails to act, the Engineer or Inspector may instruct the Contractor to take action. Should the Contractor still fail to act, the Engineer or Inspector may respond to the emergency with other forces or contractors at the Contractor's sole expense. Claims for additional time, compensation or interest will be rejected if the Contractor's actions or inaction created the emergency. Similarly, any Claims will be offset by the amount that the Contractor's actions or inaction aggravated the emergency.

00313 ASSIGNMENT (2/09/95)

The Contractor shall not assign, transfer, convey or otherwise dispose of this Contract or any of the proceeds thereunder unless written consent of the City has been obtained. No right under this Contract or claim for any proceeds due or to become due hereunder shall be asserted against the City, or persons acting for the City, by reason of any so-called assignment, transfer or conveyance of this Contract or any part thereof unless such assignment, transfer or conveyance has been authorized by the written consent of the City. The instrument of assignment, transfer or conveyance shall contain a clause subordinating the claim of the assignee, transfer or conveyor to all prior liens for services rendered or materials supplied for the execution of the Work.

00314 NOTIFICATION OF HAZARDOUS SUBSTANCES (10/17/01)

The existing facilities or Jobsite may contain asbestos, PCBs, corrosives, carcinogens, or other hazardous materials. Should the Contractor or any of its Subcontractors, while performing Work on or in the vicinity of existing facilities, unexpectedly encounter any material identified in the California Code of Regulations, Title 8, as a hazardous material not shown on the Plans or addressed in the specifications, or have reason to believe that any other material encountered may be a hazard to human health and safety and/or the environment, the Contractor shall stop the Work, cordon off the affected area to secure

entry, and shall immediately notify the Inspector and the Engineer. Removal and disposal of the hazardous material not shown on the Plans or addressed in the specifications, if the Engineer deems it necessary, will be done by and at the expense of the City. The City will provide the Contractor, upon request, with copies of Material Safety Data Sheets (MSDS) covering hazardous materials identified by the Contractor that are encountered in existing facilities during the course of the Work and that are not removed by the City.

In the event that the Contractor is delayed in the completion of the Contract solely because of such hazardous materials or conditions not previously identified in the Contract Documents, the Contractor shall be entitled to an extension of time in accordance with "Unavoidable Delay" of these General Conditions.

For new construction Work and for all Contractor furnished supplies and equipment that may contain hazardous materials, the Contractor shall develop and implement a written Hazard Communication Program for its employees in accordance with the California Code of Regulations. The Contractor's basic written Hazard Communication Program shall be submitted to the Engineer and the Inspector prior to the start of Work at the site, and shall be revised and kept current as required by the continuing progress of the Work. The Contractor's Hazard Communication Program shall also include the MSDS for all hazardous materials the Contractor will be using at the facility. All provisions concerning MSDS for hazardous materials shall be met before the hazardous material is delivered to the site.

The Engineer shall be provided with three (3) copies and the Inspector with four (4) copies of the Contractor's written Hazard Communication Program, Contractor provided MSDS, and all revisions and modifications thereto.

The Contractor and Subcontractors shall comply with all State and Federal statutes and regulations on training, handling, storage, public notification, and disposal of hazardous materials and hazardous wastes. In the event that the Contractor or its Subcontractors spills or releases hazardous materials, the Contractor shall immediately notify the Inspector and the Engineer and any required agencies of the spill or release and the Contractor shall stop the Work, and cordon off the affected area to secure entry. Removal and disposal of the hazardous material, if the Engineer deems it necessary, will be done by the City at the Contractor's expense. Further, the Contractor shall notify the Engineer and the Inspector when hazardous materials are brought on-site and when hazardous materials and hazardous wastes are removed from the site. Hazardous Materials brought on site shall be accompanied by four (4) copies of MSDS, which shall be provided to the Inspector before such materials are unloaded.

00315 INDEPENDENT CONTRACTOR (10/21/99)

The Contractor represents that it is fully experienced and properly qualified to perform the class of Work required for the Contract and that it is properly licensed, equipped, organized and financed to perform the Work. The Contractor shall be an independent contractor. The Contractor is not an agent of the City in the performance of the Contract, and shall maintain complete control over its employees and its Subcontractors and Suppliers of any tier. Nothing contained in the Contract or any Subcontract awarded by the Contractor shall create any relationship between any Subcontractor and the City. The Contractor shall perform the Work in accordance with its own methods, in compliance with the terms of the Contract.

00316 INDEMNIFICATION (10/17/01)

Except for the active negligence or willful misconduct of the City, the Contractor undertakes and agrees to defend, indemnify and hold harmless, through legal counsel acceptable to the City, the City, and any and all of the City's Boards, Officers, Agents, Employees, Assigns, and Successors in Interest from and against all suits and causes of action, claims, losses, demands and expenses, including, but not limited to, attorney's fees and cost of litigation, damage or liability of any nature whatsoever, arising out of or related to the performance or nonperformance by Contractor or its Subcontractors, Sub-Subcontractors, or Suppliers, of any tier, of any portion of the construction of the Project, including but not limited to

Contractor's negligent acts, errors, omissions, breach of contract, breach of warranty (express or implied), or willful misconduct.

It is agreed that such defense and indemnity shall extend to the City's Architect/Engineer or other Design Consultant providing services under written agreement with the City covering any portion of the Project. Provided, however, that the Design Consultant shall be solely responsible for the enforcement of any request made by said Consultant for indemnification or defense by the Contractor. It is further provided that the City shall have no liability whatsoever for any failure of the Contractor to comply with any request from the consultant for indemnity or defense.

It is further agreed that the defense and indemnity obligations of the Contractor under this Article shall not extend to the liability of the Design Consultant or its agents, employees or subconsultants, arising as a result of such indemnitee's own active negligence, errors or omissions or from (1) the preparation or approval of maps, Plans, opinions, reports, surveys, change orders, designs or Specifications, or (2) the giving of or failure to give directions or instructions by the indemnitee provided that such giving or failure to give is the primary cause of the damage or injury.

00317 INSURANCE (1/05/10)

These provisions apply unless otherwise noted in the General Requirements.

A) GENERAL

During the term of this Contract and without limiting the Contractor's indemnification of the City, the Contractor shall provide and maintain at its own expense, insurance having the limits customarily carried and actually arranged by the Contractor but not less than the amounts and types listed on the Insurance Requirements Form in these Contract Documents, covering its operations hereunder subject to the following conditions as they may variously apply:

1) ADDITIONAL INSURED/ADDITIONAL INTEREST/LOSS PAYEE

The City, its Boards, Officers, Agents, and Employees shall be included as:

a) Additional Insureds in all required General Liability and Automobile Liability insurance.

b) Named Insureds in all required Owners and Contractors Protective Liability and Builder's Risk insurance policies.

c) Loss Payee As Its Interest May Appear in all required property, fidelity or Surety coverages.

2) INSURANCE APPROVAL

All insurance required hereunder shall conform to the City requirements established by Charter, ordinance or policy. Evidence of insurance shall be approved by the Office of the City Administrative Officer, Risk Management prior to commencement of any Work or tenancy under this Contract in accordance with the Los Angeles Administrative Code.

3) ALTERNATIVE PROGRAMS/SELF-INSURANCE

Alternative Risk Financing mechanisms such as Risk Retention Groups, Risk Purchasing Groups, off-shore carriers, captive insurance programs and self-insurance programs are subject to separate approval after the City has reviewed their financial statements.

4) ADMITTED CARRIER/LICENSED CALIFORNIA BROKER

All Insurance must be provided by an insurer admitted to do business in California or written through a California-licensed surplus lines broker or through an insurer otherwise acceptable to the City.

Non-admitted coverage must also contain a Service of Suit provision whereby the underwriters will submit as necessary to any court of competent jurisdiction in California and agree that all matters arising thereunder will be determined in accordance with the law and practice of such court. It must further give the name and address of the underwriter's agent for service of process located within California or must nominate the California Insurance Commissioner as such agent.

5) CONTRIBUTION NOT REQUIRED

The Contractor's insurance shall be primary and will not require contribution or shall be endorsed to effect these provisions.

6) CANCELLATION/REDUCTION IN COVERAGE NOTICE

With respect to the interest of the City, if an insurance company elects to cancel insurance before the stated expiration date, or declines to renew in the case of a continuous policy, or materially reduces the coverage period by changing the retroactive date (if any), or the extended discovery period (if any), or reduces the stated limits other than by impairment of an aggregate limit, or materially reduces the scope of coverage which affects the City's interest, the company will provide the City at least thirty (30) calendar days (ten (10) calendar days for non-payment of premium) prior written notice of such election. Notice will be addressed as follows: CAO-RISK MANAGEMENT, MAIL STOP 132, CITY HALL EAST 1240, 200 NORTH MAIN STREET, LOS ANGELES, CA 90012-4190.

7) ACCEPTABLE EVIDENCE

Electronic submission via Track4LA™, the City's online insurance compliance system (http://track4la.lacity.org), is the preferred method for submitting evidence of insurance. Track4LA™ can be used by insurance brokers and agents to submit Contractor insurance certificates directly to the City using the ACORD 25 Certificate of Liability Insurance in electronic format. Insurance Industry Certificates of Insurance other than the ACORD 25 may also be accepted. However **all** Certificates must provide a thirty (30 days' notice provision (ten (10) days for non-payment of premium) AND an Additional Insured Endorsement naming the City an additional insured completed by Contractor's insurance company or its designee. If the policy includes an automatic or blanket additional insured endorsement, the Insurance Certificate must state that the City is an automatic or blanket additional insured. An endorsement naming the City as an insured is required on all Builder's Risk policies. An endorsement naming the City as Loss Payee as its Interest may appear is required on all property, fidelity or Surety coverages.

Alternatively, the Contractor may submit a copy of the full insurance policy containing language which complies with subparagraphs 1) through 6) above.

Additional Insured Endorsements DO NOT apply to the following:

- Indication of compliance with statute, such as Workers' Compensation Law.
- Professional Liability insurance.

8) SEPARATION OF INSUREDS

Except with respect to the insurance company's limits of liability, each liability insurance policy shall apply separately to each insured against whom a claim or suit is brought. The inclusion of any person or organization as an insured shall not affect any right which such person or organization would have as a claimant if not so included.

9) RENEWAL

Once the insurance has been approved by City, evidence of renewal of an expiring policy may be submitted on a manually signed renewal endorsement or certificate form. If the policy or carrier has changed, however, new evidence as specified in paragraphs 1) through 8) above, must be submitted.

B) AGGREGATE LIMITS/REDUCTION IN COVERAGE

If any of the required insurance coverages contain annual aggregate limits, the Contractor must give the City written notice of any pending claim or lawsuit which will materially diminish the aggregate within thirty (30) days of knowledge of same. Further, the Contractor must take appropriate steps to restore the impaired aggregate limits or provide replacement insurance protection within thirty (30) days of knowledge of same. The City may, at its option, specify a minimum acceptable aggregate for each line of coverage required.

The Contractor shall not make any substantial reductions in scope of coverage (e.g., elimination of contractual liability or reduction of discovery period) which may affect the City's protection without the City's prior written consent.

C) MODIFICATION OF COVERAGE

The City reserves the right at any time during the term of this Contract to change the amounts and types of insurance required hereunder by giving the Contractor ninety (90) calendar days advance written notice of such change. If such change should result in substantial additional cost to the Contractor, the City agrees to negotiate additional compensation.

D) FAILURE TO PROCURE INSURANCE

The Contractor's failure to procure or maintain required insurance or a self-insurance program during the entire term of this Contract shall constitute a material breach of this Contract under which the City may immediately suspend or terminate this Contract or, at its discretion, procure or renew such insurance to protect the City's interests and pay any and all premiums in connection therewith, and recover all monies so paid from the Contractor.

E) UNDERLYING INSURANCE

The Contractor shall be responsible for requiring indemnification and insurance as it deems appropriate from its consultants, agents and Subcontractors, if any, to protect the Contractor's and the City's interests, and for ensuring that such persons comply with any applicable insurance statutes. The Contractor should seek professional advice in this regard.

F) WORKERS' COMPENSATION

By signing this Contract, the Contractor hereby certifies that it is aware of the provisions of Section 3700 et seq., of the Labor Code which require every employer to be insured against liability for Workers' Compensation or to undertake self-insurance in accordance with the

provisions of that Code, and that it will comply with such provisions at all such times as they may apply during the performance of the Work pursuant to this Contract.

A waiver of subrogation in favor of the City will be required when Work is performed on City premises under hazardous conditions. The Contractor's Workers' Compensation and Employer's Liability insurance shall be endorsed accordingly.

G) ALL RISK BUILDER'S RISK/INSTALLATION FLOATER

During the course of construction, the Contractor shall secure and maintain an All Risk Builder's Risk Insurance policy covering loss, damage or destruction of property, including materials in transit and stored on and off site, in an amount equal to the value of the construction and materials on hand.

An Installation Risk or "Floater" Policy, written to cover only specific types of equipment during construction, may be provided to cover damage to Work or high valued equipment or materials.

Coverage shall remain in force until the Work is completed and accepted by the City. Acceptable evidence of coverage shall be in the form of an endorsement to the policy which names the City as a Named Insured and as Loss Payee As Its Interest May Appear.

H) TYPICAL COVERAGES REQUIRED

The coverages required in A above shall be at least as broad as:

1) General Liability: Insurance Services Office Commercial General Liability coverage (Occurrence Form CG 00 01) with an edition date prior to 2004. Coverage shall include protection for the City as additional insured with regard to the completed operations hazard.

2) Automobile Liability: Insurance Services Office Form Number CA 00 01 covering Automobile Liability, code 1 (any auto).

3) Professional Liability: If applicable, errors and omissions liability appropriate to the consultant's profession, with a discovery period of not less than twelve (12) months after completion of Work or termination of Contract.

I) TYPICAL LIMITS OF LIABILITY

Unless otherwise specified in Form Gen. 146/IR, the Contractor shall maintain limits no less than:

1) General Liability: $1,000,000 per occurrence, $2,000,000 aggregate for bodily injury and property damage. A separate aggregate shall apply to completed operations.

2) Automobile Liability: $1,000,000 per accident for bodily injury and property damage.

3) Employer's Liability: $1,000,000 per accident for bodily injury or disease.

1) Professional Liability: $1,000,000 per claim.

K) CONTRACT BONDS

Before the execution of the Contract by the Board, the Bidder shall file with the Board Surety bonds satisfactory to the Board in the amounts and for purposes noted below. Bonds shall be duly executed by a responsible corporate Surety, authorized to issue such bonds in the State of

California and secured through an authorized agent with an office in California. Bonds shall be issued by a Surety who is listed in the latest revision of U.S. Department of Treasury Circular 570, is authorized to issue bonds in California, and whose bonding limitation shown in said circular is sufficient to provide Bonds in the amount required by the Contract. The Bidder shall pay all Bond premiums, costs, and incidentals. On Contracts estimated by the Engineer to be less than $2 million, Bonds may be obtained from an insurance company with a Certificate of Authority from the California Insurance Commissioner authorizing the company to write Surety insurance within the State of California.

Each Bond shall be signed by both the Bidder and the Surety, and the signature of the authorized agent of the Surety shall be notarized.

The Bidder shall provide two good and sufficient surety bonds. The "Payment Bond" (Material and Labor Bond) shall be for not less than one hundred percent (100%) of the Contract Price, to satisfy claims of material suppliers and of mechanics and laborers employed by it on the Work. The bond shall be maintained by the Contractor in full force and effect until the Work is accepted by the Board, and until all claims for materials and labor are paid, and shall otherwise comply with the California Civil Code.

The "Performance Bond" shall be for one hundred percent (100%) of the Contract Price to guaranty faithful performance of all Work, within the time period prescribed, in a manner satisfactory to the Board, and that all materials and Workmanship will be free from original or developed defects, and comply with requirements and guaranty specified in “Guaranty-Warranty” of the General Requirements.

Should any Surety at any time be unsatisfactory to the Board, notice will be given the Contractor to that effect. No further payments shall be deemed due or will be made under the Contract until a new Surety shall qualify and be accepted by the Board.

Changes in the Work, or extensions of time, made pursuant to the Contract, shall in no way release the Contractor or Surety from its obligations. Notice of such changes or extensions shall be waived by the Surety. In addition to the bonds detailed above, the Contractor shall provide a guarantee bond as detailed in “Guaranty-Warranty” of the General Requirements.

Assistance in obtaining the City-required bid, payment and performance surety bonds is available through the City of Los Angeles Bond Assistance Program at (213) 258-3000 or http://cao.lacity.org/risk/BondAssistanceProgram.pdf.

00318 SERVICE OF NOTICE (2/09/94)

The delivering of any notice, instruction, claim or protest, or other written communication, personally to the Contractor or the Contractor’s Representative or to the Engineer, the Inspector, or to the City Clerk of the City shall constitute service therefore upon the Contractor, the Engineer, the Inspector, or the City, respectively.

The depositing of a post-paid (Registered Mail) wrapper directed to the official address of the Contractor, the Engineer, the Inspector, or the City in any post office, of any notice, instruction, claim or protest, or written communication, shall be deemed sufficient service thereof upon the Contractor, the Engineer, the Inspector, or the City, respectively, and the date of said service shall be the day following the date of postmark.

The official address of the Contractor shall be the address given in the accepted Bid or such other address as the Contractor may subsequently designate in writing either to the Engineer or to the City. The official address of the Engineer, the Inspector, and the City will be supplied to the Contractor after the award.

00319 AGENT TO ACCEPT SERVICE (10/21/99)

The Contractor shall maintain within Los Angeles County a duly authorized agent as identified in the Article entitled Service of Notice to accept service of legal process on its behalf, and shall keep the City advised of such agent's name and address during the duration of the Contract and for three (3) years after the Final Payment, or as long as the Contractor has warranty obligations under the Article entitled "Guaranty-Warranty" of General Requirements, whichever period terminates later. In the event that no such duly authorized agent is on file with the City, the Contractor agrees that the Secretary of State of the State of California shall be the Contractor's agent for service of legal process.

00320 – 00399 NOT USED

00400 TEMPORARY SUSPENSION OR DELAY OF WORK (9/18/07)

If the Work of the Contract is suspended or delayed, the Contractor shall so notify the Engineer within twenty-four (24) hours after the start thereof. If the Contractor is entitled to reimbursement for such suspension or delay, as specified hereinafter, the Contractor shall submit a completely detailed statement of the costs thereof, to the Engineer, within twenty (20) calendar days after the termination thereof. Failure to submit such statement of costs or notification within the time specified shall be deemed a waiver of any claims for delay or damages or both by the Contractor.

If the Work of the Contract is suspended or delayed through no fault of the City, except as provided for in Unavoidable Delay of these General Conditions, all expenses and losses shall be borne by the Contractor with no time extension, additional reimbursement for extended overhead, or interest on monies due, allowed to the Contractor.

If the Work of the Contract is suspended or delayed by an act of the City, or by failure of the City to furnish required information, and the Contractor thereby incurs expenses or sustains losses which could not have been avoided by the judicious handling of forces and equipment, and if by a diligent prosecution of the Work the Contractor could not have completed the Work before such suspension, the Contractor will be paid such amount as the Engineer may find to be a fair and reasonable compensation for such part of the Contractor's actual loss. In no case shall any compensation be made to cover any loss other than actual cash paid for wages, rental of equipment, and materials used in protection of the Work, all of which must be supported by satisfactory written evidence. Such wages shall not include the wages or salary of any individual not necessary for protection of the Work. The Contractor shall not be entitled to any mark-up for overhead or profit on damages or for extended duration or for interest on monies due for work satisfactorily completed prior to the suspension or delay.

The Contractor shall maintain complete and accurate daily records of all costs due to delay, clearly distinguishing them from the costs of other portions of the Work, and shall submit a detailed written report of such costs to the Engineer and the Inspector within twenty (20) calendar days of incurring the delay. Failure to comply shall result in waiver by the Contractor to any claims for additional payment and schedule change. In addition, the Contractor shall submit evidence of any cause of delay specified herein if it has not already done so.

As soon as practicable, following receipt of such report and evidence, if required, the Engineer will determine the nature and extent of such costs and will, if the Engineer finds that payment is due, issue a Change Order therefor, subject to the provisions in "Change Orders" of the General Requirements. If the Engineer determines that payment is not due, the Contractor will be so advised in writing. Should the Contractor disagree with such finding, Contractor may submit a notice of protest to the Engineer as provided in Claims and Protests. The Contractor shall provide the Engineer with access to its daily cost records or certified copies thereof as requested. All such records shall be retained by the Contractor and open to inspection and audit by the City and the Engineer. Except for the additional compensation

provided hereinbefore, the Contractor shall have no claim for damage or compensation for any delay or hindrance whether or not contemplated by the Contract.

00401 UNAVOIDABLE DELAY (10/17/01)

Should the Contractor be obstructed or delayed in the completion of the Work from causes beyond its control and without its fault or negligence, and solely due to acts of God, acts of government in its sovereign capacity, riots, insurrections, wars, fires, floods, earthquakes, tidal waves, epidemics, quarantine restrictions, industry-wide strikes, freight embargoes, or unusually severe weather, it shall be entitled to a noncompensable extension of time.

The Contractor shall only be entitled to a noncompensable extension of time for Unavoidable delay in the Work which negatively impacts the critical path of the approved project schedule, and causes the Work of the project to extend beyond the approved Contract Completion date.

The Contractor shall be entitled to a noncompensable time extension only if it notifies the Engineer and the Inspector immediately at the time the Contractor is prevented from proceeding with the Work and follows with written notification of the causes of the delay within five (5) calendar days from the beginning of any delay. Also, the Contractor shall notify the Engineer and the Inspector immediately at the end of the delay and follow up with written notification of the cessation of delay within five (5) calendar days from the end of the delay.

Any claim for a time extension shall be made in writing within twenty (20) calendar days after the conclusion of the delay. The Engineer and the Inspector shall ascertain the facts and the extent of the delay and extend the time for completing the Work if, in their judgement, the findings of fact justify such an extension. The Engineer's decision shall be final and conclusive, subject only to appeal as provided by Claims and Protests.

00402 ARCHAEOLOGICAL AND PALEONTOLOGICAL DISCOVERIES (9/18/07)

If items of archaeological or paleontological interest are discovered, the Contractor shall immediately cease excavation in the area of discovery and shall not continue until ordered by the Engineer. When resumed, excavation operations within the area of discovery shall be as directed by the Engineer.

Such discoveries include antiquated dwelling sites, stone implements or other artifacts, animal bones, human bones, fossils and the like. The Contractor shall be entitled to an extension of time and compensation in accordance with the provisions of Temporary Suspension or Delay of Work.

00403 COORDINATION WITH OTHER CONTRACTS (1/30/03)

The Board may allow other work at the site by the City's own forces, utility owners or other direct contracts. If such other work to be performed was not noted in the Contract Documents, written notice thereof will be given to the Contractor prior to starting any such other work; and, if the Contractor believes that such performance will involve additional expense to the Contractor or requires additional time and the parties are unable to agree as the extent thereof, the Contractor may make a claim therefor as provided under Claims and Protests.

Paving of roadway areas shall be withheld until planned utility changes or installations have been made under City permits and until verifications of completion of all such changes or installations have been received by the Inspector. The Contractor is responsible for assuring that verifications are submitted by the utilities. Underground final inspection and acceptance of sewer and storm drain installations shall precede paving operations.

The Contractor shall afford each utility owner and other contractor who is a party to such a direct contract (or the City, if the City is performing the additional work with City employees) proper and safe access to

the site and a reasonable opportunity for the introduction and storage of materials and equipment and the execution of such work, and shall properly connect and coordinate the Work with theirs. The Contractor shall do all cutting, fitting and patching of the Work that may be required to make its several parts come together properly and integrate with such other work. The Contractor shall not endanger any work of others by cutting, excavating or otherwise altering their work and will only cut or alter their work with the written consent of the Engineer and the others whose work will be affected. The duties and responsibilities of the Contractor under this Article are for the benefit of such utility owners and other contractors to the extent that there are comparable provisions for the benefit of the Contractor in said direct contracts between the City and such utility owners and other contractors.

If any part of the Contractor's work depends upon proper execution or results of the work of any such other contractor or utility owner or the City, the Contractor shall inspect and promptly report to the Engineer in writing any delays, defects or deficiencies in such work that renders it unavailable or unsuitable for such proper execution and results. The Contractor's failure to do so will constitute an acceptance of the other Work as fit and proper for integration with the Contractor's Work. The exception is latent defects in the other work.

00404 TERMINATION OF CONTRACT BY CITY (CONTRACTOR NOT AT FAULT) (9/18/07)

The Contract may be terminated, in whole or in part, at any time, by the City, at its sole discretion, without cause and for the City's convenience. Such termination will be accomplished by delivery of a written "Notice of Termination" to the Contractor, specifying the extent to which performance of the Work under the Contract or portion of the Contract shall be terminated and the date upon which such termination shall become effective.

After receipt of a Notice of Termination, except as otherwise directed by the City, the Contractor shall:

1) Stop Work under the Contract on the date and to the extent specified in the Notice of Termination.

2) Notify the City in writing of all outstanding orders, Subcontracts and contracts entered into by Contractor for performance of the Work, including the (I) name and address of the vendor, supplier or Subcontractor; (ii) a copy of the complete contract, order or Subcontract; (iii) an accounting of the Work performed and compensation earned by the vendor, supplier or Subcontractor, and (iv) such other information as the City may request to assist it in determining whether to terminate or accept assignment of the order, Subcontract or contract.

3) Upon written notice by City, terminate all Subcontracts, orders and contracts, of any tier, related to the performance of the Work that the City determines shall be terminated and not assigned. Place no further orders or Subcontracts for Goods or services, except as may be necessary for completion of that portion of the Work that has not been assigned.

4) Place no further orders or Subcontracts for Goods or services, except as may be necessary for completion of that portion of the Work that has not been terminated.

5) Settle outstanding liabilities and Claims arising out of such termination of orders and Subcontracts, with the Acceptance of the City if required (which Acceptance shall be final for the purposes of this Article).

6) Assign to the City in the manner, at the times, and to the extent directed by the City all of the rights, titles, and interests of the Contractor under such orders, contracts and Subcontracts so terminated.

7) Transfer title and deliver to the City in the manner, at the times and to the extent directed by it, the fabricated or unfabricated parts, Work in process, completed Work, supplies, and other

Goods procured as a part of, or acquired in connection with the performance of the Work terminated; and completed or partially completed plans, drawings, information and other items that would have been required (per the Specifications) to be furnished to the City if the Contract had been completed.

8) Use its best efforts to sell the property of the types referred to above in the manner, at the times, to the extent, and at the price(s) directed or authorized by the City, providing that the:

   A) Contractor is not required to extend credit to any purchaser;

   B) Contractor may acquire any such property under the prescribed conditions; and/or proceeds of any such transfer or disposition are applied or otherwise credited to reduce payments made by the City to the Contractor under the Contract.

9) Take any action that may be necessary, or that the City may direct, for the protection and preservation of the property related to the Contract that is in the possession of the Contractor and in which the City has or may acquire an interest.

10) Complete performance of that portion of the Work that has not been terminated by the Notice of Termination, as applicable and in accordance with the Contract.

After receipt of a Notice of Termination for the City's convenience, the Contractor shall submit its termination Claim to the City requesting payment of such sums as are permitted under the terms of this Article, in the form and with the certification(s) prescribed by the City for Claims and Protests. Such Claim shall be submitted promptly but in no event later than thirty (30) days from the effective date of termination, unless one or more extensions are granted in writing by the City upon written request by the Contractor during such six-month period or authorized extension thereof. However, the City may receive and act upon any termination Claim at any time after the thirty (30) days period or any extension thereof, if it determines that the facts justify such action. Upon failure of the Contractor to submit its termination Claim within the time specified, the City will determine the amount due the Contractor, if any, on the basis of information available, and will pay the Contractor the amount so determined. Such determination shall be final and binding and payment shall be in full settlement for the Work performed under the Contract.

Subject to the provisions of this Article, the Contractor and the City may agree upon the total or partial amount to be paid to the Contractor by reason of the total or partial termination pursuant to this Article. The agreed upon amount shall under no circumstances include any sum for lost profits on the terminated portion of the Work or for consequential damages, of any kind. If agreement is reached, the Contract will be amended by Modification accordingly and the Contractor will be paid the agreed upon amount.

In the event of failure of the Contractor and the City to agree on the total amount to be paid the Contractor by reason of the termination of Work pursuant to this Article, the City will pay the Contractor the amounts determined by the City as follows, exclusive of any amounts agreed upon in accordance with the preceding Paragraph:

The Contractor’s actual cost for the Work properly performed by the Contractor as of the date of termination, including a 5% allowance for profit on such costs; plus, the reasonable cost of preserving and protecting property; plus, other reasonable costs incidental to the termination of the Work under the Contract, including expense incurred to determine the amounts due; provided however, that the maximum payable or paid for any portion of the completed Work shall not exceed the values listed in the corresponding bid item of Schedule of Values.

The total sum to be payable or paid to the Contractor, exclusive of the settlement amounts described in the Paragraph immediately above, shall not exceed the total Contract Price less the:

1) Payments made previously by the City for the Work; plus

2) A prorated portion of the total Contract Price for the terminated portion of the Work as determined by the Engineer.

Except for normal spoilage and to the extent that the City will have otherwise expressly assumed the risk of loss, the fair value (as determined by the City) of property that is destroyed, lost, stolen, or damaged (so as to become undeliverable to the City or other buyer as described above) shall be excluded from the amounts paid to the Contractor.

In arriving at the amount due the Contractor under this Article, a deduction shall be made for the following:

1) Any claim that the City may have against the Contractor in connection with the Contract; and

2) The agreed upon price for and/or proceeds from the sale of goods or other items acquired or sold by the Contractor that have not been otherwise recovered by or credited to the City.

Under such terms and conditions as it may prescribe and at its sole discretion, the City may make partial payments against costs incurred by the Contractor in connection with terminated portion of the Contract whenever the City decides that the aggregate of such payments is within the amount to which the Contractor is entitled hereunder. If the total of such payments is in excess of the amount finally agreed upon or determined to be due under this Article, such excess shall be payable by the Contractor to the City upon demand together with interest at a rate equal to that set forth in California Code of Civil Procedure, Section 685.010.

Under no circumstances shall the Contractor be entitled to anticipatory or unearned profits or consequential damages as a result of a termination of partial termination under this Article, or for any other termination by the City. The payment to the Contractor determined in accordance with this Article shall constitute the exclusive remedy of the Contractor for termination hereunder.

Anything contained in the Contract to the contrary notwithstanding, a termination under this Article shall not waive any right or claim to damages that the City may have; the City may pursue any course of action that it may have by law or under the Contract; and shall not relieve Contractor of its warranty obligations with respect to any Work performed prior to such termination.

If the termination hereunder is only for a part of the Work, the Contract Price shall be reduced by the amount of the Contract Price applicable to the portion of the Work which is terminated, including overhead and profit, on the basis of one or more of the following:

1) Unit prices stated in the Contract or agreed upon by the City and the Contractor.

2) A lump sum determined by the Engineer, based on the estimate costs including overhead and profit of the terminated portions of the Work.

00405 TERMINATION OF CONTRACT BY CITY (CONTRACTOR DEFAULT) (9/18/07)

In the event of conduct by the Contractor which is determined by the Engineer or the Inspector to constitute default, the City may either suspend the Work under the provisions of Temporary Suspension or Delay of Work of these General Conditions or, upon ten (10) calendar days' written notice to the Contractor, terminate the Contract as provided herein. Default by the Contractor shall occur whenever it shall declare bankruptcy; become insolvent or assign its assets for the benefit of its creditors; fail to provide materials, equipment, or workmanship meeting the requirements of the Specifications; disregard or violate provisions of the Contract Documents or the Engineer’s or the Inspector’s instructions; cause a material breach of the Contract; fail to prosecute the Work according to the approved progress schedule; or fail to provide a qualified representative, competent workers or Subcontractors. Upon request, the

Contractor will be provided a hearing by the Board to contest the recommendation of the Engineer or the Inspector as to default by the Contractor.

In the event the Contract is terminated pursuant to this Article, the City may take possession of the Work and of all materials, tools, equipment, and property of the Contractor, which have been provided in connection with the Work, and may complete the Work by whatever method or means the City may select. The unpaid balance of the Contract cost for completing the Contract Work shall be used to complete the Work in accordance with the Contract Documents. If cost of completing the Work exceeds the unpaid balance, the Contractor shall pay the excess amount to the City. If such cost is less than the unpaid balance, the Contractor shall not have claim to the difference except to such extent as may be necessary, in the opinion of the Engineer, to reimburse the Contractor or the Contractor's sureties for any unpaid expense properly incurred for materials, tools, equipment, property, and labor devoted to the prosecution of the Work, or which the City shall have received the benefit. In computing such expenses, as it relates to equipment and property, the salvage value at completion of Work shall be deducted from the salvage value at the time the Contract was terminated, and the difference shall be considered as an expense. If after termination for failure of the Contractor to fulfill contractual obligations (Contractor Default), it is determined by a Court of competent jurisdiction that the Contractor had not failed to fulfill contractual obligations, the termination shall be deemed to have been for the convenience of the City. In such an event, adjustment of the Contract Price shall be made as provided in Termination of Contract by City (Contractor Not at Fault)".

00406 PARTIAL ACCEPTANCE (9/18/07)

The City shall have the right to utilize or place into service any item of equipment or other usable portion of the Work prior to completion of the entire project. The Engineer will notify the Contractor in writing identifying the specific portion or portions of the Work to be so utilized or otherwise placed into service. Following inspection by the Bureau of Contract Administration's Final Inspector and completion of a Partial Final Inspection Correction List, a "Statement of Partial Completion" will be issued.

It shall be understood by the Contractor that until a "Statement of Partial Completion" is issued, all responsibility for care and maintenance of all items or portions of the Work to be placed in use shall be borne by the Contractor. Upon issuance of a "Statement of Partial Completion", the City will accept responsibility for the protection and maintenance of all such items or portions of the Work described in the written notice, and it is further understood that the manufacturer's warranties of any affected equipment will commence not later than the date for commencement of the warranties indicated on the "Statement of Partial Completion". However, the Contractor shall retain full responsibility for satisfactory operation of the total project and the Contractor's guarantee period shall commence only after the issuance of the Statement of Completion. Such guarantee of total systems operation shall include that portion or portions of work covered by the "Statement of Partial Completion".

The issuance of a "Statement of Partial Completion" for any part of the Work shall not relieve the Contractor of its obligation to promptly remedy any omissions and latent or unnoticed defects in the Work covered by the "Statement of Partial Completion". The City shall have the right to restrict the Contractor's use of the occupied portion of the Work but shall allow the Contractor reasonable access to complete or correct items required by the Contract Documents.

The City may, if the Work is progressing satisfactorily, release part of the retention on portions of the Work for which a "Statement of Partial Completion" has been issued, provided that the following conditions have been met:

1) Partial Final Inspection corrections have been completed to the satisfaction of the Inspector on the portions of work to be utilized or placed into service;

2) The Contractor submits a written request to the Inspector for release of retention which includes a verifiable valuation of the identified portions of the Work covered by the "Statement of Partial Completion";

3) Impacted Subcontractors, major suppliers and the Contractor's Surety all agree in writing to release of retention;

4) There are no Stop Notices on file with the Board against the Contractor involving any portion of the affected Work; and

5) Both the Engineer and Inspector agree that a portion of the retention should be released for the affected Work.

00407 FINAL ACCEPTANCE (02/21/08)

When all work has been completed to the satisfaction of the Inspector, the Inspector shall request in writing a Full Final Inspection be performed by the Final Inspector. The Full Final Inspection conducted by the Final Inspector may include the Contractor and the Engineer. A Final Inspection Correction List will be provided to the Contractor and the Engineer upon completion of the Final Inspection. All corrections listed on the Final Inspection Correction List shall be completed within thirty (30) days of issuance of the Final Inspection Correction List. Failure to complete all corrections within thirty (30) days of issuance of the Final Inspection Correction List shall result in the Final Inspection being performed again.

The date of completion of the Project shall be the date of Final Field Acceptance of the Project when all physical corrections have been completed. The Final Inspector will issue the Statement of Completion indicating the date of Final Field Acceptance of the Project.

If there are no physical corrections to be completed following the Full Final Inspection, the Final Inspector will issue the Statement of Completion indicating the date of Final Field Acceptance of the Project.

Final Field Acceptance of the Project shall establish the following:

1) Start date of the Contractor's material and workmanship Guaranty-Warranty for the total Project.

2) Start date of any equipment or material warranties which had not previously been started.

3) Date the City assumes responsibility for maintenance, security, and safety of the Project.

Upon issuance of the Statement of Completion by the Final Inspector and completion of all administrative requirements of the contract, the Inspector of Public Works and City Engineer shall prepare a Joint Report which contains the recommendation of the Inspector of Public Works that the Board accept the Project. The Board will formally accept the project based on the information contained in the Joint Report.

00408 LIQUIDATED DAMAGES (9/18/07)

Time is of the essence in completing the Work required by the Contract. If the Contractor fails or refuses to complete the Work or any part thereof within the time fixed by the terms of the Contract, or any approved extension thereof, the actual damage to the City due to the delay will be difficult or impossible to determine. In lieu thereof, the Contractor shall pay to the City, as fixed and agreed, liquidated damages for each day of delay in completion, the sum or sums as set forth in the Contract Documents. The Contractor shall be liable for the amount thereof. The City reserves the right, however, to terminate the

Contractor's completion of the Work, charging against the Contractor and its sureties any excess cost occasioned the City thereby, together with liquidated damages accruing until such time as the City may reasonably complete the Work.

Permitting the Contractor to continue and complete the Work, or any portion thereof, after the time fixed herein for completion, or after the expiration of any extensions of said time, shall in no way operate as a waiver on the part of the City of any of its rights under the Contract.

00409 – 00499 NOT USED

00500 CHANGES AND EXTRA WORK (9/18/07)

The Engineer may, at any time, without notice to the Sureties, by written order designated or indicated to be a Change Order, order performance of extra work or make any change, addition or deletion in the Work, including but not limited to changes in the Specifications including Plans and designs; in the time, method or manner of performance of the Work; in the City furnished facilities, equipment, materials, services, or site; or directing acceleration in the performance of the Work.

Upon receipt of such Change Order, the Contractor shall promptly proceed with the Work covered thereby, which shall be performed in accordance with the provisions of the Contract Documents except as otherwise specifically provided.

In the event that Contractor receives any written order or direction by the Engineer or Inspector that is not so designated or indicated to be a Change Order, but which Contractor believes to constitute an extra, change, addition or deletion in the Work, then Contractor shall, prior to performance of any Work related thereto, give written notice to the Engineer and Inspector confirming Contractor's belief that such order or direction is believed to be a Change Order within one (1) working day of Contractor's receipt of such order or direction. Compensation for the extra, change, addition, or deletion in the Work will be in accordance with the provisions of "Change Orders" of the General Requirements.

Contractor conclusively waives any right to additional compensation, costs, expenses, damages or extension of time associated with an extra, change, addition or deletion to the Work that is performed by Contractor without either (i) a written order signed by the Engineer designated or indicated to be a Change Order and any change, addition or deletion, or (ii) a written notice issued by Contractor in accordance with the provisions of this Article.

During the progress of the Work, it may be necessary for the Engineer to issue written field orders in the form of an Emergency Change Order. Upon receipt, The Contractor shall immediately proceed with the Engineer's written directive to the limits described in Authority of the Board, Engineer, and Inspector.

Except as provided in this Article, no other order, statement, or conduct of the Engineer or Inspector shall be treated as a change under this Article or shall entitle the Contractor to an adjustment in the Contract Price or Contract Completion Date.

Except for claims based on defective Specifications, no Claim for any change under this Article shall be allowed for any costs incurred more than twenty (20) calendar days before the Contractor gives written notice as required. Except as otherwise provided in the Contract Documents, in the case of defective specifications for which the Engineer is responsible, the adjustment shall include any increased cost the Contractor reasonably incurred in attempting to comply with those defective specifications.

If the Contractor intends to assert a Claim for an adjustment in the Contract Price under this Article, it must, within twenty (20) calendar days after receipt of a written Change Order or the furnishing of a

written confirmation notice as hereinbefore specified, submit a written statement to the Engineer setting forth the general nature and monetary extent of such claim and all factual grounds therefor, including documented actual costs. The Contractor may include the statement of claim in the written notice as hereinbefore specified. Failure to comply with the twenty (20) calendar day notice requirement shall be deemed a waiver of Claims by the Contractor.

No adjustment shall be made under this Article for any suspension, delay, interruption, change or any other cause, to the extent that an adjustment is provided for or excluded under any other provision of the Contract.

Recovery of compensation, costs, expenses or damages resulting from delay, disruption, hindrance, or interference in the performance of the Work (including without limitation interruption of schedules, extended, excess or extraordinary field overhead and indirect overhead costs, loss of productivity and the impact, ripple or cumulative effect on other Work), shall not be permitted, and all rights thereto are conclusively waived by Contractor.

No Claim by the Contractor shall be allowed if the Claim is made after final payment under this Contract.

00501 DIFFERING SITE CONDITIONS (9/18/07)

Upon discovery and before further disturbance of any differing site conditions, the Contractor shall immediately notify the Inspector and the Engineer, followed by a written notice to the Engineer within twenty-four (24) hours of subsurface or latent physical conditions at the site differing materially from those indicated in the Contract Documents; or unknown physical conditions at the site, of an unusual nature, differing materially from those ordinarily encountered and generally recognized as inherent in the Work of the character provided for in this Contract; or materially differing from that represented in the Contract Documents which the Contractor believes may be hazardous waste (as defined in the California Health and Safety Code and is required to be removed to a Class I, Class II or Class III disposal site in accordance with provisions of existing law).

The Engineer will promptly investigate the conditions. If the Engineer finds that conditions materially differ and will cause an increase or decrease in the Contractor's cost or the time required to perform any part of the Work, the Engineer will adjust the Contract by Change Order.

If the Contractor disagrees with the Engineer's determination the Contractor may request an adjustment to the Contract Price or Contract Completion Date. Within twenty (20) calendar days after it first discovered, or should have discovered in the exercise of diligence and extreme care, the existence of such Differing Site Condition, submit a written statement setting forth a detailed cost breakdown described in "Change Orders" of the General Requirements. The statement must include the Contractor's basis and calculation of the costs saved or incurred, detailed information demonstrating the effect on the Contractor's schedule of performance (in the same manner as required by the Contract Documents for requesting an extension of time), identification of the Escrow Bid Documents that formed the basis of the Contractor's Bid to perform the Work affected by such conditions, and a complete and detailed explanation of the factual basis for the request.

Failure by the Contractor to strictly comply with the requirements of this Article concerning the timing and content of any notice of Differing Site Conditions or of any request for adjustment in Contract Price or Contract Completion Date based on Differing Site Conditions shall be deemed a waiver of any Claim by the Contractor for increase in the Contract Price or extension of the Contract Completion Date by reason of such conditions.

No Claim by the Contractor for an adjustment hereunder shall be allowed if asserted after final payment under this Contract.

00502 – 00599 NOT USED

00600 CLAIMS AND PROTESTS (9/18/07)

A Claim that involves an extra, change, addition or deletion to the Work as set forth in Changes and Extra Work shall arise upon issuance of a final decision of the Engineer denying, in whole or in part, a request for adjustment in the Contract Price or Contract Completion Date; provided however, that failure to comply with the requirements of the articles for Changes and Extra Work or Differing Site Conditions shall be conclusively deemed to constitute grounds to deny such Claim.

A Claim that does not involve an extra, change, addition or deletion to the Work may be asserted only if the Contractor shall immediately and prior to performing the Work affected thereby give written notice to the Engineer and the Inspector of such circumstances and of Contractor's intention to file a Claim based thereon. Unless otherwise directed by the Engineer, the Contractor shall proceed without delay to perform the Work and to conform to any order, instruction, or decision of the Engineer with respect thereto.

The Contractor shall, within twenty (20) calendar days after it first knew, or in the exercise of diligence and extreme care should have known, of the circumstances giving rise to the Claim, file a written Claim with the Engineer, stating in detail all objections, grounds and reasons therefor. The Contractor shall, upon instruction by the Engineer or the Inspector, provide, within ten (10) days or such other time as agreed to between the Engineer, and the Contractor, any and all documents, records or other materials identified by the Engineer or the Inspector as necessary for the resolution of the Contractor's Claim.

Claims seeking time extensions shall be accompanied by such documentation as is required by "Contractor's Construction Schedule and Reports" of the General Requirements. Claims seeking recovery of compensation or adjustments to the Contract Price, whether or not based on extras, changes, additions or deletions to the Work, shall be in the form of Change Order Cost Quotations prepared in accordance with and subject to all of the requirements of "Change Orders" of the General Requirements, including without limitation the prohibition on use of "total cost" and "modified total cost" methodologies.

Contractor waives all rights to assert any claims or seek any relief in the form of extensions of time or recovery of additional compensation, costs, expenses, damages from the City that are not presented as a Claim in the manner specified and within the time stated herein. Contractor further hereby agrees that in the interest of avoiding the additional expense and potential inequity of piecemeal resolution of Claims, all decisions by Engineer shall be final and binding not only as to all matters asserted in the Claim, but also as to all matters (including without limitation all rights to extensions of time and recovery of extra compensation, costs, expenses and damages) not asserted in the Claim that were known to Contractor, or that could have been reasonably discovered by Contractor in the exercise of diligence and extreme care, at the time of submission of the Claim and that are in any way related to the subject matter of the Claim. All orders, instructions and decisions of the Engineer or the Inspector will be limited to matters properly falling within their respective authority as specified in Authority of the Board, Engineer and Inspector.

The Contractor will be informed of the Engineer's or the Inspector's decision within thirty (30) days after the Contractor last submits data pertinent to the Claim previously mentioned. In the case of a Claim that involves an extra, change, addition or deletion to the Work as set forth in Changes and Extra Work, if the Contractor accepts the decision of the Engineer or Inspector, then the Contractor and City shall enter into a Change Order adjusting the Contract Price and Contract Completion Date in accordance with such decision. In case a Claim does not involve an extra, change, addition or deletion to the Work as set forth in Changes and Extra Work and the Contractor accepts the decision of the Engineer or Inspector, then the Contractor and City shall enter into a Change Order setting forth the terms of the decision and, if appropriate, its effect on the Contract Price or Contract Completion Date. If the Contractor does not

accept the decision of the Engineer or Inspector, it is recommended that further appeal of the Engineer's decision be conducted in accordance with the Issue Resolution Ladder, as defined in "Opportunity to Partner" of the General Requirements. If the dispute cannot be settled, the Contractor must elevate the appeal to the Dispute Review Board (if provided for under the terms of the General Requirements) or to the Board of Public Works (if the Contract Documents do not provide for a Dispute Resolution Board) in writing within twenty (20) calendar days after receipt of the Engineer's decision. The Board shall afford the Contractor an opportunity to be heard and to offer evidence in support of its appeal. All determinations of the Board with respect to Claims shall be final and binding.

In all matters concerning the validity, interpretation, performance, effect or otherwise of the Contract, the Federal regulations (if and to the extent expressly incorporated by reference in the Contract Documents), the laws of the State of California, and the Charter of the City of Los Angeles shall govern and be applicable. Pending final disposition of a Claim, the Contractor shall proceed diligently with the performance of the Contract and in accordance with the previously mentioned decision.

Any Claim, including without limitation any Claim filed on behalf of or having its source in a claim by Subcontractor, Sub-Subcontractor, or Supplier, at any tier, which the Contractor chooses to make to the City, shall be accompanied by the certification language set forth below signed by a responsible managing officer of the Contractor's organization, who has the authority to sign Subcontracts or Purchase Orders on behalf of the Contractor, and who has personally investigated and confirmed the truth and accuracy of the matters set forth in such certification. Submission of certification in accordance herewith is a condition precedent to the City's consideration of or decision on the Claim and to the filing and maintenance of any legal action or proceeding to enforce or recover monies under such Claim. Failure to submit such a certification along with the Claim shall result in the Claim being returned to the Contractor without any decision, and shall waive the Contractor's right to pursue the Claim either on its own behalf or on behalf of such Subcontractor or Supplier.

I hereby certify under penalty of perjury that I am a managing officer of _____(Contractor's name) and that I have reviewed the Claim presented herewith on Contractor's behalf and/or on behalf of (Subcontractor's/Supplier's name(s)) and that the following statements are true and correct:

1) The facts alleged in or that form the basis for the Claim are true and accurate; and,

2) Contractor does not know of any facts or circumstances, not alleged in the Claim, that by reason of their not being alleged render any fact or statement alleged in the Claim materially misleading; and,

3) Contractor has, with respect to any request for money or damages alleged in or that forms the basis for the Claim, reviewed the job cost records (including those maintained by Contractor and by any Subcontractor or Supplier, of any tier, that is asserting all or any portion of the Claim) and confirmed with mathematical certainty that the losses or damages suffered by Contractor and /or such Subcontractor or Supplier were in fact suffered in the amounts and for the reasons alleged in the Claim; and,

4) Contractor has, with respect to any request for extension of time or claim of delay, disruption, hindrance or interference alleged in or that forms the basis for the Claim, reviewed the job schedules (including those maintained by Contractor and by any Subcontractor or Supplier, of any tier, that is asserting all or any portion of the Claim) and confirmed on an event-by-event basis that the delays or disruption suffered by Contractor and /or such Subcontractor or Supplier were in fact experienced for the durations, in the manner, and with the consequent effects on the time and/or sequence of performance of the Work, as alleged in the Claim; and,

5) Contractor has not received payment from City for, nor has Contractor previously released City from, any portion of the Claim.

Signature: _____

Name: _____

Title: _____

Company: _____

Date: _____

No Claim by the Contractor shall be allowed if made after final payment under this Contract.

00601 COMMENCEMENT OF STATUTE OF LIMITATIONS (11/21/01)

Any applicable statute of limitations shall commence to run and any alleged cause of action by the Contractor against the City arising out of or related to the Project shall be deemed to have accrued in any and all events no later than 30 days after Contractor's submittal of its last application for progress payment of Contract or Change Order Work satisfactorily performed.

00602 GOVERNING LAW (11/21/01)

The terms and conditions of this Contract shall be construed and interpreted under, and all respective rights and duties shall be governed by, the laws of the State of California. Wherever applicable each provision of these Contract Documents shall be interpreted in such a manner as to be effective and valid under applicable law, but if any provision of these Contract Documents shall be prohibited by or invalid under applicable law, such provision shall be ineffective to the extent of such prohibition or invalidity, without invalidating the remainder of such provision or the remaining provisions of these Contract Documents.

Unless otherwise provided in this Contract, all claims, counterclaims, disputes and other matters in question between the City and the Contractor arising out of or relating to this Contract or the breach of it will be decided by a Court of competent jurisdiction. It is understood that this Contract is executed and to be performed within the City and County of Los Angeles.

00603 VENUE (2/09/95)

This Contract will be executed and performed within the City and County of Los Angeles, California.

00604 NO WAIVER OF RIGHTS (4/12/95)

Neither the inspection by the City, nor any order by the City for payment of money, nor any payment for or acceptance of the whole or any part of the Work by the City, nor any extension of time, nor any possession taken by the City, shall operate as a waiver of any provision of this Contract, or any power herein reserved to the City, or any right to damages herein provided, nor shall any waiver of any breach in this Contract be held to be a waiver of any other or subsequent breach.

00605 ACCEPTANCE OF FINAL PAYMENT CONSTITUTES RELEASE (4/12/95)

The acceptance by the Contractor of final payment shall release the City, the Engineer, the Inspector, their officers, agents, representatives, or employees, as representatives of the City, from all claims and all liability to the Contractor for all things done or furnished in connection with the Work and every act of the City relating to or arising out of the Work.

00606 PATENTS AND COPYRIGHTS (10/17/01)

The Contractor shall include in its Bid the patent fees or royalties on any patented article or process which may be furnished or used in the Work. The Contractor shall indemnify and hold the City harmless from any legal action that may be brought for infringement of patents. The Contractor's attention is directed to "Notice of Patents, Data, and Copyright Regulations" of the Federal Labor Standards.

The Contractor shall bear all costs arising from the use of patented goods and /or processes used on and/or incorporated into the Work. When use of these goods and/or processes is judged to be an infringement and their use is banned, the Contractor, at its own expense, shall, with concurrence of the Engineer, do one of the following:

1) Secure for the City the right to continue using goods and/or processes by suspension of the injunction or by procuring a license(s);

2) Replace said goods and/or processes with non-infringing goods and /or processes;

3) Modify said goods and/or processes so that they become non-infringing; or

4) Remove said goods and/or processes and refund the sum paid therefor without prejudice to any other rights of the City.

The preceding shall not apply to any goods manufactured to the detailed design of the City contained in the Contract Documents.

00607 PUBLIC RECORDS ACT (4/06/00)

All records, documents, Plans, specifications and all other information relating to the conduct of the City's business, including information submitted by the Contractor, shall become the exclusive property of the City and except as provided by law shall be deemed public records. Said information shall be subject to the provisions of the California Public Records Act (Government Code Sections 6250 et seq.).

Under no circumstances will the City be responsible or liable to the Contractor, submitter or any other party for the disclosure of any records or information submitted to the City, regardless of whether such records or information are labeled "Trade Secret", "Confidential", or "Proprietary" (or words to similar effect) and regardless of whether the disclosure is required by law or a court order or occurs through inadvertence, mistake, or negligence on the part of the City or its officers, employees, and/or contractors.

The City will not advise as to the nature or content of documents entitled to protection from disclosure under the California Public Records Act", including interpretations of the Act or the definition of "Trade Secret". The submitting party shall be solely responsible for all determinations made under the Act, and where appropriate for clearly and prominently marking each and every page or sheet of information with "Trade Secret", "Confidential", or "Proprietary". Each submitting party is advised to contact its own legal counsel concerning the California Public Records Act and its applicability to the submitting party's own circumstances.

In the event of litigation concerning the disclosure of any information submitted by the submitting party, the City's sole involvement will be as a stakeholder, retaining the information until otherwise ordered by a court. The submitting party, at its sole expense and risk, shall be responsible for any and all fees and costs for prosecuting or defending any action concerning the information, and shall indemnify and hold the City harmless from all costs and expenses including attorneys' fees, in connection with such action.

END OF SECTION

BUREAU OF ENGINEERING

STRATHERN PARK NORTH STORMWATER CAPTURE PROJECT WORK ORDER NO. EW40080F

MASTER GENERAL REQUIREMENTS

APRIL 8, 2025

City of Los Angeles
California

Department of Public Works
Bureau of Engineering

ENGINEERING
CITY OF LOS ANGELES

TABLE OF CONTENTS
DIVISION 01 – GENERAL REQUIREMENTS

01100 SUMMARY

01050 TABLE OF CONTENTS
01111 ABBREVIATIONS AND REFERENCE STANDARDS
01112 DESCRIPTION OF WORK
01113 DIVISIONS OF TECHNICAL SECTIONS OF PROJECT MANUAL
01114 ISSUANCE OF DRAWINGS AND THE PROJECT MANUAL
01115 MANDATORY PROVISIONS
01116 ELECTRONIC DOCUMENT CONTROL
01120 INTERFACE / COORDINATION REQUIREMENTS
01140 CONTRACTOR'S USE OF THE PREMISES
01150 STORAGE OF MATERIALS AND EQUIPMENT

01200 PRICE AND PAYMENT PROCEDURES

01211 ALLOWANCE FOR EQUIPMENT SUBSTITUTIONS FOR COMPATIBILITY PURPOSES
01212 FIXED CASH ALLOWANCE ITEMS
01251 CHANGE ORDER REQUESTS
01252 CONSTRUCTION INCENTIVE CHANGE PROPOSAL
01253 DIFFERING SITE CONDITION
01254 CHANGE ORDERS
01255 PRICE REDUCTION FOR DEFECTIVE COST OR PRICING DATA
01270 MEASUREMENT OF QUANTITIES FOR UNIT PRICE WORK
01280 MEASUREMENT AND PAYMENT
01291 NOTICE TO WITHHOLD AND/OR STOP NOTICE
01292 PAYMENTS
01298 SCHEDULE OF VALUES / CONTRACT PRICE BREAKDOWN

01300 ADMINSTRATIVE REQUIREMENTS

01311 PRECONSTRUCTION SAFETY CONFERENCE
01312 PROJECT MEETINGS
01313 WORK BY CITY OR OTHERS
01321 CONTRACTOR'S CONSTRUCTION SCHEDULE AND REPORTS
01322 CONSTRUCTION PROGRESS PHOTOGRAPHY
01323 CONSTRUCTION STATUS REPORTS
01330 SHOP DRAWINGS / SUBMITTALS
01350 AUDIT AND ACCESS TO RECORDS
01351 ESCROW BID DOCUMENTS
01353 OPPORTUNITY TO PARTNER

01400 QUALITY REQUIREMENTS

01410 REGULATORY REQUIREMENTS
01411 CONFINED SPACE ENTRY
01420 UNITS OF MEASURE
01421 SYMBOLS
01430 MANUFACTURER'S FIELD SERVICE
01452 INSPECTION OF THE WORK
01453 SAMPLING, TESTING AND FABRICATION INSPECTION
01454 WEIGHING AND METERING EQUIPMENT

01455 CALIBRATION OF TESTING EQUIPMENT

01500 TEMPORARY FACILITIES AND CONTROLS

01561 ENVIRONMENTAL CONTROL
01562 ENVIRONMENTAL MITIGATION
01563 POLLUTION CONTROL -SEWAGE SPILL PREVENTION AND RESPONSE REQUIREMENTS
01571 STORMWATER POLLUTION CONTROL MEASURES FOR CONSTRUCTION ACTIVITIES
01572 CONSTRUCTION AND DEMOLITION WASTE MANAGEMENT
01573 EXCAVATION SHORING, FORMS, AND FALSEWORK
01581 PROJECT SIGNS

01600 PRODUCT REQUIREMENTS

01601 BUY CLEAN CALIFORNIA ACT
01611 GUARANTY / WARRANTY
01630 SUBSTITUTIONS AND "OR EQUAL" SUBMITTAL

01700 EXECUTION REQUIREMENTS

01711 SITE INVESTIGATION
01712 SUBSURFACE DATA
01721 MOBILIZATION
01722 SURVEYING
01723 RIGHT OF WAY
01731 CUTTING AND PATCHING
01732 ADDITIONAL POTHOLING
01740 REMOVAL, CLEANUP, AND DEMOBILIZATION
01750 STARTUP ASSISTANCE
01770 PROJECT CLOSEOUT
01781 SPARE PARTS
01782 TECHNICAL MANUALS
01783 PROJECT RECORD DOCUMENT

01800 FACILITY OPERATION

01810 FUNDAMENTAL COMMISSIONING REQUIREMENTS
01813 PREFUNCTIONAL CHECKLISTS
01820 OPERATIONS AND MAINTENANCE TRAINING

END OF SECTION

SECTION 01111
ABBREVIATIONS AND REFERENCE STANDARDS

1.1 ABBREVIATIONS

A. The abbreviations herein, together with others in general use, are applicable to this Project Manual, Contract Drawings, and other Contract Documents.

All abbreviations and symbols used on Contract Drawings for structural steel construction shall conform to those given by the "Manual of Steel Construction" published by the American Institute of Steel Construction, Inc.

B. Common Usage: Whenever the following abbreviations are used, they shall have the meanings indicated:

ABAN	Abandon
ABAND	Abandoned
ABUT	Abutment
ABS	Acrylonitrile – butadiene – styrene
AC	Asphalt concrete
ACP	Asbestos cement pipe
ACWS	Asphalt concrete wearing surface
ADA	Americans with Disabilities Act
AGB	Alley grating basin
AL	Allowance
ALT	Alternate
AMER STD	American Standard
AQMD	Air Quality Management District
ARHM	Asphalt-rubber hot-mix
ATSAC	Automated Traffic Surveillance and Control System
AT&T	Local and long distance telephone company (formerly SBC and Pacific Bell)
AWG	American Wire Gage (nonferrous wire)
BAGR	Bridge approach guard railing
BB	Beginning of Bridge
BC	Beginning of curve
BCR	Beginning of curb return
BDRY	Boundary
BF	Bottom of footing
BM	Bench mark
BMP	Best Management Practice
BPW	Board of Public Works
BSJ	Bell and spigot joint
BSL	Bureau of Street Lighting
BVC	Beginning of vertical curve
B/W	Back of wall
C/C	Center to center
CAB	Crushed aggregate base
CAC	California Administrative Code
CAP	Corrugated aluminum pipe
CASQA	California Storm Water Quality Association
CB	Catch Basin
Cb	Curb
CBP	Catch Basin Connection Pipe

CBR	California Bearing Ratio
CCR	California Code of Regulations
CCTV	Closed Circuit TV
CF	Curb face or Cubic foot
C&G	Curb and gutter
CGB	Curbside grating basin
CFR	Code of Federal Regulations
CIDH	Cast-in-drilled-hole
CIP	Cast iron pipe or Cast-in-place
CIPP	Cast-in place pipe
CL	Clearance, center line
CLF	Chain link fence
CLSM	Controlled Low Strength Material
CMB	Crushed miscellaneous base
CMC	Cement mortar-coated
CML	Cement mortar-lined
CMP	Corrugated Metal Pipe
CO	Cleanout (sewer)
COL	Column
CONC	Concrete
CONN	Connection
CONST	Construct, Construction
COORD	Coordinate
CQC	Contractor Quality Control
CSP	Corrugated steel pipe
CTB	Cement treated base
CV	Check valve
CY	Cubic yard
D	Load of pipe
dB	Decibels
DBE	Disadvantaged Business Enterprise
DBL	Double
DF	Douglas fir
DFT	Dry Film Thickness
DIA	Diameter
DIP	Ductile iron pipe
DL	Dead load
DMBB	Double metal beam barrier
DT	Drain Tile
DWG	Drawing
DWPPS	Los Angeles Department of Water & Power, Power System
DWPWS	Los Angeles Department of Water & Power, Water System
DWY	Driveway
DWY APR	Driveway approach
EA	Each
EB	End of bridge
EC	End of curve
ECR	End of curb return
EF	Each face
EG	Edge of gutter
EGL	Energy grade line
El	Elevation
ELC	Electrolier lighting conduit
ELT	Extra long ton
ENGR	Engineer, Engineering

EP	Edge of pavement
EPA	Environmental Protection Agency
ESA	Environmentally Sensitive Area
ESAL	Equivalent Single Axle Load
ESRP	Emergency Spill Response Plan
ESMT	Easement
ETB	Emulsion-treated base
EVC	End of vertical curb
EXC	Excavation
EXP JT	Expansion joint
EXST	Existing
F	Fahrenheit
F&C	Frame and cover
F&I	Furnish and install
FAB	Fabricate
FAS	Flashing arrow sign
FD	Floor drain
FDN	Foundation
FED SPEC	Federal Specification
FG	Finished grade
FH	Fire hydrant
FL	Flow line
FRP	Fiberglass reinforced plastic
FRPM	Fiberglass reinforced plastic mortar
FS	Finished surface
FTA	Fully traffic actuated
FT-LB	Foot-pound
FTG	Footing
FW	Face of wall
GA	Gauge
GALV	Galvanized
GC	Grade change
GCASP	State General Construction Activity Stormwater Permit
GIP	Galvanized iron pipe
GL	Ground line or grade line
GM	Gas meter
GP	Guy pole
GR	Grade
GRTG	Grating
GSP	Galvanized steel pipe
GTE	General Telephone Company
H	High or height
HB	Hose bib
HC	House connection
HDPE	High density polyethylene
HDWL	Headwall
HGL	Hydraulic grade line
HORIZ	Horizontal
HP	Horsepower
HPG	High pressure gas
HPS	High pressure sodium (Light)
HS	High strength
HYDR	Hydraulic
ID	Inside diameter
INCL	Including

INSP	Inspection
INV	Invert
IP	Iron pipe
IPW	Inspector of Public Works
JC	Junction chamber
JCT	Junction
JS	Junction structure
JT	Joint
L	Length
LAAC	Los Angeles Administrative Code
LAB	Laboratory
LADBS	Los Angeles Department of Building and Safety
LADGS	Los Angeles Department of General Services
LADOT	Los Angeles Department of Transportation
LACDPW	Los Angeles County Department of Public Works
LAMC	Los Angeles Municipal Code
LARWQCB	Los Angeles Regional Water Quality Control Board
LAT	Lateral
LB	Pound
LD	Local depression
LF	Linear foot
LH	Lamp hole
LL	Live load
LOL	Layout line
LONG	Longitudinal
LP	Lamp post
LPS	Low pressure sodium (Light)
LS	Lump sum
LTS	Lime treated soil
MA	Mast Arm
MAINT	Maintenance
MAX	Maximum
MB	Metal beam
MBB	Metal beam barrier
MBGR	Metal beam guard railing
MBE	Minority Business Enterprise
MCR	Middle of curb return
MEAS	Measure
MED	Median
MH	Manhole, maintenance hole
MIL SPEC	Military Specification
MISC	Miscellaneous
MOD	Modified, modify
MON	Monument
MSM	Mandatory subcontracting minimum
MTA	Metropolitan Transportation Authority (of LA County)
MTH	Month
MTL	Material
MULT	Multiple
MUTCD	Manual on Uniform Traffic Control Devices
MVL	Mercury vapor light
MWD	Metropolitan Water district
NOI	Notice of Intent
NPDES	National Pollutant Discharge Elimination System
NRCP	Nonreinforced concrete pipe

OBE	Other Business Enterprise
OBS	Obsolete
OC	On center
OD	Outside diameter
OE	Outer edge
OH	Overhead
OPP	Opposite
ORIG	Original
OSA	Office of the State Architect
OSHA	Occupational Safety and Health Administration (Dept. Of Labor)
PACBELL	Pacific Bell (Pacific Telesis Group)
PAV	Pressure Aging Vessel
PB	Pull box
PC	Point of curvature
PCC	Portland cement concrete or Point of compound curvature
PCVC	Point of compound vertical curve
PE	Polyethylene
PG	Performance Graded
PI	Point of intersection
PL	Property line
PMB	Processed miscellaneous base
POC	Point on curve
POT	Point on tangent
PP	Power pole
PRC	Point of revere curve
PRVC	Point of reverse vertical curve
PSI	Pounds per square inch
PT	Point of tangency
PVC	Polyvinyl chloride
PVMT	Pavement
PVT R/W	Private right-of-way
Q	Rate of flow in cubic feet per second
QA	Quality Assurance
QC	Quality Control
QUAD	Quadrangle, Quadrant
R	Radius
R&O	Rock and oil
R/W	Right-of-way
RA	Recycling agent
RAC	Recycled asphalt concrete
RAP	Reclaimed asphalt pavement
RBAC	Rubberized asphalt concrete
RC	Reinforced concrete
RCB	Reinforced concrete box
RCC	Rail Construction Corporation
RCE	Registered civil engineer
RCP	Reinforced concrete pipe
RCV	Remote control valve
REAS	Rubberized Emulsion-Aggregate Slurry
REF	Reference
REINF	Reinforced or reinforcement
RES	Reservoir
RGE	Registered geotechnical engineer
RR	Railroad
RSE	Registered structural engineer

RTE	Registered traffic engineer
RTFO	Rolling Thin Film Oven
S	Slope
SCAQMD	South Coast Air Quality Management District
SCCP	Steel cylinder concrete pipe
SCG	Southern California Gas Company
SCHED	Schedule
SCRRA	Southern California Regional Rail Authority
SD	Storm drain
SDR	Standard thermoplastic pipe dimension ratio (ratio of pipe O.D. to minimum wall thickness)
SE	Sand Equivalent
SEC	Section
SF	Square foot
SI	International System of Units (Metric)
SOCB	Side opening catch basin
SPEC	Specifications
SPPWC	Standard Plans for Public Works Construction
SR	Standard ratio
SRJ	Steel ring joint (for RCP)
SS	Sanitary sewer
SSB	Select sub-base
SSPWC	Standard Specifications for Public Works Construction
ST HWY	State highway
STA	Station
STD	Standard
STR	Straight
STR GR	Straight grade
STRUC	Structural/Structure
SW	Sidewalk
SWD	Sidewalk drain
SWMP	Storm Water Management Plan
SWPPP	Storm Water Pollution Prevention Plan
SWRCB	State (of California) Water Resources Control Board
SY	Square yard
TAN	Tangent
TC	Top of curb
TCP	Traffic control plan
TEL	Telephone
TF or T/F	Top of footing
TH	Test hole
TOPO	Topography
TR	Tract
TRANS	Transition
TS	Traffic signal or transition structure
TSC	Traffic signal conduit
TSS	Traffic signal standard
TW	Top of wall
TYP	Typical
USA	Underground Service Alert
V	Volt
VAR	Varies, Variable
VB	Valve box
VC	vertical curve
VCP	Vitrified clay pipe

VECP	Value Engineering Change Proposal
VERT	Vertical
VOL	Volume
VT	Variable thickness
W	Wider or width
WATCH	Work Area Traffic Control Handbook
WBE	Women Business Enterprise
WDID	Waste Discharge Identification Number
WI	Wrought iron
WM	Water meter
WPCP	Water Pollution Control Plan
WPJ	Weakened plane joint
WUT	Western Union Telegraph
WWECP	Wet Weather Erosion Control Plan
XCONN	Cross connection
XSEC	Cross section

C. Institutions: Wherever the following abbreviations are used they shall have the meanings indicated:

AASHTO	American Association of State Highway and Transportation Officials
ACI	American Concrete Institute
ACRI	Air Conditioning and Refrigeration Institute
ADA	Americans with Disabilities Act
AGA	American Gas Association
AGMA	American Gear Manufacturers' Association
AI	Asphalt Institute
AISC	American Institute of Steel Construction
AISI	American Iron & Steel Institute
AITC	American Institute of Timber Construction
AAMA	American Architectural Manufacturer’s Association
AMCA	Air Movement and Control Association
ANSI	American National Standards Institute
APA	American Plywood Association
API	American Petroleum Institute
APWA	American Public Works Association
AQMD	Air Quality Management District
AREA	American Railway Engineering Association
ASCE	American Society of Civil Engineers
ASHRAE	American Society of Heating, Refrigerating, and Air Conditioning Engineers
ASME	American Society of Mechanical Engineers
ASQC	American Society for Quality Control
ASTM	American Society for Testing and Materials
AWPA	American Wood Preservers Association
AWPI	American Wood Preservers Institute
AWS	American Welding Society
AWWA	American Water Works Association
BHMA	Building Hardware Manufacturer’s Association
CAC	California Administrative Code
CAL/ABL	State of California/Architectural Barriers Laws
CAL/OSHA	State of California/Occupational Safety and Health Administration
CALTRANS	California Department of Transportation

CASQA	California Stormwater Quality Association
CBM	Certified Ballast Manufacturers
CITY	City of Los Angeles
CRSI	Concrete Reinforcing Steel Institute
CSI	Construction Specifications Institute
EIA/TIA	Electronic Industries Association
EPA	Environmental Protection Agency
ETL	Department of Building & Safety Electrical Test Laboratory
FCI	Fluid Control Institute, Inc.
FIA	Factory Insurance Association
FM	Factory Mutual Association
FS	Federal Specifications
GA	Gypsum Association
GRI	Geosynthetic Research Institute
ICBO	International Conference of Building Officials
ICEA	Insulated Cable Engineers Association
IEEE	Institute of Electrical and Electronics Engineers
ISA	Instrument Society of America
LA	City of Los Angeles
LABC	City of Los Angeles Building Code
LAMC	City of Los Angeles Municipal Code
NAAMM	National Architectural Association of Metal Manufacturers
NEC	National Electrical Code
NECA	National Electrical Contractors Association
NEMA	National Electrical Manufacturers Association
NFC	National Fire Code
NFPA	National Fire Protection Association
NWMA	National Wood Manufacturer's Association
NWWDA	National Wood Window and Door Association
NOAA	National Oceanic and Atmospheric Administration (Dept. of Commerce)
OSA	Office of the State Architect
OSHA	Occupational Safety and Health Administration (Dept. of Labor)
PCA	Portland Cement Association
RA	Rule of General Application – Department & Safety
RCSC	Research Council on Structural Connections of the Engineering Foundation
SAMA	Scientific Apparatus Manufacturer's Association
SDI	Steel Deck Institute
SMACNA	Sheet Metal and Air Conditioning Contractor's National Association
SSPC	Steel Structures Painting Council
SSPWC	Standard Specifications for Public Works Construction
SWRCB	State Water Resources Control Board
UBC	Uniform Building Code, International Conference of Building Officials
UL	Underwriters Laboratories, Inc.
USGS	United States Geological Survey
VERIZON	Verizon Communications (Formerly General Telephone & Electronics
WATCH	Work Area Traffic Control Handbook
WCLIB	West Coast Lumber Inspection Bureau
WCRSI	Western Concrete Reinforcing Steel Institute
WIC	Woodwork Institute of California
WRI	Wire Reinforcement Institute

WWPA Western Wood Products Association

1.2 REFERENCE STANDARDS

A. Applicable Publications: Whenever in these Specifications / Project Manual references are made to published specifications, codes, standards, or other requirements, it shall be understood that wherever no date is specified, only the latest specifications, standards, or requirements of the respective issuing agencies which have been published as of the date that the Work is advertised for bids shall apply; except to the extent that said standards or requirements may be in conflict with applicable laws, ordinances or governing codes. No requirements set forth herein or shown on the Drawings shall be waived because of any provision of, or omission from, said standards or requirements.

B. Specialists' Assignments: In certain instances, specification text requires (or implies) that specific work is to be assigned to specialists or expert entities, who must be engaged for the performance of that work. Such assignments shall be recognized as special requirements over which the CONTRACTOR has no choice or option. These requirements shall not be interpreted so as to conflict with the enforcement of building codes and similar regulations governing the Work; also they are not intended to interfere with local union jurisdiction settlements and similar conventions. Such assignments are intended to establish which party or entity involved in a specific unit of work is recognized as "expert" for the indicated construction processes or operations. Nevertheless, the final responsibility for fulfillment of the entire set of contract requirements remains with the CONTRACTOR.

C. Codes and Safety Standards: Without limiting the generality of other requirements of the Specifications, all work specified herein shall conform to or exceed the applicable requirements of the following Codes and Safety Standards.

1. Applicable Codes:

- City of Los Angeles Building Code
- City of Los Angeles Mechanical Code
- City of Los Angeles Plumbing Code
- City of Los Angeles Fire Code
- City of Los Angeles Electrical Code

References herein to "Building Code" shall mean City of Los Angeles Building Code. Similarly references to "Mechanical Code," "Plumbing Code," "Fire Code," and "Electric Code" shall mean City of Los Angeles Mechanical Code, City of Los Angeles Plumbing Code, City of Los Angeles Fire Code, and City of Los Angeles Electric Code respectively.

2. Applicable Safety Standards:

- OSHA Regulations for Construction
- OSHA Standard

- Cal-OSHA

References herein to "OSHA Regulations for Construction" shall mean Title 29, Part 1926, Construction Safety and Health Regulations, Code of Federal Regulations (OSHA), including all changes and amendments thereto.

References herein to "OSHA Standards" shall mean Title 29, Part 1910, Occupational Safety and Health Standards, Code of Federal Regulations (OSHA), including all changes and amendments thereto.

References herein to "Cal-OSHA" shall mean State of California, Department of Industrial Relations, as amended to date, and all changes and amendments there to which are effective as of the date of construction.

The latest edition of the codes as approved and adopted for use by the CITY as of the date of award shall apply to the Work herein, including all addenda, modifications, amendments, or other lawful changes thereto.

D. Standard Specifications: References in the Contract Documents to "Standard Specifications" shall mean the Standard Specifications for Public Works Construction, including all current supplements, addenda, and revisions thereof.

E. Standard Plans: References herein to "Standard Plans" shall mean the Standard Plans issued by the City of Los Angeles which drawings are hereby incorporated in and made a part of these Contract Documents, and copies of which are available for a fee.

F. Conflict between Codes, Safety Standards, Reference Standards, Drawings and other Contract Documents: In case of conflict between codes, reference standards, drawings and other Contract Documents, the most stringent requirements shall govern. All conflicts shall be brought to the attention of the ENGINEER for clarification and directions prior to ordering or providing any materials or labor. The CONTRACTOR shall bid for the most stringent requirements.

END OF SECTION 01111

SECTION 01113
DIVISIONS OF TECHNICAL SECTIONS OF PROJECT MANUAL

1.1 THE REQUIREMENT

A. The Technical Section of the Project Manual, including the General Conditions and General Requirements, are arranged into the Construction Specifications Institute (C.S.I.) sixteen (16) Divisions - Section format with an additional Division 17 for Instrumentation and Controls. Each "Section" constitutes a unit of work and related "Sections" are grouped under broad generic headings called Divisions.

B. The organization of the Technical Sections of the Project Manual into Division, Sections, and articles shall not control or limit the CONTRACTOR in dividing the work among Subcontractors, a Sub-subcontractor, or to establish the extent of work to be performed by any trade. The CONTRACTOR shall be solely responsible for all subcontract arrangements of work regardless of the Project Manual organization.

END OF SECTION

SECTION 01114
ISSUANCE OF DRAWINGS AND THE PROJECT MANUAL

1.1 THE REQUIREMENT

A. Unless otherwise provided in the Contract Documents, the ENGINEER will furnish to the CONTRACTOR one (1) set and one (1) CD containing each of the Drawings, Project Manual and, where applicable, Geotechnical Data Report (GDR) without charge. Additional sets desired by the CONTRACTOR or Subcontractors will be furnished upon request, but at the CONTRACTOR'S expense.

B. All Drawings, Specifications, Special Provisions, and copies thereof are the property of the CITY. They are not to be used on other work. All necessary bid documents will be available to prospective bidders via the City of Los Angeles Regional Alliance Marketplace for Procurement (www.rampla.org/s/).

(END OF SECTION)

SECTION 01115
MANDATORY PROVISIONS

1.1 THE REQUIREMENT

A. Any mention in the Divisions of this Project Manual which follow the General Requirements or indication on drawings of articles, materials, operations, or methods requires that the CONTRACTOR provide each item mentioned or indicated, of quality or subject to qualifications noted; perform according to conditions stated, each operation the same prescribed; and provide therefore all necessary labor, equipment, and incidentals, even though such mention of articles, materials, operations, methods, quality, qualifications, or conditions is not expressed in complete sentences.

END OF SECTION

SECTION 01116
ELECTRONIC DOCUMENT CONTROL

1.1 USE OF ELECTRONIC DOCUMENT CONTROL SYSTEM

A. The CONTRACTOR shall use the City's cloud-based electronic document control system to submit and receive all construction related documentation on this project. The system used is "e2020" and all costs associated with the use of the software have been paid for by the City. The website address to be used will be provided by the ENGINEER after award of the contract. The CITY will provide training to the CONTRACTOR on the use of the system. As coordinated with other sections of these project specifications, the information to be generated, transmitted and tracked by the e2020 document control system shall include, but not be limited to the following:

1. Correspondence (including Engineer's Communication).

2. Plan Clarifications.

3. Requests for Information (RFI's).

4. Submittals & Shop Drawings.

5. Change Orders.

6. Allowance Orders.

7. Progress Photos.

8. Project Schedules.

9. Meeting Minutes.

10. Permits.

11. Partnering (Issue Resolution Ladder, Charter).

12, Claims Resolution.

13. Building Information Modeling Coordination.

B. When hard copies of drawings or product samples are required to be submitted that cannot be submitted through e2020, the CONTRACTOR shall:

1. Upload a transmittal sheet for the submittal in e2020,

2. Submit six (6) full-size hard copies,

3. Submit one half-sized hard copy (not exceeding 11x17 inches),

4. Transmit electronic files to the ENGINEER in Adobe Acrobat (.PDF) format.

C. The CONTRACTOR shall be responsible for the installation of its own computer system and scanner. In addition, the CONTRACTOR shall be responsible for the procurement of an Internet Service Provider (ISP) with a high-speed broadband internet connection for its own use, as well as the ENGINEER's/INSPECTOR's use at the site offices to access the document control system.

D. At the request of the ENGINEER, the CONTRACTOR must provide a hard copy of approved submittals to the INSPECTOR, at no additional cost to the CITY.

END OF SECTION

SECTION 01120
INTERFACE / COORDINATION REQUIREMENTS

1.1 THE REQUIREMENT

A. Traffic and Access

1. The CONTRACTOR'S operations shall cause no unnecessary inconvenience. The access rights of the public shall be considered at all times. Unless otherwise authorized, traffic shall be permitted to pass through the Work, or an approved detour shall be provided.

2. Safe and adequate pedestrian and vehicular access shall be provided and maintained to: residences; fire hydrants; commercial and industrial establishments; churches, schools and parking lots; service stations and motels; hospitals; police and fire stations; and establishments of similar nature. Access to these facilities shall be continuous and unobstructed unless otherwise approved by the ENGINEER.

3. The CONTRACTOR shall provide and install steel plates to bridge any excavation in the public right-of-way. Such bridging shall be in accordance with the provisions of the latest edition of the Work Area Traffic Control Handbook (WATCH), and in addition, shall have a nonskid surface with coefficient of friction of 0.35 per California Test 342 for all steel plates within the traveled roadway of streets and alleys. When required by the INSPECTOR, the CONTRACTOR shall certify in writing to the INSPECTOR that steel plates to be used in the Work meet the required static coefficient of friction. Also, when required by the INSPECTOR, the CONTRACTOR shall have steel plates to be used in the Work tested in accordance with the above standards for the verification of required static coefficients of friction. Testing shall be done by an independent laboratory approved by the INSPECTOR. The CONTRACTOR shall pay for any costs associated with the testing of steel plates.

4. At least ten (10) days before the start of construction, the CONTRACTOR is required to notify, in writing, abutting property occupants of the proposed construction start date. A copy of said written notification shall be provided to the INSPECTOR.

5. The CONTRACTOR shall notify the MTA Special Events Desk at (213) 922-4632, (213) 922-4692(Fax) at least forty-eight (48) hours before any work that will affect normal bus operations. If no answer, call MTA Dispatch at any time, (213)-922-4634.

6. Safe and adequate pedestrian zones and public transportation stops, as well as pedestrian crossings of the Work at intervals not exceeding 90m (300 feet), shall be maintained unless otherwise approved by the ENGINEER. If required by the construction, the CONTRACTOR may close only one crosswalk at a time at intersections having four crosswalks. If construction requires closure of two or more crosswalks at an intersection, the CONTRACTOR shall obtain LADOT approval before implementation of the closure. LADOT approval is required prior to closing of any crosswalk at intersections having fewer than four crosswalks.

7. Vehicular access to residential driveways shall be maintained to the property line except when necessary construction precludes such access for reasonable periods of time. If backfill has been completed to the extent that safe access may be provided, and the street is opened to local traffic, the CONTRACTOR shall immediately clear the street and driveways and provide the maintained access.

8. The CONTRACTOR shall cooperate with the various parties involved in the delivery of mail and the collection and removal of trash and garbage to maintain existing schedules for these services.

9. Grading operations, roadway excavation and fill construction shall be conducted by the CONTRACTOR in a manner to provide a reasonably satisfactory surface for traffic. When rough grading is completed, the roadbed surface shall be brought to a smooth, even condition satisfactory for traffic.

10. Work shall be performed in only one-half of the roadway at one time. One-half of the roadway shall be kept open and unobstructed until the opposite side is ready for use by traffic. The CONTRACTOR shall phase the removal operations so as to maintain the specified traffic lanes on the existing pavement until sufficient new pavement is constructed to accommodate the traffic requirements. If one-half of a street is only being improved, a smooth, even surface and a condition satisfactory for traffic shall be maintained on the other one-half.

11. Where no pavement exists in a roadway, and traffic is to be maintained through the Worksite, the CONTRACTOR shall conduct its operations in a manner to provide a smooth, even surface satisfactory for traffic, reasonably free of mud and dirt.

12. The CONTRACTOR shall include in its Bid all costs for the above requirements.

B. Street Closures, Detours, Barricades

1. The CONTRACTOR shall comply with all applicable State, County and CITY requirements for closure of streets. The CONTRACTOR shall provide barriers, guards, lights, signs, temporary bridges, flagpersons, and watchpersons. The CONTRACTOR shall be responsible for compliance with additional public safety requirements that may arise. The CONTRACTOR shall furnish and install signs and warning devices and promptly remove them upon completion of the Work.

2. The CONTRACTOR shall obtain and pay for all permits for closure of streets, alleys or sidewalks, as required by the Bureau of Street Services (800) 996-2489 and LADOT (213) 972-4990.

3. At least forty-eight (48) hours in advance of closing, partially closing, or reopening any street, alley, or other public thoroughfare, the CONTRACTOR shall notify the Police, Fire, Traffic, and Engineering Departments, and comply with their requirements. Deviations must first be approved in writing by the ENGINEER.

4. When specified on the Plans or permit, the CONTRACTOR shall install advance construction notice signs per Standard Plan S-791, not less than seven (7) days before the start of construction. The CONTRACTOR shall maintain the signs for the duration of construction, removing them only after completion of the work. All costs incurred in furnishing, installing, maintaining and removing the signs shall be included in the CONTRACTOR'S Bid.

5. The CONTRACTOR shall secure approval, in advance, from authorities concerned with the use of temporary bridges proposed by the CONTRACTOR for public use. Temporary bridges shall be clearly posted as to load limit, with signs and posting conforming to current requirements covering "signs" as set forth in the California Manual of Uniform Traffic Control Devices (MUTCD). (The California MUTCD is available on the internet a https://dot.ca.gov/programs/safety-programs/camutcd. This manual shall also apply to street closures, barricades, detours, lights, and other safety devices that may be required.

6. The CONTRACTOR shall comply with the requirements of the latest adopted edition of the "Work Area Traffic Control Handbook", obtainable from Building News, Inc., 10801 National Blvd., Los Angeles, CA 90064, (800) 873-6397 or the LADOT Worksite Traffic Control Plan (S-488.0) available from LADOT, 100 S. Main Street, 9th Floor, Los Angeles, CA 90012.

7. A street with local traffic crossing a street in which Work is being performed may be closed to traffic, providing the adjacent cross streets are kept open. The CONTRACTOR shall notify the Police and Fire Departments whenever such a street is to be closed to traffic. A similar notification shall then be made at the time the street is again opened to traffic. If the closing is to be of short duration or different sections of the street are to be closed at different times, the notification to the Police and Fire Departments shall be on a day-by-day basis, giving information regarding the conditions expected to prevail on the next working day. The CONTRACTOR shall notify the INSPECTOR which streets are to be closed, duration of closures, and person(s) and telephone numbers contacted in the Fire and Police Department.

8. All signs, including offsite detour signs, lights, or devices installed by the CONTRACTOR shall conform to the California Manual of Uniform Traffic Control Devices (MUTCD), and be approved by LADOT before use. Offsite detour signs shall be installed, maintained, and removed by the CONTRACTOR. "No Parking" signs shall be posted and removed only by LADOT upon request from the CONTRACTOR. LADOT will charge and collect its actual cost for each temporary sign installed and for each sign replaced during the authorized period. To be enforceable, temporary "No Parking" signs shall be installed by LADOT twenty-four (24) hours before the time when needed. Their removal by LADOT shall take place as the Work progresses to restore parking spaces. See Section 01313 – WORK BY CITY OR OTHERS of the GENERAL REQUIREMENTS.

9. The CONTRACTOR shall include in its Bid all costs for the above requirements.

C. Work Performed Within an Operating Facility

1. As approved by the ENGINEER, all or portions of the existing facility may be taken out of service for short periods of time corresponding with expected instances of minimum impact. The CONTRACTOR shall notify the ENGINEER on forms [(see Attachment [01120-A1 through 01120-A2)] provided by the ENGINEER not less than thirty calendar (30) days in advance to determine the feasibility of taking a utility/operation out of service. If the ENGINEER determines that the utility/operation can be taken out of service, the CONTRACTOR shall then request the shutdown on standard forms provided by the ENGINEER. Such requests shall be submitted to the ENGINEER not less than fifteen (15) calendar days before the requested date of the shutdown and shall include: dates, times, locations, procedures, and drawings showing materials proposed to be used and work to be performed. If any of the information changes, an additional fifteen (15) calendar days may be required after such changes are reported to the ENGINEER. Approval when granted will always be conditional. If granted, approval of the request, including date and time, will be given three (3) calendar days before the proposed shutdown. Additionally, all preparations outlined in the submitted procedures shall be demonstrated to the ENGINEER and shall be completed twenty-four (24) hours before the shutdown. This shall include, but not be limited to, all tools, equipment, materials, excavations, operation of fans, pumps, etc. Should the CONTRACTOR fail to meet this requirement, the ENGINEER shall reserve the right to cancel such scheduled shutdown at no cost to the CITY and, furthermore, the CONTRACTOR shall reimburse the CITY for preparation costs incurred.

2. Vehicular and pedestrian traffic adjacent to the laydown area and/or within the jobsite must be maintained. If an existing street in the CONTRACTOR'S Work area is to be demolished or obstructed, the CONTRACTOR shall be responsible for providing access through or around the effected area, including signs, barricades, and lights, as approved by the ENGINEER and any local agencies having jurisdiction over any public access areas. The CONTRACTOR shall follow WATCH standards and the California Manual of Uniform Traffic Control Devices (MUTCD), for all traffic, including a minimum traffic lane of ten (10) feet for vehicles and four (4) feet for pedestrians. (The California MUTCD is available on the internet at http://www.dot.ca.gov/hq/traffops/signtech/mutcdsupp/ca_mutcd.htm).

3. The CONTRACTOR shall not park any vehicles (including concrete, hauling and delivery trucks) in any facility street at any time unless approved by the ENGINEER. Access must be maintained at all times for emergencies, sampling, equipment operations, maintenance, and like items.

4. Before altering any vehicular or pedestrian access, the CONTRACTOR shall notify the ENGINEER thirty (30) calendar days in advance on forms provided by the ENGINEER. The CONTRACTOR shall then request the alteration on forms provided by the ENGINEER. Requests shall include reasons for the alteration, times, boundary limits, special safety measures, proposed traffic rerouting with widths of such route, and a map detailing the above. Such requests shall be submitted to the ENGINEER not less than fifteen (15) calendar days before the requested

date of the access alteration. If any of the information changes, an additional fifteen (15) calendar days may be required after the changes are brought to the attention of the ENGINEER. Approval when granted will always be conditional. Final approval of the request, including date and time, will be given three (3) calendar days in advance. The CITY retains the right to ticket and impound vehicles blocking traffic.

5. The following shall be taken into consideration in preparing the proposed schedule of construction operation:
   a. Impacts to storm drainage service through the existing 45" SOTMR DRAIN.
   b. Impacts to the electrical easement property being used as an active storage area for large vehicles.

(END OF SECTION)

(SEE ATTACHMENTS)

ATTACHMENTS TO SECTION 01120

Attachments to General Requirements Section 01120 consists of two (2) documents, as follows:

ATTACHMENT NUMBER	TITLE OF ATTACHMENT	NUMBER OF PAGES IN THIS ATTACHMENT
01120-A1	Request for Special Plan Accommodations (RESPA)	1

REQUEST FOR SPECIAL PLAN ACCOMMODATIONS (RESPA)

REQUEST #:_____

REQUESTOR:_____ PHONE#: (____) _____

SUBCONTRACTOR:_____ PHONE#: (____) _____

PROJECT:_____ ELEMENT:_____

REASON FOR REQUEST:_____

_____

_____

POTENTIAL FOR SPILL: ☐ YES ☐ NO **(If Yes, Attach Spill Prevention Plan)**
MATERIAL:_____
(Spill Prevention Plan should include type of material, containment procedures, discharged location and procedures, estimate of material to be handled, etc.)

STREET / LOCATION OF WORK:_____
(Street name, building, tunnel, MCC, etc.)

AFFECTED AREA:_____

PROCESS:_____

ELECTRICAL ACCESS:_____

OTHER:_____

(Attach drawing, sketch, map or plan detail showing work to be performed or affected area, etc.)

WORK TO BE PERFORMED:_____

_____

_____

ADDITIONAL INFORMATION: (Detour plan, confined space procedures, barricades, flagperson, etc.)

_____

_____

_____

DAY / START TIME:_____ DURATION:_____

DAY / FINISH TIME:_____

REQUESTOR SIGNATURE:_____ DATE:_____

PROJECT MANAGER SIGNATURE:_____ DATE:_____

SECTION 01140
CONTRACTOR'S USE OF THE PREMISES

1.1 THE REQUIREMENT

A. General

1. This Section applies to all situations in which the CONTRACTOR or his representatives, including but not necessarily limited to, suppliers, Subcontractors, employees and field engineers, who enter upon the CITY'S property.

2. CONTRACTOR shall commence the Contract Work and provide security and protection to existing facility and job site within 5 days from the issuance of Notice-To-Proceed letter, unless noted otherwise.

B. Access to the Job-site

1. As instructed by the ENGINEER, the CONTRACTOR shall restrict CONTRACTOR'S employees to the immediate Work areas on the job-site and in no way go beyond the Work limits noted on the Contract Drawings or as otherwise directed by the ENGINEER.

a. Deliver materials, tools and equipment to the Parking Lot, via the Strathern Street entrance through the LADWP Easement, as directed by the ENGINEER.

b. CONTRACTOR may establish a staging area and employee parking area during construction to the west side of the LADWP Easement for storage of materials, tools and equipment via the Strathern Street entrance through the LADWP Easement, as directed by the ENGINEER and as described herein.

c. CONTRACTOR and his employees shall enter the Strathern Street for access to Work areas as directed by the ENGINEER and shall not go beyond the Work area limits noted on the Contract Drawings.

2. CONTRACTOR shall in no way block such entrance(s) to the job-site when Contracted Work occurs at an existing CITY facility. At any time, the CONTRACTOR shall not block any other entrance/exit/fire doors, corridor or lobby door, etc. All fire and smoke doors, including the elevator/lobby doors, shall remain in operation at all times. CONTRACTOR shall provide all required exit at all times.

3. Use of such accesses to the job-site will only be for the purpose of parking, delivery and/or removal of materials equipment, tools, vehicles and removal of rubbish and debris, and shall be kept free of obstructions and in a safe condition at all times during extent of Contracted Work.

4. Use of crane, equipment and/or man lift, catwalk/platform to transport materials, equipment, supplies and the CONTRACTOR'S personnel to the Work area shall be in conformance with the requirements of the local governing agencies. The CONTRACTOR shall furnish the CITY with a duplicate copy of the operating permit of the equipment prior to its use.

5. If any of the crane, equipment and/or man lift, catwalk platform is attached to the existing structure specified to remain, CONTRACTOR shall provide shop drawings, including the equipment data, the attachment details, structural calculation and erection plans to the ENGINEER for approval.

6. For existing electrical transforme, which are maintained by the Department of Water and Power, the CONTRACTOR shall arrange and obtain the permission for access and to do work from the Department of Water and Power.

7. The CONTRACTOR shall not change any existing occupied room or door key without the approval of the ENGINEER. The CONTRACTOR shall provide a duplicate key to the ENGINEER for CITY employee access.

C. City Occupation of the Premises

The CITY and public will occupy the existing premises of ballfields and other facilities at Strathern Park North during construction operations. The CITY will also maintain a vehicle parking area to the east side of the LADWP easement and will need regular daily access to this area off of Strathern Street. The eastern side of this easement may also be used by the public for overflow parking during schedule baseball games. See also GENERAL REQUIREMENTS Section 01313 – WORK BY CITY OR OTHERS, and in Section 00406 – PARTIAL ACCEPTANCE of the GENERAL CONDITIONS.

D. Contractor's Use of the Premises

1. Do not interfere with City maintenance of the Strathern Park North site and maintenance within the LADWP easement during Contracted Work operations, as directed by the ENGINEER.

2. The CONTRACTOR shall provide a staging area within the LADWP easement that follows the requirements of Figure 1:

The area to be a 200 ft x 150 ft as shown in Figure 1. This area will be fenced on the north and south with 24 ft wide access gates. The southern fence will be permanent and used after construction. The northern fence will be temporary for construction only. A 24-ft wide path through the staging area will remain clear at all times for city vehicle access. Rolling gates on either side will be lockable with three sets of keys provided by the CONTRACTOR to the City. This staging area is away from the transmission towers and between two of the wells so that construction equipment is not near LADWP facilities.

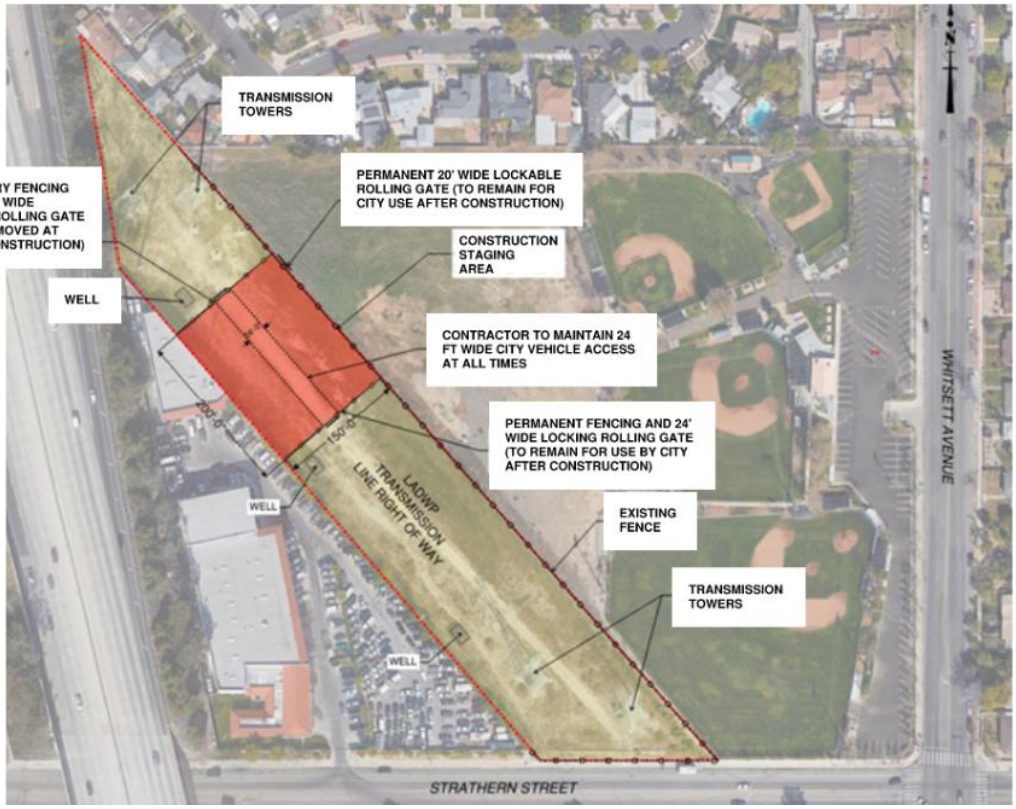

Figure 1: CONTRACTOR staging area within LADWP easement.

a. CONTRACTOR shall provide both security lighting and security cameras around the perimeter of the staging area shown in Figure 1.

b. There is an existing City managed vehicle storage to the east side of the LADWP easement off of Strathern Street. CONTRACTOR will enter at this east side of the easement for a limited time to traverse with vehicles to the staging area within this easement. All CONTRACTOR vehicles, equipment, materials and tools to remain within the staging area.

c. CONTRACTOR may maintain additional staging areas as needed during construction within the limit of disturbance of the construction work (outside the LADWP easement) and shall provide security lighting and security cameras around the perimeter of each of these temporary staging areas.

3. Exercise care during Contracted Work operations not to interfere with or damage the following listed facilities:

a. Existing ballfield and other facilities at Strathern Park North and the entrance and parking lot area off of Whitsett Avenue.

b. Existing City managed vehicle storage to the east side of the LADWP easement off of Strathern Street. CONTRACTOR will enter at this east side of the easement for a limited time as

needed to traverse with vehicles to the staging area. All CONTRACTOR vehicles, equipment, materials and tools to remain within the staging area(s). Existing fencing located along the northern side of the LADWP easement to be maintained by the CONTRACTOR during construction except for locations where new gate access is to be provided by the CONTRACTOR.

4. All items, materials and equipment remaining in the existing structures and on the premises (job site), which are not specified to be salvaged in Item C above or elsewhere, shall become the property of the CONTRACTOR and shall be removed from the job site. The CITY makes no claims or assumes any value in any of these items, materials and/or equipment if they are removed from the structures or the job site or vandalized prior to and/or during the Contract period. The CITY assumes no responsibility for any additional operation or works as a result of the conditions described herein.

E. Parking

1. No parking of CONTRACTOR'S vehicles will be allowed on the job-site except for the purposes of unloading and/or loading as directed by the ENGINEER. CONTRACTOR shall not use new paved areas for loading or unloading. All traffic controls in the Work area shall conform to the Work area Traffic Control Handbook (WATCH), latest edition, and the California Manual of Uniform Traffic Control Devices (MUTCD). (The California MUTCD is available on the internet at https://dot.ca.gov/programs/safety-programs/camutcd).

2. CONTRACTOR'S employees are advised to park on adjacent CITY streets and shall observe CITY parking restrictions posted on such streets.

3. CONTRACTOR shall obtain and pay for a "Street Use Permit" in order to park his vehicles, equipment and CONTRACTOR'S Field Office at Street Division, Bureau of Street Services, [1149 S. Broadway, Suite 400, (800) 996-2489]. Such "Street Use" shall be fenced off from street traffic as required. Upon completion of Contracted Work, such street area shall be left in a clean and safe condition ready for use by the public. Wherever CONTRACTOR and CONTRACTOR'S employees' vehicles are located on the street or "Street Use" area or on the job-site, all such vehicles shall be kept locked at all times.

4. The CONTRACTOR shall not park any vehicles, including concrete trucks, hauling and delivery trucks, in any street at any time unless approved by the ENGINEER. All vehicles used for shuttle purposes must be parked on the street and within the CONTRACTOR'S laydown area or off the [Hyperion Plant] site. Access must be maintained at all times for emergencies, sampling, equipment operations, maintenance and like items. The CITY retains the right to ticket and tow away at the CONTRACTOR'S expense vehicles blocking traffic if these vehicles are parked to altar or block traffic without an approved request.

5. Unless specified otherwise, the CONTRACTOR shall make arrangements with the CITY personnel and provide a locking device to

be used over the existing parking entrance gate lock to allow dual access.

6. Unless specified otherwise, the CONTRACTOR is responsible to lock up all gates at 5:00 P.M. and open all gates and opening at 7:00 A.M., Monday through Friday.

7. Unless specified otherwise, the Contractor's construction and staff vehicles are to be parked within the designated Stockpile/Laydown areas shown on design drawing CS07. Contractor to provide access at all times to LADWP to electrical easement including Contractor Stockpile/Laydown area. Contractor shall follow the Standard Conditions within LADWP Electrical Easement shown of design sheet GI04. INSPECTOR'S Job Office is to be located within this designated Contractor Stockpile/Staging Area within the electrical easement. Contractor shall restore to equal or improved condition any disturbed areas within the LADWP electrical easement. CONTRACTOR shall coordinate and schedule their operations to allow sufficient time to notify the ENGINEER for parking relocation and to relocate the INSPECTOR'S temporary job office and complete the new improvements. Unless specified otherwise CONTRACTOR shall not perform any demolition or install any new paving or parking stripping sixty (60) days before the Contract completion date, with the exception of major utility installation. CONTRACTOR shall not use the newly paved area for parking, loading or unloading.

F. Security

1. Restrict the access of all persons entering upon the CITY'S property in connection with the Contracted Work to the Access Route and to the actual site of the work.

2. All employees of the CONTRACTOR who will be engaged in the construction of this project will be screened by the CITY for proper identification and good behavior. Candidates of good standing will be issued a temporary pass. CONTRACTOR shall furnish the CITY, a list of employees for approval prior to start of this project.

3. In addition to the responsibilities specified in other Sections of these GENERAL REQUIREMENTS, and the GENERAL CONDITIONS, the CONTRACTOR shall be responsible for the security of all its construction equipment, materials, tools, facilities, and vehicles (personal, private, or contractual) while performing the work of this Contract. This requirement shall be effective twenty-four (24) hours per day for the duration of the Contract.

4. CONTRACTOR shall furnish and maintain approved type site security protection between the Work areas and other areas. All such site security protection shall remain for the duration of this Contract.

5. The CONTRACTOR is responsible for the security of the parking lot or parking area and all CITY property that is stored in the parking lot or area.

6. CONTRACTOR shall furnish and maintain adequate site security protection, as directed by the ENGINEER, INSPECTOR or other authorities having jurisdiction, at no additional cost to the CITY.

G. Protections

1. Required: Where necessary for the safety of the public and the protection of the adjacent street improvements and adjacent properties, provide and maintain adequate protection, fences and gates and barricades to separate Work areas from areas outside the job-site limits**.** Such protections shall comply with provisions of Section 01120 – INTERFACE / COORDINATION REQUIREMENTS and Section 01721 – MOBILIZATION of the GENERAL REQUIREMENTS, and shall remain in place during extent of this Contract or as otherwise directed by the INSPECTOR.

2. CONTRACTOR shall provide protections, barricades, signs, etc., as necessary so that persons will be protected from the Work areas where trenching and excavations occur for foundation, underground utilities, underground fuel storage tanks etc. on the job-site. Upon completion of such work operations, such protections shall be removed.

3. All equipment, material, soil, debris and any heavy loaded object shall not be stock piled in adjacent area to create any surcharging to the trench or excavation.

4. Protection of Existing Building and Site Conditions:

a. Construct and maintain a suitable type partition, approved by the ENGINEER, to prevent dust, noise and any other nuisance to occupants within areas adjacent to the Work area(s) of this Project. This also applies to any damage to existing homes and properties located adjacent to the project site.

b. Protect existing surfaces in areas where work of this Contract is being performed or passed through for access to the Work areas from damage in a manner approved by the ENGINEER. Take all necessary precautions to protect and preserve the integrity of all existing work. Any damage will be subject to requirements hereinafter specified. Submit protection plans or details as required by the ENGINEER.

H. Repair of Damages

1. Required: Repair or replace any damage by CONTRACTOR activities to existing LADWP electrical easement or areas adjacent to the full perimeter of the site under CONTRACTOR'S protection.

2. Methods: Repair or replace damaged work with new materials as necessary to restore the damaged areas or surfaces to a condition equal to and matching such conditions existing prior to damage or start of Work of this Contract, to the full satisfaction of the ENGINEER, and at no added cost to the CITY. Submit repair method for approval as required by the ENGINEER.

I. Interruption of Services

1. CONTRACTOR shall make all provisions to accomplish Contracted Work without undue interference with the CITY operations of the existing facilities on the job-site premises. Any necessary interruptions to existing plumbing, mechanical and/or electrical facilities shall be done only after 48 hours advance consultation with the ENGINEER and at such time and duration as instructed by the ENGINEER. Provide an uninterruptive power source if necessary to ensure that there is no power interruption. CONTRACTOR shall verify existing loading and any possible load increase during construction prior to ordering. Any required new circuit or repair of existing circuit in the CITY'S occupied area to maintain continuous operation shall be done by CONTRACTOR at no additional cost to the CITY.

J. Non-interference With Others

1. CONTRACTOR shall confine Contracted Work operations to the immediate boundaries of the job-site and shall execute work operations in a manner to minimize interference with CITY operations and/or work operations of other CONTRACTORS working on the premises; as directed by the ENGINEER.

2. CONTRACTOR shall provide and maintain adjacent pedestrian and vehicular accesses in accordance with Work area Traffic Control Handbook (W.A.T.C.H.), latest edition, and the California Manual of Uniform Traffic Control Devices (MUTCD).

3. CONTRACTOR shall obtain approval of ENGINEER and local authorities having jurisdiction such as Department of Transportation, Police Department, Bureau of Street Services, etc. prior to any street, alley or sidewalk closure.

K. Underground Service Alert

1. Before commencing any excavation, the CONTRACTOR shall obtain an underground service alert inquiry I.D. Number by calling 1 (800) 422-4133. Two (2) working days shall be allowed after the I.D. Number is obtained and before the excavation work starts so that utility owners can be notified. The I.D. Number must be reported to the Bureau of Contract Administration when calling for inspection. I.D. Numbers will not be given more than ten (10) calendar days prior to starting excavation work.

L. Job Safety

1. CONTRACTOR shall observe all safety rules and regulations of the Los Angeles City Building Code and CAL/OSHA as applicable to the safety of the CONTRACTOR, CONTRACTOR'S personnel and CITY employees during Contracted Work operations and especially during asbestos removal operations.

(END OF SECTION)

SECTION 01150
STORAGE OF MATERIALS AND EQUIPMENT

1.1 THE REQUIREMENT

A. All materials and equipment shall be stored and protected in accordance with the manufacturer's instructions, with seals and labels intact and legible. Store sensitive products in weatherproof, climate controlled enclosures. Where indoor storage is required, the equipment shall be stored inside a completely enclosed building, with the temperature controlled between 60 degrees Fahrenheit and 100 degrees Fahrenheit (60°F – 100°F) and a maximum relative humidity of ninety percent (90%) noncondensing.

B. For exterior storage of material or equipment, the materials or equipment shall be placed on sloped supports above ground. Material or equipment subject to deterioration shall be covered with an impervious covering. Where necessary ventilation and heating shall be provided to avoid condensation.

C. The CONTRACTOR shall exercise all measures necessary to ensure preservation of the quality, quantity, and fitness of the materials or equipment and shall perform the manufacturers recommended maintenance of the material or equipment.

D. The CONTRACTOR shall inspect the material and equipment, and submit a written monthly report to the INSPECTOR listing all the equipment stored, the results of their inspection, and the maintenance performed.

E. The materials and equipment shall not show signs of pitting, rust, decay or other deleterious effects of storage when incorporated in to the work.

F. Pumps, motors, electrical equipment, and other equipment with anti-friction or sleeve bearings shall be stored in weather tight structures maintained at a temperature above sixty degrees Fahrenheit (60°F). Electrical equipment, controls, and insulation shall be protected against moisture and water damage. All space heaters furnished in electrical equipment shall be immediately energized and operated continuously until the equipment is placed into service.

G. The CONTRACTOR shall grant the INSPECTOR and ENGINEER access to the storage facility at any time and assist the INSPECTOR and ENGINEER in conducting a full view, piece by piece, inventory of all such material or equipment.

H. The CONTRACTOR shall absorb any and all cost incurred to store, protect, and maintain the materials and equipment without modification to the Contract amount.

I. For CITY furnished equipment delivered to the site, the CONTRACTOR shall take all necessary measures to protect the equipment from damage due to the CONTRACTOR’s activities. The CONTRACTOR shall also ensure that all measures required by the CITY’s vendor to preserve and protect their equipment are maintained and are not disturbed including, but not limited to, providing for the continuous operation of space heaters furnished in electrical equipment.

END OF SECTION

SECTION 01211
ALLOWANCE FOR EQUIPMENT SUBSTITUTIONS FOR COMPATIBILITY PURPOSES

1.1 THE REQUIREMENT

A. An allowance for equipment upgrade purposes has been established in the Proposal for this Contract. In the event that the CITY determines that items of equipment proposed for use by the CONTRACTOR do not meet the needs of the CITY, and the CITY directs the CONTRACTOR to substitute other pieces of equipment, then this allowance may be used. The substitution of equipment must be directed by the CITY in writing and must specifically be identified as substitutions due to compatibility of equipment. In this event, and provided that the CONTRACTOR can clearly document an increase in cost, then such cost increase may be paid for from this allowance through the issuance of an Allowance Order; provided that there is a specific written approval of the CITY. Any monies paid from this allowance shall not result in the need to issue a Change Order. It is agreed that this allowance shall only be used to pay for direct cost differences in the cost of equipment. If the CITY rejects a piece of equipment proposed for use by the CONTRACTOR because the equipment, in the sole judgment of the ENGINEER, does not meet the requirements of the Contract Documents, the CONTRACTOR shall not have any claim against this allowance. This bid item is an allowance and is subject to an upward or downward adjustment by a Change Order, at the end of the project, to reflect the actual costs expended. Such adjustment is not subject to markup (overhead, profit, bonds, insurance, etc.).

(END OF SECTION)

SECTION 01212
FIXED CASH ALLOWANCE ITEMS

1.1 THE REQUIREMENT

A. A fixed cash allowance has been allocated to each of the following items of the Bid Breakdown (see Bid Proposal). Requirements for each Fixed Cash Allowance Item are specified in the GENERAL REQUIREMENTS (GR) section referenced below. Overhead and Profit, at the rates listed below, shall be added to the actual invoiced amount.

Bid Item No.	Description	Overhead and Profit
1.	ALLOWANCE for Engineer's and Inspector's Field Office Supplies per the GR, Section 01212	5%
2.	ALLOWANCE for Differing Site Condition per the GR, Sections 01212, 01253 and 01254	Per Section 01254
3.	ALLOWANCE for Payment for Permits per the GR, Sections 01212, 01280, 01292 and 01721	0%
4.	ALLOWANCE for Opportunity to Partner per the GR, Sections 01212 and 01353	5%
5.	ALLOWANCE for Startup Assistance per General Requirements Section 01750	5%
6.	ALLOWANCE for Distributed Control System Integration (Honeywell)	5%
7.	ALLOWANCE for Community Impact Mitigation per the GR 01212 and 01280	Per Section 01254.

B. If these items are not executed, or are only partially executed, or the allowance for any item is not expended or partially expended, then a deductive Change Order shall be issued for the amount that is not expended. If, however, these items are over expended (with ENGINEER'S prior approval), then an appropriate Change Order shall be executed in accordance with the provisions of the GENERAL REQUIREMENTS Section 01254 –- CHANGE ORDERS, except for Overhead and Profit wherein the above listed rates shall apply.

C. The ENGINEER'S AND INSPECTOR'S field office supply allowance is to be used at the ENGINEER'S and/or INSPECTOR'S discretion to purchase office supplies and/or office equipment, perform repairs to field offices or equipment owned or leased by the City, pay field office utility bills, purchase reference documents, etc. The items covered by this allowance are in addition to those required to be furnished by the CONTRACTOR under GR Section 01721-Mobilization. The CONTRACTOR shall be reimbursed the actual invoice amount plus the markup allowed by Section A, above.

END OF SECTION

SECTION 01251
CHANGE ORDER REQUESTS

1.1 THE REQUIREMENT

A. All quotations for preliminary change orders for extras, changes, additions, or deletions to the Work as described in CHANGES AND EXTRA WORK of the GENERAL CONDITIONS shall be submitted to the ENGINEER, in writing, on the Change Order Cost Quotation Form provided by the ENGINEER, and in conformance with the requirements of CHANGE ORDERS of the GENERAL REQUIREMENTS (See Attachment 01251-A1). The quotation shall be firm for a period of not less than sixty (60) calendar days from the date of receipt of the quotation by the ENGINEER. The CONTRACTOR shall submit its written cost quotation and Time Impact Analysis not later than fifteen (15) days after being requested to provide such quotation, unless the ENGINEER allows more time. Delays in submitting quotations beyond the fifteen (15) days set forth herein, which cause a delay in the issuance of a Change Order or a delay to the completion date of the project, shall not be cause for a claim or a time extension under the Contract.

B. The ENGINEER'S request for quotation on a preliminary change shall not be considered authorization to proceed with the changed work prior to the issuance of a final Lump Sum or Time & Material Change Order, unless directed otherwise, in writing, by the ENGINEER, nor shall such request constitute justification for a delay to the existing Work or a time extension under the Contract.

END OF SECTION

SEE ATTACHMENT

ATTACHMENT TO SECTION 01251

Attachments to General Requirements Section 01251 consists of one (1) document, as follows:

ATTACHMENT NUMBER	TITLE OF ATTACHMENT	NUMBER OF PAGES IN THIS ATTACHMENT
01251-A1	Change Order Cost Summary Form	1

Change Order Cost Summary Form

		Direct Labor	Direct Materials	Direct Equipment		Totals
(1):	Lump Sum Work by Prime Contractor	$	$	$		
(2):	"T&M" Work by Prime Contractor	$	$	$		
(3):	Subtotal - Direct Work (Prime Contractor)	$	$	$		
(4):	All Lump Sum Work by subcontractors (any tier)	$	$	$		
(5):	All "T&M" Work by subcontractors (any tier)	$	$	$		
(6):	Subtotal - Direct Work (all subcontractors)	$	$	$		$
(3)+(6)=(7):	Total - Direct Costs	$	$	$	**Add each of the three columns across and enter to the right.**	$
(8):	Markup	(20% of direct labor) $	(15% of direct mat'l) $	(15% of direct equip) $		$
(9):	Prime Contractor Markup for subcontractors				5% of line (6) direct sub work	$
(10):	Bonds & Insurance				1% of line (7) all direct work	$
(11):	Additional amount (if any) permitted by Contract					$
(12):	**GRAND TOTAL**				Add sums of lines) (7), (8), (9), (10) and (11)	$

SECTION 01252
CONSTRUCTION INCENTIVE CHANGE PROPOSAL

1.1 PURPOSE

A. This Article defines a "Construction Incentive Change Proposal" (CICP) and establishes policies and procedures for the application of CICP's.

1.2 DEFINITIONS

A. A CICP is a formally written proposal for a Change Order during the construction of this Project. A CICP shall be initiated, fully designed and developed, and identified as such by the CONTRACTOR. A CICP must result in a net capital savings of one-hundred-thousand dollars ($100,000) or more. However, if, in the sole judgement of the ENGINEER, a disproportionate amount of the net capital savings are offset due to the CITY's development and implementation costs, the ENGINEER will decline to approve and pursue the CICP.

B. Net capital savings are defined as the total savings proposed by the CONTRACTOR, and accepted by the ENGINEER, less the CITY's added development and implementation costs. The CONTRACTOR's development and implementation costs accepted or rejected, shall be borne solely by the CONTRACTOR and shall not be included in the calculation of savings herein.

C. A CICP must result in a net capital saving while causing no increase in the total life cycle cost of the Project and must also meet the following conditions.

1. The required quality, function, reliability, and safety of the Project shall be maintained.

2. There shall be no impact to cost or increase in difficulty of the facility/system operation and maintenance.

3. The proposed change will not result in any Contract rebidding.

4. The proposed change shall not be solely based on a reduction in end item quantities. Reductions in specified end item quantities or quantities necessary to complete the Work as specified or shown shall not be considered CICP's and shall be addressed as deductive Change Orders.

5. The proposed change shall not be solely based on a change in material quality. Reductions in specified material quality shall not be considered CICP's and shall be addressed as deductive Change Orders.

6. The proposed change shall not cause undue interruption of the Work of the Contract.

7. The proposed change shall be in full compliance with all applicable codes, permits, and regulations.

8. The proposed change shall not result in a substitution of material or equipment only.

1.3 CONTENT

A. A CICP shall contain all pertinent information and supporting documentation for evaluation by the ENGINEER. As a minimum, the following information shall be included.

1. Name(s) of the individual(s) associated with the development and preparation of the CICP.

2. A detailed description with duly signed Plans and Specifications of the present design and the proposed change(s).

3. A written discussion and clear identification of all advantages and disadvantages for each change proposed.

4. A detailed design, procedure, and schedule for implementing the proposed change. This shall include all necessary CONTRACT amendments, Plans, sketches, Drawings, design calculations, etc. (stamped by a California Registered Professional Engineer, as applicable) and the latest date the CICP must be approved for implementation without any impact to the construction progress. Such submittal shall be provided to the ENGINEER no later than ninety (90) calendar days prior to the proposed date of implementation.

5. A summary of the estimated costs shall include the following:

   a. Construction costs before and after the CICP for the proposed change. This shall be a detailed estimate identifying the following items for each trade involved in the CICP including:

      (1) Quantities of materials and equipment

      (2) Unit prices of materials and equipment

      (3) Labor hours and rates for installation

      (4) Subcontractor and CONTRACTOR mark-ups.

   b. If applicable, operation and maintenance costs before and after the CICP.

   c. CONTRACTOR’s share of the savings based on the paragraph entitled "Sharing Provisions" contained herein.

   d. Time required for executing the proposed change.

   e. Prices for items or products shown or specified shall form the basis for cost comparison for alternatives or equals that the CONTRACTOR may choose to employ under a CICP.

6. The CONTRACTOR may not restrict the CITY’s use of any CICP or the supporting data submitted.

1.4 SHARING PROVISIONS

A. Sharing of Net Capital Savings

1. Upon acceptance of a CICP, the CONTRACTOR shall share the net capital savings based on the Sharing Formula below.

1. Net Capital Savings = (Initial Construction Costs - Revised Construction Costs) -(CITY CICP Implementation Costs)

2. The CONTRACTOR's CICP development costs shall not be included in this formula. The CONTRACTOR shall bear such costs exclusively.

3. Sharing Formula

a. When the total cumulative net savings based on the formula set forth above is $1 million ($1,000,000) or less, the CONTRACTOR shall receive fifty percent (50%) of the savings.

b. When the total cumulative net savings based on the formula set forth above exceeds $1 million ($1,000,000) the CONTRACTOR's share will be computed based on the following formula:

y = .2x + $300,000

where:

y = CONTRACTOR's share in dollars

x = Total net savings in dollars

For example, if the total net savings is $1,200,000

y = .2($1,200,000) + $300,000 = $540,000

1.5 GENERAL PROVISIONS

A. Any CICP may be accepted, in whole or in part, by the ENGINEER's issuance of a Change Order to this CONTRACT citing this Article and referencing the CONTRACTOR's CICP. The ENGINEER may accept a CICP even though an agreement on price reduction has not been reached, by issuing a Notice-To-Proceed with the CICP to the CONTRACTOR. Until a Notice-To-Proceed is issued, or a Change Order applies a CICP to this CONTRACT, the CONTRACTOR shall perform in strict accordance with the existing CONTRACT requirements.

B. If the CICP is not accepted, the ENGINEER shall notify the CONTRACTOR, in writing, setting forth the reasons for rejection.

C. The ENGINEER's decision to accept or reject all or a part of any CICP shall be final and conclusive of the matter and shall not be subject to appeal under the CLAIMS AND PROTESTS Section of the GENERAL CONDITIONS.

D. In recognition of the fact that the CONTRACTOR is the originator and the designer of all CICP's, the CONTRACTOR shall be responsible for the installation, implementation, and performance of any CICP and shall guaranty and warranty the CICP in accordance with the provisions of the GUARANTY-WARRANTY Section of these GENERAL REQUIREMENTS. The

CONTRACTOR shall indemnify the ENGINEER and all its agents from any claims or damages arising directly or indirectly out of any CICP in accordance with the provisions of the INDEMNIFICATION of the GENERAL CONDITIONS. The CONTRACTOR shall be solely responsible for any and all impacts (both time and costs) and delays arising either directly or indirectly out of the implementation of any CICP.

(END OF SECTION)

SECTION 01253
DIFFERING SITE CONDITIONS

1.1 THE REQUIREMENT

A. During the course of construction, the CONTRACTOR may encounter existing utilities, structures, etc. that are not shown on the contract drawings or are not specified and which may interfere with or may impact construction activities. In the event of this occurrence, the ENGINEER may direct the CONTRACTOR to proceed with necessary exploratory or corrective work to alleviate the situation. The cost for such directed work shall be paid for under the bid item DIFFERING SITE CONDITIONS of the SCHEDULE OF WORK AND PRICES. Costs shall be calculated in accordance with Section 01254 CHANGE ORDERS, subsection TIME AND MATERIALSWORK, of the GENERAL REQUIREMENTS.

B. If the total cost of the Work directed under the DIFFERING SITE CONDITIONS clause is different from the amount set forth in the SCHEDULE OF WORK AND PRICES, the Contract Price shall be adjusted by a Change Order. The adjustment shall be the difference between the total actual cost and the amount included in the Bid, as either an additional amount due the CONTRACTOR or as a credit to the CITY, as appropriate.

C. The Geotechnical Baseline Report (GBR) presents the geotechnical basis for the effect of geologic and geotechnical conditions upon the construction. The GBR is to be considered as establishing the only geotechnical baseline for all anticipated subsurface and physical conditions for the purposes of the construction. If actual subsurface or latent conditions physical conditions differ materially from those indicated in the GBR, and are of such a nature as to cause an increase or decrease in the cost of performance of the Work, or a change in the construction methods required for performance of the Work, which results in an increase or decrease in the cost of the Work, the City shall make an adjustment in the Contract Price and Contract Completion Date and the Contract Documents shall be modified accordingly. It is understood by the parties hereto that the GBR is the only standard that is to be applied for determining CONTRACTOR'S rights to an adjustment of the Contract Price or Contract Completion Date by reason of unforeseen or unexpected subsurface or latent physical conditions. All other geotechnical data, reports, and other information provided to the CONTRACTOR are not included in or made a part of the Contract Documents, nor are such other data, reports or information warranted, impliedly or expressly, as to accuracy, completeness or use.

D. The CONTRACTOR shall notify the ENGINEER, in writing, within twenty-four (24) hours of any subsurface latent conditions or physical conditions encountered which CONTRACTOR believes, or should have suspected in the exercise of diligence and extreme care, to constitute Differing Site Conditions as described in this Section. Such written notice shall include a detailed statement of the following facts concerning such conditions: (i) their location; (ii) their nature and extent; (iii) the baseline conditions described the GBR that formed the basis of the CONTRACTOR'S expectations regarding the conditions that would be encountered. The ENGINEER shall promptly investigate the conditions. If the ENGINEER finds that conditions materially differ and will cause an increase or decrease in the CONTRACTOR'S cost or the time required to perform any part of the Work under this Contract, whether or not changed as a result of such conditions, the ENGINEER shall, after receipt of the CONTRACTOR'S written statement, make an equitable adjustment and modify the Contract in writing.

E. If the CONTRACTOR intends to assert a claim for an adjustment in the Contract Price or Contract Completion Date under this Article, it must, within twenty (20) calendar days after receipt of such determination as to whether a Differing Site Condition exists, submit a written statement setting forth a detailed cost breakdown in the form required by GENERAL REQUIREMENTS Section 01254 (CHANGE ORDERS) setting forth the basis of CONTRACTOR'S calculation of the costs saved or incurred, detailed information demonstrating the effects on the Contractor's schedule of performance in the same manner as required by the Contract Documents for obtaining approval of extensions of time, identification of the portions of the Escrow Bid Documents (including without limitation the GBR baseline statements referred to in the Escrow Bid Documents as required by Section 01351 (Escrow Bid Documents) of the General Requirements) that formed the basis of CONTRACTOR'S bid estimate to perform the Work affected by such conditions, and a complete and detailed explanation of the factual basis for the CONTRACTOR'S request.

F. Failure by CONTRACTOR to strictly comply with the notice requirements of this Section concerning the timing and content of any notice of Differing Site Conditions or of any request for equitable adjustment based on Differing Site Conditions or any failure to comply with the requirements of Section 01351 (Escrow Bid Documents) pertaining to clear identification of GBR baseline statements used in preparation of CONTRACTOR's bid shall be deemed waiver of any claim by the CONTRACTOR for increase in the Contract Price or extension of the Contract Completion Date by reason of such conditions.

G. CONTRACTOR'S rights to compensation for (i) delay, disruption, hindrance, interference, schedule compression, and the impact, ripple or cumulative effect thereof; or (ii) additional supervision, administration, excess, extended or extraordinary overhead, loss of productivity, or similar costs, expenses or damages incurred as a result of or related to any claim of Differing Site Conditions shall be limited to such sums as are allowable under TEMPORARY SUSPENSION OR DELAY OF WORK of the GENERAL CONDITIONS.

H. No claim by the CONTRACTOR for an adjustment hereunder shall be allowed if asserted after final payment under this Contract

(END OF SECTION)

SECTION 01254
CHANGE ORDERS

1.1 The Requirement

Payment to the Contractor, or credit to the City, for any change, addition, deletion or extra to the Work, or settlement of any Claim, covered by any Change Order, shall be determined by the methods set forth herein. The Engineer may change the Plans and Specifications, character of the Work, or quantity of Work provided the total net dollar value of all such changes, taking into consideration both additive and deductive changes, does not exceed twenty-five percent (25%) of the original Contract Price. (The total net dollar value requires that additive and deductive changes offset each other, and only after the total net dollar value of the changes exceeds 25% of the original Contract Price, will a Supplemental Agreement be required). Should it become necessary to exceed this limitation, the change shall be by written Supplemental Agreement between the Contractor and the City, which shall be executed by a Change Order.

Unless otherwise stipulated, “Unit Prices” and “Stipulated Prices” include all costs necessary to furnish, install and complete the Work. The “Unit Prices” and “Stipulated Prices” include all direct costs for labor, equipment and materials, all insurance and bond costs, all field and office supervisors and assistants, all onsite project administration, security costs, the cost of small tools and consumables, incidental job burdens, and all general home office expenses and no separate allowance will be made therefor. Assistants to field and office supervisors include all clerical, stenographic, and general office help. Incidental job burdens include, but is not limited to, office equipment and supplies, temporary toilets, telephone, utilities, safety equipment, warning devices, personal protective equipment, and conformance to OSHA requirements. Project administration includes, but is not limited to, review and coordination, estimating, engineering, scheduling, and expediting relative to Change Orders, and updating and furnishing Record Drawings to incorporate changes, schedule update, supervision not applied solely to the Work of the Change Order, home office salaries and expenses, and City of Los Angeles Business Tax.

A. Unit Prices

Unit prices stipulated in the Schedule of Work and Prices (Bid) or itemized in the approved Schedule of Values shall be utilized, where they are applicable and determined reasonable by the Engineer. In the event that the Change Order results in a change in the Bid quantity of more than twenty-five percent (25%), either increase or decrease, then either the Engineer or the Contractor may request a review of the unit price to determine if a new unit price shall be mutually determined by negotiation. Any new unit price mutually determined under this Subsection shall only apply to the units in excess of one hundred twenty five percent (125%) of the Bid quantity for overruns. In case of underruns, the new mutually determined unit price shall only apply to the units up to seventy-five percent (75%) of the Bid quantity. When the final quantity is less than 75% of the Bid quantity, the total payment for that item shall not be more than 75% of the Bid quantity times the Bid unit price.

At the City’s option, payment for Unit Price Work in excess of 125% of the Bid quantity, or less than 75% of the Bid quantity, will be made on a Time and Materials basis as provided in Subsection C if a new unit price cannot be agreed upon.

Renegotiated unit prices or unit prices for new items added to the Contract by Change Order shall be determined in accordance with Subsections B through G. Whether stipulated in the Bid, itemized in the approved Schedule of Values or renegotiated, the unit prices used for payment constitute the total adjustment with no further costs owed for overhead, impact, profit, delay or impact to unchanged portions of the Contract, or any

other reason. The unit price shall be full and final compensation as described in Subsection D.

The cost proposals for renegotiated unit prices shall be presented in accordance with the provisions of Subsections B through G. Should any Bid Item be deleted in its entirety, the amount bid for that Bid Item shall be subtracted from the total Contract amount. The Contractor shall be paid only for the actual cost incurred prior to the notification of such deletion for that Bid Item.

B. Lump Sum

The Engineer may initiate a change in the Work by issuing a Preliminary Change Order (PCO). A PCO will include a detailed description of the proposed additions, deletions, or revisions with supplementary sketches or revised Contract Drawings and/or Specifications and will request from the Contractor a lump sum cost quotation and time impact analysis for the proposed Change Order Work. The Contractor shall submit its PCO cost quotation and time impact analysis, if applicable, to the City within 14 calendar days after receipt of a PCO. The Contractor shall summarize the total cost and furnish a breakdown of the proposed lump sum costs satisfactory to the Engineer in accordance with Subsections B through G. Such lump sum costs shall be full and final compensation as described in Subsection D. The Contractor's quotation shall conform to the requirements of Section 01251- Change Order Requests and be submitted in the Change Order Cost Summary Form provided (see Attachment 01251-A1). The Change Order Cost Summary Form cannot be used to nullify or supersede any specification or contractual provision.

If the method or amount of payment cannot be agreed upon prior to performing the Change Order Work, the Engineer may issue a Unilateral Change Order in the amount determined reasonable by the Engineer for the Change Order Work and direct the Contractor to proceed immediately. The Engineer also has the option to issue a Time and Materials Change Order directing the Change Order Work be performed on a time and materials basis with the Contractor providing all labor, equipment, and materials necessary to complete the Change Order Work in a satisfactory manner and within a reasonable period of time. Estimates for lump sum quotations and accounting for Time and Materials Work shall be limited to direct expenditures necessitated specifically by the subject Change Order Work, and shall be segregated as follows:

1. Labor: The cost of labor shall include all employees of the Contractor or Subcontractor(s), up to and including working foremen, who are used in the actual and direct performance of the Change Order Work. Employees identified as superintendents or non-working foremen shall not be charged as labor on the Change Order Work. The labor rates used to price the Change Order Work shall be those listed on the Bureau of Engineering's website at http://eng.lacity.org/contractors/. The Change Order Labor Rates include State of California Prevailing Wages, Fringe Benefits (health & welfare, pension, vacation, training and other payments) as established by negotiated labor agreements, Payroll Taxes (FICA, Federal and State unemployment taxes) as established by law, and Insurance costs (Worker's Compensation and General Liability Insurance, but shall not include Automobile Liability Insurance, Umbrella or any other insurance costs). No other subcomponents of labor costs shall be considered, unless approved in writing by the Engineer.

   The Change Order Labor Rates are calculated using the most current published prevailing wage and fringe benefits determination, applicable to the Los Angeles County and the particular labor classification, from the State of California Director

of Industrial Relations. To the Total Base Hourly Wage Rate (Column D), will be added Payroll Taxes at 8.65% (Column E), and Worker's Compensation & General Liability Insurance at 13% (Column F) of the base wages (Columns A+B), respectively.

Copies of the prevailing wage and fringe benefit determinations are available on the internet at http://www.dir.ca.gov/OPRL/PWD/. Payment to a craft of classification not shown on the prevailing wage rate determinations shall comply with the rate of the craft or classification most closely related to it.

The Engineer may approve a higher markup for insurance by review of current invoice(s) of insurance premium, as prepared by insurance companies for the Contractor or its Subcontractors at all tiers, to be submitted by the Contractor within ten (10) working days after issuance of the Notice to Proceed.

Except when provided otherwise by specific labor agreements, the overtime compensation will be at 1.5 times for more than 8 hours per day and Saturday work (Column H) and 2 times for Sunday and Holiday work (Column I).

The labor cost is not allowed to be increased by using labor classifications with paygrades higher than necessary to accomplish the Change Order Work. Owners, business partners, stock holders, corporate officers, next of kin, relatives and other stake holders of the contracting company (whose classifications are directly chargeable to the project) may be chargeable to the Change Order Work, provided that these personnel/workers perform direct labor in accordance with their classification and have the approval of the Inspector. The rates shall not exceed the prevailing wage rate for the classification they are performing. Foreman/General Foreman classification shall include a premium not exceeding the allowable premium in the Master Labor Agreement over the highest prevailing wage he is supervising. All labor classifications considered for the work shall be presented to the City, via a submittal, for review and approval before change order work is performed.

Reimbursement at the computed Change Order Labor Rates is subject to verification by certified payroll.

2. Materials: The cost of materials used in performing the Change Order Work will be the direct cost, including sales tax and freight, to the purchaser, whether Contractor, Subcontractor or other forces, from the supplier thereof, except as follows:

   a. Cash or trade discounts available to the purchaser shall be credited to the City notwithstanding the fact that such discounts may not have been taken by the Contractor.

   b. For materials secured by other than a direct purchase and direct billing to the purchaser, the cost shall be deemed to be the price paid to the actual supplier as determined by the Engineer. Supplier markup, except for actual costs incurred in the handling of such materials, will not be allowed.

   c. Payment for materials from sources owned wholly or in part by the purchaser shall not exceed the price paid by the purchaser for similar materials from said sources on contract items or the current wholesale price for such materials delivered to the Jobsite, whichever price is lower.

d. If, in the opinion of the Engineer, the cost of materials is excessive, or the Contractor does not furnish satisfactory evidence of the cost of such materials, then the cost shall be deemed to be the lowest current wholesale price for the quantity concerned, delivered to the Jobsite less cash or trade discount. The City reserves the right to furnish materials for the Work and no claim shall be made by the Contractor for costs and profit on such materials.

e. For the purposes of this Section, a "Supplier" is defined as any person or persons, firm or business, who supplies materials of construction and/or permanent equipment, but who does not perform any portion of the Work of the Contract on site, for the Contractor, except that labor or labor supervision which may be required by some manufacturers as part of their equipment installation for warranty or other purposes.

3. Equipment: The cost of equipment shall include ownership, lease or rental costs, as well as operating costs, for individual equipment units whose replacement value is in excess of $1,000. Transportation and set up costs shall be included, but only if the equipment is imported to the worksite solely to perform work on the Changed/ Extra Work described in the Change Order and the Contractor can demonstrate that the changed work cannot or could not be performed economically with equipment already at the site. Equipment costs shall be determined in accordance with the requirements set forth in Subsection G.

4. Small tools, equipment, consumables and incidental costs: No separate payment will be made for the use of small tools or equipment with a replacement value of $1,000 or less. This applies to tools and equipment owned by the Contractor or its Subcontractors, at any tier. Also, no separate payment will be made for fuel, lubricants, tool or equipment repairs, tool or equipment maintenance, consumables, drinking water, sanitary facilities or other incidentals. These costs are already included as a part of Markup.

5. Subcontractor Costs, including their overhead and profit, provided that such costs are direct costs to the Contractor for performing the Change Order Work as set forth in Subsections B through G.

C. Time and Materials Work

The costs of all Changed/Extra Work submitted under the Time and Materials (T&M) method shall be formulated in accordance with the provisions of Subsections B through I.

Unless otherwise stipulated on the Change Order, the “Not-to-Exceed” amount for all T&M Change Orders is $25,000. The Contractor is responsible for tracking costs and for notifying the Engineer in writing when costs approach 50% and 75% of the “Not-to-Exceed” amount. In addition, if the Changed/Extra Work cannot be completed within the “Not-to-Exceed” limit, the Contractor shall notify the Engineer in writing, and in a timely manner, that the limit requires an increase. The City will only reimburse eligible costs up to the “Not-to-Exceed” amount.

The Contractor shall notify the Inspector at the beginning of each day when T&M Change Order Work is being performed. The Contractor shall notify the Inspector of the T&M Change Order Work being performed and describe the personnel involved, whether by Contractor forces or by its Subcontractors, at any tier. Failure to notify the Inspector prior

to the start of T&M Change Order Work serves as the Contractor's waiver to claim for compensation on that day.

For each day work is performed on the T&M Change Order, the Contractor shall submit a "Daily Report of Time and Material Work" to the Inspector. The "Daily Report" consists of Bureau of Contract Administration Form BCA-165 for labor supplied, and Form BCA-166 for equipment and materials supplied. The Inspector will only consider Forms that are properly completed as described below.

1. Separate forms must be used for labor and for equipment/materials.

2. Labor, equipment, material or expenditures that are not included on Bureau of Contract Administration Forms BCA-165 and/or BCA-166 are ineligible for payment. There will be no exceptions to this requirement. It is the responsibility of the Contractor to include any and all items of labor, equipment, or material for which it requests compensation for each day's work completed.

3. Information required on the Labor form shall include name of personnel, personnel classification, and only the number of hours worked on T&M Change Order Work for the day being reported. Since the overhead allowance already includes all necessary supervision, any hours for additional supervision or non-working foremen are ineligible for additional payment. The premium pay for a general foreman is eligible for payment only if the general foreman is a working foreman and a general foreman was required by a Union Labor Agreement or otherwise approved by the Inspector. The general foreman rate is eligible for payment only during the time that a general foreman was required for the T&M Change Order Work.

4. Information required on the Equipment/Material form shall include Contractor-owned equipment and/or tools, and rented equipment or tools for which compensation is requested. Information shall include the type of equipment, size of equipment, equipment identification number, appurtenances, and only the number of hours worked on the T&M Change Order Work.

5. The only allowable materials are materials delivered to the job site and/or incorporated only into the T&M Change Order Work. The allowable materials shall be listed on the Equipment/Material form for the day that they are delivered to the job site and/or incorporated into the T&M Change Order Work.

6. Delivery ticket(s) and/or bill(s) of lading for rental equipment and/or tools delivered to the site and/or material incorporated into the T&M Change Order Work for the day being reported must be attached with the T&M sheet for that day. No payment will be allowed for materials and/or rented equipment unless receipt(s) or bill(s) of lading is attached. If the request for payment is not substantiated by original vendor/supplier invoices, acceptable copies of original invoices, or other documentation acceptable to the Inspector, the City may establish the cost of the item(s) at the lowest possible wholesale price or rental rate applicable while the T&M Change Order Work was being performed.

7. Failure to submit the required "Daily Report of Time and Material Work" by the close of the next working day shall waive all rights for that day unless otherwise approved by the Inspector. Any T&M Change Order Work that cannot be substantiated by a "Daily Report", approved and signed by the Inspector, is ineligible for payment.

8. The Contractor is responsible for preparing the “Daily Report” for the T&M Change Order Work performed by its Subcontractors and submitting the forms to the Inspector on time.

9. The Contractor must have each “Daily Report” verified by the Inspector. After the “Daily Report” is approved by the Inspector, both the Contractor and Inspector sign the report. The original “Daily Report” is retained by the Inspector with a copy provided to the Contractor.

10. When the “Daily Report” is signed by the Inspector and the Contractor, it is binding on the Contractor and its Subcontractors.

11. When agreed to by the Inspector, the Contractor may submit a supplemental “Daily Report” for labor, materials, or equipment for which the Contractor requests compensation, but failed to list on the original daily report.

    a. These supplemental forms shall be marked “SUPPLEMENTAL”.

    b. Unless otherwise approved by the Inspector, the supplemental forms may only be submitted for approval up to two (2) working days following the date when the work was performed.

No payment will be allowed for labor, materials, or equipment included on T&M sheets not signed by the Contractor and the Inspector. Payment will not be allowed for labor, materials, or equipment included on T&M sheets signed by anyone other than the Inspector or the Inspector’s immediate supervisor.

D. General

It is the intent of the City to settle all Change Orders full and final at the time the Change Order is issued. Therefore, the following paragraph will be incorporated, in writing, on all Change Orders:

> “The compensation (time and cost) set forth in a Change Order comprises the total compensation due the Contractor, all Subcontractors, and all Suppliers, for the Work or change defined in the Change Order, including impact on unchanged work. By signing the Change Order, the Contractor acknowledges and agrees on behalf of himself, all Subcontractors, and all Suppliers, that the stipulated compensation includes payment for all work contained in the Change Order, plus all payment for the interruption of schedules, extended field overhead costs, delay, and all impact, ripple effect or cumulative impact on all other work under this Contract. The signing of the Change Order indicates that the Change Order constitutes full mutual accord and satisfaction for the change, and that the time and/or cost under the Change Order constitutes the total equitable adjustment owed the Contractor, all Subcontractors, and all Suppliers as a result of the change. The Contractor, on behalf of himself, all subcontractors, and all Suppliers, agrees to waive all rights, without exception or reservation of any kind whatsoever, to file any further claim related to this Change Order. No further claim or request for equitable adjustment of any type for any reasonably foreseeable cause shall arise out of or as a result of this Change Order or the impact of this Change Order on the remainder of the Work under this Contract.”

Costs which shall not be paid in Change Orders under this Contract include, but are not limited to, interest costs of any type; claim preparation or filing costs; legal expenses; the costs of preparing or reviewing proposed Change Orders or Change Order proposals;

lost revenue; lost profits; lost income or earnings; rescheduling costs; costs of idled equipment when such equipment is not at the site or has not yet been employed on the Work; lost earnings or interest on unpaid retainage; claims consulting costs; and the costs of corporate officer or staff visiting the site; any compensation due to the fluctuation of foreign currency conversion or exchange rates; loss of other business; changes in taxes or increased tax rates of any kind or any costs identified as unallowable under the provisions of the Federal Acquisition Regulations.

Extensions of time shall be based solely upon the effect of delays to the Work as a whole. Extensions of time shall not be granted for delays to the Work, unless the Contractor can clearly demonstrate, through analysis of the current updated schedule, that the delay to the Work as a whole arose or will arise from causes other than normal weather, beyond the control and without fault or negligence of the Contractor, or any Subcontractor, at any tier, and that such delays will, in fact, delay the progress of the Work as a whole. The Contractor shall not be entitled to a time extension unless it submits a Time Impact Analysis which is a calculation of the extent of the delay to the end date of the Work and which shows that the Work will be extended beyond the current Contract completion date. A Time Impact Analysis is a scheduling procedure which utilizes the networking techniques (fragnets) and a written analysis of the facts associated with the alleged delay to demonstrate the effect of the alleged delay on the critical path of the schedule. A "fragnet" is defined as a sequence of new activities and/or activity revisions that are proposed to be added to the existing current updated schedule to demonstrate (mathematically and graphically) the influence of the alleged delay on the end date of the Work and shall be the sole method for incorporating delays and impacts into the schedule. The objective of a Time Impact Analysis is to pinpoint, isolate, and quantify all time impact associated with a specific issue and determine its time relationship to current or future delays. Time extensions shall not be allowed for delays to parts of the Work that are not on the critical path of the currently approved monthly updated project schedule. Time extensions shall not be granted, nor delay damages of any kind whatsoever paid to the Contractor, until all available float, slack, or contingency time on the project is used and the end date of the Work is moved beyond the current, adjusted Contract completion date.

The cost summary, cost breakdowns and requests for cost reimbursement submitted by the Contractor (for delay, disruption, hindrance and interference associated with the changes, additions, deletions or extras) shall be itemized in a manner that, with mathematical certainty and without reliance upon probabilities or inferences, segregates the direct, actual reimbursable costs associated with each individual, change, addition, deletion, extra and (on an event-by-event basis) each individual delay or disruption event. Such cost summaries, breakdowns or requests shall not be based, in whole or in part, upon any methodology (such as “total cost” or “modified total cost” methodologies) that purports to calculate the Contractor’s additional costs of performance of the extra, change, addition or deletion (including without limitation the additional costs of delay, disruption or other impact) based on the difference between Contractor’s total actual Project or line item costs (with or without fee) and its original bid estimate for the Project or any original bid estimate line item. In connection with the foregoing, Contractor represents and warrants that it has the ability to generate and maintain complete and accurate cost accounting records that will reflect (i) the actual costs incurred or saved for each individual item of Extra Work, change, addition, deletion (including without limitation any costs of associated delay, disruption, interference, hindrance and the cumulative impact of each extra, change, addition, deletion on other parts of the Work); and, (ii) on an event-by-event basis, the effect of each delay or disruption that forms the basis of each request for extension of time, regardless of their scope, number, complexity, cumulative effect, or time of issuance or occurrence.

Except as provided in “Temporary Suspension or Delay of Work” of the General Conditions, Contractor shall have no right to recovery of any compensation, costs, expenses or damages resulting from delay, disruption, interference, or hindrance in the performance of the Work (including without limitation interruption of schedules, excess or extraordinary extended field and indirect overhead costs, loss of productivity and the impact, ripple or cumulative effect on other Work).

Contractor waives any claim or rights and remedies based on abandonment, quantum merit, rescission or other similar legal theory by reason of any of the following circumstances, which the Contractor acknowledges and agrees are within the reasonable contemplation of the parties: (i) changes, additions, deletions and extras to the Work after execution of the Contract and issued from time to time throughout the period of construction, regardless of their scope, number, cumulative value, or complexity, to correct errors, omissions, conflicts, and ambiguities in the Contract Documents, or to implement discretionary changes to the scope of Work requested by the City; (ii) the issuance and performance of changes, additions, deletions and extras in a manner that is not in sequence with the as-built or as-planned progress of the Work; (iii) changes due to Differing Site Conditions; (iv) suspensions of the Work or parts thereof, or limitations on access to portions or all of the Work, for the convenience of City or in the interests of the Project; (v) delay or disruption to the Work due to failure of the City, Engineer or Inspector to timely perform any contractual obligation.

E. Markups – Overhead and Profit

1. In addition to the direct expenditures specified for labor, materials and equipment in Subsection B, a fixed markup percentage will be paid for all overhead and profit, including: All insurance costs other than specifically mentioned in this Section, all field and office supervisors and assistants, all onsite project administration, security costs, the cost of small tools and consumables, incidental job burdens, and all general home office expenses and no separate allowance will be made therefor. Assistants to field and office supervisors include all clerical, stenographic, and general office help. Incidental job burdens include, but is not limited to, office equipment and supplies, temporary toilets, telephone, utilities, safety equipment, warning devices, personal protective equipment, and conformance to OSHA requirements. Project administration includes, but is not limited to, review and coordination, estimating, engineering, scheduling, and expediting relative to Change Orders, and updating and furnishing Record Drawings to incorporate changes, schedule update, supervision not applied solely to the Work of the Change Order, home office salaries and expenses, and City of Los Angeles Business Tax. The following maximum markup percentages shall be applied to the total amount of direct expenditures of the Contractor and Subcontractors, as noted in the Change Order Cost Summary Form.

Changed/Extra Work – Direct Costs	Markup Percentage
Contractor Direct Labor	20%
Contractor Direct Materials, Equipment, Other Items	15%
Subcontractor (of any tier) Direct Labor	20%
Subcontractor (of any tier) Direct Materials, Equipment, Other Items	15%
Contractor Administrative Fee for Subcontractor’s (of any tier) Direct Labor, Materials, Equipment, Retail Rental Equipment, Other Items	5%

2. Bonds and Insurance

An additional allowance of one percent (1%) of all direct costs (less markup) is allowed.

3. Add/ Deduct Changes

The overhead rates determined above shall be applied to all additive Change Orders, except those utilizing as-bid Unit Prices or Stipulated prices listed in the Bid Proposal.

Any change in the Work involving both extras and credits shall show a net total cost, including subcontracts. Allowances for overhead and profit to the net total cost, as specified herein above, shall be applied if the net total cost is an extra; overhead and profit allowances shall not be applied if the net total cost is a credit. When the credit is due to a reduction in unit price quantity, the Contractor shall not be entitled to retain the markups in E.1 above for the reduced quantity. The estimated cost of deductions shall be based on labor and material prices on the date the Contract was signed.

F. City Furnished Materials, Equipment and Services

The Engineer reserves the right to furnish materials, equipment and services deemed expedient for use on the Change Order Work. The Contractor shall have no claim for profit or overhead on the cost of such materials, equipment and services.

G. Equipment Costs

The rates for rental or leased equipment shall not exceed the rates listed in the Retail Rental Rates as listed in Equipment Watch, Randall Reilly Data Division, 1509 Orchard Lake Drive Charlotte, North Carolina 98270, as adjusted to the regional area of the Work under this Contract. For T&M Change Orders, the rates are established by the actual paid invoice(s) that comply with the requirements of Subsections G.1 and G.3. Owned equipment costs shall not exceed the rates established by Subsection G.2. The most recent published edition in effect at the commencement of actual equipment use on Change Order Work shall be used.

The rates paid for any rented or leased equipment or tools shall include, oil, lubrication, supplies, small tools, necessary attachments, repairs and maintenance of any kind, depreciation, storage, insurance, profit and all incidental costs associated with the operation of the equipment or tools.

It is the responsibility of the Contractor to include any appurtenances added to equipment which would increase the basic rate for said equipment (i.e., hoe-ram, oversize bucket, etc.) as established in the acceptable rental rate guide. All equipment and/ or tools shall be acceptable to the Inspector, in good working condition, suitable for the purpose for which it is to be used, and necessary to complete the Change Order Work. Payment will be based on the manner in which the equipment was actually powered, operated and modified per the equipment manufacturer’s recommendations.

1. Rented or Leased Equipment

For equipment rented or leased (including lease with purchase option) in arm's length transactions from outside vendors, the Contractor shall be paid the actual invoiced, rented or leased rates provided that the invoiced lease or rental rates

do not exceed the rates set forth in the Equipment Watch retail rental rates. Arm's length rental or lease transactions are those in which the firm involved in rental or lease of such equipment is not associated with, owned by, have common management, directorship, facilities, or stockholders with the firm renting the equipment. Submittal by a Contractor of a retail rental or leased invoice from the lessor will be prima facie proof of compliance with the above. However, such invoices are not conclusive proof; if questioned, the burden of proof remains with the Contractor. In no event shall the leased equipment rate billed to the City be at rates exceeding those prescribed in the following table:

Actual Usage (Change Order & Contract Work Combined)	Payment Category
Less than 8 hours	Hourly Rate
8 or more hours but less than 7 days	Daily Rate
7 or more days but less than 30 days	Weekly Rate
30 calendar days or more	Monthly Rate

a. When in Use:

Actual equipment use time documented by the Inspector shall be the basis that the equipment was utilized on the changed work and paid for under the T&M Change Order. In addition to the lease or rental rate, equipment-operating costs shall not exceed the estimated hourly operating rate as set forth in the Blue Book. The hours of operation shall be based upon actual equipment usage on the T&M Change Order Work as recorded by the Inspector. For multiple shift work sequences, the allowable equipment rate shall not exceed fifty percent (50%) of the base rate, for second or third shifts.

b. When Idle:

Idle equipment is equipment on site and necessary to perform the T&M Change Order Work, but periodically not in actual use due solely to the impact of the changed work. Equipment operating costs due to idle time, documented by the Inspector, shall be paid at the rate determined in “G” (1) above. The “ESTIMATED OPERATING COST $/HR” will not be paid when the equipment is idle. Idle time shall include a reasonable time allowance to and from the project site. Payment for equipment necessary to be on the site to complete the Work, but not in actual use due solely to the impact of the T&M Change Order Work, shall be paid per Caltrans Standard Specifications Section 8-1.07C, provided that its presence and necessity on the site has been documented by the Inspector, and further provided that the equipment was idled solely by actions of the City.

Payment for equipment or tools shall be limited to hours actually used on the T&M Change Order Work if the equipment or tool is already on site for Work under the original Contract. No “standby” time will be paid for equipment already on site for Work under the original Contract. Mark Up for retail rental equipment will be per Table A in Section E.1.

If equipment or tools are used intermittently and, when not in use, could be returned to the rental source at less expense than holding it at the work site, it

shall be returned, unless the Contractor elects to keep it at the work site at no expense to the City.

2. Owned and Other Equipment

Equipment rates for owned equipment or equipment provided in other than arm's length transactions shall not exceed the total hourly costs as set forth in the Caltrans “Labor Surcharge and Equipment Rental Rates” effective at the time the T&M Change Order Work is performed. (The Caltrans equipment rental rates are available on the internet at http://www.dot.ca.gov/hq/construc/equipmnt.html.) If the equipment is not listed in Caltrans, then the Owned Rental Rate in Equipment Watch shall be used. When using Equipment Watch, the hourly rate for any period less than 7 days shall be the weekly rate divided by 40, plus the Operating Cost. Except as noted herein below, this equipment hourly rate plus the estimated operating cost per hour from Equipment Watch will be paid for each hour the equipment actually performs the T&M Change Order Work. Daily records listing the equipment units and their respective operators, identification code, and actual usage on the T&M Change Order Work, as certified at the end of each work day (or work shift if the Work is being performed in multiple work shift sequence) by the Inspector shall be the record upon which actual equipment use shall be based. For multiple shift work sequences, the Caltrans overtime factor shall be applied. When using the Blue Book, one-half the Non-Operating Cost will be deducted for second and third shifts. The Non-Operating Costs are the Blue Book monthly or weekly/40 rates, as applicable. It is agreed that this rate shall represent payment in full for all the Contractor’s and Subcontractor’s direct costs.

a. When Idle:

Payment for equipment necessary to be on the site to complete the Work, but not in actual use due solely to the impact of the changed work, shall be paid per Caltrans Standard Specifications Section 8-1.07C, provided that its presence and necessity on the site has been documented by the Inspector, and further provided that the equipment was idled solely by actions of the City. (When using the Blue Book the payment for idle time shall not exceed fifty percent (50%) of the Non-Operating Cost.) Idle equipment time will only be paid as a function of delays specifically directed or caused by the City's actions. In no event shall the idle time claimed in a day for a particular piece of equipment exceed the normal work schedule established for the project - usually eight (8) hours per day or forty (40) hours per week, and excluding Saturdays, Sundays, and holidays. For multiple shift work sequence, the allowable idle equipment rate shall not be allowed, for second or third shifts. It is agreed that this rate shall represent payment in full for all the Contractor’s and Subcontractor’s direct costs.

3. Equipment Haulage and Set-up Costs

Documented and actual equipment haulage and set-up costs shall be paid for, if applicable as set forth in Subsection B.3.

4. Other Equipment Cost Guides

In the event that an owned piece of equipment used on a Change Order is not listed in Caltrans or Equipment Watch, costs may be derived from the Associated

General Contractor's of America Equipment Ownership Guide, the Associated Equipment Dealers Guide, or the Equipment Rate Guide published by the U.S. Army Corps of Engineers as adjusted appropriately for the type of work and use and the regional area of the Work under this Contract.

H. Records

At any time should the Contractor deviate substantially from the schedule, method and sequence of operation, equipment, cost or pricing data furnished by the Contractor and agreed to by the City in connection with the Change Order or should the City determine that any price negotiated in connection with the Change Order is defective due to such deviation or the fault of the Contractor, the City reserves the right to reduce the Change Order cost and reissue the Change Order at the amount in which the City determines to be the actual costs to complete the Change Order Work.

Whenever any material or process is indicated or specified by patent or a proprietary name, or by name of a manufacturer in the Change Order, such direction shall not relieve the Contractor's responsibility or obligation to perform Work in accordance with the Contract requirements. The Contractor shall be solely responsible for, and have control over construction means, methods, techniques, sequences and procedures, coordination of all portions of the Contract and Change Order Work.

The Contractor shall on a weekly basis submit an approximate accounting of the amount expended on the T&M Change Order Work to date and an estimate of the Impact to the time of performance of the Contract Work.

I. Partial Payments for Time and Materials Change Order Work.

Progress payments for T&M Change Order Work shall only be made if the anticipated cost of the changed work is in excess of $100,000 and/or the time to perform the changed work will exceed two (2) months duration. To receive payments for T&M Change Order Work, the Contractor shall submit to the Engineer an invoice of the daily reports which were verified by the Inspector, with details and documents, verifying the Contractor's and Subcontractor's actual costs incurred for the T&M Change Order Work as set forth in Subsections B through H. Costs shall be submitted within thirty (30) calendar days after the T&M Change Order Work has been satisfactorily completed unless an extension of time for submittal is authorized in writing by the Inspector.

J. Field Office Overhead - Rate Per Day:

Subject to the provisions of this Subsection and "Temporary Suspension or Delay of Work" of General Conditions, for each day of approved time extension due solely to extras, changes, and additions to the Work, Contractor shall be entitled to compensation for additional Daily Field Office Overhead as set forth herein. As a further condition to the Contractor's right to such additional compensation, the Contractor shall submit a detailed listing of the Daily Field Office Overhead cost components which are time related. The individual cost components shall represent costs which have been or will be incurred or increased as a sole or direct result of the time extension. This listing may include, but is not limited to, onsite project management, supervision, engineering, and clerical salaries; onsite office utilities and rent; onsite company vehicles and their operating expenses; site maintenance and security expenses. Daily Field Office Overhead costs which are unaffected by the increased time or time extension in the Change Order shall not be allowable costs of the Daily Field Office Overhead rates. These cost components include, but are not limited to, acquisition and installation of plant, stationary equipment, temporary construction facilities, utilities and office furnishings (unless such items are

rented or leased); the preparation of the site including clearing, grubbing, grading, and fencing; and mobilization and demobilization expenses. The listing of the Daily Field Office Overhead cost components described above must be based on the Contractor's actual Field Office Overhead costs. This listing must be submitted with the first Change Order proposal that includes a time extension request per Subsection D. If the Contractor's time related Daily Field Office Overhead cost changes for subsequent compensable delays, then the Contractor shall submit a new Daily Field Office Overhead rate based on the Contractor's time related Daily Field Office Overhead costs at the time of the subsequent delay. If change order work is performed during a compensable delay, any Daily Field Office Overhead costs paid by that change order shall be deducted from the compensation owed for additional Daily Field Office Overhead during the same time period.

The Daily Field Office Overhead rate shall be multiplied by the number of days the Contract is to be extended in the Change Order, and shall then be added to the agreed upon costs of the Change Order. No markup for overhead costs and no profit allowance shall be allowed on the Extended Daily Field Office Overhead cost component of the Change Order. The derivation of an extended home office overhead rate and its application to Contract time extensions shall not be allowed.

The information submitted above shall be submitted in sufficient detail to allow review and shall be prepared in accordance with generally accepted accounting principles and applicable portions of the Federal Acquisition Regulations. The Engineer shall have the right to have an audit of the Contractor's costs performed, at the Contractor's sole expense, if the costs submitted are considered by the Engineer to be excessive, questionable, or unsupported. The overhead rates determined above shall be applied to all additive Change Orders, except those utilizing original as-bid unit prices under Subsection A.

END OF SECTION

SECTION 01255
PRICE REDUCTION FOR DEFECTIVE COST OR PRICING DATA

1.1 THE REQUIREMENT

A. If the ENGINEER determines that any price, including profit or fee, negotiated in connection with any Change Order under this Contract, or any cost reimbursable under this Contract, was increased because:

1. the CONTRACTOR furnished cost or pricing data which was not accurate, complete, and current as certified in the CONTRACTOR'S Certificate of Current Cost or Pricing Data;

2. a Subcontractor or prospective Subcontractor furnished cost or pricing data was submitted in support of a subcontract cost estimate furnished by the CONTRACTOR but which was not accurate, complete, and/or current as of the date certified in the CONTRACTOR'S Certificate of Current Cost or Pricing Data; or,

3. the CONTRACTOR or a Subcontractor or prospective Subcontractor, at any tier, furnished any data not within subsection 1.1A(1) or 1.1A(2),above, which was not accurate as submitted;

then the price shall be reduced accordingly, and the Contract shall be modified in writing as may be necessary to reflect such reduction. However, any reduction in the Contract price due to defective subcontract data of a perspective Subcontractor, when the subcontract was not subsequently awarded to such Subcontractor, will be limited to the amount (plus applicable overhead and profit allowances) by which the actual subcontract or actual cost to the CONTRACTOR if there was no subcontract, was less than the prospective subcontract cost estimate submitted by the CONTRACTOR; provided that the actual subcontract price was not affected by defective cost or pricing data.

The following certification from the CONTRACTOR is required to be provided on all Change Order quotations or requests for equitable adjustment in excess of ten-thousand dollars ($10,000).

CERTIFICATION OF CURRENT COST
AND PRICING DATA

This is to certify that, to the best of my knowledge and belief, cost or pricing data submitted in writing, or specifically identified in writing if actual submission of the data is impracticable, to the CITY in support of **[CONTRACTOR is to insert appropriate identification such as Change Order quotation, proposal quotation, price adjustment, etc.]** are accurate, complete, and current as of **[CONTRACTOR to insert date].**

CONTRACT NO.: _____
PROPOSED CHANGE ORDER NO.: _____
FIRM: _____
NAME: _____
TITLE: _____
DATE: _____
SIGNATURE: _____

END OF SECTION

SECTION 01280
MEASUREMENT AND PAYMENT

PART 1 - GENERAL

1.01 PAYMENT

A. Upon Contract award, the accepted Schedule of Work and Prices shall become the Payment Schedule. Payment for Work under the Contract shall be made at the unit prices listed in the Payment Schedule. For lump sum bid items, payment shall be made in accordance with Section 01298.

B. Payment for the measured quantities of Work performed shall be considered full compensation for all of the CONTRACTOR's costs associated with the performance of the Work. These costs comprise direct labor, materials, tools, equipment, transportation, supplies, incidentals, and subcontract Work; and indirect costs such as field and home office overhead, consulting and design services, establishment, operation and removal of general plant, taxes, insurance, permits, bond, profit, and contingencies for the performance of all Work specified.

C. The costs for conforming to the requirements for measuring quantities shall be considered included in the fixed, unit, or lump-sum prices paid for the quantities being measured, and no additional compensation will be made therefore.

D. Work specified or shown on the drawings for which the Payment Schedule does not provide a separate lump sum or unit price is considered incidental and is not separately paid. The cost for such Work is compensated in the prices bid for other Work items and no additional compensation shall be allowed.

1.02 REJECTED, EXCESS, AND WASTED MATERIALS

A. The following shall not be measured for payment:

1. Quantities of material wasted or otherwise disposed.

2. Rejected loads of material, including material rejected after it has been placed for failure to comply with specified requirements.

3. Material remaining on the transporting vehicle or in the pipeline.

4. Muck material not removed from designated location.

5. Material placed outside specified or indicated lines or limits.

6. Material not incorporated into the Work.

7. Material remaining on hand after completion of the Work.

B. No payment will be made for loading, hauling, and disposing of rejected material.

1.03 PAYMENT SCHEDULE FOR STRATHERN PARK NORTH

A. **BID ITEM 1: Mobilization**

1. The amount payable under this item is fixed at the bid price. This bid price for costs of work in advance of construction operations. This Bid Item is not included and attributable directly to any other specific Bid Items. For progress payments, the amount payable under this item shall be determined in accordance with Section 01292.

2. The Work shall include:

   a. The movement of personnel, equipment, supplies and incidentals to the project sites.

   b. Temporary laydown area and obtaining all permits and clearance requirements to secure and utilize the laydown area

   c. The establishment of field offices, parking, utilities and other facilities at the Work Area Sites for the CITY and the CONTRACTOR, as specified in Section 01721.

   d. Work, such as engineering designs and submittals, must be performed and expended in advance of actual construction. This Work shall include any additional investigations of the condition of the NOS that the CONTRACTOR deems necessary to conduct the Work in compliance with applicable safety and other regulatory requirements.

   e. Applying for permits and coordinating work with other agencies such as USACE, LADOT, AQMD, LADBS, LADWP, SCG and other utility companies and public agencies.

   f. Work, such as handling homeless encampment within and/or adjacent to work site (if applicable) & community outreach regarding disruption to the Los Angeles River Bike Path and Recreational Parks (if applicable) at pit locations and bypass locations must be performed and resolved during mobilization. This work shall be, but is not limited to, installation 12 feet chain link and gates per S-691 around the pit(s) and/or at field office locations.

      CONTRACTOR shall coordinate with Public Affair Office (PAO) of BOS for any related issues mentioned above:

      Tonya Durrell
      (213) 978-0333 (office)
      (213) 798-6085 (cell)
      Tonya.Durrel@lacity.org

      In addition, contact LA – Homeless Services Authority at (213) 225-6581 to handle any homeless issues

   CONTRACTOR shall comply with all instructions and requirements of the PAO and the Mayor's office regarding homeless encampment issues. In addition, the CONTRACTOR shall comply with all instructions and requirements by the PAO, LADOT, LA County, and Mayor's office regarding any construction/bypass activities. All the costs related and associated with these issues shall be included in the Bid Item 1 "Mobilization".

B. **BID ITEMS 2 through 9: Allowance Items**

1. Allowance items have been established in the Bid Schedule to compensate the CONTRACTOR for the cost of performing such items as the CITY may require for the

construction of the Work, but for which it is impracticable to ascertain the scope prior to bid. If the total cost compensable under each allowance item differs from the amount set forth in the SCHEDULE OF WORK AND PRICES, the Contract Price shall be adjusted by a Change Order for the difference between the total actual costs and the allowance amount as an additional amount due the CONTRACTOR or a credit to the CITY, as appropriate.

2. Reimbursement for all allowance items shall be as determined by GR-Section 01212.

3. The allowance items are as follows:

   a. **Bid Item 2: Allowance for Engineer's and Inspector's Field Office Supplies per the GR, Section 01212**

      This bid item allows compensation for the expenses for supplies for the Engineer's and Inspector's Field Office Supplies to support the facilities during construction to be provided by the CONTRACTOR in Section 01280. This allowance shall be used to reimburse the CONTRACTOR for this work per Section 01212.

   b. **Bid Item 3: Allowance for Differing Site Conditions per the GR, Sections 01212, 01253, and 01254**

      This allowance will compensate the CONTRACTOR the additional expenses and measures taken to address and to mitigate Differing Site Condition(s) as defined and approved by the CITY per conditions set forth in Section 01253 of the specification in addition to abandoning and/or relocation of site utilities encountered during construction but not shown on the current project plans as directed by the CITY or the ENGINEER.

      This allowance will compensate CONTRACTOR in the event of an omission of an existing utility in the contract, or if an existing utility needs to be relocated due to its location in the field differing significantly from that shown in the contract drawings, and in the opinion of the ENGINEER that the utility relocation is necessary to avoid impacting the Work. If actual utilities are within 2 feet off location shown on the drawings (centerline to centerline), there will be no compensation provided under this bid item. This allowance shall not compensate the CONTRACTOR to relocate existing utilities shown on the contract drawings proposed or specified for relocation by others.

   c. **Bid Item 4: Allowance for Payment for Permits per the GR, Sections 01212, 01280, 01292 and 01721**

      Reimbursement for CONTRACTOR's expenses for permits fees without compensation for any mark-ups. The CONTRACTOR shall include in the Bid the amount stipulated under PERMITS in the SCHEDULE OF WORK AND PRICES in the Bid Proposal as ana allowance for the costs of all required permits.

      Costs shall be limited to the actual fees paid to the agencies and will be reimbursed based on original receipts only. No overhead, profit, or mark-ups shall be added to the cost of the permits. The CONTRACTOR shall deliver to the ENGINEER with each permit the original receipt. After all permits have been obtained and delivered, the actual costs of all permits shall be reviewed by the CONTRACTOR and the ENGINEER.

   d. **Bid Item 5: Allowance for Opportunity to Partner per the GR, Sections 01212 and 01353**

Reimbursement of 100 percent of the expenses for partnering, as determined by Section 0153 of these GENERAL REQUIREMENTS. There shall be no mark-ups for overhead or profit.

e. **Bid Item 6: Allowance for Startup Assistance per the General Requirements Section 01750**

This bid item allows compensation for startup assistance per GR Section 01750. This allowance shall be used to reimburse the CONTRACTOR for this work per section 01212.

f. **Bid Item 7: Allowance for Distributed Control System Integration**

This bid item allows compensation for the additional expenses for the distributed control system integration to be performed by Honeywell per Section 17400. This allowance shall be used to reimburse the CONTRACTOR for this work per Section 01212.

g. **Bid Item 8: Allowance for Community Impact Mitigation**

This allowance bid item shall be used solely to reimburse any/all CONTRACTOR's costs associated with performance of extra work related to community relations at the direction of the ENGINEER.

Reimbursement shall be determined by Section 01254, "Change Orders" of the General Requirements

(1) Compensation for noise, vibration and other mitigation measures beyond the requirements indicated and specified in Sections 01561, "Environmental Control" and 01562, "Environmental Mitigation or Conditions" of these GENERAL REQUIREMENTS.

This allowance shall not compensate CONTRACTOR for costs associated with applying for or complying with requirements established because of any CONTRACTOR request for nighttime work hours beyond the allowable working hours. This allowance shall not compensate CONTRACTOR for any means or methods or required change to its means and methods to comply with Sections 01561, "Environmental Control" and 01562, "Environmental Mitigation or Conditions" of the GENERAL REQUIREMENTS.

(2) Compensation for any community mitigation measures performed for the surrounding neighborhood.

C. **Bid Item 9: Demolition**

This lump sum price bid shall compensate the CONTRACTOR for:

a. The cost of furnishing all labor, materials, equipment and disposal fees for the demolition and disposal required including clearing and grubbing, trees, partial; excavation and removal of subsurface construction debris and other wastes, fence removal for rolling gates, etc. as defined on the Contract Drawings. Refer to Section 01572.

D. **Bid Item 10: Stormwater Pollution Prevention Plan (SWPPP), Spec Section 01571**

This lump sum price bid shall compensate the CONTRACTOR for the cost of furnishing all labor, materials and equipment to prepare the permit to implement the Stormwater Pollution

Prevention Plan (SWPPP), obtain the permit approval and implement the Plan throughout construction.

E. **Bid Item 11: Earthwork**

This lump sum price shall compensate the CONTRACTOR for the cost of furnishing all labor, materials, and equipment to prepare got excavation, shoring, soil export, soil import, backfill, compaction, etc. Refer to Section 02310.

F. **Bid Item 12: Underground Infrastructure**

This lump sum price bid shall compensate the CONTRACTOR for the cost of furnishing all labor, materials, and equipment for constructing the underground infrastructure including the storm drain piping, flow meter manholes, side gate structures, desilting basins, infiltration gallery, ventilation manholes and piping, etc. and all remaining underground infrastructure included in the Contract Drawings and Specifications that are not included in other Bid Items.

G. **Bid Item 13: Landscaping**

This lump sum price bid shall compensate the CONTRACTOR for the cost of furnishing all labor, materials and equipment for landscaping including planting, soil preparation, trees, shrubs, groundcovers, bioswales, boulders and irrigation, and all remaining landscape facilities and requirements included in the Contract Drawings and Specifications that are not included in other Bid Items. Additionally, there will be a designated maintenance period for the landscaping to ensure the proper establishment and care of all installed plants and materials.

H. **Bid Item 14: Lighting**

This lump sum price bid shall compensate the CONTRACTOR for the cost of furnishing all labor, materials, and equipment for the site lighting including MUSCO sports lighting, path lighting, security lighting, electrical wiring and conduits, etc.

I. **Bid Item 15: Electrical Service & Components**

This lump sum price bid shall compensate the CONTRACTOR for the cost of furnishing all labor, materials and equipment for the electrical service and components, all remaining electrical facilities and requirements included in the Contract Drawings and Specifications that ae not included in other Bid Items.

J. **Bid Item 16: Instrumentation**

This lump sum price bid shall compensate the CONTRACTOR for the cost of furnishing **all** labor, materials and equipment for site furnishings including flow meter, level sensors, intrusion alarms, and Programmable Logic Controller cabinets, and all remaining instrumentation facilities and requirements included in the Contract Drawings and Specifications that are not included in other Bid Items that are onsite.

K. **Bid Item 17: Site Furnishings**

This lump sum price bid shall compensate the CONTRACTOR for the cost of furnishing all labor, materials, and equipment for site furnishings the including bollards, rhino gates, benches, hydration stations, trach/recycling receptacles, educational signage and all remaining site furnishings included in the Contract Drawings and Specifications that are not included in other Bid Items.

L. **Bid Item 18: Maintenance Access Road**

This lump sum price bid shall compensate the CONTRACTOR for the cost of furnishing all labor, materials and equipment for maintenance access road including asphalt paving for new roadway and subsurface layers.

M. **Bid Items 19: Baseball Field and Appurtenances**

This lump sum price bid shall compensate the CONTRACTOR for the cost of furnishing all labor, materials and equipment for the baseball fields and appurtenances including fencing, dugout, equipment, storage, bleachers, pitching areas, batting cages, and all remaining baseball field and appurtenances included in the Contract Drawings and Specifications that are not included in other Bid Items.

N. **Bid Items 20: Pre and Post Construction Survey (9 homes)**

This lump sum price bid shall compensate the CONTRACTOR for the cost of performing pre and post construction surveys of 9 homes, per Section 01561.

(END OF SECTION)

SECTION 01291
NOTICE TO WITHHOLD AND/OR STOP NOTICE

1.1 THE REQUIREMENT

A. When a "Notice to Withhold" or "Stop Notice" is served upon the CITY, or the Board, pursuant to the lien statutes of the State of California, to withhold sufficient funds from payments to the CONTRACTOR in support of a claim resulting from default by the CONTRACTOR in payment for labor or materials used in prosecution of the Contract, the CITY shall withhold from payment due the CONTRACTOR an amount of money equal to the amount of the claim stated in the "Notice to Withhold" or "Stop Notice," and an additional amount equal to twenty-five percent (25%) of the amount of said claim, to defray the costs of litigation in the event of court action on the claim, for a total withholding of one and one quarter (1-1/4) times the stated amount of the claim. At the discretion of the CITY, the CITY may allow the CONTRACTOR to file with the CITY the bond referred to in the Civil Code of the State of California after which said monies will not be withheld on account of such "Notice to Withhold" or "Stop Notice."

B. In the event the Contract is terminated for CONTRACTOR default, any funds due the CONTRACTOR and retained by the CITY in accordance with SECTION 01292 -PAYMENTS of these GENERAL REQUIREMENTS, shall become the property of the CITY to the extent necessary to repay to the CITY any excess in the Contract Price above the cost of the Work completed at the time of termination. After issuance of Notice To Discontinue Work, no further payments will be made to the CONTRACTOR for the Work covered by the notice until completion of work and final settlement has been made.

END OF SECTION

SECTION 01292
PAYMENTS

1.1 PAYMENT FOR MOBILIZATION

A. Payment for mobilization shall be limited to those items of work described in MOBILIZATION of these GENERAL REQUIREMENTS. Whether Mobilization is included as a Contract Bid Item in the Bid Proposal Form or specified as part of the lump sum in the Contract Documents, the amount shall include full compensation for furnishing the labor, materials, tools, equipment and incidentals for all of the Work involved in mobilization in advance of construction operations. The CONTRACTOR shall submit to the ENGINEER for approval the Contract Price Breakdown with the amount established for mobilization.

B. The CONTRACTOR shall submit to the INSPECTOR for approval a breakdown of the amount established for mobilization. Total payment (100%) for obtaining insurance and bonds will be made upon proof of payment for those items. The payment for all other items of mobilization will be made when those items of mobilization have been completed and as specified below:

1. When the monthly partial payment estimate of the amount earned, not including the amount earned for mobilization, is five percent (5%) or more of the original Contract amount, the total amount earned for mobilization may be up to fifty percent (50%) of the Contract item price for mobilization. This amount will be included in the said estimate for payment.

2. When the monthly partial payment estimate of the amount earned, not including the amount earned for mobilization, is ten percent (10%) or more of the original Contract amount, the total amount earned for mobilization may be up to seventy-five (75%) of the Contract item price for mobilization. This amount will be included in the said estimate for payment.

3. When the monthly partial payment estimate of the amount earned, not including the amount earned for mobilization, is twenty percent (20%) or more of the original Contract amount, the total amount earned for mobilization may be up to ninety-five percent (95%) of the Contract item price for mobilization. This amount will be included in the said estimate for payment.

4. When the monthly partial payment estimate of the amount earned, not including the amount earned for mobilization, is fifty percent (50%) or more of the original Contract amount, the total amount earned for mobilization may be up to one hundred percent (100%) of the Contract item price for mobilization. This amount will be included in the said estimate for payment.

C. The adjustment provisions in CHANGE ORDERS of these GENERAL REQUIREMENTS, and the retention of funds provisions in this Section, shall not apply to the Contract lump sum item for Mobilization.

D. When other Contract items are adjusted as provided in CHANGE ORDERS of these GENERAL REQUIREMENTS, if the costs applicable to such item of work include mobilization costs, such mobilization costs will be deemed to have been recovered by the CONTRACTOR by the payments made for mobilization and will be excluded from consideration in determining compensation under said Article.

E. When the Contract does not include a Contract pay item for mobilization as specified above, full compensation for any necessary mobilization required shall be considered as included in the prices paid for the various Contract items of work involved and no additional compensation will be allowed.

1.2 PAYMENT FOR PERMITS

A. The Contractor shall obtain and pay for all permits necessary for performance of the Work in accordance with the provisions of PERMITS AND CONSTRUCTION EASEMENTS of the GENERAL CONDITIONS. If the Bid Proposal provides an allowance for Permits, the CONTRACTOR shall include in the Bid the amount stipulated under PERMITS in the SCHEDULE OF WORK AND PRICES in the Bid Proposal as an allowance for the costs of all required permits. Costs shall be limited to the actual fees paid to the agencies and will be reimbursed based on original receipts only and no overhead or profit shall be added to the cost of the permits. The CONTRACTOR shall deliver to the ENGINEER with each permit the original receipt. After all permits have been obtained and delivered, the actual costs of all permits shall be reviewed by the CONTRACTOR and the ENGINEER. If the total costs differ from the amount set forth in the SCHEDULE OF WORK AND PRICES, the Contract Price shall be adjusted by a Change Order for the difference between the total actual costs and the amount included in the Bid, as an additional amount due the CONTRACTOR or a credit to the CITY, as appropriate.

1.3 MONTHLY PROGRESS PAYMENTS

A. General

1. The quantities listed in the Bid schedule will not govern final payment. Payment to the CONTRACTOR will be made only for actual quantities of Contract items constructed in accordance with the Plans and Specifications. Upon completion of construction, if the actual quantities show either an increase or decrease from the quantities given in the Bid schedule, the Contract Unit Prices will prevail subject to the provisions of CHANGE ORDERS of these GENERAL REQUIREMENTS.

2. The unit and/or lump sum prices to be paid shall be full compensation for the items of work and all appurtenant work, including furnishing all materials, labor, equipment, tools, and incidentals.

3. Payment will not be made for materials wasted or disposed of in a manner not called for under the Contract. This includes rejected material not unloaded from vehicles, material rejected after it has been placed, and material placed outside of the Plan lines. No compensation will be allowed for disposing of rejected or excess material.

4. Payment for work performed or materials furnished under an Assessment Act Contract will be made as provided in particular proceedings or legislative act under which such Contract was awarded.

5. Whenever any portion of the Work is performed by the CITY at the CONTRACTOR'S request, the cost thereof shall be charged against the CONTRACTOR, and may be deducted from any amount due or becoming due from the CITY.

6. Whenever immediate action is required to prevent injury, death, or property damage, and precautions which are the CONTRACTOR'S responsibility have not been taken and are not reasonably expected to be taken, the CITY may, after reasonable attempt to notify the CONTRACTOR, cause such precautions to be taken and shall charge the cost thereof against the CONTRACTOR, or may deduct such cost from any amount due or becoming due from the CITY. CITY action or inaction under such circumstances shall not be construed as relieving the CONTRACTOR or its Surety from liability.

7. Guarantee periods shall not be affected by any payment, but shall commence on the date equipment or material is placed into service at the direction of the CITY. In the event such items are not placed into service, prior to partial or final completion of the project, the guarantee period will commence on the date of completion.

8. If the Contract comprises two or more major units of work readily separable and divisible, and for which separate prices are stipulated in the Contract, the CONTRACTOR may make separate requests for progress payment on each such unit, and the CITY will make such progress payments, statement of completion, acceptance, retention, and final payment in accordance with the procedure specified above for the entire Contract.

9. The making of any payment to the CONTRACTOR under this Contract shall not relieve the CONTRACTOR of any obligations hereunder. The CONTRACTOR is obligated to complete the Contract in its entirety and to deliver to the CITY such acceptably completed work, finished product or structure as is specified in the Contract, at the time or times specified. Until this Contract is fully performed by the CONTRACTOR, and the Work, product, or structure produced thereby is accepted by the CITY, the CONTRACTOR shall also be obligated to repair, replace, restore, or rebuild any fully or partially completed work or structure, or any materials or equipment required to be provided under the Contract which may be damaged, lost, stolen, or otherwise injured in any way. This particular obligation of the CONTRACTOR, with respect to any major unit of the type mentioned in this Section, will terminate upon the completion by the CONTRACTOR and acceptance by the CITY of such major unit.

B. Monthly Request for Payment

1. Unless otherwise prescribed by law, three (3) working days prior to the last work day of each month, or other such date mutually agreed upon by the CONTRACTOR and the INSPECTOR, the CONTRACTOR shall prepare and submit to the INSPECTOR, an estimate of the cumulative

amount and value of acceptable Work performed by the CONTRACTOR at the Jobsite up to that date. The value of the completed Work shall be based on the approved Schedule of Values in accordance with the provisions of SCHEDULE OF VALUES/CONTRACT PRICE BREAKDOWN of these GENERAL REQUIREMENTS. Said amount shall also include the value of all acceptable materials and equipment for the Contract that have been delivered and suitably stored but not yet used in the Work, subject to the requirements of this Section.

2. The CONTRACTOR will be required to make all monthly requests for payment on the CITY'S Contract Payment Request Form. CONTRACTOR shall submit Contract Payment Request Form with the approved Payment Request estimate of work to the INSPECTOR. That form requires that the CONTRACTOR certify, under penalty of perjury, to the following:

   a. No workers were required or permitted to work more than eight (8) hours in any one calendar day, except in cases of emergency, and except as provided by law.

   b. Not less than the prevailing rates of wages, as set forth in the Contract for this Work, have been paid all laborers, workers, and mechanics employed to perform this Work.

   c. There were no substitutions of Subcontractors, no assignment or transferences of Subcontractors or Sub-Subcontractors, except as approved by the Board of Public Works.

   d. All of the provisions of Los Angeles Administrative Code, Section 10.8, pertaining to non-discrimination in employment have been complied with.

.

C. On lump-sum Contracts the INSPECTOR'S estimate of the monthly payment due the CONTRACTOR is an estimate of work acceptably completed and will not be required to be made by strict measurement.

D. Upon verification and approval by the INSPECTOR, the progress payment estimate shall be forwarded to the Payment Section of the Bureau of Contract Administration for processing.

E. Payment to the CONTRACTOR shall be made within 30 days after an undisputed and properly submitted payment request is received from the CONTRACTOR by the Bureau of Contract Administration Payment Section.

F. The CITY shall retain a portion of the amount otherwise due to the CONTRACTOR, as follows:

   1. Retention of five percent (5%) will be held on the original Contract value on each approved payment claim until the amount paid of the original Contract equals fifty percent (50%). The INSPECTOR may then, at its sole discretion, discontinue further retention on the original Contract value for all subsequently approved payment claims.

2. At any time during the course of the Contract, the INSPECTOR may, at its sole discretion, reinstate the five percent (5%) retention.

3. In the event the Contract is terminated for CONTRACTOR default, any funds due the CONTRACTOR and retained by the CITY in accordance with these provisions, shall become the property of the CITY to the extent necessary to repay to the CITY any excess in the Contract Price above the cost of the Work completed at the time of termination. After issuance of Notice To Discontinue Work, no further payments will be made to the CONTRACTOR for the Work covered by the notice until completion of work and final settlement has been made.

G. Additional deductions will be made from each monthly payment request for amounts due the CITY as follows:

1. Equipment or materials furnished by the CITY.

2. Services rendered to the CONTRACTOR by the CITY.

3. Amounts due the CITY for liquidated damages under the terms of the Contract.

4. Amounts required to be deducted by federal, state, or local governmental authority or other provisions of these Contract Documents.

H. From the balance thus determined will be deducted the amount of all previous payments, and the remainder shall constitute the monthly payment due the CONTRACTOR.

I. The monthly payments may be withheld or reduced, for the following reasons:

1. If the CONTRACTOR is not diligently or efficiently complying with the express intent of the Contract;

2. If there are unresolved Notices of Non-Compliance;

3. If Technical Manuals are not submitted;

4. If Record Drawings are not kept up-to-date;

5. If progress photographs are not submitted;

6. If construction schedules are not submitted in accordance with these General Requirements; or

7. If the Solid Waste Diversion and Disposal Report is not submitted with progress payment estimate.

8. Failure of the CONTRACTOR to maintain insurance as required by the CONTRACT.

9. Upon written request of the ENGINEER.

J. The CONTRACTOR shall promptly submit the following in response to requests by the INSPECTOR:

1. All information and records necessary to determine the cost of the Work for purposes of estimating monthly payment.

2. All itemized statements, in a form satisfactory to the INSPECTOR, of the actual cost of all acceptable materials delivered by the CONTRACTOR to the site.

K. The making of any payment to the CONTRACTOR shall not relieve the CONTRACTOR from Contractual obligations. These payments shall not be construed as the transfer of ownership of any equipment or materials to the CITY.

L. Responsibility of ownership shall remain with the CONTRACTOR who shall be obligated to store, protect, repair, replace, rebuild or otherwise restore any fully or partially completed work or structure for which payment has been made. The CONTRACTOR shall replace any materials or equipment required to be provided under the Contract which may be damaged, lost, stolen, or otherwise degraded in any way prior to acceptance of the Work under the Contract.

M. Escrow Account for Retention Payments

1. Under Section 22300 of the Public Contract Code, the CONTRACTOR has the option to deposit securities with an Escrow Agent as a substitute for the CITY withholding the required five percent (5%) retention from progress payments to ensure performance of any contract entered into between the CITY and the CONTRACTOR. Provided adequate value of securities is on deposit with the Escrow Agent, retention payments are then made directly to the CONTRACTOR by the CITY. As an option, Section 22300 also permits the CONTRACTOR to have retention payments made directly to the Escrow Agent, with no requirement for the CONTRACTOR to deposit securities with the Escrow Agent. If the CONTRACTOR requests neither of the above alternatives, the retention funds will be retained by the CITY and invested by the City Treasurer, in which case, interest earned will accrue to the benefit of the CITY.

2. Under the terms of the Escrow agreement, the CONTRACTOR has the option to arrange to deposit securities up front for up to the full five percent (5%) of the total amount of the Contract **(Option "A")**, or to have the CITY make payments directly to the Escrow Agent for the amount the CITY withholds for the required retentions with no requirement for the CONTRACTOR to deposit securities in advance **(Option "B")**. These arrangements are set forth in the Escrow Agreement.

3. At the CONTRACTOR'S request, the Bureau of Accounting will provide the necessary paperwork to establish the Escrow Account. For information contact:

City of Los Angeles
Office of Accounting
200 N. Spring Street
9th Floor, City Hall
Los Angeles, CA 90012
(213) 978-0994

1.4 PAYMENT FOR MATERIALS OR EQUIPMENT DELIVERED AND STORED ON THE JOBSITE

A. Materials and/or equipment are eligible for partial payment when delivered and stored at the Worksite as follows:

1. Each individual piece of the material or equipment must be valued at $5,000 minimum.

2. The materials and equipment are intended for permanent installation.

3. The materials or equipment are specifically delineated in the Contract, specially manufactured for this project and not readily useable on other projects.

4. The CONTRACTOR shall store the materials and equipment as required in STORAGE OF MATERIALS AND EQUIPMENT in these GENERAL REQUIREMENTS.

5. Living, perishable, degradable or standard stocked items are ineligible.

B. The partial payment is limited to the lesser of 1) Ninety-five percent (95%) of the invoice cost, or 2) The bid item amount less an estimate by the City for installation.

C. The CONTRACTOR shall include cost-loaded scheduling activities for items of material and equipment that the CONTRACTOR intends to request “Partial Payment for Materials or Equipment Delivered and Stored on the Job Site”.

D. The CONTRACTOR shall provide all documentation necessary to establish the cost of such materials and equipment for the “Schedule of Values”.

E. Prior to start of Work, the CONTRACTOR shall provide the INSPECTOR with a list of all materials or equipment proposed to receive partial payment under the provisions of this Article, along with its supplier, fabricator or manufacturer.

F. Change orders and/or time extensions will not be issued for any costs or impacts related to compliance with this section, including documentation, special handling, or special storage.

1.5 PAYMENT FOR MATERIALS OR EQUIPMENT STORED OFF THE JOBSITE

A. Partial payment for materials or equipment stored off the Jobsite shall be subject to the following conditions:

3. Payment will not be made for any materials or equipment unless each individual piece of the material or equipment becomes a permanent part of the Work and has a value of more than $5,000.

4. The materials and/or equipment are required by the Specifications, and are specifically manufactured for the Project and could not readily be utilized or diverted to another job.

5. No payment will be made for living or perishable plant material, or for degradable materials such as rock, sand, cement, or for reinforcing steel, miscellaneous piping, off the shelf and catalog items, or similar items, until they are incorporated into the Work.

6. Payment for the materials or equipment stored shall not exceed sixty percent (60%) of the invoice cost of the materials or equipment. Percent of the invoice paid shall be at the discretion of the CITY. The amount paid shall not exceed the total amount of the Bid item less an amount estimated for installation.

B. The CONTRACTOR shall include cost loaded activities for the materials and equipment, for which payment will be requested, in the Schedule of Values. The CONTRACTOR shall provide all documentation necessary to establish the cost of the materials or equipment.

C. All suppliers, fabricators, or manufacturers who intend to furnish materials or equipment to the CITY must file a notice with the CITY in accordance with the State of California lien laws.

D. Each supplier, fabricator or manufacturer shall file a list, with the INSPECTOR, indicating the materials or equipment to be furnished to the Project. They shall also provide a notarized declaration from their company indicating the employees authorized to sign an unconditional release for the company. The persons signing the declaration and the unconditional release shall be identified by name and title.

E. Each request for payment shall include a notarized Unconditional Release that conforms to the California Civil Code for no less than 60% of the invoice cost of the materials or equipment. The release shall be signed by an authorized employee identified in the corporate declaration. The request shall include the suppliers invoice for the materials or equipment.

F. The CONTRACTOR shall store the materials and equipment as required in STORAGE OF MATERIALS AND EQUIPMENT of these GENERAL REQUIREMENTS, in a bonded warehouse or facility approved by the INSPECTOR. The storage site shall be located within fifty (50) miles of the geographic limits of the CITY. The materials and equipment shall be physically segregated from all other materials or equipment within the facility and shall be identified as being the "PROPERTY OF THE CITY OF LOS ANGELES". The CONTRACTOR shall exercise all measures necessary to ensure preservation of the quality, quantity, and fitness of such materials or equipment and shall perform

the manufacturers' recommended maintenance of the materials or equipment. The CONTRACTOR shall inspect the materials and equipment, and submit a monthly written report to the INSPECTOR listing all the equipment stored, results of their inspection, and the maintenance performed.

G. The CONTRACTOR shall grant the INSPECTOR and the ENGINEER access to the storage facility at any time and assist the INSPECTOR and the ENGINEER in conducting a full view, piece by piece, inventory of all such material or equipment.

H. The CONTRACTOR shall provide all additional insurance necessary to insure the materials or equipment against loss of damage. The insurance provided shall be provided as stated in INSURANCE of the GENERAL CONDITIONS. The insurance shall cover the material or equipment, while stored at the approved site, while in transit to the Jobsite, while being off-loaded at the site and until the material or equipment is incorporated into the Work and the CONTRACT is accepted by the BOARD.

I. The CONTRACTOR shall be responsible for any damage to, defects therein, mis-fabrication thereof, or loss of the materials or equipment.

J. The CONTRACTOR shall be responsible for any resulting project delays or consequential damages as if the CONTRACTOR were the owner of the material or equipment until it is incorporated in the Work and accepted by the CITY.

K. The CONTRACTOR shall absorb any and all cost incurred to meet the requirements of this article without modification in the Contract amount.

L. The CONTRACTOR shall present the storage arrangements in writing and sign a Security Agreement, which shall be submitted to the INSPECTOR for approval by the City Attorney. This agreement shall set forth the terms of ownership, storage and insurance necessary to insure the material or equipment against damage or loss.

1.6 FINAL PAYMENT

A. Final Payment of all monies owed the CONTRACTOR shall be made within 60 days of the date of Final Field Acceptance by the Final Inspector after deducting all prior payments and all amounts to be withheld under the provisions of the Contract, including the following items:

1. Liquidated damages, as applicable;

2. "Disputed Funds" including, but not limited to, the following:

a. Penalty and/or restitution for failure of the CONTRACTOR to pay prevailing wages as required by the contract.

b. Penalty for failure of the CONTRACTOR to receive approval of all Subcontractor(s) prior to said Subcontractor working on the project.

c. Penalty for failure of the contractor to receive approval for Subcontractor substitution(s).

d. Penalty for failure of the contractor to receive approval for a reduction in the dollar amount paid a bid-listed and/or approved Subcontractor;

3. Lien claims or Stop Notices filed on behalf of suppliers, Subcontractors, and labor performed in connection with the project; except, that upon submittal of a Stop Notice Release Bond issued by an approved Surety Company executed in favor of the CONTRACTOR, the CITY will release such portion of the retained funds to said CONTRACTOR that is being held solely to cover Stop Notice Claims.

B. No claim of the CONTRACTOR under this Article shall be allowed unless the CONTRACTOR has given the required written notice. Nor shall a claim by the CONTRACTOR for an equitable adjustment hereunder be allowed if asserted after final payment under this Contract.

C. The acceptance by the CONTRACTOR of final payment and retention shall release the CITY, its officers, agents, representatives or employees, as representatives of the CITY, from all claims and all liability to the CONTRACTOR for all matter in connection with the Work and all acts of the CITY relating to or arising out of the Work.

END OF SECTION

SECTION 01298
SCHEDULE OF VALUES / CONTRACT PRICE BREAKDOWN

1.1 THE REQUIREMENT

A. The Schedule of Values shall be used as a basis for determining progress payments on a lump sum contract or any designated lump sum bid item. The Schedule of Values shall be a schedule of cost loaded construction activities equal, in total, to the lump sum bid and shall be in such form and sufficient detail to correctly represent a reasonable apportionment of the lump sum. Prior to submitting an invoice for payment, the CONTRACTOR shall have submitted a detailed Schedule of Values and obtained approval from the INSPECTOR.

B. Each lump sum bid item on the Schedule of Work and Prices, as set forth in the Bid must be broken down separately. The breakdown of each lump sum bid item must cover the cost of construction required by the Drawings and Project Manual for that item. The sum of the values for the construction activities, within a bid item, must equal the total bid amount for that item. The breakdown shall include subcontract amounts which shall not deviate from the amounts submitted in the Bid Proposal. The CONTRACTOR shall provide certification from the Subcontractors certifying the subcontract amounts.

C. Each activity in the Schedule of Values shall delineate one construction activity. For example, the placement of concrete between construction joints, the construction of an electrical duct bank or pipeline between points A & B. The costing for each activity should include all costs for the labor and materials or equipment required to complete the activity. For example, concrete construction activities should include all costs for the forming, placing of reinforcement, placing concrete and curing. The cost for pipeline construction activities should include materials, equipment and installation including pipeline supports or thrust blocks. The excavation and backfill for a pipeline or structure may be separate activities. The Contract Price breakdown shall include the itemized costs for the plant establishment and any maintenance services to be performed before the final project acceptance is made. No non-construction activity shall be cost loaded.

D. The CONTRACTOR shall use cost loaded construction activities from the Construction Schedule as a Schedule of Values. Each construction activity shall be encoded to its bid item and a sort provided for each bid item totaling the cost loaded amount. The total of the Cost Loaded amounts for each bid item shall equal the amount bid for that item. The total of the Schedule of Values shall equal the current Contract value at all times. At any time during the progress of the Work of the Contract the INSPECTOR reserves the right to review the cost loading of the Schedules of Values and direct necessary revisions. When requested by the INSPECTOR, the CONTRACTOR shall provide all information necessary to substantiate the cost loading.

END OF SECTION

This page intentionally left blank

SECTION 01311
PRE-CONSTRUCTION SAFETY CONFERENCE

1.1 THE REQUIREMENT

A. The CONTRACTOR's Project Manager, Project Engineer, Safety Coordinator and Superintendent(s) shall attend a Pre-Construction Safety Conference conducted by the INSPECTOR and the ENGINEER. The CONTRACTOR will be informed of the date, time, and location of the Pre-Construction Safety Conference by the ENGINEER. The Pre-Construction Safety Conference shall take place within twenty-one (21) calendar days after Notice of Award and prior to the start of any Work at the site. The CONTRACTOR shall select additional personnel from its field staff, vendors, suppliers, and manufacturers, and from every Subcontractor, at any tier, to attend the Pre-Construction Safety Conference.

B. The CONTRACTOR shall provide to the ENGINEER and the INSPECTOR, at the Pre-Construction Safety Conference, the following documents.

1. Injury and Illness Prevention Program (IIPP) which shall address site specific concerns and shall also Include the following, as a minimum:

a. Occupational Injury and Illness Investigation and Reporting System, including a system for providing all injury reports to the INSPECTOR and the ENGINEER.

b. Safety Inspection System

c. Hazard Communication Program.

d. Methods of identifying hazards including a procedure for notifying the INSPECTOR and the ENGINEER when a hazard is identified.

e. Training Documentation System.

f. Safety Communication and Remediation Procedures.

g. Other specific safety activities which pertain to the Work

2. During periods of Pandemic/Epidemic of infectious diseases, as declared by the local and/or State health officials, the Contractor may be required to modify his/her attendance to the Pre-Construction Safety Conference and all other meetings by teleconference.

a. Following the guidelines from local and/or State health officials, the Contractor shall modify the IIPP to include these additional requirements:
   i. Personal Protective Equipment (PPE) for all workers.
   ii. Social distancing.
   iii. Hygiene maintenance.
   iv. Quarantine of infected workers and those who have come in contact.
   v. Testing requirements as prescribed by the State/Local health officials.

vi. Any other requirements as prescribed by State/Local health officials as they become available.

b. Additionally, the Contractor shall follow these guidelines as required for construction inspection:
   i. Los Angeles Department of Building and Safety Announcement No. 5 “Covid-19 Safety Guidance for Construction Sites”.
   ii. Bureau of Contract Administration Job Memorandum “Covid-19 Safety Guidelines for Construction Sites”.

3. Identification of person(s) responsible for safety of this site, who will be assigned to the site during the performance of the work, for the CONTRACTOR and all Subcontractors at any tier.

4. Emergency Action and Fire Prevention Plan.

5. Hazardous Materials Procurement, Storage, Handling, Waste Control and Disposal Procedures.

   a. The CONTRACTOR’s Lock Out/Tag Out, Confined Space Entry, Hazardous Materials/Waste Control and all other site specific safety programs shall meet or exceed the Bureau of Sanitation’s standards for this site. These standards are available to the CONTRACTOR upon request from the ENGINEER.

6. It shall be the CONTRACTOR’s responsibility to assure that all field forces know and obey all safety and emergency procedures to be maintained at the job site. The CONTRACTOR shall further assure that a supervisor is present at all times during any field work who is knowledgeable of and responsible for the enforcement of the CONTRACTOR’s required safety procedures.

(END OF SECTION)

SECTION 01312
PROJECT MEETINGS

PART ONE - GENERAL

1.1 DESCRIPTION

A. Work Included:

1. Required to enable orderly review during pre-installation conference and progress of Contracted Work, and to provide for systematic discussion of installation problems and other construction problems arisen, the ENGINEER will conduct project meetings throughout the construction period. Conform to the Pre-Construction Scheduling Conference and Project Schedule Review Meeting provisions in Section 01321 – CONTRACTOR'S CONSTRUCTION SCHEDULE AND REPORTS of the GENERAL REQUIREMENTS.

B. Related Work:

1. Documents affecting work of this Section include, but are not necessarily limited to, GENERAL CONDITIONS, DIVISION 1 - GENERAL REQUIREMENTS

2. The CONTRACTOR'S relations with his Subcontractors and materials suppliers, and discussions relative thereto, are the CONTRACTOR'S responsibility and normally are not part of project meetings content.

3. Pretesting Procedural Conference in Section 01453 – SAMPLING, TESTING AND FABRICATION INSPECTION of the GENERAL REQUIREMENTS.

4. CONTRACTOR'S CONSTRUCTION SCHEDULE AND REPORTS in Section 01321 of the GENERAL REQUIREMENTS.

1.2 SUBMITTALS

A. Conform to provisions of Section 01330 – SHOP DRAWINGS / SUBMITTALS of GENERAL REQUIREMENTS.

B. Agenda Items:

1. To the maximum extent practicable, advise the ENGINEER at least twenty-four (24) hours in advance of project meetings regarding items to be added to the agenda or requesting the cancellation of any Meeting.

C. Minutes:

1. The ENGINEER will compile minutes of each project meeting and will furnish one copy to the CONTRACTOR, INSPECTOR and all other involved parties.

2. Recipients of copies may make and distribute such other copies as they wish.

3. Special denotation mutually agreed by all parties shall be used in Meeting Minutes to identify old and new business, to distinguished new discussion/statement made in subsequent meeting from previous meetings, or any revision to any part of the minutes.

1.3 QUALITY ASSURANCE

A. For those persons designated by the CONTRACTOR to attend and participate in project meetings, provide required authority to commit the CONTRACTOR to solutions agreed upon in the project meetings. Refer to provisions indicated in Section 00302 - CONTRACTOR'S REPRESENTATIVE AT THE SITE of the GENERAL CONDITIONS.

PART TWO - PRODUCTS (NOT APPLICABLE)

PART THREE - EXECUTION

3.1 MEETING SCHEDULE

A. Except as noted below for Preconstruction Meeting, project meetings will be held bi-weekly or as otherwise directed by the ENGINEER.

B. Coordinate as necessary to establish mutually acceptable schedule for additional meetings.

3.2 MEETING LOCATION

A. The ENGINEER will establish the meeting location. To the maximum extent practicable, meetings will be held in CONTRACTOR'S job office at the Jobsite.

3.3 PRECONSTRUCTION MEETING

A. Preconstruction Meeting will be scheduled to be held within fifteen (15) working days after the City has issued the Notice to Proceed.

1. Provide attendance by authorized representatives of the CONTRACTOR and major Subcontractors.

2. The ENGINEER will advise other interested parties.

B. Minimum Agenda: Data will be distributed and discussed on at least the following items.

1. Organizational arrangement of CONTRACTOR'S forces and personnel, and those of the subcontractors, and materials suppliers.

2. Organizational arrangement of the CITY'S forces and personnel, such as the User's Agency, Project Manager, ENGINEER, CITY'S Scheduler, CITY'S Abatement Consultant, Soil Engineer, CITY'S Surveyor, INSPECTOR and other authorized representatives.

3. Channels and procedures for communication.

4. Construction schedule, including sequence of critical work.

5. Contract Documents, including distribution of required copies of original Documents and revisions.

6. Processing of Shop Drawings and other data submitted to the ENGINEER for review.

7. Processing of Bulletin, addenda, field decisions, Requests for Information and Change Orders.

8. Rules and regulations governing performance of the Work.

9. Procedures for site security, Project quality control, housekeeping, and related matters.

10. It is the responsibility of the CONTRACTOR for Job Site Safety & First Aid, however, it shall be on the agenda.

11. Procedures to request air monitoring services, soil inspection, survey, etc. if specified, shall be provided by the CITY.

12. Emergency Information: The name, addresses, telephone and fax numbers of the CONTRACTOR, and Subcontractors, or their representatives, shall be filed with the ENGINEER prior to start of Contracted Work.

3.4 PROJECT MEETINGS

A. Attendance:

1. To the maximum extent practicable, the Project Superintendent and other representatives who have full knowledge of the project and full authority to act for the CONTRACTOR shall represent the CONTRACTOR at Project Meetings throughout the progress of the Work. All representatives must conform to the provisions indicated in Section 00302 - CONTRACTOR'S REPRESENTATIVE AT THE SITE of the GENERAL CONDITIONS.

2. Subcontractors, materials suppliers, and others may be invited to attend these Project Meetings in which their aspect of the Work is involved.

3. CONTRACTOR may not cancel or be absent from any meeting without advanced approval from the ENGINEER. The CONTRACTOR must submit a written request with reason to the ENGINEER twenty-four (24) hours before the scheduled meeting. If approved, the CONTRACTOR shall notify all parties of the cancellation.

B. Minimum Agenda:

1. Review, revise as necessary, and approve minutes of previous meeting.

2. Review progress of the Work since last meeting. Review actual starts and finish dates of activities.

3. Review status (total complete and outstanding) of submittal for approval, Request-for-Information and Change Orders.

4. Identify old and new problems, which impede planned progress**,** identify responsible party for the follow-up actions. Mutually agree to a common solution and date of correction.

5. Develop corrective measures and procedures to regain lost time on the planned schedule.

6. Review Weekly Progress Reports including the forecasts as required in Section 01321 – CONTRACTOR'S CONSTRUCTION SCHEDULE AND REPORTS of the GENERAL REQUIREMENTS.

7. Status of Record drawings and the Record Project Manual.

8. Jobsite Walk-Through. Record all discussion and follow-up actions.

9. Any Jobsite health and/or accident or safety issues.

C. Revisions to Minutes:

1. Unless published minutes are challenged in writing prior to the next regularly scheduled progress meeting, they will be accepted as properly stating the activities and decisions of the meeting.

2. Persons challenging published minutes shall reproduce and distribute copies of the challenge to all indicated recipients of the particular set of minutes.

3. Challenge to minutes shall be settled as priority portion of "old business" at the next regularly scheduled meeting.

3.5 SITE MEETINGS

A. Required when necessary to enable orderly review and discussion of site conditions and problems requiring solution during the progress of the contracted work. Notify the ENGINEER of the need for additional site meetings as early as possible to resolve the problem without any impact to the Project Schedule.

B. Provide necessary labor, tools, and equipment such as shoring, scaffolding, ladder, etc. to gain access to the site.

C. CONTRACTOR or CONTRACTOR'S authorized representative shall be present at all times.

D. All discussion and follow-up actions shall be recorded by ENGINEER and the minutes shall be distributed at the next meeting or at earliest time.

END OF SECTION

SECTION 01313
WORK BY CITY OR OTHERS

1.1 THE REQUIREMENT

A. The CONTRACTOR shall be responsible for ascertaining the nature and extent of any simultaneous, collateral and essential work by others. The CITY, its employees and contractors, and others, shall have the right to operate within or adjacent to the worksite to perform such work.

B. The CITY, the CONTRACTOR, their employees, Subcontractors and others, shall coordinate their operations and cooperate to hold interference to a minimum.

C. The CONTRACTOR shall include in its Bid and schedule all costs and time involved as a result of coordinating its work with others. The CONTRACTOR shall not be entitled to additional compensation from the CITY for damages resulting from such simultaneous, collateral and essential work. The CONTRACTOR'S coordinating efforts shall include redeployment of his work forces to other parts of the Work.

D. Should the CONTRACTOR be delayed by the CITY, and such delay could not reasonably have been foreseen and prevented by the CONTRACTOR, the ENGINEER will determine the extent of the delay, the effect of the delay on the project as a whole, and any commensurate extension of time.

E. The CONTRACTOR is required to notify affected CITY offices of Work to be done as specified in the following table:

Item	Office of LADOT to be notified	Cost to be borne by	Required Notice (working days)
Work on signal – controlled intersection	Traffic Signal Inspector: Central Area: (213) 485-1071 Western Area: (213) 485-6834 Valley Area: (818) 779-9433 ATSAC Project Engineer: (213) 972-8664	Contractor	3
Traffic Signal and Interconnect damage	Signal Superintendent: Daytime: (213) 473-8465 After Hours: (818) 374-4823		Immediate
Parking meter damage	Parking Meter Supervisor: (213) 473-0644		
Parking meter removal and replacement	Parking Meter Planning Supervisor: (213) 473-0644	City**	5
Material and labor by LADOT	For Scheduling of: Sign/Striping: (213) 485-9331 Signal: (213) 485-6818		
Traffic Sign removal, relocation and replacement	Appropriate District Transportation Engineer*: Central District: (213) 972-4990 East Valley District: (818) 374-4688 Hollywood District: (323) 957-6843 West Valley District: (818) 774-4306 Western District (310) 575-8138 Southern District: (310) 732-4599		10
Parking restrictions, changes relating to temporary striping			
Final traffic striping and pavement marking		Contractor	5
Temporary Traffic Control Plan			30
Temporary striping installation mark out			2
Offsite Detour Signs			5
Placement of temporary “No Parking” signs	Special Traffic Control Section: (213) 485-2298		4

***** For B-Permit projects, notify citywide investigations (213) 972-8687.

******On B-Permit projects, the costs shall be charged to the permittee as required by Section 62.110 of the Los Angeles Municipal Code.

END OF SECTION

SECTION 01321
CONTRACTOR'S CONSTRUCTION SCHEDULE AND REPORTS

1. THE REQUIREMENT

A. Progress of the Work

1. It is expressly understood and agreed that the time of beginning, the rate of progress, and the time of completion of the Work are of the essence of this Contract. The Work shall be executed with such progress as required to prevent any delay to other CONTRACTORS that may be working on other contracts at the site, the Contract milestones, and the general completion of the Contract.

B. CONTRACTOR'S Construction Scheduler

1. The CONTRACTOR shall continuously employ or retain the services of a Construction Scheduler. The Construction Scheduler shall have at least three (3) years of verifiable experience as the person primarily responsible for preparing and maintaining detailed project schedules on projects of the same or similar size and nature as this project. The Construction Scheduler is required to attend all meetings pertaining to scheduling and progress of the Work. If the Construction Scheduler leaves employment of the CONTRACTOR, the CONTRACTOR must fulfill the requirements of B.2 a and b within thirty (30) days.

2. Within five (5) calendar days after the Notice of Award the CONTRACTOR shall provide a statement to the ENGINEER with the following:

a. Identification, qualifications, and experience of the CONTRACTOR’S Construction Scheduler and all other members of the CONTRACTOR’S scheduling staff.

b. References of not less than two (2) previous projects on which the CONTRACTOR’S Construction Scheduler has utilized CPM scheduling.

(As used in this Section, "days" mean consecutive calendar days unless otherwise noted.)

The ENGINEER and the INSPECTOR reserve the right to disapprove any scheduling candidate or scheduling system proposed for the project. The ENGINEER and the INSPECTOR reserve the right to remove, without rights to work on the project, any member of the CONTRACTOR’S scheduling staff, that is, in the ENGINEER’S or INSPECTOR’S opinion, incompetent in scheduling.

C. General

1. Schedule Methodology

The scheduling method to be used shall be a Critical Path Method schedule in the form of an activity on node Precedence Diagram Network (PDN) with capabilities of identifying the critical path. The principles and definitions of the terms used herein shall be as set forth in the Associated General CONTRACTOR’S publication "CPM in Construction", latest

edition. To the extent there are any conflicts between the Associated General CONTRACTOR'S publication and the Specifications, the Specifications shall govern.

2. Work Breakdown Structure

   a. The CONTRACTOR shall submit to the ENGINEER for approval, at the Preconstruction Scheduling Conference, the following:

      (1) A Work breakdown structure.

      (2) The associated alphanumeric coding structure to implement the Work breakdown structure.

      (3) The activity identification system for labeling all Work activities.

3. The first code field shall designate the bid item. The second code field shall identify the type of activity. (Types of activities shall be defined as "submittal", "review/approval", "procurement/fabrication", "delivery", and "construction/installation" or "Change Order".) The third code field shall identify which Specification section the activity shall be paid under. The fourth code field shall identify who is responsible to perform the activity (i.e., CONTRACTOR, Subcontractor(s), Supplier, etc.). The fifth code field shall identify the area being worked in or the facility, if appropriate. The sixth code field shall identify the construction phase or project element (if phasing of Work or project elements are identified in the Contract.) All Change Orders and Notices of Non-Compliance shall be included as separate code fields.

4. Scheduling System

   The CONTRACTOR shall use Primavera P6 (latest edition) and a hardware system commensurate with the size of the program. This shall be referred to as the Scheduling System. The Scheduling System shall be capable of handling, processing, printing, and plotting data to satisfy all requirements of this Section.

D. Preconstruction Scheduling Conference

1. The ENGINEER will schedule and conduct a Preconstruction Scheduling Conference with the CONTRACTOR'S Project Manager and Construction Scheduler within seven (7) calendar days after Notice of Award, to commence development of the required Schedule. At this meeting, the requirements of this Section, as they apply to the Contract, will be reviewed with the CONTRACTOR. The CONTRACTOR shall be prepared to review and discuss its methodology for developing the Schedule, its proposed sequence of operations, and cost, manpower, and equipment loading methodology.

   The Contractor shall include the effects of adverse weather in the Schedule in terms of working days (wds). The number of wds, Monday through Friday, excluding any day designated as a holiday by the City or in a Master Labor Agreement binding the Contractor, of normal adverse weather per month is as follows: January-3 wds, February-2 wds, March-

3 wds, April-1 wd, October-1 wd, November-2 wds, December-2 wds. Unusually severe weather (see GC 00401 – Unavoidable Delay) is defined as the number of working days over what is normal adverse weather, as defined in the previous sentence. For partial months, the aforementioned numbers shall be prorated and rounded to the nearest whole number. There shall be no extension of time for adverse weather unless the Contractor is prevented from working during the first five (5) hours of a workday with at least sixty percent (60%) of the normal work force on more days per month than listed above. Even if there is unusually severe weather, a non-compensable extension of time will not be granted unless the other conditions required by GC 00401 are met, including negative impact to the critical path and delay beyond the current Contract Completion Date.

E. CONTRACTOR'S Construction Schedules

1. CONTRACTOR'S Preliminary Schedule

a. Within fifteen (15) calendar days after the Preconstruction Scheduling Conference, the CONTRACTOR shall submit to the ENGINEER the detailed plan of operations for the first ninety (90) calendar days of Work after Notice to Proceed, as well as a general approach for the remainder of the Work. The initial submittal of the Preliminary Schedule shall include the time scaled network diagram covering at least the first 90 days after Notice to Proceed. The network diagram shall be based on the "early" schedule dates. The network diagram shall list activity I.D. number, description, original duration and early dates. The submittal shall include a predecessor/successor report which matches the network diagram. The predecessor/successor report (sorted by activity ID) shall list (as a minimum) activity ID number, original duration, description, early dates and detailed predecessor/successor listing. The Preliminary Schedule submittal shall include electronic files uploaded to e2020 containing the CPM file matching the network diagram and predecessor/successor report. Any resubmittals of the Preliminary Schedule shall be the same detail and quantity as the initial submittal.

b. The ENGINEER, the INSPECTOR, and the CONTRACTOR shall meet within seven (7) calendar days after submittal of the Preliminary Schedule to review and make any necessary adjustments or revisions. The Preliminary Schedule, when revised, will represent the CONTRACTOR'S planned means, methods, and sequences for performance of the Work during the first ninety (90) calendar days after Notice to Proceed and is to be incorporated as the first ninety (90) calendar days of the CONTRACTOR'S Construction Baseline Schedule (the Schedule).

c. The CONTRACTOR shall submit the revised Preliminary Schedule within seven (7) calendar days after the meeting, for approval by the ENGINEER and the INSPECTOR.

d. At the same time, and as part of the submittal of the Preliminary Schedule, the CONTRACTOR shall submit to the ENGINEER and the INSPECTOR, for approval, a schedule of manpower and costs assigned to each activity on the Preliminary Schedule. Costs assigned will generally conform to the CONTRACTOR'S bid item unit prices and such lump sum bid item breakdowns as the INSPECTOR shall approve. The schedule of manpower and costs shall be realistic and level so as to not have any unusual manpower requirements.

e. The resultant Preliminary Schedule, when approved by the ENGINEER and the INSPECTOR, shall be the sole basis of partial or progress payments made for Work performed during the first ninety (90) calendar days after Notice to Proceed.

f. Submittal and approval of the Preliminary Schedule is a condition precedent to the issuance and payment of progress payments. Therefore, no progress payments will be made until the Preliminary Schedule has been approved by the ENGINEER and the INSPECTOR.

g. The Preliminary Schedule shall be updated monthly during the first ninety (90) calendar days after Notice to Proceed as a part of the payment application process. All appropriate reports and network diagrams required by H of this Section shall be submitted, as agreed upon between the ENGINEER, the INSPECTOR, and the CONTRACTOR.

2. CONTRACTOR'S Construction Baseline Schedule

a. Fifteen (15) calendar days after approval of the Preliminary Schedule, the CONTRACTOR shall provide to the ENGINEER an update on the progress in the development of the Schedule. The CONTRACTOR shall prepare and submit to the ENGINEER the Contractor's Construction Baseline Schedule (the Schedule) within forty-five (45) calendar days after approval of the Preliminary Schedule.

b. The Schedule shall show the sequence and interdependence of activities required for complete performance of the Work, beginning with the date of the Notice to Proceed and concluding with the Contract Completion Date based on the completion time (calendar days) allowed in the Contract.

c. Pursuant to the float sharing requirements of the Contract, use of float suppression techniques such as preferential sequencing, special lead/lag logic restraints, extended activity times or imposed dates shall be cause for rejection of the Schedule and any revisions or updates. The use of float time disclosed or implied by the use of alternative float suppression techniques shall be shared as directed by the ENGINEER.

d. If the CONTRACTOR submits a Baseline Schedule showing completion of the Work more than thirty (30) calendar days in advance of the Contract Completion Date, the Schedule shall

show the time between the early completion date and the current Contract Completion Date as "project float". The CONTRACTOR agrees that the ENGINEER may, at no cost to the CITY, decrease the Contract duration by issuance of a Change Order which will change the appropriate Milestone Date(s) and the Contract Completion Date to the completion date reflected on the Schedule. Any approved Schedule, revision, or update having an early completion date shall show the time between the early completion date and the current Contract Completion Date as “project float”.

e. The ENGINEER will review and make comments on the Schedule. Meetings will be held between the ENGINEER, the CONTRACTOR, and all Subcontractors and Suppliers whom the CONTRACTOR may desire to invite or whom the ENGINEER may request be present.

f. Comments made by the ENGINEER on the Schedule, during review, will not relieve the CONTRACTOR from compliance with requirements of the Contract Documents. To the extent that there are any conflicts between the approved Schedule and the requirements of the Contract Documents, the Contract Documents shall govern.

g. If requested by the ENGINEER at any time during the project, the CONTRACTOR shall provide highly detailed, a short-term schedule for specific crucial items (work-around, start-up, etc.).

F. Network Details

1. The Schedule shall include time-scaled network diagrams, based on calendar days, as well as computer tabulations. It shall be constructed to show the order in which the CONTRACTOR proposes to carry out the Work, to indicate restrictions of access and to show availability of Work areas, and availability and use of manpower, materials and equipment. The CONTRACTOR shall utilize the Schedule in planning, scheduling, coordinating, and performing the Work under the Contract (including all activities of Subcontractors, equipment vendors, and Suppliers). The CONTRACTOR will provide the ENGINEER with written confirmation of the concurrence of all major trade Subcontractors and Suppliers with the Schedule. (The term "major Subcontractors and Suppliers" as used in this Section, shall include any Subcontractor or Supplier with five (5) percent or more of the value of the Contract.) The logic shall be determined by which activity must be completed before a successor can start; maximum concurrent work; and manpower or equipment constraints which prevent concurrent work.

2. The Schedule shall provide the ENGINEER with a tool to monitor and follow the progress of all phases of the Work. The Schedule submitted to the ENGINEER shall comply with all limits imposed by the scope of Work, with all contractually specified intermediate milestone and completion dates, and with all constraints, restraints or sequences included in the Contract. The degree of detail shall include factors to the satisfaction of the ENGINEER, including, but not limited to:

a. Physical breakdown of the project.

b. Contract milestones and completion dates, substantial completion dates, constraints, restraints, sequences of Work shown in the Contract, the planned substantial completion date, and the final completion date.

c. Type of Work to be performed, the sequences, and the labor trades involved.

d. All purchases, submittals, submittal reviews, manufacturing, tests, delivery, and installation activities for all major materials and equipment, and a separate list of all major material items or items of equipment for which the CONTRACTOR intends to seek payment prior to installation.

e. Deliveries of CITY furnished equipment and/or materials in accordance with the dates or schedule windows of such items set forth in the Contract or furnished by the ENGINEER, or items to be salvaged and delivered to the CITY.

f. Preparation, submittal and approval of Shop and/or Working Drawings and material samples showing Twenty-one (21) day minimum time specified for the ENGINEER'S review of normal or routine submittals and a forty five (45) day review time for all major submittals, so identified in the technical specifications, and the same time frame shall be allowed for at least one (1) resubmittal on all major submittals so identified in the Contract Documents.

g. Approvals required by regulatory agencies or other third parties notifications to utility companies, and request of services.

h. Plans for all subcontract Work, concrete placement sequence, structural steel, plumbing, electrical, etc.

i. Assignment of responsibility for performing specific activities, notifications to utility companies and request of services.

j. Access to and availability of Work areas including all anticipated plant shutdowns, if applicable.

k. Identification of interfaces and dependencies with preceding, concurrent and follow-on CONTRACTORS and utilities as shown on the Plans or called out in the Specifications.

l. Resource loading for cost, manpower, material, and equipment.

m. Actual tests by the CONTRACTOR and the CITY, submission of test reports, and approval of test results.

n. All start up, testing, training, and assistance required under the Contract.

o. Planning for phased or total takeover by the CITY.

p. Punchlist and final cleanup.

q. Identification of any manpower, material, or equipment restrictions, as well as any activity requiring unusual shift work, such as two shifts, six (6) day weeks, specified overtime, or work at times other than regular days or hours, shall be clearly identified in the Schedule.

3. The activities included in the Schedule shall be analyzed in detail to determine activity durations in units of project working days. Durations shall be based on the labor, equipment, and materials required to perform each activity on a normal Workday basis. No on-site activity shall have a duration over fifteen (15) working days except non-construction activities such as submittals, submittal reviews, procurement and delivery of materials or equipment, and concrete curing. Only on-site construction activities will be shown in their resource loaded state to reflect cost, manpower, materials and equipment except for those activities specifically identified under 1.1F.2d of this Section. The manpower and equipment, by item designation, shall be shown for each construction activity for the network on a tabular listing, and in information furnished in accordance with O and P of this Section.

4. Critical or near critical paths resulting from the use of manpower or equipment restraints shall be kept to a minimum. Near critical paths shall be defined as those paths having fifteen (15) working days or less of total float at the time of initial submission. Restraints related to resource loading must be identified as “For resource loading only”.

5. The estimated cost to perform each work activity shall be noted for each activity in the network on a tabular listing. The sum of the costs assigned to all activities shall equal the Contract value. No activity costs shall be assigned to submittals or submittal reviews. The accepted cost loaded Project Schedule shall constitute the Schedule of Values in accordance with the SCHEDULE OF VALUES / CONTRACT PRICE BREAKDOWN of these GENERAL REQUIREMENTS, from which monthly progress payments will be made in accordance with the provisions of PARTIAL PAYMENTS in these GENERAL REQUIREMENTS. Acceptance of the Cost Loaded Schedule by the CITY does not relieve the CONTRACTOR’S responsibility to submit any cost information or data as requested by the ENGINEER for verification of cost.

6. The network diagram shall be prepared on (E) size sheets (28 inches by 40 inches), shall have a title block in the lower right-hand corner, and a timeline on each page. Exceptions to the size of the network sheets and the use of computer graphics to generate the networks shall be subject to the approval of the ENGINEER.

7. All networks shall be drafted time scaled to show a continuous flow of information from left to right. The primary path(s) of criticality shall be clearly and graphically identified on the network(s).

G. Schedule Reports

1. The Schedule submitted to the ENGINEER shall include the time scaled network diagram. Network diagrams shall be based on early start and early finish dates of activities shown. The network diagrams submitted to

the ENGINEER shall also be accompanied by a computer-generated mathematical analysis for each activity included in the Schedule. Such mathematical analysis shall be submitted to the ENGINEER and shall include at a minimum, the following:

a. A list of all activities sorted by Activity I.D. Number with predecessor and successor activity numbers and descriptions;

b. Activity number and description.

c. Activity code(s).

d. Schedule and actual/remaining duration for each activity.

e. Earliest start date (by calendar date).

f. Earliest finish date (by calendar date).

g. Actual start date (by calendar date).

h. Actual finish date (by calendar date).

i. Latest start date (by calendar date).

j. Latest finish date (by calendar date).

k. Float in work days.

l. Monetary value and cost-to-date of each activity.

m. Percentage of activity complete and remaining duration for incomplete activities.

n. Cumulative value of Work completed based on the CONTRACTOR'S reported portion of activities complete and accepted.

o. Imposed constraints.

2. The following printed computer outputs shall be required as part of the Schedule submittal and each revision or update thereafter as a condition precedent to receipt of progress payments:

a. Activity listing sorted by I.D. number showing predecessor and successor activities in numerical order, with original and remaining duration, early start, early completion, late start, late completion and total float.

b. A sublisting of materials and equipment sorted by Specification Section number. The sublisting of materials and equipment shall include the following activities: preparation of Shop Drawings, submittal to the ENGINEER, review by the ENGINEER, and fabrication, testing, and/or delivery of material and equipment which shall be interfaced with the earliest start date that the material or equipment is to be installed on the project.

c. Activity sort(s) by organizational responsibility, including submittals to the ENGINEER for all major items or material and equipment, the number of shifts, crew sizes of each craft and construction equipment to accomplish the activity;

3. Outputs 1 and 2, above, shall show all activities, including restraints, for the duration of the project.

4. The CONTRACTOR shall also prepare and submit a time-scaled Master Bar Chart Summary Schedule on a single sheet that shows the total project in approximately 25-100 activities, as agreed to by the CONTRACTOR and the ENGINEER. This schedule will accurately summarize the current Project Schedule and shall have common events for correlating the two levels of schedule indenture. All Contract milestones shall be shown. The Master Summary Schedule shall be updated monthly.

H. Approval Of The Baseline Schedule

1. The Schedule network diagram and computer tabulations, the Cash Flow Projection, and the Manpower and Equipment Requirements Forecast shall be submitted to the ENGINEER for approval on e2020:

a. The Network Diagram and Master Bar Chart Summary Schedule.

b. Computer tabulations, Predecessor/Successor Report.

c. Manpower Requirements.

d. Cash Flow Projection.

e. All required reports specified in F and G of this Section.

f. Written confirmation of concurrence of all major trade Subcontractors and Suppliers.

2. Approval Process:

a. The ENGINEER shall approve or disapprove, in writing, the CONTRACTOR'S submission within twenty-one (21) calendar days after receipt of all required information. The Schedule, once approved, becomes the Baseline Schedule which shall be used for monitoring and evaluating all facets of Contract performance including, but not limited to, progress, changes, and delays.

b. The CONTRACTOR, the CONTRACTOR'S Construction Scheduler, and those major trade Subcontractors and Suppliers, as required by the ENGINEER, shall be required to participate in all meetings necessary to reach mutual agreement and approval of the Baseline Schedule, the Manpower Requirements Forecast, and the Cash Flow Projection.

c. The CONTRACTOR shall revise the Baseline Schedule, as required by the ENGINEER, to reflect project construction. If any of the required submissions are returned to the CONTRACTOR

for corrections or revisions, they shall be resubmitted along with a new CD and a hard copy listing of each change (Claim Digger report) for approval within seven (7) calendar days after receipt. Resubmittals shall be as required in H.1 and H.2 of this Section. Review and response by the ENGINEER shall be given within seven (7) calendar days after receipt of each new submission.

d. Should the Baseline Schedule, submitted for approval, show variances from the requirements of the Contract, the CONTRACTOR shall make specific mention of such variations in the letter of transmittal, in order that, if accepted, proper adjustments to the Baseline Schedule can be made. Otherwise, the CONTRACTOR will not be relieved of the responsibility for executing the Work in strict accordance with the requirements of the Contract Documents.

e. Submittal and approval of the Baseline Schedule, the Manpower Requirements Forecast, the Cash Flow Projection, major trade Subcontractor and Supplier confirmation in writing, or CD(s), within the time prescribed, or revisions thereof within the required time, is a condition precedent to the issuance and payment of progress payments.

f. Failure of the CONTRACTOR to submit the Baseline Schedule, or any required resubmittals, in a timely, accurate manner and in accordance with the requirements of this Section will result in costs to the CITY which are difficult if not impossible to determine; therefore, the CONTRACTOR shall pay the CITY liquidated damages in the amount of $1,000.00 per calendar day, for every work day the schedule submittal, revision, or resubmittal is late. This amount shall be subtracted from any monies due and shall be forfeited by the CONTRACTOR.

I. Revisions To Approved Baseline Schedule

1. The CONTRACTOR shall execute the Work in accordance with the approved Baseline Schedule. Out of sequence construction, defined as a change in the Baseline Schedule, requires prior approval of the ENGINEER as defined below.

2. Upon approval of a Time Impact Analysis the change shall be reflected in the next schedule submittal by the CONTRACTOR.

3. No change (except for resubmittals) to the approved Baseline Schedule shall be made without the prior written approval of the ENGINEER. If the CONTRACTOR desires to make a change to the approved Baseline Schedule, the CONTRACTOR shall request permission from the ENGINEER in writing, stating the reasons for the change as well as the specifics, such as revisions to activities, logic, durations, etc. The ENGINEER will provide a response within five (5) calendar days. Actual status and/or forecast dates for revised submittals shall be added without prior acceptance by the ENGINEER. They are still subject to review by the ENGINEER.

4. If the ENGINEER considers a change to the Baseline Schedule to be of a major nature, the ENGINEER may require the CONTRACTOR to revise and submit for acceptance all of the affected portion(s) of the Baseline Schedule including an analysis to show the effect on the entire project. The proposed revision and analysis shall be submitted to the ENGINEER within fifteen (15) calendar days after the ENGINEER notifies the CONTRACTOR the revision is of a major nature. A change will be considered to be of a major nature if the time estimated for an activity or sequence of activities is varied from the original plan to the degree that there is reasonable doubt that the Contract completion date will be met, or if the change impacts the Work of other CONTRACTORS at the Jobsite. Changes to activities having adequate float shall be considered as minor changes, except that an accumulation of minor changes may be considered a major change when such changes affect the Contract completion date. (Activities having adequate float are activities which are not critical after the change is made.).

5. Only upon approval of a change by the ENGINEER shall it be reflected in the next Schedule update submitted by the CONTRACTOR.

J. Updates To Approved Baseline Schedule And Progress Payments

1. Monthly Updates:

a. All updated or revised Schedules shall be submitted in the same detail as the original submittal, unless modified in writing by the ENGINEER. Written confirmation of the major trade Subcontractors and Suppliers shall be required quarterly.

b. The initial Schedule update shall be submitted within fourteen (14) calendar days after approval of the Baseline Schedule. The Schedule update shall be cost loaded. Subsequent Schedule updates shall be submitted at the beginning of each month thereafter for the duration of the Contract. The data date shall be the first working day of the month unless otherwise directed by the ENGINEER. The Schedule and computer tabulations shall be reviewed by the CONTRACTOR'S Construction Scheduler at a joint update meeting with the ENGINEER and the INSPECTOR.

2. Monthly Schedule Updates:

a. The CONTRACTOR shall submit the Monthly Schedule Update to the ENGINEER each month, on a date assigned by the ENGINEER. The proposed Monthly Schedule Update prepared by the CONTRACTOR shall include all information available as of the cutoff date established by the ENGINEER. A detailed list of all proposed schedule changes (logic, duration, status, additions, and deletions) shall be submitted with the update (Claim Digger report). Prior to the monthly update review meeting, the CONTRACTOR shall obtain from his Subcontractors, Suppliers, and staff the necessary information as required to reflect progress to date. A proposed Monthly Schedule Update containing the information set forth below shall be available for review at the meeting.

(1) For activities started and/or completed during the previous period: Actual start and actual completion dates, and number of shifts used to accomplish the activity.

(2) For activities begun but not yet complete to date: Remaining duration of the Work, estimated percent complete, and estimated completion date. The schedule shall be calculated using remaining durations and retained logic.

(3) For activities not yet started: Estimated start dates, revised durations, and estimated completion dates, as necessary.

(4) For authorized Change Orders, including Emergency Change Orders, Time and Material Change Orders, and Unilateral Change Orders: Revised and original activities, number of shifts, crew sizes by craft, construction equipment required, cost, and durations, and status of all outstanding Notices of Non-Compliance, where required.

(5) The monthly update of the Network Diagram shall be for the whole project. The previous month's activities shall be reported as they actually took place and designated as complete, if actually completed, on the network diagram update.

(6) The electronic file of the submitted Network Diagrams and the related reports shall constitute a clear record of progress of the Work from Notice to Proceed to final completion.

(7) The monthly submittal to the ENGINEER shall be accompanied by the Schedule Narrative Report. The Schedule Narrative Report shall describe the physical progress during the report period. Plans for continuing the Work during the forthcoming report period, actions planned to correct any negative float predictions, and an explanation of potential delays and/or problems and their estimated impact on performance and the overall project completion date. In addition, alternatives for possible schedule recovery to mitigate any potential delay and/or cost increases shall be included for consideration by the ENGINEER. The report shall follow the outline set forth below:

CONTRACTOR'S Schedule Narrative Report Outline:

a) CONTRACTOR'S Transmittal Letter.

b) Description of problem areas.

c) Current and anticipated delays:
    1) -Cause of the delay.

2) -Corrective action and schedule adjustments to correct the delay.
3) -Impact of the delay on other activities, milestones, and completion dates.

d) Changes in construction sequences.

e) Pending items and status thereof:
1) -Permits.
2) -Change Orders.
3) -Time extensions.
4) -Non-Compliance Notices.

f) Contract Completion Date(s) status:
1) Ahead of schedule and number of working days.
2) Behind schedule and number of working days.

g) Other project or scheduling concerns including any plant shutdowns, duration of each shutdown, and analysis of any Work to be performed during the shutdown period.

h) Include reviewed and updated Network Diagram and Reports.

i) Include revised Cost Loading and Cash Flow Information of this Section.

j) Include substantial revisions to manpower and equipment requirements

(8) The CONTRACTOR shall provide to the ENGINEER, the Network Diagram, the Predecessor/Successor Report sorted by activity number, the list of all changes made to the previously approved Schedule, and the Schedule Narrative Report. The data required to provide all other scheduling reports called for in of this Section shall be provided on e2020.

3. The CONTRACTOR'S Construction Scheduler and representatives from major Subcontractors and Suppliers (as requested by the ENGINEER shall attend the monthly update meetings with the above data prepared in advance for each meeting to provide, as of the end of the updating period, a complete and accurate report of the current procurement schedule (in accordance with the requirements of CONSTRUCTION STATUS REPORTS of the GENERAL REQUIREMENTS), construction progress, and a depiction of how the CONTRACTOR plans to continue the Work of the project to meet all Contract Completion Dates. All network changes and status dates agreed to during each update meeting shall be considered as acceptable by all parties unless written notice of exception is given by an objecting party within five (5) calendar days after the update meeting. For major network changes that cannot be agreed to during an update meeting, the CONTRACTOR shall submit, in writing, such

revisions for the ENGINEER'S approval prior to inserting such changes into the network. Submissions may be in the form of marked-up networks, fragnets, or schedule abstracts provided they are submitted with a letter of transmittal. The submission and approval procedures for this information shall follow the same timetable described in H.2 of this Section.

4. Predicated on the results of the ENGINEER'S review of Monthly Schedule Update submittals and accompanying reports, the CONTRACTOR may be required to revise the Monthly Schedule Update. Conditions under which a revision will be made are as follows:

   a. When a delay in the completion of any Work item or sequence of Work items results in an indicated extension of the project completion or interim milestone dates detailed herein by thirty (30) calendar days.

   b. When delays in submittals or deliveries or Work stoppages are encountered, which make replanning, rescheduling, or resequencing of the Work necessary.

   c. When the schedule does not represent the actual execution and progress of the project.

5. Required revisions of the Monthly Schedule Update are due within five (5) calendar days of notice by the ENGINEER that a revision is required. All revisions and additions to the Schedule are subject to the review of the ENGINEER. No changes (except resubmittal cycles) are to be implemented in the Schedule by the CONTRACTOR without the prior approval of the ENGINEER. When the Monthly Schedule Update or its required revision is approved by the ENGINEER, it then becomes the Current Schedule Update. The Current Schedule Update will be used for the period from which it is approved until its successor is submitted and approved.

6. The Schedule Narrative Report, the updated Project Schedule (networks, and computer computations), the Cash Flow Projection, the updated network diagram, and one (1) copy of the updated CD reflecting the status of the project agreed to at the updating meeting, shall be submitted to the ENGINEER within five (5) calendar days after each updating meeting.

7. The update report shall show the activities or portions of activities completed during the reporting period and their total value as the basis for the CONTRACTOR'S request for partial payment. Payments made pursuant to PARTIAL PAYMENTS of these GENERAL REQUIREMENTS will be based on the total value of such activities completed or partially completed after verification by the INSPECTOR. The report shall state the percentage of the Work actually complete as of the report date. If the project is behind schedule, progress along other paths with negative float shall also be reported.

8. Failure of the CONTRACTOR to submit the Monthly Schedule Updates in a timely, accurate manner and in accordance with the requirements of this Section will result in costs to the CITY which are difficult, if not impossible to determine; therefore, the CONTRACTOR shall pay the CITY liquidated damages in the amount of $1,000.00 per calendar day for every work day

the submittal is late or not in full compliance with the requirements of this Section. This amount shall be deducted from any monies due and forfeited by the CONTRACTOR. In addition to the liquidated damages, if the CONTRACTOR fails to submit any of the Monthly Schedule Update deliverables, or to meet any of the other updating requirements, progress payments will be withheld until such time as the required update information is submitted.

K. Weekly Progress Reports

1. Once each week, on a day established by the ENGINEER, the CONTRACTOR shall submit:

   a. A progress schedule listing the activities completed and in progress for the previous week and the activities scheduled for the succeeding two (2) weeks. The activity designations shall be consistent with the activity designations in the Current Schedule Update. A bar chart shall be used to display the information in pictorial form. The appropriate schedule activity number shall be listed for each bar.

L. Cost Loading and Cash Flow

1. With the initial Baseline Schedule submittal, each Monthly Schedule Update, and each revision, the CONTRACTOR shall also submit a schedule of cost loading and cash flow to the ENGINEER. There shall be a strict correlation between the sum of individual activity costs and the total values indicated for bid items. That is, each individual activity within the Schedule shall employ a code, which in summary, attaches its cost, if any, to the appropriate bid items. The sum of activity costs within a specific code shall equal the cost of its corresponding bid items and approved Change Orders.

2. Expected payment requests for each month shall be included with proposed updates. The cash flow shall show the net payment requests for each month. The cumulative payment requests to date shall also be shown after deducting retainage and any other monies withheld. The cash flow shall be shown in tabular format and in graphic format.

3. The CONTRACTOR, at the Preconstruction Scheduling Conference, shall explain in detail the procedure to be used to develop the Schedule activity cost loading and cash flow. This procedure is subject to the review and approval of the ENGINEER and the INSPECTOR. Receipt and approval of the Schedule Cost Loading and Cash Flow Summary is a condition precedent to the making of any payments under the Contract. Therefore, failure to submit an acceptable schedule cost loading and cash flow summary shall be cause for withholding any progress payments due or that may become due under this Contract, until such time as an acceptable cost loading and cash flow summary is received.

4. In accordance with the updating procedures, when an activity is deemed substantially complete by the ENGINEER, then such activity will no longer be treated as an activity affecting the critical path or successor activities on the project. The cost of correction of any punchlist items associated with substantially completed activities will be covered by amounts deemed

by the ENGINEER and the INSPECTOR to be adequate to cover such costs.

M. Responsibility For Completion

1. Whenever it becomes apparent from the current Monthly Schedule Update that phasing, milestone, constraint, restraint, or Contract Completion Date will not be met, the CONTRACTOR shall submit a plan to recover the delay using some or all of the following remedial actions;

   a. Increase construction manpower in such quantities and crafts as necessary to eliminate the backlog of work and meet the current Contract Completion Date.

   b. Increase the number of working hours per shift, shifts per working day, working days per week, the amount of construction equipment, or any combination thereof to eliminate the backlog of Work.

   c. Reschedule the Work in conformance with the Specification requirements.

2. Prior to implementing any of the above actions, the CONTRACTOR shall notify the ENGINEER and obtain approval from the ENGINEER. If such actions are approved, the Schedule revisions shall be incorporated by the CONTRACTOR into the Network Diagram before the next Monthly Schedule Update is due.

3. Under no circumstances will the addition of equipment or construction forces, increasing the Working hours or any other method, manner, or procedure to return to the contractually required Contract Completion Date be considered justification for a Change Order or be treated as acceleration where the need for a recovery schedule has been caused by the CONTRACTOR and/or its Subcontractors or Suppliers, at any tier.

4. The ENGINEER may elect to withhold progress payments until the CONTRACTOR'S progress indicates that the milestone date(s) and/or the Contract Completion Date will be met.

N. Schedule Time Extensions

1. When Change Orders or delays are experienced by the CONTRACTOR and a time extension is requested, the CONTRACTOR shall submit to the ENGINEER, a written Time Impact Analysis illustrating the influence of all changes or all delays on the current Contract Completion Date. The Time Impact Analysis shall be based on an As-Built Schedule Analysis approach. The As-Built Schedule that will be created will incorporate all Actual Start and Finish dates, actual durations of activities, and actual sequences of construction. This Time Impact Analysis shall incorporate all delays (including CITY, CONTRACTOR, and Third Party delays without exception) in the time frame they occurred with actual logic ties. The As-Built Schedule data shall be obtained from the most recent accepted Baseline Schedule or Monthly Schedule Update as of the time the Preliminary Change Order, Emergency Change Order, Unilateral Change Order, or Allowance Order was issued to the CONTRACTOR. The As-Built

Schedule shall be created as an early start schedule. The As-Built Schedule shall use the original activity durations for all incomplete work and the actual logic driving all activities. All requests for time extensions shall be based upon an analysis of this As-Built Schedule. The critical path will be established, and all CITY caused delays on the critical path will be identified. The time extension will be based solely upon the cumulative duration of all CITY and Third Party caused delays (as set forth in UNAVOIDABLE DELAY of the GENERAL CONDITIONS) which are on the critical path. Any time extensions to the project Interim Milestone Dates shall be non-compensable time extensions only.

2. Time extensions will be granted only to the extent that equitable time adjustments for the activity or activities affected exceed the total or remaining float along the critical path of activities at the time of actual delay, or at the time the Preliminary Change Order, the Emergency Change Order, the Unilateral Change Order, or the Allowance Order was issued to the CONTRACTOR. Float or slack time is not for the exclusive use or benefit of the ENGINEER or the CONTRACTOR but is an expiring resource available to all parties as needed to meet Contract milestones and the Contract Completion Date. Time extensions shall not be granted nor delay damages paid until;

    a. A delay occurs which is beyond the control and without the fault or negligence of the CONTRACTOR and its Subcontractors or Suppliers, at any tier; and

    b. Which extends actual performance of the Work beyond the applicable current Contract Completion Date and the most recent date predicted for completion of the project on the approved Monthly Schedule Update, current as of the time of the delay or as of the time of issuance of the Preliminary Change Order, the Emergency Change Order, the Unilateral Change Order, or the Allowance Order was issued to the CONTRACTOR.

3. Each Time Impact Analysis shall be submitted in triplicate, within fifteen (15) calendar days after a delay occurs, or issuance of the Preliminary Change Order, Emergency Change Order, Time and Materials Change Order, or Unilateral Change Order. <u>If the CONTRACTOR does not submit a Time Impact Analysis for a specific Change Order or delay within the specified period of time, the CONTRACTOR shall be deemed to have irrevocably waived any rights to additional time and cost.</u>

4. Since float time within the Schedule is jointly owned, it is acknowledged and agreed by the CONTRACTOR that CITY caused delays on the project may be offset by CITY caused time savings (including, but not limited to: critical path submittals returned in less time than allowed for in the Contract, approval of substitution requests which result in a savings of time along the critical path for the CONTRACTOR, etc.). In such an event the CONTRACTOR shall not be entitled to receive an extension of time or delay damages until all CITY caused time savings are exceeded and the Contract Completion Date is also exceeded.

5. Approval or rejection of each Time Impact Analysis by the ENGINEER shall be made within fifteen (15) calendar days after receipt of each Time Impact Analysis, unless subsequent meetings and negotiations are

necessary. Upon approval, a copy of a Time Impact Analysis signed by the ENGINEER shall be returned to the CONTRACTOR for incorporation into the next Monthly Schedule Update.

6. Upon mutual agreement by both parties, fragnets illustrating the influence of Change Orders and delays shall be incorporated into the Schedule during the first update after agreement is reached.

7. In the event the CONTRACTOR does not agree with the decision of the ENGINEER regarding the impact of a change or delay, it shall be resolved in accordance with CLAIMS AND PROTESTS of the GENERAL CONDITIONS.

O. Manpower

The CONTRACTOR shall submit with the initial Baseline Schedule a histogram depicting total project manpower for its own forces and for each of its Subcontractors for each month. The histogram shall be based upon and shall be in substantive agreement with the number of shifts and crew sizes in the Schedule and shall be updated monthly and submitted with the Monthly progress report. The update shall show actual manpower for each month during the construction period to date and required manpower for both base scope and Change Order Work each month, necessary to complete all remaining activities to insure timely project completion.

P. Construction Equipment

1. The CONTRACTOR shall submit with the initial Baseline Schedule a tabular report listing each major piece of construction equipment for itself and each of its Subcontractors for each month. This major equipment is the equipment that is or will be used at the Worksite. Each major piece of the CONTRACTOR'S and the Subcontractor's equipment shall be separately described, identified, and numbered in the report. The tabular report shall be based upon and in substantive agreement with the number of shifts and crew sizes by craft in the Schedule and shall be updated monthly and submitted with the monthly progress report. The update shall show actual construction equipment for each month during the construction period to date and the required construction equipment for each month necessary to complete all remaining activities including the Change Order Work, on the early finish date.

Q. Submittal Of "As-Built" Schedule

1. As a condition precedent to any release of retention, the last update to the Schedule submitted shall be identified by the CONTRACTOR as the "As-Built Schedule". The "As-Built Schedule" shall reflect the exact manner in which the project was actually constructed (including start and completion dates, activities, sequences, and logic) and shall be signed and certified by the CONTRACTOR'S Project Manager and Construction Scheduler as being a true reflection of the way in which the project was actually constructed.

(END OF SECTION)

SECTION 01322
CONSTRUCTION PROGRESS PHOTOGRAPHY

PART ONE - GENERAL

1.1 SUMMARY

A. Required**:** Provide photographs taken at the Jobsite at the specified stages of Contracted Work in accordance with provisions of this Section.

1. Take three views of each structure and other major improvement; and three views of each 1,000 sq ft of desilting and infiltration gallery or other feature being constructed as directed by the ENGINEER at thirty (30) day intervals during the period of Contracted Work.

2. Take first photographs just before CONTRACTOR starts any work operations at the Jobsite.

3. Take final photographs when all Contracted Work has been completed, regardless of time interval since previous photographs were taken. These photographs shall be suitable for use in City presentations and publications.

B. Related Work:

1. Documents affecting work of this Section include, but are not necessarily limited to, GENERAL CONDITIONS, DIVISION 1 - GENERAL REQUIREMENTS and other Sections of the Project Manual.

1.2 SUBMITTALS

A. Comply with pertinent provisions of Section 01330 **–** SHOP DRAWINGS / SUBMITTALS of the GENERAL REQUIREMENTS.

B. Except as otherwise directed by the ENGINEER, submit three color prints of each view.

1.3 QUALITY ASSURANCE

A. Secure the services of a full-time professional photographer who is skilled and experienced in construction photography and whose work samples are acceptable to the ENGINEER.

B. Do not replace the photographer without the ENGINEER'S written approval.

C. Do not permit prints to be issued for any other purpose without specific written approval from the ENGINEER.

D. Photographs and prints to be of professional quality; clear, in focus, with high resolution and sharpness, and with minimum distortion. Prints to be with contrast, detail and finish for acceptable reproduction by half-tone cut.

PART TWO - PRODUCTS

2.1 CONSTRUCTION PHOTOGRAPHS

A. Provide Color digital files uploaded to e2020.

B. Identify the following:

1. Job name and address;

2. Location from which photographed;

3. Date of photograph;

4. Photographer's name and address, and the photograph number.

PART THREE - EXECUTION

3.1 CONSTRUCTION PHOTOGRAPHY

A. View Locations: As directed by the ENGINEER**.** Location(s) to provide diversified overall view of the Work from a position that is expected to remain accessible throughout progress of the Contracted Work for added photography.

Continue to take photographs at same view position of the Works to show continuous progress of the Works until the Works are completed or as directed by the ENGINEER**.**

B. Notifications: Notify the ENGINEER seven (7) days in advance of proposed day of photography.

C. Weather Conditions: When inclement weather is anticipated, consult with the ENGINEER to determine acceptable alternate arrangements.

D. Timing of Photography: To the maximum extent practicable, take photographs at the same time of day throughout progress of the Contracted Work. Timing shall be approved by the ENGINEER**.**

E. On Contract Drawing: Photographer to identify each photograph location or by such other means as acceptable to the ENGINEER, to enable future photographs to be taken from the same location and position.

F. Change of Locations: When so directed by the ENGINEER because of construction, change one or more of the locations inside or outside of the building(s).

END OF SECTION

SECTION 01323
CONSTRUCTION STATUS REPORTS

1.1 THE REQUIREMENT

A. Weekly Status Report

During the construction phase of the Work, the CONTRACTOR shall submit weekly written status reports to the ENGINEER and the INSPECTOR. The report shall contain a record of inspections and tests, not performed by CITY forces, for all Work accomplished subsequent to the previous report and shall include the following information:

1. Type of work under way during the time frame of the report (e.g., earthwork, concrete work, structural steel erection, equipment manufacturing, component installation).

2. Inspections and tests, and location of inspections and tests that were made.

3. Results of inspections.

4. Reports of tests performed, including those specified, with the results of the tests, and acceptance criteria, including failures and remedial action to be taken. Test results, including all computations, shall be attached to the report form. Where test results cannot be completed by the time the report is submitted, a notation shall be made that the test was performed, including the approximate expected date that test results will be reported.

5. Report of any nonconforming items/activities. Nonconformance report forms designed solely for this purpose shall be utilized.

6. Results of inspections of material and equipment done upon their arrival at the Jobsite and prior to their incorporation into the Work. This includes, but is not limited to, compliance with approved submittals, damage, and proper storage requirements.

7. Offsite quality control activities.

8. Instructions received from the ENGINEER or INSPECTOR.

9. In all cases, the report must be verified and signed by the CONTRACTOR'S representative. The verification is to contain the statement that all supplies and materials incorporated in the Work are in compliance with the terms of the Contract except where noted.

B. Monthly Procurement and Delivery Status Report

1. The CONTRACTOR shall prepare and submit to the INSPECTOR and the ENGINEER a comprehensive Monthly Procurement and Delivery Status Report covering the procurement and delivery of equipment and materials to the Jobsite. This report shall outline the purchasing status of

all material, equipment and contracts. The purchasing status report shall include the following information:

a. Specification, purchase order, and Contract number;

b. Submittal Number;

c. Item or service description;

d. Required job site date; and

e. Project Delivery Date.

In addition, this report shall contain a three (3) month "Look Ahead Projection" of all factory tests, shipments to be inspected, or any other supplier activity which the CONTRACTOR, the ENGINEER, or the INSPECTOR, has the right to witness and accept. The report shall detail arrangements which are planned for meeting the witnessing and acceptance requirements, and for recording tests passed.

2. The CONTRACTOR shall obtain a submittal schedule for technical data, Shop Drawings, material and test certificates, O&M manuals, spare parts lists, and other submittals, from each supplier. This schedule shall be monitored and updated on a monthly basis and shall be submitted to the INSPECTOR and the ENGINEER with the Monthly Procurement and Delivery Status Report.

C. Miscellaneous Submittals

Required: CONTRACTOR shall prepare a Daily Construction Report recording the following information concerning events at the job-site and submit duplicate copies to the Consultant or ENGINEER at weekly intervals:

1. List of Subcontractors and Sub-Subcontractors at the site**,** types of works and job location.

2. Approximate count of CONTRACTOR'S personnel at the site**,** name, type of work and job location.

3. Construction equipments at the site.

4. High and low temperatures, general weather conditions.

5. Accidents and unusual events.

6. Meetings and significant decisions.

7. Stoppages, delays, shortages, losses.

8. Meter readings and similar recordings.

9. Emergency procedures.

10. Inspection, Orders and requests of governing authorities**,** type of work.

11. Change Orders received, implemented.

12. Services connected, disconnected.

13. Notice of Non-Compliance, Notice-To-Correct, and Job-Memorandum received.

14. Equipment or system tests and start-ups.

15. Preparation of Record Drawings and Project Manual.

16. Equipment or material delivered to site.

17. Partial completions, occupancies

18. Substantial completions authorized.

END OF SECTION

SECTION 01330
SHOP DRAWINGS / SUBMITTALS

1.1 THE REQUIREMENT

A. The CONTRACTOR shall prepare, approve, sign and submit to the ENGINEER any and all Shop Drawings, Manufacturers' Project Data, Job References, Certificates, Wiring Diagrams, Operation and Maintenance Manuals and Samples required by the Contract Documents on “e2020” (the City’s web-based construction management application.)

NOTE: All references in the Technical Sections under "Shop Drawings" or “Submittal” to the words "approval of" shall mean "reviewed by".

B. The CONTRACTOR, by preparing, reviewing, approving and submitting the Shop Drawings, Manufacturers' Product Data, Job References, Certifications, Wiring Diagrams, Operation and Maintenance Manuals and Samples, represents that the CONTRACTOR has determined and verified all materials, field measurements and filed construction criteria related thereto, and has checked and coordinated the information contained within such submittals with the requirements of the Work, the Project and the Contract Documents.

C. The CONTRACTOR shall inform the ENGINEER, in writing, of any and all deviations and/or questions regarding the Contract Documents, and shall properly identify these areas of concern in the transmittal of the Shop Drawings, Manufacturers' Product Data, Job References, Certification, Wiring Diagram and Samples for proper written disposition respectively by the ENGINEER. The CONTRACTOR shall provide Shop Drawings in accordance with Specification Section 01116 of the General Requirements.

D. Transmittal sheets for all Shop Drawings, Manufacturers' Product Data, Wiring Diagrams, Job References, Certifications, Operation and Maintenance Manuals and Samples shall be uploaded in e2020 in accordance with Specification Section 01116 of the General Requirements.

E. The CONTRACTOR is not relieved of the responsibility for any deviation from the requirements of the Contract Documents, by virtue of CONTRACTOR’S approval and submittal of the Shop Drawings, Manufacturers' Product Data, Wiring Diagrams, Operation and Maintenance Manuals and Samples to the ENGINEER. All deviations and/or interpretations of the Contract Documents must be approved in writing by the ENGINEER.

F. The review of the Shop Drawings, Manufacturers' Product Data, Job References, Certifications, Wiring Diagrams, Operation and Maintenance Manuals; and Samples by the ENGINEER does not relieve the CONTRACTOR of its responsibility from any requirements of the Contract Document, or any errors or omissions in such submittals, or for any failure to perform the requirements and intent of Contract Documents.

G. The Shop Drawings shall include such fabrication, erection, and setting drawings; manufacturer's standard drawings or catalog cuts, performance and test data; Job References, Certifications, wiring and control diagrams; schedules; samples; and descriptive data pertaining to material, machinery and methods of construction as may be necessary to carry out the intent of contract Drawings and Project Manual and shall not relieve the CONTRACTOR from the responsibility for proper fitting and construction of the Work, nor from furnishing materials and Work required by the Contract, which may or may not be indicated on the Shop Drawings.

The CONTRACTOR shall perform no portion of the Work requiring submittal and review of Shop Drawings, Product Data, Job References, Certifications**,** samples, etc. until such submittals have been reviewed by the ENGINEER.

H. Shop Drawings shall show in detail the size, sections and dimensions of all the members, the arrangement and construction of all connections and joints and other pertinent details; also, all holes, straps and other fittings required by other CONTRACTORS for attaching their work. When required, by the ENGINEER or by Standard Practice of the CONTRACTOR, engineering computations shall be submitted for the record. The CONTRACTOR shall be responsible to coordinate with other trades, collect all necessary data or information for preparation of shop Drawings and deliver approved copies of Shop Drawings to all others whose work is dependent thereon.

I. At all times, the CONTRACTOR shall maintain at the site of the project, a complete file of Shop Drawings and Manufacturers' Data of its own and all Subcontractors. All Shop Drawings and Manufacturers' Data shall be reviewed and by the CONTRACTOR.

J. Submittals shall be made within the times specified in the various Divisions, of the Project Manual. If time is not specified, they shall be made within a period which will cause no delay in the work. The CONTRACTOR shall allow twenty-one (21) calendar days on the project construction schedule for each item submitted for the review by the ENGINEER.

K. In the event the ENGINEER finds the submittal to be incomplete, it will be returned to the CONTRACTOR for required revised drawings. The CONTRACTOR will revise the drawings and resubmit as directed on original submittals. Any delay resulting from the need for resubmittals shall be the CONTRACTOR'S responsibility.

L. In the event, the Contract Documents are prepared by a Consultant Architect or ENGINEER, the pertinent requirements of this Section will be effective, except as follows or as otherwise modified in the Divisions that follow:

1. All references in the Contract Documents to the Consultant shall mean the Consultant Architect or Consultant Engineer

2. Submittals shall be uploaded in e2020 in accordance with Specification Section 01116 of the General Requirements.

3. If submittal is found to be incomplete and revised drawings are required, CONTRACTOR will be notified by the ENGINEER.

4. When Shop Drawings are required in accordance with the Contract, due to “substitutions” or for "or equal" determination or review as indicated hereinbefore, after final check, said drawings, reviewed and signed by Consultant shall be forwarded to the ENGINEER, Bureau of Engineering for final review and distribution electronically, through e2020.

5. Unless otherwise specified for Operation and Maintenance Manuals, four (4) copies are required and all copies should be delivered to the Consultant Architect for review. After reviewed and signed by the Consultant, scan and electronically upload in e2020 for final review.. Once approved by the ENGINEER on e2020, four (4) copies shall be forwarded to the ENGINEER for distribution to the CITY maintenance staff. The CONTRACTOR will receive a transmittal of acceptance of Operation and Maintenance Manual Submittal.

M. In the event the Contract Documents are prepared by CITY personnel, four (4) copies of each Operation and Maintenance Manuals, shall be sent to the ENGINEER by the CONTRACTOR for review and final distribution. Distribution requirements described in Items K(4) and K(5) hereinbefore remain effective.

N. CONTRACTOR’S Coordination:

1. The ENGINEER will return and will not review unrelated submittals.

2. The CONTRACTOR may be required to provide drawings, setting diagrams and similar information necessary for proper coordination of Contracted Work. Such data shall remain between the CONTRACTOR and CONTRACTOR’S Subcontractor and will not be reviewed by the Consultant or ENGINEER unless specifically called for in the Contract Documents.

3. Consultant or ENGINEER will not review any required Structural Shop Drawings, Structural Calculations, etc., not prepared or signed by a State of California licensed ENGINEER.

4. The ENGINEER will return and will not review any submittal requiring coordination with other submittals until such other submittals or required information are received by the ENGINEER.

O. CONTRACTOR’S Submittals: CONTRACTOR’S submittals required for performance of Contracted Work shall be electronically submitted in e2020 construction subsections 8.1 through 8.22, and shall include, but are not limited to, the following:

1. Contract Price (Cost Breakdown)

2. Construction Schedule and Notification to ENGINEER of completion of each milestone or percentage increment of the Work as required.

3. Submittal Schedule

4. Daily Construction Reports

5. Shop Drawings and Structural Calculations.

6. Manufacturer's Data and Specifications.

7. Samples

8. Templates

9. Certificate of Compliance

10. Construction Photographs

11. Substitutions

12. Record Drawings and Record Project Manual

13. Operation & Maintenance Manuals

14. Stock Materials, Spare parts, tools

15. Material Testing Results

16. Daily Statements of cost-plus percentage Change Order

17. Survey grade sheets

18. Copies of Notice-To-Correction or Notice of Non-Compliance from governing authorities.

19. Maintenance Logs and Maintenance Schedule.

P. Administrative Submittals include, but are not limited to the following:

1. Permits

2. Request for Payments

3. Performance and Payment Bonds

4. Insurance Certificates

5. List of Subcontractors and proof of qualifications

6. Hazardous Communication Program.

7. Certified weekly payroll records.

8. Ethnic Composition of Work Force Report.

9. Third Party Testing Agency

Q. CONTRACTOR shall conform to the provisions of the Contract Document and may be specifically directed by the Consultant or ENGINEER.

1. Preparation and processing of submittals shall be coordinated with Contracted Work operations, which includes fabrication, purchasing and delivery of work items so as not to delay Contracted Work operations.

2. In each Submittal, mark every applicable material, product, equipment, manufacturer's data, product information, color samples, rating or values, part and model numbers, etc. by red color circle. Each of the submittal items must be clearly distinguishable from other unrelated or similar items listed in the Manufacturer's Catalog or Technical Specifications, Manuals, etc.

R. Coordination and Submittals:

1. Carefully review and coordinate all aspects of each item being submitted.

2. Carefully review contract drawings and technical sections, verify all work as laid out or indicated meeting the applicable codes and standards.

3. Ensure ample time for reviewing and processing of the submittals by the CITY or other authorized agencies, delays resulting from improper and untimely submittals shall be the responsibility of the CONTRACTOR.

4. Verify that all such submittal items conform to the Project Manual requirements noted in the Technical Sections.

5. Verify all site conditions and provide all required dimensions and measurements in Shop Drawings.

6. Where necessary, review the CITY'S comments, make changes and resubmit to local governing agencies for approval. Upload the approved plans or drawings for review on e2020 and furnish copies of said drawings at the ENGINEER'S request.

S. CONTRACTOR shall affix to each submittal, the CONTRACTOR'S electronic signature certifying that required coordination has been performed and include on an attached label for processing and recording action taken, noting the following:

1. Name and address of the Subcontractor(s)

2. Name and address of the Supplier

3. Name and address of the Manufacturer

4. Reference to Specification Section Number and Title

5. Reference to Drawing Sheet Number and detail(s)

6. Priority Number and expected return date.

T. CONTRACTOR shall, verify on e2020 that the CONTRACTOR has met the following CITY requirements:

1. Conformance in all respect to the Contract Document requirements.

2. Has reviewed and coordinated all aspects of each submitted item relative to manufacturer's product data, Specifications, etc.

3. Has verified with site conditions and all dimensions.

4. That all questions and/or comments prepared by the Consultant or ENGINEER have been reviewed and answered.

5. CONTRACTOR is not relieved from responsibilities for errors, omissions and any deviation in the required submittals as revealed resulting from the CITY'S or Consultant's review of such submittals.

6. In each Section of the Project Manual, all required lists of material, product or equipment; manufacturer's data; and etc., shall be appropriately grouped and submitted to the CITY for review as one submittal. Piece meal submittals will not be accepted.

   Any submittal with outstanding product data, manufacturer's specification or any required information shall deem to be incomplete and subject for rejection without any review. Subsequent submittal shall be considered as second submission.

7. All Shop Drawings shall be provided with dimensions and measurements verified at the site as stated hereinbefore. If the CONTRACTOR decides to submit the dimensions and measurements at a later time, the CONTRACTOR must state the reason, for the ENGINEER'S approval, why the dimensions and measurements cannot be taken. If approval is granted, the CONTRACTOR shall re-submit the approved submittal with the final dimensions and measurements after the Works are completed. The CONTRACTOR is not relieved from the responsibilities of error and omission, or any problem that may arise during the fabrication or installation.

8. It is considered reasonable that the CONTRACTOR shall make a complete and acceptable submittal to the ENGINEER or Consultant by the second submission of a submittal item. The CITY reserves the right to withhold moneys due to the CONTRACTOR to cover additional costs of the ENGINEER or Consultant's review beyond the second submittal. On the third submittal by CONTRACTOR, the CONTRACTOR will be charged $150 per hour of CITY'S or Consultant's review time and no additional Contract time shall be allowed.

U. Comply with pertinent provisions of the GENERAL CONDITIONS and GENERAL REQUIREMENTS as applicable**,** but not limited**,** to the following:

1. Record Drawings, Record Project Manual, Record Product Data, Record Sample and Record Submittals.

2. Operation and Maintenance Manuals.

3. Manufacturer's Reference Data.

4. Qualification of CONTRACTOR.

5. Certification of Warranty and Guarantee.

6. Manufacturer's Recommended Installation Procedures.

7. Materials List of items proposed to be provided as specified in the Technical Sections of the Project Manual.

8. Samples, illustrating assembly details, workmanship, fabrication techniques, connections, color selection to be submitted as specified in the Technical Sections of the Project Manual.

9. Regarding Concrete Work, submit Portland Cement Mill Certificates, Concrete Mix and Curing Designs, Load Tickets and Product Data.

10. Regarding shop-Inspected fabricated items, submit Shop INSPECTOR Tag, copy of the billing of lading, delivery receipt for materials or equipment.

V. The CONTRACTOR shall comply with all submittal requirements in the Contract Documents. For convenience, a checklist of submittals required in all the Technical Sections is included, but is not necessarily limited to the following:

SECTION OF PROJECT MANUAL	SUBMITTAL
02810 – IRRIGATION, 02932 LANDSCAPE PLANTING	• Product Data • Materials List • Written evidence that Landscape Irrigation System has been inspected • Soils Agriculture Suitability Test Report
03100 – CONCRETE FORMWORK	• Shop Drawing
03300 – CAST-IN-PLACE-CONCRETE	• Product Data • Samples • Laboratory Test Reports • Portland Cement Mill Certificates • Concrete Mix and Curing Design • Load Tickets • (ETC.)

W. CONTRACTOR shall submit requests for changes in products, materials, equipment and methods of construction required by the Contract Documents, and all submittals shall conform to the provisions of Section 01630 – SUBSTITUTIONS AND “OR EQUAL” SUBMITTAL of the GENERAL

REQUIREMENTS of the Project Manual immediately after the issuance of Notice-To-Proceed.

1. All substitution requests shall be made by the CONTRACTOR and shall imply the CONTRACTOR'S approval of such substitutions.

X. The Following Are Not Considered As Substitutions:

1. Substitutions requested by Bidders during the bidding period or prior to award of contract will not be considered or accepted.

2. Revisions to Contract Documents requested by the ENGINEER or the Consultant.

3. Specified options of products and construction methods included in Contract Documents.

4. The CONTRACTOR'S determination of and compliance with governing regulations and orders issued by governing authorities.

Y. CONTRACTOR shall perform no portion of the Contracted Work requiring submittal and review of Shop Drawings, Product Data, Samples, etc. until such submittals have been reviewed by the Consultant or ENGINEER. All work not shown on Shop Drawings or not conforming to Contract shall be removed without additional cost to the CITY.

Z. CONTRACTOR shall be responsible for procurement and installation of equipment or material without deviation upon receipt of the reviewed submittal from the ENGINEER or Consultant bearing the designation of "A" No Exception Taken". Be responsible for the coordination with other trade, proper fitting and construction of the work, furnishing other material and work required which may not be indicated on the Contract Drawings or Submittals. All submittals shall be reviewed by the CITY for general design or compliance. CONTRACTOR will be responsible for deviation from the drawings or Project Manual, and for errors or omissions of any sort in the Submittals.

AA. CONTRACTOR shall review and attend to all "Note Markings" and/or "Comments Attached" as noted by the ENGINEER or the Consultant on the Submittal. Make corrections or modifications to equipment or material as required.

AB. CONTRACTOR shall omit any article disapproved or noted "Reject" by the ENGINEER, or any article not conforming to the contract, or not of proper quality or grade and provide suitable articles, in lieu thereof in conforming with the Contract.

AC. CONTRACTOR shall resubmit all submittals with corrections as noted by the ENGINEER or the Consultant or as required in timely manner without delay or impact to the contract.

END OF SECTION

SECTION 01350
AUDIT AND ACCESS TO RECORDS

1.1 THE REQUIREMENT

A. The CONTRACTOR shall maintain books, records, estimates, communications, payroll documents and other evidence directly pertinent to performance of Work under this Contract in accordance with generally accepted accounting principles and practices consistently applied for a period of no less than four (4) years from the date of the Project acceptance by the Board of Public Works. The CONTRACTOR shall also maintain the financial information and data used by the CONTRACTOR in the preparation or support of any cost submissions required for this Contract, or any Modifications or claims, and a copy of the cost summary submitted to the CITY. The CITY authorized representatives shall have access, at all times during normal business hours, to such books, records, documents and other evidence for the purpose of inspection, audit and copying. The CONTRACTOR will provide proper facilities for such access and inspection.

B. The CONTRACTOR agrees to make A through G of this Article applicable to this Contract and all Modifications or claims affecting the Contract price. The CONTRACTOR agrees to include A through G of this Article in all his contracts and all tier subcontracts in excess of $10,000, and to make A through G of this Article applicable to all Modifications and claims related to project performance.

C. Audits conducted under this Article shall be in accordance with generally accepted auditing standards and established procedures and guidelines of the reviewing or audit agency.

D. The CONTRACTOR agrees to the disclosure of all information and reports resulting from access to records under A and B of this Article, to the CITY and affected agencies.

E. Records under A and B of this Article shall be maintained and made available during performance of Work under this Contract within the time period specified in A of the Article. In addition, those records which relate to any portion of this Contract, to any Modification, to any dispute, to litigation, to the settlement of claims arising out of such performance, or to costs or items to which an audit exception has been taken, shall be maintained and made available within the time period specified in A of the Article.

F. This right of access Article applies to financial records pertaining to this Contract and all Contract Modifications. In addition this right of access applies to all records pertaining to all contracts, contract modifications, and contract amendments:

1. To the extent the records pertain directly to Contract performance;

2. If there is any indication that fraud, gross abuse or corrupt practices may be involved; or

3. If the Contract is terminated for default or for convenience.

G. Access to records is not limited to the required retention periods. The authorized representatives designated in A of this Article shall have access to records at any reasonable time for as long as the records are maintained.

H. Provided that CITY has made demand for access or audit, pursuant to this Section, CONTRACTOR'S compliance with provisions A through G of this Section shall be a condition precedent to maintenance of any legal action or proceeding by the CONTRACTOR against the CITY and to CONTRACTOR'S right to Progress or Final Payment. Without limitation to the foregoing, or to any other provisions for withholding set forth in the Contract Documents, CITY shall have the right, in its sole discretion and in addition to any right of withholding of retention, to further withhold from any payment to CONTRACTOR a sum of up to ten percent (10%) of the total amount set forth in CONTRACTOR'S current, unpaid Application(s) for Payment, until CONTRACTOR has complied with any outstanding and unsatisfied request by CITY for audits under this Section. Upon CONTRACTOR'S compliance with this Section, any monies withheld pursuant to this Paragraph solely due to CONTRACTOR'S failure to permit an audit requested by CITY shall be released to CONTRACTOR.

I. CONTRACTOR hereby consents and agrees that any failure by CONTRACTOR to provide access to records as provided in A through G of this Section shall be specifically enforceable by issuance of a preliminary and/or permanent mandatory injunction by a court of competent jurisdiction based on affidavits submitted to such court, without the necessity of oral testimony, to compel CONTRACTOR to permit access and inspection of the records or to require delivery of the records to CITY for inspection.

END OF SECTION

SECTION 01351
ESCROW BID DOCUMENTS

1.1 THE REQUIREMENT

A. Scope

1. This Article requires that the three (3) low bidders submit, within the specified time after receipt of bids, one (1) copy of all documentary information including, but not limited to, electronic files generated in preparation of bid prices for this project. This material is hereinafter referred to as "Escrow Bid Documents". The Escrow Bid Documents of the CONTRACTOR will be held in escrow for the duration of the Contract.

2. The successful Bidder agrees, as a condition of the award of the Contract, that the Escrow Bid Documents constitute all of the information used in preparation of the Bid, and that no other bid preparation information shall be considered in resolving disputes or claims. The successful bidder also agrees that nothing in the Escrow Bid Documents shall change or modify the terms or conditions of the Contract Documents.

B. Ownership

1. The Escrow Bid Documents are, and shall always remain, the property of the CONTRACTOR, subject to joint review by the CITY and the CONTRACTOR as provided herein. The Escrow Bid Documents are proprietary and secret information belonging to the CONTRACTOR and exempt from the Federal Freedom of Information Act, California Public Records Act, and the Los Angeles CITY Freedom of Information Act.

2. The CITY stipulates and expressly acknowledges that the Escrow Bid Documents, as defined herein, constitute trade secrets. This acknowledgment is based on the CITY'S express understanding that the information contained in the Escrow Bid Documents is not known outside the Bidder's business, is known only to a limited extent and only to a limited number of employees of the Bidder, is safeguarded while in the Bidder's possession, is extremely valuable to the Bidder and could be extremely valuable to the Bidder's competitors by virtue of it reflecting the Bidder's contemplated techniques of construction. The CITY acknowledges that the Bidder expended substantial sums of money in developing the information included in the Escrow Bid Documents and further acknowledges that it would be difficult for a competitor to replicate the information contained therein. The CITY further acknowledges that the Escrow Bid Documents and the information contained therein are made available to the CITY only because such action is an express prerequisite to award of the Contract. The CITY acknowledges that the Escrow Bid Documents include a compilation of information used in the Bidder's business, intended to give the Bidder an opportunity to obtain an advantage over competitors who do not know of or use the contents of the documentation. The CITY further agrees to safeguard the Escrow

Bid Documents, and all information contained therein, against disclosure to the fullest extent permitted by law.

C. Purpose

1. The purpose of the Escrow Bid Documents procedure is intended to create a spirit of cooperation in an atmosphere of honesty and candor between the CITY and the CONTRACTOR.

2. Escrow Bid Documents will be used to assist in the negotiation of price adjustments and Change Orders and in the settlement of disputes and claims. They will not be used for pre-award evaluation of the CONTRACTOR'S anticipated methods of construction or to assess the CONTRACTOR'S qualifications for performing the WORK.

D. Format and Contents

1. Bidders may submit Escrow Bid documents in their usual cost estimation format; a standard format is not required. It is not the intention of this Article to cause the Bidder extra work during the preparation of the Bid, but to ensure that the Escrow Bid Documents will be adequate to enable complete understanding and proper interpretation for their intended use. The Escrow Bid Documents shall be in English.

2. It is required that the Escrow Bid Documents clearly itemize the estimated costs of performing the WORK of each Bid item contained in the Bid schedule. Bid items should be separated into sub-items as required to present a complete and detailed cost estimate and allow a detailed cost review. The Escrow Bid Documents shall include all quantity takeoffs, crew, equipment, calculations of rates of production and progress, copies of quotations from Subcontractors and Suppliers, and memoranda, narratives, add/deduct sheets, and all other information used by the Bidder to arrive at the prices contained in the Bid. Estimated costs should be broken down into the Bidder's usual estimate categories such as direct labor, repair labor, equipment ownership and operation, expendable materials, permanent materials, and subcontract cost, as appropriate. Plant and equipment and indirect costs should be detailed in the Bidder's usual format. The CONTRACTOR'S reallocation of indirect costs, contingencies, markup and other items to each bid item shall be identified.

3. All estimates for items of Work that are based in whole or in part upon any baseline statements or information in the Geotechnical Baseline Report (GBR), shall clearly reference the baseline statements used. CONTRCTOR shall have no right to an adjustment in the Contract Price or the Contract Completion Date (due to Differing Site Conditions of the General Conditions) unless such baseline statements have been clearly identified in the Escrow Bid Documents.

4. All cost shall be identified. For bid items amounting to less than $10,000, estimated units costs are acceptable without a detailed cost estimate, provided that labor, equipment, materials, and subcontracts, as applicable, are included and provided that indirect costs, contingencies,

and markups, as applicable, are allocated. Bid documents provided by the CITY need not be included in the Escrow Bid Documents unless needed to comply with the following requirements.

E. Submittal

1. The Escrow Bid Documents shall be submitted to the Board of Public Works Office, by the three (3) low Bidders, in sealed containers, within forty-eight (48) hours after the time for receipt of Bids. The containers shall be clearly marked on the outside with the Bidder's name, date of submittal, project name and the words "Escrow Bid Documents".

2. The Escrow Bid Documents shall be accompanied with the certification (a sample is included), signed by an individual authorized by the Bidder to execute Bids, stating that the material in the Escrow Bid Documents constitutes all the documentary information used in preparation of the Bid and that the Bidder has personally examined the contents of the Escrow Bid Documents container and has found that the documents in the container are complete.

BID DOCUMENTATION CERTIFICATION

THE UNDERSIGNED HEREBY CERTIFIES THAT THE BID DOCUMENTATION CONTAINED HEREIN CONSTITUTES ALL OF THE INFORMATION USED IN PREPARATION OF THE BID AND THAT I HAVE PERSONALLY EXAMINED THESE CONTENTS AND HAVE FOUND THAT THIS BID DOCUMENTATION IS COMPLETE.

SIGNATURE: _____

NAME: _____

TITLE: _____

FIRM: _____

DATE: _____

3. Within 14 Calendar days following the receipt of bids, the Escrow Bid Documents of the apparent successful Bidder will be examined, organized and inventoried by representatives of the CITY, together with members of the CONTRACTOR'S staff who are knowledgeable of how the Bid was prepared. This examination is to ensure that the Escrow Bid Documents are legible and complete. It will not constitute approval of proposed construction methods, estimating assumptions, or interpretations of Contract Documents. Examination will not alter any condition or term of the Contract.

4. If all the documentation required in Section D, "Format and Contents", has not been included in the original submittal, additional documentation shall be submitted, at the CITY'S sole discretion, within twenty four (24) hours after the original inventory and examination of the Escrow Bid

Documents and prior to award of the Contract. The detailed breakdown of estimated costs shall be reconciled and revised, if appropriate, by agreement between the CONTRACTOR and the CITY before making the award. If the Contract is not awarded to the apparent successful Bidder, the Escrow Bid Documents of the Bidder next to be considered for award shall be processed as described above.

5. Submission of complete Escrow Bid Documents is an essential element of the Bidder's responsiveness and a prerequisite to a Contract award. Failure to provide the necessary Escrow Bid Documents within the forty-eight (48) hour time limit, may render the Bid non-responsive. Escrow Bid Documents of the unsuccessful Bidders will be returned following award of the Contract.

6. If any Bidder's Bid is based on subcontracting any part of the WORK, each Subcontractor, whose total subcontract price exceeds five percent (5%) of the total Contract price bid by the Bidder, shall provide separate Escrow Bid Documents to be included with those of the Bidder. Such documents shall be opened and examined in the same manner and at the same time as the examination described above for the apparent successful Bidder.

7. If the CONTRACTOR wishes to subcontract any portion of the WORK after award, the CITY retains the right to require the CONTRACTOR to submit Escrow Bid Documents from the Subcontractor before the subcontract is approved.

F. Storage

1. The Escrow Bid Documents will be placed in lockable container, with provisions for the Contractor and the City to provide separate locks,, for the life of the Contract, and stored in a mutually agreeable location at or near the jobsite. The cost of storage will be paid by the CITY.

G. Examination

1. The Escrow Bid Documents shall be examined by both the CITY and the CONTRACTOR, at any time deemed necessary by either the CITY or the CONTRACTOR, to assist in the negotiation of price adjustments and Change Orders or the settlement of disputes and claims.

2. Examination of the Escrow Bid Documents is subject to the following conditions:

a. As trade secrets, the Escrow Bid Documents are proprietary and confidential.

b. The CITY and the CONTRACTOR shall each designate, in writing to the other party and within ten (10) days after execution of the Contract, representatives who are authorized to examine the Escrow Bid Documents, with the exception of the initial reviewers as specified in section 1.1.E.3 above. No other person shall have access to the Escrow Bid Documents.

c. Access to the Escrow Bid Documents may take place only in the presence of duly designated representatives of both the CITY and the CONTRACTOR.

3. The Escrow Bid Documents at all times remain the property of the CONTRACTOR and the CITY will take all reasonable steps necessary to protect confidentiality.

H. Final Disposition

1. The Escrow Bid Documents will be returned to the CONTRACTOR at such time as the following conditions have been satisfied.

a. The Contract has been completed.

b. Final payment has been issued by the CITY.

c. All litigation has been completed, and a written agreement has been executed between the CITY and the CONTRACTOR that no further litigation will be made.

d. The Board of Public Works has accepted the project.

2. The Escrow Bid Documents will be sealed and promptly returned to the CONTRACTOR by the party in charge of the Escrow Bid Documents. Reproduction of any portion of the Escrow Bid Documents will not be permitted at any time without the written permission of the CONTRACTOR.

END OF SECTION

SECTION 01353
OPPORTUNITY TO PARTNER

1.1 THE REQUIREMENT

A. The successful bidder will have the opportunity to enter into a cooperative partnership agreement with the CITY for the contract. Participation in Partnering is highly encouraged. Partnering will create a framework for conflict resolution, improved communications, reduced litigation, and cost containment. During the partnering session, all parties will participate in developing an Issue Resolution Ladder, which will help establish and communicate the chain of command in each organization (See Attachment 01353–A1). Each level of the organization is expected to work cooperatively to resolve issues. However, if issues cannot be resolved in a timely manner or are beyond the authority granted that level, each party understands that the issue must be elevated to the next level.

B. The objective of this Partnering agreement would be effective completion of the Work on time and to achieve a standard of quality that would be a source of pride to both the CITY and the CONTRACTOR. Partnering is intended only to establish an environment of cooperation between the parties and will not affect the terms of this contract.

C. An initial one (1) day training session is recommended to initiate the partnership agreement. The cost of this training, excluding staff labor charges, will be paid from a fixed cash allowance that has been allocated as the bid item Opportunity to Partner in the SCHEDULE OF WORK AND PRICES. No Overhead and Profit shall be added to the cost of the training. If the total cost of the partnering training differs from the amount set forth in the SCHEDULE OF WORK AND PRICES, the Contract Price shall be adjusted by a Change Order for the difference between the total actual cost and the amount included in the Bid, as an additional amount due the CONTRACTOR or a credit to the CITY, as appropriate.

D. The third party partnering moderator shall be chosen jointly by the Engineer and the Contractor. The City or Contractor may suggest the use of certain moderator, however each party shall have the right to agree or deny the use of the suggested moderator.

END OF SECTION

(SEE ATTACHMENT)

ATTACHMENT TO SECTION 01353

Attachments to General Requirements Section 01353 consists of one (1) document, as follows:

ATTACHMENT NUMBER	TITLE OF ATTACHMENT	NUMBER OF PAGES IN THIS ATTACHMENT
01353-A1	Issue Resolution Ladder – Line Management Form	1

City of Los Angeles, Department of Public Works
Bureaus of Engineering and Contract Administration

Contractor: **{name}**

Project Title: **{title}**

Issue Resolution Ladder – Line Management

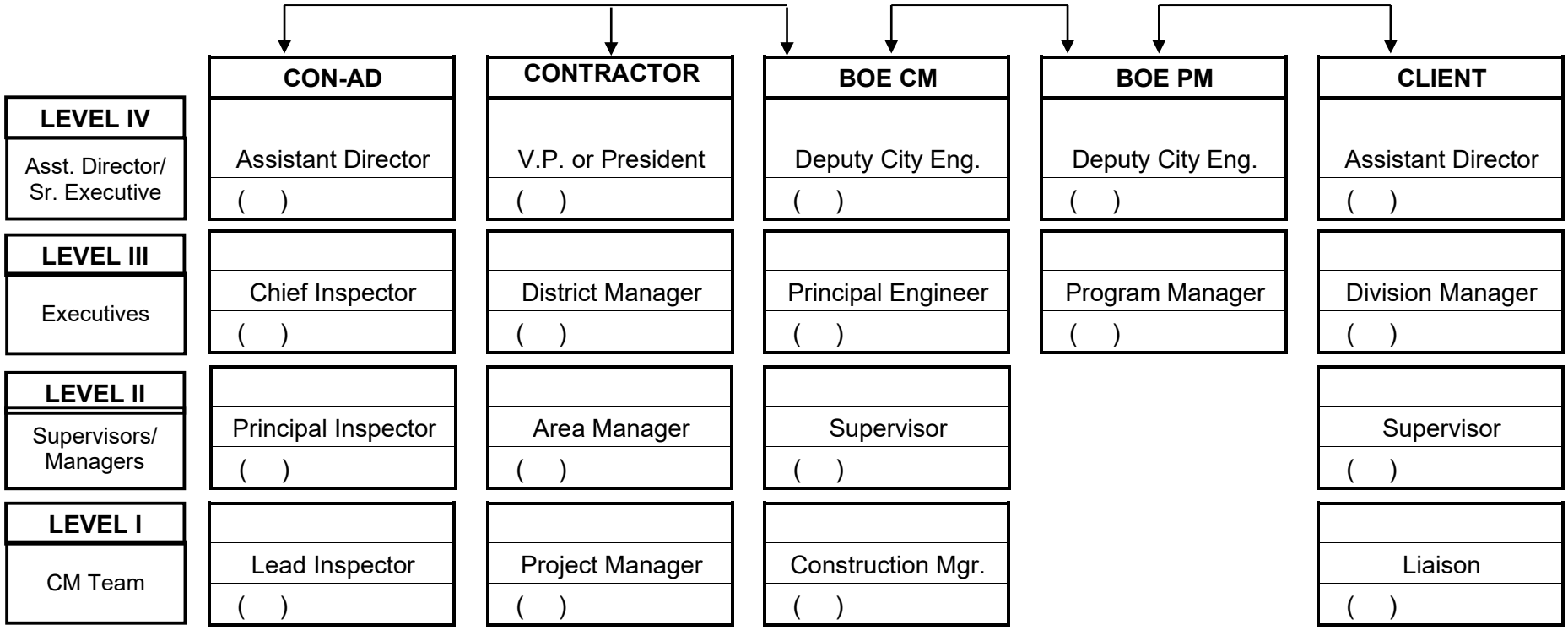

SECTION 01410
REGULATORY REQUIREMENTS

PART ONE - GENERAL

1.1 SUMMARY OF WORK

A. Building Codes and Regulations:

1. The CONTRACTOR shall perform the Contracted Work in accordance with the requirements of **the latest edition of the** Los Angeles City Building Codes and Amendments and all other regulations, laws, and ordinances, even though such requirements are not specifically mentioned in the Project Manual or shown on the Contract Drawings.

2. When the Work required by the Drawings and Project Manual are in conflict with any such law or ordinance, the CONTRACTOR shall notify the ENGINEER. The CONTRACTOR shall comply with the more stringent requirements, unless notified by the ENGINEER and the CONTRACTOR shall not proceed with the Work until the ENGINEER has so ordered.

3. This Section specifies procedural and administrative requirements for compliance with governing regulations, codes, and standards imposed upon the Contracted Work. These requirements include obtaining permits, licenses, inspections, releases, and similar documentation, as well as payments, statements, and similar requirements associated with the regulations, codes, and standards.

B. Related Documents:

1. Contract Documents: Work of this Section shall comply with all the Contract Documents, including General Conditions and Supplementary Conditions and other Sections, DIVISION 1 - GENERAL REQUIREMENTS.

1.2 CODES AND REGULATIONS

A. The design and construction of this Project have been selected and depicted on the Contract Documents in compliance with all applicable codes, which govern the various work, materials, devices, equipment, systems, and procedures in effect at the time the permits for the Projects are issued by the governing agencies. These include, but are not limited to, the following:

1. CITY of Los Angeles Building Code and Amendments, latest edition.

2. Los Angeles CITY "Standard Specifications for Public Works Construction", (The Green Book).

3. CAC Title 24.

4. California Building Code (CBC).

5. CAL/OSHA (Occupational and Safety Code).

6. California State Architectural Barrier's Law (CAL/ABL).

7. California State Fire Marshall requirements.

8. California Electrical, Plumbing and Mechanical Codes.

9. Los Angeles CITY Fire Code.

10. State Energy Standards Title 24.

11. Americans with Disabilities Act (ADA).

12. Los Angeles CITY Electrical, Plumbing and Mechanical Codes and Amendments, latest editions.

13. Los Angeles CITY Elevator Code, C.A.C. 3041 and Barclay's California Code of Regulation (Sub-article E620)

14. Los Angeles CITY Municipal Code, latest edition.

15. Uniform Building Code (UBC).

16. All other Codes and Regulations that may be noted in the Technical Sections of the Project Manual.

B. The procedure followed by the ENGINEER has been to contact governing authorities, where necessary, to obtain information needed for the purpose of preparing Contract Documents, recognizing that such information may or may not be of significance in relation to the CONTRACTOR'S responsibilities for performing the Work. Direct contact, by the CONTRACTOR, with such governing authorities can be made for necessary information and decisions that have a bearing on the performance of the Work, if necessary.

C. CONTRACTOR shall be familiar with all codes, regulations and all necessary procedures to obtain and pay for all permits, arrange all inspections, and secure necessary releases or sign-offs, which are prerequisite to any utility service connection work.

D. When conflict or violation of law or codes are found during any inspection by the governing agencies, the CONTRACTOR shall request such allegation of code conflict or violation, or Request of Correction to be on a written form from the governing agencies. The CONTRACTOR shall furnish the ENGINEER and the INSPECTOR each a duplicate copy of such written notice for review.

PART TWO - PRODUCTS (NOT APPLICABLE)

PART THREE - EXECUTION

3.1 PERMIT INFORMATION

A. CONTRACTOR shall contact the ENGINEER to obtain the proper CITY **(**owner**)** information to be used in the manifest or notification prior to start of any abatement work.

B. All information used by the CONTRACTOR including the CITY'S (Owner's) and CITY authorized representative's names, addresses and telephone numbers shall be consistent with the information shown on the building permit and plan-check applications obtained by the CITY.

END OF SECTION

SECTION 01411
CONFINED SPACE ENTRY

1.1 THE REQUIREMENT

A. Confined Space Entry Program

1. The CONTRACTOR shall be responsible for implementing, administering and maintaining a confined space entry program (CSEP) in accordance with Sections 5156, 5157 and 5158, Title 8, CCR.

2. Prior to starting the Work, the CONTRACTOR shall prepare and submit its comprehensive CSEP to the ENGINEER. The CSEP shall address all potential physical and environmental hazards and contain procedure for safe entry into confined spaces, including, but not limited to, the following:

a. Training of personnel

b. Purging and cleaning the space of materials and residue

c. Potential isolation and control of energy and material inflow

d. Controlled access to the space

e. Atmospheric testing of the space

f. Ventilation of the space

g. Special hazards consideration

h. Personal protective equipment

i. Rescue plan provisions.

3. The CONTRACTOR'S submittal shall include the names of its personnel, including Subcontractor personnel, assigned to the project, who will have CSEP responsibilities, their CSEP training, and their specific assignment and responsibility in carrying out the CSEP.

B. Permit-Required Confined Spaces

1. Entry into permit-required confined spaces, as defined in Section 5157, Title 8, CCR, may be required as a part of the Work. All maintenance holes, tanks, vaults, pipelines, excavations, or other enclosed or partially enclosed spaces shall be considered permit-required confined spaces until the pre-entry procedures demonstrate otherwise. The CONTRACTOR shall implement a permit space program prior to performing any Work in a permit-required confined space. A copy of the permit shall be available at all times for review by CONTRACTOR and CITY personnel at the Worksite.

C. Payment

1. Payment for implementing, administering, and providing all equipment and personnel to perform the CSEP shall be included in the bid items for which the CSEP is required.

END OF SECTION

SECTION 01420
UNITS OF MEASURE

1.1 THE REQUIREMENT

A. General

1. The International System of Units, also referred to as SI or the metric system, is the principal measurement system in these specifications and shall be used for construction, unless otherwise stated in the Contract documents. U.S. Standard Measures, also called U.S. Customary System, are included in parenthesis. SI units and U.S. Standard Measures in parenthesis may or may not be exactly equivalent. If U.S. Standard Measures are specified for use in the contract documents, then all values used for construction shall be U.S. Standard Measures shown in parenthesis. However, certain material specifications and test requirements contained herein use SI units specifically and conversions to U.S. Standard Measure have not been included in these circumstances. When U.S. Standard Measures are not included in parenthesis, then the SI units shall control.

2. Reference is also made to ASTM E 380 for definitions of various units of the SI system and a more extensive set of conversion factors.

B. Units of Measure and Their Abbreviations (abbreviations noted within parentheses):

U.S. Customary Unit (Abbreviations)	Equal to	SI Unit (Abbreviations)
1 mil (= 0.001 in)	=	25.4 micrometer (µm)
1 inch (in)	=	25.4 millimeter (mm)
1 inch (in)	=	2.54 centimeter (cm)
1 foot (ft)	=	0.3048 meter (m)
1 yard (yd)	=	0.9144 meter (m)
1 mile (mi)	=	1.6093 kilometer (km)
1 square foot (ft^2)	=	0.0929 square meter (m^2)
1 square yard (yd^2)	=	0.8361 square meter (m^2)
1 cubic foot (ft^3)	=	0.0283 cubic meter (m^3)
1 cubic yard (yd^3)	=	0.7646 cubic meter (m^3)
1 acre	=	0.4047 hectare (ha)
1 U.S. gallon (gal)	=	3.7854 Liter (L)
1 fluid ounce (fl. oz.)	=	29.5735 milliliter (mL)
1 pound mass (lb) (avoirdupois)	=	0.4536 kilogram (kg)
1 ounce mass (oz)	=	0.0283495 kilogram (kg)
1 Ton (= 2,000 lb avoirdupois)	=	0.9072 Tonne (= 1,000 kg)
1 Poise	=	0.1 pascal · second (Pa · s)
1 centistoke (cs)	=	1 square millimeters per second (mm^2/s)
1 pound force (lbf)	=	4.4482 Newton (N)
1 pound per square inch (psi)	=	6.8948 Kilopascal (kPa)
1 pound force per foot (lbf/ft)	=	1.4594 Newton per meter (N/m)
1 foot-pound force (ft-lbf)	=	1.3558 Joules (J)
1 foot-pound force per second ([ft-lbf]/s)	=	1.3558 Watt (W)
1 part per million (ppm)	=	1 milligram/liter (mg/L)

C. Temperature Units and Their Abbreviations (abbreviations noted within parentheses):

Degree Fahrenheit (Abbreviation: °F)	Degree Celsius (Abbreviation: °C)
°F = (1.8 x °C) + 32	°C = (°F – 32)/1.8

D. SI Units Commonly Used in Both Systems and their Abbreviations (abbreviations noted within parentheses):

1 Ampere (A)
1 Volt (V)
1 Candela (cd)
1 Lumen (lm)
1 second (s)

E. Common Metric Prefixes and Their Abbreviations (abbreviations noted within parentheses):

kilo (k)	10^{3}
centi (c)	10^{-2}
milli (m)	10^{-3}
micro (μ)	10^{-6}
nano (n)	10^{-9}
pico (p)	10^{-12}

END OF SECTION

SECTION 01421
SYMBOLS

1.1 THE REQUIREMENT

A. The symbols as shown shall mean:

Symbol	Definition
Δ	Delta, the central angle or angle between tangents
∠	Angle
%	Percent
'	Feet or minutes
"	Inches or seconds
#	Number
/	Per or (between words)
°	Degree
℄	Property line
℄	Centerline
℄	Survey line or station line

END OF SECTION

SECTION 01430
MANUFACTURER'S FIELD SERVICES

1.1 THE REQUIREMENT

A. Prior to the startup of the facility, an experienced, competent, and authorized representative of the manufacturer of each item of equipment incorporated into the Work, for which field services are indicated in specified equipment sections, shall visit the site of the Work and inspect, check, adjust if necessary, and approve the equipment installation. In each case, the representative shall revisit the Jobsite as often as necessary until all trouble is corrected and the equipment installation and operation are satisfactory in the opinion of the ENGINEER. Each manufacturer's representative shall furnish to the ENGINEER and the INSPECTOR a written report certifying that the equipment has been properly installed, and lubricated; is in accurate alignment; is free from any undue stress imposed by connecting piping or anchor bolts; and has been operated under full load conditions and that it operated satisfactorily. All costs for these services shall be included in the CONTRACTOR'S Bid.

END OF SECTION

SECTION 01452
INSPECTION OF THE WORK

1.1 THE REQUIREMENT

A. Whenever the CONTRACTOR intends to carry on the Work of this Contract on a Saturday, Sunday, or holiday, or more than eight (8) hours a day on Monday through Friday, or any variation in the time of the workday as set forth in the GENERAL CONDITIONS, length of the workday and work week, notification shall be given to the INSPECTOR and the ENGINEER of such intention at least forty-eight (48) hours in advance so that inspection may be arranged. No Work shall be allowed during these times without the approval of the INSPECTOR and no demolition will be permitted on Saturdays, Sundays, or holidays without the prior approval of the Board. All CITY inspection required by the CONTRACTOR on holidays, weekends and overtime for the sole convenience of the CONTRACTOR shall be accomplished at the sole expense of the CONTRACTOR by issuance of a deductive Change Order.

B. The Work shall be conducted under the general observation of the ENGINEER and shall be subject to inspection by the INSPECTOR to ensure compliance with the requirements of the Contract Documents. Such inspection may include mill, plant, shop or field inspection, as required. The INSPECTOR shall be permitted access to all parts of the Work, including plants where materials or equipment are manufactured or fabricated. All materials and articles furnished by the CONTRACTOR shall be subject to inspection and no materials or articles shall be used in the Work until they have been inspected and accepted by the INSPECTOR.

C. No Work shall be backfilled, buried, cast in concrete, hidden or otherwise covered until it has been inspected by the INSPECTOR, and other Agencies for which a permit is required. Whenever the CONTRACTOR is ready to backfill, bury, cast in concrete, hide, or otherwise cover any Work under the Contract, the CONTRACTOR shall notify the INSPECTOR not less than forty-eight (48) hours in advance to request inspection before beginning any such Work of covering. Failure of the CONTRACTOR to notify the INSPECTOR at least forty-eight (48) hours in advance of any such inspections shall be cause for the INSPECTOR to require a sufficient delay in the progress of Work to allow time for such inspections and any remedial or corrective work required, and all costs of such delays, including its effect upon other portions of the work, shall be borne by the CONTRACTOR. Any Work so covered in the absence of inspection shall be subject to uncovering at the sole expense of the CONTRACTOR. Where uninspected Work cannot be uncovered, such as in concrete cast over reinforcing steel, all such Work shall be subject to demolition, removal, and reconstruction under proper inspection, and no additional payment will be allowed therefor.

D. The presence of the ENGINEER or the INSPECTOR shall not relieve the CONTRACTOR of the responsibility for the proper execution of the Work in accordance with all requirements of the Contract Documents. Compliance is a duty of the CONTRACTOR, and said duty shall not be avoided by any act or omission on the part of the ENGINEER or the INSPECTOR. If the

CONTRACTOR fails to replace any defective or damaged Work or material after reasonable notice, the ENGINEER may withhold progress payment for the Work or material, reserve the right to notify the CONTRACTOR'S Bond and Insurance Companies, and/or may cause such Work or materials to be replaced. The replacement shall be deducted from the amount to be paid to the CONTRACTOR, otherwise the CONTRACTOR shall pay the CITY if there remains insufficient or no amount to be paid by the CITY to the CONTRACTOR.

E. The INSPECTOR shall have the right, at all times and places, to reject any articles or materials to be furnished hereunder which, in any respect, fail to meet the requirements of these specifications, regardless of whether the defect in such articles or materials are detected at the point of manufacture or after completion of the Work at the site. If the ENGINEER or the INSPECTOR, through an oversight or otherwise, has not rejected materials or work which is defective or which is contrary to the specifications, such material, no matter in what stage or condition of manufacture, delivery, or erection, may be rejected by the INSPECTOR upon discovery. The CONTRACTOR shall promptly remove rejected articles or materials from the site of the Work after notification of rejection. All costs of removal and replacement of rejected articles or materials as specified herein shall be borne by the CONTRACTOR.

F. At the completion of Work, after completion of all corrections, a final inspection will be made by the INSPECTOR, the ENGINEER, and the CONTRACTOR, as applicable. The INSPECTOR will provide a Final Inspection Correction List itemizing all work necessary to complete the Project satisfactorily.

G. When the correction work is found to be in compliance with the Contract Documents, the construction Work will be considered complete and the Contract time will stop. The CONTRACTOR shall proceed with the maintenance work if required by the Contract. If the correction work is found to be non-compliant with the Contract Documents, the Contract time shall be continued to be assessed until the correction is satisfactorily made and accepted by the CITY.

END OF SECTION

SECTION 01453
SAMPLING, TESTING AND FABRICATION INSPECTION

1.1 THE REQUIREMENT

A. General

1. All materials and fabricated articles furnished by the CONTRACTOR shall be subject to inspection and testing and no materials or fabricated articles shall be incorporated into the Work until they have been inspected and accepted by the INSPECTOR. The CONTRACTOR shall ensure that all items requiring shop inspection are inspected at their source by the INSPECTOR or by an independent inspection or testing laboratory (IITL) that has been approved by the INSPECTOR.

2. Fabrication shall be subject to inspection by the INSPECTOR, to ensure strict compliance with the requirements of the Contract Documents. Such inspection shall include mill, plant, shop or field inspection, as required. The INSPECTOR shall be permitted access to all parts of the Work, including plants where materials or equipment are manufactured or fabricated. When a third party INSPECTOR is approved, monthly meetings may be scheduled with the INSPECTOR at the manufacturing facility to review the progress of the Work and the inspection activities. The INSPECTOR will determine the number of trips based on the manufacturing schedule for the material or fabricated article(s). The CONTRACTOR shall include in the Bid all costs associated with these inspections, except for the costs for CITY personnel as set forth herein which shall be reimbursed under the Bid Item ALLOWANCE FOR CITY INSPECTION, if provided in the SCHEDULE OF WORK AND PRICES.

3. All fabricated items shall be fabricated from Shop Drawings, which have been submitted to the ENGINEER and approved in accordance with SUBMITTALS of the GENERAL REQUIREMENTS. Shop inspection shall be provided on all materials and/or equipment so designated on the CONTRACTOR'S approved Shop Drawings or Contract Documents. The CONTRACTOR shall provide approved Shop Drawings and the corresponding Contract Specification to the INSPECTOR or IITL for use in the inspection and testing of the items to be fabricated.

4. Any item requiring inspection that is delivered to the job site without having been inspected and approved by the Bureau of Contract Administration or an approved third party inspection agency will be rejected by the Project Inspector. The BCA Materials Control Group will not perform any inspection at the job site. It is the Prime CONTRACTOR'S responsibility to ensure that all items requiring shop inspection are inspected at their source by the BCA Materials Control Group, or by an inspection or testing laboratory that has been approved by the BCA Materials Control Group. The City shall be held harmless for any delays resulting from the CONTRACTOR'S or fabricator's failure to obtain the required inspections.

5. Prior to any fabrication, there shall be a Prefabrication Meeting either at the fabricator's location or via telephonic conference. A representative of the CITY and the IITL, if retained, the Prime CONTRACTOR, the fabricator's plant superintendent and the fabricator's quality control person, shall be present at the Prefabrication Meeting. The items to be discussed are the required inspections, tests and reports, based on the approved Shop Drawings and the corresponding Contract Specifications. The IITL shall take minutes of the pre-fabrication meeting and distribute the same to the individuals in attendance. The IITL shall submit an inspection plan to the INSPECTOR for approval two (2) weeks prior to the Prefabrication Meeting. The CONTRACTOR is directed to notify the INSPECTOR and the ENGINEER three (3) weeks in advance of the date and time of the Prefabrication Meeting. The CONTRACTOR shall include in the Bid all costs associated with these meetings except for the costs for CITY personnel as set forth herein which shall be reimbursed under the Bid Item ALLOWANCE FOR CITY INSPECTION, if provided in the SCHEDULE OF WORK AND PRICES.

6. If a Bid Item ALLOWANCE FOR CITY INSPECTION has been included in the SCHEDULE OF WORK AND PRICES in the Bid Proposal, this allowance shall only be used to reimburse the CONTRACTOR for the cost of CITY inspection and travel requirements, as set forth herein, and shall not be used for any portion of the costs of the CONTRACTOR'S independent third party INSPECTOR or inspection laboratory. Reimbursement of approved expenses shall be made on the basis of original invoices and are not subject to markup for overhead and profit. If at the end of the Project, the total costs differ from the amount set forth in the SCHEDULE OF WORK AND PRICES, the Contract Price shall be adjusted by a Change Order for the difference between the total actual costs and the amount included in the Bid, as an additional amount due the CONTRACTOR or a credit to the CITY, as appropriate.

7. The CONTRACTOR shall coordinate all sampling, testing and fabrication inspections with the INSPECTOR and is responsible for maintaining the inspection schedules. Subject to the terms contained herein, costs for CITY personnel travel will be paid from the Bid item ALLOWANCE FOR CITY INSPECTION. In the event that the scheduled inspection is postponed or delayed by the CONTRACTOR, through no fault of the CITY, and CITY personnel are required to extend their travel duration resulting in additional travel costs, these increased costs, including per diem travel allowances, shall be borne by the CONTRACTOR and are not eligible for payment from the Bid item ALLOWANCE FOR CITY INSPECTION.

8. In addition to the approval of the Bureau of Contract Administration, approval may be required from the Department of Building and Safety, Materials Control Section, for certification of both the manufacturer of structural items/materials and/or the testing laboratory/inspection company. For certification information, contact:

Senior Building Inspector
Materials Control section
Dept. of Building and Safety
Telephone: (213) 482-0388

B. Samples And Test Specimens

1. Samples and test specimens required under these Specifications shall be furnished, prepared for testing, and delivered, at no cost to the CITY, in ample time for the completion of the necessary tests and analysis before said article or materials are to be used. The time and location of the delivery shall be designated by the INSPECTOR.

2. In addition to any other inspection or quality assurance provisions that may be specified, the ENGINEER or the INSPECTOR shall have the right to independently select, test, and analyze, at the expense of the CITY, additional test specimens of any or all of the materials to be used. Whenever any portion of the Work fails to meet the requirements of the Specifications, as shown by the results of independent testing or investigation, all costs of such independent inspection and investigation, and all costs of removal, correction, and reconstruction or repair of any such Work, shall be borne solely by the CONTRACTOR.

3. The INSPECTOR may allow the manufacturer, fabricator, supplier, or Subcontractor to provide the results of tests from samples taken at the mill, factory, or warehouse. The INSPECTOR will accept the test reports provided that the following conditions are met:

   a. The Testing Agency was approved by the INSPECTOR prior to performing the tests, and that all necessary certifications were valid at the time the tests were performed.

   b. The tests were performed in conformity with the Specifications for the specified materials or items.

   c. The reports are made in the form of an affidavit specified hereinafter.

4. Whenever the approved independent testing laboratory or INSPECTOR takes samples of materials other than at the site, the deliveries to the site of materials represented by such samples shall be identified as specified for the specific material. The results of such tests shall be reported to the INSPECTOR in the form of affidavits attested to by the testing agency. Such affidavits shall furnish the following information with respect to the material sampled:

   a. Manufacturer's name and brand.

   b. Place of sampling.

c. Sufficient information to identify the lot, group, bin, or silo from which the samples were taken.

d. Amount of material in the lot sampled.

e. Statement that the material has passed the requirements.

f. Notarized signature and title of the person making the affidavit and the date of execution of the affidavit.

C. Shop Inspection And Testing

1. Shop Inspection and/or Material Sampling and Testing are the sole jurisdiction and responsibility of the Inspector of Public Works through the Bureau of Contract Administration's Materials Control Group. Shop Inspection and/or Material Sampling and Testing cannot be approved, waived, or otherwise altered by any other City Department, Bureau, Division, or individual. Shop Inspection required by this section is in addition to any inspections required by applicable building codes.

2. The CONTRACTOR is responsible for coordinating shop inspection with the INSPECTOR. The CONTRACTOR is to estimate the time required for Shop testing of the fabricated article(s) or equipment, and so inform the INSPECTOR. The Contractor is responsible for contacting the Bureau of Contract Administration, Materials Control Group, regarding scheduling for all Shop Inspection and/or Material Sampling and Testing. Please contact the Materials Control Supervisor at (213) 847-2442.

3. A final inspection by the INSPECTOR may be required prior to shipment. No fabricator or CONTRACTOR shall deliver fabricated materials to the project site without the approval of the BCA Materials Control Group.

4. Where the CONTRACTOR is specifically required by the Technical Specifications to demonstrate performance of major equipment prior to delivery, a testing procedure must be developed by the manufacturer and approved by the ENGINEER prior to scheduling the shop performance testing. Both the INSPECTOR and the ENGINEER are required to witness the performance testing. The ENGINEER will evaluate performance-testing data and notify the INSPECTOR whether the equipment meets the performance requirements of the Contract. The INSPECTOR will be responsible for releasing the equipment for delivery to the Jobsite. This procedure will also apply to field performance testing required as a condition precedent to acceptance of the equipment as described under the PARTIAL ACCEPTANCE and FINAL ACCEPTANCE provision of the Contract.

5. Inspection at Locations Within Thirty (30) Miles from CITY

a. When the CONTRACTOR intends to purchase materials, fabricated products, or manufactured equipment from sources located within thirty (30) miles (48 km) of the geographical limits

of the CITY, the CONTRACTOR shall notify the INSPECTOR at least 24 hours prior to the scheduled date of tests at all stages of manufacture to allow for arrangements specified herein.

b. Except as otherwise provided in these Specifications, performance of the required sampling and tests will be under the direction of the INSPECTOR, from samples provided by the CONTRACTOR, and the cost of performing the test(s) will be borne by the CITY, except for the costs of any retests which show unsatisfactory results which shall be borne by the CONTRACTOR.

6. Inspection at Locations More Than Thirty (30) Miles From the CITY

a. When the CONTRACTOR intends to purchase materials, fabricated products, or equipment from sources located more than thirty (30) miles (48 km) outside the geographical limits of the CITY, an IITL approved by the INSPECTOR, shall be engaged by the CONTRACTOR, at the CONTRACTOR'S sole expense, to inspect the materials, equipment and/or process, unless the City elects to perform the inspection with BCA Materials Control Personnel. Approval of the IITL shall be obtained from the BCA Materials Control Group before producing any material or equipment. The IITL shall judge the materials and fabricated articles by the requirements of the Plans and Specifications and approved submittals. The IITL shall be accountable to the BCA Materials Control Group and shall provide written records of all inspections performed to the Group in a format approved by that Group. No equipment or material shall be shipped nor shall any processing, fabrication and/or treatment of such equipment or materials be done without the required inspection and approval by IITL. Approval by IITL shall not relieve the CONTRACTOR of its responsibility to comply with the Contract requirements. The City retains the right to perform inspection or testing at any remote site with City personnel. If the City exercises this right, the contractor will be required to pay for all costs associated with this inspection and testing, except the Inspectors' wages, unless reimbursement is provided under the bid item ALLOWANCE FOR CITY INSPECTION as listed in the SCHEDULE OF WORK AND PRICES.

b. The CITY retains the right to perform inspection or testing at such remote sites with CITY personnel in lieu of a third party inspector. In the event the CITY exercises this right, the CONTRACTOR shall administer travel arrangements as specified herein Paragraph C.10, CITY PERSONNEL TRAVEL REQUIREMENTS.

7. Inspection Outside Continental United States

a. Requirements and procedures for inspection and testing of materials, fabrication of products and equipment from sources

outside the continental United States shall be the same (including the requirement for an accredited inspection agency and/or testing laboratory pre-qualified by the CITY Department of Building and Safety and approved by the INSPECTOR) as provided in the Paragraph C.7 SHOP INSPECTION & TESTING of this Section. In addition to the requirements of Paragraph C.10, City Personnel Travel Requirements, of this Section, the CONTRACTOR shall provide the following, the cost of which shall be reimbursed out of the ALLOWANCE FOR CITY INSPECTION item, if provided in the SCHEDULE OF WORK AND PRICES.

(1) A minimum of five (5) calendar days hotel accommodation shall be required for each shop inspection visit made by the INSPECTOR.

(2) A minimum advance notice of ten (10) working days shall be required for all hold points (mandatory) inspection.

(3) The approximate rates for allowances given as a guideline in Paragraph C.10, City Personnel Travel Requirements, of this Section, shall be adjusted to match the rates in the foreign locality for similar types of facilities and amenities.

8. Third Party Inspection Requirements

a. The proposed third party inspection and/or testing company must gain approval by the INSPECTOR after award. This approval shall be obtained before producing any material or manufacturing any product or equipment. The approved inspection and/or testing agency shall not sublet or assign its work to any other agency.

b. The approved third party inspection and/or testing agency shall take direction from, and be responsible to, the INSPECTOR.

c. The CONTRACTOR shall also comply with requirements regarding the Prefabrication Meeting as contained herein.

d. The Work and activities of the third party inspection and/or testing agency shall be monitored by the INSPECTOR during monthly meetings to ensure compliance with the Contract Documents.

9. Third Party Testing and Inspection Laboratory Approval Procedures

a. The INSPECTOR will approve third party inspection and/or testing agencies/laboratories. The City of Los Angeles has a contract only with the Prime CONTRACTOR. The City of Los

Angeles has no Third Party agreement with any subcontractor, plant, manufacturer, or fabricator. All are considered employees of the Prime CONTRACTOR and the Prime CONTRACTOR shall be responsible for their work. The Supervisor of the Materials Control Group of the Bureau of Contract Administration acts on behalf of the INSPECTOR of Public Works Therefore, all requests for the approval of a third party inspection or testing company shall be from the Prime CONTRACTOR, typewritten on the Prime CONTRACTOR'S letterhead, addressed to the Supervisor of the BCA Materials Control Group (213) 847-2442 as follows:

Bureau of Contract Administration
General Services Division
Materials Control Group
1149 S. Broadway, Suite 300
Los Angeles, CA 90015

One (1) duplicate copy of the request shall be sent to the ENGINEER.

b. The letter requesting approval of a third party test lab or private inspection company shall contain all of the following information:

PROJECT DATA

(1) Complete title of the project.
(2) The project work order number.
(3) The approved submittal number(s) and a brief description of the item(s) to be inspected tested with their Specification Division and Section number.

PROPOSED INSPECTION

(1) Names of two (2) proposed testing laboratories or inspection companies.
(2) Addresses and telephone numbers of the proposed test labs/inspection companies.
(3) Contact person at the proposed test labs/ inspection companies.
(4) Description and history of the proposed test laboratories/inspection companies.
(5) Resumes of at least two (2) or more inspectors (primary and alternate) who will perform the physical inspections.
(6) Samples of all inspection reporting documents utilized by the provider and a written description of the reporting methodology.

FABRICATOR DATA

(1) Company name, address, and telephone number of the actual production site for each fabricator.
(2) Contact person at each fabricator.
(3) Fabrication schedule.

c. The INSPECTOR will notify the CONTRACTOR by letter if the testing laboratory/inspection agency has been approved.

d. The Materials Control Group may order modifications of the inspection reporting procedure utilized by the provider prior to approval.

10. CITY Personnel Travel Requirements

a. The CONTRACTOR shall administer the travel and furnish the following services for CITY personnel who are attending Prefabrication Meetings and performing inspection services.

(1) Purchase airline tickets (Coach Class only).
(2) Make hotel reservations and prepay for the planned number of nights. (Three Star or American Automobile Association (AAA) Three Star approved.
(3) Make rental car reservations and prepay for the planned number of days if the manufacturer's or fabricator's facility is greater than one (1) mile from the departing and arrival airport or hotel.
(4) The estimated per diem travel allowance will be at least fifty U.S. dollars ($50.00) per day for meals, en route expenses, and other miscellaneous expenses. CITY personnel will submit an expense statement to the CITY for approval of actual expenses incurred.
(5) For CITY paid advances, the CONTRACTOR shall reimburse the CITY for these actual expenses by deductive Change Order to be deducted from the Bid item, ALLOWANCE FOR CITY INSPECTION.
(6) When requested by the ENGINEER or the INSPECTOR, the CONTRACTOR shall provide an advance check, for the estimated costs of all travel allowance costs, to the ENGINEER or the INSPECTOR, no later than forty eight (48) hours prior to the departure time. Failure to provide all accommodations described herein in such a manner to adequately facilitate the travel activity will cause the inspection visit to be canceled, and any costs or delays owing to such rescheduling shall be born by the contractor.

b. As the basis for cost reimbursement under SCHEDULE OF WORK AND PRICES of the Bid Proposal, the CONTRACTOR

shall submit receipts or invoices for payment to the ENGINEER with a cover letter referencing the following:

(1) INSPECTOR'S or ENGINEER'S name.
(2) Project title.
(3) Project Work Order Number.
(4) CONTRACTOR'S:
(5)
(6) Name
(7) Address
(8) Telephone Number.
(9) CONTRACTOR'S contact person and telephone number(s)
(10)
(11) Reference Technical Specification and submittal number.
(12) Purpose of inspection.
(13) Address and location of inspection:
(14) Country
(15) State
(16) City.
(17) Date(s) of inspection.
(18) Description of items enclosed as set forth herein

11. Shop Inspected Equipment/Materials:

a. Without waiving any specific requirement of the Contract Documents, the following items of equipment and/or material are examples of, but not limited to those items that are subject to shop inspection as noted herein below.

Equipment/ Materials	Spec. Sect.	Insp. Req'd	Product Identification	See Notes
Aluminum Fabrication	05530/08410 /08416/0852 0	YES	Inspector Witness – Yellow Tag	G.N.1
Aluminum Railings	05520	YES	Yellow Tag	G.N.5
Anodizing	05035/09800	YES	Yellow Tag	G.N.18
Asphalt Material	02710	YES	Batch Plant Insp. Report #1101	G.N.8
Base Material	02310	NO	Standards Div. Approves Source	
Bearing Pads	05120	YES	Yellow Tag	G.N.31
Bolting	05120	YES	Inspector Witness - Yellow Tag	G.N.2
Bitumen	07160	YES	Insp. Witness & meas. thickness	G.N.18
Boilers	11915	YES	Yellow Tag	G.N.7
Castings	05530	YES	Stamped **"L.A. City Approved"**	G.N.4
Coatings	Div. 9/05530	YES	Insp. Witness & meas. thickness	G.N.18
Cabinets – Wood	06200/06400	NO		G.N.17
Compressors	11870/11875 /11880	YES	Yellow Tag	G.N.20
Crane Systems	14320/14600 /14630	YES	Yellow Tag	G.N.19
Conveyors	14605	YES	Yellow Tag	G.N.19
Concrete	03300	YES	Batch Plant Insp. Report # 1101	G.N.8
Concrete-Fiberglass Reinf.	03400	YES	Batch Plant Insp. Report # 1101	G.N.12
Concrete – mix Designs	03300	YES	Batch Plant Insp. Report # 1101	G.N.8
Concrete – Precast	03400	YES	Stamped **"LA City Approved"**	G.N.9
Concrete – Prestressed	02465/03400	YES	Yellow Tag or Stamped	G.N.9
Concrete Vaults	02585	YES	Stamped "**LA City Approved**"	G.N.11
Catch Basins	02545	YES	Yellow tag for bulb Angle & Grating	G.N.11
Chain Link Fabric	02820	YES	Yellow Tag	G.N.18
Doors – Metal	08110	YES	Yellow Tag	G.N.6
Door Frames - Metal	08110	YES	Yellow Tag	G.N.6
Ductwork – Fiberglass	13390/15170	YES	Yellow Tag	G.N.27
Ductwork – Flexible	15170	NO		G.N.27
Ductwork – Metal	15210	NO		G.N.27
Ductwork – Stainless steel	15210	YES	Yellow Tag	G.N.27
Electrical - Controls	17400	YES		G.N.24
Electrical Motors	16490	YES	Yellow Tag	G.N.20
Electrical Panels	16330	YES	Yellow Tag	G.N.22
Electrical Switchgear	16200	YES	Yellow Tag	G.N.22

TABLE *Continued*

Equipment/ Materials	Spec. Sect.	Insp. Req'd	Product Identification	See Notes
Electrical Transformers	16320	YES	Yellow Tag	G.N.22
Electrical Units	Div 16	YES	Yellow Tag	G.N.25
Electrical Wiring	16150/16160	YES	Inspector Witness	G.N.24
Escalators	Div 14	YES	Yellow Tag	G.N.19
Elevators	14200/14241	NO		G.N.19
Fiberglass	06610	YES	Yellow Tag	G.N.30
Frames – Metal	05500	YES	Yellow Tag	G.N.6
Forgings	Div. 5	YES	Stamped **"LA City Approved"**	G.N.4
Galvanizing	Div. 5	YES	Inspector Witness – Yellow Tag	G.N.18
Gratings	Div. 5	YES	Yellow Tag	G.N.4
Gaskets	07900	YES	Yellow Tag	G.N.11
Generators	16410	YES	Yellow Tag	G.N.22
Glue-Laminated Beams	06181	NO	Certificate of Compliance (Forestry)	G.N.16
Grout	04230	YES	Batch Plant Insp. Report #1101	G.N.13
Gypsum	09200	YES	Batch Plant Insp. Report #1101	G.N.13
Gypsum –Fiberglass Reinf	03520	YES	Batch Plant Insp. Report #1101	G.N.12
Hoists	14320/14600	YES	Yellow Tag	G.N.19
HVAC	15130	NO		G.N.26
Linings – Pipe	09800	YES	Inspector Witness – Yellow Tag	G.N.18
Lumber	06100	NO	Treated Lumber Stamped "LA"	G.N.16
Lighting Fixtures	16360/16370	NO		G.N.23
Lamps	16360/16370	NO		G.N.23
Motors	16490	YES	Yellow Tag	G.N.20
M.H. –Frames/Covers Cast Iron	02585	YES	Stamped "LA" on Cover & Frame	G.N.4
M.H. –Frames/Covers Steel	02585	YES	Stamped "LA" on Inner-Cover only	G.N.4
M.H. –Precast w/Epoxy Coating	02585	YES	Stamped "LA" or Yellow Tag	
M.H. –Shafts/Grade Rings	02585	YES	Stamped "LA" or Yellow Tag	G.N.11
Masonry	04230	NO		G.N.14
Mechanical Equipment	Div. 15	YES	Yellow Tag	G.N.20
Millwork	06200	NO		G.N.17
Misc. Metal Fabrication	05500	YES	Yellow Tag	G.N.1
Mortar	04230	YES	Batch Plant Insp. Report #1101	G.N.13
Non-Destructive Testing	05120	YES	Inspector Witness	G.N.1
Electrical Testing	16570	YES	Inspector Witness	G.N.25

Equipment/ Materials	Spec. Sect.	Insp. Req'd	Product Identification	See Notes
Pressure Vessels	Div. 13	YES	Yellow Tag	G.N.7
Painting (Coating Systems)	09900/ 09905	YES	Yellow Tag	G.N.18
Pilings	02465/ 02460/ 02470	YES	Yellow Tag	G.N.9
Pipe – Fiberglass		YES	Yellow Tag	G.N.15
Pipe - Plastic	02510	NO	Standards Div will issue a batch #	G.N.29
Pipe – Reinf. Concrete	02250/ 2560/0 2565	YES	**LA City Approved** stamp w/ a 3 digit # if approved and a 5 digit number if not approved	G.N.11
Pipe - Steel	Div 15	YES	Yellow Tag	G.N.15
Pipe Supports	15770	YES		G.N.15
Pipe – Vitrified Clay	GB	NO	Standards Division will stamp 3-digit number and **"LA City Approved DPW"** inside full lengths of pipe	G.N.15
Pipe Welding	15610	YES		G.N.15
Plastic Liner Plate	09800	YES		G.N.29 (a)
Pullbox – Street Light & Traffic Signal.		YES	Stamped **"LA City Approved"** on the inside of the box	
Pre-Engineered Metal Buildings		YES		G.N.1
Pumps	Div. 11	YES	Yellow Tag	G.N.20
PVC Liner	09800	YES		G.N.29 (a)
Railings	05520	YES	Yellow Tag	G.N.5
Rebar	03200	YES	Yellow Tag	G.N.3
Sandblasted Steel Items	Div. 5	YES		
Slide Gates	11815	YES	Yellow Tag	G.N.21
Sluice Gates	11182 0	YES	Yellow Tag	G.N.21
Steel Doors	08110	YES	Yellow Tag	G.N.6
Steel – Stainless	05500	YES		G.N.1
Steel Structural	05120	YES	Yellow Tag	G.N.1
Steel Supports	05120	YES	Yellow Tag	G.N.1
Store Fronts	08410/ 08416	YES	Yellow Tag	G.N.28
Street Lgt. Standards	03400	YES	Stamped **"LA City Approved"** or **"Third Party Insp. Agency"** at the bottom of the base	G.N.10
T-Lock Liner Plate		YES	Yellow Tag	

TABLE *Continued*

Equipment/ Materials	Spec. Sect.	Insp. Req'd	Product Identification	See Notes
Tanks – Storage	Div. 13	YES	Yellow Tag	G.N.7
Tanks – Steel	13310	YES	Yellow Tag	G.N.7
Tree Well – Cast Iron		YES	Stamped **"LA"** or Yellow Tag	
Tree Well – Architectural		YES	Stamped **"LA"** or Yellow Tag	
Tree Well – Per Std. Plans		NO		
Vessels	Div. 13	YES	Yellow Tag	G.N.7
Vaults	02585	YES	Stamped **"LA"** or Yellow Tag	G.N.11
Valves	1Div. 15	YES	Yellow Tag	G.N.20
Welding	Div. 5	YES	Inspector Witness – Yellow Tag	G.N.1
Wire Rope		YES	Yellow Tag	
Wood Paneling	06200	NO		G.N.17
Wood Trusses-Engineered		NO	Provide Manufacturer's Certification	

NOTES:

1. Fabrication of ferrous materials, which may include welding, high strength bolting or non-destructive testing shall be shop inspected.
2. Bolting with ASTM A-325 bolts, ASTM A-490 bolts or other alternate fasteners shall require shop inspection. Bolting with ASTM A-307 bolts does not require shop inspection.
3. Reinforcing steel is normally sampled at the Jobsite, but for expediency, the sampling will be performed at the point of fabrication by the CITY'S Standards Division.
4. All forging and castings made at the foundry shall be shop inspected, approved and stamped prior to delivery to the Jobsite.
5. Steel stairways and handrails (ferrous) require shop inspection for welding and specified coatings.
6. Metal door and frame fabrication requires shop inspection.
7. Pressure vessels, tanks, boilers and related equipment do require inspection of fabrication, welding, and testing.
8. Concrete, asphalt concrete and mix designs are inspected at the batch plant. These products are shop inspected for conformance to Specifications and verification by the INSPECTOR.
9. Both pre-cast and pre-stressed concrete are subject to shop inspection and approval before delivery to the Jobsite.
10. Street lighting standards of either steel, aluminum or concrete are required to be shop inspected.
11. Reinforced concrete vaults catch basins, and reinforced pipe are required to be shop inspected. (See Note 9.) Maintenance hole shafts and grade rings without reinforcement or linings do not require shop inspection. Gaskets used for reinforced concrete pipe require testing.

12. FGRC and FGRG (Fiberglass Reinforced Concrete and Fiberglass Reinforced Gypsum) should be manufactured in an approved shop and be shop inspected.
13. Mortar, grout and gypsum shall be inspected at the batch plant, unless the products are mixed at the Jobsite from approved packages under the inspection of the INSPECTOR.
14. Concrete Masonry Units (CMU) shall be inspected and sampled at the Jobsite.
15. Lining and coating of ductile iron pipe and fiberglass pipe, as well as welded supports, are subject to shop inspection. Vitrified Clay Pipe (VCP) is exempt, as are non-welded pipe supports which can be classified as standard or catalog items. The CITY'S Standards Division will provide the inspection and testing for VCP.
16. Shop inspection is not required for lumber, unless it is treated lumber. Glue-laminated products do not require shop inspection. Each "Glue Lam" shall come with an individual Certificate of Compliance.
17. Millwork and wood products are not required to be shop inspected, unless the Specifications call for equivalency or inspection by the Woodworking Institute of California (W.I.C.).
18. Specified coatings including, but not limited to, anodizing, bitumen, epoxy, galvanizing, polyvinylidene fluoride, and pipe linings and coatings shall be shop inspected.
19. Conveying equipment, such as elevators, escalators, or conveyors are exempt from shop inspection. However, the structural framework of the escalators, hoists, cranes and lifts do require inspection.
20. Mechanical equipment, such as compressors, pumps, motors and valves, require shop inspection for fabrication, tests of windings, and any specified coating. Pumps, valves and motors may be exempt if they are standard or catalog items.
21. Fabrications of sluice gates and slide gates are subject to shop inspection for fabrication, welding and coating.
22. Transformers rated at 600 volts and higher, transformers rated at 100 KVA and higher, generators, switchgear motor drives and complex wired panel boards require shop inspection.
23. Lighting fixtures and lamps are considered standard or catalog items and are exempt from shop inspection.
24. Electrical wiring and testing, performed in the shop, requires inspection to verify conformance with applicable Specifications.
25. Shop tests specified in the Specifications including, but not limited to, voltage, grounding, loads, performance, installation, temperature, or noise levels will require shop inspection.
26. HVAC (heating, ventilation and air conditioning) are subject to shop inspection for fabrication and welding. Each component will be evaluated for possible inspection.
27. Sheet metal ductwork is not shop inspected. Flexible ductwork is considered a standard or catalog item and no shop inspection is required. Ductwork made of aluminum, stainless steel, or fiberglass will require shop inspection.
28. Storefronts and wall systems are shop inspected. Fixed windows are standard items and have no need of inspection.
29. Plastic pipe, such as ABS or PVC does not require shop inspection. The pipe will be inspected and sampled for testing at the Jobsite. (a) Extruded plastic liner plate and PVC Liner will require shop inspection.
30. Fiberglass products, because of the resins and the fiber reinforcement, do require shop inspection.
31. Elastomeric bearing pads shall be tested according to Cal-Trans Standard Specification Section 51-1.12H. Sampling will be done by the INSPECTOR.

END OF SECTION

SECTION 01454
WEIGHING AND METERING EQUIPMENT

1.1 THE REQUIREMENT

A. It is the CONTRACTOR'S responsibility to ensure that all scales and metering equipment used for proportioning materials shall be inspected for accuracy and certified within the past twelve (12) months by the State of California Bureau of Weights and Measures, by the County Director or Sealer of Weights and Measures, or by a scale mechanic registered with or licensed by the County.

B. The accuracy of the work of a scale service agency, except as stated herein, shall meet the standards of the California Business and Professions Code and the California Code of Regulations pertaining to weighing devices. A certificate of compliance shall be presented, prior to operation, to the ENGINEER for approval and shall be renewed whenever required by the ENGINEER at no cost to the CITY.

C. All scales shall be arranged so they may be read easily from the operator's platform or area. They shall indicate the true net weight without the application of any factor. The figures of the scales shall be clearly legible. Scales shall be accurate to within one percent (1%) when tested with the plant shut down. Weighing equipment shall be so insulated against vibration or moving of other operating equipment in the plant area that the error in weighing with the entire plant running will not exceed two percent (2%) for any setting nor one-and-one-half percent (1.5%) for any batch.

END OF SECTION

SECTION 01455
CALIBRATION OF TESTING EQUIPMENT

1.1 THE REQUIREMENT

A. It is the CONTRACTOR'S responsibility to ensure that testing equipment such as, but not limited to, pressure gages, metering devices, hydraulic systems, force (load) measuring instruments, and strain-measuring devices shall be calibrated by a testing agency acceptable to the ENGINEER at intervals not to exceed twelve (12) months and following repairs, modification, or relocation of the equipment. Calibration certificates shall be provided when requested by the ENGINEER.

END OF SECTION

SECTION 01561
ENVIRONMENTAL CONTROL

1.1 THE REQUIREMENT

A. Fugitive Dust and Smoke Control

1. The CONTRACTOR shall furnish all labor, equipment, and means required and shall carry out effective measures wherever and as often as necessary to prevent its operation from producing dust in amounts damaging to property, cultivated vegetation, or domestic animals, or causing a nuisance as defined by the ENGINEER. The CONTRACTOR shall be responsible for any damage resulting from any dust originating from its operations. The dust abatement measures shall be continued until the CONTRACTOR is relieved of further responsibility by the ENGINEER. No separate payment shall be allowed for dust abatement measures and all costs thereof shall be included in the CONTRACTOR's Bid. The use of water resulting in mud on streets, sidewalks, driveways, shall not be permitted as a substitute for sweeping or other methods of dust control.

2. The CONTRACTOR shall not discharge smoke, dust, or any other air contaminants into the atmosphere in such quantity as will violate the regulations of any legally constituted authority.

3. The CONTRACTOR shall comply with the requirements of Title 8, California Code of Regulations, concerning handling of asbestos dust.

B. Rubbish Control

1. Through all phases of construction, including suspension of Work and until final acceptance of the Project, the CONTRACTOR shall keep the Worksite and other areas used by it in a neat and clean condition, and free from any accumulation of rubbish and debris. The CONTRACTOR shall dispose of all rubbish and waste materials of any nature occurring at the Worksite and shall establish regular intervals of collection and disposal of such materials and waste. The CONTRACTOR shall also keep its haul roads free from dirt, rubbish, and unnecessary obstructions resulting from its operations. Care shall be taken to prevent spillage on haul routes. Any such spillage shall be removed immediately and the area cleaned by the CONTRACTOR. Equipment and material storage shall be confined to areas approved by the ENGINEER. Disposal of all rubbish and surplus materials shall be off the site of construction, at the CONTRACTOR's expense, all in accordance with local codes and ordinances governing locations and methods of disposal, and in conformance with all applicable safety laws, and the requirements of the OSHA Safety and Health Standards for Construction. All cleanup cost shall be included in the CONTRACTOR's Bid.

C. Sanitation

1. Fixed or portable chemical toilets shall be provided for the use of the CONTRACTOR's employees. These accommodations shall be maintained in a neat and sanitary condition. Toilets at construction sites shall conform to the requirements of Title 8, California Code of Regulations.

2. Wastewater conveyance and disposal shall not be interrupted. Should the CONTRACTOR disrupt existing sewer facilities, sewage shall be conveyed in closed conduits and disposed of in a sanitary sewer system. Sewage shall not be permitted to flow in trenches or be covered by backfill.

3. The CONTRACTOR shall establish a regular schedule for collection of all sanitary and organic waste. All wastes and refuse from sanitary facilities provided by the CONTRACTOR or organic material wastes from any other source related to the CONTRACTOR's operations shall be disposed of away from the site in a manner satisfactory to the INSPECTOR and in accordance with all laws and regulations pertaining thereto. Disposal of all such wastes shall be at the CONTRACTOR's expense.

D. Chemicals

1. The following paragraph does not relieve the CONTRACTOR from its responsibility for obtaining prior approval from the ENGINEER for chemical usage when otherwise required.

2. The CONTRACTOR shall provide four (4) copies of the MSDS to the INSPECTOR for all chemicals used during project construction or furnished for project operation, prior to bringing them on site, whether defoliant, soil sterilant, herbicide, pesticide, disinfectant, polymer, reactant, or of other classification, which shall show approval of either the U.S. Environmental Protection Agency or the U.S. Department of Agriculture. Use of all such chemicals and disposal of residues shall be in strict accordance with the printed instructions of the manufacturer and with all other applicable laws and regulations.

E. Hazardous Waste

1. Hazardous waste generated by the CONTRACTOR at the site shall be disposed of in accordance with NOTIFICATION OF HAZARDOUS SUBSTANCES of the General Conditions.

F. Odor Control

1. The CONTRACTOR shall furnish all labor, materials, and equipment required and shall carry out effective measures whenever and as often as necessary to prevent the discharge of a nuisance odor from its operation into the atmosphere in such quantity as will violate the regulations of any legally constituted authority. During construction, the CONTRACTOR shall notify the ENGINEER and the INSPECTOR at

least forty-eight (48) hours in advance when potential odor-causing activities are scheduled for construction.

G. Drainage Control

1. The CONTRACTOR shall maintain drainage within and through the Work areas. Earth dams will not be permitted in paved areas. Temporary dams of sandbags, asphaltic concrete, or other acceptable material will be permitted when necessary. Such dams shall be removed from the site as soon as their use is no longer necessary.

H. Graffiti Control

1. Throughout all phases of Work, including suspension of work, and until final acceptance, the CONTRACTOR shall keep all equipment, field offices, storage facilities and other facilities free of graffiti. Graffiti shall be painted over, masked or cleaned off within twenty-four (24) hours after notification by the INSPECTOR

I. Vermin Control

1. At the time of acceptance, structures entirely constructed under the Contract shall be free of rodents, insects, vermin, and pests. Necessary extermination work shall be arranged and paid for by the CONTRACTOR as part of the work within the contract time, and shall be performed by a licensed exterminator in accordance with requirements of governing authorities. The CONTRACTOR shall be liable for injury to persons or property and responsible for the elimination of offensive odors resulting from extermination operations.

J. Pre and Post Construction Survey (PCS)

1. The CONTRACTOR shall be responsible for any damages to the adjacent properties caused by the CONTRACTOR or its Subcontractors. This includes damage to the following residential properties:
8117 Potter Avenue, North Hollywood, CA 91605
8109 Potter Avenue, North Hollywood, CA 91605
8101 Potter Avenue, North Hollywood, CA 91605
12570 Lorne Street, North Hollywood, CA 91605
12562 Lorne Street, North Hollywood, CA 91605
12554 Lorne Street, North Hollywood, CA 91605
12550 Lorne Street, North Hollywood, CA 91605
12544 Lorne Street, North Hollywood, CA 91605
12540 Lorne Street, North Hollywood, CA 91605

2. The CONTRACTOR shall implement assessment damage prevention and measures as necessary. As a minimum, the CONTRACTOR shall secure the services of a property assessment company to prepare a PCS report for the adjacent premises and structures at addresses and locations listed below to differentiate the existing conditions from post constructions:
8117 Potter Avenue, North Hollywood, CA 91605
8109 Potter Avenue, North Hollywood, CA 91605

8101 Potter Avenue, North Hollywood, CA 91605
12570 Lorne Street, North Hollywood, CA 91605
12562 Lorne Street, North Hollywood, CA 91605
12554 Lorne Street, North Hollywood, CA 91605
12550 Lorne Street, North Hollywood, CA 91605
12544 Lorne Street, North Hollywood, CA 91605
12540 Lorne Street, North Hollywood, CA 91605

3. The property assessment company shall have a minimum experience of 10 years performing similar work including have establish forms and procedures for petitioning right-of-entry from property owners and renters. The lead investigator/assessor of the property assessment company shall have a minimum of 5 years experiences in conducting this type of work on over 30 similar properties and / or structures

4. Report shall be in color, minimum three (3) hard copies, and an electronic (pdf) copy. Each property/structure shall have its own separate report. The interior and exterior survey includes but is not limited to visual observation of: windows, doors, stairs, the exterior walls, roof, walkways, driveways, retaining walls, perimeter walls, and other special features currently on the properties, with accompanying photographs. All reports shall be signed by both the lead assessor and executive level representatives. Property owners shall be provided with a hard copy of each report.

5. Each photograph shall include date, time, location and direction of view. The PSC report includes attached “Notification Letter” to be signed by the property or/and rental owners. Also, any observed existing damage shall be identified as “low”, ”medium”, or of “high” severity, or similar rating system.

6. The preconstruction survey and report shall be conducted and prepared just prior to implementing any work adjacent to identified addresses and locations. However, ample time shall be scheduled to secure Right-of-Entry in advance of actual survey.

7. The post construction survey and report shall be conducted and prepared immediately after substantial completion of work at each address and/or location, or as directed in writing by the ENGINEER.

8. The CONTRACTOR shall be responsible for all the repair costs if the damages to existing facilities are caused by CONTRACTOR.

9. All costs for performing the PCS report shall be included in the Bid Item 20 Pre and Post Construction Survey (9 homes). The City has the option to cancel the need for conducting the post construction survey and related report for any identified item and receive corresponding credit

END OF SECTION

SECTION 01562
ENVIRONMENTAL MITIGATION OR CONDITIONS

1.1 THE REQUIREMENT

A. The CONTRACTOR shall mitigate the adverse environmental impacts associated with the Work of the Contract. The CONTRACTOR shall indemnify and hold harmless the CITY from any and all fines, penalties or damages incurred by the CITY for violation of any environmental mitigation measures or permit caused by the CONTRACTOR's failure to comply with environmental Mitigation Measures (MM) and/or Best Management Practices (BMPs) of this Article. The measures that the CONTRACTOR shall take to mitigate environmental impacts include, but are not limited to the following:

1. Implement a Fugitive Dust and Erosion Control Plan (FDECP) that meets or exceeds SCAQMD requirements and the CITY'S FDECP for this site.

2. Comply with the General Construction Activity Storm Water Permit and the Storm Water Pollution Prevention Plan for this site.

3. Comply with the requirements of NOTIFICATION OF HAZARDOUS SUBSTANCES of the General Conditions.

4. Comply with all MM and BMPs contained in the Initial Study/Mitigated Negative Declaration (IS/MND). Note specific requirements for Strathern Park North are sections HAZ-3 and NOI-2 of the MMRP.

5. Protect sensitive habitats and species through the use of fencing, to prohibit construction personnel access to adjacent habitat areas, and with dust control measures of the FDECP.

6. Comply with the following emission control measures to minimize construction activity emissions, at no additional cost to the CITY:

   a. Stop construction activities during Stage II smog alerts which will be announced to the CONTRACTOR by the ENGINEER;

   b. Reduce construction equipment emissions by shutting off all equipment not in actual use;

   c. Reduce construction-related traffic congestion;

   d. Provide rideshare incentives for construction personnel;

   e. Tune and maintain construction equipment properly;

   f. Use low-sulfur/low nitrogen fuel for construction equipment, if available;

   g. Provide transit incentives for construction personnel;

   h. Configure construction parking to minimize traffic interference;

   i. Minimize obstruction of through-traffic lanes;

j. Provide a flagperson to facilitate traffic flow and prevent traffic congestion;

k. Schedule operations affecting roadways for off-peak traffic hours.

l. The Contractor shall notify the LABOE Project Inspector and Construction Manager twenty-one (21) calendar days in advance of any vegetation disturbance or ground-disturbing activities during the avian season, February 1st to September 1st.

7. Comply with the Mitigation Monitoring Program (see Section 5 of "Draft Final Mitigated Negative Declaration Stormwater Capture Parks Program.") Mitigation measures and best management practices include, but are not limited to, the following:

a. AQ-1:

(1) The program shall use off-road diesel-powered construction equipment that meets or exceeds the CARB and USEPA Tier 4 off road emissions standards for equipment rated at 50 horsepower or greater and not identified under (2) or (3) below. Such equipment will be outfitted with Best Available Control Technology (BACT) devices, including CARB-certified Level 3 Diesel Particulate Filter or equivalent. These requirements shall be included in applicable bid documents and successful contractor(s) must demonstrate the ability to supply each equipment.

(2) All dumpers/tenders, used on site shall either be certified Tier 3 with a CARB-certified Level 3 Diesel Particulate Filter or equivalent; certified Tier 4 with a CARB-certified Level 3 Diesel Particulate Filter or equivalent or equivalent, or alternatively fueled (e.g., gasoline, electric, CNG).

(3) At the minimum, the following equipment shall be electric: air compressors, cement and mortar mixers, concrete saws, forklifts, pumps. Diesel generators shall be placed with electricity from the grid either permanent or temporary, or replaced with alternative (non-diesel) fuels.

(4) Equipment requirements identified under (1), (2), and (3) above all be included in applicable bid documents and successful contractor(s) must demonstrate the ability to supply such equipment. A copy of each unit's certified tier specification or model year specification and CARB or SCAQMD operating permit (if applicable) shall be available upon request at time of mobilization of each applicable unit of equipment.

(5) During the site clearing and preparation, grading and excavation, and soil filling, revegetation, and park

improvement phases, watering must be conducted a minimum of 4 times per day during dry weather.

(6) The fleet shall be composed of a mix of 2014 or newer trucks. The contractor shall provide documentation as specified by LABOE Project Inspector and/or Construction Manager specifying the year/make/model of the trucks. The city shall ensure that on-road haul trucks including delivery and those conveying excavated material do not exceed the following daily truck limits:

The daily truck limit for this project shall not exceed 27 trucks per day.

(a) If the procurement of 2014 or newer trucks is unfeasible, the contractor shall provide a statement specifying why it is unfeasible. If the procurement of 2014 or newer trucks is unfeasible, the contractor may use older trucks, but the daily truck limits are the following:

The daily truck limit for this project shall not exceed 20 trucks per day.

b. BIO-1: Special-Status Wildlife Species. Construction activities at any of the nine project sites could result in impacts to the Cooper's Hawk (*Accipiter cooperii*), a California Species of Special Concern, where mature trees are present. Similarly, construction activities may also impact other nesting bird species that may nest in a variety of vegetation as well as man-made structures. Construction activities should occur outside of the avian nesting season. If the avian nesting season cannot be avoided and construction or vegetation removal occurs from February 1 to September 1, the City shall implement the following to avoid and minimize impacts to nesting birds and raptors:

(a) During the avian breeding season, a qualified biologist shall conduct a preconstruction avian nesting survey no more than 7 days prior to vegetation disturbance or ground-disturbing activities. If construction begins in the non-breeding season and proceeds continuously into the avian nesting season, no surveys are required. However, if there is a break of 7 days or more in construction activities during the nesting season, a new nesting bird survey shall be conducted before construction begins again.

(b) The preconstruction survey shall cover all reasonably potential nesting locations on and within 100 feet of the construction areas. A 300-foot radius shall be surveyed in areas containing suitable habitat for nesting raptors, such as trees and utility poles.

(c) If an active nest is found during the preconstruction avian nesting survey, a qualified biologist shall designate a suitable buffer for all passerine birds and raptor species. The nest site area shall not be disturbed until the nest becomes inactive, the young have fledged, the young are no longer being fed by the parents, the young have left the area, and the young will no longer be impacted by the Program. Buffer areas may be increased upon recommendation of a qualified biologist if any endangered, threatened, California Fully Protected, or California Species of Special Concern are identified during the preconstruction surveys.

(d) If the nest(s) are found in an area where ground disturbance is scheduled to occur, the City or its contractor shall avoid the area by delaying aground disturbance in the area until a qualified biologist has determined that the birds have fledged and are no longer reliant upon the nest or parental care for survival.

(e) Prior to removal of trees in any parks, the City shall retain a qualified bat specialist to conduct bat surveys to confirm whether bats are using the trees as roosting sites. The surveys should encompass a minimum buffer area of 100 feet around the parks. The results of the surveys will be provided to CDFW. In the event that bat roots are identified, an additional bat species survey will be conducted using acoustic survey techniques necessary to confirm the species of bat using the area. If the species survey concludes that sensitive bat species are present, the City shall consult with CDFW pursuant to the California Fish and Game Code section 2081. Removal of special status bats would not be conducted without prior approval from CDFW.

c. CUL-2: Prior to the start of ground-disturbing activities, the City shall retain a qualified archaeologist meeting the Secretary of the Interior's Professional Qualifications Standards for archaeology (U.S. Department of the Interior, 2008) to carry out the following cultural resources mitigation measures.

d. CUL-3: Prior to start of ground-disturbing activities, the qualified archaeologist shall prepare a cultural resources sensitivity training. All construction personnel shall receive sensitivity training prior to beginning work onsite. Construction personnel should be informed of the types of archaeological resources that may be encountered, and of the proper procedures to be enacted om the event of an inadvertent discovery of archaeological resources or human remains. The City should

ensure that construction personnel are made available for and attend the training and retain documentation demonstrating attendance.

e. CUL-4: Prior to the start of any project-related ground-disturbing activities, LADWP will provide a qualified archaeologist shall prepare a Cultural Resources Monitoring Plan (CRMP) in consultation with Tribes that requested consultation under AB52. Native American monitoring, which shall include all ground-disturbing activities The CRMP shall include monitoring protocols to be carried out during Program-related construction. The CRMP shall stipulate that Native American monitors associated with any of the Tribes that have been consulted with under AB52 be retained to monitor Program-related ground disturbance stipulated in the CRMP.

f. CUL-5: In the event of the unanticipated discovery of archaeological materials, paleontological materials, and/or human remains during the Program implementation, all work shall immediately cease in the area (within approximately 100 feet) of the discovery until it can be evaluated by the qualified archaeologist. Construction shall not resume until the qualified archaeologist has conferred with the City and the Native American monitors on the significance of the resource.

   If it is determined that the discovered archaeological resource constitutes a significant resource, avoidance and preservation in place is the preferred manner of mitigation. Preservation in place may be accomplished by, but is not limited to, avoidance, incorporating the resource into open space, capping, or deeding the site into a permanent conservation easement. In event that preservation in place is demonstrated to be infeasible and data recovery through excavation is the only feasible mitigation available, a Cultural Resources Treatment Plan shall be prepared and implemented by the qualified archaeologist in consultation with the City and Native American monitors that provides for adequate recovery of the scientifically consequential information contained in the archaeological resource. The City shall consult the appropriate Native American representatives in determining treatment and disposition for prehistoric or Native American resources for prehistoric or Native American resources to ensure cultural values ascribed to the resource beyond those that are scientifically important are considered.

g. GEO-1: In the event that the depth to groundwater rises to less than 50 feet bgs as measured in nearby wells, the stormwater infiltration process shall be stopped and the stormwater routed to the surface storm drain system until groundwater depths decrease to below 50 bgs.

h. GEO-3: Prior to start of any ground-disturbing activities, the Qualified Paleontologist shall contribute to any construction worker cultural resources sensitivity WEAP training (Worker Environmental Awareness Program), a program that educates project managers and workers about regulatory compliance and

responsibilities for conserving environmental resources, materials outlined in Mitigation Measure CUL-2, either in person or via a training module provided to the Qualified Archaeologist. This training shall include information on what types of paleontological resources could be encountered during excavations, what to do in case an unanticipated discovery is made by a worker, and laws protecting paleontological resources. All construction personnel shall be informed of the possibility of encountering fossils and instructed to immediately inform the construction foreman or supervisor if any fossils are unexpectedly unearthed in an area where a paleontological monitor is not present. The Contractor shall ensure that construction personnel are made available for and attend the training and retain documentation demonstrating attendance. Such documentation shall be made available to the City, whenever requested.

i. HAZ-3: The City and its contractor shall conduct further investigation of the nature and extent of landfill materials and contaminated soil at the Strathern Park North site, under the oversight of the City of Los Angeles Local Enforcement Agency (LEA). Undocumented waste shall be delineated and sampled for chemicals of concern related to waste materials. The project shall avoid construction within the delineated waste mass, as feasible. If avoidance of the waste mass is not feasible, the City shall submit a work plan to the LEA that documents the results of the waste delineation, details the specifics of the construction project and how it relates to the onsite waste, describes the procedures for dealing with the waste, and outlines the environmental monitoring procedures that would be implemented during construction. Upon approval of the work plan, the City and its contractor shall remove the landfill materials and any soil with chemical concentrations above regulatory action levels to the satisfaction of the LEA and properly dispose of it at a permitted facility. An as-built report shall be submitted to the LEA after completion of the project.

j. NOI-1: For construction activities adjacent to noise-sensitive receptors (e.g., residences and schools), the contractor shall ensure that all construction equipment, fixed or mobile, are equipped with properly operating and maintained noise shielding and muffing devices consistent with manufactures' standards. The contractor shall use muffler systems (e.g., absorptive mufflers) that provide a minimum reduction of 5 dBA compared to the same equipment without installed muffler system, reducing maximum construction noise levels. The contractor shall keep documentation on-site demonstrating that the equipment has been maintained in accordance with the manufacturers' specifications. The contactor shall also keep documentation on-site verifying compliance with this measure.

k. NOI-2: For construction activities adjacent to noise-sensitive receptors (e.g., residences and schools), where physically and technically feasible, the contractor shall provide an 8-foot-tall to 20-foot-tall temporary fence or other barrier placed between the

project construction area and the sensitive receptor with a performance standard of achieving a 15 dBA noise level reduction at the sensitive receptor. The temporary fence or barrier shall be used during peak noise-generating construction phases when the use of heavy equipment is prevalent. A noise barrier is not required if it would pose a safety risk or unreasonably prevent access to the construction area as deemed by the on-site construction manager, such as in areas that have limited equipment maneuvering space or access.

l. NOI-3: Limit engine idling of construction equipment (e.g., haul trucks, loaders) to a minimum of 200 feet from any boundary of the nearest sensitive receptors.

m. NOI-4: Prior to commencement of construction activities, the City shall notify in writing adjacent residents, schools and businesses near the various park project sites, of proposed construction activities and the tentative schedule.

The notices shall also provide a contact person and hotline where local residents, schools, or business owners can call during active construction with questions or comments. The City shall respond to inquiries regarding construction noise and vibration. Notices and construction signs will include a website address which will be updated quarterly and will include Program-related information.

n. NOI-5: The operation of construction equipment that generates high levels of vibration, such as large bulldozers and loaded trucks, shall be prohibited within 45 feet of the property lines of existing residential and school uses adjacent to the various park project sites. Instead, rubber-tired equipment not exceeding 247 horsepower shall be used in these areas during construction within 45 feet from the sensitive receptor locations.

o. TR-1: For parks where construction would occur outside of park facilities or that may impact roadways surrounding park areas, a CTMP shall be developed by the City or its contractor and approved by LADOT prior to the start of construction. The CTMP may include, but is not limited to the following:

(1) Work area traffic control plans for all in-street construction sites to the satisfaction of LADOT, appropriate prior to the start of any construction work. The plans shall include such elements as the location of any lane closures, restricted hours during which lane closures would not be allowed, local traffic detours, protective devices and traffic controls (such as pavement markings, barricades, cones, flagmen, lights, warning beacons, temporary traffic signals, turning movement restrictions, warning signs), access to abutting properties, and provisions to maintain emergency access through construction work areas.

(2) The dates and locations where in-street and off-street construction activities are planned.

(3) If any street segments will be limited to one-way traffic, prepare detour plans over parallel routes.

(4) Require signage indicated alternative routes when construction will occur.

(5) Identify and consolidate staging areas for equipment and materials, as feasible.

(6) Consolidate truck trips, such that multiple worksites can be served, as feasible.

(7) Promote carpooling among workers.

(8) Contact emergency service providers in the project vicinity to notify of the location, hours, and duration of in-street construction. Provide advance notice of any lane closures and changes to local access and identify alternative routes where appropriate.

B. Comply with the more stringent requirements of the current CITY or local noise ordinances, which may include:

1. Construction of noise barriers;

2. Use of low-noise-generating construction equipment;

3. Maintenance of mufflers and ancillary noise abatement equipment;

4. Use of vibration pile drivers and other techniques that result in less noise than impact pile drivers;

5. Scheduling high noise producing activities during periods that are least sensitive;

6. Routing construction related truck traffic away from noise-sensitive areas;

7. Reducing construction vehicle speeds.

C. The CONTRACTOR, a minimum of thirty (30) days prior to beginning work on each new major activity, shall submit a written plan to the ENGINEER, for approval, detailing how the environmental impacts for the activity shall be mitigated in accordance with the Mitigation Monitoring and Reporting Program. The plan shall include, at a minimum:

1. Anticipated site conditions;

2. Equipment to be utilized;

3. Means and methods of construction.

4. Impacts likely to occur;

5. Mitigation methods to be employed.

6. Best Management Practices to be employed.

END OF SECTION

(SEE ATTACHMENT)

ATTACHMENTS TO SECTION 01562

Attachments to General Requirements Section 001562 consists of one (1) document, as follows:

ATTACHMENT NUMBER	TITLE OF ATTACHMENT	NUMBER OF PAGES IN THIS ATTACHMENT
01562-A1	Internal Roles and Responsibilities for the Mitigation Monitoring and Reporting Program	6

LADWP Stormwater Capture Parks Program

INTERNAL ROLES AND RESPONSIBILITIES FOR THE MITIGATION MONITORING AND REPORTING PROGRAM

November 2024

Mitigation Measure	Name of the Site	Phase of Construction (Design, Construction, Operation)	Need Monitoring during Construction	Responsibility: DWP, DWP Contractor, BOE-Engineering, BOE-EMG, BOE-Contractor	Implementation Method (Monitoring, Specification and Plans) Report	Implementation Record (Report filed with DWP, BOE-EMG, and any responsible regulatory agencies, Specifications and Plans)	Enforcement Responsibility (BOE-PE, BOE-PM, CONTRACTOR, DWP-Mitigation Monitor, PW-CON-AD).
Air Quality							
AQ-1: Construction of the Program shall incorporate the following conditions:							
a. For all Program sites: The Program shall use off-road diesel-powered construction equipment that meets or exceeds the CARB and USEPA Tier 4 off-road emissions standards for equipment rated at 50 horsepower or greater and not identified under b or c. below. Such equipment will be outfitted with Best Available Control Technology (BACT) devices, including a CARB-certified Level 3 Diesel Particulate Filter or equivalent. These requirements shall be included in applicable bid documents and successful contractor(s) must demonstrate the ability to supply such equipment.	All Sites	Construction	Yes	BOE Contractor	Specifications Pre-construction verification submitted to BOE with annual recertification	BOE CARB AQMD USEPA	BOE Contractor
b. All dumpers/tenders used on-site shall either be certified Tier 3 with a CARB-certified Level 3 Diesel Particulate Filter or equivalent; certified Tier 4 with a CARB-certified Level 3 Diesel Particulate Filter or equivalent, or alternatively fueled (e.g., gasoline, electric, CNG).	All Sites	Construction	Yes	BOE Contractor	Specifications Pre-construction verification submitted to BOE with annual recertification	BOE CARB	BOE Contractor
c. At a minimum, the following equipment shall be electric: air compressors, cement and mortar mixers, concrete saws, forklifts, pumps. Diesel generators shall be replaced with electricity from the grid either permanent or temporary, or replaced with alternative (non-diesel) fuels.	All Sites	Construction	Yes	BOE Contractor	Specifications Pre-construction verification submitted to BOE with annual recertification	BOE CARB AQMD	BOE Contractor
d. Equipment requirements identified under a, b, and c above shall be included in applicable bid documents and successful contractor(s) must demonstrate the ability to supply such equipment. A copy of each unit's certified tier specification or model year specification and CARB or SCAQMD operating permit (if applicable) shall be available upon request at the time of mobilization of each applicable unit of equipment.	All Sites	Construction	Yes	BOE Contractor	Specifications	BOE	Contractor
e. During the site clearing and preparation, grading and excavation, and soil filling, revegetation, and park improvement phases, watering must be conducted a minimum of 4 times per day during dry weather.	All Sites	Construction	Yes	BOE Contractor	Specifications Monitoring Reporting	AQMD, SWRCB, RWQCB	Contractor
f. For Valley Plaza Park North only 2 dozers are allowed to operate on any portion of the site at one time.	Valley Plaza Park North	Construction	Yes	BOE Contractor	Specifications	BOE	Contractor
g. The City shall ensure:							
i. On-road haul trucks including delivery and those conveying excavated material do not exceed the following daily truck limits:	All Sites	Construction	Yes	BOE Contractor	Specifications	BOE	Contractor
1. 185 trucks when 2 parks are concurrently under construction;							
2. 180 trucks when 3 parks are currently under construction;							
3. 170 trucks when 4 parks are concurrently under construction;							
4. 160 trucks when 5 parks are concurrently under construction;							
5. 150 trucks when 6 parks are concurrently under construction;							
6. 140 trucks when 7 parks are concurrently under construction. Or;							
ii. If the fleet is composed of a mix of 2014 or newer trucks, the City shall ensure that on-road haul trucks including delivery and those conveying excavated material do not exceed the following daily truck limits:	All Sites	Construction	Yes	BOE Contractor	Specifications	BOE	Contractor
1. 240 trucks when 2 parks are concurrently under construction;							
2. 230 trucks when 3 parks are concurrently under construction;							
3. 220 trucks when 4 parks are concurrently under construction;							
4. 210 trucks when 5 parks are concurrently under construction;							
5. 200 trucks when 6 parks are concurrently under construction;							
6. 190 trucks when 7 parks are concurrently under construction.							

Biological Resources							
BIO-1: Special-Status Wildlife Species. Construction activities at any of the nine park project sites could result in impacts to the Cooper's hawk (*Accipiter cooperii*), a California Species of Special Concern, where mature trees are present. Similarly, construction activities may also impact other nesting bird species that may nest in a variety of vegetation as well as man-made structures. Construction activities should occur outside of the avian nesting season. If the avian nesting season cannot be avoided and construction or vegetation removal occurs from February 1 to September 1, the City shall implement the following to avoid and minimize impacts to nesting birds and raptors: During the avian breeding season, a qualified biologist shall conduct a preconstruction avian nesting survey no more than 7 days prior to vegetation disturbance or ground-disturbing activities. If construction begins in the non-breeding season and proceeds continuously into the avian nesting season, no surveys are required. However, if there is a break of 7 days or more in construction activities during the nesting season, a new nesting bird survey shall be conducted before construction begins again. The preconstruction survey shall cover all reasonably potential nesting locations on and within 100 feet of the construction areas. A 300-foot radius shall be surveyed in areas containing suitable habitat for nesting raptors, such as trees and utility poles. If an active nest is found during the preconstruction avian nesting survey, a qualified biologist shall designate a suitable buffer for all passerine birds and raptor species. The nest site area shall not be disturbed until the nest becomes inactive, the young have fledged, the young are no longer being fed by the parents, the young have left the area, and the young will no longer be impacted by the Program. Buffer areas may be increased upon recommendation of a qualified biologist if any endangered, threatened, California Fully Protected, or California Species of Special Concern are identified during preconstruction surveys. If the nest(s) are found in an area where ground disturbance is scheduled to occur, the City or its contractor shall avoid the area by delaying ground disturbance in the area until a qualified biologist has determined that the birds have fledged and are no longer reliant upon the nest or parental care for survival. Prior to removal of trees in any of the parks, the City shall retain a qualified bat specialist to conduct bat surveys to confirm whether bats are using the trees as roosting sites. The surveys should encompass a minimum buffer area of 100 feet around the parks. The results of the surveys will be provided to CDFW. In the event that bat roosts are identified, an additional bat species survey will be conducted using acoustic survey techniques necessary to confirm the species of bat using the area. If the species survey concludes that sensitive bat species are present, the City shall consult with CDFW pursuant to the California Fish and Game Code section 2081. Removal of special status bats would not be conducted without prior approval from CDFW.	All Sites	Pre-construction and Construction	Yes	DWP/DWP Contractor	Specifications Surveys and Monitoring Report	Report to be filed with DWP Environmental Planning and Assessment Group and shared with BOE	DWP – Environmental Planning and Assessment Group
Cultural Resources							
CUL-1: In the event Program designs are further refined and individual park project components change to encroach more closely than 50 feet to the North Hollywood Branch Library (P-19-167303), the pool house and maintenance building associated with North Hollywood Park, the clubhouse associated with the David M. Gonzales Recreation Center, and/or the 170 Freeway Pedestrian Overpass, the City shall retain a qualified architectural historian meeting the Secretary of the Interior's Standards for Architectural History to review design plans for conformance with the Secretary of the Interior's Standards for the Treatment of Historic Properties (Standards). Should potential Program redesign not conform to the Standards, the City shall work with the qualified architectural historian to mitigate impacts to these resources. Should Program redesign place Program components within 50 feet of these resources, the qualified architectural historian shall also assess potential construction-related impacts resulting from ground-borne vibration. Should ground-borne vibrations have the potential to impact the historical resources, the City and the qualified architectural historian shall develop a plan to monitor ground-borne vibration during construction to ensure it does not exceed thresholds that could damage, or otherwise alter the historical resources.	North Hollywood Park David M. Gonzales, Valley Plaza Park North	Design/Pre-Construction	TBD	DWP/DWP Contractor	Design review by qualified architectural historian and monitoring, if required.	Report to be filed with DWP Environmental Planning and Assessment Group and shared with BOE	DWP – Environmental Planning and Assessment Group
CUL-2: Prior to the start of ground-disturbing activities, the City shall retain a qualified archaeologist meeting the Secretary of the Interior's Professional Qualifications Standards for archaeology (U.S. Department of the Interior, 2008) to carry out the following cultural resources mitigation measures.	All sites	Design/Pre-Construction	NA	DWP/DWP Contractor	Retention of qualified archaeologist	BOE	DWP – Environmental Planning and Assessment Group
CUL-3: Prior to start of ground-disturbing activities, the qualified archaeologist shall prepare a cultural resources sensitivity training module to be used as part of the City's Worker Environmental Awareness Program (WEAP) training. All construction personnel shall receive sensitivity training prior to beginning work onsite. Construction personnel should be informed of the types of archaeological resources that may be encountered, and of the proper procedures to be enacted in the event of an inadvertent discovery of archaeological resources or human remains. The City should ensure that construction personnel are made available for and attend the training and retain documentation demonstrating attendance.	All sites	Pre-construction	NA	DWP/DWP Contractor	Pre-construction WEAP training	Training materials/handouts Training records sent to BOE	DWP – Environmental Planning and Assessment Group

CUL-4: Prior to the start of any project-related ground-disturbing activities, the qualified archaeologist shall prepare a Cultural Resources Monitoring Plan (CRMP) in consultation with Tribes that requested consultation under AB52. The CRMP shall stipulate the location and timing of archaeological and Native American monitoring, which shall include all ground-disturbing activities in each of the nine parks that exceed the depths of undocumented fill as documented by geotechnical testing. The qualified archaeologist shall review engineering plans for each of the nine parks to determine where ground-disturbing activities will exceed the depths of undocumented fill at each park to determine the timing and locations of monitoring to be included in the CRMP. The CRMP shall include monitoring protocols to be carried out during Program-related construction. The CRMP shall stipulate that Native American monitors associated with any of the Tribes that have been consulted with under AB52 be retained to monitor Program-related ground disturbance stipulated in the CRMP.	All sites	Design/Pre-construction/ Construction	Yes	DWP/DWP Contractor	Cultural Resources Monitoring Plan/Monitoring	Report to be filed with DWP Environmental Planning and Assessment Group and shared with BOE	DWP – Environmental Planning and Assessment Group
CUL-5: In the event of the unanticipated discovery of archaeological materials during Program implementation, all work shall immediately cease in the area (within approximately 100 feet) of the discovery until it can be evaluated by the qualified archaeologist. Construction shall not resume until the qualified archaeologist has conferred with the City and the Native American monitors on the significance of the resource. If it is determined that the discovered archaeological resource constitutes a significant resource, avoidance and preservation in place is the preferred manner of mitigation. Preservation in place may be accomplished by, but is not limited to, avoidance, incorporating the resource into open space, capping, or deeding the site into a permanent conservation easement. In the event that preservation in place is demonstrated to be infeasible and data recovery through excavation is the only feasible mitigation available, a Cultural Resources Treatment Plan shall be prepared and implemented by the qualified archaeologist in consultation with the City and Native American monitors that provides for the adequate recovery of the scientifically consequential information contained in the archaeological resource. The City shall consult the appropriate Native American representatives in determining treatment and disposition for prehistoric or Native American resources to ensure cultural values ascribed to the resource beyond those that are scientifically important are considered.	All Sites	Construction	Yes	DWP/DWP Contractor	Monitoring/Treatment Plan	Report to be filed with DWP Environmental Planning and Assessment Group and shared with BOE	DWP – Environmental Planning and Assessment Group
CUL-6: If human remains are encountered, all work shall halt in the vicinity (within 100 feet) of the find and the Los Angeles County Coroner shall be contacted in accordance with PRC Section 5097.98 and Health and Safety Code Section 7050.5. If the County Coroner determines that the remains are Native American, the NAHC will be notified in accordance with Health and Safety Code Section 7050.5, subdivision ©, and PRC Section 5097.98 (as amended by Assembly Bill 2641). The NAHC will designate a Most Likely Descendent (MLD) for the remains per PRC Section 5097.98. Until the landowner has conferred with the MLD, the City shall ensure that the immediate vicinity where the discovery occurred is not disturbed by further activity, is adequately protected according to generally accepted cultural or archaeological standards or practices, and that further activities take into account the possibility of multiple burials.	All Sites	Construction	Yes	DWP/DWP Contractor	Monitoring/ Notification	Report to be filed with DWP Environmental Planning and Assessment Group and shared with BOE	DWP – Environmental Planning and Assessment Group
Geology and Soils							
GEO-1: The City shall implement the recommendations provided in the geotechnical investigations for each of the park project sites. In the event that the depth to groundwater rises to less than 50 feet bgs as measured in nearby wells, the stormwater infiltration process shall be stopped and the stormwater routed to the surface storm drain system until groundwater depths decrease to below 50 bgs.	All Sites	Design, Construction, Operations	Yes	BOE Contractor (construction phase) DWP	DWP monitoring	DWP and shared with BOE and contractor	DWP shared with Contractor during construction and RAP during operations
GEO-2: Prior to the start of construction activities, the City shall retain a Qualified Paleontologist that meets the standards of the Society of Vertebrate Paleontology (2010) to carry out all mitigation measures related to paleontological resources.	All Sites	Design/Pre-Construction	Yes	DWP/DWP Contractor	Retention of qualified Paleontologist	DWP Contracted Archeologist BOE	DWP – Environmental Planning and Assessment Group Contractor
GEO-3: Prior to start of any ground-disturbing activities, the Qualified Paleontologist shall contribute to any construction worker cultural resources sensitivity WEAP training materials outlined in Mitigation Measure CUL-2, either in person or via a training module provided to the Qualified Archaeologist. This training shall include information on what types of paleontological resources could be encountered during excavations, what to do in case an unanticipated discovery is made by a worker, and laws protecting paleontological resources. All construction personnel shall be informed of the possibility of encountering fossils and instructed to immediately inform the construction foreman or supervisor if any fossils are unexpectedly unearthed in an area where a paleontological monitor is not present. The City shall ensure that construction personnel are made available for and attend the training and retain documentation demonstrating attendance.	All Sites	Pre-construction	Yes	DWP/DWP Contractor	Pre-construction WEAP Training	Training materials/handouts Records provided to BOE	DWP – Environmental Planning and Assessment Group

GEO-4: The Qualified Paleontologist shall supervise a paleontological monitor meeting the Society for Vertebrate Paleontology standards (2010) who shall be present during all excavations exceeding 15 feet. Monitoring shall consist of visually inspecting fresh exposures of rock for larger fossil remains and, where appropriate, collecting wet or dry screened sediment samples of promising horizons for smaller fossil remains. Monitoring can be reduced to part-time inspections or ceased entirely if determined adequate by the Qualified Paleontologist in consultation with the City. Monitoring activities shall be documented in a Paleontological Resources Monitoring Report to be prepared by the Qualified Paleontologist at the completion of construction and shall be provided to the City and filed with the Natural History Museum of Los Angeles County within 6 months of Program completion.	All Sites	Construction	Yes	DWP/DWP Contractor	Monitoring	Report to be filed with DWP Environmental Planning and Assessment Group and shared with BOE	DWP – Environmental Planning and Assessment Group
GEO-5: If a unique geologic feature or paleontological resource is discovered during construction, the paleontological monitor shall be empowered to temporarily divert or redirect grading and excavation activities in the area of the exposed fossil to facilitate evaluation of the discovery. An appropriate buffer area shall be established by the Qualified Paleontologist around the find where construction activities shall not be allowed to continue. Work shall be allowed to continue outside of the buffer area. At the Qualified Paleontologist's discretion and to reduce any construction delay, the grading and excavation contractor shall assist in removing rock samples for initial processing and evaluation of the find. All significant fossils shall be collected by the paleontological monitor and/or the Qualified Paleontologist. Collected fossils shall be prepared to the point of identification and catalogued before they are submitted to their final repository. Any fossils collected shall be curated at a public, non-profit institution with a research interest in the materials, such as the Los Angeles County Natural History Museum, if such an institution agrees to accept the fossils. If no institution accepts the fossil collection, they shall be donated to a local school in the area for educational purposes. Accompanying notes, maps, and photographs shall also be filed at the repository and/or school.	All Sites	Construction	Yes	DWP/DWP Contractor	Monitoring/Treatment Plan	Report to be filed with DWP Environmental Planning and Assessment Group and shared with BOE	DWP – Environmental Planning and Assessment Group
Hazards and Hazardous Materials							
HAZ-1: The City or its construction contractor shall ensure that fueling of vehicles or storage of fuel or other chemicals would occur at the furthest extent possible from an existing school site.	David M. Gonzales	Construction	No	BOE Contractor	Specifications	BOE	Contractor
HAZ-2: For all schools located adjacent to a proposed work area, the City shall coordinate school safety routes, which should include, but not be limited to:	David M. Gonzales	Construction	Yes	BOE Contractor	Specifications	BOE	BOE Contractor
Maintaining in place all crosswalks along the safe routes to and from the school (for Pacoima Charter School these would include Norris Avenue, Van Nuys Boulevard, Pierce Street, and Herrick Avenue).							
Designating a safe location for school buses and parents to drop off and pick up students.							
Designating a safe parking area for parents to wait for/pick up school children.							
Maintaining sidewalks open to pedestrian traffic during construction.							
Additional safety measures must be adopted during construction to protect the students and the public, including k-railing, secured fencing with screen, clear signing, temporary striping, and a flagger for trucks entering and existing the construction zone. Flaggers should also be considered at crosswalks while students are present.							
Close coordination with the impacted school and the Los Angeles Unified School District for input on the school safety route design and frequent communication during construction.							
Extensive outreach program for the school and the community describing safety measures and construction schedules.							
Restrict construction times to avoid before and after school timeframes while children may be walking to and from school, and while school is in session, as feasible.							
HAZ-3: The City and its contractor shall conduct further investigation of the nature and extent of landfill materials and contaminated soil at the Strathern Park North site, under the oversight of the City of Los Angeles Local Enforcement Agency (LEA). Undocumented waste shall be delineated and sampled for chemicals of concern related to waste materials. The project shall avoid construction within the delineated waste mass, as feasible. If avoidance of the waste mass is not feasible, the City shall submit a work plan to the LEA that documents the results of the waste delineation, details the specifics of the construction project and how it relates to the onsite waste, describes the procedures for dealing with the waste, and outlines the environmental monitoring procedures that would be implemented during construction. Upon approval of the work plan, the City and its contractor shall remove the landfill materials and any soil with chemical concentrations above regulatory action levels to the satisfaction of the LEA and properly dispose of it at a permitted facility. An as-built report shall be submitted to the LEA after completion of the project.	Strathern Park North	Design and Construction Post construction closure report	Yes	BOE Contractor BOE Engineering	Specifications	LADBS LEA BOE	LADBS BOE Contractor

Noise							
NOI-1: For construction activities adjacent to noise-sensitive receptors (e.g., residences and schools), the contractor shall ensure that all construction equipment, fixed or mobile, are equipped with properly operating and maintained noise shielding and muffling devices, consistent with manufacturers' standards. The contractor shall use muffler systems (e.g., absorptive mufflers) that provide a minimum reduction of 5 dBA compared to the same equipment without an installed muffler system, reducing maximum construction noise levels. The contractor shall keep documentation on-site demonstrating that the equipment has been maintained in accordance with the manufacturers' specifications. The contractor shall also keep documentation on-site verifying compliance with this measure.	All sites	Construction	Yes	BOE Contractor	Specifications	BOE Contractor	Contractor
NOI-2: For construction activities adjacent to noise-sensitive receptors (e.g., residences and schools), where physically and technically feasible, the contractor shall provide an 8-foot-tall to 20-foot-tall temporary fence or other barrier placed between the project construction area and the sensitive receptor with a performance standard of achieving a 15 dBA noise level reduction at the sensitive receptors. The temporary fence or barrier shall be used during peak noise-generating construction phases when the use of heavy equipment is prevalent. A noise barrier is not required if it would pose a safety risk or unreasonably prevent access to the construction area as deemed by the on-site construction manager, such as in areas that have limited equipment maneuvering space or access.	Applies portions of Fernangeles, Strathern, Valley Plaza South, and Valley Village which may be within 25' of residences.	Construction	Yes	BOE Contractor	Specifications	BOE Contractor	Contractor
NOI-3: Limit engine idling of construction equipment (e.g., haul trucks, loaders) to a minimum of 200 feet from any boundary of the nearest sensitive receptors.	All sites	Construction	Yes	BOE Contractor	Specifications	BOE	Contractor
NOI-4: Prior to commencement of construction activities, the City shall notify in writing adjacent residents, schools and businesses near the various park project sites, of proposed construction activities and the tentative schedule. The notices shall also provide a contact person and hotline where local residents, schools, or business owners can call during active construction with questions or comments. The City shall respond to inquiries regarding construction noise and vibration. Notices and construction signs will include a website address which will be updated quarterly and will include Program-related information.	All sites	Construction	Yes	BOE Contractor	Specifications	BOE	Contractor
NOI-5: The operation of construction equipment that generates high levels of vibration, such as large bulldozers and loaded trucks, shall be prohibited within 45 feet of the property lines of existing residential and school uses adjacent to the various park project sites. Instead, rubber-tired equipment not exceeding 247 horsepower shall be used in these areas during construction within 45 feet from the sensitive receptor locations.	All sites, especially David M. Gonzalez and North Hollywood	Construction	Yes	BOE Contractor	Specifications	BOE	Contractor
Transportation							
TR-1: For parks where construction would occur outside of park facilities or that may impact roadways surrounding park areas, a CTMP shall be developed by the City or its contractor and approved by LADOT prior to the start of construction. The CTMP may include, but is not limited to the following:	All Sites	Design and Construction	Yes	BOE Contractor	Approved Traffic Control Plans or WATCH Manual	LADOT Contractor BOE-EMG	Contractor
Work area traffic control plans for all in-street construction sites to the satisfaction of LADOT, as appropriate prior to the start of any construction work. The plans shall include such elements as the location of any lane closures, restricted hours during which lane closures would not be allowed, local traffic detours, protective devices and traffic controls (such as pavement markings, barricades, cones, flagmen, lights, warning beacons, temporary traffic signals, turning movement restrictions, warning signs), access to abutting properties, and provisions to maintain emergency access through construction work areas.							
The dates and locations where in-street and off-street construction activities are planned.							
If any street segments will be limited to one-way traffic, prepare detour plans over parallel routes.							
Require signage indicated alternative routes where construction will occur.							
Identify and consolidate staging areas for equipment and materials, as feasible.							
Consolidate truck trips, such that multiple worksites can be served, as feasible.							
Promote carpooling among workers.							
Contact emergency service providers in the project vicinity to notify of the location, hours, and duration of in-street construction. Provide advance notice of any lane closures and changes to local access and identity alternative routes where appropriate.							

SECTION 01563
POLLUTION CONTROL - SEWAGE SPILL PREVENTION AND RESPONSE REQUIREMENTS

1.1 THE REQUIREMENT

A. General

1. The CONTRACTOR shall observe and comply with the CITY's policy of "ZERO SANITARY SEWER OVERFLOWS".

2. The CONTRACTOR shall be in full charge and be responsible for the Jobsite, the construction Work of this Contract, and subject to the directions of the ENGINEER or the INSPECTOR.

3. The CONTRACTOR shall observe and comply with all Federal, State, and local laws, ordinances, codes, orders, and regulations which in any manner affect the conduct of the work, specifically as it relates to sewage spills.

4. The CONTRACTOR shall be fully responsible for preventing sewage spillage, containing any sewage spillage, recovery and legal disposal of any spilled sewage, any and all fines, penalties, claims and liability arising from negligently causing a sewage spillage and any violation of any law, ordinance, code, order, or regulation as a result of the spillage.

5. The CONTRACTOR shall exercise care not to damage existing public and private improvements, interrupt existing services and/or facility operations which may cause a sewage spill. Any reasonably anticipated utility and/or improvement which is damaged by the CONTRACTOR shall be immediately repaired at the CONTRACTOR's expense. In the event that the CONTRACTOR damages an existing utility, interrupts an existing service which causes a sewage spill, the CONTRACTOR shall immediately notify the CITY representatives. The CONTRACTOR shall request and obtain from the ENGINEER an emergency roster of the designated CITY representatives with their respective telephone numbers, pager numbers, and cellular phone numbers. The CONTRACTOR shall take all measures necessary to prevent further damage or service interruption, and to control, contain and clean up the resultant impacts of the damage, service interruption and any resulting sewage spill(s) as mentioned in Section 1.1.A. 6, below.

6. Prior to the start of construction, the CONTRACTOR shall develop and submit to the ENGINEER, for review and approval, a written Spill Response Plan. The Spill Response Plan shall be developed to respond to any construction related sewage spill. This shall include, but is not limited to:

   a. The CONTRACTOR shall identify all nearby waterways, channels, catch basins and entrances to underground existing storm drains and furnishing all of the necessary materials, supplies, tools equipment, labor and other services.

b. The CONTRACTOR shall make arrangements for an emergency response unit comprised of emergency response equipment and trained personnel to be immediately dispatched to the Jobsite in the event of a sewage spill(s).

c. The CONTRACTOR shall develop and include an emergency notification procedure, which includes an emergency response roster with telephone numbers and arrangements for backup personnel and equipment and an emergency notification roster of the design CITY representatives. The CONTRACTOR shall designate a primary and secondary representative and include their respective phone numbers, pager numbers, and cellular phone numbers. The CONTRACTOR's representatives shall be accessible and available at all times to respond immediately to any construction related emergency.

7. If called for in the Plans and/or Specifications, or if sewer bypass is needed to construct the Project, the CONTRACTOR shall continuously monitor the flow levels downstream and upstream of the construction location to detect and possible failure that may cause a sewage backup and spill. The CONTRACTOR shall include the means and methods of monitoring the flow in their Spill Response Plan.

a. In case of sewage spill, the CONTRACTOR shall act immediately without instructions from the CITY, to control the spill and take all appropriate steps to contain it in accordance with their Spill Response Plan. The CONTRACTOR shall immediately notify the CITY representatives of the spill and all actions taken. The CONTRACTOR shall, within three (3) working days from the occurrence of the spill, submit to the ENGINEER a written confirmation describing the following information related to the spill: the location on a current Thomas Bros. guide map; the nature and volume; the date and time; the duration; the cause; the type of remedial and/or preventive action taken; and the water body impacted and results of any necessary monitoring. Requests for additional compensation for the handling of the spill shall be submitted to the ENGINEER as a construction claim. The CONTRACTOR shall assure the validity, accuracy, and correctness of the claim under penalty of perjury. The ENGINEER may institute further corrective actions, as deemed necessary, to fully comply with existing law, ordinance, code, order or regulation. The CONTRACTOR shall be responsible for all costs incurred for the corrective actions.

b. It shall be the CONTRACTOR's responsibility to assure that all field forces, including Subcontractors, know and obey all safety and emergency procedures, including the Spill Response Plan, to be maintained and followed at the Jobsite.

B. Sewer Bypass

1. The CONTRACTOR shall provide temporary means to maintain and handle the sewage flow in the existing system as required to complete the necessary construction.

2. The CONTRACTOR shall prepare and submit a detailed bypass plan to the ENGINEER for approval of the ENGINEER and the facility OWNER before the bypass is installed.

3. The CONTRACTOR shall size the bypass system to handle the peak flow of the system. The CONTRACTOR shall include a one-hundred percent (100%) backup in the bypass system. The CONTRACTOR shall utilize the backup system to mitigate any additional wet weather flows, perform the necessary maintenance and repairs on the bypass system, and exercise and ensure the operability of the backup system. Each pump, including the backup pumps, shall be a complete unit with its own suction and discharging pumping. The CONTRACTOR shall operate the backup bypass system for a minimum of twenty-five percent (25%) of the time on a weekly basis. The backup bypass system shall be fully installed and operational.

4. Prior to the full operation of the bypass system, the CONTRACTOR shall demonstrate, to the satisfaction of the ENGINEER and INSPECTOR, that both the primary and backup bypass systems are fully functional and adequate, and shall certify the same, in writing, to the ENGINEER in a manner acceptable to the ENGINEER.

5. The CONTRACTOR shall provide one dedicated fuel tank for every single pump/generator, if fuel/generator driven pumps are used. The CONTRACTOR shall provide a fuel level indictor outside each fuel tank. The CONTRACTOR shall continuously (while in use) monitor the fuel level in the tanks and ensure that the fuel level does not drop below a level equivalent to two (2) hours of continuous bypass system operation. The CONTRACTOR shall take the necessary measures to ensure the fuel supply is protected against contamination. This includes, but is not limited to, fuel line water traps, fuel line filters, and protecting fuel stores from precipitation.

6. The CONTRACTOR shall provide an emergency standby power generator, if electric power driven pumps are used.

7. The CONTRACTOR shall continuously (while in use) monitor the operation of the bypass system and all impacted facilities. The CONTRACTOR shall submit, as part of their bypass plan, their monitoring procedure and frequency. The CONTRACTOR shall maintain a log of the monitoring in a manner acceptable to the ENGINEER and INSPECTOR.

8. The CONTRACTOR shall continuously monitor the flow levels downstream and upstream of the bypass to detect any possible failure that may cause a sewage backup and/or spill. The CONTRACTOR shall include the means and methods of monitoring the flow in their Spill Response Plan.

9. The CONTRACTOR shall routinely inspect and maintain the bypass system, including the backup system. The CONTRACTOR shall submit as part of their bypass plans their maintenance procedures and frequency. The CONTRACTOR shall maintain a log of all pertinent

inspection, maintenance and repair records in a manner acceptable to the ENGINEER and INSPECTOR.

10. All costs associated with sewer bypass requirements listed above (Section B-1 through 9) shall be included in the Bid Item “Sewer bypass system”.

C. Additional Insurance Requirements

1. The CONTRACTOR shall obtain and maintain an additional insurance coverage for Pollution Liability with limits and requirements set forth in Part III of the Proposal for Federal Funded projects, or Part IV of the Proposal for City funded projects. The limits and requirements for Pollution Liability shall be in an amount sufficient to cover potential losses from sudden and accidental pollution. All costs associated with the requirements for “Sewage Spill Prevention and Response Requirements”, including additional insurance, shall be included in the prices bid for other related bid items. However, CONTRACTORS will be required to submit, with their bid, a cost breakdown for the items required by the “Sewage Spill Prevention and Response Requirements”.

END OF SECTION

SECTION 01571
STORMWATER POLLUTION CONTROL
MEASURES FOR CONSTRUCTION ACTIVITIES

1.1 THE REQUIREMENT

A. General

1. The Contractor shall exercise every reasonable precaution to protect channels, storm drains, and bodies of water from pollution.

2. Conduct and schedule operations to minimize or avoid muddying and silting channels, drains, and waters.

3. As required, obtain permits for erosion and water pollution control from the appropriate jurisdictional agency before starting Work. All costs for work required for compliance with this Section shall be included within the Bid Prices.

.

4. Provide any necessary water pollution control devices to prevent, control, and abate water pollution, and implement good housekeeping pollution control measures to reduce the discharge of pollutants from work sites to the maximum extent practicable. These water pollution control devices include drains, gutters, slope protection blankets and retention basins and shall be constructed concurrently with other Work at the earliest practicable time.

5. Exercise care in preserving vegetation and protecting property, to avoid disturbing areas beyond the limits of the Work. Promptly repair any damage caused by Contractor operations.

6. Comply with the specific requirements based on acreage of disturbed soil.

7. Penalties: Failure to comply with this Section may result in significant fines and possible imprisonment. The RWQCB or other prosecuting authority may assess fines of up to $32,500 per day for each violation. Should the City be fined or penalized as a result of the Contractor failing to comply with this Section, the Contractor shall reimburse the City for any and all fines, penalties and related costs.

8. Notification and Report: If pollution occurs in the work area for any reason or when the Contractor becomes aware of any violation of this Section, correct the problem and immediately notify the Inspector and also notify the LADWP Wastewater Quality and Compliance Group. In addition, submit a written report to the Engineer within seven (7) calendar days describing the incident and the corrective actions taken. If either the Inspector or Engineer is first to observe pollution or a violation, the Contractor shall also explain in the written report why the Work was inadequately monitored.

9. The provisions of this Section describe minimum compliance and do not preclude other more stringent stormwater pollution control measures that may be required in the Contract.

B. Definition

1. Construction Activity: Includes clearing, grading, excavation, stockpiling, and reconstruction of existing facilities involving removal and replacement. Construction activity does not include routine maintenance such as, maintenance of original line and grade, hydraulic capacity, or original purpose of the facility. If construction activity is part of a larger common plan of development, the amount of disturbed soil is the total land area of disturbed soil that results under the common plan.

C. Projects Having Less Than One Acre of Disturbed Soil

Projects with construction activity that will result in less than one acre of disturbed soil, the Contractor shall comply with the following minimum water quality protection requirements:

1. Retain eroded sediments and other pollutants on-site and do not allow transportation from the site by sheet flow, swales, area drains, natural drainage, or wind. Control slope and channel erosion by implementing an effective combination of best management practices (BMPs). Such BMPs include scheduling grading during non-rainy seasons, planting and maintaining vegetation on slopes and covering erosion-susceptible slopes.

2. Protect stockpiles of earth and other construction-related materials from being transported from the site by wind or water.

3. Properly store and handle fuels, oils, solvents, and other toxic materials to not contaminate the soil or surface waters, enter the groundwater, or be placed where they may enter a live stream, channel, drain, or other water conveyance facility. Protect all approved toxic storage containers from weather. Clean spills immediately and properly dispose of cleanup materials. Spills shall not be washed into live streams, channels, drains, or other water conveyance facilities.

4. Do not wash excess or waste concrete into the public way or any drainage system. Retain concrete wastes on-site until they can be appropriately disposed of or recycled.

5. Deposit trash and construction-related solid wastes in covered receptacles to prevent contamination of rainwater and dispersal by wind.

6. Do not allow sediments and other materials to be tracked from the site by vehicle traffic. Stabilize construction entrance roadways to inhibit sediments from being deposited onto public ways. Immediately sweep up accidental depositions. Do not allow depositions to be washed away by rain or by any other means.

7. Contain non-stormwater runoff from equipment or vehicle washing and any other activity at the work site.

8. At completion of the Work, clear the worksite of debris and restore to a condition at least equal to or better than prior to construction.

9. When construction activity with grading is likely to occur during the rainy season from October 1 through April 15, prepare a Wet Weather Erosion Control Plan (WWECP) per LAMC Section 61.02. The WWECP must be submitted to the Engineer for approval within thirty (30) calendar days after Notice to Proceed.

Guidance on preparing the WWECP can be found in "Development Best Management Practices Handbook - Part A, Construction Activities", adopted by the Board and as authorized by LAMC Section 64.72. The handbook can be viewed at or obtained at cost at Bureau of Engineering public counters.

10. When working in live streams, these are additional water pollution control requirements.

11. Erect barriers sufficient to prevent muddying or polluting streams.

12. Prior to removing materials from a flowing stream, use a stream bypass or other equivalent means to keep the flow in the stream free of the mud or silt from the removal operations.

13. Avoid transporting materials across live streams. If not possible, the transportation operation must be designed to prevent materials from falling into the stream and cannot muddy the stream.

14. Equipment may not be operated in a live stream or channel unless the Contractor can demonstrate to the Engineer's satisfaction that no other practical alternatives exist. The equipment must be designed to prevent materials from falling into the stream and cannot muddy the stream.

15. Do not allow fresh portland cement or fresh portland cement concrete to enter the water flowing in streams, channels or drains.

16. Do not allow material derived from the Work to be deposited in a live stream, channel or drain.

D. Projects Having One Acre or More of Disturbed Soil

Projects, including Linear Underground Projects (LUPS), with construction activity that will result in one acre or more of disturbed soil, or less than one acre but part of a larger common plan of development, the Contractor shall comply with the requirements included in Section 1.1.C above, and the following requirements:

1. The Contractor shall comply with General Permit 2009-0009-DWQ for Discharges of Storm Water Associated with Construction Activities (General Permit). A copy of the General Permit may be downloaded from the California State Water Resources Control Board (SWRCB) website using the following link: https://www.waterboards.ca.gov/water_issues/programs/stormwater/construction.html

2. The Contractor shall provide a Qualified Storm Water Pollution Prevention Plan (SWPPP) Developer (QSD) to prepare all Permit Registration Documents (PRDs), as defined in the General Permit. All PRDs must be uploaded to the SWRCB's General Permit web application called the Storm Water Multiple Application Report Tracking System (SMARTS) prior to commencement of construction activities. The SMARTS website link is: http://smarts.waterboards.ca.gov/smarts/faces/SwSmartsLogin.jsp. The PRDs include the Notice of Intent, Risk Assessment, Post-Construction Calculations, Site Map, SWPPP, and the first annual fee. The annual fee for this project is estimated to be $**509.00.** The Contractor must submit the prepared SWPPP to the City for review and approval prior to uploading it to the SMARTS system. Upon City approval, the SWPPP shall be uploaded by the Contractor and certified by the City's Legally Responsible

Person (LRP). At that time, the actual fee invoice will be provided by the City to the Contractor and the Contractor will submit payment to the State for the first annual fee. The Contractor is also responsible for all subsequent annual fees for this project.

3. This project has been determined to be a Risk Level 2. The Contractor shall comply with all visual monitoring, effluent water quality sampling, reporting, and record keeping requirements associated with this Risk Level, in accordance with the General Permit. For projects with Risk Level 2 or Risk Level 3, the Contractor must prepare and implement a Rain Event Action Plan, as described in the General Permit. The Contractor to submit all SWPPP related documents to the LADWP Wastewater Quality and Compliance Group to complete, certify, and submit the Annual Report in SMARTS.

4. The Contractor shall provide a Qualified SWPPP Practitioner (QSP) to implement all SWPPP requirements at the project site and monitor the effectiveness of the SWPPP, in accordance with the General Permit.

5. The Contractor shall prepare the Annual Report required by the General Permit and submit it to LADWP for review and approval by August 1st of each year. LADWP will prepare, certify and submit the annual report in SMARTS.

6. The Contractor shall provide and submit all reports and data necessary to LADWP for review and approval to complete the Notice of Termination (NOT) at the Completion of the Work, in accordance with the General Permit. LADWP will prepare, certify, and submit the NOT in SMARTS.

END OF SECTION

SECTION 01572
CONSTRUCTION AND DEMOLITION WASTE MANAGEMENT

1.1 The Requirement

A. The Construction and Demolition (C&D) Waste Management Specification includes procedures for ensuring optimal diversion of construction and demolition waste generated by the project, and documentation procedures for tracking waste generation and diversion.

B. Each construction or demolition project shall reuse or recycle a minimum of 80% of the inert debris and 65% of the remaining construction and demolition waste generated by the project.

C. Each construction or demolition project shall dispose of construction and demolition waste generated from the project in accordance with the City's C&D Waste Recycling Ordinance (Ordinance No. 181519). Los Angeles Municipal Code requires that all mixed C&D waste generated within the City of Los Angeles be taken to a City Certified C&D Waste Processing Facility and all source separated C&D waste be taken to a recycling facility or City Certified C&D Waste Processing Facility. Further, C&D waste can only be legally collected, removed, or transported by City of Los Angeles Permitted Solid Waste Haulers. If the Contractor plans on collecting, removing, or transporting its own waste, it must first apply for and obtain a Solid Waste Hauler Permit from the Solid Resources Citywide Recycling Division (SRCRD) of the Bureau of Sanitation.

D. Failure to meet the C&D waste recycling requirements as detailed above will result in the assessment of penalties up to $5,000 per each load of mixed C&D waste not taken to City Certified C&D Waste Processing Facility. Further, collecting, removing or transporting C&D waste within the City without a valid Solid Waste Hauler Permit is a criminal misdemeanor subject to fines and/or imprisonment.

E. The project shall promote the City's sustainable building efforts by creating a resource-efficient and environmentally sensitive project and maintaining optimum control of the C&D waste generated during the project.

F. The project shall use products with post-consumer recycled content to the greatest extent feasible. Refer to the California Department of Resources Recycling and Recovery's website for information about recycled content construction products.

1.2 Abbreviations

A. C&D: Construction and Demolition

B. CalMAX: California Materials Exchange

C. CalRecycle: California Department of Resources Recycling and Recovery

D. CCR: California Code of Regulations

E. CDRG: Construction and Demolition Recycling Guide

F. LEA: Local Enforcement Agency

G. SWDD Report: Solid Waste Diversion and Disposal Report

H. WMP: Waste Management Plan

1.3 Definitions

A. "Certified C&D Waste Processing Facility" or "Certified C&D Waste Processor": A solid waste processing facility that accepts loads of C&D waste for the purpose of recovering re-usable and recyclable materials and disposing of the non-recyclable residual material. A Certified C&D Waste Processing Facility has been certified by the City of Los Angeles Bureau of Sanitation to have a facility specific recycling rate for C&D waste. For information on becoming a certified C&D waste processor, type in and search "waste hauler permit program" and then select the "waste hauler permit program" link at www.lacitysan.org. See the CDRG for information on the current list of certified processors and recycling facilities.

B. "Class III Landfill": A landfill that accepts non-hazardous solid waste such as household, commercial, and industrial solid waste. A Class III landfill is regulated by the LEA and must have a CalRecycle solid waste facilities permit.

C. "Construction and Demolition Recycling Guide": A publication by the Bureau of Sanitation's Solid Resources Citywide Recycling Division. The CDRG can be found by searching "waste hauler permit program" at www.lacitysan.org.

D. "C&D Waste" or "Mixed C&D Waste" or "C&D Debris or Mixed C&D Debris": Solid waste and recyclable materials, and building materials from construction, deconstruction, remodeling, repair, or demolition of buildings and other structures, do not contain hazardous waste (as defined in CCR Title 22, Section 66261.3, *et seq*.), and contain no more than one percent (1%) putrescible wastes by volume, calculated on a monthly basis. C&D waste includes, but is not limited to: asphalt, concrete, Portland cement, brick, lumber, drywall, roofing material, ceramic tile, pipe, glass, carpet and associated packaging.

E. "Deconstruction": The process of taking apart a structure with the primary goal of preserving the value of all useful building materials, so that they may be reused or recycled.

F. "Disposal": Acceptance of solid waste at a legally operating facility for the purpose of landfilling.

G. "Diversion": Activities that result in reducing the amount of solid waste disposed at a landfill. This can include source reduction activities, composting, recycling, and reuse.

H. "Inert Backfill Site": A location, other than inert fill or other disposal facility, to which inert debris is taken for the purpose of filling an excavation, shoring, or another soils engineering operation.

I. Inert Debris: Solid waste and recyclable materials that are source separated or separated for reuse and do not contain hazardous waste (as defined in CCR, Title 22, section 66261.3 et. seq.) or soluble pollutants at concentrations in excess of applicable water quality. Inert debris may not contain any putrescible wastes. Inert debris includes but is not limited to concrete, asphalt, crushed glass, fiberglass, asphalt or fiberglass roofing shingles, brick, slag, ceramics,

plaster, clay, and clay products.

J. Inert Debris Engineered Fill Operation (IDEFO): An activity exceeding one year in duration in which only the following inert debris may be used: fully cured asphalt, uncontaminated concrete (including steel reinforcing rods embedded in the concrete), crushed glass, brick, ceramics, clay and clay products, which may be mixed with rock and soil. Those materials are spread on land in lifts and compacted under controlled conditions to achieve a uniform and dense mass which is capable of supporting structural loading, as necessary, or supporting other uses such as recreation, agriculture and open space in order to provide land that is appropriate for an end use consistent with approved local general and specific plans (e.g., roads, building sites, or other improvements) where an engineered fill is required to facilitate productive use(s) of the land.

K. "Non-Permitted Solid Waste Hauler": A company that does not possess a valid and current solid waste hauler permit from the City of Los Angeles to collect and transport solid waste from individuals or businesses in the City of Los Angeles.

L. "Permitted Solid Waste Hauler": A company that possesses a valid and current solid waste hauler permit from the City of Los Angeles to collect and transport solid waste from individuals or businesses in the City of Los Angeles.

M. "Recycling": The process of collecting, sorting, cleansing, treating, and reconstituting materials that would otherwise become solid waste, and returning them to the economic mainstream in the form of raw material for new, reused, or reconstituted products that meet the quality standards necessary to be used in the marketplace.

1. On-site Recycling: Materials that are sorted and processed for use in an altered form in the project, (e.g. concrete is crushed for use as base for a parking lot on the site)

2. Off-site Recycling: Source-separated materials hauled to another location and used in an altered form in the manufacture of a new product.

N. "Recycling Facility": An operation that can legally accept materials for the purpose of processing the materials into an altered form for the manufacture of a new product. Depending on the types of materials accepted and operating procedures, a recycling facility may or may not be required to have a Solid Waste Facilities permit from CalRecycle or be regulated by the LEA.

O. "Reuse": Materials that are recovered for use in the same form. This includes materials that are reused on-site or off-site.

P. "Salvage": Materials recovered for reuse or sale or donation to a third party.

Q. "Source Reduction": Any action causing a net reduction in the generation of solid waste. Source reduction includes, but is not limited to, reducing the use of nonrecyclable materials, replacing disposable materials and products with reusable materials and products, reducing packaging, and reducing the amount of yard waste generated.

R. "Source-Separated Materials (Construction and Demolition Waste)": Material that is sorted at the site of generation by individual material type for the purpose of reuse or recycling, i.e., loads of concrete that are source-separated for delivery to an inert debris recycling facility to be crushed into road base material. Note: The

Contractor may be able to save money on collection fees for source-separated material. Source-separated material is not subject to the City's 10% AB939 fee.

S. "Solid Waste": shall mean waste that CalRecycle has deemed acceptable for disposal at a Class III Landfill and shall not include source-separated material.

T. "Transfer Station": A facility that can legally accept solid waste for the purpose of temporarily storing the materials for re-loading onto other trucks and transporting them to a landfill for disposal or recovering some materials for reuse or recycling. Transfer stations must be permitted by CalRecycle and regulated by the LEA.

U. "Solid Waste Hauler" or "Waste Hauler": shall mean any Person engaged in the business of providing or responsible for the collection, removal or transportation or Solid Waste, Construction and Demolition Waste, Source-Separated Materials,

V. "Solid Waste Hauler Permit", "Waste Hauler Permit", or "AB 939 Compliance Permit": Persons who collect, remove or transport Solid Waste, including Construction and Demolition Waste, Source-Separated Materials or Co-Mingled Recyclables, generated within the City, must obtain, in addition to all other required permits, an AB 393 Compliance Permit from the Bureau of Sanitation.

1.4 DIVERSION REQUIREMENTS

A. The construction and demolition project shall reuse or recycle a minimum of 80% of the inert debris and 65% of the remaining construction and demolition waste generated by the project.

1.5 SUBMITTALS

A. Waste Management Plan (WMP): The Contractor shall conduct a site assessment and estimate the types and quantities of materials, generated during the project, that are anticipated for on-site or off-site processing, recycling, or reuse.

1. After the contract is awarded and prior to the commencement of the project, the City project manager will schedule and attend a meeting with the Contractor to discuss the Contractor's proposed WMP. This plan shall be submitted to allow the City and the Contractor an opportunity to develop a mutual understanding regarding the recycling and reuse requirements and programs.
2. Not more than 20 working days after the meeting, and before the commencement of the project, the Contractor shall prepare and submit to the City project manager a written WMP, Attachment A of this specification, and a copy of the contracted hauler's solid waste hauler permit. The plan shall show a minimum 80% recycling for inert debris expected from the project and 65% recycling for the remaining C&D waste expected from the project. The Contractor shall submit the plan in the format provided herein as Attachment A. Instructions for filling out the form are in Attachment A, -- INSTRUCTION SHEET. Work shall not begin until the project engineer approves the WMP for the project.
3. If the Contractor expects a circumstance that the Contractor believes make it infeasible to comply with the Diversion Requirement, the Contractor may submit a written request for an exemption at the time the WMP is submitted. If the exemption request is not approved by the Engineer, the Contractor shall revise and resubmit a WMP.

4. If the City determines that it is infeasible for the Contractor to meet the Diversion Requirement due to unique circumstances, the City shall determine the maximum feasible diversion rate for each material and shall indicate this rate on the WMP submitted by the Contractor. The City shall return a copy of the WMP to the Contractor marked "Approved for Infeasible Exemption". The Contractor will be required to meet the maximum feasible diversion rates as approved by the City. If the Contractor fails to meet the revised rates the Contractor will be subject to the stipulated penalties. Exempt projects are required to keep and submit all documentation for the project. This includes receipts, the WMP, SWDD Reports, and all supporting documentation as required herein.
5. The City's approval of the Contractor's WMP will not otherwise relieve the Contractor of responsibility for adequate and continuing control of pollutants and other environmental protection measures.

B. Solid Waste Diversion and Disposal Report (SWDD Report): With each submittal of the Contractor's application for progress payment, the Contractor shall prepare and submit to the project inspector a written SWDD Report quantifying all material generated, diverted, and disposed in the project during the time period covered by the SWDD Report and progress payment. Part 3 of each SWDD Report is a cumulative history of the diversion and disposal for the project. The Contractor shall submit the report in the format provided herein as shown in Attachment B. Failure to submit the report and the supporting documentation shall render the application for progress payment incomplete and delay payment until the proper documentation is submitted. The supporting documentation includes manifests, weight tickets, receipts, reports, invoices, and other supporting documents specifically identifying the projects, the recyclables and solid waste generated by the project, and where the material was sent. Instructions for filling out the forms are in Attachment B – INSTRUCTION SHEET. Together, all of the SWDD Reports should cover the complete time period of the project. The final SWDD Report and supporting documentation must be submitted within 30 days of the end of the project.

C. Substitutions: Should the Contractor desire to use materials, equipment, or products that meet the requirements of these specifications but are more environmentally responsive, the Contractor shall submit these substitutions in accordance with "Substitutions and "Or Equal" Submittals" of the General Requirements.

1.6 PENALTY

A. If the diversion requirement has not been met, a per ton penalty will be applied to the disposed material over that allowed in the approved WMP.

B. The penalty will be calculated as follows: Tons over that allowed in the approved WMP times the per-ton penalty in effect at the time the contract was awarded. The penalty may not exceed the total payment retention for the project.

C. Tons of mixed C&D waste either not hauled to City Certified C&D Waste Processing Facilities or hauled by non-permitted waste hauler(s) will be assessed a per-ton penalty. The penalty may not exceed the total payment retention for the project.

D. The penalty is $100 per ton.

E. The recommended penalty will be determined by the Bureau of Contract Administration and Bureau of Sanitation and shall be considered by the Board of Public Works at the time of the project closeout.

1.7 REUSE, SALVAGE, AND RECYCLING OPTIONS

A. Construction projects shall make use of as many reuse and salvage options as is feasible. One option is the California Materials Exchange (CalMAX), a free program sponsored by CalRecycle. The most recent issue of CDRG, contains contact information for non-profit organizations, salvage facilities, and other reuse organizations.

B. Recycling shall include both on-site and off-site recycling of source-separated materials, as well as mixed C&D waste recycling efforts.

C. On-site recycling programs shall produce a quality product to meet the specifications identified in the contract documents, subject to approval. The Contractor shall estimate the amount of material to be used in the project and include a program for off-site recycling of any excess material that cannot be used in the project.

D. The Contractor shall develop and implement a program to include source separation of solid waste, to the greatest extent feasible, of the following types:

1. Asphalt

2. Concrete, concrete block, slump stone (decorative concrete block)

3. Rock

4. Wood (lumber)

5. Green material (i.e. tree trimmings)

6. Other materials, as appropriate, such as red clay brick, building fixtures, architectural details, dry wall, carpet, carpet padding, and corrugated cardboard

E. Mixed C&D Waste Recycling: The Contractor must develop and implement a program to transport all commingled construction and demolition materials that cannot be feasibly source-separated to a Certified C&D Waste Processing Facility.

F. Certified C&D Waste Processing Facility: These facilities have facility recycling rates, established by the City of Los Angeles for mixed C&D waste. Mixed C&D waste taken to these facilities are considered to have been recycled at the rate of the certified processing facility. For example, 100 tons of material taken to a facility with an 80% recycling rate results in 80 tons of recycling and 20 tons of disposal for the project A list of these facilities and their recycling rates is in the most recent issue of CDRG.

G. Recycling, Reuse, Mixed C&D Waste Processing, and Salvage Facilities: The CDRG is incorporated herein by reference and contains information about processing, recycling, reuse, and salvage facilities.

H. Revenue: Revenue or savings obtained from recycled, reused, or salvaged

materials shall accrue to the Contractor unless otherwise noted in the Contract Documents. Note: The Contractor may be able to save money on collection fees for source-separated material. Source-separated material is not subject to the City's 10% AB939 fee.

I. AB 939 Fee: The AB 939 fee is assessed on all solid waste hauled within the City of Los Angeles in accordance with Section 66.32 of the Los Angeles Municipal Code.
   1. All solid waste haulers hauling material from City of Los Angeles locations must be permitted in accordance with Section 66.32 of the Los Angeles Municipal Code.
   2. Source-separated material is not assessed this fee.

1.8 HAULING AND DISPOSAL OPERATIONS

A. Hauling: The Contractor is responsible for arranging the collection and hauling of C&D waste by a solid waste hauler that is permitted by the City of Los Angeles in accordance with Section 66.32 of the Los Angeles Municipal Code.

B. Recycling and Processing Facilities: The Contractor shall be responsible for transporting C&D waste to recycling or processing facilities. The Contractor shall be familiar with the requirements for acceptance of C&D waste at the recycling and processing facilities before the material is delivered. The most recent issue of CDRG includes a partial list of these facilities. Always call facilities in advance.

C. Disposal Facilities: The Contractor shall be responsible for transporting C&D waste that cannot be accepted at a recycling or processing facility, to a transfer station or disposal facility that can legally accept the materials for the purpose of disposal. A load of C&D waste may be taken to a disposal facility only after it has been rejected by 2 different certified processing facilities and the driver is in possession of both rejection slips. The rejection slips and the weight ticket from the final destination must be kept together and submitted to the contractor.

D. Site Disposal: The Contractor may not burn, bury, or otherwise dispose of solid waste on the project job-site.

END OF SECTION

ATTACHMENT A - INSTRUCTION SHEET FOR WASTE MANAGEMENT PLAN

1. For assistance, contact the Solid Resources Citywide Recycling Division of LA Sanitation & Environment at (213) 485-3460 or sansrcrd_cdrecycling@lacity.org.
2. Please print very clearly or type.
3. Waste Management Plan (WMP) is to be completed and approved prior to start of construction. Along with the WMP, the Contractor is to include a copy of the waste hauler's waste hauler permit.
4. Attachment A includes**: Part 1-**Inert Debris and **Part 2**-Metal, Wood, C&D waste, and all other materials.
5. Must meet ≥80% recycling rate in **Part 1** – Inert Debris such as concrete, asphalt, dirt, rock, and brick.
6. Must meet ≥65% recycling rate in **Part 2** – Metal, wood, green waste, C&D waste, and all other materials.
7. The information required includes but is not limited to, the following:
    a. Contractor and project work order number.
    b. Permitted solid waste hauler(s) and permit number(s).
    c. Facility names and addresses that are to process the C&D materials.
    d. Estimated quantities of **all** C&D materials listed in **tons**.
    e. Verify whether the Waste Management Plan meets the minimum recycling requirement of 80% for inert debris in Part 1. Verify whether the Waste Management Plan meets the minimum recycling requirement of and 65% for other C&D waste.
8. **Calculating recycling and disposal for mixed C&D waste taken to a certified processing facility: the total tons taken to certified processing facility times the recycling rate = amount to be recycled. Total tons taken to facility minus amount to be recycled = amount for disposal. E.g. 100 tons x 0.80 (80% recycling rate) = 80 tons diverted and 20 tons disposed.

ATTACHMENT A

WASTE MANAGEMENT PLAN (PART 1-INERT DEBRIS)

Project Title:	W. O. Number:	Date Submitted:
Name & Title of Responsible Person:	Signature:	
Permitted Waste Hauler Name(s) and Permit No(s):		

Material	Facility Name and Address	Tons Diverted	Tons Disposed
RECYCLING/REUSE			
Asphalt			
Concrete			
Brick			
Dirt			
Mixed Inerts			
Other (Describe)			
Other (Describe)			
DISPOSAL			
Other (Describe)			
Other (Describe)			
Other (Describe)			
DIVERSION AND DISPOSAL TOTALS =			

Percent Recycling = $\frac{\text{Total diversion}}{\text{Total diversion + Total disposed}}$ X 100 =

Percent Recycling = $\frac{\quad}{+}$ X 100 = %

Does Part 1 (Inert Debris) of this Waste Management Plan meet the minimum recycling requirement of 80% for Inert Debris?

YES ☐ NO ☐

ATTACHMENT A

WASTE MANAGEMENT PLAN (PART 2-ALL OTHER C&D WASTE)

W. O. No.:	Date Submitted:

Contractors Name:

Street address:

City, State, Zip:

Phone: Fax: Email:

Permitted Waste Hauler Name(s) and Permit No(s):

Material	Facility Name and Address	Tons Diverted	Tons Disposed
RECYCLING/REUSE			
Glass			
Wood/Greenwaste			
Metal			
Cardboard			
Other (Describe)			
DISPOSAL			
Other (Describe)			
Other (Describe)			
CERTIFIED PROCESSING**			
Mixed C&D Waste			
Mixed C&D Waste			
DIVERSION AND DISPOSAL TOTALS =			

$$\text{Percent Recycling} = \frac{\text{Total Diversion}}{\text{Total Diversion} + \text{Total Disposed}} \times 100 =$$

Percent Recycling = _____ X 100 = %

+

Does Part 2 (All Other C&D Waste) of this Waste Management Plan meet the minimum recycling requirement of 65% for all other C&D Waste? YES ☐ NO ☐

****Recycling tonnages for mixed C&D waste taken to a certified processing facility = total tonnage x recycling rate. Remaining tonnage counts as disposal. Example: 200 tons x 0.80 = 160 tons diverted and 40 tons disposed.**

EXAMPLE WASTE MANAGEMENT PLAN

ATTACHMENT A

WASTE MANAGEMENT PLAN (PART 1-INERT DEBRIS)

Project Title: *Big Street Overcrossing*	W. O. Number: *XYZ12345*	Date Submitted: *01/01/2020*
Name & Title of Responsible Person: *Bobby Lee, Project Manager*	Signature: *Bobby Lee*	
Permitted Waste Hauler Name(s) and Permit No(s): *Grava Gravel Haulers, PER-22-333*		

Material	Facility Name and Address	Tons Diverted	Tons Disposed
RECYCLING/REUSE			
Asphalt	*Inert Recycling Facility A,888 Valle Valley, CA 12345*	*600*	
Concrete	*Inert Recycling Facility A,888 Valle Valley, CA 12345*	*55*	
Brick	*Inert Recycling Facility B, 777 Valle Valley,CA 12345*	*6*	
Dirt	*The Landscaping Co., 222 Valle Valley, CA 12345*	*200*	
Mixed Inerts			
Other (Describe)			
Other (Describe)			
DISPOSAL			
Other (Describe)			
Other (Describe)			
Other (Describe)			
	DIVERSION AND DISPOSAL TOTALS =	*861*	

$$\text{Percent Recycling} = \frac{\text{Total diversion}}{\text{Total diversion} + \text{Total disposed}} \times 100 =$$

$$\text{Percent Recycling} = \frac{861}{861 + 0} \times 100 = 100.00\ \%$$

Does Part 1 (Inert Debris) of this Waste Management Plan meet the minimum recycling requirement of 80% for Inert Debris?

YES ☒ NO ☐

ATTACHMENT A

WASTE MANAGEMENT PLAN (PART 2-ALL OTHER C&D WASTE)

W. O. No.: XYZ12345	Date Submitted: 01/01/2020

Contractors Name: Awesome Engineering Contractors

Street address: Circular Drive

City, State, Zip: *Ciudad City, CA 12345*

Phone: (123) 456-7891 Fax: (321) 123-4567 Email: AEC@zmail.com

Permitted Waste Hauler Name(s) and Permit No(s):

Material	Facility Name and Address	Tons Diverted	Tons Disposed
RECYCLING/REUSE			
Glass			
Wood/Greenwaste	*The Landscaping Co., 222 Valle Valley, CA 12345*	*50*	
Metal	*Kim Loai Metal Recycling, 333 Camino St, CA 12345*	*6*	
Cardboard			
Other (Describe)			
DISPOSAL			
Other (Describe)	*Municipal Landfill, 456 Montana Mountains, CA 12345*		*15*
Other (Describe)			
CERTIFIED PROCESSING**			
Mixed C&D Waste	*Certified Processor A (Recycling Rate = 75% = 0.75)*	*18.75*	*6.25*
Mixed C&D Waste	*25 tons x 0.75 = 18.75 tons recycled and 6.25 tons disposed*		
	DIVERSION AND DISPOSAL TOTALS =	*74.75*	*21.25*

$$\text{Percent Recycling} = \frac{\text{Total Diversion}}{\text{Total Diversion} + \text{Total Disposed}} \times 100 =$$

$$\text{Percent Recycling} = \frac{74.75}{74.75 + 21.25} \times 100 = 77.86\ \%$$

Does Part 2 (All Other C&D Waste) of this Waste Management Plan meet the minimum recycling requirement of 65% for all other C&D Waste? YES ☒ NO ☐

****Recycling tonnages for mixed C&D waste taken to a certified processing facility = total tonnage x recycling rate. Remaining tonnage counts as disposal. Example: 200 tons x 0.80 = 160 tons diverted and 40 tons disposed.**

ATTACHMENT B - INSTRUCTION SHEET FOR SOLID WASTE DIVERSION & DISPOSAL REPORT

1. For assistance, contact the Solid Resources Citywide Recycling Division of LA Sanitation & Environment at (213) 485-3460 or sansrcrd_cdrecycling@lacity.org.
2. Please print very clearly or type.
3. All **three (3) pages** of Attachment B and **all** manifests, weight tickets, receipts, reports, invoices, and other supporting documents specifically identifying the projects, the recyclables and solid waste generated by the project, and where the material was sent must be submitted to the inspector with each application for progress payment.
4. Attachment B includes**: Part 1** - Inert Debris, **Part 2** - All Other C&D Waste, **Part 3** - Project Cumulative Total.
5. Must meet ≥80% recycling rate for Inert Debris by end of construction.
6. Must meet ≥65% recycling rate in Metal, wood, green waste, C&D waste, and all other materials by end of construction.
7. In **Part 1 and Part 2,** record:
   a. Material type generated.
   b. Permitted solid waste hauler(s) and permit number(s).
   c. Facility names and addresses where materials were delivered.
   d. Tons diverted/disposed for a particular pay period.
   e. Verify whether Part 1 meets the minimum recycling requirement of 80% for Inert Debris. Verify whether Part 2 meets the minimum recycling requirement of 65% for other C&D Waste. Contractor is to meet the minimum recycling requirements by the end of construction.
8. In **Part 3**, record:
   a. Pay period beginning and period ending
   b. Diversion and disposal for the pay period and cumulative diversion and disposal for the project
   c. Cumulative waste generated (diversion + disposal) for the project
   d. Cumulative recycling rate for the project (diverted/generated)*100
9. The information required includes but is not limited to, the following:
   a. Contractor and project identification information
   b. Actual quantities of **all** materials listed in tons
10. Source-separated material taken to a recycling facility or certified processing facility is 100% recycled.
11. **Calculating recycling and disposal for mixed material taken to a certified processing facility: the total tons taken to certified processing facility times the recycling rate = amount to be recycled. Total taken to facility minus amount to be recycled = amount for disposal. E.g. 100 tons x 0.80 (80% recycling rate) = 80 tons diverted and 20 tons disposed.

ATTACHMENT B
SOLID WASTE DIVERSION AND DISPOSAL REPORT

PART 1 OF 3 - INERT DEBRIS

Project Title:	W. O. Number:	Date Submitted:	Progress Payment #
Company Name:	Daytime Phone Number:		
Period Covered In This Report: From:	To:		
Permitted Waste Hauler Name(s) and Permit No(s):			

Material	Facility Name and Address	Tons diverted	Tons Disposed
RECYCLING/REUSE			
Asphalt			
Concrete			
Brick			
Dirt			
Mixed Inerts			
Other (Describe)			
Other (Describe)			
DISPOSAL			
Other (Describe)			
Other (Describe)			
Other (Describe)			
DIVERSION AND DISPOSAL TOTALS * =			

***Copy the Tons Diverted and Tons Disposed totals to Part 3 Project Cumulative Total. Each Report needs to have the totals from every previous Diversion and Disposal Report documented on it, as well as the totals from this Report.**

ATTACHMENT B

SOLID WASTE DIVERSION AND DISPOSAL REPORT

PART 2 OF 3 - ALL OTHER C&D WASTE

W. O. Number:	Date Submitted:

Permitted Waste Hauler Name(s) and Permit No(s):

Material	Facility Name and Address	Tons Recycled	Tons Disposed
RECYCLING/REUSE			
Metal			
Wood / Lumber			
Greenwaste / Landscaping			
Glass			
Cardboard			
Other (Describe)			
Other (Describe)			
DISPOSAL			
Mixed Solid Waste			
Other (Describe)			
Other (Describe)			
CERTIFIED PROCESSING**			
Mixed C&D Waste			
Mixed C&D Waste			
Mixed C&D Waste			
DIVERSION AND DISPOSAL TOTALS* =			

***Copy the Tons Diverted and Tons Disposed totals to Part 3 Project Cumulative Total. Each Report needs to have the totals from every previous Diversion and Disposal Report documented on it, as well as the totals from this Report.**

****Recycling tonnages for mixed C&D waste taken to a certified facility = total tonnage x recycling rate. Remaining tonnage counts as disposal. Example: 200 tons x 0.80 = 160 tons diverted and 40 tons disposed.**

ATTACHMENT B

SOLID WASTE DIVERSION AND DISPOSAL REPORT

PART 3 OF 3 - PROJECT CUMULATIVE TOTAL

W. O. Number:				Date Submitted:			
Period Beginning	Period Ending	*Period Diversion	Cumulative Project Diversion, **R**	*Period Disposal	Cumulative Project Disposal, **D**	Cumulative Waste **G**enerated **R + D**	Cumulative Recycling % (**R/G**)100
INERT DEBRIS CUMULATIVE PROJECT HISTORY, REFER TO ATTACHMENT B PART 1 OF 3							
ALL OTHER C&D WASTE CUMULATIVE PROJECT HISTORY, REFER TO ATTACHMENT B PART 2 OF 3							
Does this Report meet the minimum recycling requirement of 80% for Inert Debris and 65% for All Other C&D Waste? Contractor is to meet the minimum recycling requirements of 80% for Inert Debris and 65% for All Other C&D Waste by the end of construction. YES ☐ NO ☐							
Name & title of person responsible for the information in this form:				Signature:			

***From appropriate Part 1 or 2 during each period.**
Each Attachment B Part III Report needs to have the Tons Diverted and Tons Disposed from every previous Diversion and Disposal Report documented in it, as well as the totals from this Report. Attach another Part III form and continue information if more rows are needed.

EXAMPLE SOLID WASTE DIVERSION AND DISPOSAL REPORT FOR PROGRESS PAYMENT #1

ATTACHMENT B

SOLID WASTE DIVERSION AND DISPOSAL REPORT

PART 1 OF 3 - INERT DEBRIS

Project Title: *Big Street Overcrossing*	W. O. Number: *XYZ12345*	Date Submitted: *03/15/2020*	Progress Payment # *1*
Company Name: *Awesome Engineering Contractors*		Daytime Phone Number: *(123)456-7891*	
Period Covered In This Report: From: *2/1/2020*		To: *2/28/2020*	
Permitted Waste Hauler Name(s) and Permit No(s): *Grava Gravel Haulers, PER-22-333*			

Material	Facility Name and Address	Tons diverted	Tons Disposed
RECYCLING/REUSE			
Asphalt	*Inert Recycling Facility A,888 Valle Valley, CA 12345*	*45*	
Concrete	*Inert Recycling Facility A,888 Valle Valley, CA 12345*	*10*	
Brick	*Inert Recycling Facility B, 777 Valle Valley, CA 12345*	*6*	
Dirt	*The Landscaping Co., 222 Valle Valley, CA 12345*	*150*	
Mixed Inerts			
Other (Describe)			
Other (Describe)			
DISPOSAL			
Other (Describe)			
Other (Describe)			
Other (Describe)			
	DIVERSION AND DISPOSAL TOTALS * =	*211*	

***Copy the Tons Diverted and Tons Disposed totals to Part 3 Project Cumulative Total. Each Report needs to have the totals from every previous Diversion and Disposal Report documented on it, as well as the totals from this Report.**

ATTACHMENT B

SOLID WASTE DIVERSION AND DISPOSAL REPORT

PART 2 OF 3 - ALL OTHER C&D WASTE

W. O. Number: *XYZ12345*	Date Submitted: *03/15/2020*

Permitted Waste Hauler Name(s) and Permit No(s): *Grava Gravel Haulers, PER-22-333*

Material	Facility Name and Address	Tons Recycled	Tons Disposed
RECYCLING/REUSE			
Metal	*Kim Loai Metal Recycling, 333 Camino St, CA 12345*	*2*	
Wood / Lumber	*The Landscaping Co., 222 Valle Valley, CA 12345*	*15*	
Greenwaste / Landscaping			
Glass			
Cardboard			
Other (Describe)			
Other (Describe)			
DISPOSAL			
Mixed Solid Waste	*Municipal Landfill, 456 Montana Mountains, CA 12345*		*1*
Other (Describe)			
Other (Describe)			
CERTIFIED PROCESSING**			
Mixed C&D Waste	*Certified Facility A (Recycling Rate = 75% = 0.75)*	*9*	*3*
Mixed C&D Waste	*12 tons x 0.75 = 9.00 tons recycled and 3.00 tons disposed*		
Mixed C&D Waste			
Mixed C&D Waste			
DIVERSION AND DISPOSAL TOTALS* =		*26*	*4*

***Copy the Tons Diverted and Tons Disposed totals to Part 3 Project Cumulative Total. Each Report needs to have the totals from every previous Diversion and Disposal Report documented on it, as well as the totals from this Report.**

****Recycling tonnages for mixed C&D waste taken to a certified facility = total tonnage x recycling rate. Remaining tonnage counts as disposal. Example: 200 tons x 0.80 = 160 tons diverted and 40 tons disposed.**

ATTACHMENT B

INERT SOLID WASTE DIVERSION AND DISPOSAL REPORT

PART 3 OF 3 - PROJECT CUMULATIVE TOTAL

W. O. Number: *XYZ12345*				Date Submitted: *03/15/2020*			
Period Beginning	Period Ending	*Period Diversion	Cumulative Project Diversion, **R**	*Period Disposal	Cumulative Project Disposal, **D**	Cumulative Waste **G**enerated **R + D**	Cumulative Recycling % (**R/G**)100
INERT DEBRIS CUMULATIVE PROJECT HISTORY, REFER TO ATTACHMENT B PART 1 OF 3							
2/1/2020	*2/28/2020*	*211*	*211*	*0*	*0*	*211*	*100(211/211)= 100.00*
ALL C&D OTHER WASTE CUMULATIVE PROJECT HISTORY, REFER TO ATTACHMENT B PART 2 OF 3							
2/1/2020	*2/28/2020*	*26*	*26*	*4*	*4*	*26+4=30*	*100(26/30)= 86.67*

Does this Report meet the minimum recycling requirement of 80% for Inert Debris and 65% for All Other C&D Waste? Contractor is to meet the minimum recycling requirements of 80% for Inert Debris and 65% for All Other C&D Waste by the end of construction.

YES ☒ NO ☐

Name & title of person responsible for the information in this form: *Bobby Lee, Project Manager*	Signature: *Bobby Lee*

***From appropriate Part 1 or 2 during each period.**
Each Attachment B Part III Report needs to have the Tons Diverted and Tons Disposed from every previous Diversion and Disposal Report documented in it, as well as the totals from this Report.
Attach another Part III form and continue information if more rows are needed.

EXAMPLE SOLID WASTE DIVERSION AND DISPOSAL REPORT FOR PROGRESS PAYMENT #2

ATTACHMENT B

SOLID WASTE DIVERSION AND DISPOSAL REPORT

PART 1 OF 3 - INERT DEBRIS

Project Title: *Big Street Overcrossing*	W. O. Number: *XYZ12345*	Date Submitted: *04/15/2020*	Progress Payment # *2*
Company Name: *Awesome Engineering Contractors*	Daytime Phone Number*: (123)456-7891*		
Period Covered In This Report: From: *3/1/2020*	To: *3/31/2020*		
Permitted Waste Hauler Name(s) and Permit No(s): *Grava Gravel Haulers, PER-22-333*			

Material	Facility and Location	Tons diverted	Tons Disposed
RECYCLING/REUSE			
Asphalt	*Inert Recycling Facility A,888 Valle Valley, CA 12345*		
Concrete	*Inert Recycling Facility A,888 Valle Valley, CA 12345*	*300*	
Brick	*Inert Recycling Facility B, 777 Valle Valley, CA 12345*		
Dirt	*The Landscaping Co., 222 Valle Valley, CA 12345*	*100*	
Other (Describe)			
Other (Describe)			
DISPOSAL			
Other (Describe)			
Other (Describe)			
Other (Describe)			
DIVERSION AND DISPOSAL TOTALS * =		*400*	

***Copy the Tons Diverted and Tons Disposed totals to Part 3 Project Cumulative Total. Each Report needs to have the totals from every previous Diversion and Disposal Report documented on it, as well as the totals from this Report.**

ATTACHMENT B

SOLID WASTE DIVERSION AND DISPOSAL REPORT

PART 2 OF 3 - ALL OTHER C&D WASTE

W. O. Number: *XYZ12345*	Date Submitted: *04/15/2020*

Permitted Waste Hauler Name(s) and Permit No(s): *Grava Gravel Haulers, PER-22-333*

Material	Facility and Location	Tons Recycled	Tons Disposed
RECYCLING/REUSE			
Metal	*Kim Loai Metal Recycling, 333 Camino St, CA 12345*	*1*	
Wood / Lumber	*The Landscaping Co., 222 Valle Valley, CA 12345*	*16*	
Greenwaste / Landscaping			
Glass			
Cardboard			
Other (Describe)			
Other (Describe)			
DISPOSAL			
Mixed Solid Waste	*Municipal Landfill, 456 Montana Mountains, CA 12345*		*1*
Other (Describe)			
Other (Describe)			
Other (Describe)			
CERTIFIED PROCESSING**			
Mixed C&D Waste	*Certified Processor A (Recycling Rate = 75% = 0.75)*	*7.5*	*3.5*
Mixed C&D Waste	*10 tons x 0.75 = 7.5 tons recycled and 2.5 tons disposed*		
Mixed C&D Waste			
Mixed C&D Waste			
DIVERSION AND DISPOSAL TOTALS* **=**		*24.5*	*4.5*

***Copy the Tons Diverted and Tons Disposed totals to Part 3 Project Cumulative Total. Each Report needs to have the totals from every previous Diversion and Disposal Report documented on it, as well as the totals from this Report.**

****Recycling tonnages for mixed C&D waste taken to a certified facility = total tonnage x recycling rate. Remaining tonnage counts as disposal. Example: 200 tons x 0.80 = 160 tons diverted and 40 tons disposed.**

ATTACHMENT B

INERT SOLID WASTE DIVERSION AND DISPOSAL REPORT

PART 3 OF 3 - PROJECT CUMULATIVE TOTAL

W. O. Number: *XYZ12345*				Date Submitted: *04/15/2020*			
Period Beginning	Period Ending	*Period Diversion	Cumulative Project Diversion, **R**	*Period Disposal	Cumulative Project Disposal, **D**	Cumulative Waste **G**enerated **R + D**	Cumulative Recycling % (**R/G**)100
INERT DEBRIS CUMULATIVE PROJECT HISTORY, REFER TO ATTACHMENT B PART 1 OF 3							
2/1/2020	*2/28/2020*	*211*	*211*	*0*	*0*	*211*	*100(211/211)= 100.00*
3/1/2020	*3/31/2020*	*400*	*211+400=611*	*0*	*0*	*211+400=611*	*100(611/611)= 100.00*
ALL OTHER C&D WASTE CUMULATIVE PROJECT HISTORY, REFER TO ATTACHMENT B PART 2 OF 3							
2/1/2020	*2/28/2020*	*26*	*26*	*4*	*4*	*26+4=30*	*100(26/30)= 86.67*
3/1/2020	*3/31/2020*	*24.5*	*26+24.5=50.5*	*4.5*	*4+4.5=8.5*	*50.5+8.5=59*	*100(50.5/59)= 85.59*

Does this Report meet the minimum recycling requirement of 80% for Inert Debris and 65% for All Other C&D Waste? Contractor is to meet the minimum recycling requirements of 80% for Inert Debris and 65% for All Other C&D Waste by the end of construction.

YES ☒ NO ☐

Name & title of person responsible for the information in this form: *Bobby Lee, Project Manager*	Signature: *Bobby Lee*

***From appropriate Part I or II during each period.**
Each Attachment B Part III Report needs to have the Tons Diverted and Tons Disposed from every previous Diversion and Disposal Report documented in it, as well as the totals from this Report.
Attach another Part III form and continue information if more rows are needed.

END OF SECTION

This page intentionally left blank

SECTION 01573
EXCAVATION SHORING, FORMS, AND FALSEWORK

1.1 THE REQUIREMENT

A. The CONTRACTOR shall have at the Worksite, copies or suitable extracts of: Construction Safety Orders, Tunnel Safety Orders and General Industry Safety Orders issued by the State Division of Industrial Safety. The CONTRACTOR shall comply with provisions of these and all other applicable laws, ordinances, and regulations.

B. Before excavating any trench 1.5m (5 feet) or more in depth, the CONTRACTOR shall submit a detailed plan to the CITY showing the design of shoring, bracing, sloping, or other revisions to be made for the Workers' protection from the hazard of caving ground during the excavation of such trench. The plan and calculations shall be prepared by a California registered Civil or Structural ENGINEER. No excavation shall start until the ENGINEER has accepted the plan and the CONTRACTOR has obtained a permit from the State Division of Industrial Safety. A copy of the permit shall be submitted to the ENGINEER and INSPECTOR.

C. Whenever work under the Contract involves trench excavation five (5) feet or more in depth, or any kind of shoring, the CONTRACTOR shall design and prepare plans for the required shoring, bracing, and sloping. The shoring plans and calculations shall also be submitted to the City of Los Angeles Department of Building and Safety to obtain required plan check and permit, in advance of excavation to ensure workers' protection from the hazard of caving ground during the excavation and to support adjacent private property with zero lateral and vertical deflection of the shoring system. All costs therefore shall be included in the price named in the Contract for completion of the Work as set forth in the Contract Documents.

D. Nothing in this Section shall be deemed to allow the use of a shoring, sloping, or other protective system less effective than that required by the CAL/OSHA Construction Safety Orders.

E. Nothing in this Article shall be construed to impose liability on the CITY, ENGINEER, INSPECTOR, or any of their officers, agents, representatives, or employees.

F. The CONTRACTOR shall secure approval, in advance, from authorities concerned for the use of any bridges proposed by it for public use. Temporary bridges shall be clearly posted as to load limit and speed limits, with signs and posting conforming to current requirements set forth in the Traffic Manual published by the California Department of Transportation, covering "signs". This manual shall also apply to the street closures, barricades, detours, lights, and other safety devices required.

G. The INSPECTOR will provide a competent person trench/excavation certification form to the CONTRACTOR. It shall be completely filled out before any worker has access to trench or excavation and returned to the INSPECTOR before the end of the first working day. The CONTRACTOR shall certify by this form the

name of the competent person administering the Work, the soil classification, and the type of excavation protective system provided and/or installed.

H. The CONTRACTOR shall completely fence all excavations to provided protection against anyone falling into the excavation and to the satisfaction of the INSPECTOR. The fencing shall be in place at all times except when workers are present and actual construction operations are in progress.

I. The CONTRACTOR shall comply fully with the requirements of the CAL/OSHA Construction Safety Orders, regarding the design of forms, false work, and shoring for concrete placement, and the inspection of same prior to placement of concrete. Where the Construction Safety Orders requires the services of a Civil or Structural Engineer registered in the State of California to approve design calculations and Working Drawings of the false work or shoring system, to inspect such system prior to placement of concrete, the CONTRACTOR shall employ such engineer for these purposes, and all costs therefore shall be included in the price named in the Contract for completion of the Work as set forth in the Contract Documents.

J. No Work under this Section shall start until the ENGINEER has accepted the plans and the CONTRACTOR has obtained all permits required and furnished a copy to the ENGINEER and the INSPECTOR.

1.2 THE REQUIREMENT

A. The CONTRACTOR shall have at the Worksite, copies or suitable extracts of: Construction Safety Orders, Tunnel Safety Orders and General Industry Safety Orders issued by the State Division of Industrial Safety. The CONTRACTOR shall comply with provisions of these and all other applicable laws, ordinances, and regulations.

B. Before excavating any trench 1.5m (5 feet) or more in depth, the CONTRACTOR shall submit a detailed plan to the CITY showing the design of shoring, bracing, sloping, or other revisions to be made for the Workers' protection from the hazard of caving ground during the excavation of such trench. The plan and calculations shall be prepared by a California registered Civil or Structural ENGINEER. No excavation shall start until the ENGINEER has accepted the plan and the CONTRACTOR has obtained a permit from the State Division of Industrial Safety. A copy of the permit shall be submitted to the ENGINEER.

C. The INSPECTOR will provide a competent person trench/excavation certification form to the CONTRACTOR. It shall be completely filled out before any worker has access to trench or excavation and returned to the INSPECTOR before the end of the first working day. The CONTRACTOR shall certify by this form the name of the competent person administering the Work, the soil classification, and the type of excavation protective system provided and/or installed.

D. The CONTRACTOR shall completely fence all excavations to provided protection against anyone falling into the excavation and to the satisfaction of the INSPECTOR. The fencing shall be in place at all times except when workers are present and actual construction operations are in progress.

E. The fencing material shall be chain link fabric or welded wire fabric (6x6-W9xW9 minimum) and 1.5 m (5 feet) high, constructed according to one of the following:

1. Tensioned fencing material and have top and bottom tension wires securely fastened to driven steel posts or other equally rigid elements at a maximum spacing of 3.6m (12 feet); or

2. Untensioned fencing materials securely fastened to extended trench shoring elements at a maximum spacing of 2.4m (8 feet) and fastened to continuous top and bottom rails constructed of nominal 50mm x 100mm (2 in x 4 in) lumber or equally rigid material. Framed panels with suitable supporting elements fastened together to form a continuous fence may also be used.

F. Payment for performing all Work necessary to provide safety measures shall be included in the prices bid for other items of work except where separate bid items for excavation safety are provided, or required by law.

END OF SECTION

SECTION 01581
PROJECT SIGNS

1.1 THE REQUIREMENT

A. The Recipient shall include appropriate acknowledgement of credit to the District for its support when promoting the Funded Activity or using any data and/or information developed under this Agreement. When the Funded Activity involves the construction phase of an Infrastructure Program Project, signage shall be posted in a prominent location at Project site(s) or at the Recipients headquarters and shall include the Safe, Clean Water Program color logo and the following disclosure statement: “Funding for this project has been provided in full or in part from the Los Angeles County Flood Control District’s Safe, Clean Water Program.” At a minimum the sign shall be 2’ x 3’ in size. The Recipient shall also include in each of its contracts for work under this Agreement a provision that incorporates the requirements stated within this paragraph.

B. The size and content of the credit sign will be furnished by the ENGINEER at the time of construction. The INSPECTOR will determine the appropriate location(s). The CONTRACTOR shall provide submittal for ENGINEER’S approval prior to installation.

C. The names, addresses, and specialties of CONTRACTORS, Subcontractors, architects, or engineers may be displayed on removable signs. The size and location shall be subject to the ENGINEER’S approval. Commercial advertising matter shall not be attached to painted on the surfaces of buildings, fences, canopies, or barricades.

D. TIME and INFORMATION type construction notice signs (4 each) per Standard Plan S-791-1 are required. The Inspector will determine appropriate location(s). The time for the TIME sign and the telephone number for the INFORMATION sign will be furnished by the ENGINEER at the time of construction.3

E. C-18 and C-13 ADVANCE CONSTRUCTION NOTICE SIGNS per Standard Plan S-791-1 are required. The INSPECTOR will determine the appropriate locations.

(END OF SECTION)

SECTION 01601
BUY CLEAN CALIFORNIA ACT

1.1 THE REQUIREMENT

A. For projects with bid due dates on or after 7/1/2021 that include eligible materials, CONTRACTOR shall provide current facility-specific Environmental Product Declarations (EPDs) of eligible materials **and** meet the State of California maximum limits for Global Warming Potential (GWP) as listed by the State's Department of General Services after project award. Additional information regarding GWP limits may be found at the following website:
https://www.dgs.ca.gov/PD/Resources/Page-Content/Procurement-Division-Resources-List-Folder/Buy-Clean-California-Act

B. Eligible Materials:

1. Steel: This includes structural steel (hot-rolled sections, hollow structural sections, and plates) and carbon steel reinforcement used in concrete or masonry.
2. Flat glass
3. Mineral wool board insulation

C. A submitted facility-specific Environmental Product Declaration (EPD) must be a current Type III as defined by the International Organization for Standardization (ISO) Standard 14025, and has been 3rd Party verified following applicable Product Category Rules (PCRs). Credentials of 3rd Party showing them to be subject matter experts must be provided by the CONTRACTOR upon request. Minimum stage of coverage for EPDs shall consist of the production life cycle (i.e. product stage) or "cradle to gate". PCR shall be as identified by California Department of General Services for the Buy Clean California Act (BCCA).

D. The EPDs shall be submitted with each eligible material submittal for the product(s) under the technical specification sections for approval by the ENGINEER. Depending on the number of facilities, and product types, more than one (1) eligible material submittal may be required. Once approved, the CONTRACTOR must also provide a copy of the approved EPDs with the payment request to the INSPECTOR. Where a submittal is conditionally approved, pending submission of required EPD, the applicable restrictions as noted below shall apply.

E. Restrictions:

1. For projects with bid due dates on or after 7/1/2021, the CONTRACTOR shall not install any eligible materials or incorporate into the work in any way until the required facility-specific EPDs have been provided and approved, unless otherwise agreed upon by the ENGINEER. Payment for specific eligible material will be withheld until the EPDs for these materials are approved by the ENGINEER and submitted along with the progress payment requests.
2. The CONTRACTOR may be assessed liquidated damages for failure to

complete the project within the time fixed by the terms of the contract resulting from Contractor delays associated with submission and approval of the required EPDs.

F. Optional Eligible Materials:
The following materials are being considered for addition to future Eligible Materials list by the City of Los Angeles. As such, Article E above does not apply to these materials at this time. Furthermore, when using one of the Optional Eligible Materials listed in this Article F below, the CONTRACTOR may submit either facility-specific EPDs as noted on Article C above or an industry average EPD. The Optional Eligible Materials are as follows:

1. Concrete (i.e. corresponding mix designs).

END OF SECTION

SECTION 01611
GUARANTY / WARRANTY

1.1 THE REQUIREMENT

A. The CONTRACTOR shall and does hereby warrant and guaranty that all work executed under this Contract will be free from defects of materials and workmanship for a period of one (1) year from the date of Final Field Acceptance of the project as evidenced by the issuance of a “Statement of Completion” by the Inspector, except for certain specific items of Work, materials and equipment requiring a guaranty or warranty for a greater period of time as may be required elsewhere in the Contract Documents. In the event, however, that portions of the Work are sufficiently complete to allow use or occupancy by the CITY in the manner and for the purposes intended prior to final completion and acceptance of the project, the guarantee period will commence on the date shown on the “Statement of Partial Completion.”

B. The CONTRACTOR hereby agrees to indemnify and save harmless the CITY, and their officers, agents and employees against and from all claims and liability arising from damage and injury due to said defects. The CONTRACTOR shall repair or replace, at no cost to the CITY, any and all such defective Work and all other Work damaged thereby, which becomes defective during the term of the above-mentioned guaranties and warranties.

C. Within thirty (30) calendar days prior to completion of all Work, the CONTRACTOR shall submit to the CITY original copies of all manufacturers’ product guaranties and warranties covering all supplied and installed equipment and, where applicable, systems.

D. In addition to the requirements of INSURANCE, Contract Bonds, of the GENERAL CONDITIONS, it shall be understood that the Surety for the faithful performance bond, submitted in conformance with the terms of the Contract for this project, is liable on its bond for all obligations of the CONTRACTOR including guaranty provisions. The “Performance Bond” shall remain in effect until the end of the guarantee period.

E. The CONTRACTOR shall, within twenty-four (24) hours of notice from the ENGINEER of any Work not in accordance with the requirements of the Contract, or any defects in the Work, commence and prosecute with due diligence all work necessary to fulfill the terms of this Section and to complete the Work within a period of time as approved by the ENGINEER. The CONTRACTOR shall notify the ENGINEER of the repair schedule before commencing the repairs and notify the ENGINEER to arrange for inspection. The CONTRACTOR shall submit a written report of the defect and methods of correction. In the event of failure by the CONTRACTOR and/or its Surety to respond to the notice or to complete the Work required by this Section within the time specified, the CITY shall proceed to have such Work done at the CONTRACTOR's expense. The CONTRACTOR or its Surety shall promptly reimburse the CITY all direct and indirect cost associated with performing this Work.

F. Repairs, replacements or changes made under the requirements of this Section shall be warranted for the specified guarantee period, but no less than one year, beginning on the date of acceptance of the repairs, replacements or changes.

END OF SECTION

SECTION 01630
SUBSTITUTIONS AND "OR EQUAL" SUBMITTAL

1.1 THE REQUIREMENT

A. The CONTRACTOR may supply any of the materials specified or offer an equivalent. The ENGINEER shall determine whether the material offered is equivalent to that specified. The CONTRACTOR shall make all "Or Equal" submittals within thirty (30) calendar days after issuance of Notice to Proceed. Any request or submittal received after the specified period will be considered as NOT EQUAL to that so specified and will be processed as a substitution described hereinafter.

B. Whenever any particular material, process, or equipment is indicated by patent, proprietary or brand name, or by name of manufacturer, such wording is used for the purpose of facilitating its description and shall be deemed to be followed by the words ‘or equal.’ A listing of materials is not intended to be comprehensive, or in order of preference. The CONTRACTOR may offer any material, process, or equipment considered to be equivalent to that indicated. The substantiation of offers shall be submitted as provided in the Contract Documents.

C. The CONTRACTOR shall, at its expense, furnish data concerning items offered by it as equivalent to those specified. The CONTRACTOR shall have the material tested as required by the ENGINEER to determine that the quality, strength, physical, chemical, or other characteristics, including durability, finish, efficiency, dimensions, service, and suitability are such that the items will fulfill its intended function.

D. Test methods shall be subject to the approval of the ENGINEER. Test results shall be reported promptly to the ENGINEER, who will evaluate the results and determine if the substituted items are equivalent. The ENGINEER’S findings shall be final. Installation and use of substituted items shall not be made until approved by the ENGINEER.

E. All manufacturers' data submitted to the ENGINEER for review and acceptance shall clearly identify each proposed substitute with the corresponding Contract Drawing detail and Specification Section. If the ENGINEER decides to accept for use in the Project a material, process or article which is not the equal of that specified, substitution shall be made in the manner described in CHANGES AND EXTRA WORK of the GENERAL CONDITIONS, with a credit to the CITY for the difference in value.

F. The ENGINEER shall determine whether the material offered is equivalent to that specified. Any revision to structures, piping, mechanical, electrical, instrumentation, or any other work made necessary by such substitution must be approved by the ENGINEER, and the entire cost both direct and indirect of these revisions shall be borne by the CONTRACTOR.

G. Any materials, process, or article may be requested as a substitution by the CONTRACTOR, in lieu of that specified, under the following conditions:

1. Requests must be submitted in writing and in the manner described in SHOP DRAWINGS / SUBMITTALS of these GENERAL REQUIREMENTS.

2. Requests must be submitted thirty (30) calendar days prior to starting the work, as established by the ENGINEER, so as not to cause any delay in completion of the Project. No other request will be considered after expiration of the period specified, except that in exceptional cases where it is determined to be in the best interest of the CITY, as approved by the ENGINEER.

3. The CONTRACTOR agrees to pay for all Engineering and design services, if required, to make all changes and adjustments in material and work of all trades directly or indirectly affected by the substitute, to the satisfaction of the ENGINEER, at no cost to the CITY.

4. All requests for substitution shall be made through the CONTRACTOR. Submissions by the CONTRACTOR shall imply the CONTRACTOR'S approval of such substitution.

5. No requests for substitutions will be considered during the bidding period.

6. The CONTRACTOR shall furnish adequate data with each request for approval of a substitute to enable the ENGINEER to evaluate the proposed substitution.

7. If a substitute offered by the CONTRACTOR is not found to be equal to the specified material, then CONTRACTOR shall furnish and install the specified material.

8. The specified Contract completion time shall not be affected by any circumstance developing from the provisions of this Section.

END OF SECTION

SECTION 01711
SITE INVESTIGATION

1.1 THE REQUIREMENT

A. CONTRACTOR shall investigate the Jobsite prior to Bid and during construction to ascertain all conditions affecting necessary procedures and sequencing of the Work operations in the execution of the Contracted Work in accordance with the requirements shown in Section 01731 – CUTTING AND PATCHING of the GENERAL REQUIREMENTS, herein and elsewhere.

1. Utilities in Abandoned Streets, Easements, and/or Alleys: CONTRACTOR is responsible for verifying and satisfying himself as to conditions under which work on such utilities will be done, such as what lines will be left in place, removed or rerouted. CONTRACTOR shall verify with Utility Map, Substructure Maps, District Maps & Street Lighting Map, etc., which are available at the Public Works Counter and in the Utility Companies. Should existing inactive utility lines (not shown or noted on the Drawings) be encountered, they shall be left-in-place and properly capped if not in way of new construction or if sufficiently below finish grade; as directed by the CITY ENGINEER. CONTRACTOR shall bear all costs involved in removing, rerouting or capping of such lines. CONTRACTOR shall contact the interested utility agencies as necessary to determine the Work operations involved.

2. CONTRACTOR shall report to the ENGINEER, prior to the Bid, any adverse condition(s), which would affect the proper execution of the Contracted Work and shall not proceed until instructed by the ENGINEER. Except as provided in GENERAL REQUIREMENTS Section 01253 – DIFFERING SITE CONDITION, failure to report any such conditions shall constitute acceptance of all site conditions, and any required removal, repair, or replacement caused by unsuitable conditions shall be performed by the CONTRACTOR at its sole cost and expense.

3. Start of Contracted Work at the Jobsite shall imply CONTRACTOR'S acceptance of job conditions.

B. Work Determination: CONTRACTOR shall satisfy itself regarding job/site conditions, the nature and types of work to be performed and shall be responsible for the determination of all classes of work to be accomplished at the Jobsite or at the manufacturer's plant.

C. Allotted Working Space: CONTRACTOR shall limit work operations to the "working site" or "Jobsite" or "Worksite," and areas immediately adjacent thereto, as shown on the Contract Drawings, specified or authorized by the CITY ENGINEER.

1.2 UTILITY LOCATION

A. Unless specified otherwise, prior to commencing any excavation or other work, it is the CONTRACTOR'S responsibilities to verify and/or determine the location and the depth of underground main distribution conduits, such as, but not limited to, water, gas, sewer, storm water, electric power, oil, telephone or cable television, in the area which is known, or reasonably should be known, to contain such subsurface installations. CONTRACTOR shall search known substructure records, contact and verify with the utility companies, and pothole existing subsurface installation to determine their locations and elevation, at no additional cost to the CITY as part of the Contracted Work and requirements of the Los Angeles City Ordinance No. 150,478.

B. Coordination

1. The CONTRACTOR is advised that the Drawings usually depict the location of substructures as they existed when the project was designed. Present-day information may indicate that new facilities may have been added, or are going to be added, or that some of those substructures are now, or will be, relocated, abandoned, removed, lowered, raised, blanketed, encased, enlarged, protected, or altered in some other way. The CONTRACTOR shall carefully examine the proposed construction site prior to Bid and during construction for any evidence of recent surfacing of excavations, or the possible conflict with surface or aerial installations, and the latest substructure maps, and bid accordingly. If further information or clarification is desired, CONTRACTOR is urged to immediately contact the following:

   a. The appropriate utility companies;

   b. The appropriate District Office of the Bureau of Engineering; and/or

   c. City of Los Angeles, Utility Coordination Section of the Project Award and Control Division
   1149 S. Broadway, Suite 140,
   Los Angeles, CA 90015
   (213) 847-0624.

2. Review and verify with the information indicated on the Contract Drawings, the Summary of First Notice Replies (see Attachment No. 01711-A1) and the information provided in the GENERAL REQUIREMENTS Section 01112 - DESCRIPTION OF WORK.

1.3 Utility Protection

A. The CONTRACTOR shall not interrupt the service function or disturb the support of any utility without authority from the owner or order from the CITY. All valves, switches, vaults, and meters shall be maintained readily accessible for emergency shutoff.

B. Where protection is required to ensure support of utilities located as shown on the Plans or in accordance with Subsection 1.2 – Utility Location, above, the CONTRACTOR shall, unless otherwise provided, furnish and place the necessary protection at its expense.

C. Upon learning of the existence and location of any utility omitted from or shown incorrectly on the Plans, the CONTRACTOR shall immediately notify the ENGINEER in writing. When authorized by the ENGINEER, support or protection of the utility will be paid for as provided in SECTION 01254 – CHANGE ORDERS of the GENERAL REQUIREMENTS.

D. The CONTRACTOR shall immediately notify the ENGINEER and the utility owner if any utility is disturbed or damaged. The CONTRACTOR shall bear the costs of repair or replacement of any utility damaged if located as noted above, in Subsection 1.2 – Utility Location.

E. When placing concrete around or contiguous to any non-metallic utility installation, the CONTRACTOR shall, at its expense:

1. Furnish and install a 50mm (2 inch) cushion of expansion joint material or other similar resilient material; or

2. Provide a sleeve or other opening which will result in a 50mm (2 inch) minimum-clear annular space between the concrete and the utility; or

3. Provide other acceptable means to prevent embedment in or bonding to the concrete.

1.4 Utility Removal

A. Unless otherwise specified, the CONTRACTOR shall remove all interfering portions of utilities shown on the Plans or indicated in the Bid documents as “abandoned” or “to be abandoned in place”. Before starting removal operations, the CONTRACTOR shall ascertain from the CITY whether the abandonment is complete, and the costs involved in the removal and disposal shall be included in the Bid for the items of work necessitating such removals.

1.5 Utility Relocation

A. When feasible, the owners responsible for utilities within the area affected by the Work will complete their necessary installations, relocations, repairs, or replacements before commencement of work by the CONTRACTOR. When the Plans or Specifications indicate that a utility installation is to be relocated, altered, or constructed by others, the CITY will conduct all negotiations with the owners and work will be done at no cost to the CONTRACTOR, except as provided in SSPWC Section 301-1.6. Utilities which are relocated in order to avoid interference shall be protected in their position and the cost of such protection shall be included in the Bid for the items of Work necessitating such relocation.

B. After award of the Contract, portions of utilities which are found to interfere with the Work will be relocated, altered or reconstructed by the owners, or the ENGINEER may order changes to the Work to avoid interference. Such changes will be paid for in accordance with SECTION 01254 – CHANGE ORDERS of the GENERAL REQUIREMENTS. However, for interfering City owned utilities

identified on the Plans including but not limited to sewers, storm-drains, traffic signal or streetlight conduits and appurtenances, their restoration, alteration, or reconstruction shall be performed by the CONTRACTOR and the associated cost shall be included in the CONTRACTOR's bid.

C. When the Plans or Specifications provide for the CONTRACTOR to alter, relocate, or reconstruct a utility, all costs for such work shall be included in the Bid for the items of work necessitating such work. Temporary or permanent relocation or alteration of utilities requested by the CONTRACTOR for its convenience shall be its responsibility and it shall make all arrangements and bear all costs.

D. The utility owner will relocate service connections as necessary within the limits of the Work or within temporary construction or slope easements. When directed by the ENGINEER, the CONTRACTOR shall arrange for the relocation of service connections as necessary between the meter and property line, or between a meter and the limits of temporary construction or slope easements. The relocation of such service connections will be paid for in accordance with the provisions of SECTION 01254 – CHANGE ORDERS of the GENERAL REQUIREMENTS. Payment will include the restoration of all existing improvements which may be affected thereby. The CONTRACTOR may agree with the owner of any utility to disconnect and reconnect interfering service connections. The CITY will not be involved in any such agreement.

1.6 Utility Delays

A. The CONTRACTOR shall notify the ENGINEER of its construction schedule insofar as it affects the protection, removal, or relocation of utilities. Said notification shall be included as part of the construction schedule required in SECTION 01321 - CONTRACTOR'S CONSTRUCTION SCHEDULE AND REPORTS OF THE GENERAL REQUIREMENTS. The CONTRACTOR shall notify ENGINEER in writing of any subsequent changes in the construction schedule which will affect the time available for protection, removal, or relocation of utilities.

B. The CONTRACTOR will not be entitled to damages or additional payment for delays attributable to the utility relocations or alterations if correctly located, noted, and completed in accordance with 1.2 Utility Location, above.

C. The CONTRACTOR may be given an extension of time for unforeseen delays attributable to the unreasonably protracted interference by utilities in performing Work correctly shown on the Plans

D. The CITY will assume responsibility for the timely removal, relocation, or protection of existing main or trunkline utility facilities within the area affected by the Work if such utilities are not identified in the Contract Documents. The CONTRACTOR will not be assessed liquidated damages for any delay caused by failure of CITY to provide for the timely removal, relocation, or protection of such existing facilities.

E. If the CONTRACTOR sustains loss due to delays attributable to interferences, relocations, or alterations not covered by Subsection 1.2 - Utility Location, above, which could not have been avoided by the judicious handling of forces, equipment, or plant, there shall be paid to the CONTRACTOR such amounts as

the ENGINEER may find to be fair and reasonable compensation for such part of the CONTRACTOR'S actual loss as was unavoidable and the CONTRACTOR may be granted an extension of time.

F. Payment to the CONTRACTOR for actual loss due to a protracted utility delay shall be calculated based on wage increases, price increases of material and equipment, additional insurance costs and actual direct costs of maintaining the Worksite incurred because of the utility delay.

1.7 Utility Cooperation.

A. When necessary, the CONTRACTOR shall so conduct its operations as to permit access to the Worksite and provide time for utility work to be accomplished during the progress of the Work.

END OF SECTION

(SEE ATTACHMENT)

ATTACHMENT TO SECTION 01711

Attachment to General Requirements Section 01711 consists of one (1) document, as follows:

ATTACHMENT NUMBER	TITLE OF ATTACHMENT	NUMBER OF PAGES IN THIS ATTACHMENT
01711-A1	Summary of First Notice	(as required for each project)

Date: December 6, 2021

CITY OF LOS ANGELES
DEPARTMENT OF PUBLIC WORKS
BUREAU OF ENGINEERING

SUMMARY OF FIRST NOTICE REPLIES

W.O. No.:	Job ID.:	Project Title:
EW40080D	**1457**	**STRATHERN PARK NORTH STORMWATER CAPTURE PROJECT**

Bidders are advised that project plans usually depict the location of substructures as they existed when the project was designed. Present-day information may indicate that new facilities may have been added or are going to be added. Some of those substructures may now be or will be relocated, abandoned, removed, lowered, raised, blanketed, encased, enlarged, protected, or altered in some other way. Bidders are urged to carefully examine the proposed construction site for any evidence of recent surfacing of excavations, or the possible conflict with surface or aerial installations. Contractor should use the latest substructure maps and prepare their bid accordingly. If further information or clarification is desired, bidders are urged to immediately contact the appropriate utility company or the appropriate District Office of the Bureau of Engineering. Contractors may also contact the Utility Coordination Group, 1149 S. Broadway Street, Suite 140, Los Angeles, CA 90015, naajia.jaml@lacity.org. The contractor will need to coordinate work with utility companies during construction if necessary.

Based on the confirmation from the following utility companies, they have facilities within the improvement area that will definitely be affected.

NONE

Based on the confirmation from the following utility companies, they have facilities within the improvement area that may not require relocation but will mark them upon request. Notify Underground Service Alert at 1-800-227-2600 two working days prior to excavation to have facilities marked:

BUREAU OF STREET LIGHTING	Daniel Ordonia	(213) 847 – 1568
SOUTHERN CALIFORNIA GAS – DISTRIBUTION	Art Alfaro	(213) 231 – 7808
CHARTER COMMUNICATIONS	Robert Reihs	(661) 483 – 3030
DWP – POWER	Gibson Phan	(213) 367 – 2715
SCE	Anthony Devestern	(661) 775 – 1040

Based on the confirmation from the following utility companies, there are no facilities within the improvement area that will be affected:

INFORMATION TECHNOLOGY AGENCY	Frank Gonzalez	(213) 978 – 4032

SOUTHERN CALIFORNIA GAS – TRANSMISSION	Ron Silver	(818) 701 – 4536

The following utility companies have not responded to the First Utility Notice, but they may have facilities within the improvement area.

AT&T CALIFORNIA	Cathy Hurtado	(626) 817 – 4263
LADWP – WATER – EAST VALLEY	Glenn Micko	(213) 367 – 1211

Gregg Vandergriff, PE
Division Engineer
Project Award and Control Division
Bureau of Engineering
Department of Public Works

SECTION 01712
SUBSURFACE DATA

1.1 THE REQUIREMENT

A. All soil and test hole data, water table elevation, and soil analyses shown on the Drawings or included in the Geotechnical Evaluation Report in the Specification Appendix apply only at the location of the test holes and to the depth indicated. Any additional subsurface exploration shall be done by the CONTRACTOR at their own expense. The indicated elevation of the water table is that level at the date the test hole data was obtained. It is the CONTRACTOR'S responsibility to determine and allow for the elevation of groundwater at the date of Project construction. A difference in elevation between the ground water shown in soil boring logs and groundwater actually encountered during construction will not be considered as a basis for extra work.

END OF SECTION

SECTION 01721
MOBILIZATION

1.1 THE REQUIREMENT

A. General

Whether Mobilization is included as a Contract Bid Item in the Bid Proposal Form or specified as part of the lump sum in the Contract Documents, the cost of labor, equipment, materials and incidentals for doing all the work in mobilization (in advance of construction operations and not directly attributable to any specific bid item) shall be included in the Contract Price Breakdown and progress payment estimate. If there is no mobilization bid item, the CONTRACTOR shall submit to the INSPECTOR for approval the Contract Price Breakdown with the amount established for mobilization.

Mobilization shall include, but not be limited to, the following items, all as required for the proper performance and completion of the Work:

1. Obtaining all permits, licenses, insurance, and bonds. Providing copies to the ENGINEER.

2. Moving onto the Jobsite all of CONTRACTOR'S plant and equipment as required.

3. Erecting temporary buildings and other construction facilities.

4. Installing temporary construction power and wiring.

5. Establishing fire protection system for its temporary facilities.

6. Developing construction water supply.

7. Providing field office trailers for the CONTRACTOR, complete with all specified equipment, furnishings and utility services.

8. Providing sanitary facilities or connecting to onsite sanitary facilities as specified.

9. Providing potable water facilities as specified. This includes a means by which all on site CONTRACTOR, Subcontractor or supplier personnel can wash their hands with soap.

10. Arranging for, and erection of, CONTRACTOR'S work and storage yards and sheds.

11. Submitting all required Subcontractor insurance certificates and bonds.

12. Posting all CAL/OSHA required notices and establishment of safety programs.

13. Having the CONTRACTOR'S representative at the Jobsite full time.

14. Furnishing of Construction Schedule, Contract Price Breakdown and Submittal Schedule.

15. Erecting all temporary fencing.

16. Erecting CONTRACTOR signs. The names, addresses, and specialties of CONTRACTORS, subcontractors, engineers or architects may be displayed on removable signs. The size and location shall be subject to the ENGINEER'S approval. Commercial advertising matter shall not be attached to or painted on the surfaces of buildings, fences, canopies or barricades.

17. Installing Building Credit signs and Advance Construction Notice signs. The Building Credit sign shall be submitted to the ENGINEER for approval prior to installation. Refer to GENERAL REQUIREMENTS Section 01581 – Project Signs, for additional requirements.

18. Providing an air-conditioned meeting room with a conference table, a minimum of [10] chairs and utilities for construction meetings within the CONTRACTOR'S field office.

19. Furnishing and set-up of field office(s) for the ENGINEER and INSPECTOR. If it is necessary to relocate the INSPECTOR'S job office to a new facility or relocation during the course of the Contract provide the required labor and equipment. The new facility shall be properly equipped and conform to the requirements shown in Subsection B.2, Field Offices herein. The CONTRACTOR shall obtain the ENGINEER'S approval of the new location thirty (30) days in advance.

B. Field Offices For The Inspector And The Engineer

1. Unless specified otherwise, the CONTRACTOR shall, at no cost to the CITY, furnish, install, maintain, and remove all temporary light, telephone, power and water (including piping, wiring, lamps and other equipment necessary for the field offices).

2. The CONTRACTOR shall furnish the ENGINEER and the INSPECTOR, for the duration of the Contract, and through the STARTUP ASSISTANCE period, at no additional cost to the CITY, a furnished field office with janitorial services and maintenance agreements for all equipment provided under this Section. This office shall have a minimum floor space of 300 square feet, at least 2 door(s), and window area of not less than 10 square feet. All exterior doors and windows shall be provided with screens. All exterior doors shall be provided with door handles with double deadbolt locks and the CONTRACTOR shall provide the INSPECTOR 3 keys as requested by the INSPECTOR. This field office shall be furnished as follows:

   a. 2 plan table(s), 2 standard 5-foot double pedestal desk with a drawer suitable for holding files, 2 chairs, 1 drafting stool, 1 plan racks, 3 - 4 drawer filing cabinet suitable to hold legal or letter size hanging file folders, 2 storage cabinet with a minimum of 4 adjustable shelves.

b. Heating and air conditioning of sufficient capacity shall be provided at no expense to the CITY to adequately control the temperature at all times.

c. Bottled drinking water shall be provided within the office. Sanitary facilities shall be provided directly adjoining the office for the sole use of the ENGINEER and the INSPECTOR. [Sanitary facilities shall include a toilet and wash basin with hot and cold running water.]

d. One console type, dry, indirect electrophotographic process network-capable copier/printer/scanner capable of 60 letter size copies per minute. Copier shall be able to copy 11" X 17" ledger size paper and be able to reduce to 65% and enlarge to 154%. Copier shall have a sorter/finisher with a staple cartridge and have additional cassettes for letter, legal, ledger-size paper. The copier's primary paper supply shall be 8.5" X 11" size. The copier shall be installed new or like new in good working order and the CONTRACTOR shall maintain the unit in operating condition throughout the life of the Project.

e. One Color inkjet all-in-one machine capable of printing, copying, and scanning up to 11” X 17”. Printing shall be a minimum of 35 pages per minute in black and 28 pages per minute in color. Resolution shall be a minimum of 6000 x 1200 dpi. A 50-sheet document feeder shall be included. All toner cartridges shall be provided by the contractor for the duration of the project.]

f. Eight Duplex convenience outlets for electrical power [a minimum of four per staff person].

g. Three Outdoor lighting fixture with 300-Watt bulb to effectively light the area around the office facility.

h. One Maintenance and service agreements for all office equipment during the contract period.

i. The CONTRACTOR shall provide janitorial services twice-a-week for the field offices for the duration of the Contract Work.

j. Any computer equipment or software furnished under this section or under an Allowance for City Field Offices shall be the property of the City at the end of the project.

k. The CONTRACTOR shall provide a high-speed internet connection for the duration of the Contract and through the start up assistance period.

C. Temporary Construction Utilities

1. Construction Water:

a. Potable water will be made available for the CONTRACTOR’S use from the existing fire hydrant system, as located on the

Plans, or as directed by the ENGINEER. The CONTRACTOR shall meter water usage and pay for the cost of water consumption. The CONTRACTOR shall make arrangements with the servicing water utility company. A backflow preventer shall be provided as per the Plumbing Code.

2. Construction Power:

   a. The CONTRACTOR shall provide all electrical power required in performance of the Work and shall pay all installation charges and monthly bills in connection therewith. The CONTRACTOR shall provide and maintain all temporary and permanent power. The CONTRACTOR shall pay for all permits. All temporary connections for electricity shall be subject to approval of the ENGINEER and the power company representative, and shall be removed in like manner at the CONTRACTOR'S expense prior to final acceptance of the Work.

3. Telephones:

   a. The CONTRACTOR shall provide and maintain at all times during the progress of the Work, at its own expense, not less than three (3) telephones in good working order, at its own field construction office. Each such telephone shall be connected to an established exchange for toll service and with all other telephones utilized by the CONTRACTOR.

4. Temporary Ventilation:

   a. The CONTRACTOR shall provide adequate means to furnish temporary ventilation within Work areas at CONTRACTOR'S own expense and conforming to applicable requirements and standards of Federal, State, County and the 2020 Los Angeles CITY Building Codes and Amendments.

D. Contractor's Temporary Storage Facilities

1. The CONTRACTOR shall provide an adequate temporary shed on the site in a location designated by the ENGINEER for the safe storage of material and equipment. The shed shall be weathertight with a wood floor above grade. The shed shall be removed upon completion of the Work, or when so ordered by the ENGINEER.

E. Sanitary Facilities

1. The CONTRACTOR shall provide adequate sanitary conveniences of an approved type for the use of persons employed on the Work, and properly secluded from public observation, shall be provided and maintained by the CONTRACTOR in such a manner and at such points as shall be required or approved by the INSPECTOR. These conveniences shall be maintained at all times without nuisances and their use shall be strictly enforced. Upon completion of the Contracted Work, they shall be removed from the premises, leaving the premises clean and free from a nuisance.

F. Job Bulletin Board

1. The CONTRACTOR shall provide and mount on the CONTRACTOR'S Field Office, where it can be readily seen by the CONTRACTOR'S employees, a substantially built 3-feet high x 4-feet wide bulletin board, with a framed glass door protected on the outside with a 2-inch x 2-inch galvanized mesh and lock.

G. Protection Enclosures

1. Precautions shall be exercised by the CONTRACTOR at all times for the protection of persons and property.

2. CONTRACTOR shall furnish (or cause to be furnished) and maintain for the duration of Contracted Work, all scaffolds, covers, tarpaulins, canopies, warning signs, steps, bridges and other temporary construction and other protective devices as required by the INSPECTOR and the Local and State Rules, Ordinances and/or Regulations necessary for protection of public and private property and public safety.

3. Such enclosures shall be of reasonably good appearance and shall be maintained free of signs, posters, writing, markings and any other thing which would detract from a reasonably good appearance.

H. Temporary Fencing and Gates

1. Provide and maintain for the duration of the Contracted Work temporary chain link fencing of design and type needed to prevent entry onto the Jobsite and exterior Work area by the public.

I. Plan Box

1. CONTRACTOR shall provide a plan box to store a full set of contract drawings and the project manual for the duration of the project. The box shall be of the appropriate size to contain the contract drawings and the project manual, and shall be temporary, weather tight, and include a cover, lock, and proper identification.

J. Construction Sign

1. Materials:

a. Posts: 4-inch x 6-inch redwood, C.R.A. Foundation grade.

b. Frame: Douglas fir solid stock, W.C.L.B., and Better, V.G. Finish.

c. Metal Panel: No. 22 gauge sheet steel.

d. CITY Seal: Provided by ENGINEER.

2. Fabrication:

a. Securely attach frame to posts with adequate fasteners.

b. Miter and nail frames, conceal fastenings and set nails.

c. Secure a sheet metal panel to frame with wood stops.

3. Painting:

a. By sign painters.

b. On all surfaces of posts, panel and frame, 1 coat of primer and 1 coat of finish paint on concealed surfaces not glued; 1 coat of primer and 2 coats of finish paint on exposed surfaces, and anti-graffiti coating.

c. With exterior wood primer and exterior oil paint**.**

d. White finish on all surfaces; black letters and black frames reveal.

4. Installation:

a. Set posts into natural ground; location as directed by the ENGINEER or where indicated on the Contract Drawings.

5. Removal:

a. Upon completion of Contracted Work or when directed by the ENGINEER.

6. Modifications:

a. During the course of the Contract, the CONTRACTOR may be required to make changes to lettering, as directed by the ENGINEER, up to forty (40) letters regardless of the letter size, without additional cost to the CITY.

b. Repair and recoat the modified area in a manner that will eliminate the evidence of the changes.

K. Permits

1. The CONTRACTOR shall be responsible for obtaining and paying for all permits, licenses and fees in a timely manner, in accordance with Section 00217 of the General Conditions. The CONTRACTOR shall be aware of the expiration date of all building permits, plan checks and/or extensions when the ENGINEER turns over such documents to the CONTRACTOR for construction use. If the CONTRACTOR does not obtain the permits in a timely manner, the CONTRACTOR shall be responsible for the delay, and the additional cost incurred as a result of the delay, in obtaining and paying for the permits or licenses (such as costs to re-plan check, plan modification due to code changes, etc).

2. The CONTRACTOR shall be familiar with all aspects of the Project. For the Project which requires a haul route hearing and haul route bonding as part of the Grading Permit approval process, CONTRACTOR shall

prepare and secure the Grading Permit as soon as the construction contract is awarded in order to mitigate any possible delays due to the haul route hearing, The haul route map preparations shall be as required by the Los Angeles CITY Department of Building and Safety, Grading Division, and Section 02220 – EARTHWORK of the Project Manual.

3. The CONTRACTOR shall obtain and pay for the following:

   a. Building Permit for each structure

   b. Permits to Use Street Space and Deposit Building Materials

   c. Sewer Connection Permit

   d. Storm Drain Permit

   e. Grading Permit

   f. Sidewalk/Driveway – "A" Permit

   g. Street Work – "B" Permit

   h. Excavation in the Public Right-of-Way – "U" Permit

   i. Plumbing Permit

   j. Demolition Permit

   k. Electrical Permit

   l. Los Angeles County Flood District

   m. Shoring Permit

   n. Sign Permit

   o. Stormwater Pollution Prevention Plan (SWPPP) for stormwater pollution control measures for construction activities

   p. California Department of Transportation Permits (CITY will submit for plan check and pay for owner's permit. CONTRACTOR shall submit and pay for work permit.)

L. Utility Services Connections

1. Within five (5) days after the Notice-to-Proceed, notify the serving utilities that the Project is under construction and furnish them dates on which the services will be required. Furnish the ENGINEER a duplicate copy of all service requests.

2. Should any major changes to the Work indicated be necessary to complete the utility installation, notify the ENGINEER in writing at once

and cease all the Work affected until approval for the required modifications has been obtained from the ENGINEER.

3. Water Service Connections: Make all arrangements with the proper authorities for the domestic water service. The CONTRACTOR will pay for all fees and charges. Construction water is to be separately arranged and paid for by the CONTRACTOR. If the CONTRACTOR uses an existing water supply for construction the billing shall be transferred to the CONTRACTOR prior to the start of construction. A duplicate of the transfer documentation shall be provided to the ENGINEER.

4. Power Service Connections: Make all arrangements with the proper authorities for the new power service connections and testing of electrical equipment and control and removal of existing power service connections as part of the contract. **See Sheet [Sheet Number], Sheet E `-_____] and attached information from [Name of Power Company] (Attachment No.__)]** for coordination. The CONTRACTOR will pay for all fees and charges. Power for construction and testing equipment to be separately arranged and paid for by the CONTRACTOR. The CONTRACTOR shall contact **[Name]** of **[Name of Power Company]** at **[Telephone Number].**

5. If the CONTRACTOR is delayed during the inspections by local authorized agencies or work by utility companies, not the fault of the CONTRACTOR and a critical path is impacted, the CONTRACTOR shall be entitled to a non-compensable time extension and shall have no claim for any other compensation for such delay.

6. If the CONTRACTOR is delayed during the inspections by local authorized agencies or work by utility companies, not the fault of the CONTRACTOR and a critical path is impacted, the CONTRACTOR shall be entitled to a non-compensable time extension and shall have no claim for any other compensation for such delay.

1.1 THE REQUIREMENT

A. Mobilization shall consist of preparatory work and operations including, but not limited to, those necessary for the movement of personnel, equipment, supplies and incidentals to the Project site for all other work and operations that must be performed or costs incurred before beginning work on the various Contract items on the Project site

1.2 SIGNS

The names, addresses and specialties of CONTRACTORS, subcontractors, engineers or architects may be displayed on removable signs. The size and location shall be subject to the ENGINEER'S approval. Commercial advertising matter shall not be attached to or painted on the surfaces of buildings, fences, canopies or barricades. Refer to GR Section 01581 – Project Signs, for additional requirements.

A. Removal Facilities

1. Field offices shall be removed upon completion of the Work. Buildings and equipment furnished by the CONTRACTOR at the Project site under the provisions of this Section are the property of the CONTRACTOR.

B. Basis of Payment

1. All costs incurred in furnishing, maintaining, servicing, and removing field offices, laboratories, or bathhouse facilities required at the Project site shall be included in the Bid item for furnishing such facilities. If such facilities are required by the Plans or Specifications and no bid item is provided in the proposal, the costs shall be included in other items for which bids are entered. Such costs incurred in connection with offices and laboratories at plants shall be borne by the plant owners. Payment for office facilities will be made as follows: twenty-five percent (25%) when completely installed, seventy-five (75%) prorated over the remainder of the Contract duration.

1.3 THE REQUIREMENT

A. Mobilization shall consist of preparatory work and operations including, but not limited to, those necessary for the movement of personnel, equipment, supplies, and incidentals to (each) Project site for all other work and operations that must be performed or costs incurred before beginning work on the various Contract items on the Project site(s).

1. All furnishings, computer, printer, and related equipment shall be returned to the CONTRACTOR at the end of the Contract Work.

B. Temporary Construction Utilities

1. Construction Water:

a. Potable water will be made available for the CONTRACTOR's use from the existing fire hydrant system, as directed by the ENGINEER. The CONTRACTOR shall meter water usage and pay for the cost of water consumption. The CONTRACTOR shall make arrangements with the servicing water utility company. A backflow preventer shall be provided as per the Plumbing Code.

2. Construction Power:

a. The CONTRACTOR shall provide and maintain all electrical power in performance of the Work and shall pay all installation charges and monthly bills in connection therewith. The CONTRACTOR shall pay for all necessary permits. All temporary connections for electricity shall be subject to approval of the ENGINEER and the power company representative, and shall be removed in like manner at the CONTRACTOR's expense prior to final acceptance of the Work.

C. Contractor's Temporary Storage Facilities

1. The CONTRACTOR shall locate and secure an adequate temporary area near the project site for the safe storage of material and equipment.

The temporary area shall be subject to approval of the ENGINEER and the INSPECTOR. All materials associated with the temporary area shall be removed upon completion of the Work, or when so ordered by the ENGINEER.

D. Sanitary Facilities

1. The CONTRACTOR shall provide adequate sanitary conveniences of an approved type for the use of persons employed on the Work and properly secluded from public observation. The facility shall be provided and maintained by the CONTRACTOR in such a manner and at such points as shall be required or approved by the INSPECTOR. These conveniences shall be maintained at all times without nuisances and their use shall be strictly enforced. Upon completion of the Contracted Work, they shall be removed from the premises, leaving the premises clean and free from nuisance.

E. Job Bulletin Board

1. The CONTRACTOR shall provide and mount on the CONTRACTOR's Field Office, where it can be readily seen by the CONTRACTOR's employees, a substantially built 3' high x 4' wide bulletin board, with a framed glass door protected on the outside with a 2-inch x 2-inch galvanized mesh and lock.

F. Protection Enclosures

1. Precautions shall be exercised by the CONTRACTOR at all times for the protection of persons and property.

2. CONTRACTOR shall furnish (or cause to be furnished) and maintain for the duration of Contracted Work, all scaffolds, covers, tarpaulins, canopies, warning signs, steps, bridges and other temporary construction and other protective devices as required by the INSPECTOR and the Local and State Rules, Ordinances and/or Regulations necessary for protection of public and private property and public safety.

3. Such enclosures shall be of reasonably good appearance and shall be maintained free of signs, posters, writing, markings and any other thing which would detract from a reasonably good appearance.

G. Permits

1. The CONTRACTOR shall be responsible for obtaining and paying for all permits, licenses and fees in a timely manner, in accordance with Section 00217 of the General Conditions. The CONTRACTOR shall be aware of the expiration date of all building permits, plan checks and/or extensions when the ENGINEER turns over such documents to the CONTRACTOR for construction use. If the CONTRACTOR does not obtain the permits in a timely manner, the CONTRACTOR shall be responsible for the delay, and the additional cost incurred as a result of the delay, in obtaining and paying for the permits or licenses (such as costs to re-plan check, plan modification due to code changes, etc).

H. Utility Services Connections

1. Within five (5) days after the Notice-to-Proceed, notify the serving utilities that the Project is under construction and furnish the representatives with dates on which services will be required. Furnish the ENGINEER with a duplicate copy of all service requests.

2. Should any major changes to the Work indicated be necessary to complete the utility installation, notify the ENGINEER in writing at once and cease all the Work affected until approval for the required modifications has been obtained from the ENGINEER.

END OF SECTION

(SEE ATTACHMENT)

ATTACHMENTS TO SECTION 01721

Attachments to General Requirements Section 01721 consists of one (1) document, as follows:

ATTACHMENT NUMBER	TITLE OF ATTACHMENT	NUMBER OF PAGES IN THIS ATTACHMENT
01721-A1	Construction Water Supply Schematic	1

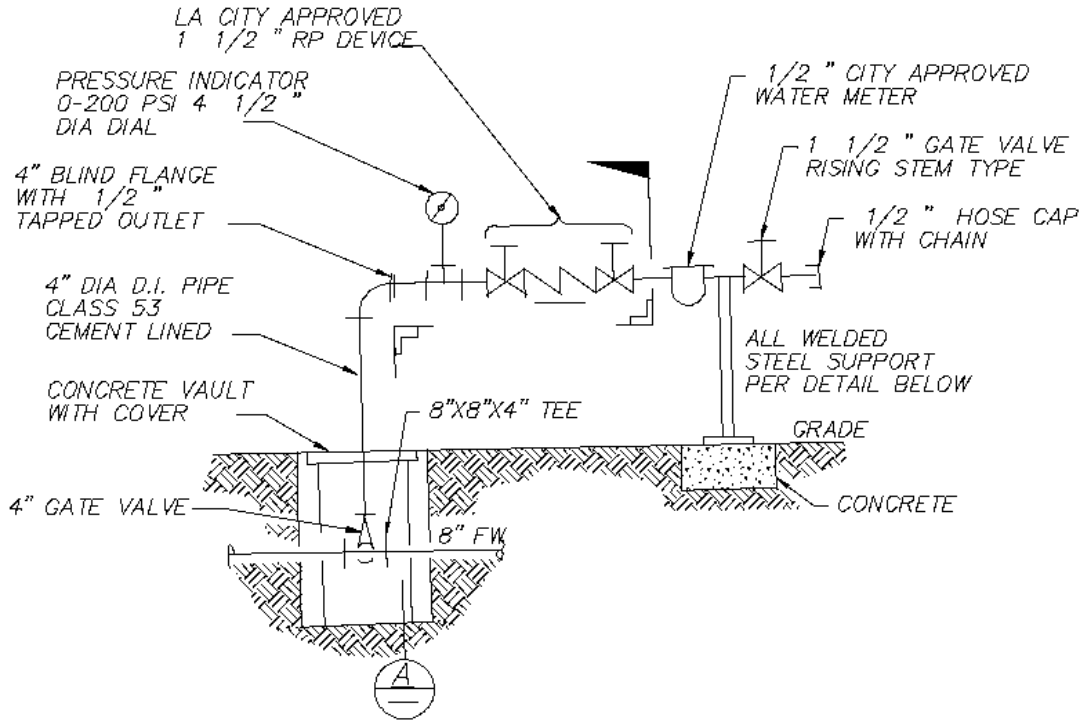

CONSTRUCTION WATER SUPPLY DETAIL

NTS

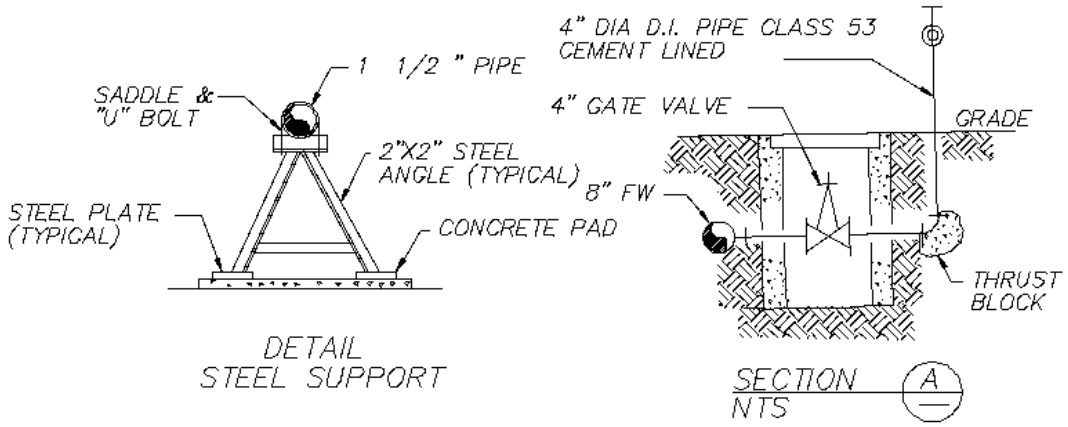

CONSTRUCTION WATER SUPPLY SCHEMATICS

NTS

SECTION 01722
SURVEYING

1.1 THE REQUIREMENT

A. Permanent Survey Control Network Markers

1. The CITY Surveyor will establish horizontal and vertical control by recovering or reestablishing city centerline control monuments and identifying city benchmarks. The CONTRACTOR shall be responsible to protect all preconstruction control network reference points. In the case, where the monuments are to be removed or damaged by the CONTRACTOR, the CONTRACTOR shall notify the ENGINEER / CITY Surveyor in writing seven (7) calendar days before starting the Work. There will be a charge to the CONTRACTOR for replacing monuments and benchmarks that are disturbed by the CONTRACTOR prior to the CITY Surveyor establishing adequate reference points.

   The CONTRACTOR shall furnish all additional surveying necessary for project and shall protect the CITY monuments from damage for the duration of the Project. The CONTRACTOR will be back charged for any CONTRACTOR damaged or destroyed survey control that has to be replaced by the CITY. For pipeline or street projects there shall be control points with coordinates at a maximum ¼ mile spacing. For all projects, at least two elevation benchmarks shall be provided. For projects greater than ½ mile in length, the elevation benchmarks shall be no more than ½ mile apart.

   The CONTRACTOR shall complete a survey request form at least seven (7) full working in advance by contacting the appropriate District Survey Office in the list below. Additional lead time will facilitate service. The form shall state exactly what and when the services are needed. A copy of the request can be faxed to the appropriate District Survey Office and a copy sent to the Engineer.

   West L.A. District Survey Office **(310) 575-8493**
   1828 Sawtelle Blvd., Room 105 ~~**Fax (310) 575-8866**~~
   West Los Angeles 90025
   Email Address: Eng.surdivisionwr@lacity.org

   San Pedro District Survey Office **(310) 732-4661**
   638 S. Beacon Street, Room 406 ~~**Fax (310) 732-4670**~~
   San Pedro, CA 90731
   Email Address: Eng.surdivisionwr@lacity.org

   Valley District Survey Office **(818) 374-4660**
   6262 Van Nuys Blvd. Suite 350
   Van Nuys, CA 91401
   Email Address: Eng.surdivisionwr@lacity.org

   Central District Survey Office **(213) 473-0608**
   555 Ramirez St, Space 250 ~~**Fax (213) 482-7175**~~
   Los Angeles, CA 90012
   Email Address: Eng.surdivisionwr@lacity.org

B. Layout of Contracted Work:

1. The CONTRACTOR shall be responsible for all surveys required to layout Work and for the accuracy of all survey work for construction. The CONTRACTOR shall include the cost of all such survey work in their Bid. The CONTRACTOR shall have all construction surveying performed by a 'Licensed Land Surveyor' or a 'Civil Engineer' registered by the State of California to perform such work. The ENGINEER reserves the right to verify all survey work done by the CONTRACTOR.

C. Construction Surveying Services

1. Construction Surveys shall conform to Chapter J 600 of the Bureau of Engineering Survey Manual, Part J. This manual may be purchased through the Bureau of Engineering Public Reference Center.

2. The CONTRACTOR shall provide all reference stakes and form checks necessary for construction and inspection of improvements. All construction staking shall be documented in survey field notes. This staking may include but is not limited to: removals, joins, rough grade, slope, utilities, storm drains, sewers, curbs, walks, paving, wall and building stakes; and any other staking necessary for construction and inspection.

D. Reference or Grade Stakes

1. A reference or grade stake shall be set for each grade change or angle point shown on the plan, standard plan, and shop drawing, in addition to the normal staking interval.

E. Form Checks

1. Forms shall be checked when durable points may be disturbed, removed, or are impractical to be used to verify the design location. The measured location shall be recorded in the survey field notes. All variations from the plan location shall be brought to the attention of the ENGINEER.

F. Staking Intervals and Offset Stake Lines

1. All staking intervals shall be in accordance with the Survey Manual, Figures J 615.224A&Am, J 615.225A, and J615.225Am. Stake lines shall be set at an offset distance from the improvement to ensure proper grade, station, and alignment.

G. Utility Stakes

1. The CONTRACTOR shall provide stakes for all utilities, public or private, that require location or relocation, unless otherwise stated.

H. Additional Survey Work

1. The CONTRACTOR may be required to furnish additional survey work, such as profiles, restakes, Change Orders, etc., at the request of the ENGINEER or the INSPECTOR.

I. Accuracy

1. The CONTRACTOR shall use appropriate surveying methods to obtain the following standards: For fixed works (i.e. cast-in-place concrete; asphalt pavement, pipes and drains; and other items determined by the ENGINEER) the following survey standards shall be used. The absolute horizontal accuracy, in relationship to the Engineer's control, shall be such that the semimajor axis of its 95% error ellipse is ±0.015 foot or less. The absolute vertical accuracy, in relationship to the Engineer's control, shall be such that its standard deviation is ±0.015 foot or less. The relative horizontal accuracy of survey points within the Project shall be such that the semimajor axis of its 95% error ellipse is ±0.015 foot or less. The relative vertical accuracy of survey points within the Project shall be such that its standard deviation is ±0.015 foot or less.

2. For excavation purposes, the following survey standards shall be used. The absolute horizontal accuracy, in relationship to the Engineer's control, shall be such that the semimajor axis of its 95% error ellipse is ±0.1 foot or less. The absolute vertical accuracy, in relationship to the Engineer's control, shall be such that its standard deviation is ±0.1 foot or less. The relative horizontal accuracy of survey points within the Project shall be such that semimajor axis of the 95% error ellipse is ±0.1 foot or less. The relative vertical accuracy of survey points within the Project shall be such that its standard deviation is ±0.1 foot or less.

J. Survey/Inspector

1. The CONTRACTOR shall provide to the INSPECTOR those measurements and control points necessary to determine the location and conformance to the plan, line, and grade of the improvements necessary for inspection purposes.

K. Survey/Engineer

1. The CONTRACTOR shall provide to the ENGINEER those measurements necessary for the expedient completion of the Project.

L. Survey Plan of Operations

1. Prior to construction, the CONTRACTOR shall submit to the ENGINEER for approval a survey plan describing methods and instrumentation to be used on the Project. The survey plan must be approved prior to any construction.

M. Survey Notes

1. The CONTRACTOR shall supply and keep notes on CITY standard format note sheets in conformance with Chapter J 600 of the Bureau of Engineering Survey Manual, Part J. The ENGINEER may request copies of, and otherwise review, survey notes at any time during the construction phase of the Project. Upon completion of the Project, the original survey notes shall become the property of the CITY and shall be delivered to the ENGINEER

(END OF SECTION)

SECTION 01723
RIGHT OF WAY

1.1 THE REQUIREMENT

A. The CONTRACTOR shall not allow its employees to use private property for any reason, or to use water or electricity from such property without written permission from the owner. The CONTRACTOR shall provide evidence of such permission, in writing, to the ENGINEER, before entering upon such lands.

END OF SECTION

SECTION 1731
CUTTING AND PATCHING

PART ONE - GENERAL

1.1 SUMMARY

A. This Section establishes general requirements pertaining to cutting (including excavating,) coring, fitting, and patching of the Contracted Work in existing or new CITY facilities (structures) required to:

1. Make the several parts fit properly;

2. Uncover work to provide for removal, installing, inspecting, or both, of ill-timed work;

3. Remove and replace work not conforming to requirements of the Contract Documents; and

4. Remove and replace defective work.

B. Related Work:

1. Documents affecting Works of this Contract include, but are not necessarily limited to, the GENERAL CONDITIONS, DIVISION 1 - GENERAL REQUIREMENTS and other Sections of the Project Manual.

2. In addition to other specified requirements, the CONTRACTOR shall, upon the Consultant's or ENGINEER'S request, uncover work to provide for inspection by the Consultant or ENGINEER of uncovered work and remove samples of installed materials for testing.

3. Do not cut or alter Work performed under separate Contracts without the Consultant's or ENGINEER'S written permission.

4. Shoring in Section 02240.

5. Waterproofing in Section 07290.

6. Joint Sealant in Section 07900.

7. Electrical in Division 16.

1.2 SUBMITTALS

A. Request For Consultant's or ENGINEER'S Consent:

1. Prior to cutting which effects structural safety, submit written request to the Consultant or ENGINEER for permission to proceed with cutting.

2. Submit, to the ENGINEER, for approval, the method(s) of cutting and patching, and protection plan for each. Submit structural calculation,

prepared by a California State licensed Engineer, as directed by the ENGINEER.

3. Should conditions of the Work or schedule indicate a required change of materials or methods for cutting and patching, so notify the Consultant or ENGINEER and secure written permission prior to proceeding.

1.3 QUALITY ASSURANCE

A. Use adequate numbers of skilled workers who are thoroughly trained and experienced in the necessary crafts, and who are completely familiar with the specified requirements and the methods needed for proper performance of the Work of this Section.

B. The safety provisions of applicable laws, building and construction codes shall be observed.

C. Field Mock Up: For each finish surface condition prepare a representative mock-up area which shall be completely cleaned and finished for review by ENGINEER. ENGINEER'S approval shall be obtained before proceeding with additional cutting and patching work.

D. Requirements for Structural Work: Do not cut and patch structural elements in a manner that would reduce their load-carrying capacity.

1. Obtain approval of the cutting and patching proposal before cutting and patching any structural elements.

E. Operational and Safety Limitations: Do not cut and patch operating elements or safety related components in a manner that would result in reducing their capacity to perform as intended, or result in increased maintenance, or decreased operational life or safety.

1. Obtain approval of the cutting and patching proposal before cutting and patching any operating elements.

F. If no deposition of existing detail of existing improvements or conditions is made on the Drawings or in the Project Manual, it shall be the CONTRACTOR'S responsibilities to provide necessary site investigations including testing, potholes, exposure, etc. to obtain site information at no additional cost to the CITY. CONTRACTOR shall submit site information as part of the submittal. CONTRACTOR shall repair all potholes, exposures, etc. as part of the Contract.

G. Visual Requirements: Do not cut and patch construction exposed on the exterior or in occupied spaces, in a manner that would, in the ENGINEER'S or Consultant's opinion, reduce the building's aesthetic qualities, or result in visual evidence of cutting and patching. Remove and replace work cut and patched in a visually unsatisfactory manner.

PART TWO - PRODUCTS

2.1 MATERIALS

A. General**:** Use materials that are identical to existing materials. If identical materials are not available, or existing materials do not meet codes or cannot be used where exposed surfaces are involved, use materials that match existing adjacent surfaces to the fullest extent possible with regard to visual effect. Use materials whose installed performance will equal or surpass that of existing materials. Submit method of repair including lapping, splicing and joining of new and existing materials.

B. For replacement of items removed, use materials complying with pertinent Sections this Project Manual.

C. All cut concrete shall be provided with steel dowels filled with non-shrink grout prior to patching or placement of new concrete.

PART THREE - EXECUTION

3.1 SURFACE CONDITIONS

A. Inspection:

1. Inspect existing conditions, including elements subject to movement or damage prior to the Bid, during cutting, excavating, patching, and backfilling.

2. Identify all existing utilities, protect and maintain service to occupied areas in accordance with GENERAL REQUIREMENTS Section 01140 –- CONTRACTOR'S USE OF THE PREMISES, and GENERAL REQUIREMENTS Section 01711 – SITE INVESTIGATION.

3. Unless specified otherwise, inspect and determine location of existing rebars in masonry and/or concrete walls or flooring prior to cutting.

4. After uncovering the work, inspect conditions affecting installation of new work.

B. Discrepancies:

1. If uncovered conditions are not as anticipated, immediately notify in writing the Consultant or the ENGINEER and secure needed directions.

2. Do not proceed until unsatisfactory conditions are corrected.

3.2 PREPARATION PRIOR TO CUTTING

Provide required protection including, but not necessarily limited to, shoring, bracing, and support to maintain structural integrity of the work. Provide duplicate copy of shoring permit and plan to the ENGINEER prior to start of Contracted Work.

3.3 PERFORMANCE

A. Perform required excavating and backfilling as required under other pertinent Sections of the Project Manual.

1. Perform cutting and demolition by methods, which will prevent damage to other portions of the Contracted Work and provide proper surfaces to receive a proper installation of repair and new work.

2. Perform cutting (excavating) in accordance with recommendations described in Soil Investigation Report. Over cutting (excavating) is prohibited.

3. Perform fitting and adjusting of products to provide finished installation complying with the specified tolerances and finishes noted in the Technical Sections of the Project Manual.

B. Cutting: Cut existing construction using methods least likely to damage elements to be retained or adjoining construction. Where possible, review proposed procedures with the original installer. If CONTRACTOR does not concur with the original installer's recommendations, CONTRACTOR shall notify the ENGINEER and request instructions.

1. In general, where cutting is required, use hand or small power tools designed for sawing or grinding, not hammering and chopping. Impact tools are not to be used in the building. Cut holes and slots neatly to size required with minimum disturbance of adjacent surfaces. Temporarily cover openings when not in use.

2. To avoid marring existing finished surfaces, cut or drill from the exposed or finished side into concealed surfaces, or spaces.

3. Cut through concrete and masonry using a cutting machine such as a carborundum saw or diamond core drill. Use methods or locations that could avoid cutting the rebars. All cut rebars, approved by the ENGINEER, shall be rounded off any sharp edges and dabbed with a coat of protective coating against rusting.

4. Comply with requirements of applicable Sections of DIVISION 2 where cutting and patching requires excavating and backfilling.

5. By-pass utility services such as pipe or conduit, before cutting, where services are shown or required to be removed, relocated or abandoned. Cut-off pipe or conduit in walls, partitions or floor slabs to be removed. Cap, valve or plug and seal the remaining portion of pipe or conduit to prevent entrance of moisture or other foreign matter after bypassing and cutting. No existing service shall be interrupted, in accordance with

Section 01140 – CONTRACTOR'S USE OF THE PREMISES of the GENERAL REQUIREMENTS.

6. Unless specified otherwise, all cut floor or roof wooden ledgers and blockings shall be repaired, spliced and installed with approved steel connectors. If necessary, install new double wooden ledgers or blocking without additional cost to the CITY.

7. Unless specified otherwise, all cut ceiling framing members shall be repaired or replaced with new framing members to the satisfaction of the ENGINEER. Re-install all ceiling, mechanical grills, and lighting fixtures affected by the cutting and repairs.

8. Unless specified otherwise, all existing masonry walls shall be removed to the nearest grout joint. All removed masonry units shall be protected, salvaged and reused.

C. Patching: Patch with durable seams that are as invisible as possible. Comply with specified tolerances.

1. Where feasible, inspect and test patched areas to demonstrate integrity of the installation.

2. Restore exposed finishes of patched areas and extend finish restoration into retained adjoining construction in a manner that will eliminate evidence of patching and refinishing.

3. All existing masonry wall shall be repointed and regrouted to the nearest wythe joint to match existing.

4. Restore all building insulation and fireproofing to match existing thickness and conditions.

5. Restore complete caulking, sealer, waterproofing, etc. to achieve maximum performance as required at no additional cost to the CITY.

3.4 CLEANING

Thoroughly clean areas and spaces where cutting and patching is performed or used as access. Remove completely paint, mortar, oils, putty and items of similar nature. Thoroughly clean piping, conduit and similar features before painting or other finishing is applied. Restore damaged pipe covering to its original condition.

3.5 TESTING

Demonstrate by appropriate water testing that repaired **caulking, sealer, waterproofing**, etc. are completely water tight and weather tight.

END OF SECTION

SECTION 01732
ADDITIONAL POTHOLING

1.1 THE REQUIREMENT

A. The CONTRACTOR shall conduct exploratory excavations by potholing to verify or to discover the actual locations and the size of existing underground utilities and improvements. The CONTRACTOR shall take care not to damage existing facilities during potholing operations. Any utility or existing facility (including those located by Underground Service Alert - USA) within 3 feet of any trench or excavation shall be potholed prior to starting the contract work in the vicinity. Potholing shall be done in each given area where excavation work is to occur at least fourteen (14) calendar days in advance of any excavation or construction in that area, to avoid possible delay in the progress of the Work.

B. Potholing shall consist of excavations at the locations of utilities or other underground facilities indicated on the Drawings, located by USA, or as directed by the ENGINEER. All costs of potholing operations for the utilities indicated on the Drawings shall be included in the CONTRACTOR'S Bid.

C. If an allowance for Additional Potholing has been established and included in the SCHEDULE OF WORK AND PRICES, this allowance shall only be used to reimburse the CONTRACTOR for potholing utilities not shown or otherwise referenced on the drawings, or as directed by the ENGINEER. If the total cost of the Work directed under the Additional Potholing allowance differ from the amount set forth in the SCHEDULE OF WORK AND PRICES, the Contract Price shall be adjusted by a Change Order. The adjustment shall be the difference between the total actual costs and the amount included in the Bid, as an additional amount due to the CONTRACTOR or a credit to the CITY, as appropriate.

D. In addition to the potholes indicated on the Drawings, or directed by the ENGINEER, the CONTRACTOR may opt to do further potholing deemed necessary at no additional cost to the CITY.

E. Potholing operations shall conform to all applicable requirements of INJURY AND ILLNESS PREVENTION - SAFETY MEASURES of the GENERAL CONDITIONS, as to sidewall slopes, sheeting and shoring, and all other excavation and trenching provisions specified herein.

F. Potholing operations shall be conducted in accordance with the requirements of PROTECTION OF PERSONS AND PROPERTY AND RESTORATION OF EXISTING IMPROVEMENTS of the GENERAL CONDITIONS, in order to ensure that the existing facilities will remain in operation with minimum interruptions. Attention is specifically directed to the limitations on street closures, altering of vehicular and pedestrian access in accordance with INTERFACE / COORDINATION REQUIREMENTS of these GENERAL REQUIREMENTS. Potholes shall be identified and protected in accordance with the City of LA Brown Book, the California Manual on Uniform Traffic Control Devices (MUTCD) and Work Area Traffic Control Handbook (WATCH) Standards.

G. The CONTRACTOR'S proposed method of potholing and schedule for potholing shall be submitted to the ENGINEER for approval, at least thirty (30) days prior to

the commencement of operation. Any utilities damaged during potholing shall be immediately reported to the ENGINEER and INSPECTOR and repairs made immediately in accordance with the requirements of PROTECTION OF PERSONS AND PROPERTY AND RESTORATION OF EXISTING IMPROVEMENTS of the GENERAL CONDITIONS.

H. A complete log of all potholes shall be kept by the CONTRACTOR, showing specific locations and dimensions of trenches. The log shall be verified by the INSPECTOR prior to the backfilling of the potholes. The verified log will be submitted to the ENGINEER and the INSPECTOR within two (2) working days after completion of potholing in each area. Payment for potholing utilities not shown or otherwise referenced on the drawings, or as directed by the ENGINEER will not be made unless these potholes are listed on the verified log.

I. The CONTRACTOR shall record the coordinates, elevations and dimensions of all utilities and improvements verified or discovered by potholing. The records shall be submitted to the ENGINEER within two (2) working days after the completion of potholing in each area. The records shall also include dates of the potholing operations and any additional discovered information or pertinent data.

J. Upon completion of potholing in each area, and after verification of the logs by the INSPECTOR, potholes shall be immediately backfilled and compacted in accordance with the specifications, or restored as directed by the ENGINEER.

END OF SECTION

SECTION 01740
REMOVAL, CLEANUP, AND DEMOBILIZATION

1.1 THE REQUIREMENT

A. Throughout all phases of construction, including suspension of work, and until the Final Acceptance, the CONTRACTOR shall keep the site clean and free from rubbish and debris. The CONTRACTOR shall also abate dust nuisance by cleaning, sweeping and sprinkling with water, or other means as necessary. The use of water resulting in mud on public streets will not be permitted as a substitute for sweeping or other methods.

B. The road(s) on the construction site shall be paved immediately after the installation of planned utilities and the constructions and underground/final inspection of SS, SD, curbs, and gutters. The exit road on the construction site shall be paved first.

C. Vehicles exiting the construction site shall have all dirt clods and mud removed from their tires.

D. When required by the Plans or Specifications, the CONTRACTOR shall furnish and operate a self-loading motor sweeper with spray nozzles at least once each working day for the purpose of keeping paved areas acceptably clean whenever construction, including restoration, is incomplete.

E. Materials and equipment shall be removed from the site as soon as they are no longer necessary. Before the final inspection, the site shall be cleared of equipment, unused materials and rubbish so as to present a satisfactory clean and neat appearance. All cleanup costs shall be included in the CONTRACTOR'S Bid.

F. Care shall be taken to prevent spillage on haul routes. Any such spillage shall be removed immediately and the area cleaned.

G. Excess excavated material from catch basins or similar structures shall be removed from the site immediately. Sufficient material may remain for use as backfill if permitted by the Specifications. Forms and form lumber shall be removed from the site as soon as practicable after stripping.

H. Failure of the CONTRACTOR to comply with the ENGINEER'S cleanup orders may result in an order to suspend work until the condition is corrected. No additional compensation will be allowed as a result of such suspension.

END OF SECTION

SECTION 01750
STARTUP ASSISTANCE

1.1 THE REQUIREMENT

A. To satisfy the requirements of the ENGINEER during the startup of the facility, the CONTRACTOR may be required to provide STARTUP ASSISTANCE. Startup assistance shall commence immediately after a Statement Of Partial Completion or a Statement Of Completion is issued as specified in PARTIAL ACCEPTANCE and FINAL ACCEPTANCE of the GENERAL CONDITIONS and shall continue for a period of three months. Such services shall include the services of craft personnel supplied by the CONTRACTOR to satisfy the requirements of the ENGINEER during Startup. Such services shall be available for at least one (1) eight (8) hour shift per day until startup activities are concluded, and may also include the availability of said craft personnel on a twenty-four (24) hour on-call basis.

B. Such startup assistance shall include such modifications to the Work as deemed necessary by the ENGINEER to provide a complete and functional facility.

C. Commencing on the first day of startup assistance, and upon written notice by the ENGINEER, the CONTRACTOR shall provide the INSPECTOR with daily labor timesheets, material invoices, and rented equipment invoices required for startup assistance activities.

D. Direct costs of startup assistance activities shall be in strict accordance with the Cost Reimbursement (Time and Materials) portions of the GENERAL REQUIREMENTS Section 01254, CHANGE ORDERS. However, Part 1.1.E, MARKUPS – OVERHEAD AND PROFIT, shall not be applicable to the direct costs of startup assistance. Instead, provisions for overhead and profit applied to the direct costs of startup assistance are included below:

DIRECT COST PERFORMED IN ONE MONTH	% OVERHEAD[2] AND PROFIT WHEN PRIME CONTRACTOR PERFORMS WORK	% OVERHEAD[2] & PROFIT PAID TO PRIME CONTRACTOR FOR WORK DONE BY ITS SUBCONTRACTORS[1]
Under $20,000	24%	11%
$20,000 - $50,000	22%	9%
$50,000 - $100,000	20%	7%
Over $100,000	18%	5%

[1] Subcontractors will mark up[2] their direct costs for startup assistance in accordance with the SSPWC available at the time of the Bid. Subcontractors at all tiers shall not be paid overhead and profit on their Subcontractor's work.

[2] Overhead for CONTRACTOR or Subcontractor shall consist of the following, but is not limited to:

1. Home office overhead expenses

2. All insurance requirements

3. Other needed insurance

4. Field office overhead including, but not limited to:

    a. Bookkeeping, accounting, estimating (whether done at the field or home office);

    b. Photocopying and/or office automation (whether done at the field or home office);

    c. Salaried superintendent or any other person with superintendent duties during the course of the Work;

    d. Any salaried staff and/or temporary office services;

    e. Trailers, electricity, water, telephone, etc.;

    f. Vehicles assigned to any salaried staff and/or temporary office services;

    g. Small tools and consumables. Small tools are defined as any equipment or tool, which has a replacement value of $1,000 or less;

    h. Travel of home office or field office staff, including transportation and expenses.

E. All items included in overhead shall not be billed as direct costs. The derivation of an extended overhead (field and/or office) rate and its application to contract time extensions shall not be applicable to startup assistance activities for this Contract. The duration of startup assistance will not be considered in the determination of the completion date for liquidated damages. That date will be determined by the completion of other work. Likewise, the duration of startup assistance will not be the basis in whole or in part for any claims for delay or extended overhead.

F. Each month the amount billed by the CONTRACTOR for startup assistance will be deducted from the amount stipulated in the SCHEDULE OF WORK AND PRICES of Bid Proposal. In the event that the stipulated amount is exhausted, the CITY will continue to approve payment via Change Orders. The cost of these Change Orders will be calculated in the manner described hereinbefore in this Article. In the event that the stipulated amount is not exhausted when the startup activities are concluded, the balance of the stipulated amount will not be due the

CONTRACTOR and a deductive Change Order will be issued for the remaining balance.

END OF SECTION

SECTION 01770
PROJECT CLOSEOUT

PART ONE - GENERAL

1.1 RELATED DOCUMENTS

A. Drawings and General Provisions of Contract, including GENERAL CONDITIONS, DIVISION 1 - GENERAL REQUIREMENTS and other Sections of the Project Manual, applies to this Section.

1. SHOP DRAWINGS / SUBMITTALS in Section 01330.

2. Section 01140 – CONTRACTOR'S USE OF THE PREMISES.

3. MOBILIZATION in Section 01721.

4. REMOVAL, CLEAN-UP AND DEMOBILIZATION in Section 01740.

5. RECORD DRAWINGS AND RECORD PROJECT MANUAL in Section 01783.

1.2 SUMMARY

A. This Section specifies administrative and procedural requirements for a Project Closeout, including but not limited to:

1. Inspection procedures.

2. Project record document submittals.

3. Operation and Maintenance Manual submittal.

4. Submittal of warranties.

5. Final cleaning.

B. Closeout requirements for specific construction activities are included in the appropriate Technical Sections in Divisions 2 through 16 of the Project Manual.

1.3 FINAL INSPECTION

A. Preliminary Procedures: Before requesting final inspection for the Contracted Works, the CONTRACTOR shall complete the following.

1. In the "Request for Payment" that coincides with, or first follows, the date the final inspection is requested, show one-hundred percent (100%) completion for the portion of the Contracted Work claimed as complete. Include supporting documentation for completion as indicated in these Contract Documents and a statement showing an accounting of changes to the Contract Sum.

a. Include a list of incomplete or outstanding works established during a Pre-final walk-thru as required in Section 01452 - INSPECTION OF THE WORK of the GENERAL REQUIREMENTS, and all supporting evidence or documentation for completion.

b. If one-hundred percent (100%) completions cannot be shown, include a list of incomplete items and all correction notices, the value of incomplete construction, and reasons as to why the Work is not complete.

2. Advise CITY of pending insurance changeover requirements.

3. Submit specific warranties, reduced faithful performance bonds for guarantee work, maintenance agreements, final certifications and similar documents.

4. Obtain and submit releases from local authorized agencies enabling the CITY unrestricted use of the Work and access to services and utilities; include the certificate of occupancy, permits or operating certificates and similar releases. Return all Building & Safety's sign-off sheet and Inspection Records to the CITY.

5. Submit Record Drawings and Record Project Manual, maintenance manuals, final Project photographs, damage or settlement survey, property survey, and similar final record information.

6. Deliver tools, spare parts, extra stock, and similar items.

7. Make a final changeover of permanent locks and transmit keys to the ENGINEER. Advise the CITY'S personnel of the changeover in security provisions.

8. Complete start-up testing of systems, and instruction/training of the CITY'S operating and maintenance personnel. Discontinue or change over and remove temporary facilities from the Jobsite, along with construction tools, mockups, and similar elements.

9. Complete all required testing including balancing test, bacteriological analysis, etc. Submit all test reports.

10. Return all original permits and manifests to the ENGINEER.

11. Advise the CITY of pending change over of the utility services upon start-up testing of the systems and completion of final inspection.

12. Complete final clean up requirements, including touch-up painting. Touch-up and otherwise repair and restore marred exposed finishes.

13. Make ready to proceed with the 90 day plant establishment period. Submit the maintenance schedules and logs.

B. Inspection Procedures: The INSPECTOR, with cooperation from the Consultant and the ENGINEER, will prepare a Final Inspection Correction list to that effect following inspection, or advise the CONTRACTOR of construction that must be

completed or corrected before the construction work can be considered complete**.** The Contract time shall continue to be assessed.

1. The INSPECTOR, Consultant and ENGINEER will repeat the inspection when requested and assured that the Contracted Work has been satisfactorily completed.

2. The INSPECTOR, Consultant and ENGINEER will inspect the Work of the plant establishment period upon completion.

3. Results of the completed inspection will form the basis of requirements for Final Acceptance. The Contract time shall stop when all corrections are considered complete by the CITY.

C. Reinspection Fees: Should the Consultant and the CITY'S personnel perform reinspection due to failure of the Work to comply with CONTRACTOR'S claim of completion, the CONTRACTOR will compensate the CITY for such additional services. The CITY will deduct the amount of such compensation from the Final Payment to the CONTRACTOR.

1.4 FINAL ACCEPTANCE

A. Preliminary Procedures: Before requesting Final Acceptance and Final Payment, the CONTRACTOR shall complete the following and list exceptions in the request.

1. Submit the Final Payment request with releases and supporting documentation not previously submitted and accepted. Include certificates of guarantee for products and completed operations where required.

2. Submit an updated final statement, accounting for final additional changes to the Contract Sum.

3. Submit a certified copy of the INSPECTOR'S (combined with Consultant's and ENGINEER'S) final inspection list of items to be completed or corrected, stating that each item has been completed or otherwise resolved for acceptance, and the list has been endorsed and dated by the INSPECTOR, the Consultant or ENGINEER.

4. Submit a certified copy of the INSPECTOR'S, Consultant's and ENGINEER'S final inspection correction list for the maintenance services and items to be completed or corrected.

5. Submit final meter readings for utilities, a measured record of stored fuel, and similar data as of the date of Final Acceptance, or when the CITY took possession of and responsibility for corresponding elements of the Work.

6. Submit consent of surety to Final Payment.

7. Submit a final liquidated damages settlement statement.

8. Submit evidence of final, continuing insurance coverage complying with insurance requirements.

9. Submit all required certified weekly payroll records, ethnic composition of work force reports.

B. Reinspection Procedure: The INSPECTOR**,** Consultant and ENGINEER will reinspect the Contracted Work upon receipt of notice that the Work, including inspection list items from earlier inspections, has been completed, except items whose completion has been delayed because of circumstances acceptable to the INSPECTOR**,** Consultant or ENGINEER.

1. After all correction works are completed and inspected, ENGINEER and INSPECTOR of Bureau of Contract Administration shall establish the construction completion date.

1.5 RECORD DOCUMENTS SUBMITTALS

A. General: Do not use Record Documents for construction purposes; protect from deterioration and loss in a secure, fire-resistive location; provide access to record documents for the Consultant's or ENGINEER'S reference during normal working hours.

B. Record Drawings: Maintain a clean, undamaged set of blue or black line white-prints of Contract Drawings and Shop Drawings. Mark the set to show the actual installation where the installation varies substantially from the Contracted Work as originally shown. Mark whichever drawing is most capable of showing conditions fully and accurately; where Shop Drawings are used, record a cross-reference at the corresponding location on the Contract Drawings. All Record Drawings, Record Project Manual and new markings shall be submitted to the ENGINEER for review prior to the approval of the Progress Payments. Give particular attention to concealed elements that would be difficult to measure and record at a later date. Upon completion of the Work, submit Record Drawings, Record Project Manual etc, to the Consultant or ENGINEER for review and for the CITY'S records.

1. Mark Record Sets with a red erasable pencil; use other colors to distinguish between variations in separate categories of the Work.

2. Mark new information that is important to the CITY, including detail from "Request-for-Information" which was not shown on Contract Drawings or Shop Drawings, as soon as it is made available**.** Any subsequent revision or changes, to the details from an earlier "Request-for-Information", shall also be marked immediately on the Record Drawings.

3. Note related finalized or pending "Change Order" numbers where applicable**.**

4. Note all addenda, drawing modification, etc. on Record Drawings.

5. Where Shop Drawings are used for actual performance of the Contract Work and are most capable of showing actual details, conditions, and dimensions fully and accurately, record all the Shop Drawings and place them in good order with the Record Drawings. Properly identified and bound of field, and ready for continued use and reference.

6. Organize Record Drawing sheets into manageable sets, bind with durable paper cover sheets, and print suitable titles, dates and other identification on the cover of each set.

C. Record Project Manual: Maintain one complete copy of the Project Manual, including addenda, and one copy of other written construction documents such as "Change Orders" and modifications issued in printed form during construction. Mark these documents to show the variations in actual Contracted Work performed in comparison with the text of the Project Manual and modifications. Give particular attention to substitutions, selection of options and similar information on elements that are concealed or cannot otherwise be readily discerned later by direct observation. Note related Record Drawing information and Product Data.

1. Upon completion of the Work, submit record Project Manual to the Consultant or ENGINEER for review and for the CITY'S record.

D. Record Schedule: Provide one (1) copy of a computer diskette of the Construction Schedule. Record this document to show the actual schedules and sequences the actual Works were performed in comparison with Baseline Construction Schedule approval in accordance with GENERAL REQUIREMENTS Section 01321 – CONTRACTOR'S CONSTRUCTION SCHEDULE AND REPORTS.

E. Record Product Data: Maintain one (1)copy of each Product Data submittal. Mark these documents to show significant variations in actual Work performed in comparison with information submitted. Include variations in products delivered to the site, and from the manufacturer's installation instructions and recommendations. Give particular attention to concealed products and portions of the Work, which cannot otherwise be readily discerned later by direct observation. Note related Change Orders and markup of Record Drawings and Project Manual.

1. Upon completion of a markup, submit a complete set of Record Product Data to the Consultant or ENGINEER for review and for the CITY'S records.

F. Record Sample Submitted: Immediately prior to the date or dates of Substantial Completion, the CONTRACTOR will meet at the Jobsite with the Consultant or ENGINEER and the CITY'S personnel to determine which of the submitted Samples that have been maintained during progress of the Work are to be transmitted to the CITY for record purposes. Comply with delivery to the CITY'S Sample storage area.

G. Miscellaneous Record Submittals: Refer to other Sections of the Project Manual for requirements of miscellaneous record-keeping and submittals in connection with actual performance of the Contract Work. Submit to the Consultant or the ENGINEER miscellaneous records for the CITY'S records.

H. Maintenance Manuals: Organize operating and maintenance data into suitable sets of manageable size. Bind properly indexed data in individual heavy-duty 2-inch, 3-ring vinyl-covered binders, with pocket folders for folded sheet information. Mark appropriate identification on front and spine of each binder. Include the following types of information:

1. Emergency instructions.

2. Spare parts list with model/part numbers.

3. Copies of work permits and warranties.

4. Wiring diagrams.

5. Recommended "turn around" cycles.

6. Inspection procedures; Operation and Maintenance Instructions.

7. Shop Drawings and Product Data.

8. Small scale of "Record" Drawings of such operating equipment.

9. Fixture lamping schedules.

PART TWO - PRODUCTS (NOT APPLICABLE)

PART THREE - EXECUTION

3.1 CLOSEOUT PROCEDURES

A. Operation and Maintenance Instructions: Unless specified otherwise, in addition to the maintenance manuals described hereinabove, arrange for each installer of equipment that requires regular maintenance to meet with the CITY'S personnel to provide instruction in proper operation and maintenance. If installers are not experienced in procedures, provide instruction by manufacturer's representatives. Include a detailed review of the following items:

1. Maintenance Manuals.

2. Permit and Record Documents.

3. Spare parts and materials.

4. Tools.

5. Lubricants.

6. Fuels.

7. Identification systems.

8. Control sequences.

9. Hazards.

10. Cleaning.

11. Warranties and bonds.

12. Maintenance agreements and similar continuing commitments.

B. As Part of Instruction for Operating Equipment, Demonstrate the Following Procedures:

1. Start-up.

2. Shutdown.

3. Emergency operations.

4. Noise and vibration adjustments.

5. Safety procedures.

6. Economy and efficiency adjustments.

7. Effective energy utilization.

3.2 FINAL CLEANING

A. General: General cleaning during construction is required by the GENERAL CONDITIONS and GENERAL REQUIREMENTS.

B. Cleaning: Employ experienced workers or professional cleaners for final cleaning. Clean each surface or unit to the condition expected in a normal, commercial building cleaning and maintenance program. Comply with manufacturer's instructions.

1. Complete the following cleaning operations before requesting inspection prior to CITY'S acceptance of Contracted Work.

a. Remove labels that are not permanent labels.

b. Clean transparent materials, including mirrors and glass in doors and windows. Remove glazing compound and other substances that are noticeable vision-obscuring materials. Replace chipped or broken glass and other damaged transparent materials at no added cost to the CITY.

c. Clean exposed exterior and interior hard-surfaced finishes to a dust-free condition, free of stains, films and similar foreign substances. Restore reflective surfaces to their original reflective condition. Leave concrete floors broom clean. Vacuum carpeted surfaces.

d. Wipe surfaces of mechanical and electrical equipment. Remove excess lubrication and other substances. Clean plumbing fixtures to a sanitary condition. Clean light fixtures and lamps.

e. Clean the site, including landscape development areas of rubbish, litter and other foreign substances. Sweep paved areas broom clean; remove stains, spills and other foreign deposits. Rake grounds that are neither paved nor planted, to a smooth even-textures surface.

f. Remove all temporary detour stripping by the wet sandblasting method.

C. Pest Control: Engage an experienced exterminator to make a final inspection, and rid the Project of rodents, insects and other pests.

D. Removal of Protection: Remove temporary protection and facilities installed for protection of the Contracted Work during construction.

E. Compliance: Comply with regulations of authorities having jurisdiction and safety standards for cleaning. Do not burn waste materials. Do not bury debris or excess materials on the CITY'S property. Do not discharge volatile, harmful or dangerous materials into drainage systems. Remove waste materials from the site and dispose of in a lawful manner.

1. Where extra materials of value remaining after completions of associated Work have become the CITY'S property, arrange for disposition of these materials as directed.

END OF SECTION

SECTION 01781
SPARE PARTS

1.1 THE REQUIREMENT

A. General

1. The Spare Parts supplier must be the manufacturer or a factory authorized representative of the manufacturer. The manufacturer will be responsible for any default of the representative that is not corrected by the representative in a timely and efficient manner. This responsibility includes replacing incorrect or defective parts, trouble shooting, and correcting problems that are traceable to the manufacturer's parts. The supplier shall provide, along with the Spare Parts List, a formal letter of certification from the manufacturer that the supplier is an authorized representative of the manufacturer.

2. The supplier shall be a stocking facility of the manufacturer of the proposed parts, or the manufacturer must maintain a stocking facility of these parts on the West Coast, or the supplier can guarantee delivery of spare parts within seventy-two (72) hours.

3. Spare Parts should be supplied in the manufacturer's original packaging and shall be new and unused. A statement shall be included to clearly indicate that the Spare Parts are new and unused.

4. The Spare Parts list shall be in addition to any other lists required under any other sections of these Specifications. This list shall include but is not limited to the following:

   a. Current prices including delivery to the Jobsite.

   b. Original Equipment Manufacturer (OEM) part numbers, which identify interchangeability.

   c. Make and type of equipment as well as Model number.

   d. Size.

   e. Supplier's address and telephone number.

   f. Letter of certification from the manufacturer.

   g. Materials.

   h. Special tools.

   i. Estimated delivery lead times.

   j. Warranty: State terms of warranty of spare parts offered.

   k. Cross-sectional, exploded view or assembly-type drawing with part numbers.

l. Manufacturer’s price list catalog.

m. Applicable trade discount (for budget purposes)

5. Delivery of all required Spare Parts shall be a condition precedent to receipt of Partial Completion or a Statement of Completion.

6. The CONTRACTOR shall be responsible for proper storage and protection of the Spare Parts until delivered to the CITY.

7. To ensure proper tracking of the Spare Parts the CONTRACTOR shall fill out and submit required information, on the forms provided by the ENGINEER, to the INSPECTOR with the delivery of Spare Parts. The CONTRACTOR'S cost of preparing and submitting the Spare Parts List(s), procuring, and inspection of the Spare Parts shall be included in the CONTRACTOR'S lump sum bid, and therefore, no overhead or profit shall be added to the cost of the Spare Parts.

B. Required Spare Parts

1. The Required Spare Parts lists shall be included with the equipment submittal to the ENGINEER.

2. The CONTRACTOR shall include in the Bid the cost of providing the Required Spare Parts described under individual equipment Specifications.

C. Recommended Spare Parts

1. The CONTRACTOR shall submit with each equipment submittal a list from the manufacturer of the Recommended Spare Parts adequate to ensure two (2) continuous years of normal operation after expiration of the equipment warranty. The cost of preparing and submitting the Spare Parts List(s) shall be included in the CONTRACTOR'S lump sum bid.

2. The Recommended Spare Parts List(s) shall include items requiring replacement under the following conditions:

a. Wear, corrosion, or erosion during normal operation.

b. Failure which causes a shutdown of equipment or systems.

c. Damage or breakage during routine maintenance or inspections of equipment.

d. Custom or specially fabricated parts, and

e. Long lead items.

3. If an allowance for RECOMMENDED SPARE PARTS has been included as a bid item in the SCHEDULE OF WORK AND PRICES in Vol. 1 of the Proposal, the CONTRACTOR shall procure such Recommended Spare Parts as directed by the ENGINEER. The ENGINEER will compile, from the CONTRACTOR’S submittal, a list identifying which recommended Spare Parts are approved for purchase. The CITY will pay, from the

RECOMMENDED SPARE PARTS allowance, the vendor-invoiced prices plus delivery cost only, without markup for overhead or profit. If the total cost differs from the amount set forth in the SCHEDULE OF WORK AND PRICES, the Contract Price shall be adjusted by a Change Order for the difference as an additional amount due the CONTRACTOR, or a credit to the CITY, as appropriate.

4. Approval of the individual equipment submittal does not constitute authorization to procure the Recommended Spare Parts.

D. Prices charged to the CITY are based on a percentage discount from the manufacturer's published price list(s) shall not be subject to change for a period of sixty (60) calendar days after bid opening. If prices on the price list(s) are raised, the CITY reserves the right to accept the raise or to cancel such items from the contract. The CITY is to be given benefit of any decline in prices immediately upon the manufacturer's effective date of such decline. Changes in price list(s) shall be effective on the date of the manufacturer's effective date of change. Increase in prices shall not be retroactive.

END OF SECTION

SECTION 01782
TECHNICAL MANUALS

1.1 THE REQUIREMENT

A. Definitions:

1. EMPAC: EMPAC is an acronym for Enterprise Maintenance Planning and Control. This is the system used for the identification and maintenance management of all [treatment plant or pumping plant] equipment. This EMPAC number is typically the equipment identification number used in the Contract Documents.

2. Connective Wiring Diagrams: Connective Wiring Diagrams are electrical diagrams that show how an equipment or instrumentation item is to be connected to the Plant or equipment system electrical power system or instrumentation system.

3. Internal Wiring Diagrams: Internal Wiring Diagrams are electrical diagrams that show how an equipment or instrumentation item is internally electrically connected.

4. Maintenance Summary Forms: The Maintenance Summary Forms are a series of forms including the Equipment Maintenance Summary Form (MSF), Mechanical Component MSF, Electrical Component MSF, Instrumentation Component MSF, and Valve Gate Component MSF. These forms are used to summarize the identification, nameplate data, maintenance requirements, recommended lubricants, and recommended spare parts for the various equipment and instrumentation. (See Attachments 01782-A1 through 01782-A4.)]

B. Technical Manuals:

1. Unless otherwise specified, Technical Manuals shall, as a minimum, include the following:

a. Table of Contents.

b. Itemized list of all data provided.

c. Consistent tabulation or indexing method within each technical manual and when compiling technical manual into the final Operations & Maintenance (O&M) Manual.

d. Manufacturer, supplier, spare parts and servicing location information including name, address, phone number of the manufacturer and local representative.

e. Approved Shop Drawing Submittal information applicable to O&M, including operating curves, manufacturer's recommended tolerances and clearances, and approved fabrication drawings.

f. Recommended installation, adjustment, start-up, calibration and troubleshooting procedures.

g. Lubrication recommendation and yearly quantity requirements.

h. Recommended step-by-step procedures for all modes of operation including start-up, operation, shutdown, load changes, and emergency shutdown. Manufacturer's literature shall be included.

i. Complete internal and connection wiring diagrams. Circuit diagrams and schematics shall be down to component level.

j. Recommended preventive maintenance and maintenance procedures, including lubrication and calibration schedules.

k. Complete parts list, by generic title and identification number, with exploded views and schematics of each assembly.

l. Complete programming procedures and ladder logic documentation for all computer controlled, programmable logic controllers and automated equipment.

m. Electrical, instrumentation, control system and piping schematics.

n. Recommended spare parts list and list of special tools and equipment required for O&M.

o. Disassembly, overhaul, reassembly, realignment and testing instructions.

p. Complete equipment O&M Manuals.

q. All contents of the technical manual shall be suitable for compilation into a standard size, three-ring binder.

r. Approved isometric drawings of piping systems

C. Additional requirements are contained in individual Divisions of the Technical Specifications [i.e. Division 16: ELECTRICAL, Division 17: INSTRUMENTATION AND CONTROL, etc.]. The CONTRACTOR shall be responsible for reviewing all said reference requirements and including them in the Bid price. In the event of a conflict, the requirements of the individual Technical Specifications shall prevail. Repetition of requirements in two or more specification references shall not be cause for CONTRACTOR claim of conflict.

D. The CONTRACTOR shall submit two (2) copies of all Technical Manuals to the ENGINEER for review prior to sixty percent (60%) completion of Contract Amount as measured by Monthly Progress Payments at least sixty (60) calendar days prior to the use of any new equipment. The ENGINEER will review and return one copy of each submittal within thirty (30) calendar days following their receipt by the ENGINEER. The CONTRACTOR shall make all revisions and additions and resubmit to the ENGINEER six (6) copies of the corrected Technical Manuals prior to seventy-five percent (75%) completion of the Contract Amount.

E. The ENGINEER will review the corrected Technical Manuals within twenty-one (21) calendar days following their receipt by the ENGINEER. The CONTRACTOR shall then compile all of the corrected Technical Manuals into a single O&M Manual, which shall be arranged according to a Table of Contents, provided by the ENGINEER.

F. The CONTRACTOR shall furnish to the ENGINEER four (4) hard copies and one (1) electronic, searchable Portable Document Format (PDF) copy of the final O&M Manual. Each hard copy manual shall consist of one or more volumes, each of which shall be bound, in a standard size, three-ring, loose-leaf, vinyl plastic hard cover binder, suitable for bookshelf storage. Binder ring size shall not exceed two-and-one-half inches (2.5 inches). All reprints shall be done on margin-reinforced papers. The searchable PDF copy shall be an exact duplicate of the hard copy of the final O&M Manual and be submitted on media approved by the ENGINEER. All submittal materials shall be in English. The final O&M Manual shall be submitted to the ENGINEER prior to eighty-five percent (85%) completion of the Contract Amount as measured by Monthly Progress Payments. Submittal of the Technical Manuals, the Corrected Technical Manuals and/or the O&M Manuals within the specified time frame, as detailed above, shall be a condition precedent to the making of the monthly payments.

G. If TECHNICAL MANUALS have been stipulated as a separate bid item in the SCHEDULE OF WORK AND PRICES in the Bid Proposal, the CONTRACTOR shall be entitled to receive Progress Payments upon submittal and approval of the Technical Manuals. This bid item is not an allowance but is a fixed amount and the CONTRACTOR is not entitled to receive additional compensation for technical manuals. The CONTRACTOR shall be entitled to receive fifty percent (50%) of the bid breakdown amount upon approval of all required draft Technical Manuals by the ENGINEER. Partial submittal of the required Technical Manuals shall not entitle the CONTRACTOR to any payment of this amount. The CONTRACTOR is entitled to receive one-hundred percent (100%) of the bid breakdown amount at the time the ENGINEER gives full approval to all Technical Manuals. Partial approval, or approval of some of the Technical Manuals, shall not entitle the CONTRACTOR to any payment. Failure to list TECHNICAL MANUALS as a separate bid item in the SCHEDULE OF WORK AND PRICES does not relieve the CONTRACTOR from preparing the Technical Manuals and including all associated costs in the Bid.

END OF SECTION

(SEE ATTACHMENTS)

ATTACHMENTS TO SECTION 01782

Attachments to General Requirements Section 01782 consists of four (4) documents, as follows:

ATTACHMENT NUMBER	TITLE OF ATTACHMENT	NUMBER OF PAGES IN THIS ATTACHMENT
01782-A1	Equipment Summary Data Forms Information Sheet	1
01782-A2	Equipment Summary Data Form	1
01782-A3	Information Sheet for Equipment Maintenance Summary Form	1
01782-A4	Typical Maintenance Summary Form	1

EQUIPMENT SUMMARY DATA FORMS
INFORMATION SHEET

Equipment Summary Data Forms are intended to provide the Maintenance Department with sufficient information to catalogue newly purchased equipment items installed at the facility. This information is used for inventory purposes as well as for equipment performance tracking purposes. Each item of equipment installed at the facility must be documented on one of three Forms; Electrical Summary Data Form, Equipment (Mechanical, HVAC, etc.) Summary Data Form, and/or Pump Summary Data Form. Examples of each form are attached. Additional requirements regarding submittal format, quantities, etc, are found elsewhere in this Specification.

1. Equipment item (included industry-accepted nomenclature).

2. CITY Equipment Identification Number (EMPAC)

3. Manufacturer
Address Phone/Fax Numbers

4. Supplier (if different than (3)
Address Phone/Fax Numbers

5. Equipment Serial Number(s)

6. Equipment Model Number

7. Size

8. Capacity

9. Rated Output

10. Drive Motor Data (as appropriate).

In addition, information specific to the item described shall be provided as indicated on the example Forms.

EQUIPMENT SUMMARY
DATA FORM

EQUIPMENT ITEM: _____

EQUIPMENT COST: _____

EQUIPMENT SUPPLIER: _____

COMPONENT INFORMATION: **NAMEPLATE DATE:** **MANUFACTURER:**	
CITY IDENTIFICAITON NUMBER:	**EQUIPMENT SERIAL NUMBER:**
EQUIPMENT MODEL DESIGNAITON:	**TYPE:**
SIZE:	**RATED OUTPUT:**
CAPACITY:	**SERVICE:**
COMPONENT INFORMATION: DRIVE MOTOR DATA **MANUFACTURER:**	
SERIAL NO.:	**HORSEPOWER:**
MODEL:	**FRAME:**
TYPE:	**VOLTAGE:**
DUTY (Pumps Only):	**SEAL TYPE (Pumps Only):**
ENCLOSURE:	**AMPERAGE:**
PHASE: **HERTZ:**	**SERVICE FACTOR:**
LUBRICATION REQUIREMENTS: MOTOR	
COMMENTS:	

INFORMATION SHEET FOR
EQUIPMENT MAINTENANCE SUMMARY FORMS

Equipment Maintenance Summary forms are intended to provide the Maintenance Division with information sufficient to properly diagnose (troubleshoot, repair, check-out, and return an item of equipment to service. Standard information contained in each Form shall be as follows:

In addition, Maintenance information required to troubleshoot, repair, and return electrical/electronic equipment to service (including set point, derivatives, etc.) Shall be included as required. The Maintenance Summary Form attached in intended to serve as a (minimum) guide to the information required per item of equipment. Additional requirements regarding submittal format, quantities, etc. are found elsewhere in this Specification.

1. **Equipment Item (include industry-accepted nomenclature)**

2. **CITY Equipment Identification Number (EMPAC)**

3. **Manufacturer**
   Address Phone/Fax Numbers

4. **Equipment Serial Number(s)**

5. **Weight of Individual Components (over 100 pounds)**

6. **Nameplate Date (including voltage, horsepower, lubrication requirements, speed, etc.)**

7. **Manufacturer's Local Representative**
   Address Phone/Fax Numbers

8. **Maintenance Operation(s) Required. Listing shall include (1) Maintenance Operation to be performed. (2) frequency of said Maintenance Operation based on actual service conditions of installed equipment (i.e., type of duty, environmental factors). Reference shall be made to the appropriate section of the manufacturer's technical literature.**

9. **Lubricant List. List shall include a primary and two secondary manufacturer-approved lubricants.**

10. **Spare Parts required for a minimum of one (1) year of equipment operation based on anticipated actual service conditions. Also to be included in the name, address, and phone number of the recommended source of spare parts if different than (7) above.**

ATTACHMENT ____
Typical Maintenance Summary Form

NOTE: SUPPLEMENTARY INFORMATION, AS APPROPRIATE, SHALL BE INCLUDED

1. EQUIPMENT ITEM: _____

2. CITY EQUIPMENT IDENTIFICATION NUMBER (EMPAC): _____

3. MANUFACTURER:_____
   ADDRESS:_____
   TELEPHONE NO.:_____ FAX NO.:_____

4. EQUIPMENT SERIAL/IDENTIFICATION NUMBERS: _____

5. WEIGHT OF INDIVIDUAL COMPONENTS (OVER 100 POUNDS):_____

6. NAMEPLATE DATA:_____

7. MANUFACTURER'S LOCAL REPRESENTATIVE:_____
   ADDRESS:_____
   TELEPHONE NO.: _____
   FAX NO.:_____

8. MAINTENANCE OPERATION(S) REQUIRED: (attach separate sheet if required).

OPERATION	FREQUENCY	COMMENTS

9. LUBRICANT LIST. Provide Reference symbol used in items recommended.

SHELL	STANDARD OIL	GULF	ARCO	EQUAL

10. RECOMMENDED SPARE PARTS LISTS FOR MINIMUM OF ONE (1) YEAR UNINTERRUPTED SERVICE. (Attach separate sheet if required).

ITEM	PART NO.	QUANTITY REQUIRED (per unit)	UNIT COST	COMMENTS

SECTION 01783
PROJECT RECORD DOCUMENTS

PART 1 - GENERAL

1.1 THE REQUIREMENT

A. The CONTRACTOR shall maintain at the Jobsite a current record copy of all Contract Documents including, but not limited to, Contract Drawings and Project Manual which are marked up during construction to delineate the actual in-place constructed conditions. Project Record Documents including Record Drawings (also known as “As-Built” Plans), Record Project Manual, Record Schedule, Record Product Data, Record Samples, and Miscellaneous Record Submittals shall be provided by the CONTRACTOR for this Project. Requirements for Record Documents, as specified elsewhere, shall supplement the requirements specified herein.

B. Record Documents, particularly the Record Drawings and Record Project Manual, shall include a copy of all changes including those issued as Change Orders, Plan Clarifications, Addenda, Notice to Bidders, responses to Requests for Information (RFI’s), Jobsite Memos, and any additional details needed for the construction of the Project, but not shown on the Contract Drawings or included in the Project Manual.

C. Record Drawings and Record Project Manual shall be marked with red ink on one (1) set of full size prints to produce a record of the complete installation. Any additional drawings that may be required to indicate record conditions shall be prepared on 24" x 36" paper. All additions to Contract Drawings shall employ and use drafting standards which are consistent with the drafting standards used in the Contract Drawings.

D. The Record Drawings and Record Project Manual, including those of all Subcontractors, shall be kept by the CONTRACTOR in the CONTRACTOR’S Jobsite office, shall be updated during construction, and shall be available for the ENGINEER'S inspection and copying at all times. The ENGINEER will review the Record Drawings and Record Project Manual prior to submittal of all Monthly Payment Requests. If, in the opinion of the ENGINEER, the Record Drawings and/or Record Project Manual are not current, approval of the Monthly Payment may be withheld until the Record Drawings and the Record Project Manual are made current. In addition, the CONTRACTOR shall submit a signed certification with each Monthly Payment Request stating that all Record Drawings and record Project Manual are complete and accurate as of the date of the payment request.

1.2 PROJECT RECORD DOCUMENTS

A. This Section includes administrative and procedural requirements for Project Record Documents, including the following:

1. Record Drawings
2. Record Project Manual
3. Record Schedule
4. Record Product Data
5. Record Samples
6. Miscellaneous Record Submittals

B. Related Sections:

1. Section 01321 – Contractor's Construction Schedule and Reports
2. Section 01330 – Shop Drawings/Submittals
3. Section 01770 – Project Closeout
4. Section 01782 – Technical Manuals
5. Section 01810 – Fundamental Commissioning Requirements

1.3 CLOSEOUT SUBMITTALS

C. Required Documents: GENERAL REQUIREMENTS Section 01770 – PROJECT CLOSEOUT, describes administrative requirements for submission, number and type of copies required for Contract closeout requirements.

PART 2 – PRODUCTS

2.1 RECORD DRAWINGS

A. GENERAL: Maintain one set of marked-up paper copies of the Contract Drawings and Shop Drawings onsite, incorporating new and revised Drawings as modifications are issued. Review Record Drawings and Shop Drawings monthly with the Engineer and/or Inspector, for approval.

1. Preparation: Mark the Record Drawings and Shop Drawings to show the actual installation where installation varies from that shown originally. Require individual or entity who obtained record data, whether individual or entity is Installer, subcontractor, or similar entity, to provide information for preparation of corresponding marked-up Record Drawings.

a. Give particular attention to information on concealed elements that would be difficult to identify or measure and record later.
b. Accurately record information in an acceptable drawing technique.
c. Record data as soon as possible after obtaining it.
d. Record and check the markup before enclosing concealed installations.

2. Content: Types of items requiring marking include, but are not limited to, the following:

a. Dimensional changes to Contract Drawings.
b. Revisions to details shown on Contract Drawings.
c. Depths of foundations below first floor.
d. Locations and depths of underground utilities.
e. Revisions to routing of piping and conduits.
f. Revisions to electrical circuitry.
g. Actual equipment locations.
h. Duct size and routing.
i. Locations of concealed internal utilities.
j. Changes made by Change Order.
k. Details not on the original Contract Drawings.
l. Field records for variable and concealed conditions.
m. Record information on the Work that is shown only schematically.

3. Mark the Record Drawings and Record Shop Drawings completely and accurately. Use personnel proficient at recording graphic information in production of marked-up as-built prints.

4. Mark Record Drawings set using red-colored ink. Use other colors to distinguish between changes for different categories of the Work at same location.

5. Mark important additional information that was either shown schematically or omitted from original Contract Drawings.

6. Note Change Order numbers, and similar identification, where applicable.

2.2 RECORD PROJECT MANUAL

A. Preparation: Mark Specifications to indicate the actual product installation where installation varies from that indicated in the Specifications, Addenda, and Contract modifications.

1. Give particular attention to information on concealed products and installations that cannot be readily identified and recorded later.

2. Mark copy with the proprietary name and model number of products, materials, and equipment furnished, including substitutions and product options selected.

3. Record the name of manufacturer, supplier, Installer, and other information necessary to provide a record of selections made.

4. For each principal product, indicate whether record Product Data has been submitted in operation and maintenance manuals instead of submitted as record Product Data.

5. Note related Change Orders**,** Record Product Data**,** and Record Drawings where applicable.

2.3 RECORD SCHEDULE

A. Final Schedule: Submit to the Engineer a final schedule update. The “As-Built” Schedule shall reflect the exact manner in which the project was actually constructed including actual start and finish dates, activities, sequences and logic.

1. The Contractor shall certify the final schedule update as being a true reflection of the way the project was actually constructed.

2.4 RECORD PRODUCT DATA

A. Preparation: Mark Product Data to indicate the actual product installation where installation varies substantially from that indicated in Product Data submittal.

1. Give particular attention to information on concealed products and installations that cannot be readily identified and recorded later.

2. Include significant changes in the product delivered to the Project site and changes in manufacturer's written instructions for installation.

3. Note related Change Orders**,** Record Specifications, and Record Drawings, where applicable.

2.5 MISCELLANEOUS RECORD SUBMITTALS

A. Assemble miscellaneous records required by Individual Specification Sections for miscellaneous record keeping and submittal in connection with actual performance of the Work. Bind or file miscellaneous records and identify each, ready for continued use and reference.

B. Format: Submit miscellaneous record submittals.

1. Include miscellaneous record submittals directory organized by specification section number and title, electronically linked to each item of miscellaneous record submittals.

PART 3 - EXECUTION

3.1 RECORDING AND MAINTENANCE

A. Maintain Change Log: Maintain and submit a written change log to the Engineer, monthly for review, indicating items incorporated in the Project Record Documents concurrent with progress of the Work, including modifications, concealed conditions, field changes, product selections, and other notations incorporated.

B. Recording: Maintain one copy of each submittal during the construction period for Project Record Document purposes. Post changes and modifications to the Project Record Documents as they occur; do not wait until the end of the Project.

C. Maintenance of Record Documents and Samples: Store Record Documents and Samples in the field office apart from the Contract Documents used for construction. Project Record Documents are not to be used for construction purposes. Maintain Project Record Documents in good order and in a clean, dry, legible condition, protected from deterioration and loss. Provide access to Project Record Documents for the Engineer’s reference during normal working hours during performance of Contract.

END OF SECTION

SECTION 01810
FUNDAMENTAL COMMISSIONING REQUIREMENTS

PART 1 - GENERAL

1.1 DESCRIPTION

A. This section includes administrative and procedural requirements as well as a detailed description of the commissioning process. This section supplements other Division 1 Commissioning Sections and applies to Sections in Divisions 15 and 16 that specify testing of components and systems.

B. Basic Commissioning is intended to achieve the following objectives:

1. Verify that applicable equipment and systems are installed according to the manufacturer's recommendations and to industry accepted minimum standards and that they receive adequate operational checkout by installation contractors.

2. Verify and document proper performance of equipment and systems.

3. Verify that Operations and Maintenance (O&M) data is complete.

4. Verify that the City's operating and maintenance personnel are trained in accordance with the specifications.

C. Related Work:

1. 01330 Shop Drawings / Submittals

2. 01770 Project Closeout

3. 15270 Mechanical Systems Commissioning

4. 15280 Mechanical Testing Requirements

5. 16100 Basic Electrical Materials and Methods

6. 16560 Electrical Systems Commissioning

7. 16570 Electrical Testing Requirements

1.2 SUBMITTALS

A. Provide submittal documentation relative to commissioning as described in Section 01330 Shop Drawings/Submittals.

B. Contractor to submit the names of three independent Los Angeles City Fire Department certified testers to the Engineer. The Engineer will select one of the submitted testers to schedule and perform Regulation No. 4 testing

1.3 DEFINITIONS

A. Commissioning Process: A systematic process which verifies that the building systems perform interactively according to the Design Intent Document. The commissioning process coordinates system documentation, equipment startup, control system calibration, testing and balancing, performance testing and training.

B. Commissioning Authority (CA): An entity contracted by the City that plans, schedules, and coordinates the Commissioning Team to implement the Commissioning Process.

C. Commissioning Plan: A document that provides the structure, schedule, and coordination for the commissioning process.

D. Design Intent Document: A written document that details functional requirements of the Project including expectations of how the Project will be used and operated. The Design Intent Document includes design goals, measurable performance criteria, success criteria, and supporting information.

E. Functional Test (FT): A documented test of the dynamic functioning and operation of equipment and systems with the goal of verifying that the Design Intent is met. Test requirements are included in these specifications. Test procedures are developed and results documented by the Commissioning Authority. Test procedures are completed by the Contractor.

F. Prefunctional Checklist (PC): A written checklist that includes checks and tests prerequisite to the equipment's Functional Test. Draft checklists are included in the specifications. The Commissioning Authority assists the Contractor in finalizing the checklists. The Checklists are completed by the Contractor and verified by the Commissioning Authority.

1.4 COORDINATION

Items listed below require the Contractor to coordinate between the sub-contractors, INSPECTOR, GSD building maintenance representative, and the Commissioning Authority. Details regarding each item are given elsewhere in this Section and/or other commissioning sections of the specifications.

A. Pre-Commissioning Meeting: Conducted by the City's Project Manager during which the CA reviews the commissioning process with the commissioning team members.

B. Coordination Meetings: Attend meetings throughout construction, scheduled by the ENGINEER, to plan, coordinate, schedule future activities, and resolve problems.

C. Start-up Plans: Work with the CA to develop startup plans and startup documentation formats, including prefunctional checklists.

D. Equipment Start-up: Utilize start-up plans to coordinate equipment start-up, manufacturers' testing, and other required testing to minimize duplication of work.

E. Testing, Adjusting, and Balancing: Coordinate testing, adjusting, and balancing with the Commissioning Authority so that the CA can witness the processes.

F. Functional Testing: Coordinate functional testing with the Commissioning Authority so that they can witness testing.

G. Training: Coordinate training of owner's staff with Commissioning Authority so that the CA can verify that training is conducted per commissioning requirements.

1.5 SYSTEMS TO BE COMMISSIONED

A. The following systems will be commissioned in this project.

1. Irrigation System and Controls

a. Irrigation System

2. Infiltration Gallery System and Controls

a. Gate Vault and level indicator control system

3. Electrical Systems

a. Lighting System and Controls

b. Automatic gate operators and control

c. Baseball scoreboard systems

PART 2 - PRODUCTS

2.1 TEST EQUIPMENT

A. Provide all testing equipment required by the Commissioning Process except data logging equipment. Data logging equipment is provided by the CA.

B. Provide any special equipment, tools, and instruments that are only available from the equipment supplier, which are specific to the equipment, and which are required for testing.

PART 3 - EXECUTION

3.1 MEETINGS

A. Commissioning Pre-Construction Meeting: Within 60 days of commencement of construction, the ENGINEER will schedule a commissioning pre-construction meeting with the commissioning team in attendance. Commissioning Authority shall distribute meeting minutes to commissioning team. Attendance is mandatory for the following team members:

1. Commissioning Authority

2. Contractor's Site Supervisor

3. Contractor's Project Scheduling personnel

4. Mechanical sub-contractor

5. Electrical sub-contractor

6. Air Balance sub-contractor

7. GSD Building Maintenance Division representative

8. INSPECTOR

B. Miscellaneous Meetings. The ENGINEER will schedule other meetings, generally in conjunction with regularly scheduled site meetings as construction progresses. Meetings will cover coordination, deficiency resolution, and planning issues with particular subcontractors.

3.2 START-UP AND PREFUNCTIONAL CHECKLISTS

A. Perform a full pre-functional checkout of each piece of equipment. The pre-functional testing for a given system must be successfully completed prior to formal functional testing.

B. Equipment shall not be “temporarily” started (for heating and cooling) until the Start-Up Plan is completed.

C. The Contractor shall prepare start-up plans for equipment to be commissioned. Subcontractors responsible for pre-functional checklists and startup will be identified at the pre-commissioning meeting. Submit start-up plans to the Engineer for review and approval; start-up plans shall consist of, but not be limited to:

1. The manufacturer’s standard written start-up procedures copied from the installation manuals, with check boxes by each procedure and a signature block at the end.

2. Field checkout sheets normally used by the sub-contractor.

3. Forms normally issued by the sub-contractor to document tests required in the specifications.

4. Final pre-functional checklists (drafts are included in the specifications). The checklists for mechanical systems include sensor and actuator calibration as described in Section 01811.

5. Schedule that includes equipment installation, contractor start-up, manufacturer start-up, and other tests required by the specifications. Schedule shall state when documents in the start-up plan will be completed.

D. At least 90 days prior to the start of commissioning, the Contractor shall submit a commissioning package for the equipment to be commissioned. This package shall include the following information:

1. Equipment manufacturer’s operating & maintenance instructions.

2. Equipment manufacturer’s installation and start-up manual.

3. Start-up plans as required in this section.

3.3 REQUIREMENTS FOR FUNCTIONAL TESTING

A. Complete the following prior to functional testing:

1. Arrange for commissioning observations to be performed by the Commissioning Authority, and GSD Building Maintenance Division representative.

2. Complete and approve the Start-up Plan.

3. Correct deficiencies identified during start-up.

4. Record pretest set points.

3.4 FUNCTIONAL TESTING

A. Perform functional testing after the testing requirements listed in Paragraph 3.3 are completed.

B. Perform functional testing under the observation of the commissioning authority who will record the results of the functional test procedures.

C. Perform all specified tests according to approved testing procedures.

1. Verify and test performance using actual conditions whenever possible.

2. Simulate conditions by imposing an artificial load when it is not practical to test under actual conditions and when written approval for simulated conditions is received from Commissioning Authority. Before simulating conditions, calibrate testing instruments. Set and document simulated conditions and methods of simulation. After test, return settings to normal operating conditions.

3. Alter set points when simulating conditions is not practical and when written approval to do so is received from Commissioning Authority.

4. Overwrite sensor values with a signal generator when actual or simulated conditions and altering set points are not practical. Do not use the sensor to act as the signal generator to simulate conditions or overwrite values.

D. The Commissioning Authority will review and approve functional testing results. Deficiencies found during testing shall be corrected by the Contractor and retested. Where there is a dispute over a deficiency, the ENGINEER shall be the final authority.

E. Problem Solving: The CA will recommend solutions to problems found, however, the burden of responsibility to solve, correct and retest problems is with the contractor and the design team.

3.5 COST OF RETESTING

A. Costs for retesting beyond one retest will be the responsibility of the Contractor, if the ENGINEER determines that the contractor is responsible for the deficiency. These costs shall include charges for the CA's time, Engineer and Inspector.

B. For a deficiency identified during functional testing but not included in the approved Start-up Plan: The CA will direct the retesting of the equipment once the deficiencies are corrected.

C. Retesting will not be considered a reason for a claim of delay or for a time extension by the contractor.

3.6 DEFERRED TESTING

A. Unforeseen Deferred Tests: Checks or tests not completed due to the building structure, required occupancy condition, or other condition may be delayed upon approval of the ENGINEER. These tests will be conducted in the same manner as the seasonal tests as soon as possible.

B. Seasonal Testing: Complete seasonal testing (tests delayed until weather conditions are closer to the system's design conditions) during the warranty period, as part of this contract. The CA will coordinate this activity. Tests shall be executed, documented and deficiencies corrected by the appropriate Subs, with facilities staff and the CA witnessing. The Contractor shall make adjustments to the Operations and Maintenance Data, as necessary.

3.7 WRITTEN WORK PRODUCTS

A. The commissioning process generates a number of written work products described in the Specifications. A summary of the written products follows. Where the product is developed by the subcontractors, the contractor shall be responsible for their production.

Product	Developed By
1. Design Intent Document	A/E
2. Commissioning Plan	CA
3. Commissioning schedules	CA, Contractor and Subcontractors
4. Equipment & commissioning submittals	Subcontractors
5. Draft prefunctional checklists	CA with specifications
6. Startup Plan	Subcontractors
7. Completed Startup Plan	Subcontractors
8. Issues log (deficiencies)	CA
9. Deficiency reports	CA
10. Blank functional test forms	CA
11. Completed functional test forms	CA
12. O&M manuals	Subcontractors
13. Overall training plan	CA and Subcontractors
14. Specific training agendas	Subcontractors
15. Commissioning report	CA
17. Commissioning meeting minutes	CA or A/E consultants
18. Warranty Documents	Subcontractor

END OF SECTION

SECTION 01820
OPERATIONS AND MAINTENANCE TRAINING

1.1 THE REQUIREMENT

A. General

1. This section covers the development and implementation of training programs that will identify skills and knowledge necessary to safely and efficiently operate and maintain the Project Facilities.

2. The CONTRACTOR shall furnish all tools, equipment, materials, and supplies, and shall perform all functions and services required to complete the Work as specified herein. With the exception of safety and overview training, training shall be divided into separate categories for operations training and maintenance training with maintenance training further broken down to specific crafts.

3. The training requirements specified in other Sections of the Specifications shall be in addition to those specified in this Section.

4. No actual operations training of a piece of equipment will be permitted until the equipment is properly installed and is operational.

5. Operations training shall be a prerequisite to the beneficial use of the facility or any portion thereof and be completed a minimum of one week prior to the beneficial use of the Project Facilities. Maintenance training shall occur after and within thirty (30) days of the beneficial use of the facility.

B. Related Work Specified Elsewhere

1. LIQUIDATED DAMAGES of the GENERAL CONDITIONS.

2. SUBMITTALS of the GENERAL REQUIREMENTS.

3. CONTRACTOR'S CONSTRUCTION SCHEDULE AND REPORTS of the GENERAL REQUIREMENTS.

4. DIVISIONS 11, 16, and 17 as applicable.

C. Training Scope

1. Manufacturer/Vendor Training

a. Manufacturer supplied (VENDOR) equipment training for all major plant equipment and subsystems shall be provided for the Operations and Maintenance groups as outlined in this section. The VENDOR training shall be provided by qualified instructors of the equipment manufacturers, i.e.: equipment field startup technician or their representative, as approved by the ENGINEER and may include both on and off-site training

venues. Generally, manufacturer sales representatives will not be acceptable.

b. Classroom training shall be structured to develop a basic understanding of the design, function and capabilities of the equipment and the interrelationship with the process. In addition, routine operational and preventive maintenance, safety considerations, responses to abnormalities and startup, shutdown and troubleshooting will be covered.

c. Field training shall be scheduled to commence immediately following the classroom training and shall stress hands-on, performance based application of the classroom training. Equipment shall be started and relevant systems and components shall be demonstrated.

d. Off-site training, primarily for the technical crafts including Electricians, Instrument Technicians and Mechanics, shall focus on specialized, technical training and shall be provided by the manufacturer at their factory or training facility. In the event, the CITY requests specialized factory training on a particular piece of plant equipment, the contractor shall make arrangements with the applicable equipment manufacturer to provide such training.

2. Process Overview, Operations and Safety Training

a. Process overview and safety training for the Operations group, if deemed necessary, will be prepared and conducted by the CITY utilizing approved material supplied by the equipment vendors. In the event the CITY is unable to provide the process training, the CONTRACTOR shall enter into an agreement with a training specialist approved by the ENGINEER. Any and all work performed by the training specialist will be paid as stated in Paragraph I, “Fixed Cash Allowance,” herein. The CONTRACTOR shall submit invoices for payment from the training specialist, which have been previously approved by the ENGINEER and paid by the CONTRACTOR.

3. General

a. Training Material: Sections of the manufacturers O&M manuals, selected by the CITY for the installed equipment, shall be used as classroom training material. The CONTRACTOR shall then reproduce the selected text for each piece of plant equipment and compile the training material to be used in the classroom by the manufacturer’s field technician.

b. Training schedule: The CONTRACTOR shall provide an operation and maintenance training schedule to be conducted immediately following vendor equipment startup of the equipment. All training shall be scheduled for Tuesday through Thursday only.

D. Training Requirements

1. The technical position titles of trainees for the Operational and Maintenance groups are listed below:

   a. Operations Group

      (1) Shift Superintendents and Process Control Engineers

   b. Maintenance Group

      (1) Mechanics/Plumbers

      (2) Electricians

      (3) Instrument Technicians

2. Major equipment and plant subsystems for the various crafts which require training include, but are not limited to the following:

   a. Instrumentation and Controls (I&C)

      (1) Distributed Control Systems (DCS)

      (2) Programmable Logic Controllers (PLC)

      (3) Local Control Panels (LCP)

      (4) Loop Descriptions and Drawings

      (5) Instrument Installation and Calibration

   b. Electrical Systems:

      (1) Transformers and Substations

      (2) Motor Control Centers (MCC)

      (3) High and Low Voltage Systems

      (4) Wiring Diagrams/Schematics

      (5) Lighting and Power Panels

      (6) Starters and Controllers

   c. Operating Systems

      (1) Gate actuator

      (2) Level indicators

(3) Local and Remote Control Devices

E. Operation Training

1. The VENDOR shall conduct **5** courses as described herein for the General Operations Group. Each course shall consist of both classroom and field training as specified herein. Each class size shall consist of 12 trainees. The courses shall not be conducted concurrently.

2. The classroom training shall consist of 10 hours of instruction and include, but not be limited to, the following subjects. This training shall be conducted by qualified representatives of the equipment manufacturers as follows:

a. Safety precautions and procedures for 2 hours
b. Equipment description and function for 2 hours
c. Operating procedure for 2 hours
d. Operational Maintenance for 2 hours
e. Emergency procedures for 2 hours

F. Maintenance Training

1. The maintenance training shall include the function, adjustment, repair, and replacement of all components related to the trainee's trade. Emphasis shall be placed on those areas listed in item number 3, below. Safety aspects shall also be stressed.

2. The field training shall stress hands-on instruction.

3. The training shall include, but not be limited to, the following:

a. Preventive and corrective maintenance procedures, including replacement of parts; lubrication quantities, types, frequencies, and application points; and an estimate of time to perform such procedures.

b. Special tools, techniques, or procedures required for either preventive or corrective maintenance of equipment, or its auxiliary or support systems.

c. Procedures to perform adjustments required for alignment, wear and calibration for all preventive and corrective maintenance, and an estimate of time required to perform such procedures.

d. Assembly and disassembly procedures, including parts lists required for appropriate preventive and/or corrective maintenance. Models, "exploded" views, and/or audiovisual materials shall be used for this training. These materials shall be turned over to the ENGINEER upon completion of training. Hands-on field training shall be provided, subject to the approval of the ENGINEER.

e. Maintenance, overhauls, troubleshooting of equipment, and auxiliary or support systems.

4. Maintenance training shall be conducted as described in the following subsections.

a. Mechanic Training

(1) Conduct 8 hours of both classroom and field training for the Mechanics Group. The class size consist of 12 trainees.

(2) The training shall consist of hours of instruction, including but not limited to, the following topics for each major equipment system:

(a) Equipment Description and Function for 0.5 hours

(b) Corrective and Preventive Maintenance Procedures for 1 hour

(c) Disassembly and Assembly 1 hour

(d) Spare Parts for 0.5 hours

(e) Troubleshooting for 1 hour

(3) The field training shall consist of 4 hours of hands-on instruction.

b. Electrician Training

(1) Conduct 8 hours of both classroom and field training for the Electrician Group. The class size will consist of 12 trainees.

(2) The classroom training shall consist of 8 hours of instruction, including but not limited to, the following:

(a) Transformers and Unit Substations for 1 hour

(b) High and Low voltage Systems for 1 hour

(c) Motor Control Centers for 1 hour

(d) Control Panel Wiring Diagrams/Schematics for 1 hour

(3) The field training shall consist of 4 hours of hands-on instruction.

c. Instrument Technician Training

(1) Conduct 8 hours of both classroom and field training for the Instrument Technicians Group. The class size will consist of 12 trainees.

(2) The classroom training shall consist of 8 hours of instruction, including but not limited to, the following subjects:

(a) PLC and/or DCS for 1 hour

(b) Loop and PID Drawings, Schematics **for 1 hour**

(c) Programming for 1 hour

(d) Operator Interface for 1 hour

(3) The field training shall consist of 4 hours of hands-on instruction.

G. Execution

1. The training specified herein shall be provided at the "**To Be Determined Location"**. The CITY will make available one room for the training.

2. Due to limitations of plant manpower available for dedicated training purposes, no more than one group course shall be taught at a time for any individual trade discipline.

3. Training shall be conducted so that home study will not be required. The training shall include courses, which combine classroom and field hands-on training that is structured and scheduled to facilitate trainee comprehension of the subject material. Courses shall be continuous, and the field training shall immediately follow the classroom instruction.

4. The CITY reserves the right to videotape any and all training materials and presentations, except for proprietary material, and retain all rights for usage of such recorded material to train CITY personnel.

H. Evaluation

1. All training sessions will be monitored and approved by the ENGINEER. Any session or portion thereof deemed unsatisfactory, based on evaluation of the training, shall be repeated by the manufacturer or manufacturer's representative at no additional cost to the CITY.

2. When deemed appropriate by the ENGINEER, field instruction to CITY personnel designated to receive training may be acceptable as a training session. The instruction shall be provided by a field service technician qualified to perform corrective or preventive maintenance, troubleshooting, or related field services.

I. Fixed Cash Allowance

1. A fixed cash allowance has been allocated for the Facility Overview and Operations/Safety training and is included as an item of the bid breakdown. Overhead and profit shall be as per Section 01212 – FIXED CASH ALLOWANCE ITEMS of the GENERAL REQUIREMENTS.

2. However, if Facility Overview and Operations/Safety training are not executed or partially executed or partially expended, or over expended (with the ENGINEER'S prior approval), then an appropriate change order shall be executed in accordance with the provisions the GENERAL REQUIREMENTS Section 01254 -- PAYMENT FOR CHANGES AND EXTRA WORK.

J. Submittals

1. The CONTRACTOR shall submit training packages for the ENGINEER'S review and approval. The training submittal shall be tied into the CONTRACTOR'S overall submittal process.

2. The CONTRACTOR shall provide the training submittals in the following order for review and approval by the ENGINEER.

   a. First draft sixty (60) days prior to proposed instruction date.

   b. Final draft thirty (30) days prior to proposed instruction date.

3. The "first draft" of the training material shall, as a minimum, contain the following:

   a. Instructional text that details the specific topics of training for the system. These topics are detailed previously in the training submittal. All text must be complete. Incomplete sections, paragraphs, etc., shall not be acceptable.

   b. Clean legible photocopies of all overhead transparencies to be used in the delivery of the lesson plan.

   c. Slides, videos (Digital Media), and any other type of visual training aid that will be used in conjunction with the training plan.

   d. Reference materials as detailed in the lesson plan (e.g. handout, manufacturer catalogues, brochures, and pamphlets). All material shall be reviewed by the ENGINEER to determine applicability and functionality. Reference materials that do not pass this review shall be modified and resubmitted within two weeks for approval.

   e. No actual classroom or field training shall be scheduled unless this material is approved.

f. The CONTRACTOR shall not proceed to the "final draft" stage of training material until the ENGINEER has approved the "first draft".

4. With the final draft of the training material, the CONTRACTOR shall submit a Training Agenda that provides the following information:

   a. Company name, address, and telephone number(s) for the vendor.

   b. Name and telephone number(s) of the vendor training representative.

   c. Duration of class (total hours).

   d. Breakdown of class and duration in hours of each training activity.

   e. Target audience (e.g. operators, maintenance personnel etc).

   f. Audiovisual requirements (i.e. slide projector, television, VCR, overhead projector, etc.).

5. After the CONTRACTOR has received approval of the "final draft" of the training material and the training agenda from the ENGINEER, only then can the actual training be scheduled. CONTRACTOR shall submit his proposed training schedule to the ENGINEER for approval. The proposed training schedule shall be submitted a minimum of sixty (60) calendar days prior to the start of the training. If the proposed training schedule is approved, then it becomes the final training schedule.

6. Any compensation that is paid to CITY personnel as a result of class cancellations of classes that begin more than thirty (30) minutes after the scheduled start time shall be reimbursed to the CITY by the CONTRACTOR. An exception is when a class is canceled or delayed due to actions by the CITY. The ENGINEER, or his/her representative, will monitor the starting times of scheduled classes.

7. The review of the training material does not constitute its approval unless specifically stated so. The training material submittal shall contain, but not be limited to, the following:

   a. Sufficient background information on each instructor for various sessions shall be provided to allow evaluation of the proposed instructor's qualifications and his capability of training the specific discipline.

   b. At the completion of the training, the CONTRACTOR shall forward to the ENGINEER three (3) complete sets of training materials and support material for each defined training category. This forwarding of materials is to take place at a closeout meeting between the CONTRACTOR and the ENGINEER.

8. Failure to submit training schedule or changes made to the final training schedule, that are not due to actions by the CITY, shall subject the CONTRACTOR to liquidated damages. Liquidated damages shall be assessed at the rate of **$500** per day should the CONTRACTOR fail to meet the schedule's submittal requirements.

END OF SECTION

BUREAU OF ENGINEERING

STRATHERN PARK NORTH STORMWATER CAPTURE PROJECT WORK ORDER NO. EW40080F

TECHNICAL SPECIFICATIONS

APRIL 8, 2025

City of Los Angeles
California

Department of Public Works
Bureau of Engineering

TABLE OF CONTENTS
TECHNICAL SPECIFICATIONS

02001 Table Of Contents

DIVISION 02-SITE WORK
02210 Clearing, Grubbing and Stripping
02235 Dewatering
02240 Sheeting Shoring and Bracing Systems
02310 Earthwork
02545 Storm Drain System
02550 Lined Reinforced Concrete Pipe
02585 Maintenance Manhole and Precast Vault Construction
02600 Ductile-Iron Vent Piping
02710 Yard Work and Street Work
02730 Permeable Paving
02752 Concrete Paving
02795 Ballfield Infield Surface
02810 Irrigation
02820 Chain Link Fencing and Gates
02840 Concrete Wheel Bumpers
02932 Landscape Planting

DIVISION 03 – CONCRETE
03100 Concrete Formwork
03200 Reinforcement Steel
03250 Concrete Accessories
03290 Joints In Concrete
03300 Cast-In-Place Concrete
03315 Grout
03370 Concrete Curing
03400 Precast Concrete
03740 Concrete Repair

DIVISION 04 - MASONRY
(Not used)

DIVISION 05 – METALS
05500 Miscellaneous Metalwork
05600 Floor Access Hatches

DIVISION 06 – WOOD AND PLASTICS
06100 Rough Carpentry

DIVISION 07 - THERMAL AND MOISTURE PROTECTION
07290 Waterproofing
07900 Joint Sealant
07920 Caulking and Sealants

DIVISION 08 – DOORS AND WINDOWS
(Not used)

DIVISION 09 - FINISHES
09800 Protective Coatings

DIVISION 10 - SPECIALTIES
10443 Disabled Accessibility Parking Signage

DIVISION 11 – EQUIPMENT
11815 Slide/Stop Gates

DIVISION 12 - FURNISHINGS
(Not used)

DIVISION 13 - SPECIAL CONSTRUCTION
13200 Modular Buried Stormwater Infiltration System and Desilting Basin System

DIVISION 14 - CONVEYING EQUIPMENT
(Not used)

DIVISION 15 – MECHANICAL/PLUMBING
15270 Mechanical Systems Commissioning
15280 Mechanical Testing Requirements
15320 Electrical Requirements for Mechanical Equipment

DIVISION 16 - ELECTRICAL
16020 Municipal Facilities General Electrical Requirements
16100 Basic Materials and Methods
16110 Raceways
16160 Conductors
16170 Cabinets and Racks
16180 Wiring Devices
16190 Electrical Identification
16200 Motor Control Centers
16210 Switches, Disconnect and Safety
16270 Service and Distribution Switchboard
16280 Short Circuit and Coordination Report
16290 Municipal Facilities Grounding Systems
16320 Transformers
16330 Panelboards
16340 Low Voltage Motor Control
16360 Municipal Facilities Lighting
16380 Municipal Facilities Uninterruptible Power System
16490 Electric Motors
16560 Municipal Facilities Electrical Systems Commissioning
16570 Municipal Facilities Electrical Testing Requirements

DIVISION 17 - INSTRUMENTATION
17100 Meters, General
17240 AV Flow Meters – Field Mounted
17400 Process Instrumentation and Control
17450 SCADA, PLCS, Network and Communications

APPENDICES
Geotechnical Evaluation Report Strathern Park North
Limited Phase II Environmental Site Assessment
Additional Phase II Environmental Site Assessment
DRAFT Stormwater Pollution Prevention Plan for Construction Activities
Utility Location Report
DRAFT Final Mitigated Negative Declaration Stormwater Capture Parks Program

Notice of Proposed Project First Notice
Summary of First Notice Replies
Transfer Agreement Between LACFCD and LADWP (to be provided later)
State Transfer Agreement (to be provided later)

END OF SECTION

SECTION 02210
CLEARING, GRUBBING AND STRIPPING

PART ONE - GENERAL

1.1 DESCRIPTION

A. All site clearing and grubbing on the job-site.

B. Site clearing shall consist of removing all vegetable growth such as trees, roots, stumps, shrubs, brush, limbs; and stone, boulders, clods, wood and other vegetative growth from the growth surface. Clearing shall also include the removal and disposal of trash piles, rubbish, etc.

C. Grubbing shall consist of the removal and disposal of wood roots, stumps, shrubs, brush, stone, boulders, clods, vegetable growth, etc. below the ground or subgrade surface.

D. CONTRACTOR shall furnish all tools, equipment materials and supplies and shall perform all labor to complete the work associated with removal of all natural and artificial objectionable material from the designated areas of work as indicated in the Contract Documents.

E. This work shall also include the protection from injury and preservation of existing improvements, adjacent property, utility, vegetation and existing objects designated to remain.

F. Prior to commencing the work, obtain acceptance from the ENGINEER regarding methods to be used and disposal of removed materials.

G. Related Sections:

1. Documents affecting work of this Section included, but are not necessarily limited to the GENERAL CONDITIONS, SUPPLEMENTARY CONDITIONS, DIVISION 1 - GENERAL REQUIREMENTS and other Sections of the Project Manual.

2. Earthwork in Section 02310.

3. Irrigation System in Section 02810.

4. Concrete work in Section 03300.

1.2 QUALITY ASSURANCE

A. Labor: Use adequate numbers of skilled laborers thoroughly trained in site-clearing operations and experienced in the necessary crafts and completely familiar with the specified requirements and methods needed for the proper performance of the work of this Section.

Codes and Regulations: Perform all work of this Section in strict accordance with applicable Government Codes and Regulations especially meeting all safety standards and requirements of CAL/OSHA, County and 2019 Los Angeles City Building Code and applicable Amendments. Conform to all storm water pollution control measures as required and provided in Section 02310 - EARTHWORK of the Project Manual. Provide additional measures, added materials and devices as may be needed as directed by the City Engineer or the Consultant at no added cost to the City.

B. Miscellaneous Requirements:

1. Erection and maintenance of protections.

2. Dust Control.

3. Repair of Damages.

4. Cleaning and Removal of Rubbish.

C. Permits and Licenses: Procure all City, County and State Permits and Licenses, including Municipal Business License and pay all charges and fees for the same.

D. Contractor Submittals - Submit schedule of clearing, grubbing, and erosion control measures to be put in place for all work scheduled during the rainy season (October - April).

PART TWO - PRODUCTS

2.1 MATERIALS

A. Soil Sterilant: As specified in Section 02310 - EARTHWORK.

B. Soil Treatment for Termite Control: As specified in Section 02310 - EARTHWORK

C. Provide Materials not specifically described but required for completion of the work of this Section as selected by the Contractor subject to the approval of the City Engineer or the Consultant.

PART THREE - EXECUTION

3.1 SITE CONDITIONS

Examine the job-site and conditions under which work of this Section will be performed. Correct conditions detrimental to timely and proper site-clearing operations, as directed by the City Engineer or the Consultant. Do not proceed until such detrimental conditions have been corrected.

3.2 PROTECTION

A. Protect Existing Structures and Site Improvements indicated to remain from damage by approved methods and/or as authorized by the City Engineer. Removal of all protections shall be when work of this Section is completed or when so authorized by the City Engineer or the Consultant. Apply protections to adjacent properties as required and directed by the City Engineer.

B. Protect Existing Utilities Indicated on Plans traversing the job-site and serving existing adjacent facilities.

C. Protect Existing Trees and Shrubs indicated on Plan by providing temporary surrounding fencing so located a sufficient distance away so that trees and shrubs will not be damaged by site-clearing operations.

D. Protection of Persons and Property (existing structures and site improvements).

1. Provide barricades, warning signs at open depressions and holes on adjacent property and public accesses.

2. Provide operating warning lights during hours from dusk to dawn each day or as otherwise required.

3. Protect existing remaining structures, utilities, sidewalks, pavements other facilities from damage as caused by settlement, undermining, washout or other hazards created by site-clearing operations of this Section.

4. Provide and maintain pedestrian and vehicular access in accordance with Work Area Traffic Control Handbook (WATCH), latest edition.

E. Use means necessary to prevent air pollution or dust from becoming a nuisance to the public, to neighbors and to others performing work on or near the job-site. Comply with governing regulations.

E. Maintain access to the job-site, other neighboring property, street and alley at all times.

F. The project site shall be maintained in conformance with Section 7-8 - PROJECT SITE MAINTENANCE of the Standard Specifications for Public Works Construction (SSPWC) and the requirements of this Project Manual.

G. Contractor shall comply and remain compliant with the Storm Water Pollution Prevention Plan Construction Activities.

3.3 SITE CLEARING AND GRUBBING

A. General:

1. For drawing clarity, not all trees, shrubs, brush, grass, weeds, or exact amount of trash or debris are shown on the drawings. Contractor shall carefully study the Contract Drawings, Geotechnical Report, Phase 2 Environmental Site Assessment Report, , visit the job site and verify the extent of the work to be done prior to the Bid.

2. Prior to starting job-site clearing operations in the company of the City Engineer or Consultant Architect, Soil Engineer and Inspector; visit the job site and verify the extent of the work.

3. Site clearing and grubbing shall conform to Section 300-1 - CLEARING AND GRUBBING of SSPWC and applicable requirements of the Project Manual.

4. Site clearing and grubbing shall be done in the presence of the Soil Engineer. Contractor shall notify the City Engineer 72 hours prior to clearing operation.

B. Site Clearing and Grubbing Operations

1. To a depth of at least 12 inches below existing ground surfaces or new graded surfaces, whichever is lower, Clean out all vegetable growth, roots, stomps, clods

and other objective materials.

2. Treat roots remaining in the soil with a weed killer approved and as directed by the City Engineer or the Consultant.

3. Remove all concrete and masonry debris. Remove stones, boulders, clods which are one (1) inch or larger. Remove stones, boulders, clods which are one (1) inch or larger from all utility trenches.

4. Remove all existing rubbish and debris or those resulting from work operations of this Section as soon as possible, do not allow to pile up. Do not burn rubbish and debris on the job-site.

5. Remove all growths including trees and shrubs on the job-site within property lines including trees in tree wells and elsewhere as noted on the Contract Drawings.

6. Where active utility lines need to be capped or plugged, perform such work in accordance with requirements of the Utility Company or government agency having jurisdiction and conform to provisions of Section 01140 – CONTRACTOR'S USE OF THE PREMISES, and Subsection 3.2B of this Section.

7. Existing Services to remaining structures are to be maintained at all times.

3.4 STRIPPING

A. Stripping shall include the removal and disposal of all organic sod, topsoil, grass and grass roots, and other objectionable material remaining after clearing and grubbing from the areas designated to be stripped. The depth of stripping shall be as shown on the Drawings and specified herein.

B. Topsoil from the strippings shall be stockpiled and used for the finished site grading. Excess topsoil will be placed in the waste disposal areas designated by the ENGINEER.

C. Prior to beginning any excavation or fill, strip the topsoil to a depth sufficient to remove all organic material **and stockpile for future use.** In general, topsoil shall be removed where structures are to be built, trenches dug, and roads, parking lots, walks, and similar improvements constructed within the areas presently covered with topsoil. Topsoil shall be stored clear of the construction area. Take reasonable care to prevent the topsoil from becoming mixed with subsoil. In lieu of reusing stockpiled, use imported topsoil as required for final grading.

3.5 TOPSOIL

A. Strip and remove existing sod, and stock pile existing sod if specified for reuse in the Contract Works.

B. After proposed planting area(s) has been cleared of vegetation and grubbed, strip the existing topsoil to a depth needed to allow the top 24" of fill as "Class A" topsoil in accordance with Earthwork, Section 02310 and Landscape Planting, Section 02932.

C. If on site topsoil is specified for reuse, stock pile topsoil in an area clear of new

construction or where directed by the City Engineer or the Consultant.

D. Remove and dispose of the stock pile topsoil prior to the delivery of any new imported top soil.

3.6 REMOVAL AND DISPOSAL OF CLEARING AND GRUBBING DEBRIS

A. General: All materials removed shall be disposed of outside of the right-of-way. No accumulation of flammable material shall remain on or adjacent to the right-of-way. The roadway and adjacent areas shall be left with a neat and finished appearance.

B. Bituminous Pavement: Bituminous pavement removal shall be in conformance with SSPWC Section 300-1.3.2.

C. Concrete Pavement: Concrete pavement removal shall be in conformance with SSPWC Section 300-1.3.2.

D. Concrete Curb, Walk, Gutters, Cross Gutters, Driveways, and Alley Intersections: Concrete removal shall be in conformance with SSPWC Section 300-1.3.2.

3.7 STORAGE OF MATERIALS AT THE JOB-SITE

Storage not permitted beyond brief accumulation awaiting pick up by removal trucks. Delays in the removal of site-clearing materials from the job-site shall be subject to the approval of the City Engineer or the Consultant.

END OF SECTION

SECTION 02235
DEWATERING

PART 1 – GENERAL

1.1 Related Documents

A. Drawings and general provisions of the Contract, including General and Supplementary Conditions and Division 1 Specification Sections, apply to this Section.

1.2 Summary

A. This Section includes construction dewatering.

B. Related Sections include the following:

1. Division 2 Section "Earthwork" for excavating, backfilling, and site grading.

1.3 Performance Requirements

A. Dewatering Performance: Design, provide, test, operate, monitor, and maintain a dewatering system of sufficient scope, size, and capacity to control ground-water flow into excavations and permit construction to proceed on dry, stable subgrades.

1. Work includes removing dewatering system when no longer needed.

2. Maintain dewatering operations to ensure erosion is controlled, stability of excavations and constructed slopes is maintained, and flooding of excavation and damage to structures and utilities are prevented.

3. Prevent surface water from entering excavations by grading, dikes, or other means.

4. Accomplish dewatering without damaging existing buildings and utilities adjacent to excavation.

5. Identify steps to minimize the volume, monitor and pre-treat dewatering effluent to improve its quality prior to disposal.

1.4 Submittals

A. Shop Drawings: For dewatering system. Show arrangement, locations, and details of wells and well points; locations of headers and discharge lines; and means of discharge and disposal of water.

1. Include a written report outlining control procedures to be adopted if dewatering problems arise.

2. If retaining "Performance Requirements" Article, retain subparagraph below to meet requirements of authorities having jurisdiction or to follow

customary practice in Project's location.

3. Include Shop Drawings signed and sealed by a California registered professional engineer responsible for their preparation.

B. Dewatering Plan: The dewatering plan shall include all the requirements of Bureau of Engineering Special Order No. 001-0204. Submit Dewatering Plan to the Bureau of Sanitation (BOS), Regional Water Quality Control Board and National Pollutant Discharge Elimination System (NPDES) for plan check review, approval and permit. Steps shall be identified to minimize the volume, to monitor and pre-treated to improve the quality of dewatering effluent prior to disposal.

C. BOS Industrial Waste Permit: Obtain a BOS Industrial Waste Permit for disposing dewatering effluent into sanitary sewers. Sewers are primary disposal sites for dewatering effluent. Disposal into storm drains may only be used as a last resort and will be heavily regulated.

D. Qualification Data: For firms and persons specified in "Quality Assurance" Article to demonstrate their capabilities and experience. Include lists of completed projects with project names and addresses, names and addresses of architects and owners, and other information specified.

E. Photographs or videotape, sufficiently detailed, of existing conditions of adjoining construction and site improvements that might be misconstrued as damage caused by dewatering operations.

F. Record drawings at Project closeout identifying and locating capped utilities and other subsurface structural, electrical, or mechanical conditions.

1.5 Quality Assurance

A. Installer Qualifications: Engage an experienced installer to assume engineering responsibility and perform dewatering who has specialized in installing dewatering systems similar to those required for this Project and with a record of successful in-service performance.

B. Professional Engineer Qualifications: A California registered profesional engineer who is experienced in providing engineering services for designing dewatering systems that are similar to those indicated for this Project in material, design, and extent.

1. Engineering Responsibility: Engage a qualified professional engineer to prepare or supervise the preparation of data for the dewatering system including drawings, testing program, test result interpretation, and comprehensive engineering analysis that shows the system's compliance with specified requirements.

C. Regulatory Requirements: Comply with water disposal requirements of authorities having jurisdiction.

1.6 Project Conditions

A. Existing Utilities: Do not interrupt utilities serving facilities occupied by the Owner or others unless permitted in writing by the Engineer and then only after

arranging to provide temporary utility services according to requirements indicated.

B. Project Site Information: A geotechnical report has been prepared for this Project and is attached to the Project Specifications for information only. The opinions expressed in this report are those of the geotechnical engineer and represent interpretations of the subsoil conditions, tests, and results of analyses conducted by the geotechnical engineer. Owner will not be responsible for interpretations or conclusions drawn from this data by Contractor.

1. Make additional test borings and conduct other exploratory operations as necessary.

C. Survey adjacent structures and improvements, employing a qualified professional engineer or surveyor, establishing exact elevations at fixed points to act as benchmarks. Clearly identify benchmarks and record existing elevations.

1. During dewatering, resurvey benchmarks weekly, maintaining an accurate log of surveyed elevations for comparison with original elevations. Promptly notify Architect if changes in elevations occur or if cracks, sags, or other damage is evident in adjacent construction.

PART 2 – PRODUCTS

NOT USED

PART 3 - EXECUTION

3.1 Preparation

A. Protect structures, utilities, sidewalks, pavements, and other facilities from damage caused by settlement, lateral movement, undermining, washout, and other hazards created by earthwork operations.

1. Prevent surface water and subsurface or ground water from entering excavations, from ponding on prepared subgrades, and from flooding site and surrounding area.

2. Protect subgrades and foundation soils from softening and damage by rain or water accumulation.

B. Install dewatering system to ensure minimum interference with roads, streets, walks, and other adjacent occupied and used facilities.

1. Do not close or obstruct streets, walks, or other adjacent occupied or used facilities without permission from Owner and authorities having jurisdiction. Provide alternate routes around closed or obstructed traffic ways if required by governing regulations.

3.2 Dewatering

A. Install dewatering system utilizing wells, well points, or similar methods complete with pump equipment, standby power and pumps, filter material gradation, valves, appurtenances, water disposal, and surface-water controls.

B. Before excavation below ground-water level, place system into operation to lower water to specified level, a minimum of three feet below the bottom of planned excavations, and then operate it continuously until drains, sewers, and structures have been constructed and fill materials have been placed, or until dewatering is no longer required.

C. Provide an adequate system to lower and control ground water to permit excavation, construction of structures, and placement of fill materials on dry subgrades. Install sufficient dewatering equipment to drain water-bearing strata above and below bottom of foundations, drains, sewers, and other excavations.

1. Do not permit open-sump pumping that leads to loss of fines, soil piping, subgrade softening, and slope instability.

D. Dispose of water removed from excavations in a manner to avoid endangering public health, property, and portions of work under construction or completed. Dispose of water in a manner to avoid inconvenience to others. Provide sumps, sedimentation tanks, and other flow-control devices as required by authorities having jurisdiction.

E. Provide standby equipment on-site, installed and available for immediate operation, to maintain dewatering on a continuous basis if any part of system becomes inadequate or fails. If dewatering requirements are not satisfied due to inadequacy or failure of dewatering system, restore damaged structures and foundation soils at no additional expense.

1. Remove dewatering system from Project site on completion of dewatering. Plug or fill well holes per the current requirements of City of Los Angeles.

F. Damages: Promptly repair damages to adjacent facilities caused by dewatering operations.

END OF SECTION

SECTION 02240
SHEETING, SHORING AND BRACING SYSTEMS

PART 1 – GENERAL

1.1 SUMMARY

The Contractor shall provide shoring at open excavations and elsewhere where greater than 5-feet in depth, or as needed to ensure a stable excavation at less than 5 feet depth. Shoring shall be furnished, placed, maintained and removed by the Contractor, as needed to protect workers, materials, other properties and the public.

1.2 SYSTEM DESCRIPTION

A. General:

1. Shoring systems are not fully detailed on the Drawings, which are diagrammatic and show design intent of finished profiles, shapes and forms.

2. Specifications are of the performance type and include the minimum requirements of the excavation support system without limiting the Contractor to methods of achieving such performance.

B. Survey of existing conditions:

1. Employ California licensed surveyor or civil engineer to make a survey of existing adjacent structures and improvements.

   a. Establish precise elevations at fixed points to act as benchmarks.

   b. Clearly identify benchmarks and record existing elevations.

2. Photograph conditions encountered to highlight defects in existing construction. Notify the Engineer and registered owners of adjacent properties in writing when the survey is to be made and photographs taken so they may have representatives present.

   a. Have those representatives present sign the survey and photographs as witnesses.
   b. Upon completion of this work, make a similar examination of the properties originally surveyed, giving similar notice to all interested parties so they may be present during the final examination of the properties. Send a record of the original and final examinations to all concerned parties.

C. Design Requirements:

1. Shoring: Design shoring in accordance with all applicable codes, and in accordance with the specific requirements shown on the Contract Drawings and specified in the Soil Report. All wood components of the shoring system

shall be constructed of pressure treated wood in conformance with the code requirements.

2 Loading: Design and construct shoring to withstand all soil and hydrostatic loading that might occur during the various stages of construction and for any surcharging loading caused by equipment loads, loads from material or soil stockpiles, and earthquake-induced loads.

a. Determine the soil, surcharge, and hydrostatic loading, but in no case shall the loading be less than the earth and minimum equipment surcharge pressures.

b. Determine the proper load distributions caused by such activities and assure that those conditions are not exceeded in the field during construction.

c. Design the shoring for lateral earth and water pressures and surcharge loads that could result from construction methods and dewatering activities.

d. Consider the intermediate stages during sequence of excavation and backfilling, including placement and removal of the lateral support elements, in the shoring design.

3 Allowable deflection: Maximum deflection of any portion of the shoring system is 0.5 inch. The maximum allowable deflection, where there are no structures, utilities, or other improvements that may be impacted by the movement of shoring elements, may be increased up to one inch with the approval of the Engineer.

4 Existing pipes or structures shall not be used to support any portion of the open excavation unless approved by the Engineer in writing.

5 The design of shoring shall conform to accepted engineering practice in this field. Approval of the Contractor's plans and methods of construction by the Engineer or the authorized agencies does not relieve the Contractor of his responsibility for the adequacy of the shoring system.

D. Performance Criteria:

1. The Contractor shall be solely responsible for and bear the sole burden of cost for any and all damages resulting from improper shoring or failure to shore.

2. The safety of workers, the protection of adjacent structures, property and utilities, and the installation of adequate supports for all excavations shall be the sole responsibility of the Contractor.

3. The design, planning, installation, and removal of all shoring shall be accomplished in such a manner as to maintain stability of the required excavation, or trench section, and to prevent any movement of soil that may cause damage to adjacent structures and utilities, damage or delay the work, or endanger life and health.

1.3 RELATED WORK SPECIFIED ELSEWHERE

A. Section 02310 Earthwork

B. Section 02810 Irrigation System

C. Section 03300 Cast-in-Place Concrete

D. Division 16 Electrical

1.4 CONTRACTOR SUBMITTALS

A. Comply with pertinent provisions of Section 01330 - SUBMITTALS of DIVISION 1 - GENERAL REQUIREMENTS.

B. Design and Calculations: The Contractor shall design and prepare shoring drawings and make calculations of materials used structurally in excavations, footings and foundation in accordance with the code requirements.

C. Shop Drawings: After submitting drawings for shoring to the Engineer for review, the Contractor shall incorporate all comments or corrections in the drawings, and submit to the authorized governing agencies for approval, at least three (3) weeks prior to commencement of work. After the approval is obtained, the Contractor shall submit [seven (7)] duplicate copies of the approved drawings to the Engineer. No excavations shall start until all the reviews and approval of the shoring design, which includes the following minimum items, have been obtained from the authorized agencies, or the Engineer:

1. Design assumptions, analysis calculations, and information on Contractor's proposed method of installation and removal of all shoring.

2. The maximum design load to be carried by the various members of the support system.

3. Detailed excavation support drawings, showing all pertinent dimensions, spacing, and relationships among the components of the shoring, as well as construction sequence and scheduling. Drawings shall show adjacent existing improvements including utilities within a lateral distance equal to the depth of excavation.

4. The method of bracing and preloading, if any.

5. Detailed utility and structure support drawings, where necessary.

6. The full excavation depth and depth(s) below the main excavation to which the support system will be installed.

7. Detailed sequence of construction and loads for various stages of bracing installation and removal.

8. Detailed drawings and descriptions of the method to be used by the Contractor to monitor shoring movements.

9. Types of construction equipment intended to be used in this Project.

10. Method of removing the soil from the trench or excavation.

11. Backfill materials and method of backfill and compaction.

12. Dewatering Plans.

D. Quality Control Submittals:

1. Design Data: All the design and calculations and shop drawings shall be sealed and signed by a Civil or Structural Engineer licensed in the State of California and experienced in the design of earth retaining structures. The professional engineer shall be obtained and paid for by the Contractor.

E. Permits:

1. Submit in accordance with provisions in Section 01112 – DESCRIPTION OF WORK in DIVISION 1 - GENERAL REQUIREMENTS and other Sections of the Project Manual.

2. Obtain permit(s) as required by Title 8, Division 1-DEPT. OF INDUSTRIAL RELATIONS, Chapter 4 –DIVISION OF INDUSTRIAL SAFETY of the California Code Of Regulation, and pursuant to Subsection 7-10.4.1 - SAFETY ORDERS of SSPWC, prior to excavating to the depth of 5-feet or greater. A duplicate copy of the permit shall be submitted to the Engineer for review prior to the start of excavation.

F. Certification Form: Contractor shall completely fill out a Competent Person Trench/Excavation Certification Form provided by Inspector of Bureau of Contract Administration prior to any worker access to trench or excavations, and return it to the Inspector. Contractor shall certify by this form: the name of the competent person administering the work, the soil classification, and the type of excavation protective system provided/installed.

G. Shoring Monitoring Data: As Specified herein.

[H. Notification: As required by Section 3301.2 of the Los Angeles City Building Code, before commencing any excavation of 12 feet below the grade, the Contractor shall notify in writing the owners of adjoining buildings not less than 10 days before such excavation is to be made and that the adjoining buildings should be protected.

1.5 QUALITY ASSURANCE

A. Use adequate numbers of skilled workers who are thoroughly trained and experienced in the necessary crafts and who are completely familiar with the specified requirements and the methods needed for proper performance of the work of this Section.

B. Employ a qualified registered engineer having at least five (5) year experience to design the shoring system and to inspect and report on the quality of its construction.

C. Comply with pertinent requirements of governmental agencies having jurisdiction.

D. Coordinate the shoring design and construction with:

1. Soil Investigation Report prepared for this Work in Appendix A;

2. Structural system established for the Work, including location of columns, pilasters, walls, and other features.

3. Utilities established in the site.

E. Regulatory Requirements:

1. Conform to provisions of Section 01410 - REGULATORY REQUIREMENTS in the GENERAL REQUIREMENTS.

2. Comply with applicable requirements, including but not limited to, those shown on the Contract Drawings; latest adopted version of the Los Angeles City Building Code, Section 1802 – QUALITY AND DESIGN and Section 3301 – EXCAVATION AND FILLS; State of California, Code of Regulations, Title 8 – INDUSTRIAL RELATIONS, Division 1- DEPARTMENT OF INDUSTRIAL RELATIONS, Chapter 4 – DIVISION OF INDUSTRIAL SAFETY, Subchapter 4 – CONSTRUCTION SAFETY ORDERS, Section 1539, 1540, and 1541.

1.6 PROTECTIONS

A. Protect adjacent existing improvements against damage by the Contractor's operations. Protect all excavation so that the soil of adjoining property will not cave in or settle. Repair or replace damaged items to the full satisfaction of the Engineer, at no extra cost to the City.

B. Shore, crib or lag excavations and earthbanks, as necessary, to prevent caving in, erosion or gullying of the sides.

C. Divert or pump water out of all excavations and trenches until all installation work and backfilling are completed and inspected.

1.7 INSPECTIONS

A. Excavation of existing fills, reworking of natural soils and compaction of all required fills will be inspected and tested by the City of Los Angeles Building and Safety Inspector and the Soils Engineer who will be responsible to the Engineer and will be paid for by the City.

B. Place all such backfill under the full supervision of the Soils Engineer.

PART 2 – PRODUCTS (NOT USED)

PART 3 -- EXECUTION

3.1 SURFACE CONDITIONS

A. Examine the areas and conditions under which the work of this Section will be

performed. Correct conditions detrimental to timely and proper completion of the work. Do not proceed until detrimental conditions are corrected.

B. Existing Utilities: Contract Drawings show major utilities, but all utilities may not be shown. The Contractor will obtain all as-built records of existing utilities from local government authorities or Utility Companies and field check locations of utilities with representatives of the Utility Company. Protect from damage and provide utility trench support to any sewer, storm drain, water, gas, electric or other pipelines or conduits uncovered during work.

1. Excavate by hand or other excavation methods acceptable to the utility owner.

2. If existing utilities interfere with Contractor's proposed method of support, any required modification to the shoring system or relocation of interfering utilities shall be performed at no additional cost to the City.

3. Contact Underground Service Alert, (800) 422-4133, and obtain underground service alert inquiry I.D. Number 48 hours prior to digging. Report the I.D. Number to the Bureau of Contract Administration when calling for inspection.

C. Provisions for Contingencies:

1. Provide a contingency plan or alternative procedures to be implemented, if unfavorable performance is evidenced from the shoring monitoring program.

a. Keep on hand the necessary materials and equipment to implement the contingency plan.

2. If support elements project beyond the vertical projection of the right-of-way shown on the Contract Drawings onto adjoining property, the Contractor shall obtain permission of the adjoining property owner in writing. The Contractor shall bear the cost required to obtain such permission.

3. Subsurface Conditions: Evaluate subsurface conditions as excavation occurs.

4. Differing Conditions: Notify the Engineer of differing conditions that could affect the shoring design assumptions.

5. Acceptance: Proceeding with work means acceptance of existing conditions.

6. Notifications: The Contractor shall make all the necessary notifications to the adjacent properties, as described herein.

3.2 PREPARATION

A. Protection:

1. Protect or repair utilities damaged by operations of this Section.

2. Protect adjacent structures and property from damage and disfiguration.

B. Dewatering:

1. Where applicable, no excavation shall commence until the Contractor has demonstrated to the satisfaction of the Engineer that the groundwater has been lowered to the required level and that the soils inside the excavation are in the dewatered condition that was assumed in the Contractor's shoring design and submittal.

3.3 INSTALLATION

A. All trench and excavation openings shall be illuminated and fenced or barricaded during nights, weekends, and other times, as necessary, and meet CAL/OSHA safety requirements.

B. All shoring shall be installed to the lines and elevations shown on the Contractor's approved Construction Drawings. No component of the shoring system shall infringe on the minimum dimensions of any permanent structure shown in the Contract Drawings.

C. The excavation shall be staged as shown in the Construction Drawings or on required work documents and in such a manner as to provide a stable system of support at all times.

D. Should the shoring system utilize steel H-beams, piles, or other similar vertical supports, driving of said vertical supports will not be permitted in proximity of existing structures or sensitive utilities, except for the last 4-feet. The vertical supports shall be placed in holes drilled to a depth of 4-feet above the proposed bottom of the pile, except where this procedure is impracticable. The vertical support may then be driven to the required depth, not to exceed 4-feet. During the drilling and driving operations, the Contractor shall take care to avoid damage to utilities.

At locations where the drilling of such holes is impracticable despite reasonable mitigation methods because of the existence of obstructions or rocks, running sand, or other adverse condition, and provided said impracticability is demonstrated to the satisfaction of the Engineer by actual drilling operations by the Contractor, the Engineer may, upon request of the Contractor, approve the use of means other than drilling for the purpose of placing the vertical support. Such other means, however, must be of a nature which will accomplish, as nearly as possible, the purpose of the drilling, namely, the prevention of damage to existing surface or subsurface improvements, both public and private.

3.4 MONITORING

A. Employ a California-licensed surveyor or civil engineer to design, construct and maintain an on-going monitoring system of the horizontal and vertical deflections of the excavation support systems and the settlement of the adjacent ground and structures.

1. Regularly resurvey benchmarks specified during installation of excavation support systems.

2. Monitor excavation support and protection systems daily during excavation progress and for as long as the excavation remains open.

3. Regularly survey adjacent ground and structures to verify that no settlement is occurring or has occurred as a result of the construction activities.

4. Maintain an accurate log of surveyed elevations and positions for comparison with original elevations and positions. Maintain accuracy within 1/100 of a foot and keep records in a readily understandable form, such as a tabular form of both the net and total deflections (both horizontal and vertical) of each soldier pile.

B. Submit a copy of all the daily readings to the Engineer at the end of each week. Notify the Inspector or the Engineer immediately of any excessive movements or deflection.

1. If changes in elevations or positions occur or if cracks, sags, or other damage is evident in adjacent construction, promptly notify the Engineer and immediately take steps to remedy the situation.

2. Horizontal and lateral deflections into the excavation at any location on the shoring shall be limited to a maximum of 1 inch, or to a maximum of 0.5 inch within the influence zone of an existing structure, adjacent to a utility sensitive to deflection, or other special circumstances as determined by the Engineer for work in or affecting the public right-of-way. Deflection in private property not affecting the public right-of-way shall be limited to 0.5 inch.

3. The total of the allowable calculated deflection for secondary members (lagging or sheeting) added to the calculated deflection for primary members may be 50 percent greater than the limits identified when struts are placed no more than 5 feet apart on center, or piles are spaced no more than 8 feet apart on center.

4. If at any time the measured deflection exceeds the allowable maximum deflection, immediate corrective measures shall be taken by the Contractor to prevent any further deflections.

5. The Contractor shall stop the excavation work until corrective measures have been taken and the deflections have been reduced to acceptable limits, as specified.

3.5 REMOVAL OF SHORING

A. Shoring shall be designed to be gradually removed as necessary to allow backfill to be placed and compacted. All voids existing behind the shoring which remains in place shall be backfilled with structural concrete, as specified in Section 02310 - EARTHWORK.

B. Shoring shall be removed as backfilling progresses. Removal shall be conducted in such a manner so as to avoid any damage to adjacent facilities, or to other members of the shoring system. Impact loading or in members of the shoring

system will not be allowed. All wood forms, loose or casual wood and debris shall be removed. Areas that cannot be accessed or achieve adequate compaction shall be backfilled with structural backfill at no additional cost to the City.

C. During backfilling, temporary support elements shall not be removed until alternative support is available, such as substituted struts, backfill, or ability of the support system to act as a cantilever without detrimental deflection.

D. Portions of shoring used to support excavations for installation of sanitary sewer and storm drain facilities shall be [removed] [left in place, with permission of the Engineer] or the pipe bedding and side support shall be recompacted to the satisfaction of the Engineer.

(END OF SECTION)

SECTION 02310
EARTHWORK

PART ONE - GENERAL

1.1 SUMMARY

A. Provided and executed earthwork, **as indicated on the Contract Drawings or** in the Project Manual including, but not limited to the following:

1. General excavating and trenching for various trades.

2. General exterior grading and cutting.

3. General excavating for site improvements.

4. Select base materials for under concrete slab and under paving.

5. Filling and Backfilling.

6. Structure excavation, unclassified fill and borrow excavation defined in Section 300 – EARTHWORK of the "Standard Specifications for Public Works Construction (SSPWC)".

B. RELATED WORK SPECIFIED ELSEWHERE

1. Documents affecting the work of this Section include, but are not necessarily limited to the GENERAL CONDITIONS, SUPPLEMENTARY CONDITIONS, DIVISION 1 - GENERAL REQUIREMENTS and other applicable Sections of the Project Manual.

2. Drawing Sheets GI02 and GI03 for additional requirements for structure subgrade preparation, fill material, placement and compaction

3. Demolition in Division 2

4. Clearing, Grubbing and Stripping in Section 02210.

5. Shoring in Section 02240.

6. Yard and Street Work in Section 02710.

7. Storm Drain System in Section 02545.

8. Irrigation and Landscaping Work in Division 2.

9. Concrete Work in Division 3.

10. Disabled Accessibility Parking Signage in Section 10443.

11. Electrical Work in Division 16.

12. Geotechnical Evaluation Report in Appendix

1.2 QUALITY ASSURANCE

A. Labor: Use adequate numbers of skilled laborers who are thoroughly trained and experienced in the necessary crafts and who are completely familiar with specified requirements and the methods needed for proper performance of the Work of this Section.

B. Equipment: Use equipment adequate in size, capacity, and numbers to accomplish the work of this Section in a timely manner.

C. Codes and Standards: Perform excavation work in compliance with applicable ordinance of governing authorities having jurisdiction including, but not limited to, the 2022 or latest edition L. A. City Building Code and applicable Amendments; Division 1-DEPARTMENT OF INDUSTRIAL RELATIONS of Title 8 of the California Code of Regulations; Section 300 - EARTHWORK of SSPWC, as amended by the Brownbook.

1. In addition to complying with Codes and Standards having jurisdiction, comply with directions of the Soil Engineer.

D. The Contractor shall provide necessary measures for storm water pollution control and water quality protection. The Contractor shall meet the standards of good housekeeping at all times.

E. Testing and Inspection Services**:** The City will engage a qualified soil testing and inspection service for quality control testing during earthwork operations. Testing shall be performed in accordance with the soil investigation reports and testing standards, the instructions of the Soil Engineer and the applicable Sections of General Conditions.

F. Soil Engineer: The City will retain the services of a Soil Engineer for the purpose of soil investigations and testing, all the necessary inspections and observations, and certifications.

G. Survey: The Contractor shall employ the services of a California licensed surveyor for the purposes of survey control, layout, grade and cross-sections required to control work. Survey work shall conform to Section 01722-SURVEYING.

1.3 SUBMITTALS

Conform to provisions of Section 01330 of DIVISION 1 - GENERAL REQUIREMENTS.

A. Shop Drawing of the Shoring System in Section 02240.

B. Sources of imported materials.

C. Method of Back-Filling and Compaction.

D. Dewatering Plans.

E. California General Construction Activity Stormwater Permit, Waste Discharge Identification Number, Wet Weather Erosion Control Plan or Stormwater Pollution Prevention Plan.

F. Competent Person Trench/Excavation Certification Form in Section 02240 –

SHORING.

G. Test Reports-Excavating: Contractor shall submit the following reports directly to the Los Angeles City Department of Building & Safety, prepared by the Soil Engineer and the testing service, with a copy to the Engineer.

1. Test reports on borrow material.

2. Verification of each footing subgrade.

3. Field density test reports.

4. One optimum moisture-maximum density curve for each type of soil encountered.

5. Other test reports as required by the Soil Engineer and the local cognizant agency.

1.4 PERMITS

A. Required: In addition to the requirements specified herein, and in applicable Section 01112 – DESCRIPTION OF WORK of DIVISION 1 - GENERAL REQUIREMENTS of the Project Manual.

B. The Contractor shall perform all work in accordance with the permit requirements of the Los Angeles City Department of Building and Safety, including obtaining the grading permit, hauling permit and bond, and making the notification to the adjacent property owners; no additional compensation will be allowed therefore.

C. The Contractor shall furnish to the Engineer a duplicate copy of the OSHA excavation permit, and all other required permits prior to the start of the excavation work.

D. The Contractor shall obtain and pay for the Bureau of Engineering's Shoring (Lateral Support) Permit.

E. The Contractor shall obtain and pay for the California State Regional Water Quality Control Board (LARWQCB) Construction Water Discharge Permit. The Los Angeles Department of Water and Power (LADWP) will submit and obtain the Ground Water Dewatering Permit. The Contractor shall work with LADWP to provide necessary information to complete the application process.

F. The LADWP will submit and obtain and pay for Calif General Construction Activity Stormwater Permit. The Contractor shall work with LADWP to provide necessary information to complete the application process. The Contractor shall obtain Waste Discharge Identification Number after submitting Wet Weather Erosion Control Plan (WWECP) pursuant to Section 61.02 and 64.72 of L.A.M.C. Stormwater Pollution Prevention Plan (SWPPP) pursuant to Section 91.106 of L.A.M.C. to the Los Angeles City Dept. Building and Safety for reviews.

G. The Contractor shall make all necessary notifications, obtain and pay for required permits and file manifests with the South Coast Air Quality Management District (SCAQMD).

1.5 JOB CONDITIONS

A. Required Work Coordination: The Contractor shall fully coordinate the work operations of this Section with that of other trades involved and with the Engineer to assure proper sequence of work, limitations, methods and time of work so as to minimize or avoid interference with the existing utilities as well as performance of work by the other Contractors. Contractor shall include minimum two weeks in its Construction Schedule to allow the Soil Engineer to prepare final Soil Report to be submitted to the Los Angeles City Department of Building and Safety Grading Division for final approval if the Soil Engineer is obtained by the City. The Contractor shall coordinate and arrange for all the inspections with the local authorized agencies and the Bureau of Contract Administration.

B. Trench Safety: Attention is directed to the provisions of Section 6705 of the Labor Code and Section 02240 – SHORING of the Project Manual concerning trench excavation safety plans.

C. Air Pollution Control: The Contractor shall comply with all air pollution control rules, regulations, ordinances and statutes which apply to work performed pursuant to the Contract, including any air pollution control rules, regulations, ordinances and statutes, specified in Section 1107 of the Government Code.

D. Use of Pesticides: The Contractor shall comply with all rules and regulations of the Department of Food and Agriculture, the Department of Health, the Department of Industrial Relations and all other agencies which govern the use of pesticides required in the performance of the Work on the Contract.

1. Pesticides shall include, but shall not be limited to herbicides, insecticides, fungicides, rodenticides, germicides, menatocides, bactericides, inhibitors, fumigants, defoliants, soil sterilants, and repellents.

2. Any substance or mixture of substances intended for preventing, repelling, mitigating or destroying weeds, insects, diseases, rodents, or nematodes and any substance of mixture for substances intended for use as a plant regulator, defoliant shall be considered as a pesticide.

E. Sound Control Requirements: The Contractor shall comply with all local sound control and noise level rules, regulations and ordinances which apply to any work performed pursuant to the Contract.

Each combustion engine, used for any purpose on the job or related to the job, shall be equipped with a muffler of a type recommended by the manufacturer. No internal combustion engine shall be operated on the project without said muffler.

F. Use of Explosives: The use of explosives is not permitted.

1.6 PROTECTIONS

A. General: Comply with provisions of Section 00309 - PROTECTION OF PERSONS AND PROPERTY AND RESTORATION OF EXISTING IMPROVEMENTS in GENERAL CONDITIONS. Protect and guard all excavations against damage to life, limb and property as prescribed by Los Angeles City Department of Building and Safety.

B. Protections of Persons and Property: Provide and install signs, lights and

barricades at danger points on and off the job-site to guard against accidents, etc.

1. Barricade open excavations occurring as part of this work and post with warning lights.

2. Operate and maintain warning lights as recommended by authorities having jurisdiction.

3. Protect structures, utilities, sidewalks, pavements and other facilities from damage caused by settlement, lateral movement, undermining, washout and other hazards created by earthwork operations.

4. Perform excavation within drip-line of large trees to remain by hand, and protect the root system from drainage or dry out to the greatest extent possible. Maintain moist condition for root system and cover exposed roots with burlap. Paint root cuts of 1" diameter and larger with emulsified asphalt tree paint.

C. Existing Improvements (including trees and shrubs Indicated to Remain): Protect against damage resulting from Contractor's operations. Repair or replace damaged items to the full satisfaction of the City at no added cost to the City.

D. Shoring, Cribbing and Lagging: Required of excavations and earth banks as necessary to prevent caving in, erosion or gullying of sides. Conform to applicable provisions in Section 02240 – SHORING of the Project Manual.

1. Design and calculations of shoring, etc. shall be in accordance with requirements of with the latest Los Angeles City Building Code, Section 2811 and Safety Orders of State of California, Division of Industrial Safety, Title 8, Subchapter 4, Article 6, Sections 1540 and 1541.

2. Upon completion of the project or when no longer needed or otherwise directed by the authority having jurisdiction, remove all such shoring from the job-site.

E. Water: Divert or pump out of all excavations until concrete and other items are placed therein, forms are removed, and backfilling is completed. The Contractor shall provide a means for solids removal before discharging the water.

F. Existing Utilities: Utilities shown on the drawings are shown pursuant to a search of available records and are shown as a matter of information and not as a matter of fact. Conforming with Section 01112 - SUMMARY OF THE WORK, Section 01140 – CONTRACTOR'S USE OF THE PREMISES and other Sections of the Project Manual, the Contractor shall locate existing underground utilities in areas of work. If utilities are to remain in place, provide adequate means of support and protection during earthwork operations.

1. Should uncharted or incorrectly charted piping or other utilities be encountered during excavation, consult City immediately for directions. Cooperate with City and utility companies in keeping respective services and facilities in operation. Repair damaged utilities to the satisfaction of the utility company.

2. Do not interrupt existing utilities serving facilities occupied and used by City and others, during occupied hours, except when permitted in writing

by the Engineer and then only after acceptable temporary utility services have been provided.

3. Provide a minimum of 48-hour notice to the Engineer, and receive written notice to proceed before interrupting any utility. Obtain clearance and notify all utility companies in the area and contact Underground Service Alert by calling (800) 422-4133. Deliver utility clearance ticket number to the Engineer prior to the start of any work.

4. Demolish and completely remove from site existing underground utilities indicated to be removed. Coordinate with utility companies for shut-off of service if lines are active.

1.7 INSPECTION

A. Required: All excavations and trenches shall be inspected by the Los Angeles City Building and Safety Inspector, and the Soil Engineer before filling, backfilling and/or other subsequent work is placed therein.

1. Earthwork backfill for structures shall comply with requirements of Section 300-3.5 - STRUCTURAL BACKFILL of SSPWC and/or requirements in the Project Manual.

1.8 SOILS INFORMATION

Available soils information include *Geotechnical Evaluation LABOE TOS No. 25 Stormwater Capture Parks Program David M. Gonzales Recreation Center* dated August 31, 2020.

Contractor shall comply with all Soil Report recommendations specified and other instruction directed by the Engineer. In case of conflicts between other parts of the Project Manual and the Soils Report, the most restrictive condition shall govern unless otherwise approved by the Soil Engineer.

1.9 MATERIAL HANDLING

A. Delivery: All materials, tools, equipment, etc. to be delivered to the job-site, in such a manner that it is coordinated with progress of work of this Section.

B. Material Storage: Stockpile satisfactory excavated materials where directed, until required for backfill or dispose of in accordance with Section 300-2.6 - SURPLUS MATERIALS of SSPWC. Place, grade and shape stockpiles for proper drainage.

1. Locate and retain soil materials away from edge of excavations. Do not store within drip line of trees indicated to remain.

2. Dispose of excess soil material and waste materials as herein specified.

PART TWO – PRODUCTS

2.1 SOIL MATERIALS

A. Suitable Excavated Material: Suitable materials from excavations for use in fill and embankments shall be free from shale, sod, large clods or hard lumps of earth, roots, trash or other debris; that has a liquid limit of less than 30 and a plasticity index of less than 9; and is readily compatible to specified density. No

rock, cobbles or broken concrete exceeding 2 inches in maximum dimension shall be placed in compacted fill without the specified approval of the Engineer. No rock, cobbles or broken concrete exceeding 1 inch in maximum dimension shall be placed in compacted fill of a utility trench.

B. Fill Material: Furnish imported earth material as necessary; if specified in the contract requirements or if the amount of suitable earth materials obtained from the job-site excavations is not sufficient to properly construct the required fill, subject to the approval of the Engineer or the Soil Engineer prior to use.

1. Submit imported fill material samples and testing results for the Engineer's approval prior to importing to the job site in accordance with Section 300-5 BORROW EXCAVATION of SSPWC.

2. Imported fill material shall be free of foreign materials, vegetable growths, sod, rocks, expansive soils and all debris.

3. Lime for Treatment of Imported Fill Material: As hereafter specified in accordance with Section 301-5 - LIME-TREATED SOIL of SSPWC.

4. Where fill material exhibits a wide variation in consistency, the Engineer may require blending to stabilize and upgrade the material as directed by the Engineer.

5. In landscape (planting area), fill shall not be saline or contain anything that would prevent normal plant growth: See LANDSCAPING, Section 02900 of the Project Manual for verification of required or approved fill material.

C. Base Material: "Crushed Aggregate Base", or "Crushed Miscellaneous Base", 1-1/2-inch maximum size aggregate, as specified in Section 200-2 - UNTREATED BASE MATERIALS of SSPWC.

D Pipe Bedding and Trench Backfill Material:

1. For all pipe bedding follow CASE 4 per COLA STD Plan S-251-1.

2. Use clean earth materials previously removed from job-site excavations or use imported fill materials as above specified free from clay, rock or gravel larger than 1-inches for utility trenches, clay, rock or gravel larger than 2" inches in an area other than utility trench subject to the Soil Engineer's approval prior to use.

3. For sanitary sewer pipe, use Case I bedding material and extend 12-inch above said pipe, the balance of backfill to be approved clean earth materials.

4. For storm drain pipe, use approved washed sand and extend 12 inches above said pipe, the balance of backfill to be approved clean earth materials. For storm drain pipe section located beneath the sidewalk paving and connected to concrete curb outlet, sand bedding and backfill are not applicable.

5. For water pipe or pipe rise**,** use approved washed sand and extend 12-inches above said pipe, the balance of backfill to be approved clean earth materials.

6. For electrical conduits, use approved washed sand and extend 4 inches above said conduits, the balance of backfill to be approved clean earth materials. For utility service connection, provide bedding and backfill material in accordance with utility company's instructions.

7. For the landscape irrigation piping, use approved washed sand and extend 4-inches above said pipe, the balance of backfill to be an approved clean earth materials.

8. Conforming to applicable Sections of the Project Manual for the pipe bedding widths and depths.

E. Soil Cement: Use soil-cement to form a dense, uniform mass conforming to the lines, grades and cross sections [shown on the Contract Drawings.] The soil cement shall be mixed, placed and compacted at least 95% of the relative compaction, in accordance with Section 301-3 of SSPWC and the instructions of the Soil Engineer.

F. Structural Backfill: The structural backfill shall have a sand equivalent of not less than 20 in accordance with Section 300-3.5 - STRUCTURAL BACKFILL and Section 300-4.5 - PLACING MATERIALS FOR FILLS of SSPWC and placed and compacted to 90% of relative compaction.

G. Slurry Backfill: Slurry backfill shall be 60 E 0.7 (Class 100-E-100) and placed in accordance with Section 306-1.3.1 - BACKFILL AND DENSIFICATIONS of SSPWC.

2.2 WEED KILLER/SOIL STERILANT

Provide a dry, free-flowing, dust-free chemical compound, soluble in water, capable of inhibiting growth of vegetation, and approved for use on this Work by governmental agencies having jurisdiction.

A. Tinted for visual identification, shall be as follow:

1. United States Borax Corp. "Polyborchlorate" or equal.

2. Pacific Coast Borax Co. "Polyborchlorate".

3. Amspray Corp. "Pavex".

4. Elanco "Spike 801".

2.3 TOPSOIL

A. Where required by [and shown on the Landscape Drawings or otherwise required], provide topsoil consisting of friable, fertile soil of loamy character, containing an amount of organic matter normal to the region, capable of sustaining healthy plant life, and reasonably free from subsoil, roots, heavy or stiff clay, stones larger than 2 inches in greatest dimension, noxious weeds, sticks, brush, litter, and other deleterious matter.

B. Obtain topsoil from sources within the project limits, provide imported topsoil from approved sources outside the project limits, or from both sources.

2.4 OTHER MATERIALS

Provide other materials, not specifically described but required for a complete and proper installation, as selected by the Contractor subject to the approval of the Engineer.

PART THREE - EXECUTION

3.1 SURFACE CONDITIONS

Examine the areas and conditions under which the Work of this Section will be performed. Correct conditions detrimental to timely and proper completion of the Work. Do not proceed until detrimental conditions are corrected.

3.2 WATER QUALITY PROTECTION

A. Eroded sediments and other pollutants must be retained on site and may not be transported from the site via sheet flow, swales, area drains, natural drainage, or wind.

B. Stockpiles of earth and other construction-related materials must be protected from being transported from the site by wind or water.

C. Fuels, oils, solvents, and other toxic materials must be stored in accordance with their listing and are not to contaminate the soil ~~n~~or the surface waters. All approved toxic storage containers are to be protected from the weather. Spills must be cleaned up immediately and disposed of in a proper manner. Spills may not be washed into the drainage system.

D. Excess or waste concrete may not be washed into the public right-of-way or any drainage system. Provisions shall be made to retain concrete waste on-site until they can be appropriately disposed of or recycled.

E. Trash and construction-related solid waste must be deposited into a covered receptacle to prevent contamination of rainwater and dispersal by wind.

F. Sediments and other materials may not be tracked from the site by vehicle traffic. The construction entrance roadways must be stabilized so as to inhibit sediments from being deposited into the public right-of-way. Accidental deposits must be swept up immediately and may not be washed down by rain or by any other means.

G. Comply with requirements shown in Wet Weather Erosion Control Plan (WWECP).

3.3 SITE PREPARATION

A. Remove the existing soil including fill material, debris, roots and foreign materials to natural soil at the proposed building site. Removal shall be continued to at least 5 feet beyond the exterior faces of the exterior foundation. Removal shall be done in accordance with Section 02210 - SITE CLEARING and Grubbing of the Project Manual.

B. Remove the upper 6 inches of existing soil including debris, roots and foreign materials under the landscape.

C. Subgrades: Scarify for recompaction to a depth of 6-inches, bring to optimum moisture content and then recompact to at least 95% maximum density for subgrade as per ASTM D1557 - TESTED METHOD FOR LABORATORY COMPACTION CHARACTERISTICS OF SOIL USING MODIFIED EFFORT (56,000 FT - LBF/FT^3.). Prepare subgrade in accordance with Section 301-1 - SUBGRADE PREPARATION of SSPWC.

D. Holes and trenches existing on the jobsite or resulting from Contractor's operations shall be filled with clean existing or imported earth materials (free of large clods and stone).

Unless indicated otherwise, construct fill in accordance with Section 300-4.5 - PLACING MATERIALS FOR FILLS of SSPWC in 8-inch layers and each layer compacted to 95% relative compaction and finished to elevations necessary to require cutting by fine grading. Inspection by Los Angeles City Building and Safety Inspector and the Soil Engineer are required prior to filling. Obtain minimum one compaction test for each layer or volume specified by Code.

E. Grading: To elevations of existing adjoining street surfaces, private property and surfaces immediately adjacent to the job-site limits indicated on the Contract Drawings; make all grades in a straight line from any point to any other perimeter point.

F. Dewatering:

1. Remove all water, including rainwater, encountered during trench and sub-structure work to an approved location by pumps, drains, and other approved methods.

2. Keep excavations and site construction area free from water.

G. Dust Control: Use means necessary to prevent dust becoming a nuisance to the public, to neighbors, and to other work being performed on or near the job-site.

H. Moisture Control: Where subgrade or layer of soil material must be moisture conditioned before compaction, uniformly apply water to surface of subgrade, or layer of soil material. Apply water in manner to prevent free water appearing on surface during or subsequent to compaction operations.

1. Remove and replace, or scarify and air dry, soil material that is too wet to permit compaction to specified density.

2. Soil material that has been removed because it is too wet to permit compaction may be stockpiled or spread and allowed to dry. Assist drying by discing, harrowing, or pulverizing until moisture content is reduced to a satisfactory value.

I. Rework: Any previously compacted or tested subgrade and fill material, which are affected or disturbed, in the opinion of the Soil Engineer, by the inclemency of the weather such as rains, floods, earthquake or others shall be reworked, retested and re-inspected at no additional cost to the City.

J. Approval of Subgrade**:** By the Soil Engineer and the Los Angeles City Building and Safety Inspector prior to placing any fill.

K. Subgrade Preparation Where Extensive Fills Will Occur:

1. Remove disturbed existing soils and stockpile materials approved by the Soil Engineer for use in fills and as backfill materials. Dispose unsuitable materials off the jobsite.

2. Subgrade to be approved by the City of Los Angeles Building and Safety Inspector and the Soil Engineer.

3. Scarify the upper 6 inches of the soil over the entire rough grade site and recompact to a minimum relative compaction of 95%.

4. Bring to designated rough grades, using existing on-site imported materials, as approved by Soil Engineer, regrade by removing and replacing materials in loose lifts and bringing to optimum moisture content and compacting to 90% relative compaction as above specified for exposed soils to receive fills. The lifts should not generally exceed 8 inches in loose thickness depending on the type of compaction equipment. Use granular material for fills behind retaining walls.

5. Testing of Fills: Test the fill for conformance with code requirements; under continuous control supervision of a qualified representative of the City. The City's representative shall keep a log of the tests performed which will be filed with the Engineer upon completion of the work. Contractor to bear the costs of rework, retesting and re-inspection because of non-conformance.

3.4 GRUBBING AND GRADING

A. Remove entire roots under the footings and elsewhere to three feet below the subgrade of each surface.

B. Rough: Leave cut and fill sufficiently high to require cutting by fine grading.

C. Fine: To elevations required to ensure proper drainage or finished elevations indicated on drawings; finish elevations for planting areas as specified for top soil fill in Section 02900 – LANDSCAPING.

D. Subgrade Preparation: Required for all areas, other than filled or backfill areas, over which moisture barrier material, slabs, walks or pavement will be placed; in accordance with provision specified herein and Section 301-1 - SUBGRADE PREPARATION of SSPWC.

E. Inspection Required: Prior to placing base material, concrete or other materials.

F. Grading for Demolition Jobs: To specified elevations or elevations of existing sidewalks, adjacent property lines or surfaces immediately adjacent to the sites. Make all grades straight-line from any point to any other perimeter point.

G. Grading for New Asphalt Concrete Paving:

1. Rough: Cut and fill to be left sufficiently high to require cutting by fine grading and preparation of the surface for placement of the required select base material to thickness noted on the Contract Drawings or matching that of adjacent existing select base materials.

2. Fine: To exact elevations necessary for required new paving and paving

repairs.

3. Testing and Inspection Required: Prior to placing of select base and asphalt paving materials.

3.5 EXCAVATING

A. General:

1. Excavation consists of the removal and disposal of materials necessary to establish required grade elevations and certified compacted fill for new construction pursuant to Section 300-2 UNCLASSIFIED EXCAVATION of SSPWC.

2. Excavated materials suitable for use as fill and/or backfill to be stockpiled where directed by the Engineer.

3. Non-approved and excess excavated materials to be legally removed and disposed of from the jobsite.

4. Shoring, Bracing and Bulkheading of Trenches: All to be provided, installed and maintained where required to support trenches, See Subsection 1.6 of this Section. Conform to the requirements prescribed by the Los Angeles City Department of Building and Safety, CAL/OSHA, Section 02240 - SHORING and other Sections of the Project Manual.

5. Access to Trenches: Conform to Section 306-1.1.4 - ACCESS TO TRENCHES of SSPWC. Provide safe and suitable ladders, which project 2 feet above the top of the trench. It shall be provided for all trenches over 4 feet in depth. A minimum one ladder shall be provided for each 50 feet of open trench or fraction thereof and be so located that the workers in the trench need not move more than 25 feet to a ladder.

6. Encountered Existing Underground Piping or Conduits: Immediately stop the trench operations at the point of encounter, notify the Engineer of such condition and submit support drawings to the Engineer for approval. The support drawings shall be in conformance with the Los Angeles City Bureau of Engineering Standard Plans S-253, SUPPORTS FOR STORM DRAIN AND SEWER PIPES ACROSS TRENCHES, latest edition; CAL/OSHA and the utility company's requirements.

B. For Substructure Concrete:

1. When Earth Banks are Stable: To net sizes of concrete, except as otherwise specified or indicated on the Contract Drawings.

2. When Earth Banks are not Stable: Sufficiently wider than concrete to allow for forms and inspection thereof.

3. Where Rock Occurs: Surface to be leveled to a clean, even hard surface.

4. Depth: As indicated on Contract Drawings.

5. Excessive Width and Depth: Where excavation is made wider and deeper than required, fill with concrete specified in Section 03300 of the

Project Manual, at Contractor's expense.

6. Inspection Required: After excavation and before placing concrete and before backfilling, the exposed soil or subgrade will be carefully inspected by the City of Los Angeles Building and Safety Inspector and the Soil Engineer to verify removal of additional unsuitable soil.

7. Protections and Shorings: See Subsection 1.6 of this Section.

8. Excavation for Grade Beams: Omit forms when sides will stand to a cut face, make such excavation 1-inch wider on each side.

9. When excavating adjacent to existing remaining structures, do so in a sequence as required and approved by the Engineer to avoid displacement or damage to the existing adjacent structure.

C. For Site Improvements:

1. Masonry Yard Walls: As necessary for required footing and setting of forms for concrete work, to depth indicated.

2. For Planter Curbs: To exact curb limit, without excessive removal of adjacent paving or subgrade for new paving.

3. Planter Areas: Remove the upper 6 inches of existing sub-soils as necessary to receive topsoil fill as specified in Section 02900 - LANDSCAPING.

4. For Bumper Posts: To dimensions and depths noted on the Contract Drawings.

5. For Flagpole, to exact size and depth for concrete foundation.

6. For Concrete and Asphaltic Site Improvements such as concrete and/or asphalt pavements, concrete walkways, driveways aprons, concrete curb and gutter: Excavate to exact limits of such work without excessive removal of existing subgrade. Scarify and compact top 6 inches of subgrade and compact at 95% relative density.

D. For Walls (including wall footings): Width not less than 18-in. from face of wall and sufficient for necessary forms, cribbing, bracing, inspection, and application for watering on walls, where required.

E. Conduit and Piping: Conforming to the requirements as specified on the drawings, Los Angeles City Plumbing Code, SSPWC and other sections of the Project Manual. Any piping with 8 feet or less cover or backfill, Case 1 Bedding Installations of Los Angeles City Bureau of Engineering Standard Plan S-251, latest edition, shall be used for all piping laying unless otherwise specified on the drawings or noted.

1. Depth and Width of Trench For Storm Drainage Piping: To depth necessary for installation of piping and construction of catch basin in accordance with requirements of Section 02545 - STORM DRAIN SYSTEM, PLUMBING Section in Division 15 of the Project Manual and as noted on the Contract Drawings. Provide minimum 7-½ inches side clearance from side of the piping. Make the sides vertical and the

bottoms smooth, firm, level or uniformly sloped as required, slope to not exceed a downward slope of two horizontal to one vertical in a manner to prevent formation of water pockets in the pipe. For backfill or earth cover exceeded 8 feet, refer to Los Angeles City Bureau of Engineering Standard Plan S-251, latest edition, for maximum allowable trench width and bedding material. Unless specified otherwise, provide minimum 2 inches washed sand bedding below the pipe barrel.

2. Depth and Width of Trench for Plumbing Piping: As necessary for complete installations of the piping, fixtures and controls; provide minimum 7-1/2 inches side clearance from side of the piping; make the sides vertical and bottoms smooth, firm, level or slopes, as required by the code for proper drainage. Final elevations shown on Contract Drawings shall mean the invented pipe elevations. Pipe thickness and bedding thickness shall be used in determining trench depths. Conform to the requirements as specified in the Los Angeles City Plumbing Code and in Division 15 of the Project Manual. For backfill or earth cover exceeded 8 feet, refer to Los Angeles City Bureau of Engineering Standard Plan S-251, latest edition, for maximum allowable trench width and bedding material. Unless specified otherwise, provide minimum 4 inches washed sand bedding below the pipe barrel.

   If final elevation is not shown on contract drawings, place all piping to a depth no less than 24 inches.

3. Depth and Width of Trench for Electrical Conduit and Pull Box: As necessary for complete installation of the electrical conduits and pull box, unless specified otherwise, provide minimum 7-1/2 inches side clearance from the side of the conduit and pull box and 2 inches sand bedding in accordance with the Contract Drawings and requirements of the Utility Company.

   Conduit shall be placed to a depth of not less than 24 inches and 36 inches under the driveway.

4. Depth and Width of Trench for Landscape Irrigation Piping: As necessary for complete installations of the piping fixtures and controls; provide a minimum of 7-1/2 inches side clearance from the side of the piping and 4 inches washed sand bedding. Depth of piping shall be conformance with Section 02810 – IRRIGATION SYSTEMS of the Project Manual. All trenches for electrical conduit and wiring shall be in accordance with requirements listed hereinbefore.

F. Corrections: Required of all unauthorized excavations made below indicated depths, as recommended by the Soil Engineer at no added cost to the City.

3.6 FILLING

A. General: Construct in accordance with Section 300-4- UNCLASSIFIED FILL of SSPWC and place in layers not exceeding 8-inches thickness, compacted to a relative compaction of not less than 95% when tested in accordance with Section 211-2 - COMPACTION TESTS of SSPWC, except that fill in planting areas may be compacted to 90% relative compaction.

B. In Planting Areas and Tree Wells: If flooding method is specified for fill material, place saturated fill (exclusive of topsoil fill) prior to construction of adjacent improvements to minimize settlement as follows:

1. Planting Areas and Holes: Cultivate and soak the specified backfill mix for a minimum of two days using a common lawn soaker.

2. Tree Wells: Excavate a sump approximately 3-feet square by 3-feet deep and flood each sump for about 3 days.

C. Fill all holes on the existing job-site or resulting from site-clearing or demolition operations.

D. Topsoil Fill: Specified in Section 02900 - LANDSCAPING of the Project Manual.

E. Inspection Required: Prior to placement of fill materials. See Subsection 1.7A of this Section.

F. Concrete and Asphalt Site Improvements Walkways: Compact top 6 inches of existing subgrade and each 8" layer of backfill or fill material at 95% relative density.

3.7 BACKFILLING

A. Prior to Backfilling: Remove debris, trash and form materials from excavations.

B. Inspection Required: Prior to backfilling operations.

C. Placement of Backfill: In layers not exceeding 8-inches thickness, moisten to optimum moisture content and tamp until required 95% relative compaction is secured and finish to suitable elevations to provide for anticipated settlement and shrinkage.

D. Pipe Bedding And Backfill Over Underground Piping And Conduit: Place bedding and backfill material in conformance with provisions specified Subsection 2.1 (D) herein and in Section 02545 - STORM DRAIN SYSTEM, Division 15 - PLUMBING and Division 16 – ELECTRICAL of the Project Manual. Do not place backfill materials until the Inspector has inspected and approved the pipe installation. The bedding shall be compacted and shaped to form a firm base for the pipe and conduit. The initial backfill shall be placed in two lifts. The first lift shall be to the spring line of the pipe or conduit. The initial backfill shall be lightly compacted by light tamping compacted by water densification method. The balance of backfill shall be placed in accordance with Subsection 3.8 (C) herein.

E. For Parking Lot or Demolition Jobs: Use clean material previously removed from excavations or use imported materials as hereinbefore specified subject to approval by the Inspector or Engineer.

F. For Backfill Against Basement Walls: Do not place until such walls have gained sufficient strength to resist backfill loads and backside of such walls have been properly waterproofed without prior approval of the Inspector. Bring backfill up to finish grade or to subgrade for paving as indicated on the drawings.

G. In Planting Areas Holes and Tree Wells: After planting, cultivate and soak the specified backfill mix for a minimum of two days using a common lawn soaker if

specified.

H. For Voids Left by the Removal of Sheeting, Piles and Similar Shoring Supports: Immediately backfill with structural backfill of clean sand which shall be jetted into place to ensure a dense and complete filling of the voids.

I. Slurry Backfill: In areas where specified and/or around the utilities, vaults or other structures where the Soil Engineer determines that it is not practical to attain the required compaction by the mechanical methods or water densification, provide a trench slurry backfill 60-E0.7 (Class 100-E-100).

3.8 SELECT BASE

A. Place in accordance with Section 301-2 - UNTREATED BASE of SSPWC and "Soil Report" recommendations.

B. Locations: Place select base beneath concrete and asphalt concrete yard paving, beneath concrete driveway aprons and concrete gutters in yard areas, building floor slab on grade and elsewhere to thickness noted on the Contract Drawings.

C. Thickness: At least 4 inches under yard concrete paving, at least 4-inches under yard asphalt concrete paving, and at least 4-inches under all structure slabs on grade or as otherwise indicated on the Contract Drawings.

NOTE: Place to thickness matching that of original thickness of select base under existing removed concrete or asphalt concrete paving and make ready to receive paving repair materials. Aggregate base shall be compacted to 95% relative density in accordance with Section 301-2 - UNTREATED BASE of SSPWC.

3.9 SOIL STERILIZATION

Apply specified soil sterilization material to areas to receive select base materials and all exterior area including concrete and asphalt paving, concrete walkway, concrete curb and gutter, by methods recommended by the manufacturer. Certify in writing that the material has been applied.

3.10 DISPOSAL OF EXCESS AND WASTE MATERIALS

A. Removal from City's Property: Remove waste materials, including unacceptable excavated material, trash and debris, and dispose of it off City's property in a legal manner and to conform with the requirements shown in Section 01572 – CONSTRUCTION AND DEMOLITION WASTE MANAGEMENT of Division 1 - General Requirements.

B. Provide written consent of the owner of the property upon which the surplus material is to be deposited, pursuant to Section 01572 – CONSTRUCTION AND DEMOLITION WASTE MANAGEMENT specified above and Section 300-26 - SURPLUS MATERIAL of SSPWC.

END OF SECTION

This page intentionally left blank.

SECTION 02545
STORM DRAIN SYSTEM

PART ONE - GENERAL

1.1 DESCRIPTION

A. Furnish all labor, materials and equipment necessary to provide "on-site" Storm Drain System as shown on the Contract Drawing and specified herein, including:

1. Catch basin
2. Maintenance Holes
3. Diversion Structure
4. Valve Structure
5. Hydrodynamics Separator (HDS)
6. Connection to storm drain main line and/or to street gutters.

B. Repair and construct paving and bases after installation of Storm System.

C. Related Sections:

1. Documents affecting work of this Section include, but are not necessarily limited to the GENERAL CONDITIONS, SUPPLEMENTARY CONDITIONS and DIVISION 1 - GENERAL REQUIREMENTS and applicable section of the Project Manual.
2. Shoring in Section 02240.
3. Earthwork in Section 02310.
4. Irrigation System in Section 32 80 00.
5. Cast-In-Place Concrete Work in Section 03300.
6. Precast Concrete Work in Section 03400.

1.2 QUALITY ASSURANCE

A. **Bonded Contractor:** For connection to City's Storm Drain System including any catch basin or structure, Contractor specializing in the Storm Drain System connection work of this section shall be preapproved, bonded, and certified by Los Angeles City Bureau of Engineering. Submit certificates verifying Contractor's qualifications prior to start of work.

B. **Labor:** Use adequate numbers of skilled laborers who are thoroughly trained and

experienced in the necessary crafts and who are completely familiar with the specified requirements and the methods needed for proper performance of the work of this Section.

C. **Codes and Regulations:** Conform to the applicable Los Angeles City Building Code and Amendments, Los Angeles City Bureau of Engineering Standard Plans, and the Standard Specifications for Public Works Construction (SSPWC), latest edition.

1.3 SUBMITTALS

A. Comply with applicable provisions in the Section 01330 - SUBMITTALS of DIVISION 1 - GENERAL REQUIREMENTS of the Project Manual.

B. **Product Data:** Within 35 calendar days after the Contractor has received the City's "Notice to Proceed", submit:

1. Materials list of items proposed to be provided under this Section and other related Sections;

2. Manufacturer's Specifications and other data needed to prove compliance with the specified requirements;

3. Manufacturer's recommended installation procedures which, when approved by the City Engineer or the Consultant, will become the basis for accepting or rejecting actual installation procedures used on the Work.

C. Contractor's proof of qualification.

D. Shop Drawings:

1. Shoring Drawings.

   a. The hydrodynamic separator units will require a long lead time for shop drawing review and shop inspection. It is recommended that the Contractor submit the shop drawings as early as possible to prevent delays.

2. Submit complete shop fabrication drawings of all pipe, pipe specials, hydrodynamic separators, and joint details. Contractor shall also submit a schedule of pipe marks accompanied by a plan showing the field location of each mark.

E. Testing Data and Reports.

1.4 DELIVERY, STORAGE AND HANDLING

A. Deliver material and products with certified delivery tickets to the job-site where directed by the City Engineer or the Consultant.

B. Store materials on the job located where directed by the City Engineer or the Consultant and not interfering with work operations of this Section.

C. Handle materials safely in a manner avoiding damage prior to and during installation and not damaging work of other trades.

1.5 PROTECTION

A. Required:

Furnish, erect and maintain barriers, lights and signs as necessary to protect the public, Contractor's and City's personnel and work under this Contract in accordance with Work Area Traffic Control Handbook until such time for backfilling of trenches and subsequent Contracted Site and "Street Work" operations.

1.6 PERMIT

A. Required:

1. Obtain Storm Drain Connection permit for connecting and discharging storm water into City street storm drain system as noted on the Contract Drawing and as noted in Sections of GENERAL CONDITIONS and Section 01112 – DESCRIPTION OF THE WORK in GENERAL REQUIREMENTS of the Project Manual or as otherwise directed by the City Engineer or the Consultant.

1.7 INSPECTION

A. Required:

1. All work outside the property lines regarding storm drain line connections to the street storm drain or gutters through sidewalk and curbs or as called for on the Contract Drawings, by the Storm Drain Connection Inspector of the Bureau of Contract Administration. Contractor shall make necessary arrangement in accordance with the permit requirements.

2. All work inside the property lines regarding storm drain lines shall be inspected by the Los Angeles City Department of Building and Safety.

3. Test pipes shall be selected from the lot and tested in accordance with the requirements specified in SSPWC, but not necessary limited to. At the place of manufacture, the City Engineer or Inspector will indicate tentative acceptance of the pipe for delivery by marking with the Agency stamp. Final acceptance will be made only when the project has been completed.

4. All pipe penetration and required fire stopping shall be inspected prior to any wall closure.

B. **Notification:** Contractor shall notify all local governing agencies and arrange for required inspection.

1.8 COORDINATION

A. **Required:** All on-site storm drain work shall be fully coordinated with other Contracted Work operations as per approved work scheduled.

PART TWO-PRODUCTS

2.1 PIPE MATERIAL (As applicable)

A. **Reinforced Concrete Pipe:** Cast Pipe wall type, As per Section 207-2 - REINFORCED CONCRETE PIPE of the Standard Specifications for Public Works Construction (SSPWC), sizes as indicated on the Contract Drawings.

2.2 CONCRETE MATERIALS

A. **Required for Catch Basins:** Concrete having a compressive strength of 3250 psi at 28 days as per Section 303 of the SSPWC and in Section 03300 - CAST-IN-PLACE CONCRETE of the Project Manual.

2.3 CATCH BASIN GRATE AND FRAME

A. Alhambra Foundry Ltd., Alhambra, California, No. A-2012 Standard Heavy Weight Traffic Cast Iron (square or rectangular grate and frame), size as indicated on the Contract Drawings, or equal.

2.4 CURB DRAIN PIPE

A. Rectangular in shape conforming to Los Angeles City Bureau of Engineering Standard Plan S-503, latest edition. Material shall be Alhambra Foundry Rectangular Cast Iron Pipes and adaptors, Part A-470 (Rectangular Cast Iron Pipe and Adaptors) and A-480 (Cast Iron Pipe Adaptors, round to rectangular pipe).

2.5 MISCELLANEOUS MATERIALS (As Applicable)

A. **Miscellaneous Metals:** See Section 05500 - METAL FABRICATIONS of the Project Manual.

B. **Grout:** See Section 03300 - CAST-IN-PLACE CONCRETE of the Project Manual.

C. **Mortar:** Comply with requirements of ASTM C270 - SPECIFICATION FOR MORTAR FOR UNIT MASONRY, Type "M" except the maximum placement time shall be one hour. No mortar shall be used which has begun to set; retempering not permitted.

D. **Pipe Bedding and Backfill Materials:** See Sub-Section 3.3 hereinafter, Section 02310-EARTHWORK of SSPWC and other Sections of the Project Manual.

1. Sand shall be graded as follow:

Sieve size	Percentage Passing Sieves
3/8"	100%
No. 4	60-100%
No. 8	65 - 90%
No. 16	45 - 70%
No. 30	25 - 45%
No. 50	10 - 20%
No. 100	2 - 8%
No. 200	0 - 4%
No. 220	0 - 3%

2. Concrete shall be in accordance with the Los Angeles City Bureau of Engineering Standard Plan S-251, latest edition.

2.6 HYDRODYNAMIC SEPARATORS

A. General:

1. Hydrodynamic separators shall be constructed of precast concrete and designed to remove oil and sediment from stormwater.

2. Hydrodynamic separators shall be designed with bypass capability such that flows in excess of the maximum treatment flow rate are routed around the treatment gallery and not allowed to contact the area of sediment storage in order to prevent scour and re-suspension of captured sediment.

3. One City of Los Angeles storm drain message marker or placard shall be placed on each hydrodynamic separator. Consult with the City for specific requirements for placard types and methods of application.

B. Materials:

1. Concrete for hydrodynamic separator shall conform to ASTM A478 or ASTM C890 and C913.

2. Cement shall be Type I, II, III Portland cement conforming to ASTM C150 with a minimum compressive strength of 4,000 psi.

3. Pipe openings shall be sized to accept pipes of the specified sizes and materials and shall be sealed by the Contractor with hydraulic cement conforming to ASTM C595M or ASTM C1107.

4. The screen system structure to be a welded aluminum framework spanned by the stainless steel screen. It shall be generally rectangular and the inflow end shall remain open to allow water to enter the screen system. All the panels, access doors, and lids that make up the screen system shall be stainless steel.

5. The stormwater treatment system to have a floating skimmer apparatus for preventing floatable debris from entering the treatment vault outlet. A rubber seal

at the face of the skimmer shall prevent the passage of oils, floating chemicals and debris.

6. Access maintenance hole to be constructed of Cast Iron and shall bear the words “Storm Drain”.

C. Performance:

1. The hydrodynamic separators should be able to treat a minimum flow rate of 35 cfs with full trash capture.

2. Total Suspended Solids (TSS) removal of at least 80% average annual reduction with a mean particle size of 150 microns.

3. The combination of installed components shall be designed to withstand AASHTO HS20 loads.

4. The hydrodynamic separators shall have the capacity to store at least 190 cubic feet of sediment without affecting the performance of the unit.

D. Manufacturer:

1. Old Castle Infrastructure, NSBB-1020-TC

2. Or Approved Equal

PART THREE - EXECUTION

3.1 SURFACE CONDITIONS

Examine the areas and conditions under which work of this Section will be performed. Correct conditions detrimental to timely and proper completions of the Work. Do not proceed until detrimental conditions are corrected as directed by the City Engineer or the Consultant.

3.2 EXCAVATING AND TRENCHING

A. General:

1. Conform to the requirements as specified on the drawings, Los Angeles City Plumbing Code, Standard Specifications for Public Works Construction and other sections of the Project Manual. Case 1 Bedding installation of Los Angeles City Bureau of Engineering Standard Plan S-251, latest edition shall be used for all piping laying. Any piping with 8 feet or more cover or backfill, trench width shall not exceed the maximum allowable trench width as shown in Standard Plan S-251.

2. Excavate trenches to provide for a minimum 6-inch thickness of bedding sand below bottom of pipe couplings. There shall be a minimum side clearance of 6 inches on each side.

B. Provide excavation and trenches for storm drain piping systems, concrete catch basins indicated on the Contract Drawings in accordance with applicable requirements specified in Section 02310 - EARTHWORK.

3.3 STORM DRAIN SYSTEM CONSTRUCTION

A. **General:** In strict accordance with pipe manufacturers recommendations and the Los Angeles City Plumbing Code and the SSPWC.

B. **Installation of Pipe:** In accordance with Sec. 306-1.2 INSTALLATION OF PIPE of the SSPWS on unyielding bedding foundations with uniform bearing under full length of pipe barrels; walking on or disturbing pipe in any manner after joints have been made, not permitted; at close of each day's work or whenever work is stopped for any reason, protect ends of pipe with temporary tight fitting closures. Slope as per Contract Drawings.

C. Seal all wall and flooring penetrations and sleeves with applicable fire stopping or sealant material. Obtain inspection prior to wall closure or trench backfill.

D. Bedding:

1. Provide for a minimum 6-inch thickness of bedding sand below bottom of pipe barrels; any over-excavations may require concrete pipe bedding and to be filled with slurry backfill or structural backfill in accordance with Standard Plan S-251, latest edition, at Contractor's expense; bedding sand to be tamped and compacted and accurately graded and shaped to support bottom quadrant of pipe, with coupling holes dug prior to placement of pipe.

2. Backfill: Provide sand backfill to an elevation of 12 inches over the top of the pipe and floor in accordance with Section 306-1.3.3 – WATER DENSIFIED BACKFILL. Use clean earth material for remainder of backfill to required finish grade and compact for yard paving.

E. **Pipe Juncture with Concrete Structures:** Set pipe ends as necessary for casting-in-place or grouting-in-place after construction of such structures. Junctures with existing storm drain channels to be in accordance with the standards and specifications of the Los Angeles County Flood Control District.

F. **Fill Joints:** (Other than wedge-lock type) with mortar troweled smooth on inside of pipe; keep mortar joints damp until backfill is placed.

G. **Pipe Juncture with Concrete Structures:** Set pipe ends as necessary for casting-in-place or grouting-in-place after construction of such structures.

3.4 CONCRETE STRUCTURES

A. **General:** Catch basins, gutters, maintenance holes, hydrodynamic separators, etc. as indicated on the Contract Drawings.

B. Materials:

1. Concrete: As specified in Sections 03300 CAST-IN-PLACE CONCRETE.

2. Grates, Frames and Covers: As hereinbefore specified.

3. Miscellaneous Metals: As specified in Section 05500 - METAL FABRICATIONS.

C. **Construction:** As indicated on the Drawings and specified in Section 03300 - CAST-IN-PLACE CONCRETE.

D. **Catch Basins:** Section 303-1- CONCRETE STRUCTURE and 303-1.4.4(b) - STANDARD CATCH BASIN of the SSPWC as applicable. Forms to be of 1-inch minimum thick plywood; remove forms minimum 24-hours after concrete pour; top surface of catch basins to conform to drawing details or paving grades and as directed by the City Engineer or the Consultant; steel trowel finish and lightly brushed with bristle brush all exposed surfaces; gratings and frames to be set flush and level with top surface of basin or as otherwise indicated on the Contract Drawings.

E. **Maintenance Holes, Hydrodynamic Separators, Diversion Structure:** Construct at location and to elevations indicated on the Contract Drawings, in accordance with details and materials noted thereon; set precast concrete segments with full mortar joints troweled smooth on interior of maintenance hole; set cover frames in full mortar bed and accurately to meet paving grades.

3.5 BACKFILL

A. As specified in "Sand and Backfill" subsections of Sections 02310 - EARTHWORK and provisions herein, including approval, place approved washed sand 12-inches above top of pipe and the balance of backfill shall be approved clean earth material free from waste material, rock or large clods larger than 1-inch in size. If excavated material is unsuitable or rejected; Contractor shall provide approved imported materials as necessary to complete the work.

B. No backfill material shall be deposited against the concrete structure until the concrete has developed not less than the specified 28 - day compressive strength.

3.6 TESTING (As Applicable)

A. **Required:** Provide personnel and equipment necessary, and perform tests required to demonstrate that the work of this Section has been completed in accordance with the specified requirements.

B. Hydrostatic Test on Watertight Joints:

1. Make a hydrostatic test on each watertight joint. Test one sample of each type watertight joint used. If one sample fails because of faulty workmanship, test an additional joint.

2. Demonstrate that joints in reinforced and unreinforced concrete pipe comply with ASTM C443 - SPECIFICATION FOR JOINTS FOR CIRCULAR CONCRETE SEWER AND CULVERT PIPE, USING RUBBER GASKETS.

3. Make tests in concrete pipe and clay pipe at an internal hydrostatic pressure of 10 psi for 24-hours.

4. Replace or repair joints found to be faulty. Repeat the test and repair cycle until joints are demonstrated to meet the specified requirements.

END OF SECTION

SECTION 02550
LINED REINFORCED CONCRETE PIPE

PART 1 -- GENERAL

1.1 THE REQUIREMENT

A. The CONTRACTOR shall furnish all tools, equipment, materials, and supplies and shall perform all labor required to complete the work as indicated in the Contract Documents.

B. This Section covers lined reinforced concrete pipe intended to be used for the construction of sewers, and related structures.

1.2 RELATED WORK SPECIFIED ELSEWHERE

A. Section 02310 Earthwork.

B. Section 02585 Maintenance Hole and Precast Vault Construction.

C. Section 03300 Cast-in-Place Concrete.

1.3 REFERENCE SPECIFICATIONS, CODES, AND STANDARDS

A. Comply with the applicable reference specifications as specified in the GENERAL REQUIREMENTS.

B. Comply with the current provisions of the following Codes and Standards.

1. Commercial Standards:

ASTM C76	Specification for Reinforced Concrete Culvert, Storm Drain, and Sewer Pipe.
ASTM C596	Test Method for Drying Shrinkage of Mortar Containing Portland Cement.
ASTM D 412	Test method for tensile strength and elongation.
ASTM D 2240	Test method for indentation hardness.

2. Standard Specifications SSPWC Sections 207 - 3, 210 - 2, and 311 - 1.

1.4 CONTRACTOR SUBMITTALS

A. Shop drawing submittals shall be made in accordance with the GENERAL REQUIREMENTS and SSPWC Section 2-5.3.2.

PART 2 -- PRODUCTS

2.1 GENERAL

A. Except as modified herein, reinforced concrete pipe shall conform to the requirements of ASTM Designation C 76 for Class II, Wall B, and Type II cement. Unless otherwise specified, pipe shall have tongue and groove joints designed to be self-centering and to leave a recess on the inside of the pipe for pointing with mortar after jointing. Pipe shall be designed for an internal pressure of 26 feet of water, and an external D load as labelled on the Drawings.

B. The size, type, and D-load of the concrete pipe to be furnished shall be as shown on the Drawings, as specified under the bid item of work for the project, or as stated above.

C When pipe joints of the reinforced concrete collar type or of rubber-gasketed type are specified or indicated on the Drawings, joint details shall be submitted to the ENGINEER for acceptance before commencing pipe manufacture.

2.2 MATERIALS

A. Except when otherwise permitted by the ENGINEER, no materials shall be used in manufacturing of the pipe other than water, Portland cement, mineral aggregates and steel conforming to ASTM C 76, with the following exceptions:

1. All cement to be used or furnished shall be Type II low alkali Portland cement conforming to ASTM C 150 or Type IP (MS) Portland-pozzolan cement conforming to ASTM C 595, unless otherwise specified. Either cement shall conform to the low alkali requirements of Table IA of ASTM C150. Type IP (MS) cement shall contain no more than 20 percent pozzolan, which shall be interground with the clinker.

2. Aggregates shall be nonreactive when tested in accordance with ASTM C 289 and evaluated in accordance with Appendix A-1 of ASTM C 33. Aggregates found to be potentially reactive may be used only upon written acceptance of the ENGINEER.

B. All pipe manufactured under the provisions of this Specification shall contain a minimum of 560 lb of cement per cubic yard of concrete unless mix designs with a lower cement content meet the requirements of this Specification and approved by the ENGINEER prior to use.

C. Cement Mortar: Cement mortar shall consist of a mixture of Portland cement, sand, and water. Cement and sand shall first be combined in the proper proportions, and then thoroughly mixed with the required amount of water. Cement mortar shall be proportioned by loose volume in the proportion of 1 part cement to 2 parts sand. The quantity of water to be used in the preparation of mortar shall be only that required to produce a mixture sufficiently workable for the purpose intended. Mortar shall be used as soon as possible after mixing and shall show no visible signs of setting prior to use. Retempering of mortar will not be permitted. Cement, sand, and water for cement mortar shall conform to Section 03300 Cast-in-Place Concrete.

D. Admixtures: No admixtures shall be used in mortar unless otherwise specified or accepted by the ENGINEER.

E. Quick Setting Grout: Quick setting grout shall be high strength, non-staining grout accepted by the ENGINEER prior to use. It shall reach an initial set within 90 minutes at 70 degrees F and shall

reach minimum compressive strength of 2,500 psi within 24 hours. Shrinkage shall be less than 0.1 percent when tested, using the test procedures of ASTM C 596. The grout shall be mixed, handled, and placed in accordance with the manufacturer's written instructions.

F. Gaskets for Concrete Pipe: Unless otherwise specified, gaskets shall be manufactured from a synthetic elastomer conforming to SSPWC Section 208-3.

G. Plastic liner shall be in accordance with SSPWC Section 210-2.

PART 3 -- EXECUTION

3.1 INSTALLATION OF LINED REINFORCED CONCRETE PIPE

A. Liner shall be installed accordance with Standard Plan No. S-121, and SSPWC Section 311-1.

3.2 Pipe shall be laid to plan line and grade, with uniform bearing under the full length of the barrel of the pipe. Pipe shall be installed in accordance with SSPWC Section 306 1.2 as modified by Standard Plan S-251. Suitable excavation shall be made to receive the socket or collar, which shall not bear upon the subgrade or bedding. Any pipe which is not in true alignment or shows any undue settlement after laying shall be taken up and relaid at the CONTRACTOR's expense. Pipe shall be laid up-grade with the socket or collar ends of the pipe upgrade unless otherwise authorized by the ENGINEER. Concrete pipe with elliptical reinforcement shall be laid with the minor axis of the reinforcement cage in a vertical position.

3.3 FIELD JOINTING OF LINED REINFORCED CONCRETE PIPE

A. Field jointing shall be in conformance with SSPWC Section 306 -1.2.4.

END OF SECTION

SECTION 02585
MAINTENANCE HOLE AND PRECAST VAULT CONSTRUCTION

PART 1 -- GENERAL

1.1 THE REQUIREMENT

A. The CONTRACTOR shall furnish all tools, equipment, materials, and supplies and shall perform all labor required to complete the work as indicated on the Drawings and specified herein.

B. This section covers the work necessary for the construction of maintenance holes and precast vaults. General maintenance hole and vault details are as shown on the Drawings.

1.2 RELATED WORK SPECIFIED ELSEWHERE

A. Section 01330 Shop Drawings/Submittals

B. Section 01453, Sampling, Testing, and Fabrication Inspection.

C. Section 02310 Earthwork

D. Section 03300 Cast-in-Place Concrete.

E. Section 03400 Precast Concrete for hydrodynamic separator and Stormfilter treatment vaults.

F. Section 13200 for Precast Concrete for Modular Buried Stormwater Infiltration System.

1.3 REFERENCE SPECIFICATIONS, CODES AND STANDARDS

A. Comply with the applicable reference specifications as specified in the GENERAL REQUIREMENTS.

B. Comply with the current provisions of the following Codes and Standards.

1. Commercial Standards:

ASTM A 48	Specification for Gray Iron Castings.
ASTM C 14	Standard Specification for Nonreinforced Concrete Sewer, Storm Drain, and Culvert Pipe.
ASTM C 150	Specification for Portland Cement.
ASTM C 387	Standard Specification for Packaged, Dry, Combined Materials for Concrete and High Strength Mortar.
ASTM C 478	Standard Specifications for Circular Precast Reinforced Concrete Manhole Sections.

AASHTO LRFD with version and modifications per Caltrans's latest Addendum.

2. Standard Specifications: SSPWC Section 206 -3 Gray Iron Casting

1.4 CONTRACTOR SUBMITTALS

A. Submittals shall be made in accordance with the GENERAL REQUIREMENTS.

B. Shop Drawings: The CONTRACTOR shall furnish complete shop drawings for all precast maintenance hole sections, cast iron frames and covers, and appurtenances for review by the ENGINEER in accordance with **SUBMITTALS** of the GENERAL REQUIREMENTS. This shall include

1. Concrete mix design and structural calculations of non-standard elements, signed and sealed by a California Registered Civil or Structural Engineer.

2. Joint details of all precast sections and jointing between cast-in-place and precast segments.

3. Method of weathertightness, and watertight joints, when groundwater is within five (5) feet from the lowest joint, and associated test reports

4. Joint materials and products including mortars, o-rings, gaskets, etc.

5. Lifting anchor and all other anchor information.

6. Details, products, and appurtenances for all lateral connections, and particular locations.

C. Non-Preapproved Products: For products which are not listed on the online approved products list (http://boe.lacity.org/apm/menu.cfm), the Contractor shall secure the services of a precaster to design, and fabricate the required precast reinforced concrete products, including the preparation of all associated plans, calculations, and documentation of associated appurtenances such as joints, gaskets, sealants, protective liners Type I, etc., to the full satisfaction of the ENGINEER. Calculations and plans shall be signed and sealed by a California registered Civil and/or Structural Engineer. Joints, gaskets, and sealants shall be tested to meet the requirements of the Contract. Non-approved maintenance hole products will not be considered unless there are none listed in the online approved products list.

1.5 DESIGN CRITERIA

A. Design of precast structures and maintenance holes shall conform to S-601-3, including cumulative supplements, and ASTM C478, including AASHTO LRFD with version and modifications per Caltrans' latest addendum.

B. For structures used as part of a sanitary sewer system, surfaces exposed to a corrosive environment shall be lined with an approved Type I liner System. Mortar bed just below frame and cover shall be sealed with approved epoxy sealant.

1.6. QUALITY ASSURANCE

A. Fabrication: Contractor shall coordinate with the Bureau of Contract Administration Materials Control Inspection for required inspection prior to fabrication. See Section 01453 for detail requirements.

B. Field Inspection: All work is subject to inspection including excavation, placement, backfill, and finishing. The CONTRACTOR shall demonstrate that all maintenance holes and precast vault segments have been properly installed, level, with tight joints, at the correct elevations and orientations, and that the backfilling has been carried out in accordance with the Contract Documents. Coordinate with Inspector prior to start of work.

PART 2 -- PRODUCTS

2.1 GENERAL

A. Products used shall be pre-approved products, up to date and in good standing, as listed in the online approved products list (http://boe.lacity.org/apm/menu.cfm), including maintenance holes and frame & covers. Where no acceptable pre-approved product exists, the CONTRACTOR shall retain the services of a precaster to design and fabricate a project specific structure. Plant approval shall be required.

2.2 GRANULAR BASE

A. Granular base shall conform to Section 02310"Earthwork."

2.3 CONCRETE

A. Ready-mixed, conforming to ASTM C 94, Alternate B.

B. Mix design shall conform to SSPWC.

C. The concrete class for maintenance hole bases shall be 660-CW-4000, or 560-B-3250.

D. The concrete class for maintenance holes and precast structures shall be by strength, with a minimum compressive strength of 4,000 psi.

2.4 FORMS

A. Exterior exposed surfaces shall be plywood. Others shall be matched boards, plywood, or other approved material. Provide forms on all vertical surfaces. Trench walls, large rock, or earth will not be approved as form material.

2.5 REINFORCING STEEL

A. For maintenance holes, conform to ASTM A 615, Grade 40, or greater.

B. For precast vaults or structures, conform to ASTM A615 Grade 60, deformed bar.

C. All bars intended to be welded shall conform to ASTM A706 and AWS D1.4.

2.6 POURED-IN-PLACE MAINTENANCE HOLES

A. Poured-in-place type maintenance holes may be used provided all details of construction are accepted by the ENGINEER.

2.7 PRECAST MAINTENANCE HOLE SECTIONS

A. Precast maintenance hole sections shall be minimum 60 inches in diameter, conforming to

Standard Plan S-387, S-142, S-150 and to ASTM C 478. Minimum wall thickness shall be 5 inches for reinforced sections. Provide eccentric cones for all maintenance holes. Cones shall have same wall thickness and reinforcement as maintenance hole section. Top and bottom of all sections shall be parallel. Maintenance hole steps shall be cast in the Precast Sections by the manufacturer of the maintenance hole sections.

B. Joints shall be tongue-and-groove with rubber gaskets conforming to ASTM C 443. The CONTRACTOR's attention is directed to specification for MORTAR hereinafter.

C. Prior to the delivery of any size of precast maintenance hole section on the jobsite, yard tests will be conducted at the point of manufacture. The precast sections to be tested will be selected at random from the stockpiled material which is to be supplied for the job. All test specimens will be mat tested, and shall meet the permeability test requirements of ASTM C 14.

2.8 PRECAST BASE SECTIONS AND BASES

A. At the option of the CONTRACTOR, precast base sections or maintenance hole bases may be used provided all details of construction are approved by the ENGINEER. Base sections shall have the base slab integral with sidewalls. Base slab shall be constructed in accordance with Standard Plan S-140. Tie reinforcing steel to wall steel.

2.9 MAINTENANCE HOLE EXTENSIONS

A. Concrete grade rings for extensions shall be a maximum of 6 inches high and shall be approved by The INSPECTOR before installation.

B. In general, maintenance hole extensions will be used on all maintenance holes in roads or streets or in other locations where a subsequent change in existing grade may be likely. Extensions will be limited to a minimum of 12 inches and a maximum height of 2 feet 6 inches. Finish grade for maintenance hole covers shall conform to finished ground or street surface level, unless otherwise directed by the ENGINEER.

C. For raising of maintenance hole, conform to S-137.

2.10 MORTAR

A. Standard premixed mortar conforming to ASTM C 387 or proportion 1 part Portland cement to 2 parts clean, well-graded sand which will pass a 1/8-inch screen. Admixtures may be used not exceeding the following percentages of weight of cement: Hydrated lime, 10 percent; diatomaceous earth or other inert materials, 5 percent. Consistency of mortar shall be such that it will readily adhere to the pipe when using the standard tongue-and-groove type joint. Mortar mixed for longer than 30 minutes shall not be used.

2.11 PREFORMED SEALANTS

A. Preformed sealants may be used in lieu of mortar type joints and shall be Kent-Seal No. 2 manufactured by Hamilton Kent Manufacturing Company, Kent, OH**;** Ram-Nek, manufactured by K. T. Snyder Company, Inc., Houston, TX; or equal, meeting all requirements of Federal Specification SS-S-00210.

2.12 PIPE STUBOUTS FOR FUTURE SEWER CONNECTIONS

A. Pipe stubouts shall be the same type as approved for use in lateral, main, or trunk sewer

construction. Strength classifications shall be the same class as in adjacent trenches. Where there are two different classes of pipe at a maintenance hole, the higher strength pipe will govern strength classification. Rubber gasketed watertight plugs shall be furnished with each stubout adequately braced against all hydrostatic or air test pressures.

2.13 PRECAST CONCRETE VAULT

A. The precast concrete vault shall be precast with a 28-day, 3,250 psi minimum compressive strength concrete and designed for AASHTO H-20 loading. Minimum dimensions are shown on the Drawings. Provide openings for pipes and grating as shown on the Drawings.

2.14 MAINTENANCE HOLE STEPS

A. Maintenance hole steps shall be made of minimum 3/4-inch stainless steel bar Type 316. Steps shall be 12-inch wide minimum, center-to-center of legs, and shall be drop pattern with a 2 1/2-inch drop. Bends shall be made around a 1-inch radius minimum, 2-inch radius maximum mandrel. There shall be 3-inch minimum embedment in precast concrete maintenance hole sections and 4-1/2-inch minimum projection from the face of concrete at point of embedment to the center of the step. There shall be a 2-inch hook on the embedment end.

B. The installed steps shall be located so as to provide a continuous ladder with steps equally spaced vertically in the assembled maintenance hole at 12 inches ± 3/4-inch. They shall be capable of withstanding a force of 350 pounds, applied at any place on the step and in any direction which projects from the point of application through a diameter of the step cross-section at that point, with no permanent deformation resulting. Steps shall be cast in manhole sections by the manufacturer.

2.15 MAINTENANCE HOLE FRAMES AND COVERS

A. Cast iron of size and shape detailed on the Drawings. Covers shall have the letter “S” or “D” fitted tight in a 3-inch diameter circle in the center of the cover. Frame and cover shall conform to applicable City of Los Angeles Standard Plans. Test per S-601. Frames shall have a minimum clear opening of 30 inches.

B. Non-preapproved products shall conform to Standard Plan S-601 and the following requirements. The more stringent shall apply: Castings shall be tough, close-grained gray iron, sound, smooth, clean, free from blisters, blowholes, shrinkage, cold shuts, and all defects, and shall conform to ASTM A 48, Class 35B. Plane or grind bearing surfaces to ensure flat, true surfaces. Covers shall be true and seat within ring at all points.

PART 3 -- EXECUTION

3.1 EXCAVATION AND BACKFILL

A. Conform to applicable portions of Section 02310 “Earthwork”. Backfill around maintenance holes shall be of the highest quality of trench backfill immediately adjacent, as shown on the Drawings.

3.2 GRANULAR BASE

A. Remove water from the excavation. Place a minimum of 6 - inches of granular base and thoroughly compact with a mechanical or power vibrating tamper to a minimum of 90%

relative compaction.

3.3 CONCRETE BASE

A. Construct concrete base in conformance with the details shown on the Drawings. Vibrate to densify the concrete and screed so that the first precast maintenance hole section to be placed has a level, uniform bearing for the full circumference.

B. Deposit sufficient mortar on base to assure watertight seal between base and maintenance hole wall or place the first precast section of maintenance hole in concrete base before concrete has set, if preferred. First section shall be properly located and plumb.

C. If material in bottom of trench is unsuitable for maintenance hole, excavate below the flow line as directed by ENGINEER, and backfill to required grade with granular base per geotechnical recommendations.

3.4 PLACING PRECAST MAINTENANCE HOLE SECTIONS

A. Clean ends of sections of foreign materials. Thoroughly wet joint with water prior to placing mortar. Place mortar on groove of lower section. Set next section in place. Fill joint completely with mortar of the proper consistency. Trowel interior and exterior surfaces smooth on standard tongue-and-groove joints. Wipe or otherwise clean the excess mortar from the inside of the Keylock joint.

B. When a **Keylock** joint is used, it is the intent that the void between the tongue-and-groove be completely filled with mortar, and that the interior and exterior end faces of the section to be placed seat fully on the previously placed section.

C. Prevent mortar from drying out and cure by applying an approved curing compound or comparable approved method. Chip out and replace all cracked or defective mortar. Completed maintenance holes shall be rigid and watertight.

3.5 PREFORMED PLASTIC GASKETS

A. Carefully inspect precast maintenance hole sections to be joined. Sections with chips or cracks in the tongue shall not be used. Preformed plastic gaskets shall be installed in strict conformance with the manufacturer's recommendations. Only pipe primer furnished by the gasket manufacturer will be approved.

3.6 MAINTENANCE HOLE INVERT

A. Construct maintenance hole inverts in conformance with details shown on the Drawings, and with smooth transitions to ensure an unobstructed flow through maintenance hole. Remove all sharp edges or rough sections which tend to obstruct flow. Where a full section of pipe is laid through a maintenance hole, break out the top section as indicated and cover exposed edge of pipe completely with mortar. Trowel all mortar surfaces smooth.

B. For benches of maintenance holes greater than 48 inches in diameter, line the surface and make it non-skid per SSPWC 311-1.7.

3.7 FLEXIBLE JOINTS

A. Provide joints in all pipe not more than 1.5 feet from maintenance hole walls. Lay pipes entering maintenance holes on firmly compacted granular base. Granular base shall be as specified hereinbefore.

B. Where the last joint of the line laid up to the maintenance hole is more than 1.5 feet from the maintenance hole base, a 6-inch concrete encasement shall be constructed around the entire pipe from the maintenance hole base to within 1.5 feet of the pipe joint. The pipe encasement shall be constructed monolithically with the maintenance hole base. Pipes laid out of the maintenance hole shall be shortened to ensure the first joint is no more than 1.5 feet from the maintenance hole base.

3.8 PIPE STUBOUTS FOR FUTURE SEWER CONNECTIONS

A. Install stubouts in maintenance holes for future sewer connections as shown or as required by the ENGINEER. Maximum length shall be 1.5 feet outside the maintenance hole wall. Grout pipes in precast walls or maintenance hole base to provide watertight seal around pipes. Construct invert channels in accordance with details shown on the Drawings. Provide compacted granular base as specified herein before to undisturbed earth under all stubouts.

B. Install semi-permanent plugs at the end of stubouts with gasket joints similar to sewer pipe being used. Plugs shall be capable of withstanding all internal or external pressures without leakage. All plugs to be braced to prevent blowoffs.

3.9 PERMANENT PLUGS

A. Clean interior contact surfaces of all pipes to be cut off or abandoned as shown. Construct concrete plugs at the end at of all pipes 18 inches or less in diameter. Minimum length of concrete plugs shall be 8 inches. For pipe 21 inches and larger, the plugs may be constructed of common brick or concrete block. Plaster the exposed face of block or brick plugs with mortar. All plugs shall be watertight and capable of withstanding all internal and external pressures without leakage.

3.10 MAINTENANCE HOLE EXTENSIONS

A. Install extensions in conformance with the details shown on the Drawings, and to height determined by the ENGINEER. Lay grade rings in mortar with sides plumb and tops level. Seal joints with mortar as specified for maintenance hole sections. Extensions shall be watertight.

3.11 MAINTENANCE HOLE FRAMES AND COVERS

A. Install frames and covers on top of maintenance holes to positively prevent all infiltration of surface or groundwater into maintenance holes. Frames shall be set in a bed of mortar with the mortar carried over the flange of the ring as shown in the Maintenance Hole Details on the Drawings. Set frames so that tops of covers are flush with surface of adjoining pavement or ground surface, unless otherwise shown or directed.

3.12 MAINTENANCE HOLES OVER EXISTING SEWERS

A. Construct maintenance holes over existing operating sewer lines at locations shown. Perform necessary excavation as specified above, break into existing line, and construct

maintenance hole.

B. Maintain flow through existing sewer lines at all times, and protect new concrete and mortar work for a period of 7 days after concrete has been placed. Advise ENGINEER of plans for diverting sewage flow and obtain ENGINEER's approval before starting. ENGINEER's approval will not relieve CONTRACTOR of responsibility for maintaining adequate capacity for flow at all times and adequately protecting new and existing work.

C. Construct the new base under the existing sewer and the precast sections as specified herein.

D. Break out the existing pipe within the new maintenance hole, cover the edges with mortar, and trowel smooth.

3.13 PRECAST CONCRETE VAULT

A. Install precast concrete vault at the locations shown on the Drawings. Provide necessary excavation and backfill as specified herein.

3.14 HYDROSTATIC TESTING

A. All sewer maintenance holes shall be hydrostatically tested for leakage after installation, but prior to being backfilled. Prior to hydrostatic testing, all maintenance holes shall be visually inspected for leaks. All leaks or cracks shall be repaired by the CONTRACTOR, prior to hydrostatic testing, to the satisfaction of the ENGINEER and the INSPECTOR. All pipes entering the maintenance hole shall be sealed at a point outside the maintenance hole walls so as to include testing of the pipe/maintenance hole joints. Maintenance holes may be filled 24 hours prior to time of testing, if desired, to permit normal absorption into the pipe walls to take place. The maintenance hole shall be filled with water to a level 2 inches below the top of the frame. Safety lines shall be secured to all plugs utilized. After a period of at least one hour to allow the water level to stabilize, the maintenance hole shall be refilled and the water level shall be checked. The water level shall again be checked after a period of 4 hours. If the water level is reduced by more than 1/4-inch, the leakage shall be considered excessive, and the CONTRACTOR shall be required to make all necessary repairs and retest the maintenance hole. The exterior of the maintenance hole shall be inspected during this period for visible evidence of leakage. Visible moisture, sweating, or beads of water on the exterior of the maintenance hole shall not be considered leakage, but any water running across the surface will be considered leakage and shall be repaired to the satisfaction of the ENGINEER and the INSPECTOR regardless of the volume of water lost.

END OF SECTION

SECTION 02600
DUCTILE IRON PIPING

PART 1 - GENERAL

1.1 RELATED DOCUMENTS

A. Drawings and general provisions of the Contract, including General and Supplementary Conditions and Division 01 Specification Sections, apply to this Section.

1.2 SUMMARY

A. Section Includes:

1. Materials, equipment and incidentals required to install and test ductile iron pipe and fittings for yard piping as shown on Drawings and as specified.

a. The word "pipe" is used to refer to pipe, fittings, or appurtenances unless otherwise noted.

2. Yard Piping: Includes piping and fittings extending outward, upward and downward into the ground from the outside face of structures.

3. Locate piping as shown on the Drawings. The Engineer reserves the right to make modifications in locations as may be found desirable to avoid interference between pipes or for other reasons.

B. Related Requirements:

1. Section 2310 Earthwork

1.3 ACTION SUBMITTALS

A. Section 013300 “Submittal Procedures” for submittals requirements.

B. Shop Drawings and Product Data:

1. Including piping layouts, design calculations, warranty information, test reports, in accordance with Section 01330 Shop Drawing Submittals.

1.4 INFORMATIONAL SUBMITTALS

A. Prior to Pipe Shipment:

1. Certified copies of mill tests confirming type of materials used in pipe, and shop testing of pipe to show compliance with requirements of applicable standards, along with a sworn affidavit of compliance that pipe complies with referenced standards.
2. Certified affidavit of compliance from manufacturer stating that pipe, fittings, gaskets, linings and exterior coatings for project have been manufactured and tested in accordance with AWWA and ASTM standards and requirements specified herein.

1.5 QUALIFICATIONS

A. Manufacturer shall meet the following criteria and furnish necessary project information, which demonstrates required experience:

1. Experience that includes successful fabrication (followed by installation, acceptance and service) to AWWA C151 standards of at least 50,000 lineal feet of largest specified diameter or larger ductile iron pipe with similar linings/coatings within the past 5 years.
2. Experience to include successful fabrication of at least 50 fittings in compliance with AWWA C110 or C153 of largest specified diameter or larger with similar lining/coatings within the past 5 years.

1.6 DELIVERY, STORAGE, AND HANDLING

A. Delivery: Per AWWA C600 and referenced AWWA Standards for shipping, handling and storage procedures.

1. Deliver materials in manufacturer's packaging including application instructions.
2. Handle to prevent injury to pipe, pipe linings and pipe coatings.

    a. Examine pipe and fittings as noted in Division 01. Damage to linings or coatings discovered during examination to be repaired to the satisfaction of Engineer before proceeding with work.

3. Transport pipe to job site on padded bunks or oak timbers and secured with steel banding or nylon tie down straps adequately protecting pipe and coating.

    a. Handle pipe using slings, hooks, pipe tongs or other devices acceptable to Engineer.
    b. Do not use non-cushioned ropes, chairs, wedges, cables or levers when handling finished pipe, fittings or couplings.
    c. Do not drop pipe or fittings.
    d. Do not skid pipe or fittings against each other.
    e. Do not mark pipe or fitting coatings.

f. Utilize padded wooden pipe cradles, or chocks suitable for protecting coatings between and beneath finished pipes when pipes are placed upon rough surfaces.

B. Storage:

1. Do not store pipe on bare ground unless soft sand berms are used to support pipe and is approved by Engineer.
2. Keep materials safe from damage if stored. Interior of pipe, fittings and other appurtenances to be kept free from dirt, excessive corrosion or foreign matter.
3. Do not stack pipe higher than limits recommended by manufacturer. Keep bottom tier off ground using timbers, rails, or concrete. Stacking to conform to manufacturer's recommendations and/or AWWA C600.
4. Store gaskets for mechanical and push-on joints in a cool location out of direct sunlight; not in contact with petroleum products. Use gaskets on a first-in, first-out basis.

C. Protection:

1. Lined and coated pipe: Suitably protected from exposure and heating from sun. Follow procedures recommended by coating and lining system manufacturer.

a. Exposure will not be allowed except for short periods such as installation, assembly and repairs.

2. Metal tools or heavy objects are not permitted to come in contact unnecessarily with finished coating.

a. Workers may walk on coated pipe only when necessary, and only when wearing footwear with rubber or composition soles and heels sufficiently free of dirt and mud so coating remains undamaged.

3. Prevent damage to linings and coatings caused by handling, onsite storage, and exposure to low temperatures (due to embrittlement), high temperatures, or direct sunlight.

1.7 EXISTING CONDITIONS

A. Field Measurements: Verify field locations and sizes of connections to existing piping and equipment prior to submitting pipe lay drawings.

1. Indicate field measurements on Shop Drawings.

1.8 WARRANTY

A. Furnish two year manufacturer's warranty for ductile iron pipe and fittings.

PART 2 - PRODUCTS

2.1 SYSTEMS

A. Assure compatibility between joints of all items supplied.

2.2 DUCTILE IRON PIPE

A. Manufacturers: Provide pipe and fittings supplied by:

1. American Cast Iron Pipe Co.
2. U.S. Pipe and Foundry.
3. Griffin Pipe Products.
4. McWane Company; all pipe divisions.
5. An approved equivalent member of the Ductile Iron Pipe Research Association (DIPRA).

B. Ductile Iron Pipe: Per AWWA C151. Provide in standard lengths as much as possible.

C. Thickness Design: Per AWWA C150, except as follows:

1. Piping 12 inches and Smaller: Minimum Class 350.

2.3 FITTINGS

1. Pipe Fittings: Ductile iron per AWWA C110 or AWWA C153 as applicable. Fittings to have the same pressure rating, as a minimum, of the connecting pipe.

2.4 LININGS, COATINGS & CORROSION PROTECTION

A. Interior Lining:

1. Cement Mortar Lining: Per AWWA C104 double thickness. Cement type per ASTM C150.

B. Exterior Coating

1. Buried pipe installed with bituminous coating per AWWA C151 and C110 respectively.
2. Install buried pipe with polyethylene encasement.

a. Polyethylene Encasement: 8 mils thickness meeting standards per AWWA C105.

1) Three layers of co-extruded linear low-density polyethylene (LLDPE), fused into a single thickness not less than eight mils. Infuse inside surface in contact with pipe exterior with an antimicrobial compound and volatile corrosion inhibitor blend, mitigating microbiologically influenced corrosion galvanic corrosion.
2) Polyethylene encasement shall be V-Bio, as patented by DIPRA.

b. Manufacturers:

1) North Town Company.
2) AA Thread and Seal Tape, Inc.
3) Sigma Corp.

PART 3 - EXECUTION

3.1 EXAMINATION

A. Section 017300 “Execution” for installation examination requirements.

3.2 PREPARATION

A. Section 017300 “Execution” for installation preparation requirements.

B. Handle piping and fittings per “Delivery, Storage, and Handling” Article in Part 1 of this specification.

C. Examine pipe and fittings before laying. Repair any damage to pipe, lining or coatings per manufacturer's recommendations prior to installation.

D. Interior of all pipe, fittings and other appurtenances shall be kept free from dirt, excessive corrosion or foreign matter at all times.

3.3 INSTALLATION

A. Installed per requirements of laying schedule and AWWA C600, unless otherwise specified.

1. Provide firm, even bearing length of pipe. Dig bell holes at each joint. Tamp backfill materials on pipe sides to springline per details on Drawings.
2. Blocking is not permitted.
3. Replace with sound pipe or fitting, defective pipe or fitting discovered after having been laid.
4. When laid, pipe and fittings shall perform to lines and grades required. When laying is not in progress, close open ends of pipe with watertight plug or other approved means.
5. Place sufficient backfill to prevent flotation. Joint deflection not to exceed manufacturer’s recommendation.
6. Pipe Laid Underground: 3 feet cover unless Drawings show otherwise or otherwise specified.
7. Lay pipe such that invert elevations shown on Drawings are not exceeded.
8. Provide fittings, in addition to those shown on Drawings, where required, in crossing utilities which may be encountered upon opening trench. Install solid sleeve closures at locations approved by Engineer.
9. Pipe Interior: Maintain dry and broom clean throughout construction period.

10. Field Cutting Pipe: When required, smooth cut by machine perpendicular to pipe axis. Bevel cut pipe ends per manufacturer's recommendations for spigot end.

    a. Repair coating removed from cut per manufacturer's recommendation and/or coating and lining paragraphs of Part 2 above (whichever method is more stringent in opinion of Engineer).
    b. Cement lining shall be undamaged.
    c. Cutting of restrained joint pipe will not be allowed, unless approved at specific joints in conjunction with use of restrainer glands by EBAA Iron or field adaptable restrained joints.
    d. Where Field Cuts are Permitted" Pipe supplied by factory as "gauged full length".

        1) Gauged Full Length Pipe is Unavailable: Pipe to be field gauged at location of new spigot using a measuring tape, or other means approved by manufacturer, to verify that diameter is within tolerances permitted in Table 1 of AWWA C151.

B. Jointing Ductile-Iron Pipe:

1. Push-On Joints: Install per manufacturer's instructions, AWWA C600 and Appendix B of AWWA C111. If there is conflict, manufacturer's instructions take precedence.

    a. Lay pipe with bell ends looking ahead.
    b. Insert rubber gasket in groove of bell end of pipe.
    c. Clean and lubricate joint surfaces
    d. Align plain end of pipe with bell of pipe to which it is to be joined and pushed home.
    e. Metal feeler shall be used to make certain that rubber gasket is properly seated.

2. Flanged Joints (Non-Buried): Assembled per manufacturer's instructions and Appendix C of AWWA C111. If there is conflict, manufacturer's instructions take precedence.

    a. Ensure there is no restraint on opposite ends of pipe or fitting, which would prevent uniform gasket compression, cause unnecessary stress, bending or torsional strains, or distortion of flanges or flanged fittings.
    b. Adjoining push-on joints are not to be assembled until flanged joints have been tightened.
    c. Tighten flange bolts for uniform gasket compression and sealing.

        1) Leave flange bolts with approximately 1/2 inch projection beyond nut face after tightening.

    d. Encapsulate bolts and nuts using wax sealing tape per AWWA Standard C217.

C. Polyethylene Encasement:

1. Install polyethylene encasement around ductile iron pipe to limits shown on Drawings and in accordance with pipe manufacturer's recommendations.

a. Installed per ANSI/ AWWA C105/A21.5, Method 'A' in accordance with section 2.15 of DIPRA's Installation Guide for Ductile Iron Pipe.

2. Use a fabric type or padded sling when handling pipe to prevent damage to encasement.
3. Seal seams with approved 2 inch wide plastic adhesive tape.
4. Repair encasement rips or tears with tape and film per ANSI/AWWA C105/A21.5.
5. When backfilling do not damage polyethylene encasement.

D. Cathodic Protection Systems:

3.4 CONNECTIONS TO STRUCTURES

A. Where pipe 3 inch diameter or larger horizontally passes from concrete to earth, install two flexible joints spaced 4 feet apart depending on pipe size within 2 feet of exterior wall face, whether shown on Drawings or not.

B. Utilize wall sleeves for pipes passing through walls designed to pass through wall via restrained piping unless otherwise specified.

C. Encase piping underneath structures in reinforced concrete as shown in Drawings.

3.5 FIELD QUALITY CONTROL

A. Replace with sound pipe or fitting, defective pipe or fitting discovered after having been laid.

B. Thoroughly clean pipe and fittings before laying. Keep clean until used in Work.

C. Pipe and fittings, when installed or laid, shall conform to lines and grades required.

3.6 EXHIBIT A

Use as a reference

INTERIOR LININGS AVAILABLE FOR DUCTILE IRON PIPE

Description	Max./ Service (1) Temp. (Degrees F)	Common Uses	Thickness
CEMENT MORTAR (AWWA C104			
With Sealcoat	150 degrees	Salt water	
Without Sealcoat	212 degrees	Drinking Water Non-Septic Gravity Sewers Sanitary sewers Force Mains	Standard per AWWA C104 or double
GLASS		Scum	10 Mil (nominal)
PETROLEUM ASPHALT COATING	150 degrees	Air	1 Mil
PROTECTOR 401 (CERAMIC-FILLED AMINE-CURED EPOXY)	120-150 degrees (2)	Septic sewers Acids (3) Alkali Waste Pickling brine	40 Mil (nominal)
EPOXIES SUITABLE FOR DRINKING WATER (4)	120-150 degrees (2)	Drinking Water Food Processing	24 Mil (minimum)
POLYETHYLENE	120-150 degrees (5)	Septic Sewers Acids (3) Alkali Waste Pickling Brine	40 Mil (nominal)

(1) Maximum service temperatures listed are intended as general guidelines. For higher service temperatures, consult manufacturer for specific recommendations.
(2) Maximum service temperatures for epoxies depends on service conditions and specific formulation. Consult manufacturer for recommendations for elevated temperature service.
(3) Consult manufacturer for specific acid service use.
(4) All epoxies are not suitable for conveying drinking water. Consult manufacturer for recommendations. Many jurisdictions require NSF 61 certifications for linings in contact with drinking water."
(5) Maximum service temperature for polyethylene for acids and alkali waste depends on specific acid or alkali waste and service condition(s). consult manufacturer for recommendations for elevated temperature service.

3.7 EXHIBIT B

EXHIBIT B

Use as a Reference

GASKET MATERIALS USED FOR DUCTILE IRON PIPE IN WATER AND SEWERAGE SERVICE

Description	Maximum Service(1,2) Temperature (Degrees F)		Common Uses(3)
	Push-On Gaskets	Mechanical Joint Gaskets	
SBR (Styrene Butadiene)	150 Degrees	120 Degrees	Fresh Water Salt Water Sanitary Sewage
EPDM (Ethylene Propylene)	250 Degrees	225 Degrees	Fresh Water Salt Water Sanitary Sewage Hot Water
Nitrile (NBR) (Acrylonitrile Butadiene)	150 Degrees	120 Degrees Fats, Oils Greases Chemicals	Hydrocarbons
Neoprene(R) (CR) (Polychloroprene)	200 Degrees	200 Degrees Salt Water Sanitary Sewage	Fresh Water
Viton(R); Fluorel(R) (FPM) (4) (Fluorocarbon)	300 Degrees	225 Degrees Acids Petroleum Vegetable Oils	Hydrocarbons

(1) Maximum service temperatures listed are intended as general guidelines for ductile iron pipe gaskets. For service temperatures greater than those listed, consult manufacturers for specific recommendations.

(2) Minimum service temperature is not usually a meaningful parameter for piping gaskets; however, low temperatures during pipeline installation may necessitate precautions. Consult manufacturer for pertinent recommendations.

(3) Water, including sanitary sewage, with low levels of the listed contaminants.

END OF SECTION

SECTION 02710
YARD WORK AND STREET WORK

PART 1 -- GENERAL

1.1 DESCRIPTION

A. Provide all yard and street work indicated on the Drawings and in other Sections of the Project Manual; including but not limited to:

1. Asphalt concrete paving.
2. Asphalt concrete paving repairs.
3. Fog seal coating.
4. Portland cement concrete paving, sidewalk and driveways.
5. Concrete wheel bumpers.
6. Joint sealant and caulking.
7. Parking lot striping and disabled symbol marking.
8. Street Work: Curbs, gutters, tree guards and gratings.
9. Street paving repairs.
10. Disabled Parking Accessible Signage.

B. Related Sections:

1. Documents affecting work of this Section include but are not necessarily limited to the GENERAL CONDITIONS, SUPPLEMENTARY CONDITIONS, DIVISION 1 - GENERAL REQUIREMENTS and other Sections of the Project Manual.
2. Contractor's Use of the Premises in Section 01140.
3. Storage or Materials and Equipment in Section 01150.
4. Earthwork including excavating, grading and filling and select base materials in Section 02310.
5. Storm Drain System in Section 02545
6. Irrigation System in Sections 02810.
7. Landscape Planting 02932.
8. Cast-in-place Concrete Section 03300.
9. Concrete Paving in Section 02752.
10. Concrete Formwork in Section 03100.
11. Concrete Reinforcement in Section 03200.

12. Joint Sealant in Section 07900.

1.2 QUALITY ASSURANCE

A. Labor: Use an adequate number of skilled laborers who are thoroughly trained and experienced in the necessary crafts and who are completely familiar with the specified requirements and the methods needed for proper performance of the work of this Section.

B. Codes and Regulations

1. Conform to the applicable 2020 Los Angeles City Building Code and Amendments, the Standard Specifications for Public Works Construction (SSPWC), State of California Department of Transportation Standard Specifications, Los Angeles City Bureau of Engineering Brown Book, latest edition and provisions hereinafter specified in the Project Manual.

C. Permits: Submit inspection/acceptance certificates required by the governing authorities and pay for all the required permits, plan check, inspections, and fees. Arrange for and make required inspections and tests.

D. Survey: According to Section 01112 - SUMMARY OF THE WORK, the Contractor shall furnish all surveying necessarily for the work. All work shall conform to the lines, elevations, and grades shown on the drawings. The Contractor shall submit the grade sheets to the City Engineer for review.

1.3 ALTERATIONS, REPAIRS AND REPLACEMENTS

A. As required for complete construction of a project; materials and construction to match existing adjacent work where occur in quality and appearance and conform to applicable provisions of the Project Manual.

B. Maintain vehicular and pedestrian traffic in accordance with W.A.T.C.H. (Work Area Traffic Control Handbook, latest edition)

1.4 PROTECTION

A. Required: Furnish, erect and maintain fences, barriers, lights and signs as necessary, in order to protect the public, City personnel, Contractor's personnel, existing work and work of this Section under this Contract.

B. All existing structures beneath the pavement shall be protected from any operation. No impact tool shall be allowed in the demolition of the existing pavement which may affect the existing structure. All sewerage and storm drain structures, utility vault, etc. extending two (2) inches or more above the new subgrade shall be removed by the Contractor to the new subgrade before paving. Structures projecting less than 2 inches above the subgrade may be paved over and later adjusted to grade.

1.5 DELIVERY, STORAGE AND HANDLING

A. Delivery: Deliver materials, products and equipment to the job-site where directed by the City Engineer.

B. Storage: Store materials where located on the job-site not interfering with work operations of this Section as directed by the City Engineer and easily accessible when needed to be installed or used.

C. Handling: Handle materials, etc. safely and avoiding damage to such materials prior to installation.

1.6 SUBMITTALS (As Applicable)

A. General: Comply with provisions of SECTION 01330 - SUBMITTALS of DIVISION 1 - GENERAL REQUIREMENTS of the Project Manual.

B. Concrete:

1. Portland Cement Mill Certificate: Submit to the City Engineer of each load showing conformance with the requirements and applicable Section of the SSPWC or otherwise the Testing Laboratory shall test the cement as per ASTM C150 - SPECIFICATION FOR PORTLAND CEMENT.

2. Design Mix and Curing Methods.

C. Asphaltic Concrete:

1. Submit a mix design for asphaltic concrete prepared by a material laboratory under the direction of a California Registered Engineer.

2. Certificates: Submit certificates signed by the materials producer and the asphalt paving Subcontractor, stating that materials meet or exceed the specified requirements prior to any fabrication. Submit the certified delivery tickets for each truckload of asphaltic material delivered to the job site.

D. Product Data: Submit to the City Engineer the data on all proprietary items, materials, etc. to be used in the work of this Section, as conforming to the specified requirements of this Section.

E. Shop Drawings:

1. Submit material, testing reports, mix designs, and other pertinent information for the asphalt concrete pavements.

2. Submit the joint layouts in concrete pavements.

F. Spreading Schedule: At least five (5) working days prior to commencing work, the Contractor shall submit its spreading schedule to the City Engineer for approval. The schedule shall allow residents on the street to be sealed ample “on street” parking within a reasonable distance from their homes. The Contractor shall notify the residents and businesses of the work and shall post temporary “No Parking” signs.

1.7 RECORD DRAWINGS

A. Required: Clearly mark changes, deletions and/or additions to the work of this Section conforming to provisions of Section 30 - RECORD DRAWINGS AND RECORD PROJECT MANUAL of the GENERAL CONDITIONS of the Project Manual.

1.8 REMOVAL AND CLEAN UP

A. Remove and recycle all surplus materials, debris and rubbish resulting from work of this Section conforming to provisions of Section 01572 - SOLID RESOURCE MANAGEMENT and Section 01740 - CLEANING of DIVISION 1 - GENERAL REQUIREMENTS of the Project Manual.

PART 2 -- PRODUCTS

2.1 CONCRETE MATERIALS

A. Furnish concrete material, form work and reinforcing in accordance with applicable requirements specified in the drawings and Section 03300 - CAST-IN-PLACE CONCRETE, Section 03100 - CONCRETE FORM WORK, Section 03200 - REINFORCEMENT, and Section 03345 - CONCRETE FINISHING, respectively.

B. Form work conforming to Section 03100 – CONCRETE FORM WORK.

C. Concrete conforming to Section 03300 – CAST-IN-PLACE CONCRETE.

D. Reinforcement steel or wire mesh conforming to Section 03200 - REINFORCEMENT.

E. Caulking for Expansion and Control Joints: As specified in Section 07920.

2.2 ASPHALT CONCRETE MATERIALS

A. In accordance with Section 203-6 - ASPHALT CONCRETE and mix in accordance with Section 203-6.5 - PROPORTIONING of the SSPWC. Unless otherwise specified, reclaimed asphalt pavement (RAP), RAP Bituminous material or mixture shall not be used without City Engineer's approval and payment adjustment.

B. Asphalt: PG64-10-75 Viscosity grades conforming to State of California Department of Transportations, Standard Specifications Section 92-1.02(B).

C. For 4-Inch and Thicker A.C. Paving, and for Parking Lot Projects: Two course applications, Class B – PG64-10-75 with 3/4-inch (maximum) size aggregates for first course. Top course (second course) shall be 2" inches thick wearing surface course, Class C2 – PG64-10-75 with ½-inch maximum size aggregates.

2.3 MISCELLANEOUS MATERIALS

A. Aggregate Base (Select Base): As specified in Section 02310 - EARTHWORK.

B. Soil Sterilant: As specified in Section 02310 - EARTHWORK.

C. Asphalt Fog Seal Coating: A fog sealant, slow setting type emulsified asphalt (Grade SS-1) of Section 203 - EMULSIFIED ASPHALT, and Section 203-9 - SEAL COAT ASPHALT BASED of the SSPWC; diluted with equal parts of water.

D. Slurry Coating Materials: Material shall be a mixture of asphalt emulsion, quick setting type, CRS-1slow-set type, SS-1h or CCS-1h conforming to the requirements of Section 203-3 EMULSIFIED ASPHALT, a Type I Fine Basic Aggregate graduation using No. 8 maximum nominal size aggregate, conforming to the requirements of Section 37-2 of the State of California Department of Transportation Standard Specifications or Rock Dust, conforming to the requirements of Section 200-1.2 - CRUSHED ROCK AND ROCK DUST of SSPWC, and water shall be potable and compatible with the other ingredients of the slurry. Additive shall be a type approved by the City Engineer.

C. Prime Coat: Consisting of Grade SC-250 liquid asphalt, applied at a rate between 0.45 L/m^2 and 1.15 L/m^2 (0.10 and 0.25 gallon per square yard), conforming to Section 302-5.3 - PRIME COAT of the SSPWC.

D. Tack Coat/Paint Binder: Grade SS-1h emulsified asphalt at an approximate rate of 0.25

L/m5 to 0.45 L/m5 (0.05 to 0.10-gallon per square yard), conforming to Section 302-5.4 - TACK COAT of the SSPWC.

G. Adhesive for Securing of Concrete Wheel Bumpers to Concrete Paving: An epoxy two-component type, long curing, manufactured by Edeco, Furance, Andrew Brown or Adhesive Engineering Company.

H. Parking Lot Striping Material: Fuller "Traffic Line Paint" or J. E. Bauer Co. "Zonelac Traffic Paint" or other colors as otherwise noted on drawings. Color shall be white except that accessible be parking emblem and adjacent parking stall lines shall be blue color. The coating shall be minimum 15 mils thick.

I. Wood Headers: In accordance with Section 302-5.5 - DISTRIBUTION AND SPREADING of the SSPWC 2" x 6” inch size (within 2” inches of the thickness of the pavement) edging with 2" x 4" stakes or as otherwise noted or detailed on the drawings. Construction Heart Grade Redwood (S1S1E).

J. Grout: Non-shrink grout; Embeco by Master Builders, Inc., 8978 Haven Ave. #A, Rancho Cucamonga, CA 91730 (800) 228-3315 or equal.

K. Disabled Accessibility Parking Signage: As specified in Section 10442 - DISABLED ACCESSIBILITY PARKING SIGNAGE.

2.4 CONCRETE WHEEL BUMPERS

A. Units: Precast reinforced concrete bumpers**;** manufactured by Consley and Montigney, El Monte, California, phone (626) 283-2771, or equal. Provide two bumpers of each specified size for testing by the Inspector to verify conformance with the requirements.

B. Size: Four feet long, 5-3/8" high x 7-5/8" wide with a side chamfered to produce a top side 2-1/8" wide as otherwise detailed on the Drawings.

C. Materials:

1. Minimum 3250 psi concrete at 28 days.

2. Two 3/4" diameter x 24" long steel drift pins or pipes by length indicated on the Drawings.

3. Two ½ inch reinforcing bars x length of unit with minimum 1 inch cover.

D. Construction:

1. Forms and Reinforcement: In accordance with requirements of Section 03300 - CAST-IN-PLACE CONCRETE.

2. Form holes for drift pins or pipe, locate 9" from each end of unit. Reinforcing to run full length of the unit.

3. Finish the units for simulate poured-in-place concrete without rock pockets, broken corners and other defects.

E. Curing: Allow units to cure fully 28 days before installation.

PART THREE - EXECUTION

3.1 JOB-SITE CONDITIONS

A. Examine the areas and conditions under which work of this Section will be performed.

1. Correct conditions detrimental to timely and proper completion of the work, as directed by the City Engineer.

2. Do not proceed until such detrimental conditions are corrected.

B. Comply with stormwater pollution control measures as indicated in Section 02310 - EARTHWORK of the Project Manual.

3.2 ASPHALT CONCRETE PAVING

A. Materials: As hereinbefore specified.

B. Subgrade Preparation: Prior to placing the selected base materials, compact the upper 6" of subgrade to 95% relative compaction, as per Section 301-1 - SUBGRADE PREPARATION of SSPWC. Suitably roll subgrade to provide a smooth surface to a tolerance of plus or minus 0.04 ft. in accordance with Section 301-1.2 - PREPARATION OF SUBGRADE of the SSPWC.

C. Soil Sterilization: Apply specified soil sterilant to areas to be paved, by method recommended by the manufacturer. Certify in writing that the material has been applied.

D. Select Base: Place the Select Base materials to thickness [indicated on the drawings], in accordance with Section 301-2 - UNTREATED BASE of the SSPWC, after the subgrade preparation is completed.

E. Asphalt Paving Thickness and Courses:

1. Thickness as indicated on the Drawings.

2. Course; Construct a pavement in 2 course(s) unless indicated otherwise.

G. Construction:

1. General: In accordance with Section 302-5.5 - DISTRIBUTION AND SPREADING of the SSPWC thereto.

2. Prime Coat: Apply to the subgrade or aggregate base prior to placing the asphalt concrete and subbase; and to other surfaces designated by the City Engineer.

3. Tack Coat: Apply to concrete surfaces abutting new A. C. paving at least 24 hours prior to laying new work; apply to the surface of any course before the succeeding course or all cold pavement joints, curbs, gutters, manholes and the like. All the surfaces shall be free of water, foreign material or duct when the tack cold is applied.

4. Laying and Compaction: In accordance with Section 302-5.5 DISTRIBUTION AND SPREADING and Section 302.5.6 - ROLLING of the SSPWC.

If the asphalt concrete base course is 6" inches or thicker, the Contractor may at its option, construct the base course in one paving operation, in accordance with the Los Angeles City Standard Plan S-610, latest edition and the SSPWC.

5. Finish asphalt concrete surfaces smooth and even, to indicated elevations

without low spots, hollow or irregularities and properly sloped for drainage.

H. Testing:

1. Upon completion, the pavement shall be true to grade and cross section. When a straight edge is laid on the finished surface, the surface shall not vary from the edge of the straightedge no more than ⅛” inches, except at the intersection or at the change of grade.

2. Flood Tests: In the presence of the Inspector or City Engineer and prior to acceptance of the work, water flood tests by water tank truck. All depressions where water ponds shall not exceed a depth of more than ⅛" fill.

3. Any area that is not within this tolerance shall be brought to grade by removing the paving material in the area to be repaired by an approved. Provide a minimum laying depth of 1" inches of the new pavement material at the joint line. Repairs shall not be made to the pavement surface by feather edging at the joints.

I. After the bituminous surfacing has passed the tests, including the flood test, clear and allow to dry, then apply one coat of a seal coat to the surface, in accordance with Subsection 37-4.04 of the California State Department of Transportation Standard Specifications. The seal coat shall not be applied to the newly constructed asphalt concrete surface until thirty (30) days after spreading and compacting the new asphalt concrete. After 30 days, the surface of the newly constructed asphalt concrete shall be washed with a strong detergent such as trisodium phosphate and rinsed before the application of the seal coat.

3.3. ASPHALT SEAL COATING

A. Required: Over existing repaired new asphalt concrete paving where noted on the Drawings.

B. Material: As hereinbefore specified for fog seal coating. A representative sample of the aggregate shall be taken in accordance with the requirements.

C. Surface Preparation:

1. Repairs: As hereinbefore specified but not necessarily limited to.

2. Clean all existing asphalt concrete surfaces of oil, grease, and foreign materials. Remove existing striping by approved methods and leave surfaces dry.

D. Weather Limitations: Execute work when pavement and atmosphere are about 60 degrees Fahrenheit and when no precipitations are expected within 24 hours. The Contractor shall not apply any seal coat if the weather is not suitable for the application. The Contractor shall notify the City Engineer and the Inspector minimum 24 hours in advance of the date the Contractor intends to begin work.

E. Protection: Provide as required to avoid getting seal coat materials on exposed concrete, masonry and/or miscellaneous building surfaces and fixed equipment and yard improvements.

F. Application: Single application by spray method at a rate of 0.15 to 0.30 gallons/square yards of surface depending on dryness and texture of the asphalt concrete surface, will conveniently seal small cracks and surface voids.

Asphaltic emulsion shall not be applied a greater distance than can be immediately

covered by screenings. The cut off of the asphaltic emulsion shall be made on building paper or a similar material spread over the surface, which shall then be removed and disposed in a manner satisfactory to the City Engineer. Immediately following the application of the asphaltic emulsion, it shall be covered with screenings spread within 10% of the required rate per square yard.

G. Curing: Maintain coated surfaces free from traffic for at least four (4) days. Maintenance includes the distribution of screenings over the surface to absorb any free bituminous material, to cover any area deficient in cover coat material, to prevent formation of corrugation, and perform light brooming.

3.4 "STREET WORK" ASPHALTIC CONCRETE REPAIRS

A. Required: As necessary to accommodate construction of new storm and sewerage pipings, curbs, gutters and driveways as indicated on drawings; as necessary due to excavation, trenching and utility connections. Provide a minimum laying depth of 1" inches of the new pavement material at the join line. Repairs shall not be made to pavement surfaces by feather-edging at the joints.

B. Application: Upon completion of all work within existing asphalt concrete paved areas, Contractor shall repair the existing asphalt concrete paving conforming to requirements of the SSPWC and the Los Angeles City Bureau of Engineering standards as follow:

1. Properly remove and repair subgrade, sub-base and aggregate base as approved by the City Engineer or Inspector to match existing adjoining work. Identify the mixture or density of existing adjoining work and submit the proposed mix design to the City Engineer for approval.

2. Soil Sterilization: Apply weed killers (soil sterilant) on areas to be paved with asphalt concrete; soil sterilant to be applied as recommended by the manufacturer; The Contractor shall certify in writing that material has been applied.

3. Tack coat surfaces of existing asphalt concrete surfaces as per 302-5.4 - TACK COAT of the SSPWC over which new materials will be laid of edges of existing saw cut asphalt concrete and/or concrete, and other structures against which new asphalt concrete will be placed, terminate tack coats on concrete surfaces at top of asphalt concrete paving.

4. Lay new asphalt concrete paving conforming to Section 302-5.6.2 - DENSITY AND SMOOTHNESS of the to match adjoining work [using material of a heavier density than the "in-place" adjacent work. Use hot smoothing iron to obtain inconspicuous, straight and flush joint lines. Properly grade to provide the desired drainage as indicated on the Drawings. When a ten-foot straightedge is laid on the finish surface parallel to the centerline of the roadway, the surface shall not vary from the edge of the straightedge more than ⅛” inch, except at intersections or at changes of grade.

3.5 “ON-SITE" ASPHALT CONCRETE PAVING REPAIRS

A. Required: To remove and replace defective asphalt concrete paving, base, holes, cracks and other defects, etc. Provide a minimum laying depth of 1" inches of the new pavement material at the join line. Repairs shall not be made to the pavement surfaces by featheredging at the joints.

B. Materials: As hereinbefore specified.

C. Subgrade Preparation:

1. Properly remove all damaged paving and base, compact existing subgrade top 6" to 95% relative compaction in accordance with Section 301-1.3 of the SSPWC.

2. Properly roll subgrade to a smoothness tolerance of plus or minus 0.04 ft.

3. Place select base materials to thickness matching existing adjacent materials in accordance with Section 301-2 - UNTREATED BASE of the SSPWC.

D. Asphalt Concrete Paving Repairs:

1. General: In accordance with Section 302-5 - ASPHALT CONCRETE PAVEMENT of the SSPWC.

2. Tack coat cut surfaces of existing saw-cut asphalt concrete and/or concrete against which new asphalt materials will be placed at least 24 hours prior to laying new asphalt materials. Terminate tack coating on concrete surfaces at level with top of new asphalt concrete paving.

3. Lay asphalt concrete paving materials to thickness matching that of adjacent asphalt concrete surfaces. Make smooth, even and flush with adjacent surfaces without low-spots, hollows or irregularities. Use hot smoothing irons to obtain straight and flush joint lines. Properly grade paving repairs to provide desired drainage as indicated on the Drawing. When a straight edge is laid on the finish surface it shall not vary from the straight edge more than 1/8 inch except at intersections or at changes of grade.

3.6 CONCRETE SIDEWALK, CURB AND GUTTER

A. General: In accordance with the requirements in the SSPWC, Section 03300 - CAST-IN-PLACE CONCRETE, and Section 07920 - CAULKING AND SEALANT.

B. Locations: Where indicated on the Drawings.

C. Materials: As hereinbefore specified.

D. Preparation:

1. Concrete shall be removed and disposed off, in accordance with Section 300-1.3 REMOVAL AND DISPOSAL OF THE MATERIALS of the SSPWC.

2. Compact existing subgrade and [4" inches thick] base material, in accordance with Section 301-2 - UNTREATED BASE of the SSPWC.

3. Concrete shall be placed on the subbase to the required depth. The surface of concrete shall be floated by [finishing machine method] [transverse float method] and dragged on by burlap.

4. Concrete driveway shall be [Case 1] [Case 2] [Case 3] [Case 4], 4" inches thick, and constructed per [locations and details], [as indicated on the drawings] and conform to the Los Angeles City Bureau of Engineering Standard Plan S-440, latest edition.

8. Type C Integral Curb and Concrete pavement shall be constructed per locations and details, as indicated on the drawings and conforms to the Los Angeles City Bureau of Engineering Standard Plan S-410, latest edition.

3.7 INSTALLATION OF CONCRETE WHEEL BUMPERS

A. Locations: Where indicated on the Drawings.

B. On Asphalt Concrete: secure in place with steel drift pins or pipe driven to at least 1/4" below top of a surface of the bumper unit. Fill holes with non-shrink grout to top surface of unit.

3.8 PARKING LOT STRIPING, LETTERS, ARROWS [AND/OR HELIPORT MARKINGS**]**

A. Materials: As hereinbefore specified.

B. Lines: 4" wide or as indicated on the Drawings.

C. Letters: Sizes and strokes as indicated on the Drawings**.** Minimum dry paint thickness shall be 15 mils.

D. Arrows: 10" stroke with proportionate head.

E. Handicapped Parking Striping: Sizes and colors are in conformance with the State of California, Code of Regulations, Title 24. An International Symbol of Accessibility symbol shall be stenciled at the rear of the parking space. Each accessible parking unloading zone shall be marked.

F. Traffic Striping**:** As indicated on the drawings and in conformance with Section 310-5.6.5 - TRAFFIC STRIPES AND MARKINGS of SSPWC.

G. Preparation: All surfaces to be free of dirt, grease or other foreign materials. Remove existing markings by sandblasting or other approved methods.

H. Application: Apply one heavy undiluted coat with traffic line painting equipment in locations indicated on the Drawings in uniform coverage, free from light spots and with all edges clean-cut and true. Paint by spray can shall not be allowed. Minimum dry paint thickness shall be 15 mils.

3.9 DISABLED ACCESSIBILITY PARKING SIGN

A. Required: On walls and where indicated on the Contract Drawings and specified in Section 10443 - DISABLED ACCESSIBILITY PARKING SIGNAGE complying with State of California, Code of Regulation, Title 24.

B. Materials and Fabrications: Constructed of 3M Scotchlite Brand reflective sheeting laminated to 18-gage heavy duty sheet steel and silkscreened in transparent blue with "Disabled Symbol" and/or the appropriate message in white. Sign to have a weather-resistant finish.

C. Size: Not less than 18-inches wide x 27-inches high with lettering not less than 1" inch in height.

D. Installation: Provide a sign in a conspicuous space at each entrance to off-street parking facilities and immediately adjacent to and visible from each stall or space. Install concrete footing and post, in accordance with the detail and requirement as shown on the Contract Drawings, Section 10443 - DISABLED ACCESSIBILITY PARKING SIGNAGE and Section 03300 - CAST-IN-PLACE CONCRETE of the Project Manual. Mount on a wall on a post on a fence at height noted on the Contract Drawing in plumb and level position and secured in place. Construct concrete paving over construct asphaltic

concrete paving around backfill around the concrete footing in accordance with the details shown on the drawings.

END OF SECTION

SECTION 02752
CONCRETE PAVING

PART 1 – GENERAL

1.1 SUMMARY

A. Section includes cast-in-place concrete, including formwork, reinforcement, concrete materials, mixture design, placement procedures, joints and finishes.

1.2 SUBMITTALS

A. Mix designs: submit to the ENGINEER for review and approval. Mix design shall be signed by a licensed California Structural or Civil Engineer. Indicate amounts of mixing water to be withheld for later addition at project site, if any.

B. Material information: for each of the following, as provided by manufacturers:

1. Admixtures.
2. Form release agents.
3. Steel reinforcement and accessories.
4. Joint filler products.

C. Load tickets: in addition to the CONTRACTOR's copy, deliver a legible copy of each load ticket from the producer to the BCA inspector. Load ticket shall state quantities of all material in each load and shall be signed by weigh master. The BCA inspector shall record on each copy, the slump and location where placed on the job. Maintain tickets at jobsite.

D. Material test reports: for the following, from a qualified testing agency:

1. Aggregates: include service record data indicating absence of deleterious expansion of concrete due to alkali aggregate reactivity.

1.3 QUALITY ASSURANCE

A. Installer qualifications: CONTRACTOR shall employ on the project an installer qualified as ACI-Certified Flatwork Technician and Finisher and a supervisor who is an ACI-certified Concrete Flatwork Technician.

B. Quality control: do not commence placement of concrete until mix designs have been reviewed and approved by the PROJECT MANAGER or ENGINEER, and until copies are at the jobsite.

C. Batch plant inspections: required for all structural concrete. Inspection shall be by a CITY BCA material control inspector. The CONTRACTOR shall notify the inspector at least 24 hours in advance of mixing time. The BCA materials inspector shall be present at the beginning of each day of batching and shall perform the following:

1. Check plant and equipment quality.
2. Check identity of materials.
3. Check aggregate grading, characteristics, and water content.
4. Verify mix designs being used.
5. Check proportioning and loading of concrete materials.
6. Issue certifications of quality and quantity of materials as batched.
7. After verification of above, return to the jobsite for placement inspection.

D. Continuous placement inspection: required for all structural concrete and to be performed by an LADBS certified deputy inspector approved by the PROJECT MANAGER. The BCA inspector shall perform the following procedures:

1. Verify condition and adequacy of forms and reinforcement placement.
2. Ensure that concrete is of required quality and consistency.
3. Ensure that all requirements and conditions of concrete placement are met.
4. Make slump tests and secure cylinders.
5. Provide written reports at regular intervals reporting concrete practices.

E. Mockups: provide approx. 4-foot by 4-foot mockups to adequately portray the specified finishes, reveals, formwork, joints, etc. For each concrete finish indicated on the plans and listed below for the ENGINEER's approval prior to commencing concrete work. CONTRACTOR shall continue to construct mock-ups until an approved mock-up for each specified finish is produced at no additional cost to the CITY. Acceptable mock-ups shall be made the job standard for each finish, and workmanship. Protect accepted mock-ups from damage until completion and acceptance of the work represented by the mock-ups. Remove mock-up panel(s) from the site at completion of the project, unless otherwise instructed by PROJECT MANAGER.

1. Specified finishes to be mocked up:

    a. Concrete paving: medium broom finish, unless otherwise noted.

1.4 DELIVERY, STORAGE, AND HANDLING

A. Steel reinforcement: deliver, store, and handle steel reinforcement to prevent bending and damage. Avoid damaging coatings on steel reinforcement.

1.5 FIELD CONDITIONS

A. Hot-weather placement: comply with ACI301 and as follows:

1. Maintain concrete temperature below 90 deg F at time of placement. Chilled mixing water or chopped ice may be used to control temperature, provided water equivalent of ice is calculated to total amount of mixing water.

2. Fog-spray forms, steel reinforcement, and subgrade just before placing concrete. Keep subgrade uniformly moist without standing water, soft spots, or dry areas.

PART 2 – PRODUCTS

2.1 STEEL REINFORCEMENT

A. Reinforcing bars: shall be ASTM A615/A615m, Grade 60, deformed.

B. Plain-steel wire: shall be ASTM A1064a/A1064m, as drawn.

2.2 REINFORCEMENT ACCESSORIES

A. Joint dowel bars: ASTM A615/A615m, Grade 60, plain-steel bars, cut true to length with ends square and free of burrs.

B. Bar supports: bolsters, chairs, spacers, and other devices for spacing, supporting, and fastening reinforcing bars and welded-wire reinforcement in place. Manufacture bar supports from steel wire, plastic, or precast concrete and of greater compressive strength than concrete.

2.3 CONCRETE MATERIALS

A. Cementitious materials:

1. Portland Cement: all cement shall be Type II, low alkali Portland Cement conforming to ASTM C150 (201-1.2).

2. Fly ash: ASTM C618, class F.

B. Normal-weight aggregates: the aggregates for all concrete construction shall be fractured face aggregates obtained from a quarry that is certified non-reactive by an approved testing laboratory as approved by the Bureau of Contract Administration, (201-1.2.2). Unless otherwise noted.

1. Maximum coarse-aggregate size: 3/4-inch nominal.

C. Water: ASTM C94/C94m and potable.

2.4 CONCRETE MIXTURES

A. Concrete specified by class: placed concrete shall be Class 520-C-2500, maximum 4-inch slump unless otherwise noted on Contract Drawings. Pumped concrete shall be Class 560-E-2500, maximum 6-inch slump unless otherwise noted on Contract Drawings. A complete delivery receipt shall be required for each truckload of concrete delivered. The receipt shall be given to the BCA Inspector, (201-1.1.2).

1. Minimum compressive strength: 2,500 PSI at 28 days.

2. Slump limit: 4-inches, plus or minus 1-inch.

2.5 CONCRETE MIXING

A. Ready-mixed concrete: measure, batch, mix, and deliver concrete according to ASTM C94/C94m and ASTM C1116/C1116m and furnish batch ticket information to BCA inspector.

1. When air temperature is between 85 and 90 deg F, reduce mixing and delivery time from 1-1/2 hours to 75 minutes; when air temperature is above 90 deg F, reduce mixing and delivery time to 60 minutes.

2.6 CONCRETE JOINT MATERIALS

A. Expansion joint material: expansion joint material shall be min. 3/8-inch-thick closed-cell, polyethylene low resistance joint filler, by Celltex Ltd., or approved equal.

B. End of pour joints: end of pour joints shall be min. 3/8-inch-thick closed-cell, polyethylene low resistance joint filler, by Celltex Ltd., or approved equal.

C. Joint urethane sealant: expansion and isolation joint sealant material shall be a urethane elastomeric sealant for concrete pavement shall be Sikaflex®-1A
By Sika Corporation, or an approved equal, (201-3). Color to match concrete.

PART 3 – EXECUTION

3.1 STEEL REINFORCEMENT INSTALLATION

A. General: comply with CRSI's "Manual of Standard Practice" for fabricating, placing, and supporting reinforcement.

B. Clean reinforcement of loose rust and mill scale, earth, ice, and other foreign materials that reduce bond to concrete.

C. Accurately position, support, and secure reinforcement against displacement. Locate and support reinforcement with bar supports to maintain minimum concrete cover. Do not tack weld crossing reinforcing bars.

D. Securely fasten steel reinforcement and wire ties against shifting during concrete placement. Set wire ties with ends directed into concrete, not toward exposed concrete surfaces.

3.2 JOINTS IN CONCRETE

A. General: construct joints true to line with faces perpendicular to surface plane of concrete.

B. Construction joints: install so strength and appearance of concrete are not impaired, at locations indicated or as approved by ENGINEER.

1. Place joints perpendicular to main reinforcement. Continue reinforcement across construction joints unless otherwise indicated.

2. Form keyed joints where indicated. Embed keys at least 1-1/2 inches into concrete.

3. Space vertical joints in walls as indicated. Locate joints beside piers integral with walls, near corners, and in concealed locations where possible

C. Contraction joints in slabs-on-grade: form weakened-plane contraction joints, sectioning concrete into areas as indicated. Construct contraction joints for a depth equal to at minimum one-fourth of the concrete thickness as follows:

1. Tooled joints: form contraction joints after initial floating by grooving and finishing each edge of joint to a radius of 1/8-inch. Repeat tooling of contraction joints after applying surface finishes. Eliminate tool marks on concrete surfaces.

2. Saw-cut joints: form contraction joints with power saws equipped with shatterproof abrasive or diamond-rimmed blades. Cut 1/8-inch-wide joints into concrete when cutting action does not tear, abrade, or otherwise damage surface and before concrete develops random contraction cracks.

D. Isolation joints in slabs-on-grade: after removing formwork, install joint-filler strips at slab junctions with vertical surfaces, such as column pedestals, foundation walls, grade beams, and other locations, as indicated.

1. Extend joint-filler strips full width and depth of joint, terminating not less than 1/2-inch or more than 1-inch below finished concrete surface where joint sealants are indicated.

E. Doweled expansion joints: shall be placed against previously constructed concrete structures or as indicated in the plans (303-5.4.2) and the applicable details. Install dowel bars and support assemblies at joints where indicated. Lubricate one-half of dowel length to prevent concrete bonding to one side of joint. Install per details.

3.3 CONCRETE PLACEMENT

A. Before placing concrete, verify that installation of formwork, reinforcement, and embedded items is complete and that required inspections are completed.

B. Deposit concrete continuously in such thickness that no new concrete is placed on concrete that has hardened enough to cause seams or planes of weakness. If a section cannot be placed continuously, provide construction joints as indicated.

1. Deposit concrete in horizontal layers of depth not to exceed formwork design pressures.

2. Maintain reinforcement in position on chairs during concrete placement.

3. Screed slab surfaces with a straight-edge and strike off to correct elevations.

4. Slope surfaces uniformly to drains where required, and as indicated on Contract Drawings.

3.4 FINISHING FLOORS AND SLABS

A. General: comply with ACI 302.1R recommendations for screeding, re-straightening, and finishing operations for concrete surfaces. Do not wet concrete surfaces.

B. Rotary float finish: consolidate surface with power-driven floats or by hand floating if area is small or inaccessible to power-driven floats. Re-straighten, cut down high spots, and fill low spots. Repeat float passes and re-straightening until surface is left with a uniform, smooth, granular texture. Apply rotary float finish only to surfaces indicated.

C. Broom finish: apply a broom finish to exterior concrete platforms, steps, ramps, and elsewhere as indicated.

1. Immediately after float finishing, slightly roughen the trafficked surface with fiber-bristle broom perpendicular to main traffic route. Match finish(es) in approved mock-up for each finish type.

3.5 MISCELLANEOUS CONCRETE ITEM INSTALLATION

A. Repairs and filling: fill in holes and openings left in concrete structures after work of other trades is in place unless otherwise indicated. Mix, place, and cure concrete, as specified, to blend with in-place construction. Provide other miscellaneous concrete filling indicated or required to complete the work.

3.6 CONCRETE PROTECTION AND CURING

A. General: protect freshly placed concrete from premature drying and excessive cold or hot temperatures. Comply with ACI 301 for hot-weather protection during curing. Cure formed concrete according to ACI 308.1.

B. Exposed un-formed surfaces: begin curing slabs, sidewalks, driveway approaches, walkways and other exposed surfaces immediately after finishing concrete.

3.7 JOINT SEALING

A. For expansion and isolation joints in concrete: remove dirt, debris, saw cuttings, curing compounds, etc. From joints; leave contact faces of joints clean and dry.

B. Install approved joint sealer according to manufacturer's written instructions and applicable details.

3.8 CONCRETE SURFACE REPAIRS

A. Defective concrete: repair and patch defective areas when directed by BCA Inspector. Remove and replace concrete that cannot be repaired and patched to ENGINEER's approval.

B. Repairing un-formed surfaces: test un-formed surfaces, such as floors and slabs, for finish and verify surface tolerances specified for each surface. Correct low and high areas. Test surfaces sloped to drain for trueness of slope and smoothness; use a sloped template.

1. Repair finished surfaces containing defects. Surface defects include spalls, pop-outs, honeycombs, rock pockets, crazing and cracks in excess of 0.01 inch wide or that penetrate to reinforcement or completely through unreinforced sections regardless of width, and other objectionable conditions.

2. Repair defective areas, except random cracks and single holes 1 inch or less in diameter, by cutting out to the nearest control joints and replacing with fresh concrete. Remove defective areas with clean, square cuts and expose steel reinforcement with at least a 3/4-inch clearance all around. Dampen concrete surfaces in contact with patching concrete and apply bonding agent. Mix patching concrete of same materials and mixture as original concrete, except without coarse aggregate. Place, compact, and finish to blend with

adjacent finished concrete. Cure in same manner as adjacent concrete.

3. Repair random cracks and single holes 1-inch or less in diameter with patching mortar. Groove top of cracks and cut out holes to sound concrete and clean off dust, dirt, and loose particles. Dampen cleaned concrete surfaces and apply bonding agent. Place patching mortar before bonding agent has dried. Compact patching mortar and finish to match adjacent concrete. Keep patched area continuously moist for at least 72 hours.

3.9 FIELD QUALITY CONTROL

A. Special inspections: engage a LADBS Deputy Special Inspector and qualified testing to perform field tests and inspections and prepare test reports when required by Codes or Contract Drawings.

B. Required inspections. BCA Inspector shall inspect the following prior to concrete placement:

1. Steel reinforcement placement.
2. Verification of use of required design mixture.
3. Concrete placement, including conveying and depositing.

C. Samples: BCA Inspector will select and take samples for testing during the course of the work as considered necessary. Cost of testing will be paid for by the CITY.

D. Rejected materials: CONTRACTOR shall remove off the site all concrete below specified strength.

E. Cost of removal and retesting: CONTRACTOR shall pay for full cost of removal of rejected concrete and its replacement with concrete if specified strength and retesting.

END OF SECTION

SECTION 02795
BALLFIELD INFIELD SURFACE

1.1 SECTION INCLUDES

A. This section includes the supply and installation of stabilized crushed aggregate infield surface mix, as indicated in the Contract Documents.

1.2 SUBMITTALS

A. The CONTRACTOR shall make all required materials submittals in accordance with the General Requirements.

B. The CONTRACTOR shall make substitution submittals in accordance with the General Requirements.

C. CONTRACTOR shall submit following in accordance with material submittal procedures:

1. Manufacturer's product data sheet.

2. Physical sample of infield surface material (1-quart minimum).

1.3 MOCK-UP

A. All work and materials are subject to inspection and approval by the Bureau of Contract Administration (BCA) Inspector and the ENGINEER. Any work done without proper inspection will be subject to rejection per Section 2-11 of the Standard Specifications for Public Works Construction. The CONTRACTOR shall notify the Bureau of Contract Administration (BCA) Inspector and PROJECT MANAGER three (3) days prior to requested inspection of the following for approvals:

1. Approval of sub-grade preparation by BCA Inspector of ENGINEER prior to installation of infield surface material.

2. Upon completion, CONTRACTOR shall request inspection and approval of installation by ENGINEER.

B. Mock-Up: CONTRACTOR shall install 20 square feet minimum of stabilized crushed aggregate infield surface mix including subgrade preparation, at a location approved by the ENGINEER.

1. ENGINEER shall review and approve mock-up before proceeding with rest of stabilized crushed aggregate paving.

2. Approved mock-up may remain as part of completed Work, subject to approval by ENGINEER.

1.4 DELIVERY AND HANDLING

Material shall be delivered to the site pre-mixed by supplier. CONTRACTOR shall protect the stabilized crushed aggregate infield surface mix from contamination.

1.5 SEQUENCING

A. Do not install work specified in this section prior to approval of sub-grade preparation per Section 310000 - EARTHWORK.

B. Do not install stabilized crushed aggregate surfacing when base material is wet or saturated to field capacity.

C. CONTRACTOR shall coordinate work specified in this Section with work specified in other Sections to minimize disturbance of, and operation of heavy equipment over, installed stabilized crushed aggregate surface.

PART 2: PRODUCTS

2.1 MATERIALS

A. For ballfields with NO GRASS INFIELD: The Stabilized Crushed Aggregate Infield Surface Mix: The infield surface shall be “Pro-Gold Softball Mix” as distributed by Gail Materials (951) 667-6106 or an approved equal. The infield material shall be a minimum 4” thick profile.

B. For ballfields WITH GRASS INFIELD: The Stabilized Crushed Aggregate Infield Surface Mix: The infield surface shall be “Pro-Gold Infield Mix Plus” as distributed by Gail Materials (951) 667-6106 or an approved equal. The infield material shall be a minimum 4” thick profile.

PART 3: EXECUTION

3.1 METHODS

A. The stabilized crushed aggregate infield surface mix shall be premixed by the distributor before delivery to the site. The subgrade for areas beneath the infield surface shall be compacted to 90% relative compaction – *do not compact adjacent turf areas*.

3.2 PLACEMENT

A. Place the infield mix on prepared sub-grade compacted to 90% relative compaction. Level to desired grade and cross section of 4” minimum depth. A 10’ by 10’ area centered over each future base pad location shall be six (6) inches deep in lieu of the standard four (4) inches depth for the rest of the infield. Grade infield area so that all areas achieve a .5% minimum slope, and no depressions are created that can retain water.

3.3 WATERING

A. Water thoroughly to achieve full depth moisture penetration of the entire stabilized infield mix profile. Stabilizer is water-activated: to achieve adequate saturation of stabilized infield mix profile, a minimum of 25 to 45 gallons of water per ton must be applied. During water application randomly test for penetration depth using a probing device until the entire profile is adequately wetted.

B. *Do not begin compaction for minimum of 6 hours after completion of wetting*. Compaction must be completed within 24 hours of wetting.

3.4 COMPACTION

A. Upon full moisture penetration, compact the infield surface material to 85% relative compaction with a min. 1,000 lb. Static drum roller. *Do not use a vibratory compactor or vibratory setting on the drum roller.*

B. Take care in compacting stabilized infield mix when adjacent to planting and irrigation systems. Hand tamping with 8” or 10” hand tamp is recommended in areas where large equipment could damage irrigation or hardscape.

3.5 INSPECTION

A. The finished surface of stabilized infield mix shall be smooth, uniform and solid. There shall be no evidence of chipping or cracking. Cured and compacted infield shall be firm throughout profile with no spongy areas. Loose material shall not be present on or below the surface. Any significant irregularities in the surface shall be repaired to the uniformity of entire installation.

3.6 REPAIR

A. To repair, excavate damaged area to a depth of 2” minimum, and scarify exposed stabilized crushed aggregate surface. Apply replacement material to the excavated area and compact. Thoroughly water the material and allow the material to cure, but not completely dry out. Re-compact the material, ensuring that the final grade and crown are maintained. Do not use a vibratory compactor.

END OF SECTION

SECTION 02810
IRRIGATION

PART ONE – GENERAL

1.1 DESCRIPTION

A. Work Included:

1. All labor, materials, equipment, appliances, fixtures and tests necessary for complete demolition of existing irrigation system and a new operating irrigation system as indicated on the Contract Drawings.

B. Related Work:

1. Documents affecting work of this Section include, but are not necessarily limited to the GENERAL CONDITIONS, SUPPLEMENTARY CONDITIONS in DIVISION 1 - GENERAL REQUIREMENTS and other Sections of the Project Manual.

2. Site Clearing and Grubbing in Section 02210.

1.2 SUBMITTALS

A. The Contractor shall make all required materials submittals in accordance with Article 10 of the General Requirements. For all materials not approved upon the first submittal, Contractor is responsible to promptly resubmit for approval*,* necessary data concerning a substitution for a disapproved item or piece of equipment.

B. The Contractor shall make substitution submittals in accordance with Article 11 of the General Requirements.

C. Submit copies of the following:

1. Complete list of irrigation materials and miscellaneous hardware complete with descriptions and/or photographs and manufacturer’s literature. Clearly mark or underline proposed items.

1.3 QUALITY ASSURANCE

A. Codes and Regulations: Contractor shall obtain and pay for all required permits. Deliver all permits and submit certifications of compliance to the BCA Inspector and the Project Manager.

1.4 GENERAL REQUIREMENTS

A. Approvals by the Engineer: Before commencement of irrigation installation, Contractor shall obtain:

1. All approvals on required submittals hereinafter specified.

2. Approval of all re-submittals requested by the City Engineer.

3. Contractor shall make a detailed staked layout on the work site of the proposed trenching locations for all mainline, control wire conduit, and valve manifolds for approval by City Engineer prior to trenching.

4. Contractor shall make a detailed staked layout on the work site of the proposed head locations for approval by City Engineer prior to lateral line trenching.

B. Required Inspections: Notify the City Inspector at least 72 hours prior to time of required inspection.

1. IRRIGATION MAINLINE PRESSURE TEST: The pressure test shall take place under the direction of the BCA Inspector.

2. IRRIGATION COVERAGE TEST: After installation of heads and lateral lines etc., entire irrigation system shall be tested for coverage. Contractor shall notify the BCA Inspector, Project Manager, Landscape Architect and designated Recreation and Parks Regional maintenance staff three (3) days before the scheduled test.

C. Existing Utilities and Plant Materials: Protect utilities and/or plant materials not designated for removal or modification in place against damage resulting from work of this Contract. Perform any removal and/or modifications only on approval or instruction from the City Engineer or in accordance with applicable provisions noted or specified.

D. Verification of Dimensions and Quantities: Verify site conditions, contract drawings, all dimensions and quantities prior to the bid. Furnish the quantities as necessary to do the specified work. Notify the Project Manager of any discrepancies between the Contract Drawings and the site conditions prior to beginning work. Do not work in areas where such discrepancies occur until further instruction by the City Engineer.

E. Record Drawings: Comply with provisions of the General Requirements. Contractor shall accurately dimension the location and depths of all piping, valves, and control equipment as installed. Indicate with suitable colored ink on one set of prints of the Contract Drawings to produce a record of complete installations to be kept on the job and up-to-date at all times during construction. At the completion of the work and prior to Final Inspection, the Contractor shall copy his record "as installed" data, using red ink, onto a set of clean prints. The Contractor shall certify to the completeness and accuracy of the "as installed" information indicated on the prints with his signature and deliver the signed prints to the Project Manager for review prior to the completion of the Plant Establishment Period.

Dimension from two permanent points of reference, building corners, sidewalk, or road intersections, the location of the following items:

1. Connection to existing water lines.
2. Connection to existing electrical power.
3. Gate valves.
4. Routing of all pressure lines. Indicate dimensional location at 100' intervals.
5. Irrigation control valves.
6. Routing of control wiring.
7. Quick coupling valves.
8. Controller.
9. Other related equipment as directed by the Architect.
10. Sleeve locations.

F. Water and Power Services: Upon award of contract, the Contractor shall contact the Department of Water and Power to arrange and pay for the installation of all required water and electrical meters and services. Service connections shall be as shown on the Contract Drawings or as designated by the utility company. Upon final

acceptance of the project, the Contractor shall transfer billing to the City of Los Angeles, Department of Recreation and Parks as directed by the Project Manager.

G. Guarantee: In accordance with provisions of the GENERAL CONDITIONS, contractor shall guarantee the entire irrigation system against defects in materials and workmanship for a period of one year from the date of final acceptance of the Project.

1. The entire irrigation system shall be warranted to be free from defects in materials and workmanship, and installed in accordance with the irrigation plans, specifications and the SSPWC. The Contractor shall be required to repair or replace any defects in material or workmanship which may develop within one (1) calendar year from the date of acceptance, excepting ordinary wear and tear and unusual abuse or neglect. Further, the Contractor shall be required to make any necessary repairs within 48 hours of notification at no cost to the City. If the Contractor or his agent fail to make such repairs within the stipulated time, the City shall make such repairs or have repairs made by a third party and bill the Contractor for all expenses that accrue from making such repairs.

2. The City reserves the right to make temporary repairs as necessary to keep the irrigation system equipment in operating condition. The exercise of this right by the City will not relieve the Contractor of his responsibilities under the terms of the guarantee.

3. Contractor shall repair any settlement of backfilled trenches which may occur during a one year period after final acceptance by the City Engineer, to the City Engineer's satisfaction, without expense to the City, including the complete restoration of all damaged planting, paving, or other improvements of any kind.

1.5 DELIVERY, STORAGE AND HANDLING

A. Delivery: Deliver products to the job-site in their manufacturer's original containers, with labels intact and legible.

B. Storage: Store piping, materials, fitting, etc. at the job-site where directed by the City Engineer until such time for installation.

C. Handling: Promptly remove damaged materials and unsuitable items from the job-site and promptly replace with materials meeting the specified requirements, at no added cost to the City.

PART TWO - PRODUCTS

2.1 MATERIALS

A. General: Provide recently manufactured materials of the best grade of each respective kind.

B. Pipe and Fittings: The type of pipe material and fittings designated on the Contract Drawings, or as hereinafter specified shall be:

1. Steel Pipe: Galvanized standard weight Schedule 40 steel water pipe complying with ASTM A53 - SPECIFICATION FOR PIPE, STEEL, BLACK AND HOT-DIPPED, ZINCH-COATED, WELDED AND SEAMLESS; jointed with galvanized, threaded, standard weight malleable iron fittings, and/or couplings.

2. Plastic Irrigation Pipe: High impact rigid polyvinyl chloride PVC 1220 (Type I, Grade 2), conforming to ASTM D1785 - SPECIFICATION FOR POLY (VINYL CHLORIDE) (PVC) PLASTIC PIPE, SCHEDULES 40 & 80 and CLASS 200. The minimum pressure rating to be not less than indicated therein for the schedule and size listed.

3. DOMESTIC WATER LINES FOR DRINKING FOUNTAINS: Install water piping in accordance with the latest edition of the Uniform Building Code and all local ordinances. Prior to allowing human consumption of water from newly installed drinking fountains the contractor shall perform domestic sterilization procedures as indicated in applicable details and provide testing results to document compliance with the standards indicated. New drinking fountains shall be turned off or otherwise made inoperable until this testing is successfully completed and approved.

a. Domestic Cold Water Piping ABOVE GRADE: Piping shall be ASTM B88 Type “L” seamless hard drawn copper tubing with ANSI B 16.22 wrought copper fittings. Joints shall be made up with lead-free, nickel bearing alloy solder such as Harris Bridget.

b. Domestic Cold Water Piping BELOW GRADE: Piping shall be ASTM B88 Type “K” seamless hard drawn copper tubing with ANSI B 16.22 wrought copper fittings. Joints shall be made up with lead-free, nickel bearing alloy solder such as Harris Bridget.

4. All Pipes: Shall be homogeneous throughout and free from cracks, holes, foreign materials, blisters, deleterious wrinkles, and dents.

5. Solvent-welded Schedule 40 PVC plastic pipe and fittings shall be used for pipe sizes up to and including 2½ inch for installation of irrigation pressure lines and lateral lines.

6. Class 200 PVC gasketed pipe with ductile iron fittings and restraints as detailed on Contract Drawings shall be used for continuously pressurized pipe of sizes of 3-inch up to and including 6-inch diameter.

7. Schedule 80 PVC plastic pipe and threaded fittings shall be used only when threaded joints are specified, or otherwise permitted by the City Engineer.

8. All piping shall be permanently marked with the following: Manufacturer's name or trademark, size, schedule, and type of pipe, working pressure at 73 degrees F. and National Sanitation Foundation (N.S.F.) approval.

9. Ductile iron fittings for restrained plastic pipe shall be manufactured of ductile iron, Grade 65-45-12 in accordance with ASTM A536. Fittings shall have deep bell push-on joints with gaskets meeting ASTM F477. All ductile iron fittings shall be manufactured by HARCO Fittings, or approved equal. http://www.harcofittings.com

   a. Valve to pipe restraints shall consist of ductile iron (ASTM A536) grip rings with machined serrations and ductile iron restraint rods. The ring that grips the pipe shall meet the requirements of UNI-B-13-94. The restraint rod nuts shall be made from low alloy steel to AWWA/ANSI C111/A21.11 or ductile iron to ASTM A536.

   b. Fitting to pipe restraints shall allow the full rating of the pipe on which it is used. Grip rings and restraint structures shall be made of ductile iron to ASTM A536. Grip ring serrations

(gripping features) shall be fully machined or cast. Clamp bolts and nuts shall meet or exceed ASTM A307.

c. Pipe to pipe restraints shall allow the full rating of the pipe on which it is used. Grip rings and bell rings shall be made of ductile iron to ASTM A536. Grip ring serrations (gripping features) shall be fully machined or cast. Restraint rod nuts shall be of low alloy steel to AWWA/ANSI C111/A21.11. Clamp bolts and nuts shall meet or exceed ASTM A307. Pipe to pipe restraint shall meet or exceed the full rating of the pipe on which it is used.

9. Gasket lubricant for push on fittings shall be non-toxic, odorless, tasteless and shall not support bacteria. Use ‘Seal Lube”, SK#87710 by IPS Weldon Corp. or equal.

C. Valves and Valve Boxes:

1. General: Provide valves of the type and capacity designated on the Contract Drawings and with the requirements specified herein. All valves shall be capable of continuous performance at a working pressure of 200 psi or less.

2. Gate Valves and mainline isolation Valves: *in sizes 2.5-inch and smaller* shall be *bronze* type, non-rising stem, solid wedge gate valve; Nibco T-113-LF or approved equal.

3. Mainline isolation Valves: *in sizes 3-inch and larger* shall be Nibco #P-619-RW IPS PVC push-on type resilient wedge cast iron gate valve with electrostatically applied fusion-bonded epoxy 8-20 mil. thick inside and outside, or approved equal.

4. Automatic Control Valves: Electrically operated, cast brass or bronze normally closed globe valve, capable of with manual flow control adjustment and manual operation capability, readily disassembled for servicing, slow opening and closing, and self-flushing. Reclaimed water compatible. Rainbird EFB-CP Series or Toro 220 series, or approved equal.

5. Quick-Coupling Valves: shall be 1” type with two-piece red brass construction with a locking thermoplastic rubber cover. The Contractor shall provide one quick coupler key with hose swivel for each five quick couplers installed. Rainbird model #44LRC or approved equal.

6. Valve Boxes shall be constructed of polypropylene or equivalent material for maximum durability, UV protection and corrosion resistance. The plastic body, excluding extensions, shall have pipe slots on each end and the plastic body shall have two (2) resting points for the lid to sit securely and flush. The plastic lid shall have molded diamond tread-pattern for skid resistance. Valve boxes shall have a lockable lid using a hex-bolt to secure the cover.

   For Remote Control Valves:
   The dimensions of the box shall be 14.5" L x 9.4" W, Model VB-STD-H by Rainbird, or approved equal. The lid shall be permanently heat-embossed with station number for each valve.

   For Quick Couplers and Gate Valves:
   The dimensions of the box shall be 13.75 inches bottom diameter and 10" top diameter. Model VB-10RND-H by Rainbird, or approved equal.

   Boxes are to be installed per the applicable details. The lid shall be permanently heat-embossed as follows (paint is not acceptable):

Gate Valve	GV
Remote Control Valve	RCV
Quick Coupler Valve	QC
Master Valve	MV
Flow Meter	FM

D. Backflow Prevention - Reduced Pressure Zone Assembly and Wye Strainer:

1. The Reduced Pressure Zone Assembly shall consist of two independently operating, spring loaded, “Y” pattern check valves and one hydraulically dependent differential relief valve. Mainline valve body and caps including relief valve body and cover shall be ductile iron with Fusion epoxy coated internal and external AWWA C550. Check valve and relief valve components shall be constructed so they may be serviced without removing the valve body from the line. Shutoff valves shall be flange-mounted ductile iron NRS resilient wedge gate valve AWWA C509 (Standard) with Fusion epoxy coating.

   The assembly shall be rated to 175psi working pressure and water temperature range from 33°F to 140°F. The lead-free

Reduced Pressure Zone Assemblies shall comply with state codes and standards, where applicable, requiring reduced lead content. The assembly shall meet the requirements of AWWA Standard Code C511; and approved by the Foundation for Cross-Connection Control and Hydraulic Research at the University of Southern California. The Reduced Pressure Zone Assembly shall be Febco LF860-NRS, or approved equal.

2. Wye-Strainer: The main body shall be flange-mounted ductile iron with fusion epoxy coating inside and outside, the strainer screen shall be 300 series stainless steel #225 mesh. Screens shall be accessible for cleaning without removing the device from the line. The “Y” type strainer shall be a Zurn Wilkins Model FSC type, or approved equal.

3. Backflow Device Enclosure: shall be of a vandal resistant nature manufactured of formed cold rolled steel tubing and rod, coated with a performance polymer alloy. All locking and mounting hardware shall be manufactured entirely of stainless steel. Each enclosure shall have amounting pad which shall be used as installation frame. Enclosure hardware on the mounting frame shall be stainless steel. The backflow cage enclosure shall remain bolted to frame in open and closed positions. Enclosure and door shall close with concealed locking tab with hole to accept padlock. Enclosure shall be powder-coated dark green. By Strongbox, SBBC-CR series or approved equal. https://strongbox.com

E. Irrigation Heads:

1. Pop-up spray head: bodies shall have a 4”, 6” or 12” pop-up stroke. The body of the spray head shall be constructed of corrosion and UV-resistant, heavy-duty A.B.S. The spray head body shall have a factory-installed drain check valve capable of checking up to 10 feet in elevation change. The spray head body shall have a standard pressure-regulating device as an integral part of the pop-up riser maintaining a constant nozzle outlet pressure of 30 or 45 PSI with inlet pressures of up to 100 PSI. Nozzles shall be matched precipitation rate, fixed spray or multiple-stream, rotating type or other as noted on Contract Drawings. As manufactured by Rainbird Corporation, Toro Company or approved equal, models # 1804, 1806, 1812, or 1845.

2. Pop-up Gear Driven Rotor Head: The body of the rotor head shall be constructed of corrosion and UV-resistant, heavy-duty A.B.S. The rotor head body shall have a factory-installed drain check valve capable of checking up to 10 feet in elevation change. The full or part-circle rotor head shall be a single stream, water lubricated, gear drive type capable of both full circle and/or part circle operation in the same unit as noted on Contract Drawings. The rotor head shall have a screen attached to the drive housing to filter inlet water, protect the drive from clogging and simplify its removal for cleaning and flushing of the system. The rotor head body shall have a 1” (26/34) female (NPT or BSP) bottom inlet. The rotor head shall have a standard rubber cover which designates each adjustment opening from the top. Pop-up height as measured from the top of the cover to the centerline of the nozzle orifice shall be at least 5 inches. The rotor shall have a stainless steel covered nozzle turret and riser stem. As manufactured by Rainbird Corporation or the Toro Company or approved equal.

3. Root Watering System: The RWS assembly shall consist of a perforated polyethylene rigid mesh cylinder 18” long x 4” diameter or 10” long x 2” diameter with an integrated pressure compensating bubbler and optional check valve. The assembly shall be preconfigured with swing joint assembly or spiral barbed fittings to enable the RWS to be directly connected to PVC or polyethylene lateral drip lines, and shall have a plastic locking grate cover. Manufactured by Rainbird Corporation, or approved equal.

4. SA Swing Joint Assemblies: The Swing Assemblies shall be used as a flexible swing joint assembly for 1/2” inlet sprinklers. The pipe shall be flexible black tubing constructed of linear low density polyethylene material with a wall thickness of 0.090”and an inside diameter of 0.490”. The fittings shall be constructed of UV-resistant, thermoplastic material. The Swing Assembly shall have an operating pressure rating of 80 psi at 110° F. As manufactured by Rain Bird Corporation, Glendora, California or approved equal.

5. TSJ (PRS) Swing Joint Assemblies: The swing joints shall be used as a height adjustable connector between lateral lines and ¾" or 1" sprinklers or quick coupler valves. The swing joint shall be molded from rigid PVC, Type 1, cell classification 12454-B, conforming to ASTM D1784, with a pressure rating of 315 psi at 73° F when tested in accordance with ASTM D3139,

including 60 minutes at 790 psi, and short term exposure of 1000 psi without leakage. All NPT threads, sockets, and spigots shall be Schedule 80 per ASTM D2464 and D2467. All components shall be factory preassembled, available with ¾” or 1" inlet/outlet and in lengths of 12” and 18". All rotating joints shall be modified stub ACME threads. All rotating joints shall have two EPDM rubber O-rings for positive sealing and thread protection.

The pressure regulating system (PRS) shall consist of the outlet elbow of a Rain Bird Turf Swing Joint (TSJ). The TSJ-PRS shall allow pressure to increase uniformly within the rotor up to the preset regulation pressure before regulation occurs. Pressure regulation shall be provided to rotors with ¾" and 1" inlets by means of a spring-loaded diaphragm attached to a flow tube. The regulator housing shall be constructed of high strength PVC. All metal components shall be made of stainless steel. The diaphragm shall be a fabric reinforced elastomer.

F. Automatic Controller Unit: The Controller shall be capable of fully automatic or manual operation with an interface to a two-wire path for decoder-based irrigation control. The controller shall provide flow sensing capability and management and a station capacity expandable to 200 stations. Controller shall include: automatic Et calculations and The ability to use any of four different Et sources as the basis for Et calculations; Cycle-and-Soak or conventional start times; Four independently controlled programs with 5 selectable start times for a total of 20 possible cycles per day or Cycle-and-Soak with unlimited start times; Flow sensing capability to monitor system flow and responds to high, low, unscheduled and no-flow conditions; Detection of valve wiring faults and automatic field wire detection enabling the controller to sense a short in the field wire and instantly turn off that station; Optional internet control via wireless cellular communication; manufactured by Rain Master Control Systems or approved equal.

1. The automatic controller shall be enclosed in a Heavy Duty Stainless Steel Top Entry Enclosure model SB-22SS by Strongbox or approved equal.

2. Valve decoders: shall be Rainmaster TW-D-1 Single valve AC decoder, TW-D-2 Dual valve AC decoder, TW-D-4 Quad valve AC decoder, TW-LA-1 Lightning arrestor (every 600 feet) as indicated in the Contract Drawings. Install and connect to 2-wire path per manufacturer’s instructions and as indicated in the Contract Drawings. All decoders must be manufactured by

SAME manufacturer and compatible with the 2-wire controller system specified.

3. Sensor wire: provide per manufacturer's requirements, and install in conduit per below.

G. Control Wire:

1. Connection between the automatic controller and the valve decoders shall be made with polyethylene double-jacketed or UF-B UL PVC double-jacketed two-conductor solid core wire designed for direct burial with insulation 3/16 inch (.060") thick, high density, sunlight resistant incased in an outer jacket of Polyethylene or PVC conforming to ICEA S-GL-402 or NEMA WC5, having a minimum wall thickness of .045 inches. Two-wire Polyethylene 'twisted' cable and single strand 14 gauge PVC coated irrigation wire are not acceptable.

2. 2-WIRE Conductor SIZING**:** Standard wire lengths for straight line installation i.e. wire distance to the furthest device without any loop:

Wire Size(gauge)	#14	#12
Total loop Length	10,000'	14,800'
Distance to furthest valve	5,000'	7,400'

3. All 2-wire conductors shall be installed in a 1-1/4" diameter sch. 80 PVC conduit per details. Distance between pull boxes shall not exceed 200'.

4. Low voltage control wire conductors between the 2-wire decoders and the valves shall be U.L. approved direct burial Type U.F., 600 volt, No. 14 AWG solid copper. Use a different color wire for each valve in the manifold grouping.

H. Wire Connectors: Control wire connections shall be made with 3-M brand of DBY or DBR Direct Burial Splice kits, or approved equal. The splice kit shall consist of a one-piece malleable plastic bulb body with internal locking fingers, filled with re-enterable gel sealant and a Scotchlok Electrical Spring Connector. Materials shall be as follows:

1. Connector shall be a flame retardant PVC insulator with a steel spring and shell within. Connector shall be a non-crimping system.

2. Tube material shall be clear see-through polypropylene.

3. Gel material shall be hixotropic calcium organic complex.

4. Wire sizes and numbers of wires per connector shall be as follows:

Connector:	Color:	No. and Size of Wires:
3M Model DBY	Yellow	Max. 4-12 gage UF wires
3M Model DBR	Red	Max. 3-14 gage UF wires

I. Concrete Thrust Blocks: Provide concrete thrust blocks per details where applicable for plastic pipes with 3" inch diameter or larger, and all backflow preventer assemblies. The portland cement concrete used for concrete thrust blocks shall be 470-B-2000 concrete.

PART THREE - EXECUTION

3.1 SURFACE CONDITIONS

Examine the area of work and conditions under which work of this Section will be performed. Correct any conditions detrimental to timely and proper completion of the work prior to commencing installation of irrigation equipment.

3.2 IRRIGATION SYSTEM INSTALLATION:

A. General:

1. The Irrigation system layout shown on the Contract Drawings shall be considered as diagrammatic. The Contractor shall make adjustments where necessary to conform to actual field conditions unless otherwise noted or as directed by the City Engineer at no additional cost to the City.

2. All piping shown on the Contract Drawings in paved areas but running parallel and adjacent to planted areas, is done for clarity only and is to be installed inside the planting area whenever possible.

3. Specimen trees (24-inch or larger size box) may be planted

before installing the irrigation system upon written approval from the Project Manager. Contractor shall re-route irrigation lines conflicting with specimen plant locations to clear the root ball by twenty-four (24) inches minimum at no additional cost to the City. Watering of all specimen trees planted before completion of the irrigation system shall be the Contractor's responsibility.

4. Contractor shall make all required water and utility connections as shown on the Contract Drawings or as required by the utility company. Replace all sidewalks, curbs or paving removed or damaged by the installation of required utilities to the satisfaction of the BCA Inspector.

B. Trench Excavating and Backfilling: Size trenches and other excavations to accommodate the irrigation system components, conduits, pipe bedding material and other required elements indicated on Contract Drawings. Provide a minimum of 6" of side clearance on outside of the piping or conduit to assure proper installation and access for inspections.

1. See TREE PROTECTION REQUIREMENTS in the Landscape Planting Specifications for all trenching within the protected root zone of an existing tree.

2. Unless otherwise specified, the minimum depth of cover over pipelines and conduits shall be as follows:

   a. Control wire conduit - 30-inches (36-inches under roadways and parking lots).

   b. Other Control Wiring - Depth of mainline, or a minimum of 24-inches cover if without any mainline.

   c. Irrigation Mainline: 24-inches for piping 3" and smaller; 30-inches for piping 4" and larger.

   d. Lateral lines - 12-inches.

3. Make the bottom of trenches true to grade and free of protruding stones, roots or other matter which would prevent proper bedding of pipe or other facilities.

4. All trench backfill shall be performed in accordance with approved soils report. Pipe bedding shall be clean site soil, free of all rocks, debris, etc. over 1/2" diameter. Bed pipe in at least

4-inches of finely divided material to provide a firm, uniform bearing. Surround the pipe with additional finely divided material to at least 6-inches over the top of the pipe. Bedding shall be placed in 6-inch maximum lifts. Backfill shall be site soil placed above the bedding to finish grade. There shall be no rocks over 2" in greatest dimension or organic matter in the backfill. All bedding and backfill shall be properly moisture conditioned and compacted at each lift. All trenches shall have a minimum relative compaction of 90%. Compaction shall be tested by the City at locations to be determined by the Geotechnical Engineer.

5. Finished trenches shall be flush with adjacent finish grades. The Contractor shall be responsible for maintaining the trenches flush and smooth with adjacent surface grade until final acceptance of the project. After compaction has been approved, trenches in existing turf areas shall be re-planted per "Method A" lawn repair of the Landscape Planting Specifications, unless otherwise noted.

C. Irrigation Pipeline Installation - General: Execute trench excavating and backfilling, including the depth of cover over the pipeline, in accordance with requirements above.

1. Pipe layout as shown on irrigation plan is diagrammatic. Contractor shall route piping in planted areas in the most expedient manner consistent with the requirements set forth herein, including avoidance of tree roots.

2. When two or more pipelines are installed in the same trench, separate the pipelines by a minimum horizontal clear distance of 12-inches. Install piping such that each pipe, valve, or other component may be serviced or replaced without disturbing the others.

2. During installation of pipe, fittings, valves, and other components, prevent soil or foreign matter from entering the system. Temporarily cap or plug all open ends at completion of installation operations.

3. All changes in pipe size shall be made with reducer fittings. No close nipples or bushings shall be used.

4. Where irrigation piping crosses a vehicular roadway or other paving, sleeve all pipe and conduit inside a Schedule 40 PVC

sleeve of a minimum of two pipe sizes larger than the piping to pass through it under the paving at the depth of the mainline or 30 inches minimum. All sleeves shall extend a minimum of 3 feet beyond the edges of paving.

5. Pipe or irrigation components of dissimilar metals shall be separated by an approved "Dielectric" coupling.

D. Steel Pipe:

1. Square cut and ream pipe ends to full size with a long taper reamer.

2. Cut threads with clean sharp dies.

3. Make joints with a non-toxic, non-hardening joint compound applied to the male threads only.

4. Wrap steel pipe embedded in the ground with seamless 10 mil F.D.S. Safe-T-clad tape. Spiral wrap pipe with uniform laps. Apply the second layer of wrap in the reverse direction of the first layer of wrap.

5. Joints and any remaining unwrapped portion of the pipeline shall be similarly wrapped after pressure testing.

E. Solvent Welded Plastic Pipeline:

1. Join plastic pipe with slip type solvent welded fittings, threaded fittings as specified. Install steel pipe first when plastic pipe is joined to steel pipe.

2. Cut pipe square, externally chamfer approximately 10-15 degrees, and remove all burrs and fins.

3. Prior to the application of the P.V.C. solvent cement, prepare all surfaces to be solvent welded with tetrahydrofuran primer tinted purple. Make solvent welded joints in accordance with ASTM D2855 - PRACTICE FOR MAKING - SOLVENT - CEMENTED JOINTS WITH POLY (VINYL CHLORIDE) (PVC) PIPE AND FITTINGS. Use a solvent approved by the pipe manufacturer.

4. Install plastic pipe in accordance with ASTM D2774 - PRACTICE FOR UNDERGROUND INSTALLATION OF THERMOPLASTIC PRESSURE PIPING and the requirements

herein. Exercise care in assembling a pipeline with solvent welded joints so that stress on previously made joints is avoided. Handling of the pipe following jointing, such as lowering the assembled pipeline into the trench, shall not occur prior to the set times specified by the manufacturer.

5. Apply solvent to pipe ends in such a manner that no material is deposited on the interior surface of the pipe or extruded into the interior of the pipe during jointing. Wipe off excess cement on the exterior of the joint immediately after assembly.

6. Make threaded pipe joints using Teflon tape or other approved jointing material. Do not use solvent with threaded joints. Protect pipe from tool damage during assembly. Use vises with padded jaws and strap wrenches for installation of fittings and nipples. Remove and replace any plastic pipe which has been nicked, scarred, or otherwise damaged.

7. Snake plastic pipe from side to side in the trench to allow 1-foot of expansion and contraction per 100 feet of straight run.

8. Do not expose the pipeline to water for 24 hours after the last solvent welded joint is made.

F. Bell and Spigot Gasketed Pipeline:

1. Join plastic pipe with “push-on” type gasketed fittings with mechanical restraints as detailed and specified.

2. Cut pipe square, externally chamfer approximately 10-15 degrees, and remove all burrs and fins. Remove and replace any plastic pipe which has been nicked, scarred, or otherwise damaged.

3. Align pipe sections straight. Clean all debris from the bell areas of the fitting and install gasket so that it is completely seated in the groove with no raised areas.

4. Apply lubricant to the installed gasket and to beveled end of the cut pipe or to the spigot end of the pipe or fitting. Align the pipe with fitting and push together by hand or with pry bars on the end of the fitting or with two pry bars using the lugs on the fitting. Insert until the reference line mark is even with edge of the fitting bell.

5. Install mechanical restraints per details and manufacturer's instructions.

6. Snake plastic pipe from side to side in the trench to allow 1-foot of expansion and contraction per 1000 feet of straight run.

G. Installation of Valves, Valve Boxes, and Special Equipment:

1. General: Install all valves and other equipment in strict accordance with the details, and make readily accessible for manual operation, maintenance or replacement.

2. Install isolation or gate valves of the same size as the pipeline in which they are installed, unless otherwise indicated.

3. Install all valves below ground housed in a covered valve box with a securable lid that will permit access for field servicing. Boxes shall be set flush with existing grade, including sloped areas, and all soil within 12 inches of the perimeter of the box shall be compacted per the trench repair section of this specification. Boxes are to be positioned per details.

4. Set valve boxes per applicable details and set valves at sufficient depth to provide clearance between the cover and valve handle or key when the valve is in the fully open position. Do not cover valve with pea gravel.

5. Install backflow preventers per applicable details with pipe supports and the accessories necessary to properly secure the assembly where required. Install backflow preventers per prevailing codes. All Backflow devices shall be certified by a licensed inspector as required by the County Health Department Test Instructions, Water Pollution Control Section after installation at the Contractor's expense.

6. No equipment shall be installed closer than 12 inches to any paved surface, unless separated from the paved surface by a wall, fence, curb, or similar barrier, or installed underground.

H. Irrigation Head Installation and Adjustment:

1. General: In accordance with the requirements of Subsection 3.2 of this Section, flush and pressure test all mains and flush lateral lines before installing irrigation heads.

2. Irrigation Head Placement and Spacing:

   a. Irrigation plans are designed, as a minimum standard, for head-to-head coverage on all spray heads. Head locations shall be determined by referencing the irrigation plan and using the head spacing listed in the irrigation head legend. Accuracy of final installation shall be within plus or minus 12 inches for all rotary heads having a throw of 30 feet or greater; within plus or minus 4 inches for all head types with a throw of under 30 feet. Do not exceed the maximum irrigation head spacing shown on the Contract Drawings.

   b. Prior to head installation, Contractor shall mark the proposed locations of all irrigation heads in the field for review and approval by the Engineer. Contractor shall make any adjustments to head locations requested by the Engineer at that time at no additional expense to the City. Contractor shall provide minimum 48 hours notice prior to the requested time of inspection.

3. Head Installation:

   a. Do not exceed the maximum irrigation head spacing shown on the Contract Drawings.

   b. Install all irrigation heads 3-inches clear of adjacent walks, curbs, paving, headers, and similar improvements. Adjust all heads to flush with the final finish grade - adjusting for depth of sod in turf areas if needed.

   c. All soil within 12 inches of the perimeter of the head shall be compacted as indicated in applicable details.

   d. All irrigation heads shall be installed on swing joint assemblies as shown on details.

4. Irrigation Head Adjustment:

   a. When all irrigation heads are installed and the irrigation system is operating, adjust and balance each section or unit with all section control valves fully open to obtain uniform 100% head to head coverage.

b. Adjust irrigation heads having adjustable pin nozzles, screws or orifices to provide optimum distribution of water over the coverage pattern. Without additional cost to the City, Contractor shall substitute larger or smaller nozzles in irrigation heads and/or add or omit sprinkler heads as necessary to obtain uniform coverage to meet MWELO requirements. Any requested modification shall not alter the total GPM to a degree to require a major revision of pipe sizing.

c. At no time is the irrigation system to cause excessive overspray on adjacent paved areas, or cause any erosion to the site.

d. Low Head Drainage: The Contractor shall install in-line drainage swing check valves where necessary to prevent low head drainage or as indicated on contract drawings.

I. Automatic Control System Installation:

1. General: Install a complete automatic irrigation 2-wire control system, including the automatic controller, automatic control valves, decoders and wiring, and all necessary accessories and utility service connections.

2. Install the automatic controller outside of the coverage pattern of the irrigation system at the location designated on the Contract Drawings. Verify location with City Engineer prior to installation.

3. Install a separate disconnect switch between the source of power and the controller inside the controller enclosure per details. Provide grounding per details and manufacturer's instructions.

4. Install all electrical service wiring per Electrical Code in galvanized steel electrical conduit from the service point to the controller. The minimum service wire shall be No. 12 AWG copper 600 volt, Type THW or THWN or larger, as required by the controller manufacturer. Locate splices only in specified pull boxes and make splices with a waterproof packaged kit approved for underground use. Set pull boxes to finish grade on a 12-inch deep layer of one (1) inch crushed rock.

5. All 2-wire control wire shall be installed in 1-1/4" SCH 80 PVC conduit per details, with a maximum run of 200' between pull

boxes. Install conduit in the same trench as irrigation mainline per trenching detail where possible. Low voltage control wire conductors between the 2-wire decoders and the valves shall be installed in 1/2” SCH 80 PVC conduit per details.

6. Wire connectors shall be DBY or DBR as manufactured by 3M Corp. Control wires shall be stripped of 1/2 inch of insulation USING A WIRE-STRIPPING TOOL SPECIFICALLY MADE FOR THAT PURPOSE, inserted into the electrical spring connector, and the connector twisted in a clockwise direction until the wires are tight. Insert the completed splice into the gel-filled tube, and check visually to confirm that the wire nut has been pushed past the fingers and is seated in the bottom of the tube. Position wires in wire channels and close insulator cover. Make splices in control wire in accordance with the requirements for service wire. Leave at least 2-feet of coiled slack at each splice and point of connection inside of valve boxes.

7. Testing Electrical Components: Field tests shall be performed by the Contractor on all irrigation system conductors in accordance with the requirements specified herein prior to performing the functional tests. Where conductors are installed by trenching and backfilling, such tests shall be performed after at least six (6) inches of backfill material has been placed over the conductors and backfill material has been compacted.

    a. Prior to the start of the functional testing, the Contractor shall perform the following tests on all irrigation system electrical conductors in the presence of the BCA Inspector.

    b. Each circuit shall be tested for continuity and open circuits.

    c. Each circuit shall be tested for grounds.

    d. An insulation resistance test at 500-volts DC shall be made on each circuit between the circuit and the ground. The insulation resistance shall not be less than 10-megohms on all circuits.

    e. The functional test for all the electric automatic irrigation system(s) shall consists of a minimum of fifteen (15) working days of operation during which time the controller shall complete at least three (3) complete cycles automatically for each station. The lengths and frequencies of the cycles will

be determined by the City's representative. If unsatisfactory performance of the system develops, the condition shall be corrected and the test repeated until fifteen (15) working days of continuous, satisfactory operation is obtained.

f. The functional test shall be satisfactorily completed prior to the start of the plant establishment period.

g. Repair to the irrigation system wiring shall be made within five (5) working days of a malfunction or damage to any portion of the system.

8. Contractor shall leave the control system in operating condition with an operational chart mounted within the controller cabinet upon completion of the work.

3.3 FLUSHING AND TESTING

A. After completion, and prior to the installation of any terminal fittings, thoroughly flush the entire pipeline system to remove dirt, scale, or other material. After flushing, conduct the following tests in the sequence listed below. Provide all equipment, materials, and labor necessary to perform the tests. Conduct all tests in the presence of the City Inspector.

1. The irrigation system mainlines shall be pressure tested for 24 hours at 125 p.s.i. with all control valves in place and closed. During the test, the Contractor shall provide pressure gauges downstream from the backflow device and upstream from the farthest remote control valve in the system. Air pressure testing of the irrigation system is acceptable if approved by the BCA inspector. Placement of control wires shall be verified before mainline trenches are backfilled after pressure test.

2. After installation, the irrigation lateral lines shall be thoroughly flushed in the presence of the BCA inspector. Each valve and lateral system shall be flushed commencing with the head closest to the valve and proceeding to the farthest head.

3. Irrigation Coverage Test: After installation of heads and lateral lines etc., entire irrigation system shall be tested for coverage. The BCA Inspector, Project Manager, Contractor and Recreation and Parks Regional maintenance staff shall be notified three (3) days before the scheduled test. Perform the

coverage test for each zone after irrigation heads have been installed and demonstrated that each section or unit in the irrigation system is balanced to provide uniform and adequate coverage of the areas serviced. Correct deficiencies in the system in accordance with the requirements of Subsection 3.2(G)4.

4. Operational Test: Evaluate the performance of all components of the automatic control system for manual and automatic operation. During the maintenance period, and at least 15 days prior to final inspection, set the controller on automatic operation so that the system will operate satisfactorily during such period. Make all necessary repairs, replacements, and adjustments until all equipment, electrical work, controls, and instrumentation are functioning in accordance with the Contract Documents.

3.4 OPERATING MANUALS AND EQUIPMENT

A. Furnish the City with 2 bound copies of operating and maintenance manuals for all irrigation system equipment such as automatic controller, valves, heads, etc.

B. Explain in detail all irrigation equipment operations, watering schedule and maintenance procedures to the City personnel as directed by the Project Manager before completion of the project.

C. Provide the City with a reduced legible copy of the "As-Installed" Irrigation Plan hermetically sealed in a plastic cover to be affixed inside the controller cover.

3.5 RECORD DRAWINGS

Irrigation record drawings shall include the following: Dimension the following locations from two permanent points of reference (building corners, sidewalks, road intersections, etc.):

a. Connection to existing water lines
b. Connection to existing electrical power
c. Gate valves
d. Mainline routing and/or directional turns (dimension maximum 100 feet along routing).
e. Remote control valves
f. Air and pressure relief valves
g. Master valves/flow sensors

h. Control wire routing
i. Quick coupling valves
j. Lightning protection (rod, plate, etc.)
k. Pull boxes
l. Irrigation controllers
m. Backflow prevention units

END OF SECTION

SECTION 02820
CHAIN LINK FENCING AND GATES

PART ONE - GENERAL

1.1 SUMMARY

A. All permanent chain link fencing, gates and appurtenances as indicated on the Contract Drawings and as specified herein, and as needed for complete and proper installation.

B. Related Work Sections:

1. Concrete Work in Section 03300.

1.2 QUALITY ASSURANCE

A. Labor: Use adequate number laborer's who are thoroughly trained and skilled in the fencing trade and who are completely familiar with the specified requirements and methods needed for the proper executions of the work of this Section.

B. Codes and Regulations: Perform all work in strict accordance with applicable Government Codes and Regulations, meeting all "Safety Standards" of CAL/OSHA, County and the current Los Angeles City Building Code and applicable Amendments.

C. Qualification of Fabricators: Provide adequate number of fabricators who are thoroughly familiar with the specified requirements regarding fabrication of fencing fabrics, posts and gates.

D. Quality of All Materials and Accessories: All materials and accessories shall conform with the requirements of the Standard Specifications for Public Works Construction (SSPWC) and specified herein.

1.3 SUBMITTALS

A. General: Comply with applicable provisions the GENERAL REQUIREMENTS and other Sections of the Project Manual.

B. Product Data:

1. CONTRACTOR shall provide Shop drawings in sufficient detail to show layout of fence and gate, elevation details, fabrication, assembly, hardware, installation, anchorages and interface of work of this Section with work of adjacent trades.

2. Manufacturer's Specifications and other data needed to prove compliance with the specified requirements for chain link fabric, posts and rails.

3. Manufacturer's recommended installation procedures which when reviewed and approved by the ENGINEER, will become the basis for accepting or rejecting actual installation procedures used on the Work.

4. Vinyl coating and color for chain link fabric. Note: For special post coating, use section 206-6.1 of SSPWC.

1.4 PRODUCT HANDLING

A. Protection: Protect fencing fabric, posts and gate assemblies before, during and after installation. Properly package and identify and note location of unassembled items (hardware, etc.) for protection against damage.

B. Delivery: Deliver all items to be built into concrete or masonry work in time, so as not to delay construction and installation operations.

PART TWO - PRODUCTS AND FABRICATION

2.1 MATERIALS

A. General: All materials for fencing, posts and gates and fasteners to be new and hot-dipped galvanized.

B. Galvanizing: Where noted on drawings or Specified herein, metal products shall be hot-dipped galvanized, and comply with requirements of Section 210-3 - GALVANIZING of SSPWC, except as modified herein.

C. Fabric:

1. Galvanized steel chain link fabric shall conform to ASTM A392 - SPECIFICATION FOR ZINC COATED STEEL CHAIN LINK FENCE

FABRIC and A817 - SPECIFICATION FOR METALLIC - COAT STEEL WIRE FOR CHAIN LINK FENCE FABRIC. Fabric shall be 2-inch mesh of 9-gage steel wire (minimum 75,000 psi tensile strength) galvanized with 1.2 oz/ft^2 zinc, in single fabric width for the entire height. Top and bottom selvedges shall be knuckled.

Vinyl coated galvanized steel fabric, when specified, shall conform to ASTM F 668, Class 2b, "fused and adhered", and meet the galvanizing requirements contained in this section, (206-6.3).

2. Fabric Tie: 11 gage galvanized steel used to fasten the fabric to posts, rails and gate frame.

D. Posts:

1. Schedule 40 Standard weight pipe conforming to ASTM F-1083 **-** SPECIFICATION FOR PIPE, STEEL, HOT-DIPPED ZINC - COATED (GALVANIZED) WELDED, FOR FENCE STRUCTURES.

2. Line Posts: 2 3/8-inch O.D. complete with malleable iron eye-top of suitable design to provide moisture-proof cap.

3. Terminal (End) and/or Corner Posts: 2 7/8-inch O.D. with malleable iron moisture-proof cap.

4. Gate Posts: 4-inch O.D. complete with malleable iron moisture-proof cap.

E. Top and Bottom Rails: 1-5/8 inch O.D. standard weight steel pipe complete with end caps and end clamps for attachment to posts.

F. Horizontal and Diagonal Bracing:

1. Horizontal Rails with Diagonal Bracing to all end sections: Intermediate horizontal rail, 1-5/8-inch O.D. standard weight steel pipe complete with end caps and clamps for attachment to posts.

2. Diagonal: 3/8-inch diameter steel truss rods complete with turn buckles and attachments to post.

G. Tension Wire: For fabric of 9-gage and heavier use 6-gage galvanized coiled spring steel wire.

H. Galvanizing Repair Material: Galvanized surfaces which have been

damaged in transport or during installation shall be re-coated using the metalizing process or zinc oxide, zinc dust paint per Section 210-3.5 of the SSPWC.

I. Galvanized Steel Brace Bands, Tension Bands or Bars and Tension Rods: Brace bands shall be galvanized**,** minimum of 3/16 inch x 3/4-inch wide; tension bands or bars shall be 3/16 inch x 3/4-inch wide and tension rods shall be 3/8 inch diameter galvanized steel rod with galvanized turnbuckles or other suitable tightener or tightening devices.

2.2 GATE HARDWARE

A. Swinging Gate:

1. Hinges: Heavy-duty ball and socket, industrial service***,*** offset type***,*** minimum 3 inch in width.

2. Latch for Single Swing Gate: Heavy malleable iron, fork type with provisions for padlocking.

3. Latch for Double Swing Gate: Heavy center drop rod latch assembly with provisions for padlocking. For hold-back sleeves provide steel pipe of diameter greater than of drop rod diameter and of length indicated on the Drawing.

2.3 GATE CONSTRUCTION

A. Swinging Gate Frame Construction:

1. All welded, fabricated of 1-7/8 inch O.D., galvanized steel pipe; all welded joints ground smooth and coated with a galvanizing repair material; all in accordance with reviewed Shop Drawings.

2. Frame Bracing: Use galvanized steel truss rods with galvanized turn buckles as hereinbefore specified.

3. Fabric: Same as hereinbefore specified for fencing, placed on exterior side of gate frame, as indicated, in same manner as specified for fencing.

PART THREE - EXECUTION

3.1 SURFACE CONDITIONS

A. Examine the areas and conditions under which work of this Section will be performed. Correct conditions detrimental to timely and proper completion of the work. Do not proceed until detrimental conditions are corrected.

3.2 CHAIN LINK FENCE INSTALLATION

A. Post Setting: In concrete foundations per applicable detail/s; set plumb, at specified height and spacing, in straight alignment for uniform installation as indicated on the Drawings.

1. Excavating and Backfilling: Neatly and accurately excavate foundation holes for posts as indicated. Compact subgrade or any loose material. Solidly and firmly backfill around completed concrete foundations with excavated earth materials to finish grade or to proper elevation, as necessary for required paving as applicable.

2. Concrete Footings: Minimum 2500 psi concrete or as otherwise specified on drawings and conforming to the most recent edition of Los Angeles City Building Code and applicable Amendments. Finish top of footing smooth and even, sloped to shed water and with edges at finish grade of adjoining ground or adjusted for paved surfaces. Allow concrete to attain at least 75% of its 28-day strength before installation of fencing components.

C. Top Rail: Extend through post eye-top caps and attach ends to corner, gate, and/or terminal (end) posts.

D. Horizontal and Diagonal Bracing:

1. Horizontal Rail: Locate mid-height in fencing panels adjacent to gates, corner, and terminal (end) posts.

2. Diagonal Bracing: Extend from the joint of horizontal brace (with

adjacent post) diagonally to the base of gate, corner, or terminal post.

E. Chain Link Fabric:

1. The fabric shall be installed so that the edge extends beyond the top rail and the bottom rail by 1 inch. The bottom of the fabric shall extend to within 1 inch maximum of the natural ground or final grade. High points of ground shall be excavated to clear the bottom of the fabric and depression shall be filled and compacted to within 2 inches of the bottom of fabric. Secure fabric to tension wire with galvanized clip rings or wire ties spaced not more than 18 inches apart.

2. Tightly stretch and secure to line posts, with adequate tie wires, space maximum 18-inches apart or as recommended by manufacturer.

3. Secure fabric to top rail, terminal (end) and gate posts by means of heavy, galvanized steel bands bolted to 1/4-inch x 3/4-inch tension bars passing vertically through full height of fabric 16 inches interval.

3.3 SWINGING GATE INSTALLATION

A. Properly hang or set gate(s) in plumb and level position for full opening without interference and adjust the hardware for smooth and trouble-free operation and inspect latching and locking hardware for proper alignment and function.

3.4 MISCELLANEOUS

A. Use U-shaped tie wires, conforming to diameter of pipe to which attached, clasping pipe and fabric firmly with ends twisted at least two full turns.

B. Bend ends of wire to minimize hazards to persons and clothing.

C. Fasteners:

1. Install galvanized nuts for tension band and hardware bolts on side of fence opposite fabric side.

2. Peen the ends of bolts to prevent removal of the nuts.

D. Repairs: Repair fencing coatings damaged in the shop or during field erection using a hot-applied repair compound applied in accordance with repair compound manufacturer's recommendations as approved by the City Engineer; at no added cost to the City.

E. Cleanup: Comply with provisions of the GENERAL REQUIREMENTS regarding removal from the jobsite; rubbish, all equipment, unused materials, temporary structures and/or facilities no longer required.

END OF SECTION

SECTION 02840
CONCRETE WHEEL BUMPERS

PART 1 GENERAL

1.1 SUMMARY

A. Furnish and install concrete wheel bumpers (wheel stops) as indicated on the drawings and specified.

B. Product Data: Submit information describing the materials used in the manufacture of the wheel bumpers.

PART 2 PRODUCTS

2.1 MATERIALS

A. Concrete shall conform to the following:

1. Minimum compressive strength: 4,000 pounds per square inch (psi) minimum at 28 days.

2. Air content: 5 to 8 percent.

3. Size of bumpers shall be as indicated on the drawings.

B. Reinforcing bars shall be deformed billet steel conforming to ASTM A615, Grade 60.

C. Anchor stakes for driving into the ground shall be No. 4 reinforcing bars or steel pipe conforming to ASTM A53.

D. Adhesive for Securing of Concrete Wheel Bumpers: An epoxy two-component type, long curing, manufactured by Edeco, Furance, Andrew Brown, Adhesive Engineering Company, or equal.

PART 3 EXECUTION

3.1 INSTALLATION ON ASPHALT PAVEMENTS

A. Secure bumpers in place with steel stakes, two per bumper, driven to at least 1/4-inch below top surface of the bumper, through the pavement and not less than 12 inches into the subgrade.

3.2 INSTALLATION ON PORTLAND CEMENT CONCRETE PAVEMENTS

A. Secure bumpers in place with 2-component epoxy adhesive. Surfaces to receive adhesive to be free of laitance, dirt, loose particles or other foreign matter and shall be completely cured and dry.

B. Slightly roughen the smooth surfaces as recommended by the adhesive manufacturer to provide for proper bond. Properly cure the adhesive after placing of bumper unit.

END OF SECTION

SECTION 02932
LANDSCAPE PLANTING

PART ONE - GENERAL

1.1 DESCRIPTION

A. Work Included:

1. All labor, materials, equipment, and tools necessary to provide and execute: soil preparation and amendments; planting of new trees, plants, shrubs, ground cover and sod; all required testing and inspections; maintenance and establishment of new landscape plantings as indicated on the Contract Drawings, specified herein and as needed for complete and proper installation and maintenance.

1.2 SUBMITTALS

A. The CONTRACTOR shall make all required materials submittals in accordance with the General Requirements.

B. The CONTRACTOR shall make substitution submittals in accordance with the General Requirements.

C. Submit copies of the following:

1. Complete list of landscape plant materials soil amendments, fertilizers, herbicides, and miscellaneous hardware complete with descriptions and/or photographs and manufacturer's literature. Clearly mark or underline proposed items.

1.3 QUALITY ASSURANCE

A. Codes and Regulations: CONTRACTOR to obtain and pay for all required permits. Deliver all permits and submit certifications of compliance to the CITY ENGINEER.

1.4 GENERAL REQUIREMENTS

A. Required Approvals by the ENGINEER: No work included in this Section shall be commenced until the following are completed and approved:

1. Any required agricultural suitability and fertility analysis or testing and weed/pest control prior to placing topsoil or soil amendments.

2. All work on irrigation system prior to start of landscape planting work.

3. All reviews on required submittals and re-submittals requested by the ENGINEER for materials included in this section.

B. Inspection: All work and materials are subject to inspection and approval by the Bureau of Contract Administration (BCA) Inspector and the PROJECT MANAGER. Any work done without proper inspection will be subject to rejection per Section 2-11 of the Standard Specifications for Public Works Construction. The CONTRACTOR shall notify the Bureau of Contract Administration (BCA) Inspector and PROJECT MANAGER three (3) days prior to requested inspection of the following for approvals:

1. For all finish grades in planting areas following all weed/pest control, soil fertilizing and conditioning, prior to landscape container planting, and after rolling in turf areas.

2. Inspection of all plant materials under 24" box size shall be at the time of delivery to the job site. This inspection will be for compliance with the caliper, height and spread requirements if given on the plant legend and for the general health, structure and appearance of plants. The CONTRACTOR shall also stake all tree planting locations at this time for review and approval by the ENGINEER.

3. Tagging of 24" box or larger trees at the grower with Recreation and Parks tags. This inspection will be for compliance with the caliper, height and spread requirements if given on the plant legend and general health, structure and appearance of plants. All trees shall be tagged by the ENGINEER or authorized representative.

4. All completed landscape planting and irrigation work for approval to begin the plant maintenance and plant establishment period.

C. Existing Plant Materials: Protect all existing plant materials, not designated for removal or modification, in place against damage resulting from work of this Contract. Perform any removal and/or trimming only on approval or instructions from the CITY ENGINEER or in accordance with applicable provisions noted or specified on the Contract Drawings. CONTRACTOR shall replace all damaged existing plant material with like type and size material. If an acceptable replacement is not available, CONTRACTOR shall pay damages to the CITY for the

value of the damaged tree as assessed by the tree value formula in the ISA Guide for Establishing Value of Trees and Other Plants.

D. Tree Protection Requirements: See sheet LP03 and LP04.

1.5 DELIVERY, STORAGE AND HANDLING

A. Delivery:

1. Delivery of plant material shall begin only when it is ready for plant installation and after the inspections are made and any required soil samples and tests have been reviewed by the PROJECT MANAGER. All materials furnished for the work shall be not less than the approved submittal. Upon delivery, CONTRACTOR shall tag one plant of each variety for identifying purposes.

2. Notify the ENGINEER of a scheduled delivery a minimum of 48 hours in advance so the plant materials may be inspected upon arrival at the jobsite. All plant material judged by the ENGINEER at the time of delivery as unacceptable shall be removed immediately from the jobsite by the CONTRACTOR. All trees not accompanied with the tags signed placed the ENGINEER or the authorized representative, or plants not correspondent with contract requirements shall be rejected and immediately removed from the job site.

3. Protect plants during delivery against damage to root balls or desiccation of leaves. Protect trees during transport by tying in the branches and covering all exposed branches.

4. Deliver fertilizer to the jobsite in the original and unopened containers bearing manufacturer's guarantee chemical analysis, name, trademark or trade name in conformance with Federal and Local law. In lieu of containers, fertilizer may be furnished in bulk and a certificate indicating the above information shall accompany each delivery.

B. Storage:

1. Store plants, trees, etc. at the jobsite where directed by the PROJECT MANAGER.

2. Keep fertilizer in dry storage away from contaminants. Loose fertilizers and soil amendments shall be kept covered with a tarp.

3. Store plants not installed on the day of arrival at the jobsite as follows:

    a. Outside storage to be protected from wind.

    b. Keep plants in containers in a moist condition until planted by watering with fine mist spray.

C. Handling: Transport and handle plants with care to ensure protection against injury.

PART TWO - PRODUCTS

2.1 MATERIALS

A. Topsoil: The type and thickness of topsoil shall be as shown on the plans. If not shown, the topsoil shall be the existing class "C" on-site topsoil and amended as indicated.

B. Fertilizers and Conditioning Materials: Comply with the applicable requirements of the State Agricultural Code. All fertilizing materials shall be packaged, first grade, commercial quality products identified by source, type of material, weight and manufacturer's guaranteed analysis. Fertilizing material shall not contain toxic ingredients or fillers in quantities harmful to human, animal, or plant life.

1. Agricultural Gypsum: Hydrated calcium sulfate product containing 23 percent calcium and 18 percent sulfur with a guaranteed analysis of 84 percent calcium sulfate.

2. General Purpose Fertilizer: Shall be Gro-Power Plus fertilizer, having a minimum analysis of 5-3-1 (N-P-K) derived from ammonium phosphate, urea, sulfate of potash, compost and sulfides and oxides of iron, manganese and zinc, with 1.00% Alkyl Naphthalene Sodium Sulfonate soil penetrant as manufactured by Gro-Power Inc., 5065 Telephone Avenue, Chino, CA 91710 (909) 393-3744, or an approved equal. https://www.gropower.com

3. Fertilizer Tablets**:** Fertilizer tablets shall be Tri-C Myco Tabs planting tablets, 1.7 gram 17-9-5 (N-P-K) as manufactured by TRi-C Organics Inc., (800) 590-3301, or an approved equal. https://www.tricorganics.com

4. Non-Selective Herbicide**:** Shall be Finale™, by BASF, or an approved equal. All herbicides, when required, shall be specified and applied by a licensed Pest Control Advisor in a manner consistent with the manufacturer's product labelling. Prior to application, CONTRACTOR shall submit proposed herbicide and a diagram showing the area of application for approval to the PROJECT MANAGER.

5. Pre-Emergent Herbicide**:** Shall be Specticle G Pre Emergent Granular Herbicide, by Bayer Environmental Sciences, or an approved equal applied at the rate of 2.3 lb./1000 sf. All pre-emergent herbicides, when required, shall be specified and applied by a licensed Pest Control Advisor per the manufacturer's recommendations.

6. Granular Humic Acid Soil Conditioner: Shall be LIVE EARTH HUMATE SOIL CONDITIONER [PLUS GYPSUM] or Tri-C Humate [Tri-C Humate Plus with Gypsum] or approved equal. Contact Todd Burns, Live Earth Products, Inc. (661) 978-7307 for availability, or TRi-C Organics Inc., (800) 590-3301 https://www.tricorganics.com, or an approved equal. Apply per manufacturer's instructions.

7. Soil Penetrant**:** Shall be "Ground Breaker" by Green As it Gets, Inc. or approved equal. Soil penetrant shall contain organic yucca and kelp extracts. Soil penetrant MAY NOT contain alcohol. Apply soil penetrant per manufacturer's instructions. Contact: Green As It Gets Inc., 300 Morning Drive, Bakersfield, CA 93306 Phone: 1-800-476-0034. https://www.greenasitgets.com

8. Organic Soil Amendment**:** "Type 1" organic soil amendment shall be a relatively dry and friable fine-textured organic composite that is well-composted and nitrogen stabilized, derived from composted greenwaste or processed wood products, and free of foreign matter including animal waste and any viable plant, tree or weed seed. 99% of material shall pass through a 1/2" screen. CONTRACTOR shall submit a sample of the organic soil amendment to the PROJECT MANAGER for approval prior to installation.

   All Organic Soil Amendment shall conform with the following criteria:

   a. The pH of the material shall be between 6 to 7.5.

   b. Salinity: material shall have a maximum saturation extract conductivity of 2.50 millisiemens per centimeter.

c. Boron content of the saturated extract shall be less than 1.0 parts per million.

d. Sludge-based or animal waste materials are not allowed.

e. Carbon:Nitrogen ratio is less than 25:1.

f. All compost shall be aerobic without malodorous presence of decomposition products.

g. Maximum total permissible pollutant concentrations in amendment in parts per million on a dry weight basis:

Arsenic	20	Copper	150	Selenium	50
Cadmium	15	Lead	200	Silver	10
Chromium	300	Mercury	10	Vanadium	50
Cobalt	50	Molybdenum	60	Zinc	300
Nickel	100				

9. Top Dress Mulch**:** Shall be well-seasoned composted tree chip mulch, free all foreign matter including weed and tree seeds. Mulch chip size shall be minimum one (1) inch in diameter and not more than four (4) inches in diameter. Submit a sample of mulch and source to the PROJECT MANAGER for approval prior to application.

C. Plant Materials:

1. Availability & substitutions: No substitutions of plant species, type, cultivar, size etc. will be accepted without prior approval of PROJECT MANAGER. CONTRACTOR is expected to utilize all reasonable nursery resources in the Southern California region before determining if a specified material is unavailable. When plants of a specified kind or size are determined by PROJECT MANAGER to be not available, substitution may be made upon approval by the ENGINEER, in accordance with the General Conditions. CONTRACTOR shall provide information regarding his attempts to locate such material.

2. All Plants: The plant names shown or listed on the Contract Drawings shall conform to the “Sunset Western Garden Book”, latest edition unless otherwise specified. In all cases, botanical names take precedence over common names. One plant of each variety shall be tagged for identifying purposes.

3. Quality: All plants shall have a growth habit normal to the species in accordance with U.S.A. Standards for Nursery Stocks, latest editions; shall be sound, healthy, vigorous and free from insect pests, plant disease, sun scalds, weeds, fresh bark abrasions, excessive abrasions or other objectionable disfigurements. Tree trunks shall have normal well-developed branch systems. All plant materials shall have vigorous and fibrous root system, not root bound and shall be free of kinked or girdling roots. The CONTRACTOR shall be responsible for the condition of all plants, planted or otherwise, until final acceptance by the CITY and termination of maintenance period

4. Sod: Shall be of the type designated on the planting plan, or an approved equal. Sod shall be delivered to the job site within 24 hours of being cut at the nursery, and COMPLETELY installed within 12 hours of delivery to the job site. The sod shall be machine cut to between 3/8” and 5/8” thick, not including top growth or thatch.

5. All plants shall be inspected and approved prior to planting as per provisions of Subsection 1.4(B) specified above

D. Tree Stakes:

1. Wood tree stakes 2-inches in diameter by 8-feet long, lodgepole grade, pressure-treated, capable of standing in the ground at least two years.

   a. All trees in non-turf areas as indicated on the Contract Drawings shall be *double staked* per detail.

   b. All trees in turf areas as indicated on the Contract Drawings shall be *triple staked* per detail.

E. Slope Stabilization and Erosion Control Material: Jute Mesh material shall be light weight, brown color, fire retardant, open weave construction and shall have a minimum 4-year longevity. Material shall handle maximum water flow of 8 feet per second.

PART THREE - EXECUTION

3.1 GENERAL

A. The Landscape work shall not be performed at any time when it may be subject to damage by climatic conditions.

B. The CONTRACTOR shall verify all dimensions shown on the Contract Documents and at the site.

C. In case of conflict between the plant schedule totals and total plant count of the contract documents, the CONTRACTOR shall provide the higher number of plants.

D. Delivery of material shall begin only when it is ready for the work and after the inspections are made and the required samples and tests have been reviewed by the ENGINEER. All materials furnished for the work shall be not less than the reviewed sample.

E. The CONTRACTOR shall provide temporary fencing, barricades, covering, or other protection to preserve existing landscaping items indicated to remain and to protect the adjacent properties and other structures from damages by the landscape and other contract work.

F. The CONTRACTOR shall abide by the Tree Preservation Guidelines, Section 1.4.D herein for all trees indicated to remain.

G. The CONTRACTOR shall remove and/or relocate landscape items such as trees, shrubs, grass, other vegetation, improvements, and obstructions as shown on Drawings or specified otherwise. All plant material to be removed shall be disposed of off the site in a legal and proper manner.

3.2 SURFACE CONDITIONS

A. Examine the areas and conditions under which work of this Section will be performed. Correct conditions detrimental to timely and proper completion of the work. Do not proceed until detrimental conditions are corrected.

3.3 AGRICULTURAL SUITABILITY AND FERTILITY ANALYSIS TESTS

A. General**:** CONTRACTOR shall submit the existing Class C Topsoil for Agricultural Suitability and Fertility Analysis. CONTRACTOR shall sample a minimum of three typical locations of existing on-site soil proposed to be used for topsoil and submit them to a certified soil laboratory for required soil analysis. The location of the soil sample and intent of the soil analysis are to provide the following:

1. Accurate soil amendment and fertilizer recommendations with regards to type, quantity and procedure to create suitable planting soil for plant material which includes trees, shrubs, ground covers and turf.

2. Identify any potential problems in the relationship between specified of plant materials and existing soil conditions that may ultimately affect plant growth.

3. For on-site soil, use a soil probe or soil auger to remove soil core samples. Otherwise use a shovel to dig a hole to the desired depth. Sample the soil from the side of the hole by scraping it with a trowel. The tools need to be clean and not rusty. Avoid sampling when the soil is too wet.

B. CONTRACTOR shall provide the ENGINEER with a copy of the completed report with recommendations for soil amendments and fertilization for initial planting, as well as any measures to be taken during the plant establishment period. on laboratory letterhead for review prior to commencement of soil preparation.

C. Agricultural Suitability and Fertility Analysis:

1. Must include pH measurement in the Saturation Extract, Electrical Conductivity of the saturation extract and Sodium Adsorption Ratio of the saturation extract.

2. The following nutrients and elements must be determined with an approved extraction method. Interpretation data must be given citing concentrations which are considered to be low, medium and high: Boron, Calcium, Copper, Iron, Magnesium, Manganese, Molybdenum, Phosphorus, Potassium, Sodium, Sulfur, and Zinc

    a. The saturation extract must be analyzed for Calcium, Magnesium, Sodium, Boron, Chloride, Nitrate and Sulfate.

b. The following trace metals must be measured by the DTPA extract: Aluminum, Arsenic, Cadmium, Chromium, Cobalt, Lead, Lithium, Nickel, Selenium, Silver, Strontium, Tin and Vanadium.

c. The presence of Calcium Carbonate and/or Magnesium Carbonate must be determined.

d. Soil Texture and Organic Matter content may be estimated or determined by commonly used methods.

e. Interpretation of nutritional deficiencies or excesses and potential toxicities must be given.

3.4 GRADING AND SITE PREPARATION:

A. Rough Grading:

1. Earthwork and Topsoil Placement: Shall include excavation and backfilling for the irrigation system and the preparation for the spreading, densification, cultivation and raking of topsoil, including fertilization and conditioning.

B. Topsoil Preparation and Amendment:

1. After completion of *all necessary trenching and backfill* for electrical, irrigation, or drainage piping and conduit, bring planting areas to approximate finish grade, including construction of landscape mounds, before performing soil amendment. CONTRACTOR shall account for the amount of fertilizer and soil amendments to determine the appropriate grade.

2. Turf Areas: For all TURF planting areas *outside of tree protection zones,* Class "C" on-site ("native") topsoil shall be scarified and cultivated to a uniform, finely divided condition to a depth of 12 inches. Soil shall not be worked when it is so wet as to cause excessive compaction to cause the formation of large clods; or so dry as to create excessive dust. All soil amendments shall then be broadcast evenly at the rate as specified below (or per the recommendations of the approved agricultural suitability and fertility analysis if directed by the PROJECT MANAGER)**,** and then thoroughly and uniformly incorporated to the depth of 12 inches**.** Prior to planting, the top 3 inches of all planting areas (including slopes) shall be free of weeds, stones and other deleterious matter 1-inch diameter and larger.

a. All turf planting areas shall receive the following soil amendments per 1,000 square feet:

4 cubic yards, Type I organic soil amendment
15 lbs. Agricultural Gypsum
50 lbs. Gro-Power Plus fertilizer

a. Topsoil shall be restored to a smooth finish grade after amendment process is complete and irrigated thoroughly to activate amendments and fertilizers.

2. Non-Turf Area Bulk Amendment**:** For all continuous areas designated on plans for tree, shrub and groundcover planting areas *outside of tree protection zones*, the Class "C" on-site ("native") topsoil shall be scarified to a depth of 1 inch, taking care not to damage surface roots.

   a. After scarification, apply “GROUND BREAKER” soil penetrant to all planting areas at a rate of 1 gallon per 1,000 square feet per manufacturer’s instructions.

   b. 2 hours minimum after applying soil penetrant, all planting areas shall receive the following soil amendment per 1,000 square feet:
      - 50 lb. GRANULAR HUMIC ACID SOIL CONDITIONER

   c. Soil amendment shall be evenly broadcast on the surface and uniformly cultivated into the top 6” of the soil and *thoroughly irrigated*. Soil shall not be worked when it is so wet as to cause excessive compaction or to cause the formation of large clods; or so dry as to create excessive dust. Prior to planting, the top 3 inches of soil (including slopes) shall be free of weeds, stones and other deleterious matter 1-inch diameter and larger.

3. For all planting areas *inside of tree protection zones*, the Class "C" on-site ("native") topsoil shall be scarified to a depth of 1 inch, taking care not to damage surface roots.

   a. After scarification, apply “GROUND BREAKER” soil penetrant to all planting areas at a rate of 1 gallon per 1,000 square feet per manufacturer’s instructions.

   b. 12 hours minimum after applying soil penetrant, all planting areas shall receive the following soil amendment per 1,000 square feet:
      - 20 lb. GRANULAR HUMIC ACID SOIL CONDITIONER

c. Soil amendment shall be evenly broadcast on the surface and uniformly cultivated into the top 1” of the soil and *thoroughly irrigated*. Soil shall not be worked when it is so wet as to cause excessive compaction or to cause the formation of large clods; or so dry as to create excessive dust. Prior to planting, the top 3 inches of soil (including slopes) shall be free of weeds, stones and other deleterious matter 1-inch diameter and larger.

4. For individual tree and shrub planting outside of designated bulk soil amendment areas, backfill shall be 100% Class "C" on-site ("native") topsoil uniformly amended with GRANULAR HUMIC ACID SOIL CONDITIONER at the rate specified below:

    15 gallon: 1/2 cup (US) per plant
    24" box: 2 cups (US) per plant
    36" box: 6 cups (US) per plant
    48" box: 10 cups (US) per plant

5. Incorporation of all soil amendments shall be performed in the presence of the BCA Inspector, and at that time CONTRACTOR shall furnish the BCA Inspector with delivery tickets to verify the source, kind and quantities delivered and applied. Furnish PROJECT MANAGER duplicate copies of the material invoices as required in Subsection 1.2 (C).

B. Finish Grading:

1. Make finish grade smooth, uniform and free of abrupt grade changes and depressions to insure proper surface drainage.

2. Finish grade below adjacent paving, curbs or headers shall be 1.5 inches in shrub or ground cover areas and 3/4 inch in sodded lawn areas.

3. Water soil after spreading of fertilizer and/or soil conditioning materials and allow it to settle to provide a stable surface. After the soil has dried out to a workable condition, regrade, rake and smooth to the required grades and contours, eliminating any erosion scars. Finished surfaces shall be clean and suitable for planting.

4. Finish grading shall insure proper drainage of site. Surface drainage shall be away from all building foundations at a minimum of 2% or in accordance grades shown on Contract Drawings.

5. Turf Areas**:** Finish grading of turf areas shall take place after the soil has dried out to a workable condition following the soil preparation operations. The soil shall be remodeled and smoothed to the required grades and contours, then rolled in two directions at right angles with a water ballast roller weighing 200 to 300 pounds maximum. Any resulting irregularities in the grade after the initial rolling shall be re-raked, cut or filled, then re-rolled until the grade is free from irregularities. No trucks, tractors or other heavy objects shall be taken over the areas at any time. The final finish grade shall be smooth, uniform, without abrupt changes in grade, within one-tenth of a foot of the grades shown on the plan. No turf areas shall exceed 5:1 slope. Final grade must be approved by the CITY ENGINEER or BCA Inspector prior to seeding or sodding. (801-2.3).

3.5 WEED ABATEMENT

A. General: Unless specified otherwise, weed abatement shall apply to all planting areas. The abatement operation shall commence before planting but only after removals, grading, hardscape construction, installation of irrigation system, soil preparation, and fine grading of planting areas have been completed.

B. All herbicides for weed control shall be applied with a photosensitive dye which will produce a contrasting color when sprayed upon the ground. The dye shall be applied in a manner so as not to leave any stain upon finished surfaces.

C. The following precautions shall be observed in handling and applying herbicides:

1. Before applying, the CONTRACTOR shall read and understand all instructions provided by the manufacturer.

2. Herbicide product shall not be used when winds are gusty or in excess of 8 miles per hour, or when any other conditions exist which would result in drift.

3. DO NOT USE any combinations of pressure and nozzle type or adjustment that result in misting.

4. Do not apply during rain, or if rain is forecast within twelve hours. If rain occurs within a twelve-hour period after application, material must be reapplied after application area has sufficiently dried out.

5. CONTRACTOR shall observe extreme care not to allow spray to contact plant material designated to remain, or in adjacent areas. Use cardboard, plywood, or other appropriate material to shield plant materials outside of the treatment area from overspray.

6. Do not apply to bare ground.

D. Herbicide Application: Pesticides must be applied by a licensed Pest Control Applicator in accordance with the requirements of the California Food and Agricultural Code and specified herein. The CONTRACTOR shall abide by all laws and codes governing weed abatement operations including but not limited to CAL-OSHA requirements and The Healthy School Act of 2000 (AB2260). Prior to herbicide application CONTRACTOR shall:

1. Notify the PROJECT MANAGER a minimum of 72 hours in advance of each application of pesticide/herbicide and shall indicate the hours during which the application will occur. No applications shall be made on Saturdays, Sundays, or legal holidays, unless otherwise prior approval by the PROJECT MANAGER in writing.

2. Notify the Pest Management Supervisor of the RAP Forestry Division at (213) 485-4826. Do not add other products to any herbicide mix, including spreader, stickers, or surfactants, unless required by the label directions and approved by the RAP Pest Management Supervisor.

3. Prior to any approved pesticide applications at any RAP facility with a Recreation Center or Child Care Center, the CONTRACTOR is required to notify the Recreation Center Director a minimum of 72 hours in advance of each application.

4. Submit to the BCA Inspector and to RAP Forestry a “Pest Control Recommendation Form” prepared by a licensed Pest Control Advisor, and a provide completed and accurate SDS (Safety Data Sheet) to be kept at the site of application. The area of application shall be posted as such and barricaded for public safety and information (site construction fencing is deemed adequate for this purpose when present).

5. Any questions regarding pesticide application and procedures at Recreation and Parks facilities shall be directed to the PROJECT MANAGER/BCA Inspector and the RAP Forestry group, Vegetative Management at (213) 485-4826.

E. "Grow and Kill" method: The CONTRACTOR shall adhere to the following steps:

1. Clear and grub the surface of the designated planting area by mechanical means or by hand, removing all surface vegetation (excepting any trees, shrubs or turf designated to remain per plans and notes), rocks, debris, etc. Do not disturb the roots or compact soil around any existing vegetation to remain or within designated Tree Protection Zones, and do not remove any topsoil during clearing work.

2. "Grow Period": Water all planting areas daily or as needed to keep soil evenly moist and promote weed germination and growth for a period of a minimum of *three weeks*. If, in the opinion of the ENGINEER the "Grow Period" irrigation was insufficient to achieve adequate germination, the "Grow Period" may be extended in minimum 7-day intervals at no additional expense to the CITY.

3. "Kill Period": At the conclusion of the grow period and approval by the ENGINEER, treat all emergent weeds within the planting area with approved herbicide per the submitted and approved "Pest Control Recommendation Form" following the manufacturer's instructions and labelling - *taking care to protect all trees, shrubs, turf etc. designated to remain*. If nutsedge (nutgrass) is determined to be present in any of the planting areas by the ENGINEER during the "Grow Period", CONTRACTOR will be required to apply a separate selective herbicide manufactured specifically for the control of nutsedge at no additional cost to the CITY until nutsedge is completely eradicated.

4. After spraying, do not water or otherwise disturb treated areas for a minimum period of two (2) weeks.

5. After the two-week kill period, remove all dead vegetation. If any living plants are observed, the entire plant, including roots, shall be removed by hand, minimizing physical disturbance of the soil.

F. Herbicide Damage: New and/or existing plants which in the opinion of the ENGINEER have been damaged, disfigured, or stunted by the application of herbicide shall be replaced in kind (type, size, and age) by the CONTRACTOR at their expense.

3.6 PLANTING

A. General: All plant materials, including plants previously approved at the nursery, shall be inspected by the ENGINEER prior to planting. The CONTRACTOR shall be responsible for the condition of all plants, planted or otherwise, until final acceptance by the CITY and termination of maintenance and establishment period. CONTRACTOR shall be obligated to honor all requirements of warranty as indicated herein.

1. Perform planting with materials and equipment according to procedures favorable to the optimum growth of the plant. Do not plant during high wind conditions.

2. Except as noted for specimen planting, do not start planting operations until the completion of weed suppression and completion and acceptance of the irrigation system

3. Large boxed trees may be planted prior to hardscape installation or irrigation completion to facilitate construction and avoid damage to completed work with written approval from the PROJECT MANAGER. CONTRACTOR shall re-route irrigation lines in conflict with boxed tree locations to clear the root ball by 24” minimum at no additional cost to CITY.

B. Protection and Storage:

1. Keep all plant materials delivered to the jobsite in a healthy condition for planting. Do not crowd containers together in a manner that adversely affects plant foliage or growing conditions.

2. Do not allow plants to dry out or suffer physical damage from other construction activities. Protect from heavy winds.

C. Layout and Plant Locations:

1. Plant locations indicated on the Contract Drawings are approximate.

2. CONTRACTOR shall lay out each plant in its intended planting location as shown on the plan while the plant is still in the container and obtain approval of the layout from the ENGINEER *prior to installation*.

3. Prior to planting, the CONTRACTOR may be directed to alter the layout of plants by direction of the ENGINEER, without additional compensation to the CONTRACTOR.

4. For “on center” plant spacing, locate the first row of plants in areas designated at one-half the specified spacing from the edge. Do not stretch the maximum specified spacing for each species as shown on the plans.

D. Container Plants Backfill Mix:

1. Unless specified otherwise or recommended by the approved agricultural suitability and fertility analysis and approved by the PROJECT MANAGER, container plants shall be backfilled with 100% amended site soil.

   a. Each plant pit shall also receive Tri-C Myco Tabs 1.7 gram 17-9-5 (N-P-K) planting tablets as shown in the relevant planting details, and as follows:

      Container Size
      1 gallon = 2 tablet
      5 gallon = 8 tablets
      15 gallon = 16 tablets
      Boxed Trees = 10 tablets per inch of trunk diameter, with a minimum of 20 tablets per tree.

   b. Some plant species may be designated not to receive any planting tablets. Refer to legend on Planting Plan.

E. Tree and Shrub Planting:

1. Prior to planting, irrigation system installation and soil amendment shall be completed and approved. Soil shall be thoroughly irrigated beforehand, and suitably moist for planting. *Do not plant in dry soil*.

2. Make planting holes approximately square with vertical sides *no greater than the depth of the plant container* (or such depth as needed so that the root crown has the correct relationship to adjacent finished grade per the planting details) and approximately twice the width of the plant container or rootball and larger if necessary to permit handling and planting without injury to the root system. Lightly scarify native soil at the bottom of planting holes.

3. Do not plant plants with a broken or cracked rootball. Such plants shall be considered defective and rejected. Rejected plants shall be removed promptly from the job site.

4. Open and remove plant containers in such a manner that the plant roots are not injured. Do not pull plants out of the pot by the stalk.

5. Scarify native soil at the bottom of planting holes.

6. If soil is not adequately moist, apply water to planting hole and allow to drain. Set the plant approximately in the center of the planting hole and add backfill under rootball if needed to adjust the root crown to correct grade.

7. Backfill the balance of the planting hole with moist, amended site soil; firming the backfill by hand or with tools to assure all air pockets have been removed, and settlement will be minimized. After planting, all plants shall be plumb with the root crown at its natural depth with respect to finish grade.

8. Prune or remove any broken or damaged minor limbs. Any major damage to plant material shall be brought to the attention the ENGINEER for evaluation. Trees or shrubs with major broken limbs shall be considered defective and rejected. Rejected plants shall be removed promptly from the job site.

9. For any trees installed prior to completion of irrigation system: form a circular watering basin 6-inches high and slightly larger than the planting hole to accommodate temporary hand watering. Make the bottom of the basin level with surrounding finish grade. Watering basin berms shall be removed during fine grading process and before application of top-dress mulch.

10. Tree Edging: Where trees are planted in lawn area, a minimum 4-foot diameter circle around each tree shall be maintained free of lawn area to avoid the growth-reducing effects of lawn area on trees. Mulch shall be placed in the circle. This circle shall be kept clear of lawn area by the CONTRACTOR for the duration of the maintenance period.

11. Install vines per planting detail. Remove nursery stakes and affix all branches to walls or fences per notes and details on Contract Drawings.

F. Turf Planting: Soil amendment, irrigation installation, weed abatement, and fine grading shall be completed and approved before seeding or sod installation.

1. Hydro-Seeded Turf Planting: The seed, fertilizer, fiber and other

materials in the slurry mixture shall be as specified on Contract Drawings and other applicable sections of these Specifications. All material shall be of appropriate type that will disperse into a uniform slurry when mixed with water. The mixture shall form an absorbent porous mat after placement. Do not apply when the wind velocity exceeds five miles per hour or is detrimental to the uniform distribution of the slurry.

a. The lawn seed mix for lawn planting shall contain the following materials at the rates specified:

    1. Mulch Fiber Eco-Fiber Wood Fiber, 2000 lbs./acre
    2. Stabilizer – Environ-Mend , 150 lbs./acre. Add slowly to tank to avoid clumping
    3. Fertilizer – Starter Fertilizer (15-15-15) , # 400 lbs./acre. Incorporate additional elements as needed by soil test.

b. If seeding of turf areas is done during cool-season (between October 1st and March 1st) mix shall be 6/lbs / 1000 SF

    50% Stovers ‘Grand Slam FS’ perennialryegrass blend
    40% Stovers ‘Arden 15’ hybrid bermuda grass
    10% Stovers ‘365SS’ Kentucky Bluegrass blend

c. If seeding of turf areas is done during warm-season (between March 1st and October 1st) mix shall be 6/lbs 1000 SF

    50% Stovers ‘Grand Slam FS’ perennial ryegrass blend
    30% Stovers ‘Arden 15’ hybrid bermuda grass
    20% Stovers ‘365SS’ Kentucky Bluegrass blend

d. The CONTRACTOR shall supply a delivery receipt to the BCA Inspector certifying conformance with the specified hydroseed mix and indicating that the slurry has not been mixed for longer than two hours. Slurry which has been mixed longer than two hours shall be recharged with 50 percent more of the specified seed mix, at the CONTRACTOR's expense, (801-4.8.2(b)). Delivery tickets shall be forwarded to the PROJECT MANAGER/BCA Inspector.

f. Use a green coloring additive in the slurry for the visual inspection purposes during application. Apply the slurry under pressure at

the specified rates indicated in the Contract Drawings. Moisten areas to be seeded with irrigation beforehand, but not surface wet at the time of application. Keep the hydraulically seeded areas moist during the germination period and avoid puddling.

g. See additional information in Section 22 HYDROSEEDING

1. Sod Planting: The type of sod and the area to be sodded shall be in accordance with the Contract Drawings. Sod shall be machine cut to between 3/8" and 5/8" thick, not including top growth or thatch.

    a. Site shall be fine graded to the specified thickness of the sod below finish grades. Soil conditioning and fine grading shall be completed before sodding. No heavy equipment shall operate over the site after grading is completed.

    b. The site shall be moist but not wet when sod is laid. Sod shall be laid with closely fitted joints, and the ends of the strips shall be staggered forming a running bond pattern. Openings shall be plugged with sod or topsoil. Within 2 hours after installing sod and before rolling, the sod shall be lightly irrigated. All seams and joints shall then be rolled with a 200-300 lb. water ballast roller until the sod is well bonded to the soil below.

    c. The sodded areas shall then be watered thoroughly to penetrate the subsoil at least 8 inches. Watering shall be repeated as necessary to keep the sod moist until rooted into the subgrade. Sodded areas shall be protected against all traffic until the sod is well established.

2. Turf Repair: All trenches shall be fully compacted, and the grade brought flush with the adjacent undisturbed finish grade. This repair shall include areas of irrigation or other piping trenches, conduit trenches or where vehicles or equipment has damaged the existing turf. Turf repair shall be accomplished using "Method A" hand seeding; or existing sod shall be carefully cut, removed, and reused to re-sod trenches after backfilling and compaction. CONTRACTOR shall use seed/sod to match existing turf type in areas being repaired unless directed otherwise by the ENGINEER.

3.7 TREE STAKING AND GUYING

A. Tree Staking: See planting legend for what type of staking shall be used for each tree type, if any shall be used. Stake trees with 2” diameter x 10’ long lodgepole pine stakes as indicated on the Drawings and details.

1. After planting, all trees shall be re-staked promptly per details.

2. Remove any existing nursery stakes first before installing new lodgepole stakes.

3. All trees in turf areas shall be triple staked unless noted otherwise. Stakes shall be placed in a circular pattern around tree, evenly spaced 1/3 circle apart.

4. All trees in non-turf areas shall be double staked, unless noted otherwise. Align stakes with the direction of strongest seasonal winds.

5. DO NOT drive stakes into the rootball of any newly planted trees.

3.8 MAINTENANCE AND PLANT ESTABLISHMENT

A. General Maintenance: Maintain all areas Inside of work on a continuous basis as they are completed *during the progress of the work and during the plant establishment period*.

1. CONTRACTOR shall maintain the entire area of work until final acceptance of the Contract by the CITY. Maintenance activities shall include continuous operations of picking up trash, watering, weeding (including all broadleaf weeds in lawn areas), mowing, rolling, edging, fertilization, spraying & pest control of insects and rodents, reseeding & plant replacement (irrespective of cause), or any other operations necessary to provide normal healthy plant growth.

2. Any malfunctions of, or damage to the irrigation system due to workmanship or materials or as caused by the CONTRACTOR in the execution of his work shall be repaired by the CONTRACTOR within 24 hours at his own expense. The CONTRACTOR is responsible for keeping all plant material sufficiently watered during any irrigation failures.

B. Plant Establishment Period:

1. The Plant Establishment Period shall be for a minimum period of 90 days unless extended as described in this section. The Plant Establishment Period shall be started when all planting and irrigation related work has been completed in accordance with the contract documents and approved by the PROJECT MANAGER. CONTRACTOR shall request a review of completed work by the PROJECT MANAGER at the appropriate time to determine if the Plant Establishment period may begin. A field notification will be issued to the CONTRACTOR to establish the effective beginning date of the plant establishment period.

2. The designated plant establishment period is part of the total contract time. The plant establishment period will be extended at fourteen (14) day intervals if, at the end of the plant establishment period, the planting, irrigation and other improvements do not reflect the intent of the plans and specifications. All extensions of the plant establishment period shall be subject to the assessment of liquidated damages, (801-6).

3. All lawns shall be of the grass seed or sod specified and shall be free from all broadleaf weeds. The lawn shall not be allowed to grow higher than three (3) inches and shall be mowed to a 1½" - 2" inch height. The lawn shall be mowed at least weekly during the Plant Establishment Period. All lawn areas shall have 95 percent coverage with bare areas not exceeding three square inches at the end of the Plant Establishment Period. 60 days after commencement of Plant Establishment Period, CONTRACTOR shall apply a slow release 38-0-0 granular fertilizer at a rate of 15 pounds per 1000 sq. ft. to all lawn areas and irrigate immediately afterwards. The fertilizer shall be applied in the presence of the BCA Inspector.

4. All trees and shrubs shall be healthy and vigorous in appearance throughout the duration of the Plant Establishment Period. Upon notice from the PROJECT MANAGER, the CONTRACTOR shall replace within seven (7) days of such notice at his own expense, any and all plant materials and/or sod which, for any reason dies or is damaged while under the CONTRACTORS care, or does not meet or exceed the quality of appearance and growth condition at the time of planting. Replacement shall be made with the same plant species and varieties as indicated or specified for the original planting. All replacement plants are subject to the same inspection requirements set forth in these specification for the original plant installation.

5. During the plant establishment period, all damage caused by erosion shall be repaired by the CONTRACTOR at his own expense within three (3) working days.

6. Broken or vandalized tree stakes shall be repaired or replaced by the CONTRACTOR at his own expense within seven (7) days.

7. During the plant establishment period, the irrigation system shall be operated in the automatic mode, unless otherwise permitted by the ENGINEER. No hand watering or manual station operations should be performed without notifying the ENGINEER. CONTRACTOR shall be responsible for setting an appropriate watering schedule for all irrigation zones, such as to provide adequate watering for each plant type, but not so much as to create any wasteful or unhealthful growing conditions. CONTRACTOR shall be responsible for modifying the watering schedule as needed to accommodate changing weather conditions.

C. Final Inspection/Final Acceptance:

1. Upon completion of the plant establishment period, a final inspection for acceptance will be performed by the BCA Inspector and ENGINEER or authorized representative. The CONTRACTOR shall request for inspection at least three (3) working days prior to the anticipated date. For this inspection, the site must be thoroughly cleared of all debris and excess material removed. If work fails to pass final inspection, any subsequent inspection must be rescheduled as per above, and will be charged to the CONTRACTOR.

2. If the plant establishment period is satisfactorily completed ahead of other work included in the Contract, the plants establishment shall be extended and shall be the responsibility of the CONTRACTOR until all other work has been completed and accepted by the CITY.

3.9 GUARANTEE

A. General: All shrubs and ground covers shall be guaranteed for a period of ninety (90) days from the end of the Plant Establishment Period. All trees and shrubs 15-gallon size or larger shall be guaranteed for a period of one (1) year from the end of the Plant Establishment Period. CONTRACTOR shall provide a written guarantee for the above materials as a part of the final close out package.

B. Deficiencies: Should any deficiencies develop within the specified guarantee period, CONTRACTOR shall correct such deficiencies to the full satisfaction of the ENGINEER without added expense to the CITY. All replacement plants shall be subject to a new guarantee for a period as described herein above.

END OF SECTION

SECTION 03100
CONCRETE FORMWORK

PART 1 -- GENERAL

1.1 THE REQUIREMENT

A. The CONTRACTOR shall furnish all materials for concrete formwork, bracing, shoring, and supports and shall design and construct all falsework and scaffolding, all in accordance with the provisions of the Contract Documents.

B. DEFINITIONS

1. Exposed Concrete: All concrete that is visible in the finished work, including concrete to be painted.

2. Unexposed Concrete: All other concrete that is concealed in the finished work, including plastered surfaces and attic and utility spaces.

1.2 RELATED WORK SPECIFIED ELSEWHERE

A. Section 02310 Earthwork.

B. Section 03200 Reinforcement Steel.

C. Section 03250 Concrete Accessories.

D. Section 03300 Cast-in-Place Concrete.

E. Section 03315 Grout.

F. Section 03370 Concrete Curing.

G. Section 07900 Joint Sealants.

1.3 REFERENCE SPECIFICATIONS, CODES, AND STANDARDS

A. Comply with the reference standards and Standard Specifications as specified in the GENERAL REQUIREMENTS.

B. Comply with the current provisions of the following Codes and Standards, as applicable:

1. Government Standards:

PS 1	U.S. Product Standard for Concrete Forms, Class I
PS 20	American Lumber Softwood Standard
CSS	Caltrans Standard Specifications

2. Commercial Standards:

ACI 350.5	Specification for Environmental Structural Concrete
ACI 347R-14	Guide to Formwork for Concrete
ACI 117	Standard Tolerances for Concrete Construction and Materials

1.4 CONTRACTOR SUBMITTALS

A. Submittals shall be made in accordance with the GENERAL REQUIREMENTS.

B. The following submittals and specific information shall be provided.

1. Formwork and shoring Calculations and Drawings: The CONTRACTOR shall comply with all the latest applicable Sections of the Division of Industrial Safety, Construction Safety Orders. In addition, formwork and shoring must be designed, fabricated, erected, supported, braced, and maintained so that it will be capable of supporting without failure all vertical and lateral loads that might be applied to the formwork. Drawings and plans, including all revisions for the jack layout, formwork (including shoring equipment), working decks, and scaffolds, must be available at the jobsite. All shoring equipment (including equipment used in reshoring operations) must be inspected prior to erection to determine that the equipment meets the requirements specified in the formwork drawings. **Plans and Calculations shall be prepared and signed by a Civil Engineer, registered in the State of California.** A copy of the falsework plan or shoring layout shall be available on the job site at all times. The Engineer who designed the formwork or vertical shoring shall personally inspect such work and provide a written certification that the work conforms to the design.

2. The CONTRACTOR shall file with the City detailed plans of the formwork and shoring to be used. Such plans and calculations shall be in sufficient detail to indicate the general layout, pattern layout, dimensioned to precisely locate grooves, form panel jointing, and similar features. The submittal shall also include sizes of members, anticipated stresses, grade of materials to be used, and typical soil conditions.

3. The CONTRACTOR shall provide shop drawings of the following:

   a. Form Release Compound

   b. Form Ties and Spreaders

   c. Pertinent dimensions, openings, details of construction, types of connections, materials, joint arrangement and details, ties and shores, location of framing, studding and bracing, and temporary supports.

   d. Joint Locations

   e. Notes to formwork erector showing size and location of conduits and piping embedded in concrete.

   f. Procedure and schedule for removal of shores and installation and removal of reshores.

   g. Installation Instructions

4. Review of submittals will be for appearance, performance, and strength of completed

structure only. Approval by the Engineer will not relieve Contractor of responsibility for the strength, safety, or correctness of methods used, the adequacy of equipment, or from carrying out the work as shown on Contract Documents.

1.5 QUALITY ASSURANCE

A. Tolerances: The variation from established grade or lines shall be in accordance with ACI 350.5and ACI 117, unless noted otherwise.

B. Laborers: Use adequate number of skilled laborers who are thoroughly trained and experienced in the necessary crafts and who are completely familiar with the specified requirements and the methods needed for proper performance of the work of this Section.

C. Prior to construction of formwork for concrete beams and slabs above grade, Contractor shall conduct a meeting at the site to determine and define all cambers required for the project. ENGINEER, Contractor and Contractor's formwork installer shall be in attendance at this meeting.

D. Engage a licensed surveyor to verify that work is within specified tolerances. Surveyor shall report in writing to the ENGINEER, with copy to Contractor, certifying work as acceptable or indicating deviations from allowable tolerances.

1.6 DELIVERY, STORAGE, AND HANDLING

A. Deliver materials for forms in timely manner to ensure uninterrupted progress.

B. Store materials by methods that prevent damage and permit ready access for inspection and identification.

PART 2 -- PRODUCTS

2.1 GENERAL

A. Except as otherwise expressly accepted by the ENGINEER, all lumber brought on the job site for use as forms, shoring, or bracing shall be new material. All forms shall be smooth surface forms and shall be of the following materials:

Walls	-	Steel or plywood panel
Columns	-	Steel, plywood or fiber glass
Roof, floor, deck and soffit	-	Plywood, Steel Panels
All other work	-	Steel panels, plywood or tongue and groove lumber

2.2 FORM AND FALSEWORK MATERIALS

A. Materials for concrete forms, formwork, and falsework shall conform to the following requirements:

1. Lumber shall be Douglas Fir or Southern Pine, construction grade or better, in conformance with U.S. Product Standard PS20.

2. Plywood for concrete formwork shall be new, waterproof, synthetic resin bonded, exterior type Douglas Fir or Southern Pine plywood manufactured especially for concrete formwork and shall

conform to the requirements of PS 1 for Concrete Forms, Class I, and shall be edge sealed.

3. Form materials shall be metal, wood, plywood, or other material approved by the ENGINEER that will not adversely affect the concrete and will facilitate placement of concrete to the shape, form, line, and grade shown. Metal forms shall be an approved type that will accomplish such results.

   Forms for exposed exterior concrete surfaces shall be American Plywood Association (APA) High Density Overlay (HDO) Plyform Class I Ext. 48" X 96" X 3/4" minimum thickness.

   Forms for other concrete surfaces shall be American Plywood Association (APA) Douglas Fir B-B Plyform Class I Exterior PS 1, 3/4-inch minimum thickness.

4. Tube forms: Sonoco “Seamless Sonotubes”, Alton Building Products “Sleek Seamless Standard Wall”, or equal, type leaving no marks in concrete, 1-piece lengths for full required height.

B. Unless otherwise shown, exterior corners in exposed concrete members shall be provided with 3/4-inch chamfers. Re-entrant corners in concrete members shall not have fillets unless otherwise shown.

C. Forms and falsework to support the roof and elevated floor slabs shall be designed for the total dead load, and a minimum construction live load of 30 psf.

2.3 FORM TIES

A. Form ties with integral waterstops shall be provided with a plastic cone or other suitable means for forming a conical hole to insure that the form tie may be broken off back of the face of the concrete. The maximum diameter of removable cones for rod ties, or of other removable form-tie fasteners having a circular cross-section, shall not exceed 1-1/2-inches; and all such fasteners shall be such as to leave holes of regular shape for reaming.

B. Form ties for water-retaining structures shall have integral waterstops. Alternate form ties consisting of tapered through-bolts at least 1 inch (25 mm) in diameter at smallest end or through-bolts that utilize a removable tapered sleeve of same minimum size may be used. Install in forms so that large end is, where applicable, on liquid or backfilled side of the wall. Clean, fill, and seal form tie hole with rubber plug installed from the liquid or backfilled side and non-shrink cement grout to provide watertight form tie holes. Make repairs needed to make watertight.

2.4. FORM RELEASE COMPOUND

A. Form release compound shall be water based, non-staining clear coating free from oil, bond-breaking form coating, and not grain-raising. Provide form release compound that is VOC compliant for the area used.

2.5 EARTH FORMS

Unless otherwise approved by ENGINEER concrete for footings may NOT be placed directly against vertical excavated surfaces.

PART 3 -- EXECUTION

3.1 GENERAL

A. Erect formwork, shoring and bracing according to ACI 350.5. Forms to confine the concrete and shape it to the required lines shall be used wherever necessary. The CONTRACTOR shall assume full responsibility for the adequate design of all forms, and any forms which are unsafe or inadequate in any respect shall promptly be removed from the WORK and replaced at the CONTRACTOR's expense. A sufficient number of forms of each kind shall be provided to permit the required rate of progress to be maintained. The design and inspection of concrete forms, falsework, and shoring shall comply with applicable local, state and Federal regulations. Plumb and string lines shall be properly installed before concrete placement and shall be maintained during placement. Such lines shall be used by CONTRACTOR's personnel and by the INSPECTOR and shall be in sufficient number and properly installed. During concrete placement, the CONTRACTOR shall continually monitor plumb and string line form positions and immediately correct deficiencies.

B. Concrete forms shall conform to the shape, lines, and dimensions of members as called for on the Drawings, and shall be substantial, free from surface defects, and sufficiently tight to prevent leakage. Forms shall be properly braced or tied together to maintain their position and shape under a load of freshly-placed concrete. If adequate foundation for shores cannot be secured, trussed supports shall be provided.

C. Camber: Place suitable jacks, wedges, or similar means to induce camber and to correct settlement in forms before and during concrete placing. Camber shall be as determined in pre-installation meeting specified above. In general, formwork shall be capable of accommodating camber of 1/8" per 10' of span plus 1/4".

3.2 FORM DESIGN

A. All forms shall be true in every respect to the required shape and size, shall conform to the established alignment and grade, and shall be of sufficient strength and rigidity to maintain their position and shape under the loads and operations incident to placing and vibrating the concrete. Suitable and effective means shall be provided on all forms for holding adjacent edges and ends of panels and sections tightly together and in accurate alignment so as to prevent the formation of ridges, fins, offsets, or similar surface defects in the finished concrete. Plywood, 3/4-inch and greater in thickness, may be fastened directly to studding if the studs are spaced close enough to prevent visible deflection marks in the concrete. The forms shall be tight so as to prevent the loss of water, cement and fines during placing and vibrating of the concrete. Specifically, the bottom of wall forms that rest on concrete footings or slabs shall be provided with a gasket to prevent loss of fines and paste during placement and vibration of concrete. Such gasket may be a 1- to 1-1/2-inch diameter polyethylene rod held in position to the underside of the wall form. Forms shall be cleaned of debris prior to concrete placement.

B. Actual form design shall conform to ACI 347R-14.

C. For concrete mixes characterized as self-consolidating concrete, high performance concrete, or known to contain components that can potentially extend the plastic state of the concrete, the forms shall be designed to sustain the resulting hydrostatic pressure for the total pour height or pressure head for that day of pour, whichever is more. For such mixes, appropriate set-time tests shall be conducted in preparation of the mix design and this information made available to the form designer.

3.3 CONSTRUCTION

A. Vertical Surfaces: All vertical surfaces of concrete members shall be formed.

B. Construction Joints: Concrete construction joints will not be permitted at locations other than those shown or specified, except as may be acceptable to the ENGINEER. When a second lift is placed on hardened concrete, special precautions shall be taken in the way of the number, location, and tightening of ties at the top of the old lift and bottom of the new to prevent any unsatisfactory effect whatsoever on the concrete. Pipe stubs and anchor bolts shall be set in the forms where required.

C. Provide for openings, offsets, keyways, recesses, moldings, reglets, chamfers, blocking, screeds, bulkheads, anchorages, inserts and other features as required. Fill form joints to produce smooth surfaces, intersections, and arrises. Use polymer foam or equivalent fillers at joints and where forms abut or overlap existing concrete to prevent leakage of mortar.

D. Set embedded piping and rough hardware in forms to be embedded in concrete in a manner so that the required strength of the structure will not be reduced. Do not cut any reinforcement.

D. Apply form release compound on formwork in accordance with manufacturer's instructions prior to placing of reinforcing steel, anchorages, and embedded items.

E. Construct forms suitable for removal without hammering or prying against and damaging the concrete.

F. Openings in Forms: Provide as required to facilitate cleaning and inspection. Close such openings immediately after cleaning and before placement of concrete. Provide air relief holes in formed top surfaces of concrete elements as required.

H. Form Ties:

1. Embedded Ties: Holes left by the removal of form tie cones shall be clean and rough before being filled with mortar as specified for "Finish of Concrete Surfaces" in Section 03300, "Cast-in-Place Concrete". Wire ties for holding forms will not be permitted. No form-tying device or part thereof, other than metal, shall be left embedded in the concrete. Ties shall not be removed in such manner as to leave a hole extending through the interior of the concrete members. The use of snap-ties which cause spalling of the concrete upon form stripping or tie removal will not be permitted. If steel panel forms are used, rubber grommets shall be provided where the ties pass through the form in order to prevent loss of cement paste. Where metal rods extending through the concrete are used to support or to strengthen forms, the rods shall remain embedded and shall terminate not less than 1-inch back from the formed face or faces of the concrete.

2. Removable Ties: Where taper ties are approved for use in non water bearing structures, the larger end of the taper tie shall be on the wet side of walls in water retaining structures. After the taper tie is removed, the hole shall be thoroughly cleaned and roughened for bond. A precast neoprene or polyurethane tapered plug shall be located at the wall centerline. The hole shall be completely filled with non-shrink grout for water bearing and below-grade walls. The hole shall be completely filled with non-shrink or regular cement grout for above-grade walls which are dry on both sides. Exposed faces of walls shall have the outer 2-inches of the exposed face filled with a cement grout which shall match the color and texture of the surrounding wall surface.

I. Coordination:

1. Provide slots, openings, chases, recesses, grounds, nailers and screeds required by other trades and subsequent work.

2. Ensure that conduit, pipes, sleeves, anchors, hangers and ties are secured in forms before

concrete is placed.

3.4 REUSE OF FORMS

Forms may be reused only if in good condition and only if acceptable to the INSPECTOR. Light sanding between uses will be required wherever necessary to obtain uniform surface texture on all exposed concrete surfaces. Exposed concrete surfaces are defined as surfaces which are permanently exposed to view. In the case of forms for the inside wall surfaces of water retaining structures, unused tie rod holes in forms shall be covered with metal caps or shall be filled by other methods acceptable to the INSPECTOR.

3.5 REMOVAL OF FORMS

Careful procedures for the removal of forms shall be strictly followed, and this work shall be done with care so as to avoid damage the concrete. No heavy loading on green concrete will be permitted.

1. Do not remove formwork until concrete has attained sufficient strength to support its own weight and all superimposed loads including construction loads and to permit form and falsework removal with complete safety.

2. In the case of concrete members subject to bending stresses, where the member relies upon forms for vertical support, forms shall remain in place until test cylinders attain a minimum comprehensive strength of 75 percent of the 28-day strength specified in Section 03300, "Cast in-Place Concrete", provided, that no forms shall be disturbed or removed under individual panel or unit before the concrete in the adjacent panel or unit has attained 75 percent of the specified 28-day strength and has been in place for a minimum of 7 days.

3. Forms for roofs and elevated slabs shall remain in place a minimum of 10 days after concrete has been placed.

4. Forms for all vertical walls and columns shall remain in place at least 3 days after the concrete has been placed.

5. Formwork removal shall also be subject to the curing requirements of section 3370 of these specifications and as authorized by the ENGINEER.

6. Reshore structural members as specified below because of design requirements or construction conditions to permit successive construction.

The time required to establish concrete strength shall be determined by the ENGINEER based on test cylinders made for this purpose from the concrete placed and in accordance with ACI 301 and the curing requirements of section 3300. If the time so determined is more than the minimum time specified above, then that time shall be used as the minimum length of time. Forms for all parts of the WORK not specifically mentioned herein shall remain in place for periods of time as determined by the ENGINEER.

3.6 FORMWORK TOLERANCES

A. Deflection: Limit deflection of forming surfaces from concrete pressure to L/240.

B. Finish Lines: Position formwork to maintain hardened concrete finish lines within following permissible deviations.

1. Variation from Plumb:

In 10'-0"	1/4” max.
In any story or 20'-0"	3/8” max.
In 40'-0" or more	3/4” max.

2. Variation from Level or Grades Indicated

In 10'-0"	1/4” max.
In any bay or 20'-0" maximum	3/8”
In 40'-0" or more	3/4” max.

C. Building Lines: Variation of linear building lines from established position in plan and related position of columns, walls and partitions:

1. In any bay or 10'-0" maximum	1/2”
2. In 40'-0" or more	1”

D. Slab Openings: Variations in size and location of sleeves and slab openings shall not exceed 1/4”.

3.7 MAINTENANCE OF FORMS

Forms shall be maintained at all times in good condition, particularly as to size, shape, strength, rigidity, tightness, and smoothness of surface. Forms, when in place, shall conform to the established alignment and grades. Before concrete is placed, the forms shall be thoroughly cleaned. The form surfaces shall be treated with a nonstaining mineral oil or other lubricant acceptable to the ENGINEER. Any excess lubricant shall be satisfactorily removed before placing the concrete. Where field oiling of forms is required, the CONTRACTOR shall perform the oiling at least two weeks in advance of their use. Care shall be exercised to keep oil off the surfaces of steel reinforcement and other metal items to be embedded in concrete.

3.8 FALSEWORK

A. The CONTRACTOR shall be responsible for the design, engineering, construction, maintenance, and safety of all falsework, including staging, walkways, forms, ladders, and similar appurtenances, which shall equal or exceed the applicable requirements of the provisions of the OSHA Safety and Health Standards for Construction, the requirements of the Construction Safety Orders of the California Division of Industrial Safety, and the requirements specified herein.

B. All falsework shall be designed and constructed to provide the necessary rigidity and to support the loads. Falsework for the support of a superstructure shall be designed to support the loads that would be imposed if the entire superstructure were placed at one time.

C. Falsework shall be placed upon a solid footing, safe against undermining, and protected from softening. When the falsework is supported on timber piles, the maximum calculated pile loading shall not exceed 20 tons. When falsework is supported on any portion of the structure which is already constructed, the load imposed by the falsework shall be spread, distributed, and braced in such a way as to avoid any possibility of damage to the structure.

D. Reshoring:

1. Minimum reshoring with falsework shall consist of not less than half the full required falsework added under the last placed floor over which full falsework is to be placed for the next floor above. Leave reshoring in place for at least 10 days after the floor above is placed, but in no case remove falsework until the next concrete placing has attained a compressive strength equal to 75% of that required for the 28 days age as determined by controlled test cylinders.

2. Maintain a form and falsework removal record.

END OF SECTION

SECTION 03200
REINFORCEMENT STEEL

PART 1 -- GENERAL

1.1 THE REQUIREMENT

A. The CONTRACTOR shall furnish, fabricate, and place all concrete reinforcement steel, welded wire fabric, couplers, and concrete inserts for use in reinforced concrete and masonry construction and shall perform all appurtenant work, including all the wires, clips, supports, chairs, spacers, and other accessories, all in accordance with the Contract Documents.

1.2 RELATED WORK SPECIFIED ELSEWHERE

A. Section 03100 Concrete Formwork.

B. Section 03250 Concrete Accessories.

C. Section 03300 Cast-in-Place Concrete.

1.3 REFERENCE SPECIFICATIONS, CODES, AND STANDARDS

A. Comply with the reference standards of the GENERAL REQUIREMENTS.

B. Comply with the current provisions of the following Codes and Standards, as applicable:

1. Commercial Standards:

ACI 350.5	Specification for Environmental Structural Concrete
ACI 315	Details and Detailing of Concrete Reinforcement.
ACI 318	Building Code Requirements for Reinforced Concrete.
ACI 350	Code Requirements for Environmental Engineering Concrete Structures.
ACI 530	Building Code Requirements & Specifications for Masonry Structures
WRI	Manual of Standard Practice for Welded Wire Fabric.
AWS D1.4	Structural Welding Code - Reinforcing Steel.
ASTM A 82	Specification for Steel Wire, Plain, for Concrete Reinforcement.
ASTM A 1064	Specification for Carbon-Steel Wire and Welded Wire Reinforcement.
ASTM A 615	Specification for Deformed and Plain Billet-Steel Bars for Concrete Reinforcement.
ASTM A 706	Low-alloy Deformed Steel Bars for Concrete Reinforcement
CRSI	Manual of Standard Practice
CRSI	Recommended Practice for Placing Bar Supports, Specifications and Nomenclature

1.4 CONTRACTOR SUBMITTALS

A. Submittals shall be made in accordance with the GENERAL REQUIREMENTS (GR).

B. Buy Clean California Act.

a. For project specifications that include GR Section 1601, Buy Clean California Act, bidders shall submit current Environmental Product Declarations (EPDs) for each type of reinforcing steel material (A615, A706) from the originating mill used in the project as well as corresponding mill certifications. When material comes from different mills, an EPD and mill certification will be required for each mill from which the material has been obtained.

b. An EPD must conform to the following:
   1) Shall be facility-specific manufacturer/mill EPD.
   2) Be independently verified in accordance with ISO 14025 (Type III).
   3) Be developed according to the guidelines of the applicable Product Category Rule (PCR), as identified by the Department of General Services, State of California.
   4) Have a valid date that has not expired.
   5) Shall not exceed the Global Warming Potential (GWP) limit as required by GR Section 1601.

c. EPD shall be submitted concurrently with the product's submittal for review and approval.

d. Specified epoxy-coated or other specified coated reinforcing steel are exempt from having an associated EPD.

C. The following submittals and specific information shall be provided.

1. The CONTRACTOR shall furnish shop bending diagrams, placing lists, splice lengths and location, and drawings of all reinforcement steel prior to fabrication.

2. Details of the concrete reinforcement steel and concrete inserts shall be submitted by the CONTRACTOR at the earliest possible date after receipt by the CONTRACTOR of the Notice to Proceed. Details of reinforcement steel for fabrication and erection shall conform to ACI 315 and the requirements specified and shown. The shop bending diagrams shall show the actual lengths of bars, to the nearest inch measured to the intersection of the extensions (tangents for bars of circular cross section) of the outside surface. The shop drawings shall include bar placement diagrams which clearly indicate the dimensions of each bar splice.

3. Where mechanical couplers are required or permitted to splice reinforcement steel, the CONTRACTOR shall submit Los Angeles City Department of Building and Safety's Research Report approval and manufacturer's literature which contains instructions and recommendations for installation for each type of coupler used; certified test reports which verify the load capacity of each type and size of coupler used; and shop drawings which show the location of each coupler with details of how it is to be installed in the formwork.

4. If reinforcement steel is required or permitted to be spliced by welding at any location, the CONTRACTOR shall submit mill test reports which shall contain the information necessary for the determination of the carbon equivalent as specified in AWS D1.4. The CONTRACTOR shall submit a written welding procedure for each type of weld for each size of bar which is to be spliced by welding; merely a statement that AWS procedures will be followed is not acceptable.

1.5 QUALITY ASSURANCE

A. The CONTRACTOR shall make provisions for sampling reinforcing steel delivered to the job site. Two sampling bars, cut from different bars and 3 feet in length for bar sizes # 3 through # 5 and 5 feet in length for bars sizes # 6 and larger, shall be taken from each 25 tons or fraction thereof, of each size and heat number delivered to the job site. When the name of the manufacturer, heat identification number, or chemical analysis is not known, the sampling interval shall be each 2.5 tons or fraction thereof, of each bar size and heat number. Tests shall consist of 2 bent tests and 2 tensile tests. Costs of initial tests will be paid by the CITY. Additional tests due to material failing initial tests shall be paid by the CONTRACTOR.

B. If reinforcement steel is welded at any location, the CONTRACTOR shall submit certifications of procedure qualifications for each welding procedure used and certification of welder qualifications, for each welding procedure, and for each welder performing the work. Such certification and qualifications shall be as required by the Los Angeles Department of Building and Safety.

C. The CONTRACTOR shall provide samples of each type of weld used in the work in a quantity and of dimensions adequate for testing. At the discretion of the INSPECTOR, radiographic testing of direct butt welds will be performed. The CONTRACTOR shall provide assistance necessary to facilitate testing. The CONTRACTOR shall repair any weld which fails to meet the requirements of AWS D1.4. The costs of testing will be paid by the CITY; except, the costs of all tests which fail to meet specified requirements shall be paid by the CONTRACTOR.

D. The CONTRACTOR shall provide to the INSPECTOR written identification of reinforcement steel by manufacturer's heat number and mil certification, and the fabricator's release number and type from the point of fabrication to the place of final incorporation of the rebar into the work.

1.6 MARKING AND SHIPPING

A. Tag bundled bars with identification, and transport and store so as not to damage any material. Use metal tags indicating size, length and other marking shown on placement drawings. Maintain tags after bundles are broken.

PART 2 -- PRODUCTS

2.1 REINFORCEMENT STEEL

A. All reinforcement steel for all cast-in-place reinforced concrete construction shall conform to the following requirements:

1. Bar reinforcement shall conform to the requirements of ASTM A615, Grade 60 Billet Steel Reinforcement with supplementary requirement S-1, and ASTM A706 for rebars subject to welding, or as otherwise shown.

2. Bar reinforcement for wall boundary elements, special moment frames, or when subject to welding, shall conform to ASTM A706, unless noted otherwise.

3. Welded wire fabric reinforcement shall conform to the requirements of ASTM A1064 and the details shown; provided, that welded wire fabric with longitudinal wire of W9.5 size wire shall be either furnished in flat sheets or in rolls with a core diameter of not less than 10 inches; and provided further, that welded wire fabric with longitudinal wires larger than W9.5 size shall be furnished in flat sheets only.

4. Spiral reinforcement may be cold-drawn steel wire conforming to the requirements of ASTM

A82, when approved by the ENGINEER.

5. All reinforcements shall be shop fabricated. Bending of reinforcing in the field will not be allowed.

7. Reinforcement with any of the following defects will not be acceptable and be immediately removed from the site:

   a. Bar lengths, depths, and/or bends exceeding the specified fabrication tolerances.

   b. Bends or kinks not shown on the Drawings

   c. Bars with reduced cross-section due to excessive rusting or other cause.

B. Accessories:

1. Accessories shall include all necessary chairs, slab bolsters, concrete blocks, tie wires, dips, supports, spacers, and other devices to position reinforcement during concrete placement. Slab bolsters shall have gray plastic-coated legs.

2. Concrete blocks (dobies), used to support and position reinforcement steel, shall have the same or higher compressive strength as specified for the concrete in which it is located. Where the concrete blocks are used on concrete surfaces exposed to view, the color and texture of the concrete blocks shall match that required for the finished surface. Wire ties shall be embedded in concrete block bar supports.

3. Use bar supports complying with CRSI recommendations, unless otherwise shown on the Contract Drawings.

4. Do not use wood, brick, or other non-complying material.

5. For slabs on grade, use supports with sand plates or horizontal runners where base material will not support chair legs.

6. For exposed-to-view completed concrete surfaces, where legs of supports are in contact with forms, provide supports with either hot-dip galvanized or plastic-protected legs. CONTRACTOR's selection subject to the ENGINEER's approval.

2.2 MECHANICAL COUPLERS

A. Mechanical couplers shall comply with the applicable Department of Building and Safety's Research Report. Location of the Mechanical Couplers shall be approved by the ENGINEER. The couplers shall develop a tensile strength which exceeds 125 percent of the yield strength of the reinforcement bars being spliced at each splice. CONTRACTOR to provide the required number of couplers and bars for testing in accordance with the Report

B. Where the type of coupler used is composed of more than one component, all components required for a complete splice shall be supplied. This shall apply to all mechanical splices, including those splices intended for future connections.

C. The reinforcement steel and coupler used shall be compatible for obtaining the required strength of the connection. Clearance and coverage requirements shall be maintained at all times.

D. Couplers which are located at a joint face shall be a type which can be set either flush or recessed from the face as shown. The couplers shall be sealed during concrete placement to completely eliminate concrete or cement paste from entering. After the concrete is placed, couplers intended for future connections shall be plugged and sealed to prevent any contact with water or other corrosive materials. Threaded couplers shall be plugged with plastic plugs which have an O-ring seal.

E. Hot-forged sleeve-type couplers shall not be used.

2.3 WELDED SPLICES

A. Welded splices shall be provided where shown and where approved by the ENGINEER. All welded splices of reinforcement steel shall develop a tensile strength which exceeds 125 percent of the yield strength of the reinforcement bars which are connected. Provide two samples of each bar size for testing. When welding is to be done in the field, provide field prepared samples. Preparation shall be made by welder actually preparing the production run.

B. All materials required to conform the welded splices to the requirements of AWS D1.4 shall be provided.

C. All welding shall be performed by City of Los Angeles certified welders. All shop welding shall be performed at shops of a City of Los Angeles approved fabricator.

PART 3 -- EXECUTION

3.1 GENERAL

A. All reinforcement steel, welded wire fabric, couplers, and accessories shall be fabricated, and placed in accordance with the requirements of the City of Los Angeles Building Code, CRSI Recommended Practices and Manual, and WRI, and the supplementary requirements specified herein.

3.2 FABRICATION

A. General: Reinforcement steel shall be accurately formed to the dimensions and shapes shown, and the fabricating details shall be prepared in accordance with ACI 315, ACI 117 and ACI 350.5 (as applicable), except as modified by the Drawings. Bars shall be bent cold.

B. The CONTRACTOR shall fabricate reinforcement bars for structures in accordance with bending diagrams, placing lists, and placing drawings. Said drawings, diagrams, and lists shall be prepared by the CONTRACTOR as specified under GENERAL REQUIREMENTS.

C. Fabricating Tolerances: Bars used for concrete reinforcement shall meet the following requirements for fabricating tolerances:

1. Sheared length: ± 1 inch

2. Depth of truss bars: + 0, - 1/2 inch

3. Stirrups, ties, and spirals: ± 1/2 inch

4. All other bends: ± 1 inch

3.3 PLACING

A. Placing: Reinforcement steel shall be accurately positioned as shown and shall be supported and wired together to prevent displacement, using annealed iron wire ties or suitable clips at intersections. All reinforcement steel shall be supported using approved accessories and chairs which are strong and rigid enough to prevent any displacement of the reinforcement steel and shall comply with the applicable Department of Building and Safety's Research Report. Where concrete is to be placed on the ground, supporting concrete blocks (or dobies) shall be used, in sufficient

numbers to support the bars without settlement, but in no case shall such support be continuous. All concrete blocks used to support reinforcement steel shall be tied to the steel with wire ties which are embedded in the blocks. Use care not to damage vapor barriers where they occur.

B. The portions of all accessories in contact with the formwork shall be made of concrete, plastic, or steel coated with a 1/8-inch minimum thickness of plastic which extends at least 1/2-inch from the concrete surface. Plastic shall be gray in color.

C. Tie wires shall be bent away from the forms in order to provide the specified concrete coverage.

D. Bars additional to those shown which may be found necessary or desirable by the CONTRACTOR for the purpose of securing reinforcement in position shall be provided by the CONTRACTOR at its own expense.

E. Placing Tolerances: Unless otherwise specified, reinforcement placing tolerances shall be within the limits specified in ACI 117 except where in conflict with the requirements of the City of Los Angeles Building Code.

F. Bars may be moved as necessary to avoid interference with other reinforcement steel, conduits, or embedded items. If bars are moved more than one bar diameter, or enough to exceed the above tolerances, the resulting arrangement of bars shall be reviewed and accepted by the ENGINEER.

G. Welded wire fabric reinforcement placed over horizontal forms shall be supported on slab bolsters having gray, plastic-coated standard type legs as specified in Paragraph B herein. Slab bolsters shall be spaced not less than 30 inches on centers, shall extend continuously across the entire width of the reinforcement mat, and shall support the reinforcement mat in the plane shown.

H. Welded wire fabric placed over the ground shall be supported on wired concrete blocks (dobies) spaced not more than 3 feet on centers in any direction. The construction practice of placing welded wire fabric on the ground and hooking into place in the freshly placed concrete shall not be used.

3.4 SPACING OF BARS

A. Spacing of reinforcement shall comply with ACI 350.5 requirements.

3.5 SPLICING

A. General: Reinforcement bar splices shall only be used at locations shown. When it is necessary to splice reinforcement at points other than where shown, the character of the splice and location shall be as acceptable to the ENGINEER.

B. Splices of Reinforcement: The length of lap for reinforcement bars per standard details on structural drawings. Stagger splices in horizontal wall bars at least 48” longitudinal in alternate bars and opposite faces.

C. Splices in column spiral reinforcement, when necessary, shall be made by welding or by a lap of 1-1/2 turns.

D. Field welding of bars: In accordance with the approved submittal. Continuous inspection required.

E. Mechanical couplers: Install in accordance with the approved submittal.

F. Bending or Straightening: Reinforcement shall not be straightened or rebent in a manner which will injure the material. Bars with kinks or bends not shown shall not be used. All bars shall be bent cold, unless otherwise permitted by the ENGINEER. No bars partially embedded in concrete shall be field-bent except as shown or specifically permitted by the ENGINEER.

3.6 CLEANING AND PROTECTION

The surfaces of all reinforcement steel and other metalwork to be in contact with concrete shall be thoroughly cleaned of all dirt, grease, loose scale and rust, grout, mortar and other foreign substances immediately before the concrete is placed. Where there is delay in depositing concrete, reinforcement shall be reinspected and, if necessary recleaned. Bars with reduced cross-section due to excessive rusting or other cause will not be acceptable for use and shall be replaced by the CONTRACTOR at no additional cost to the CITY.

3.7 FIELD QUALITY CONTROL

A. Inspection: Secure inspection and acceptance from INSPECTOR before concrete is placed. Make arrangements in advance for geotechnical inspection of foundations, continuous inspection as required, and/or structural observation by the designated registered design professional prior to concrete placement.

END OF SECTION

SECTION 03250
CONCRETE ACCESSORIES

PART 1 -- GENERAL

1.1 THE REQUIREMENT

A. The CONTRACTOR shall furnish all tools, equipment, materials, and supplies to install all concrete accessories to complete the Work including cast-in-place anchor bolts (also known as anchor rods), epoxy grouted anchor bolts or dowels and, expansion or adhesive anchors, in accordance with the requirements of the Contract Documents.

1.2 RELATED WORK SPECIFIED ELSEWHERE

A. Section 03300 Cast-in-Place Concrete.

B. Section 03315 Grout.

1.3 REFERENCE SPECIFICATIONS, CODES, AND STANDARDS

A. Comply with the reference standards and Standard Specifications of the GENERAL REQUIREMENTS.

B. Comply with the current provisions of the following Codes and Standards, as applicable.

1. Commercial Standards:

AISC Code of Standard Practice for Steel Buildings and Bridges

AISC Specifications for the Design, Fabrication and Erection of Structural Steel for Buildings

ASTM A 36	Specifications for Carbon Structural Steel
ASTM A 153	Specifications for Zinc Coating (Hot Dip) on Iron and Steel Hardware
ASTM A 193	Specifications for Alloy-Steel and Stainless Steel Bolting Materials for High-Temperature Service
ASTM A 194	Specifications for Carbon and Alloy Steel Nuts for Bolts for High-Pressure and High-Temperature Service
ASTM A 307	Specifications for Carbon Steel Bolts and Studs, 60,000 PSI Tensile Strength
ASTM A 449	Specifications for Quenched and Tempered Steel Bolts and Studs
ASTM A 615	Specifications for Deformed and Plain Billet-Steel Bars for Concrete Reinforcement
ASTM B 633	Specifications for Electrodeposited Coatings of Zinc on Iron and Steel

ASTM B 695	Specifications for Coatings of Zinc Mechanically Deposited on Iron and Steel
ASTM F 436	Specifications for Hardened Steel Washers
ASTM F 1554	Standard Specification for Anchor Bolts, Steel, 36, 55, and 105-ksi Yield Strength

1.4 CONTRACTOR SUBMITTALS

A. Submittals shall be made in accordance with the GENERAL REQUIREMENTS.

B. The following submittals and specific information shall be provided.

1. High Strength Anchor Bolts: The CONTRACTOR shall provide mill certificates and certified compliance with ASTM [F 1554; A 449 with F 436].

2. The CONTRACTOR shall submit shop drawings for all welded or fabricated items for use as anchors.

3. The CONTRACTOR shall submit catalog cuts and manufacturer's recommendations, with applicable City of Los Angeles Research Reports, for all expansion and adhesive anchors, and anti-seize thread lubricants.

PART 2 -- PRODUCTS

2.1 GENERAL

A. Anchor Size: Anchor size shall be as specified or shown on plans.

B. Anchor Material:

1. Water-containment or sanitary structures, immersion service, or exposed exterior locations: Stainless steel.

2. Other locations: Galvanized steel as permitted by the corresponding ASTM except as listed in the contract drawings.

C. Anchor Length: Sufficient to extend through the nut(s) and not more than 1/4 inch beyond the nut when exposed while meeting the required embedment as indicated on the contract drawings or as required by the associated Los Angeles Department of Building and Safety's Research Report.

2.2 ANCHOR GRADES

A. Anchor Bolts and Nuts:

1. High Strength: ASTM F 1554 Grade 105, galvanized. Provide with corresponding galvanized hardened washers.

2. Stainless steel: ASTM A 193 and A 194, Type 316N, Grade 8MN.

3. Unspecified: ASTM F 1554 Grade 36, galvanized.

4. Galvanizing: Hot dipped as required per ASTM F 1554 When protected from the atmosphere, moisture and sewage gases, ASTM B 695 is also acceptable.

5. Other Coatings: As specified in the contract drawings.

B. Flat Washers: Same material and finish as nut and bolt. For high strength bolts, use ASTM F 1554.

C. Anti-Seize Thread Lubricant for use with stainless steel anchors:

1. Jet-Lube "Nikal"
2. Never-Seez "Pure Nickel Special"
3. Permatex "Nickel Anti-Seize"
4. Or an approved equal.

D. Reinforcing Steel Dowels: ASTM A 615, Grade 60. Same diameter as spliced rebar, or #4 minimum.

E. Expansion and Adhesive Anchors: Use only anchor types and styles with Research Report approval by the Los Angeles Department of Building and Safety.

1. Simpson Strong-tie “Strong-Bolt 2”
2. Hilti "Kwik-Bolt TZ"
3. Or an approved equal.

PART 3 -- EXECUTION

3.1 PROJECT CONDITIONS

A. Examine the areas and conditions under which the work will be performed. Correct conditions detrimental to timely and proper completion of the Work. Do not proceed until detrimental conditions are corrected.

3.2 CAST-IN-PLACE ANCHOR BOLTS

A. Provide templates or other means to ensure accurate placement. Provide sufficient threads to allow for a nut to be placed on the concrete side of the template.

B. Anchor bolts shall be clean and free of all coatings which may impair bonding with concrete.

C. Provide two nuts and a washer with each anchor bolt. Provide an additional locknut when indicated on the Drawings.

D. High Strength Bolts: Install such that ASTM Grade markings are visible after casting into concrete.

3.3 EPOXY-GROUTED ANCHOR BOLTS OR DOWELS

A. Provide templates or other means to ensure accurate placement.

B. Anchor bolts or dowels shall be clean and free of all coatings which may impair bonding with epoxy.

C. Provide two nuts and a washer with each anchor bolt. Provide an additional locknut when indicated on the Drawings.

D. High Strength Bolts: Install such that ASTM Grade markings are visible after casting into concrete.

E. Do not disturb bolt or dowel until epoxy grout has cured and reached full strength.

3.4 EXPANSION AND ADHESIVE ANCHORS: Install per Los Angeles Department of Building and Safety Approved Research Report and manufacturer's recommendations, whichever is more restrictive. Provide nuts and washers of same material and finish as anchor body.

3.5 STAINLESS STEEL ANCHORS. After installation of stainless steel anchor bolts or expansion anchors, lubricate threads before fastening.

END OF SECTION

SECTION 03290
JOINTS IN CONCRETE

PART 1 -- GENERAL

1.1 THE REQUIREMENT

A. The CONTRACTOR shall construct all joints and bearing pads in concrete at the locations shown. Joints required in concrete structures are of various types and will be permitted only where shown, unless specifically accepted by the ENGINEER.

1.2 RELATED WORK SPECIFIED ELSEWHERE

A. Section 03100 Concrete Formwork.

B. Section 03200 Reinforcement Steel.

C. Section 03300 Cast-in-Place Concrete.

D. Section 07900 Joint Sealants.

1.3 REFERENCE SPECIFICATIONS, CODES, AND STANDARDS

A. Comply with the reference standards of the GENERAL REQUIREMENTS.

B. Comply with the current provisions of the following Codes and Standards, as applicable:

1. Federal Specifications:

TT-S-0227E(3)	Sealing Compound, elastomeric type, Multi-component for Caulking, Sealing, and Glazing Buildings and Other Structures).

2. U.S. Army Corps of Engineers Specifications:

CRD-C572	Corps of Engineers Specification for Polyvinylchloride Waterstop

3. Other Government Standards:

CSS	Caltrans Standard Specifications.

4. Commercial Standards:

ASTM C 920	Standard Specification for Elastomeric Joint Sealants.
ASTM D 624	Standard Test Method for Tear Strength of Conventional Vulcanized Rubber and Thermoplastic Elastomers.
ASTM D 638	Standard Test Method for Tensile Properties of Plastics.
ASTM D 746	Standard Test Method for Brittleness Temperature of Plastics and Elastomers by Impact.

ASTM D 1751	Standard Specification for Preformed Expansion Joint Filler for Concrete Paving and Structural Construction (Nonextruding and Resilient Bituminous Types).
ASTM D 1752	Standard Specification for Preformed Sponge Rubber, Cork and Recycled PVC Expansion Joint Fillers for Concrete Paving and Structural Construction.
ASTM D 2240	Test Method for Rubber Property -- Durometer Hardness.

1.4 TYPES OF JOINTS

A. Construction Joints: When fresh concrete is placed against a hardened concrete surface, the joint between the two pours is called a construction joint. Unless otherwise specified, all joints in water bearing members shall be provided with a waterstop and sealant groove of the shape specified and as shown on the plans.

B. Control Joints (Weakened Plane): The function of the control joint is to provide a weaker plane in the concrete, where shrinkage cracks will probably occur. A groove, of the shape and dimensions as shown on the plans, is formed or saw-cut in the concrete and shall be filled with a joint sealant material as specified in the Paragraph in Part 2 entitled "Joint Sealant."

1.4 CONTRACTOR SUBMITTALS

A. Submittals shall be made in accordance with GENERAL REQUIREMENTS.

B. The following submittals and specific information shall be provided.

1. Waterstops: Prior to use of the material required under this contract, qualification samples shall be submitted. Such samples shall consist of extruded or molded sections of each size or shape to be used. The material sample shall be representative of the material to be furnished under this contract. The balance of the material to be used under this contract shall not be produced until after the ENGINEER has reviewed and approved the qualification samples.

2. Joint Sealant: Prior to ordering the sealant material, the CONTRACTOR shall submit to the ENGINEER for review and approval, data to show compliance with the requirements of the Contract Documents. Certified test reports from the sealant manufacturer on the actual batch of material being supplied indicating compliance with the above requirements shall be furnished the ENGINEER before the sealant is used on the job.

3. Shipping Certification: The CONTRACTOR shall provide written certification from the manufacturer as an integral part of the shipping form, to show that all of the material shipped to this project meets or exceeds the physical property requirements of the Contract Documents. Supplier certificates are not acceptable.

4. The CONTRACTOR shall submit placement shop drawings showing the location and type of all joints for each structure.

1.5 QUALITY ASSURANCE

A. Waterstop manufacturer shall demonstrate five years (minimum) continuous, successful experience in production of waterstops.

B. Waterstop Inspection: It is required that all waterstop field joints shall be subject to inspection, and no such work shall be scheduled or started without having made prior arrangements with the INSPECTOR to provide for the required inspections. Not less than 24 hours notice shall be provided to the INSPECTOR for scheduling such inspections.

C. All field joints in waterstops shall be free of misalignment, bubbles, inadequate bond, porosity, cracks, offsets, and other defects which would reduce the potential resistance of the material to water pressure at any point. All defective joints shall be replaced with material which shall pass said inspection, and all faulty material shall be removed from the site and disposed of by the CONTRACTOR at its own expense.

D. The following waterstop defects represent a partial list of defects which shall be grounds for rejection:

1. Offsets at joints greater than 1/16-inch or 15 percent of material thickness, at any point, whichever is less.

2. Exterior crack at joint, due to incomplete bond, which is deeper than 1/16-inch or 15 percent of material thickness, at any point, whichever is less.

3. Any combination of offset or exterior crack which will result in a net reduction in the cross section of the waterstop in excess of 1/16-inch or 15 percent of material thickness at any point, whichever is less.

4. Misalignment of joint which result in misalignment of the waterstop in excess of 1/2-inch in 10 feet.

5. Porosity in the welded joint as evidenced by visual inspection.

6. Bubbles or inadequate bonding.

E. Waterstop Samples: Prior to use of the waterstop material in the field, a sample of a fabricated metered cross and a tee constructed of each size or shape of material to be used shall be submitted to the ENGINEER for approval. These samples shall be fabricated so that the material and workmanship represent in all respects the fittings to be furnished under this contract. Field samples of fabricated fittings (crosses, tees, etc.) will be selected at random by the INSPECTOR for testing. When tested, they shall have a tensile strength across the joints equal to at least 600 psi.

F. Construction Joint Sealant: The CONTRACTOR shall prepare adhesion and cohesion test specimens as specified herein, at intervals of 5 working days while sealants are being installed.

G. The sealant material shall show no signs of adhesive or cohesive failure when tested in accordance with the following procedure in laboratory and field tests:

1. Sealant specimen shall be prepared between 2 concrete blocks (1-inch by 2-inch by 3-inch). Spacing between the blocks shall be 1/2-inch. Coated spacers (2-inch by 1-1/2-inch by 1/2-inch) shall be used to insure sealant cross-sections of 1/2-inch by 2 inches with a width of 1/2-inch.

2. Sealant shall be cast and cured according to manufacturer's recommendations except that curing period shall not exceed 24 hours.

3. Following curing period, the gap between blocks shall be widened to one inch. Spacers shall be used to maintain this gap for 24 hours prior to inspection for failure.

H. Store waterstops under tarps to protect from oil, dirt, and sunlight.

1.6 GUARANTEE

A. The CONTRACTOR shall provide a 5-year written guarantee of the entire sealant installation against faulty and/or incompatible materials and workmanship, together with a statement that it agrees to repair or replace, to the satisfaction of the CITY, at no additional cost to the CITY, any such defective areas which become evident within said 5-year guarantee period.

PART 2 -- PRODUCTS

2.1 PVC WATERSTOPS

A. General: Waterstops shall be extruded from an elastomeric polyvinyl chloride compound containing the plasticizers, resins, stabilizers, and other materials necessary to meet the requirements of these Specifications. No reclaimed or scrap material shall be used. The CONTRACTOR shall obtain from the waterstop manufacturer and shall furnish to the ENGINEER for review, current test reports and a written certification of the manufacturer that the material to be shipped to the job meets the physical requirements as outlined in the U.S. Army Corps of Engineers Specification CRD-C572 and those listed herein.

B. Flatstrip and Center-Bulb Waterstops: Flatstrip and center-bulb waterstops shall be as detailed and as manufactured by: Kirkhill Rubber Co., Brea, California; Greenstreak, St. Louis, MO; Progress Unlimited, Inc., New York, New York; or an approved equal; provided, that at no place shall the thickness of flat strip waterstops, including the center bulb type, be less than 3/8-inch.

C. Multi-Rib Waterstops: Multi-rib waterstops, where required, shall be as detailed and as manufactured by Progress Unlimited, Inc., New York, New York; Greenstreak, St. Louis, MO, or an approved equal. Prefabricated joint fittings shall be used at all intersections of the ribbed-type waterstops.

D. Other Types of Waterstops: When other types of waterstops, not listed above are required and shown, they shall be subjected to the same requirements as those listed herein.

E. Waterstop Testing Requirements: When tested in accordance with the specified test standards, the waterstop material shall meet or exceed the following requirements:

Physical Property, Sheet Material	Value	ASTM Std.
Tensile Strength-min (psi)	1750	D 638, Type IV
Ultimate Elongation-min (percent)	350	D 638, Type IV
Low Temp Brittleness-max (degrees F)	-35	D 746
100 Percent Modulus (psi)	1000	D 638
Accelerated Extraction (CRD-C572)		
Tensile Strength-min (psi)	1500	D 638, Type IV
Ultimate Elongation-min (percent)	300	D 638, Type IV
Effect of Alkalies (CRD-C572)		
Change in Weight (percent)	+0.25/-0.10	------
Change in Durometer, Shore A	+5	D 2240
Finish Waterstop		
Tensile Strength-min (psi)	1400	D 638, Type IV
Ultimate Elongation-min (percent)	280	D 638, Type IV

F. Accessories

1. Provide factory made waterstop fabrications for all changes of direction, intersections, and transitions leaving only straight butt joint splices for the field.

2. Provide hog rings or grommets spaced at 12 inches on center along length of waterstop.

3. Provide Teflon coated thermostatically controlled waterstop splicing irons for field butt splices.

2.2. HYDROPHILIC WATERSTOP:

A. Installation Adhesives: Use with expansive waterstops as recommended by waterstop manufacturer.

B. Acceptable Manufacturers: Provide products manufactured by one of the following or equal:

1. Greenstreak Plastic Products: Hydrotite CJ-1020-2K.

2. Mitsubishi: Adeka Ultraseal MC-2010MN.

2.3 JOINT SEALANT

A. Joint sealant shall be polyurethane polymer designed for bonding to concrete which is continuously submerged in water.

B. Joint sealant material shall meet the following requirements:

Work Life	45 - 90 minutes
Time to Reach 20 Shore "A" Hardness (at 77 degrees F, 200 gr quantity)	24 hours, maximum
Ultimate Hardness	30 - 40 Shore "A"
Tensile Strength	250 psi, minimum
Ultimate Elongation	400 percent, minimum
Tear Resistance (Die C ASTM D 624)	75 pounds per inch of thickness, minimum
Color	Light Gray

For bridge structures, additional requirements of CSS Section 51 shall also apply.

C. All polyurethane sealants for waterstop joints in concrete shall conform to the following requirements:

1. Sealant shall be 2-part polyurethane with the physical properties of the cured sealant conforming to or exceeding the requirements of ASTM C 920 or Federal Specification TT-S-00227 E(3) for 2-part material, as applicable.

2. For vertical joints and overhead horizontal joints, only "non-sag" compounds shall be used; all such compounds shall conform to the requirements of ASTM C 920 Class B, or Federal Specification TT-S-0027 E(3), Type II.

3. For plane horizontal joints, the self-leveling compounds which meet the requirements of ASTM C 920 Class A, or Federal Specification TT-S-0027 E(3), Type I shall be used. For joints subject to either pedestrian or vehicular traffic, a compound providing non-tracking characteristics, and having a Shore "A" hardness range of 25 to 35, shall be used.

4. Primer materials, if recommended by the sealant manufacturer, shall conform to the printed recommendations of the sealant manufacturer.

D. All sealants, wherever shown, or required hereunder shall be Rubbercalk 2101-I or 270 as manufactured by Products Research Company; GS 102 or GS 1102 as manufactured by General Sealants Corp; or an approved equal. For sanitary structures mastic/sealant material shall be Ram Nek Sealant by Henry Co.; Sika Flex 1A, Sikadur 51 NS by Sika Corp.

E. Sealants for non-waterstop joints in concrete shall conform to the requirements of Section 07900, "Joint Sealants". Mastic joint sealer shall be a material that does not contain evaporating solvents; that will tenaciously adhere to concrete surfaces; that will remain permanently resilient and pliable; that will not be affected by continuous presence of water and will not in any way contaminate potable water; and that will effectively seal the joints against moisture infiltration even when the joints are subject to movement due to expansion and contraction. The sealer shall be composed of special asphalts or similar materials blended with lubricating and plasticizing agents to form a tough, durable mastic substance containing no volatile oils or lubricants and shall be capable of meeting the test requirements set forth hereinafter, if testing is required by the ENGINEER.

2.4 PREFORMED JOINT FILLER

A. Preformed joint filler material shall be of the preformed non-extruding type joint filler constructed of cellular neoprene sponge rubber or polyurethane of firm texture. Bituminous fiber type will not be permitted. All non-extruding and resilient-type preformed expansion joint fillers shall conform to the requirements and tests set forth in ASTM D 1752 for Type I, except as otherwise specified herein.

B. Unless otherwise noted, preformed joint filler shall be a non-extruding, resilient, bituminous type conforming to the requirements of ASTM D 1751.

2.5 BACKING ROD

A. Backing rod shall be an extruded closed-cell, polyethylene foam rod. The material shall be compatible with the joint sealant material used and shall have a tensile strength of not less than 40 psi and a compression deflection of approximately 25 percent at 8 psi. The rod shall be 1/8-inch larger in diameter than the joint width except that a one-inch diameter rod shall be used for a 3/4-inch wide joint.

2.6 BOND BREAKER

A. Bond breaker shall be Super Bond Breaker as manufactured by Burke Company, San Mateo, California; Hunt Process 225-TU as manufactured by Hunt Process Co., Santa Fe Springs, California; Select Cure CRB as manufactured by Select Products Co., Upland, California; or an approved equal. It shall contain a fugitive dye so that areas of application will be readily distinguishable.

PART 3 -- EXECUTION

3.1 GENERAL

A. Unless otherwise shown, waterstops of the type specified herein shall be embedded in the concrete across joints as shown. All waterstops shall be fully continuous for the extent of the joint. Splices necessary to provide such continuity shall be accomplished in conformance to printed instructions of manufacturer of the waterstops. The CONTRACTOR shall take suitable precautions and means to support and protect the waterstops during the progress of the work and shall repair or replace at its own expense any waterstops damaged during the progress of the work. All waterstops shall be stored so as to permit free circulation of air around the waterstop material.

B. When any waterstop is installed in the concrete on one side of a joint, while the other half or portion of the waterstop remains exposed to the atmosphere for more than 2 days, suitable precautions shall be taken to shade and protect the exposed waterstop from direct rays of the sun during the entire exposure and until the exposed portion of the waterstop is embedded in concrete.

3.2 SPLICES IN WATERSTOPS

A. Splices in waterstops shall be performed by heat sealing the adjacent waterstop sections in accordance with the manufacturer's printed recommendations and the following requirements:

1. The material not be damaged by heat sealing.

2. The splices have a tensile strength of not less than 60 percent of the unspliced materials tensile strength.

3. The continuity of the waterstop ribs and of its tubular center axis be maintained.

B. Butt joints of the ends of two identical waterstop sections may be made while the material is in the forms.

C. All joints with waterstops involving more than 2 ends to be jointed together, and all joints which involve an angle cut, alignment change, or the joining of 2 dissimilar waterstop sections shall be prefabricated by the CONTRACTOR prior to placement in the forms, allowing not less than 24-inch long strips of waterstop material beyond the joint. Upon being inspected and approved, such prefabricated waterstop joint assemblies shall be installed in the forms and the ends of the 24-inch strips shall be butt welded to the straight run portions of waterstop in place in the forms.

3.3 JOINT CONSTRUCTION

A. Setting Waterstops:

1. In order to eliminate faulty installation that may result in joint leakage, particular care shall be taken of the correct positioning of the waterstops during installation. Adequate provisions must be made to support the waterstops during the progress of the WORK and to insure the proper embedment in the concrete. The symmetrical halves of the waterstops shall be equally divided between the concrete pours at the joints. The center axis of the waterstops shall be coincident with the joint openings. Maximum density and imperviousness of the concrete shall be insured by thoroughly working it in the vicinity of all joints

2. In placing flat-strip waterstops in the forms, means shall be provided to prevent them from being folded over by the concrete as it is placed. Unless otherwise shown, all waterstops shall be held in place with light wire ties on 12-inch centers which shall be passed through the edge of the waterstop and tied to the curtain of reinforcing steel. Horizontal waterstops, with their flat face in a vertical plane, shall be held in place with continuous supports to which the top edge of the waterstop shall be tacked. In placing concrete around horizontal waterstops, with their flat face in a horizontal plane, concrete shall be worked under the waterstops by hand so as to avoid the formation of air and rock pockets.

3. Adequate means shall be provided for anchoring the waterstop in concrete. Waterstops shall be positioned so that they are equally embedded in the concrete on each side of the joint.

4. Hydrophilic Waterstops:

a. Clean and prepare joint surfaces, install primers or adhesives, and install expansive waterstops on dry surfaces in accordance with manufacturer's instructions, including concrete cure, temperature conditions, and splices.

b. Use mechanical fasteners to secure expansive waterstops to previously placed vertical and overhead concrete surfaces and other locations, as recommended by manufacturer. Protect installed waterstops from moisture and keep dry until subsequent placement of concrete.

B. Joint Location:

Construction joints, and other types of joints, shall be provided where shown. When not shown, construction joints shall be provided at 25-foot maximum spacing for all concrete construction, subject to the approval of the ENGINEER, unless noted otherwise. Where joints are shown spaced greater than 25 feet apart, additional joints shall be provided to maintain the 25-foot maximum spacing. The location of all joints, of any type, shall be submitted for acceptance by the ENGINEER.

C. Joint Preparation:

Special care shall be used in preparing concrete surfaces at joints where bonding between two sections of concrete is required. Unless otherwise shown, such bonding will be required at all horizontal joints in walls. Surfaces shall be prepared in accordance with the requirements of Section 03300, "Cast-in-Place Concrete." Except on horizontal wall construction joints, wall to slab joints or where otherwise shown or specified, at all joints where waterstops are required, the joint face of the first pour shall be coated with a bond breaker as specified herein.

D. Construction Joint Sealant:

1. Construction joints in water-bearing floor slabs, and elsewhere as shown, shall be provided with tapered grooves which will be filled with construction joint sealant. The material used for forming the tapered grooves shall be left in the grooves until just before the grooves are cleaned and filled with joint sealant. After removing the forms from the grooves, all laitance and fins shall be removed, and the grooves shall be sand-blasted. The grooves shall be allowed to become thoroughly dry, after which they shall be blown out; immediately thereafter, they shall be primed and filled with the construction joint sealant. The primer used shall be supplied by the same manufacturer supplying the sealant. No sealant will be permitted to be used without a primer. Care shall be used to completely fill the sealant grooves. Areas designated to receive a sealant filler shall be thoroughly cleaned, as outlined for the tapered grooves, prior to application of the sealant.

2. Sealant application shall be in accordance with the manufacturer's printed instructions. The surfaces of the groove for the sealant shall not be coated. Concrete next to waterstops shall be placed in accordance with the requirements of Section 03300, Cast-in-Place Concrete.

3. The primer and sealant shall be placed strictly in accordance with the printed recommendations of the manufacturer, taking special care to properly mix the sealant prior to application. All sealant shall cure at least 7 days before the structure is filled with water.

4. All sealant shall be installed by a competent waterproofing specialty contractor who has a successful record of performance in similar installations. Before work is commenced, the crew doing the WORK shall be instructed as to the proper method of application by a representative of the sealant manufacturer.

5. Thorough, uniform mixing of 2-part, catalyst-cured materials is essential; special care shall be taken to properly mix the sealer before its application. Before any sealer is placed, the CONTRACTOR shall arrange to have the crew doing the WORK carefully instructed as to the proper method of mixing and application by a representative of the sealant manufacturer.

5. Any joint sealant which after the manufacturer's recommended curing time for the job conditions of the WORK hereunder, fails to fully and properly cure shall be completely removed; the groove shall be thoroughly sandblasted to remove all traces of the uncured or partially cured sealant and primer, and shall be re-sealed with the specified joint sealant. All costs of such removal, joint treatment, re-sealing, and appurtenant work shall be at the expense of the CONTRACTOR.

END OF SECTION

SECTION 03300
CAST-IN-PLACE CONCRETE

PART 1 -- GENERAL

1.1 THE REQUIREMENT

A. The CONTRACTOR shall furnish all materials for concrete in accordance with the provisions of this Section and shall form, mix, place, cure, repair, finish, and do all other work as required to produce finished concrete, in accordance with the requirements of the Contract Documents.

B. The following types of concrete shall be covered in this Section:

1. Structural Concrete: Concrete to be used in all cases except where noted otherwise in the Contract Documents.

2. Sitework Concrete: Concrete to be used for curbs, gutters, sidewalks, pavements, fence and guard post embedment, and underground duct bank encasement unless otherwise shown.

1.2 RELATED WORK SPECIFIED ELSEWHERE

A. Section 03100 Concrete Formwork

B. Section 03200 Reinforcement Steel

C. Section 03250 Concrete Accessories

D. Section 03290 Joints in Concrete

E. Section 03315 Grout

F. Section 03370 Concrete Curing

G. Section 07900 Joint Sealants

1.3 REFERENCE SPECIFICATIONS, CODES, AND STANDARDS

A. Comply with the reference standards and the Standard Specifications of the GENERAL REQUIREMENTS.

B. Comply with the current provisions of the following Codes and Standards, as applicable.

1. Commercial Standards:

ACI 117	Specification for Tolerances for Concrete Construction and Materials
ACI 305.1	Specification for Hot Weather Concreting
ACI 306.1	Standard Specification for Cold Weather Concreting
ACI 318	Building Code Requirements for Structural Concrete
ACI 347R	Guide to Formwork for Concrete

ACI 350	Code Requirements for Environmental Engineering Concrete Structures
ACI 350.5	Specification for Environmental Concrete Structures
ASTM C 31	Standard Practice for Making and Curing Concrete Test Specimens in the Field
ASTM C 33	Standard Specification for Concrete Aggregates
ASTM C 39	Standard Test Method for Compressive Strength of Cylindrical Concrete Specimens
ASTM C 40	Standard Test Method for Organic Impurities in Fine Aggregates for Concrete
ASTM C 42	Standard Test Method for Obtaining and Testing Drilled Cores and Sawed Beams of Concrete
ASTM C 88	Standard Test Method for Soundness of Aggregates by Use of Sodium Sulfate or Magnesium Sulfate
ASTM C 94	Standard Specification for Ready-Mixed Concrete
ASTM C 109	Standard Test Method for Compressive Strength of Hydraulic Cement Mortars (Using 2-in Cube Specimens)
ASTM C 117	Standard Test Method for Materials Finer than No. 200 Sieve in Mineral Aggregates by Washing
ASTM C 131	Standard Test Method for Resistance to Degradation of Small-Sized Coarse Aggregate by Abrasion and Impact in the Los Angeles Machine
ASTM C 136	Standard Test Method for Sieve Analysis of Fine and Coarse Aggregates
ASTM C 143	Standard Test Method for Slump of Hydraulic-Cement Concrete
ASTM C 150	Standard Specification for Portland Cement
ASTM C 157	Standard Test Method for Length Change of Hardened Hydraulic-Cement Mortar and Concrete
ASTM C 192	Standard Practice for Making and Curing Concrete Test Specimens in the Laboratory
ASTM C 260	Standard Specification for Air-Entraining Admixtures for Concrete
ASTM C 311	Standard Test Methods for Sampling and Testing Fly Ash or Natural Pozzolans for Use in Portland-Cement Concrete
ASTM C 494	Standard Specification for Chemical Admixtures for Concrete
ASTM C 595	Standard Specification for Blended Hydraulic Cements
ASTM C 596	Standard Test Method for Drying Shrinkage of Mortar Containing Hydraulic Cement

ASTM C 618	Standard Specification for Coal Fly Ash and Raw or Calcined Natural Pozzolan for Use in Concrete
ASTM C 989	Standard Specification for Slag Cement for Use in Concrete and Mortars
ASTM C 1157	Standard Performance Specification for Hydraulic Cement
ASTM C 1293	Standard Test Method for Determination of Length Change of Concrete Due to Alkali-Silica Reaction
ASTM C 1567	Standard Test Method for Determining the Potential Alkali-Salica Reactivity of Combinations of Cementitious Materials and Aggregate (Accelerated Mortar-Bar Method)
ASTM C 1602	Standard Specification for Mixing Water Used in the Production of Hydraulic Cement Concrete
ASTM C 1603	Standard Test Method for Measurement of Solids in Water-Suggest you add as it relates to ASTM C1602
ASTM D 2419	Standard Test Method for Sand Equivalent Value of Soils and Fine Aggregate

2. Government Standards:

CSS	Caltrans Standard Specifications

1.4 CONTRACTOR SUBMITTALS

A. Submittals shall be made in accordance with GENERAL REQUIREMENTS.

B. The following submittals and specific information shall be provided.

1. Mix Designs: Prior to beginning the WORK, the CONTRACTOR shall submit to the ENGINEER, for review, and acceptance, preliminary concrete mix designs for each class and type of concrete specified herein. The mix designs shall be designed by an independent testing laboratory acceptable to the ENGINEER. All costs related to such mix design shall be borne by the CONTRACTOR.

Each concrete mix submittal shall contain the following information, as applicable:

a. Location and purpose of the mix.
b. Slump on which the design is based.
c. Total gallons of water per cubic yard, and the water/cementitious materials ratio (w/cm).
d. Brand, type, composition and quantity of cement.
e. Brand type, composition and quantity of fly ash, slag cement, silica fume.
f. Specific Gravity, source and gradation of each aggregate.
g. Ratio of fine to total aggregate per cubic yard.
h. Weight (surface dry) of each aggregate per cubic yard.
i. Brand, type, and ASTM designation, active chemical ingredients and quantity of each admixture.
j. Copy of the Building and Safety Research Report Approval for each concrete admixture.
k. Air content.

l. Compressive strength based on 7-day and 28-day compression tests, including standard deviation calculations, corroborative data (if applicable), and required average comprehensive strength per ACI 318.
m. Time of initial and final set.
n. Certification stamp and signature by a Civil or Structural engineer registered in the State of California, experienced in concrete mix design.
o. Certificate of Compliance for Cement.
p. Concrete pour sequence.
q. Buy Clean California Act
   1.) For project specifications that include GR Section 1601, Buy Clean California Act, bidders shall submit current Environmental Product Declarations (EPDs) for each concrete mix design, from the originating ready-mix plant used in the project. When material comes from different plants, an EPD will be required for each plant from which the material will be obtained.

   2.) An EPD must conform to the following:
      a) Shall be facility-specific manufacturer/plant EPD.
      b) Be independently verified in accordance with ISO 14025 (Type III).
      c) Be developed according to the guidelines of the applicable Product Category Rule (PCR), as identified by the Department of General Services, State of California.
      d) Have a valid date that has not expired.
      e) Shall not exceed the Global Warming Potential (GWP) as required by GR Section 1601.

   3.) EPD shall be submitted concurrently with each mix submittal for review and approval.

2. Certified Delivery Tickets: Where ready-mix concrete is used, the CONTRACTOR shall provide certified weighmaster delivery tickets at the time of delivery of each load of concrete. Each certificate shall show the public weighmaster's signature, and the total quantities, by weight of cement, sand, each class of aggregate, admixtures, and the amounts of water in the aggregate and added at the batching plant as well as the amount of water allowed to be added at the site for the specific design mix. Each certificate shall, in addition, state the mix number, total yield in cubic yards, and the time of day, to the nearest minute, corresponding to when the batch was dispatched, when it left the plant, when it arrived at the job, the time that unloading began, and the time that unloading was finished.

3. When a water reducing admixture is to be used, the CONTRACTOR shall furnish mix designs for concrete both with and without the admixture.

4. The CONTRACTOR shall furnish a Certificate of Compliance signed by the supplier identifying the type of fly ash and stating that the fly ash complies with ASTM C 618 and these Specifications, together with all supporting test data prior to the use of the fly ash the sample represents. The supporting data shall also contain test results confirming that the fly ash in combination with the cement and water to be used meets all strength requirements and is compatible with air-entraining agents and other admixtures.

5. The CONTRACTOR shall submit to the ENGINEER for review the design mix for fly ash concrete together with the design mix for Portland cement (non-fly ash) concrete as specified in this Section.

1.5 QUALITY ASSURANCE

A. Laborers: Use adequate number of skilled laborers who are thoroughly trained and experienced in the necessary crafts and completely familiar with the specified requirements and the methods needed for proper performance of the Work of this Section.

B. Compliance with Regulations: All materials shall comply with the current rules and regulations of the local air quality management district, with the rules regarding volatile organic compounds, and with FDA rules and regulations for dangerous substances in construction products.

C. Concrete Manufacturer: Furnish concrete from licensed commercial ready-mix concrete plants conforming to ASTM C94 and approved by City of Los Angeles Department of Building and Safety. Requirements herein govern when exceeding ASTM C94.

D. Continuous Inspection: Construct structural concrete exceeding 2,500 psi compressive strength under continuous inspection of DEPUTY INSPECTOR. Obtain inspection and approval of forms and reinforcing by CONTRACTOR's Independent Testing/Inspection Laboratory three (3) working days before placing structural concrete in order to be verified by ENGINEER.

E. Tests on component materials and for compressive strength and shrinkage of concrete will be performed as specified herein. Test for determining slump will be in accordance with the requirements of ASTM C 143.

F. The cost of all laboratory tests on cement, aggregates, and concrete compressive strength, will be borne by the CITY. However, the CONTRACTOR shall be responsible for all other required tests and shall be charged for the cost of any additional tests and investigation on work performed which does not meet the specifications.

G. Concrete for testing shall be supplied by the CONTRACTOR at no cost to the CITY, and the CONTRACTOR shall provide assistance and facilities to the INSPECTOR in obtaining samples, and disposal and cleanup of excess material.

H. Field Compression Tests:

1. Compression test specimens will be taken during construction from the first placement of each concrete mix used and at intervals thereafter as selected by the INSPECTOR to insure continued compliance with these specifications. Each set of test specimens will be a minimum of 4 cylinders.

2. Compression test specimens for concrete shall be made in accordance with ASTM C 31. Specimens shall be 6-inch diameter by 12-inch high cylinders.

3. Compression tests shall be performed in accordance with ASTM C 39. Two 6"x12" test cylinders will be tested at 7 days as necessary and two at 28 days. Any remaining cylinders will be held to verify test results, if needed.

I. Evaluation and acceptance of Compressive Strength Concrete shall be based on the following criteria:

1. Concrete shall be sampled and tested in accordance with the ACI 350.5.

2. Acceptance of concrete placed shall be based on 28-day compressive strength test results. A 28-day compressive strength test shall consist of the average compressive strength of two 6"x12" concrete test cylinders fabricated from a single load of fresh concrete except that, if a cylinder should show evidence of improper handling, molding, or testing, said cylinder shall be discarded and the compressive strength test shall then consist of the remaining cylinder.

3. Concrete compressive strength tests representing concrete poured-in-place, shall attain the 28-day compressive strength specified in the specifications or as shown on the plans.

4. In-place concrete represented by a compressive cylinder strength test failing to meet the specified 28-day compressive strength shall be removed from the work at no cost to the CITY. Also, the CONTRACTOR shall at its own expense make any corrective changes in the mix deemed necessary by the ENGINEER. The changes in the mix proportions or placement

procedures shall be approved by the ENGINEER prior to the placement of any additional concrete subsequent to a failing compressive strength test.

5. As an alternative to the removal of concrete represented by a failed cylinder compressive strength test and subject to the approval of the ENGINEER, the concrete represented by the failed compressive strength cylinder test or tests may be cored in place. The corings shall be completed no later than 10 days from notification of failure by the ENGINEER. The cores shall be taken by the CONTRACTOR in the presence of the INSPECTOR and tested at the CONTRACTOR's expense in accordance with ASTM C 42 by a certified laboratory acceptable to the INSPECTOR. The cores shall be 4 inch diameter (min.) unless otherwise directed by the ENGINEER. At least three cores shall be taken in each area represented by a failed 28-day concrete compressive strength cylinder test. Unless otherwise directed by the ENGINEER, the cores shall be tested wet following a 40-hour submergence. If each core tests at least 85 percent of the specified 28-day compressive strength or greater, the concrete represented may be accepted provided the CONTRACTOR accepts the payment provisions stated below. Concrete represented by failing core tests shall not be paid for and shall be removed by the CONTRACTOR from the work at no cost to the CITY.

6. Payment to the CONTRACTOR for concrete accepted by the ENGINEER based on core test results but represented by failing compressive cylinder test results shall be reduced as follows:

    a. When the result of a single compressive cylinder strength test is less than the specified 28-day compressive strength but 95 percent or more of the 28-day compressive strength, the CONTRACTOR shall pay the CITY per cubic yard for each in-place cubic yard of concrete represented by the deficient compressive strength cylinder test as determined by the actual sampling interval; and.

    b. When the result of a single compressive strength cylinder test is less than 95 percent of the specified 28-day compressive strength but is acceptable based on core test results taken in accordance with Subsection 1.5.I.5, the CONTRACTOR shall pay the CITY **[$20]** per cubic yard for each in-place cubic yard of concrete represented by the deficient compressive strength cylinder test as determined by the actual sampling interval.

J. Shrinkage Tests:

1. Perform Shrinkage tests on the design mix for Structural Concrete. The tests shall conform to ASTM C157 as modified by SASTM C 596 for curing, storage, and comparator readings. Use concrete specimens. Do not use mortar specimens.

2. Allowable shrinkage limitations shall be as specified in Part 2, herein.

K. Construction Tolerances: The CONTRACTOR shall set and maintain concrete forms and perform finishing operations so as to ensure that the completed work is within the tolerances specified in Section [03100] “Concrete Formwork”. Surface defects and irregularities are defined as finishes and are to be distinguished from tolerances.

L. For each class of fly ash, all testing and sampling procedures shall conform with these Specifications and ASTM C 311, including the restriction that one sample weighing 4 pounds shall be taken from at least each 200 tons of fly ash supplied.

M. Separate storage facilities shall be provided for fly ash and other supplementary cementitious materials (SCM). All SCM shall be stored in such a manner as to permit ready access for the purpose of inspection and sampling and suitably protected against contamination or moisture. Should any SCM show evidence of contamination or moisture or be otherwise unsuitable, the INSPECTOR may reject it and require that it be removed from the site. Each SCM used in concrete for this project shall be from the same source.

PART 2 -- PRODUCTS

2.1 CONCRETE MATERIALS

A. Materials shall be delivered, stored, and handled so as to prevent damage by water or breakage. Only one brand of cement shall be used. Cement reclaimed from cleaning bags or leaking containers shall not be used. All cement shall be used in the sequence of receipt of shipments.

B. All materials furnished for the work shall comply with the requirements of ACI 350.5, as applicable.

C. Storage of materials shall conform to the requirements of ACI 350.5.

D. Materials for concrete shall conform to the Standard Specifications and the following requirements.

1. Concurrent with strength design criteria, concrete shall also be proportioned to provide the requisite durability to satisfy the exposure conditions imposed by either environment and/or service. Durability, in this context, refers to the ability of the concrete to resist deterioration from the environment or service in which it is placed. Concrete proportioned in accordance with ACI 318, or ACI 350 for sanitary structures, chapter 4, Durability Requirements, will meet this criteria.

2. Cementitious Materials:

    a. Portland Cement shall conform to ASTM C 150, Type II.
    b. Supplementary Cementitious Materials:
        i. Fly ash shall conform to ASTM C 618, Class F.
        ii. Slag cement shall conform to ASTM C 989, Grade 100 or 120.

3. Aggregates shall be obtained from pits acceptable to the INSPECTOR, shall be non-reactive, and shall conform to ASTM C 33. Lightweight sand for fine aggregate will not be permitted.

    a. When tested in accordance with ASTM C 40, the fine aggregate shall produce a color in the supernatant liquid no darker than the reference standard color solution.

    b. When tested in accordance with ASTM C 131, the coarse aggregate shall show a loss not exceeding 42 percent after 500 revolutions, or 10.5 percent after 100 revolutions.

    c. When tested in accordance with ASTM C 88, the loss resulting after five cycles shall not exceed 10 percent for fine or coarse aggregate when using sodium sulfate.

    d. When tested in accordance with ASTM C 117, materials finer than No. 200 sieve shall not exceed 1% for gravel, and 1.5% for crushed aggregate.

    e. When tested in accordance with ASTM D 2419, the California sand equivalent values operating range shall not be below 71%.

    f. Fine and coarse aggregates used shall not cause expansion of mortar bars greater than 0.1 percent in 16 days when tested in accordance with ASTM C 1567 using project proposed cement or expansion result of the concrete prisms greater than 0.4 percent at 1 year when tested in accordance with ASTM C 1293. If aggregates proposed do not meet this requirement, then satisfy either subparagraph below:

        i. Total equivalent Akali content of the cement: DO not exceed 0.60 percent as provided in the optional chemical requirements of ASTM C 150.

        ii. Fine and coarse aggregates used shall not cause expansion of mortar bars greater than 0.1 percent in 16 days when tested in accordance with ASTM C 15678 and using the cement and fly ash proposed for the project. Proportions of cement-fly ash mix shall be the same as those proposed for the project.

4. Ready-mixed concrete shall conform to the requirements of ASTM C 94.

5. Water for mixing shall conform to ASTM C 1602 and be clean and free from objectionable quantities of silty organic matter, alkali, salts, and other impurities. The use of qualifying recycled water is encouraged**.** Mixing water that contains non-potable water should comply with ASTM C1602 Section 4 and Section 5 including Table 1 and Table 2.

6. Admixtures: The ENGINEER may require the use of admixtures or the CONTRACTOR may propose to use admixtures to control the set, effect water reduction, increase workability or enhance durability. In either case, the addition of an admixture shall be at the CONTRACTOR's expense. The use and continued use of an admixture shall be approved by the ENGINEER. Admixtures specified herein, other than calcium chloride, shall conform to the requirements of ASTM C 494 or other standards specified in this Section. The required quantity of cement shall be used in the mix regardless of whether or not an admixture is used. Admixtures shall contain no free chloride ions, be non-toxic after 30 days, and shall be compatible with and made by the same manufacturer as the air entraining admixture.

   These admixtures shall not be used in greater doses than those recommended by the manufacturer or permitted by the ENGINEER. The permitted dosage of the admixture shall not exceed that which will result in an increase in the drying shrinkage of the concrete in excess of 20 percent when used in precast or prestressed concrete, or 10 percent when used in any other structural concrete. The strength of concrete containing the admixture in the amount proposed shall, at the age of 48 hours and longer be not less than that of similar concrete without the admixture. The admixture shall not adversely affect the specified air content, unless permitted by the ENGINEER.

   a. Set controlling admixture shall be either with or without water-reducing properties. Where the air temperature at the time of placement is expected to be consistently over 80 degrees F, a set retarding admixture conforming to ASTM C 494, Type B or D, such as Sika Corporation's Plastiment, BASF Corporation’s MasterSet R Series or MasterSet DELVO Series, GCP applied Technologies (formerly W. R. Grace), Recover or Daratard 17 or an approved equal shall be used. Where the air temperature at the time of placement is expected to be consistently under 40 degrees F, a set accelerating admixture conforming to ASTM C 494 Type C or E, such as Sika Corporation's Plastocrete 161FL, BASF Corporation’s MasterSet AC 534 or MasterSet FP 20, GCP applied Technologies (formerly W. R. Grace), Daraset 400 or Polarset or an approved equal shall be used.

   b. Normal and mid-range water reducing admixtures shall conform to ASTM C 494, Type A, and shall be BASF Corporation’s MasterPozzolith Series, MasterPolyheed series, GCP applied Technologies (formerly W. R. Grace), ADVA series, Zyla series, WRDA series or approved equal. The quantity of admixture used, and the method of mixing shall be in accordance with the manufacturer's instructions and recommendations.

   c. High range water reducer shall conform to ASTM C 494, Type F or G.

      If the high range water reducing admixture is added to the concrete at the batch plant, it shall be, ADVA series ADVA 190, ADVA 198, ADVA 140M as manufactured by GCP Applied Technologies (formerly W. R. Grace) MasterRheobuild 1000, MasterGlenium Series, or PS 1466 as manufactured by BASF Corporation; or an approved equal. High range water reducer shall be added to the concrete after all other ingredients have been mixed and initial slump has been verified.

      If the high range water reducer is added to the concrete at the job site, it shall be used in conjunction with a normal water reducer and shall be MasterPozzolith 700 or MasterPozzolith 322 and MasterGlenium 7500 or MasterGlenium 3030, as manufactured by BASF Corporation; ADVA series ADVA 190, ADVA 198, ADVA 140M

and Zyla Series, Zyla 625 or WRDA series, WRDA 64 as manufactured by GCP Applied technologies (formerly W. R. Grace**);** or an approved equal. Concrete shall have a slump of 3-inches ± 1/2-inch prior to adding the high range water reducing admixture at the job site. Slump shall not exceed 9 inches for concrete after addition of high-range water-reducing admixture. The high range water reducing admixture shall be accurately measured and pressure injected into the mixer as a single dose by an experienced technician. A standby system shall be provided and tested prior to each day's operation of the job site system.

Concrete shall be mixed at mixing speed for a minimum of 30 mixer revolutions after the addition of the high range water reducer.

d. Air-entraining admixture meeting the requirements of ASTM C 260, such as BASF Corporation's MasterAir Series or, GCP Applied Technologies (formerly W. R. Grace Daravair or Darex series**,** approved equal, shall be used. Sufficient air-entraining agent shall be used to provide a total air content of 3 to 4 percent; provided that, when the mean daily temperature in the vicinity of the worksite falls below 40 degrees F for more than one day, the total air content provided shall be 5 to 6 percent. The CITY reserves the right, at any time, to sample and test the air-entraining agent received on the job by the CONTRACTOR. The air-entraining agent shall be added to the batch in a portion of the mixing water. The solution shall be batched by means of a mechanical batcher capable of accurate measurement.

e. Shrinkage-reducing admixture shall conform to ASTM C 494, Type S, and shall be BASF Corporation's MasterLife SRA 20, MasterLife CRA 007, GCP Applied Technologies (formerly W. R. Grace) Eclipse series or approved equal.

f. Calcium Chloride: Except as otherwise provided herein, calcium chloride will not be permitted to be used in concrete.

2.2 CURING MATERIALS

A. Materials for curing concrete shall conform to Section 03370 "Curing Concrete", Part 2.

2.3 NON-WATERSTOP JOINT MATERIALS

A. Materials for non-waterstop joints in concrete shall conform to Section [03290] "Joints In Concrete", Part 2.

2.4 MISCELLANEOUS MATERIALS

A. Dampproofing agent shall be an asphalt emulsion, such as [MasterSeal 610, MasterSeal 614 or MasterSeal 615 (formerly Hydrocide 600, Hydrocide 700 & Hydrocide 700B) by BASF Corporation], GCP Applied Technologies (formerly W. R. Grace) Darapel, [Flintkote C-13-E Foundation Coating], or an approved equal.

B. Epoxy adhesives shall be per the following products for the applications specified:

1 For bonding freshly-mixed, plastic concrete to hardened concrete, Sikadur Hi-Mod Epoxy Adhesive, as manufactured by Sika Corporation; MasterEmaco ADH 326 (formerly Concresive Liquid LPL) as manufactured by BASF Corporation; or an approved equal.

2 For bonding hardened concrete or masonry to steel, MasterEmaco ADH 327RS (formerly Concresive Paste SPL), Colma-Dur Gel, Sikadur Hi-Mod Gel, or an approved equal.

C. Drypack: Field mixture of 1 part Portland cement to 2 parts fine aggregate mixed to a damp consistency such that a ball molded in the hands will stick together and hold its shape. At CONTRACTOR's option, the specified admixture may be added for increased workability at lower water/cement ratio. In lieu of field mixing, CONTRACTOR may use factory mixed drypack material, such as BASF Corporation “MasterFlow 100” or Euclid "Euco Dry Pack Grout", or an approved equal.

D. Expansion Joint Filler: Asphalt impregnated fiber or non-extruding foam type, conforming to ASTM D994 and D1751, or D1752.

E. Construction Joint Materials: “Key-Kold”, “Kwik-Joint” of profiles indicated, or an approved equal.

F. Bonding Agent: “Weld-Crete”, manufactured by Larsen Products Co. or ”MasterEmaco ADH” Series (formerly Concresive Series), as manufactured by BASF Corporation, or an approved equal.

2.5 CONCRETE DESIGN REQUIREMENTS

A. General: Concrete shall be composed of cement, SCM, admixtures, aggregates and water. These materials shall be of the qualities specified. The exact proportions in which these materials are to be used for different parts of the work will be determined during the trial batch. In general, the mix shall be designed to produce a concrete capable of being deposited so as to obtain maximum density and minimum shrinkage and, where deposited in forms, to have good consolidation properties and maximum smoothness of surface. Mix designs with more than 41 percent of sand of the total weight of fine and coarse aggregate shall not be used. The aggregate gradations shall be formulated to provide fresh concrete that will not promote rock pockets around reinforcing steel or embedded items. The proportions shall be changed whenever necessary or desirable to meet the required results at no additional cost to the CITY. All changes shall be subject to review by the ENGINEER.

B. W/cm and Compressive Strength: The minimum compressive strength and cement content of concrete shall be not less than that specified in the following tabulation.

Type of Work	Min. 28-Day Compressive Strength (psi)	Aggregate Gradation	Cement per cu yd (sacks)	Max w/cm (by weight)
Structural Concrete *:	4,000	C	7.0	0.42
Sitework concrete:	3,000	C	5.5	0.54

Note: One sack of cement equals 94 lb.
* Use “B” Aggregate gradation when placing conditions permit.

C Adjustments to Mix Design: The mixes used shall be changed whenever such change is necessary or desirable to secure the required strength, density, workability, and surface finish and the CONTRACTOR shall be entitled to no additional compensation because of such changes.

D. Fly ash/pozzolan/ground granulated blast furnace slag may be used per requirements of the Standard Specifications, when approved by the ENGINEER as a partial cement replacement in concrete as follows:

1 Fly ash shall replace not more than 20 percent by weight of the Portland cement in the design mix. The design mix shall contain a minimum of 7 sacks of cement per cubic yard before the replacement is made.

2 Fly ash for hydraulic/liquid containing structures shall be Class F fly ash only. Fly ash for all other structures shall be Class C or F fly ash.

3 If ground granulated blast furnace slag is used in lieu of fly ash, the content of ground granulated blast furnace slag shall be in the range of 25-45 percent of total cement plus ground granulated blast furnace slag content, by weight.

2.6 CONSISTENCY

The quantity of water entering into a batch of concrete shall be just sufficient, with a normal mixing period, to produce a concrete which can be worked properly into place without segregation, and which can be compacted by the vibratory methods herein specified to give the desired density, impermeability and smoothness of surface. Subject to the w/c ratio requirements of section 2.5, the quantity of water shall be changed as necessary, with variations in the nature or moisture content of the aggregates, to maintain uniform production of a desired consistency. The consistency of the concrete in successive batches shall be determined by slump tests in accordance with ASTM C 143. The slumps shall be as follows:

Part of Work	Slump (in)
With high range water reducer added	9-inches max
Other work	per Standard Specifications

2.7 TRIAL BATCH AND LABORATORY TESTS

A. Before placing any concrete, a Department of Building and Safety certified testing laboratory approved by the ENGINEER shall prepare, within 30 calendar days after the date of the Notice to Proceed, a trial batch of each concrete mix, based on the preliminary concrete mixes submitted by the CONTRACTOR. During the trial batch the aggregate proportions may be adjusted by the testing laboratory using the two coarse aggregate size ranges to obtain the required properties. If one size range produces an acceptable mix, a second size range need not be used. Such adjustments shall be considered refinements to the mix design and shall not be the basis for extra compensation to the CONTRACTOR. All concrete shall conform to the requirements of this Section, whether the aggregate proportions are from the CONTRACTOR's preliminary mix design, or whether the proportions have been adjusted during the trial batch process. The trial batch shall be prepared using the aggregates, cement and admixture proposed for the project. The trial batch materials shall be of a quantity such that the testing laboratory can obtain 3 drying shrinkage, and 10 compression test specimens from each batch. The cost of not more than 3 laboratory trial batch tests for each specified concrete strength shall be borne by the CONTRACTOR. Any additional trial batch testing required shall be performed at the expense of the CONTRACTOR.

The trial batch procedure may be waived when test data of prior performance of the proposed mix design, performed by a Department of Building and Safety certified testing laboratory, is presented by the CONTRACTOR and approved by the ENGINEER.

The requirements of this section may be waived for concrete mixes specified by the Class per the Standard Specifications.

B. The determination of compressive strength will be made by testing 6-inch diameter by 12-inch high cylinders; made, cured and tested in accordance with ASTM C 192 and ASTM C 39. Five compression test cylinders shall be tested at 7 days and 5 at 28 days. The average compressive strength for the 5 cylinders tested at 28 days for any given trial batch shall not be less than the appropriate sections of ACI 318 of the specified compressive strength.

C. A sieve analysis of the combined aggregate for each trial batch shall be performed according to the requirements of ASTM C 136. Values shall be given for percent passing each sieve.

2.8 SHRINKAGE LIMITATION

A. The maximum concrete shrinkage for specimens cast in the laboratory from the trial batch, as measured at 25-day drying age shall be 0.036 percent. The CONTRACTOR shall only use a mix design for construction that has first met the trial batch shrinkage requirements.

2.9 MEASUREMENT OF CEMENT AND AGGREGATE

The amount of cement and of each separate size of aggregate entering into each batch of concrete shall be determined by direct weighing equipment furnished by the CONTRACTOR and acceptable to the ENGINEER; provided that, where batches are so proportioned as to contain an integral number of conventional sacks of cement, and the cement is delivered at the mixer in the original unbroken sacks, the weight of the cement contained in each sack may be taken without weighing as 94 pounds.

2.10 MEASUREMENT OF WATER

The quantity of water entering the mixer shall be measured by a suitable water meter or other measuring device of a type acceptable to the ENGINEER and capable of measuring the water in variable amounts within a tolerance of one percent. The water feed control mechanism shall be capable of being locked in position so as to deliver constantly any specified amount of water to each batch of concrete, and the meter shall include a set-back register with a readily visible vertical face and double hands indicating in cubic feet and decimals thereof. A positive quick-acting valve shall be used for a cut-off in the water line to the mixer. The operating mechanism must be such that leakage will not occur when the valves are closed

2.11 READY-MIXED CONCRETE

A. At the CONTRACTOR's option, ready-mixed concrete may be used meeting the requirements as to materials, batching, mixing, transporting, and placing as specified herein and in accordance with ASTM C 94, including the following supplementary requirements.

B. Ready-mixed concrete shall be delivered to the site of the work, and discharge shall be completed within 90 minutes after the addition of the cement to the aggregates or before the drum has been revolved 250 revolutions, whichever is first. In hot weather, or under conditions contributing to quick stiffening of the concrete, the ready-mixed concrete shall be discharged before the temperature of the concrete exceeds 90 degrees F.

C. Truck mixers shall be equipped with electrically-actuated counters by which the number of revolutions of the drum or blades may be readily verified. The counter shall be of the re-settable, recording type, and shall be mounted in the driver's cab. The counters shall be actuated at the time of starting mixers at mixing speeds.

D. Each batch of concrete shall be mixed in a truck mixer for not less than 70 revolutions of the drum or blades at the rate of rotation designated by the manufacturer of equipment. Additional mixing, if any, shall be at the speed designated by the manufacturer of the equipment as agitating speed. All materials including mixing water shall be in the mixer drum before actuating the revolution counter for determining the number of revolutions of mixing.

E. Truck mixers and their operation shall be such that the concrete throughout the mixed batch as discharged is within acceptable limits of uniformity with respect to consistency, mix, and grading. If slump tests taken at approximately the 1/4 and 3/4 points of the load during discharge give slumps differing by more than 2-inches when the specified slump is more than 3-inches, the mixer shall not be used on the work unless the causing condition is corrected and satisfactory performance is verified by additional slump tests. All mechanical details of the mixer, such as water measuring and discharge apparatus, condition of the blades, speed of rotation, general mechanical condition of the unit, and clearance of the drum, shall be checked before a further attempt to use the unit will be permitted.

F. Each batch of ready-mixed concrete delivered at the job site shall be accompanied by a certified weighmaster delivery ticket furnished to the INSPECTOR in accordance with the Paragraph in Part 1 entitled "Certified Delivery Tickets".

G. The use of non-agitating equipment for transporting ready-mixed concrete will not be permitted. Combination truck and trailer equipment for transporting ready-mixed concrete will not be permitted. The quality and quantity of materials used in ready-mixed concrete and in batch aggregates shall be subject to continuous inspection at the batching plant by the INSPECTOR.

PART 3 -- EXECUTION

3.1 PROPORTIONING AND MIXING

A. Proportioning: Proportioning of the concrete mix shall conform to the requirements of Chapter 3 "Proportioning" of ACI 350.5; provided that the maximum slump for any concrete shall not exceed 4-inches except when the use of high range water reducer is permitted which increases the maximum slump to 9-inches.

B. Mixing: Mixing of concrete shall conform to the requirements of Chapter 7 of said ACI 350.5 Specifications and SSPWC. Whichever is most stringent shall apply.

C. Slump: Maximum slumps shall be as specified herein in Section 2.6.

D. Retempering: Retempering of concrete or mortar which has partially hardened will not be permitted.

3.2 PREPARATION OF SURFACES FOR CONCRETING

A. General: Wet wood forms sufficiently to tighten up cracks. Wet other materials sufficiently to reduce adsorption and to help maintain concrete workability. Earth surfaces shall be thoroughly wetted by sprinkling, 24 hours prior to the placing of any concrete, and these surfaces shall be kept moist by frequent sprinkling up to the time of placing concrete thereon. The surface shall be free from standing water, mud, and debris at the time of placing concrete.

B. Screeds: Set screeds at walls and maximum 8’ centers between. Set to provide level floor. Check with an instrument level, transit, or laser during placing operation to maintain level floor.

C. Expansion Joint Filler: Install where slabs abut buildings and elsewhere as indicated. Install full depth of concrete with top level with finished surface of concrete.

D. Joints in Concrete: Concrete surfaces upon or against which concrete is to be placed, where the placement of the old concrete has been stopped or interrupted so that, as determined by the ENGINEER, the new concrete cannot be incorporated integrally with that previously placed, are defined as construction joints. The surfaces of horizontal joints shall be given a compacted, roughened surface for good bond. Except where the Drawings call for joint surfaces to be coated, the joint surfaces shall be cleaned of all laitance, loose or defective concrete, and foreign material. Such cleaning shall be accomplished by sandblasting followed by thorough washing. All pools of water shall be removed from the surface of construction joints before the new concrete is placed.

E. After the surfaces have been prepared all approximately horizontal construction joints shall be covered with a layer of mortar approximately two-inch thick, or as shown on the plans. The mortar shall have the same proportions of cement and sand as the regular concrete mixture. The water-cement ratio of the mortar in place shall not exceed that of the concrete to be placed upon it, and the consistency of the mortar shall be suitable for placing and working in the manner hereinafter specified. The mortar shall be spread uniformly and shall be worked thoroughly into all irregularities of the surface. Wire brooms shall be used where possible to scrub the mortar into the surface. Concrete shall be placed immediately upon the fresh mortar. When casting deep walls (more than 6 feet high) over slabs or footings, in lieu of the two-inch thick mortar, a 6-inch lift of a rich pea gravel

mix with the same water-cement ratio as the wall concrete shall be placed and spread uniformly. Wall concrete shall follow immediately and shall be placed upon the fresh pea gravel mix.

F. Embedded Items: No concrete shall be placed until all formwork, installation of parts to be embedded, reinforcement steel, and preparation of surfaces involved in the placing have been completed and ACCEPTED by the INSPECTOR at least 24 hours before placement of concrete. All surfaces of forms and embedded items that have become encrusted with dried grout from concrete previously placed shall be cleaned of all such grout before the surrounding or adjacent concrete is placed.

G. Conduits and Sleeves:

1. Locate so as not to reduce the strength of construction. Do not place pipes, except conduits in a slab of less than 3-1/2" thickness.

2. In supported concrete slabs, do not bury conduit having any outside diameter greater than 33% of the thickness of the slab. Increase slab thickness locally to meet this requirement.

3. Do not place conduit between the bottom of reinforcing steel and the bottom of supported slab.

4. In placing conduits at slabs on earth, place below the reinforcement, and encase in concrete by increasing thickness of the slab locally to at least 3" of concrete around the conduit on all sides.

H. All inserts or other embedded items shall conform to the requirements herein.

I. All reinforcement, anchor bolts, sleeves, inserts, and similar items shall be set and secured in the forms where shown or by shop drawings and shall be acceptable to the INSPECTOR before any concrete is placed. Accuracy of placement is the responsibility of the CONTRACTOR.

J. Where concrete is to be cast against old concrete, (greater than 60 days of age), the surface of the old concrete shall be thoroughly cleaned and roughened by sand-blasting, exposing the aggregate. In concrete shear-walls, suspended slabs and roof slabs, the interface surface at construction joints shall be roughened to a full amplitude of one quarter inch. The hardened surface shall be cleaned of all latent foreign material and washed clean, prior to the application of an epoxy bonding agent.

K. Concrete shall not be placed in any structure until all water entering the space to be filled with concrete has been properly cut off or has been diverted by pipes, or other means, and carried out of the forms, clear of the work. Concrete shall not be deposited underwater nor shall the CONTRACTOR allow still water to rise on any concrete until the concrete has attained its initial set. Water shall not be permitted to flow over the surface of any concrete in such manner and at such velocity as will injure the surface finish of the concrete. Pumping or other necessary dewatering operations for removing ground water, if required, will be subject to the review of the ENGINEER.

L. Corrosion Protection: Pipe, conduit, dowels, and other ferrous items required to be embedded in concrete construction shall be so positioned and supported prior to placement of concrete that there will be a minimum of 2-inches clearance between said items and any part of the concrete reinforcement. Securing such items in position by wiring or welding them to the reinforcement will not be permitted.

M. Openings for pipes, inserts for pipe hangers and brackets, and the setting of anchors shall, where practicable, be provided for during the placing of concrete.

N. Anchor bolts shall be accurately set, and shall be maintained in position by templates while being embedded in concrete.

O. Cleaning: The surfaces of all metalwork to be in contact with concrete shall be thoroughly cleaned of all dirt, grease, loose scale and rust, grout, mortar, and other foreign substances immediately before the concrete is placed.

3.3 HANDLING, TRANSPORTING, AND PLACING

A. General: Do not place concrete during rain or adverse weather conditions without means to prevent all damage. Conform to requirements specified hereinafter whenever concrete placement is required during cold or hot weather. Placing of concrete shall conform to the applicable requirements of ACI 350.5 and the requirements of this Section.

B. Non-Conforming Work or Materials: Concrete which upon or before placing is found not to conform to the requirements specified herein shall be rejected and immediately removed from the work. Concrete which is not placed in accordance with these Specifications, or which is of inferior quality, shall be removed and replaced by and at the expense of the CONTRACTOR.

C. Concrete shall not be placed except in the presence of duly authorized representative of the INSPECTOR. The CONTRACTOR shall notify the INSPECTOR in writing at least 48 hours in advance of placement of any concrete.

D. Placement in Wall Forms: Concrete shall not be dropped through reinforcement steel or into any deep form, whether reinforcement is present or not, causing separation of the coarse aggregate from the mortar on account of repeatedly hitting rods or the sides of the form as it falls, nor shall concrete be placed in any form in such a manner as to leave accumulation of mortar on the form surfaces above the placed concrete. In such cases, some means such as the use of hoppers and, if necessary, vertical ducts of canvas, rubber, or metal shall be used for placing concrete in the forms in a manner that it may reach the place of final deposit without separation. In no case shall the free fall of concrete exceed 4 feet below the ends of ducts, chutes, or buggies. Concrete shall be uniformly distributed during the process of depositing and in no case after depositing shall any portion be displaced in the forms more than 6 feet in horizontal direction. Concrete in forms shall be deposited in uniform horizontal layers not deeper than 2 feet; and care shall be taken to avoid inclined layers or inclined construction joints except where such are required for sloping members. Each layer shall be placed while the previous layer is still soft. The rate of placing concrete in forms shall not exceed 5 feet of vertical rise per hour.

E. Casting New Concrete Against Old: An approved epoxy adhesive bonding agent shall be applied to the old surfaces according to the manufacturer's written recommendations. This provision shall not apply to joints where waterstop is installed, see Section [03290], "Joints in Concrete".

F. Conveyor Belts and Chutes: All ends of chutes, hopper gates, and all other points of concrete discharge throughout the CONTRACTOR'S conveying, hoisting and placing system shall be so designed and arranged that concrete passing from them will not fall separated into whatever receptacle immediately receives it. Conveyor belts, if used, shall be of a type acceptable to the ENGINEER. Chutes longer than 50 feet will not be permitted. Minimum slopes of chutes shall be such that concrete of the specified consistency will readily flow in them. If a conveyor belt is used, it shall be wiped clean by a device operated in such a manner that none of the mortar adhering to the belt will be wasted. All conveyor belts and chutes shall be covered. Sufficient illumination shall be provided in the interior of all forms so that the concrete at the places of deposit is visible from the deck or runway.

G. Placement in Slabs: Concrete placed in sloping slabs shall proceed uniformly from the bottom of the slab to the top, for the full width of the pour. As the work progresses, the concrete shall be vibrated and carefully worked around the slab reinforcement, and the surface of the slab shall be screeded in an up-slope direction.

H. Temperature of Concrete: The temperature of concrete when it is being placed shall be not more than 90 degrees F nor less than 40 degrees F in moderate weather, and not less than 50 degrees F in weather during which the mean daily temperature drops below 40 degrees F. Concrete ingredients shall not be heated to a temperature higher than that necessary to keep the temperature of the mixed concrete, as placed, from falling below the specified minimum temperature. If concrete is placed

when the weather is such that the temperature of the concrete would exceed 90 degrees F, the CONTRACTOR shall employ effective means, such as precooling of aggregates and mixing water using ice or placing at night, as necessary to maintain the temperature of the concrete, as it is placed, below 90 degrees F. The CONTRACTOR shall be entitled to no additional compensation on account of the foregoing requirements.

I. Cold Weather Placement:

1. Earth foundations shall be free from frost or ice when concrete is placed upon or against them. Fly ash concrete shall not be placed when the air temperature falls below 50 degrees F.

2. Normal Concrete: When the temperature is below 40 degrees F, the temperature of the concrete placed in the forms shall be at least 60 degrees F. When the temperature is below 30 degrees F, the temperature of the concrete as mixed shall be 65°F. In all cases, when the daily average temperature is below 40 degrees F, the concrete shall be kept at 55 degrees F for the 72 hours, and then allowed to drop uniformly to the air temperature over the next 24 hours. Concrete temperature shall be measured by placing a thermometer 2" below the top of the concrete being placed.

3. Air-entrained concrete shall be kept at the above temperature for 27 hours and above freezing for an additional 72 hours.

4. No calcium chloride shall be used to accelerate hardening of concrete. CONTRACTOR to certify that any additive used does not contain calcium chloride.

5. If low temperature accelerating admixture is proposed, adjust concrete mix as required and obtain approval of the ENGINEER.

6. All concrete materials, reinforcement, forming materials and ground with which concrete is to come in contact shall be free of frost.

7. The covering or other protection used in connection with the curing shall remain in place and intact for at least 24 hours.

8. The work shall be protected from the elements, flowing water, and defacements of any nature during the construction operations.

9. Conform to the provisions of ACI 306.1R-16, except as modified herein.

J. Hot Weather Placement:

Conform to ACI 305.1 and the following requirements:

1. Take extra care to reduce the temperature of the concrete being placed, and to prevent rapid drying of newly placed concrete. When the outdoor ambient temperature is more than 90 degrees F, shade the fresh concrete as soon as possible after placing, use an evaporation reducer or fogging to minimize rapid drying. and start curing as soon as the surface of the fresh concrete is sufficiently hard to permit it without damage.

2. Concrete placement temperatures shall be controlled by the CONTRACTOR and shall not be limited to:

   a. Shading and cooling the aggregate;

   b. Avoiding use of hot cement;

   c. Cooling mixing water by additions of ice;

d. Insulating water supply lines and tanks; and

e. Insulating mixer drums or cooling them with sprays or wet burlap.

K. Cast-in-place concrete shall be homogeneous throughout the structural element. The methods used to place shall prevent segregation. Placement of concrete for bridge structures shall conform to Section 51-1 of the CSS.

3.4 PUMPING OF CONCRETE

A. General: If the pumped concrete does not produce satisfactory end results, the CONTRACTOR shall discontinue the pumping operation and proceed with the placing of concrete using conventional methods.

B. Pumping Equipment: The pumping equipment must have 2 cylinders and be designed to operate with one cylinder only in case the other one is not functioning. In lieu of this requirement, the CONTRACTOR may have a standby pump on the site during pumping.

C. The minimum diameter of the hose (conduits) shall be 4-inches.

D. Pumping equipment and hoses (conduits) that are not functioning properly, shall be replaced.

E. Aluminum conduits for conveying the concrete will not be permitted.

F. Gradation of coarse aggregates shall conform to ASTM C 33 and shall be as close to the middle range as possible.

G. Gradation of fine aggregate shall conform to ASTM C 33, with 15 to 30 percent passing the number 50 screen and 5 to 10 percent passing the number 100 screen. The fineness modulus of sand used shall not be over 3.00.

H. Field Control: Concrete samples for slump per ASTM C 143 and test cylinders per ASTM C 31 and C 39.

3.5 ORDER OF PLACING CONCRETE

A. The order of placing concrete in all parts of the work shall be acceptable to the ENGINEER. In order to minimize the effects of shrinkage, the concrete shall be placed in units as bounded by construction joints shown. The placing of units shall be done by placing alternate units in a manner such that each unit placed shall have cured at least 7 days before the contiguous unit or units are placed, except that the corner sections of vertical walls shall not be placed until the 2 adjacent wall panels have cured at least 14 days.

B. The surface of the concrete shall be level whenever a run of concrete is stopped. To insure a level, straight joint on the exposed surface of walls, a wood strip at least 3/4-inch thick shall be tacked to the forms on these surfaces. The concrete shall be carried about 1/2-inch above the underside of the strip. About one hour after the concrete is placed, the strip shall be removed and any irregularities in the edge formed by the strip shall be leveled with a trowel and all laitance shall be removed.

3.6 TAMPING AND VIBRATING

A. As concrete is placed in the forms or in excavations, it shall be thoroughly settled and compacted, throughout the entire depth of the layer which is being consolidated, into a dense, homogeneous mass, filling all corners and angles, thoroughly embedding the reinforcement, eliminating rock pockets, and bringing only a slight excess of water to the exposed surface of concrete during placement. Vibrators shall be high speed power vibrators (8,000 to 10,000 rpm) of an immersion type in sufficient number and with (at least one) standby units as required.

B. Operation of Vibrators: Do not horizontally transport concrete in forms with vibrators nor allow vibrators to contact forms or reinforcing. Push vibrators vertically into the preceding layers that are still plastic and slowly withdraw, producing maximum obtainable density in concrete without creating voids or segregation. In no case disturb concrete that has partially set. Vibrate at intervals not exceeding two-thirds the effective visible vibration diameter of the submerged vibrator. Avoid excessive vibration that causes segregation. Use and type of vibrators shall conform to ACI 309 "Recommended Practice for Consolidation of Concrete".

C. Correction of Segregation: Before placing next layer of concrete, and at the top of last placement for vertical elements, remove concrete containing excess water or fine aggregate or showing deficiency of coarse aggregate and fill the space with compacted concrete of correct proportions.

D. Care shall be used in placing concrete around waterstops. The concrete shall be carefully worked by rodding and vibrating to make sure that all air and rock pockets have been eliminated. Where flat-strip type waterstops are placed horizontally, the concrete shall be worked under the waterstops by hand, making sure that all air and rock pockets have been eliminated. Concrete surrounding the waterstops shall be given additional vibration, over and above that used for adjacent concrete placement to assure complete embedment of the waterstops in the concrete.

E. Concrete in walls shall be internally vibrated and at the same time rammed, stirred, or worked with suitable appliances, tamping bars, shovels, or forked tools until it completely fills the forms or excavations and closes snugly against all surfaces. Subsequent layers of concrete shall not be placed until the layers previously placed have been worked thoroughly as specified. Vibrators shall be provided in sufficient numbers, with standby units as required, to accomplish the results herein specified within 15 minutes after concrete of the prescribed consistency is placed in the forms. The vibrating head shall be kept from contact with the surfaces of the forms. Care shall be taken not to vibrate concrete excessively or to work it in any manner that causes segregation of its constituents.

3.7 FINISHING CONCRETE SURFACES

A. General: Surfaces shall be free from fins, bulges, ridges, offsets, honeycombing, or roughness of any kind, and shall present a finished, smooth, continuous hard surface. Allowable deviations from plumb or level and from the alignment, profiles, and dimensions shown are defined as tolerances and are specified in Part 1, herein. These tolerances are to be distinguished from irregularities in finish as described herein. Aluminum finishing tools shall not be used.

B. Formed Surfaces: Formed surfaces for all structures other than building structures and bridge decks, shall be finished per Section 303-1.9 of Standard Specifications. Concrete for bridge decks shall be finished per CSS Section 51-1.17. Concrete for building and retaining wall structures shall be finished per architectural finish as specified hereon, or as shown on Drawings.

C. Finishing of Formed Surfaces (As Applicable):

1. General: After removal of forms, give the concrete surfaces one or more of the finishes specified below where so indicated on the Contract Drawings. Revise the finishes as needed to secure the approval of the ENGINEER.

C. Finishing of Unformed Top Surfaces of slabs, floors, walls, and curbs in accordance with Aci 350.5.

1. Unspecified Finish: In accordance with ACI 350.5, unless otherwise stated below:

a. Light Troweled Finish: For top slabs or floors intended as walking surfaces.

3.8 CURING AND DAMPPROOFING

Curing and Dampproofing shall conform to Section 03370 “Curing Concrete”, Part 3.

3.9 PROTECTION

The CONTRACTOR shall protect all concrete against injury until final acceptance by the CITY. Fresh concrete shall be protected from damage due to rain, hail, sleet, or snow. The CONTRACTOR shall provide such protection while the concrete is still plastic and whenever such precipitation is imminent or occurring. Immediately following the first frost in the fall, the CONTRACTOR shall be prepared to protect all concrete against freezing. After the first frost, and until the mean daily temperature in the vicinity of the worksite falls below 40 degrees F for more than one day, the concrete shall be maintained at a temperature not lower than 50 degrees F for at least 72 hours after it is placed.

The CONTRACTOR shall protect all concrete against injury or damage from excessive heat, lack of moisture, overstress, or any other cause until final acceptance by the CITY. Particular care shall be taken to prevent the drying of concrete and to avoid roughening or otherwise damaging the surface. Any concrete found to be damaged, or which may have been originally defective, or which becomes defective at any time prior to the final acceptance of the completed work, or which departs from the established line or grade, or which, for any other reason, does not conform to the requirements of the Contract Documents, shall be satisfactorily repaired or removed and replaced with acceptable concrete at the CONTRACTOR'S expense.

3.10 TREATMENT OF SURFACE DEFECTS

A. As soon as forms are removed, all exposed surfaces shall be carefully examined, and any irregularities shall be immediately rubbed or ground in a satisfactory manner in order to secure a smooth, uniform, and continuous surface. Plastering or coating of surfaces to be smoothed will not be permitted. No repairs shall be made until after inspection by the ENGINEER. In no case will extensive patching of honeycombed concrete be permitted. Concrete containing minor voids, holes, honeycombing, or similar depression defects shall be repaired as specified herein. Concrete containing extensive voids, holes, honeycombing, or similar depression defects, shall be completely removed and replaced. All repairs and replacements herein specified shall be promptly executed by the CONTRACTOR at its own expense.

B. Defective surfaces to be repaired shall be cut back from true line a minimum depth of 1/2-inch over the entire area. Feathered edges will not be permitted. Where chipping or cutting tools are not required in order to deepen the area properly, the surface shall be prepared for bonding by the removal of all laitance or soft material, and not less than 1/32-inch depth of the surface film from all hard portions, by means of an efficient sandblast. After cutting and sandblasting, the surface shall be wetted sufficiently in advance of shooting with shotcrete or with cement mortar so that while the repair material is being applied, the surfaces under repair will remain moist, but not so wet as to overcome the suction upon which a good bond depends. The material used for repair purposes shall consist of a mixture of one sack of cement to 3 cubic feet of sand. For exposed walls, the cement shall contain such a proportion of Atlas white Portland cement as is required to make the color of the patch match the color of the surrounding concrete.

C. Holes left by tie-rod cones shall be reamed so as to leave the surfaces of the holes clean and rough. These holes then shall be repaired in an approved manner with non-shrink grout. Holes left by form-tying devices having a rectangular cross-section, and other imperfections having a depth greater than their least surface dimension, shall not be reamed but shall be repaired in an approved manner with non-shrink grout.

D. All repairs shall be built up and shaped in such a manner that the completed work will conform to the requirements of this Section, as applicable, using approved methods which will not disturb the bond, cause sagging, or cause horizontal fractures. Surfaces of said repairs shall receive the same kind and amount of curing treatment as required for the concrete in the repaired section.

E. Prior to filling any structure with water, all cracks that may have developed shall be repaired to the satisfaction of the ENGINEER. This repair method shall be done on the water bearing face of members. Prior to backfilling, faces of members in contact with fill, which are not covered with a waterproofing membrane, shall also have cracks repaired as specified herein.

END OF SECTION

SECTION 03315
GROUT

PART 1 -- GENERAL

1.1 THE REQUIREMENT

A. The CONTRACTOR shall furnish all materials for grout in accordance with the provisions of this Section and shall form, mix, place, cure, repair, finish, and do all other work as required to produce finished grout, in accordance with the requirements of the Contract Documents.

B. All grouts shall be City of Los Angeles approved product. The CONTRACTOR shall submit a copy of the Los Angeles Research Report with submittals.

C. The following types of grout shall be covered in this Section:

1. Non-Shrink Grout: This type of grout is to be used wherever grout is shown in the Contract Documents, unless another type is specifically referenced.

2. Concrete (Cement) Grout.

1.2 RELATED WORK SPECIFIED ELSEWHERE

A. Section 03250 Concrete Accessories.

B. Section 03300 Cast-in-Place Concrete.

C. Section 03400 Precast Concrete.

D. Section 03740 Concrete Repair.

1.3 REFERENCE SPECIFICATIONS, CODES, AND STANDARDS

A. Comply with the reference standards of the GENERAL REQUIREMENTS.

B. Comply with the current provisions of the following Codes and Standards, as applicable.

1. Commercial Standards:

CRD-C 621	Corps of Engineers Specification for Non-shrink Grout
ASTM C 109	Standard Test Method for Compressive Strength of Hydraulic Cement Mortars (Using 2-in or 50-mm Cube Specimens)
ASTM C 531	Standard Test Method for Linear Shrinkage and Coefficient of Thermal Expansion of Chemical- Resistant Mortars, Grouts, Monolithic Surfacings, and Polymer Concretes
ASTM C 579	Standard Test Methods for Compressive Strength of Chemical-Resistant Mortars, Monolithic Surfacings, and Polymer Concretes
ASTM C 827	Standard Test Method for Change in Height at Early Ages of Cylindrical Specimens of Cementitious Mixtures
ASTM C 1107	Standard Specification for Packaged Dry, Hydraulic-Cement Grout (Non-Shrink)

ASTM D 696	Standard Test Method for Coefficient of Linear Thermal Expansion of Plastics Between -30°C and 30°C with a Vitreous Silica Dilatometer

2. Other Government Standards:

CSS	Caltrans Standard Specifications.

1.4 CONTRACTOR SUBMITTALS

A. Submittals shall be made in accordance with GENERAL REQUIREMENTS.

B. The following submittals and specific information shall be provided.

1. The CONTRACTOR shall submit certified test results verifying the compressive strength, shrinkage, and expansion requirements specified herein; and manufacturer's literature containing instructions and recommendations on the mixing, handling, placement and appropriate uses for each type of non-shrink and epoxy grout used in the work.

1.5 QUALITY ASSURANCE

A. Field Tests:

1. Compression test specimens will be taken during construction from the first placement of each type of grout, and at intervals thereafter as selected by the ENGINEER to insure continued compliance with these specifications. The specimens will be made by the INSPECTOR

2. Compression tests and fabrication of specimens for concrete (cement) grout and non-shrink grout will be performed as specified in ASTM C 109 at intervals during construction as selected by the ENGINEER. A set of three specimens will be made for testing at 7 days, 28 days, and each additional time period as appropriate.

3. All grout, already placed, which fails to meet the requirements of these specifications, is subject to removal and replacement at the cost of the CONTRACTOR.

4. The cost of all laboratory tests on grout will be borne by the CITY, but the CONTRACTOR shall assist the INSPECTOR in obtaining specimens for testing. However, the CONTRACTOR shall be charged for the cost of any additional tests and investigation on work performed which does not meet the specifications. The CONTRACTOR shall supply all materials necessary for fabricating and containing the test specimens.

B. Construction Tolerances: Construction tolerances shall be as specified in the Section 03300, "Cast-in-Place Concrete," except as modified herein and elsewhere in the Contract Documents.

PART 2 -- PRODUCTS

2.1 CONCRETE (CEMENT) GROUT

A. Concrete (Cement) Grout: Cement grout shall be composed of one part cement, three parts sand, and the minimum amount of water necessary for the mixture to flow under its own weight. Where needed to match the color of adjacent concrete, white Portland cement shall be blended with regular cement as needed. In addition, where needed, an approved admixture may be added to increase workability at a low water/cement ratio. The minimum compressive strength at 28 days shall be 4000 psi.

B. Concrete (cement) grout materials shall be as specified in Section 03300, "Cast-in-Place Concrete".

2.2 PREPACKAGED GROUTS

A. Non-Shrink Grout:

1. Non-shrink grout shall be a prepackaged, inorganic, non-gas-liberating when tested in accordance with C1107, non-metallic, cement-based grout requiring only the addition of water. Manufacturer's instructions shall be printed on each bag or other container in which the materials are packaged. The specific formulation for each class of non-shrink grout specified herein shall be that recommended by the manufacturer for the particular application.

2. Class A non-shrink grouts shall have a minimum 28 day compressive strength of 5,000 psi; shall have no shrinkage (0.0 percent) and a maximum 4.0 percent expansion in the plastic state when tested in accordance with ASTM C 827; and shall have no shrinkage (0.0 percent) and a maximum of 0.2 percent expansion in the hardened state when tested in accordance with CRD C 621.

3. Class B non-shrink grouts shall have a minimum 28 day compressive strength of 5,000 psi and shall meet the requirements of CRD C 621.

4. Application:

   a. Class A non-shrink grout shall be used for the repair of all holes and defects in concrete members which are water bearing or in contact with soil or other fill material, grouting under all equipment base plates, and at all locations where grout is specified in the contract documents; except, for those applications for Class B non-shrink grout and epoxy grout specified herein. Class A non-shrink grout may be used in place of Class B non-shrink grout for all applications.

   b. Class B non-shrink grout shall be used for the repair of all holes and defects in concrete members which are not water-bearing and not in contact with soil or other fill material, grouting under all base plates for structural steel members, and grouting railing posts in place.

2.3 CURING MATERIALS

Curing materials shall be as specified in Section 03300, "Cast-in-Place Concrete" for cement grout and as recommended by the manufacturer of prepackaged grouts.

2.4 CONSISTENCY

The consistency of grouts shall be that necessary to completely fill the space to be grouted for the particular application. Dry pack consistency is such that the grout is plastic and moldable but will not flow. Where "dry pack" is called for in the Contract Documents, it shall mean a grout of that consistency; the type of grout to be used shall be as specified herein for the particular application.

2.5 MEASUREMENT OF INGREDIENTS

A. Measurements for cement grout shall be made accurately by volume using containers. Shovel measurement shall not be allowed.

B. Prepackaged grouts shall have ingredients measured by means recommended by the manufacturer.

PART 3 -- EXECUTION

3.1 GENERAL

A. All surface preparation, curing, and protection of cement grout shall be as specified in Section 03300, "Cast-in-Place Concrete". The finish of the grout surface shall match that of the adjacent concrete.

B. The manufacturer of Class A non-shrink grout and epoxy grout shall provide on-site technical assistance upon request. All costs related to this requirement shall be borne by the CONTRACTOR.

C. All mixing, surface preparation, handling, placing, consolidation, and other means of execution for prepackaged grouts shall be done according to the instructions and recommendations of the manufacturer.

3.2 CONSOLIDATION

Grout shall be placed in such a manner, for the consistency necessary for each application, so as to assure that the space to be grouted is completely filled.

END OF SECTION

SECTION 03370
CONCRETE CURING

PART 1 -- GENERAL

1.1 THE REQUIREMENT

A. The Contractor shall furnish all tools, equipment, materials, and supplies and shall perform all labor required to complete the work as indicated on the Drawings and specified herein.

B. This section covers the work necessary for the concrete curing requirements.

1.2 RELATED WORK SPECIFIED ELSEWHERE

A. Section 03100 Concrete Formwork.

B. Section 03300 Cast-In-Place Concrete.

D. Section 03400 Precast Concrete.

1.3 REFERENCE SPECIFICATIONS, CODES AND STANDARDS

A. Comply with the reference standards and Standard Specifications of the GENERAL REQUIREMENTS.

B. Comply with the current provisions of the following Codes and Standards, as applicable.

1. Federal Specifications:

   UU-B-790A (Int.Amd. 1) Building Paper, Vegetable Fiber (Kraft, Waterproofed, Waterproofed, water Repellant and Fire Resistant)

2. Commercial Standards:

ACI 308	Standard Practice for Curing Concrete
ASTM C 156	Standard Test Method for Water Loss [from a Mortar Specimen] Through Liquid Membrane-Forming Curing Compounds for Concrete
ASTM C 171	Specifications for Sheet Materials for Concrete Curing
ASTM C 309	Standard Specification for Liquid Membrane-Forming Compounds for Curing Concrete

3. Government Standards:

CSS	Caltrans Standard Specifications

1.4 CONTRACTOR SUBMITTALS

A. Submittals shall be made in accordance with the GENERAL REQUIREMENTS.

1.5 QUALITY ASSURANCE

A. Quality Control Data:

1. Curing Compound: Manufacturer's Certification of Compliance, to include statement that product meets ASTM C 309 additional permeability requirement, and coverage.

2. Retardant For Exposed Aggregate Finish on Formed Surface: Manufacturer's Certification of Compliance including statement that product is suitable for and will meet job requirements.

3. Curing method, procedures and method of application to be used shall be in compliance with the requirements as specified herein.

PART 2 -- PRODUCTS

2.1 CURING MATERIALS

A. Materials for curing concrete as specified herein shall conform to the Standard Specifications and the following requirements:

1. Polyethylene sheet for use as concrete curing blanket shall be white and conform to ASTM C 171. The loss of moisture when determined in accordance with the requirements of ASTM C 156 shall not exceed 0.055 grams per square centimeter of surface.

2. Polyethylene-coated waterproof paper sheeting for use as concrete curing blanket shall consist of white polyethylene sheeting free of visible defects, uniform in appearance, having a nominal thickness of 2 mils and permanently bonded to waterproof paper conforming to the requirements of Federal Specification UU-B-790A (Int. Amd. 1). The loss of moisture, when determined in accordance with the requirements of ASTM C 156, shall not exceed 0.055 gram per square centimeter of surface.

3. Polyethylene-coated burlap for use as concrete curing blanket shall conform to ASTM C 171. The loss of moisture, when determined in accordance with the requirements of ASTM C 156, shall not exceed 0.055 grams per square centimeter of surface.

4. Curing mats for use in Curing Method 6 as specified herein, shall be heavy shag rugs or carpets or cotton mats quilted at 4-inches on center. Curing mats shall weigh a minimum of 12 ounces per square yard when dry.

5. Evaporation retardant shall be a material such as MasterKure ER 50 (formerly Confilm) as manufactured by Masterbuilders, Cleveland, OH; or an approved equal**.**

B. Curing Compound:

1. Curing compound shall consist of a liquid which, when applied to fresh concrete by means of a spray gun, will form an impervious membrane over the exposed surfaces of the concrete.

2. Concrete curing compounds shall be designated by type as follows:

Type 1-D - Clear or translucent with red fugitive dye.

3. Provide curing compound meeting requirements of ASTM C 309, with additional requirement that permeability not exceed 0.039 gm/square cm/72 hours, when tested in accordance with ASTM C 156 standards.

4. Provide evaporation retardant where required to prevent rapid evaporation of water from fresh exposed concrete.

5. When pigmented curing compounds are used, at the time of use, the compound shall be thoroughly mixed, with the pigment uniformly dispensed throughout the mixture.

PART 3 -- EXECUTION

3.1 CURING AND DAMPPROOFING METHODS

General: All concrete shall be cured for not less than 10 days after placing, in accordance with the methods specified herein for the different parts of the work and described in detail in the following paragraphs.

Surface to be Cured or Dampproofed	Method
Unstripped forms	1
Wall sections with forms removed	6
Construction joints between footings and walls, and between floor slab and columns	2
Encasement concrete and thrust blocks	3
All concrete surfaces not specifically provided for elsewhere in this Paragraph	4
Floor slabs on grade	5
Roof and slabs not on grade	6
Exterior buried surfaces of roof slabs and basement walls	7
All liquid and water retaining structures	2

Method 1: Wooden forms shall be wetted immediately after concrete has been placed and shall be kept wet with water until removed. If steel forms are used the exposed concrete surfaces shall be kept continuously wet until the forms are removed. If forms are removed within 10 days of placing the concrete, curing shall be continued in accordance with Method 6, herein.

Method 2: The surface shall be covered with burlap mats which shall be kept wet with water for the duration of the curing period, until the concrete in the walls has been placed. No curing compound shall be applied to surfaces cured under Method 2.

Method 3: The surface shall be covered with moist earth not less than 4 hours, nor more than 24 hours, after the concrete is placed. Earthwork operations that may damage the concrete shall not begin until at least 7 days after placement of concrete.

Method 4: The surface shall be sprayed with a liquid curing compound.

1 Curing compound shall be applied in 2 coats according to the manufacturer's printed instructions. The direction of application of the second coat shall be perpendicular to the first. The second coat shall be applied when the first coat is dry to touch, but not to exceed 4 hours. Each coat shall be applied at a rate not more than 200 square feet per gallon and in such a manner as to cover the surface with a uniform film which will seal thoroughly.

2 Where the curing compound method is used, care shall be exercised to avoid damage to the seal during the curing period. The CONTRACTOR shall maintain and monitor the curing compound membrane for a minimum of 10 days. Should the seal be damaged or broken before the expiration of this curing period, the break shall be repaired immediately by the application of additional curing compound over the damaged portion.

3 Wherever curing compound may have been applied by mistake to surfaces against which concrete subsequently is to be placed and to which it is to adhere, said compound shall be entirely removed by wet sandblasting just prior to the placing of new concrete.

4 Application of the curing compound to the concrete shall commence as soon as the finished surface of the concrete reaches a uniformly damp appearance with no free water on the surface. Curing compound shall also be applied no later than 2 hours after removal of forms from contact with formed surfaces or after the placement of concrete on the subgrade. At any point, the application rate shall be within 50 square feet per gallon of the nominal rate and the average application rate shall be within 25 square feet per gallon of the nominal rate specified when tested in accordance with California Test 535.

5 Repairs required to be made to formed surfaces shall be made within the said 2-hour period; provided, however, that any such repairs which cannot be made within the said 2-hour period shall be delayed until after the curing compound has been applied. When repairs are to be made to an area on which curing compound has been applied, the area involved shall first be wet-sandblasted to remove the curing compound, following which repairs shall be made as specified herein.

6 At the time of use, pigmented curing compounds shall be maintained in a thoroughly mixed condition. Containers of curing compound shall remain air-tight when not in use.

7 The CONTRACTOR shall apply curing compound in the presence of the INSPECTOR. Curing compound shall be applied to form a continuous and uniform membrane.

Method 5: Immediately after the concrete has been screeded, it shall be treated with a liquid evaporation retardant. The retardant shall be used again after each work operation as necessary to prevent drying shrinkage cracks.

1. Immediately after each square foot of the concrete has been finished, it shall be given a coat of curing compound in accordance with Method 4, herein. Not less than one hour nor more than 4 hours after the coat of curing compound has been applied, the surface shall be wetted with water delivered through a fog nozzle, and concrete-curing blankets shall be placed on the slabs. The curing blankets shall be polyethylene sheet, polyethylene-coated waterproof paper sheeting or polyethylene-coated burlap. The blankets shall be laid with the edges butted together and with the joints between strips sealed with 2-inch wide strips of sealing tape or with edges lapped not less than 3-inches and fastened together with a waterproof cement to form a continuous watertight joint.

2. The curing blankets shall be left in place during the 10-day curing period and shall not be removed until after concrete for adjacent work has been placed. Should the curing blankets become torn or otherwise ineffective, the CONTRACTOR shall replace damaged sections. During the first 3 days of the curing period, no traffic of any nature and no depositing, temporary or otherwise, of any materials shall be permitted on the curing blankets. During the remainder of the curing period, foot traffic and temporary depositing of materials that impose light pressure will be permitted only on top of plywood sheets 5/8-inch minimum thickness, laid over the curing blanket. The CONTRACTOR shall add water under the curing blanket as often as necessary to maintain damp concrete surfaces at all times.

Method 6: Concrete slabs shall be treated with an evaporation retardant as specified in Method 5. The concrete shall be kept continuously wet by the application of water for a minimum period of at least 10 consecutive days beginning immediately after the concrete has been placed or forms removed. Heavy curing mats shall be used as a curing medium to retain the moisture during the curing period. The curing medium shall be weighted or otherwise held in place to prevent being dislodged by wind or any other causes. Until the concrete surface is covered with the curing medium the entire surface shall be kept damp by applying water using nozzles that atomize the flow so that the surface is not marred or washed. The curing blankets and concrete shall be kept continuously wet by the use of sprinklers or other means both during and after normal working hours. Immediately after the application of water has terminated at the end of the curing period, the curing medium shall be removed and curing compound immediately applied in accordance with Method 4, herein. The CONTRACTOR shall dispose of excess water from the curing operation to avoid damage to the work.

Method 7:

1. Method 6 shall be used for curing.

2. Immediately after completion of curing the surface shall be sprayed with a dampproofing agent consisting of an asphalt emulsion. Application shall be in 2 coats. The first coat shall be diluted to 1/2 strength by the addition of water and shall be sprayed on so as to provide a maximum coverage rate of 100 square feet per gallon of dilute solution. The second coat shall consist of an application of the specified material, undiluted, and shall be sprayed on so as to provide a maximum coverage rate of 100 square feet per gallon. Dampproofing material shall be as specified herein.

3. As soon as the asphalt emulsion, applied as specified herein, has taken an initial set, the entire area thus coated shall be coated with whitewash. Any formula for mixing the whitewash may be used which produces a uniformly coated white surface and which so remains until placing of the backfill. Should the whitewash fail to remain on the surface until the backfill is placed, the CONTRACTOR shall apply additional whitewash.

3.2 EVAPORATION RETARDANT APPLICATION PROTECTION

A. Spray onto surface of fresh concrete immediately after screeding to react with surface moisture.

B. Reapply after smoothing surface with a bull float to ensure continuous, compacted monomolecular layer until final finishing is completed.

C. After finishing, apply water curing as specified.

3.3 CURING AND PROTECTION IN COLD WEATHER

A. Concrete shall not be placed during cold weather where conditions would require procedures as specified in ACI 306.

B. The Engineer, at his option, may allow cold weather placement of concrete if an extended period of cold weather is anticipated.

C. Water curing of concrete may be reduced to 6 days during periods when the mean daily temperature in the vicinity of the worksite is less than 40 degrees F; provided that, during the prescribed period of water curing, when temperatures are such that concrete surfaces may freeze, water curing shall be temporarily discontinued.

D. Concrete cured by an application of curing compound will require no additional protection from freezing if the protection at 50 degrees F for 72 hours is obtained by means of approved insulation in contact with the forms or concrete surfaces; otherwise, the concrete shall be protected against freezing temperatures for 72 hours immediately following 72 hours protection at 50 degrees F. Concrete cured by water curing shall be protected against freezing temperatures for 3 days immediately following the 72 hours of protection at 50 degrees F.

E. Discontinuance of protection against freezing temperatures shall be such that the drop in temperature of any portion of the concrete will be gradual and will not exceed 40 degrees F in 24 hours. In the spring, when the mean daily temperature rises above 40 degrees F for more than 3 successive days, the specified 72-hour protection at a temperature not lower than 50 degrees F may be discontinued for as long as the mean daily temperature remains above 40 degrees F; provided, that the concrete shall be protected against freezing temperatures for not less than 48 hours after placement.

F. Where artificial heat is employed, special care shall be taken to prevent the concrete from drying. Use of unvented heaters will be permitted only when unformed surfaces of concrete adjacent to the heaters are protected for the first 24 hours from an excessive carbon dioxide atmosphere by application of curing compound; provided, that the use of curing compound for such surfaces is otherwise permitted by these Specifications.

END OF SECTION

SECTION 03400
PRECAST CONCRETE

PART 1 -- GENERAL

1.1 THE REQUIREMENT

A. The CONTRACTOR shall furnish all tools, equipment, materials, and supplies and shall perform all labor required to complete the precast concrete work in accordance with the Contract Documents.

B. This Section covers the design, fabrication, delivery and installation of all plant precast concrete units, including connections, complete, in place, as shown and specified.

1.2 RELATED WORK SPECIFIED ELSEWHERE

A. Section 03315 Grout.

B. Section 07900 Joint Sealants.

C. Section 13200 Modular Buried Stormwater Infiltration System

1.3 REFERENCE SPECIFICATIONS, CODES AND STANDARDS

A. Comply with reference standards of the GENERAL REQUIREMENTS.

B. Comply with the current provisions of the following Codes and Standards, ~~or~~ as applicable:

1. Commercial Standards:

ACI 301	Specifications for Structural Concrete
ACI 304	Guide for Measuring, Mixing, Transporting and Placing Concrete
ACI 311	Guide for Concrete Plant Inspection and Testing of Ready-Mixed Concrete
ACI 315	Details and Detailing of Concrete Reinforcement
ACI 318	Building Code Requirements for Reinforced Concrete
ACI 347	Guide to Formwork for Concrete
AWS A5.4	Welding Rods and Electrodes
AWS D1.1	Welding and Cutting
AWS D1.4	Structural Welding Code – Reinforcing Steel
ASTM A 184	Standard Specification for Welded Deformed Steel Bar Mats for Concrete Reinforcement

ASTM A 193	Standard Specification for Alloy-Steel and Stainless Steel Bolting for High Temperature or High Pressure Service and Other Special Purpose Applications
ASTM A 194	Standard Specification for Carbon Steel, Alloy Steel, and Stainless Steel Nuts for Bolts for High-Pressure and High-Temperature Service, or Both
ASTM A 351	Standard Specification for Castings, Austenitic, for Pressure-Containing Parts
ASTM A 580	Standard Specification for Stainless Steel Wire
ASTM A 615	Standard Specification for Deformed and Plain Carbon-Steel Bars for Concrete Reinforcement
ASTM A 666	Standard Specification for Annealed or Cold-Worked Austenitic Stainless Steel Sheet, Strip, Plate, and Flat Bar
ASTM A 775	Standard Specifications for Epoxy-Coated Reinforcing Steel Bars
ASTM A 1064	Standard Specification for Carbon-Steel Wire and Welded Wire Reinforcement, Plain and Deformed, for Concrete
ASTM C 33	Standard Specification for Concrete Aggregates
ASTM C 67	Standard Test Methods for Sampling and Testing Brick and Structural Clay Tile
ASTM C 127	Standard Test Method for Relative Density (Specific Gravity) and Absorption of Coarse Aggregate
ASTM C 128	Standard Test Method for Relative Density (Specific Gravity) and Absorption of Fine Aggregate
ASTM C 150	Specification for Portland Cement
ASTM C 173	Standard Test Method for Air Content of Freshly Mixed Concrete by the Volumetric Method
ASTM C 204	Standard Test Method for Fineness of Hydraulic Cement by Air-Permeability Apparatus
ASTM C 231	Standard Test Method for Air Content of Freshly Mixed Concrete by the Pressure Method
ASTM C 260	Standard Specification for Air-Entraining Admixtures for Concrete
ASTM C 311	Standard Test Methods for Sampling and Testing Fly Ash or Natural Pozzolans for Use in Portland Cement Concrete

ASTM C 494	Standard Specification for Chemical Admixtures for Concrete
ASTM D 2240	Test Method for Rubber Property -- Durometer Hardness
AWS B2.1	Specification for Welding Procedure and Performance Qualification
AWS D1.4	Structural Welding Code - Reinforced Steel
PCI MNL-116	Manual for Quality Control for Plants and Production of Structural Precast Concrete Products
PCI MNL-117	Manual for Quality Control for Plants and Production of Architectural Precast Concrete Products
PCI MNL-121	Manual for Structural Design of Architectural Precast Concrete

2. Government Standards:

CSS	Caltrans Standard Specifications.

1.4 CONTRACTOR SUBMITTALS

A. Submittals shall be made in accordance with the GENERAL REQUIREMENTS.

B. Shop Drawings:

1. Shop drawings shall provide details in accordance with ACI 315 and ACI 318 including installation details.

2. Shop drawings, including design computations, shall be stamped and signed by a civil or structural engineer registered in the State of California and shall be approved by the ENGINEER.

3. Shop drawings shall indicate precast unit identification marks, location of units in the WORK, elevations, fabrication details, welding details, reinforcement, connections, dimensions, interface with adjacent members, and special handling instructions in sufficient detail to cover manufacture, handling, and erection. Shop drawings shall include erection drawings. Shop drawings shall also include design computations for above mentioned drawings.

4. Shop drawings shall be divided into complete separate submittals for each structure. Each complete submittal shall consist of a schedule and shop drawings.

a. Schedule: Showing all exterior elevations of the structure, including all precast concrete enclosure faces exposed to view, in its associated shop drawing submittal. Elevations at a minimum scale of 1/8" = 1'-0" shall be drawn, identifying the type and location of each segment by a number which corresponds to the segment number appearing on an associated shop drawing; this same number shall be permanently marked on the back of each segment as they are fabricated.

b. Shop Drawings: Showing all elevations, dimensions, horizontal and vertical sections, openings, inserts, reinforcing, anchorage devices, pick-up points, details, design computations, and other requirements for each different type of panel to be incorporated into the portion of the project covered by the submittal. Drawings shall be 24 inches x 36 inches maximum.

C. Mix Proportions: Prior to commencing operations, including fabrications of the precast concrete for any mock-up, a statement shall be submitted giving the nominal maximum aggregate size and proportions of all ingredients that will be used in the manufacture of concrete. The statement shall include test results from an approved testing laboratory, with certification stamp and signature by a Civil or Structural Engineer registered in the State of California. No substitutions shall be made in materials used in the concrete mix without approval and additional tests to verify that the concrete properties are satisfactory. A copy shall be submitted of concrete mix with each set of samples.

D. Test Reports: Tests for compressive strength of concrete shall be performed by an approved independent commercial testing laboratory at no cost to the CITY. Copies of test reports including all test data and all test results shall be submitted for review and approval of the ENGINEER.

E. Certificates of Compliance: Certificates of compliance shall be submitted attesting that materials and products meet or exceed specified requirements.

F. Manufacturer's Qualifications: Prior to commencing operations, a statement shall be submitted giving the qualifications of the precast concrete Manufacturer, and evidence that the Manufacturer and plant are PCI certified.

1.5 QUALITY ASSURANCE

A. General Requirements: Design precast members under direct supervision of a professional structural engineer experienced in design of precast concrete units, registered in the State and conforming to requirements of PCI MNL-121 and to ACI 318.

1. Precast Manufacturer and erectors shall be qualified in accordance with PCI MNL-117 and MNL-116.

2. Welding shall be in accordance with AWS D1.1, AWS D12.1, AWS B2.1, and AWS A5.4.

3. Manufacture, Transportation and Installation: The Manufacturer shall specialize in providing precast products and services normally associated with precast concrete construction with high quality architectural finishes similar to that indicated on drawings, using procedures complying with PCI MNL-116 and MNL-117, and PCI plant certified for at least 5 years.

4. Use adequate number of skilled workers who are thoroughly trained and experienced in the necessary crafts and who are completely familiar with the specified requirements and methods needed for proper performance of the work of this Section.

B. CONTRACTOR is responsible for all damage that may occur while installing precast concrete structures after delivery. Repair procedures are to be submitted for approval by the ENGINEER.

1.6 DESIGN REQUIREMENTS

A. General: The precast concrete panel and connection designs shown hereon represent minimum precast construction requirements. The Manufacturer shall verify the panel and connection designs for all handling, erection, and service conditions, and shall provide any additional materials necessary to meet the design conditions.

B. Standards and Loads (Building structures only): The precast panel and connection design and construction shall conform to all applicable codes and AISC Specification for the Design, Fabrication and Erection of Structural Steel for Buildings. The precast or prefabricated, nonbearing, nonshear wall panels and connections which are attached to or enclose the exterior, shall resist, in addition to initial handling and erection loads and dead loads, the following forces:

1. Wind pressure and load combinations relative to panel design in accordance with the latest edition of LABC.

2. Seismic loads relative to panel design in accordance with the latest edition of Los Angeles Building Code.

3. The design shall be based on a differential temperature of 50 degrees F between interior and exterior faces of the units and an 80 degrees (40 degrees from erected temperature) average panel temperature differential.

4. Stresses due to restrained volume changes caused by shrinkage and temperature differentials shall be accounted for.

C. Connections (Building structures only): Prior to submitting shop drawings, the CONTRACTOR shall verify the precast connection designs shown against the aforementioned and following design criteria and provide any additional materials necessary to meet the design conditions.

1. The panel joints shall be designed to accommodate an in-plane movement between stories of 0.005 times the story height in inches but not less than 3/4-inch.

2. Panel connections shall accommodate building movement and permit panels to move freely so as not to resist in plane deformation of the main frame structural system. Adjustment shall be provided to accommodate misalignment of structure without permanent distortion, damage to components, racking of joint connection, breakage of seals, or moisture penetration.

D. Concrete Mix: The concrete mix shall be designed by the Manufacturer, with certification stamp and signature by a Civil or Structural Engineer registered in the State of California, and approved by the ENGINEER, using the materials and quantities specified to meet all of the requirements of this specification.

1. Proportioning of Concrete Mixes: Mixes shall be proportioned by weight except water and admixtures may be batched by volume if desired. Trial mixes and testing to meet requirements of the strengths of concrete specified is the CONTRACTOR's responsibility. Design mix shall contain similar materials as those proposed for use in the WORK.

2. Admixtures: Concrete shall contain an air entraining admixture in proportion so as to provide 4 percent plus or minus 1 percent total air in the concrete as determined by ASTM C 173 or C 231. Set retarding admixtures may be used provided cement content is not reduced. Water reducing admixtures may be used provided they are

used in the mix design studies. High-range water reducers (superplasticizers) shall be used only where specifically called for in this Section, otherwise superplasticizers shall not be used without written approval from the ENGINEER. No admixture may contain chlorides, bromides, or fluorides.

3. Water: Clean, potable water. The CONTRACTOR shall provide tests to assure that no more than 200 parts per million total aggregated content of chlorides, bromides, and fluorides are present.

4. If a variance from the Local Authority is required for the precast concrete mix design, the CONTRACTOR shall be responsible for submitting and obtaining the 5,000 psi precast concrete mix variance. The admixtures used in the mix design shall be used in approved combinations and proportions in accordance with the local requirements.

E. Formwork: Formwork shall be designed to withstand high-frequency vibration and to ensure finished units.

F. Pickup Points and Boxouts: Pickup points, boxouts, and inserts on panel faces and surfaces to be exposed are prohibited except as approved by the ENGINEER.

1.7 DELIVERY, STORAGE AND HANDLING

A. General: Deliver precast concrete units to the job-site in such quantities and at such times as to assure the continuity of construction. Precast members shall be handled to position consistent with their shape and design; they shall be lifted and supported from design incorporated support points and provided with strong backs and other devices as required. Lifting or handling equipment shall be capable of maintaining units during manufacture, storage, transportation, erection, and in position for fastening.

B. Blocking and supports, lateral restraints and protective materials during transport and storage shall be clean, nonstaining, without causing harm to exposed surfaces, including temporary support to prevent bowing and warping. Lateral restraints shall be provided to prevent undesirable horizontal movement. Edges and exposed faces of members shall be protected to prevent straining, chipping, or spalling of concrete.

C. Units shall be marked with date of production and final position in structure in location not visible after erection.

D. Precast units shall be stored off the ground in a manner to keep markings visible, and to prevent cracking, distortion, warping, staining or other physical damage, and they shall be protected from weather, marring, and overload.

E. Stainless Steel Hardware: Stainless steel hardware shall be transported, handled, stored, and protected in wood crates.

PART 2 -- PRODUCTS

2.1 CONCRETE MATERIALS

A. Cement: ASTM C 150, Type II, "low alkali," white color. "Low alkali" requirement may be waived if not reactive as defined in Appendix to ASTM C 33. Submit laboratory test reports.

B. Aggregate: ASTM C 33, 1/2-inch maximum coarse aggregate size fine aggregate ratio to total aggregate volume = 0.35 min, 0.55 max.

1. Water Absorption, Coarse Aggregate: ASTM C 127.

2. Water Absorption, Fine Aggregate: ASTM C 128.

C. Reinforcing Steel: ASTM A 615, Grade 60, deformed epoxy coated in accordance with ASTM A 775.

D. Welded Wire Fabric:

1. Plain: ASTM A 1064, epoxy coated.

2. Deformed Steel: ASTM A 1064, epoxy coated.

3. Fabricated Steel Bar or Rod Mats: ASTM A 184, epoxy coated.

E. Tie Wire: ASTM A 580, Type 316L, cold finished annealed, Huntington Alloy Co. "Monel", "Inconel", or an approved equal.

F. Air Entrainment Admixture: ASTM C 260.

G. Water Reducing or Retarding Admixtures: ASTM C 494, Type C, D, or F/G, with no chloride, bromide, and fluoride ingredients. Use MasterPozzolith R 300 manufactured by Master Builders, Plastiment manufactured by Sika Chemical Corp., or an approved equal.

H. Silica Fume Slurry Admixture: 45 to 50 percent silica fume, water, and superplasticizer as dispersant. Silica Fume: 85 percent amorphous silicon dioxide in accordance with ASTM C 311; loss on ignition shall not exceed 6 percent and moisture shall not exceed 3 percent in accordance with ASTM C 311. Surface area not less than 10,000 square meters per kilogram at bed porosity of 0.50 in accordance with ASTM C 204.

Reduce water in mix by 5.6 to 9.5 lbs for each gallon of slurry added to mix, as recommended by slurry Manufacturer used.

Add Los Angeles City approved slurry to concrete mix to achieve 7.5 percent dry silica fume by weight of cement. Mixing procedures as recommended by silica fume slurry manufacturer. Sika "Sikacrete-950 DP"; GCP Applied Technologies (formerly W.R. Grace) "Force 10,000 D" or approved equal. Submit applicable Los Angeles Research Report with shop drawing submittal.

I. Pigment: Pure mineral type, color-resistant to alkalis, nonfading. Color as required to produce finished concrete matching color and appearance of prebid sample and the 72-inch by 72-inch sample at the ENGINEER's field office.

2.2 SUPPORT DEVICES

Unless otherwise specified on the project plans, the following requirements shall apply:

A. Connecting and support devices, bolts, nuts, washers, inserts, and anchorage devices exposed to view, moisture, or weather shall be hot-dipped galvanized steel.

B. Anchorage devices shall be fabricated from ASTM A 36, and shall be hot-dip galvanized in accordance with ASTM A 123.

2.3 ACCESSORIES

Unless otherwise specified on the project plans, the following requirements shall apply:

A. Plates, Angles, Anchors, studs, and other metal accessories exposed to view, moisture, or weather shall be hot-dipped galvanized steel.

B. Reglets: Plastic, shaped and flanged to remain in place once cast; tape closed to prevent concrete intrusion.

C. Bearing Pads: Neoprene, molded to size or cut from molded sheet, 70-80 Type A durometer, ASTM D 2240.

D. Sealant: Specified in Section 07900, "Joint Sealants."

E. Gaskets: ASTM C 509, preformed, firm, cellular, neoprene, sized to be under constant compression at the joints, and manufactured in lengths to minimize field splices.

F. For bridge structures, expansion and fixed joints and bearings shall conform with CSS Section 51-1.12.

2.4 FORMS AND MOLDS

A. Forms: Manufacturer's standard with smooth, hard, dense, and rigid casting surface; without bow, warpage, oil canning, or other imperfections. Comply with PCI MNL 117, Division V, Section 2, Article 5.2.1.

B. Form Release Agent: Manufacturer's standard, nonstaining, nonpetroleum based; compatible with concrete surface sealer.

C. Surface Sealer: Clear, flat, penetrating, nonyellowing, nonclouding solution; high concentration of organosilane in an aqueous alcoholic vehicle which is designed to provide water repellent concrete surfaces from which graffiti can be easily removed. Oil-type silicones, paraffins, waxes, vinyls, modified urethanes, or acrylics shall not be used. Sealant shall be tested by Manufacturer and proved compatible with surface sealer.

D. Molds: Fabricate using steel, concrete, fiberglass, reinforced plastic or wood.

   a. Selection of materials for molds shall be at manufacturer's option, except that wood shall not be use without specific prior approval of the ENGINEER.

   b. Cast elements in molds of rigid construction, accurate in detail with precise corners and arises, and designed to provide close control of dimensions, radii, and details as indicated on the Contract Drawings.

c. Prior to casting of precast elements, molds shall have surface joints, radii, and corners filled, ground, filed, straightened, or otherwise removed to provide finished concrete surface that is smooth and dense, free of honeycombing, air pockets, offsets, sinkages, or other irregularities.

d. Mold Release Agents: Synthetic resin or organic compound containing no wax, oil, silicates, or varnish, and compatible with specified coatings, sealants, fresh concrete, curing process, and adhesives.

e. Cast molds with release agents to facilitate removal of elements from molds.

2.5 MIX

Silica Fume Concrete: Minimum 5,000 psi (unless noted otherwise on the project plans), 28-day compressive strength; aggregate 3/8-inch max; water - 305 lbs per cu yd; cement - 750 lbs per cu yd; w/c ratio 0.40 max; slump range 3 inches to 5 inches with silica fume slurry; air entrainment 4 percent plus or minus 1 percent; 7.5 percent dry silica fume by weight of cement, provided through specified silica fume slurry; add superplasticizer to achieve desired working slump for precast concrete as may be required by silica fume slurry Manufacturer. Add colorant as required to achieve match with ENGINEER's sample. Moist cure by spray mist.

2.6 FABRICATION

A. General: Precast concrete units shall be fabricated by a licensed shop in accordance with ACI 318, PCI MNL-116 (structural features), PCI MNL-117 (nonstructural features, surface treatments, patching, and tolerances). Plant records and quality control program shall be maintained during production of precast units. Records and access to plant shall be available to the ENGINEER upon request.

Rigid molds shall be used, constructed to maintain precast unit uniform in shape, size, and finish, free from castings and dents, gouges, oil canning, or other irregularities that will adversely affect appearance or strength of units. Consistent quality shall be maintained during manufacture.

Equipment for handling epoxy-coated reinforcing bars shall have protected contact areas. Bundles of coated bars shall be lifted at multiple pickup points to prevent bar-to-bar abrasion from sags in the bundles. Coated bars or bundles of coated bars shall not be dropped or dragged. Coated bars shall be stored on protective cribbing. The maximum amount of damage shall not exceed 2 percent of the surface area of each bar.

Reinforcing steel, anchors, inserts, plates, angles, and other cast-in-place items shall be embedded as indicated on shop drawings. Reinforcement shall be fabricated and placed in conformance with ACI 318. No tack welding of or to reinforcement permitted. Welding when allowed shall conform to AWS D1.4 requirements. No carbon steel chairs, spacers, nails or tie wire shall be used in positioning reinforcing and embedments.

Adequate reinforcing steel shall be provided to control cracking. Maximum permissible crack width:

Surfaces exposed to weather:	0.005 inch.
Surfaces exposed to view but not weather:	0.01 inch

Connecting devices, plates, angles, items fit to steel framing members, inserts, bolts, and accessories shall be fabricated to permit initial placement and final attachment.

Anchors, inserts, lifting devices, and other accessories shall be placed and embedded in accordance with approved shop drawings, accurately positioned in their designed location and anchored to prevent dislocation during panel construction. Do not use powder actuated fasteners for surface attachment of accessory items except as specifically approved by the ENGINEER and specifically accepted by the precast unit manufacturer. Flashing reglets shall be placed and embedded continuous and straight, with lifting devices to permit removal after erection.

Units shall be moist cured with water mist to develop concrete quality and to minimize surface drying and appearance blemishes such as nonuniformity, staining, or surface cracking.

Precast units shall be removed from formwork using procedures conforming to PCI MNL-117. Minor patching in plant acceptable, providing structural adequacy and appearance of units are not impaired. Each precast unit shall be identified with corresponding code on erection drawings, in location not visible to finished work.

Repair of damaged epoxy coating, when required, shall be made with patching material conforming to ASTM A 775. Repair shall be in accordance with the material Manufacturer's recommendations.

B. Fabrication and Tooling of Stainless Steel Connections and Embedments: All tools used during fabrication shall be made of stainless steel. Use of carbon steel tools is prohibited.

Welding of stainless steel shall conform to AWS A5.4, AWS B2.1 and AWS D1.1, using tungsten inert gas procedures and 316L filler metal for stainless steel to stainless steel and 309 filler metal for stainless steel to carbon steel. Surfaces shall be sanded smooth (do not grind), and oxidized discoloration removed (blue heat tint). Threaded parts of stainless steel bolts shall be lubricated with graphite suspended in alcohol (Neo-Lube) every time that nut is run on or off the threads. No other lubricant is acceptable.

Erection slings, cables, blocking, hardware and restraints shall be nonmetallic or stainless steel. Cribbing or crating shall be wood.

2.7 FINISH OF PRECAST UNITS

A. Backs and Sides (Unexposed Edges): Smooth, dense, uniform surface free from blemishes. Defects in backs and sides (unexposed edges) shall be repaired as approved.

B. Faces: Appearance, color, and texture finish of all panels shall match appearance, color and texture of the approved sample panels constructed by the CONTRACTOR. Panels that do not match shall be rejected. Repairs will be acceptable only if structural adequacy and appearance of product are not impaired and the repair and surrounding area match the approved sample panels at the ENGINEER's field office.

Mechanical finishing of panels at precast plant shall be at essentially the same age (or strength) of concrete to assure finished appearance is uniform from panel to panel.

To reduce possibility of stains occurring during transportation and erection, sealer shall be applied at the plant as recommended by Manufacturer and the precaster and shall be guaranteed in writing that sealer will not alter or yellow the original precast concrete color in

any way and that it is compatible with the joint sealants to be used on the project. Seal finish surfaces of precast units to be exposed in completed work as follows: apply a uniform coat of surface sealer in accordance with Manufacturer's written instructions. Apply sealer by method and in quantity required to provide coverage specified by sealer Manufacturer. Forty-eight hours after application of sealer, apply water to face of each panel in sufficient quantity to determine if full sealer coverage was achieved. Panels not fully sealed shall be resealed and retested. A second coat shall be applied at the jobsite after erection and cleanup in accordance with the Manufacturer's instructions.

PART 3 – EXECUTION

3.1 INSTALLATION

A. Examination: The CONTRACTOR shall verify that the structure, anchors, devices, and openings are ready to receive work of this Section. Beginning of installation means acceptance of existing condition.

B. Preparation: The CONTRACTOR shall provide for erection procedures and induced loads, during erection, maintain temporary bracing in place until final support is provided, provide necessary hoisting equipment and safety and protective devices.

C. Erection: The units shall be erected in accordance with approved shop/erection drawings without damage to shape or finish or adjacent work. Damaged panels shall be replaced or repaired. Unless otherwise shown, members shall be erected level and plumb within allowable tolerances.

The CONTRACTOR shall align and maintain uniform horizontal and vertical joints as erection progresses, provide approved shims and wedges as required, and when members required adjustment beyond design or tolerance criteria, discontinue affected work. Units shall be secured in place and field welded, scratches and otherwise damaged steel surfaces shall be touched up.

Field fabrication and erection of stainless steel shall conform to the procedures outlined in the paragraph entitled "Fabrication and Tooling of Stainless Steel Connectors and Embedments."

The vertical units shall be set dry, without grout, attaining joint dimension with lead or plastic shims and spacers.

Pickup points, boxouts, inserts, bearing surfaces, and open spaces at connections and joints shown shall be grouted with non-shrink grout system(s) recommended by the manufacturer of the precast units, in accordance with Section 03315, "Grout". The color and texture of concrete surfaces of adjacent areas shall be finished to match in the same plane. Provide forms or other acceptable method to retain the grout in place until it is sufficiently hard to support itself. Pack spaces with stiff grout material, tamping voids completely full. Place the grout in a manner to finish smooth, plumb, and level with adjacent concrete surfaces. Keep grouted surfaces damp for not less than 24-hours after grout has taken its initial set. Promptly remove grout material from exposed surfaces before its hardens.

D. Tolerances: In accordance with requirements of PCI MNL-117 unless otherwise indicated.

1. Variation from Plane of Location: 1/4-inch in 10 feet and 3/8-inch in 100 feet maximum, compensating not cumulative.

2. Offset from True Alignment between Two Connecting Members: 1/4-inch maximum.

3. Out of Square: 1/8-inch in 10 feet maximum, noncumulative.

4. Variation in Dimensions Indicated in Shop Drawings: Plus or minus 1/8-inch.

5. Misalignment of Anchors, Inserts, Openings: 1/8-inch, maximum.

6. Bowing or Warpage of Units: 1/700 of panel dimension.

7. Exposed Joint Dimension: 3/4-inch plus or minus 1/8-inch.

8. Location of Reglets: 1/4-inch from true position.

E. Joint Sealing: Specified in Section 07900, Joint Sealants.

3.2 CLEANING

A. Not sooner than 72 hours after joints are sealed, faces and other exposed surfaces of precast units shall be cleaned using a cleaning detergent recommended by the sealer manufacturer and water applied with a soft bristle brush, and thoroughly rinsed using clean water or other approved procedures.

B. Units shall be cleaned when temperature and humidity conditions are such that surfaces dry rapidly (e.g., 70 degrees F and rising, 50 percent Relative Humidity or less).

C. Discolorations which cannot be removed by these procedures shall be considered defective work and repaired or replaced as directed by ENGINEER.

D. Just before final acceptance by the ENGINEER, clean precast units to remove dirt and stains.

3.3 PROTECTION

Adjacent surfaces shall be protected from damage during sealing and cleaning operations and against damage, disfiguration or discoloration from subsequent operations. Noncombustible shielding shall be used during welding operations.

END OF SECTION

SECTION 03740
CONCRETE REPAIR

PART 1 -- GENERAL

1.1 THE REQUIREMENT

This section covers the work, including materials, testing, and workmanship necessary to structurally repair cracks and damaged surface areas (or spalls) in the concrete of the structures stated herein. Cracks shall be repaired by the injection of an epoxy resin adhesive. Spalls shall be repaired using an epoxy mortar as specified. Cracks and spalls requiring repair will be field located and identified by the CONTRACTOR during leak testing. Some cracks regardless of size may not be designated by the ENGINEER for repair.

1.2 RELATED WORK SPECIFIED ELSEWHERE

A. Section 03300 Cast-In-Place Concrete.

B. Section 03315 Grout.

1.3 REFERENCE SPECIFICATIONS, CODES AND STANDARDS

A. Comply with the reference standards of the GENERAL REQUIREMENTS.

B. Comply with the current provisions of the following Codes and Standards.

1. Commercial Standards:

ASTM C 579	Standard Test Methods for Compressive Strength of Chemical-Resistant Mortars, Grouts, Monolithic Surfacings and Polymer Concretes
ASTM D 482	Standard Test Method for Ash from Petroleum Products
ASTM D 638	Standard Test Method for Tensile Properties of Plastics
ASTM D 648	Standard Test Method for Deflection Temperature of Plastics Under Flexural Load in the Edgewise Position
ASTM D 664	Standard Test Method for Acid Number of Petroleum Products by Potentiometric Titration
ASTM D 695	Standard Test Method for Compressive Properties of Rigid Plastics
ASTM D 790	Standard Test Methods for Flexural Properties of Unreinforced and Reinforced Plastics and Electrical Insulating Materials
ASTM C 881	Standard Specification for Epoxy-Resin-Base Bonding Systems for Concrete
ASTM C 882	Standard Test Method for Bond Strength of Epoxy-Resin Systems Used With Concrete By Slant Shear
ASTM D 1652	Standard Test Methods for Epoxy Content of Epoxy Resins

2. Government Standards:

CSS Caltrans Standard Specifications.

1.4 CONTRACTOR SUBMITTALS

A. Submittals shall be made in accordance with the GENERAL REQUIREMENTS.

B. The CONTRACTOR shall submit certified test results verifying the compressive strength, shrinkage, and expansion requirements specified herein; and manufacturer's literature containing instructions and recommendations on the mixing, handling, placement and appropriate uses for each type of non-shrink and epoxy grout used in the work.

C. The CONTRACTOR shall submit detailed written description of the epoxy injection procedures, including desired injection pressures, the proposed procedures when a crack appears to be taking no epoxy or the epoxy does not exude from the adjacent port, and the proposed procedures if the desired injection pressures cannot be attained or the crack appears to be taking an excessive amount of epoxy.

D. The CONTRACTOR shall prepare mock-ups at locations in the job site where directed by the ENGINEER. The approved mock- ups will be used as data for comparison of works installed under this Section and for acceptance or rejection of same work. The mock-ups shall remain on site during the construction

1.5 QUALITY ASSURANCE

A. The following quality control test and certificate is required under this Specification:

1. Test Requirements: Compression tests and fabrication of specimens for epoxy grout will be performed as specified in ASTM C 579, Method B, at intervals during construction as selected by the ENGINEER but no less than after every 200 sq. ft. of applied grout. A set of three specimens will be made for testing at 7 days, and each earlier time period as appropriate. Tests shall be conducted by a qualified testing laboratory approved by the City of Los Angeles and acceptable to the ENGINEER at the CONTRACTOR’s expense.

2. Certification and Test Report: Manufacturer shall certify that every batch of material supplied meets the Specifications and shall furnish copies of actual test reports on each batch.

B. Labor: Use adequate number of skilled works who are thoroughly trained and experienced in the necessary crafts and who are completely familiar with the specified requirements and methods needed for the proper performance of the work of this Section.

1.6 PACKAGING, LABELING, STORAGE

A. Packaging: The adhesive material shall be packaged in new, sealed containers. Each container will be clearly labeled.

B. Label Information: The label shall include, in a clear and distinct manner, the following information:

1. Manufacturer name.

2. Product name and lot number.

3. ANSI Hazard Classification and appropriate recommended ANSI precautions for handling.

4. Mix ratio by volume.

C. Storage: The adhesive shall be stored at ambient temperatures between 32 and 120 degrees F. If stored at temperatures outside these limits, the adhesive material shall be tested at the CONTRACTOR's expense prior to use to determine if the adhesive material meets the requirements of this Specification.

PART 2 -- PRODUCTS

2.1 GENERAL

A. The use of a manufacturer's name and model or catalog number is for the purpose of establishing the standard of quality and general configuration desired only. Products of other manufacturers will be considered in accordance with the GENERAL REQUIREMENTS.

B. Like items of materials provided hereunder shall be the end products of one manufacturer in order to achieve structural compatibility, singular responsibility, and standardization for appearance, maintenance, and replacement.

C. Epoxy products shall be as manufactured by Sika Corp., Lyndhurst, NJ; or an approved equal, meeting the requirements specified hereinafter.

2.2 CRACK WIDTH

Large cracks are defined as being wider than 0.015 inch. Small cracks are defined as cracks with width equal to 0.015 inch or less.

2.3 ADHESIVE FOR INJECTION

A. Unless otherwise specified hereon, the epoxy adhesive used for injection for concrete structures shall comply with the following material specification. For non-sanitary structures, in lieu of the requirements of this section, the CONTRACTOR may submit Los Angeles Department of Building and Safety approved Research Reports on products intended for use, subject to review and approval by the ENGINEER.

1. This Specification defines a two-component structural epoxy adhesive to be processed through continuous positive displacement in-line metering and in-line mixing equipment for injection into cracks or other voids in concrete structures for bonding or grouting. Batch mix pumps shall not be allowed.

2. Properties of the two-component epoxy adhesive:

a. Part A shall be a blend of modified epoxy resins:

		Specification Requirements	
	Test Method	Large Cracks	Small Cracks**
Color	Visual	Clear Amber Liquid	Light Amber Liquid
Viscosity @ 40 ± 3 deg F, cps	Brookfield RVT Spindle No. 4 @ 20 rpm	6,000-8,000	
Viscosity @ 77 ± 3 deg F, cps	Brookfield RVT Spindle No. 4 @ 20 rpm	400-700	375 cps max. @ 50 rpm

Epoxide Equivalent Weight	ASTM D 1652* See Appendix C	160-176
Ash Content, %	ASTM D 482	1 max.

* Method modified to use perchloric acid in acetic acid.
** The specified requirements for the epoxy blend for small cracks shall meet the requirements for large cracks except as shown.

b. Part B shall be a modified amine curing agent:

		Specification Requirements	
	Test Method	Large Cracks	Small Cracks**
Color	Visual	Black Liquid	Dark Amber Liquid
Viscosity @ 40, ± 3 deg F, cps	Brookfield RVT Spindle No. 4 @ 20 rpm	700-1,400	
Viscosity @ 77, ± 3 deg F, cps	Brookfield RVT Spindle No. 2 @ 20 rpm	105-240	150 cps max. Using Spindle No. 1 @ 50 rpm
Amine Value, mg KOH/g	ASTM D 664*	490-560	
Ash Content, %	ASTM D 482	1 max.	

* Method modified to use perchloric acid in acetic acid.
** The specified requirements for the epoxy blend for small cracks shall meet the requirements for large cracks except as shown.

3. Properties of the Uncured Adhesive: When mixed in the mix ratio specified on the label on the adhesive, containers shall be:

		Specification Requirements	
	Test Method	Large Cracks	Small Cracks**
Pot Life (60-gram mass) @ 77 ± 4 deg F	(As hereinafter specified)	13-25 minutes minimum	15-30 minutes minimum
Pot Life (60-gram mass) @100 ± 3 deg F	(As hereinafter specified)	5 minutes minimum	N/A
Viscosity @ 40, ± 3 deg F	Brookfield RVT Spindle No. 4 @ 20 rpm	4,400 cps	600 cps
Viscosity @ 75-77 deg F	Brookfield RVT Spindle No. 2 @ 20 rpm	375-350 cps	175-140 cps

4. Properties of the Adhesive: When cured for 7 days at 77 ∀ 3 degrees F and conditioned at test temperature 12 hours prior to test, unless otherwise specified, shall be:

		Specification Requirements	
	Test Method	Large Cracks	Small Cracks**
Ultimate Tensile Strength, psi	ASTM D 638	8,000 min.	5,000 min.
Tensile Elongation @ Break, %	ASTM D 638	4.2 max.	3.0 max.
Flexural Strength, psi	ASTM D 790	10,000 min.	10,000 min.
Flexural Modulus, psi	ASTM D 790	$5.5x10^5$ min.	$4.5x10^5$ min.
Compressive Yield Strength, psi	ASTM D 695*	15,000 min.	12,000 min.
Compressive Modulus psi	ASTM D 695*	$4.0x10^5$ min.	$2x10^5$ min.
Heat Deflection Temperature	ASTM D 648*	127 deg F min.	140 deg F min.
Slant Shear Strength (5,000 psi Compressive Strength Conc.)	AASHTO T 237**		
Cured 3 days @ 40 40 deg F – Wet Conc.		3,500 psi min.	
Cured 1 day @ 77 deg F - Dry Conc.		5,000 psi min.	
Cured 3 days @ 77 deg ± 3 deg F		5,000 psi min.	

* Test specimens must be cured in a manner such that the peak exothermic temperature of the adhesive does not exceed 100 degrees F.

** See referenced specifications for method of preparation of test specimens.

B. Epoxy for injection shall conform to ASTM C 881 and shall be Los Angeles City Department of Building and Safety approved epoxy. The epoxy shall be Sikadur 35 Hi-Mod LV or Sikadur 52, manufactured by Sika Corporation, or an approved equal.

2.4 POT LIFE TEST

A. Pot life test for components A and B, as described in Section 2.3, shall conform to the following:

1. Condition both A and B Components (as defined in Section 2.3) to required temperature.

2. Measure components in ratio of Component B as stated on the manufacturer's label into a 2 ounce (fluid) paper cup.

3. Start stopwatch immediately and mix the components for 60 seconds using a wooden tongue depressor and taking care to scrape the sides and bottom of cup periodically.

4 Probe the mixture once with the tongue depressor every 30 seconds, starting 2 minutes prior to

the minimum specified pot life.

5. The time at which a soft stringy mass forms in the center of the cup is the pot life.

2.5 FABRICATION OF SLANT SHEAR SPECIMENS

A. Fabrication of slant shear specimens for testing bond of injectable adhesives to wet concrete at 40 degrees F, as required by Section 2.3, shall conform to the following:

1. Scope: This method of test is intended for the preparation of diagonal concrete mortar blocks used in determining the slant shear strength of low viscosity injectable adhesives according to AASHTO T 237 when the concrete is wet.

B. Materials:

1. Diagonal concrete mortar blocks prepared in accordance with AASHTO Test Method T 237 and cured to produce a mortar with compressive strength of 5,000 psi or greater.

2. Paraffin wax.

3. Masking Tape: 3/4-inch wide.

4. Suitable 20-mil thick shim stock.

C. Preparation:

1. Place a 20-mil shim between the diagonal faces of two blocks and align them so that the ends and sides are square. Bind the block in this position with masking tape covering the gap between the blocks. Leave only enough of the gap between the blocks on one face uncovered for the removal of the shim and the application of the adhesive. Paint melted paraffin wax over the masking tape. A shallow dam may be built up around the opening using paraffin wax or modeling clay to help retain the adhesive.

2. Apply a suitable capping compound to each end of the specimen to produce smooth surfaces perpendicular to the longitudinal axis of the block.

3. Remove the shim stock from the gap opening. Soak the specimen in water at 40 degrees, ∀3 degrees F for at least 24 hours.

4. After soaking, remove the specimen and shake the water from the surface and out of the crack.

5. Prepare the liquid adhesive. Within 5 minutes after removing specimen from water, start to flow adhesive into the crack so that no air bubbles are entrapped. Place specimen in 40 ∀ 3 degrees F ambient for curing within 15 minutes after it has been removed from water for bonding. At no time during the 15 minutes should the specimen be exposed to an environment above 77 degrees F.

6. Cure the specimen for 72 ∀4 hours at 40 ∀ 3 degrees F.

2.6 SURFACE SEAL

A. Physical Properties: The material used as a surface seal must have adequate strength and adhesion to confine the injection adhesive in the crack being repaired until the injected adhesive has cured. The surface seal material shall have adequate strength to hold the injection fittings firmly in place and to resist injection pressures adequately to prevent leakage during injection.

B. Appearance: After the injection adhesive has cured, the surface seal must be capable of being removed.

C. Epoxy paste sealer for caulking cracks and installing injection port devices. The epoxy paste sealer shall be Sikadur 33, manufactured by Sika Corporation, or an approved equal.

2.7 EQUIPMENT FOR METERING, MIXING, AND INJECTING

A. Type: The equipment used to meter and mix the two injection adhesive components and to inject the mixed adhesive into the crack shall be portable, positive displacement type pumps with in-line metering. The equipment used shall be manufactured by the epoxy manufacturer and/or approved in writing by the epoxy manufacturer. Pumps shall have interlocks to provide positive ratio control of exact proportions of the two components at the nozzle. The pumps shall be electric or air powered.

B. Discharge Pressure: The injection equipment shall have automatic pressure controls and the capability of discharging the mixed adhesive at pressures up to 200 psi, +5 percent, and maintaining that pressure.

C. Automatic Shutoff Control:

1. The injection equipment shall be equipped with sensors on both the Component A and B reservoirs that will automatically stop the machine when only one component is being pumped to the mixing head.

2. CONTRACTOR shall provide a standby injection pump of the same ratio, setting forth each primary injection pump used on the project. Each material of different mix ratio shall have its own primary injection pump as well as standby backup pump.

3. All pumps of dual resin system epoxy resins shall be manufactured by the epoxy resin suppliers or shall be approved in writing by the epoxy resin manufacturer so as to immediately compensate for any changes in resins.

D. Pressure Check Test:

1. Method: The mixing head of the injection equipment shall be disconnected and the two adhesive component delivery lines shall be attached to the pressure check device. The pressure check device shall consist of two independent valved nozzles capable of controlling flow rate and pressure by opening or closing the valve. There shall be a pressure gauge capable of sensing the pressure buildup behind each valve. The valves on the pressure check device shall be closed and the equipment operated until the gauge pressure on each line reads 160 psi. The pumps shall be stopped and the gauge pressure shall not drop below 150 psi within 3 minutes.

2. Frequency of Pressure Check Test: The pressure check test shall be run for each injection equipment unit, as a minimum, at the beginning and at the end of every day that the unit is used in the work of crack repair to verify. A pressure test shall also be run at the start of any injection work when the equipment has been out of use for more than 45 minutes at any time during the day.

2.8 EPOXY MORTAR REPAIR

A. The manufacturer shall certify, in writing, its applicability in bonding to damp concrete surfaces and to the uses intended in this project. Submit applicable City of Los Angeles Department of Building and Safety Research Report for ENGINEER's review and approval.

B. The mortar mix design shall be Concresive 1470 mortar, Adhesive Ownering Co., San Carlos, CA; Sika Top, 123 Plus, for hand-applied method, manufactured by Sika Corporation, or an approved equal. The actual mix design shall be submitted by the manufacturer using the specified resin, Sand #1 and Sand #2, or a pre-engineered sand blended especially for stated products by the manufacturer.

C. Anti-Corrosion Coating for reinforcement shall conform to ASTM C 882 and shall be Los Angeles City Department of Building and Safety approved. The coating shall be Sika Armatic 110 EpoCem, manufactured by Sika Corporation, or an approved equal.

D. The finished repair shall have a color which matches the surrounding concrete's color as best as possible.

E. Submit technical data (physical and chemical properties) available on the repair agent for review. Also submit data (client name, location, and description of work) on at least two similar jobs that the applicator has used the surface repair agent in the last 2 years.

PART 3 -- EXECUTION

3.1 GENERAL

A. CONTRACTOR is responsible for all cracks in concrete that occur in the field. Crack repair procedures are to be followed as specified herein.

3.1 QUALIFICATIONS OF ADHESIVE APPLICATORS

A. All adhesive injection shall be performed by an applicator who has demonstrated the capability to inject concrete cracks, repairing them to the quality specified.

B. All applicators shall submit evidence of experience in injecting concrete cracks with epoxy resin.

C. Evidence of experience shall include a complete list of adhesive injection work accomplished in the last 3 years for at least 10,000 lineal feet of crack injection experience including the following information:

1. Name of Owner.
2. Name of person to contact and telephone number.
3. Address of completed work.
4. Lineal footage of crack injection repair.
5. Type of structure.
6. Description of work including materials and equipment used.

D. Epoxy injection shall be performed by a licensed certified applicator of the manufacturer of the epoxy meeting these Specifications and the applicator shall be approved by the epoxy manufacturer.

E. The applicator shall submit to the ENGINEER a statement in addition to applicator's previous experience in performing comparable work, business and technical organization and plant available to be used in performing work; along with proposed technique, material, and equipment for review prior to startup.

3.2 WORKMAN'S QUALIFICATION

A. The applicator's foreman engaged in the epoxy injection process shall have satisfactorily completed a program of instruction in the methods of restoring concrete structures utilizing the specific epoxy injection process indicated. The curriculum shall include theory on the nature and causes of cracking in concrete, methods for permanently repairing damaged concrete structures, the technical aspects of correct material selection and use, and the operation, maintenance, and troubleshooting of equipment. Foreman must prove certification and approval of the manufacturer.

B. Superintendent shall have at least 3 years' experience in injection work consisting of a minimum of 5,000 LF of crack injection in the last 3 years.

C. Any technician operating the injection pump shall have at least 1 year's experience consisting of a minimum of 3,000 LF of crack injection.

D. Equipment, material, and training must originate from same source.

E. Qualification of an applicator may be denied, and will be based upon the aforementioned evidence of experience along with any additional investigational information acquired by the ENGINEER.

3.3 PROPORTIONING THE ADHESIVE COMPONENTS

A. Ratio Tolerance: The equipment shall have the capability of maintaining the mix ratio for the injection adhesive prescribed by the manufacturer of the adhesive within a tolerance of ±5 percent by volume at any discharge pressure up to 160 psi.

B. Tests for Proper Ratio:

1. Method:

a. The mixing head of the injection equipment shall be disconnected and the two adhesive components shall be pumped simultaneously through the ratio check device. The ratio check device shall consist of two independent valved nozzles capable of controlling flow rate and back pressure by opening or closing the valve to restrict material flow. There shall be a pressure gauge capable of sensing the back pressure behind each valve. The discharge pressure shall be adjusted to 160 psi for both adhesive components. Both adhesive components shall be simultaneously discharged into separate calibrated containers. The amounts discharged into the calibrated containers simultaneously during the same time period shall be compared to determine the mix ratio.

b. After the test has been completed at a 160 psi discharge pressure, the procedure shall be repeated for 0 psi discharge pressure.

2. Frequency of Test for Proper Ratio: The ratio test shall be run for each injection unit at the beginning of every day, and at the beginning of every work period wherever an hour break has occurred, and at the end of every day that unit is used in the work of crack repair.

3.4 PROOF OF RATIO AND PRESSURE CHECK

A. At all times during the course of the work, the CONTRACTOR must keep complete and accurate records available to the ENGINEER of the ratio check tests.

B. In addition, the ENGINEER at any time without prior notification of the CONTRACTOR, may request the CONTRACTOR to conduct the tests described in the presence of the ENGINEER or the INSPECTOR.

3.5 CRACK REPAIR PROCEDURE

A. Initial Condition (for Sanitary Structures): Each water-holding structure to be repaired will be drained by the plant staff on a schedule to allow the work to proceed in that one structure and at the same time to keep the remainder of the plant in operation. All cleaning and the amount of cleaning shall be the responsibility of the CONTRACTOR.

B. Repair Procedures: Cracks 0.005 inch or wider that are designated by the CITY to be injected shall be cleaned and pressure injected with epoxy as specified. All spalled areas or areas with damaged surface, after being designated by the ENGINEER to be repaired, shall be repaired with epoxy grout as specified herein. Some cracks and damaged areas may be excluded from repair by the ENGINEER. Repair only those specifically identified by the ENGINEER.

C. Crack Preparation:

1. The licensed applicator shall be responsible for crack preparation. All cracks must be free from loose matter such as dirt or laitance and free from oil, grease, salt, or any other contaminants. Cracks shall be cleaned in accordance with the instructions of the injection adhesive manufacturer. The manufacturer's written instructions shall govern.

2. Examine the areas and conditions at the job site under which work of the Section will be performed. Correct conditions detrimental to timely and proper completion of the work. Do not proceed until detrimental conditions are corrected. Coordinate with other trades as required to assure proper and adequate provisions in the work of those trades for interface with the work of this section.

3. Surfaces adjacent to cracks or other areas of application shall be cleaned of dirt, dust, grease, oil, efflorescence, or other foreign matter detrimental to bond of epoxy injection surface seal system. Acids and corrosives shall not be permitted for cleaning, unless neutralized. If necessary, cracks shall receive three-step acid flushing technique.

D. Crack Sealing: A surface seal adhesive as specified shall be applied to the face of the crack to be repaired prior to adhesive injection. The surface seal shall seal the crack and not allow injection adhesive to escape. The seal shall be applied in accordance with the instructions of the surface seal manufacturer.

E. Backfilled Walls: At locations where walls have backfill on one side and where it will not be possible to excavate and seal both crack surfaces, and where cracks extend entirely through the wall, entry ports as specified below shall be spaced closer together in addition to adjusting injecting pressure so that only a minimum amount of injection adhesive is lost to the soil.

F. Entry Ports: Openings in the surface seal shall be established along the crack for the purpose of adhesive entry. The distance between entry ports shall be determined by the adhesive applicator and, in general, shall be spaced approximately equal to the thickness of the concrete member. The spacing of ports may be increased or decreased as required to insure maximum penetration of the injection epoxy. For through cracks, CONTRACTOR shall seal both sides of cracked member. The repair work for each through crack shall be paid for as a single crack. Special consideration to entry port location must be given when cracks occur in a backfilled wall to ensure minimum adhesive is lost to the soil.

G. Injection: The injection of the adhesive into each crack shall begin at the entry port at the lowest port along a radial crack and at the end of a circumferential or horizontal crack. Injection shall continue at the first port until the injection adhesive begins to flow out of the port at the next highest elevation. The first port shall be plugged and injection started at the second port until the adhesive flows from the next port. The entire crack shall be injected with the same sequence. It is required that a manufacturer’s representative or factory trained qualified applicators with past experience be present on the job at all times.

Injection at the last port shall continue for approximately one minute after the rise in gauge pressure. Once injection has been started on a crack, it shall be continued and uninterrupted until the crack has been completely injected.

H. Finishing:

1. After the injection adhesive has cured, the surface seal shall be removed. The face of the crack shall be finished flush with the adjacent concrete. There shall be no indentations or protrusions caused by placement of entry ports.

2. When cracks are completely filled, epoxy adhesive shall be cured for sufficient time to allow removal of surface seal without any draining or runback of epoxy material from cracks.

3. Surface seal material and injection adhesive runs or spills shall be removed from concrete surfaces.

4. Finish Coating: Provide new paint system over concrete surface to match existing adjacent surface and to conform with requirements as specified.

3.6 TESTING OF INJECTION REPAIR

A. Initial Cores: The CONTRACTOR shall obtain three 4-inch diameter initial core samples in the first 100 lineal feet of crack repaired and one core for each 500 lineal feet thereafter. The cores shall be for full crack depth and taken from locations as selected by the ENGINEER. If any reinforcing steel is contacted during the core drilling, the CONTRACTOR shall cease drilling and relocate the core drill to clear the reinforcing steel. Additionally, the CONTRACTOR shall provide, at no additional expense to the CITY the following labor, materials, and services required for core sampling and testing as directed by the ENGINEER including, but not limited to:

1 Preparation, handling, storage, and transportation of epoxy injection concrete core test specimens as directed by the ENGINEER.

2 Providing suitable containers for the storage, curing, and transportation of test specimens.

3 Providing suitable storage for supply of test equipment and other items required for sampling and testing.

B. Initial cores will be tested to determine degree of epoxy penetration and bond strength.

C. Testing of initial core samples will be performed by the ENGINEER at the CITY's expense.

D. Additional cores, called verification cores, required as indicated in G. Evaluation and Acceptance of Tests, specified hereinafter, will be tested by the CITY.

E. Methods of Testing Initial and Verifying Cores:

1 Penetration: Visual examination.

2 Bond Strength/Compression Test: Concrete failure prior to adhesive failure.

F. Test Requirements:

1 Penetration: A minimum of 90 percent of the crack shall be full of epoxy adhesive.

2 Bond Strength: Concrete failure before adhesive failure, or 6,500 psi with no failure of either concrete or adhesive.

G. Evaluation and Acceptance of Tests:

1 If the initial cores pass tests as specified above, epoxy adhesive injection work at the area represented by the cores will be accepted.

2 If initial cores fail either by lack of penetration or bond strength, the work shall not proceed further until the area represented by the cores are reinjected and retested for acceptance.

3 After rework of areas represented by failed initial cores is complete, the CONTRACTOR shall obtain verifying cores, the number and location to be determined by the ENGINEER. Verifying cores shall be tested in accordance with Paragraphs E and F for compliance.

H. Correction of Work As Result of Testing: Upon notification from the ENGINEER, refill initial and verifying core holes in accordance with requirements specified hereinafter.

I. Repair of Core Holes: The CONTRACTOR shall fill the core holes with an epoxy grout tamped and rodded in place to form a dense fill and finish the surface to blend with the adjacent concrete. The

epoxy grout and placement techniques shall be accepted by the ENGINEER and as specified herein.

3.7 CONCRETE SPALL REPAIR

A. The following types of areas are known to require repair:

1. Spalled wall surfaces designated by the ENGINEER.

2. Spalled slab surfaces designated by the ENGINEER.

3. Other specific areas shown on contract drawings.

B. Surface Preparation: The CONTRACTOR shall be responsible for preparing the surfaces of damaged concrete in accordance with the repair adhesive manufacturer's recommendations. The area shall be chipped to remove all loose materials and materials that would prevent bond. The edges shall be left sharp and square with the adjacent concrete surfaces.

C. Application: All concrete spall repair adhesive shall be applied in strict conformance with manufacturer's instructions.

D. Avoid having a joint between new material and old materials right at the planes of the reinforcing steel. Expose the steel completely or at least ¾ inch all around and encase them fully in a new concrete patch.

E. After chipping of the existing concrete has been completed, all reinforcing bars shall be completely exposed or at lease ¾ inch all around, thoroughly cleaned of rust or other deleterious substances by power wire brushing, sandblasting, or other approved means. All remaining fines or dust shall be removed from the chipped surfaces by air jet or vacuum. If an air jet is used, care shall be taken to insure that no oil is in the air system. A suitable oil trap shall be in service during the air cleaning

Before applying the concrete patch/repair mortar; all cracks, exposed damaged or rusted reinforcing steel within the spalled areas shall be cleaned and repaired. All damaged reinforcing steel shall be removed and welded with new. When corrosion has occurred due to presence of chlorides, the reinforcing steel should be high-pressure washed with clean water after mechanical cleaning. Prime all reinforcing steel by using approved anti-corrosion coating per Subsection 2.8.E herein.

The existing concrete surface to be patched must be clean and dry before applying the epoxy bonding agent. The epoxy to be used for bonding the concrete patches shall conform to Subsection 2.8.B herein.

Evaluate moisture content for concrete by determining if moisture will collect at bond lines between existing concrete surface and epoxy bonding agent before epoxy had cured, this may be accomplished by taping a 4’x4’ polyethylene sheet to concrete surface. If moisture collects on underside of polyethylene sheet before epoxy would cure, then allow concrete to dry sufficiently to prevent the possibility of moisture between old concrete and new epoxy.

H. A uniform coat of the epoxy bonding agent and anti-corrosion coating shall be applied to entire chipped areas of the existing concrete and all exposed surfaces of both existing and new reinforcing steel. When the epoxy becomes dry before the concrete patch/repair mortar has been applied, the epoxy shall be completely removed and re-applied.

After the concrete patches/repair mortars have cured for a minimum time of 3 days, the CONTRACTOR shall remove the forms, any irregularities or departures from a plane surface by grinding, rubbing with a carborundum stone or other means approved by the ENGINEER.

I. Color and Finish: The finished surface repair shall have a color that matches best as possible the surrounding concrete. Repaired surface finish shall be roughened to a degree to match surrounding concrete.

END OF SECTION

SECTION 05500
MISCELLANEOUS METALWORK

PART 1 -- GENERAL

1.1 THE REQUIREMENT

The CONTRACTOR shall furnish, fabricate, and install miscellaneous metalwork and appurtenances, complete, in accordance with the requirements of the Contract Documents.

1.2 RELATED WORK SPECIFIED ELSEWHERE

A. Section 03300 Cast-In-Place Concrete.

1.3 REFERENCE SPECIFICATIONS, CODES, AND STANDARDS

A. Comply with the reference specifications of the GENERAL REQUIREMENTS and the specifications and standards listed below.

B. Federal Specifications:

QQ-F-461 C (1)	Floor Plate, Steel, Rolled.
MIL-6-18015	(Ships) Aluminum Planks. (6063-T6)

C. Commercial Standards:

Aluminum Assn. AA-M32	C22A41.
AASHTO HS-20	Truck Loading.
AISC	Steel Construction Manual
AISI	Standards for Stainless Steel
ASTM A 36	Standard Specification for Carbon Structural Steel.
ASTM A 48	Standard Specification for Gray Iron Castings.
ASTM A 53	Standard Specification for Pipe, Steel, Black and Hot-Dipped, Zinc-Coated Welded and Seamless.
ASTM A 123	Standard Specification for Zinc (Hot-Dip Galvanized) Coatings on Iron and Steel Products.
ASTM A 125	Standard Specification for Steel Springs, Helical, Heat Treated.

ASTM A 153	Standard Specification for Zinc Coating (Hot-Dip) on Iron and Steel Hardware.
ASTM A 307	Standard Specification for Carbon Steel Bolts, Studs, and Threaded Rod 60,000 psi Tensile.
ASTM A 563	Standard Specification for Carbon and Alloy Steel Nuts.
ASTM A 575	Standard Specifications for Steel Bars, Carbon, Merchant Quality, M-Grades.
ASTM B 98	Standard Specification for Copper-Silicon Alloy Rod, Bar, and Shapes.
ASTM B 438	Standard Specification for Bronze-Base Powder Metallurgy Bearings (Oil-Impregnated).
ANSI/AWS D1.1	Structural Welding Code - Steel.
NFPA 101	Life Safety Code.
NAAMM	Metal Stairs Manual.

1.4 CONTRACTOR SUBMITTALS

A. Shop Drawings: Shop drawings of all miscellaneous metalwork shall be submitted to the ENGINEER for review in accordance with SUBMITTALS of the GENERAL REQUIREMENTS.

B. Delegated-Design Submittal: For stairs and railing include calculation analysis signed and sealed by a Civil or Structural Engineer registered in the State of California.

1. Include plans, elevations, sections, details, and attachment to other Work.

2. Indicate sizes of metal sections, thickness of metals, profiles, holes, and field joints.

3. Include plan at each level

4. Indicate locations of anchors, weld plates, and blocking for attachment of wall-mounted handrails

C. Anchors: Wherever power-driven pins will be utilized for anchorage or support, complete information describing pin capacity, connections, and proposed use locations shall be furnished to the ENGINEER.

PART 2 -- PRODUCTS

2.1 GENERAL REQUIREMENTS

A. Standard: All structural steel shapes, plates, bars, and their products shall conform to the requirements of ASTM A 36.

B. Corrosion Protection: All miscellaneous steel metalwork shall be hot-dip galvanized after fabrication as specified herein.

C. Stainless Steel: Unless otherwise shown, stainless steel metalwork and bolts shall be of Type 316 stainless steel and shall not be galvanized. Where anaerobic conditions are anticipated, Type 304 stainless steel shall be used.

D. Delegated Design: Engage a Civil or Structural Engineer registered in the State of California to design stairs and railings, including attachment to building construction.

E. Structural Performance of Stairs: Metal stairs shall withstand the effects of gravity loads and the following loads and stresses within limits and under conditions indicated:

1. Uniform Load: 100 lbf/sq. ft.

2. Concentrated Load: 300 lbf applied on an area of 4 sq. in.

3. Uniform and concentrated loads need not be assumed to act concurrently.

4. Stair Framing: Capable of withstanding stresses resulting from railing loads in addition to loads specified above.

5. Limit deflection of treads, platforms, and framing members to L/360.

F. Seismic Performance of Stairs: Metal stairs shall withstand the effects of earthquake motions determined according to ASCE/SEI 7.

1. Component Importance Factor: 1.0.

G. Structural Performance of Railings: Railings, including attachment to structure construction, shall withstand the effects of gravity loads and the following loads and stresses within limits and under conditions indicated:

1. Uniform Load: 50 lbf/ft applied in any direction along the top rail.

2. Concentrated Load: 200 lbf applied in any direction on the top rail.

3. Uniform and concentrated loads need not be assumed to act concurrently.

H. Thermal Movements: Allow for movements from ambient and surface temperature changes.

2.2 ALUMINUM RAILINGS

A. General: All aluminum handrails and railings shall be component systems complete with all anchors, attachments, balusters, brackets, caps, fasteners, gates (swing with self-latching hardware or removable), posts, sleeves, trim, and any other related items required or necessary for a complete installation. All gates and removable rail sections shall be complete with all hardware such as self-closing hinges, self-latching latches, hasps, etc. Railings shall conform to the Building Code and OSHA General Industry Occupational Safety and Health Standards (29CFR1910).

B. Materials: All materials for miscellaneous metalwork shall conform to the following requirements:

1. Aluminum: Aluminum shall be U.S. Alloy 6063 T-5 or T-6. Aluminum pipe rail shall not be less than 1-1/2-inch diameter Schedule 40 pipe.

2. Electrolysis Protection: Electrolysis protective material shall be alkali-resistant asphaltum base paint, Koppers "Bitumastic 50," Texaco "Cement 1401," or equal.

3. Sleeves: Sleeves shall be of galvanized steel or PVC.

4. Grout: Grout for hand rail posts shall consist of an inorganic, non-shrink, non-metallic premised grout with a minimum 28-day compressive strength of 4,000 psi.

5. Fasteners: Fasteners, screws, and bolts shall be concealed and shall be of stainless steel or aluminum.

6. Welding Rods: Aluminum welding rods shall be of a type recommended by the aluminum manufacturer for anodized finished products.

C. Finishes: Pipe railing system including handrails, railings, tube caps, and other miscellaneous parts of rails shall be provided with a clear anodized finish, AA-M32 C22A41.

D. Manufacturers or Equal:

1. C-V Pipe Rail, by Crane Veyor Corp..

2.3 METAL GRATING AND FLOOR HATCHES

A. General: Metal grating and floor hatches shall be of the design, sizes and types shown. Aluminum in contact with other metal or concrete shall be shop-painted in accordance with Section 2.5 of this specification.

B. Metal Grating: Metal grating shall be of aluminum or stainless steel as shown. No single piece of grating shall weigh more than 80 lb unless otherwise specified or shown. Aluminum shall be 6061-T6 Alloy Bearing Bars and 6063-T5 Alloy Cross Bars. Stainless steel shall be Type 316. All grating shall be completely banded. Do not notch bearing bars at supports to maintain elevation. For openings 2 inches or greater in diameter or dimension, band grating edges with a bar of same depth and thickness as bearing bars. Weld cut bearing bars or cross bars to banding bar. Provide trench grating with symmetrical cross bar arrangement. Fabricate metal frames and supports for grating of same material as grating, unless otherwise indicated.

Anchor grating to supporting system using saddle clips.

Provide stainless-steel fasteners for fastening aluminum.

C. Floor Hatches: Floor hatches shall be of 1/4" thick diamond-pattern mill-finish aluminum plate with mill finish aluminum angle frames as shown. Hatches shall be either single or double leaf per Contract Drawings, and shall be furnished with adjustable counterbalancing springs, heavy-duty hold-open arm that automatically locks door open at 90 degrees, release handle with vinyl grip that allows for one-handed closure, and recessed lift handle. Hinges shall be heavy-duty butt hinges with

stainless steel pins. Latches shall be stainless steel slam latches. Hatches shall be load rated for AASHTO HS-20 concentrated wheel load, with impact.

2.4 SEAT ANGLES, SUPPORTS, AND GUIDES

A. Seat angles for grating shall be aluminum or steel as shown and of a size as shown. Guides for slide gates shall be steel, of a size shown, hot-dip galvanized after fabrication.

2.5 BOLTS AND ANCHORS

A. Standard Service Bolts (Not Buried or Submerged): Except where otherwise shown or specified, all bolts, anchor bolts, and nuts shall be steel, galvanized after fabrication as specified herein. Threads on galvanized bolts and nuts shall be formed with suitable taps and dies such that they retain their normal clearance after hot-dip galvanizing. Except as otherwise specified herein, steel for bolts, anchor bolts and cap screws shall be in accordance with the requirements of ASTM A 307 Grade A or B, or threaded parts of ASTM A 36.

B. Buried or Submerged Bolts: Unless other corrosion-resistant bolts are shown, all bolts, anchor bolts and washers which are buried, submerged, or below the top of the wall inside any hydraulic structure shall be of Type 316 stainless steel, with bronze nuts, or cap screws (where screwed into stainless steel), of copper-silicon alloy, conforming to ASTM B 98, alloy C 65100, designation H04, or alloy C 65500, designation H04. Wherever stainless steel bolts and nuts are specified, it shall refer to the above material combination, unless specifically excluded. Where anaerobic conditions are anticipated, Type 304 stainless steel shall be used.

C. Bolt Requirements:

1. The bolt and nut material shall be free-cutting steel.

2. The nuts shall be capable of developing the full strength of the bolts. Threads shall be Coarse Thread Series conforming to the requirements of the American Standard for Screw Threads. All bolts and cap screws shall have hexagon heads and nuts shall be Heavy Hexagon Series.

3. The length of all bolts shall be such that after joints are made up, each bolt shall extend through the entire nut, but in no case more than 1/2-inch beyond the nut.

D. Adhesive Anchors: Unless otherwise shown or specified, all drilled, concrete or masonry anchors shall be adhesive anchors. No material substitutions will be considered unless accompanied with ICBO report verifying strength and material equivalency.

1. Epoxy adhesive anchors are required for drilled anchors where exposed to weather, in submerged, wet, splash, overhead, and corrosive conditions, and for anchoring handrails, pumps, mechanical equipment, and reinforcing bars. Epoxy systems shall be HILTI HIT-HY 200 or approved equal. Threaded rod shall be stainless steel Type 316.

E. Expanding-Type Anchors: Expanding-type anchors if shown or permitted, shall be steel expansion type HILTI "Kwik-Bolt;" or equal. Lead calking anchors will not be permitted. Size shall be as shown.

Expansion type anchors which are to be embedded in grout may be steel. Non-embedded buried or submerged anchors shall be stainless steel.

2.6 COATINGS

A. Primer: Use "10-99 Tnemec Primer" or "Rustoleum Number 5769 Primer.

B. For Repair of Galvanizing: Use a high zinc-dust content paint complying with MIL-P-21035.

C. Galvanizing: Provide a zinc coating for those items shown or specified to be galvanized as follows and as applicable:

1. ASTM A153 for galvanized iron or steel hardware.

2. ASTM A123 for galvanized rolled, pressed or forged steel shapes, plates, bars and strip 1/8-inch thick and heavier.

D. Field Galvanizing:

1. Required: For repair of protective coating of damaged galvanized surfaces resulting from welding or other construction operations in the shop or at the job-site at no added cost to the City.

2. Method: By "galvalloy" methods, in accordance with manufacturer's directions.

E. Shop Painting:

1. Required: On all uncoated ferrous metals; galvanized ferrous metal not to be shop coated.

2. Paint: Specified paint primer.

3. Painting: Full prime coating, completely covering the metal surfaces; at least 1 coat on all surfaces which will be accessible after fabrication and erection; at least 2 coats on all surfaces which will be inaccessible after fabrication and erection.

4. Remove scale, rust and other deleterious materials before application of Shop Coating.

5. Clean off heavy rust and loose mill scale in accordance with SSPC-SP-2 or SSPC-SP-3 before coating.

6. Remove oil, grease and similar contaminants in accordance with SSPC-SP-1.

F. Aluminum Finishes:

1. Anodized Finish: Give an anodic oxide treatment in accordance with AA M31C22A41 where indicated.

2. Mill Finish: Have a cleaned and degreased mill finish on other aluminum items.

2.7 FABRICATION OF FRAMED STAIRS

A. NAAMM Stair Standard: Comply with NAAMM AMP 510, “Metal Stairs Manual,” for Industrial Class,

unless more stringent requirements are indicated.

B. Provide Aluminum Stair Framing:

1. Fabricate stringers of channels.

a. Framing Size (Stringers, post, beams, etc): As required to comply with "General Requirements" Article.

b. Provide closures for exposed ends of channel stringers.

c. Aluminum Finish: Anodized

2. Construct platforms and tread supports of channel headers and miscellaneous framing members as required to comply with "Performance Requirements" Article.

a. Provide closures for exposed ends of channel framing.

3. Weld or bolt stringers to headers; weld or bolt framing members to stringers and headers.

C. Metal Bar-Grating Stairs: Form treads and platforms to configurations shown from metal bar grating; fabricate to comply with NAAMM MBG 531 Type P-19-4, “Metal Bar Grating Manual.”

1. Fabricate treads and platforms from welded grating with opening in gratings no more than 3/4 inch in least dimension.

a. Surface: Plain

2. Fabricate grating treads with cast-abrasive nosing and with aluminum angle or plate carrier at each end for stringer connections.

a. Secure treads to stringers with bolts.

D. Extruded Bars and Shapes: ASTM B 221, alloys as follows:

1. Grating Bearing Bars: 6061-T6 or 6063-T6.

2. Grating Crossbars: 6061-T6.

3. Extruded Shapes: 6061-T6.

4. Aluminum Sheet: ASTM B 209, Alloy 5052-H32.

5. Welding electrode, aluminum: 5356 filler alloy.

E. Risers: Open.

F. General Fabrication Requirements:

1. Provide complete stair assemblies, including metal framing, hangers, railings, clips, brackets, bearing plates, and other components necessary to support and anchor stairs and platforms on supporting structure.

a. Join components by welding unless otherwise indicated.

b. Use connections that maintain structural value of joined pieces.

2. Assemble stairs and railings in shop to greatest extent possible.

   a. Disassemble units only as necessary for shipping and handling limitations.

   b. Clearly mark units for reassembly and coordinated installation.

3. Cut, drill, and punch metals cleanly and accurately.

   a. Remove burrs and ease edges to a radius of approximately 1/32 inch unless otherwise indicated.

   b. Remove sharp or rough areas on exposed surfaces.

4. Form bent-metal corners to smallest radius possible without causing grain separation or otherwise impairing work.

5. Form exposed work with accurate angles and surfaces and straight edges.

6. Weld connections to comply with the following:

   a. Use materials and methods that minimize distortion and develop strength and corrosion resistance of base metals.

   b. Obtain fusion without undercut or overlap.

   c. Remove welding flux immediately.

   d. Weld exposed corners and seams continuously unless otherwise indicated.

   e. At exposed connections, finish exposed welds to comply with NOMMA's "Voluntary Joint Finish Standards" for Finish # 3 - Partially dressed weld with spatter removed.

7. Form exposed connections with hairline joints, flush and smooth, using concealed fasteners where possible.

   a. Where exposed fasteners are required, use Phillips flat-head (countersunk) screws or bolts unless otherwise indicated.

   b. Locate joints where least conspicuous.

   c. Fabricate joints that are exposed to weather in a manner to exclude water.

   d. Provide weep holes where water may accumulate internally.

PART 3 -- EXECUTION

3.1 FABRICATION AND INSTALLATION REQUIREMENTS

A. Fabrication and Erection: Except as otherwise shown, the fabrication and erection of structural steel shall conform to the requirements of the American Institute of Steel Construction "Manual of Steel Construction."

B. Aluminum Railings: Aluminum railing fabrication and installation shall be performed by craftsmen experienced in the fabrication of architectural metalwork. Exposed surfaces shall be free from defects or other surface blemishes. Dimensions and conditions shall be verified in the field. All joints, junctions, miters and butting sections shall be precision fitted with no gaps occurring between sections, and with all surfaces flush and aligned. Electrolysis protection of materials shall be provided.

C. Metal Stairs:

1. Fastening to In-Place Construction: Provide anchorage devices and fasteners where necessary for securing metal stairs to in-place construction.

   a. Include threaded fasteners for concrete and masonry inserts, through-bolts, lag bolts, and other connectors.

2. Cutting, Fitting, and Placement: Perform cutting, drilling, and fitting required for installing metal stairs. Set units accurately in location, alignment, and elevation, measured from established lines and levels and free of rack.

3. Install metal stairs by welding stair framing to steel structure or to weld plates cast into concrete unless otherwise indicated.

4. Fit exposed connections accurately together to form hairline joints.

   a. Weld connections that are not to be left as exposed joints but cannot be shop welded because of shipping size limitations.

   b. Do not weld, cut, or abrade surfaces of exterior units that have been hot-dip galvanized after fabrication and are for bolted or screwed field connections.

   c. Comply with requirements for welding in "General Fabrication" Article.

D. Floor Hatches: Unless otherwise shown, the CONTRACTOR shall furnish and install a 1/2-inch drain line to the nearest floor drain for all floor hatches.

E. Power-Driven Pins: Power-driven pins shall be installed by a craftsman who is certified by the manufacturer as being qualified to install the manufacturer's pins. Pins shall be driven in one initial movement by an instantaneous force that has been carefully selected to attain the required penetration. Driven pins shall conform to the following requirements where "D" = Pin's shank diameter:

Material Penetrated by Pin	Material's Minimum Thickness	Pin's Shank Penetration in Supporting Material	Minimum Space From Pin's CL to Edge of Penetrated Material	Minimum Pin Spacing
Concrete	16D	6D minimum	14D	20D
Steel	1/4-inch	Steel thickness	4D	7D

3.2 WELDING

A. Method: All welding shall be by the metal-arc method or gas-shielded arc method as described in the American Welding Society's "Welding Handbook" as supplemented by other pertinent standards of the AWS. Qualification of welders shall be in accordance with the AWS Standards governing same.

B. Quality: In assembly and during welding, the component parts shall be adequately clamped, supported and restrained to minimize distortion and for control of dimensions. Weld reinforcement shall be as specified by the AWS Code. Upon completion of welding, all weld splatter, flux, slag, and burrs left by attachments shall be removed. Welds shall be repaired to produce a workmanlike appearance, with uniform weld contours and dimensions. All sharp corners of material which is to be painted or coated shall be ground to a minimum of 1/32-inch on the flat.

3.3 GALVANIZING

A. All structural steel plates shapes, bars and fabricated assemblies required to be galvanized shall, after the steel has been thoroughly cleaned of rust and scale, be galvanized in accordance with the requirements of ASTM A 123. Any galvanized part that becomes warped during the galvanizing operation shall be straightened. Bolts, anchor bolts, nuts and similar threaded fasteners, after being properly cleaned, shall be galvanized in accordance with the requirements of ASTM A 153. Field repairs to galvanizing shall be made using "Galvinox", or equal.

3.4 DRILLED ANCHORS

A. Drilled anchors and reinforcing bars shall be installed in strict accordance with the manufacturer's instructions. Holes shall be roughened with a brush on a power drill, cleaned and dry. Drilled anchors shall not be installed until the concrete has reached the specified 28-day compressive strength. Adhesive anchors shall not be loaded until the adhesive has reached its specified strength in accordance with the manufacturer's instructions.

END OF SECTION

SECTION 05600
FLOOR ACCESS HATCHES

PART 1 -- GENERAL

1.1 SUMMARY

A. Work included: Provide factory-fabricated floor access doors.

1.2 SUBMITTALS

A. Product Data: Submit manufacturer’s product data

B. Shop Drawings: Submit shop drawings including profiles, accessories, location, adjacent construction interface, and dimensions

C. Warranty: Submit executed copy of manufacturer's standard warranty.

1.3 QUALITY ASSURANCE

A. Manufacturer: A minimum of 5 years experience manufacturing similar products.

B. Installer: A minimum of 2 years experience installing similar products.

C. Manufacturer’s Quality System: Registered to ISO 9001 Quality Standards including in-house engineering for product design activities.

1.4 DELIVERY, STORAGE AND HANDLING

A. Deliver products in manufacturer’s original packaging. Store materials in a dry, protected, well-vented area. Inspect product upon receipt and report damaged material immediately to delivering carrier and note such damage on the carrier’s freight bill of lading.

1.5 WARRANTY

A. Manufacturer’s Warranty: Provide 5 year warranty. Materials shall be free of defects in material and workmanship for a period of five years from the date of purchase. Should a part fail to function in normal use within this period, manufacturer shall furnish a new part at no charge.

PART 2 -- PRODUCTS

2.1 MANUFACTURER

A. Basis-of-Design Manufacturer: Type JAL-H20 Single Leaf Floor Access Door or Type JDAL-H20 Double Leaf by The BILCO Company, P.O. Box 1203, New Haven, CT 06505, 1-800-366-6530, Fax: 1-203-535-1582, Web: www.BILCO.com, or approved equal.

2.2 ACCESS HATCHES

A. Furnish and install where indicated on plans vault access door Type J-AL H20, in sizes shown on the Drawings including hinge locations. The floor access door shall be double leaf and pre-assembled from the manufacturer.

B. Performance characteristics:

1. Covers: Shall be reinforced to support AASHTO HS-20-wheel load with a maximum deflection of 1/150th of the span. Manufacturer to provide structural calculations stamped by a registered professional engineer upon request. (Note: For installation in an off-street location where not subject to high-density, fast-moving traffic.)
2. Operation of the covers shall be smooth and easy with controlled operation throughout the entire arc of opening and closing.
3. Operation of the covers shall not be affected by temperature

C. Covers: Shall be 1/4” aluminum cover and extruded aluminum frame.

D. Frame: Channel frame shall be aluminum with full anchor flange around the perimeter.

E. Hinges: Shall be specifically designed for horizontal installation and shall be through bolted to the covers with tamperproof Type 316 stainless steel lock bolts and shall be through bolted to the frame with Type 316 stainless steel bolts and locknuts.

F. Drain Coupling: Provide a 1-1/2” (38mm) drain coupling located in the right front corner of the channel frame (note: can be placed at a different location if specified).

G. Lifting mechanisms: Manufacturer shall provide the required number and size of compression spring operators enclosed in telescopic tubes to provide, smooth, easy, and controlled cover operation throughout the entire arc of opening and to act as a check in retarding downward motion of the covers when closing. The upper tube shall be the outer tube to prevent accumulation of moisture, grit, and debris inside the lower tube assembly. The lower tube shall interlock with a flanged support shoe fastened to a formed 1/4” gusset support plate.

H. A removable exterior turn/lift handle with a spring loaded ball detent shall be provided to open the covers and the latch release shall be protected by a flush, gasketed, removable screw plug.

I. Hardware:

1. Hinges: Hinges: Heavy forged Type 316 stainless steel hinges, each having a minimum 1/4” (6mm) diameter Type 316 stainless steel pin, shall be provided and shall pivot so the covers do not protrude into the channel frame.
2. Covers shall be equipped with a hold open arm that automatically locks the cover in the open position.
3. Covers shall be fitted with the required number and size of compression spring operators.
4. A Type 316 stainless steel snap lock with fixed handle shall be mounted on the underside of the cover.
5. All hardware shall be zinc plated and chromate sealed with type 316 stainless steel fasteners. For installation in highly corrosive environments or when prolonged exposure to hot water or steam is anticipated, specify Type 316 stainless steel hardware.

J. Finishes: Mill finish aluminum with a bituminous coating applied to the exterior of the frame.

2.3 FALL PROTECTION GRATING

A. All hatches both single and double leaf shall have a fall protection grating system meeting OSHA 29 CFR1926.502(c) requirements for fall protection. The grating shall be aluminum with powder coat paint finish that is safety yellow in color. The system is to be factory installed and allow the grating to open to the full 90 degree position.

PART 3 -- EXECUTION

3.1 EXAMINATION

A. Examine substrates and openings for compliance with requirements for installation tolerances and other conditions affecting performance. Proceed with installation only after unsatisfactory conditions have been corrected.

3.2 INSTALLATION

A. Install products in strict accordance with manufacturer's instructions and approved submittals. Locate units level, plumb, and in proper alignment with adjacent work.

1. Test units for proper function and adjust until proper operation is achieved.
2. Repair finishes damaged during installation.
3. Restore finishes so no evidence remains corrective work.

3.3 ADJUSTING AND CLEANING

A. Clean exposed surfaces using methods acceptable to the manufacturer which will not damage the finish.

END OF SECTION

SECTION 06100
ROUGH CARPENTRY

PART ONE - GENERAL

1.1 DESCRIPTION

*A. All rough carpentry work indicated on the Contract Drawings and as hereinafter specified, including:

1. Blocking and nailers and framing anchors.

2. Miscellaneous wood, nails, screws and other rough hardware indicated on the Drawings and required for complete and proper installation.

*B. Related Sections:

1. Documents affecting work of this Section include, but are not necessarily limited to the GENERAL CONDITIONS, SUPPLEMENTARY CONDITIONS and Sections in DIVISION 1 - GENERAL REQUIREMENTS of these Specifications.

2. Concrete Formwork in Section 03100.

3. Finish Carpentry in Section 06200.

4. Architectural Woodwork in Section 06400.

5. Custom Casework in Section 06410.

1.2 QUALITY ASSURANCE

A. Use adequate numbers of skilled workers who are thoroughly trained and experienced in the necessary crafts and who are completely familiar with the specified requirements and the methods needed for the proper performance of the work of this Section.

B. Codes and Standards:

1. In addition to complying with the pertinent codes and regulations of the Uniform Building Code with the City of Los Angeles 1992

Amendments, comply with the following:

a. "Product Use Manual" of the Western Wood Products Association for selection and use of products included in that manual;

b. "Plywood Specification and Grade Guide" of the American Plywood Association;

c. "Standard Specifications for Grades of California Redwood Lumber" of the Redwood Inspection Bureau for Redwood, when used.

1.3 GENERAL REQUIREMENTS

A. Verification of Job Conditions: Required and take field measurements as may be required. Report to the City Engineer or Consultant any discrepancies between the Drawings and job-site conditions, for further instructions.

B. Coordination and Cooperation: Do work of this Section in a fully coordinated and cooperative manner with work of other trades to provide complete and proper installation and to expedite the job without delays.

C. Defective Work: All work of this Section that is not set true to line, plane and elevation or is damaged or marred or is not in a condition to receive other trade work will not be accepted. Remedy remove or replace defective work to a first class condition as approved by the City Engineer or Consultant, at no added cost to the City.

D. Clean-Up: During the progress of the work of this Section, conform to provisions of Section 01710 in GENERAL REQUIREMENTS, keep the premises free of debris and waste resulting from the work of this Section. Upon completion, all surplus materials and debris shall be removed from the job-site.

1.4 SUBMITTALS

A. Comply with pertinent provisions of Section 01340 - SUBMITTAL in DIVISION 1 - GENERAL REQUIREMENTS.

B. Contractor shall submit Shop Drawings indicating location of backing, furring, nailers, blocking, etc. to the City Engineer for approval prior to start of Contracted Work. Contractor shall coordinate work of this Section with work

of other trades if necessary.

1.5 PRODUCT HANDLING

A. Delivery: Deliver the rough carpentry materials to the job-site and store in a safe area, out of way of traffic and shored up off the ground surface, where directed by the City Engineer.

1. Identify framing lumber as to grades and store each grade separately from other grades.

2. Protect metal items with adequate waterproof outer wrapping and properly identify or label such items.

3. Use extreme care in off loading of lumber to prevent damage, splitting and breaking of materials.

B. Protection: Stack lumber to prevent warping and keep dry.

PART TWO - PRODUCTS

2.1 GRADE STAMPS

A. Identify framing lumber by the grade stamp of the West Coast Lumber Inspection Bureau, or such other grade stamp as is approved in advance by the City Engineer or Consultant.

B. Identify plywood as to species, grade, and glue type by the stamp of the American Plywood Association.

C. Identify other materials of this Section by the appropriate stamp of the agency approved in advance by the City Engineer or Consultant.

D. Conform to the Uniform Building Code with the Los Angeles City 1992 Amendment, Section 2505.

*2.2 MATERIALS (As Applicable)

A. Provide materials in the quantities needed for the work shown on the Drawings and meeting or exceeding the following standards of quality at the time of delivery:

1. Furnish lumber manufactured to comply with PS20 "American Softwood Lumber Standards" and with applicable grading rules of Inspection Agencies certified by the American Lumber Standards Committee (ALSC) Board of Review.

B. Seasoning:

1. Rough lumber to be air dried and well seasoned to have average moisture content not to exceed 19 percent.

2. Finish lumber to be kiln dried as closely as practicable to have an average moisture content not exceeding 12 percent.

*2.3 PRODUCTS

A. Blocking and Nailers: Douglas Fir, "Construction" grade, pressure treat with chromate zinc chloride.

B. Plywood: Conform to U.S. Product Standard P.S. 1-83 and U.B.C. Standard 25-9. Plywood shall be grade-marked by the American Plywood Association (APA), Pittsburgh Testing Laboratories (PTL) or Timber Engineering Company (TECO). Plywood shall be exterior grade, structural.

C. Nails, Screws, and Lag Screws: Commercial Standard.

D. Bolts and Washers: American Standard and U.B.C. Standard 25-17.

E. Treated Lumber: Cut surfaces in treated lumber shall be given a brush coat of approved type preservative.

F. Fire Retardant: All wood shall be treated with Baxter "Pyresote", Barnard "Bar Flame" or equal.

G. Building Paper: Kraft paper complying with Fed. Spec. UU-B-7902.

H. Joist Hangers: Simpson, Teco or equal as approved by the City Engineer or Architect.

I. Exterior Gypsum Sheathing: Butt edge, 2-inch thick, complying with ASTM C630.

J. Load Bearing Studs: 2-inch x 4-inch, Douglas Fir W.C.L.I.B. No. 1 grade.

K. Beams and Stringers: 5-inch and thicker, width more than 2-inch greater

than thickness, Douglas Fire W.C.L.I.B. No. 1 structural beams and stringers.

L. Wall Sills: Treated Douglas Fir of W.C.L.I.B. grade for wall framing or Redwood C.R.A. Foundation grade as market or branded by an approved agency of the Los Angeles City Department of Building and Safety.

2.4 MINIMUM SURFACING: (As Applicable)

A. General: All faces required to be left exposed; where specifically indicated on the Drawings or specified; where necessary to achieve proper connections to other members.

B. S1E: Blocking, studs, joists, rafters, purlins, bridging and other members in which uniform width must be maintained.

C. S1S1E: Plates, sills and other members in which uniform width and thickness must be maintained.

D. S4S: Exposed wood except where noted to have "Resawn" finish.

*2.5 OTHER MATERIALS

A. Provide other materials not specifically described but required for a complete and proper installation, as selected by the Contractor subject to the approval of the City Engineer or Architect.

1. Glue: As suitable for required joining; water-resistant where subject to moisture conditions.

2. Stock Framing Connectors and Brackets: "Simpson", "Teco" or "Trimfast", galvanized metal of types and sizes indicated or required. Use nails furnished by the connector manufacturer.

PART THREE - EXECUTION

3.1 SURFACE CONDITIONS

Examine the areas and conditions under which work of this Section will be performed. Correct conditions detrimental to timely and proper completion of the Work. Do not proceed until detrimental conditions are corrected.

3.2 COMPLIANCE

A. Do not permit materials not complying with the provisions of this Section to be brought onto or to be stored at the job-site.

B. Promptly remove non-complying materials from the job-site and replace with materials meeting the requirements of this Section.

3.3 WORKMANSHIP

A. Produce joints which are tight, true and well nailed, with members assembled in accordance with the Contract Drawings and with pertinent Codes and Regulations.

B. Selection of Lumber Pieces:

1. Carefully select the members.

2. Select individual pieces to that knots and obvious defects will not interfere with placing bolts or proper nailing, and will allow making of proper connections.

3. Cut out and discard defects which render a piece unable to serve its intended function.

4. Lumber may be rejected by the City Engineer or Consultant, whether or not it has been installed, for excessive warp, twist, bow, crook, mildew, fungus or mold, as well as for improper cutting and fitting.

*3.4 GENERAL FRAMING

A. General: Execute rough carpentry in accordance with the Uniform Building Code wit the Los Angeles City 1992 Amendments, Divisions 25 and 48 as applicable.

1. In addition to framing operations normal to the fabrication and erection indicated on the Drawings, install wood blocking and backing required for the work of other trades.

2. Set horizontal and sloped members with crown up.

3. Do not notch, cut, or bore members for pipes, ducts, or conduits, or for other reasons except as shown on the Drawings or as specifically

approved in advance by the Consultant or City Engineer.

4. Make proper allowances for shrinkage where possible.

5. Splicing between bearings not permitted.

6. The contact surfaces of any member coming in contact with an exterior concrete floor slab or footing or masonry wall regardless of height above ground shall be treated wood or shall be painted with two coats of an approved preservative.

B. Bearings:

1. Make bearings full unless otherwise indicated on the Drawings.

2. Finish bearing surfaces on which structural members are to rest as to give sure and even support.

3. Where framing members slope, cut or notch the ends as required to give uniform bearing surface.

C. Wall Sills and/or Ledgers:

1. Set level and in straight alignment.

2. All sills on uneven concrete bases to be set in beds of dry pack mortar as specified in Cast-In-Place Concrete in Section 03300.

3. Anchor to concrete as indicated on the Drawings.

*D. Stud Framing: (As Applicable)

1. Space studs 16-inches on center except where closer spacing is indicated or noted on the Drawings or is necessary at wall corners and openings. Space studs 12-inches on center behind ceramic tile wall surfacing.

2. Double studs at openings with inside studs cut to take headers.

3. Double top plate with joints lapped, at least 4-feet.

4. Place double headers on edge.

5. Lintels to be one piece full thickness of studs.

6. Strap studs together with substantial metal straps where sills or plates are cut to accommodate piping.

7. End studs of partitions adjoining masonry walls to be suitably bolted to masonry, as approved by the City Engineer or the Consultant.

E. Rafters and Ceiling Joists:

1. Space as indicated on the Drawings.

2. Splice only as indicated on the Drawings.

3. Tightly nail joints as indicated or as necessary.

4. Accurately set in place and nail securely to wall framing, beams and to hangers.

5. Level or slope bottom ceiling joists carefully.

6. Properly frame all openings in roof sheathing as indicated on the Drawings.

F. Wood Grounds:

1. Required: Continuous wood grounds for casings, base and other finish and as necessary for attachment of wood finish and millwork specified in Finish Carpentry and Custom Casework Sections.

2. Material: Douglas Fir, S4S.

3. Size: Not less than 1-1/4-inches wide, unless otherwise indicated on the Drawings of proper thickness for exact finish of plaster.

4. Install plumb, level, true to line and grade. Solidly wedged in positions to assure true planes of finished work. Securely nail to framing or to nailers set in masonry, as approved by the City Engineer.

G. Furring and/or Stripping (Where Occur):

1. Material: Douglas Fir Boards, S4S, sizes as noted on the Drawings.

2. Application:

a. Accurate spacing and straight alignment.

b. At right angles to framing or as otherwise indicated on the Drawings.

c. Securely nail to framing at every bearing with suitable box nails to masonry or concrete as indicated on Drawings or other fastening as approved by the City Engineer.

H. Parapet Walls: Construct to uniform height as indicated, make rigid, plumb and straight-line complete with block as necessary to receive sloping framing for eaves. Top surface of top plate shall slope towards flat roof area for drainage and make ready to receive subsequent work.

I. Eave Framing:

1. Size and spacing of joists shall be as indicated on the Drawings.

2. Joists shall be set in place with bottom surfaces carefully leveled and shall be securely anchored to exterior wall framing and to tile roof framing and make ready for lathing and plastering as indicated on the Drawings.

J. Roof Crickets and Saddles:

1. Materials: Douglas Fir Boards S4S for framing; softwood plywood Structural I C-C Exterior DFPA, 2-inch thick for sheathing.

2. Installation: As indicated on the Drawings to the established lines and grades or elevations to assure proper roof drainage. See Roof Plan and "Roof Sheathing" as hereinafter specified.

K. Roof Sheathing:

1. Material: Softwood plywood, Structural I C-C Exterior DFPA, size and of thickness indicated on the Contract Drawings.

2. Installation:

a. As indicated on the Contract Drawings.

b. Nail panels securely to supports in accordance with Nailing Schedule on the Drawings.

c. End Joints: Over and parallel to supports; stagger as indicated on the Drawings.

d. Nailing: As indicated in Nailing Schedule on Drawings. Nail plywood sheets tight and drive nails flush.

e. Cracks and Holes: Cover with sheet metal as necessary for application of roofing and waterproofing.

L. Roof Platforms for Mechanical and/or Electrical Equipment: Construct as indicated on the Drawings on top of the roof sheathing; make top plywood surface level and ready to receive waterproofing felts, sheet metal covering and mechanical and/or other equipment.

M. Wood Curbs: Construct as detailed on the Drawings; make top of curb level, unless otherwise detailed.

N. First or Second Floor Sheathing: (As Applicable)

1. Material: Softwood plywood Structural I C-D, Interior DFPA (exterior glue).

2. Installation: Securely nail to supports in accordance with nailing schedule indicated on the Drawings. Drive nails tight and flush. Securely butt plywood edges to allow for proper installation of moisture barrier material and lightweight concrete fill.

O. Hose Tower Sheathing (Ladder Rest): (on Fire Department Projects)

1. Material: Softwood plywood, Structural I C-C Exterior DFPA, 3/4-inch thickness.

2. Installation: As indicated on the Drawings.

P. Wood Nailers:

1. Required: For cap of building masonry walls and elsewhere as noted on the Drawings.

2. Materials: Pressure treated lumber, sizes, and shapes as indicated on the Drawings.

3. Installation: In level position, tightly bolt in place with nuts or heads countersunk and make ready for receiving sheet metal copings; as indicated on the Drawings.

Q. Support Beams:

1. Required: As necessary and as indicated for support of steel and other items.

2. Material: Douglas Fir beams, sizes as indicated on the Drawings.

3. Fabrication and Installation: As indicated on the Drawings, securely anchor in place to floor or ceiling framing, and make ready to receive and support steel items.

R. Plywood Backing:

1. Required: For supports for Mechanical and/or Electrical equipment on walls.

2. Material: 3/4-inch plywood "B-D" grade; sizes as noted or indicated on the Drawings.

3. Installation: At location indicated on the Drawings; bolt to structural framing so as to bear weight of equipment; countersink all fasteners.

S. Wall Diaphragm Sheathing:

1. Required on inside surfaces of exterior wall framing and on interior partition framing where indicated on the Structural Drawings for lateral stability of walls.

2. Material: Plywood panels of size and thickness as noted on the Structural Drawings and specified in Paragraph 2.03 of this Section.

3. Installation: Panels shall be applied directly to stud framing with long dimension of panels horizontal and with all edges bearing against wood studs and blocking extending from floor up height as indicated. Panels shall be staggered. Nailing shall be as noted. Where panels contact intermediate studs nail panels thereto with nails at 10" O.C. or as otherwise directed by the City Engineer.

T. Attic Partitions:

1. Shall conform to the Uniform Building Code with the Los Angeles City 1992 Amendments, Section 3201.

2. Frame Partitions with 2-inch x 4-inch studs spaced not over 24-inches on center.

3. Solidly sheath partition, extending from ceiling below to underside of roof sheathing with 2-inch thick plasterboard or plywood, 24-inches on center securely nailed in place, or as otherwise detailed on the Drawings.

4. Each partition to have a self-closing door of the same construction as the partition, top hinged and latched at bottom with a screen door catch. Locate door at center of partition or as otherwise located on the Drawings.

5. Provide continuous catwalks along full length of attic spaces; shall be two (2) 2-inch x 12-inch boards and secure to ceiling framing.

3.5 BLOCKING AND BRIDGING

A. Install blocking as required to support items of finish and to cut off concealed draft openings, both vertical and horizontal, between ceiling and floor areas.

B. Bridging:

1. Install wood cross bridging (not less than 2" x 3" nominal), metal cross bridging of equal strength, or solid blocking between joists where the span exceeds 8'-0".

2. Provide maximum distance of 8"-0" between a line of bridging and a bearing.
3. Cross bridging may be omitted for roof and ceiling joists where the omission is permitted by code, except where otherwise indicated on the Drawings.

4. Install solid blocking between joists at points of support and wherever sheathing is discontinuous. Blocking may be omitted where joists are supported on metal hangers.

3.6 ALIGNMENT

On framing members to receive a finished surface, align the finish subsurface to vary not more than 1/8" from the plane of surfaces of adjacent furring and framing members.

3.7 INSTALLATION OF PLYWOOD SHEATHING

A. Placement:

1. Place plywood with face grain perpendicular to supports and continuously over at least two supports, except where otherwise shown on the Drawings.

2. Center joints accurately over supports, unless otherwise shown on the Drawings.

B. Protect Plywood from moisture by use of waterproof coverings until the plywood in turn has been covered with the next succeeding component or finish.

3.8 FASTENING

A. General: Comply with provisions of the Uniform Building Code with the Los Angeles City 1992 Amendments, Table 25-Q in Division 25 and Table 48-C in Division 48 as applicable to Rough Carpentry.

B. Nailing:

1. Use only common wire nails or spikes of the dimension shown on the Nailing Schedule, except where otherwise specifically noted on the Drawings. Replacement or sinker nail is not allowed.

2. For conditions not covered in the Nailing Schedule, provide penetration into the piece receiving the point of not less than 2 the length of the nail or spike, provided, however, that 16d nails may be used to connect two pieces of 2" (nominal) thickness.

3. Nail without splitting wood.

4. Prebore as required.

5. Remove split members and replace with members complying with the specified requirements.

C. Bolting:

1. Drill holes 1/16" larger in diameter than the bolts being used.

2. Drill straight and true from one side only.

3. Do not bear bolt threads on wood, but use washers under head and

nut where both bear on wood, and use washers under all nuts.

D. Screws:

1. For lag screws and wood screws, prebore holes same diameter as root of threads, enlarging holes to shank diameter for length of shank.

END OF SECTION

SECTION 07290
WATERPROOFING

PART ONE - GENERAL

1.1 SUMMARY

A. Provide all waterproofing where indicated or noted on the Contract Drawings and specified hereinafter, not limited to the following:

1. Waterproofing exterior concrete block walls below grade (hydrostatic pressure of 6-foot head).

2. Waterproofing exterior concrete block walls below grade (hydrostatic pressure of 12-foot head).

3. Waterproofing exterior building walls below grade (hydrostatic pressure of 6-foot head).

4. Waterproofing site retaining walls.

5. Dampproofing planter boxes at masonry walls below grade.

6. Waterproofing shower and drying room floors over slab on grade.

7. Waterproofing concrete entry canopies.

8. Waterproofing on parking deck.

9. Waterproofing membrane under all toilet rooms, shower stalls and drying rooms, and under mop drain troughs.

10. Waterproofing membrane over wood subfloors of drying and toilet rooms (except shower stalls).

B. Related Sections:

1. Documents affecting work of this Section include, but are not necessarily limited to the GENERAL CONDITIONS, SUPPLEMENTARY CONDITIONS and Sections of GENERAL REQUIREMENTS in DIVISION 1 of these Specifications.

2. Moisture Barrier Over Wood Subfloor to Receive Lightweight Concrete Fill in DIVISION 3.

3. Preparation of Concrete Surfaces to Receive Work of this Section in Section 03300.

4. Wood Nailers in Section 06100.

5. Built-up Roofing in DIVISION 7.

6. Above grade Waterproofing Sealer Treatment of Masonry Walls in Section 07210.

7. Sheet Metal Work in Section 07600.

8. Caulking and Sealants in Section 07920.

1.2 QUALITY ASSURANCE

A. Use adequate numbers of skilled applicators who are thoroughly trained and experienced in the necessary crafts and who are completely familiar with the specified requirements and the methods needed for proper performance of the work of this Section.

B. Use an applicator currently approved in writing by the manufacturer of the waterproofing system.

C. **Technical Services:** Contractor shall notify the manufacturer at least 72 hours prior to start of work to provide required technical services. Equipment used to apply the waterproofing material to be as prescribed by or meeting approval of the material manufacturer.

D. **Manufacturer's Certification:** Prior to start of waterproofing operations of this Section and during work progress, the manufacturer of the waterproofing material shall visit the job-site to inspect and shall certify the following:

1. That the surfaces to which the material was applied were in a condition suitable to receive the waterproofing materials.

2. That materials applied conform to the specified requirements.

3. That materials were applied in accordance with manufacturer's current recommendations.

1.3 SUBMITTALS

A. **General:** Comply with provisions in SUBMITTALS SECTION 01340 in DIVISION 1 - GENERAL REQUIREMENTS of these Specifications.

B. **Certification:** Upon completion of the work of this Section and as a condition of its acceptance, deliver to the City Engineer the certification required under the above paragraph 1.2D.

C. **Applicator:** Submit letter to the City Engineer or Consultant stating that the applicator is approved by the material manufacturer and that the work has been installed or applied in accordance with manufacturer's instructions, as shown or noted on the Contract Drawings and as hereinafter specified.

D. **Manufacturer's Recommended Installation Procedures:** When approved by the City Engineer, will become the basis for accepting or rejecting actual installation procedures used on the work.

E. **Manufacturer's Specifications** and other data needed to prove compliance with specified requirements.

F. **Materials List** of items to be provided under this Section.

1.4 EXTENDED GUARANTEES

A. **Guarantee Period:** Specified in Section 28 in GENERAL CONDITIONS shall be extended to two (2) years. Obtain written guarantees from each of the several applicators and file five (5) copies of same with the City Engineer or the Consultant as a prerequisite for final acceptance of the work.

1. Guarantee to be prepared by both the material manufacturer and the applicator.

2. Manufacturer shall further guarantee the material to perform as specified and in case of failure to perform within the guarantee period shall agree to furnish sufficient material to correct the failure without added cost to the City.

1.5 INSPECTION

A. Each applicator hereunder, in the company of the City Engineer's representative, before starting work, shall inspect and verify surfaces that are to receive waterproofing materials are in the following condition to receive work of this Section:

1. Concrete to be dry, smooth, free from loose material, rough spots, sharp projections and lumpy places, and that all pits, holes or cracks in concrete surfaces are filled with cement mortar to provide solid surface.

2. Should any deficiency appear, the City Engineer representative shall file a written report of same to the Contractor for correction before such waterproofing work commences.

1.6 PRODUCT HANDLING

A. Delivery and Storage:

1. Deliver waterproofing materials to the job-site in their unopened, sealed and original containers with all labels intact and legible at time of use, with manufacturer's name, brand name and batch number.

2. Store material where directed by the City Engineer in a safe, clean and dry and orderly area free from oily rags, waste and empty containers. Such materials shall be handled and stored in a manner to prevent damage or contamination.

B. Protection: Use all means necessary to protect the materials of this Section before, during and after installation and to protect the work and materials of all other trades.

C. Replacements: In the event of damage or contamination, immediately make all repairs and replacements necessary to the City Engineer's approval, at no added cost to the City.

1.7 CLEANING AND CLEAN-UP

A. Contractor shall not permit applicators to allow waste or debris to accumulate and shall have same removed from the job-site at frequent intervals. Comply with provisions of Section 01710 - CLEANING of the GENERAL REQUIREMENTS in DIVISION 1 of these Specifications.

B. Upon completion of work of this Section, thoroughly clean all non-related surfaces of any material splashed onto adjacent surfaces during work operations of this Section. Use cleaning materials and methods recommended by the waterproofing or damproofing material manufacturer. Remove all waste, debris, surplus materials, equipment, and tools co-incident with the specified work. Leave the premises and the job-site in a clean and

orderly condition.

PART TWO - PRODUCTS

2.1 GENERAL

* **A. Types (As applicable)**

1. Primer: Fed Spec. SS-A-710B, ASTM D41-73 Genstar Roofing Products Co. (Flintkote) No. 810-01 asphalt primer.

2. Waterproofing Asphalt: Fed. Spec. SS-A-666 Class A, temperature range 165 degree Fahrenheit to 175 degree Fahrenheit.

3. Protection Board: Fed. Spec. LLL-I-535A, minimum 2-inch thick, integrally asphalt treated cane fiber board as recommended by the waterproofing material manufacturer.

4. Reinforcement Felts: Fed. Spec. HH-R-595B, Type 15A, Style A, plain, asphalt saturated, 15-lb. weight, Genstar Roofing Products Co. "Saturated Felt".

5. Elastomeric Sheeting: 40 mil thick chlorinated polyethylene (CPE), "Chloraloy 240" manufactured by the Noble Co., Grand Haven, Michigan (local representatives phone (213) 981-8660).

6. Bonding Liquid (for Elastomeric Sheeting): Chlorinated polyethylene (CPE) solvent bonding liquid or Xylen.

7. Reinforcing Fabric: Fed. Spec. HH-C-466B, glass fabric.

8. Waterproofing Asphalt: ASTM D449.

9. Asphalt Emulsion: ASTM D1187-66, marine type asphalt-clay fibered emulsion, Genstar Roofing Products Co. (Flintkote) No. C-113-E.

10. Protective Sheet: 70-lb. similar and equal to Genstar Roofing Products Co. (Flintkote) "New Method Protective Sheet".

11. Reinforcing Paper: Sisalkraft building paper by Sisalkraft Building Paper Co., Chicago, Illinois.

12. Protection Panels: Maximum 2-inch X 4-foot X 8-foot panels of a ductile air blown asphalt fortified with inorganic mineral fibers heat pressure molded to specified thickness manufactured by Asphalt

Products Oil Corp. (A.P.O.C.), Long Beach, California.

a. Primer (A.P.O.C.) hot applied water repelling asphalt.

b. Asphalt (A.P.O.C.) hot applied water repelling asphalt.

13. Nails: 12-gage galvanized steel with 5/8-inch diameter head, length sufficient to penetrate wood minimum 3/4-inch.

2.2 SUMMARIES OF WATERPROOFING ASSEMBLIES

A. For Waterproofing Exterior Concrete Block Yard Walls Below Grade (Hydrostatic Pressure of 6-Foot Head):

1. 1 coat of primer (1 gal.) .....8 lbs./100 sq. ft.

2. First course of waterproofing.....25 lbs./100 sq. ft.

3. 2 layers of felt.....30 lbs./100 sq. ft.

4. Asphalt mopping between layers of felt and on top.....50 lbs./100 sq. ft.

5. Protection board.....57 lbs./100 sq. ft.
TOTAL: 170 lbs./100 sq. ft.

B. For Waterproofing Exterior Concrete Block Yard Walls and Exterior Building Walls Below Grade (Hydrostatic Pressure of 12-Foot Head):

1. 1 coat of primer (1-1/2-gal.).....15 lbs./100 sq. ft.

2. First course of waterproofing
(2 coats @ 3 gal. each coat) .....60 lbs./100 sq. ft.

3. 2 layers of reinforcement.....2 lbs./100 sq. ft.

4. Second course of waterproofing
(2 coats @ 3 gal. each coat) .....60 lbs./100 sq. ft.

5. Protection board..... 57 lbs./100 sq. ft.
TOTAL: 187 lbs./100 sq. ft.

NOTE: Use cold applied method in tight spaces as may be governed by CAL/OSHA.

C. Waterproofing site retaining walls:

1. Asphalt emulsion primer (1-1/2-gallons).....15 lbs./100 sq. ft.

2. Course of emulsion .....40 lbs./100 sq. ft.
   TOTAL: 55 lbs./100 sq. ft.

D. Waterproofing Building Exterior Walls and Yard Walls Below Grade (Hydrostatic Pressure of 6-Foot Head):

Cold Applied Method:

1. Asphalt Emulsion (2 strength) as primer .....15 lbs./100 sq. ft.

2. First course of asphalt emulsion (3 gallons).....30 lbs./100 sq. ft.

3. Layer of reinforcement fabric .....1 lbs./100 sq. ft.

4. Second course of asphalt emulsion (3 gallons).....30 lbs./100 sq. ft.

5. Layer of reinforcement fabric ..... 1 lb./100 sq. ft.

6. Third course of asphalt emulsion (3 gallons)..... 30 lbs./100 sq. ft.
   TOTAL: 107 lbs./100 sq. ft.

Or

Hot Applied Method

1. 1 coat of primer (1-1/2 gal.).....15 lbs./100 sq. ft.

2. First course of waterproofing (3 gallons) .....30 lbs./100 sq. ft.

3. Layer of reinforcement fabric ..... 1 lb./100 sq. ft.

4. Second course of waterproofing (3 gallons).....30 lbs./100 sq. ft.

5. Second Course of Reinforcement Fabric ..... 1 lb./ sq. ft.

6. Third Course of waterproofing (3 gallons) ..... 30 lbs./100 sq. ft.
   TOTAL: 107 lbs./100 sq. ft.

E. Dampproofing Planter Boxes at Masonry or Concrete Walls Below Grade:

1. Asphalt Emulsion Primer.....15 lbs./100 sq. ft.

2. Course of Emulsion..... 40 lbs./100 sq. ft.
55 lbs./100 sq. ft.

F. Waterproofing Membrane Under Toilet Rooms Shower Stalls, Drying Rooms and Under Mop Drain Troughs:

1. One layer of 15-lbs. asphalt saturated felt.

2. Layer of elastomeric sheeting (CPE)

***NOTE**: Use cold applied method in tight spaces as may be governed by CAL/OSHA.

G. Waterproofing Membrane Over Wood Subfloor in Drying and Toilet Rooms (Except in Shower Stalls):

1. Two layers of felt.

2. Asphalt mopping between layer of felt and fabric.

3. Layer of fabric.

4. Asphalt mopping.

5. Layer of reinforcing felt.

PART THREE - EXECUTION

3.1 SURFACE CONDITIONS

A. Examinations Required: All surfaces to receive waterproofing materials by the material applicator, to be clean, free of dirt, foreign materials and surface defects which would impair the proper application of materials. Comply with provisions hereinbefore specified in Subsection 1.5 - INSPECTION of this Section.

B. Preparation of Surfaces: Perform or arrange for all remedial work to be executed prior to start of work of this Section. Start of work of this Section shall imply Contractor's acceptance of surface conditions as meeting requirements for the specified work.

3.2 COORDINATION

A. **Required:** Work of this Section shall be coordinated with other trades to assure proper and adequate provisions in the work of those trades for interface with work of this Section.

3.3 PROTECTION

A. **Required:** Below grade waterproof concrete and/or masonry wall surfaces prior to backfilling operations.

B. **Material:** Install specified protection board against such vertical wall surfaces.

3.4 WATERPROOFING EXTERIOR CONCRETE BLOCK YARD WALLS BELOW GRADE

A. **Required:** Below finish grade on block surfaces down to concrete foundation against which backfill will be placed.

NOTE: Where working in tight spaces use cold applied method as governed by CAL/OSHA.

* **B.** **Application:**

1. By an applicator authorized by waterproofing manufacturer, in accordance with manufacturer's specifications.

2. Extend waterproofing from bottom of footing to finish grade; not to be exposed above finish grade.

3. Prime concrete foundation and concrete block wall surfaces with asphalt emulsion primer at rate of 1 2 gallon per 100 square foot of surface; allow to dry thoroughly.

4. Brush apply cold asphalt emulsion to surfaces at rate of three gallons per 100 square foot.

   or

   Hot-mop-prime surfaces with asphalt at temperature of not less than 375 degrees F. or not more than 450 degrees F.

5. On vertical wall angles, angles at footings, and/or offsets embed in

emulsion or hot asphalt 12-inch-wide layer of reinforcing fabric extending 6-inches from the angle or corner.

6. Embed two layers of felt in hot asphalt or cold asphalt emulsion with sheets lapped 19-inches leaving 17-inches exposure, begin at top of footing and extend to within 6-inches of finish grade. Secure top edge of felt to wall with concrete nails through tin discs spaced 6-inches on center.

   NOTE: Where there is a 12 ft. hydrostatic pressure head, apply 3 layers of feet in lieu of 2 layers.

7. Seal perimeter edges of felts with three layers of glass fabric embedded in 1/4-inch thick layers of troweled on flashing compound (roofing cement). Coat the third layer with 1/8-inch thick layer of flashing compound. Extend seal 6-inches onto reinforcing felts and 6-inches out on block wall surfaces, as directed by the waterproofing material manufacturer.

8. Hot-mop-in-place specified protection board with smooth surface against the wall surface, extend the protection board from top of footing up to finish grade, embed in coat of asphalt emulsion. Protection board shall not be exposed above grade.

3.5 WATERPROOFING SITE RETAINING WALLS

A. Required: Where noted on the Contract Drawings.

B. Materials: As hereinbefore specified.

C. Application:

1. Primer: Brush or spray apply asphalt emulsion primer at rate of 1-1/2 gallons per 100 square foot, thinned with not more than 20 percent cool, clean water, and allow to thoroughly dry.

2. Emulsion course: Brush or spray apply emulsion at rate of four gallons per 100 square foot in uniform manner and allow to dry thoroughly before backfill is placed.

3. All applied in accordance with material manufacturer's printed directions.

3.6 DAMPPROOFING PLANTER BOXES AT MASONRY OR CONCRETE WALLS BELOW GRADE

A. **Required:** Where noted on the Drawings.

B. **Materials:** As hereinbefore specified.

C. **Application:** Butt installation method in accordance with manufacturer's instructions.

1. Extend waterproofing from top of footing to finish grade, not to be exposed above finish grade.

2. Prime top of footing and vertical wall surfaces with specified primer at rate of one (1) gallon per 100 to 150 square feet maximum, then hot mop with specified waterproofing asphalt at rate of 20-lbs. per 100 sq. ft. of surface.

3. Prime back side of protection panel and footing angles and while asphalt primer is still hot set footing angles in place followed by an application of protection panel and butt edges squarely up to adjacent footing angles and protection panels edges.

4. Back mop at joints of protection panels and at corners with a minimum 10-inch wide strip of hot asphalt and embed therein 8-inch wide batten strips (protective panels) over all joints and corners.

3.7 WATERPROOFING MEMBRANE UNDER TOILET ROOM, SHOWER STALLS, DRYING ROOMS AND UNDER MOP DRAIN TROUGHS

***NOTE:** This can be used for janitor slop sink construction.

A. **Required:** Where noted on the Drawings.

B. **Materials:** Felt, Elastomeric Sheeting and Bonding Liquids as hereinbefore specified.

C. **Application:** By an applicator authorized by the material manufacturer, in accordance with the manufacturer's specifications.

1. Apply a single layer of 15-lbs. asphalt-saturated felt, shingle method with 4-inch side and end laps and turn up felt 9-inches on vertical surfaces.

2. Install the CPE sheet liner over the felt and turn the sheet 9-inches up on all side walls. Use folded corner on all interior corners and prefab corner on all exterior corners. Secure the liner to the side walls with nails or staples 2-inch from the top edge.

3. Where necessary to nail the elastomeric sheet liner below the water line or in any critical area, cut a 2-inch x 2-inch piece of elastomeric sheeting and weld it to the elastomeric sheeting over the nail head as hereinafter specified for the welding of the seams of the elastomeric sheeting material.

4. Bond lapped joints of elastomeric sheeting material with application of specified liquid bonding material on both surfaces to be joined and press together while bonding material is still moist, lap joints in direction of watershed towards floor drain(s). End and side laps shall be minimum 2-inches.4

5. Fit the floor drain clamping ring in place by pressing on top of the elastomeric sheeting material to indicate the outline of the drain opening. Cut an opening in the membrane materials to expose the drain opening. Bolt the drain opening clamping ring in place firmly over the membrane material to make a waterproof seal.

D. Test: Test the completed waterproofing membrane by plugging the drains and filling the shower stall or mop drain trough with water to height of finish floor, shower stall curb, or drain trough curb or finish floor level. There shall be no evidence of leakage during a four hour period with waterproofed areas remaining full of water.

E. Protection: Upon completion of the waterproofing membrane, completion of testing, temporarily protect such surfaces with a covering of 15-lb. asphalt saturated felt loosely laid in place until such time subsequent tile work is applied.

***NOTE:** Specified, waterproofing membrane not required for toilet rooms over slabs on grade.

3.8 WATERPROOFING MEMBRANE ON PARKING DECKS

A. Required: Between structural parking deck slab and concrete wearing course from line.

B. Materials: As hereinbefore specified.

C. Application:

1. Concrete Surface: Smooth and free from rough spots and sharp projections, dry and swept clean.

2. Drains: Properly seal membrane around drains; fill base of ring with plastic cement; install ring over membrane and tighten while asphalt is warm.

3. Reinforcing Strips: Coat the walls and 12-inches out on deck with asphalt primer and allow to dry. Coat the primed area with flashing compound and apply two layers of membrane dampcourse; the first layer shall start 12-inches out on roof surface and 10-inches for second layer extending up full height of recess; apply the membrane assembly over these strips of dampcourse. After membrane is laid, apply two additional strips of membrane dampcourse starting 10-inches out on membrane for first layer, 8-inches for second layer, and extending the full height of recess. Apply each strip in flashing compound 1/8-inch thick. Nail strips 18-inches on centers on upper edge with concrete nails driven through tin discs to wall in recess. Coat the top and bottom of membrane in contact with reinforcing strips with flashing compound and exposed surface of strips 1/8-inches thick.

4. Membrane Assembly: Apply each layer separately over the roof deck surface, roll, and broom into place. Do not allow asphalt to remain on either the outside surfaces of top or bottom layers or the assembly. Mop the membrane solid and even with asphalt between layer starting with two layers of membrane dampcourse, follow with one layer of No. 30 asphalt felt, and two layers of dampcourse. Lap all layers 2-inches on sides and 4-inches on ends, with end laps not less than 2-feet apart; trim all layers flush with vertical surfaces.

5. Protective Sheet: After the finished membrane is approved and accepted, apply the protective sheet dry with mica surfaced side down lapped 4-inches on sides and 8-inches on ends; seal laps only with hot asphalt.

6. Expansion Joints: As indicated on the Drawings.

3.9 WATERPROOFING MEMBRANE OVER WOOD SURFACES

A. **Required:** Under tile floors in Drying and Toilet Rooms and elsewhere noted (except in shower stalls).

B. **Materials:** As hereinbefore specified.

C. **Application:**

1. Clean wood subfloors of dirt, loose and foreign materials and properly set all nail heads.

2. Spot mop and shower nail (at 12-inches on center) first layer of felt, lay shingle fashion with 4-inch side and end laps embedded in hot asphalt.

3. Hot mop in place 2nd layer of felt, lay as above specified, stagger side and end laps in relationship to that of previous layer of felt.

4. Hot mop in place one layer of fabric specified for felts with side and end laps staggered.

5. Hot mopping: Each mopping shall use not less than 25 lbs. of asphalt per 100 sq. ft. of floor and wall area and applied at temperatures between 375 degrees F. and 450 degrees F.

6. Turn up waterproofing onto walls and/or up and over curb surfaces, secure to wood plate at 12-inch centers with nails through tin caps; make corners watertight by folding of felts, fabrics and reinforcing paper.

3.10 WATERPROOFING CONCRETE ENTRY CANOPY

A. **Required:** Complete waterproofing over the entire roof area of the concrete entry canopy and as indicated on the Drawings, including flashing to the steel support members.

B. **Application:** By the manufacturer of the product or by an approved applicator authorized by the manufacturer, in accordance with the manufacturer's printed instructions on properly prepared, clean, dry surfaces; 40 mil. thickness minimum. Color shall be white. Make complete application, smooth and even in surface and color.

END OF SECTION

SECTION 07900
JOINT SEALANTS

PART 1 - GENERAL

1.1 THE REQUIREMENT

A. The CONTRACTOR shall furnish all tools, equipment, materials, and supplies and shall perform all labor required to complete the work as indicated on the Drawings and specified herein.

B. This section covers all joint sealant as specified herein and shown on Drawings.

1.2 RELATED WORK SPECIFIED ELSEWHERE

A. Section 03290 Joints in Concrete

1.3 REFERENCE SPECIFICATIONS, CODES AND STANDARDS

A. Comply with the reference specifications of the GENERAL REQUIREMENTS.

B. Federal Specifications:

TT-S-001543A	Sealing Compound, Silicone Rubber Base, (Calking, Sealing and Glazing in Buildings and Other Structures).
TT-S-00230C(2)	Sealing Compound, Elastomeric Type, Single Component, (For Calking, Sealing, and Glazing in Buildings and Other Structures).

1.4 CONTRACTOR SUBMITTALS

A. Submittals shall be made in accordance with the GENERAL REQUIREMENTS.

B. The following submittals and specific information shall be provided.

1. Product Data: Surface preparation and installation instructions.

2. Samples: Material proposed for use showing color range available, and marked with the manufacturer's name and product identification.

3. Quality Control Submittals:

C. Applicator Qualification: Documentation showing minimum of 5 years experience installing sealants in projects of similar scope.

D. Certificates of Compliance: Proposed materials meet Specification requirements.

1. Contract Closeout Submittals: Guarantee.

1.5 QUALITY ASSURANCE (NOT USED)

1.6 PRODUCT HANDLING

A. Deliver sealants to the jobsite in sealed containers, each bearing manufacturer's name and product designation.

B. Store and protect sealant products from damage, deterioration, and contamination in accordance with manufacturer's written recommendations.

1.7 ENVIRONMENTAL CONDITIONS

A. Ambient Temperature: Between 40 and 80 degrees F (4 and 27 degrees C) when sealant is applied.

1.8 GUARANTEE

A. Sealed Joints: Against adhesive and cohesive failure of sealant and for watertightness of sealed joints for a period of 5 years after date of final completion of sealants.

PART 2 -- PRODUCTS

2.1 MATERIALS

A. Like Items of Materials: End products of one manufacturer to achieve standardization for appearance, maintenance, and replacement.

B. CONTRACTOR Option: Immersible sealant may be substituted for nonimmersible sealant of the same material.

C. Characteristics:

1. Uniform, homogeneous.

2. Free from lumps, skins, and coarse particles when mixed.

3. Nonstaining, nonbleeding.

4. Hardness of 15 minimum and 50 maximum, measured by Method ASTM C 661.

2.2 SEALANT MATERIALS

A. Type 1 - Silicone, Nonsag, Not Immersible:

1. Silicone base, single-component, chemical curing; ASTM C 920, Type S, Grade NS, Class 25; Federal Specification TT-S-001543, nonsag type, Class A;

2. Capable of withstanding movement up to 50 percent of joint width.

3. Manufacturer: Dow Corning Corp. No. 790; General Electric Silpruf; or equal.

B. Type 2 - Multi-Part Polyurethane, Self-Leveling, Immersible:

1. Polyurethane base, multi-component, chemical curing; ASTM C 920, Type M, Grade P, Class 25 and Federal Specification TT-S-00227, self-leveling Type I, Class A.

2. Capable of being continuously immersed in water.

3. Manufacturer: Pecora Corp. Urexpan NR-200; Lym Tal Iso-Flex 880GB; or equal.

C. Type 3 - Multi-Part Polyurethane, Nonsag, Immersible:

1. Polyurethane base, multi-component, chemical curing; ASTM C 920, Type M, Grade NS, Class 25 and Federal Specification TT-S-00227, nonsag Type II, Class A.

2. Capable of being continuously immersed in water.

3. Manufacturer: LymTal Iso-Flex 881; or equal.

D. Type 4 - Multi-Part Polyurethane, Nonsag, Not Immersible:

1. Polyurethane base, multi-component, chemical curing; ASTM C 920, Type M, Grade NS, Class 25 and Federal Specification TT-S-00227, nonsag Type II, Class A.

2. Manufacturer: Pecora Corp. Dynatrol II; Tremco Dymeric; LymTal Isoflex 2000; or equal.

E. Type 5 - One-Part Polyurethane, Immersible:

1. Polyurethane base, single-component, chemical curing; Federal Specification TT-S-00230, Type I or II, Class A.

2. Capable of being continuously immersed in water, withstand movement of up to 25 percent of joint width.

3. Manufacturer for Nonsag: Sika Chemical Corp., Sikaflex-1A; equal.

4. Manufacturer for Self-Leveling: Sika Chemical Corp. Sikaflex-1C SL; or equal.

F. Type 6 - One-Part Polyurethane, Not Immersible:

1. Polyurethane base, single-component, chemical curing; ASTM C 920, Type S, Grade NS, Class 25 and Federal Specification TT-S-00230, nonsag Type II, Class A.

2. Manufacturer: Pecora Corp. Dynatrol I; Tremco Dymonic; or equal.

G. Type 7 - Multi-Part Polysulfide, Immersible:

1. Polysulfide base, two-component, chemical curing; ASTM C 920, Type M, Grade P or NS, Class 25 and Federal Specification TT-S-00227, Type I self-leveling, Type II nonsagging, Class A, uniform, homogeneous and free from lumps, skins, and coarse particles when mixed.

2. Capable of being continuously immersed in water.

H. Type 8 - One-Part Polysulfide, Nonsag, Not Immersible:

1. Polysulfide base, single-component, chemical curing; ASTM C 920, Type S, Grade NS, Class 12 1/2; Federal Specification TT-S-00230, Type II nonsag, Class A;

2. Capable of withstanding movement up to 20 percent of joint width.

3. Manufacturer: Sika Chemical Corp. Sikaflex 440; or equal.

I. Type 9 - One-Part Acrylic Terpolymer, Nonsag, Not Immersible:

1. Acrylic base, single-component, solvent curing; Federal Specification TT-S-00230, Type I nonsag, Class B.

2. Capable of withstanding movement up to 7.5 percent of joint width; Shore "A" hardness of 55 maximum.

3. Manufacturer: Tremco Mono; or equal.

2.3 BACKUP MATERIAL

A. Nongassing, extruded, closed-cell round polyethylene foam rod, compatible with sealant used, and as recommended by sealant manufacturer.

B. Size: As shown or as recommended by sealant material manufacturer. Provide for joints greater than 3/16-inch wide.

C. Manufacturer: Haveg Industries Minice; Dow Corning Ethafoam SB; or equal.

2.4 BOND BREAKER

A. Pressure Sensitive Tape: Recommended by sealant manufacturer to suit application.

2.5 JOINT CLEANER

A. Noncorrosive and nonstaining type, recommended by sealant manufacturer; compatible with joint forming materials.

2.6 PRIMER

A. Nonstaining type recommended by sealant manufacturer to suit application.

2.7 SEALANT COLOR

A. Unless specifically noted, match the color of the principal wall material adjoining the area of application.

2.8 TAPE SEALANT

A. Closed cell polyvinyl chloride (PVC) foam coated on both sides with a modified acrylic pressure-sensitive adhesive.

B. Color: Black.

C. Size: 3/4-inch width by length as required by thickness as recommended by manufacturer, for particular application.

D. Properties:

1. Tensile Strength (ASTM D 412, Die C): 80 psi.

2. Elongation (ASTM D 412, Die C): 125 percent.

3. Compression Set (ASTM D 1056): 30 percent max.

4. Compression Deflection (ASTM D 1056) at 25 Percent Deflection: 2.5 psi.

5. Low Temperature Flexibility, 5 Hours at -40 Degrees F: No cracking.

6. Heat Resistance/Maximum Shrinkage, 70 Hours at 212 Degrees F: 1.5 percent.

7. Staining (ASTM D 925) on Most Substrates: None.

8. Water Absorption by Weight at 30 Percent Compression: 24 percent.

9. Density per Cubic Foot (ASTM D 3574): 10 pounds.

10. Thermal Conductivity (k factor): 0.24.

2.9 PREFORMED SEALS

A. Preformed Compressible Joint Seals:

1. Widths Up to 5-Inches: Watson-Bowman Acme, Inc., Buffalo, NY, Wabo-Series; LymTal Isoflex Neoprene Seal, LS-Series, Pontiac, MI; or equal.

2. Other Widths: Series or model recommended by seal manufacturer.

PART 3 -- EXECUTION

3.1 GENERAL

A. Use of more than one material for the same joint is not allowed unless approved by the sealant manufacturer.

B. Install joint sealants in accordance with ASTM C 962.

C. Horizontal and Sloping Joints of 1 Percent Maximum Slope: Use self-leveling (Grade P) joint sealant.

D. Steeper Sloped Joints, Vertical Joints, and Overhead Joints: Use nonsag (Grade NS) joint sealant.

E. Use joint sealant as required for the appropriate application and as follows:

Joint Size	Sealant Type
Less than 1-inch	1,2,3,4,5,6,7,8, or 9
Less than 2-inch	1,2,3,4, or 7
Over 2-inch	As per manufacturer's recommendation

3.2 PREPARATION

A. Verify that joint dimensions and physical and environmental conditions are acceptable to receive sealant.

B. All surfaces to be sealed shall be dry, sound, and free of dust, loose mortar, and other foreign materials.

1. Mask adjacent surfaces where necessary to maintain neat edge.

2. Starting of work will be construed as acceptance of all subsurfaces.

C. Verify that joint shaping materials and release tapes are compatible with sealant.

D. Examine joint dimensions and size materials to achieve required width/depth ratios.

3.3 INSTALLATION

A. Use joint filler to achieve required joint depths, to allow sealants to perform intended function.

1. Install backup material as recommended by sealant manufacturer.

2. Where possible, provide full length sections without splices; minimize number of splices.

B. Use bond breaker where recommended by sealant manufacturer.

C. Apply sealant within environmental conditions stated above.

1. Consult manufacturer when sealant cannot be applied within these temperature ranges.

D. Seal all joints around window, door and louver frames, expansion joints, and elsewhere as indicated.

E. Joint Sealant Materials: Follow manufacturer's recommendation and instructions, filling joint completely from bottom to top, without voids.

F. Joints: Tool slightly concave after sealant is installed.

1. When tooling white or light color sealant, use a water wet tool.

2. Finish joints free of air pockets, foreign embedded matter, ridges, and sags.

G. Tape Sealant: Locate where indicated and install in accordance with manufacturer's instructions.

3.4 PREFORMED SEALS

A. Prepare joint surfaces clean and dry, free from oil, rust, laitance, and other foreign material.

B. Construct joints straight and parallel to each other and at the proper width and depth.

C. Install within environmental conditions stated above.

D. Apply joint sealant manufacturer's approved primer and adhesive in accordance with manufacturer's instructions.

E. Install seal in accordance with manufacturer's instructions.

3.5 CLEANING

A. Clean surfaces next to the sealed joints of smears or other soiling resultant of sealing application.

B. Replace any damaged surfaces resulting from joint sealing or cleaning activities.

C. Clean up and dispose of all waste materials and debris resulting from this operation off the site.

3.6 JOINT SEALANT SCHEDULE

A. This schedule lists the sealant types acceptable for each joint location. Use as few different sealant types as possible to meet the requirements of this project.

Joint Location	Sealant Type(s)
1. Expansion/Contraction and control Joints at:	
Concrete Walls	1,3,4,5,6,7
Concrete Floor Slabs	2,5
2. Other Joints:	
Threshold Sealant Bed	5
Immersed Concrete (Vertical and Sloped)	3,5
Immersed Concrete (Horizontal)	2,5
Concrete Form Snap-Tie Holes	1,4,6

END OF SECTION

SECTION 07920
CAULKING AND SEALANTS

PART 1 -- GENERAL

1.1 SUMMARY

A. Throughout the Contracted Work furnish all tools, equipment, materials, and supplies and perform all labor to provide a positive barrier against passage of air or moisture from the exterior.

1. Caulk and Seal around entire exposed perimeters of all penetrations and openings through walls and for slabs on grade where any item is installed in the opening or through the penetrations.

2. Caulk and seal the sheet metal flashings and other items penetrating through the roof.

B. Related Sections:

1. Documents affecting work of this Section include, but are not necessarily limited to the GENERAL CONDITIONS, SUPPLEMENTARY CONDITIONS and Sections in DIVISION 1 - GENERAL REQUIREMENTS of these Specifications.

1.2 QUALITY ASSURANCE

A. Reference Standards:

1. All materials specified herein shall conform to the requirements of the publications hereinafter listed, to the extent that the requirements therein specified are not in conflict with the provisions of this Section.

2. References to "ANSI Standards" shall mean the American National Standards Institute Publication A116.1-1967 "Two Component Elastomeric Sealing Components for the Building Trade".

B. Qualifications of Manufacturers: Products used in the work of this Section shall be produced by manufacturers regularly engaged in the manufacture of similar items and with a history of successful production acceptable to the City Engineer or the Consultant. Manufacturer shall have been on business

of manufacturing the specified types of Sealants for not less than 10 years.

C. Qualification of Installers:

1. Installers shall be thoroughly trained and experienced in the necessary skills and be thoroughly familiar with the specified requirements and shall have a minimum of 5 years experience installing caulking and sealants.

2. Installers shall be completely familiar with the joint details shown on the Contract Drawings and installation requirement hereinafter specified in this Section.

1.3 SUBMITTALS

A. Manufacturer's Data: Comply with provisions in the SUBMITTALS SECTION 01340 in DIVISION 1-GENERAL REQUIREMENTS of these Specifications.

1. Submit within 45 days after execution of the Contract:

a. A complete materials list showing all items specified to be furnished and installed under this Section.

b. Sufficient data to demonstrate that all materials meet or exceed the specified requirements.

c. Specification, installation instructions and general recommendations from manufacturer showing procedures under which it is proposed that materials will be installed.

d. Upon approval by the City Engineer or the Consultant, the proposed installation procedures will become the basis for inspection and acceptance or rejection of actual installation procedures used on the work.

B. Samples: Submit separate samples for each type of caulking or sealant material, together with manufacturer's data, all as necessary to fully demonstrate functional and service ability characteristics that comply with the specified requirements. Obtain approval prior to delivery of materials to the job-site for material substitutions. Samples of the sealant in concrete construction expansion joints shall be applied between 1-inch thick concrete blocks to the full size and shape of sealant in the joints indicated. Conform to the provisions of MATERIALS, SAMPLING AND TESTING of Section 31 in the GENERAL CONDITIONS of these Specifications.

1.4 GUARANTEE

A. Guarantee: The guarantee period specified in Section 28 of the GENERAL CONDITIONS of these Specifications shall hereby be extended to two (2) years. Contractor shall provide the City Engineer with a written guarantee against any inherent or developed defects in material or in installation and file five (5) copies of same with the City Engineer or the Consultant as a prerequisite for final acceptance of the work.

B. Warranty shall further state that installed sealants are warranted against the following:

1. Water leakage through sealed joints.

2. Adhesive or co-adhesive failure of sealant.

3. Staining of adjacent surfaces caused by migration of sealant or primer.

4. Chalking or visible color changes of the cured sealant.

1.5 DEFECTIVE WORK

A. Work will be adjudged defective by the City Engineer or the Consultant if leakage results from failure of sealant or caulking to bond to adjacent work or if it hardens, cracks, shrinks, or runs or stains adjacent work.

B. Remove defective work, clean joints and install new caulking and/or sealant materials as approved by the City Engineer or the Consultant at no added cost to the City.

1.6 PRODUCT HANDLING

A. Delivery and Storage: Deliver all materials of this Section to the job-site in their original unopened or unbroken containers with all labels intact and legible at time of use. Store only under conditions recommended by the manufacturer concerning shelf life, temperature humidity, ensuring the fitness of the material when installed. Do not retain on the job-site any material which has exceeded the manufacturer's recommended shelf life.

B. Protection: Use all means necessary to protect the materials of this Section before, during and after installation and to protect work and materials of other trades.

C. Replacements: In the event of damage, immediately make all repairs and replacements necessary to the approval of the City Engineer or the Consultant, at no added cost to the City.

PART TWO - PRODUCTS

2.1 SEALANTS

A. Type of Sealants:

1. Asphalt Sealant shall conform to Federal Specifications SS-S-1614 (1), EDOCO Technical Product No. 3060 or Burke's No. 400 Sealing Compound.

2. Elastomeric Joint Sealant: Federal Specification TT-S-00227E (3) for 2-part rubber base sealant or Federal Specification TT-S-230A for 1-part synthetic rubber base sealant.

a. Use "Class A" sealant for non-traffic bearing horizontal surfaces.

b. Use "Class B" sealant for vertical surfaces.

B. Sealant Colors:

1. Colors for each sealant installation will be selected by the City Engineer or the Consultant from standards colors normally available from the manufacturer. Should such standard color is not available from the approved manufacturer except at additional charge, provide all such colors at no additional cost to the City.

2. In concealed installations and in partially or full exposed installations, where so approved by the City Engineer or the Consultant, use standard gray or black sealant.

2.2 CAULKING MATERIALS

A. Caulking Compound: W.R. Grace & Co. "Hornflex Standard Gun Grade" or "Thiokol" approved polysulfide sealant for all other joints including miscellaneous vertical joints, exterior door, window and louver frames, etc.

B. Caulking Stop: Polyurethane for open joints of size 1-1/2 times the joint width opening and depth no more than 3/8 inch for sealant bite.

C. Oakum: Untarred, picked (loose), fine hemp fibers.

*2.3 BACKUP MATERIALS FOR SEALANTS

A. Primers and Bond Breakers: As recommended by the sealant manufacturer in their published instructions.

B. Backer Rods and Other Backing Materials: Type as recommended by the Sealant manufacturer.

1. Closed-cell resilient urethane or polyvinyl chloride foam;

2. Closed-cell polyethylene foam;

3. Closed-cell sponge of vinyl or rubber;

4. Polychoroprene tubes or beads;

5. Polyisobuthlene extrusion;

6. Oil-less dry jute.

C. Filler for Use with Asphalt Sealant: Asphalt impregnated, as per ASTM D 1715.

D. Filler of Use with Elastomeric Sealer: Plain type as per ASTM D 1752 Type II or Type III.

E. Surface Covers: (Where Simple bond-prevention is necessary).

1. Polyethelene Tape, pressure-sensitive adhesive, required only to hold tape to the construction material.

2. Aluminum foil conforming to MIL-SPEC-MIL-A-148E

3. Heavy wax paper conforming to Fed. Spec. UU-P-270

F. Other Materials: All other materials, not specifically described but required for complete and proper caulking and installation of sealants, shall be first quality of their respective kinds as selected by the Contractor subject to the approval of the City Engineer or the Consultant.

PART THREE - EXECUTION

*3.1 INSPECTION AND INSTRUCTIONS

A. Manufacturer's Inspection: Just prior to start of application of each type sealant, provide initial instructions at start of work in order to verify if physical conditions are proper in order to properly instruct applicators and that supervision provided is by qualified personnel handling such materials.

B. Examine the areas and conditions under which work of this Section will be performed. Correct conditions detrimental to the proper and timely completion of the work. Do not proceed until detrimental conditions have been corrected.

C. Contractor to notify the manufacturer at least 72 hours prior to time inspection is required.

D. Failure or refusal of manufacturer to provide inspection and supervision shall constitute grounds for non-acceptability of materials manufactured, even though specified hereinafter in this Section.

E. Applicator shall report to the Contractor any detrimental conditions impairing the proper installation of such materials. Contractor shall correct all such detrimental conditions to the full satisfaction of the City Engineer or the Consultant or the Inspector at no added cost to the City.

3.2 WORKMANSHIP

A. Application: In strict accordance with ASTM C-962 and ASTM C-1193 and manufacturer's instructions and supervised by the manufacturer's approved applicator. Manufacturer to provide field assistance to insure proper mixing of sealants, cleaning of surfaces, and application of materials.

B. Cleaning: Immediately remove caulking and/or sealant materials from adjacent surfaces not specified to receive sealant, and/or caulking materials. Leave work in a condition satisfactory to the City Engineer or the Consultant.

C. Protection: Carefully protect adjoining surfaces from staining. Carefully provide necessary strippable masking where required to limit extent of caulking and sealant material application.

3.3 PREPARATION (As Applicable)

A. Joint Cleaning: Joints shall be free of foreign materials full depth of joint. Joint

surfaces to be clean, dry and free from grease, oil, wax or other foreign matter, which would tend to destroy or impair adhesion. Clean surfaces in accordance with manufacturer's instructions.

B. Priming: Joint surfaces to be primed in accordance with sealant manufacturer's instructions.

C. Steel Surfaces:

1. Steel surfaces in contact with sealant shall be sandblasted or scraped or wire-brushed to remove mill scale.

2. Use solvent to remove oil and grease, wiping the surfaces with clean rags.

3. Remove protective coatings on steel by sandblasting or by a solvent that leaves no residue.

*D. Aluminum Surfaces:

1. Surfaces in contact with sealant shall be cleaned of temporary protective coatings, dirt, oil and grease.

2. When masking tape is used as a protective cover, remove tape just prior to application of sealant.

3. Use only such solvents to remove protective coatings as recommended for that purpose by the aluminum manufacturer, and which are non-staining.

*E. Concrete and Ceramic Tile Surfaces:

1. All contact surfaces shall be dry, sound, well brushed and wiped free from dust.

2. Use solvent to remove oil and grease, wiping the surfaces with clean rags.

3. Treated surfaces shall have the surface treatment removed by sandblasting or wire brushing.

4. Remove all laitance and mortar from the joint cavity.

5. Where backstop is required, insert an approved backup material into the joint cavity to required depth.

3.4 INSTALLATION OF BACKUP MATERIAL

Use only the backup materials recommended by the Sealant manufacturer and approved by the City Engineer or the Consultant for the particular installation, compressing the backup material 25% to 50% to secure a positive and secure fit. When using backup of tube or rod stock, avoid lengthwise stretching of material. Do not twist or braid hose or rod backup stock.

1. Sealant bite 1/8" to 2" but never more than 2 to 1/4 of joint width.

2. Use foam backup rod or bond breaker tape to minimize joint configuration.

3.5 PRIMING

Use only the primer recommended by the Sealant Manufacturer and approved by the City Engineer or the Consultant for the particular installation. Apply primer in strict accordance with manufacturer's recommendations as approved by the City Engineer or the Consultant.

3.6 SCHEDULE

A. Elastomeric Caulking Joint Compound: Use in expansion and contraction joints where limited movement is anticipated and areas where general caulking is required.

B. Multi-Part Sealant: Use in expansion and construction joints and all joints in all concrete walking surfaces where indicated or noted on the Contract Drawings and/or specified in the Specifications.

3.7 INSTALLATION SEALANTS

A. General: Prior to start of installation in each joint, verify the joint type according to Contract Drawing Details and that the required proportion of width to depth of joint has been secured.

B. Equipment: Apply sealants under pressure with hand or power actuated gun or other appropriate means. Guns shall have nozzle of proper size and shall provide sufficient pressure to completely fill joints as designed.

*C. Application:

1. Caulking performed under other Sections of these Specifications shall

comply with all of the following requirements unless specific changes are specified in those other Specification Sections.

2. Fill all joints where no backing exists partially with filler material (that is compatible with specified caulking or sealant material).

   a. Metal to Metal Joints: Minimum joint width of 1/4-inch.

   b. All Other Joints: Maximum 3/4-inch, unless otherwise detailed.

   c. Minimum joint depth shall be 1/4-inch, for metal joints; 2-inch for concrete, masonry, and plaster work joints.

3. Apply sealants under sufficient pressure to completely fill all voids.

4. Apply non-sagging type sealants in vertical joints.

5. Apply self-leveling type sealants in horizontal joints.
6. Apply non-tracking sealants, having a shore hardness range of 40 to 55, to concrete, masonry or tile expansion joints, subject to foot or vehicular traffic.

7. Finish all exposed joints smooth, flush with surfaces, or recessed as shown.

8. Provide strippable masking for factory applied sealing materials to prevent dirt contamination until parts are assembled.

9. Tool all joints to the profile shown on the Contract Drawing Details.

10. Caulk and seal open joints left between openings and both sides of frames on the exterior of building and all other joints between building units or materials where Contract Drawings call for caulking and/or sealants, interior and exterior or where necessary to completely seal off joints against passage of water, air or dust.

D. Cleaning Up:

1. Remove masking tape immediately after joints have been tooled.

2. Clean adjacent surfaces free from sealants as the installation progresses. Use solvent or cleaning agent as recommended by the sealant manufacturer.

3. Remove excess caulking and sealants from adjacent surfaces of joints, leaving the work in a neat and clean condition.

E. Concrete Expansion and/or Contraction Joints: Construct such joints as indicated on the Contract Drawings and specified in DIVISION 3 - CONCRETE.

END OF SECTION

SECTION 09800
PROTECTIVE COATING

PART 1 -- GENERAL

1.1 THE REQUIREMENT

A. The Contractor shall furnish all tools, equipment, materials, and supplies and shall perform all labor required to complete the protective coating of all specified surfaces not specifically included under the requirements of Section [09905] "Architectural Paint Finishes," including all surface preparation, pretreatment, coating application, touch-up of factory-coated surfaces, protection of surfaces not to be coated, cleanup, and appurtenant work, all in accordance with the requirements of the Contract Documents.

B. The following surfaces shall not be protective coated hereunder unless shown or specified herein, or elsewhere in the Contract Documents.

1. Concrete.

2. Stainless steel.

3. Machined surfaces.

4. Grease fittings.

5. Glass.

6. Equipment nameplates.

7. Maintenance hole frames and covers.

8. Platform gratings, stair treads, door thresholds, and other walk surfaces.

C. The coating system schedules summarize the surfaces to be coated, the required surface preparation, and the coating systems to be applied. Coating notes on the drawings are used to show exceptions to the schedules, to show or extend the limits of coating systems, or to clarify or show details for application of the coating systems.

1.2 RELATED WORK SPECIFIED ELSEWHERE (Not Used)

1.3 REFERENCE SPECIFICATIONS, CODES AND STANDARDS

A. References herein to "SSPC Specifications" or "SSPC" shall mean the published standards of the Steel Structures Painting Council, 4400 Fifth Avenue, Pittsburgh, PA 15213.

B. References herein to "NACE" shall mean the published standards of the National Association of Corrosion Engineers, P.O. Box 986, Katy, TX 77450.

C. Comply with the reference specifications of the GENERAL REQUIREMENTS.

D. Comply with the current provisions of the following Codes and Standards.

1. Commercial Standards:

ANSI A13.	Scheme for Identification of Piping Systems.
ANSI/AWWA C105	Polyethylene Encasement for Ductile Iron Piping for Water and Other Liquids.
ANSI/AWWA C203	Coal-Tar Protective Coatings and Linings for Steel Water Pipelines - Enamel and Tape-Hot-Applied.
ANSI/AWWA D102	Painting Steel Water-Storage Tanks

2. Federal Specifications:

TT-P-28F	Paint, Aluminum, Heat Resisting (1200F)

1.4 CONTRACTOR SUBMITTALS

A. Submittals shall be made in accordance with the GENERAL REQUIREMENTS.

B. Samples: The Contractor shall submit samples of all paint, finishes, and other coating materials specified herein, in accordance with the GENERAL REQUIREMENTS. Paint or coating samples shall be submitted on 8-1/2-inch by 11-inch sheet metal. Each sample shall be completely coated over its entire surface with one protective coating material, type, and color.

C. Coating Materials List: The Contractor shall provide 8 copies of a coating materials list which indicates the manufacturer and the coating number, keyed to the coating systems herein, prior to or at the time of submittal of samples.

D. Paint Manufacturer's Information: For each paint system to be used the Contractor shall submit the following listed data at least 30 days prior to painting.

1. Paint manufacturer's data sheet for each product used, including statements on the suitability of the material for the intended use.

2. Paint manufacturer's instructions and recommendations on surface preparation and application.

3. Colors available for each product (where applicable).

4. Compatibility of shop and field applied coatings (where applicable).

5. Material safety data sheet for each product used.

6. Two sets of color samples to match each color selected by the Engineer from the manufacturer's standard color sheets. If custom mixed colors are required by this Section, the color samples shall be made using color formulations prepared to match the color samples furnished by the Engineer. The color formula shall be shown on the back of each color sample.

E. Manufacturer's Certification: For submerged and severe service coating systems, the Contractor shall require the paint manufacturer to certify to the following:

1. The manufacturer's representative has provided at least 6 hours of on-site instruction in the proper surface preparation, use, mixing, application, and curing of the coating systems.

2. The manufacturer's representative has personally observed the start of surface preparation, mixing, and application of the coating materials.

F. The Contractor shall submit all such certificates to the Engineer within 7 days of completion of

each paint system.

G. Applicator's Certificate and Report: For submerged and severe service coating systems, the Contractor shall require the applicator of the protective paint coatings to certify to the following:

1. Immediately before painting, surfaces conformed to the specified preparation; they were in the specified condition; and were clean, dry, and free of dust, rust, and mill scale.

2. Surface preparation and coating use, mixing, application, and curing were done in accordance with the current printed instructions and recommendations of the protective coating manufacturer, and these Specifications.

3. The products specified were used and a listing of the names of the products and their manufacturer.

4. The products were used within the shelf-life dates, stating the shelf-life dates of each container of each product used.

5. The specified dry film thickness of coatings are on the items.

6. The quantities of each product used with copies of paint manufacturer's invoice.

7. Compatible paints were used where shop or field applied coatings are applied over previously-applied coatings.

8. The applicator's certificate shall list the dates and locations that the coating work was completed for the various surfaces coated, and shall also list the dry film thickness obtained for each coat. The Contractor shall submit said paint applicator's certificates to the Engineer within 7 days after completion of each paint system.]

1.5 QUALITY ASSURANCE

A. General: The Contractor shall give the Engineer a minimum of 3 days advance notice of the start of any field surface preparation work of coating application work, and a minimum of 7 days advance notice of the start of any shop surface preparation work.

B. All such work shall be performed only in the presence of the Engineer, unless the Engineer has granted prior approval to perform such work in its absence.

C. Inspection by the Engineer, or the waiver of inspection of any particular portion of the work, shall not relieve the Contractor of its responsibility to perform the work in accordance with these Specifications.

D. Where protective coatings are to be performed by a subcontractor, said subcontractor [must possess a valid state license as required for performance of the painting and coating work called for in this specification and] must provide 5 references which show that the painting subcontractor has previous successful experience with the specified or comparable coating systems. Include the name, address, and the telephone number for the owner of each installation for which the painting subcontractor provided the protective coating.

E. Scaffolding shall be erected and moved to locations where requested by the Engineer to facilitate inspection. Additional illumination shall be provided to cover all areas to be inspected.

F. Inspection Devices: The Contractor shall furnish, until final acceptance of such coatings, inspection devices in good working condition for the detection of holidays and measurement of dry-film thicknesses of protective coatings. Dry-film thickness gages shall be made available for the Engineer's use at all times while coating is being done, until final acceptance of such coatings. The Contractor shall provide the services of a trained operator of the holiday detection devices until the final acceptance of such coatings. Holiday detection devices shall be operated

only in the presence of the Engineer.

G. Holiday Testing: The Contractor shall holiday test all coated ferrous surfaces inside a steel reservoir, or other surfaces which will be submerged in water or other liquids, or surfaces which are enclosed in a vapor space in such structures and surfaces coated with any of the submerged and severe service coating systems. Areas which contain holidays shall be marked and repaired or recoated in accordance with the coating manufacturer's printed instructions and then retested.

1. Coatings With Thickness Exceeding 20 Mils: For surfaces having a total dry film coating thickness exceeding 20 mils: pulse-type holiday detector such as [Tinker & Rasor Model AP-W], [D.E. Stearns Co. Model 14/20], or equal shall be used. The unit shall be adjusted to operate at the voltage required to cause a spark jump across an air gap equal to twice the specified coating thickness.

2. Coatings With Thickness of 20 Mils or Less: For surfaces having a total dry film coating thickness of 20 mils or less: [Tinker & Rasor Model M1 non-destructive type holiday detector], [K-D Bird Dog], or equal shall be used. The unit shall operate at less than 75 volts. For thicknesses between 10 and 20 mils, a non-sudsing type wetting agent, such as [Kodak Photo-Flo], or equal, shall be added to the water prior to wetting the detector sponge.

H. Film Thickness Testing: On ferrous metals, the dry film coating thickness shall be measured in accordance with the SSPC "Paint Application Specification No. 2" using a magnetic-type dry film thickness gage such as Mikrotest model FM, Elcometer model 111/1EZ, or equal. Each coat shall be tested for the correct thickness. No measurements shall be made until at least 8 hours after application of the coating. On non-ferrous metals and other substrates, the coating thicknesses shall be measured at the time of application using a wet film gage.

I. Surface Preparation: Evaluation of blast cleaned surface preparation work will be based upon comparison of the blasted surfaces with the standard samples available from the NACE, using NACE standard TM-01-70.

1.6 MANUFACTURER REPRESENTATIVE

A. The Contractor shall require the protective coating manufacturer to furnish a qualified technical representative to visit the project site for technical support as specified in the paragraph entitled "Manufacturer's Certification", herein, and as may be necessary to resolve field problems attributable or associated with the manufacturer's products furnished under this Contract or the application thereof.

1.7 MAINTENANCE

A. Warranty Inspection: A warranty inspection may be conducted during the eleventh month following completion of all coating and painting work. The Contractor and a representative of the coating material manufacturer shall attend this inspection. All defective work shall be repaired in accordance with these specifications and to the satisfaction of the City. The City may, by written notice to the Contractor, reschedule the warranty inspection, or may cancel the warranty inspection altogether. If a warranty inspection is not held the Contractor is not relieved of its responsibilities under the Contract Documents.

PART 2 -- PRODUCTS

2.1 GENERAL

A. Definitions: The term "paint", "coatings", or "finishes" as used herein, shall include surface treatments, emulsions, enamels, paints, epoxy resins, and all other protective coatings, excepting galvanizing or anodizing, whether used as a pretreatment, primer, intermediate coat, or finish coat. The term "DFT" means minimum dry film thickness.

B. General: Coating materials shall be sealed in containers that plainly show the designated name, formula or specification number, batch number, color, date of manufacture, manufacturer's directions, and name of manufacturer, all of which shall be plainly legible at the time of use.

C. The Contractor shall use coating materials suitable for the intended use and recommended by their manufacturer for the intended service.

D. Compatibility: In any coating system only compatible materials from a single manufacturer shall be used in the work. Particular attention shall be directed to compatibility of primers and finish coats. If necessary, subject to the approval of the Engineer, a barrier coat shall be applied between existing prime coat and subsequent field coats to ensure compatibility.

E. Colors: All colors and shades of colors of all coats of paint shall be as selected or specified by the Engineer. Each coat shall be of a slightly different shade, to facilitate inspection of surface coverage of each coat. [Finish colors shall be as selected from the manufacturer's standard color samples by the Engineer.] [Finish colors shall be custom mixed to match color samples furnished by the Engineer.]

F. Protective Coating Materials: Products shall be standard products produced by recognized manufacturers who are regularly engaged in production of such materials for essentially identical service conditions. Where requested, the Contractor shall provide the Engineer with the names of not less than 10 successful applications of the proposed manufacturer's products demonstrating compliance with this specification requirement.

G. Substitute or "Or-Equal" Submittals: Unless otherwise specified, materials are from the catalogs of the companies listed herein. Materials by other manufacturers are acceptable provided that they are established as being compatible with and of equal quality to the coatings of the companies listed. The Contractor shall provide satisfactory documentation from the firm manufacturing the proposed substitute or "or-equal" material that said material meets the specified requirements and is equivalent or better than the listed materials in the following properties:

1. Quality
2. Durability
3. Resistance to abrasion and physical damage
4. Life expectancy
5. Ability to recoat in future
6. Solids content by volume
7. Dry film thickness per coat
8. Compatibility with other coatings
9. Suitability for the intended service
10. Resistance to chemical attack
11. Temperature limitations in service and during application
12. Type and quality of recommended undercoats and topcoats
13. Ease of application

14. Ease of repairing damaged areas

15. Stability of colors

H. The cost of all testing and analyzing of the proposed substitute materials that may be required by the Engineer shall be paid by the Contractor. If the proposed substitution requires changes in the contract work, the Contractor shall bear all such costs involved and the costs of allied trades affected by the substitution.

2.2 INDUSTRIAL COATING SYSTEMS

A. Material Sources: Each of the following manufacturers is capable of supplying many of the industrial coating materials specified herein. Where manufacturers and paint numbers are listed, it is to show the type and quality of coatings that are required. Proposed substitute materials must be shown to satisfy the material descriptions and to equal or exceed the properties of the listed materials as required in the paragraph entitled "Substitute or `Or-Equal' Submittals" herein.

1. Carboline Coatings Company

2. PPG Paints, Ameron

3. Sherwin Williams Company

4. Tnemec Company

B. System 1 – Not Used

C. System 2 - Not Used

D. System 3 – Not Used

E. System 4 - Aliphatic Polyurethane: Two component aliphatic acrylic or polyester polyurethane coating material shall provide superior color and gloss retention, resistance to splash from acid and alkaline chemicals, resistance to chemical fumes and severe weathering and with a minimum solids content of 58 percent by volume. Primer shall be a rust inhibitive two component epoxy coating with a minimum solids content of 70 percent by volume.
If this coating system is to be used on Galvanized Ferrous Metal; provide surface treatment (or approved equal) for the prime coat as per the Coating Manufacturers product data sheet.

1. Prime coat (Min DFT = 4 mils), Amerlock 400, Carboguard 890, SW Macropoxy 646-100, Tnemec L69 Epoxoline, or equal.

2. Finish coat (one or more, Min DFT = 3 mils), Amershield, Carboline 133 MC, SW Sherloxane 800, Tnemec 740 EverThane, or equal.

3. Total system Min DFT = 7 mils.

4. More than one finish coat shall be applied as necessary to produce a finish with uniform color and texture.

F. System 5 - Inorganic Zinc/Epoxy/Polyurethane: The inorganic zinc primer shall be a water or solvent based, self-curing, zinc silicate 2-component inorganic coating which contains at least 85 percent of metallic zinc by weight in the dried film,and is recommended by the coating manufacturer as a primer for this system. The intermediate coat shall be a high-build two component epoxy with a solids content of at least 70 percent by volume. Finish coats shall be a 2-component aliphatic acrylic or polyester polyurethane coating material that provides superior color and gloss retention, resistance to chemical fumes and severe weathering, and a minimum solids content of 58 percent by volume.

1. Prime coat (Min DFT = 2 mil), Dimetcote 21-5/4A, Carbo Zinc 11 WB, SW Corothane Galvapac 2k 100, Tnemec 94H2O Hydro- Zinc, or equal.

2. Intermediate coat (Min DFT = 4 mils), Amerlock 400, Carboline 890, SW Macropoxy 646-100, Tnemec L69 Epoxoline, or equal.

3. Finish coats (one or more, Min DFT = 3 mils), Amershield, Carboline 133 MC, SW Sherloxane 800, Tnemec 740 EverThane, or equal.

4. Total system DFT = 9 mils.

5. Intermediate coat shall be applied in excess of 4 mils DFT or in more than one coat as necessary to completely cover the inorganic zinc primer and prevent application bubbling of the polyurethane finish coat.

6. More than one finish coat shall be applied as necessary to produce a finish with uniform color and texture.

G. System 6 - Inorganic Zinc, Water Based: Water based, self curing, ethyl silicate shall be a two component inorganic coating material that contains at least 85 percent of metallic zinc by weight in the dried film.

1. Prime coat and finish coat (one, Min DFT = 3 mils), Dimetcote 21- 5/4 A, Carbozinc 11 WB, SW Zinc Clad XI, or equal.

2. Total system DFT = 3 mils.

H. System 7 – Acrylic Enamel: Single component, water based acrylic coating with a fungicide additive shall have a minimum solids content of 35 percent by volume. Prime coat shall be as recommended by manufacturer. The coating material shall be available in the ANSI safety colors.

1. Prime coat (Min DFT = 2 mils), as recommended by manufacturer.

2. Finish coats (2 or more, Min DFT = 6 mils), Amercoat 2104, Carboline 3359 MC, SW Pro Industrial Acrylic, Tnemec 1028 Enduratone, or equal.

3. Total system DFT = 8 mils.

I. System 8 - Not Used

J. System 9 - Not Used

K. System 10 – Acrylic Enamel, Concrete: High molecular weight acrylic coating material shall have a minimum solids content of 35 percent by volume. Prime coat shall be an acrylic filler and sealer for concrete surfaces.

1. Prime coat (Filler/sealer)(Min DFT = 12 mils), Tnemec 180 Tneme-Crete, Sanitile 100, SW Heavy Duty Block Filler, or equal.

2. Finish coats (2 or more, Min DFT = 4 mils), Tnemec 180 Tneme- Crete, Carbocrylic 3359 MC, SW Pro Industrial Acrylic (DFT = 6 mils) or equal.

L. System 11 - Aliphatic Polyurethane, Concrete: Two component aliphatic polyester polyurethane coating material shall provide superior color and gloss retention, resistance to splash from acid and alkaline chemicals, and resistance to chemical fumes and severe weathering, and with a minimum solids content of 58 percent by volume. Filler-sealer compound shall be a two component epoxy material used to provide a smooth surface for the epoxy intermediate coat. The filler-surfacer is applied to the entire concrete surface and worked into the concrete surface

with a wide blade putty knife or squeegee. The intermediate coat shall be a high-build polyamide epoxy coating with a minimum solids content of 70 percent by volume.

1. Prime coat (Filler-sealer), NU-Klad 114A, Carboguard 501. SW Steel Seam FT 910, Tnemec 215 Surfacing Epoxy, or equal.

2. Intermediate coat (Min DFT = 4 mils), Amerlock 400, Carboguard 60, Macropoxy 646-100], Tnemec L69 Epoxoline, or equal.

3. Finish coats (1 or more, Min DFT = 3 mils), Amershield,Carbothane 133 MC], [SW Sherloxane 800, Tnemec 740 Everthane, or equal.

M. System 12 - Aliphatic Polyurethane, Fiberglass: Two-component aliphatic polyurethane coating material shall provide superior color and gloss retention, resistance to splash from acid and alkaline chemicals, and resistance to chemical fumes and severe weathering. A primer, tie coat, or mist coat shall be used as recommended by the manufacturer.

1. Prime coat (Tie coat) (Min DFT= 2 mils), Sanitile 120, SW Macropoxy 646-100, Tnemec P69 Epoxoline, or equal.

2. Finish coats (1 or more, Min DFT = 3 mils), Amershield, Carbothane 133 MC, SW Sherloxane 800, Tnemec 740 Everthane, or equal.

N. Max VOC levels per SCQAMD noted in Section 2.5.

2.3 SUBMERGED AND SEVERE SERVICE COATING SYSTEMS

A. Materials Sources: The manufacturers' products listed in this paragraph are materials which satisfy the material descriptions of this paragraph and have a documented successful record for long term submerged or severe service conditions. If proposed materials are not listed below, the requirements of the paragraph entitled "Substitute or `Or-Equal' Submittals" apply. In addition, the Contractor shall submit for consideration a list of at least 10 installations with similar service conditions for which the proposed substitute or "or-equal" products have shown satisfactory performance for at least several years including the name, address, and phone number of the owner of each installation.

B. System 100 - Amine Cured Epoxy Lining: High build, amine cured, straight epoxy resin shall have a solids content of at least 80 percent by volume, manufactured in accordance with ANSI 61 Standards as test by NSF, and shall be suitable for long-term immersion service in potable water, raw water, and non-potable water. The material shall conform to Food and Drug Administration regulations for food additives.

1. Prime coat and finish coats (1 or more, Minimum DFT = 20 mils), Phenoline 341, Amercoat 133, SW Duraplate UHS, Sherplate PW, Tnemec 22 Pota-Pox, or equal.

C. System 101 – Epoxy: High-build, amine or polyamide cured, epoxy resin shall have a solids content of at least 70 percent by volume, comply with local VOC regulations, and shall be suitable for exposures to chlorine vapors, fumes, and incidental splash or spill of chemicals. Total thickness 8- 12 mills DFT.

1. Prime Coat (DFT= 4-6 mils) Carboguard 890, SW Macropoxy 646-100, Tnemec L140F Pota-Pox, or equal.

2. Topcoat (DFT = 4-6 mils) Carboguard 890, SW Macropoxy 646-100, Tnemec l140F Pota-Pox, or equal.

D. System 102 – Epoxy Mortar: High-build, 3-component amine cured epoxy mortar, shall have a

solids content of 100 percent by volume, suitable for long-term immersion and atmospheric exposure to wastewater. Filler-resurfacing compound shall be a 3-component epoxy cementitious thin overlay material used to fill voids and rough areas and must feather-edge capable. Epoxy Glaze (finish) coat shall bea 100 percent solids epoxy suitable for long-term immersion and atmospheric exposure to wastewater.

1. Filler / Resurfacing Overlay (Thickness = minimum 1/16”), SW Duraplate 2300, Tnemec 218 MortarClad, or equal.

2. Epoxy Mortar (Minimum DFT = 125 mils) SW Duraplate 6100, Tnemec 434 Perma-Shield], or equal.

3. Finish coat (DFT = 15-20 mils), SW Duraplate 6100, Tnemec 435 Perma-Glaze, or equal.

E. System 103 - Coal Tar Epoxy: High build, 2-component amine cured coal tar epoxy shall have a solids content of at least 68 percent by volume, suitable for coating of buried surfaces, and conforming to DOD-P-23236, Class 2, or to SSPC Paint 16. Prime coats are for use as a shop primer only. Prime coat shall be omitted when both surface preparation and coating are to be performed in the field.

1. Prime coat (Min DFT = 1.5 mils).

2. Finish coats (2 or more, Min DFT = 16 mils), SW Targuard CTE 100, Carboguard 888 or 330M], or equal

3. Total system DFT = 17.5 mils.

F. System 104 - Coal Tar Epoxy Substitute, Concrete: High build, 2-component amine cured epoxy, shall have a solids content of at least 80 percent by volume, suitable for long term immersion for coating of buried surfaces. Product performance shall be equivalent to DOD-P-23236, Class 2, or to SSPC Paint 16. Filler-surfacin compound shall be a 2-component epoxy material used to fill voids and rough areas. The seal coat provides a smooth surface for the application of the amine cured epoxy. The seal coat is a two-component epoxy material with 100 percent solids and is applied to the entire concrete surface and worked into the concrete surface with a wide blade putty knife or a squeegee.

1. Seal coat, Carboguard 501, SW Steel Seam FT910, Tnemec Series 215, or equal.

2. Finish coats (1 or more, Min DFT = 25 mils) Phenoline 341 or Plascite 4500, Amercoat 133, SW Duraplate UHS, Tnemec Series 22 or equal.

G. System 105 - Inorganic Zinc/Epoxy:

1. Inorganic Zinc Primer: Water or solvent based, self-curing 2-component inorganic coating shall contain a minimum of 85 percent metallic zinc by weight in the dried film and is recommended by the coating manufacturer as a primer for the epoxy material.

2. Polyamide Cured Epoxy: High build polyamide cured epoxy coating shall have a solids content of at least 70 percent by volume and a finish coat color of white. The material shall be capable of achieving at least 4 mils dry film thickness per coat.

3. Amine Cured Epoxy: High build amine cured epoxy coating shall have a solids content of at least 80 percent by volume and with a finish coat color of white or ivory. The material shall be capable of achieving at least 5 mils dry film thickness per coat.

4. The epoxy coating material shall be a straight epoxy resin and shall be either a polyamide-cured epoxy or an amine-cured epoxy suitable for long-term immersion service in potable water. The material shall conform to Food and Drug Administration regulations for food

additives and state and local health regulations and policies for service in potable water reservoirs. The Contractor shall submit a written certification that the proposed materials meet the above regulatory agency standards and policies. The material shall be applied with a primer if recommended by the coating manufacturer.

5. Part A: Products shall be as listed, or equal:

a. Pre-coating, prior to erection. (DFT = 3 mils) See Note (1) under Paragraph f.		Dimetcote 9, Carboline Zinc, SW Corothane Galvapac, Tnemec 94-H2O Hydro-Zinc
Touch up, following erection. (DFT = 3 mils) See Note (2) under Paragraph f		SW Corothane Galvapac, Tnemec 94-H2O Hydro-Zinc
b. Difficult-to-coat areas, following erection. See Note (3) underline Paragraph f .		Amercoat 395, Macropoxy 5500LT, Carbo-859, Tnemec L140F Pota-Pox.
c. Finish Coats (2 or more)	(DFT = 8 mils)	Amercoat 395, Macropoxy 5500LT, Carbo-859 Tnemec L140F Pota-Pox.

d. Total system DFT = 7 mils

e. Notes:

(1) All lap roof plate edges are to be pre-coated. If necessary, zinc primer exposed on exterior of roof may be removed prior to welding.

(2) Touch-up coating shall be done for areas damaged during erection, or areas not pre-coated. The Contractor shall spot sandblast to SSPC-SP-5 before application of coating. Material used for touch-up shall be a compatible solvent based inorganic or organic zinc primer recommended by the manufacturer.

(3) All edges, nuts, bolts, lap joints, weld seams and the roof rim angle shall receive one brush-applied coat prior to the application of the complete spray coat.

6. Part B: Products shall be as listed, or equal:

a. Difficult-to-coat areas. See Note (1) under Paragraph d.		Amercoat 395, Phenoline 341, SW Macropoxy 5500LT, Tnemec L140F Pota-Pox.
b. Finish coats (2 or more). See Note (1) under Paragraph d.	(DFT = 12 mils)	Amercoat 395, Phenoline 341, SW Macropoxy 5500LT, Tnemec L140F Pota-Pox.

c. Total system DFT = 12 mils

d. Notes:

(1) All edges, nuts, bolts, lap joints, and weld seams shall receive one brush-applied coat prior to the application of the first complete spray coat.

7. Curing Period: Prior to immersion, the completed system shall be subjected to at least 240 hours of curing time with the metal temperature at a minimum of 70 degrees F, or 480

hours at a minimum of 60 degrees F, both conditions at a maximum relative humidity of 50 percent and under the forced ventilation conditions required by the paragraph entitled "Curing of Coatings, herein. More curing time or a higher temperature shall be provided if recommended by the epoxy coating manufacturer. If the environmental conditions do not provide the necessary minimum temperature, use heated air to provide the necessary heat for curing. Other combinations of curing time and temperature may be used if the coating manufacturer presents satisfactory documentation and test results to substantiate that the degree of curing is equal or greater than curing for 240 hours at 70 degrees F.

8. Volatile Organic Compound Testing: The completed interior reservoir coating system shall be tested for volatile organic compounds as specified herein.

H. System 106 - Fusion Bonded Epoxy: The coating material shall be a 100 percent powder epoxy applied in accordance with the ANSI/AWWA C213 "AWWA Standard for Fusion-Bonded Epoxy Coating for the Interior and Exterior of Steel Water Pipelines", except that the surface preparation shall be as specified in the coating system schedule of this Section. The coating shall be applied using the fluidized bed process.

1. Liquid Epoxy: For field repairs or where, as confirmed by the Engineer, it would be impossible to use the powder epoxy method without causing damage to the item, the use of a liquid epoxy will be permitted, applied in not less than 3 coats to provide a DFT of 15 mils. The liquid epoxy shall be a 100 percent solids epoxy recommended by the powder epoxy manufacturer.

2. Coating (Min DFT = 16 mils), [Scotchkote 206N], [SW Pipeclad 2000], or equal.

3. Total system DFT = 16 mils.

I. System 107 – Not Used

J. System 108 - Not Used

K. System 109 – Epoxy - Amine, Epoxy-amine cured resin with a solids content of at least 100 percent by volume, and suitable for long-term immersion in wastewater and exposure to the effects of hydrogen sulfide gas where there is the probability of sulfuric acid formation on the surfaces

1. Prime coat and finish coats (1 or more, Minimum DFT 20 mils), Tnemec 435 Perma-Glaze, SW Duraplate 6100, or equal

L. System 110 - Epoxy - Amine, Concrete: Epoxy- amine cured resin with a solids content of at least 55 percent by volume, and suitable for long-term immersion in wastewater and exposure to the effects of hydrogen sulfide gas where there is the probability of sulfuric acid formation on the surfaces. The filler-sealer shall be a 100 percent solids amine cured epoxy material with silica and inert fillers. A 100 percent solids epoxy surfacer shall be used to fill holes and patch the concrete surfaces after abrasive blasting.

1. Prime coat (filler-sealer)(1 or more, applied to the entire surface using a squeegee to achieve a smooth, void-free surface), Carboguard 501, Nu-Klad 114A, SW Steel Seam FT910, Tnemec 218 MortarClad, or equal.

2. Finish coats, manholes, (1 or more, Minimum DFT = 120 mils), Plasite 4500-S, Sigma Novoguard 840, SW Duraplate 6100, Tnemec 435 PermaGlaze or equal.

3. Finish coats, wastewater, (1 or more, Minimum DFT = 30 mils), Plasite 4500-S], [Sigma Novoguard 840, SW Duraplate 6100, Tnemec 435 PermaGlaze or equal.

4. Finish coats, stairways and walkways, (2 or more, Minimum DFT = 15 mils per

coat)(provide aluminum oxide, non-skid broadcast between coats), Plasite 4500-S], [Sigma Novoguard 840, Plascite 4500-S, SW Duraplate 6100, Tnemec 435 Permaglaze, or equal.

M. System 111 – Not Used

N. System 112 - Vinyl Ester-Concrete: Vinyl ester resin coating material with an inert flake pigment suitable for immersion service in hydrochloric acid and sulfuric acid solutions. The filler-sealer shall be a 100 percent solids amine-cured epoxy or vinyl ester material with silica and inert fillers. The filler-sealer is applied to the entire concrete surface. A 100 percent solids epoxy or vinyl ester surfacer shall be used to fill holes and patch the concrete surface after abrasive blasting.

1. Prime coat (filler-sealer), applied to achieve a smooth void-free surface.

2. Finish coats (two or more, Minimum DFT = 40 mils), [SW Cor Cote VEN], Tnemec 120 Vinester, or equal.

O. Max VOC levels per SCQAMD noted in Section 2.5

2.4 SPECIAL COATING SYSTEMS

A. System 200 - PVC Tape: Prior to wrapping the pipe with PVC tape, the pipe and fittings first shall be primed using a primer recommended by the PVC tape manufacturer. After being primed, the pipe shall be wrapped with a 20-mil adhesive PVC tape, half-lapped, to a total thickness of 40 mils.

B. System 201 - Rich Portland Cement Mortar: Rich portland cement mortar coating shall have a minimum thickness of 1/8-inch, followed by enclosure in an 8-mil thick polyethylene sheet with all joints and edges lapped and sealed with tape.

C. System 203 - Epoxy Surfacing: Two-component epoxy floor surfacing mortar shall be formulated to resist many acids, alkalies, and solvents. Novolac finish material shall be resistant to liquid alum, sodium hydroxide, and 50 percent sulphuric acid. Finish coats shall be a minimum 20 mils dry film thickness over mortar surfacing. Products shall be as follows, or equal:

1. Ameron Alternative: Prime coat Amerlock Sealer; finish coat Nu-Klad 110A, (1/4-inch thick).

2. SW Alternative: Prime coat TPM 115; finish coat GP 3741 Novoflo (1/4-inch thick).

3. Carboline Alternative: Prime coat Carboguard 501, finish coat Semstone 140 (¼ inch thick, 250 mils DFT).

4. Tnemec Alternative: Prime coat Tnemec 237 Power- Tread; finish Tnemec 282 Tneme-Glaze (1/4-inch thick).

D. System 204 - Waterproofing: Two coats of a clear, non-staining, silane-modified-siloxane masonry waterproofing material. The waterproofing system 204 after application shall be provided with not less than a five-year warranty on the performance of the product.

1. Where EPA Allows Solvents: Chemstop, "WB Heavy Duty"; Rainguard, "XS", Chemprobe / Prime a Pell H2O; or equal.

2. Where EPA Prohibits Solvents: Chemstop, "WB Regular / Heavy Duty"; Rainguard's "Blok-Lok"; Rainproof's "Chem-Trete #45", Chemprobe / Prime A Pell H2O; or equal.

Surfaces shall be cleaned with a chemical (approved by waterproofing manufacturer) cleaner and

power wash. Surfaces shall be clean and dry before application of waterproofing. Method and rate of application shall be in accordance with manufacturer's published instructions. A manufacturer's representative shall be present during applications if necessary for warranty.

E. System 205 - Polyethylene Encasement: Application of polyethylene encasement shall be in accordance with ANSI/AWWA C105 using Method C.

F. System 206 - Cement Mortar Coating: A 1-1/2-inch minimum thickness mortar coating reinforced with 3/4-inch galvanized welded wire fabric shall be provided. The cement mortar shall contain no less than one part Type V cement to 3 parts sand. The cement mortar shall be cured by a curing compound meeting the requirements of "Liquid Membrane-Forming Compounds for Curing Concrete" ASTM C 309-81, Type II, white pigmented, or by enclosure in an 8-mil thick polyethylene sheet with all joints and edges lapped by at least 6-inches.

G. System 207 - Non-Slip Surfacing: Coating shall have one coat of Semstone 140 W/ aluminum oxide additive, AS 150 as manufactured by Amstep Products or one coat of Ameron Nu-Klad 100A with Amercoat 886 additive, or one coat SW Fastop TC with AO, or one coat Tnemec 280 Tneme-Glaze with Series 211 additive or equal. The coating shall be gray in color. Application shall be by means of a roller and not more than 60 sq ft per gallon of non-slip coating shall be applied. Primer shall be as recommended by the coating manufacturer.

H. System 208 - Aluminum Metal Isolation: A wash primer (0.5 mils) shall be applied, followed by one coat of heavy bodied bituminous paint, such as SW Macropoxy 646-100, Tnemec L69 Epoxoline, or equal (8 mils). Total thickness of system (8.5 mils).

I. Max VOC levels per SCQAMD noted in Section 2.5

2.5 MAXIMUM VOLATILE ORGANIC COMPOUND LIMITS (SCQAMD - 2016)

TABLE OF STANDARDS 1
VOC LIMITS

Grams of VOC Per Liter of Coating,
Less Water and Less Exempt Compounds

COATING CATEGORY	Category Codes	Current Limit[1]	Effective Date			Small Container Exemption
			1/1/14	2/5/16	1/1/19	
Bond Breakers	5	350				✓
Building Envelope Coating	62	100			50	✓
Concrete-Curing Compounds	7	100				✓
Concrete-Curing Compounds For Roadways and Bridges[2]	7	350				✓[3]
Concrete Surface Retarder	58	50	50			✓
Default	51	50	50			✓
Driveway Sealer	52	50				✓
Dry-Fog Coatings	8	50	50			✓
Faux Finishing Coatings						
Clear Topcoat	9a	100	100			✓
Decorative Coatings	9	350				✓
Glazes	9b	350				✓
Japan	9c	350				✓
Trowel Applied Coatings	9d	50	50			✓
Fire-Proofing Coatings	10	150	150			✓
Flats	13	50				✓[5]
Floor Coatings	14	50				✓
Form Release Compound	16	100	100			✓
Graphic Arts (Sign) Coatings	17	200	150	200		✓
Industrial Maintenance (IM) Coatings	19	100				✓[5]
Color Indicating Safety Coatings		480				✓[5]
High Temperature IM Coatings	18	420				✓[5]
Non-Sacrificial Anti-Graffiti Coatings	19a	100				✓[5]
Zinc-Rich IM Primers	56	100				✓[5]
Magnesite Cement Coatings	22	450				✓[3]
Mastic Coatings	23	100	100			✓
Metallic Pigmented Coatings	24	150	150			✓
Multi-Color Coatings	25	250				✓[3]
Nonflat Coatings	26, 27, 28	50				✓[5]
Pre-Treatment Wash Primers	29	420				✓[3]
Primers, Sealers, and Undercoaters	30	100				✓
Reactive Penetrating Sealers	59	350				✓[4]
Recycled Coatings	33	250			150	✓
Roof Coatings	34	50				✓
Roof Coatings, Aluminum	53	100				✓
Roof Primers, Bituminous	4	350				✓[3]
Rust Preventative Coatings	35	100				✓[6]
Sacrificial Anti-Graffiti Coatings	60	50				✓[3]
Shellac						
Clear	37	730				✓[4]
Pigmented	38	550				✓[4]
Specialty Primers	39	100				✓
Stains	41	100				✓

COATING CATEGORY	Category Codes	Current Limit[1]	Effective Date			Small Container Exemption
			1/1/14	2/5/16	1/1/19	
Stains, Interior	40	250				✓
Stone Consolidants	61	450				✓[3]
Swimming Pool Coatings						
Repair	43	340				✓[3]
Other	42	340				✓[3]
Tile and Stone Sealers	63	100				✓
Traffic Coatings	45	100				✓
Tub and Tile Refinishing Coatings	64	420				✓[4]
Waterproofing Sealers	48	100				✓
Waterproofing Concrete/Masonry Sealers	49	100				✓
Wood Coatings		275				
Varnish	46, 47	275				
Sanding Sealers	36	275				
Lacquer	20	275				
Wood Conditioners	65	100				
Wood Preservatives						
Below-Ground	50	350				✓[3]
Other	55	350				✓[3]

1. The specified limits remain in effect unless revised limits are listed in subsequent columns in the Table of Standards.
2. Does not include compounds used for curbs and gutters, sidewalks, islands, driveways and other miscellaneous concrete areas.
3. Effective 02/05/2016, the small container exemption no longer applies per (f)(1).
4. Effective 01/01/2018, the small container exemption no longer applies per (f)(1).
5. Effective 01/01/2019, the small container exemption is further restricted per (f)(1).
6. Effective 01/01/2020, the small container exemption is further restricted per (f)(1).

TABLE OF STANDARDS 1 (cont.)
VOC LIMITS

Grams of VOC Per Liter of Material

COATING	Limit
Low-Solids Coating	120

TABLE OF STANDARDS 2
VOC LIMITS FOR COLORANTS

Grams of VOC Per Liter of Colorant
Less Water and Less Exempt Compounds

COLORANT ADDED TO	Limit
Architectural Coatings, excluding IM Coatings	50
Solvent-Based IM	600
Waterborne IM	50

PART 3 -- EXECUTION

3.1 STORAGE, MIXING, AND THINNING OF MATERIALS

A. Manufacturer's Recommendations: Unless otherwise specified herein, the coating manufacturer's printed recommendations and instructions for thinning, mixing, handling, applying, and protecting its coating materials, for preparation of surfaces for coating, and for all other procedures relative to coating shall be strictly observed. The Contractor shall supply the Engineer with copies of each manufacturer's instructions in accordance with the GENERAL REQUIREMENTS.

B. All protective coating materials shall be used within the manufacturer's recommended shelf life.

C. Storage and Mixing: Coating materials shall be protected from exposure to cold weather, and shall be thoroughly stirred, strained, and kept at a uniform consistency during application. Coatings of different manufacturers shall not be mixed together.

3.2 PREPARATION FOR COATING

A. General: All surfaces to receive protective coatings shall be cleaned as specified herein prior to application of said coatings. The Contractor shall examine all surfaces to be coated, and shall correct all surface defects before application of any coating material. All marred or abraded spots on shop-primed and on factory-finished surfaces shall receive touch-up restoration prior to any coating application.

B. Protection of Surfaces Not to be Coated: Surfaces which are not to receive protective coatings shall be protected during surface preparation, cleaning, and coating operations.

C. All hardware, lighting fixtures, switch plates, machined surfaces, couplings, shafts, bearings, nameplates on machinery, and other surfaces not to be painted shall be removed, masked or otherwise protected. Drop cloths shall be provided to prevent coating materials from falling on or marring adjacent surfaces. The working parts of all mechanical and electrical equipment shall be protected from damage during surface preparation and coating operations. Openings in motors shall be masked to prevent entry of coating or other materials.

D. Care shall be exercised not to damage adjacent work during blast cleaning operations. Spray painting shall be conducted under carefully controlled conditions. The Contractor shall be fully responsible for and shall promptly repair any and all damage to adjacent work or adjoining property occurring from blast cleaning or coating operations.

E. Protection of Painted Surfaces: Cleaning and coating shall be so programmed that dust and other contaminants from the cleaning process will not fall on wet, newly-coated surfaces.

3.3 SURFACE PREPARATION STANDARDS

A. The following referenced surface preparation specifications of the Steel Structures Painting Council shall form a part of this specification:

1. Solvent Cleaning (SSPC-SP1): Removal of oil, grease, dirt, soil, salts, and contaminants by cleaning with solvent, vapor, alkali, emulsion, or steam.

2. Hand Tool Cleaning (SSPC-SP2): Removal of loose rust, loose mill scale, and loose paint to degree specified, by hand chipping, scraping, sanding, and wire brushing.

3. Power Tool Cleaning (SSPC-SP3): Removal of loose rust, loose mill scale, and loose paint to degree specified by power tool chipping, descaling, sanding, wire brushing, and grinding.

4. White Metal Blast Cleaning (SSPC-SP5/NACE1): Removal of all visible rust, mill scale, paint, and foreign matter by blast cleaning by wheel or nozzle (dry or wet) using sand, grit,

or shot.

5. Commercial Blast Cleaning (SSPC-SP6/NACE3): Blast cleaning until at least two-thirds of each element of surface area is free of all visible residues.

6. Brush-Off Blast Cleaning (SSPC-SP7/NACE4): Blast cleaning of all except tightly adhering residues of mill scale, rust, and coatings, exposing numerous evenly distributed flecks of underlying metal.

B. The other surface preparation standards shall be the most recent versions published by the SSPC and NACE.

3.4 METAL SURFACE PREPARATION (UNGALVANIZED)

A. The minimum abrasive blasting surface preparation shall be as specified in the coating system schedules included at the end of this Section. Where there is a conflict between these specifications and the coating manufacturer's printed recommendations for the intended service, the higher degree of cleaning shall apply.

B. Workmanship for metal surface preparation shall be in conformance with the current SSPC Standards and this Section. Blast cleaned surfaces shall match the standard samples available from the National Association of Corrosion Engineers, NACE Standard TM-01-70.

C. All oil, grease, welding fluxes and other surface contaminants shall be removed by solvent cleaning per SSPC-SP1 prior to blast cleaning.

D. All sharp edges shall be rounded or chamfered and all burrs, and surface defects and weld splatter shall be ground smooth prior to blast cleaning.

E. The type and size of abrasive shall be selected to produce a surface profile that meets the coating manufacturer's recommendation for the particular coating and service conditions.

F. The abrasive shall not be reused unless otherwise approved by the Engineer. For automated shop blasting systems, clean oil-free abrasives shall be maintained.

G. The Contractor shall comply with the applicable federal, state, and local air pollution control regulations for blast cleaning.

H. Compressed air for air blast cleaning shall be supplied at adequate pressure from well maintained compressors equipped with oil/moisture separators which remove at least 95 percent of the contaminants.

I. Surfaces shall be cleaned of all dust and residual particles of the cleaning operation by dry air blast cleaning, vacuuming or another approved method prior to painting.

J. Enclosed areas and other areas where dust settling is a problem shall be vacuum cleaned and wiped with a tack cloth.

K. Damaged or defective coating shall be removed by the specified blast cleaning to meet the clean surface requirements before recoating.

L. If the specified abrasive blast cleaning will damage adjacent work, the area to be cleaned is less than 100 square feet, and the coated surface will not be submerged in service, then SSPC-SP2, hand tool cleaning or SSPC-SP3, power tool cleaning, may be used.

M. Shop applied coatings of unknown composition shall be completely removed before the specified coatings are applied. Valves, castings, ductile or cast iron pipe, and fabricated pipe or equipment shall be examined for the presence of shop-applied temporary coatings. Temporary coatings shall be completely removed by solvent cleaning per SSPC-SP1 before the abrasive blast

cleaning work has been started.

N. Shop primed equipment shall be solvent cleaned in the field before finish coats are applied.

O. Ferrous metal surfaces in severe or immersion service shall conform to the following.

1. Solvent Cleaning (SSPC-SP1) shall be performed over all surfaces prior to abrasive blast cleaning. : Removal of oil, grease, dirt, soil, salts, and contaminants by cleaning with solvent, vapor, alkali, emulsion, or steam as required.

2. All ferrous metal and non ferrous metal surfaces to be cleaned in accordance with SSPC-SP5/NACE 1. White Metal Blast Clean with a 3.0 mil minimum anchor profile.

3. Where the coating is specified to be terminated, the Contractor shall prepare and apply materials as outlined in coating manufacturer recommendations.

4. Where the coating is specified to be terminated at a metal embedment, the Contractor shall prepare and apply materials as outlined or as recommended by the manufacturer.

5. The Contractor shall notify the Engineer should jobsite conditions prevent the above operations and/or applications

3.5 SURFACE PREPARATION FOR GALVANIZED FERROUS METAL

A. Galvanized ferrous metal shall be alkaline cleaned per SSPC-SP1 to remove oil, grease, and other contaminants detrimental to adhesion of the protective coating system to be used.

B. Abrasive brush blasting or uniform scarification of cleaned surfaces is required. Perform surface preparation according to SSPC-SP16, Brush of Blast Cleaning of Coated and Uncoated Galvanized steel, Stainless Steel, and Non-Ferrous Metals.

C. Abrasive brush blasting is required for all non-ferrous metals in severe or immersion service.

D. Pretreatment coatings, white rust staining, passivation treatments such as chromating shall be completely removed. Perform successful test to confirm removal of passivating treatments according to SSPC-Sp16 prior to the application of any coatings.

3.6 SURFACE PREPARATION OF FERROUS SURFACES WITH EXISTING COATINGS

A. General: All grease, oil, heavy chalk, dirt, or other contaminants shall be removed by solvent or detergent cleaning prior to abrasive blast cleaning. The generic type of the existing coatings shall be determined by laboratory testing.

B. Abrasive Blast Cleaning: The Contractor shall provide the degree of cleaning specified in the coating system schedule for the entire surface to be coated. If the degree of cleaning is not specified in the schedule, deteriorated coatings shall be removed by abrasive blast cleaning to SSPC-SP6, Commercial Blast Cleaning. Areas of tightly adhering coatings shall be cleaned to SSPC-SP7, Brush-off Blast Cleaning, with the remaining thickness of existing coating not to exceed 3 mils.

C. Incompatible Coatings: If coatings to be applied are not compatible with existing coatings the Contractor shall apply intermediate coatings per the paint manufacturer's recommendation for the specified coating system or shall completely remove the existing coating prior to abrasive blast cleaning. A small trial application shall be conducted for compatibility prior to painting large areas.

D. Unknown Coatings: Coatings of unknown composition shall be completely removed prior to application of new coatings.

E. Water Abrasive or Wet Abrasive Blast Cleaning: Where specified or where job site conditions do not permit dry abrasive blasting for industrial coating systems due to dust or air pollution considerations, water abrasive blasting or wet abrasive blasting may be used. In both methods, paint-compatible corrosion inhibitors shall be used, and coating application shall begin as soon as the surfaces are dry. Water abrasive blasting shall be done using high pressure water with sand injection. In both methods, the equipment used shall be commercially produced equipment with a successful service record. Wet blasting methods shall not be used for submerged and severe service coating systems unless specified.

3.7 CONCRETE AND CONCRETE BLOCK MASONRY SURFACE PREPARATION

A. Surface preparation shall not begin until at least 30 days after the concrete or masonry has been placed.

B. All oil, grease, and form release and curing compounds shall be removed by detergent cleaning per SSPC-SP1 before abrasive blast cleaning.

C. Concrete, concrete block masonry surfaces and deteriorated concrete surfaces to be coated shall be abrasive blast cleaned to remove existing coatings, laitance, deteriorated concrete, and to roughen the surface equivalent to the surface of the No. 80 grit flint sandpaper.

D. If acid etching is required by the coating application instructions the treatment shall be made after abrasive blasting. After etching, rinse surfaces with water and test the pH. The pH shall be between neutral and 8.

E. Surfaces shall be clean and as recommended by the coating manufacturer before coating is started.

F. Unless required for proper adhesion, surfaces shall be dry prior to coating. The presence of moisture shall be determined with a moisture detection device such as [Delmhorst Model DB], or equal.

G. Concrete, Concrete Masonry Unit surfaces in sever or immersion service shall conform to the following.

1. Remove all release agents, curing compounds, efflorescence, chalk, grease, and foreign material from the surface. Surfaces shall be decontaminated to remove all microorganisms, acid constituents, grease, oil, and other contaminants prior to commencement of surface preparation (Reference ASTM D4258, SSPC-SP13/NACE No. 6).

2. Verify that the pH of the cleaned and prepared concrete surfaces to be coated is within the range of to 9 to 11. Application of coating materials outside this range will not be permitted without written approval from the Engineer. ASTM D 4262 should be used to determine pH.

3. Allow new concrete to cure for a minimum of 28 days or shall be prepared and treated according to the coating manufacturer’s recommendations.

4. Test concrete for moisture following the 28 day curing period in accordance with ASTM D4263 and/or F1869. Test results shall be reviewed by the coating manufacturer’s technical representative to determine if any special treatments are required prior to the application of coating.

5. Concrete surfaces shall be prepared in accordance with SSPC-SP13/NACE No. 6, Severe Service, and shall produce a minimum surface profile of a CSP-5 as noted in ICRI Technical Guideline No. 310.2 and ASTM D4259, SSPC-SP13/NACE No. 6.

6. Fill all bug holes, honeycombs, cracks, and surface imperfections with surface fillers to the specified thickness in a uniform and consistent fashion. .

7. Where the coating is specified to be terminated, the contractor shall prepare and apply

materials as outlined by the coating manufacturer. Detailed drawings shall provided for review with contractor submittals.

8. Repair of spalling, corroded concrete, exposed rebar shall be performed according to the specified process and manufacturer's recommendation.

3.8 PLASTIC, FIBERGLASS AND NONFERROUS METALS SURFACE PREPARATION

A. Plastic and fiberglass surfaces shall be sanded or brush off blast cleaned prior to solvent cleaning with a chemical compatible with the coating system primer.

B. Non-ferrous metal surfaces shall be solvent-cleaned SSPC-SP1 followed by sanding or brush-off blast cleaning SSPC-SP7/NACE4.

C. All surfaces shall be clean and dry prior to coating application.

3.9 ARCHITECTURAL CONCRETE BLOCK MASONRY SURFACE PREPARATION

A. The mortar surfaces shall be cured at least 14 days before surface preparation work is started.

B. Dust, dirt, grease, and other foreign matter shall be removed prior to abrasive blasting.

C. The masonry surfaces shall be prepared in accordance with the material manufacturer's printed instructions.

3.10 WORKMANSHIP

A. Skilled craftsmen and experienced supervision shall be used on all work.

B. Clean drop cloths shall be used. All damage to surfaces resulting from the work hereunder shall be cleaned, repaired, and refinished to their original condition.

C. All coatings shall be applied under dry and dust-free conditions. Coating shall be done in a workmanlike manner so as to produce an even film of uniform thickness. Edges, corners, crevices, and joints shall receive special attention to insure that they have been thoroughly cleaned and that they receive an adequate thickness of coating material. The finished surfaces shall be free from runs, drops, ridges, waves, laps, brush marks, and variations in color, texture, and finish. The hiding shall be so complete that the addition of another coat would not increase the hiding. Special attention shall be given to insure that edges, corners, crevices, welds, and similar areas receive a film thickness equivalent to adjacent areas, and installations shall be protected by the use of drop cloths or other approved precautionary measures.

3.11 SHOP COATING REQUIREMENTS

A. All items of equipment, or parts of equipment which are not submerged in service, shall be shop primed and then finish coated in the field after installation with the specified or approved color. The methods, materials, application equipment and all other details of shop painting shall comply with this section. If the shop primer requires topcoating within a specified period of time, the equipment shall be finish coated in the shop and then touch-up painted after installation.

B. All items of equipment, or parts and surfaces of equipment which are submerged or inside an enclosed hydraulic structure when in service, with the exception of pumps and valves, shall have all surface preparation and coating work performed in the field.

C. The interior surfaces of steel reservoirs shall have all surface preparation and coating work performed in the field.

D. For certain pieces of equipment it may be undesirable or impractical to apply finish coatings in the

field. Such equipment may include engine generator sets, equipment such as electrical control panels, switchgear or main control boards, submerged parts of pumps, ferrous metal passages in valves, or other items where it is not possible to obtain the specified quality in the field. Such equipment shall be shop primed and finish coated and touched up in the field with the identical material after installation. The Contractor shall require the manufacturer of each such piece of equipment to certify as part of its shop drawings that the surface preparation is in accordance with these specifications. The coating material data sheet shall be submitted with the shop drawings for the equipment.

E. For certain small pieces of equipment the manufacturer may have a standard coating system which is suitable for the intended service conditions. In such cases, the final determination of suitability will be made during review of the shop drawing submittals. Equipment of this type generally includes only indoor equipment such as instruments, small compressors, and chemical metering pumps.

F. Shop painted surfaces shall be protected during shipment and handling by suitable provisions including padding, blocking, and the use of canvas or nylon slings. Primed surfaces shall not be exposed to the weather for more than 6 months before topcoated, or less time if recommended by the coating manufacturer.

G. Damage to shop-applied coatings shall be repaired in accordance with this Section and the coating manufacturers printed instructions.

H. The Contractor shall make certain that the shop primers and field topcoats are compatible and meet the requirements of this Section. Copies of applicable coating manufacturer's data sheets shall be submitted with equipment shop drawings.

3.12 APPLICATION OF COATINGS

A. The application of protective coatings to steel substrates shall be in accordance with "Paint Specification No. 1, (SSPC-A-1)", Steel Structures Painting Council.

B. Cleaned surfaces and all coats shall be inspected prior to each succeeding coat. The Contractor shall schedule such inspection with the Engineer in advance.

C. Blast cleaned ferrous metal surfaces shall be painted before any rusting or other deterioration of the surface occurs. Blast cleaning shall be limited to only those surfaces that can be coated in the same working day.

D. Coatings shall be applied in accordance with the manufacturer's instructions and recommendations, and this Section, whichever has the most stringent requirements.

E. Special attention shall be given to edges, angles, weld seams, flanges, nuts and bolts, and other places where insufficient film thicknesses are likely to be present. Use stripe painting for these areas.

F. Special attention shall be given to materials which will be joined so closely that proper surface preparation and application are not possible. Such contact surfaces shall be coated prior to assembly or installation.

G. Finish coats, including touch-up and damage repair coats shall be applied in a manner which will present a uniform texture and color matched appearance.

H. Coatings shall not be applied under the following conditions:

1. Temperature exceeding the manufacturer's recommended maximum and minimum allowable.

2. Dust or smoke laden atmosphere.

3. Damp or humid weather.

4. When the substrate or air temperature is less than 5 degrees F above dewpoint.

5. When air temperature is expected to drop below 40 degrees F or less than 5 degrees F above the dewpoint within 8 hours after application of coating.

I. Dewpoint shall be determined by use of a sling psychrometer in conjunction with U.S. Dept. of Commerce, Weather Bureau psychrometric tables.

J. Steel piping shall be abrasive blast cleaned and primed before installation.

K. The finish coat on all work shall be applied after all concrete, masonry, and equipment installation is complete and the work areas are clean and dust free.

3.13 CURING OF COATINGS

A. The Contractor shall provide curing conditions in accordance with the conditions recommended by the coating material manufacturer or by this Section, whichever is the highest requirement, prior to placing the completed coating system into service.

B. In the case of enclosed areas, forced air ventilation, using heated air if necessary, may be required until the coatings have fully cured.

C. Forced Air Ventilation of Steel Reservoirs and Enclosed Hydraulic Structures: Forced air ventilation is required for the application and curing of coatings on the interior surfaces of steel reservoirs and enclosed hydraulic structures. During curing periods continuously exhaust air from a maintenance hole in the lowest shell ring, or in the case of an enclosed hydraulic structure, from the lowest level of the structure using portable ducting. After all interior coating operations have been completed provide a final curing period for a minimum of 10 days, during which the forced ventilation system shall operate continuously. For additional requirements, refer to the specific coating system being used in the paragraph entitled "Submerged and Severe Service Coating Systems" herein.

3.14 TESTING FOR VOLATILE ORGANIC COMPOUNDS IN POTABLE WATER RESERVOIRS

A. General: The Contractor shall provide the following services to ensure that the interior reservoir coatings or linings do not convey volatile organic compounds to the potable water.

B. Selection of Coating or Lining Material: The Contractor shall provide a coating or lining system that has a successful record in meeting the national, regional, and local regulations and policies pertaining to leaching of volatile organic compounds into potable water.

C. Before the coating or lining materials are used, the Contractor shall by letter notify the regulatory agency having jurisdiction. The letter shall describe the proposed materials, including brand names, catalog numbers, catalog technical data, application and curing instructions, and material safety data sheets.

D. The Contractor shall provide curing time, temperature and ventilations as specified by the manufacturer or this Section, whichever is the highest requirement. In some cases, the Contractor may find it necessary to extend the curing time or ventilation time beyond the requirements in order to comply with the regulatory agency requirements or to reduce the leached organic compounds to the required levels. All costs in connection with any extended curing times shall be borne by the Contractor.

E. Following the curing or ventilation period, the Contractor shall clean, disinfect and fill the reservoir as specified.

F. A 7-day soaking period shall follow initial filling to determine the presence of any leached organics. Before the tank is placed into service, samples of the water in the tank will be taken by the Engineer and analyzed by a laboratory approved by the State or the EPA. Analyses will be for volatile organic compounds by EPA Method 624 or equivalent (this test includes TCE, PCE, xylenes, toluene, ketones, carbon tetrachloride, and similar compounds).

G. If the tests results are above either (1) 0.005 mg/l for TCE, 0.004 mg/l for PCE, 0.62 mg/l for xylenes, 0.10 mg/l for toluene, 0.75 mg/l for methyl-ethyl ketone (to be used as representative for all ketone compounds), 0.005 mg/l for carbon tetrachloride, or (2) the regulatory agency's recommended Action Level Limits, whichever is less, the Contractor shall drain the water from the tank and flush, refill, and retest at no additional cost to the City. The Contractor shall provide as many curing, soaking, and flushing cycles as necessary to reduce the leached volatile organic compounds to levels below the requirements.

3.15 IDENTIFICATION OF PIPING

A. Identification of piping shall be in accordance with Section [15780] "Treatment Plant Piping Identification Systems."

B. Every valve or connection, where it may be possible for a worker to be exposed to a hazardous substance, shall be labeled per [General Industry Safety Orders, Article 112] OSHA Occupational Safety and Health Standards 29CFR1910.

C. [All unburied pipe in structures and in chemical pipe trenches shall be color-code painted. Colors shall be as specified in Section [15780] "Treatment Plant Piping Identification Systems," as selected by the Engineer, or as shown.]

D. [All unburied chemical pipes, including chemical pipes in structures and chemical pipe trenches shall be color-code painted. Colors shall be as specified in Section [15780] "Treatment Plant Piping Identification Systems," as selected by the Engineer, or as shown.]

3.16 COATING SYSTEM SCHEDULES - FERROUS METALS

A. Coating System Schedule, Ferrous Metal - Not Galvanized:

	Item	Surface Prep.	System No.
FM-1	All exposed surfaces indoors and outdoors, except those included below.	Commercial blast cleaning SSPC-SP6/NACE3	(7) acrylic enamel
FM-1	All exposed surfaces indoors and outdoors, except those included below.	Commercial blast cleaning SSPC-SP6/NACE3	(4) aliphatic polyurethane
FM-1	All exposed surfaces indoors and outdoors, except those included below.	White metal blast cleaning SSPC-SP5/NACE1	(5) zinc-rich / polyurethane
FM-2	Surfaces in chlorination room, chlorine storage room.	Commercial blast cleaning SSPC-SP6/NACE3	(101) epoxy
FM-3	Surfaces of equipment and ferrous surfaces submerged or intermittently submerged in potable water or utility water, including all surfaces lower than 2-feet above high water level and all surfaces inside enclosed hydraulic	White metal blast cleaning SSPC-SP5/NACE1	(100) amine cured epoxy

	structures and vents (excluding shop-coated valves, couplings, pumps).		
FM-4	Surfaces of equipment and ferrous surfaces submerged or intermittently submerged in wastewater, including all surfaces lower than 2-feet above high water level and all surfaces inside enclosed hydraulic structures (excluding shop-coated valves, couplings, pumps).	White metal blast cleaning SSPC-SP5/NACE1	(109) epoxy amine
FM-5	Surfaces exposed to high temperature (between 150 and 600 degrees F).	White metal blast cleaning SSPC-SP10/NACE1	(6) inorganic zinc,water-based
FM-6	Surfaces exposed to high temperature (between 600 and 1000 degrees F).	white metal blast cleaning SSPC-SP5/NACE1	(3) aluminum silicone resin
FM-7	Buried small steel pipe.	Removal of dirt, grease, oil	(200) PVC tape
FM-8	Buried pipe couplings, valves, and flanged joints (where piping is plastic).	Removal of dirt, grease, oil	(201) rich portland cement mortar
FM-9	Buried pipe couplings, valves, and flanged joints (where piping is not plastic, or tape-coated, or mortar-coated steel), including epoxy-coated surfaces.	As specified by reference specification	(205) polyethylene encasement
FM-10	Buried pipe couplings, valves, and flanged joints (where piping is mortar-coated steel or reinforced concrete), including epoxy-coated surfaces.	Removal of dirt, grease, oil	(206) cement-mortar coating
FM-11	Ferrous surfaces in water passages of all valves 4-inch size and larger, exterior surfaces of submerged valves.	White metal blast cleaning SSPC-SP5/NACE1	(100) amine-cured epoxy
FM-12	Where shown or specified, ferrous surfaces in water passages and submerged surfaces of all pumps which have discharge size of 4-inches or larger.	White metal blast cleaning SSPC-SP5/NACE1	(100) amine-cured epoxy

FM-12	Where shown or specified, ferrous surfaces in water passages and submerged surfaces of all pumps which have discharge size of 4-inches or larger.	White metal blast cleaning SSPC-SP5/NACE1	(106) fusion-bonded epoxy]
FM-13	Ferrous surfaces of sleeve-couplings	White metal blast cleaning SSPC-SP5/NACE1	(100) amine-cured epoxy
FM-14	All ferrous surfaces of sluice gates, flap gates, and shear gates, including wall thimbles.	White metal blast cleaning SSPC-SP5/NACE1	(106) fusion-bonded epoxy
FM-15	Buried surfaces that are not specified to be coated	White metal blast cleaning SSPC-SP5/NACE1	(103) coal tar epoxy
FM-16	Indoor sheet metal, flashings, exposed ducts.	Commercial blast cleaning SSPC-SP6/NACE3	(7) acrylic enamel
FM-17	Interior surfaces of all chemical tanks, except caustic soda tanks, including tank nozzles, manholes, nozzle necks, flange faces.	White metal blast cleaning SSPC-SP5/NACE1	(107) chemical-resistant sheet lining
FM-18	Surfaces of indoor equipment.	[Specifier enter]	[Specifier enter]
FM-19	[Specifier list of existing ferrous equipment or surfaces which are required to be re-coated as part of this work.]	[Specifier enter]	[Specifier enter]

B. Coating System Schedule, Ferrous Metal - Galvanized: Pretreatment coatings, barrier coatings, or washes shall be applied as recommended by the coating manufacturer. [All galvanized surfaces shall be coated] [All galvanized surfaces except for the following items shall be coated unless coating is required by other Sections: (1) Floor gratings and frames, (2) Handrails, (3) Stair treads, (4) Chain link fencing and appurtenances, (5) Specifier selected items].

	Item	Surface Prep.	System No.
FMG-1	All exposed surfaces indoors and outdoors, except those included below.	Galvanized Metal	(3) acrylic enamel
FMG-1	All exposed surfaces indoors and outdoors, except those below.	Galvanized Metal	(4) aliphatic polyurethane
FMG-2	Surfaces in chlorinator room, chlorine storage room.	Galvanized Metal	(101) amine-cured epoxy
FMG-3	Buried small steel pipe.	Galvanized Metal	(200) PVC tape
FMG-4	Surfaces buried or submerged in wastewater.	Galvanized Metal	(109) epoxy-amine
FMG-5	Buried miscellaneous surfaces, couplings, valves, and flanged joints.	Galvanized Metal	(201) rich portland cement mortar
FMG-6	Indoor sheet metal flashings, exposed ducts.	Galvanized Metal	(3) acrylic enamel
FMG-7	[Specifier list of existing galvanized equipment or surfaces which are required to be recoated as part of this work.]	[Specifier enter]	[specifier enter]

C. Coating System Schedule, Steel Reservoir Interior: For steel reservoir exterior coating system, see "Coating System Schedule, Ferrous Metal-Not Galvanized". The interior surfaces of steel reservoirs shall have all surface preparation and coating work performed in the field.

	Item	Surface Prep.	System No.
SR-1	All interior surfaces beginning one foot above high water level, including all plates, roof structural members, fittings, and vents.	White metal blast cleaning SSPC-SP5/NACE1	(105) Part A, inorganic zinc/epoxy
SR-2	Underside of column bases, floor under column bases before columns set in place, submerged contact surfaces that are not accessible after erection.	White metal blast cleaning SSPC-SP5/NACE1	(105) Part B, inorganic zinc/epoxy
SR-3	Interior surfaces exclusive of surfaces in SR-1 and SR-2 above, including overflow, drain and other piping out to the first valve or coupling.	White metal blast cleaning SSPC-SP5/NACE1	(105) Part B, inorganic zinc/ epoxy

D. Coating System Schedule, Steel Digester Floating Covers and Digester Gasholders:

	Item	Surface Prep.	System No.
SD-1	All ferrous surfaces submerged in water or sludge, including rim plate.	White metal blast cleaning SSPC-SP5/NACE1	(109) epoxy amine
SD-2	All ferrous surfaces exposed to digester gas.	White metal blast cleaning SSPC-SP5/NACE1	(109) epoxy amine
SD-3	All interior ferrous surfaces of gasholder shell, including top angle.	White metal blast cleaning SSPC-SP5/NACE1	(109) epoxy amine
SD-4	All ungalvanized interior surfaces inside digester roof, between and including the ceiling plate and the roof deck.	White metal blast cleaning SSPC-SP5/NACE1	(109) epoxy amine
SD-5	Exposed, outdoors.	Commercial blast cleaning SSPC-SP6/NACE3	(5) Zinc rich, aliphatic polyurethane

3.17 COATING SYSTEM SCHEDULE, NON-FERROUS METAL, PLASTIC, FIBERGLASS

A. Where isolated non-ferrous parts are associated with equipment or piping, the Contractor shall use the coating system for the adjacent connected surfaces. Do not coat handrails, gratings, frames or hatches. Only primers recommended by the coating manufacturer shall be used.

	Item	Surface Prep.	System No.
NFM-1	All exposed surfaces, indoors and outdoors, except those included below.	Solvent cleaned SSPC-P1	(3) acrylic enamel]
NFM-1	All exposed surfaces, indoors and outdoors, except those included below.	Solvent cleaned SSPC-P1	(4) aliphatic polyurethane]
NFM-2	Chlorination room, chlorine storage room.	Solvent cleaned SSPC-SP1	(101) amine-cured epoxy
NFM-3	Aluminum surfaces in contact with concrete, or with any other metal except galvanized ferrous metal.	Solvent cleaned SSPC-SP1	(208) aluminum metal isolation
NFM-4	Polyvinyl chloride plastic piping, indoors and outdoors, or in structures, not submerged.	Solvent cleaned SSPC-SP1	(7) acrylic enamel
NFM-5	Fiber glass surfaces.	Per Paragraph [3.8]	(12) aliphatic polyurethane fiberglass
NFM-6	Buried non-ferrous metal pipe.	Removal of dirt, grease, oil	(200) PVC tape
NFM-7	[Specifier list of existing equipment or surfaces which are required to be recoated as part of this work.]	[Specifier enter]	[Specifier enter]

3.18 COATING SYSTEM SCHEDULE-CONCRETE

	Item	Surface Prep.	System No.
C-1	Exposed indoors and outdoors, as shown.	Per Paragraph [3.7]	(10) acrylic, concrete
C-2	Submerged in wastewater including surfaces up to 2-feet above high water line and down to 2-feet below low water line and all surfaces in an enclosed structure, as shown.	Per Paragraph [3.7]	New surface:(110) epoxy amine, concrete Existing surface: (102) epoxy mortar
C-2	Submerged in wastewater including surfaces up to 2-feet above high water line and down to 2-feet below low water line and all surfaces in an enclosed structure, as shown.	Per Paragraph [3.7]	(110) epoxy amine, concrete
C-3	Floor slab, exposure to chemicals, as shown.	Per Paragraph [3.7]	(203) epoxy surfacing
C-4	Floor slab, non-slip surface, as shown.	Per Paragraph [3.7]	(207) non-slip surfacing
C-5	Interior surfaces of sewer manholes, including sidewalls, bottom, and metal appurtenances, for manholes shown.	Per Paragraph [3.7]	New surface:(110) epoxy amine, concrete Existing surface: (102) epoxy mortar
C-5	Interior surfaces of sewer manholes, including sidewalls, bottom, and metal appurtenances, for manholes shown.	Per Paragraph [3.7]	New surface:(110) epoxy amine, concrete Existing surface: (102) epoxy mortar
C-6	Walls, exposure to chemical splash, washdown, as shown.	Per Paragraph [3.7]	(11) aliphatic polyurethane, concrete
C-7	[Specifier list of existing concrete surfaces which are required to be recoated as part of this work and as shown.]	[Specifier enter]	[Specifier enter]

3.19 COATING SYSTEM SCHEDULE-CONCRETE BLOCK MASONRY

	Item	Surface Prep.	System No.
CBM-1	Exposed, indoors and outdoors, as shown.	Per Paragraph [3.9]	(10) acrylic, concrete
CBM-2	Submerged in wastewater, including all vertical masonry surfaces above waterline as shown.	Per Paragraph [3.9]	New surface:(110) epoxy amine, concrete Existing surface: (102) epoxy mortar
[CBM-2	Submerged in wastewater, including all vertical masonry surfaces above waterline as shown.	Per Paragraph [3.9]	New surface:(110) epoxy amine, concrete Existing surface: (102) epoxy mortar
CBM-3	Exterior surfaces, above grade.	Per Paragraph [3.9]	(204) waterproofing
CBM-4	[Specifier list of existing masonry surfaces which are required to be recoated as part of this work, and as shown.]	[Specifier enter]	[Specifier enter]

END OF SECTION

SECTION 10443

DISABLED ACCESSIBILITY PARKING SIGNAGE

PART ONE - GENERAL

*1.1 DESCRIPTION

A. Furnish and install disabled accessibility signage as indicated on the drawings and specified herein.

B. Related Work Sections:

1. Documents affecting work of this Section include, but are not necessarily limited to the GENERAL CONDITIONS, SUPPLEMENTARY CONDITIONS, GENERAL REQUIREMENTS in Division 1 and other Section of the Project Manual.

2. Earthwork in Section 02310.

3. Porous Paving in Section 02731.

4. Concrete Work in Section 03300.

1.2 QUALITY ASSURANCE

A. Labor: Use adequate number laborer's who are thoroughly trained and experienced in the necessary crafts and who are completely familiar with the specified requirements and the methods needed for the proper performance of the work of this section.

B. Codes and Regulations: In accordance with the following documents:

1. American National Standards Institute (ANSI), ANSI A117.1, latest edition - Providing Accessibility and Usability for Physically Disabled People.

2. State of California, Code of Regulations, Title 24, Chapter 11B – Accessibility to Public Buildings, Public Accommodations, Commercial Buildings and Publicly Funded Housing, Section 1129B.5 – Identification of Parking Spaces for Off-Street Parking Facilities.

3. Los Angeles City Building Code and Amendment.

1.3 SUBMITTALS

A. Comply with pertinent provisions of Section 01340 – SUBMITTALS of Division 1 GENERAL REQUIREMENTS of the Project Manual.

B. Product Data: Within 35 calendar days after the Contractor has received the City's Notice-To-Proceed, submit list of material, product data of items proposed to be provided under this Section.

C. Shop Drawings: Submit drawings including elevations of each type of sign; dimensions, details, and methods of mounting; shape and thickness of materials; and details of construction.

1.4 PRODUCT HANDLING

A. Protection: Protect the concrete footing, the posts and signs before, during and after installation. Protect from the paving operations.

B. Delivery: Deliver all items to be built into concrete footing in time so as not to delay construction and installation operations.

C. Storage: Properly store all material until time for installation.

PART TWO - PRODUCTS

*2.1 STANDARD PRODUCTS

A. Signs shall be as manufactured by Western Highway Products Inc., Stanton, CA. (714-761-4811) or equal.

B. Signs shall be complete with lettering, framing, and related components for a complete installation. Materials and equipment shall be the standard product of a manufacturer regularly engaged in the manufacture of the products. Items of equipment shall essentially duplicate equipment that has been in satisfactory use at least 2 years prior to bid opening.

*2.2 MATERIAL AND FABRICATION

A. Posts: Provide two-piece, 2 inches x 2 inches x 1/9 inch thick x9 feet high galvanized steel tabular post and sleeve. Post shall be designed to accept panel framing system and shall be designed to permit attachment of panel

framing system without exposed fasteners. Caps shall be provided for each post.

B. Panel Framing System: Panel framing consisting of galvanized steel sections and interlocking track components shall be designed to interlock with posts with concealed fasteners. Top and bottom framing members shall be removable to permit panel removal.

C. Panels: Modular message panels shall be provided in sizes, [not less than 18 inches wide x 27 inches high], [as shown on contract drawings]. Constructed of reflective sheeting laminated to 18-gage heavy duty sheet steel and silk screened in transparent blue with “Disabled Symbol” and the appropriate message in white. Panels shall be designed to be interchangeable. Panels with metal return sheeting shall have welded corners, ground smooth.

2.3 FINISHES

A. Post finish shall be semi-gloss baked enamel or two-component acrylic polyurethane.

B. Metal panel framing system finish shall be baked enamel or two-component acrylic polyurethane, as standard with the sign manufacturer.

*2.4 GRAPHICS

A. Graphics and message shall be applied to panel using the silkscreen process. Silkscreened images shall be executed with photo screens prepared from original art. No handcut screens will be accepted. Original art shall be defined as artwork that is a first generation stencil of the original specified art. Edges and corners shall be clean. Rounded corners, cut or ragged edges, edge buildup, bleeding or surfaces pinholes will not be accepted.

At least one parking sign with “Disabled Symbol” plus the message “Van Accessible” shall be provided. Other accessible parking signs shall be provided with “Disabled Symbol”.

An additional sign shall also be posted in a conspicuous place at the entrance and it shall state the following:

> “Unauthorized vehicles parked in designated handicapped space not displaying distinguishing placards or license plates issued for physically disabled persons may be towed away at owner’s expense. Towed vehicles may be reclaimed at (address) or by telephone (number)”.

The blank spaces are to be filled in with appropriate information as a permanent part of the sign by the Contractor.

B. Graphics, message, and colors shall be in accordance with ANSI A117.1. The type face shall be Helvetica medium. All lettering shall not less than one (1) inch in height.

*3.1 INSTALLATION

A. Signs shall be installed at locations shown on the drawings, plumb and true. Bottom of the sign shall be 80 inches above the finish grade of the parking lot or floor.

B. Permanent mounting shall be provided by fastening to 12 inch post sleeve embedded in concrete foundations. Foundations shall be not less than 12 inches in diameter and 24 inches deep with the top one inch above the paving. The top of the foundation shall be shaped/sloped to drain water away from the post. Concrete shall have a minimum compressive strength of 2500 psi at 28 days. Metal sleeve shall be installed 2 inches in the concrete foundation above about the top of concrete and secured with the post; all subgrade, base course and paving shall be compacted and placed around the foundation.

3.2 PROTECTION AND CLEANING

A. The work shall be protected against damage during construction. Keep the signage clean until final acceptance of the work.

END OF SECTION

SECTION 11815
SLIDE/STOP GATES

PART 1 -- GENERAL

1.1 THE REQUIREMENT

A. The CONTRACTOR shall furnish and install slide/stop gates in the sizes and locations shown, complete and operable, including manual and electric operators, bracing, frame, mountings, etc., as specified herein, in accordance with the requirements of the Contract Documents.

1.2 REFERENCE SPECIFICATIONS, CODES AND STANDARDS

A. Comply with the applicable reference specifications as specified in the GENERAL REQUIREMENTS.

B. Comply with the current provisions of the following Codes and Standards.

ASTM A193A	Specification for Alloy-Steel and Stainless Steel Bolting Materials for High-Temperature Service.
ASTM A194A	Specification for Carbon and Alloy Steel Nuts for Bolts for High Pressure and High-Temperature Service.
ASTM A240	Chromium and Chromium-Nickel Stainless Steel.
ASTM A283	Low and Intermediate Tensile Strength Carbon Steel Plates.
ASTM A380	Standard Practice for Cleaning, De-scaling and Passivation of Stainless Steel Parts, Equipment and Systems.
ASTM D638	Test Method for Tensile Properties of Plastics.
ASTM D790	Test Methods for Flexural Properties of Unreinforced and Reinforced Plastics and Electrical Insulating Materials.
ASTM D2240	Test Method for Rubber Property-Durometer Hardness.
ASTM E 84-91A	Surface Burning Characteristics
ASTM D3982-92	Standard Specifications for Contact Molded “Fiberglass” Glass Fiber Reinforced Thermosetting Resin Duct and Hoods.
ASTM C582	Standard Specifications for Contact Molded Reinforced Thermosetting Plastic (RTP).
ASTM D5241-93	Standard Specifications for Contact Molded Glass-Fiber-Reinforced Thermosetting Resin Flanges.
ASTH D4024-00	Standard Specifications for Reinforced Thermosetting Resin (RTR) Flanges.
NBS PS 15-69	Custom Contact-Molded Reinforced-Polyester Chemical-Resistant Process Equipment.

UL 181 Standard for Factory Made Air Ducts and Air Connectors.

* When two or more of the above regulations are applicable, the more stringent requirement shall be met.

1.3 CONTRACTOR SUBMITTALS

A. Submittals shall be made in accordance with the GENERAL REQUIREMENTS.

B. Shop Drawings: The CONTRACTOR shall submit complete shop drawings of all gates, frames, slides, and operators, as well as design load calculations for deflection at the maximum expected head, and calculations for the lifting force required to lift the gate with 40 pounds effort on the handwheel or crank.

1.4 QUALITY ASSURANCE

A. Comply with Section 11000 "Equipment General Provisions."

B. The leakage allowance for slide gates shall not exceed 0.1 gpm/ft of seating perimeter under 20 ft of seating head, and 0.2 gpm/ft under 20 ft of unseating head, to meet ANSI/AWWA C-501.

PART 2 -- PRODUCTS

2.1 GENERAL REQUIREMENTS

A. All plastic and fiberglass items shall be manufactured with the "matched die-molded method," of material suitable for potable water, and shall be certified for such use on the shop drawings. Bolts, anchor bolts, nuts, washers, and supports shall be provided for all plastic and fiberglass items in accordance with the requirements of the manufacturers of the plastic and fiberglass items. All bolts, anchor bolts, washers, and supports required in connection with the plastic or fiberglass items shall be of Type 316 stainless steel.

B. All gates shall be new and of current manufacture, and adequately braced to prevent warpage and bending under the intended use. Where designated, gates shall be furnished with electric operators provided by the gate manufacturer. All operators of a given type shall be furnished by the same manufacturer.

C. All gates shall be furnished with a handwheel, crank-operated or electrically operated floor stand, having a 2:1 gear ratio, or 2-inch square operating nut, as shown on drawings, and shall conform to ANSI/AWWA C501, except as otherwise specified herein.

D. Operating Mechanism: Operators shall be weatherproof, equipped with stem covers, and shall be mounted on cast-iron or fabricated steel pedestals. Actuator shall be placed in an adjacent dry vault as shown on the drawings. The pedestal shall have an ample base or bracket area to evenly distribute the load to the supporting structure. The center line of the manual operator shall be approximately 3-feet above the base of the pedestal. The unit shall be designed so that a maximum of 40 pounds effort on the crank will operate the gate. Clockwise movement of the handwheel shall close the gate. The operating crank shall be easily removable to facilitate the use of a portable power operator.

E. Coating: Each gate and all accessories shall be epoxy-coated as specified in Section 09800 Protective Coating. Care shall be exercised to protect all machined surfaces during sandblasting and coating.

1. Cleaning and Finishing stainless steel welded fabrication:

a. Cleaning of weld joints and weld joint areas both before and after welding, shall

conform to ASTM A380. Use only stainless steel brushes or stainless steel wool.

b. Finishing: All weld areas following fabrication shall be pickled to remove all mill scale, weld inclusions, and color, and passivated in conformance to ASTM A380.

c. Contractor shall submit the cleaning and passivation procedure in compliance with the above requirements for ENGINEER's review and approval.

F. Stems: Stems shall be of Type 316 stainless steel and shall be provided with Type 316 stainless steel adjustable bushed stem guides to ensure that the L/R ratio of the stem does not exceed 200.

2.2 ALUMINUM SLIDE GATES

A. Construction: Aluminum slide gates shall be self-contained, or as shown, crank or handwheel-operated, with Type 316 stainless steel operating stem. Aluminum gates in liquids with a pH lower than 5, or higher than 9, shall be anodized. The gates shall have stiffeners, extruded aluminum frames with bearing bars of ultra high molecular weight polymer, resilient P-seals, and fully lubricated stems and operators.

B. Manufacturers:

1. Waterman

2. Fontaine Aquanoz Water Control Products

3. Whipps

4. Or equal.

PART 3 -- EXECUTION

3.1 INSTALLATION

A. Slide gates shall be installed in strict accordance with the manufacturer's printed recommendations and the requirements herein. Operators shall be located to avoid interference with handrails and structural members.

B. All damage to surface coatings incurred during shipment and/or installation shall be repaired to the satisfaction of the ENGINEER prior to installation.

END OF SECTION

SECTION 13200
MODULAR BURIED STORMWATER INFILTRATION AND DESILTING BASIN SYSTEM

PART 1 - GENERAL

1.1 RELATED DOCUMENTS

A. Drawings and general provisions of the Contract, including General and Supplementary Conditions and Division 01 Specification Sections, apply to this Section.

1.2 SUMMARY

A. This Section includes the performance criteria, materials, design, production, and installation for precast concrete, modular, buried, stormwater desilting basins and infiltration units that together form the stormwater infiltration system. The Work performed under this Section includes all labor, materials, equipment, related services, and supervision required for the supply, installation and commissioning of the precast concrete, modular, buried, stormwater storage and infiltration units and accessories formed into the infiltration system.

1.3 RELATED SPECIFICATIONS

A. All precast concrete for this Section shall comply with the requirements of Section 03400 Precast Concrete.

1.4 SUBMITTALS

A. Submittals shall conform to Section 01330 Shop Drawings/Submittals.

B. Action Submittals

1. Shop Drawings and Calculations

a. Stormwater Infiltration system layout drawings indicating each separate unit type and location, system dimensions, access locations and types, floor infiltration openings vent locations, and other information needed to provide an understanding of the complete system to be supplied.
b. Detail fabrication and installation of structural precast concrete units including joint interface at member ends and to each adjoining member.
c. Indicate locations, plan views, elevations, dimensions, shapes, and cross sections of each unit, openings, inlet and outlet pipe openings, vents, and level sensors, and other equipment openings, support conditions and types of reinforcement, including special reinforcement.
d. Detail loose and embedded hardware, lifting and erection inserts, connections, and interface surfaces.
e. Indicate location and details of joint treatment for sealing of joints.

f. Submit signed and sealed reinforcing drawings for all precast units by a Structural Engineer registered in the State of California.
g. Submit structural calculations and design for cast-in-place modules for approval in accordance with Section 01330 Shop Drawings/Submittals. This also applies to modules that do not fit the 6'x8' access hatch requirements.

C. Concrete Design Mixtures

1. Include a submittal for each concrete design mixture including both 7-day and 28-day compressive strength. Submit Concrete Mix Design signed and sealed by a Structural Engineer registered in the State of California.
2. Water Storage Sizing:

a. Include supporting data to confirm the stormwater infiltration system is sized with sufficient water storage capacity per the Drawings.
b. Alternative stormwater infiltration systems to any Specified system shall include a continuous simulation hydrologic model that supports how the system is sized with sufficient water storage capacity, conforms to the required draw-down time, and conforms to the release rates and other pertinent design parameters as detailed on the Plans and in the Specifications. The continuous simulation hydraulic model and results shall be reviewed and will require Approval by the Engineer or the Owner's authorized representative prior to acceptance of an alternative system.

D. Informational Submittals

1. Material Test Reports:

a. Aggregates: Material test reports shall be from an accredited agency indicating and interpreting test results for compliance with Reference Standards and Specifications as detailed herein.
b. Compressive Strength: Concrete compressive strength test results shall be supplied for 25% of the batches of concrete utilized in the production of the precast concrete, modular, buried, infiltration system.

2. Material Certifications: Material certifications shall be signed by the Manufacturers certifying that each of the following items comply with the Reference Standards and Specifications as detailed herein.

a. Cementitious materials.
b. Reinforcing materials.
c. Admixtures.
d. Bearing pads.
e. Sealants.
f. Gaskets.

3. Operations and Maintenance Manual.

a. Contractor Provided Installation Verification: The installation of the subsurface stormwater infiltration system shall be verified by a California Licensed Professional Engineer and a certification provided indicating that the system has

been constructed and is in substantial conformance with the Shop Drawings, Project Drawings and Specifications.

b. Provide an operations and maintenance manual that includes recommended maintenance schedule and tasks, personnel, access requirements, health and safety, equipment, and standard operating procedures.

1.5 DELIVERY, STORAGE, AND HANDLING

A. Deliver all precast concrete members in such quantities and at such times to assure compliance with the agreed upon Project schedule and setting sequence to ensure continuity of installation.

B. Transport and handle members in a manner that will avoid excessive stresses that could cause cracking or other damage.

C. Store individual precast members with adequate dunnage and bracing, and protect units to prevent contact with soil, staining, and to control cracking, distortion, warping or other physical damage.

D. Store individual precast members with dunnage across the full width of each bearing point unless otherwise Specified or shown on the Shop Drawings.

E. Place stored members so that identification marks are clearly visible and units can be inspected.

F. Place dunnage of even thickness between each member.

G. Precast members shall be stacked according to the manufacturer's recommendation.

H. Lift and support precast members as per manufacturer's recommendations only at designated points indicated on the Shop Drawings. Do not drag, slide or push members.

I. Accessories:

1. Accessory components shall be delivered in the manufacturer's original, unopened packaging and/or containers with labels that clearly identify the make, model, date of fabrication, and manufacturer.
2. Accessory components shall be stored in a clean, dry area out of direct sunlight.

PART 2 - PRODUCTS

2.1 MODULAR BURIED STORMWATER DESILTING BASIN AND INFILTRATION UNITS

A. Manufacturers: Subject to compliance with requirements, provide products manufactured by one of the following:

1. Bio Clean Environmental, 5796 Armada Drive, Suite 250, Carlsbad, CA 92008; Phone: (855) 566-3938, www.biocleanenvironmental.com, Contact: Michael Frasco (310) 595-4583 (Los Angeles, CA)

2. Jensen Precast, 14221 San Bernardino Ave., Fontana, CA 92335, Phone: (909) 350-4111, www.jensenprecast.com, Contact: Matthew Blaylock (909) 429-3174.
3. OldCastle Infrastructure, 10650 Hemlock Ave., Fontana, CA 92337, Phone: (909) 428-3700, oldcastleinfrastructure.com, Contact: Xiaoyu Zhang, (323) 430-3138 (Los Angeles).
4. Precon Products, 240 W. Los Angelese Ave., Simi Valley, CA 93065; Phone: (805) 527-0841, www.pre-conproducts.com; Contact: Dan Zarraonandia, (805) 306-2494.
5. StormTrap, 1287 Windham Parkway, Romeoville, IL 60446; Phone: (815) 941-4549 stormtrap.com; Contact: Charlie Carter, (760) 212-5628.
6. Approved equal.

B. Design and Performance Requirements:

1. Water Storage Capacity: Underground stormwater infiltration system with minimum water storage capacities as indicated on the Drawings and Specifications. The storage volume to reflect any necessary freeboard.
2. System Footprint: Underground infiltration system footprint to be within the site limit restrictions shown on the Drawings. Design system to prevent hydraulic blockage in the longitudinal, lateral or diagonal directions with the exception of areas designated as sedimentation basins. Sedimentation basins shall be designed to the dimensions, locations, etc. as shown on the Drawings without deviation.
3. System Configuration:

    a. Underground stormwater infiltration system to meet one of the following two layout requirements:

        1) Total area of infiltration openings in the concrete base of the infiltration units to meet the minimum required area identified on the drawings. Provide easily removable and replaceable filter fabric units to prevent sediment from entering and clogging the crushed rock voids of the bedding below the infiltration system. Filter fabric to cover all infiltration openings to filter all stormwater that passes through these openings and to not restrict the hydraulic characteristics of the infiltration system if 90% clogged by sediment. Filter fabric shall meet the requirements of Section 02660 Geotextile Filter Fabrics.
        2) Total area of infiltration openings at the concrete base of the infiltration units to be a minimum of 40% of the total area of the infiltration system.

4. Maintenance Access:

    a. Access to be provided for maintenance staff entry into the underground infiltration system. Access locations, sizes and types to be provided at the site locations shown on the Drawings.
    b. Maintenance access for mechanized equipment to be provided that allows access to all locations within the infiltration system through continuous forward motion of the equipment with a turning radius of 2.5 feet without the need for three-point turn arounds.
    c. The stormwater infiltration system shall be designed with no internal ledges, steps, slopes, or walls that would impede the maintenance vehicle pathway.

5. Ventilation: Vents to be provided in locations as shown on the drawings.
6. Structural Performance: Underground stormwater infiltration units capable of withstanding design loads as indicated on the Drawings and Specifications and as detailed herein:

    a. Dead Loads:

        1) Soil load based on minimum and maximum depth of burial as indicated on the Drawings using a minimum of 120 pcf soil density.
        2) Lateral soil pressures based on a minimum “At Rest Earth Pressure” of 60 pcf.
        3) Other dead loads as indicated on the Drawings.

    b. Live Loads:

        1) Able to sustain HS20 loading requirements without damage to the structure; ACI 350 and ACI 318 based on minimum and maximum depths of burial as indicated on the Drawings.
        2) For burial depths less than two feet including at manned access locations a concentrated point load shall be utilized for the calculated live load.

    c. Interior Water Load:

        1) A minimum of 62.4 pcf water density at the maximum water storage depth as indicated on the Drawings. Evaluation of loads on infiltration units to be based on both the maximum water storage volume depth and dry infiltration unit conditions.

    d. Seismic Loads to be based on project Geotechnical Report in the Appendix.
    e. Other Loads (if any) to be determined using the following:

        1) As detailed on the Drawings of otherwise listed in the specifications.

7. Materials and Concrete Thicknesses: Structural precast concrete, modular, buried, stormwater desilting basin and infiltration units to be designed in accordance with ACI 350, ACI 350.3, and ACI 318 latest edition and the details listed herein;

    a. Cement: Type II/V Portland cement; ASTM C150.
    b. Aggregate: ASTM C33, except for gradation requirement
    c. Reinforcement to consist of steel bar conforming to ASTM A615, Grade 60/80, glass fiber reinforced polymer bars conforming to ASTM D7957, or mesh conforming to ASTM A1064, Grade 60/80.
    d. All desilting and stormwater infiltration units to be cured by an approved method. Do not ship until concrete has attained full design compressive strength as determined by a California Licensed Professional Engineer (and in no case less than 2,000 psi compressive strength).
    e. Wall thickness, and top slab thickness of the desilting basin and infiltration units to conform to ACI 350 and ACI 318 and shall be no less than the minimum thickness necessary to sustain soil loading plus HS20 loading requirements as determined by a Licensed Professional Engineer in the State of California.

f. Wall thickness, top slab thickness and bottom slab thickness of the desilting and infiltration units to be no less than the minimum thickness necessary to sustain the expected soil loading based on a minimum of 120 pcf for soil density at the required burial depths as determined by a Licensed Professional Engineer in the State of California.

g. Wet mix concrete or self-consolidating concrete (SCC) with a water/cement ratio of no greater than 0.40 to be utilized for all precast elements and any field cast elements. Dry cast concrete is not to be used in order to maintain dimensional tolerances and to ensure adequate consolidation around heavy reinforcement.

h. The interior assembled floor of the infiltration units is to be flat to within ½" and not sloped greater than 1%. The top of concrete at the floor of the desilting basin units is to be within ½" and not sloped greater than 1% more or less than the slope indicated on the drawings.

i. All vertical load bearing elements to contain transverse reinforcement per ACI 350 and ACI 318 to provide confinement and ensure that spalling of the shell concrete does not result in a loss of axial load strength.

j. Minimize horizontal structural irregularities in interior space to prevent unpredictable movement during a design seismic event.

8. Openings and Risers:

a. Pipe Openings: ASTM C595 or ASTM C1107. Sized to accept pipes of the specified size(s) and material(s) as indicated on the Drawings and shall be sealed by the Contractor with hydraulic cement.

b. Access Risers: ASTM A478 for round access risers and ASTM C857 and ASTM C858 for square/rectangular access risers and provide for an access opening with a minimum dimension of 48-inches.

c. Leveling: Brick or masonry used to level the manhole frames and covers to finished grade; ASTM C32 or ASTM C139 and to be installed in conformance with all local requirements.

9. Warranty Period – Material supplier shall provide a minimum 5-year materials warranty.

C. Accessories:

1. Spacer/Backer (for use between concrete members): 1/2-inch thick x 4-inch wide closed-cell polypropylene foam; ASTM D8139, ASTM D1751, and ASTM D545.
2. Joint Filler (for use between concrete member floors): Non-shrink hydraulic cement; ASTM C595 or C1107.
3. Joint Sealer (for use between concrete member floors): Cold-applied, water proof membrane; ASTM C836.
4. Joint Sealer (for use between concrete member walls): Rapid-cure, elastomeric sealant; ASTM C920.
5. Joint Sealer (to span between concrete member roofs): Polyolefin backed exterior joint wrap; ASTM C877.

2.2 EXCAVATION, BACKFILL AND SOIL MATERIALS

A. Excavation, backfill, soil and bedding materials are specified in Section 02310 Earthwork.

2.3 CAST-IN-PLACE CONCRETE

A. Cast-in-Place Concrete is specified in Division 3.

2.4 ACCESS HATCHES AND MANHOLE FRAMES AND COVERS

A. Manhole frames and covers, and access hatches are specified in Section 02585 Maintenance Hole and Precast Vault Construction.

2.5 FILTER FABRICS

A. Filter fabric to be installed in the filter units in the base of the infiltration gallery to:

1. Filters shall meet the following requirements:

    a. Filters particles to 50 microns in size,
    b. Removes a minimum of 99% of total suspended solids (TSS);
    c. Removed oil and grease to be non detectable;
    d. Flow rate of 100 gpm per sq-ft; and
    e. Minimum gross solids removal of 90%.

2. Product to be Absorb-it Catch Basin Filter Basket, or approved equal.

B. Filter fabric to be installed around the Infiltration Gallery structure to be:

1. EX Description: Fabric of PP or polyester fibers or combination of both, with flow rate range from 110 to 330 gpm/sq. ft. (4480 to 13 440 L/min. per sq. m) when tested according to ASTM D4491.
2. Structure Type: Nonwoven, needle-punched continuous filament. Class 2 in first subparagraph below is the default class recommended by AASHTO. Survivability to meet AASHTO M 288 Class 2; with styles flat and sock.

PART 3 - EXECUTION

3.1 EXAMINATION

A. Examine all surfaces and areas for suitable conditions beneath the modular buried stormwater infiltration system and desilting basins and to a limit of 2 feet outside each structure where crushed stone will be placed for infiltration. Notify Engineer if existing soil area is not acceptable for infiltration.

B. If subsurface drainage is required for landscaping, locate and mark existing utilities, underground structures, and aboveground obstructions before beginning installation and avoid disruption and damage of services.

C. Verify that drainage panels installed as part of foundation wall waterproofing are properly positioned to drain into subsurface drainage system.

D. Proceed with installation only after unsatisfactory conditions have been corrected.

3.2 EARTHWORK

A. Excavating, trenching, and backfilling are specified in Section 02310 Earthwork.

3.3 STORMWATER INFILTRATION SYSTEM INSTALLATION

A. General Locations and Arrangements: As indicated on Shop Drawings.

B. Install per ASTM C891. Follow manufacturer's written instructions where specific installation procedures are not indicated.

C. Inspect all precast concrete members for defects and cracks before being lowered into the excavation. Remove and replace defective, damaged or unsound structures or products whose grade is disturbed after laying. Ensure interior of treatment system is free from dirt, excess water and foreign materials as installation progresses; leave in a clean condition at completion of the installation.

3.4 EXCAVATION

A. Excavate pit to ensure side slopes will be stable under working conditions. Slope trench walls or provide shoring or bracing in conformance with federal, state, and local safety standards. Excavate only as much as can be safely maintained by available equipment.

B. Where excavation walls are stable or supported, provide width sufficient, but no greater than necessary, to ensure working room to properly and safely place and compact embedment materials. Provide space between infiltration system and excavation wall that is wider than compaction equipment used in compaction area.

C. Dewatering:

Do not lay or embed any precast concrete member in standing or running water. Prevent surface runoff from entering excavation at all times.

1. When water is present in work area, dewater to maintain stability of in-situ and imported materials. Maintain water level below infiltration system bedding and foundation to provide a stable excavation bottom. Use, as appropriate, sump pumps, well points, deep wells, geofabrics, perforated underdrains, or stone blankets of sufficient thickness to remove and control water in all excavations. When excavating while depressing ground water, ensure that ground water is kept below bottom of cut at all times to prevent washout from behind sheeting or sloughing of exposed excavation walls. Maintain control of water in excavation before, during, and after stormwater infiltration system

installation and until covering embedment is installed and sufficient backfill has been placed to prevent flotation of system, attached piping, or accessory drainage structures.

D. Removal of Unstable Material:

1. Where wet or otherwise unstable soil incapable of properly supporting the infiltration system, as determined by Engineer, is encountered in bottom of an excavation, remove the material to at least 24 inches below the bottom of the system and replace to proper grade with select granular material, compacted as directed by Engineer. Removal of unstable material created due to fault or neglect of Contractor while performing shoring and sheeting, water removal, or other specified requirements, shall be performed at no additional cost to Owner.

3.5 PLACING PRECAST CONCRETE MEMBERS

A. Examine each precast concrete member for defects before placement; do not use defective or damaged members. Place precast concrete members within ± ¾-inch of elevations as indicated on Drawings. Provide proper equipment for lowering and setting precast concrete members into the excavation. Do not lay precast concrete members in water, and do not lay members when trench conditions or weather are unsuitable for such work. Provide diversion of drainage or dewatering of excavations as directed by Engineer and as indicated in Section 3.4 C.

B. Place a ½" thick x 4" wide closed-cell polypropylene foam gasket conforming to ASTM D8139, ASTM D1751, and ASTM D545 on all sides of precast concrete members that will abut an adjacent member. Keep foam gasket members in place to ensure proper alignment and act as backer material for subsequent sealing.

C. Place and align precast concrete members to within ½-inch of each other horizontally and vertically.

D. Use a random-oriented fiber bearing pad conforming to ASTM D4014 and ASTM D5992 between members with a minimum bearing surface area of 18 square-inches for precast members transferring vertical loads to other members or slabs.

1. Minor misalignment of upper sections on slab or upper sections on other members may be adjusted through shimming using random oriented fiber pads conforming to the ASTM D4014 and ASTM D5992, provided the minimum bearing surface area is maintained.

3.6 JOINTING/SEALING

A. Seal joints on exterior top and side surface using a polyolefin backed exterior joint wrap conforming to ASTM C877. Span joint wrap by a minimum of 6-inches on either side of the joint.

B. Protect sealed joints from damage during placement of additional members and during final backfill. Re-seal joints damaged during construction.

3.7 BACKFILLING

A. General:

1. Backfill placement and compaction shall be constructed in accordance with the Specifications herein and the product manufacturer's published installation guides.

B. Backfilling Stormwater Infiltration System in Excavation:

1. After precast concrete member and accessory drainage connections have been properly bedded, select material from excavation or borrow, at a moisture content that will facilitate compaction as described on the project geotechnical report, shall be placed along all sides of the system in layer depths to ensure minimum compaction density is obtained evenly throughout the backfill material. Bring backfill up evenly on all sides of structure. Compact each layer with mechanical tampers or rammers. The lift thickness for fill soils will depend on the type of compaction equipment used, but generally should not exceed 8 inches in loose thickness. Tests for density as necessary to ensure conformance to compaction requirements as Specified in Geotechnical Evaluation Report. Where necessary, in the opinion of the Engineer, that sheeting or portions of bracing used to be left in place, the contract will be adjusted accordingly. Do not leave untreated wood sheeting or shoring in place beneath structures or pavements.

C. Movement of Construction Machinery:

1. Movement of construction machinery over the stormwater infiltration system at any stage of construction shall be at the Contractor's risk. Remove and replace any damaged precast member. Do not load equipment used during construction greater than H20 per AASHTO. Do not permit equipment to operate over top of the stormwater infiltration system with less than 12-inches of structural cover.

3.8 CONNECTIONS

A. Comply with requirements for piping specified in Section 02545 Storm Drain System. Drawings indicate general arrangement of piping, fittings, and specialties.

3.9 FIELD QUALITY CONTROL

A. Inspect all precast concrete members, accessories, and aggregate material used during installation prior to installation and replace defective, damaged or non-conforming material.

B. Precast Concrete Members: Reject units:

1. With a fracture or continuous crack greater than 12 inches in length or 0.01 inch in width.
2. That have not reached required design strength based on laboratory test results.
3. With indications of imperfections in mixing and/or molding, honeycombed, or open textured surface.
4. With indications of substantial patches or repairs.
5. With exposed reinforcing steel.

C. Accessories: Free from defects and damage.

D. Tests and Inspections:

1. After installing drainage course to top of piping, test drain piping with water to ensure free flow before backfilling.
2. Remove obstructions, replace damaged components, and repeat test until results are satisfactory.

E. Drain piping will be considered defective if it does not pass tests and inspections.

F. Prepare test and inspection reports.

3.10 CLEANING

A. Clear interior of installed piping and structures of dirt and other superfluous material as work progresses. Maintain swab or drag in piping and pull past each joint as it is completed. Place temporary plugs in ends of uncompleted pipe at end of each day or when work stops.

END OF SECTION

SECTION 15270
MECHANICAL SYSTEMS COMMISSIONING

PART 1 – GENERAL

1.01 DESCRIPTION

A. The purpose of this section is to specify Division 15 responsibilities in the commissioning process.

B. The systems to be commissioned are listed in Section 01810.

C. Commissioning requires the participation of Division 15 to ensure that all systems are operating in a manner consistent with the Contract Documents. The general commissioning requirements and coordination are detailed in Division 01, Section 01810. Division 15 shall be familiar with all parts of Division 01, Section 01810 and the commissioning plan issued by the CA and shall execute all commissioning responsibilities assigned to them in the Contract Documents.

1.02 RESPONSIBILITIES

A. Mechanical, Controls and TAB Contractors. The commissioning responsibilities applicable to each of the mechanical, controls and TAB contractors of Division 15 are as follows (all references apply to commissioned equipment only):

1. Construction and Acceptance Phases

a. Include and itemize the cost of commissioning in the contract price.
b. In each purchase order or subcontract written, include requirements for submittal data, commissioning documentation, O&M data and training.
c. Attend a commissioning kickoff meeting and other meetings necessary to facilitate the commissioning process.
d. Contractors shall provide the CA with normal cut sheets and shop drawing submittals of commissioned equipment.
e. Provide additional requested documentation, prior to normal O&M manual submittals, to the CA for development of start-up and functional testing procedures.

(1) Typically this will include detailed manufacturer installation and start-up, operating, troubleshooting and maintenance procedures, full details of any owner-contracted tests, fan and pump curves, full factory testing reports, if any, and full warranty information, including all responsibilities of the Owner to keep the warranty in force clearly identified. In addition, the installation, start-up and checkout materials that are actually shipped inside the equipment and the actual field checkout sheet forms to be used by the factory or field technicians shall be submitted to the Commissioning Agent.
(2) The Commissioning Agent may request further documentation necessary for the commissioning process.
(3) This data request may be made prior to normal submittals.

f. Provide a copy of the O&M manuals and submittals of commissioned equipment, through normal channels, to the CA for review and approval.
g. Contractors shall assist (along with the design engineers) in clarifying the operation and control of commissioned equipment in areas where the specifications, control drawings or equipment documentation is not sufficient for writing detailed testing procedures.
h. Provide limited assistance to the CA in preparing the specific functional performance test procedures as specified in Section 15997. Subs shall review test procedures to ensure feasibility, safety and equipment protection and provide necessary written alarm limits to be used during the tests.
i. Develop a full start-up and initial checkout plan using manufacturer's start-up procedures and the prefunctional checklists from the CA for all commissioned equipment. Submit to CA for review and approval prior to startup. Refer to Section 01810 for further details on start-up plan preparation.
j. During the startup and initial checkout process, execute the mechanical-related portions of the prefunctional checklists for all commissioned equipment.
k. Perform and clearly document all completed startup and system operational checkout procedures, providing a copy to the CA.
l. Address current A/E punch list items before functional testing. Air and water TAB shall be completed with discrepancies and problems remedied before functional testing of the respective air- or water-related systems.
m. Provide skilled technicians to execute starting of equipment and to execute the functional performance tests. Ensure that they are available and present during the agreed upon schedules and for sufficient duration to complete the necessary tests, adjustments and problem solving.
n. Provide skilled technicians to perform functional performance testing under the direction of the CA for specified equipment in Section 15997 and 01810. Assist the CA in interpreting the monitoring data, as necessary.
o. Correct deficiencies (differences between specified and observed performance) as interpreted by the CA, CM and A/E and retest the equipment.
p. Prepare O&M manuals according to the Contract Documents, including clarifying and updating the original sequences of operation to as-built conditions.
q. During construction, maintain as-built red-line drawings for all drawings and final CAD as-builts for contractor-generated coordination drawings. Update after completion of commissioning (excluding deferred testing).
r. Provide training of the Owner's operating staff using expert qualified personnel, as specified.
s. Coordinate with equipment manufacturers to determine specific requirements to maintain the validity of the warranty.

2. Warranty Period

a. Execute seasonal or deferred functional performance testing, witnessed by the CA, according to the specifications.
b. Correct deficiencies and make necessary adjustments to O&M manuals and as-built drawings for applicable issues identified in any seasonal testing.

B. Mechanical Contractor. The responsibilities of the HVAC mechanical contractor, during construction and acceptance phases in addition to those listed in (A) are:

1. Provide startup for all HVAC equipment, except for the building automation control system, if any.
2. Assist and cooperate with the TAB contractor and CA by:

    a. Putting all HVAC equipment and systems into operation and continuing the operation during each working day of TAB and commissioning, as required.
    b. Including cost of sheaves and belts that may be required by TAB.
    c. Providing test holes in ducts and plenums where directed by TAB to allow air measurements and air balancing. Providing an approved plug.
    d. Providing temperature and pressure taps according to the Construction Documents for TAB and commissioning testing.
    e. Install a P/T plug at each water sensor, which is an input point to the control system.
    f. List and clearly identify on the as-built drawings the locations of all air-flow stations.
    g. Prepare a preliminary schedule for Division 15 pipe and duct system testing, flushing and cleaning, equipment start-up and TAB start and completion for use by the CA. Update the schedule as appropriate.
    h. Notify the GC, CM or CA depending on protocol, when pipe and duct system testing, flushing, cleaning, startup of each piece of equipment and TAB will occur. Be responsible to notify the GC, CM or CA, ahead of time, when commissioning activities not yet performed or not yet scheduled will delay construction. Be proactive in seeing that commissioning processes are executed and that the CA has the scheduling information needed to efficiently execute the commissioning process.

C. Controls Contractor. The commissioning responsibilities of the controls contractor, during construction and acceptance phases in addition to those listed in (A) are:

1. Sequences of Operation Submittals. The Controls Contractor's submittals of control drawings shall include complete detailed sequences of operation for each piece of equipment, regardless of the completeness and clarity of the sequences in the specifications. They shall include:

    a. An overview narrative of the system (1 or 2 paragraphs) generally describing its purpose, components, and function.
    b. All interactions and interlocks with other systems.
    c. Detailed delineation of control between any packaged controls and the temperature control system, listing what points the temperature control system monitors only and what points are control points and are adjustable.
    d. Written sequences of control for packaged controlled equipment. (Equipment manufacturers' stock sequences may be included, but will generally require additional narrative).
    e. Start-up sequences.
    f. Warm-up mode sequences.
    g. Normal operating mode sequences.

h. Unoccupied mode sequences.
i. Shutdown sequences.
j. Capacity control sequences and equipment staging.
k. Temperature and pressure control: setbacks, setups, resets, etc.
l. Detailed sequences for all control strategies, e.g., economizer control, optimum start/stop, staging, optimization, demand limiting, etc.
m. Effects of power or equipment failure with all standby component functions.
n. Sequences for all alarms and emergency shut downs.
o. Seasonal operational differences and recommendations.
p. Initial and recommended values for all adjustable settings, setpoints and parameters that are typically set or adjusted by operating staff; and any other control settings or fixed values, delays, etc. that will be useful during testing and operating the equipment.
q. Schedules, if known.
r. To facilitate referencing in testing procedures, all sequences shall be written in small statements, each with a number for reference. For a given system, numbers will not repeat for different sequence sections, unless the sections are numbered.

2. Control Drawings Submittal

a. The control drawings shall have a key to all abbreviations.
b. The control drawings shall contain graphic schematic depictions of the systems and each component.
c. The schematics will include the system and component layout of any equipment that the control system monitors, enables or controls, even if the equipment is primarily controlled by packaged or integral controls.
d. Provide a full points list with at least the following included for each point:

(1) Controlled system
(2) Point abbreviation
(3) Point description (DB temp, airflow, etc.)
(4) Display unit
(5) Control point or setpoint (Point that controls equipment and can have its setpoint changed, e.g. OSA, SAT, etc.)
(6) Monitoring point (Point that does not control or contribute to the control of equipment, but is used for operation, maintenance, or performance verification)
(7) Intermediate point (Point whose value is used to make a calculation which then controls equipment, e.g. space temperatures that are averaged to a virtual point to control reset)
(8) Calculated point (“Virtual” point generated from calculations of other point values)

e. The Controls Contractor shall keep the CA informed of all changes to this list during programming and setup.

3. An updated as-built version of the control drawings and sequences of operation shall be included in the final controls O&M manual submittal.
4. Assist and cooperate with the TAB contractor in the following manner:

a. For a given area, have all required prefunctional checklists, calibrations, startup and selected functional tests of the system completed and

approved by the CA prior to TAB.

b. Provide a qualified technician to operate the controls to assist the TAB contractor in performing TAB, or provide sufficient training for TAB to operate the system without assistance.

5. Assist and cooperate with the CA in the following manner:

   a. Using a skilled technician who is familiar with this building, execute the functional testing of the controls system as specified for the controls contractor in Section 15997. Assist in the functional testing of all equipment specified in Section 15997.
   b. Execute all control system trend logs specified in Section 15997.

6. The controls contractor shall prepare a written plan indicating in a step-by-step manner, the procedures that will be followed to test, checkout and adjust the control system prior to functional performance testing, according to the process in Section 01810. At minimum, the plan shall include for each type of equipment controlled by the automatic controls:

   a. System name.
   b. List of devices.
   c. Step-by-step procedures for testing each controller after installation, including:

      (1) Process of verifying proper hardware and wiring installation.
      (2) Process of downloading programs to local controllers and verifying that they are addressed correctly.
      (3) Process of performing operational checks of each controlled component.
      (4) Plan and process for calibrating valve and damper actuators and all sensors.
      (5) A description of the expected field adjustments for transmitters, controllers and control actuators should control responses fall outside of expected values.

   d. A copy of the log and field checkout sheets that will document the process. This log must include a place for initial and final read values during calibration of each point and clearly indicate when a sensor or controller has “passed” and is operating within the contract parameters.
   e. A description of the instrumentation required for testing.
   f. Indicate what tests on what systems should be completed prior to TAB using the control system for TAB work. Coordinate with the CA and TAB contractor for this determination.

7. Provide a signed and dated certification to the CA and CM upon completion of the checkout of each controlled device, equipment and system prior to functional testing for each piece of equipment or system, that all system programming is complete as to all respects of the Contract Documents, except functional testing requirements.
8. Beyond the control points necessary to execute all documented control sequences, provide monitoring, control and virtual points as specified in Division 15.
9. List and clearly identify on the as-built duct and piping drawings the locations of all static and differential pressure sensors (air, water and building pressure).

D. TAB Contractor. The duties of the TAB contractor, in addition to those listed in (A) are:

1. Six weeks prior to starting TAB, submit to the CM the qualifications of the site technician for the project, including the name of the contractors and facility managers of recent projects the technician on which was lead. The Owner will approve the site technician's qualifications for this project.
2. Submit the outline of the TAB plan and approach for each system and component to the CA, CM and the controls contractor six weeks prior to starting the TAB. This plan will be developed after the TAB has some familiarity with the control system.
3. The submitted plan will include:

    a. Certification that the TAB contractor has reviewed the construction documents and the systems with the design engineers and contractors to sufficiently understand the design intent for each system.
    b. An explanation of the intended use of the temperature control system. The controls contractor will comment on feasibility of the plan.
    c. All field checkout sheets and logs to be used that list each piece of equipment to be tested, adjusted and balanced with the data cells to be gathered for each.
    d. Discussion of what notations and markings will be made on the duct and piping drawings during the process.
    e. Final test report forms to be used.
    f. Detailed step-by-step procedures for TAB work for each system and issue: flow calibration , diffuser proportioning, branch / submain proportioning, total flow calculations, rechecking, diversity issues, expected problems and solutions, etc. Criteria for using air flow straighteners or relocating flow stations and sensors will be discussed. Provide the analogous explanations for the water side, as applicable.
    g. List of all air flow, water flow, sound level, system capacity and efficiency measurements to be performed and a description of specific test procedures, parameters, formulas to be used.
    h. Details of how *total* flow will be determined (Air: via hood readings of all outlets, supply (SA) and return air (RA) pitot traverse, SA or RA flow stations, etc.).
    i. The identification and types of measurement instruments to be used and their most recent calibration date.
    j. Specific procedures that will ensure that both air and water side are operating at the lowest possible pressures and provide methods to verify this.
    k. Confirmation that TAB understands the outside air ventilation criteria under all conditions.
    l. Details of whether and how minimum outside air cfm will be verified and set, and for what level (total building, zone, etc.).
    m. Details of how building static and exhaust fan / relief damper capacity will be checked.
    n. Proposed selection points for sound measurements and sound measurement methods.
    o. Details of methods for making any specified coil or other system plant capacity measurements.
    p. Details of any TAB work to be done in phases (by floor, etc.), or of areas to be built out later.
    q. Details regarding specified deferred or seasonal TAB work.

r. Details of any specified false loading of systems to complete TAB work.
s. Details of all exhaust fan balancing and capacity verifications, including any required room pressure differentials.

4. A running log of events and issues shall be kept by the TAB field technicians. Submit hand-written reports of discrepancies, deficient or uncompleted work by others, contract interpretation requests and lists of completed tests to the CA and CM at least twice a week.
5. Communicate in writing to the controls contractor all setpoint and parameter changes made or problems and discrepancies identified during TAB which affect the control system setup and operation.
6. Provide a draft TAB report within two weeks of completion. A copy will be provided to the CA. The report will contain a full explanation of the methodology, assumptions and the results in a clear format with designations of all uncommon abbreviations and column headings. The report should follow the latest and most rigorous reporting recommendations by AABC.
7. Provide the CA with any requested data, gathered, but not shown on the draft reports.
8. Provide a final TAB report for the CA with details, as in the draft.
9. Conduct functional performance tests and checks on the original TAB as specified for TAB in Section 15997.

1.03 RELATED WORK

A. Refer to Section 01810 Part 1.12 for systems to be commissioned and Section 01810 Part 3.05 and Section 15997 for functional testing requirements.

PART 2 – PRODUCTS

2.01 TEST EQUIPMENT

A. Division 15 shall provide all test equipment necessary to fulfill the testing requirements of this Division.

B. Refer to Section 01810 Part 2.01 for additional Division 15 requirements.

PART 3 – EXECUTION

3.01 SUBMITTALS

A. Division 15 shall provide submittal documentation relative to commissioning to the CA as requested by the CA. Refer to Section 01810, Part 3.03 for additional Division 15 requirements.

3.02 STARTUP

A. The HVAC mechanical and controls contractors shall follow the start-up and initial checkout procedures listed in the Responsibilities list in this section and in Section 01810. Division 15 has start-up responsibility and is required to complete systems and sub-systems so they are fully functional, meeting the design objectives of the Contract Documents. The commissioning procedures and functional testing do not relieve or

lessen this responsibility or shift that responsibility partially to the commissioning agent or Owner.

B. Functional testing is intended to begin upon completion of a system. Functional testing may proceed prior to the completion of systems or sub-systems at the discretion of the CA and CM. Beginning system testing before full completion does not relieve the Contractor from fully completing the system, including all prefunctional checklists as soon as possible.

3.03 TAB

A. Refer to the TAB responsibilities in Part 1.02 above.

3.04 FUNCTIONAL PERFORMANCE TESTS

A. Refer to Section 01810 Part 1.12 for a list of systems to be commissioned and to Part 3.05 for a description of the process and to Section 15997 for specific details on the required functional performance tests.

3.05 TESTING DOCUMENTATION, NON-CONFORMANCE AND APPROVALS

A. Refer to Section 01810 Part 3.06 for specific details on non-conformance issues relating to prefunctional checklists and tests.

B. Refer to Section 01810 Part 3.05 for issues relating to functional performance tests.

3.06 OPERATION AND MAINTENANCE (O&M) MANUALS

A. The following O&M manual requirements do not replace O&M manual documentation requirements elsewhere in these specifications.

B. Division 15 shall compile and prepare documentation for all equipment and systems covered in Division 15 and deliver this documentation to the GC for inclusion in the O&M manuals, according to this section and Section 01810, prior to the training of owner personnel.

C. The CA shall receive a copy of the O&M manuals for review.

D. Special Control System O&M Manual Requirements. In addition to documentation that may be specified elsewhere, the controls contractor shall compile and organize at minimum the following data on the control system in labeled 3-ring binders with indexed tabs.

1. Three copies of the controls training manuals in a separate manual from the O&M manuals.
2. Operation and Maintenance Manuals containing:

    a. Specific instructions on how to perform and apply all functions, features, modes, etc. mentioned in the controls training sections of this specification and other features of this system. These instructions shall be step-by-step. Indexes and clear tables of contents shall be included. The detailed technical manual for programming and customizing control loops and algorithms shall be included.

b. Full as-built set of control drawings (refer to Submittal section above for details).
c. Full as-built sequence of operations for each piece of equipment.
d. Full points list. In addition to the updated points list required in the original submittals (Part 1 of this section), a listing of all rooms shall be provided with the following information for each room:

(1) Floor
(2) Room number
(3) Room name
(4) Air handler unit ID
(5) Reference drawing number
(6) Heating and/or cooling valve tag ID
(7) Minimum cfm
(8) Maximum cfm

e. Full print out of all schedules and set points after testing and acceptance of the system.
f. Full as-built print out of any software program.
g. Electronic copy on disk or CDRom of the entire program for this facility.
h. Marking of all system sensors and thermostats on the as-built floor plan and mechanical drawings with their control system designations.
i. Maintenance instructions, including sensor calibration requirements and methods by sensor type, etc.
j. Control equipment component submittals, parts lists, etc.
k. Warranty requirements.
l. Copies of all checkout tests and calibrations performed by the Contractor (not commissioning tests).

3. The manual shall be organized and subdivided with permanently labeled tabs for each of the following data in the given order:

a. Sequences of operation
b. Control drawings
c. Points lists
d. Controller / module data
e. Thermostats and timers
f. Sensors and DP switches
g. Valves and valve actuators
h. Dampers and damper actuators
i. Program setups (software program printouts)

4. Field checkout sheets and trend logs should be provided to the CA for inclusion in the Commissioning Record Book.

E. Special TAB Documentation Requirements. The TAB will compile and submit the following with other documentation that may be specified elsewhere in the *Specifications.*

1. Final report containing an explanation of the methodology, assumptions, test conditions and the results in a clear format with designations of all uncommon abbreviations and column headings.
2. The TAB shall mark on the drawings where all traverse and other critical measurements were taken and cross reference the location in the TAB report.

F. Review and Approvals. Review of the commissioning related sections of the O&M manuals shall be made by the A/E and by the CA. Refer to Section 01810, Part 3.07 for details.

3.07 TRAINING OF OWNER PERSONNEL

A. The GC shall be responsible for training coordination and scheduling and ultimately to ensure that training is completed. Refer to Section 01810 for additional details.

B. The CA shall be responsible for overseeing and approving the content and adequacy of the training of Owner personnel for commissioned equipment. Refer to Section 01810 for additional details.

C. Mechanical Contractor. The mechanical contractor shall have the following training responsibilities:

1. Provide the CA with a training plan two weeks before the planned training according to the outline described in Section 01810, Part 3.08.
2. Provide designated Owner personnel with comprehensive orientation and training in the understanding of the systems and the operation and maintenance of each piece of HVAC equipment including, but not limited to air conditioning units, air handling units, fans, and controls, etc.
3. Training shall normally start with classroom sessions followed by hands-on training on each piece of equipment, which shall illustrate the various modes of operation, including startup, shutdown, fire/smoke alarm, power failure, etc.
4. During any demonstration, should the system fail to perform in accordance with the requirements of the O&M manual or sequence of operations, the system will be repaired or adjusted as necessary and the demonstration repeated.
5. The appropriate trade or manufacturer's representative shall provide the instructions on each major piece of equipment. This person may be the start-up technician for the piece of equipment, the installing contractor or manufacturer’s representative. Practical building operating expertise as well as in-depth knowledge of all modes of operation of the specific piece of equipment are required. More than one party may be required to execute the training.
6. The controls contractor shall attend sessions other than the controls training, as requested, to discuss the interaction of the controls system as it relates to the equipment being discussed.
7. The training sessions shall follow the outline in the Table of Contents of the operation and maintenance manual and illustrate whenever possible the use of the O&M manuals for reference.
8. Training shall include:

    a. Use of the printed installation, operation and maintenance instruction material included in the O&M manuals.
    b. A review of the written O&M instructions emphasizing safe and proper operating requirements, preventative maintenance, special tools needed, and spare parts inventory suggestions. The training shall include start-up, operation in all modes possible, shut-down, seasonal changeover and any emergency procedures.
    c. Discussion of relevant health and safety issues and concerns.
    d. Discussion of warranties and guarantees.
    e. Common troubleshooting problems and solutions.
    f. Explanatory information included in the O&M manuals and the location of all plans and manuals in the facility.

g. Discussion of any peculiarities of equipment installation or operation.
h. The format and training agenda in *The HVAC Commissioning Process, ASHRAE Guideline 1-1989R*, 1996 is a recommended reference.
i. Classroom sessions shall include the use of overhead projections, slides, video/audio-taped material as might be appropriate.

9. Hands-on training shall include start-up, operation in all modes possible, including manual, shut-down and any emergency procedures and preventative maintenance for all pieces of equipment.
10. The mechanical contractor shall fully explain and demonstrate the operation, function and overrides of any local packaged controls, not *controlled* by the central control system.
11. Training shall occur after functional testing is complete, unless approved otherwise by the Project Manager.
12. Duration of Training. The mechanical contractor shall provide training on each piece of equipment according to the following schedule.

Hours	System
2	Air Handling Units
1	Variable Speed Drives
2	Split System AC or Heat Pumps
1	Specialty Exhaust Fans
2	Controls

D. Controls Contractor. The controls contractor shall have the following training responsibilities:

1. Provide the CA with a training plan four weeks before the planned training according to the outline described in Section 01810, Part 3.08.
2. The controls contractor shall provide designated Owner personnel training on the control system in this facility. The intent is to clearly and completely instruct the Owner on all the capabilities of the control system.
3. Training manuals. The standard operating manual for the system and any special training manuals will be provided for each trainee, with three extra copies left for the O&M manuals. In addition, copies of the system technical manual will be demonstrated during training and three copies submitted with the O&M manuals. Manuals shall include detailed description of the subject matter for each session. The manuals will cover all control sequences and have a definitions section that fully describes all relevant words used in the manuals *and* in all software displays. Manuals will be approved by the CA. Copies of audiovisuals shall be delivered to the Owner.
4. The trainings will be tailored to the needs and skill-level of the trainees.
5. The trainers will be knowledgeable on the system and its use in buildings. For the on-site sessions, the most qualified trainer(s) will be used. The Owner shall approve the instructor prior to scheduling the training.
6. During any demonstration, should the system fail to perform in accordance with the requirements of the O&M manual or sequence of operations, the system will be repaired or adjusted as necessary and the demonstration repeated.
7. The controls contractor shall attend sessions other than the controls training, as requested, to discuss the interaction of the controls system as it relates to the equipment being discussed.
8. There shall be a training session, which shall consist of a total of 8 hours of actual training. Upon completion, each student, using appropriate documentation, should be able to perform elementary operations and describe

general hardware architecture and functionality of the systems.

a. This training shall be held on-site for a period of 8 hours. The portions of actual hands-on training shall take place after the completion of system commissioning. The session shall include instruction on:
   (1) Controls training. Upon completion, each student, using appropriate documentation, should be able to perform elementary operations and describe general hardware architecture and functionality of the system.
   (2) Specific hardware configuration of installed systems in this building and specific instruction for operating the installed system, including HVAC systems, lighting controls and any interface with security and communication systems.
   (3) Security levels, alarms, system start-up, shut-down, power outage and restart routines, changing setpoints and alarms and other typical changed parameters, overrides, freeze protection, manual operation of equipment, optional control strategies that can be considered, energy savings strategies and set points that if changed will adversely affect energy consumption, energy accounting, procedures for obtaining vendor assistance, etc.
   (4) All trending and monitoring features (values, change of state, totalization, etc.), including setting up, executing, downloading, viewing both tabular and graphically and printing trends. Trainees will actually set-up trends in the presence of the trainer.
   (5) Every screen shall be completely discussed, allowing time for questions.
   (6) Use of keypad or plug-in laptop computer at the zone level, if applicable.
   (7) Use of remote access to the system via phone lines or networks.
   (8) Graphics generation.
   (9) Point database entry and modifications.
   (10) Understanding DDC field panel operating programming (when applicable).

E. TAB The TAB contractor shall have the following training responsibilities:

1. TAB shall meet for 4 hours with facility staff after completion of TAB and instruct them on the following:

   a. Go over the final TAB report, explaining the layout and meanings of each data type.
   b. Discuss any outstanding deficient items in control, ducting or design that may affect the proper delivery of air or water.
   c. Identify and discuss any duct runs, diffusers, coils, and fans that are close to or are not meeting their design capacity.
   d. Discuss any temporary settings and steps to finalize them for any areas that are not finished.
   e. Other salient information that may be useful for facility operations, relative to TAB.

3.08 DEFERRED TESTING

A. Refer to Section 01810, Part 3.09 for requirements of deferred testing.

3.09 WRITTEN WORK PRODUCTS

A. Written work products of Contractors will consist of the start-up and initial checkout plan described in Section 01810 and the filled out start-up, initial checkout and prefunctional checklists.

END OF SECTION

SECTION 15280
MECHANICAL TESTING REQUIREMENTS

PART 1 – GENERAL

1.01 INCLUDED SYSTEMS AND EQUIPMENT

A. The following is a list of the equipment and system test requirements included in this section:

1. Packaged air handling units – including fans, power exhausters, economizers, dampers, UVC lights, variable speed drives, heaters, humidifiers, CO_2 sensors, and controls.
2. Temperature Control System
3. Exhaust fans
4. Split system heat pump – including fans, dampers, UVC lights, variable speed drives, heaters, humidifiers, CO_2 sensors, and controls.
5. Test and balance (TAB) work

1.02 DESCRIPTION

A. This section specifies the functional testing requirements for Division 15 systems and equipment. From these requirements, the Commissioning Authority (CA) shall develop step-by-step procedures to be executed by the Subs or the Commissioning Authority. The general functional testing process, requirements and test method definitions are described in Section 01810. The test requirements for each piece of equipment or system contain the following:

1. The contractors responsible to execute the tests, under the direction of the CA.
2. A list of the integral components being tested.
3. Prefunctional checklists associated with the components.
4. Functions and modes to be tested.
5. Required conditions of the test for each mode.
6. Special procedures.
7. Required methods of testing.
8. Required monitoring.
9. Acceptance criteria.
10. Sampling strategies allowed.

1.03 PREREQUISITES

The following applicable generic prerequisite checklist items shall be listed on each written functional test form and be completed prior to functional testing.

1. All related equipment has been started up and start-up reports and prefunctional checklists submitted and approved ready for functional testing. Sample prefunctional checklists can be found in Section 01813. These are samples and for reference only. Final prefunctional checklists will be provided as part of the Construction Phase Commissioning Plan.
2. All control system functions for this and all interlocking systems are programmed and operable per contract documents, including final setpoints and schedules with debugging, loop tuning and sensor calibrations completed.

_____ _____
Controls Contractor Signature or Verbal Date

3. Piping system flushing complete and required report approved.
4. Test and balance (TAB) complete and approved for the hydronic system.
5. All A/E punchlist items for this equipment corrected.
6. These functional test procedures reviewed and approved by installing contractor.
7. Safeties and operating ranges reviewed by the CA.
8. Test requirements and sequences of operation attached.
9. Schedules and setpoints attached.
10. False loading equipment, system and procedures ready.
11. Sufficient clearance around equipment for servicing.
12. Record of all values for pre-test setpoints changed to accommodate testing has been made and a check box provided to verify return to original values (control parameters, limits, delays, lockouts, schedules, etc.).
13. Other miscellaneous checks of the prefunctinal checklist and start-up reports completed successfully.

1.04 TEST METHODS

A. MANUAL

1. Manual testing involves using hand-held instruments, immediate control system readouts or direct observation to verify performance of a system.

B. MONITORING

1. Monitoring is a method of testing as a stand-alone method or to augment manual testing.
2. All points listed in the required monitoring section of the test requirements which are control system monitored points shall be trended by the controls contractor. At the option of the CA, some control system monitoring may be replaced with datalogger monitoring. At the CA's request, the controls contractor shall trend up to 20% more points than listed herein at no extra charge.
3. Hard copies of monitored data must be in columnar format with time down the left column and at least 5 columns of point values on the same page.
4. Graphical output is desirable, and will be required for all output, if the system can produce it.

PART 2 – PRODUCTS

NOT LISTED

PART 3 – EXECUTION

3.01 TEMPERATURE CONTROL SYSTEM

A. Parties Responsible to Execute Functional Test

1. Controls contractor: operate the controls to activate the equipment.
2. CA: to witness, direct and document testing, Mechanical Contractor assist in testing sequences.

B. Integral Components or Related Equipment Being Tested

1. Building Automation System, if any
2. All prefunctional checklists of controlled equipment

C. Prerequisites The applicable prerequisite checklist items listed in the beginning of Section 15997 shall be listed on each functional test form and checked off prior to functional testing. The commissioning agent will also spot-check misc. items and calibrations on the prefunctional checklists previously completed by the installer, before the beginning of functional testing.

D. A significant part of the temperature control system functional testing requirements is the successful completion of the functional tests of equipment the temperature control system controls or interlocks with. Uncompleted equipment functional tests or outstanding deficiencies in those tests lend the required temperature control system functional testing incomplete.

E. Integral or stand-alone controls are functionally tested with the equipment they are attached to, including any interlocks with other equipment or systems and thus are not covered under the temperature control system testing requirements, except for any integrated functions or interlocks listed below.

F. The following testing requirements are in addition to and do not replace any testing requirements elsewhere in the specifications.

Function / Mode	Test Method Manual (demonstration), Monitoring, Either or Both
MISC. FUNCTIONS	
1. All specified functions and features are set up, debugged and fully operable	Verbal discussion of features
2. Power failure and battery backup and power-up restart functions	Demonstration
3. Specified trending and graphing features demonstration	See equipment trends
4. Global commands features	Demonstration
5. Security and access codes	Demonstration
6. Occupant over-rides (manual, telephone, key, keypad, etc.)	Demonstration
7. O&M schedules and alarms	Demonstration
8. Scheduling features fully functional and setup, including weekends and holidays	Observation in terminal screens or printouts
9. Date and time setting in central computer and verify field panels read the same time	Demonstration
10. Included features not specified to be setup are installed (list)	Demonstration
11. Demonstrate functionality of field panels using local operator keypads and local ports (plug-ins)	Demonstration of 100% of panels and 10% of ports
12. All graphic screens and value readouts completed	Demonstration
13. Setpoint changing features and functions	Done during equipment testing
14. Communications to remote sites	Demonstration
15. Sensor calibrations	Sampled during equipment tests
16. “After hours” use tracking and billing	
17. Final as-builts or redlines (per spec) control drawings, final points list, program code, setpoints, schedules, warranties, etc. per specs, submitted for O&Ms.	Observation
18. Verify that points that are monitored only, having no control function, are checked for proper reporting.	Observation
INTEGRATED TESTS	

Function / Mode	Test Method Manual (demonstration), Monitoring, Either or Both
19. Fire alarm interlocks and response	Demonstration
20. Duty cycling (if specified)	Monitoring
21. Demand limiting (including over-ride of limiting)	Monitoring
22. Sequential staging ON of equipment	Either
23. Optimum start-stop functions	Monitoring
24. All control strategies and sequences not tested during controlled equipment testing	Either

G. Additional Required Monitoring

1. Besides the trending and monitoring required with the functional testing of equipment, all points listed below which are control system monitored points shall be trended by the controls contractor. Refer to the Monitoring section at the beginning of Section 15997 for additional monitoring details.

Point	Time Step (min.)	Minimum Time Period of Trend	Hard Copy? (Y/N)	ASCII File? (Y/N)	Function Being Tested
Misc. equipment current or status for duty cycling and demand limiting	5	5 days incl. weekend	Y	Y	20, 21
Equipment or building kW or current for demand limiting	5	5 days incl. weekend	Y	Y	20, 21
Optimum start/stop equip.	5	5 days incl. weekend	Y	Y	23

H. Acceptance Criteria (referenced by function or mode ID)

1. For the conditions, sequences and modes tested, the integral components and related equipment respond to changing conditions and parameters appropriately as expected, as specified and according to acceptable operating practice.

I. Sampling Strategy for Identical Units

1. Sample 10% of the field panels for procedure 9, and 10% of the local ports for procedure 11. If 10% fail, test another 10%. If 10% of those fail, test all remaining units at the contractor's expense.

3.02 EXHAUST FANS

A. Parties Responsible to Execute Functional Test

1. Controls contractor: operate the controls to activate the equipment, if BAS controlled.
2. CA: to witness, direct and document testing.

B. Integral Components or Related Equipment Being Tested

1. Exhaust fans

C. Prerequisites The applicable prerequisite checklist items listed in the beginning of Section 15997 shall be listed on each functional test form and checked off prior to functional testing. The commissioning agent will also spot-check misc. items and calibrations on the prefunctional checklists previously completed by the installer, before the beginning of functional testing.

D. Functions / Modes Required To Be Tested, Test Methods and Seasonal Test Requirements

1. The following testing requirements are in addition to and do not replace any testing requirements elsewhere in this Division.

Function / Mode	Test Method Manual, Monitoring, Either or Both	Required Seasonal Test
General 1. Test each sequence in the sequence of operations, and other significant modes and sequences not mentioned; including startup, shutdown, unoccupied & manual modes and power failure. Test functionality of this piece of equipment or system in all control strategies or interlocks that it is associated with.	Manual	
In addition to, or as part of (1) above, the following modes or tests are required:		
2. Verify schedules and setpoints to be reasonable and appropriate		
3. Function at fire alarm (off, depressurization, etc.)	Manual	
4. Interlocks to building pressurization control	Manual	
5. Speed controls	Either	
6. Check TAB report record of sound power level tests and space pressures and compare to specifications	Review	
7. Sensor calibration checks on any controlling temperature or pressure sensor	Manual	

E. Acceptance Criteria (referenced by function or mode ID)

1. For the conditions, sequences and modes tested, the fans, integral components and related equipment respond to changing conditions and parameters appropriately as expected, as specified and according to acceptable operating practice.

F. Sampling Strategy for Identical

1. No sampling, test all.

3.03 PACKAGED DX AIR CONDITIONING OR HEAT PUMP UNITS

A. Parties Responsible to Execute Functional Test

1. Controls contractor: operate the controls to activate the equipment.
2. CA: to witness, direct and document testing. Mechanical contractor or equipment vendor to assist in testing sequence as needed.

B. Integral Components or Related Equipment Being Tested

1. Unit (fans, coils, condenser, compressors).
2. Power exhausters
3. Economizers

C. Prerequisites The applicable prerequisite checklist items listed in the beginning of Section 15997 shall be listed on each functional test form and checked off prior to functional testing. The commissioning agent will also spot-check misc. items and calibrations on the prefunctional checklists previously completed by the installer, before the beginning of functional testing.

D. Functions / Modes Required To Be Tested, Test Methods and Seasonal Test Requirements

1. The following testing requirements are in addition to and do not replace any testing requirements elsewhere in this Division.

Function / Mode	Test Method Manual, Monitoring, Either or Both[3]	Required Seasonal Test[1]
General 1. Test each sequence in the sequence of operations, and other significant modes and sequences not mentioned; including startup, shutdown, unoccupied & manual modes and power failure. Test functionality of this piece of equipment or system in all control strategies or interlocks that it is associated with.	Manual	
In addition to, or as part of (1) above, the following modes or tests are required:		
2. Supply air, and reset temp. control functions	Both	
3. Compressor unloading & condenser fan staging for head pressure control	Both	
4. Demand limiting control (if applicable)	Monitoring	Cooling
5. Duct static pressure (SP) control	Both	
6. Return or exhaust fan tracking and building SP	Monitoring	
7. Damper interlocks and correct modulation in all modes, including fire and smoke dampers	Manual	
8. Verification of minimum OSA quantity	Either	[2]
9. Verification of Economizer and Power Exhauster operation	Either	[2]
10. Verify TAB reported SF cfm with control system reading	Manual	[2]
11. All alarms (low limits, high static, freezes at, etc.)	Manual	
12. Sensor and actuator calibration checks on: duct static pressure sensor on units >10 tons, SAT, MAT, OSAT, economizer and RA dampers and other random checks (EMS readout against hand-held calibrated instrument must be within 0.5°F for temps. or within a tolerance equal to 10% of static pressure setpoint, with an inclined manometer)	Manual	
13. Verify control strategies, schedules and setpoints to be reasonable and appropriate		

[1]Cooling season, Heating season or Both. “Design” means within 5°of season design (ASHRAE 2 1/2%), or 95% of loading design. A blank cell denotes no special seasonal test is required and that test can be executed during any season, if condition simulation is appropriate.

[2]Seasonal test not required if seasonal conditions can be adequately simulated.

E. Special Procedures (other equipment to test with, etc.; reference to function ID)

1. Reduced Testing for Smaller Units. For standard application AHU's less than 15 tons, the following modifications to the testing requirements apply: 1) either Manual or Monitoring will satisfy the verification requirement--where Both is listed, choose one. 2) Testing Modes 6, 8, 11, 13 and 16 is not required.

Point	Time Step (min.)	Minimum Time Period of Trend	Hard Copy? (Y/N)	ASCII File? (Y/N)	Function Being Tested
For each Unit being tested:					
RAT	5	5 days incl. weekend	Y	Y	1-3, 11
SAT	5	5 days incl. weekend	Y	Y	1-3
CC LAT	5	5 days incl. weekend	Y	Y	1-3
MAT	5	5 days incl. weekend	Y	Y	1, 3, 11
SF speed	5	5 days incl. weekend	Y	Y	1, 3-6
Duct SP	5	5 days incl. weekend	Y	Y	5, 6
OSAT	5	5 days incl. weekend	Y	Y	All
Indoor dry-bulb all zones	5	5 days incl. weekend	Y	Y	All
Compressor amps or stage	5	5 days incl. weekend	Y	Y	3
Condenser fan amps or stage	5	5 days incl. weekend	Y	Y	3

F. Acceptance Criteria

1. For the conditions, sequences and modes tested, the system, integral components and related equipment respond to varying loads and changing conditions and parameters appropriately as expected, as specified and according to acceptable operating practice.
2. RTU shall be able to maintain the SA temperature within 1.0F either side of the deadband of the current setpoint without excessive hunting.
3. RTU and controls shall control the duct static pressure so that it does not drift more than an amount equal to 10% of the setpoint value either side of the deadband without excessive hunting.

G. Sampling Strategy for Identical Units

1. No sampling, test all.

3.04 TEST AND BALANCE WORK (TAB)

A. Parties Responsible to Execute Functional Test

1. TAB contractor: perform checks using test instruments.
2. Controls contractor: operate the controls to activate the equipment.
3. CA: to witness, direct and document testing.

B. Integral Components or Related Equipment Being Tested

1. TAB air-side

C. Prerequisites The applicable prerequisite checklist items listed in the beginning of Section 15997 shall be listed on each functional test form and checked off prior to functional testing. The commissioning agent will also spot-check misc. items and calibrations on the prefunctional checklists previously completed by the installer, before the beginning of functional testing.

D. Purpose. The purpose of this test is to spot check the TAB work to verify that it was done in accordance with the contract documents and acceptable practice and that the TAB report is accurate.

E. The following tests and checks will be conducted. The following testing requirements are in addition to and do not replace any testing requirements elsewhere in this Division.

Test or Check	Test Method	Required Seasonal Test[3]
1. A random sample of up to 50 % the TAB report data shall be selected for verification (air velocity, air or water flow rate, pressure differential, electrical or sound measurement, etc.). The original TAB contractor will execute the checks, witnessed by the commissioning authority. The TAB contractor will use the same test instruments as used in the original TAB work. A failure[1] of more than 10% of the selected items of a given system[2] shall result in the failure of acceptance of the system TAB report and the TAB contractor shall be responsible to rebalance the system, provide a new system TAB report and repeat random verifications of the new TAB report. The random testing will include the verification of minimum outdoor air intake flows at minimum, maximum and intermediate total airflow rates for all of the air handlers. Other selected data to be verified will be made known upon day of testing.	Demonstration	
2. Verify that final settings of all valves, splitters, dampers and other adjustment devices have been permanently marked by the TAB Contractor.	Demonstration	
3. Verification that the air system is being controlled to the lowest possible static pressure while still meeting design loads, less diversity. This shall include a review of TAB methods, control setpoints established by TAB and a physical verification of at least one leg from fan to diffuser having all balancing dampers wide open and that during full cooling of all TUs taking off downstream of the static pressure sensor, the TU on the critical leg has its damper 90% or more open.	Demonstration	
4. Verification that the water system is being controlled to the lowest possible pressure while still meeting design loads, less diversity. This shall include a review of TAB methods, control setpoints established by TAB and a physical verification of at least one leg from the pump to the coil having all balancing valves wide open and that during full cooling the cooling coil valve of that leg is 90% or more open.	Demonstration	

[1]Failure of an item is defined as follows:
For air flow of supply and return: a deviation of more than 10% of instrument reading
For minimum outside air flow: 20% of instrument reading (30% for reading at intermediate

supply low for inlet vane or VFD OSA compensation system using linear proportional control)

For temperatures: a deviation of more than 1°F

For air and water pressures: a deviation of more than 10% of full scale of test instrument reading

For sound pressures: a deviation of more than 3 decibels. (Variations in background noise must be considered)

[2]Examples of a “system” are: the air distribution system served by one air handler or the hydronic chilled water supply system served by a chiller or the condenser water system. Systems can be defined smaller if inaccuracies in TAB work within the smaller defined system will have little or no impact on connected systems.

[3]Cooling season, Heating season or Both. “Design” means within 5°of season design (ASHRAE 2 1/2%), or 95% of loading design. A blank cell denotes no special seasonal test is required and that test can be executed during any season, if condition simulation is appropriate.

F. Special Procedures

1. None.

G. Required Monitoring

1. None.

H. Acceptance Criteria

1. Provided in footnote to test table above.

I. Sampling Strategy for Identical Units

1. Described in test table above.

END OF SECTION

SECTION 15320
ELECTRICAL REQUIREMENTS FOR MECHANICAL EQUIPMENT

PART 1 – GENERAL

1.1 RELATED DOCUMENTS

A. Drawings and general provisions of Contract, including General and Supplementary Provisions and Division 1A General Requirements, apply to work of this section.

B. Related Sections: Separate electrical components and materials required for field installation and electrical connections are specified in Division 16.

1.2 SUMMARY

A. This section specifies the basic requirements for electrical components which are an integral part of packaged mechanical equipment. These components include, but are not limited to factory installed motors, starters, and disconnect switches furnished as an integral part of packaged mechanical equipment.

B. Specific electrical requirements (i.e. horsepower and electrical characteristics) for mechanical equipment are scheduled on the Drawings.

1.3 REFERENCES

A. NEMA Standards MG 1: Motors and Generators

B. NEMA Standards ICS 2: Industrial Control Devices, Controllers, and Assemblies.

C. NEMA Standard 250: Enclosures for Electrical Equipment

D. NEMA Standard KS 1: Enclosed Switches

E. National Electrical Code (NFPA 70).

1.4 SUBMITTALS

A. No separate submittal is required. Submit product data for motors, starters, and other electrical components with submittal data required for the equipment for which it serves, as required by the individual equipment specification sections.

1.5 QUALITY ASSURANCE

A. Electrical components and materials shall be UL labeled.

PART 2 – PRODUCTS

2.1 MOTORS

A. The following are basic requirements for simple or common motors. For special motors, more detailed and specific requirements are specified in the individual equipment specifications.

1. Torque characteristics shall be sufficient to satisfactorily accelerate the driven loads.

2. Motor sizes shall be large enough so that the driven load will not require the motor to operate in the service factor range.

3. Temperature Rating: Rated for 40 deg. C environment with maximum 50 deg. C temperature rise for continuous duty at full load (Class A Insulation).

4. Starting capability: frequency of starts as indicated by automatic control system, and not less than 5 evenly time spaced starts per hour for manually controlled motors.

5. Service Factor: L15 for poly-phase motors and 1.35 for single phase motors.

6. Motor construction: NEMA Standard MG 1, general purpose, continuous duty, Design "B", except "C" where required for high starting torque.
   a. Frames: NEMA Standard No. 48 or 54; use driven equipment manufacturer's standards to suit specific application.
   b. Bearing:
      1) ball or roller bearings with inner and outer shaft seals;
      2) re-greaseable, except permanently sealed where motor is normally inaccessible for regular maintenance;
      3) designed to resist thrust loading where belt drives or other drives produce lateral or axial thrust in motor;
      4) for fractional horsepower, light duty motors, sleeve type bearings are permitted.
   c. Enclosure Type:
      1) open drip-proof motors for indoor use where satisfactorily housed or remotely located during operation;
      2) guarded drip-proof motors where exposed to contact by employees or building occupants;
      3) weather protected Type 1 for outdoor use, Type II where not housed;
   d. Overload protection: built-in thermal overload protection and, where indicated, internal sensing device suitable for signaling and stopping motor at starter.
   e. Noise rating: "Quiet" rating on motors located in occupied spaces of building.
   f. Nameplate: indicate the full identification of manufacturer, ratings, characteristics, construction, special features and similar information.

2.2 STARTERS, ELECTRICAL DEVICES, AND WIRING

A. Motor Starter Characteristics:

1. Enclosures: NEMA 1, general purpose enclosures with padlock ears, except in wet locations shall be NEMA 3R with conduit hubs, or units in hazardous locations which shall have NEC proper class and division.

2. Type and size of starter shall be as recommended by motor manufacturer and the driven equipment manufacturer for applicable protection and start-up condition.

B. Manual switches shall have:

1. Pilot lights and extra positions for multi-speed motors.

2. Overload protection: melting alloy type thermal overload relays.

C. Magnetic Starters:

1. Maintained contact push buttons and pilot lights, properly arranged for single speed or multi-speed operation as indicated.

2. Trip-free thermal overload relays, each phase.

3. Interlocks and similar devices as required for coordination with control requirements of Division-15 Controls sections.

4. Built-in 120 volts control circuit transformer, fused from line side, where service exceeds 240 volts.

5. Externally operated manual reset.

6. Under-voltage release or protection.

D. Motor connections:

1. Flexible conduit, except where plug-in electrical cords are specifically indicated.

2.3 CAPACITORS

A. Features:

1. Individual unit cells

2. All welded steel housing

3. Each capacitor internally fused

4. Non-flammable synthetic liquid impregnant

5. Craft tissue insulation

6. Aluminum foil electrodes

7. KVAR size shall be as required to correct motor power factor to 90 percent or better and shall be installed on all motors 1 horsepower and larger, that have an uncorrected power factor of less than 85 percent at rated load.

B. Disconnect Switches:

1. Fusible switches: fused, each phase; general duty; horsepower rated; non-teasible quick-make, quick-break mechanism; dead front line side shield; solderless lugs suitable for copper or aluminum conductors; spring reinforced fuse clips; electro silver plated current carrying parts; hinged doors; operating lever arranged for locking in the "OPEN" position; arc quenchers; capacity and characteristics as indicated.

2. Non-fusible switches: for equipment 2 horsepower and smaller, shall be horsepower rated; toggle switch type; quantity of poles and voltage rating as indicated. For equipment larger than 2 horsepower, switches shall be the same as fusible type.

PART 3 – EXECUTION (NOT APPLICABLE)

END OF SECTION

SECTION 16020
MUNICIPAL FACILITIES GENERAL ELECTRICAL REQUIREMENTS

PART 1- - GENERAL

1.1 DESCRIPTION:

A. Related Work:

1. 01810 Commissioning Requirements

2. 01813 Prefunctional Checklists

3. 16560 Municipal Facilities Electrical Systems Commissioning

4. 16570 Municipal Facilities Electrical Testing Requirements

B. Electrical subcontractor shall attend the Commissioning pre-construction meeting and other required meetings to facilitate coordination and execution of the commissioning scope.

C. Provide pre-functional checklists and complete functional testing under the supervision of the commissioning authority, including preparation of data in form templates. Provide qualifying calibrated instrumentation needed for the prescribed testing procedures.

D. Provide the services of specialized technicians for testing and validation. Technicians may be supplied by the equipment suppliers or from qualified independent testing services.

E. Systems that shall be commissioned are:

1. Lighting system and controls.

2. Storm water diversion and infiltration facilities.

F. Detailed descriptions of electrical commissioning requirements are provided in Section 01810.

G. Comply with all provisions of the General Conditions, Supplementary Conditions and General Requirements as applicable to work of all Sections of Division 16 concerning definitions, guarantees, submittals, as-builts, clean-up, etc.

H. Examine all Technical Sections for work required to be included in work in Sections of Division 16 - Electrical Work.

I. All work of this Division shall be coordinated with work of other trades.

1.2 SCOPE

A. Required: Provide all labor, materials, equipment, tools and appliances required to furnish and install all electrical work shown on the Contract Drawing and herein specified in the Sections of Division 16 complete and operable but not limited to the following:

1. All construction power and lighting and power for testing equipment and systems through final acceptance of test.

2. Power and lighting service raceway(s) underground from the property line to an on-site pad-mount transformer, and from the transformer to the main service switchboard.

3. Complete lighting and power system(s) including branch circuits, fixtures, outlets, lamps, switches, controllers, and auxiliary equipment.

4. Complete distribution system(s) including switchboards, panelboards, transformers, feeders, and auxiliary equipment.

5. Complete system of exterior (vandal resistant) lighting.

6. Complete Grounding System.

7. Control wiring and devices for equipment specified in Sections of Division 16 and other Technical Sections, except where specifically indicated or noted otherwise on the Contract Drawings or in the Specifications.

8. Connection and testing of electrical equipment and controls specified in Division 16 and other technical sections, except where specifically indicated or noted elsewhere on the Contract Drawing or in the Specifications.

9. Applicable excavating, trenching and backfilling.

1.3 WORK NOT INCLUDED

A. Furnishing all electrical or partially electrically devices related uniquely to mechanical equipment and only as specified in the Mechanical Division 15.

B. Furnishing and installing of all motors.

1.4 RELATED WORK

A. Preparation of Soils Reports, refer to Section 02200 EARTHWORK.

B. Painting of exposed raceways and equipment in DIVISION 9.

C. Commissioning requirements in DIVISION 1.

D. Municipal Facilities Electrical Commissioning Requirements in DIVISION 16.

E. Municipal Facilities Electrical Testing Requirements in DIVISION 16.

1.5 LEGAL REQUIREMENTS AND STANDARDS

A. Required: Comply with the latest, as applicable and effective, during the progress of Contracted Work.

1. Latest Los Angeles City Electrical, Fire and Building Codes and U.B.C. Supplement.

2. California State Administrative Code, Title 24, State Building Standard.

3. (CAL/OSHA) California State Occupational Safety and Health Act.

4. California State Fire Marshal Standards.

5. Los Angeles City Department of Water and Power.

6. U.L. - Underwriters Laboratories Inc.

7. NEC - National Electric Code.

8. ASTM - American Society of Testing and Materials.

9. Current publications of the National Fire Protection Association.

10. National and American Standards Association.

B. General Compliance as Applicable

1. Drawings and specification requirements shall govern where they exceed Code requirements.

2. Where requirements between governing Codes and Regulations vary, the more restrictive provision shall apply.

3. Nothing contained in Contract Documents shall be construed as authority or permission to disregard or violate legal requirements.

1.6 GENERAL REQUIREMENTS

A. Permits and Inspections:

1. Apply and pay for all required electrical work (construction and installation) prescribed by legally constituted public authorities.

2. Arrange and pay for all required inspections or examinations and shall deliver "certifications" of such inspections to the City Engineer prior to acceptance of the electrical work. Obtain approved plans from the Los Angeles City Department of Building and Safety.

B. Site Inspections:

1. Carefully examine the job-site and existing facilities and compare the Contract Drawings for work coordination.

2. By act of submitting bid, it will be deemed the Contractor has made required inspections and has accepted such job-site conditions and has made allowances thereof in the preparation of "Bid" figures.

C. Verification of Dimensions: All dimensions (scaled, figured or noted) are approximate, given for estimating purposes. Before proceeding with work Contractor shall carefully check and verify all

dimensions, sizes, etc. and shall assume full responsibility for proper fitting in and attachment of all materials and equipment to other equipment and to the structure.

D. Examination of the Contract Drawings:

1. Carefully study Contract Drawings and Specifications to verify if any work as laid out or indicated is contrary to or in conflict with applicable Codes and Standards. Report to the City Engineer such data prior to submittal of Bid(s).

2. The City Engineer will then instruct the Contractor on how to proceed.

3. By the act of submitting a "Bid" or "Proposal" Contractor is deemed to have made such study and has accepted all job-site conditions.

E. Substitutions:

1. Items, articles or products named on the Contract Drawings and in the Specifications are intended to establish a standard of quality and required functional performance.

2. If the Contractor desires to propose a substitution or alternate, submit a complete list with detailed specifications and manufacturer's data which differ from those specified within thirty-five (35) days after award of Contract for approval or rejection by the City Engineer.

3. If such submittals are not approved, use specified materials and equipment throughout the Electrical Work.

F. Interpretations:

1. Make all requests for interpretations of the Contract Drawings and/or Specifications to the Contractor through the Architect or City Engineer.

2. Manufacturer's or Supplier's requests for interpretations will be referred to the Contractor.

G. Submittals: Conform to applicable provisions of Section 01330 of the General Requirements and as hereinafter specified.

1. Prepare, review and coordinate schedule of submittals, determining necessary lead time for preparation, submitting, checking, and ordering and delivering materials and equipment to the job-site for timely arrival and conformance with the overall Construction schedule.

2. All submittals will be checked for general compliance with Specifications only. Contractor will be responsible for deviations from the Drawings or Specifications and for errors or omissions of any sort in the Submittals.

3. Shop drawings shall be submitted in completed groups of materials (i.e., all lighting fixtures or all switchgear, etc.). The Contractor shall add and sign the following paragraph on all equipment and materials submitted for review.

a. "It is hereby certified that the (equipment) (material) shown and marked in this submittal is that proposed to be incorporated into the project; is in compliance with the Contract Drawings and Specifications and can be installed in the allocated spaces".

b. Failure to add the above written statement for compliance will result in return of submittals to be reviewed.

4. All required submittals on electrical items and equipment shall include complete catalog information such as construction ratings, insulation systems, including manufacturer's certification that items or equipment meet or exceed U.L. and Trade Standards, and the Specifications.

5. Equipment Floor Plans: Submit after approval of material and/or equipment is secured. Prepare for each electrical equipment room drawn to 1/2" = 1'0" scale. Layout drawing shall be to exact scale.

6. Materials list of items and equipment proposed to be provided for the work of this Division 16 and shall include the following as applicable:

   a. Service and distribution switchgear.

   b. Motor control centers.

   c. Lighting control systems, including user interface programs, system configuration, control switches, etc. including wiring diagrams and sequence of operation.

   d. Lighting panelboards.

   e. Dry type transformers.

   f. Conduits.

   g. Conductors.

   h. Electrical equipment layout at 1/2" = 1'-0" scale indicating exact dimensions of equipment, clearances, housekeeping pads.

   i. Disconnect switches, pull boxes and fuses.

   j. Lighting fixtures.

   k. Fire alarm and detection system.

   l. Control devices, standard and special receptacles, switches and finish device plates.

   m. Wiring for storm water diversion and infiltration PLC based control system specified in Division 17.

   n. Grounding systems.

   o. All fabricated equipment.

H. Special Submissions:

1. Test Reports for the Following:

a. Ground fault devices.

b. Megger Readings: Ground system, motors, feeders and switchgear.

c. Voltage Readings: Distribution, service and motors.

d. Fire alarm system.

2. Maintenance service and operating manuals for all equipment.

3. Items as outlined in other Sections.

I. "No Exceptions Taken": Be responsible for equipment ordered and/or installed prior to receipt of shop drawings returned from the City Engineer bearing the Electrical Engineer's stamp of "No Exceptions Taken". Corrections or modifications to equipment as noted on shop drawings shall be performed or equipment removed from the job site at request of City Engineer without additional compensation.

J. Disapprovals: Any article or equipment supplied by the Contractor disapproved by the Architect or City Engineer as not conforming to the Specifications or not of proper quality or grade or suitability shall be deleted and suitable article or equipment be provided in lieu thereof in conformance with the Specifications at no added cost to the City.

K. Terminology: Generally speaking throughout this Division 16 of the Specifications when the words "or equal" or other words of similar intent and meaning are used implying judgment or decision is to be exercised, it is understood that it is the judgment, discretion, or decision of the City Engineer to which reference is made.

Note: Specifier should name at least two manufacturers plus the words "or equal".

L. Modification of Contract Drawings: In each case where proposed substitute material or equipment will require changes to the design of the Project as indicated on the drawings, for proper installation or operation, appropriate proposed revision drawings prepared and signed by a licensed Engineer shall be furnished by the Contractor for approval by the City Engineer. Make such drawings sufficiently complete for the proper installation and operation of the proposed substitute materials or equipment, and for construction by all of the involved trades of the proposed revisions. The cost of the drawings and the proposed revised construction shall be borne by the Contractor.

M. Record Drawings: Provide in strict accordance with applicable provisions of Section 30 in the GENERAL CONDITIONS of these Specifications concerning accurate locations of raceways, cable runs, outlets and equipment. See also applicable provisions of Section 01783-RECORD (as-built) Drawings of the GENERAL REQUIREMENTS of these Specifications.

N. Operation and Maintenance Manuals: Prior to final acceptance of Contracted Work by the City, furnish 4 bound copies of operation and maintenance manuals for all electrical equipment, as required in this Section. The contents shall include description of equipment, names of manufacturers, parts lists, model numbers, maintenance schedules, location of nearest facility for replacement parts or service, wiring and connection diagrams, internal schematic drawings, and other electrical/mechanical data necessary for operation and maintenance.

1.7 QUALITY ASSURANCE

A. General:

1. All equipment and accessories to be the product of a manufacturer regularly engaged in its manufacture.

2. Supply all equipment and accessories new, free from defects and listed by Underwriters' Laboratories, Inc. or bearing its label. Special or custom equipment must bear the label of laboratory recognized by the City of Los Angeles Department of Building and Safety.

3. Supply all equipment and accessories in compliance with the applicable standards listed in Article 1. 5 of this Section and with all applicable National, State and Local codes.

4. All items of a given type shall be the product of the same manufacturer.

B. Labor: Use adequate numbers of skilled workers who are thoroughly trained and experienced in the necessary crafts and completely familiar with specifications, requirements and methods needed for proper performance of the work of Electrical Division 16.

C. Superintendence: Provide an experienced Superintendent to be in charge of erection and/or installation of electrical work together with journeymen helpers to properly unload, erect, connect, adjust, operate and test the work involved to provide a neat, workmanlike and operable installation.

1.8 LOCATION

A. The location of apparatus and equipment indicated on the Contract Drawings are approximate only and shall be changed to meet site conditions as required.

B. Any change in work which has not been installed shall be made by the Contractor without additional compensation, except changes which are caused by Architectural changes which increase or decrease the size of apparatus or materials specified or indicated on the drawings. The Contractor shall submit a detailed breakdown cost estimate of, or credit for, such changes and shall proceed only upon the written authority of the Architect and Engineer.

C. All apparatus and equipment shall be furnished and installed in a manner and in locations avoiding all obstructions, preserving head room, and keeping openings and passageways clear. Changes shall be made in locations of equipment and materials which may be necessary in order to accomplish this.

D. The drawings are essentially diagrammatic to the extent that many offsets, bends, special fittings, and exact locations are not indicated. The Contractor shall carefully study the Contract Drawings and premises in order to determine the best methods, exact location, routes, and building obstructions, etc., and shall install all apparatus and equipment in the available location.

1.9 CUTTING AND PATCHING

A. Conform to provisions of the General Requirements.

B. The Contractor shall do all drilling, cutting and patching of the general construction work existing or new, rough finish and trim, which may be required for the installation of electrical equipment. All patching shall be of the same materials, workmanship and finish as the original work, and shall accurately match all surrounding work.

C. All cutting and patching shall be as approved by the City or City's authorized representative.

1.10 PROTECTION OF WORK

A. The Contractor shall protect all work, material and equipment from damage from any cause whatsoever, and shall provide adequate and proper storage facilities during the progress of the Work. Contractor shall provide for the safety and good condition of all work until final acceptance of the work by the City, and replace all damaged or defective work, materials and equipment before requesting final acceptance.

B. The Contractor shall be held responsible for the protection and correction of the work of all trades from smears, splashes, stain or damages that might occur in the progress of the work.

1.11 WORK COORDINATION

A. The Contractor shall so order electrical work that progress will harmonize with that of other trades so that all work may proceed as expeditiously as possible.

B. So far as possible, the work has been indicated on the Contract Drawings in such positions as to suit and accommodate the work of the other trades, but the work as indicated is largely diagrammatic, and the correct finish position of all equipment and materials cannot always be indicated. Therefore, the Contractor is hereby made directly responsible for the correct placing of electrical work and the proper location and connection of electrical work in relation to the work of other trades.

1.12 JOB SAFETY

A. The Contractor shall be solely and completely responsible for the condition of the premises on which the work is performed and for the safety of all persons and property on the site during performance of the Contract. These requirements shall not be limited to normal working hours, but shall apply continuously.

B. Contractor shall conform to all governing safety regulations.

PART 2 -- PRODUCTS

2.1 MATERIALS

A. All materials, items and equipment furnished under this Contract shall be new, recently manufactured and available locally.

B. All materials shall comply with applicable legal requirements and standards hereinbefore specified in this Section 16020.

C. The label of listing by UL shall appear on all materials and equipment for which standards have been established by that agency.

D. Where local or other authorities having jurisdiction have established label or approval requirements, furnish all materials and equipment with either the required labels affixed or the necessary written approval.

E. Examine the Drawings and Specifications and determine the work to be performed by the electrical and other trades. Provide the type and quantity of electrical materials and equipment necessary to complete this work and all systems in proper operation, tested and ready for use.

F. Provide and install all incidental items not indicated on the Drawings nor mentioned in the Specifications that belong to the work described or are required for complete systems.

2.2 MATERIALS LISTING

A. Required: See Subsection 1. 6 G 6 of this Section 16020.

PART 3 - - EXECUTION

3.1 UTILITY SERVICES (AS APPLICABLE)

A. Every effort has been made to determine as accurately as possible the requirements of the electrical services. However, before submitting bid, the Contractor shall verify the locations shown on the plans and shall include sufficient funds for material, labor and utility fees for installation of an approved utility service.

B. Before any work is performed on these facilities, verify all electrical, civil, architectural and structural, dimensional and other requirements related to these facilities with the serving utility companies.

C. Should any major changes to the work indicated be necessary to complete the power systems, notify the City Engineer at once and cease all work affected until approval for required modifications has been obtained from the City Engineer.

3.2 WORK RESPONSIBILITIES

A. The drawings indicate diagrammatically the desired locations or arrangement of conduit runs, outlets, equipment, etc., and are to be followed as closely as possible. Proper judgment must be exercised in executing the work so as to secure the best possible installation in the available space and to overcome local difficulties due to space limitations or interference with structural conditions. The Contractor is responsible for the correct placement and coordination of electrical work in relation to the work of other trades. Advise appropriate trade as to locations of access panels.

B. Locations shown on architectural plans and elevations shall take precedence over electrical plan locations, but where a major conflict is evident; notify the Architect or City Engineer for instructions.

C. In the event changes in the indicated locations or arrangement are necessary due to developed conditions in the building construction or rearrangement of furnishings or equipment, such changes shall be made without extra cost, providing the change is ordered before the conduit runs, etc., and work directly connected to same are installed and no extra materials are required.

D. Where equipment is furnished by others, verify dimensions and the correct location of this equipment before proceeding with the roughing in of connections.

E. All scaled and figured dimensions are approximate of typical equipment of the class indicated. Before proceeding with any work, carefully check and verify all dimensions, sizes, etc., with the drawings to see that the equipment will fit into the spaces provided without violation of applicable codes.

F. Should any changes to the work indicated on the Drawings or described in the Specifications be necessary in order to comply with the above requirements, notify the City Engineer immediately and cease work for all parts of the Contract Work which are affected until approval for any required modifications to the construction has been obtained from the City Engineer.

G. Be responsible for any cooperative work which must be altered due to lack of proper supervision or failure to make proper provisions in time. Such changes shall be under the direction of the City Engineer and shall be made to their satisfaction.

H. Perform all work with competent and skilled personnel. Conform to provisions of Subsection 1. 7B of this Section.

I. All work, including aesthetic as well as electrical and mechanical aspects of the work, shall be of the highest quality consistent with the best practices of the trade.

J. Replace or repair, without additional compensation, any work which, in the opinion of the City Engineer does not comply with these requirements.

3.3 GENERAL INSTALLATION (AS APPLICABLE)

A. Unless otherwise specified elsewhere in the Specifications, do all excavating necessary for the proper installation of the electrical work in accordance with the "Earthwork" Section 02220.

B. Locations of Openings: Obtain approval for all chases, shafts and openings required for the installation of the electrical work. Cutting or drilling in any structural member is prohibited without written approval of the Architect or City Engineer. Furnish access panels as required.

C. Finish Around Sleeves: Rough edges shall be finished smooth. Space between conduit and sleeves where conduit passes through exterior walls shall be sealed to permit movement of conduit but prevent entrance of water. Space between conduit and sleeves where conduit passes through fire rated interior walls and slabs shall be sealed with approved materials to provide a fire barrier conforming to the requirements of the governing authorities having jurisdiction, use Dow Corning 3-6548 RTV silicone foam or equal by General Electric if so approved by the applicable authorities having jurisdiction at the job site.

D. Wherever conduit extends through roof, furnish and install flashings in accordance with City Engineer's directions.

E. Be responsible for all cutting and patching which may be required for the proper installation of the electrical work. Work shall be performed by the trade originally installing same and paid for under this Section of the work.

F. Protect all work, materials and equipment from damage from any cause whatever and provide adequate and proper storage facilities during the progress of the work. Storage outdoors shall be

weather protected and shall include space heaters to prevent condensation. Provide for the safety and good condition of all work until final acceptance of the work by the City Engineer and replace all damaged or defective work, materials and equipment before requesting final acceptance at no added cost to the City.

G. Conduit and Equipment to be installed: Clean thoroughly to remove plaster, spattered paint, cement and dirt on both exterior and interior.

H. Conduit and Equipment to be painted: Clean all conduits exposed to view in completed structure by removing plaster and dirt. Remove grease, oil and similar material from conduit and equipment by wiping with clean rags and suitable solvents in preparation for paint.

I. All Items with Factory Finish: Remove cement, plaster, grease and oil, and leave all surfaces, including cracks and corners, clean and polished. Touch up any scratched or bare spots to match finish. Factory finish may be approved as prime coat by the Architect (see "Painting" Section).

J. Site Cleaning: Remove from site all packing cartons, scrap materials and other rubbish relating to electrical installation.

K. Electrical equipment and materials exposed to public and in finished areas shall be finish-painted after installation to coordinate with surrounding walls. Surfaces shall be thoroughly cleaned for receiving painting. Paint color coordination shall be as directed by the Architect or City Engineer. Paint shall be identical to that on adjacent surfaces to insure proper matching of quality and color with surrounding areas.

3.4 EXCAVATION, CUTTING AND PATCHING

A. All excavating, trenching and backfilling required for the work of this Division shall conform to the applicable requirements of the "Earthwork" Section 02220 in the Project Specifications. All excavating and backfilling connected with electrical work, repaving all cuts and providing and maintaining all protective measures for the electrical work excavation required by the governing authorities having jurisdiction shall be performed as a part of the work of this Division.

B. At a time in advance of the work, verify all openings indicated on the Drawings. Should the work of this division require it, furnish new instruction as to requirements for these openings, subject to the Architect's approval. All cutting, patching and reinforcement of the building (subject to the City Engineer's approval) shall be performed under the Section of the Specifications under which the work was originally performed, but the coat shall be an obligation of the Contractor.

3.5 TESTS

A. Conduct resistance to ground tests by qualified personnel to measure resistance to ground at all grounding electrodes. Make tests before slabs of affected areas are poured in order that corrective measures, if requested, may be taken. Submit to the City Engineer a report showing the results of these measurements. If the resistances exceed values specified elsewhere, perform all corrective measures as directed by the City Engineer at no additional cost to City.

B. Prior to energizing any motors, measure the service voltage for phase balance and report immediately to the City Engineer if unbalance exceeds 1% from means.

C. Measure the three-phase voltage at no load and at maximum load conditions and submit to the City Engineer a report showing the results of these measurements.

D. Upon completion of the work and adjustment of all equipment, conduct an operating test for

approval at such time as the Architect directs. Conduct the test in the presence of an authorized representative of the State. Demonstrate all systems and equipment to operate in accordance with all requirements of the Contract documents and to be free from all electrical and mechanical defects. Provide all systems free from short circuits and grounds and show an insulation resistance between phase conductors and ground not less than the requirements of the governing electric code. Test all circuits for proper neutral connections.

E. Complete all tests prior to final inspection of project, including corrective work based on the results of the tests.

F. Perform special tests on systems and equipment as specified herein in other sections of this division, using personnel qualified to perform such tests.

G. Measure voltage on secondary side of all transformers with full load connected and adjust taps to provide rated secondary voltage.

H. Submit to the City Engineer a report showing test voltage of L-N on the secondary's of all transformers.

3.6 PROTECTION

A. Besides the provisions of Subsection 1.10 of this Section comply with the following:

1. Protect all finish parts of the materials and equipment against damage during the progress of the work and until final completion and acceptance. Cover all materials and equipment in storage and during construction in such a manner that no finished surfaces will be damaged or marred. Keep all moving parts clean, dry and lubricated.

3.7 PRELIMINARY OPERATIONS

A. Required**:** Should the City require that any portion of the systems or equipment be operated prior to the final scheduled dates for completion and acceptance of the work, the Contractor shall consent. Such operation shall be under the direct supervision of, and at the expense of the Contractor, and shall not be construed as an acceptance of any of the work by the City.

3.8 CLEANING UP

A. Conform to applicable provisions of Section 01740 of the General Requirements and the following as applicable.

B. Upon completion of the work and at various times during the progress of the work, remove from the building all surplus materials, rubbish and debris resulting from the work of this division and leave the involved portions of the job-site in a neat, clean and acceptable conditions.

C. Thoroughly clean all switchgear, apparatus, exposed conduit, metal work and accessories for the work of this Division of cement, plaster and other deleterious materials; remove all grease and oil spots with cleaning solvent; carefully wipe all surfaces and scrape all cracks and corners clean.

D. Thoroughly polish all chromium and all plated work. Remove all dirt and stains from lighting fixtures.

E. Leave the entire installation in a neat, clean and usable condition.

3.9 COMPLETION

A. The work will not be reviewed for final acceptance until operating and maintenance data, manufacturer's literature, panel directories and nameplates specified herein have been approved and properly posted or installed and final cleaning of equipment and premises has been completed.

B. When the installation is complete and all adjustments have been made, operate the systems for a period of one week, during which time demonstrate to the City Engineer that the systems are completed and operating in conformance with the Specifications.

3.10 GUARANTEE

A. Conform to applicable provisions of the GENERAL CONDITIONS of these Specifications.

B. Required: Except as may be specified under other sections in the Specifications, guarantee all equipment furnished under the specifications for a period of one year from date of acceptance against defective workmanship and material, and improper installation. Upon notification of failure, correct deficiency immediately and without cost to the City.

C. Standard warranty of manufacturer shall apply for replacement of parts after expiration of the above period. Manufacturer shall furnish replacement parts to the City or his service agency as directed. Furnish to the City Engineer printed manufacturer's warranties complete with material included and expiration dates, upon completion of project.

3.11 OPERATING AND MAINTENANCE DATA

A. Required: Submit to the City Engineer, complete and at one time, prior to acceptance of the installation, 10 copies of manufacturer's instructions for operation and maintenance of electrical equipment, including replacement parts lists. Each set to be bound in an indexed loose leaf ring binder with permanent cover and permanent identification on back.

3.12 RECORD DRAWINGS

A. Required**:** Conform to the provisions of Subsection 1. 6 M of this Section and as noted hereinafter as applicable.

B. Provide and maintain in good order at the field office a complete set of electrical contract prints. All changes to the contract shall be clearly recorded on this set of prints and initialed by the Contractor on a weekly basis. At the end of the project transfer all changes, using same symbols, to one set of Mylar transparencies. Obtain Mylar transparencies from the Engineer at Contractor's cost.

C. Accurately indicate and dimension all underground conduit runs and conduit stub-outs and all pullboxes from building walls on all Record Drawings.

D. Upon completion of the work and as a prerequisite to issuance of certificate for final payment, deliver one complete set of final prints of the mylars and the Mylar originals themselves.

E. Initial and identify name and telephone number of installing Contractor on all sheets as being a correct and accurate record of the installation. This also includes, but is not limited to, fire alarm and control systems.

3.13 INSPECTION AND ACCEPTANCE PROCEDURES

A. The City Engineer will submit observation reports periodically during the construction phase detailing Contract deficiencies. The Contractor is responsible for making all corrections immediately to avoid delaying other trades. Final acceptances of the project will not be made until all items have been corrected.

3.14 FINAL ACCEPTANCE OF ELECTRICAL SYSTEMS

A. Prior to Final Acceptance of operating electrical systems Contractor shall do the following, as applicable:

1. Provide materials of the type and quality specified and as necessary for proper operation, tested and ready for use.

2. Deliver to the City Engineer the "as-built" transparency and set of prints as "Record Drawings".

3. Furnish the required operating and maintenance data/manuals.

4. Clean-up of the project pertaining to this Division of the work, as hereinbefore noted in Subsection 3. 8 of this Division.

5. After installation has been completed and adjustments made, operate the system for a period of one week, during which time, demonstrate to the City Engineer that all systems are complete and operating in conformance with Contract documents.

6. Conduct all tests required and as specified in Sections of this Division and submit test reports and corrective actions taken.

7. Submission of all warranties and guarantees.

B. Final Acceptance of Electrical Work Shall Be Contingent On The Following:

1. Contractor replacing defective materials and workmanship.

2. Upon completion of work and adjustments made, Contractor shall conduct an operating test for each system for approval at such time as City Engineer directs. Conduct test in presence of authorized representative of the City Engineer demonstrate that systems and equipment do operate in accordance with requirements of the Contract documents and are free from electrical and mechanical defects.

3. Contractor shall provide the necessary training programs and instructions to the City's representative.

4. Submit copies of manufacturer's instructions and maintenance of electrical equipment including replacement parts lists. Each set shall include one set of shop drawings of

equipment installed.

3.15 SUBMITTALS FOR CHANGE ORDERS

A. General: When changes are made during the construction phase, deletions and additions shall be presented in a manner that will indicate the cost of each item of material and corresponding labor. Overhead and profit makeup shall be then added in accordance with the requirements of the GENERAL CONDITIONS.

1. Unit costs shall apply in event of changes, additions and deletions to the contract, as follows:

2. Submit with Bid Costs a unit cost, covering one hour of labor, including all applicable supervision, nonproductive labor, burdens, benefits, insurance, taxes, direct and indirect job expenses including drawings, engineering, temporary power, warehouse, tools, equipment, clean-up, bonds, overhead and profit, charged for labor. Unit cost of labor shall be applicable for duration through completion of the project.

3. Material unit costs shall be based on the latest edition of "Electrical Trade Book", published by Trade Service Publications, Inc. Unit cost shall be taken from extreme right-hand column.

4. Labor unit quantities, for specific items required, shall be those listed in the third column from the National Electrical Contractors' Association, Inc., "NECA Manual of Labor Units".

END OF SECTION

SECTION 16100
BASIC MATERIALS AND METHODS

PART 1 -- GENERAL

1.1 THE REQUIREMENT

A. The CONTRACTOR shall furnish all tools, equipment, materials, and supplies and shall perform all labor required to complete the work as indicated on the Drawings and specified herein.

B. This section covers the work necessary to furnish and install the materials specified hereinafter.

1.2 RELATED WORK SPECIFIED ELSEWHERE

A. The following Sections and Divisions applies to the WORK of this Section. Other Sections and Divisions, not referenced below, shall apply to the extent required for proper performance of this WORK.

1. Division 02 Site Work.

2. Division 03 Concrete.

3. Division 09 Finishes.

4. Division 11 Equipment.

5. Division 17 Instrumentation and Control.

6. Work Specified Under Other Divisions

a. All concrete work required for encasement, installation, or construction of the work specified in the various Sections of Division 16 is included as a part of the work hereunder, and shall be 2500-psi concrete conforming to the applicable requirements of Section 03300, "Cast-in-Place Concrete"; provided, that the following exceptions and supplementary requirements shall apply:

1. Consolidation of encasement concrete around duct banks shall be by hand puddling. No mechanical vibration shall be used.

2. A workability admixture shall be used in encasement concrete, which shall be a hydroxylated carboxylic acid type in liquid form. Admixtures containing calcium chloride shall not be used.

3. Concrete for encasement of conduit or duct banks shall contain an integral red-oxide coloring pigment in the proportion of 8 pounds per cubic yard of concrete.

1.3 REFERENCE CODES AND STANDARDS

A. All work specified herein shall conform to or exceed the applicable requirements of the referenced portions of the following publications to the extent that the provisions thereof are not in conflict with other provisions of these specifications.

1. Codes and Standards:

LAEC	City of Los Angeles Electrical Code, latest adopted edition.

2. Government Standards:

FS W-C-596H/GEN	Connector, Plug, Receptacle and Cable Outlet, Electrical Power.
FS W-S-896G	Switches, Toggle (Toggle and Lode), Flush Mounted (ac).

3. Commercial Standards:

ANSI B16.5	Pipe Flanges and Flanged Fittings, Steel, Nickel Alloy, and Other Special Alloys.
ANSI C80.1	Electrical Rigid Steel Conduit (ERSC)
ANSI Z55.1	Gray Finishes for Industrial Apparatus and Equipment.
ANSI/UL 467	Grounding and Bonding Equipment, Safety Standard For.
NEMA WD-1-1.10	General Requirements for Wiring Devices.
NEMA PB-1	Panelboards.
NEMA KS-1	Enclosed Switches.
NEMA VE-1	Ventilated Cable Tray.
ICEA S-61-402	Thermoplastic - Insulated Wire and Cable for the Transmission and Distribution of Electrical Energy.
ICEA S-19	Rubber - Insulated Wire and Cable for the Transmission and Distribution of Electrical Energy.
ICEA S-95-658/WC70	Power Cables Rated 2000 Volts or Less.
ICEA S-96-659/WC71	Nonshielded Cables Rated 2,001-5,000 V.
ICEA S-93-639/WC74	5-46 kV Shielded Power Cable.
UL 6	Electrical Rigid Metal Conduit - Steel
UL 489	Molded Case Circuit Breakers.
UL 943	Ground Fault Circuit Interrupters.

B. All equipment furnished by the CONTRACTOR shall be listed by and shall bear the label of Underwriters' Laboratories, Incorporated, (UL) or of an independent testing laboratory acceptable to the CITY's Department of Building and Safety.

C. The construction and installation of all electrical equipment and materials shall comply with all applicable provisions of the Cal/ OSHA Safety Orders (Title 8, CCR), State Building Standards, and applicable local codes and regulations.

1.4 CONTRACTOR SUBMITTALS

A. Submittals shall be made in accordance with the requirements of Section 16020 Municipal Facilities General Electrical Requirements.

1.5 QUALITY ASSURANCE

A. Quality assurance shall be in accordance with all applicable requirements of Section 16020 Municipal Facilities General Electrical Requirements.

PART 2 -- PRODUCTS

2.1 SERVICE ENTRANCE

A. Provide labor and furnish equipment as required by the electric utility which will provide service to the facility. All such materials and work shall meet the requirements of the utility company.

B. Provide temporary service for construction.

2.2 OUTLET AND DEVICE BOXES

A. General: Provide boxes not less than 2-inches deep, unless shallower boxes are required by structural conditions and are specifically accepted by the ENGINEER. Do not use box extensions to provide wiring space required by the NEC. For hollow masonry construction, provide boxes of sufficient depth so that conduit knockouts or hubs are in the masonry void space.

B. Sheet Steel (SS) Boxes: Provide zinc- or cadmium-plated boxes of the one-piece drawn type. Install 4-inch minimum octagonal boxes for ceiling outlets, except where smaller boxes are required for the particular fixture being installed. Use concrete type boxes in poured concrete slabs. Provide 2-inch by 4-inch minimum boxes for switches and receptacles. Provide plaster rings where required.

C. Cast Steel (CS) Boxes: Provide boxes of cast ferrous metal with gasketed, watertight, cast ferrous metal covers and stainless steel screws. Provide boxes with threaded conduit hubs and cast mounting lugs where lugs are required. Use Crouse-Hinds or Appleton Type FS or FD boxes, or equal.

D. Cast Aluminum (CA) Boxes: Provide boxes of cast, copper-free aluminum with gasketed, watertight, cast copper-free aluminum covers and stainless steel screws. Provide boxes with threaded conduit hubs and cast mounting lugs where lugs are required. Use Crouse-Hinds or Appleton Type FS or FD boxes, or equal.

E. Nonmetallic (NM) Boxes: Provide fiberglass boxes with gasketed, watertight covers and stainless steel screws. Provide boxes with conduit hubs and any required mounting lugs. Use Crouse-Hinds, Stahlin, or equal.

F. Provide a box suitable for the conditions encountered at each outlet in the wiring or raceway system and sized in accordance with the LAEC. Use the listed types unless otherwise indicated or accepted.

1. Types to be provided, Steel Raceway System:

Locations	Box Type
Exterior Locations, with:	
Exposed Raceways	316 Stainless steel (NEMA 4X)
Concealed Raceways	316 Stainless steel (NEMA 4X)
Concrete Encased Raceways	316 Stainless steel (NEMA 4X)
Interior Dry Locations, with:	
Exposed Rigid Conduit	Sheet metal
Exposed EMT	Sheet steel
Concealed Raceways	Sheet steel
Concrete Encased Raceways	Cast steel
Lighting Circuits, Ceiling Portion	Sheet steel
Interior Wet Locations, with:	
Exposed Raceways	316 Stainless steel (NEMA 4X)
Concealed Raceways	Cast steel
Concrete Encased Raceways	Cast steel
Lighting Circuits, Ceiling Portion	Sheet steel

2. Types to be Provided, Nonmetallic Raceway System:

Locations	Box Type
Concealed Raceways	Nonmetallic
Concrete Encased Raceways	Precast concrete

G. Device Plates:

1. Types to be Provided:

Locations	Plate Type
All Interior	Plastic

WP Designation	Weatherproof
Flush Mounted Boxes	Plastic
Surface Mounted Cast Metal Boxes	Plastic
Surface Mounted Sheet Metal Boxes	Plastic

2.3 JUNCTION AND PULL BOXES

A. Utilize NEMA 4X 316 stainless steel or fiberglass UV-rated watertight enclosures for outdoor or wet and corrosive locations and where subscript WP is indicated at the box location on the Drawings. Fiberglass enclosures may be used only with the approval of the ENGINEER.

B. Where outlet boxes are used as junction or pull boxes, use materials as specified under article 2.2, OUTLET AND DEVICE BOXES.

C. Where larger sheet steel boxes are required, utilize boxes of code-gauge, galvanized steel with full-access screw covers mounted with corrosion-resistant stainless steel machine screws.

D. Where larger cast metal boxes are required, use neoprene gasketed, watertight boxes with hinged, cast metal full-access covers, stainless steel cover hardware, and drilled and tapped conduit entrances. Use Crouse-Hinds Series W, O.Z./Gedney Series Y boxes, or equal. For below grade conduit, use Crouse-Hinds Type WJBF, O.Z./Gedney Series YR, or equal, minimum size 8-inches by 8-inches by 6-inches. For hazardous areas, use boxes applicable for the location and hazardous atmosphere present.

E. Where larger nonmetallic boxes are required, they shall be gasketed, watertight, corrosive resistant, and have a hinged, full-access screw cover. The hinge and machine screws shall be stainless steel. The box and cover shall be of high impact strength fiberglass-reinforced polyester material with stability to high heat. The boxes shall have conduit hubs and any required mounting lugs. The minimum size shall be 7-inches by 10-inches by 6-1/2-inches deep. Use Crouse-Hinds, or equal, Type NJB boxes.

F. Use concrete boxes of reinforced, precast concrete, 10-inches by 17-inches minimum inside dimensions, Brooks Products, Inc., No. 3-1/2T, Jensen Precast HT1017, or equal. Mark cast iron cover as per CITY standards. Boxes shall be inspected and approved by the CITY prior to site delivery.

G. Use special boxes where indicated on the Drawings.

2.4 TERMINAL JUNCTION BOXES (TJB)

A. Provide hinged-cover terminal junction boxes of the required type and size where indicated. Utilize NEMA 12 enclosures for indoor dry locations. Utilize NEMA 4X 316 stainless steel watertight enclosures, as described under article 2.4, JUNCTION AND PULL BOXES, for outdoor or wet locations and where subscript WP is indicated at the box location on the Drawings. Provide terminal blocks with a separate connection point for each conductor entering or leaving the box. Provide 25 percent spare terminal points for CITY use following completion of installation. Paint interior surfaces with white enamel or lacquer.

2.5 WIRING DEVICES

A. Switches:

1. General Use Switches: Provide specification grade, totally-enclosed, ac type, quiet tumbler switches meeting NEMA WD 1 performance standards and Federal Specification W-S-896G, and capable of control of lamp loads. Use switches rated at 20 amps, 120/277 volts. Provide operating handles colored white. Switches shall have screw terminals.

2. Weatherproof Switches: Use switches mounted in a cast metal box with gasketed, weatherproof device plate.

B. Receptacles:

1. Single and Duplex: Provide specification grade receptacles meeting NEMA WD 1 performance standards and Federal Specification W-C-596H, and having a contact arrangement such that contact is made on two sides of each inserted blade without detent. Use two-pole, three-wire grounding type receptacles rated 15 amps, 125 volts, NEMA Configuration 5-15R.

   Acceptable Manufacturers:

   1. Crouse-Hinds;

   2. Hubbell;

   3. Pass & Seymour;

   4. Or equal.

2. Weatherproof Receptacles: Receptacles installed in wet or damp locations shall be listed weather-resistant type and mounted in an enclosure that is weatherproof whether or not the attachment plug cap is inserted. An outlet box hood shall be UL listed and identified as extra-duty.

3. Ground Fault Interrupter (GFI) Receptacles: Provide duplex specification grade GFI receptacles tripping at 5 milliamps; rated 15 amps, 120 volts, NEMA Configuration 5-15Rand capable of interrupting 1,000 amps without damage. Use units meeting NEMA WD 1, fitting standard sized outlet boxes, having No. 12 AWG copper TW insulated pigtails, having provision for testing, and white in color.

   Use standard model where ground fault protection is needed at an individual location. Use feed-thru model where ground fault protection is specified for "downstream" conventional receptacles. Provide receptacles accepting standard device plates.

   Acceptable Manufacturers:

   1. Crouse-Hinds;

   2. Hubbell;

   3. Pass & Seymour;

Or equal.

4. Special Purpose Receptacles: Provide receptacles of the type, rating, and number of poles indicated or required for the anticipated purpose.

C. Device Plates:

1. General:

a. Provide plates fitting closely and tightly to the box on which they are to be installed. On surface mounted boxes, provide plates which do not extend beyond the sides of the box unless the plates do not have sharp corners or edges.

b. Use plate material compatible with the box material so that galvanic corrosion of the plate and/or box does not occur.

2. Plastic (P) Plates: Provide specification grade device plates manufactured of 0.10-inch minimum thickness, noncombustible, thermosetting material. Provide white one-piece with oval-head metal mounting screws of a color matching that of the plate.

3. Metal (M) Plates: Provide specification grade, one-piece, 0.040-inch nominal minimal thickness, No. 430 satin finish stainless steel device plates with oval-head, matching mounting screws.

4. Engraved Plates: Where device titles are indicated, provide device plates engraved with the designated titles. Provide engraved letters, numbers, or characters 1/8-inch high with filler of black color.

5. Cast Metal (CM) Plates: Provide cast metal device plates of copper-free aluminum with gaskets and stainless steel screws with oval heads.

6. Weatherproof (WP) Plates:

a. Where weatherproof receptacles are designated, the receptacle shall be installed in the specified box with a gasketed, weatherproof, cast metal or stainless steel cover plate with individual cap over each receptacle opening and stainless steel mounting screws. Utilize plates with caps held tightly closed with stainless steel springs when receptacle is not in use.

Acceptable Manufacturers:

1. Crouse-Hinds;

2. Hubbell;

3. Pass & Seymour;

4. Or equal.

b. Where weatherproof switches are designated, the switch shall be installed in the specified box with a gasketed, weatherproof, cast metal cover plate incorporating an external operator for the internal switch and with stainless steel mounting screws.

Acceptable Manufacturers:

1. Crouse-Hinds;

2. Hubbell;

3. Pass & Seymour;

4. Or equal.

7. Raised Sheet Metal (SM) Plates: Provide 1/2-inch high zinc or cadmium-plated steel device plates designed for one-piece drawn type sheet steel boxes.

2.6 LIGHTING AND POWER DISTRIBUTION PANELBOARDS

A. General: Provide circuit breaker panelboards meeting standards established by UL, NEMA PB 1, and the NEC. Where used as service entrance equipment, provide panels UL labeled for that use. Furnish panels with fully rated short circuit current equipment rating. Series connected equipment ratings are not acceptable.

Provide panels rated for connection to an electric system having an available amperes rms symmetrical short circuit current as indicated on drawings or as required by electrical studies. Provide panelboards and circuit breakers suitable for use with 75 degrees C wire at full LAEC 75 degrees C ampacity.

B. Cabinets: Furnish boxes large enough to provide a minimum wiring gutter space on both sides and top and bottom of 4-inches by 4-inches minimum. Provide flush or surface mounted boxes as indicated manufactured with reinforced steel frame and code-gauge, hot-dip galvanized sheet steel. Utilize front trim the same size as the box for surface mounted panelboards and 3/4-inch larger all around than the box for flush mounted panelboards. Panel covers shall be installed with direct screw connections. Adjustable clamps shall not be used. Utilize fronts having doors with concealed hinges and flush type lock and catch device. Provide multipoint locking devices for all doors over 30-inches in height. Key all locks alike, and furnish two milled type keys with each lock. Furnish on door interior a metal directory frame with transparent plastic face and enclosed directory card. Furnish an engraved, laminated plastic nameplate screwed (no adhesives) to the cabinet exterior face indicating the panelboard designation, service voltage, and phases. Nameplates shall be white, engraved to a black core. Letter height shall be 1/4 inch.

C. Interiors:

1. Furnished factory assembled panelboard interiors complete with circuit breakers as shown. In addition, space for future circuit breakers shall be provided with easily removable front cover. Utilize panelboards with interiors designed so that circuit breakers can be replaced without disturbing adjacent circuit breakers or without removing the main bus.

2. Provide copper bus bars full sized throughout their length. Make complete provisions for mounting future circuit breakers throughout the full length of the bus. Provide all machining, drilling, or tapping required to add or change circuit breakers in the future. Bolt together and rigidly support bus bars and connection straps on molded insulators.

3. Furnish an insulated neutral bus bar rated the same as the phase bus bars and having at least one terminal screw for each branch circuit. Furnish a copper ground bus bar installed

on the panelboard frame, bonded to the box, and containing at least one terminal screw for each circuit. Provide solderless main lugs for main, neutral, and ground bus bars. Provide sub-feed or thru-feed lugs where indicated. Provide lugs and connection points on phase, neutral, and ground buses suitable for copper conductors.

D. Circuit Breakers:

1. Furnish indicating type molded circuit breakers providing ON/OFF and TRIPPED positions of the operating handle. Furnish thermal magnetic, quick-make, quick-break circuit breakers which are non-interchangeable in accordance with the LAEC. Do not use tandem or dual circuit breakers in normal single-pole spaces. Do not use single-pole circuit breakers with handle ties where multiple circuit breakers are indicated. Utilize multi-pole circuit breakers designed so that an overload on one pole automatically causes all poles to open. Provide circuit breakers meeting requirements of UL 489. Install bolt-on circuit breakers in all panelboards. Provide circuit breaker handle padlocking provisions where indicated or required.

2. Where ground fault interrupter (GFI) circuit breakers are indicated or required by the LAEC, provide a unit containing a conventional thermal magnetic trip and a ground fault sensor rated to trip the circuit breaker in approximately 0.025 second for a 5-milliampere ground fault (UL Class A sensitivity). Utilize a ground fault sensor having the same rating as the circuit breaker and having a push-to-test button.

E. Acceptable Manufacturers:

1. Eaton;

2. Schneider Electric;

3. Siemens;

4. Or equal.

2.7 CIRCUIT BREAKERS, INDIVIDUAL, 600 VOLTS AND LESS

A. Mount individual circuit breakers in NEMA 12, industrial use enclosure unless otherwise indicated. Provide NEMA 4X, 316 stainless steel raintight enclosure for circuit breakers mounted outdoors and wherever the subscript WP is indicated on the Drawings. Provide circuit breakers with handles that can be locked in the OFF position. Interlock enclosure and circuit breaker to prevent opening the cover with the circuit breaker in the ON position. Provide quick-make, quick-break, thermal magnetic circuit breakers of the indicating type showing ON/OFF and TRIPPED positions of the operating handle. Do not use single-pole circuit breakers with handle ties where multi-pole circuit breakers are indicated. Utilize multi-pole circuit breakers designed so that an overload on one pole automatically causes all poles to open. Provide circuit breakers meeting the requirements of UL 489 and having a minimum interrupting rating as indicated. Where circuit breakers are used as service entrance equipment, provide units UL labeled for that use. Provide circuit breakers with terminals suitable for use with 75 degrees C wire at full LAEC 75 degrees C ampacity.

2.8 FUSED SWITCHES, INDIVIDUAL, 600 VOLTS AND LESS

A. Mount individual fused switches in NEMA 12, industrial use enclosures unless otherwise indicated Provide fused switches that can be locked in the OFF position. Interlock enclosure and switch to

prevent opening the cover with the switch in the ON position. Provide fused switches which are quick-make, quick-break, motor rated, load-break, heavy-duty (HD) type having external marking clearly indicating ON and OFF positions. Provide fuses of the current ratings indicated and types specified herein. Utilize fuse mountings that reject Class H fuses and will accept only the current--limiting fuses specified. Provide fused switches meeting the requirements of NEMA KS 1 and UL listed for application to a system having an available short circuit current as indicated. Where fused switches are used as service entrance equipment, provide units UL labeled for that use. Provide switches suitable for use with 75 degrees C wire at full LAEC 75 degrees C ampacity.

2.9 NONFUSED SWITCHES, INDIVIDUAL, 600 VOLTS AND LESS

A. Mount individual switches in NEMA 12, industrial use enclosure unless otherwise indicated. Provide NEMA 4X, 316 stainless steel raintight enclosure for switches mounted outdoors and wherever the subscript WP is indicated on the Drawings. Provide switches that can be locked in the OFF position. Interlock enclosure and switches to prevent opening the cover with the switch in the ON position. Provide switches which are quick-make, quick-break, motor rated, load-break, heavy-duty (HD) type having external marking clearly indicating ON and OFF positions. Furnish switches meeting the requirements of NEMA KS 1. Provide switches with terminals suitable for use with 75 degrees C wire at full LAEC 75 degrees C ampacity.

2.10 FUSES, 600 VOLTS AND LESS

A. Provide a complete set of current-limiting fuses wherever fuses are indicated. Supply a set of six spare fuses of each type and each current rating installed. Utilize fuses that fit mountings specified with switches and which provide features rejecting Class H fuses. Provide the following types:

1. For motor and transformer circuits, 600 volts and less, 0 to 600 amps, UL Class RK-1 with time delay, Bussmann Type LPS-RK, Shawmut Type A6D-R, or equal.

2. For motor and transformer circuits, 250 volts and less, 0 to 600 amps, UL Class RK-1 with time delay, Bussmann Type LPN-RK, Shawmut Type A2D-R, or equal.

3. For feeder and service circuits, 600 volts and less, 0 to 600 amps, UL Class RK-1, Bussmann Type KTS-R, Shawmut Type A6K-R, or equal.

4. For feeder and service circuits, 250 volts and less, 0 to 600 amps, UL Class RK-1, Bussmann Type KTN-R, Shawmut Type A2K-R, or equal.

5. For feeder and service circuits, 600 volts and less, 601 to 6,000 amps, UL Class L, Bussmann Type KRP-C, Shawmut Type A4BY, or equal.

2.11 PUSHBUTTONS, INDICATING LIGHTS, AND SELECTOR SWITCHES

A. For non-hazardous, indoor, dry locations, including motor control centers, control panels, and individual stations, provide heavy-duty, oil tight type pushbuttons, LED indicating lights, selector switches, and stations for these devices.

B. For non-hazardous, outdoor, or normally wet locations, or where otherwise indicated, provide heavy-duty corrosion-resistant, watertight type pushbuttons, indicating lights, or selector switches mounted in NEMA 4X 316 stainless steel watertight enclosures. Provide special gasketing required to make complete station watertight.

C. Provide devices meeting the requirements of NEMA ICS 2, and having individual, extra large nameplates indicating their specific function. Provide pushbutton stations with laminated plastic nameplates indicating the drive they control. Provide contacts with NEMA designation rating A600. Install provisions for locking pushbuttons and selector switches in the OFF position wherever lockout provisions are indicated.

D. Utilize selector switches having standard operating levers. Make all LED indicating lights push-to-test type. Provide ON or START pushbuttons colored green. Provide OFF or STOP pushbuttons colored red**.**

2.12 TERMINAL BLOCKS 600 VOLTS AND LESS

A. Provide 600-volts terminal blocks for termination of all control circuits entering or leaving equipment, panels, or boxes. Provide screw clamp compression, dead front barrier type terminal blocks with current bar providing direct contact with wire between the compression screw and yoke. Provide yoke, current bar, and clamping screw constructed of high strength and high conductivity metal. Utilize yoke that guides all strands of wire into the terminal. Utilize current bar providing dependable vibration-proof connection. Supply terminals constructed to allow connection of wire without any special preparation other than stripping. Rail mount individual terminals to create a complete assembly and provide terminals constructed such that jumpers can be installed with no loss of space on terminal or rail.

B. Size all terminal block components to allow insertion of all necessary wire sizes and types. Supply terminal blocks with marking system allowing the use of preprinted or field-marked tags. Supply UL approved terminal blocks manufactured by Weidmuller, Ideal, or equal. Provide terminal blocks with 25 percent spare termination points for CITY use following completion of installation.

2.13 CONTROL RELAYS

A. Provide industrial control relays, NEMA Class A300 for 300 volts, or A600 for 600 volts, with field convertible contacts, and meeting the requirements of NEMA ICS 2.

B. Where time delay relays are specified or required, unless otherwise noted, provide industrial control relays with a timer attachment adjustable over the range specified on the Drawings.

C. Where latching (mechanically held) relays or motor thermal detector relays are specified, provide industrial control relays with mechanical latch attachment with unlatching coil and coil clearing contacts. Utilize an attachment allowing easy manual latching and unlatching.

2.14 RESET TIMERS

A. Provide synchronous-motor-driven reset timers with a solenoid-operated clutch and suitable for semi-flush, panel mounting. Utilize timers with time range indicated and 10-amp, 120-volts contacts. Provide Eagle Signal Reset timers, Automatic Timing and Controls Reset timers, or equal.

2.15 ELAPSED TIME METERS

A. Provide synchronous-motor-driven, elapsed time meters, 0 to 99,999.9 hours range, non-reset type, suitable for semi-flush, panel mounting. Provide Type 240, 2-1/2-inch Big Look unit, Eagle

Signal Elapsed Time unit, or equal.

2.16 MAGNETIC CONTACTORS

A. Provide contactors of the NEMA sizes indicated. Mount contactors in NEMA 12, dust-tight, drip-tight, industrial use enclosures unless otherwise indicated. Utilize contactors manufactured and rated in accordance with NEMA ICS 2.

2.17 MAGNETIC LIGHTING CONTACTORS

A. Provide mechanically held lighting contactors of the current ratings indicated. Mount contactors in NEMA 12, dust-tight, drip-tight, industrial use enclosures unless otherwise indicated. Provide coil-clearing contacts on mechanically-held units. Utilize contactors manufactured and rated in accordance with NEMA ICS 2.

2.18 DRY TYPE SMALL POWER TRANSFORMERS (600-VOLTS AND LESS PRIMARY)

Provide self-cooled, two-winding, dry type transformers of the ratings indicated and built in accordance with the latest IEEE, ANSI, and NEMA standards. Utilize units with manufacturer's standard insulation class and standard temperature rise. For ratings 3 to 25 kVA single-phase and 3 to 15 kVA 3-phase, provide units with core and coils completely enclosed in a non-ventilated, NEMA 3R weatherproof enclosure. Utilize encapsulated windings on single-phase units 0 to 25 kVA. On all transformers 15 kVA and larger provide units with at least four, 2-1/2 percent, full capacity voltage taps; two above and two below normal voltage rating.

A. Supply units where sound levels determined by tests in accordance with NEMA and ANSI standards do not exceed:

1. 40 decibels for 0 to 9 kVA.
2. 45 decibels for 10 to 50 kVA.
3. 50 decibels for 51 to 150 kVA.
4. 55 decibels for 151 to 300 kVA.
5. 60 decibels for 301 to 500 kVA.

B. For transformers 30 kVA and larger, equip units with integral vibration isolators completely isolating the core and coil assembly from the transformer enclosure. For smaller transformers, provide integral vibration isolators or install external vibration isolators which isolate the entire unit from the structure on which it is mounted.

Utilize only integral or external vibration isolators which are rated for the weight of the transformer and provide 99 percent isolation efficiency at the fundamental frequency of sound emitted by the transformer.

C. Acceptable Manufacturers:

1. Eaton;

2. Hammond Power Solutions;

3. Schneider Electric;

4. Or equal.

2.19 DRY TYPE, SHIELDED, ISOLATION TRANSFORMERS (600-VOLTS AND LESS PRIMARY)

A. General: Supply dry type transformers providing electrical isolation and noise suppression between the electrical supply system and the critical load. Supply transformers of the ratings and connections indicated, built in accordance with current IEEE, ANSI, NEMA, and UL standards in a general purpose indoor enclosure. Provide units having six 2-1/2 percent full capacity primary winding taps, three above and three below rated voltage. Provide units with a minimum 80 degrees C and maximum 150 degrees C temperature rise above ambient.

B. Isolation and Noise Suppression:

1. Provide units including core and coils having two foil type electrostatic shields, one located between the primary and secondary windings, and the other located between the core and the secondary winding. Provide a ground lead from each shield out into the unit enclosure.

2. Supply isolation transformers with electrical noise attenuation and other characteristics as follows:

Common mode attenuation	120 dB
Transverse mode attenuation	20 dB
Impedance	4.3
Reactance	Minimum 3 percent; Maximum 4.2
Regulation, no-load to percent full-load	1.2

Output distortion None added3.
Provide primary surge protection as follows:

Peak transient current	40,000 amps
10-microsecond rise time volts	2.9 kV

C. Additional Features Required:

1. Magnetic field strength around transformer less than 0.1-gauss at 1-1/2-feet.

2. Two thermal switches located in the center cove "hot spot" to provide two-stage (high and high-high alarm) thermal sensing. Each switch rated 5 amps, 120 volts, and having one

normally open and one normally closed contact.

D. Acceptable Manufacturers:

1. Eaton;

2. Hammond Power Solutions;

3. Schneider Electric;

4. Or equal.

2.20 LOW VOLTAGE SURGE PROTECTIVE EQUIPMENT

A. Provide secondary surge protective equipment consisting of a surge capacitor and surge arrestor combination located where indicated on the Drawings. Utilize components for all surge protective equipment covered by this Specification, designed and tested in accordance with ANSI/IEEE C62.11.

B. Provide a surge capacitor impregnated with non-pcb biodegradable dielectric fluid. Include an integral discharge resistor which will drain the residual voltage to 50 volts crest in less than 5 minutes after the unit has been disconnected from the circuit.

C. Provide an arrestor consisting of an assembly of high strength metal oxide valve elements enclosed in a high strength, corrosion-resistant, molded resin housing.

D. Provide a capacitor and arrestor having a mounting nipple, flat washer, and nut suitable for knockout mounting. Install capacitors and arrestors in NEMA 4X (stainless steel) enclosures.

2.21 PENETRATION SEALING SYSTEMS (FIRE STOPS) (NOT USED)

2.22 ELECTRIC VEHICAL PEDESTAL CHARGING STATION – Not Used

A General: Electrical vehicle (EV) standard single 40A, Level 2, and 75A Level 3 pedestal charging stations in NEMA 3R rated cabinet, designed for outdoor use.

B. Charging stations to provide the following:

1. Output cable: Single output cable extending to 18 feet, with cable organizer integral with pedestal. Standard EV connector complying with SAEJ1772.

2.. Pedestal Electrical supply: 240 VAC, 40A, 60 Hz (Level 2) or 480 VAC, 75A, 60 Hz (Level 3).

3. Charging power output: 208 to 240VAC, 30A -- DC, or 60 A DC.

4. Ground fault protection: Internal with auto reclosure.

5. Auto restart after ground fault or mains loss.

6. Authentication using RFID card.

7. Simple user interface: Front panel indicators or display showing power status, charge indicator, system fault indicator, general fault indicator.

8. Ambient operating temperature range: -20 deg F to 120 deg F.

9. Manufacturers: Level 2; General Electric EVSRN3, Schneider Electric EVLinkEV 230PSRR, or equal; Level 3: EFACEC Model QC45, Schneider Electric Level 3, or equal.

2.23 ENCLOSURE PAINT AND FINISH

A. All metallic enclosures shall be finished with a prime coat of rust inhibitor and painted as per ANSI No. 61 or as per the ENGINEER's instructions.

PART 3 -- EXECUTION

3.1 JUNCTION AND PULL BOXES

A. Where indicated on the Drawings, and where necessary to terminate, tap-off, or redirect multiple conduit runs, provide and install appropriately designed junction boxes. Furnish and install pull boxes where necessary in the raceway system to facilitate conductor installation. Provide pull boxes to limit conduit runs to less than 150-feet and to contain no more than the equivalent of three right-angle bends unless accepted by the ENGINEER.

1. Installation:

a. Make all boxes accessible. Do not install boxes in finished areas unless accepted by the ENGINEER. Mount all boxes plumb and level. Use flush mounted boxes with concealed conduits. Make edges of boxes flush with the final surface.

b. Mount boxes in a secure, substantial manner, supported independently of conduit by attachment to the building structure or a structural member. Fasten boxes with bolts and expansion shields on concrete or brick, toggle bolts on hollow masonry units, and machine screws or welded threaded studs on steelwork. Threaded studs driven in by a powder charge and provided with lock washers and nuts are acceptable in lieu of expansion shields. Boxes embedded in concrete or masonry need not be additionally supported. Utilize galvanized mounting hardware in industrial areas.

c. Install boxes for conduits under grade flush with finished grade in locations outside of paved areas, roadways, or walkways.

d. If adjacent structure is available, the box may be mounted on the structure surface just above finished grade in accessible but unobtrusive location. If it is found desirable to locate boxes in paved areas, roadways, or walkways, obtain ENGINEER's written approval and utilize boxes and covers suitable for the weights to which they may be subjected.

3.2 TERMINAL JUNCTION BOXES (TJB)

A. Install in accordance with all the requirements detailed under article 3.2, JUNCTION AND PULL BOXES above. Label each block and terminal with a permanently attached, non-destructible tag.

3.3 WIRING DEVICES

A. Switches: Mount switches at the heights indicated under article 3.1, OUTLET AND DEVICE BOXES. Mount switches for switch operation in the vertical position.

B. Device Plates:

1. Installation: Securely fasten device plates to switch or receptacle boxes or the wiring device contained therein. Install device plates used with flush mounted boxes with all four edges in continuous contact with the finished wall surfaces without the use of mats or similar materials. Plaster fillings will not be acceptable. Install device plates vertically or horizontally with an alignment tolerance of 1/16-inch. Do not use sectional type device plates.

3.4 LIGHTING AND DISTRIBUTION PANELBOARDS

A. Mount panelboards securely where indicated, plumb, in-line, and square with walls. Unless otherwise indicated, mount panelboard with top of its cabinet approximately 6-feet above the floor. Provide a typewritten circuit directory under a metal-framed transparent plastic cover inside each panelboard. Provide an engraved, laminated plastic nameplate on the outside of the panelboard showing the panelboard designation, voltage, and phases.

3.5 DRY TYPE TRANSFORMERS (600-VOLTS AND LESS PRIMARY)

A. Mount transformers approximately where indicated. Load any vibration isolators external to the unit properly and provide complete isolation with no direct transformer unit metal in contact with the mounting surface. Connect electrical circuits to transformers by means of moisture proof, flexible conduit in a manner that prevents transformer vibrations from being transmitted to the building or other equipment.

B. Ground neutrals and enclosures of all transformers and all moisture proof flexible conduit in accordance with applicable codes and as otherwise may be indicated. Connect voltage taps on all transformers to give as close as possible to rated output voltage under normal plant load conditions.

3.6 DRY TYPE, SHIELDED, ISOLATION TRANSFORMERS (600-VOLTS AND LESS PRIMARY)

A. Follow instructions for DRY TYPE TRANSFORMERS (600-VOLTS AND LESS PRIMARY) above. In addition, ground isolation shields to the unit enclosure with a conductor of the same material, and at least as big, as the shield ground lead provided with the unit.

END OF SECTION

SECTION 16110
RACEWAYS

PART 1 -- GENERAL

1.1 THE REQUIREMENT

A. The CONTRACTOR shall furnish all tools, equipment, materials, and supplies and shall perform all labor required to complete the work as indicated on the Drawings and specified herein.

1.2 RELATED WORK SPECIFIED ELSEWHERE

A. The following Divisions and Sections applies to the WORK of this Section. Other Sections of the Specifications, not referenced below, shall also apply to the extent required for proper performance of this WORK.

1. Division 02 Site Work.

2. Division 03 Concrete.

3. Division 09 Finishes.

4. Division 11 Equipment.

5. Division 15 Mechanical.

6. Division 17 Instrumentation and Control.

B. Materials and equipment furnished and installed under Divisions 11 and 15 with raceway and electrical conductors furnished, installed, and connected under Division 16, Electrical.

1.3 REFERENCE CODES AND STANDARDS

A. All work specified herein shall conform to or exceed the applicable requirements of the referenced portions of the following publications to the extent that the provisions thereof are not in conflict with other provisions of these specifications.

B. Comply with the current provisions of the following Codes and Standards.

1. Codes and Standards:

LAEC	City of Los Angeles Electrical Code, latest adopted edition.

2. Commercial Standards:

ANSI C80.1	Electrical Rigid Steel Conduit (ERSC).
ANSI/NEMA FB 1	Fittings, Cast Metal Boxes, and Conduit Bodies for Conduit
ANSI/UL 467	Grounding and Bonding Equipment, Safety Standard For.
NEMA TC 2	Electrical Polyvinyl Chloride (PVC) Conduit

NEMA TC 3	Polyvinyl Chloride (PVC) Fittings
NEMA VE-1	Metal Cable Tray Systems.
UL 6	Electrical Rigid Metal Conduit - Steel

C. All equipment furnished by the CONTRACTOR shall be listed by and shall bear the label of Underwriters' Laboratories, Incorporated (UL), or of an independent testing laboratory acceptable to the Building and Safety Department of the City of Los Angeles.

D. The construction and installation of all electrical equipment and materials shall comply with all provisions of the CAL OSHA Safety orders Title 8 CCR, as applicable, State Building Standards, and applicable local codes and regulations.

1.4 CONTRACTOR SUBMITTALS

A. Submittals shall be made in accordance with the requirements of Section 16020 Municipal Facilities General Electrical Requirements.

B. The following submittals and specific information shall be provided.

1. Catalog cuts, bulletins, or brochures shall be submitted for mass produced non-custom material.

2. The CONTRACTOR shall furnish copies of the manufacturer’s certified test reports for the material being supplied to establish compliance with NEMA RN-1.

1.5 QUALITY ASSURANCE

A. Quality Assurance shall be in accordance with Section 16010 Municipal Facilities General Electrical Requirements.

PART 2 -- PRODUCTS

2.1 RIGID GALVANIZED STEEL CONDUIT

A. Use rigid steel conduit, including bushings, couplings, elbows, nipples, and other fittings,

galvanized by hot-dipping, and meeting the requirements of ANSI C80.1, ANSI/NEMA FB 1, UL, and the LAEC. Do not use setscrew type couplings, bushings, bends, nipples, and other fittings, unless approved by the ENGINEER or the INSPECTOR. Factory bends are not permitted unless approved by the ENGINEER or the INSPECTOR. Conduit bending radius shall not be less than the minimum cable bending radius of the cable to be installed. See NEC Section 300.34 for conductor bending radius.

2.2 PVC SCHEDULE 40 CONDUIT

A. Use rigid PVC Schedule 40 conduit, UL listed for concrete-encased, underground direct burial, concealed and direct sunlight exposed use, and UL listed and marked for use with conductors having 90 degrees C insulation. Use conduits, couplings, bushings, elbows, nipples, and other fittings meeting the requirements of NEMA TC 2 and TC 3, UL, NEC, and ASTM specified tests for the intended use. Use only conduit with a factory formed bell on one end. Conduit that requires the use of couplings for straight runs will not be acceptable.

2.3 PVC SCHEDULE 80 CONDUIT

A. Use rigid PVC conduit, Schedule 80, extra heavy wall, UL listed for concrete-encased, underground direct burial, and UL listed and marked for use with conductors having 90 degrees C insulation. Use conduit, couplings, bushings, elbows, nipples, and other fittings meeting the requirements of NEMA TC 2 and TC 3, UL, and LAEC. CONTRACTOR shall account for conduit wall thickness in determining appropriate conduit size. Schedule 80 conduit shall be used as indicated on the drawings. In general, this conduit is used in concrete encased or direct burial locations exposed to vehicular traffic.

2.4 PVC COATED RIGID GALVANIZED STEEL CONDUIT

A. Use PVC coated rigid steel conduit, galvanized inside and out. Prior to coating, the galvanized conduits and fittings shall be UL listed. The galvanized conduit shall have an exterior PVC coating of 40 mils nominal (+10 mils / -5 mils) bonded to the metal. The interior shall be coated with a urethane coating no more than 7 mils thick. Use PVC coated fittings with the same interior and exterior coating requirements. PVC coated fittings and sleeves shall be completely watertight to prevent moisture from penetrating the interior of the conduits and fittings. The PVC coating shall be resistant to ultra-violet rays when installed outdoors. The conduit and fittings shall meet all the requirements of NEMA RN-1.

2.5 FLEXIBLE METAL CONDUIT, LIQUID-TIGHT

A. Use UL listed liquid-tight flexible metal conduit consisting of galvanized steel flexible conduit covered with an extruded PVC jacket and terminated with nylon bushings or bushings with steel or malleable iron body and insulated throat and sealing O-ring. Provide external grounding connector and appropriately sized grounding conductor to assure ground continuity.

2.6 RACEWAY FITTINGS

A. Fittings for Rigid Steel.

1. Use insulated throat bushings of metal with integral plastic bushings rated for 105 degrees C.

2. For insulated throat bushings for rigid steel conduit, use Thomas & Betts Nylon Insulated Metallic Bushings, or O.Z. Gedney Type B, or equal.

3. Use Myers Scru-Tite, or equal hubs for rigid steel conduit.

4. Use conduit bodies for rigid steel conduit of metal and sized as required by the NEC. Use Appleton Form 35 threaded Unilets; Crouse-Hinds Mark 9 or Form 7 threaded condulets; Killark Series O Electrolets; or equal, for normal conduit bodies for rigid steel conduit. Where conduit bodies for rigid steel conduit are required to be approved for hazardous (classified) locations, use conduit bodies manufactured by Appleton, Crouse-Hinds, Killark, or equal.

5. Use only couplings for rigid steel conduit supplied by the conduit manufacturer.

6. Use Appleton Type EYF, EYM, or ESU; Crouse-Hinds Type EYS or EZS; Killark Type EY or EYS; or equal, 40% fill sealing fittings for rigid steel conduit. Where condensate may collect on top of a seal, provide a drain by using Appleton Type SF Crouse-Hinds Type EYD or EZD, or equal Drain Seal.

7. Use Appleton Type ECDB, Crouse-Hinds ECD, or equal drain fittings for rigid steel conduit.

8. Fittings for Liquid-Tight Flexible Metal Conduit: Use insulated throat connectors for liquid-

tight flexible metal conduit of metal with an integral plastic bushing rated for 105 degrees C, and of the long design type extending outside of the box or other device at least 2-inches. Use Thomas & Betts Super-Tite Nylon Insulated Connectors or equal.

9. Fittings in Hazardous Areas: In hazardous areas, use only fittings approved for the atmosphere involved.

10. Use cable sealing fittings forming a watertight nonslip connection to pass cords and cables into conduit. Size cable sealing fitting for the conductor OD. For conductors with OD's of 1/2-inch or less, provide a neoprene bushing where the conductor enters the connector. Use Crouse-Hinds CGBS, Appleton CG Series, or equal, cable 40% fill sealing fittings.

11. Coating thickness of PVC coated fittings shall be the same as that for PVC coated conduits.

2.7 PRECAST MAINTENANCE HOLES AND HANDHOLES

A. Install maintenance holes and handholes precast with 28-day, 3,000 psi minimum compressive strength concrete and designed for AASHTO H-20 loading. Minimum dimensions for maintenance holes and handholes are shown on the Drawings. Increase these as required by use of extension sections to accommodate the several raceway entrances at their required elevations.

B. Provide raceway entrances on all 4 sides. For raceways installed under this Contract, knockout panels or precast individual raceway openings may be used. On sides where no raceways are installed under this Contract, provide knockout panels for future raceway installation.

C. Utilize heavy-duty type frames and covers made of cast iron, as per CITY of Los Angeles standards, suitable for H-20 loading, and having machined bearing surfaces. Provide indented type covers, solid top design, with two drop handles each. On the upper side of each cover, cast or burned by welder, in integral letters not less than 2-inches high appropriate titles, ELECTRIC HV (for above 600 volts), ELECTRIC LV (for 600 volts and below), or TELEPHONE. Field stamp covers with manhole or handhole numbers indicated on the Drawings.

D. Provide heavy weight cable racks with adjustable arms and acceptable insulators for all cables in each maintenance hole. Set adjustable inserts in the concrete walls for the attachment of racks. Do not use bolts or studs embedded in concrete for attaching racks. Set racks and inserts on not greater than 3-foot centers around the entire inside perimeter of the maintenance hole, arranged so that all spare conduit ends are clear for future cable installation. Provide racks with a sufficient number of arms and insulators to accommodate cables for each conduit entering or leaving the maintenance hole, including spares.

E. Provide a pulling iron embedded in the concrete wall opposite each raceway entrance and one in the floor vertically below the center of the manhole or handhole cover. Utilize 3/4-inch round stock securely fastened to the overall steel reinforcement before concrete is poured.

F. Utilize maintenance hole and handhole hardware of steel, hot-dip galvanized after fabrication.

G. Acceptable Manufacturers:

1. Brooks Products;

2. Jensen Precast;

3. Oldcastle Precast;

4. Or equal.

H. All prefabricated maintenance holes shall be shop inspected before delivery to the site.

2.8 RACEWAY TAGS

A. Provide permanent, stainless steel markers with raceway designations, minimum 1/4-inch high lettering, pressure stamped, embossed, or engraved onto the tag. Tags relying on adhesives or taped-on markers are not acceptable. Attach tags to raceways with stainless steel wire.

2.9 WARNING TAPE

A. Provide heavy-gauge, yellow plastic tape of 6 -inch minimum width for use in trenches containing electric circuits. Utilize tape made of material resistant to corrosive soil. Use tape with printed warning that an electric circuit is located below the tape.

Acceptable Manufacturers:

1. Brady;
2. Marking Services Inc.;
3. Seton;
4. Or equal.

PART 3 -- EXECUTION

3.1 GENERAL

A. Provide raceway systems meeting or exceeding the requirements of the NEC.

3.2 PROTECTION DURING CONSTRUCTION

A. In addition to the provisions of the GENERAL REQUIREMENTS, and Section 16020 "Municipal Facilities General Electrical Requirements," prior to installation, store all products specified in this section in a dry location. Following installation, protect products from the effects of moisture, corrosion, and physical damage during construction. Keep openings in conduit and tubing capped with manufactured seals during construction.

3.3 MINIMUM RACEWAY SIZE

A. Use no circular raceway less than 3/4-inch.

3.4 REQUIRED RACEWAY TYPE FOR LOCATION AND INSTALLATION METHOD

A. Exterior, Exposed:

1. PVC coated rigid galvanized steel conduit.

B. Interior, Exposed:

1. Rigid galvanized steel conduit.
2. EMT for above-ceiling application.

C. Interior, Concealed (Not Embedded in Concrete):

1. Rigid galvanized steel conduit.

2. PVC Schedule 40 conduit.

D. Embedded in Concrete Walls or Floors:

1. PVC Schedule 40 conduit.

E. Underground, Direct Earth Burial:

1. PVC Schedule 40 conduit.

2. PVC Schedule 80 conduit. (For vehicular traffic areas)

F. Concrete Encased Raceways:

1. Rigid galvanized steel conduit.

2. PVC Schedule 40 conduit.

G. Under Concrete Floor Slabs:

1. PVC Schedule 40 conduit.

H. Final Connection to Certain Equipment:

1. Make final connection to motors, wall or ceiling mounted fans and unit heaters, dry type transformers, valves, local instrumentation, and other equipment where flexible connection is required to minimize vibration or where required to facilitate removal or adjustment of equipment, with 36-inch maximum length liquid-tight, PVC-jacketed, flexible steel conduit.

2. The flexible conduit shall be long enough to allow the item to which it is connected to be withdrawn or moved off its base. Use liquid-tight flexible metal conduit in outside areas, process areas exposed to moisture, and areas required to be oil free and dust-tight.

I. Special Locations:

1. Use PVC coated rigid galvanized steel conduit:

a. Where conduit changes from underground and/or concrete embedded to exposed.

b. Under equipment mounting pads.

c. In exterior light pole foundations.

J. Communication and Instrumentation Conduits:

1. Communication and instrumentation conduits shall be PVC coated rigid galvanized steel.

3.5 GENERAL INSTALLATION REQUIREMENTS FOR RACEWAYS

A. Location, Routing, and Grouping:

1. Conceal or expose raceways as indicated. Group raceways in same area together. Locate raceways at least 12-inches away from parallel runs of heated piping for other utility systems.

2. Run exposed raceways parallel or perpendicular to walls, structural members, or intersections of vertical planes to provide a neat appearance. Follow surface contours as much as possible.

3. Avoid obstruction of passageways. Run concealed raceways with a minimum of bends in the shortest practical distance considering the building construction and other systems.

4. In block walls, do not run raceways in the same horizontal course with reinforcing steel.

5. In outdoor, underground, or wet locations, use watertight couplings and connections in raceways. Install and equip boxes and fittings so as to prevent water from entering the raceway.

6. Paint all threads of galvanized conduits with UL approved zinc-rich paint or liquid galvanizing compound before assembling. Touch up after assembly to cover nicks or scars.

7. Do not notch or penetrate structural members for passage of raceways except with prior approval of the ENGINEER or the INSPECTOR.

8. Do not run raceways in equipment base foundations.

9. Locate above ground raceways concealed in poured concrete so that the minimum concrete covering is not less than 1-1/2-inches.

10. Except at raceway crossings, separate raceways in slabs not less than six times the raceway outside diameter.

11. Raceways installed under slab floors shall lie completely under the slab with no part of the horizontal run of the raceway embedded within the slab.

12. Install concealed, embedded, and buried raceways so that they emerge at right angles to the surface. Provide support during pouring of concrete to ensure that raceways remain in position.

13. Allow a minimum headroom of 7 feet for conduit passing over walkways.

14. Communication and instrumentation conduits crossing power circuits shall be separated from such circuits by the minimum distance stipulated by the IEEE standards.

B. Support:

1. Support raceways at intervals not exceeding LAEC requirements unless otherwise indicated. Support multiple raceways adjacent to each other by ceiling trapeze. Support individual raceways by wall brackets, strap hangers, or ceiling trapeze, fastened by toggle bolts on hollow masonry units, expansion shields on concrete or brick, and machine screws or welded thread studs on steelwork.

2. Threaded studs driven in by a powder charge shall not be accepted.

3. Support all raceways from building structural members only.

4. Do not use nails anywhere or wooden plugs inserted in concrete or masonry as a base for raceway or box fastenings. Do not weld raceways or pipe straps to steel structures. Do not use wire in lieu of straps or hangers.

C. Bends:

1. Make changes in direction of runs with symmetrical bends. Make bends and offsets of the longest practical radius. Do not heat metal raceways to facilitate bending.

2. Make bends in parallel or banked runs of raceways from the same center or centerline so that bends are parallel and of neat appearance. Make field bends in parallel runs.

3. For PVC conduits, use factory made elbows for all bends 30 degrees or larger. Use rigid steel elbows on all 90-degree bends in PVC conduits. Use acceptable heating methods for forming smaller bends.

4. Make no bends in flexible conduit that exceed 90 degrees or allowable bending radius of the cable to be installed or that significantly restricts the conduits flexibility.

D. Bushing and Insulating Sleeves:

1. Where metallic conduit enters metal equipment enclosures through conduit openings, install a bonding bushing on the end of each conduit. Install a bonding jumper from the bushing to any equipment ground bus or ground pad.

2. If neither exists, connect the jumper to a threaded bolt connection to the metallic enclosure.

3. Use manufacturer's standard insulating sleeves in all metallic conduits or insulated bushings terminating at an enclosure.

E. Expansion Joints: Provide suitable expansion fittings for raceways crossing expansion joints in structures or concrete slabs or provide other suitable means to compensate for expansion and contraction. Provide for the high rate of thermal expansion and contraction of PVC conduit by providing PVC expansion joints as recommended by the manufacturer and as required.

F. PVC Conduit: Solvent weld PVC conduit joints with solvent recommended by the conduit manufacturer. Follow manufacturer's solvent welding instructions and provide watertight joints. Use acceptable PVC terminal adapters when joining PVC conduit to metallic fittings. Use acceptable PVC female adapters when joining PVC conduit to rigid metal conduit.

G. PVC Coated Rigid Steel Conduit: Install in strict accordance with the manufacturer's instructions. Touch up any damage to the coating with conduit manufacturer acceptable patching compound. PVC boot shall cover all threads. Where belled conduits are used, bevel the unbelled end of the joint before joining. Leave no metallic threads uncovered.

H. Penetrations:

1. Seal the interior of all raceways entering structures at the first box or outlet with oakum or suitable plastic expandable compound to prevent the entrance into the structure of gases, liquids, or rodents.

2. Dry pack with nonshrink grout around raceways that penetrate concrete walls, floors, or ceilings aboveground, or use one of the methods specified for underground penetrations.

3. Where an underground conduit enters a structure through a concrete roof or a membrane waterproofed wall or floor, provide an acceptable, malleable iron, watertight, entrance sealing device. Provide a device having a gland type sealing assembly at each end with pressure bushings which may be tightened at any time when there is no raceway concrete encasement specified or indicated. When there is raceway concrete encasement specified or indicated, provide such a device with a gland type sealing assembly on the accessible side. Securely anchor all such devices into the masonry construction with one or more integral flanges. Secure membrane waterproofing to such devices in a permanently watertight manner.

4. Where an underground raceway without concrete encasement enters a structure through a nonwaterproofed wall or floor, install a sleeve made of Schedule 40 galvanized pipe.

   Fill the space between the conduit and sleeve with a suitable plastic expandable compound, or oakum and lead joint, on each side of the wall or floor in such a manner as to prevent entrance of moisture. A watertight entrance sealing device as specified may be used in lieu of the sleeve.

5. Where raceways penetrate fire-rated walls, floors, or ceilings, fire stop openings around electrical penetrations to maintain the fire-resistance rating.

6. Raceways passing through roofs shall be flashed.

7. Provide conduit seals where required by Article 500 of the LAEC.

3.6 INSTALLATION REQUIREMENTS FOR UNDERGROUND DIRECT BURIAL CONCRETE-ENCASED RACEWAYS

A. General:

1. Coordinate installation of underground raceways with other outside and building construction work. Maintain existing outside utilities in operation unless otherwise authorized by the ENGINEER.

2. Remove entirely and properly reinstall all raceway installations not in compliance with these requirements.

3. Do not use union type fittings underground.

4. Provide a minimum cover per NEC Table 300.5 for all underground raceways unless otherwise indicated. Warning tape as specified in Part 2 shall be placed no less than 12 inches above conduit and duct bank.

5. Where a concrete-encased duct bank is installed over an extensive area of disturbed earth such as that within the periphery of a building, provide a separate concrete base under the duct bank to ensure stability of raceways during installation. Allow this base to set before the duct bank is installed.

6. Do not backfill underground direct burial and concrete-encased raceways until they have been inspected by the ENGINEER and the INSPECTOR.

7. Warning Tapes: Bury warning tapes approximately 8-inches below grade and above all underground conduit runs or duct banks. Align parallel to and within 12-inches of the centerline of runs.

B. Separation and Support:

1. Separate parallel runs of two or more raceways in a single trench with preformed, nonmetallic spacers designed for the purpose. Install spacers at intervals not greater than that specified in the LAEC for support of the type raceways used, and in no case greater than 10-feet.

2. Support raceways installed in fill areas to prevent accidental bending until backfilling is complete. Tie raceways to supports, and raceways and supports to the ground, so that raceways will not be displaced when concrete encasement or earth backfill is placed.

C. Arrangement and Routing:

Arrange multiple conduit runs substantially in accordance with any details shown on the Drawings. Locate underground conduits where indicated on the Drawings.

1. Make minor changes in location or cross-section as necessary to avoid obstructions or conflicts. Where raceway runs cannot be installed substantially as shown because of conditions not discoverable prior to digging of trenches, refer the condition to the ENGINEER for instructions before further work is done.

2. Where other utility piping systems are encountered or being installed along a raceway route, maintain a 12-inch minimum vertical separation between raceways and other systems at crossings. Maintain a 12-inch minimum separation between raceways and other systems in parallel runs. Do not place raceways over valves or couplings in other piping systems. Refer conflicts with these requirements to the ENGINEER for instructions before further work is done.

3. Provide insulated grounding bushings on all metallic raceways entering manholes. Provide bell-ends flush with manhole walls on all nonmetallic raceways entering manholes.

4. In multiple conduit runs, stagger raceway coupling locations so that couplings in adjacent raceways are not in the same transverse line.

5. Provide markers at grade to indicate the direction of underground conduits provided under this Contract. Provide markers consisting of double-ended arrows, straight for straight runs and bent at locations where runs change direction. Provide markers at all bends and at intervals not exceeding 100-feet in straight runs. Use markers made of sheet bronze not less than 1/4-inch thick embedded in and secured to the top of concrete posts. Use markers not less than 10-inches long and 3/4-inch wide and marked ELECTRIC CABLES in letters 1/4-inch high incised into the bronze to a depth of 3/32-inch.

6. All conduits shall enter maintenance holes and structures at right angles.

D. Provide expandable grommets for concrete encased raceway passing through wall to the earth.

E. Raceway Coating: At couplings and joints, coat metallic underground direct-burial conduits with Bitumastic No. 50 or equal, or wrap with Scotchrap No. 51, or equal plastic tape with 1/2-inch overlap.

1. Direct Earth Burial Conduit Zone Backfill Installation:

2. Backfill material for the conduit zone of direct burial conduit trenches may be selected from the excavated material if it is free from roots, foreign material, and oversized particles. Use material with 3/4-inch maximum particle size and suitable gradation for satisfactory compaction. Remove material if necessary to meet these requirements.

3. Imported 3/4-inch minus gravel or sand may be used in lieu of material from the excavation.

4. After conduits have been properly installed, backfill the trench with specified material placed around the conduits and carefully tamped around and over them with hand tampers. Final, tamped conduit cover shall be 4-inches minimum.

F. Concrete Encasement:

1. Where indicated, encase conduits in a red concrete envelope sized as indicated and located at the elevation shown. Use 2,500 psi concrete as specified in Section 03300 CAST-IN-PLACE CONCRETE.

2. Maintain a grade of at least 4-inches per 100-feet, either from one maintenance hole or pull box to the next, or from a high point between them, depending on the surface contour.

3. Hold conduits for concrete-encased raceways securely in place by acceptable window type spacer supports. Where, in the opinion of the ENGINEER, ground conditions are such as to require concrete forms, install forms constructed of materials and in a manner acceptable to the ENGINEER. No variations greater than 1/2-inch in 50-feet will be permitted from a straight line.

4. Envelopes may be poured directly against the sides of trenches if the cut is clean, even, and free of loose material. Remove loose material from trenches before and during pouring of concrete to ensure sound envelopes. Carefully spade concrete during pouring to eliminate all voids under and between raceways and honeycombing of the exterior surface.

5. Do not use power-driven tampers unless they are specifically designed for the application, in order to ensure that the watertight integrity of the raceways is maintained.

6. Generally, pour an entire concrete envelope in one continuous pour. Where more than one pour is necessary, terminate each pour in a sloped plane, and insert 3/4-inch reinforcing rod dowels extending into the concrete 18-inches minimum on each side of the joint. Obtain Engineers' approval for the number and location of dowels.

7. Provide reinforcement shown where envelopes connect to manholes or building structures to prevent shearing of joints.

3.7 MAINTENANCE HOLES AND HANDHOLES

A. Install maintenance holes and handholes where shown on the Drawings. Provide excavation, shoring, bracing, backfilling, grading, etc., in accordance with requirements specified elsewhere in these Contract Documents.

B. Do not install maintenance holes or handholes until final conduit grading, including field changes necessitated by underground interferences, has been determined. Set frames to final grades as required.

C. Make installation so that raceways enter maintenance holes or handholes at nearly right angles and as near as possible to one end of a wall, unless otherwise indicated.

D. Install one ground rod in each maintenance hole and handhole. Connect all noncurrent-carrying metal parts in the maintenance holes and any metallic raceway grounding bushings to this ground rod with No. 6 AWG (minimum) copper conductor.

E. CONTRACTOR shall clean and remove all debris from maintenance holes and handholes

whether new or existing.

3.8 WIREWAYS

A. Mount wireways securely in accordance with the LAEC and manufacturer's instructions. Locate removable cover or hinged cover on accessible vertical face of wireway unless otherwise indicated.

3.9 PREPARATION FOR PULLING IN CONDUCTORS

A. Do not install crushed or deformed raceways. Avoid traps in raceways where possible. Take care to prevent the lodging of plaster, concrete, dirt, or trash in raceways, boxes, fittings, and equipment during the course of construction. Make raceways entirely free of obstructions or replace them. Ream all raceways, remove burrs, and clean raceway interior before introducing conductors or pull wires.

B. Immediately after installation, plug or cap all raceway ends with watertight and dust-tight seals until the time for pulling in conductors.

C. For concrete-encased raceways, after the concrete envelope has set, pull a mandrel of a diameter approximately 1/4-inch less than the raceway inside diameter, through each raceway. Then pull a bristle brush through each raceway to remove debris.

3.10 EMPTY RACEWAYS

A. Certain raceways will have no conductors pulled in as part of this Contract. Identify with tags at each end and at any intermediate pull point the origin and destination of each such empty raceway. Where a raceway has been identified with a name (number) in the Raceway Schedule, use that name on the tag in lieu of origin and destination. Provide a removable permanent cap over each end of each empty raceway. Mandrel and provide a nylon pull cord in each empty raceway.

3.11 PAINTING

A. Paint raceway systems in accordance with and as specified in Section 09800 "Protective Coating."

END OF SECTION

SECTION 16160
CONDUCTORS

PART 1 -- GENERAL

1.1 THE REQUIREMENT

A. The CONTRACTOR shall furnish all tools, equipment, material, and supplies and shall perform all labor required to complete the work as indicated on the Drawings and specified herein.

1.2 RELATED WORK SPECIFIED ELSEWHERE

A. The following Sections or Divisions applies to the WORK of this Section. Other Sections of the Specifications, not referenced below, shall also apply to the extent required for proper performance of this WORK.

1. Division 11 Equipment.

2. Division 17 Instrumentation and Control.

B. Materials and equipment furnished and installed under other divisions with raceway and electrical conductors furnished, installed, and connected under Division 16, Electrical.

1.3 REFERENCE CODES AND STANDARDS

A. All work specified herein shall conform to or exceed the applicable requirements of the referenced portions of the following publications to the extent that the provisions thereof are not in conflict with other provisions of these specifications.

B. Comply with the current provisions of the following Codes and Standards.

1. Codes and Standards:

LAEC	City of Los Angeles Electrical Code, latest adopted edition.

2. Commercial Standards:

ANSI/UL 467	Grounding and Bonding Equipment, Safety Standard For.
ICEA S-95-658/WC70	Power Cables Rated 2000 Volts or Less.
ICEA S-96-659/WC71	Nonshielded Cables Rated 2,001-5,000 V.
ICEA S-93-639/WC74	5-46 kV Shielded Power Cable.
ANSI/UL 62	Flexible Cord and Fixture Wire.
ANSI/UL 510	Insulating Tape.
ANSI/UL 1277	Electric Power and Control Tray Cables with Optional Optical Fiber Members.
ASTM B8	Standard Specifications from Concentric Lay Standard Copper Conductors, Hard, Medium-Hard or Soft.

IEEE 48	Standard Test Procedures and Requirements for High Voltage Alternating Current Cable Terminations.
NEMA WC-57	Control, Thermocouple Extension, and Instrumentation Cable.

C. All Conductors furnished by the CONTRACTOR shall be listed by and shall bear the label of Underwriters' Laboratories, Incorporated, (UL).

D. The construction and installation of all electrical equipment and materials shall comply with all provisions of the CAL OSHA Safety Orders Title 8 CCR, as applicable, State Building Standards, and applicable local codes and regulations.

1.4 CONTRACTOR SUBMITTALS

A. Submittals shall be made in accordance with the Section 16010 Wastewater Facilities General Electrical Requirements.

B. CONTRACTOR shall submit the following items.

1. Catalog cut sheets and other brochures depicting conductor characteristics.

2. Manufacturer’s certified test records and factory test procedures.

3. Manufacturer’s recommended splicing, testing, and installation procedures and practices.

4. Certified test reports of HI-POT and Megger test results for medium and high voltage cables.

1.5 QUALITY ASSURANCE

A. Conductor Identification System:

1. Provide complete power, control and signal conductor identification system so that after installation, circuits can be easily traced from origin to final destination.

2. Identify power, control and signal conductors at each termination and in all accessible locations such as maintenance holes, handholes, panels, switchboards, pull boxes, terminal boxes, etc. For identification, use type of tags specified herein.

3. Tag conductors using a three-segment conductor numbering scheme which defines the origin of the conductor, the function of the conductor, and the destination of the conductor.

   Example: MCCA-P-MCCB where MCCA is the origin, P is the function identification (P = power, C = control, S = signal, etc.), and MCCB is the destination.

4. For conductors with one point of origin and two or more destinations, expand the function identification number, e.g., PA, PB, etc.

5. Make the origin and destination identification the specific names for the equipment used in the Contract Documents. Make the instrumentation and control identification names exactly as designated, i.e., FT-S-121.

B. Conductor Color Coding:

1. Color coding of multiconductor control and instrumentation cable is specified in the individual cable type specification.

2. For power conductors, provide all single conductors and individual conductors of multiconductor power cables with integral insulation pigmentation of the designated colors, except conductors larger than No. 6 AWG may be provided with color coding by applying a heat shrink tube of the appropriate color.

3. Phase A, B, C implies the direction of positive phase rotation.

4. Use the following colors:

System	Conductor	Color
All Systems	Equipment Grounding	Green
240/120 Volts	Grounded Neutral	White
1-Phase, 3-Wire	One Hot Leg	Black
	Other Hot Leg	Red
208Y/120 Volts	Grounded Neutral	White
3-Phase, 4-Wire	Phase A	Black
	Phase B	Red
	Phase C	Blue
240/120 Volts	Grounded Neutral	White
3-Phase, 4-Wire	Phase A	Black
Delta, Center Tap "High"	(wild) Leg	Orange
Ground on 1-Phase	Phase C	Blue
480Y/277 Volts	Grounded Neutral	White
3-Phase, 4-Wire	Tracer	
	Phase A	Brown
	Phase B	Orange
	Phase C	Yellow
4,160 Volt	Grounded Neutral	White
4,800 Volt	Phase A	Yellow
13,800 Volt	Phase B	Red
34,500 Volt	Phase C	Blue

C. For all high voltage cable and all 600 volt cable sized AWG #2 and larger, CONTRACTOR shall furnish cable manufactured no more than one year prior to installation. Provide documentation from the supplier.

PART 2 -- PRODUCTS

2.1 GENERAL

A. The use of a manufacturer's name and model or catalog number is for the purpose of establishing the standard of quality and general configuration desired only. Products of other manufacturers will be considered in accordance with the GENERAL REQUIREMENTS.

2.2 CONDUCTORS

A. Conductors 600 Volts and Below:

1. Unless otherwise indicated, provide stranded conductors, except provide solid conductors where No. 10 AWG and No. 12 AWG are designated for branch circuit power wiring in lighting and receptacle circuits.

2. Provide conductors with Type THW or Type THHN/THWN, except for sizes No. 6 and larger, provide conductors with XHHW, XHHW-2 insulation.

3. Use only copper conductors.

4. For all direct burial and aerial conductors and cables, provide conductors with UL labeling "TYPE USE" and RHW insulation with heavy-duty, black, neoprene sheath meeting the physical requirements and minimum thickness requirements of ICEA S-95-658 NEMA WC70.

5. Where flexible cords and cables are specified, provide Type SO, 600-volt, with the number and size of copper conductors indicated.

6. Conductors for applications of 600 volts and below shall be rated for 600 volts unless otherwise specified.

7. The name of the manufacturer, insulation type, voltage rating and wire size shall be clearly and permanently imprinted throughout the length of each conductor. All conductors and cables supplied shall bear the UL label.

B. Conductors Above 600 Volts:

1. 5 kV Conductors

a. Unless indicated otherwise, provide minimum 19 strand soft annealed uncoated copper conductors with crosslinked polyethylene (XLPE) insulation, extruded semiconducting strand and insulation shields, and a polyvinyl chloride jacket.

b. Provide shielded single conductors with 100 percent insulation level, that meet applicable portions of ICEA S-93-639/NEMA WC74, Ionization Level Requirements. Provide conductors UL listed 1072 Type MV-90.

c. Cable marking shall include manufacturer’s name, insulating material, Conductor size, voltage class and UL mark.

C. Multi-Conductor Cable:

1. Provide cable that is UL listed Type TC and conforms to the requirements of UL 1277 and NEC Article 336, or UL listed Power Limited Circuit Cable that conforms to the requirements of Article 725 of the LAEC. Provide cables permanently and legibly marked with the manufacturer's name, the maximum working voltage for which the cable was designed, the type of cable, and labeled UL (or submit evidence of UL listing).

2. Provide cables as specified under the type number in this section (Type 1, Type 2, etc.). Conduits shown on the Drawings and in the Circuit/Raceway Schedule have been sized to accommodate the outside diameter for each type. For this reason, use cable diameters equal to or less than the diameters specified.

a. Type 1 (600-Volt Multi-Conductor Control Cable, Type TC):

(1) General: Multi-conductor control circuit interconnection cable with ground. Suitable for installation in open air, in cable trays, conduit, or other approved raceways. Maximum cable temperature rating 90 degrees C dry locations, 75 degrees C wet locations. Passes vertical tray flame test.

(2) Individual Conductors: No. 14 AWG, strand copper.

(3) Insulation and Jackets: Provide conductors having 15-mil PVC insulation with 4-mil nylon jacket, and UL listed as Type THHN/THWN. Color code the conductor group in accordance with ICEA S-95-658/WC70. Include one full size green equipment grounding conductor. Bind conductor group with a spiral wrap of barrier tape. Provide cable with overall outer PVC jacket which is flame-retardant, sunlight- and oil-resistant, and has a nominal thickness as shown in the table below.

(4) Use only2,3, 4, 5, 7, 9, 12,19, 25, 30,and 37 -conductor cables. The green grounding conductor is included in the number of conductors shown in the table below.

No. of Conductors	Max. Outside Diameter (inches)	Jacket Thickness (mils)
5	0.45	45
7	0.48	45
12	0.65	60
19	0.76	60
25	0.93	60
37	1.04	80

(5) Acceptable Manufacturers:

1. Belden;

2. General Cable;

3. Southwire;

4. Or equal.

b. Type 2 (600-Volt Multi-Conductor Power Cable, Type TC):

(1) General: 3 or 4-conductor, with ground and overall jacket. Suitable for installation in open air, in cable trays, conduit, or other approved raceways. Maximum cable temperature rating 90 degrees C dry locations, 75 degrees C wet locations.

(2) Individual Conductors: Class B stranded, coated, or uncoated copper.

(3) Insulation and Jacket: Provide conductors insulated with chemically cross-linked polyethylene or ethylene-propylene, UL rated VW-1. Provide sunlight- and oil-resistant PVC outer jacket with nominal thickness as shown in the following table. Provide phase conductors color-coded black, red, and blue. Provide neutral conductor color-coded white with black tracer.

Conductor Size	No. of Conductors	Ground Wire Size	Max. OD (inches)	Thickness (mils)
12	3	-	0.45	45
	4	-	0.49	45
10	3	-	0.50	45
	4	-	0.58	60
8	3	10	0.66	60
	4	10	0.72	60
6	3	8	0.74	60
	4	8	0.81	60
4	3	8	0.88	60
	4	8	0.97	80
2	3	6	1.01	80
	4	6	1.11	80
1	3	6	1.14	80
	4	6	1.25	80
1/0	3	6	1.22	80
	4	6	1.35	80
2/0	3	6	1.32	80
	4	6	1.46	80
3/0	3	4	1.42	80
	4	4	1.58	80
4/0	3	4	1.56	80
	4	4	1.78	110

(4) Acceptable Manufacturers:

1. General Cable;
2. Okonite;
3. Southwire;
4. Or equal.

c. Type 3 (600-Volt No. 16 AWG Twisted, Shielded Pair Instrumentation Cable, Type TC) (UL 62 & 1277):

(1) General: Single pair instrumentation cable designed for noise rejection for process control, computer, or data log applications. Suitable for installation in cable trays, conduit, or other approved raceways. Maximum cable temperature rating shall be 90 degrees C dry locations, 75 degrees C wet locations.

(2) Individual Conductors: Bare soft annealed copper, Class B, 7-strand concentric per ASTM B 8; 20 AWG, 7-strand tinned copper drain wire.

(3) Insulation and Jacket: Each conductor 15-mil nominal PVC and 4-mil nylon insulation. Pair conductors pigmented black and red. Jacket flame-retardant and sunlight- and oil-resistant PVC with 45 mils nominal thickness. Shield 1.35-mil aluminum/mylar overlapped to provide 100 percent coverage.

(4) Dimension: 0.31 inch nominal OD.

(5) Acceptable Manufacturers:

1. Belden;

2. General Cable;

3. Okonite;

4. Or equal.

d. Type 4 (600-Volt No. 16 Twisted, Shielded Triad Instrumentation Cable, Type TC) (UL 62 & 1277):

(1) General: Single triad instrumentation cable designed for noise rejection for process control, computer, or data log applications. Suitable for installation in cable tray, conduit, or other approved raceways. Maximum cable temperature rating shall be 90 degrees C dry locations, 75 degrees C wet locations.

(2) Conductors: Bare soft annealed copper, Class B, 7-strand concentric per ASTM B 8; 20 AWG, 7-strand, tinned copper drain wire.

(3) Insulation and Jacket: Each conductor, 15-mil nominal PVC and 4-mil nylon insulation. Triad conductors pigmented black, red, and blue. Jacket flame-retardant and sunlight- and oil-resistant PVC with 45 mils nominal thickness. Shield 1.35-mil aluminum/mylar, overlapped to provide 100 percent coverage.

(4) Dimension: 0.32 inch nominal OD.

(5) Acceptable Manufacturers:

1. Belden;

2. General Cable;

3. Okonite;

4. Or equal.

e. Type 5 (600-Volt No. 18 AWG, Multi-twisted Shielded Pairs with a Common Overall Shield Instrumentation Cable, Type TC)(UL 62 & 1277):

(1) General: Twisted, shielded pairs of instrument cables, grouped in a single cable, designed for use as instrumentation, process control, and computer cable. Suitable for installation in cable tray, conduit, or other approved raceways. Maximum cable temperature rating shall be 90 degrees C dry locations, 75 degrees C wet locations.

(2) Conductors: Bare soft annealed copper, Class B, 7-strand, concentric per ASTM B 8. Tinned copper drain wires. Pair drain wire size AWG 20, group drain wire size AWG 18.

(3) Insulation and Jacket: Each conductor 15-mil PVC and 4-mil nylon insulation. Pair conductors pigmented black and red with red conductor numerically printed for group identification. Outer jacket flame-retardant and sunlight- and oil-resistant PVC with nominal thickness as shown in table. Individual pair shield 1.35-mil aluminum/mylar. Group shield 2.35-mil aluminum/mylar, overlapped for 100 percent coverage.

(4) Dimensions as noted in table below:

Number of Pairs	Maximum Outside Dimension (inches)	Nominal Jacket Thickness (mils)
4	0.50	45
8	0.68	60
12	0.82	60
16	0.95	80
20	1.05	80
24	1.16	80
36	1.33	80
50	1.56	80

(5) Acceptable Manufacturers:

1. Belden;
2. General Cable;
3. Okonite;
4. Or equal.

D. Conductor and Cable Tags:

1. Tags relying on adhesives or taped-on markers are not acceptable.
2. Provide conductor tags for conductors No. 12 AWG and below with legible permanent sleeve of yellow or white PVC with machine printed black marking.
3. Provide tags for cables, and for conductors No. 10 AWG and larger, consisting of permanent nylon marker plates with legible designations hot stamped on the plate. Attach these marker plates to conductors and cables with nylon tie cord.

E. Equipment Grounding Conductors:

1. Provide soft-drawn copper conductors, not smaller than AWG12 and as indicated or as required by NEC, for equipment grounding.
2. Provide conductors with green insulation of the same type as all other circuit wires.

F. Direct Buried Grounding Conductors:

1. Provide bare stranded copper conductors, size as indicated, for the ground system grid at transformers, switchgear, and where indicated.

2.3 MANUFACTURED WIRING SYSTEMS

A. Provide a flexible, coordinated means of distributing lighting branch circuit and control wiring.

B. Provide a system rated at 20 amperes load-carrying capacity per phase with final assemblies consisting of a maximum of three, phase conductors. Provide a system manufactured of Type MC

cable with 90 degrees C insulation and stranded copper conductors.

C. Provide three, single-phase, five-wire circuit cable configuration with standard color wire coding as per Article 1.5 B. of this Section.

D. Provide a system having a latch/strike locking mechanism with voltage clearly marked on latch. Provide a system UL listed for use in air handling plenums, listed to connect or disconnect under load, and manufactured in accordance with Article No. 604 of the NEC.

PART 3 -- EXECUTION

3.1 GENERAL

A. Do not exceed cable manufacturer's recommendations for maximum pulling tensions and minimum bending radii. Where pulling compound is used, use only UL listed compound compatible with the cable outer jacket and with the raceway involved. contractor shall perform and submit pulling calculation per manufacturers' recommendation to ascertain that there is no overstrain to the cable. The calculation shall be submitted to the ENGINEER for approval."

B. Tighten all screws and terminal bolts using torque type wrenches and/or drivers to tighten to the inch-pound requirements of the NEC and UL.

C. Single conductors and cables in maintenance holes, handholes, vaults, cable trays, and other indicated locations shall be wrapped together by arc and fireproofing tapes, and shall be bundled throughout their exposed length with nylon, self-locking, releasable, cable ties placed at intervals not exceeding **18** inches on centers.

D. Wires and cables in each voltage classification shall be installed in separate raceways and shall be completely isolated at the cable and wire terminations.

E. No vehicles shall be used to pull conductors. Only cable pulling machines shall be used.

F. A means of monitoring cable tension shall be provided at all pulls. (I.e. dynamometer)

3.2 CONDUCTOR 600 VOLTS AND BELOW

A. Provide conductor sizes indicated on Drawings.

B. Wire nuts may be used on solid conductors of 120-volt and 277-volt lighting and 120-volt receptacle circuits only. Place no more than one conductor in any single-barrel pressure connection. Use crimp connectors with tools by same manufacturer and/or UL listed for connectors of all stranded conductors.

C. Soldered mechanical joints insulated with tape will not be acceptable.

D. Vinyl plastic insulating tape for wire and cable splices and terminations shall be flame retardant, 7-mil thick minimum, rated for 90 degrees C minimum meeting the requirements of UL 510.

E. Provide terminals and connectors acceptable for the type of material used.

F. Arrange wiring in cabinets, panels, and motor control centers neatly cut to proper length, remove surplus wire, and bridle and secure in an acceptable manner. Identify all circuits entering motor control centers or other control cabinets in accordance with the conductor identification system specified herein**.**

G. Terminate control and instrumentation wiring with methods consistent with terminals provided, and

in accordance with terminal manufacturer's instructions. Where terminals provided will accept such lugs, terminate all control and instrumentation wiring (except solid thermocouple leads) with insulated, locking-fork compression lugs, Thomas & Betts Sta-Kon, or equal.

H. For terminals designed to accept only bare wire compression terminations, use only stranded wire, and terminate only one wire per terminal. Tighten all terminal screws with torque screwdriver to recommended torque values.

I. Attach compression lugs with a tool specifically designed for that purpose which provides a complete, controlled crimp where the tool will not release until the crimp is complete. Use of plier type crimpers is not acceptable.

J. Cap spare conductors and conductors not terminated with UL listed end caps.

K. Where conductors pass through holes or over edges in sheet metal, remove all burrs, chamfer all edges, and install bushings and protective strips of insulating material to protect the conductors.

L. For conductors that will be connected by others, provide at least 6 feet spare conductor in freestanding panels and at least 2 feet spare in other assemblies. Provide appropriate length of spare conductor in any particular assembly where it is obvious that greater spare conductor length will be needed to reach the termination point.

3.3 CONDUCTORS ABOVE 600 VOLTS

A. Splices will not be permitted unless specifically indicated or approved by the ENGINEER.

B. Make all joints and terminations with high voltage splice and termination kits specified herein and in accordance with splice or termination manufacturer's instructions. Once started, install splices or terminations as a continuous operation.

C. Identify all circuits in accordance with the conductor identification system specified at load centers, maintenance holes, splices, terminations, etc.

D. Provide terminals or connectors acceptable for the type of conductor material used.

E. Give 2 working days' notice to the ENGINEER and the INSPECTOR prior to the making of joints or terminations.

F. Cable splices shall be made by qualified cable splicers in accordance with the recommendations of the manufacturer. CONTRACTOR shall furnish documentation detailing the qualifications of each cable splicer to be working on the job.

3.4 CABLES

A. Do not splice without permission of the ENGINEER or the INSPECTOR. Locate splices, when permitted, only in readily accessible cabinets or junction boxes using locknut terminal strips. Splices will not be permitted unless deemed necessary by approved pulling tension calculations.

B. Where connections of cables installed under this section are to be made under Division Instrumentation and Controls, leave pigtails of adequate length for neat bundled type connections.

C. Instrumentation, computer, and control cables run under infinite access floors in control rooms may be installed under the floor without protection. Run individual wires, pairs, or triads in flex conduit under the floor or grouped into bundles at least 3/4 inch in diameter.

D. Maintaining the integrity of shielding of instrumentation cables is essential to the operation of the control systems. Take special care in cable installation to ensure that grounds do not occur

because of damage to the jacket over the shield.

E. Cables entering maintenance holes, handholes or vaults shall be sealed at the entrance and exit using an expanding fireproof foam product approved for the purpose.

3.5 CONDUCTOR ARC AND FIREPROOFING TAPES

A. Use arc and fireproofing tapes on all 600-volt single conductors and cables except those rated Type TC at splices in all maintenance holes, handholes, vaults, cable trays, and other indicated locations.

B. Use arc and fireproofing tapes on all 5 Kv at splices in all maintenance holes , handholes, vaults, cable trays, and other indicated locations.

C. Wrap together as a single cable all conductors entering from each conduit.

D. Follow tape manufacturer's installation instructions. Secure the arc and fireproofing tape at frequent intervals with bands of the specified glass cloth electrical tape. Make each band of at least two wraps of tape directly over each other.

E. Wrap together as far as possible, conductors carrying phases A, B, and C of the same feeder. Do not wrap together conductors carrying only two of the three phases.

F. The cables shall be placed as closely as possible to their final positions.

G. The cables shall be cleaned of all oil, grease, and cable pulling compounds using suitable solvents and cleaners non-injurious to cable and then wiped completely dry.

H. Any projecting surfaces such as fittings, ground connectors or bonding connections shall be covered with an insulating compound to present a smooth continuous surface for taping.

I. Fireproofing tapes shall be submitted as shop drawings for approval. Tapes shall be 3-inch width half-lapped and extend a minimum of 6-inches into the raceway. Use ¾” glass tape at three foot intervals to hold tape in place.

3.6 UNDERGROUND DIRECT BURIAL CABLE

A. Comply with requirements for Installation of Underground Direct Burial Raceways in Section 16110, "Raceway", including warning tapes above the cables.

3.7 FIELD TESTS

A. Field test shall be performed on conductors in accordance with Section 16020 Municipal Facilities Electrical Testing Requirements.

END OF SECTION

SECTION 16170
CABINETS AND RACKS

PART 1 - GENERAL

1.1 GENERAL CONDITIONS:

A. See the Conditions of the Contract (General, Supplementary and Special Conditions) and the General Requirements (Division 1).

1.2 WORK INCLUDED:

A. This section covers all equipment cabinets, enclosures and racks as shown on the drawings or as required to house the specified devices and equipment. The work under this section consists of furnishing materials and equipment, performing labor and services necessary for the installation of the cabinets and racks required for a complete system.

1.3 RELATED WORK SPECIFIED ELSEWHERE:

A. Refer to all other Division 16 specification sections and drawings, and to the specifications and drawings under the General Construction Contract to ascertain the extent of work included.

1.4 REFERENCED SPECIFICATIONS, MATERIALS AND/OR CODES:

A. City of Los Angeles Electrical Code, latest adopted edition

B. Electronic Industries Alliance (EIA) Standards. EIA/ECA-310-E

1.5 COOPERATION WITH OTHER TRADES:

A. The Contractor shall coordinate the work of the section with that of other sections as required to ensure that the entire work of this Project will be carried out in an orderly, complete and coordinated fashion.

1.6 SUBMITTALS:

A. General: Submittals shall be made in accordance with the General Provisions (Section 16000) of these specifications.

B. Provide thermal calculations for cabinets. Include sizing calculations for air conditioner or forced ventilation fans. Account for solar gain for outside cabinets.

PART 2 - PRODUCTS

2.1 MATERIALS:

A. Cabinets - All equipment cabinets installed indoors shall be NEMA 12 enclosures. All equipment cabinets installed outside or exposed to weather shall be NEMA 3R or 4X enclosures.

1. Cabinets shall be constructed of 14 gauge rolled steel.

2. Cabinet doors shall be furnished with key lockable doors with all cabinets under Division 16 keyed alike.

3. All cabinets shall be furnished with removable steel back panels for mounting equipment.

4. Cabinets shall be furnished with appropriate size and quantity of knock-outs for conduit entry.

5. Cabinets shall be grounded as specified in Section 16290.

6. Cabinets shall be provided with adequate vents.

7. All cabinets shall be furnished with black on white laminated plastic name plates identifying each cabinet as noted on the drawings. Lettering shall be minimum 3/16" high.

8. Cabinet finish shall be ANSI 61 gray inside and out.

9. Cabinets shall be sized in strict accordance with the EIA/ECA-310-E.

10. Cabinet back panels shall be furnished with a ground buss bar.

11. Door size shall be selected to allow a minimum door swing of 90 degrees within the dimensional constraints of the equipment room.

12. Cabinets shall be equipped with index card holders and cards mounted behind heavy plastic on inside of cabinet doors.

13. Affix nameplates to cabinet doors with a minimum of two stainless steel escutcheon pins or screws.

B. Vertical Cabinet - Floor Mounted:

1. All vertical cabinets shall be free-standing floor mounted type having features and/or characteristics as follows:

a. Panel Width - 19"

b. Panel Height - 78-3/4"

c. Overall Height - 87" Nominal

d. Overall Depth - 25" Nominal

e. Rear Door - Vented, except as otherwise specified.

f. Front door with vents at top and bottom, except as otherwise specified.

g. Plain top panel

h. Frame- 14 ga. Cold rolled sheet steel

i. Side panels - 18 ga.

j. Styled frames with trim

k. 19" EIA adjustable mounting rails for front and rear equipment mounting

l. Locks - all cabinets to be keyed alike

m. Units shall be pre-assembled type

n. Color - to be selected by Architect

2. Cabinets grouped side-by-side shall have side panels on each section.

3. Furnish and install blank 19" panels of color to match cabinet for all unused vertical mounting units on front mounting rails. Maximum height of each filler panel shall be 10.5".

C. Power Strips:

1. Furnish and install plug-in or hardwired outlet strips as required to support the installed equipment.

2. Power strips shall have a metallic case.

3. Plug-in power strips shall be equipped with a locking plug and shall only be used with a compatible locking-type receptacle.

D. Pedestals:

1. Pedestals shall be weather-tight, seam welded, constructed of 14 gauge galvanized steel. Where indicated on the drawings construction shall be stainless steel.

2. Pedestals shall be furnished with gasketed panel for access to equipment contained within. Panel shall be secured with security screws.

3. Pedestal shall be painted to withstand environmental conditions and the final color shall be as specified by the Architect.

4. Pedestal shall be pre-drilled for mounting of intercom stations, loop detectors, and other equipment as specified herein.

5. Pedestal dimensions shall be as shown on the drawings.

PART 3 - EXECUTION

3.1 EXECUTION:

A. Cabinets:

1. Provide cabinets as necessary for proper installation of the equipment specified and in compliance with all codes and regulations.

2. Secure all cabinets in place with anchors and lag bolts to ensure compliance with seismic requirements.

3. Unused openings in cabinets shall be closed to afford protection equivalent to that of the wall of the cabinet.

B. Ventilation:

1. Furnish and install ventilation fans, vents, and filters for all cabinets where forced air cooling is required to maintain interior cabinet temperature at or below 95°F.

2. For cabinets with forced ventilation, doors and side panels shall be solid with no louvers.

3. Division 17 Subcontractor shall select vented vs. forced air cabinets based on the environment's conditions of the equipment room and equipment to be installed in each cabinet.

C. Pedestals:

1. Provide pedestals at all locations shown on the drawings.

2. Secure pedestals to concrete base with anchors to ensure compliance with seismic requirements. Anchors shall be located such that they are only accessible from inside the enclosure.

3. Coordinate installation of required conduit such that all conduit is stubbed up inside pedestal.

4. Cabinets shall be large enough and equipment spaced in cabinets to provide adequate spacing for airflow and maintenance.

5. Locate all heat producing equipment, such as power supplies and amplifiers, at top of equipment cabinets.

3.2 COMPLETION:

A. General:

1. Upon completion of the work, remove excess debris, materials, equipment, apparatus, tools and the like and leave the premises clean, neat and orderly.

2. All cables shall be dressed neatly in each cabinet and rack. Excess cable shall be trimmed and disposed of. Any unused cables shall be identified with stainless steel tags showing the origination and marked as “spare”.

END OF SECTION

SECTION 16180
WIRING DEVICES

PART 1- GENERAL

1.1 SCOPE

A. Required: Provide and install wiring devices as indicated on the Contract Drawing and herein specified.

B. Comply with the General Conditions, General Requirements and Section 16020 of this Division 16 concerning definitions, guarantees, submittals, as-builts, clean-up, etc. as applicable to work of this Section.

1.2 SUBMITTALS

A. Submit under the provision of Section 01330.

B. Product Data: For each product specified.

C Maintenance Data: For materials and products to include in maintenance manuals specified in Division 1.

PART 2 - PRODUCTS

2.1 GENERAL

A. All wiring devices shall be specification grade, UL listed and labeled, conform to NEMA standards and meet the requirements of Federal specifications.

2.2 BOXES

A. Types:

1. Provide galvanized steel knockout type outlet boxes with suitable plaster rings of similar material, for interior concealed wiring in dry, non-hazardous (classified) locations.

2. Provide cast metal boxes for floor outlets, and where installed in walls direct contact with the earth. Floor outlet boxes shall be Walker box 880 series or equal.

3. Provide weatherproof cast metal outlet boxes for surface wiring, or in wet or damp locations, or where indicated on the Drawings, unless otherwise directed by the City Engineer. Boxes shall be Crouse-Hinds FS, FD, GRF, GS, or VXF series.

4. Provide sheet steel type with screw cover for pull and junction boxes over 100 cubic inches, in dry non-hazardous (classified) locations.

B. Sizes: In accordance with Code for the number and size of conductors, but not less than indicated on the drawings nor less than 4 inch square trade size, except for cast metal type, or multigang masonry type embedded in concrete or masonry walls.

C. Accessories:

1. Plaster rings, fixture studs, covers, plates, dividers, etc., as required.

2. Weatherproof covers, plates, and other accessories in wet or damp locations.

2.3 SWITCHES

A. All switches shall be specification grade and meet Federal Spec. W-S-896E.

B. Provide screw type; push-in type connections not acceptable.

C. Switches shall be self-grounding, color coded, silent or quiet type, and rated 120-277 Volts AC, 20 ampere rating, totally enclosed, where installed in AC systems Bakelite or composition base with "T" rating for AC loads, standard toggle handle, side wired only and binding screw terminals with screwdriver slot.

D. Where pilot lights are specified for switches, they shall be the neon type 1/25 W. mounted under the same plate as the switch. Lighted toggles are not acceptable.

E. Momentary contact switches shall be three position toggle, 20 Ampere rating at 120 Volts AC.

F. Single pole switches shall be equal to Bryant 1121-I; two pole switches Bryant 1122-I; three way switches Bryant 1123-I; four way switches Bryant 1124-I.

G. Approved Manufacturers:

1. Hubbell/Bryant;

2. General Electric;

3. Or equal.

2.4 PLATES AND COVERS

A. Required: For all switches, receptacles, junction boxes, telephone and other outlets.

B. Finishes of Plates and Devices:

Location	Plate	Device
General interior finished areas	White	White
Interior finished areas over wood panels	Black	Black
On exterior with spring loaded cover	Corrosion resistant	Brown
In equipment rooms or other generally unfinished areas	Galvanized	Brown
Janitor and utility	Stainless	Gray

rooms	steel	
Toilet rooms	Stainless steel	Ivory

C. Provide the Following: Unless otherwise directed by the City Engineer, provide telephone, TV, and communication outlet plates with a bushed hole.

D. Provide engraved or etched plates for all lock switches, pilot switches, switches from which the equipment or circuit controlled cannot be readily seen, three or more switches under a common plate and for switches as indicated.

E. Stainless steel plates, type 302 non-magnetic with beveled edges, 0.040" thick with satin finish. Leviton 84000-40 series or approved equal.

F. Galvanized steel plates shall be square or rectangular and hot dipped galvanized or sherardized beveled edges and 0.040" thick.

G. Provide weatherproof receptacles with spring-loaded, corrosion resistant covers with gasket for mounting on outdoor type or flush wall boxes. Leviton 6196-V or approved equal.

H. Provide plates equipped with close fitting openings for the exact device to be used. Provide plates for telephone outlets equipped with bushed openings. Synthetic plates shall be smooth finish as manufactured by Pass & Seymour, Sierra, Leviton, or approved equal.

I. Provide brass covers for floor receptacles with duplex flap opening flush with floor
See also Section 16115, sub-section 2.2, paragraph E..

J. Provide brass covers for data and communications floor outlets with 2-1/8 x 1 inch combination threaded opening.

K. Engraved plates and covers for equipment and controls, motors, for switches out of sight of the equipment controlled, for receptacles rated other than 125 volts, and for ganged switches (except no more than two switches controlling lights in the same room). Engraving shall provide positive identification acceptable to the City Engineer.

2.5 RECEPTACLES

A. Types:

1. All receptacles shall be specification grade and meet Federal Spec. WC 596 E.

2. Provide screw terminal type receptacles. Push-in type connections are not acceptable.

3. Straight blade 125 volt, 15 and 20 ampere duplex type shall be equal to Bryant 5262-I or 5263-I; single type shall be Bryant 5661-I or 5461-I.

4. Straight blade 250 volt, 15 and 20 ampere duplex type shall be equal to Bryant 5662-I or 5462-I; single type shall be Bryant 5661-I or 5461-I.

5. Combination duplex receptacles, straight blade 125/250 volt, 15 and 20 amperes, shall be equal to Bryant 5292-I or 5492-I.

6. Clock hanger receptacles shall be Bryant 2828-GS or equal.

7. Special outlets of other types shall be as indicated on the Contract Drawings.

2.6 OCCUPANCY SENSORS:

A. Wall-mounted, passive infrared sensors, as specified on the contract drawings or approved equal.

B. Ceiling mounted combination, passive infrared and ultra sonic, as approved on the contract drawings or approved equal.

2.7 CONTROLS

A. Required: For all equipment furnished in this and other divisions, as required by Code, and as indicated on the Contract Drawings and in the specifications. All devices shall be listed by U.L. or another approved testing laboratory.

B. Types:

1. Circuit Breakers: Thermal-magnetic with interrupting and trip ratings as indicated on the drawings. Equip each breaker with a device for individual padlocking. Circuit breakers shall meet Federal Specifications W-C-375B.

2. Enclosed Safety Switches: Shall be externally operable, heavy duty "tease-proof", fusible and nonfusible with number of poles and ratings as indicated on the Contract Drawings. Provide suitable rejection type fuse holders for Class R fuses. Switches shall meet Federal Spec. W-S-865C. Switches shall be as manufactured by Square D Co. or equal.

3. Fuses: All fuses shall meet U.L. Standard 198. Provide a label within each fuse enclosure indicating fuse replacement type and ratings. Provide one complete set of each type and rating of fuses and limiters, as spares. Fuses shall be one of the following types:

   a. Current-limiting Class L; Bussman KRP-C or KTU.

   b. Current-limiting Class J; Bussman JKS or JHC.

   c. Dual element Class RK-1; Bussman KTS-R or KTN-R.

   d. Dual element Class RK-5; Bussman FRS-R or FRN-R.

   e. Low Peak dual element Class RK-5; Bussman LPS-R or LPN-R.

   f. For secondary protection of control transformers rated 500 V.A. and 50 volts, or less; Bussman FNQ fuses with HPS-D or HPL-B fuse holder or equal.

   g. Fuses for direct-current circuits shall be identified for the use.

   h. Other required fuses, if not specified, shall be standard nonrenewable type; Bussman FRN or FRS for circuits where available fault current is 10,000 amperes or less.

4. Terminal connection blocks shall be provided in switch and circuit breaker enclosures in which grounded (neutral) conductors are installed.

5. Magnetic Motor Starters: Shall be across-the-line start type with overload and low voltage protection; Square D. Co. Class 8536. Combination starters shall be fusible or

nonfusible disconnect switch type; Square D. Co. Class 8538, or motor circuit protector type (instantaneous trip only); Square D. Co. Class 8539. Reversing starters shall be Square D. Co. Class 8736 or 8739 or equal. Ratings shall be as indicated on the Drawings. Equip each circuit breaker with a device for individual padlocking.

6. Manual Motor Starters: Pushbutton type with overloads; Square D. Co. Class 2510 Type M. Toggle type with overloads; Square D. Co. Class 2510 Type F. Toggle type without overloads; Square D. Co. Class 2510 Type K or equal. Each device shall have provision for padlocking.

7. General Purpose Contactors: Shall be ASCO 1000 Series or equal with number of poles and ratings as indicated on the drawings. Provide suitable hinged door enclosures.

8. Lighting Contactors: Electrically operated, mechanically held, with coil clearing contacts; ASCO Remote Control (RC) Switches or equal with number of poles and ratings as indicated on the Drawings. Provide suitable hinged door enclosures.

9. Pushbutton and Other Control Devices: Shall be Square D.Co. Class 9001 Type K or equal, in suitable enclosures with legend plates.

10. Pilot Lights: Shall be Square D. Co. Class 9001 Type K, transformer type or equal. Shall have push-to-test feature where installed in switchboards or motor control centers.

11. Control Relays: Shall be Square D. Co. Class 8501 Types D, H, or L. or equal. Install relays in suitable enclosures.

12. Time Switches: Provide types with minimum 10-hour spring driven automatic rewind reserve power. For control of mechanical systems or equipment provide 7 day dial type with features permitting daily control or omission; Paragon 7000 Series. For control of mechanically-held lighting contactors provide astronomic type with day omitting device and momentary contact single pole double-throw switching; Paragon 47216-OSZ or equal. Number of poles and voltages for time switches shall be as indicated on the Drawings.

13. Emergency Control Switches: Shall be ASCO equal to #124 Series break-glass devices for mechanical or data processing rooms or similar applications.

14. Three-Position Selector Switches: Shall be equal to Bryant 4922-I for maintained contact type; Bryant 4921-I for momentary contact type.

15. Manual Timers: Spring-wound timers shall be equal to M.R. Rhoades Inc. "Mark-Time" 125 V. 20 A.

16. Identification: Identify all control and disconnecting devices by engraved laminated plastic nameplates designating the equipment controlled, except where device plates are engraved.

    a. Motors and other equipment shall be suitably and durably identified to correspond to the control or disconnecting device. Nameplate lettering shall be white on black finish and 1/8 inch high minimum.

    b. Marking shall be as indicated on the drawings or as approved by the City Engineer. Nameplates shall be affixed with a minimum of two escutcheon pins or screws.

PART 3 - EXECUTION

3.1 GENERAL

Each class of device shall be furnished by one manufacturer for the total project. Mixing of devices by different suppliers will not be permitted.

3.2 BOX INSTALLATION

A. Install boxes where indicated on the Contract Drawings and coordinate locations with structural and architectural features for proper installation. Boxes shall be accessible.

B. Install boxes for wall mounted local switches at 4 feet to center above floor or standing surface unless otherwise directed by the City Engineer. The maximum height in handicapped areas shall be 48 inches.

C. Install boxes for wall mounted receptacles, signal and communication outlets at 15 inches to center above floor or standing surface except where located above counter tops, or used for clock outlets, or as otherwise indicated on the Drawings or directed by the City Engineer.

3.3 RECEPTACLE AND SNAP SWITCH INSTALLATION

A. General:

1. Install receptacles and switches square, level, secure, and connected to a single set of circuit conductors at each outlet. Plaster ears of receptacles and switches installed in flush boxes shall be seated against the finish surface.

2. Install closely adjacent snap switches in a single multi-gang type box, unless otherwise directed by the City Engineer.

3. Install permanent barriers between switches where the voltage between switches exceed 300 volts.

4. Connect all devices by wrapping conductor around binding screw terminals.

5. Provide GFCI type receptacles in toilet, kitchen counters and for all outdoor locations where required by code.

3.4 OUTLET PLATES AND COVER INSTALLATIONS

A. General:

1. Install square, level and secure. Plates installed at flush outlets shall be seated against the finish.

2. Properly identify plates and covers as required and noted in Subsections 2. 5 D and K of this Section as applicable.

3. Provide jumbo size plates for outlets installed in masonry walls.

4. Properly align and plumb all devices and plates. Fit plates flat against walls and tights against surfaces of devices without strain on the plate.

5. Code sized (#12 minimum) bonding jumper shall connect grounded outlet box to receptacle grounding terminal on all flush mounted units.

END OF SECTION

SECTION 16190
ELECTRICAL IDENTIFICATION

PART 1 -- GENERAL

1.1 SCOPE

A. Required: Furnish and install nameplates and warning sign where indicated on the Contract Drawings or herein specified.

B. Comply with the General Conditions, General Requirements and Division 16 concerning definitions, guarantees, submittals, as-builts, clean-up, etc. as applicable to work of this Section.

C. Work includes but is not necessarily limited to the following:

1. Nameplates and warning signs permanently installed on all electrical equipment and devices including, but not limited to, the following items:

a. Transformers, switchboards, motor control centers, panelboards, variable frequency drives, pullboxes, cabinets and motors.

b. Enclosures for all separately enclosed devices including, but not limited to, disconnect switches, circuit breakers, contactors, time switches control stations and relays, fire alarm panels and lighting control panel.

c. Wall switches not within sight of outlet controlled.

d. Special systems such as, but not limited to, telephone, fire alarm, warning and signal systems. Identification shall be at each equipment rack, terminal cabinet, control panel, annunciator and pullbox.

e. Devices mounted within and part of equipment including circuit breakers, switches, control devices, control transformers, relays, indication devices and instruments.

PART 2 -- PRODUCTS

2.1 NAMEPLATE DESIGNATIONS SHALL CLEARLY STATE

A. Manufacturer's nameplate including equipment design rating of current, voltage, KVA, HP, bus bracing rating or as applicable.

B. Equipment nameplates designating system usage and purpose, system nominal voltage, equipment rating in KVA, amperes, HP and RPM as applicable. Designation data per drawings shall be supplied with Shop Drawings approval.

C. Panelboard nameplates showing panel designation, voltage, phase and source.

2.2 MANUFACTURERS DEVICE NAMEPLATES

Device usage, purpose, or circuit number; manufacturer and electrical characteristic ratings including the following:

A. Circuit Breakers: Voltage, continuous current, maximum interrupting current and trip current.

B. Switches: Voltage, continuous current, horsepower or maximum current switching. If fused, include nameplate stating, "Fuses must be replaced with current limiting type of identical characteristics".

C. Contactors: Voltage, continuous current, horsepower or interrupting current, and whether "mechanically held" or "electrically held".

D. Motors: Rated voltage, full load amperes, frequency, phases, speed, horsepower, code letter rating, time rating, type of winding, class and temperature.

E. Controllers: Voltage, current, horsepower and trip setting of motor running overcurrent protection.

F. Motor Control Centers: Horizontal and vertical bus ratings.

2.3 MATERIALS

A. For Nameplates**:** Three layer laminated plastic or Micarta with engraved black letters over white background.

B. For Emergency Equipment: Use engraved white letters over red background.

C. For Warning Signs: Minimum 18 gauge steel with red lettering on white porcelain enamel finish.

PART 3 -- EXECUTION

3.1 MOUNTING

Nameplates shall be mounted by self-tapping, threaded stainless steel screws and bolts, or by rivets. Adhesive types are not acceptable.

3.2 MINIMUM LETTER HEIGHTS ON NAMEPLATES (AS APPLICABLE)

A. Panelboards, Switchboards and Motor Control Centers and Special Systems Enclosures: 1/4 inch identifies equipment designation; 3/16 inch identifies voltage rating and source.

B. Individual Circuit Breakers, Switches, and Motor Starters in Panelboards, Switchboards, and Motor Control Centers: 1/4 inch identifies circuit and load served, including location.

C. Individual Circuit Breakers, Enclosed Switches, and Motor Starters: 1/4 inch identify load served.

D. Transformers: 1/4 inch identifies equipment designation; 3/16 inch identifies primary and secondary voltages, primary source and secondary load. Include location of primary source or secondary load if remote from transformer.

3.3 WARNING SIGNS

A. Warning signs shall be permanently mounted with stainless steel screws or nickel-plated brass bolts.

B. Warning signs to read "DANGER - HIGH VOLTAGE", with letters 1-1/2 inch high, 1/4 inch stroke minimum.

C. Provide warning sign on all doors or immediately next to door for equipment rooms or closets containing equipment energized above 150 volts to ground.

END OF SECTION

SECTION 16200
MOTOR CONTROL CENTERS

PART 1 - GENERAL

1.1 RELATED DOCUMENTS

A. Drawings and general provisions of the Contract, including General and Supplementary Conditions and Division 1 Specification Sections, apply to this Section.

B. Related Sections: The following sections contain requirements that relate to this section:

1. Section 16560 " Municipal Facilities Electrical Commissioning Requirements" for commissioning requirements.

2. Section 16570 " Municipal Facilities Electrical Testing Requirements" for testing requirements.

1.2 SUMMARY

A. This Section includes motor-control centers for use on AC circuits rated 600 V and less.

B. Related Sections include the following:

1. Section 16190, "Electrical Identification" for labeling materials.

2. Section 16210, “Switches, Disconnect and Safety”.

1.3 SUBMITTALS

A. Submit under the provisions of Section 01330.

B. Product Data: For products specified in this Section. Include dimensions, ratings, short-circuit rating, and data on features and components.

C. Shop Drawings: For each motor-control center specified in this Section. Include dimensioned plans, elevations, and component lists. Show ratings, including short-time and short-circuit ratings, and horizontal and vertical bus ampacities.

1. Schedule of features, characteristics, ratings, and factory settings of individual motor-control center units.

2. Wiring Diagrams: Interconnecting wiring diagrams pertinent to class and type specified for motor-control center. Schematic diagram of each type of controller unit indicated.

D. Field Test Reports: Indicate and interpret test results for compliance with performance requirements.

E. Maintenance Data: For products to include in the maintenance manuals specified in Division 1. Include operating instructions required per 3.4.B.

F. Load-Current and Overload-Relay Heater List: Compile after motors have been installed and arrange to demonstrate that selection of heaters suits actual motor nameplate full-load currents.

G. Qualification Data for Field Testing Agency: Certificates, signed by Contractor, certifying that agency complies with requirements specified in "Quality Assurance" Article below.

1.4 QUALITY ASSURANCE

A. Manufacturer Qualifications: Maintain, within 100 miles of Project site, a service center capable of providing training, parts, and emergency maintenance and repairs.

B. Field Testing Agency Qualifications: An independent testing agency with experience and capability to satisfactorily conduct testing indicated without delaying the Work. Evaluation criteria shall be according to ASTM E 699.

C. Source Limitations: Obtain similar motor-control devices through one source from a single manufacturer.

D. Comply with NFPA 70 NEMA, IEEE, UL & ANSI Standards.

E. Listing and Labeling: Provide motor-control centers and components specified in this Section that are listed and labeled.

1. The Terms "Listed" and "Labeled": As defined in the National Electrical Code, Article 100.

2. Listing and Labeling Agency Qualifications: A "Nationally Recognized Testing Laboratory" as defined in OSHA Regulation 1910.7.

F. Product Selection for Restricted Space: Drawings indicate maximum dimensions for motor-control centers, including clearances between motor-control centers and adjacent surfaces and items, and are based on types and models indicated. Other manufacturers' motor-control centers with equal performance characteristics and complying with indicated maximum dimensions may be considered. Refer to Section 01330, “Shop Drawings/Submittals."

1.5 DELIVERY, STORAGE, AND HANDLING

A. Deliver in shipping splits of lengths that can be moved past obstructions in delivery path as indicated.

B. Store so condensation will not occur on or in motor-control centers. Provide temporary heaters as required to prevent condensation.

C. Handle motor-control centers according to NEMA ICS 2.3, "Instructions for the Handling, Installation, Operation, and Maintenance of Motor Control Centers." Use factory-installed lifting provisions.

1.6 COORDINATION

A. Coordinate features of controllers and accessory devices with pilot devices and control circuits to which they connect.

B. Coordinate features, accessories, and functions of each motor controller with the ratings and characteristics of the supply circuit, the motor, the required control sequence, and the duty cycle of

the motor and load.

1.7 EXTRA MATERIALS

A. Furnish extra materials described below that match products installed, are packaged with protective covering for storage, and are identified with labels describing contents.

1. Spare Indicating Lights: Furnish 6 of each type required.

PART 2 - PRODUCTS

2.1 MANUFACTURERS

A. Available Manufacturers: Subject to compliance with requirements, manufacturers offering products that may be incorporated into the Work include, but are not limited to, the following:

1. Eaton;

2. Tesco Controls;

3. Or equal.

2.2 MOTOR-CONTROL CENTERS

A. Wiring: NEMA ICS 3, Class I, Type B.

B. Enclosures: Free-standing structure as indicated. U.L.listed, NEMA 250, Type 2, unless otherwise indicated to meet environmental conditions at installed location.

1. Outdoor Locations: NEMA 250, Type 3R.

2. Compartments: Modular; individual doors have concealed hinges and quick-captive screw fasteners. Interlocks on combination controller units require disconnect means in off position before door can be opened or closed, except by consciously operating a permissive release device.

3. Interchangeability: Compartments are constructed to remove units without opening adjacent doors, disconnecting adjacent compartments, or disturbing the operation of other units in control center. Units requiring the same size compartment are interchangeable, and compartments are constructed to permit ready rearrangement of units, such as replacing 3 single units with one unit requiring 3 spaces, without cutting or welding.

4. Wiring Spaces: Each vertical section of structure with horizontal and vertical wiring has spaces for wiring to each unit compartment in each section, with supports holding wiring in place.

5. Controls: As specified elsewhere herein and as indicated on the Drawings. Each magnetic starter shall be provided with a hand-off-auto selector switch and a red "on" pilot light. Control power shall be 120 volts from integral transformer(s) unless indicated otherwise on the Drawings. Control transformer insulation shall be Class H. Provide suitable primary and secondary over current protection, and ground the secondary of control transformers. The secondary grounded

conductor shall be identified with continuous white insulation.

Where external control circuits are used a disconnecting means shall be provided in the control center and identified with a red laminated plastic nameplate marked "120 volt external control". Provide each motor control unit with a wiring diagram and overload heater chart affixed to the inside of the unit door or cover. Overload heaters shall be installed only after verification of actual motor FLA ratings.

C. Short-Circuit Current Rating for Each Section: Minimum 42,000 amps symmetrical RMS or as specified on the drawings.

2.3 BUSES

A. Material: Plated copper.

B. Ampacity Ratings: As indicated for horizontal and vertical main buses.

C. Equipment Ground Bus: Noninsulated, horizontal copper bus 2 by 1/4 inch, minimum.

D. Horizontal Bus Arrangement: Main phase, and ground buses extended with same capacity the entire length of motor-control center, with provision for future extension at both ends by bolt holes and captive bus splice sections or approved equivalent.

E. Short-Circuit Withstand Rating: Minimum 42,000 amps symmetrical rms Or as specified on the drawings.

2.4 FUNCTIONAL FEATURES

A. Description: Modular arrangement of motor controllers, control devices, overcurrent protective devices, transformers, panelboards, instruments, indicating panels, blank panels, and other items mounted in compartments of motor-control center as indicated.

B. Motor-Controller Units: Combination controller units of types and with features, ratings, and circuit assignments indicated.

1. Units with full-voltage, across-the-line, magnetic controllers up to and including Size 3 are installed on drawout mountings with connectors that automatically line up and connect with vertical-section buses while being racked into their normal, energized positions.

2. Units have short-circuit current ratings equal to or greater than short-circuit current rating of motor-control center section.

3. Units in motor-control centers with Type B wiring shall be equipped with pull-apart terminal strips or drawout terminal boards for external control connections.

C. Overcurrent Protective Devices: Types of devices with features, ratings, and circuit assignments indicated. Individual feeder-tap units through 225-A rating shall be installed on drawout mountings with connectors that automatically line up and connect with vertical-section buses while being racked into their normal, energized positions.

D. Spaces and Blank Units: Compartments fully bused and equipped with guide rails or equivalent, ready for insertion of drawout units. Provide bus barrier and compartment door.

E. Spare Units: Type, sizes, and ratings as indicated, and installed in compartments indicated "spare."

PART 3 - EXECUTION

3.1 EXAMINATION

A. Examine surfaces to receive motor control centers for compliance with installation tolerances and other conditions affecting performance of motor control centers installation. Do not proceed with installation until unsatisfactory conditions have been corrected.

3.2 APPLICATIONS

A. Select features of each motor controller to coordinate with ratings and characteristics of supply circuit and motor; required control sequence; duty cycle of motor, drive, and load; and configuration of pilot device and control circuit affecting controller functions.

B. Select horsepower rating of controllers to suit motor controlled.

C. Push-Button Stations: In covers of magnetic controllers for manually started motors where indicated, start contact connected in parallel with sealing auxiliary contact for low-voltage protection.

D. Hand-Off-Automatic Selector Switches: In covers of manual and magnetic controllers of motors started and stopped by automatic controls or interlocks with other equipment.

3.3 INSTALLATION

A. Install motor-control centers according to NEMA ICS 2.3 and manufacturer's written instructions.

B. Anchor each motor-control center assembly to steel-channel sills arranged and sized according to manufacturer's written instructions. Attach by tack welding or bolting. Level and grout sills flush with motor-control center mounting surface.

C. Install motor-control centers on concrete housekeeping bases conforming to Section 03300, "Cast-in-Place Concrete".

D. Fuses: Install fuses in each fusible switch as indicated, oriented for label readability.

3.4 IDENTIFICATION

A. Identify field-installed wiring and components and provide warning signs according to Section 16190, "Electrical Identification".

B. Operating Instructions: Frame printed operating instructions for motor-control centers, including control sequences, and emergency procedures. Fabricate frame of finished wood or metal and cover instructions with clear acrylic plastic. Mount on front of motor-control centers.

3.5 CONTROL WIRING INSTALLATION

A. Install wiring between motor-control devices according to Section 16180, “Wiring Devices".

B. Bundle, train, and support wiring in enclosures.

C. Connect hand-off-automatic switch and other automatic control devices according to an indicated wiring diagram or one that is manufacturer approved, where available.

1. Connect selector switches to bypass only the manual and automatic control devices that have no safety functions when switch is in the hand position.

2. Connect selector switches with motor-control circuit in both hand and automatic positions for safety-type control devices such as low- and high-pressure cutouts, high-temperature cutouts, and motor-overload protectors.

3.6 CONNECTIONS

A. Tighten motor-control center bus joint, electrical connector, and terminal bolts according to manufacturer's published torque-tightening values. Where manufacturer's torque values are not indicated, use those specified in UL 486A and UL 486B.

3.7 FIELD QUALITY CONTROL

A. Testing Agency: Provide services of a qualified independent testing agency to perform specified testing.

B. Testing: After installing motor-control center and after electrical circuitry has been energized, demonstrate product capability and compliance with requirements.

1. Procedures: Perform each visual and mechanical inspection and electrical test stated in NETA ATS, Sections 7.5, 7.6, and 7.16. Certify compliance with test parameters.

2. Remove and replace malfunctioning units with new units, and retest.

3.8 COMMISSIONING

A. Spot check breaker settings against Short Circuit Study. Short Circuit Study to be performed by the contractor.

B. Test the operation of the starters in Hand and Off Automatic control will generally be tested with the functional testing of the device.

C. Spot check insulation resistance on the MCC bus and control circuits.

D. Spot check voltage levels and resistance to ground

3.9 CLEANING

A. Inspect interior and exterior of motor-control centers. Remove paint splatters and other spots, dirt,

and debris. Touch up scratches and mars of finish to match original finish. Clean devices internally, using methods and materials recommended by manufacturer.

3.10 DEMONSTRATION

A. Training:

1. Conduct a minimum of 4 hours of training in operation and maintenance as specified in Division 1 Section 01770, "Project Closeout". Include training relating to equipment operation and maintenance procedures.
2. Schedule training with at least 7 days' advance notice. Deliver maintenance manuals to Owner before training commences.

END OF SECTION

SECTION 16210
SWITCHES, DISCONNECT AND SAFETY

PART 1 -- GENERAL

1.1 SCOPE

A. Work Included: Not limited to the following:

1. Fabricate, provide and install disconnect and safety type switches where indicated on the Contract Drawing and hereinafter specified.

2. Comply with General Conditions, the General Requirements and the requirements of Division 16 concerning definitions, guarantees, submittals, as-builts, clean-up, etc. as applicable to the work of this Section.

3. Examine all other Sections for work related to those Sections which are required to be included as work under this Section.

1.2 QUALITY ASSURANCE

A. Conform to applicable provisions of Subsection 1.7 of Section 16020 –Municipal Facilities General Electrical Requirements.

B. Conform to applicable Codes and NEMA, ANSI, UL and IEEE Standards, Federal Specification W-S-865,

1.3 SUBMITTALS

Conform to applicable provisions of Section 01330 of Division 1 - General Requirements and Subsection 1.6 G of Section 16020.

PART 2 -- PRODUCTS

2.1 GENERAL

A. APPROVED MANUFACTURERS:

1. Appleton;

2. Eaton;

3. Schneider Electric;

4. Or equal.

B. Disconnect Switches: Provide with devices enabling the switch to be locked in the open or closed positions.

C. Manual Motor Switches: Tumbler type rated 3HP, 208 Volts three phase or single phase with or without overload heaters as required to protect equipment served.

D. Externally Operable Safety Switches: To have quick-make, quick-break mechanism, capable of switching 10 times switch rating, with cover interlock to prevent opening with switch in ON position and defeat mechanism for maintenance.

E. Switches: Shall be Heavy Duty (HD) type unless otherwise indicated. Provide NEMA 1 enclosures for interior locations, NEMA 3R enclosures for exterior or wet locations, NEMA 4X 316 SS for corrosive locations and NEMA 7 for hazardous locations. Provide with number of poles, ampacity, voltage and HP rating, fusible or nonfusible as indicated.

F. Fusible Switches: Equip them with rejection clips for UL Class R fuses. Switches having a dual rating when used with dual element fuses shall have a rating so indicated.

G. 600 Amperes or Less Fuses: UL Class RKI with a minimum interrupting rating of 200,000 Amperes, Bussmann "Low-Peak Type" or equal.

PART 3 -- EXECUTION

3.1 GENERAL INSTALLATION

A. Locations: Install switches, disconnects and safety where indicated on the Contract Drawings.

B. Fastenings: Securely fasten switches to structural members or unistrut support as directed by the manufacturer.

C. Manual Motor Starters: Install flush mounted for switching motors 3HP and smaller in finished areas. Install surface mounted in equipment rooms and non-finished areas. Where installed above inaccessible ceilings provide access panels.

END OF SECTION

SECTION 16270
SERVICE AND DISTRIBUTION SWITCHBOARD

PART 1-- GENERAL

1.1 SCOPE

A. Work Included: Not limited to the following:

1. Fabricate, provide and install service and distribution switchboards as indicated on the Contract Drawings and hereinafter specified.

2. Comply with the General Conditions, the General Requirements and the requirements of Section 16020 of this Division 16, concerning definitions, guarantees, submittals, as-builts, clean-up, etc. as applicable to the Work of this Section.

3. Examine all other Sections for work related to those Sections which are required to be included as Work under this Section.

1.2 RELATED WORK

A. Related Sections: The following sections contain requirements that relate to this section:

1. Section 16560 "Municipal Facilities Electrical Commissioning Requirements" for commissioning requirements.

2. Section 16570 "Municipal Facilities Electrical Testing Requirements" for testing requirements.

1.3 QUALITY ASSURANCE

A. Conform to applicable provisions of Sub-Section 1.7 of Section 16020.

B. Conform to applicable Codes and NEMA, ANSI and IEEE Standards.

1.4 SUBMITTALS

A. Conform to applicable provisions of Section 01330 of Division 1 - General Requirements and of Sub-Section 1.6G of Section 16020.

B. Shop Drawings shall show and contain the following information:

1. Plans showing top and bottom of switchboards.

2. Front, rear and side elevations of switchboards.

3. Schematic Wiring Diagrams showing the following:

a. One-line diagram with each circuit numbered.

b. Schedule showing circuit number, description and rating of protective device(s).

c. Complete short circuit availability of bus.

4. 1/2" - 1'-0" scale drawings of electrical rooms or areas overall dimensions for equipment layout including space available for conduits and protective devices.

PART 2 -- PRODUCTS

2.1 MATERIALS

A. Each switchboard shall be U.L. listed deadfront, deadrear, completely self-supporting, with the required number of vertical sections bolted together to form one floorstanding switchboard. Construction shall be NEMA Class II with line and load and main bus connections accessible from the front. Provide switchboards of 1000 amperes or greater rating with line and load insulated bus bars. Overcurrent protective devices shall be grouped in convertible type construction. Vertical sections shall have full height bussing and where space for future devices is indicated on the Drawings all the necessary mounting hardware shall be furnished. Switchboards shall include all protective devices and other equipment indicated on the Contract Drawings with the necessary interconnections, instrumentation, and control wiring. Bus shall be copper with plated joints, or tin plated aluminum. Bus bars shall be mounted on supports of high impact-resistant, non-tracking insulating material, and braced to withstand the maximum available fault current as indicated on the Contract Drawings. Other ratings shall be as indicated on the Contract Drawings. Series-connected or "integrated equipment" short circuit ratings shall not be applied in lieu of, or to comply with, short circuit and interrupting capacity ratings indicated on the Drawings, unless specifically approved by the City Engineer. Switchboards shall be as manufactured by Eaton, Square D. Co., Power Style Class 2700 (Schneider), or equal.

B. Service and distribution sections shall contain circuit breakers, fusible switches, and combination motor starters, with shunt trips, motor operators, ground fault protection, and other accessories, as indicated on the Drawings, as well as provisions for utility metering in accordance with the serving electric utility requirements. Each disconnecting means shall be provided with a means for individual padlocking. Switches shall be heavy-duty, quick-make and quick-break, and horsepower rated through 500 HP. Switches rated over 600 amperes shall be bolted pressure contact type. Ratings of disconnecting means and overcurrent protective devices shall be as indicated on the Drawings. Combination motor controllers shall comply with applicable requirements of Section 16200 for Motor Control Centers.

C. Finish: Interior finish shall be a gray lacquer or enamel; exterior finish shall be a gray baked-on enamel or lacquer. Apply all finish coatings over a rust-inhibiting metal primer.

D. Identification: Each switchboard shall have an engraved laminated plastic nameplate identifying the switchboard as designated and located on the Contract Drawings, and indicating voltage, phase, and number of system conductors. For example, "Switchboard MS 277/480V. 3Ø 4W. Lettering shall be white on black finish and 1/4-inch high minimum. Nameplates shall be affixed by a minimum of two escutcheon pins or screws. Each device on the switchboard shall be provided with an engraved plastic nameplate as specified in Section 16190.

PART 3 -- EXECUTION

3.1 GENERAL INSTALLATION

A. Switchboard(s) shall be securely bolted to the flooring or structure. Final attachment means shall be in compliance with the seismic requirements of governing authority. Shop Drawings indicating the bolt down requirements shall be provided by the manufacturer along with all necessary calculations and shall be submitted with the Shop Drawings of the switchboard equipment. Refer to other Sections of the Specifications related to seismic requirements.

B. Switchboard(s) shall be installed on a level floor, with shims provided where necessary to attain both horizontal and vertical "plumb" conditions.

C. Switchboard(s) equipment shall be protected during construction in such a manner to prevent plaster, paint, dust, etc. from defacing the finish of equipment. Prior to final acceptance of the equipment, the interior of the equipment shall be cleaned of all foreign materials and debris. Any blemishes or defects on the exterior of the equipment shall be repaired by painting the equipment with paint supplied by the manufacturer of the equipment to match the factory finishes.

D. No operating handles in any switchboard shall be located above 6-foot 6-inches above finish floor. Code clearances on all sides of the switchboard equipment shall be maintained.

E. Switchboards shall be mechanically grounded to the grounding system.

F. Furnish ammeters, voltmeters, current and potential transformers, test blocks, control switches, fuses and circuit breakers, and other devices as indicated on the Drawings. Meters shall be switchboard type semi-flush mounted, with phase selector switches. The height of all devices shall comply with Code and utility company requirements with the switchboard installed on a 2-inch high concrete pad.

G. For solidly grounded "wye" services of more than 150 volts to ground, but not exceeding 600 volts phase to phase, provide ground fault protection of equipment for each service disconnecting means for services rated 1000 amperes or more, without a single main disconnecting means. Provide ground fault protection of equipment for other systems as indicated on the Drawings.

H. Ground fault sensors shall be zero sequence type unless indicated otherwise on the Drawings. Trip settings shall be as indicated on the Drawings or as directed by the City Engineer.

I. Protection: Keep switchboards covered during construction operations. Clean interior and exterior after all connections are completed. Factory connections shall be checked and re-torqued tight as required. Damage shall be field or factory repaired to a condition acceptable to the City Engineer at no added cost to the City.

J. Operational Test of the ground fault protection system using the primary current injection method shall be performed by qualified personnel with suitable testing/recording equipment in the presence of the City Engineer. Provide the City Engineer with a "Certified Test Report" including test parameters.

3.2 COMMISSIONING OF SWITCHGEAR AND SWITCHBOARD ASSEMBLIES

A. General:

1. Inspect for physical damage.

2. Compare equipment nameplate information with latest single line diagram and report discrepancies.

3. Inspect for proper alignment, anchorage and grounding.

4. Check tightness of accessible bolted bus joints by calibrated torque wrench method. Refer to manufacturer's instruction for proper foot pound levels.

5. Spot check breaker settings against Short Circuit Study.

6. Key interlock systems shall be physically tested to insure proper function.

    a. Closure attempt shall be made on locked open devices. Opening attempt shall be made on locked closed devices.
    b. Key exchange shall be made with devices operated in off-normal positions.

7. All doors, panels and sections shall be inspected for paint, dents, and scratches.

END OF SECTION

SECTION 16280
SHORT CIRCUIT AND COORDINATION REPORT

PART 1 -- GENERAL

1.1 THE REQUIREMENT

A. The CONTRACTOR shall prepare a power system analysis of short circuit calculations, a protective device coordination study and a harmonic analysis in accordance with the requirements of these Specifications and as shown.

B. The studies shall include all portions of the electrical distribution system for normal and standby power sources down to and including the (208 V) distribution system.

C. The work to be provided by the CONTRACTOR shall include protection studies for motors supplied with solid state overload and overcurrent protection devices.

D. The work to be provided by the CONTRACTOR shall include an evaluation of harmonic distortion and the furnishing and installation of filters and any other equipment as may be required for harmonic suppression.

1.2 RELATED WORK SPECIFIED ELSEWHERE

A. The Work of the following Sections applies to the work of this Section. Other Sections of the Specifications, not referenced below, shall also apply to the extent required for proper performance of this work.

1. Section 16020 Municipal Facilities General Electrical Requirements
2. Section 16270 Service and Distribution Switchboard
3. Section 16340 Low Voltage Motor Control

1.3 REFERENCE SPECIFICATIONS, CODES AND STANDARDS

A. Comply with the current provisions of the following codes and standards.

1. Codes:

LAEC	City of Los Angeles Electrical Code, latest adopted edition

2. Commercial Standards:

ANSI/IEEE 141	Recommended Practice for Electrical Power Distribution for Industrial Plants
ANSI/IEEE 242	Recommended Practice for Protection and Coordination of Industrial and Commercial Power Systems

ANSI C 37.010	Standard Application Guide for AC High-Voltage Circuit Breakers
ANSI C 37.5	Calculations of Fault Currents for Application of Power Circuit Breakers
ANSI C-37.13	Low-Voltage AC Power Circuit Breaker (600-Volt Insulation Class)
IEEE 519	Recommended Practices and Requirements for Harmonic Control in Electrical Power Systems

1.4 CONTRACTOR SUBMITTALS

A. Submittals shall be made in accordance with Section 16020 Municipal Facilities General Electrical Requirements and as specified herein.

B. The power system analysis shall be submitted to the ENGINEER prior to receiving final approval of the distribution equipment shop drawings and/or release of equipment for manufacture; approval from the ENGINEER may be obtained for a preliminary submittal of sufficient detail to ensure that device selection will be adequate. Preliminary submittal shall indicate the computer program for use in performing the work of this Section.

C. Studies for harmonic current, voltage and line notching test results shall be forwarded to the ENGINEER prior to acceptance testing of the project and subsequent to the installation of all harmonic generating and harmonic-sensitive equipment.

D. Submittals for solid state motor protective devices shall be forwarded to the engineer prior to loading the motor.

E. Final settings of Protective device shall be approved by the ENGINEER prior to project acceptance and shall be based on the results of the power system analysis.

F. The CONTRACTOR shall indicate in the submittal, changes to the protection scheme or equipment selection that will result in improved system reliability and safety.

1.5 QUALITY ASSURANCE

A. Organization's Qualifications:

1. Short circuit studies, protective device evaluation studies, and protective device coordination studies shall be performed by the medium voltage switchgear manufacturer or by an electrical testing service regularly engaged in the short circuit and protective device coordination studies for a period of at least 15 years. The study shall utilize proven computer programs for power system analysis. The studies shall be signed by the professional electrical engineer, registered in the State of California, responsible for the studies.

PART 2 -- PRODUCTS

2.1 GENERAL

A. The organization of the study shall include a single-line and an impedance diagram of the power system. This diagram shall identify all components considered in the study and the ratings of all power devices (this includes, but is not limited to: transformers, circuit breakers, relays, fuses, busses, and cables). The resistance and reactances of all cables shall be identified in the impedance diagram. The study shall contain, from the service utility company, all written data regarding maximum available short circuit current, voltage, and X/R ratio of the utilities' power system.

2.2 SHORT CIRCUIT STUDY

A. The short circuit study shall be performed with the aid of a digital computer program and shall be in accordance with ANSI C 37.5, IEEE Standard 242, and IEEE Standard 141.

2.3 PROTECTIVE DEVICE EVALUATION STUDY

A. A protective device evaluation study shall be performed to determine the adequacy of circuit breakers, molded case switches, automatic transfer switches, and fuses. Any problem areas or inadequacies in the equipment due to prospective short-circuit currents shall be promptly brought to the ENGINEER's attention.

2.4 PROTECTIVE DEVICE COORDINATION STUDY

A. A protective device coordination study shall be performed to provide the necessary calculations required to select or check the selection of power fuse ratings, protective relay characteristics and settings, ratios and characteristics of associated current transformers, and low-voltage breaker trip characteristics and settings. The results of the study shall govern the final selection of the protective devices.

2.5 TIME/CURRENT COORDINATION CURVES

A. As a minimum, the time/current coordination curves for the power distribution system shall include the following on 5-cycle log-log graph paper:

1. Time/current curves for each protective relay or fuse showing graphically that the settings will provide protection and selectivity within industry standards. Each curve shall be identified, and tap and time dial settings shall be specified.

2. Time/current curves for each device shall be positioned to provide the maximum selectivity to minimize system disturbances during fault clearing.

3. Time/current curves and points for cable and equipment damage.

4. Circuit interrupting device operating and interrupting times.

5. Indicate maximum fault values on the graph.

6. Sketch of bus and breaker arrangement.

7. Magnetizing inrush points of transformers.

8. All restrictions of the ANSI and LAEC shall be adhered to and proper coordination intervals and separation of characteristics curves shall be maintained.

9. Thermal limits of motors 250 hp and above.

2.6 HARMONIC MEASUREMENT

A. The CONTRACTOR shall prepare a report of the distribution system, at all voltage levels, which shall indicate the harmonic currents anticipated at each voltage level. This report shall indicate sources of harmonic currents, voltages, and line notching of all equipment. The report shall state the tolerance of sensitive equipment to harmonics.

B. CONTRACTOR shall measure harmonics present in the output of harmonic-generating equipment and at the input terminals of sensitive equipment. Install filters to prevent equipment malfunction, due to harmonics. Harmonic measurements shall be performed and documented after the filter installations.

C. All equipment which is required to conform to IEEE 519 shall be measured to determine output harmonic content. The CONTRACTOR shall take the corrective action necessary to attain compliance with IEEE 519, Table. Measurements and documentation shall be performed to demonstrate compliance with the standards.

2.7 MOTOR PROTECTION

A. Overload protection as phase overcurrent for medium voltage motors is specified in other Sections of these Specifications to be solid-state protective modules. The CONTRACTOR shall adjust these modules with respect to actual installed motor torque, current and thermal characteristics so that the best possible motor protection will result. Protective settings shall be submitted, and approved, before respective motors are run under load.

PART 3 -- EXECUTION

3.1 PROTECTIVE DEVICE TESTING, CALIBRATION AND ADJUSTMENT

A. The CONTRACTOR shall provide the services of a qualified field engineer and necessary tools and equipment to test, calibrate, and adjust the protective relays and circuit breaker trip devices as recommended in the power system analysis. The qualifications of the field engineer shall be subject to review and approval by the ENGINEER.

3.2 STUDY REPORTS

A. The results of the power system analysis shall be submitted summarized in a final report. The report shall include, but not limited to the following:

1. Single-line diagram

2. Impedance diagram

3. Tabulation of all protective devices, which shall be identified on the single-line diagram

4. Time/current coordination curves

5. Computerized fault current calculations

6. Specific recommendations, if any

7. Test instrumentation, condition and connections, as applicable, for each study

8. Harmonic measurement results

9. Harmonic distortion correction proposals.

END OF SECTION

SECTION 16290
MUNICIPAL FACILITIES GROUNDING SYSTEMS

PART 1 -- GENERAL

1.1 SCOPE

A. Required: Provide and ground electrical systems completely and effectively as required by Code and herein specified.

B. Comply with the General Conditions, General Requirements and the requirements of Section 16020 of this Division 16 concerning definitions, guarantees, submittals, as-builts, clean-up, etc. as applicable to work of this Section.

1.2 SUBMITTALS

A. General: Submit each item in this article according to the conditions of the Contract and Division 1 Specification 01330.

B. Product Data for grounding rods, connectors and connection materials, and grounding fittings.

C. Field tests and observation reports certified by the testing organization and indicating and interpreting the test reports for compliance with performance requirements.

1.3 RELATED WORK

A. Related Sections: The following sections contain requirements that relate to this section:

1. Section 16560 "Municipal Facilities Electrical Commissioning Requirements" for commissioning requirements.

2. Section 16570 "Municipal Facilities Electrical Testing Requirements" for testing requirements.

1.4 QUALITY ASSURANCE:

A. Testing Agency Qualifications: A “National Recognized Teating Laboratory” (NRTL) As defined in OSHA Regulation 1910.7.

B. Comply with NFPA 70.

C. Comply with UL 467.

D. Listing and Labeling: Provide products specified in this Section that are listed and labeled.

1. The Terms “Listed” and “Labeled”: As defined in the National Electrical Code Article 100.

2 Listing and Labeling Agency Qualifications: A “Nationally Recognized Testing Laboratory” (NRTL) as defined in OSHA Regulation 1910.7.

1.5 REFERENCE STANDARDS:

A. NFPA 70: National Electrical Code – Article 250.

B. Federal Information Processing Standard Publication #94 “Guideline on Electrical Power for ADP Installations”.

C. IEE Std. 142-1982 “Grounding of Industrial and Commercial Power System (GREEN Book).

D. IEE Std. 1100-1992 “Powering and Grounding Sensitive Electronic Equipment” (Emerald Book).

1.6 SYSTEM DESCRIPTION

A. Ground the electrical service system neutral at service entrance equipment to metallic water service and to concrete encased grounding electrodes.

B. Ground each separately-derived system neutral to nearest effectively grounded metallic water pipe.

C. Provide telephone and data system grounding conductor at main terminals of respective system bonded to service entrance grounding electrode.

D. Bond together system neutrals, service equipment enclosures, exposed non-current carrying metal parts of electrical equipment, metal raceway systems, grounding conductor in raceways and cables, receptacle ground connectors, metallic plumbing systems and concrete encased electrode.

PART 2 -- PRODUCTS

2.1 MATERIALS

A. Grounding and Bonding Conductors: Soft-drawn stranded copper.

B. Buried or Concealed Joints: Exothermic welded, inspected and approved the Los Angeles City Building Department before concealment.

C. System grounding conductors shall be a minimum of #3 AWG unless otherwise indicated, and shall be continuous without joints or splices.

D. Bolted Connections: Everdur hardware, bolts, and lock washers or equal.

E. Welded Connections: Either Erico Cadweld Process or Continental Industries Thermoweld Process or equal.

F. Compression Connections: Thomas & Betts Series 5300 fittings or equal. Use manufacturer's specific instructions and tools for each connection.

G. Ground Rods: Copperweld Steel Company or equal. Provide 3/4 inch copperclad steel driven ground rods, 10 feet long, UL listed, in each manhole and where indicated on Contract Drawings.

PART 3 -- EXECUTION

3.1 GENERAL INSTALLATION

A. Grounding and Bonding: Provide in accordance with all requirements of NEC and other applicable codes, Contract Drawings and the following descriptions. Comply with the codes as a minimum requirement with specifications where they are more stringent. Ground each electrical service to cold water systems and provide supplemental grounding as follows:

1. Structural Steel Electrode: Bond the structural steel frame of the building or structure to the point of ground at service equipment with a continuous bonding conductor equal in size to the grounding electrode conductor, but not smaller than No. 4 AWG or

2. Concrete-Encased Electrode: Provide three minimum No. 4 horizontal reinforcing bars in and near the bottom of the building or structure footing, each with a minimum continuous (no splices) length of 20 feet. Install a continuous bonding conductor equal in size to the grounding electrode conductors, but not smaller than No. 4 A.W.G., bonded to each reinforcing bar by means of corrosion-resistant clamps or welding, to the point of ground at service equipment. The bonding conductor shall be installed in schedule 40 rigid PVC conduit from a point within the footing continuous to the service equipment. A single size 3/0 bare copper conductor with a minimum continuous length of 20 feet may be used in lieu of the three No. 4 reinforcing bars.

B. Separate Buildings or Structures: When two or more buildings or structures are supplied from a common source or service, the grounding system in each building or structure shall have a grounding electrode connected to the metal enclosure of the building or structure disconnecting means and to the AC system grounded circuit conductor on the supply of the building or structure disconnecting means.

C. Separately Derived Systems: Shall be bonded and grounded in accordance with Code.

D. Customer-Station Transformer: Shall be bonded and grounded in accordance with the requirements of the serving electric utility.

E. Nonmetallic Raceways: A Code-sized green, or green with yellow stripe insulated conductor shall be installed with the circuit conductors, for equipment grounding. Ground conductor shall be installed in raceways with branch circuit wiring where indicated on the Contract Drawings.

F. Communication, Sound, and Signal Systems: Metal raceways and enclosures shall be grounded as directed by the City Engineer.

G. The interior metallic cold water pipe system shall be bonded to the main grounding electrode by a conductor sized in accordance with Code, but not smaller than No. 8 A.W.G.

H. Telephone service main backboard or cabinet shall be grounded in accordance with requirements of the telephone serving facility.

I. All grounding and bonding conductors shall be installed with sufficient slack to avoid breaking due to settlement and movement of conductors at attached points.

J. Flexible Conduit: Where equipment grounding or bonding conductors are required they shall be installed inside the conduit except bonding conductors may be installed exterior of the conduit if

not over 3 feet maximum length, not smaller than No. 8 A.W.G., and if secured to the conduit at 6 inch. Flexible conduit not to be used as a ground path. Include code size green conductors in all flexible conduit.

K. Transformers and other isolated neutrals shall be grounded from the neutral bushing or connector to grounding electrodes, building steel or metallic code water pipe system.

L. All conduit stub-ups shall be grounded and where multiple stub-ups are made within an equipment enclosure such as a switchboard, they shall be equipped with grounding bushings and bonded together to the enclosure, and the enclosure ground bus with code sized copper conductors.

M. Metallic conduits, wireways, metal enclosures of busways, electrical equipment housing and all non-current carrying metallic parts shall be grounded. The metallic conduit system shall be used for equipment and enclosure grounding but not as a system ground conductor.

3.2 MEASUREMENT OF RESISTANCE TO GROUND

A. All Systems**:** Measure by the "direct" method or the "Fall of Potential" method. The "direct" method, or two terminal test, includes a Megger Earth Tester with terminals connected to the electrode under test and to an all metallic water pipe system. The following limitations apply to this method:

1. The water pipe system must be extensive enough to have a negligible resistance.

2. The water pipe system must be metallic throughout, without any insulating couplings or flanges.

3. The earth electrode under test must be far enough away from the water pipe system to be outside its sphere of influence. Rule of thumb: Distance from the earth-electrode system to the water pipe system should be about 10 times the radius of the electrode or grid to obtain a measurement within an accuracy of p 10%.

4. Submit test report of the main building grounding electrode's resistance to ground to the City Engineer.

B. Test each receptacle or branch circuit breaker having ground-fault circuit protection to assure that the ground-fault circuit interrupter will not operate when subjected to a ground-fault current of less than 4 milliamperes and will operate when subjected to a ground-fault current exceeding 6 milliamperes. Perform testing using an instrument specifically designed and manufactured for testing ground-fault circuit interrupters. "TEST" button operation will not be acceptable as a substitute for this test. Replace receptacles that do not shutoff power with 5/1000 of an ampere within 1/40th of a second and retest. Submit test report signed by Test Engineer who performed this test.

END OF SECTION

SECTION 16320
TRANSFORMERS

PART 1- GENERAL

1.1 SCOPE

A. Required**:** Provide and install dry type transformers work as indicated on the Contract Drawings and Schedules and herein specified.

B. Comply with the General Conditions, General Requirements and the requirements of Division 16 concerning definitions, guarantees, submittals, as-builts, clean-up, etc. as applicable to work of this Section.

1.2 RELATED WORK

A. Related Sections: The following sections contain requirements that relate to this section:

1. Section 16190 "Electrical Identification"

2. Section 16030 "Wastewater Facilities Electrical Testing Requirements" for testing requirements.

3. Section 16560 "Municipal Facilities Electrical Commissioning Requirements" for commissioning requirements.

4. Section 16570 "Municipal Facilities Electrical Testing Requirements" for testing requirements.

1.3 QUALITY ASSURANCE

A. Manufacturers: Firms regularly engaged in manufacture of power/distribution transformers of types and ratings required, whose products have been in satisfactory use in similar service for not less than 5 years.

B. Installer's Qualifications: Firm with at least 5 years of successful installation experience on projects utilizing electrical power and distribution transformers similar to those required for this project.

C. NEC Compliance: Comply with NEC as applicable to installation and construction of electrical power/distribution transformers.

D. ANSI Compliance: Comply with applicable requirements of ANSI Standards C57-Series pertaining to power/distribution transformers.

E. NEMA Compliance: Comply with requirements of NEMA Std Pub/No.'s ST 20; "Dry-Type Transformers for General Applications", TR 1.

F. UL Compliance: Comply with applicable requirements of ANSI/UL 506; "Safety Standard for Specialty Transformers". Provide power/distribution transformers and components which are UL-listed and labeled.

G. NESC Compliance: Comply with applicable requirements of National Electrical Safety Code (ANSI Std C2) pertaining to indoor installation of transformers.

H. Testing Agency Qualifications: In addition to requirements specified in Section 01453, "Quality Control," an independent testing agency shall meet OSHA criteria for accreditation of testing laboratories, Title 29, Part 1907; or shall be a full-member company of the InterNational Electrical Testing Association.

1. Testing Agency's Field Supervisor: Person currently certified by the InterNational Electrical Testing Association or the National Institute for Certification in Engineering Technologies, to supervise on-site testing specified in Part 3.

I. Listing and Labeling: Provide transformers specified in this Section that are listed and labeled.

1. The Terms "Listed" and "Labeled": As defined in NFPA 70, Article 100.

2. Listing and Labeling Agency Qualifications: A "Nationally Recognized Testing Laboratory" as defined in OSHA Regulation 1910.7.

1.4 SUBMITTALS

A. Conform to applicable provisions of Section 01330 and as herein specified.

B. Product Data**:** Submit manufacturer's technical product data including rated KVA, frequency, primary and secondary voltages, percent taps, polarity, impedance and certification of transformer performance efficiency at indicated loads, percentage regulation at 100% and 80% power factor, no-load and full-load losses in watts, % impedance at 75 deg. C, hot-spot and average temperature rise above 40 deg. C ambient temperature, sound level in decibels, and standard published data.

C. Shop Drawings: Submit manufacturer's drawings indicating dimensions, and weight loadings for transformer installations, showing layouts, mountings and supports, spatial relationship to panelboards and associated equipment, include transformer connections to electrical equipment.

D. Wiring Diagrams: Submit wiring protection and control diagrams for power distribution transformers. Clearly differentiate between portions of wiring that are manufacturer-installed and portions to be field-installed.

PART 2 -- PRODUCTS

2.1 ACCEPTABLE MANUFACTURERS

A. Available Manufacturers: Subject to compliance with requirements, manufacturers offering products which may be incorporated in the work included, but are not limited to the following:

1. Eaton;

2. Schneider Electric;

3. Siemens;

4. Or equal.

2.2 DISTRIBUTION TRANSFORMERS

A. General**:** Except as otherwise indicated, provide manufacturer's standard materials and components as indicated by published product information, designed and constructed as recommended by manufacturer, and as required for completed installation.

B. 15 KVA and Above**:** Shall have drip-proof ventilated enclosures and copper coils of continuous wound construction impregnated with non-hygroscopic thermosetting varnish. Cores shall be constructed of high grade non-aging silicon steel, with high magnetic permeability and low hysteresis losses. Flux densities shall be well below the saturation point. Vibration-absorbing mounts shall be provided between the core/coil and the mounting base. Provide four 2-1/2 percent full capacity primary taps, two above and two below, the rated nominal voltage. Terminals shall be accessible from the front. Insulation materials shall be in accordance with NEMA ST20 standards for a 220 degrees C. U.L. recognized insulation system. Full load temperature rise shall not exceed 80 degrees C. in a 40 degrees C. ambient.

C. Less than 15 KVA: Wall mounted type, copper coils; full load temperature rise shall not exceed 115 degrees C. in a 40 degrees C. ambient.

D. Finishes: Coat interior and exterior surfaces of transformer, including bolted joints, with manufacturer's standard color baked-on enamel.

2.3 CONTROL AND SIGNAL TRANSFORMERS

A. Units comply with NEMA ST 1 and are listed and labeled as complying with UL 506.

B. Ratings: Continuous duty. If rating is not indicated, provide capacity exceeding peak load by 50 percent minimum.

C. Description: Self-cooled, 2 windings.

PART 3 -- EXECUTION

3.1 INSPECTION

A. Installer must examine areas and conditions under which power/distribution transformers and ancillary equipment are to be installed, and notify Contractor in writing of conditions detrimental to proper completion of the work. Do not proceed with the work until satisfactory conditions have been corrected in a manner acceptable to Installer.

B. Coordinate transformer installation work with electrical raceway and wire/cable work, as necessary for proper interface.

C. Tighten electrical connectors and terminals, including screws and bolts, in accordance with equipment manufacturer's published torque tightening values for equipment connectors. Where manufacturer's torquing requirements are not indicated, tighten connectors and terminals to comply with tightening torques specified in UL Std 486A and B.

3.2 GROUNDING

A. Provide equipment grounding connections for power/distribution transformers as indicated. Tighten connections to comply with tightening torques specified in UL Std 486A to assure permanent and effective grounding.

3.3 CLEANING

A. On completion of installation, inspect components. Remove paint splatters and other spots, dirt, and debris. Repair scratches and mars on finish to match original finish. Clean components internally using methods and materials recommended by the manufacturer.

3.4 INSTALLATION

A. Comply with safety requirements of IEEE C2, National Electrical Safety Code.

B. Arrange equipment to provide adequate spacing for access and for circulation of cooling air.

C. Identify transformers and install warning signs according to Section 16190, "Electrical Identification."

D. Tighten electrical connectors and terminals according to manufacturer's published torque-tightening values. If manufacturer's torque values are not indicated, use those specified in UL 486A and UL 486B.

3.5 TESTING

A. Prior to energizing of transformers, check all accessible connections for compliance with manufacturer's torque tightening Specifications.

B. Prior to energizing, check circuitry for electrical continuity, and for short-circuits.

C. Upon completion of installation of transformers, energize primary circuitry at rated voltage and frequency from normal power source, and test transformers, including, but not limited to, audible sound levels, to demonstrate capability and compliance with requirements. Where possible, correct malfunctioning units at site, then retest to demonstrate compliance; otherwise, remove and replace with new units or components, and proceed with retesting.

END OF SECTION

SECTION 16330
PANELBOARDS

PART 1 -- GENERAL

1.1 SCOPE

A. Required**:** Provide and install complete equipment including circuit breakers and panelboards as indicated on the Contract Drawings and herein specified.

B. Comply with the General Conditions, General Requirements and the requirements of Section 16020 of this Division 16 concerning definitions, guarantees, submittals, as-builts, clean-up, etc. as applicable to work of this Section.

1.2 RELATED WORK

A. Related Sections: The following sections contain requirements that relate to this section:

1. Section 16560 " Municipal Facilities Electrical Commissioning Requirements " for commissioning requirements.

2. Section 16570 " Municipal Facilities Electrical Testing Requirements" for testing requirements.

1.3 QUALITY ASSURANCE

A. Comply with applicable provisions of Subsection 1.2 of Section 16020.

B. Conform to the applicable provisions of Subsection 1.6 of Section 16020 related to legal requirements and standards including NEMA, ANSI and IEEE Standards, NFPA 70, and Federal Specifications.

1. 4 SUBMITTALS

A. Submit under the provisions of Section 01330.

B. Product Data: For each type of panelboard, overcurrent protective device, accessory, and component indicated. Include dimensions and manufacturers' technical data on features, performance, electrical characteristics, ratings, and finishes.

C. Maintenance Data: For panelboards and components to include in maintenance manuals specified in Division 1. In addition to requirements specified in Section 01770, "Closeout Procedures," include the following:

1. Manufacturer's written instructions for testing and adjusting overcurrent protective devices.

2. Time-current curves, including selectable ranges for each type of overcurrent protective device.

PART 2 -- PRODUCTS

2.1 GENERAL REQUIREMENTS

A. Cabinets to House Panelboards: Cabinets shall be formed of galvanized metal, chemically cleaned, and all breaks in galvanizing shall be painted with metallic aluminum paint.

Minimum size: 20 inches wide by 5-3/4 inches deep. Trims and doors shall be chemically cleaned. Provide ANSI synthetic alkalyd factory enamel finish on the exterior and interior of panels. Provide for circuit directory behind door with glass or heavy plastic protection. Cabinets shall be flush or surface mounted type as indicated with screw cover, hinged doors with flush lock keyed to operate from one key. Cabinets greater than three feet shall have three trim bolts on each side.

B. Identification: Each panelboard shall have an exterior engraved laminated plastic nameplate identifying the panelboard as designated on the Drawings and indicating voltage, phases, and number of system conductors. For example:

"Panel A 277/480V. 3ph, 4W". Lettering shall be white on black finish and 3/16 inch high minimum. Nameplates shall be affixed with a minimum of two escutcheon pins or screws. Each circuit breaker shall have a permanent metal or plastic number to identify each circuit. A circuit schedule card and holder shall be mounted on the inside of the door and covered with plastic.

C. Protective Devices:

1. Protective devices, main, branch or sub-feed shall be thermal-magnetic-molded-case circuit breakers, bolt-on type ampacities as scheduled on Drawings. Provide single handle, common trip for two and three-pole units. Handle ties are not acceptable.

2. Circuit Breakers, 250A and Larger: Adjustable magnetic trip setting.

3. Electronic Circuit Breakers, 400A and Larger: RMS sensing; field-replaceable rating plug; with the following field-adjustable settings:

   a. Instantaneous trip.

   b. Long- and short-time pickup levels.

   c. Long- and short-time time adjustments.

   d. Ground-fault pickup level, time delay, and I^2t response. Where indicated on the drawings.

4. GFCI Circuit Breakers: Single- and two-pole configurations with 5-mA trip sensitivity, where indicated on the lighting and appliance panelboards.

5. Molded-case circuit breakers shall be suitable for application; Rype SWD for switching fluorescent lighting loads; Type HACR for heating, air-conditioning, and refrigerating equipment.

D. Electrical Equipment Adjacent to Panelboards**:** Where scheduled provide a separate cabinet with screw cover and hinged door with flush lock keyed alike with panelboard. A single cabinet may be used when a compartment (with appropriate barriers) under separate lockable door and cover is provided.

E. Finish: As specified for service switchboards in Section 16270 service and distribution switchboards.

2.2 DISTRIBUTION PANELBOARDS

A. Each distribution panelboard shall be a deadfront, deadrear, U.L. listed, circuit breaker type with copper buses and comply with Federal Specification W-P-115a. Construction shall be NEMA Class I. Electrical ratings shall be as indicated on the Drawings.

Series-connected or "integrated equipment" short circuit ratings shall not be applied in lieu of, or to comply with, short circuit and interrupting capacity ratings indicated on the Drawings unless specifically approved by the City Engineer. Provide fronts with flush cylinder tumbler locks, trim clamps, and concealed hinges.

Double doors or doors over 48 inches high shall have 3 point latching. Provide 2 keys for each panelboard. Furnish panelboards with main lugs or main circuit breakers and all other circuit breakers as indicated on the drawings. Each circuit breaker shall be provided with a means for individual padlocking. Distribution panelboards shall be Square D. Co. I-line type or equal.

2.3 LIGHTING AND APPLIANCE PANELBOARDS

A. Each lighting and appliance panelboard shall be a U.L. listed circuit breaker type with copper buses and meet Federal Spec. W-P115a. Electrical ratings shall be as indicated on the Drawings. Series connected or "integrated equipment" ratings shall not be applied in lieu of or to comply with short circuit and interrupting ratings indicated on the Drawings, unless specifically approved by the City Engineer. Provide fronts with flush cylinder tumbler locks, trim clamps, and concealed hinges. Provide two keys for each panelboard. Furnish panelboards with main lugs or main circuit breakers and all circuit breakers as indicated on the Drawings.

B. Each circuit breaker shall be provided with a means for individual padlocking. Lighting and appliance panelboards shall be Square D. Co. Type NQO for 120/240 or 208/120 volt systems, and Type NEHB for 480/277 volt systems.

2.4 FABRICATION AND FEATURES

A. Hinged Front Cover: Entire front trim hinged to box and with standard door within hinged trim cover.

B. Directory Card: With transparent protective cover, mounted inside metal frame, inside panelboard door.

C. Bus: Hard-drawn copper, 98 percent conductivity or Tin-plated aluminum.

D. Main and Neutral Lugs: Mechanical type suitable for use with conductor material.

E. Equipment Ground Bus: Adequate for feeder and branch-circuit equipment ground conductors; bonded to box.

F. Future Devices: Mounting brackets, bus connections, and necessary appurtenances required for future installation of devices.

G. Isolated Equipment Ground Bus: Adequate for branch-circuit equipment ground conductors; insulated from box, where indicated on the Drawings.

H. Extra-Capacity Neutral Bus: Neutral bus rated 200 percent of phase bus and UL listed as suitable for nonlinear loads, where indicated on the Drawings.

I. Skirt for Surface-Mounted Panelboards: Same gage and finish as panelboard front with flanges for attachment to panelboard, wall, and ceiling or floor. Provide back, sides and removable front.

J. Feed-through Lugs: Mechanical type suitable for use with conductor material. Locate at opposite end of bus from incoming lugs or main device, where indicated on the Drawings.

PART 3 -- EXECUTION

3.1 GENERAL INSTALLATION OF PANELBOARDS

A. Install equipment square, level and secure to the building structure by bolting.

B. Align top of adjacent panelboards unless specifically noted otherwise. Install panelboards over 29 inches high to mount highest protective device handle a maximum of 6'-6" or 5'-6" for panelboards up to 29 inches high, except where adjacent to taller panelboards.

C. Flush enclosures shall be installed with the front edge flush with combustible finish surfaces and not more than 1/4 inch behind noncombustible finish surfaces, and shall be secured to framing or blocking except where embedded in masonry or concrete.

D. Provide weather-proof gaskets on trims and doors of panelboards located in mechanical areas.

3.2 OTHER APPLICABLE REQUIREMENTS

A. Provide a typewritten circuit directory for each branch circuit. Obtain City facility room numbers and use in final directory.

B. Provide a schematic diagram and sequence of operation for control devices installed under

separate door adjacent to panelboards.

C. Install nameplates in accordance with provisions noted in Section 16190 – Electrical Identification.

D. Equip each circuit breaker for electrical discharge lamps with a locking device unless circuit will be switched at panelboard. Equip each circuit breaker for night-light circuits, fire alarm, security and control circuits with a locking device.

E. Provide filler plates for all unused spaces.

F. Stub five 3/4-inch empty conduits from each flush mounted panelboard into accessible ceiling space and cap for future use. Stub four 1-inch empty conduits into raised floor space or below slab not on grade

G. Wiring in Panelboard Gutters: Arrange conductors into groups and bundle and wrap with wire ties after completing load balancing.

3.3 COMMISSIONING

A. Spot check breaker settings against Short Circuit Study

B. Spot check phase balance after system is under load. Ensure proper, thorough and accurate identification of load. Trip breakers and validate load identified. Test GFI breakers.

C. Receptacle Polarity Test: Spot check receptacles installed or reconnected under this contract with a receptacle circuit tester. Tester shall test for open ground, reverse polarity, open hot, open neutral, hot and ground reversed, hot or neutral and hot open.

D. Check circuit labeling by de-energizing circuits while circuit tester is in the receptacle. Labeling shall be checked on the load/receptacle and at the breaker

3.4 CLEANING

A. On completion of installation, inspect interior and exterior of panelboards. Remove paint splatters and other spots. Vacuum dirt and debris; do not use compressed air to assist in cleaning. Repair exposed surfaces to match original finish.

END OF SECTION

SECTION 16340
LOW VOLTAGE MOTOR CONTROL

PART 1 -- GENERAL

1.1 THE REQUIREMENT

A. The CONTRACTOR shall furnish and install all group-mounted and unit motor control as required for each motor furnished for installation all in accordance with the requirements of the Contract Documents.

B. When motors furnished differ from the indicated, the CONTRACTOR shall, at no additional cost to the CITY, make the necessary adjustments to wiring, conduit, disconnect devices, motor starters, branch circuit protection, and other affected material or equipment to accommodate the motors actually installed.

C. Make like items of equipment provided hereunder the end products of one manufacturer in order to achieve standardization for appearance, operation, maintenance, spare parts, and manufacturer's service.

1.2 RELATED WORK SPECIFIED ELSEWHERE

A. The work of the following Divisions or Sections applies to the work of this Section. Other Sections of the Specifications, not referenced below, shall also apply to the extent required for proper performance of this work.

1. Section 16020 Municipal Facilities General Electrical Requirements.

2. Section 16100 Basic Materials and Methods.

3. Section 16490 Electric Motors

1.3 REFERENCE SPECIFICATIONS, CODES, AND STANDARDS

A. All work specified herein shall conform to or exceed the applicable requirements of the referenced portions of the following publications to the extent that the provisions thereof are not in conflict with other provisions of these specifications.

1. Codes and Standards:

LAEC City of Los Angeles Electrical Code, latest adopted edition

California Code of Regulations Title 8, Industrial Relations, Subchapter 5, Electrical Safety Orders.

2. Commercial Standards:

UL 845 Standards for Safety Electric Motor Control Centers.

NEMA	ICS-1	General Standard for Industrial Control and Systems
NEMS	ICS-2	Industrial Control Devices, Controllers and Assemblies

1.4 CONTRACTOR SUBMITTALS

A. Shop drawing submittals shall comply with the "Contractor Submittals" paragraph of Section 16012, "Municipal Facilities General Electrical Requirements".

B. The following submittals and specific information shall be provided.

1. One-line diagrams,

2. Elementary diagrams,

3. Connection diagrams,

4. Interconnection diagrams,

5. Protective device time-current characteristics on conventional-sized transparencies,

6. Operational description,

7. Installation instructions,

8. Maintenance instructions,

9. Spare parts list,

10. Test reports, including procedures, test conditions, results and graphs**.**

1.5 QUALITY ASSURANCE

A. Quality assurance shall be in accordance with Section 16010 Wastewater Facilities General Electrical Requirements.

B. Electrical and Mechanical Testing: All components shall be factory tested in accordance with the applicable NEMA ICS requirements.

C. Field Testing: Field tests shall be performed in accordance with Electrical Testing Requirements.

PART 2 -- PRODUCTS

2.1 MOTOR CONTROL, GENERAL

A. Provide each motor with a suitable controller and devices that will function as specified for the respective motors and meeting NEMA ICS 2, the NEC, and UL.

B. Provide each motor controller with thermal overload protection in all ungrounded phases. Use protection consisting of thermal overload relays meeting NEMA ICS 2 which are sensitive to motor current and mounted within the motor controller, or a combination of thermal protectors embedded within the motor windings and controller-mounted overload relays, as indicated. Use overload protection devices of the inverse-time current characteristic type.

C. Provide controller-mounted overload relays of the manual-reset type with externally operated reset button when used without motor thermal protectors; when used in conjunction with thermal protectors, provide the automatic reset type. Select and install overload relay heaters after the actual nameplate full-load current rating of the motor has been determined.

D. If power factor correction capacitors are connected on the load side of the overload relays, incorporate the resulting reduction in line current in the selection of overload relay heaters.

E. Install and connect any required thermal protector monitoring relay provided by motor manufacturer in motor-control circuit and provide manual reset function

2.2 MANUALLY OPERATED STARTERS, FRACTIONAL HORSEPOWER

A. Provide starters meeting NEMA ICS 2 with the enclosures shown, rated 1 hp at single-phase, ac voltages of 115 and 230 volts, and with thermal overload protection, and toggle or pushbutton operation. Provide for locking in the OFF position.

2.3 MANUALLY OPERATED STARTERS, INTEGRAL HORSEPOWER

A. Provide starters meeting NEMA ICS 2 of the horsepower rating, voltage, number of phases, and enclosure shown and with thermal overload protection, and pushbutton or toggle switch operation. Provide for locking in the OFF position. Provide running overcurrent protection.

2.4 FULL VOLTAGE MAGNETIC STARTERS

A. Provide starters meeting NEMA ICS 2, Class A, with the rating and enclosure shown. Starters shall be full voltage, non-reversing horsepower rated, providing combined protection against running and stalled overloads. Thermal overload relays on all phases shall be temperature compensated bimetallic type with manual reset and inherent single phasing prevention.

2.5 REDUCED VOLTAGE STARTERS

A. Provide starters meeting NEMA ICS 2, Class A, with the rating and enclosure shown. Starters shall be single-step magnetic type, having closed circuit transition and an adjustable time interval between application of starting and running conditions to the motors. Provide autotransformers suitable for medium-duty service as specified in NEMA ICS 2, and with overtemperature protection. Provide taps giving approximately 50 percent, 65 percent, and 80 percent of line voltage at output terminals.

2.6 CONTROL POWER TRANSFORMERS

A. Supply individual control power transformers unless noted otherwise. The transformers shall have sufficient capacity to serve the connected load and limit voltage regulation to 10 percent during contact or pickup. Fuse one side of the secondary winding and ground the other side. Provide primary, current limiting fuses where fuses shown on Drawings, or where required by applicable codes and standards.

2.7 MOTOR CONTROL CENTERS

A. Provide motor control centers and components meeting the requirements of the latest revised NEMA and UL standards and the following requirements, unless otherwise indicated:

RATING

Voltage As indicated on the Drawings

Short Circuit Rating: 42,000 amps rms symmetrical, or as determined by electrical studies

NEMA Class	Class 2, Type B with all remote control and signal circuits wired to a separate terminal board compartment in each motor control center lineup; all additions and revisions shall be included in the final as-built record drawings

ENCLOSURE

Type	NEMA Type as shown
Vertical Section	90-inches high, 20-inches wide, or as shown
Dimensions	20-inches deep, Or depth as shown
Finish	Exterior: manufacturer's standard gray over a primer and rust inhibitor or as per architectural standard; Interior: white lacquer or enamel
Construction	Sheet steel reinforced with channel or angle irons, section constructed so they may be butted flush, end-to-end against a similar section without bolts, nuts, or cover plates causing interference; removable top cover plates and bottom cover plates
Section Mounting	Removable formed steel channel sills and removable lifting angles
Horizontal Wiring Compartments	Full width, top and bottom, accessible from front
Vertical Wiring	Full height, isolated from unit Compartment starters with a separate door, accessible from front

Unit Compartment	Individual compartments separated by steel barriers for each starter, feeder, or other unit capable of being wired from front without unit removal
Compartment Doors	Separate hinged doors for each starter, feeder, or other unit
Door Interlocking	Individual Starter and feeder doors mechanically interlocked so doors cannot be opened with unit energized; defeater mechanism to allow intentional access at any time; provisions for padlocking external disconnect handles in the OFF position
Cable Entrance	Main circuits enter from top or bottom depending on arrangement, control and feeder circuits enter from top or bottom depending on arrangement
Busway Entrance	Pull box with flanged connection for incoming busway, bus connection to motor control center main power bus and cable connection to ground bus and neutral bus; match dimensions of incoming busway;

BUS

Horizontal Power Bus	3-phase copper bus entire width of control center rated as indicated, constructed to allow future extension of additional sections; pressure type solderless lugs for each incoming line cable; Belleville washers on all bus connection bolts.
Vertical Power Bus	3-phase copper bus full height of section rated 300 amps minimum; "sandwich" type bus insulation that provides dead front construction with starter units removed except for bus stab openings; Belleville washers on all bus connection bolts
Neutral Bus	Copper; Belleville washers on all bus connection bolts
Ground Bus	Copper, 400A minimum capacity; Belleville washers on all bus connection bolts
Bus Bracing	As indicated or determined based on electrical studies, 42,000 minimum amps rms symmetrical.

MOTOR STARTER UNITS

General	Individual components and control devices including pushbuttons, selector switches, indicating lights, control relays, time delay relays, and elapsed time meters as specified in Section 16100, "Basic Materials and Methods".
Construction	Drawout combination type with stab connections, except

	where size and weight of equipment make this impracticable; readily interchangeable with starters of similar size; provide pull-apart unit control wiring terminal boards on all units
Starters	NEMA standard rating, NEMA Size 1; minimum meeting requirements specified under article 2.1, MOTOR CONTROL, GENERAL;
Disconnecting Device	disconnecting device lockable in OPEN position
Circuit Breakers	Molded case motor circuit protectors with manufacturer's recommended trip setting for maximum motor protection, tripping indicated by operating handle position; interrupting capacity required for connection to system with short circuit capacity indicated; shunt trip for ground fault protection; copies of circuit breaker time-current characteristics
Fused Switches	Heavy-duty (HD), motor rated, load-break, quick-make, quick-break type meeting requirements of UL and NEMA KS 1; current- limiting fuses as specified with rejection clips
Load Detector Relays	Manual reset with adjustable differential; Relays Cutler-Hammer Type D60LA, or equal
Motor Overload	Temperature compensated, three-pole, Protection bimetallic thermal overload relay; manual-reset overload relays when used independently of other overload protection; automatic-reset when used with integral motor thermal protector
Motor Thermal	Manual-reset interposing Protection Interface relay for connection to motor-mounted thermal protector system
Ground Fault	Same as under FEEDER UNITS Protection AND MAIN PROTECTIVE DEVICE, except instantaneous operation device
Capacitor Connection	Special terminals to allow easy connection of power factor correction capacitors on the source side of starter overload relays on all starters where capacitor connection is shown
CONTROL UNITS	
Disconnecting Device	Disconnecting device capable of de-energizing all circuits in the unit. Provide a warning sign giving location of disconnecting device if not located in the unit.
Control Devices	As indicated on the Drawings and as specified in Section 16100, "Basic Materials and Methods".
	Permanent sleeve type markers to be applied to all wires.

Wire Markers Control Wiring	Minimum wire size 14 AWG copper

FEEDER UNITS AND MAIN PROTECTIVE DEVICE

Construction	Same as under MOTOR STARTER UNITS with UL service entrance label on main protective device
Circuit Breakers	Unless otherwise indicated, molded case with thermal-magnetic trip and interrupting capacity required for connection to system with short circuit capacity indicated; tripping indicated by operating handle position; suitable for use with 75 degrees C wire at full NEC 75 degrees C ampacity; shunt trip for ground fault protection and phase monitoring relay; for main and feeder protective devices, use molded case circuit breakers with ambient insensitive solid state trips and having the current sensors and solid state logic circuits integral in the circuit breaker frame; use solid state current control providing adjustable ampere setting, adjustable long-time delay, adjustable short-time trip and delay band, fixed instantaneous trip set at 15 times the current sensor rating and adjustable ground fault trip and delay band; make settings behind a sealable tamper-proof transparent cover; locate a trip button on the front cover of the circuit breakers to permit mechanical simulation overcurrent tripping for test purposes and to trip the breaker quickly in an emergency situation; copies of circuit breaker time-current characteristics
Fused Switches	Heavy-duty (HD) motor rated, load-break, quick-make, quick-break type meeting requirements of UL and NEMA KS 1; suitable for use with 75 degrees C wire at full NEC 75 degrees C ampacity; current-limiting fuses as specified with rejection clips
Ground Fault	Suitable for 480-volt, 3-phase, Protection four-wire, solidly grounded wye system; consisting of ground sensors encircling all phase conductors and neutral conductor where used and connected to ground relays with adjustable pickup settings and time-current characteristics indicated; circuit breaker shunt trip and relay operating from a fused 120-volt ac control source within the control center; ground fault system ITE Ground Shield, General Electric Ground Break, or equal; copies of relay time-current characteristics
Key Interlocking	Kirk key interlocking where indicated
Phase Monitoring	3-phase monitoring relay to protect Motor against low Relay voltage, voltage unbalance, and phase reversal; Furnas Class 47, or equal

INSTRUMENTS

Voltmeter	Scale indicated, switchboard class with 250-degree scale, GE AB-40, or equal, panel type, nominal 4-1/2-inch

	model with ON/OFF single-phase 3-phase phase-to-phase, phase-to-ground, OFF, seven-position selector switch
Ammeter	Scale indicated, switchboard class with 250-degree scale, GE AB-40, or equal, panel type, nominal 4-1/2-inch model with ON/OFF single-phase 3-phase OFF, four-position selector switch, C.T.'s with ratio indicated
Ground Detection Lights	Heavy-duty oiltight type with operation explanation nameplate
NAMEPLATES	Engraved with inscription as shown on the single-line diagram, laminated plastic nameplates for each motor control center and each unit, blank nameplates on spaces for future units Nameplates that are white and engraved to a black core; attach nameplates with stainless steel panhead screws
SPACE HEATERS	Thermostatically controlled space heater in the bottom of each vertical section for operation from an external 120V power source
DIAGRAMS	Schematic (elementary) and outline diagrams, equipment schedules, wireless unit connection diagrams,

2.8 ACCEPTABLE MANUFACTURERS

1. Eaton;
2. Schneider;
3. Or equal.

PART 3 -- EXECUTION

3.1 GENERAL

A. Perform work in a workmanlike manner with craftsmen skilled in the particular trade. Provide work presenting a neat and finished appearance.

3.2 INSTALLATION

A. Install equipment in strict accordance with submittal drawings and manufacturer's

recommendations. Install motor control centers in accordance with NEMA ICS 2.3 as a minimum. Secure motor control centers using approved means as per latest standards and regulations. Grout mounting channels provided with motor control into the floor or mounting pads.

B. Provide a qualified, factory-trained representative to supervise installation, final adjustment, and initial energization of this equipment. Make this representative available for as long as his services are required, but in any case for a period of 5 days minimum. At the end of installation and adjustment, provide certification signed by this representative that the equipment has been properly installed and tested, and is ready for energization.

C. Retighten to NEMA standards all current-carrying bolted connections and all support framing and panels.

D. Field adjust the trip settings of all motor starter magnetic trip only circuit breakers. Adjust as per manufacturer’s recommendations. Determine motor rated current from motor nameplate following installation. In the selection of overload relay heaters, allow for motor current reduction where power factor correction capacitors are installed on the load side of the overload heaters. Prepare a typed tabulation of motor name, motor horsepower, nameplate full load current, measured load current, heater catalog number, protective device, trip setting, and include copy in the Technical Manual. Attach to the tabulation a copy of the starter manufacturer's overload heater selection tables, including only the tables for the particular starters provided.

E. After the equipment is installed, touch up any scratches, marks, etc., incurred during shipment or installation of equipment. If required by the ENGINEER because of undue amount of scratches, repaint the entire assembly.

3.3 FIELD TESTS

A. Field tests shall be in accordance with Electrical Testing Requirements.

END OF SECTION

SECTION 16360
MUNICIPAL FACILITIES LIGHTING

PART 1 -- GENERAL

1.1 SCOPE

A. Furnish and install lighting fixtures, lamps, drivers, control cabinets, and light poles, as indicated on the Contract Drawings and specified hereinafter.

B. Sports lighting including controls shall be provided as a complete system by a single manufacturer using LEDs as a light source.

C. Comply with the General Conditions, General Requirements and the requirements of Section 16020 of this Division 16 concerning definitions, guarantees, submittals, as-builts, testing, as applicable to work of this Section.

D. The work includes providing submittals, furnishing equipment, installing, and testing complete lighting systems as specified in the Contract documents, including sports fields, security, and park pathway lighting.

E. The work includes exterior sports lighting systems for two new baseball diamonds, security and pathway lighting, as shown in the drawings.

F. Provide lighting system warranties as specified.

1.2 RELATED WORK

A. Related Sections: The following sections contain requirements that relate to this section:

1. Section 16020 “Municipal Facilities General Electrical Requirements”.

2. Section 16100 “Basic Materials and Methods”.

3. Section 16560 "Municipal Facilities Electrical Commissioning Requirements" for commissioning requirements.

4. Section 16570 "Municipal Facilities Electrical Testing Requirements" for testing requirements.

1.3 SUBMITTALS

A. Conform to applicable provisions of Section 01330 of the General Requirements and of Subsection 1.6 of Section 16020.

B. Conform to the following as applicable:

1. Complete luminaire photometric catalog data including manufacturer, model, lamp wattage, input watts, voltage, sound rating, power factor and type of LED driver, as well as levels of total harmonic distortion, candlepower distribution curves in 2 or more planes, lumen output charts, average-maximum brightness data, dimming

controls, wiring diagram, dimensions and luminaire finish. For exterior luminaires also provide cut-off characteristics, pole fastening details, and wind load data.

2. For lamps provide catalog data, voltage, color, life estimate in hours, base type, and dimming capabilities.

3. Ambient light (photocell) and motion detection data indicating switching capacity, means of adjusting the lighting pickup level and enclosure. Motion detection coverage. Control options combining ambient light, diming and motion over-ride.

4. For pole-mounted fixtures provide complete data on the pole material, finish, internal junction box, ballasts/drivers, anchoring and fixture attachment and support method. Pole and luminaire combination to be designed to withstand a 100-mph wind load without damage.

5. For sports field lighting provide electrical diagram showing total load on each pole, power and control cabling, and connection between driver panels and lighting control cabinet. Indicate size and number of conductors to each pole.

6. Provide a computer-generated photo metric study for the site to demonstrate that the proposed new lighting design meets the City of Los Angeles's lighting level requirements detailed in paragraph 2.2 of this Section. Provide lighting calculations showing average/minimum/ maximum foot candles for each space.

7. Pole Foundations: Submit pole foundation designs for all pole types and associated soil types. Designs to be stamped by a Structural Engineer registered in the State of California.

8. Substitutions for specified fixtures, etc. shall be based upon quality of specified fixture construction, light distribution, appearance, wind loading, and maintenance

.

1. 4 QUALITY ASSURANCE

A. Conform to applicable provisions of Subsection 1. 7 in Section 16020.

B. Work of this Section shall comply with applicable legal requirements and standards specified in Subsection 1.6 in Section 16020 and the following:

Reference	Description
NFPA 70	National Electrical Code (NEC)
LAEC	City of Los Angeles Electrical Code
ANSI/UL 8750	Standard for LED lighting Equipment
IESNA LM-5-04	Guide for Photometric Measurements of Area and Sports Lighting Installations.
ASHRAE/IES 90.1-1989	Standards for High Efficiency Electrical Lighting Systems.
State of California, Title 24	Exterior Lighting

C. Conform to California's 2013 Title 24 Energy Efficiency Standards, Part 6 - "Outdoor

Lighting".

D. Demonstrations:

1. Exterior lighting system operation shall be demonstrated during the hours of darkness to indicate that fixtures are properly focused, photocell and motion detection operation is correct, and that fixture switching functions as intended. Through demonstration, the CONTRACTOR shall also verify that panel schedules properly indicate the lighting outlets connected to each circuit.

2. Lighting demonstration shall occur within 2 weeks prior to project acceptance.

1.5 CLEANING PROCEDURES

A. Comply with applicable provisions of Section 01740 of the General Requirements.

B. Clean fixture lenses, diffusers, and reflectors just prior to time specified for required demonstrations **.**

C. Clean damaged finish of fixture trim, including poles and support brackets, prior to required refinishing.

D. Before installation of louvers, diffusers or lenses clean reflector surfaces and lamps of all lighting fixtures of accumulated dust, dirt, grease, plaster, paint, etc.

1. 6 WARRANTY AND MAINTENANCE

A. General Warranty: Special warranty specified in this Article shall not deprive Owner of other rights Owner may have under other provision of the Contract Documents and shall be in addition to, and run concurrent with, other warranties made by Contractor under requirements of the Contract Documents.

B. Special Warranties: Written warranty, executed by manufacturer agreeing to replace or repair defects or failures in materials or workmanship within specified warranty period.

1. Special Warranty Period for Sports Lighting systems: Twenty five years from date of substantial completion. Defects in materials, equipment or workmanship, or drop in lighting levels below those specified, occurring in the warranty period, shall initiate repairs or replacement at the Contractors/ Manufacturer's expense.

2. Special Warranty Period for Pathway/ Parking Area Lights: Manufacturers' standard warranty, but not less than two years from date of Substantial Completion.

C. Maintenance Agreement

1. Sports lighting system Manufacturer shall offer a 25-year maintenance agreement covering the entire sports lighting and control system. The maintenance agreement to guarantee light levels, lamp replacement, monitoring and communications, spill-light control and structural integrity.

a. Maintain lighting levels within ± 10% of the maintained horizontal average illuminance level for the sports field.

b. Replace lamps if one or more lamps are extinguished on a pole.

c. Repairs to be completed within seventy-two (72) hours of notification by Owner unless agreed otherwise by Owner.

2. Manufacturer shall monitor the performance of the lighting system, including on/off status, hours of usage and luminaire outage for 25 years from the date of equipment shipment. Parts and labor shall be covered such that individual luminaire outages will be repaired when the usage of any field is materially impacted. Manufacturer is responsible for removal and replacement of failed luminaires, including all parts, labor, shipping, and equipment rental associated with maintenance. Owner agrees to check fuses in the event of a luminaire outage.

PART 2 -- PRODUCTS

2.1 LIGHTING SYSTEMS GENERAL REQUIREMENTS

A. Conform to ASHRAE/IES 90.1-1989 Standards for High Efficiency Electrical Lighting Systems.

B. Lighting fixtures shall have all parts and fittings necessary for complete and proper installation.

C. Where both catalog numbers and narrative descriptions are indicated, the narrative description requirements shall take precedence and prevail.

D. All fixtures of one type shall be one manufacturer and of identical finish and appearance.

E. Fixture types shall be as indicated on the Contract Drawings. However, if the fixture type is not shown, the bid shall be based on installing fixtures specified in similar areas.

F. Fixtures in exterior locations, wash-down areas, wet or moist locations shall bear a UL label for installation in wet or moist areas or locations.

G. All exposed metal parts of exterior lighting fixtures shall be stainless steel or anodized aluminum with specified finish over. Screws and fastening shall be stainless steel.

H. All above ground wiring shall be enclosed within the poles, crossarms or control cabinets.

I. Complete units and all electrical components for LED and special fixtures shall bear the Underwriters' Laboratories, Inc., IBEW and Electrical Testing Laboratory labels.

2. 2 LIGHTING PERFORMANCE

A. Illumination requirement and control

1. Baseball fields

Description	Average Target Illumination (foot candles)	Maximum to Minimum Uniformity Ratio	Grid points	Grid Spacing
Baseball No.1 Infield	50	2:1	25	20’ x 20’
Baseball No,1 Outfield	30	2.5:1	75	20’ x 20’
Baseball No.2 Infield	50	2:1	25	20’ x 20’
Baseball No,2 Outfield	30	2.5:1	75	20’ x 20’

B. Sports fields Security Lighting

Average (foot candles) minimum	Maximum (foot candles)	Average to Minimum Ratio
0.75	5	16:1

C. Pathway Lighting

Average (foot candles) minimum	Maximum (foot candles)	Minimum (foot candles)	Max/ Min Ratio
2.0	5.5	0.1	52:1

D. Parking Area Lighting (Not Used)

Average (foot candles) minimum	Maximum (foot candles)	Minimum (foot candles)	Max/ Min Ratio
2.5	4.5	1.2	3.75:1

E. City Ordinance exterior lighting requirements: All site and building mounted lighting shall be designed such that it produces a maximum initial luminance value no greater than 0.20 horizontal and vertical foot candles at the site boundary, and no greater than 0.01 horizontal foot candles 15 feet beyond the site. No more than 5.0 percent of the total initial designed lumens shall be emitted at an angle of 90 degrees or higher from nadir (straight down)

2. 3 LED FIXTURES

A. General:

1. Fixture to be an assembly consisting of LED light source array, housing, and electronic power supply, in accordance with UL 1598, UL 8750. Supply voltage as noted on the drawings.

2. Outside fixtures to be completely sealed against moisture and listed under UL 1598, for luminaires in wet locations.

3. The fixture lens shall be clear convex tempered glass.

4. Minimum service life of luminaire of 70,000 hours.

5. Power supply shall be rated for a life expectancy equal or greater than the luminaire, be designed for dimming and incorporate surge protection device (SPD) to protect against electrical transients. Each luminaire shall be independently fused.

6. Electronic module shall have operating temperature -40 deg F to 165 deg F, or better with built in thermal overload.

7. Power factor of unit to be 0.9 or higher and induce total harmonic distortion (current and voltage) of 20% or less in the AC supply line.

8. Control: Outside fixtures to include motion detection and automatic dimming when area is not occupied. Dimming bi-level 50%, or user adjustable dimming level.

9. Cut-off Requirements: Exterior lights shall have full cut-off light distribution.

10. Warranty: 5-year minimum manufacturer's warranty unless stated otherwise.

B. Pathway Lighting, pole mount

1. Architectural style post-top 117 watts LED luminaire with die-cast aluminum housing designed for exterior pathway lighting. Impact resistant tempered glass lens.

2. Finish: Metal parts of luminaire, pole and adapters, finished with corrosion resistant durable, dark bronze, powder coat finish.

3. Pole: 20-foot, 4 inch diameter steel round pole.

4. Control: Motion detector to automatically switch lamp from a pre-set dimmed output to full brightness, for a pre-set minimum time.

5. Concrete base height: 2 feet

6. Power requirements, 277 volts single phase

7. Approved Manufacturer:

   a. Lithonia Lighting MRP LED 1 49B530/40K SR5 with motion detection and 18 foot round steel silver finish pole.

   b. Or equal.

C. Car parking lighting (Not Used)

1. Post top mounted LED luminaire with die-cast aluminum housing, and integral motion detector, designed for lighting parking lots.

2. Finish: Metal parts of luminaire, pole and adapters, finished with corrosion resistant durable, dark bronze, powder coat finish

3. Pole: 20-foot round steel pole with 2 foot concrete base.

4. Approved manufacturer:

    a. Lithonia Lighting DSX2 LED 80C 700 40K T3M MVolt with integral motion detection. 20 foot round steel silver finish pole.

    b. Or equal.

D. Sports field lighting

1. Luminaires, poles, mounting hardware and lighting control system to be supplied by the same manufacturer.

2. Luminaires: High Lumen heavy-duty weather resistant LED Flood Light luminaire with die-cast aluminum housing designed for mounting on tall poles for sports field lighting.

    a. Adjustable yoke mounting to allow field adjustment of light on sports field. Provide an aiming plan for each sports fixture.

    b. UL listed and labeled as suitable for wet locations.

3. Remote lamp driver: Each floodlight to be operated from a remote lamp driver mounted inside a weather resistant enclosure mounted on the pole.

    a. Wiring between luminaires and ballast to be pre-wired and internal to pole.

    b. Driver to provide remote luminaire dimming control.

    c. Pole disconnect, fuse per light circuit and surge protection to be provided inside the cabinet

    d. Color rendering: CRI of 57000K

    e. Electrical supply: 480 volts, 3 phase.

4. Finish: Metal parts of luminaire, pole and adapters, finished with corrosion resistant durable galvanized or sliver powder coat finish.

5. Pole mounting height as shown on the drawings. Pole structure to meet the following requirements:

    a. Hybrid steel and pre-stressed concrete multi-section pole with pre-stressed concrete base foundation designed for direct embedment.

    b. Designed to meet AASHTO requirements for wind loading, with deflection not exceeding 1.1% of the free height of the pole, under a wind loading equivalent to half of the specified maximum wind speed, including a 1.4% gust factor.

    c. Provide a 4 x 10” conduit entrance opening approximately 10” below grade, and a 3.5” x 10.5” hand-hole frame with flush cover approximately 36 inches above grade.

    d. Pole foundations: See paragraph 2.5 of this Section.

6. Mounting hardware. Heavy-gauge steel protected by a weather resistant coating. Adjustable yoke to allow field adjustment of light on sports field.

7. Approved Manufacturer: MUSCO Lighting or equal.

E. Security lighting mounted on sports field poles

1. Provide security light on each sports pole, mounted at 18 feet above grade, directed into the field. Include mounting hardware and driver boxes.

2. Luminaires: High Lumen heavy-duty weather resistant LED security light luminaire with die-cast aluminum housing designed for pole mounting.

3. Adjustable yoke mounting to allow field adjustment of light direction from each fitting.

4. UL listed and labeled as suitable for wet locations.

5. Color rendering: CRI of 57000K

6. Electrical supply: 277V single phase supply, with dimming control.

7. Approved manufacturer: CREE OSQ Series area flood.

2.4 LIGHTING CONTROLS

A. General**:** Provide an automatic, lighting control system manufactured by the sports lighting manufacturer.

B. Control system to be enclosed in a dedicated NEMA 3R cabinet containing all lighting contactors, switches, terminals and a microprocessor-based controller. The system to provide the following functionality:

1. A web based remote scheduling system allowing authorized users to control and monitor remotely by lighting zone. Control parameter options to include time of day, sun rise/ sunset times, and photocell input. Output control to include lighting On/ Off and dimming. Schedules to be stored by controller. Schedules able to be set up for a minimum of seven days in advance.

2. Astronomical time clock, with automatic daylight savings compensation, and calculation of sunrise/ sunset times.

3. Photocell input.

4. Off-On-Auto switches to allow for maintenance and manual operations of lights

5. Key over-ride, High-Medium-Low-Auto switches for light pre-set level dimming control.

6. Minimum of seven zones and twelve lighting contactors (30A/ 60A) per cabinet.

C. Photocells:

1. Provide automatic ON/OFF switching photo control device, completely self-contained in the die-cast aluminum housing, not affected by moisture, vibration, or

temperature changes; ON at dusk and OFF at dawn; time delay feature to prevent false switching; and field adjustable to control operating levels.
Provide a by-bass switch to override photocell. Photocell to be compatible with lighting control panel.

2. Approved Manufacturers: MUSCO Control-Link or equal.

2.5 FOUNDATIONS

A. Install required number and type of reinforced concrete pole bases as indicated on the Contract Drawings.

B. Contractor to prepare pole and foundation drawings for each type of pole, pole loading, and soil type, and submit to the Engineer for approval. Drawings to be stamped by a certified structural Engineer, Register in California. Drawings to show design criteria, soil type, assumptions, code standards, size of foundation, depth of embedment, reinforcing, and backfill material.

C. Typical sports pole foundations are provided in Attachment A of this Section.

PART 3 -- EXECUTION

1. 1 INSTALLATION OF LIGHTING FIXTURES (LUMINARIES)

A. General**:**

Install fixtures in a manner recommended by the fixture manufacturer and accepted by the City Engineer.

1. Furnish and install all additional supports, and other structural reinforcements to the concrete pole bases required to properly and safely mount luminaires, all acceptable to the City Engineer.

2. Be responsible for handling the luminaires, installing plumb and level, and keeping luminaires clean.

3. Where pole foundation penetrates the below ground liner in the bio-swale, seal liner to pole as indicated on the drawings.

4. After construction of total project is completed, remove all labels and other markings, wash dirty luminaires inside and out with a nonabrasive mild soap or cleaner. Clean luminaire plastic lenses with antistatic cleaners only. Touch up all painted surfaces of luminaires with high-grade exterior enamel, and poles with paint supplied by manufacturer.

B. Finished Areas:

1. Locate luminaires where shown on the Site Plan.

2. Install all luminaires straight and true.

3. Exterior fixtures requiring exposed exterior boxes shall be mounted on approved cast boxes equipped with suitable gaskets.

All adjustable lighting fixtures shall be aimed (during non-daylight hours) and set to the satisfaction of, and in the presence of, the City Engineer.

3.2 INSTALLATION OF LAMPS

A. After installation clean all lamps.

3. 3 MISCELLANEOUS

A. Provide all metal shims, spacers and/or mounting bolts necessary,

B. Louvers, diffusers or lenses shall not be installed in lighting fixtures until such time as all glazing has been completed and all construction work involving plastering, grinding, sanding, painting, etc., and final clean-up sweeping and dusting have been completed by the Contractor as noted in Subsection 1. 4 of this Section.

C. Reflector surfaces and lamps in all lighting fixtures shall be thoroughly cleaned of accumulated dust, dirt, plaster, paint, etc., before the installation of the louvers, diffusers or lenses.

D. After completion of this portion of the work, it shall be the responsibility of the Contractor to clean and/or repair any damage to the finished building caused by this work, to the complete satisfaction of the Architect at no added cost to the City.

3.4 INSTALLATION OF BALLASTS/ DRIVERS

A. Install in strict accordance with manufacturer's recommendations.

B. After the installation is completed, remove and replace any ballast or driver which are judged by the City Engineer to be excessively noisy.

3.5 LIGHTING CONTROL

A. Photocell: Install photo control as shown on Drawings.

B. Lighting Control Panel: Install as shown on the drawings and in strict compliance with manufacturer’s recommendation

C. Lighting control panel Configuration: Provide initial configuration of control panel and web interface. Configure to ENGINEERS direction. Document configuration.

D. Contractor to notify lighting Control Panel Manufacturer at least 7 days before activation of the lighting system to allow him to run diagnostics and confirm system programming. Contractor shall assist with any needed corrections Manufacturer identifies.

3.6 FIELD QUALITY CONTROL

A. Inspect each installed fixture for damage. Replace damaged fixtures and components.

B. Advance Notice: Give dates and times for field tests.

C. Provide instruments to make and record test results.

D. Provide independent 3rd party testing and verification that installed lighting systems meet specified material and performance requirements. 3rd party shall be independent from the lighting subcontractor, and perform tests including but not limited to:

1. Verify normal operation of each fixture after installation.

2. Verify motion detection and dimming control.

3. Verify actuation and termination on photocell, timer, or other control function, as applicable, and in coordination with required testing per Section 16570.

4. Perform lighting illumination field measurement and analysis to demonstrate lighting system conforms to the requirements in Section 2.2.

5. Measure spill lighting levels at property boundary to ensure light level is within requirements detailed in paragraph 2.2.B of this Section

6. Report results in writing. Discuss any discrepancies with Engineer

E. Malfunctioning Fixtures and Components: Replace or repair, then retest. Repeat procedure until units operate properly.

F. Corrosive Fixtures: Replace during warranty period.

3.7 COMMISSIONING (FOR LIGHTING CONTROL SYSTEMS)

A. Check the lighting systems start up and ensure that the all lamps are operational and fixtures are clean.

B. Check motion sensor placement and test reliability of activation/deactivation.

C. Test photocells for functionality and accuracy.

D. Check switches to ensure proper operation and circuiting.

E. Check lighting schedules to ensure they are programmed per the ENGINEER direction.

F. Test operation of circuits by changing system date and time to cause various circuits to switch modes.

G. For exterior fixtures, simulate night mode to validate function. Measure and record light level to ensure they meet the requirements and are generally provide adequate security. Check for excessive light level fluctuations or dark spots.

3.8 ATTACHMENT A – TYPICAL SPORTS POLE FOUNDATION DETAILS

END OF SECTION 16360

ATTACHMENT A – TYPICAL SPORTS POLES FOUNDATION DETAILS

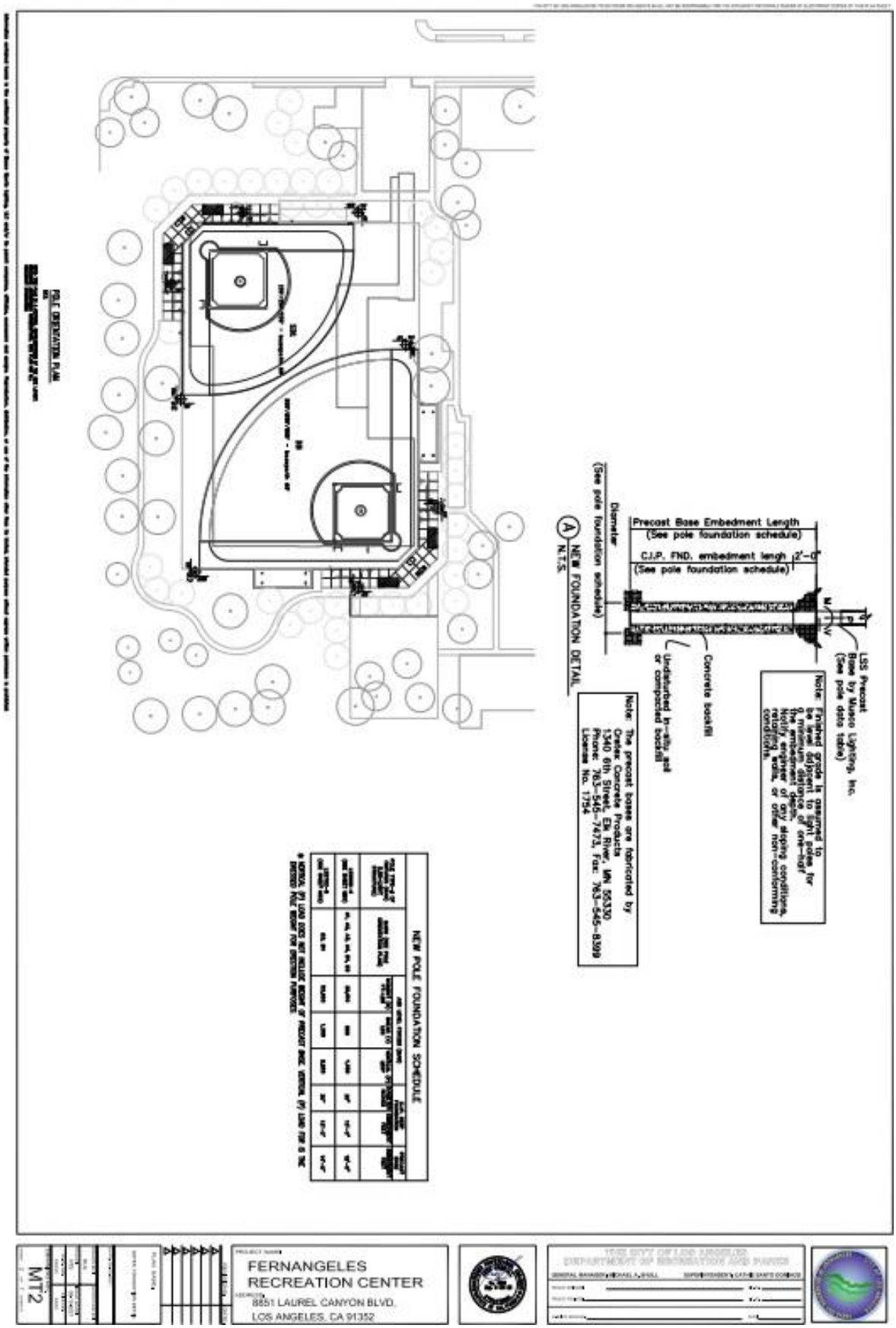

Precast Base Embedment Length
(See pole foundation schedule)
C.J.P. FND. embedment length 2'-0"
(See pole foundation schedule)
Diameter
(See pole foundation schedule)
A NEW FOUNDATION DETAIL
N.T.S.
Concrete backfill
Undisturbed in-situ soil or compacted backfill
LSS Precast Base by Musco Lighting, Inc.
(See pole data table)
Note: Finished grade is assumed to be level adjacent to light poles for a minimum distance of one-half the embedment depth. Notify engineer of any sloping conditions, retaining walls, or other non-conforming conditions.
Note: The precast bases are fabricated by Cretex Concrete Products 1340 6th Street, Elk River, MN 55330 Phone: 763-545-7473, Fax: 763-545-8399 License No. 1754
NEW POLE FOUNDATION SCHEDULE
FERNANGELES
RECREATION CENTER
8851 LAUREL CANYON BLVD.
LOS ANGELES, CA 91352
MT2

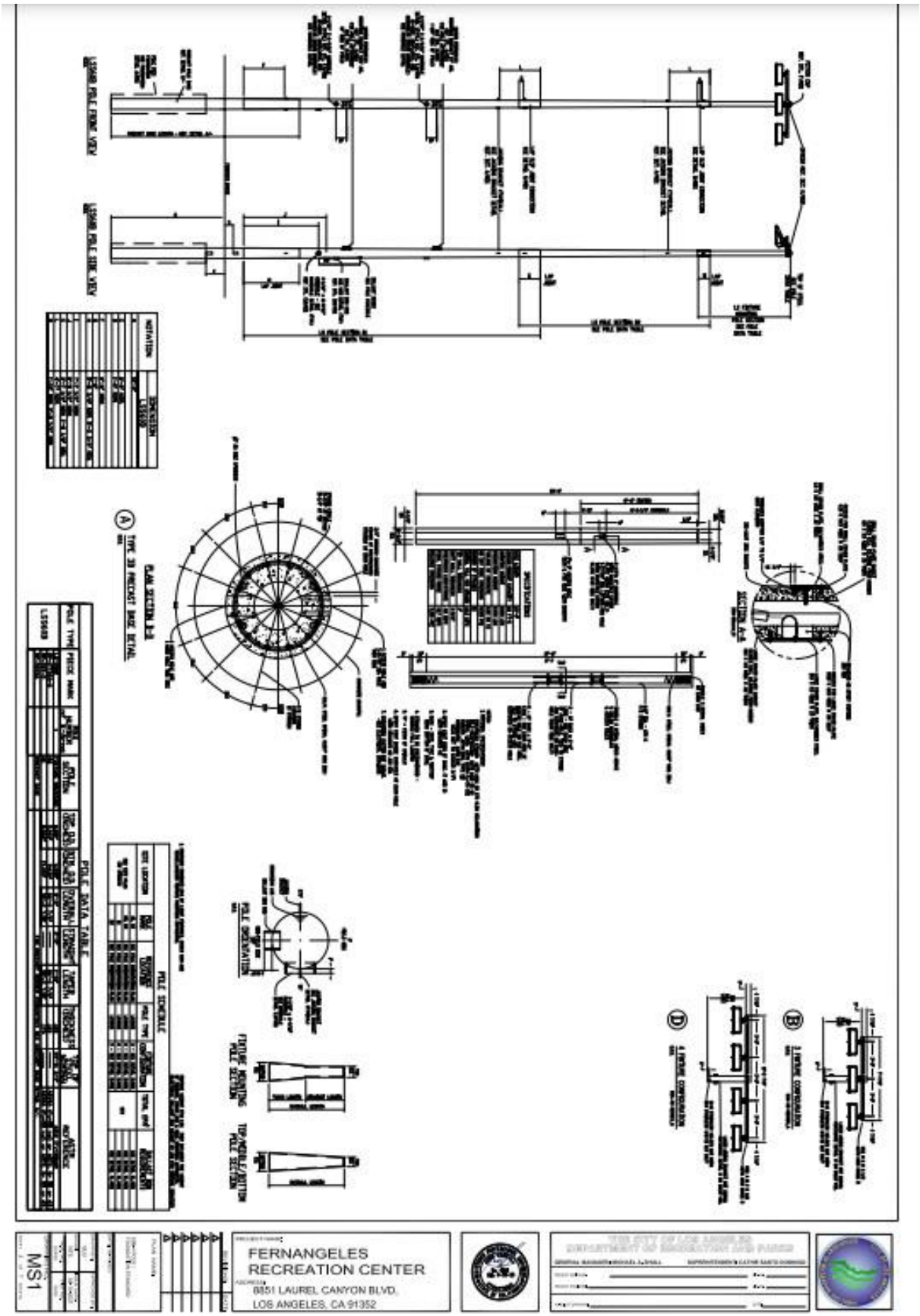
FERNANGELES
RECREATION CENTER
6951 LAUREL CANYON BLVD.
LOS ANGELES, CA 91352
MS1

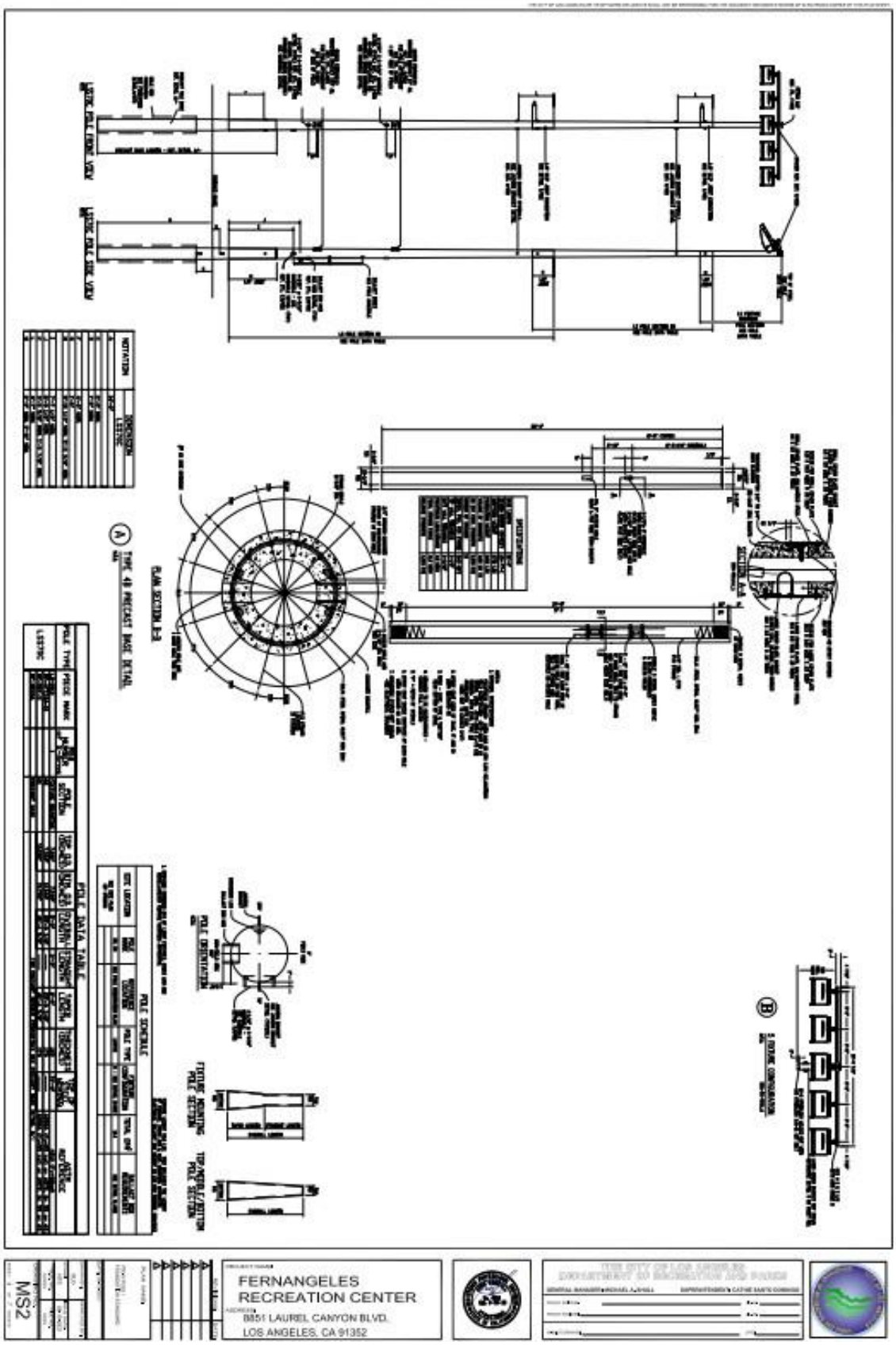
FERNANGELES
RECREATION CENTER
8951 LAUREL CANYON BLVD.
LOS ANGELES, CA 91352
MS2

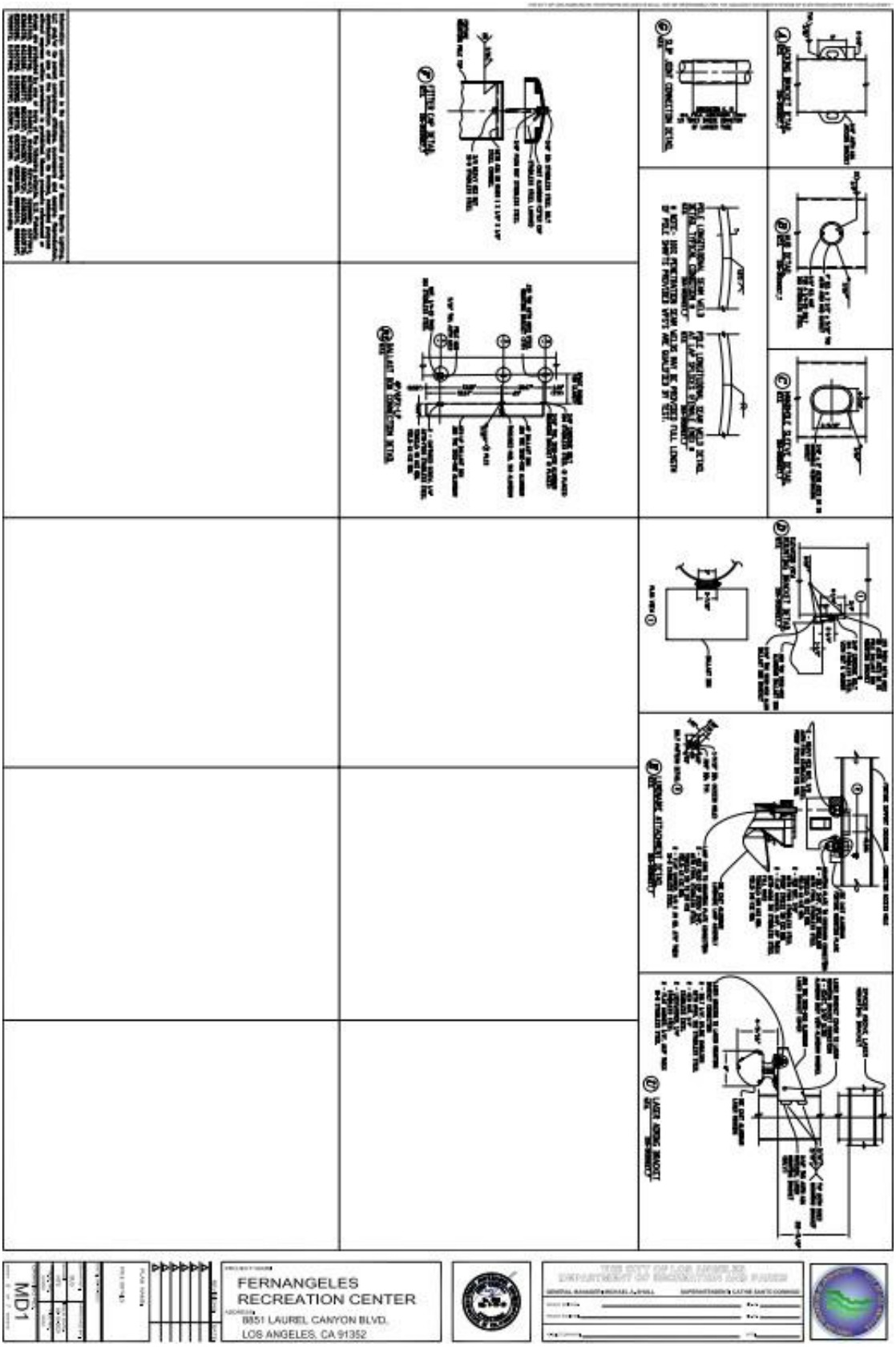
FERNANGELES
RECREATION CENTER
8851 LAUREL CANYON BLVD.
LOS ANGELES, CA 91352

MD2
FERNANGELES
RECREATION CENTER
8851 LAUREL CANYON BLVD.
LOS ANGELES, CA 91352

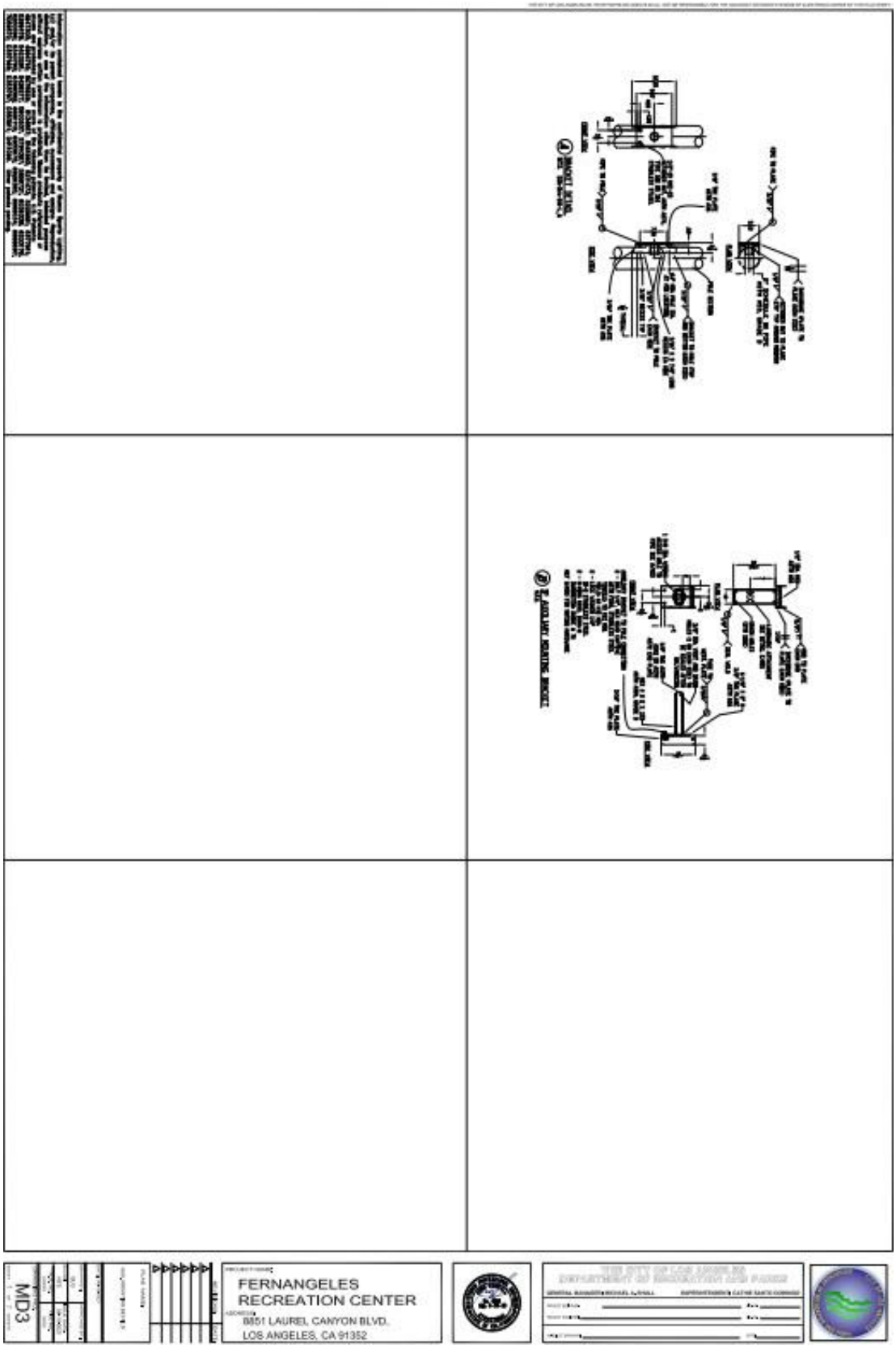
MD3
FERNANGELES
RECREATION CENTER
8951 LAUREL CANYON BLVD.
LOS ANGELES, CA 91352

SECTION 16380
MUNICIPAL FACILITIES UNINTERRUPTIBLE POWER SYSTEM

PART 1 -- GENERAL

1.1 SCOPE

A. Required**:** Furnish and install the single or three phase uninterruptible power system (U.P.S.) and all accessories indicated on the Contract Drawings and herein specified.

B. Comply with the GENERAL CONDITIONS, GENERAL REQUIREMENTS and the requirements of Section 16020 of this DIVISION 16 concerning definitions, guarantees, submittals, as-builts, clean-up, etc. as applicable to work of this Section.

1.2 RELATED WORK

A. Related Sections: The following sections contain requirements that relate to this section:

1. Section 16560 "Municipal Facilities Electrical Commissioning Requirements" for commissioning requirements.

2. Section 16570 "Municipal Facilities Electrical Testing Requirements" for testing requirements.

1.3 LEGAL REQUIREMENTS AND STANDARDS

A. Comply with applicable Codes and Standards noted in Subsection 1.5 of Section 16020 and the following additional commercial standards:

1.	ANSI/IEEE 241	Electric Power Systems in Commercial Buildings, Recommended Practice for.
2.	ANSI/NEMA 250	Enclosures for Electrical Equipment.
3.	EIA	Electronic Industries Association Standards.
4.	IEEE-587	Standards for Surge Suppression.
5.	NEC	National Electrical Code; Article 700 Emergency Systems.
6.	NEMA PB2	Panelboard.
7.	UL 1012	Underwriter's Laboratory Listing.
8.	UL 1778	UL Standard for Safety – Uninterruptible Power Supply Equipment.
9.	IEEE 944	Recommended Practice for the Application and Testing of Uninterruptible Power Supply for power generating stations.

10.	NEMA PE1	Uninterruptible Power Systems.
11.	California Code of Regulations Commercial Standard:	Title 8, Industrial Relations Subchapter 5, Electrical Safety Orders.

1.4 SUBMITTALS

A. General**:** Conform to applicable provisions of Subsection 1. 6G in Section 16020 - GENERAL ELECTRICAL REQUIREMENTS.

B. Shop Drawings and Catalogue Data**:** Required to provide sufficient information to indicate scope and quality of the UPS System installation as follows:

1. Block diagram showing system relationships of major components and quantities and interconnecting cable requirements.

2. Control console and panel arrangements, equipment outlet devices, and special mounting details.

3. Wiring diagrams showing terminal identification for field-installed wiring.

4. One-line diagram showing input, output, DC, and bypass circuit breakers and their sizes

5. Operating and services manuals, furnish 6 copies for the system. The manuals shall be bound in flexible binders and all data contained therein shall be printed or typewritten. Each manual shall include all instruction necessary for proper operation and receiving of the system, and shall include a complete block diagram of the system, a complete circuit diagnosis of the system, and a wiring designation schedule for each amplifier as well as other major components, and a replacement parts list.

6. Outline, plan, and elevation drawings, showing dimensions. Mechanical details shall include anchor bolt size and location requirements and net operating and shipping weights for the equipment.

C. The CONTRACTOR shall obtain and submit to the Engineer the test reports for All equipment and material subject to factory testing.

D. The CONTRACTOR shall obtain from the manufacturer all pass codes necessary To perform diagnostic testing and troubleshooting of the system. These pass codes shall be submitted to the ENGINEER and included in the operations and Maintenance manuals.

E. Test Reports: Contractor to provide to the City a bound report of all inspections and tests required in Section 3.

1.5 QUALITY ASSURANCE

A. General**:** Conform to applicable provisions noted in Subsection 1.7 of Section 16020 -

GENERAL ELECTRICAL REQUIREMENTS.

B. Uninterruptible power system components shall be manufactured by firms that are regularly engaged in the production of UPS system including auxiliary equipment similar to that required for this project and that have been in satisfactory service for at least 10 years.

C. Operation of the uninterruptible power system shall be demonstrated to the City Engineer to prove that under normal conditions UPS will provide power to the designated load without interruptions of functions and loss of stored information.

D. The UPS system, when specified as a three-phase unit, shall be a three-phase system in one unit. Use of three single-phase units to comprise a three-phase system is not acceptable.

E. Fabrication and assembly: Unless otherwise specified, the UPS shall be shop assembled in a single enclosure and shall utilize interchangeable plug-in printed circuit boards and power conversion components wherever possible. Shop assembly shall be performed by the UPS manufacturer; systems fabricated or assembled in whole or in part by parties other than the UPS manufacturer will not be acceptable.

F. Printed circuit boards: All printed circuit board components shall be sprayed on both sides with corrosion inhabitant compound, Konform C416, or equal.

G. During the warranty period, the CONTRACTOR shall respond to trouble calls with a competent repair person at the project site within 24 hours; the CONTRACTOR shall also maintain a full inventory of replacement parts so that all routine repairs can be completed within 24 hours. The manufacturer shall have a local representative to provide technical services.

1.6 WARRANTY

A. General Warranty: Special project warranty specified in this Article shall not deprive the Owner of other rights the Owner may have under other provisions of the Contract Documents and shall be in addition to, and run concurrent with, other warranties made by the Contractor under requirements of the Contract Documents.

B. Special Project Warranty:

1. All materials and equipment furnished and installed here under shall be new and free from all defects.

2. The Contractor shall guarantee the uninterruptible power system (UPS) including equipment and labor for a period of two (2) years from the date of final acceptance.

3. Should any trouble develop within two (2) years from date of final acceptance of the work, due to faulty material and/or workmanship, the trouble shall be corrected by the Contractor without expense to the City.

1.7 MAINTENANCE

A. Required**:** The Contractor shall respond to trouble calls with a competent repair person at the project site within 24 hours; Contractor shall also maintain a full inventory of replacement parts so that all routine repairs can be completed within 24 hours.

PART 2 -- PRODUCTS

2.1 THE SYSTEM

A. General Description**:** This Specification describes a continuous duty, single-phase on-line, solid-state uninterruptible power system (UPS). The UPS shall operate in conjunction with the plant electrical system to provide power conditioning, back-up, and distribution for electronic equipment loads.

B. The UPS shall consist of the following major equipment:

1. Inverter/charger.

2. Static bypass switch.

3. Enclosed, sealed, maintenance-free battery. Battery cabinets for longer protection times.

4. Input, battery, and output breakers.

5. Microprocessor controlled logic and control panel.

6. Six-pole output distribution panelboard.

7. System Metering.

8. Control Panel Display.

2.2 MODES OF OPERATION

A. Modes of This On-Line Fully Automatic System**:**

1. Normal: The critical load is continuously controlled by the inverter/charger. It derives power as needed from the commercial ac source and supplies filtered and regulated ac power to the critical load. In addition, simultaneous float-charging of the battery occurs.

2. Emergency: Upon failure of the commercial ac power, the critical load continues to be supplied by the inverter, which without any switching obtains its power from the storage battery. There is no interruption to the critical load upon failure or restoration of the commercial ac source.

3. Recharge: Upon restoration of the commercial ac source, the inverter/charger recharges the battery. This is an automatic function and causes no interruption to the critical load.

4. Bypass Mode: If the UPS must be taken out of service for overload, load fault, or internal failures, the bypass switch automatically transfers the load to the commercial ac power. Return from bypass mode to normal mode of operation is automatic, except for overload

trip which requires manual reset. Transfer to bypass mode can also be initiated manually by operating a key controlled ON/OFF switch on the control panel.

5. Maintenance Mode: If the UPS must be taken out of service for maintenance or repair, the external manual bypass switch must be operated to transfer the load to the alternate source. This transfer shall occur without interruption.

6. Downgrade: If the batteries alone are taken out of service, they shall be disconnected from the by circuit breakers. The UPS shall continue to function and meet all of the performance criteria specified herein, except for the reserve time capability.

2.3 UPS PERFORMANCE CHARACTERISTICS

A. Power Ratings**:** 3.0 kVA or as calculated to meet specified backup power requirements for load power factor range of 0.85 lagging to 0.9 leading.

B. Input:

1. Nominal Input Voltage and Frequency: 60 Hz models: 120/240 vac, single-phase

2. Operating Input Voltage Range: +13 percent to -20 percent of nominal without battery discharge.

3. Input Power Factor: 0.9 minimum at full load and nominal input voltage.

4. Input Current THD: 10 percent typical at full load (linear or non-linear).

5. Input Surge Suppression: Per IEEE-587 Standards.

C. Output:

1. Nominal Output Voltage: Same as input voltage.

2. Output Voltage Regulation: Within $\pm$2 percent from nominal output voltage for all operating conditions.

3. Manual Output Voltage Adjustment: Within $\pm$5 percent from nominal.

4. Transient Voltage Response: Within ±8 percent from nominal peak voltage for a 100 percent load step.

5. Transient Voltage Recovery: 100 msec to within ±2 percent of nominal.

6. Frequency Regulation: ±0.1 Hz.

7. Output Voltage Harmonic Distortion: 3 percent THD for 100 percent linear load, [5] [10] percent THD for 100 percent non-linear loads at nominal input voltage.

8. Output fully isolated from input and battery.

9. Common mode noise attenuation (without static switch): 55 dB up to 500 kHz.

D. Static Bypass: A static bypass switch includes transfer control logic which automatically transfers the load to bypass upon the following conditions:

1. Output overvoltage or undervoltage.

2. Overload condition of a duration longer than 10 minutes.

3. Overtemperature.

4. Inverter failure.

Return to UPS mode of operation upon restoration of normal operating conditions shall be automatic except for overload or inverter failure which shall require a manual restart. Electro-mechanical transfers are break before make.

E. Microprocessor Controlled Logic: Fully automatic operation of the UPS shall be provided through the use of microprocessor controlled logic. All operating and protection parameters shall be firmware controlled, to eliminate the need for manual adjustments to compensate for component tolerances. The logic includes system and battery test capability to facilitate maintenance and troubleshooting. Start-up, transfers, and battery recharge shall be all automatic functions.

F. Control Panel**:** The UPS shall be equipped with a control panel that provides the following metering, monitoring, and control functions:

ac input voltage	(LINE VOLT)
ac input current	(LINE AMP)
ac input frequency	(LINE HZ)
dc battery voltage	(BATT VOLT)
dc battery current	(BATT AMP)
ac inverter voltage	(LOAD VOLT)
ac inverter current	(LOAD AMP)
ac inverter frequency	(LOAD HZ)

The metering display shall automatically blank after five minutes.

1. Alarm Monitoring: The following alarm indicators shall be provided on the control panel display:

a. System Normal (Green): Line is supplying power to the UPS. The UPS is controlling the load voltage, and charging the battery.

b. Alarm (Red): This indicator flashes whenever an alarm condition exists.

c. Battery undervoltage (Yellow): The battery voltage has fallen below 128 v dc. Alarm condition ceases when the battery voltage reaches 132 v dc.

d. Battery discharge (Yellow): The battery is supplying power to the load.

e. Output Overload (Red): The output current exceeds the maximum rating of the system. If the output current exceeds 105 percent of system rating for 10 minutes, the system will respond by transferring to bypass.

f. Sync Loss (Red): The utility line frequency has exceeded safe operating tolerances (±1 Hz or ±3 Hz, switch selectable) and/or the UPS is not

synchronized within 5 degrees phase angle of the desired operating point.

g. AC Input Failure (Red): The line voltage is not within normal operating range for the equipment (+13 percent to -20 percent of nominal). The load is being powered by the battery, if not in bypass mode of operation.

h. Over Temp (Red): The internal temperature of the UPS cabinet is above 65 degrees C. UPS will transfer to bypass.

i. Shutdown Imminent (Red): Inverter shutdown is imminent (triggered by the battery discharging below 110 v dc or output overload over eight minutes). The load will be dropped when the battery falls below 95 v dc or the overload exceeds 105 percent for 10 minutes unless the bypass reacts.

j. On Bypass (Red): The load is receiving power which is bypassing the power protection circuitry of the UPS.

k. Inverter not ready (Red): The inverter is not ready to support the critical load.

2. Controls: The following control functions shall be provided on the control panel:

ON/OFF: Key operated switch which activates and deactivates UPS operation.

Alarm Off: Pushbutton which silences the audible alarm. The alarm will sound again at the reoccurrence of an alarm condition.

Test: Pushbutton which initiates a system test routine by simulating a utility power outage. The critical load will be supplied by the battery. When the pushbutton is released, the control circuitry resynchronizes the inverter to the input line and resumes battery charging.

3. Other controls located behind the front door shall include:

Audible Alarm Volume Control: Loud, soft and off.

Manual Restart: Pushbutton used to restart UPS after an overload or inverter failure trip.

G. Alarm Contact: A dry type summary alarm contact shall be provided for remote indication of alarm conditions.

H. Built-In Distribution: A 6-pole distribution panelboard shall be provided on the output of the system.

I. Environmental Conditions:

1. Efficiency at full, unity power factor load and nominal input voltage: 90 percent for a 3.0 kVA model, or 85 percent for a 1.5 kVA model.

2. Elevation: 5,000 feet (1,500 m) without derating.

3. Acoustical Noise: 50 dB at one meter. (Measured at +25 degrees C.)

4. EMI Suppression: Electromagnetic effects are minimized to ensure that computer systems or other similar electronic systems are neither adversely affecting to, nor are

adversely affected by, the UPS. The UPS is certified to meet the requirements of Class A, Subpart J of Part 15 of the FCC Rules and Regulations.

5. Electrostatic Discharge (Commonly Encountered in Carpeted Offices) Immunity: Withstands up to ±25 kV with no disturbance or adverse effect to the load.

6. Ambient Temperature: 40 degrees C.

J. Battery Pack: The battery consists of battery tray(s) either fully enclosed within the UPS cabinet or enclosed in metal cabinet(s) which match the UPS module in appearance. Individual battery trays are modular and individually fused.

1. Battery Type: a sealed, maintenance-free, high-rate
type battery shall be used as a stored energy source for the UPS. The battery shall be sized to
support the inverter at rated load or the kilowatt load specified for the protection time specified 60 min. The battery shall consist of one or more banks of cells as required, and be a common source for each inverter.

2. Expected Life: 5 years or 200 full discharge cycles at full load.

3. Minimum Final Discharge Voltage: 1.66 volts per cell.

4. Nominal Float Voltage: 2.25 volts per cell.

5. Battery Circuit Breaker: A molded case breaker is provided for battery short circuit protection and as a means of manual disconnection for battery maintenance.

2.4 FUNCTIONAL DESCRIPTION

A. Inverter/Charger**:** The inverter/charger shall employ Pulse Width Modulation (PWM) technology utilizing transistor power blocks as switching elements. The inverter shall be capable of providing the specified quality output power while operating from the ac utility or dc source within the specified operating range. In addition, the inverter shall simultaneously float charge the battery.

B. Electrical Protection:

1. Input protection shall be provided by a thermal-magnetic molded case circuit breaker and transient suppression circuitry.

2. Battery protection shall be provided by individual fusing of each battery tray and a thermal-magnetic molded case circuit breaker.

3. Output protection shall be provided by thermal-magnetic circuit breaker(s), fuses in the inverter circuit, and current limit circuitry.

2.5 ENCLOSURES

A. The UPS shall be housed in a free standing, double dead front (safety shields behind front door) enclosure equipped with casters and leveling feet. Enclosures shall be designed for office or computer room applications. If system consists of more than one cabinet, the cabinets shall be shipped with joining hardware to be bolted together at time of installation.

B. Ventilation: Electronics cabinets shall be designed for natural conversion cooling aided by a thermostatically controlled fan. Air inlets shall be in the lower front and rear; air outlets shall be in the upper rear. Battery cabinets shall be convection cooled.

C. Cable Entry: Units equipped with input cord and plug and output receptacles shall not require any installation. Hard wired systems shall provide for conduit entry through knockouts located in the rear of the unit. Connection between UPS and battery cabinets shall be provided and shall consist of cables and power plugs.

D. Front Access: Major subassemblies shall be modular and shall be replaceable from the front of the unit.

2.6 WARRANTY:

A. The system warranty shall be no less than 12 months after initial startup, and must include all costs including repair, parts, labor, travel and living expenses for the manufacturer's service personnel, within the United States. The manufacturer shall guarantee, in writing, the stated system efficiency.

2.7 DOCUMENTATION AND TRAINING.

A. The UPS shall be supplied with sufficient documentation, including a concise operation and maintenance manual, also including proprietary troubleshooting information, to allow training personnel to troubleshoot and service the UPS. The UPS vendor shall make available a maintenance training school for customer personnel.

B. Operating and Maintenance Manual: The CONTRACTOR shall furnish 6 copies of the operating and maintenance manuals. The manuals shall possess sufficient detail and clarity to enable the owner's technicians to understand and operate the system equipment, and to identify replaceable parts.

PART 3 -- EXECUTION

3.1 GENERAL

A. The uninterruptible power system shall be installed as shown, shall conform with Section 16010, Wastewater Facilities General Electrical Requirements and in accordance with the equipment manufacturer's installation instructions.

B. Detailed Requirements:

1. The Contractor shall receive, store, and assemble all sections of the UPS to form complete units. The Contractor shall make all internal wiring interconnections as required for complete assembly of each UPS. Where wiring connectors are not supplied by the manufacturer, the Contractor shall furnish the connectors required to complete internal wiring terminations.

2. The Contractor shall take all necessary precautions to eliminate moisture and foreign material from the equipment at all times during storage and installation. Special care shall be taken to prevent corrosion of and damage to the UPS.

3. Each UPS shall be set level and plumb on its floor channels furnished, installed, and

grouted in by the Contractor as shown. The Contractor shall furnish all shims necessary to accomplish these requirements.

3.2 INSTALLATION

A. The UPS system shall be set in place, wired and connected in accordance with the approved shop drawings and manufacturer's instructions.

B. Equipment shall be adequately anchored and braced per details on structural contract drawings to withstand the seismic forces at the location where installed.

3.3 ACCEPTANCE INSPECTION AND TESTS

A. Installation, adjustment and testing of the equipment shall be supervised by a manufacturer's representative.

B. All tests shall be witnessed by the ENGINEER.

C. Field Tests: As a minimum, the startup and field test procedures shall include the following:

1. Compare equipment nameplate data with specifications and approved shop drawings.

2. Ensure that shipping members have been removed.

3. Inspect physical, electrical, and mechanical condition.

4. Clean the UPS.

5. Attach a phase rotation meter to the UPS input, output and bypass buses, and observe proper phase sequences.
6. Torque test bus and battery connections at shipping splits.

7. Check each electrical bus for proper phasing and identification.

8. Check and test selector switches and meters for proper operation.

9. Check doors for proper alignment and operation.

10. Check and test each protective device for proper mechanical and electrical operation.

11. Verify protective device overcurrent trip settings against approved coordination study.

12. Verify the correct operation of all sensing devices, alarms, and indicating devices.

13. Perform manufacturer’s onsite field test procedures.

14. Demonstrate to the ENGINEER that the interlocks have been tested and agree with the interlocking scheme.

D. Load Test: The installed system shall be load tested for a continuous 24 hour period by means of resistive load banks, provided by equipment manufacturer. The system shall be continuously tested at 1/2 load for 8 hours, 3/4 load for 8 hours and full load for 8 hours. Instrument readings shall be recorded every half hour for the following:

1. Input voltage and current (all three phases, for each module).

2. Input and output frequency.

3. Battery voltage for each module.

4. Output voltage and current (all three phases, for each module).

5. Output kilowatts for each module.

6. Output voltage and current (all three phases).

7. Output kilowatts.

E. Full Load Burn In Test :

1. The installed system shall undergo an additional full load burn-in period of 24 continuous hours. If a failure occurs during the burn-in period, the tests shall be repeated. Instrument readings shall be recorded every half hour as above. During the burn-in period, the following tests shall be performed:

    a. With the UPS carrying maximum continuous design load and supplied from the normal source, switch 100 percent load on and off a minimum of five times within the burn-in period.
    b. With the UPS carrying maximum continuous design load and supplied from the emergency source, repeat the switching operations described. Also, verify that the UPS module rectifier charger unit(s) go into the second-step current limit mode.
    c. With the UPS carrying maximum continuous design load and operating on battery power, repeat the switching operations described above.
    d. Continue operation on battery power for 1 minute, and then restore normal power.

F. Battery Discharge Test:

1. With the battery fully charged, the system shall undergo a complete battery discharge test to full depletion and a recharge to nominal conditions. Instrument readings shall be recorded every minute during discharge for the following:

    a. Battery voltage and current for each module.
    b. Output voltage and current (all three phases) for each module.
    c. Output kilowatts for each module.
    d. Output voltage and current (all three phases - system output).
    e. Output kilowatts (system output).
    f. Output frequency.

3.4 POSTING FRAMED DATA AND INSTRUCTIONS

Wiring and control diagram instructions and data shall be framed and posted under acrylic glass in a location adjacent to the UPS system as directed by the ENGINEER. Condensed operating instructions, prepared in typed form, shall be framed as specified above and posted beside the diagrams. The framed instructions shall be posted before acceptance testing of the system.

3.5 FOLLOW-UP VERIFICATION

Upon completion of acceptance checks, settings, and tests, the Contractor shall show by demonstration in service that the central uninterruptible power supply is in good operating condition and properly performing the intended function.

3.6 TRAINING OF CITY PERSONNEL

A field training course shall be provided by a certified factory-trained technician for designated City personnel. Training shall be provided for a total period of 8 hours of normal working time and shall start after the system is functionally complete but prior to final acceptance test. Field training shall cover the items contained in the operating and maintenance manuals.

END OF SECTION

SECTION 16490
ELECTRIC MOTORS

PART 1 -- GENERAL

1.1 THE REQUIREMENT

A. General: The CONTRACTOR shall furnish and install electric motors, accessories, and appurtenances as specified herein and in conformance with the individual specifications of driven equipment, to provide a complete and operable installation, all in accordance with the requirements of the Contract Documents.

1.2 RELATED WORK SPECIFIED ELSEWHERE

A. The work of the following Sections and Divisions applies to the work of this Section. Other Sections of the Specifications, not referenced below, shall also apply to the extent required for proper performance of this work.

1. Section 16020 Municipal Facilities General Electrical Requirements.

2. Division 16 as applicable, Electrical.

3. Division 11 as applicable, Equipment.

1.3 REFERENCE SPECIFICATIONS, CODES, AND STANDARDS

A. All work specified herein shall conform to or exceed the applicable requirements of the referenced portions of the following publications to the extent that the provisions thereof are not in conflict with other provisions of these specifications.

1. LAEC City of Los Angeles Electrical Code, latest adopted edition.

2. Commercial Standards

NEMA MG 1	Motors and Generators
NEMA MG 2	Safety Standard for Construction and Guide for Selection, Installation and Use of Electric Motors and Generators
NEMA MG 10	Energy Management Guide for Selection and Use of Polyphase Motors
I EEE 43	Recommended Practice for Testing Insulation Resistance of Rotating Machinery
IEEE 85	Standard Test Procedure for Airborne Sound Measurement on Rotating Electric Machinery
I EEE 112	Standard Test Procedure for Polyphase Induction Motors and Generators.

I EEE 113 Guide on Test Procedures for DC Machines

I EEE 115 Test Procedure for Synchronous Machines

1.4 CONTRACTOR SUBMITTALS

A. Submittals shall be made in accordance with the requirements of Section 16020 Municipal Facilities General Electrical Requirements.

B. Complete motor data shall be submitted with the driven machinery shop drawings. Motor data shall include:

1. Machine name and specification number of driven machine.

2. Motor manufacturer.

3. Motor type or model and dimension drawing.

4. Nominal horsepower.

5. NEMA design.

6. Frame size.

7. Enclosure.

8. Winding insulation class and treatment.

9. Rated ambient temperature.

10. Service factor.

11. Voltage, phase, and frequency rating.

12. Full load current at rated horsepower for application voltage.

13. Starting code letter, or locked rotor kVA, or current.

14. Special winding configuration such as part-winding, star-delta. Include winding diagram.

15. Rated full load speed.

16. Power Factor at full load.

17. Noise certification and data sheets.

18. Replica of motor nameplate.

19. Bearing types and catalog numbers.

C. If water cooling is required for motor thrust bearings, the shop drawing submittals shall indicate this requirement.

D. The following submittals and specific information shall be provided.

1. General Description:

a. Motor dimensional drawings. Net motor weight shall be noted on the dimensional drawings. Shipping weight shall also be noted if motors are to be shipped separately from the driven equipment.

b. Complete motor rating and enclosure type

c. Lists of special characteristics and features being provided as specified

d. Bearing life

e. Type of bearing lubrication

f. Statement that carbon brushes are being provided that are suitable for the low speed, continuous operation specified

2. Motor Characteristics:

a. Guaranteed minimum efficiency at rated load at rated voltage.

b. Guaranteed minimum power factor at rated load at rated voltage.

c. Expected efficiency at 1/2, 3/4, and full load at rated voltage.

d. Expected power factor at 1/2, 3/4, and full load at rated voltage.

e. Motor no-load current at rated voltage.

f. Full load current at rated voltage.

g. Full load current at 110 percent voltage.

h. Starting current at rated voltage.

i. Full load speed.

j. Certified copy of test report for identical motor tested in accordance with NEMA MG 1-12.53a and IEEE Standard 112, Test Method B, showing full load efficiency not less than specified value. Motors not as specified will be rejected.

k. Recommended maximum kVAR of power factor correction capacitors when capacitors are switched with motor.

l. Time in seconds motor can be subjected to locked rotor current at rated voltage without damage to motor with (1) motor initially at rated ambient temperature, and (2) with motor initially at rated temperature rise.

m. Speed torque curves

3. Motor Tests and Test Reports:

a. Certified copies of test reports on actual motors being provided.

b. Short commercial tests, including running light current at rated voltage, high potential, and locked rotor current.

1.5 QUALITY ASSURANCE

A. Quality assurance shall be in accordance with all applicable requirements of Section 16010 Wastewater Facilities General Electrical Requirements.

B. Adjustable frequency driven motors shall be tested as an assembly with the drive and the driven equipment prior to delivery to the site.

1.6 SERVICES OF MANUFACTURER'S REPRESENTATIVE

A. Where motors are part of packaged equipment such as Bridge Crane and Air-Conditioning Unit, a qualified manufacturer's representative shall supervise the unpacking, installation and field testing.

PART 2 -- PRODUCTS

2.1 MATERIALS

A. Materials and equipment shall be standard products of established manufacturers who have produced continuously the type of equipment specified. All equipment and material shall be new and of high quality insuring long life and reliable operation.

2.2 SERVICE CONDITIONS

A. Motors shall be designed and manufactured for continuous severe duty service.

2.3 RATING AND APPLICATION

A. Unless indicated otherwise in Divisions 11, 13, 14 and 15 in which the design equipment is specified or on the motor data sheets, motor enclosures shall be of the following type(s) approved for its intended purpose:

1. Motors installed indoors and outdoors shall be totally enclosed fan cooled (TEFC) with a service factor of 1.15.

2. Motors to be installed in classified areas shall conform to the requirements of NEC Article 500.

B. Motors shall be rated in accordance with the following, unless otherwise specified.

1. Motors below 1/2 hp shall be rated 115 volts, single phase, 60 Hertz and shall be of the capacitor-start, induction-run type.

2. Motors 1/2 hp through 200 hp inclusive shall be rated 460 volts, three phase, 60 Hertz.

3. Motors 250 hp and above shall be rated three phase, 60 Hertz and voltage as specified.

C. Motor mechanical design shall be in accordance with this Specification and the detailed requirements indicated on the individual motor data sheet.

D. The design and construction of all motors shall be coordinated with the driven equipment requirements.

E. Motors shall be designed for full-voltage starting and rated for continuous operation as shown on the Contract Drawings.

F. Motors shall operate successfully under running conditions at rated load at plus or minus 10 percent of rated voltage or plus or minus 5 percent of rated frequency or a combination of the two.

G. In sizing motors, the horsepower rating of the motor, as stamped on the nameplate, shall not be exceeded during any operating conditions of the driven equipment.

H. Starting current at full voltage shall not exceed 650 percent of the motor full load current for all integral horsepower alternating current motors.

I. All motors shall have a safe stall (locked rotor) time equal to or greater than the maximum accelerating time under the worst voltage conditions specified.

J. Motor fans shall be suitable for rotation in either direction. They shall be nonsparking, corrosion resistant material, accurately balanced before assembly on the motor.

K. All motors shall be NEMA Design "B" unless otherwise specified on the motor data sheet, or required by the application.

L. Totally enclosed motors shall be "Severe Duty Chemical Service" type including shaft seals, internal surfaces coated with corrosion resistant paint or epoxy varnish, external surfaces coated with alkyd paint or epoxy enamel.

M. All motors shall be "high-efficiency" design, capable of operating at a higher normal efficiency than the standard industry design.

1. Motors built in NEMA Frames 143T through 445T shall have the guaranteed efficiency stamped on the nameplate. The basis for motor efficiency evaluation shall be IEEE test procedure 112, Method B, using accuracy improvement by segregated loss determination including stray load loss measurements.

2. Motors built in frames larger than 445T shall have the guaranteed efficiency stamped on the nameplate. The test method used in determining efficiency (e.g. Method B-Dynamometer, Method E-Input or Method F-Equivalent Circuit) shall be designated by the CONTRACTOR.

2.4 TERMINAL BOXES

A. Terminal boxes of the split type shall be furnished for each motor unless the base or housing of the motor is of a design which incorporates provisions for incoming cables.

B. Terminal boxes for medium-voltage motors shall have sufficient interior space to permit stress cones to be formed on the incoming cables and to permit the cable shields to be properly terminated and grounded. In addition, boxes shall be sized to contain surge protection equipment.

C. Separate terminal boxes shall be furnished for each accessory device, such as space heaters, temperature detectors, and other items.

D. All boxes shall be heavy duty class, weather tight and thoroughly coated internally and externally with corrosion-resistant paint.

2.5 INSULATION

A. The insulation system shall be Class F with temperature rise (based on maximum ambient temperature of 40 degrees C) of 80 degrees C measured by the resistance method.

B. Motors constructed in NEMA Frame 364 and larger, except totally enclosed motor, shall be vacuum pressure impregnated with 100 percent solids epoxy resins. The completed insulation shall have

a minimum resistance of 10 mega-ohms after 168 hours of testing in a humidity chamber maintained at 100 percent relative humidity and 40 degrees C ambient. In addition, motors with form wound coils shall also meet NEMA MG1-20.48 Qualification Test.

C. Totally enclosed motors shall be dipped and baked in epoxy resin. The completed insulation shall have a minimum resistance of 1.5 mega-ohms after testing as in 2.5B above.

2.6 BEARINGS AND LUBRICATION - HORIZONTAL MOTORS

A. All horizontal motors rated 200 hp and below shall have anti-friction bearings, selected to provide an L10 life of 100,000 hours for direct connected motors and 17,500 hours for belt or chain drive motors when belted or chain driven in accordance with the information contained on the data sheets. Further, bearings shall be re-greaseable while running via installed grease fittings.

B. Bearings on horizontal motors rated 250 hp and larger shall be anti-friction or sleeve-type as indicated on the individual Motor Data sheet(s). Bearings shall be constructed and provided with seals so that dirt, moisture, or lubricant leakage around seals will not enter the motor.

C. Motors which have split capsule type sleeve bearing and split bearing brackets shall be designed to permit bearing replacement without removing the bottom bearing bracket. Reservoirs shall be provided with drains, tapped fill openings and separate level gage glasses. Oil throwers and catchers and close running shaft seals shall be designed to prevent oil escape from the bearings and creepage along the shaft. Vents for equalizing bearing oil pressure shall be provided with screens and caps to prevent the entrance of rodents and the like.

D. Motors with sleeve bearings shall have a minimum motor rotor end float and a maximum coupling end float in accordance with NEMA MG1.

E. The requirement for bearing temperature protection will be specified on the individual motor data sheets. When specified, protection shall be resistance type bearing temperature detectors 120 ohms at 0 degrees C tip sensitive with leads brought out to the head of the device where suitable connection can be made. The detector holder and head assembly shall be suitable for the area classification in which the motors will be installed. The detectors shall sense the temperature at the outer shell of sleeve type bearings.

F. Motors shall be greased type and lubricated with Chevron SRI grease NLGI-2 or equal.

2.7 BEARINGS AND LUBRICATION - VERTICAL MOTORS

A. Vertical motors shall be solid shaft or hollow shaft and bearings shall be anti-friction type grease.

B. Motors for "Process" or "In-Line" service shall be "In-Line, Solid Shaft" type construction with a clamped and locked bearing arrangement. Mounting and shaft extension dimensions and tolerances shall be in accordance with NEMA MG1-18.620 or 18.625. The bearings shall be rated for a L10 minimum life of 2 years or 17,500 hours at the maximum expected up or down thrust the driven equipment may impose during startup or operation at any capacity including shutoff.

2.8 SPACE HEATERS

A. Space heaters shall be supplied to maintain the interior of the motor enclosure above the dew point on all motors 30 hp and larger installed outdoors and on all motors 50 hp and larger installed indoors.

B. Heaters shall be unaffected by the accumulation of moisture and shall have terminals adequately protected against moisture under severe weather conditions. Heaters shall be mounted on noncombustible material and shall operate without thermal damage to the motor or themselves.

Heaters shall be rated 120 volts single phase. They shall have a maximum sheath temperature of 200 degrees C.

C. Leads for the heaters shall be brought out into a terminal box separate from the main power leads terminal box or in a separate cabinet, if required.

D. Where motors are provided with space heaters, warning nameplate shall be red background with white letters and shall read: "CAUTION - CONTAINS AN EXTERNAL VOLTAGE SOURCE."

2.9 WINDINGS AND WINDING PROTECTION

A. Stator windings shall be copper.

B. Leads shall be brought out to a terminal box separate from the main power leads terminal box.

C. Motors 250 hp and larger or as indicated shall be furnished with surge capacitors and lightning arrestors mounted in the main power leads terminal box or in a separate cabinet, if required.

D. Motors controlled by variable frequency shall be supplied with thermostats in two phases as a minimum. Any overload condition shall cause all phases to open.

2.10 GROUNDING

A. Each motor shall have a threaded hole in the motor frame with either a bronze bolt and lock washer or a bronze post-type connector for connection to an external ground conductor. The hole shall be for a 1/2 inch bolt or post-type connector except for motors of 100 hp or less where the size of the bolt or post-type connector may be 3/8 inch. The hole in the motor frame shall be threaded to a depth not less than 1 1/2 times the diameter of the hole to ensure a firm connection. If necessary, a metal pad shall be bonded to the motor frame to provide this depth for the threaded hole. The grounding means shall be located on the same side of the motor as the main lead terminal box.

2.11 BALANCE AND VIBRATION

A. Motors shall be dynamically balanced. Method of measuring dynamic balance shall be when measured in accordance with NEMA MG1-12.06 or MG1-20.52 and with the maximum amplitude values as shown in NEMA MG1-12.05.

B. Motors shall have a maximum peak-to peak amplitude of vibration in accordance with MG1-20.52 when measured in accordance with MG1-12.06 B or MG1-20.53.

2.12 NOISE

A. Maximum sound pressure levels 3 feet from any motor shall not exceed 85dbA.

B. All motors shall be "quiet line" type and shall be so indicated on the submittals, Quiet Line type motors shall be capable of operating at a lower noise level than the standard industry design.

C. Measurement procedures shall in general be guided by the provisions of IEEE Publication No. 85.

2.13 NAMEPLATES

A. Each motor shall have a corrosive-resistant nameplate containing information in accordance with NEMA MG1. In addition the service factor and efficiency shall be included. For motors of 250 hp and larger, the nameplate shall also state any limitations on the number of starts per day, and conditions of restarting.

PART 3 -- EXECUTION

3.1 INSTALLATION

A. Motors shall be installed in accordance with Division 11, EQUIPMENT, Division 16, ELECTRICAL and in accordance with the manufacturer's recommendations.

B. CONTRACTOR shall make provision to protect motors from moisture by connecting power to space heaters.

1. The space heaters shall be connected while in storage and/or before commissioning.

END OF SECTION

SECTION 16560
MUNICIPAL FACILITIES ELECTRICAL SYSTEMS COMMISSIONING

PART 1 – GENERAL

1.1 DESCRIPTION

A. The purpose of this section is to specify Division 16 responsibilities in the commissioning process which are being directed by the CA. Other electrical systems testing are required under the direction of the CM.

B. The list of commissioned equipment and systems is found in Section 01810, Part 1.12.

C. Commissioning requires the participation of Division 16 to ensure that all systems are operating in a manner consistent with the Contract Documents. The general commissioning requirements and coordination are detailed in Division 01. Division 16 shall be familiar with all parts of Division 01 and the commissioning plan issued by the CA and shall execute all commissioning responsibilities assigned to them in the Contract Documents.

1.2 RESPONSIBILITIES

A. Electrical Contractors. The commissioning responsibilities applicable to the electrical contractor are as follows (all references apply to commissioned equipment only):

1. Construction and Acceptance Phases

a. Include the cost of commissioning in the contract price, if not yet let.

b. In each purchase order or subcontract written, include requirements for submittal data, O&M data and training.

c. Attend a commissioning kickoff meeting and other necessary meetings scheduled by the CA to facilitate the construction process.

d. Contractors shall provide normal cut sheets and shop drawing submittals to the CA of commissioned equipment.

e. Provide additional requested documentation, prior to normal O&M manual submittals, to the CA for development of start-up and functional testing procedures.

(1) Typically this will include detailed manufacturer installation and start-up, operating, troubleshooting and maintenance procedures, full details of any owner-contracted tests, fan and pump curves, full factory testing reports, if any, and full warranty information, including all responsibilities of the Owner to keep the warranty in force clearly identified. In addition, the installation and checkout materials that are actually shipped inside the

equipment and the actual field checkout sheet forms to be used by the factory or field technicians shall be submitted to the Commissioning Agent.

(2) The Commissioning Agent may request further documentation necessary for the commissioning process.

(3) This data request may be made prior to normal submittals.

2. Provide a copy of the O&M manuals submittals of commissioned equipment, through normal channels, to the CA for review and approval.

a. Contractors shall assist (along with the design engineers) in clarifying the operation and control of commissioned equipment in areas where the specifications, control drawings or equipment documentation is not sufficient for writing detailed testing procedures

b. Provide assistance to the CA in preparation of the specific functional performance test procedures specified in Section 16570. Subs shall review test procedures to ensure feasibility, safety and equipment protection and provide necessary written alarm limits to be used during the tests.

c. Develop a full start-up and initial checkout plan using manufacturer's start-up procedures and the prefunctional checklists from the CA. Submit manufacturer's detailed start-up procedures and the full start-up plan and procedures and other requested equipment documentation to CA for review.

d. During the startup and initial checkout process, execute and document the electrical-related portions of the prefucntional checklists provided by the CA for all commissioned equipment.

e. Perform and clearly document all completed startup and system operational checkout procedures, providing a copy to the CA.

f. Address current A/E punch list items before functional testing.

g. Provide skilled technicians to execute starting of equipment and to execute the functional performance tests. Ensure that they are available and present during the agreed upon schedules and for sufficient duration to complete the necessary tests, adjustments and problem-solving.

h. Perform functional performance testing under the direction of the CA for specified equipment in Section 16570 and 01810. Assist the CA in interpreting the monitoring data, as necessary.

i. Correct deficiencies (differences between specified and observed performance) as interpreted by the CA, CM and A/E and retest the equipment.

j. Prepare O&M manuals according to the Contract Documents, including clarifying and updating the original sequences of operation to as-built

conditions.

k. During construction, maintain as-built red-line drawings for all drawings and final CAD as-builts for contractor-generated coordination drawings. Update after completion of commissioning (excluding deferred testing). Prepare red-line as-built drawings for all drawings and final as-builts for contractor-generated coordination drawings.

l. Provide training of the Owner's operating personnel as specified.

m. Coordinate with equipment manufacturers to determine specific requirements to maintain the validity of the warranty.

3. Warranty Period

a. Execute seasonal or deferred functional performance testing, witnessed by the CA, according to the specifications.

b. Correct deficiencies and make necessary adjustments to O&M manuals and as-built drawings for applicable issues identified in any seasonal testing.

B. Electrical Designer/Engineer

1. Refer to Section 01810 for the responsibilities of the Electrical Designer/Engineer.

1.2 RELATED WORK

A. Refer to Section 16570 for functional testing requirements.

PART 2 -- PRODUCTS

2.1 TEST EQUIPMENT

A. Division 16 shall provide all test equipment necessary to fulfill the testing requirements of this Division (i.e. light meters).

PART 3 -- EXECUTION

3.1 SUBMITTALS

A. Division 16 shall provide submittal documentation relative to commissioning to the CA as requested by the CA. Refer to Section 01810 Part 3.3 for additional Division 16 requirements.

3.2 STARTUP

A. The electrical contractors shall follow the start-up and initial checkout procedures listed in the Responsibilities list in this section and in 01810 Part 3.4. Division 16 has start-up responsibility and is required to complete systems and sub-systems so they are fully functional, meeting the design objectives of the Contract Documents. The commissioning

procedures and functional testing do not relieve or lessen this responsibility or shift that responsibility partially to the commissioning agent or Owner.

B. Functional testing is intended to begin upon completion of a system. Functional testing may proceed prior to the completion of systems, or sub-systems at the discretion of the CA and CM. Beginning system testing before full completion does not relieve the Contractor from fully completing the system, including all prefunctional checklists as soon as possible.

1. Functional performance tests

a. Refer to Section 16570 for specific details on the required functional performance tests.

2. Testing documentation, non-conformance and approvals

a. Refer to Section 01810 Part 3.6 for specific details on non-conformance issues relating to prefunctional checklists and tests.

b. Refer to Section 01810 Part 3.5 for issues relating to functional performance tests.

3. Operations and maintenance (O&M) manuals

a. Division 16 shall compile and prepare documentation for all equipment and systems covered in Division 16 and deliver to the GC for inclusion in the O&M manuals, according to Section 01810.

b. The C shall receive a copy of the O&M manuals for review.

4. Training of owner personnel

C. The GC shall be responsible for training coordination and scheduling and ultimately to ensure that training is completed. Refer to Section 01810 for additional details.

D. The CA shall be responsible for overseeing and approving the content and adequacy of the training of Owner personnel for commissioned equipment. Refer to Section 01810 for additional details.

E. Electrical Contractor. The electrical contractor shall have the following training responsibilities:

1. Provide the CA with a training plan two weeks before the planned training according to the outline described in Section 01810, Part 3.8.

2. Provide designated Owner personnel with comprehensive training in the understanding of the systems and the operation and maintenance of each major piece of commissioned electrical equipment or system.

3. Training shall start with classroom sessions, if necessary, followed by hands on training on each piece of equipment, which shall illustrate the various modes of operation, including startup, shutdown, fire/smoke alarm, power failure, etc.

4. During any demonstration, should the system fail to perform in accordance with the requirements of the O&M manual or sequence of operations, the system will be repaired or adjusted as necessary and the demonstration repeated.

5. The appropriate trade or manufacturer's representative shall provide the instructions on each major piece of equipment. This person may be the start-up technician for the piece of equipment, the installing contractor or manufacturer's representative. Practical building operating expertise as well as in-depth knowledge of all modes of operation of the specific piece of equipment is required. More than one party may be required to execute the training.

6. The training sessions shall follow the outline in the Table of Contents of the operation and maintenance manual and illustrate whenever possible the use of the O&M manuals for reference.

7. Training shall include:

    a. Use the printed installation, operation and maintenance instruction material included in the O&M manuals.

    b. Include a review of the written O&M instructions emphasizing safe and proper operating requirements, preventative maintenance, special tools needed and spare parts inventory suggestions. The training shall include start-up, operation in all modes possible, shut-down, seasonal changeover and any emergency procedures.

    c. Discuss relevant health and safety issues and concerns.

    d. Discuss warranties and guarantees.

    e. Cover common troubleshooting problems and solutions.

    f. Explain information included in the O&M manuals and the location of all plans and manuals in the facility.

    g. Discuss any peculiarities of equipment installation or operation.

    h. The format and training agenda in Guidelines for Commissioning HVAC Systems, ASHRAE, 1989R, 1996 is a recommended reference.

    i. Classroom sessions shall include the use of overhead projections, slides, video and audio taped material as might be appropriate.

8. Hands-on training shall include start-up, operation in all modes possible, including manual, shut-down and any emergency procedures and maintenance of all pieces of equipment.

9. The electrical contractor shall fully explain and demonstrate the operation, function and overrides of any local packaged controls, not controlled by the central control system.

    a. Training shall occur after functional testing is complete, unless approved

otherwise by the Project Manager.

b. Duration of Training. The electrical contractor shall provide training on each piece of equipment according to the following schedule.

Hours	System
4	Lighting controls, controllers, and schedules
2	Occupancy sensors and photo sensors

A. Deferred testing

1. Refer to Section 01810, Part 3.9 for requirements of deferred testing.

B. Written work products

1. Written work products of Contractors will consist of the startup and initial checkout plan described in Section 01810 and the filled out startup, initial checkout and pre-functional checklists.

END OF SECTION

SECTION 16570
MUNICIPAL FACILITIES ELECTRICAL TESTING REQUIREMENTS

PART 1 – GENERAL

1.1 INCLUDED SYSTEMS AND EQUIPMENT

A. The following is a list of the equipment and system test requirements included in this section:

1. Lighting sweep controls (weekday, weekend, and holiday schedules).
2. Occupancy sensors.
3. Photo sensors (indoor and outdoor).
4. Lighting controllers (indoor and outdoor).

1.2 DESCRIPTION

A. This section specifies the functional testing requirements for Division 16 systems and equipment. From these requirements, the Commissioning Authority (CA) shall develop step-by-step procedures to be executed by the Subs. The general functional testing process, requirements and testing methods definitions are described in Section 01810. The test requirements for each piece of equipment or system contain the following:

1. The contractors responsible to execute the tests, under the direction of the CA.
2. A list of the integral components being tested.
3. Prefunctional checklists associated with the components.
4. Functions and modes to be tested.
5. Required conditions of the test for each mode.
6. Special procedures.

.

7. Required methods of testing.
8. Required monitoring.
9. Acceptance criteria.
10. Sampling strategies allowed.

1.3 PREREQUISITES

A The following applicable generic prerequisite checklist items are required to be listed on each written functional test form and be completed prior to functional testing.

1. All related equipment has been started up and calibrated and start-up reports and prefunctional checklists submitted and approved ready for functional testing. Sample prefunctional checklists can be found in Section 01813. These are

samples and for reference only. Final prefunctional checklists will be provided as part of the Construction Phase Commissioning Plan.

2. All A/E punchlist items for this equipment corrected.

3. These functional test procedures reviewed and approved by installing contractor.

4. Safeties and operating ranges reviewed by the CA.

5. Test requirements and sequences of operation attached.

6. Schedules and set points attached.

7. Record of all values for pre-test set points changed to accommodate testing has been made and a check box provided to verify return to original values (control parameters, limits, delays, lockouts, schedules, etc.).

PART 2 PRODUCTS (NOT USED)

PART 3 EXECUTION

3-1 LIGHTING SWEEP CONTROLS

A. Parties Responsible to Execute Functional Test

1. Lighting Controls contractor: operate the controls

2. Electrical contractor: assist in testing sequences

3. CA: to witness, direct and document testing.

B. Prerequisites

1. The applicable prerequisite checklist items listed in the beginning of Section 16570 shall be listed on each functional test form and checked off prior to functional testing.

C. Functions / Modes Required To Be Tested and Test Methods

1. The following testing requirements are an addition to and do not replace any testing requirements elsewhere in this Division.

Function / Mode	Test Method Manual (demonstration), Monitoring, Either or Both
MISCELLANEOUS FUNCTIONS	
1. All specified functions and features are set up, debugged and fully operable.	Verbal discussion of features
2. Power failure and battery backup and power-up restart functions.	Demonstration
3. Security and access codes.	Demonstration
4. Verify override duration setting.	Demonstration

Function / Mode	Test Method Manual (demonstration), Monitoring, Either or Both
5. Scheduling features fully functional and setup, including weekdays, weekends, and holidays.	Observation in terminal screens or printouts
SWEEP FUNCTIONS	
1. 50% of the zones with a minimum of 2 zones per controller or relay must be verified by turning on at least 25% of the lights in the zone and witnessing an actual sweep.	Either
OVERRIDE FUNCTIONS	
1. Manual occupant overrides: 25% of the local override switches, with a minimum of 4 switches must be verified by turning the override switches ON after a sweep and seeing the lights turn back on. 100% of the remainder of the switches should be sight verified to be in place.	Either

D. Acceptance Criteria (referenced by function or mode ID)

1. For the conditions, sequences and modes tested, the sweep controls, integral components and related equipment respond to changing conditions and parameters appropriately as expected, as specified and according to acceptable operating practice.

E. Sampling Strategy for Identical Units

1. Sample the units per the above table. If 10% of the units in the first sample fail the functional performance tests, test another 10% of the group (the 2nd sample). If 10% of the units in the 2nd sample fail, test all remaining units in the whole group, fully at the contractor's expense.

3-2 OCCUPANCY SENSORS

A. Parties Responsible to Execute Functional Test

1. Electrical contractor: assist in testing sequences
2. CA: to witness, direct and document testing.

B. Prerequisites

1. All occupancy sensor calibration and set points shall be verified prior to functional testing.

2. The applicable prerequisite checklist items listed in the beginning of Section 16570 shall be listed on each functional test form and checked off prior to functional testing.

C. Functions / Modes Required To Be Tested and Test Methods

1. The following testing requirements are an addition to and do not replace any testing requirements elsewhere in this Division.

Function / Mode	Test Method Manual (demonstration), Monitoring, Either or Both
MISCELLANEOUS FUNCTIONS	
1. All specified functions and features are set up, calibrated, debugged and fully operable.	Verbal discussion of features
2. Occupant over-ride functions and duration setting.	Demonstration
OCCUPANCY SENSOR FUNCTIONS	
1. Test the sequence of operation for all features and modes.	Manual
2. Verify that the controls and sensors are not easily overridden or disabled by occupants.	Visual inspection
3. Verify that the occupancy sensor is in an adequate location and is not being affected by obstructions.	Visual inspection

D. Acceptance Criteria (referenced by function or mode ID)

1. For the conditions, sequences and modes tested, the dimming controls, integral components and related equipment respond to changing conditions and parameters appropriately as expected, as specified and according to acceptable operating practice.

E. Sampling Strategy for Identical Units

1. Each occupancy sensor and its controlled zone must be tested (no sampling).

3-3 PHOTO SENSORS

A. Parties Responsible to Execute Functional Test

1. Electrical contractor: assist in testing sequences

2. CA: to witness, direct and document testing.

B. Prerequisites

1. All photo sensor calibration and set points shall be verified prior to functional testing.

2. The applicable prerequisite checklist items listed in the beginning of Section 16570 shall be listed on each functional test form and checked off prior to functional testing.

C. Functions / Modes Required To Be Tested and Test Methods

1. The following testing requirements are an addition to and do not replace any testing requirements elsewhere in this Division.

Function / Mode	Test Method Manual (demonstration), Monitoring, Either or Both
MISCELLANEOUS FUNCTIONS	
1. All specified functions and features are set up, calibrated, debugged and fully operable (indoor and outdoor sensors).	Verbal discussion of features
PHOTO SENSOR FUNCTIONS	
1. Test the sequence of operation for all features and modes (weekday, weekend, and holiday schedules) and interlocks with time clocks, if any.	Manual
2. Verify that the controls and sensors are not easily overridden or disabled by occupants.	Visual inspection
3. Verify that the photo sensor is in an adequate location and is not being affected by obstructions.	Visual inspection
DIMMING FUNCTIONS	
1. Verify that dimming does not cause lower than specified light levels in adjacent “non-dimmed” spaces.	

D. Acceptance Criteria (referenced by function or mode ID)

1. For the conditions, sequences and modes tested, the dimming controls, integral components and related equipment respond to changing conditions and parameters appropriately as expected, as specified and according to acceptable operating practice.

E. Sampling Strategy for Identical Units

1. Each photo sensor and its controlled zone must be tested (no sampling).

END OF SECTION

SECTION 17100
METERS, GENERAL

PART 1 -- GENERAL

1.1 THE REQUIREMENT

A. The CONTRACTOR shall furnish and install all meters and flow measurement devices with associated instrumentation and controls as shown and specified herein, complete and operable, for functions including (but not limited to) flow measurement, density determination, and batch metering of water, wastewater, sludge, chemicals and gases in accordance with the requirements of the Contract Documents.

B. Furnish meters for functions in addition to those listed above wherever required by the Contract Documents and/or required by the specified process.

1.2 RELATED WORK SPECIFIED ELSEWHERE

A. Division 2 and 11, as applicable.

B. Section 09800 Protective Coating.

C. Section 11000 Equipment General Provisions (Mechanical).

D. Section 16100 Basic Materials and Methods (Electrical).

E. Section 17400 Process Instrumentation and Control.

1.3 REFERENCE SPECIFICATIONS, CODES, AND STANDARDS

A. Comply with reference specifications of Section 17400 Process Instrumentation and Control.

B. Commercial Standards:

1.	ANSI/ASME B16.1	Gray Iron Pipe Flanges and Flanged Fittings (Classes 25, 125, 250).
2.	ANSI/AWWA C207	Steel Pipe Flanges for Waterworks Service - Sizes 4 In. Through 144 In. (100 mm Through 3,600 mm).
3.	ANSI/AWWA C701	Cold-Water Meters - Turbine Type, for Customer Service.
4.	ANSI/AWWA C702	Cold-Water Meters - Compound Type.
5.	ANSI/AWWA C704	Propeller-Type Meters for Waterworks Applications.
6.	ASME REPORT	Fluid Meters, Latest Edition.

1.4 CONTRACTOR SUBMITTALS

A. Comply with applicable subsections of Section 17400 Process Instrumentation and Control.

B. Shop Drawings: The CONTRACTOR shall submit complete shop drawings of all meters for review in accordance with Section 01330 Shop Drawings / Submittals of the GENERAL REQUIREMENTS.

Each meter shall be identified with its equipment number / tag number as shown or specified.

C. Manufacturer's Data: With the shop drawings, the CONTRACTOR shall also furnish certified calibration curves indicating flow versus differential pressure and any other information called for in the individual meter specifications.

D. O & M Manuals: The CONTRACTOR shall furnish to the ENGINEER eight (8) copies of complete operation and maintenance instructions for all of the metering systems provided to the project including instrumentation and controls, as specified under Section 01782 Technical Manuals of the GENERAL REQUIREMENTS.

E. Spare Parts: The CONTRACTOR shall obtain and submit from the manufacturer a list of suggested spare parts for each piece of equipment according to the provisions of Section 01781 Spare Parts of the GENERAL REQUIREMENTS. After approval, CONTRACTOR shall furnish such spare parts suitably packaged, identified with the equipment number, and labeled. CONTRACTOR shall also furnish the name, address, and telephone number of the nearest distributor for each piece of equipment. All spare parts are intended for use by the CITY, only, after expiration of the guaranty period. Any spare parts which the ENGINEER permits the CONTRACTOR to use for startup activities shall be replaced by the CONTRACTOR prior to the CITY's acceptance of beneficial use of the equipment.

F. During the term of this Contract the CONTRACTOR shall notify the ENGINEER in writing regarding any manufacturer's modification of the approved spare parts, such as part number, interchangeability, model change or others. If the ENGINEER determines that the modified parts are no longer applicable to the supplied equipment, the CONTRACTOR at its expense shall provide applicable spare parts.

G. Special Tools: A list of special tools required shall be submitted to the ENGINEER for approval. After approval the CONTRACTOR shall supply these tools suitably wrapped and identified for application. Special tools shall include substitute steel spools for each meter for maintenance purposes. Each spool shall be labeled to identify the meter for which temporary replacement is required. The label shall include the meter identification number, size and service.

1.5 QUALITY ASSURANCE

A. Inspection and Testing Requirements: The CONTRACTOR shall obtain the services of an experienced factory service representative to inspect and test all meters for proper performance and installation.

B. Accuracy Requirements: Unless otherwise specified herein, the flow meters shall be guaranteed to register flow to an accuracy of $\pm$2 percent of actual flow throughout the range specified. All density measuring equipment shall have a reference accuracy within $\pm$2 percent of actual solids content over the range specified for each density measurement system.

1.6 MANUFACTURER'S SERVICE REPRESENTATIVE

A. Erection and Startup Assistance: During erection and startup of the plant the CONTRACTOR shall obtain all necessary assistance from an experienced factory service representative to ensure a correct and high quality installation, in accordance with the Contract Documents and the manufacturer's instructions.

B. Instruction of CITY'S Personnel: After completion of the installation and during startup of the plant, the CONTRACTOR shall instruct the CITY'S personnel in the proper operation, maintenance and repair of all metering equipment. For this purpose, the CONTRACTOR shall obtain the services of an experienced factory service representative, who shall spend sufficient time on the site to fully instruct the CITY'S operating personnel on all phases of its equipment. The ENGINEER shall be the sole judge of what is appropriate and sufficient training.

1.7 CLEANUP

A. After completion and testing of its work, the CONTRACTOR shall remove all debris from the site, clean all meters, controls, cabinets, and other metering appurtenances, and deliver to the CITY each system in proper operating condition.

B. Purge all piping and capillary tubing before connection to the meter. Use water, high pressure air, and/or mechanical mandrel as applicable.

C. Purge all electrical and signal conduits before installation of wiring. Use high pressure air followed by mechanical mandrel passed through the conduits from end to end by pull rope.

1.8 GUARANTEES, WARRANTIES

A. After completion the CONTRACTOR shall furnish to the CITY the manufacturer's written guarantees that the metering systems will operate within the published accuracies and flow ranges and meet these Specifications. The CONTRACTOR shall also furnish the manufacturer's warranties as published in its literature and as specified.

B. Warranty period shall not be less than one (1) year beginning from the day of first beneficial use by the City. Contractor testing shall not be counted in this period. Where necessary the CONTRACTOR shall purchase extended warranty coverage from the manufacturer to meet this requirement. All costs shall be included in the CONTRACTOR'S Bid price for the project.

PART 2 -- PRODUCTS (NOT USED)

PART 3 -- EXECUTION

3.1 INSTALLATION

A. The CONTRACTOR shall assemble and install all equipment specified herein, in strict accordance with the manufacturer's published instructions, under the supervision of the manufacturer's representative, and under the general review of the ENGINEER. All installations shall be accomplished by competent craftsmen of the appropriate trades and in keeping with the highest industrial standards for workmanship.

B. The meters shall be installed in easily accessible locations for ease of reading and maintenance. Where indicated, meters may be used for balancing of flow in several lines in conjunction with throttling and shut-off valves. Wherever possible, all meter installations shall provide the manufacturer's recommended straight run of piping upstream and downstream of the meters. All meters, shut-off and balancing valves shall be firmly supported from the structure or from the floor with approved supports. In-line meters shall be installed to provide full-line flow and not less than the manufacturer's recommended head at all times.

3.2 TESTING

A. Equipment shall be prepared for operational use in accordance with manufacturer's instructions, including bench test and calibration, where required.

B. Each item shall be subjected to an operating test over the total range of capability of the equipment. Where applicable, tests shall be conducted in accordance with the Test Code of the Standards of the Hydraulic Institute. The CONTRACTOR shall obtain copies of factory test certifications and shall notify the ENGINEER 1 week in advance of all tests to be conducted on site.

3.3 ACCEPTANCE BY CITY

A. Final acceptance of the equipment is contingent on satisfactory operation after installation.

3.4 INSTALLATION, CALIBRATION, TESTING, PRECOMMISSIONING, START-UP AND INSTRUCTION

A. Comply with the applicable subsections of Section 17400 Process Instrumentation and Control, Part 3 – EXECUTION.

B. CONTRACTOR questions regarding conduct of any part of the work shall be submitted in writing to the ENGINEER for resolution.

END OF SECTION

SECTION 17240
AV FLOW METERS - FIELD MOUNTED

PART 1 -- GENERAL

1.1 THE REQUIREMENT

A. The CONTRACTOR shall furnish and install field-mounted ultrasonic flow meters and all appurtenant work, complete and operable, in accordance with the requirements of the Contract Documents.

B. Each meter shall consist of 2 acoustic sensors, a local flow indicator, an electronic transmitter, associated mounting hardware, cables, junction box, and accessories. The meter shall be bi-directional in measurement, utilizing an ultrasonic velocity measurement to characterize flow volume in the pipe.

1.2 RELATED WORK SPECIFIED ELSEWHERE

A. Section 17100 Meters, General.

B. Section 17400 Process Instrumentation and Controls.

1.3 REFERENCE SPECIFICATIONS, CODES AND STANDARDS

A. Comply with the reference specifications of: Section 17400 Process Instrumentation and Control.

1.4 CONTRACTOR SUBMITTALS

A. Submittals shall be made in accordance with Section 01330, Shop Drawings / Submittals, of the GENERAL REQUIREMENTS.

B. Comply with applicable subsections of Section 17400 Process Instrumentation and Control.

1.5 QUALITY ASSURANCE

A. The CONTRACTOR shall obtain the services of a factory-trained specialist to install, check, and calibrate all field-mounted ultrasonic flow meters.

B. All materials and equipment shall be of the highest available quality, new and unused.

PART 2 -- PRODUCTS

2.1 GENERAL

A. Basic Design: Field-mounted ultrasonic flow meters shall consist of transducers mounted in bosses welded directly to metal pipes, or transducers mounted to gasketed saddles strapped to concrete or plastic pipe. The meters shall be suitable for measuring stormwater with an accuracy of ±2 percent (of reading) for flow velocities above one foot per second, and a rangeability of 10 to 1 (or 25 to 1 for higher velocities).

B. Schedule of Field-Mounted Transit-Time Ultrasonic Meters: Field-mounted ultrasonic flow meters shall be provided as indicated on the drawings.

2.2 BASIC MATERIALS

A. Materials of construction shall be all 316 stainless steel including transducers, fasteners and all other accessories and appurtenances. Sensor enclosures shall have IP68 waterproof rating.

B. Metering Elements: Combined digital doppler radar velocity sensing with ultrasonic pulse echo depth sensing to remotely measure open channel flow from above the water surface (non-contact type). Flow meters shall produce a flow measurement based on the principle that the speed of a doppler radar signal varies with flow velocity. The measurement of signal speed or the measurement of transmitted and reflected frequencies infers the pipeline's average velocity. The primary element shall utilize a single pair of electro-acoustic transducers mounted inside a manhole above the water surface. Meters shall provide flow measurement during manhole surcharge flow conditions in addition to open-channel flow conditions.

C. Two sensors shall be permanently mounted to a straight pipe provided by the CONTRACTOR, with concrete anchors and installation parts provided by the meter manufacturer. The equipment manufacturer shall review and certify in writing that the installation arrangement and details will provide best possible accuracy.

D. The Transmitter shall be provided with a data logger and integral digital display scaled in engineering units and contained in a NEMA 4X enclosure. The electronics shall incorporate dual phase-lock loops in the flow measuring circuitry, one for each direction of sonic transmission. The electronics shall also incorporate automatic gain control circuitry and interference rejecting circuitry for tuning and to mitigate noise and maintain accuracy in the presence of traces of bubbles, solids, electrical noise and pipe vibration. The output signals from the transmitter shall be 4-20 mA DC proportional to flow rate. Overall metering system accuracy shall conform to ± 1 percent of flow rate for velocities over 1 ft/sec.

E. Transmitter shall be provided with manufacturer-supplied interconnecting cable of up to 1000 ft length as required based on distance between sensor and data logger/control panel. External dessicants and potting/sealant kits shall be provided as needed for proper installation.

2.3 Manufacturers:

A. Hach Flo-Dar AV Sensor with FL1500 stationary data logger;

B. Or equal.

PART 3 -- EXECUTION

3.1 INSTALLATION, CALIBRATION, TESTING, PRECOMMISSIONING, START-UP AND INSTRUCTION

A. Comply with the applicable subsections of Section 17400 Process Instrumentation and Control Part 3 - EXECUTION.

B. The sensors shall be positioned in accordance with the manufacturer's published specifications, using mounting templates provided by the manufacturer. The sensors shall be installed with a minimum of 10 pipe diameters of unobstructed straight upstream approach, and a minimum of 3 pipe diameters of unobstructed straight downstream pipe.

C. Installation shall be in strict accordance with the manufacturer's printed instructions.

D. Field welding or boring of piping and mounting of transducers shall be done only by highly skilled technicians certified in this area of expertise and recommended by the Manufacturer.

END OF SECTION

SECTION 17400
PROCESS INSTRUMENTATION AND CONTROL

PART 1 -- GENERAL

1.1 THE REQUIREMENT

A. This section sets forth the general specification and requirements for the instrumentation work for the construction of the Project.

B. A single Prime Contractor, through the use of a qualified Instrumentation and Control System Subcontractor, shall furnish, install, and place into service the operating process instrumentation, all the control systems, and all the appurtenant work, being provided under this section of these Specifications and the integration of the Control and Instrumentation system and control devices provided under this project all in accordance with the requirements of the Contract Documents. The prime CONTRACTOR may act as an instrumentation and Control System Subcontractor provided the prime CONTRACTOR has been qualified to do the work as required in paragraph 1.1 C herein for Instrumentation Subcontractors.

1. Furnish and install complete instrumentation systems as indicated on the Contract Drawings and as specified herein. Complete all required engineering work such as installation details, As-built drawings, Shop submittals, test procedures, training syllabuses and materials, and similar work described in this Specification, to produce a complete, fully documented and properly operating process instrumentation and control system. Other additional drawings and text records to complete this work shall be provided.
2. The Instrumentation and Control System Subcontractor shall assume full responsibility for integration and signal compatibility of the control and instrumentation systems with existing devices and devices provided under other specification sections and the City SCADA control system.
3. As a minimum, the Instrumentation and Control System Subcontractor under the direction of the CONTRACTOR shall provide:

    a. Implementation of the control and instrumentation system;

        1). Provide all engineering, labor and materials required to prepare analog hardware submittals; design, develop, electronically draft and submit loop drawings and control panel designs; prepare test plan, training plan, and spare parts submittals; procure hardware; fabricate panels; factory test panels; supervise the installation of all instrumentation and, control devices and panels. Perform and document all loop tests, system commissioning, and the performance of the Thirty (30) continuous day test for the entire control and instrumentation system.

        2). Provide all engineering, labor, and materials required to prepare Operations and Maintenance Manuals, conduct training classes, and to submit "as-built" or record drawings which reflect the installed state of the control and instrumentation system at the time of acceptance.

b. Integration of the control and instrumentation system with instrumentation and control devices being provided under other specification sections;

1). Provide all engineering, labor, and materials required to review vendor drawings and to design, develop, electronically draft and submit all requisite loop drawings and "As-Built" loop drawings associated with;

a). Equipment being provided under other divisions of these specifications.

b). Owner furnished or existing equipment.

2). Provide all engineering, documentation, labor, and materials required to resolve signal, power, or functional incompatibilities between the control and instrumentation system and interfacing devices.

3). Provide all engineering, labor, and materials required to:

a). Supervise and install all instrumentation and control panels (including City supplied equipment).

b). Verify compliance with the manufacturer's installation recommendations.

c). Conduct, document, supervise the performance, and documentation of testing.

c. The design, development, drafting and submission of all required loop drawings and as-built loop drawings associated with; (a) equipment provided under Division 17; (b) equipment provided under other divisions of these specifications; and (c) CITY furnished equipment. It is the intent of these specifications that all instrumentation loops associated with this project shall be drafted and documented in a CITY approved format as Loop Drawings and shall be submitted for CITY review and approval. All loop drawings shall be developed in an electronic format. The As-Built (final version) shall be submitted both in hard copy and electronic format.

d. All instruments shown on the loop drawings shall be itemized in an instrumentation summary generated by the Instrumentation and Control System Subcontractor. The instrument summary shall be on an electronic Excel and hardcopy format and shall list all of the key attributes of each instrument provided under this contract. As a minimum, attributes shall include:

1). Tag Number

2). Reference Drawing No.

3). Loop Drawing Number

4). Service

5). Area Location

6). Associated LCP, PLC PCM, or RTU

7). Calibration Range

8). Manufacturer

9). Model Number

10). Manufacturer serial number.

4. The Instrumentation and Control System Subcontractor shall obtain from the Prime CONTRACTOR the required information on those primary elements, valve actuators, vendor packages, and other control equipment or devices which are furnished by others but are required to be interfaced under this Division.

5. The Instrumentation and Control System Subcontractor shall coordinate his work to ensure that:

   a. All components provided under this Section are properly installed.

   b. The proper type, size, and number of control wires and data communication cables with their conduits are provided, installed, and tested.

   c. The proper type, size, and number of flexible pneumatic tubes with their conduits are provided and installed.

   d. Proper electric power circuits are provided for all instrumentation components and systems.

C. Instrumentation and Control System Subcontractor Experience Requirements: Prime Contractor shall at bid, submit to the CITY documentation listed below for his proposed Instrumentation and Control System Subcontractor:

1. Documentation describing at least two projects of similar size and complexity that have been successfully completed in which the Instrumentation and Control System Subcontractor performed system engineering, system fabrication and installation, documentation (including schematic, wiring and panel assembly drawings), field testing, calibration and start-up, operator instruction and maintenance training. In addition, list the following information for each project:

   a. Name of plant, owner, contact name and telephone number.

   b. Name of manufacturer for the instrumentation furnished.

   c. Type of instruments/equipment furnished

   d. Approximate number of input functions to the system, analog and digital.

   e. Approximate number of output functions from the system, analog and digital.

   f. Contracted cost of the instrumentation and Control System including change orders

   g. Date of completion or acceptance.

2. Identify individual responsible for office engineering and management, and the individual who will be responsible for field testing, calibration, start-up and operator training for this project. Include references of recent projects for these persons.

3. Documentation showing that the Instrumentation Subcontractor has been in the instrumentation and control systems business for minimum of four years.

D. Instrumentation and Control System Subcontractors not having the experience requirements and/or failing to submit the above listed documentation will be considered not-qualified for the project. The Contractor shall be responsible for substituting the bid listed Instrumentation Subcontractor with one

having the required experience and documentation at no extra cost of the City.

E. The PRIME CONTRACTOR shall assign the Instrumentation and Control System Subcontractor full responsibility for the complete operation of all new and modified instrumentation and control systems. The CONTRACTOR shall have said Subcontractor perform all engineering and coordination necessary in order to select, furnish, install, connect, calibrate, and place into operation all sensors, instruments, alarm equipment, control boards, panels, computers, process control modules, human-machine interfaces, accessories and all other equipment as specified herein. Furthermore, said Subcontractor must calibrate and demonstrate the operability of said systems in accordance with the Contract Documents.

F. The Instrumentation and Control System Subcontractor shall provide all engineering work and installation drawings to produce a complete instrumentation system. If it is necessary to produce additional drawings (due to subcontractor selecting equivalent equipment/instruments in leu of the ones shown on Contract Documents); to complete and document the work, such drawings shall be made at no additional cost to the CITY.

G. The Instrumentation and Control System Subcontractor shall examine all drawings, specifications, and details to become fully acquainted with the method of construction and to evaluate the quantity of Work to be performed. In case of conflicting or incomplete technical information, the Instrumentation and Control System Subcontractor shall include costs in its lump sum bid to coordinate the resolution of these conflicts and deficiencies with the ENGINEER at no additional cost to the CITY. Resolution of these discrepancies shall be obtained from the ENGINEER by the Instrumentation and Control System Subcontractor prior to purchasing of the instrument item.

H. Instrumentation and Control System Subcontractor shall note that the equipment loop, logic and elementary diagrams are based on non-certified vendor information and indicate minimum scope of supply from the Equipment Manufacturer. The Instrumentation and Control System Subcontractor shall include all costs in this bid to add additional instruments, wiring, computer inputs/outputs, controls, conduit, interlocks, electrical hardware, drawing revisions and all related documents and drawings, into the design based on Equipment Manufacturer's final certified prints. Such changes to instrumentation and electrical work shall be incorporated into the scope of work at no additional cost to the CITY.

I. Provide all instrumentation and all related wiring as specified on any one of the following instrument or electrical documents: instrument location drawings, Instrument Index, I/O Tabulation, Loop Descriptions, one-line electrical diagrams, or as indicated on any other Contract Document. Indication of required instrumentation work on any one of these Contract Documents shall require supply and installation of the instrument and related wiring, supports and appurtenances at no additional cost to the CITY.

J. Provide all equipment, all materials, all labor supervision, all consumables and all scaffolding for the installation of the instrumentation systems, including the following:

1. Provide field engineering design, as required, for mounting and supporting details of all field mounted components.

2. Provide coordination, as required, between manufacturer's drawings and Contract Installation Drawings.

3. Provide any additional schematics and any additional interconnection diagrams that may be required to facilitate erection or completion of equipment installation.

4. Assemble and make interconnection of instruments disconnected for shipping purposes.

5. Remove all temporary supports, all bracing or other foreign objects that were installed in instrument control panels or other equipment to prevent damage during shipping, storage and/or erection.

6. Coordinate work with that of the different trades and disciplines so that interference between conduit, piping, equipment, architectural and structural work shall be avoided.

7. Install and support all instruments and all instrument piping not installed and supported by others. The Instrumentation and Control System Subcontractor shall furnish all hardware and all stands required to mount these items and provide modifications, as required, to meet actual site conditions.

8. All piping shall be field measured prior to fabrication/or erection. Any significant discrepancies between drawings and field measurements shall be reported to the ENGINEER. The CITY shall not be responsible for any costs for rework because of failure to field measure prior to initiating fabrication.

9. Capillary tubing shall be adequately supported and protected. All extra tubing shall be carefully coiled, tied, and protected at the instrument location.

10. Provide temporary nitrogen purging to all panels (LCP, PCM, CSI, City supplied equipment) on site before being permanently installed only where the environment requires purge.

K. Prime Contractor shall be responsible for coordination with the City SCADA system for interface, communication, loop tests, and performance of complete control system.

1.2 RELATED WORK SPECIFIED ELSEWHERE

A. The WORK of the following Sections applies to the WORK of this Section. Other Sections of the Specifications, not referenced below, shall also apply to the extent required for proper performance of this WORK.

1. Section 09800 Protective Coating

2. Section 11000 Equipment General Provisions

3. Section 15320 Electrical Requirements for Mechanical Equipment

4. Section 16020 Municipal Facilities General Electrical Requirements

5. Section 16100 Basic Materials and Methods

6. Section 17450 PLC, SCADA, Network and Communications

B. The monitoring and control system configurations indicated are diagrammatic. The locations of equipment are approximate unless dimensioned. The exact locations and routing of wiring and cables shall be governed by structural conditions and physical interferences and by the location of electrical terminations on equipment.

C. The Prime CONTRACTOR shall arrange a meeting with the engineer, and CITY at the site in order to identify equipment location prior to roughing in. The CITY reserves the right to require minor changes in location of equipment prior to roughing in without incurring any additional costs or charges.

D. Determine exact routing and final terminations for all signal, power, data communication wiring/cable. A site visit and review of the existing system control panel is mandatory.

1.3 REFERENCE SPECIFICATIONS, CODES AND STANDARDS

A. Comply with the reference specifications of the GENERAL REQUIREMENTS

B. Prime Contractor shall procure all necessary permits, pay all associated costs, and shall furnish the ENGINEER with evidence of permit procurement prior to the commencement of the Work.

C. The equipment, materials and installation shall comply with the applicable standards, specifications and regulations of the following:

1. Instrument Society of America/International Society for Automation (ISA).
2. American Petroleum Institute (API).
3. National Electrical Manufacturers Association (NEMA).
4. Occupational Safety and Health Administration (OSHA).
5. American National Standards Institute (ANSI).
6. Military Standards (MIL Standards).
7. National Fire Protection Association (NFPA).
8. Scientific Apparatus Makers Association (SAMA).
9. Institute of Electrical and Electronic Engineers (IEEE).
10. National Electrical Code (NEC).
11. Insulated Cable Engineers Association (ICEA).
12. Local Power and Telephone Companies.
13. Local Authorities having jurisdiction over the work.
14. City of Los Angeles Electrical Code (CLAEC)
15. Underwriters Laboratories (UL).
16. City of Los Angeles, Department of Public Works, Bureau of Sanitation, “Operator Interface Graphic Display Standards”.
17. National Institute of Standards and Technology (NIST).
18. Society of Automotive Engineers (S.A.E).
19. American Society for Testing and Materials (ASTM).
20. Steel Structures Painting Council (SSPC).
21. “GREEN BOOK” Standard Specifications for Public Works Construction – latest Edition Adopted by City of Los Angeles.
22. Federal Information Processing Standard (FIPS).

D. All electrical equipment, components, devices, shall be Underwriters Laboratories APPROVED (have the UL label and/or be listed with reexamination in UL Publication Reference No.1). Alternatively, the equipment shall be APPROVED by a testing laboratory recognized by the City of Los Angeles and shall conform to all applicable requirements of the City of Los Angeles Department of Building and Safety.

1. Review and approval by the CITY Department of Building and Safety Electrical Test Laboratory (ETL) requires submittal of the equipment, components or devices and any current testing documents to the ETL. Where major equipment is submitted to ETL for approval, the Prime CONTRACTOR shall submit to the ENGINEER a detailed schedule showing the approval process and approximate equipment delivery dates to ensure that there will be no effect on the project completion date. No electrical equipment will be approved for delivery to the jobsite without ETL approval. All costs incurred in the approval process shall be included in the Bid.

2. Products being specified in the Contract Specifications does not express or imply approval by UL, the Department of Building and Safety or any other testing laboratory. Shop drawing approval by the ENGINEER shall not supersede the requirements of the Department of Building and Safety for listed equipment.

1.4 SUBMITTALS/SHOP DRAWINGS

A. Submittals shall be made in accordance with Section 01330**,** Shop Drawings / Submittals of the GENERAL REQUIREMENTS.

B. Shop Drawings: Coordinate the work required in these Specifications so that a complete instrumentation and control system for the facility will be provided and will be supported by accurate shop and as built drawings. The Instrumentation Subcontractor shall prepare and submit complete and organized shop drawings, as specified herein. Interface between instruments, motor starter, control valves, variable speed drives, flow meters, existing instruments, chemical feeders, instrumentation symbols, and abbreviations, piping and instrumentation, local control panels, new instruments, and equipment related to instrumentation and control shall be included in the shop drawing submittal.

C. A table of Contents shall be provided at the beginning of each binder or volume of the Submittal/Manual and shall list entries down to instrument and device level indexed by name, tag number and sequential page number. All pages of each binder/volume shall be sequentially numbered for ease of reference and review. During the period of preparation of this submittal, the Prime CONTRACTOR shall authorize direct, informal liaison between the Instrumentation Subcontractor and the ENGINEER for exchange of technical information. As a result of this informal liaison, oral communication shall not alter the scope of work or cause increase or decrease in the Contract price. During this informal exchange, no oral statement by the ENGINEER shall be construed to give formal approval of any component or method, nor shall any statement be construed to grant formal exception to or variation from these Contract Documents.

D. The Instrumentation and Control System Subcontractor shall submit an analog/digital hardware submittal that utilizes detailed shop drawings and data prepared and organized for easy reference. Section Tabs, Sequential page numbering and Table of Contents / Index Tables shall be used throughout. All shop drawings shall include the letter head and/or title block of the Prime CONTRACTOR responsible for this project. The title block shall include, as a minimum, the Prime CONTRACTOR'S registered business name and address, project name, drawing name, revision level, and personnel responsible for the content of the drawing. The quantity of submittal sets required shall be as specified in Section 01330 of the general requirements. The analog/digital hardware submittal shall be submitted as a complete bound package at one time within ninety (90) calendar days of receipt of Notice to Proceed, and shall include:

1. Drawings showing definitive diagrams for every instrumentation loop and system. These diagrams shall show and identify each component of each loop or system using legend and symbols from

ANSI/ISA S5.4, extending the format as shown on Instrumentation Drawings and as defined by the most recent revision in ISA. Each System or Loop diagram shall be drawn on a separate drawing sheet with no more than four loops per drawing. Develop, submit, update and maintain in an as-built condition the loop drawings for all loops in this project including vendor supplied packages, equipment supplied under Division 17 and CITY supplied packages. The loop drawings shall also show all software modules and linkages. In addition to the expanded ISA S5.4 requirements the Loop Diagrams shall also contain the following details:

a. ISA tag number

b. Functional name of each Loop

c. Tag number of the loop

d. Reference name, drawing, and Loop diagram numbers for any signal continuing off loop diagram sheet.

e. MCC Panel, circuit, and breaker numbers for all power feeds to the loops and instrumentation (i.e., 24VDC and 120VAC).

f. Designation and if appropriate terminal assignments associated with every manhole, pull box, junction box, conduit and panel the loop circuits pass through.

g. Vendor panel, instrument panel, conduit, junction boxes, equipment and DCS terminations, termination identification wire numbers and colors, power circuits, and ground identifications.

h. Calibration range

i. Manufacturer

j. Model Number

2. Fully executed ISA-S20 data sheets for each component, together with a technical product brochure or bulletin. The technical product brochures must be complete enough to verify conformance to all Contract Document requirements. The data sheets, as a minimum, shall show:

a. Component functional description used herein and on the Drawings.

b. Manufacturer's model number or other product designation.

c. Project tag number used herein and on the Drawings.

d. Project system or loop of which the component is a part.

e. Project location or assembly at which the component is to be installed.

f. Input and output characteristics.

g. Scale range and units and multiplier.

h. Requirements for electric supply.

i. Requirements for air supply.

j. Materials of component parts to be in contact with, or otherwise exposed to, process media;

k. Optional/Special requirements or features.

3. A complete index shall appear in the front of each bound submittal volume. A separate technical brochure or bulletin shall be included with each instrument data sheet. The data sheets shall be indexed in the submittal by systems or loops, as a separate group for each system or loop. If, within a single system or loop, a single instrument is employed more than once, one data sheet with one brochure or bulletin may cover all identical uses of that instrument in that system. Each brochure or bulletin shall include a list of tag numbers for which it applies. System groups shall be separated by labeled tags.

4. Drawings showing both schematic and wiring diagrams for control circuits: Complete details on the circuit interrelationship of all devices within and outside each Control Board shall first be submitted using schematic control diagrams. Subsequent to return of this first submittal by the ENGINEER, piping and wiring diagrams shall be prepared and submitted for review by the ENGINEER; the diagrams shall consist of component layout drawings to scale, showing numbered terminals on components together with the unique number of the wire to be connected to each terminal. Piping and wiring diagrams shall show terminal assignments from all primary measurement devices, such as flow meters, and to all final control devices, such as pumps, valves, chemical feeders and vendor panels. Should an error be found in a shop drawing at any time in the project, it shall be corrected including any field changes found and an "As Built" drawing shall be prepared and submitted for review and approval by the ENGINEER prior to the acceptance of the project. Furnish all necessary equipment suppliers' shop drawings to facilitate inclusion of this information. Respond to all comments on the shop drawing re-submittals made by the ENGINEER either by noted corrections or stating why it was not revised. Any resubmittals received by the ENGINEER which do not contain responses to the ENGINEER's previous comments shall be returned marked "Rejected." No further review by the ENGINEER shall be performed until responses are made to all comments.

5. Assembly and construction drawings for each alarm annunciator, local indicating panel and for other special enclosed assemblies for field installation: These drawings shall include dimensions, identification of all components, surface preparation and finish data, nameplates, and the like. These drawings also shall include enough other details, including prototype photographs, to define exactly the style and overall appearance of the assembly; a finish treatment sample shall be included.

6. Installation, mounting, and anchoring details for all components and assemblies to be field-mounted, including conduit connection or entry details shall be shown in the submittal drawings.

7. A Bill of Material shall be submitted for each field mounted device or assembly as well as cabinet assemblies and sub-assemblies. Bills of Material shall include all items within an enclosure, and shall be complete and detailed. An incomplete submittal shall be rejected, and no further evaluation performed until a completed and detailed bill is submitted.

E. Organization and Binding of Shop Drawings: The organization of the initial shop drawings submittal shall be compatible to eventual inclusion with the technical manuals submittal and shall include final alterations reflecting "As Built" conditions. Accordingly, the final approved multiple-copy shop drawing submittal shall be separately bound in 3-ring binders.

F. Technical Manuals: In addition to updated shop drawing information to reflect actual existing conditions, each set of technical manuals shall include installation, connection, operating, troubleshooting, maintenance and overhaul instructions in complete detail. This shall provide the CITY with comprehensive information on all systems and components to enable operation, service, maintenance and repair. Exploded or other detailed views of all instruments, assemblies and accessory components shall be included together with complete parts lists and ordering instructions. For additional requirement see the GENERAL REQUIREMENTS.

G. Control Panel Engineering Submittal: The Instrumentation and Control System Subcontractor shall submit a control panel engineering submittal (CPES) for each control panel being provided under this Specification Including intrinsically safe and Fiber Optic patch panels. The CPES shall completely define and document the construction, finish, layout, power and UPS circuits, signal and safety grounding circuits, fuses, circuit breakers, signal circuits, switches, surge protectors, internally mounted instrumentation components, faceplate mounted instrumentation components, internal panel arrangements, and external panel arrangements. All panel drawings shall, as a minimum, be ANSI "B" size (11” X 17”) with all data sheets and manufacturer specification sheets being ANSI "A" size (81/2” X 11”). The submittal shall be in conformance with latest, NEMA Standard and shall be submitted as a singular complete bound volume or multi-volume package within 120 calendar days after notice to Proceed and shall have the following contents:

1. A complete index shall appear in the front of each bound volume. All drawings and data sheets associated with a panel shall be grouped together with the panels being indexed by systems or process areas. All panel tagging and nameplate nomenclature shall be consistent with the requirements of the Contract Documents.

2. Construction drawings drawn to a 1-1/2-inch = 1-foot scale which define and quantify the type and gage of fabrication steel to be used for panel fabrication, the ASTM grade to be used for structural shapes and straps, panel door locks and hinge mechanisms, type of bolts and bolt locations for section joining and anchoring, details on the utilization of "UNISTRUT" and proposed locations, stiffener materials and locations, electrical terminal box and outlet locations, electrical access locations, print pocket locations, writing board locations and lifting lug material and locations.

3. Physical arrangement drawings drawn to 1-1/2-inch = 1 foot scale which define and quantify the physical groupings comprising control panel sections, auxiliary panels, subpanels, and racks. Cutout locations with nameplate identifications shall be provided.

4. Schematic/Elementary diagrams shall depict all control devices and circuits and their functions.

5. Wiring/Connection diagrams shall locate and identify electrical devices, terminals, installed Components/Instruments and interconnecting wiring. These diagrams shall show interconnecting wiring by lines, designate terminal assignments, and show the physical location of all electrical and control devices.

6. Interconnection diagrams shall locate and identify all external connections between the control panel/control panel devices and associated equipment. These diagrams shall show interconnecting wiring by lines, designate terminal assignments, and show the physical location of all panel ingress and egress points.

7. Control sequence diagrams shall be submitted to portray the contact positions or connections required to be made for each successive step of the control action.

8. Manufacturer specification sheets which verify the products conformance to the requirements of the Contract Documents.

9. A bill of material which enumerates all devices associated with the control panel.

H. Test Procedure Submittal:

1. The Instrumentation and Control System Subcontractor shall submit the Procedures proposed to be followed during the tests required under this project. Procedures shall include statement indicating test objectives, test descriptions, forms, and checklists to be used to control and document the required tests.

2. Prior to the preparation of the detailed test procedures, submit outlines of the specific proposed tests. Submittals shall include examples of the proposed forms and checklists. Once the Preliminary Test Procedure Submittals have been reviewed by the ENGINEER and returned stamped either "no exceptions noted" or "make corrections noted", the Instrumentation Subcontractor shall submit the proposed detailed test procedures, forms, and checklists.

3. Once the detailed Test Procedures Submittals have been reviewed by the ENGINEER and returned stamped either "no exceptions noted" or "make corrections noted", the tests shall be scheduled in coordination with ENGINEER.

4. Upon completion of each required test, a copy of the signed-off test procedures shall be submitted as test documentation. These requirements shall apply to the factory testing of all panels, and all on-site tests.

I. The Instrument Subcontractor shall submit the integrated hardware/communication loop testing results from field to the DCS at the end of project.

J. The organization of the initial shop drawing submittal required above shall be compatible to eventual inclusion with the Technical Manuals submittal and shall include final alterations reflecting "record" conditions. Submittals not organized as described above and incomplete submittals for a given Loop will not be accepted. Accordingly, the initial multiple-copy shop drawing submittal shall be separately bound in standard size, 3-ring, loose-leaf, vinyl plastic, hard cover binders suitable for bookshelf storage. Binder ring size shall not exceed 2-inches.

K. Control Valve Submittal: Submit the following data within 90 days after Notice to Proceed:

1. Type, Dimensional Outline, Mounting Details, body material, packing gland material, Trim material & shaft material.

2. Diagrams (wiring, schematic, logic)

3. Certified Performance Data

4. Calculations for Valve Sizing

5. Welding procedures, Qualification Test, & Non-destructive testing procedures.

6. Cross Sections with Parts List

7. Inspection and Test Plan Prior to acceptance, the control valve supplier shall submit function test verification certifications and hydrostatic leak test certifications.

L. Instrument Installation Detail and Submittal: Submit the following data within 180 days after Notice to Proceed:

1. Detail and Instrument Installation drawings

2. Bill of Materials.

1.5 QUALITY ASSURANCE

A. Accuracy: The accuracy of each instrumentation system or loop shall be determined as a probable maximum error; this shall be the square-root of the sum of the squares of certified "accuracies" of the

designated components in each system, expressed as a percentage of the actual span or value of the measured variable. Each individual instrument shall have a minimum accuracy of ±0.5 percent of full scale and a minimum repeatability of ±0.25 percent of full scale unless otherwise specified. Instruments which do not conform to or improve upon these criteria are not acceptable.

B. Where materials and equipment are specified to conform to the standards of the Underwriter's Laboratories, the label of, or listing with reexamination in latest UL Publication, shall be accepted as enough evidence that the items conform to Underwriter's Laboratories requirements. In lieu of such label, listing of the materials or equipment by a recognized approved testing laboratory as stated in the CITY of Los Angeles Electrical Code will be acceptable as interpreted by the CITY's Department of Building and Safety.

1.6 PRESUBMITTAL CONFERENCE

A. Arrange and conduct a Pre-submittal Conference on the instrumentation and control system work within 15 days after the notice to proceed. The Instrumentation Subcontractor shall allow one eight-hour working day for the conference. The purpose of the Pre-submittal Conference shall be to informally review with the CONTROL SYSTEM ENGINEER and approve the way the Instrumentation and Control System Subcontractor should respond to the Contract requirements before any submittals are prepared. The Instrumentation and Control System Subcontractor shall prepare the following items for presentation at the Pre-submittal Conference:

1. A list of equipment and materials required for the control system and the manufacturer and model number which the Instrumentation and Control System Subcontractor proposes to use for each item.

2. A list of proposed exceptions to the Specifications and Drawings, along with a brief explanation of each. Approval shall be subject to formal submittal and review by the ENGINEER.

3. An exact one-to-one sample of each type of submittal specified herein.

4. A bar chart type schedule for all system related activities from the Pre-submittal Conference through startup and training, plant acceptance and project closeout. The schedule shall include the dates relative to submittals, design, fabrication, programming, factory testing, deliveries, installation, field testing, and training. The schedule shall be subdivided to show activities relative to each major item or group of items.

5. Provide **3** copies on paper, and 1 electronic copy compatible with City Standard software of Pre-submittal Conference data to the ENGINEER.

B. Keep formal meeting minutes. Prior to adjournment of the conference, all parties must concur in writing with the accuracy of the minutes.

C. Preparation of shop drawings shall not commence until after the Pre-submittal Conference. Submittals required for that conference are exempted.

1.7 GUARANTEE

A. The Instrumentation and Control System Subcontractor shall guarantee all equipment and installation, as specified herein, for a period of one year following the date of completion of the work. To fulfill this obligation, the Instrumentation Subcontractor shall utilize technical service personnel designated by the Instrumentation Subcontractor whom he originally assigned project responsibility for instrumentation. Services of a non-critical nature shall be performed within 5 calendar days after notification by the CITY, and critical services as (determined by the ENGINEER) within 24 hours after

notification.

1. Equipment, software, and materials which do not achieve design requirements after installation shall be replaced or modified to attain compliance at no additional cost to the CITY. Following replacement or modification, retest the system and perform any additional procedures needed to return/restore complete system to satisfactory operation at no additional cost to the CITY and obtain design compliance approval from the ENGINEER.

2. All parts, materials (excluding consumables), labor, travel, subsistence, or other expenses incurred in providing all services and service visits during the one-year warranty period shall be included in the Bid.

1.8 MANUFACTURER'S REPRESENTATIVE SERVICES

A. Provide jobsite visits and services of a manufacturer's technical field representative for the following items of equipment for calibration, testing and start-up:

1. Flow meters

2. Process Analyzers

3. Programmable controller, HMI

4. Valve actuators

5. Any process sensing devices and indicating devices

B. Provide the following services of qualified technical representatives (see Installation, Calibration, Testing, Pre-commissioning, Start-up, and Instruction herein):

1. Install and connect all instruments, all elements, and all components of every system, including connection of instrument signals to primary measurement elements and to final control elements such as pumps, valves, and chemical feeders.

2. Make all necessary adjustments, calibrations hardware/software interfacing and tests, as called out in the specifications, and drawings.

3. Instruct Plant operating and maintenance personnel on the instrumentation. This time shall be in addition to whatever time is required for other facets of work at the site and shall be during the CITY's normal working days and hours.

1.9 SHOP INSPECTION

A. Shop Inspection and Performance Testing: Arrange for shop inspection and performance testing of the equipment according to Division 11 specifications.

1. All equipment shall be subject to shop inspection in accordance with the GENERAL REQUIREMENTS.

2. The INSPECTOR and CITY Control Systems Engineer of Record shall inspect and participate in the shop/factory testing of all panels prior to shipment.

3. For all equipment, obtain and submit the following to the ENGINEER at least 6 weeks before test date for approval:

a. The Manufacturer's factory test procedure, and report forms, and testing schedule prior to equipment testing.
b. Shop testing of the equipment shall be defined as operation of all panels with simulated input/output. The purpose of the shop test shall be to test mechanical, electrical/control, and instrumentation systems. Verify compliance with the Contract Specifications and drawings and intended design function and make any necessary adjustments or repairs prior to shipment. Simulation of faults and trips from the control panel shall be included. If all panels are to be stored at the Prime Contractor's facility, the shop test shall be successfully completed prior to storage. All panels shall not be shipped until they have been successfully shop tested.

B. Field Performance Test and Reports: All equipment shall be performance tested after installation at the field operating site according to Division 11 specifications.

1. Testing shall not start until all preliminary checks and calibrations have been completed, the installation has been certified ready for testing by the Manufacturer's representative, and the test forms and procedures have been approved by the ENGINEER.

2. All test information shall be recorded on forms provided by the CITY or approved by the ENGINEER. If forms are not available from the CITY, prepare test forms and submit for approval prior to the scheduled start of the test.

3. Submit the test procedure for approval prior to the scheduled start of the test.

4. Prepare a field performance test report, including all raw data, and submit the report within 14 calendar days after approved completion of the equipment field test.

1.10 PERSONNEL TRAINING; Refer to General Requirements.

PART 2 -- PRODUCTS

2.1 GENERAL

A. Provide all instrumentation and related wiring as specified on any of the following instrumentations and electrical documents:

1. Instrument Location Drawings, Instrument Index, Instrument Data Sheets, Loop/Logic Diagrams, I/O Tabulation, Loop Description, One-Line Electrical Diagrams, and/or as indicated on any other Contract Document.

2. Indication of required instrumentation work on any of these Contract Documents shall require supply and installation of the instrument and related wiring, supports, accessories and appurtenances, at no additional cost to the CITY.

3. Assume full responsibility to perform all engineering to select, furnish, install, program, test, calibrate, and place into operation all instrumentation, control panels, programmable controllers, and hardware/software interfacing with existing Plant DCS, for a complete and functional system.

B. The monitoring and control system configurations indicated are diagrammatic. The locations of equipment are approximate unless dimensioned. The exact locations and routing of wiring and cables shall be governed by structural conditions and physical interferences and by the location of electrical terminations on equipment. All equipment shall be located and installed so that it will be readily

accessible for operation and maintenance. The CITY reserves the right to require minor changes in location/orientation of equipment prior to roughing in without incurring any additional costs or charges. The Instrumentation Subcontractor shall review the existing site conditions and examine all shop drawings for the various items of equipment in order to determine terminations for all wiring and cables. All deviations from the Drawings or Specifications must be approved in writing by the ENGINEER.

C. All meters, instruments, and other components shall be new and un-used, and the most recent field-proven models marketed by their manufacturers at the time of submittal of the shop drawings unless otherwise specified to match existing equipment.

D. All panel mounted instruments shall have matching style and general appearance. Instruments performing similar functions shall be of the same type, model, or class, and shall be of one manufacturer.

E. All instrumentation shall be rated for operation in the ambient conditions at the equipment installation locations. 316 Stainless Steel NEMA 4X rated enclosures suitable for the environment shall be furnished in all general purpose areas.

F. All instrumentation in hazardous areas shall be approved for use in the particular hazardous classification in which it is to be installed, and shall at a minimum be NEMA 4X.

G. Analog measurements and control signals shall be electrical as indicated herein and shall vary in direct linear proportion to the measured variable, except as otherwise noted. Electrical signals outside control board(s) shall be 4 to 20 milliamperes dc except as noted. Signals within enclosures may be 1-5 volts dc. Dropping resistors shall be installed at all field side terminations in the control panels to ensure loop integrity.

H. All control panels shall be provided with redundant power supplies which are configured in a fault-tolerant manner to prevent:

1. Interruption of service upon failure.

2. Interruption of service necessitated by the replacement of a power supply.

3. All power supplies shall have an excess rated capacity of forty (40) percent.

I. Each signal and control loop shall be individually fused.

J. Equipment or methods requiring redesign of any project details are not acceptable without prior approval of the ENGINEER. Any changes inherent to a proposed alternative shall be at no additional cost to the CITY. The required approval shall be obtained in writing by the Instrumentation and Control System Subcontractor prior to submittal of shop drawings and data. Any proposal for approval of alternative equipment or methods shall include evidence of improved performance, operational advantage and maintenance enhancement over the equipment or method specified or shall include evidence that a specified component is not available. Otherwise, alternative equipment (other than direct, equivalent substitutions) and alternative methods shall not be proposed.

K. All field mounted instruments, control equipment/enclosures mounted outside of protective structures shall be equipped with suitable electrical surge protective/arresting devices to protect the equipment from damage due to electrical transients induced in the interconnecting lines from lightning discharges or nearby electrical devices. Protective devices used on 120V ac inputs to field mounted equipment shall be secondary surge protectors conforming to the requirements of latest IEEE Standard (latest ANSI C62.1), and UL 1449 latest edition.

L. Provide all equipment, material, labor supervision, consumables, scaffolding, for the installation of the instrumentation systems in accordance with the Drawings and Specifications listed herein.

1. Provide field engineering design, as required, for mounting and supporting details of all field mounted components.

2. Provide coordination, as required, between manufacturer's drawings and contract installation drawings.

3. Provide any additional schematic and interconnection diagrams that may be required to facilitate erection or to complete the installation of equipment.

4. Assemble and make interconnection of instruments disconnected for shipping purposes.

5. Remove all temporary supports, bracing or other foreign objects that were installed in instruments, control panels or other equipment to prevent damage during shipping, storage and/or erection.

6. Contractor shall coordinate his work with that of the different trades so that interference between conduit, piping, equipment, architectural and structural work shall be avoided.

7. Install and support all instruments and instrument piping related to this project not installed and supported by others. Furnish all hardware and stands required to mount these items and modify to meet actual site conditions.

8. All piping shall be field measured prior to fabrication/or erection. Any significant discrepancies between drawings and field measurements shall be reported to the ENGINEER. The CITY shall not be responsible for any costs for rework caused by failure to field measure prior to initiating fabrication.

9. Adequately support and protect capillary tubing. All extra tubing shall be carefully coiled, tied, and protected at the instrument.

M. The equipment loop, logic and elementary diagrams are based on non-certified vendor information and indicate minimum scope of supply from the equipment manufacturer. Include additional costs in the bid to add additional instruments, wiring, computer inputs/outputs, controls, conduit, interlocks, electrical hardware and similar items, into the design based on equipment manufacturer's final certified vendor prints. Revise or produce new loop, logic, and elementary diagrams to meet the equipment manufacturer's wiring requirements. Such changes to instrumentation and electrical work shall be incorporated into the scope of work at no additional cost to the CITY.

N. Provide the following:

1. Furnish and install all pneumatic piping/tubing and make connections at control panels, instruments and control valves. All tubing/pipe fittings and instrument valves shall be 316 stainless steel(SS).

2. Provide field engineering and design to install instrument air supply taps and piping/tubing as herein specified.

3. Install adequate support for pneumatic piping/tubing runs in accordance with Drawings and Specifications.

4. Check all air supply branch headers by blowing with clean compressed air before placing in service and check for tightness/leaks.

5. Clean all transmission and control piping/tubing by blowing with dried and filtered air prior to connecting to instrument components.

6. Leak test all pneumatic control circuits and enclosures in accordance with ISA Recommended Practice RP-7.1.

7. Set manufacturer's recommended supply pressure at all instrument air regulators.

8. Installation, wiring, termination, and installation tests for all analog instruments local control panels, Control System Interfaces (CSIs), panels and equipment furnished by the CITY.

2.2 SPARE PARTS

A. See the provisions of Section 01781, Spare Parts, of the GENERAL REQUIREMENTS unless otherwise noted

2.3 CONTROL PANELS

A. General

1. The Instrumentation and Control System Subcontractor shall furnish, supply and install all control panels and enclosures for this project.

2. All panels and enclosures shall be rated NEMA 4X. For hazardous locations they shall be rated NEMA 7 or 9.

3. Dimensions shall be in accordance with manufacturer's requirements. Elevations and horizontal spacing shall be subject to ENGINEER's approval.

3. Furnish, supply and install all control panels for this project. This also covers requirements for local control panels being supplied by the Equipment Manufacturer due to the corrosive environments at wastewater treatment plants, the control panels shall be provided with all required taps, fittings, rotameters, regulators, and when specified alarm interlocks to enable the implementation of an air purge system which is in conformance with ISA-S12.4 Type Z requirements.

4. This Specifications covers the requirements for the fabrication of instrument panel boards, mounting, finishing, piping and wiring of instrument equipment.

5. Front of panel layouts for all control panels shall be submitted to the ENGINEER for review and approval prior to start of fabrication. Refer to other requirements as outlined in Drawings section below.

6. All conduit entries shall utilize Myers hubs or equivalent and shall be made watertight at the point of entry into the cabinet with O-ring or gasket seals. In runs of PVC coated conduits, the hubs shall also be PVC coated in accordance with the conduit manufacturers requirements for fittings and accessories (i.e. Rob Roy Plasti-Bond 2 Red Hot PVC coated Rigid galvanized steel (PVC RGS) or equal.

7. Purge systems shall be provided as defined in the Specifications and Drawings.

B. Mounting of Instruments

1. The panel vendor shall provide cut-outs, and shall mount all instrument items shown or specified to be panel mounted, including any instruments specified to be furnished by other vendors but installed in panel.

2. The panel vendor shall also mount, behind the panels, other instrument accessory items as required and/or specified.

3. Enclosure for all the front panel mounted instruments shall be NEMA 4X rated. Instruments which are not rated NEMA 4X shall be covered with a windowed door to provide overall NEMA 4X rating.

4. Rear of panel mounted equipment shall be installed with due regard to accessibility, commissioning adjustments, servicing requirements and cover removal.

5. Spare space shall be kept clear of wiring, to give maximum space for future additions.

C. Piping Requirements

1. The panels shall be furnished with terminal connections near the top, rear of the panel for all tubing and piping which connect to instruments, valves, instrument air supply and other pressure leads to the panel. Terminal connections for tubing are to be bulkhead tube unions as described below. Those for pipe shall be threaded couplings, plugged for shipping purposes.

2. All tubing, pipe fittings and instrument valves shall be 316 stainless steel (SS).

3. Each terminal connection shall have an engraved metal or plastic plate with a terminal and instrument tag number.

D. Electrical Requirements for Control Panels

1. Furnish and install all the necessary conduit, wireways, switches, and electrical fittings with wire for all circuits to instruments and other panel electrical devices to assure a complete and acceptable installation.

2. Signal and low voltage wiring shall be run separately from power and 120-volt control wiring.

3. Conduit, wireways, junction boxes and fittings shall be installed for all signal/instrument wires. Conduit and wireway runs shall include those required between sensors, indicators, between the thermocouple wireway and junction boxes to instruments.

4. Each terminal connection shall have a plastic plate with a terminal and instrument tag number. All wiring shall be identified with permanent machine printed tubular wire markers.

5. Freestanding panels shall be provided with switched LED (9 WATT) back-of-panel lights with built-in diffuser to prevent bright spots and shadows. One light shall be provided for every 4-feet of panel width and shall be mounted inside and in the top of the back-of-panel area.

6. Freestanding panels shall be provided with a 15-amp, 120-volt, ground fault interrupted

(GFI) service outlet circuit within the back-of-panel area. The circuit shall be provided with three-wire, 120-volt, 15-ampere, duplex receptacles, one for every 4-feet of panel width (two minimum per panel) and spaced evenly along the back-of-panel area.

7. Panels shall be so sized as to adequately dissipate heat generated by equipment mounted in or on the panel.

8. Where panels are mounted outside or in unshaded areas or indoors where ambient temperatures can exceed 80°F or fall below 60°F, they shall be provided with thermostatically controlled heaters that will maintain their inside temperature above 60 °F. Thermostatically controlled refrigeration type air conditioning shall be provided where necessary to prevent overheating of the equipment enclosed.

9. For all control panels, provide heat-load calculations from the cabinet manufacturer for sizing heaters and air conditioners and for setting thermostats. In general, interior cabinet temperatures shall not exceed 80°F and shall not fall below 60°F unless otherwise recommended by the manufacturers of instrumentation and control equipment to be housed in the control panels.

E. Wiring Methods:

1. Wiring methods and materials for all panels shall be in accordance with the N.E.C. requirements for General Purpose (no open wiring), unless otherwise specified. Open wiring in closed cabinet type panels is allowed when specified in the material specifications. Unless otherwise specified by the material specification, design and installation of materials shall conform to the requirements of the latest edition of the following standards and codes as a minimum.

   a. The National Electrical Code

   b. City of Los Angeles Electrical Code

   c. All National Safety Codes

   d. American Petroleum Institute Standard RP-550

   e. Applicable Local Law and Regulations

2. Unless otherwise specified by the material specifications, all instruments, alarm systems and motor controls shall operate on 120 VAC, 60-Hertz and/or 24 VDC circuits.

3. At a location on the top or bottom of the panel, the panel fabricator shall furnish and install terminal block connections for the main power supply entry.

4. Power Supply switches for alarm units shall be three-pole type, arranged to open both the power and alarm circuits. Each annunciator shall be equipped with a separate switch.

5. Instruments located on the same panel section and serving the same process unit may be connected to a common branch circuit from the power supply. The numbers of circuits that depend on the circuit load are as noted in the contract documents. A 15-amp, two-pole circuit breaker shall be provided in each branch circuit. The circuit load shall not exceed 10 amps. Different panel sections or different process units shall not use common branch circuits.

6. When instruments do not come equipped with integral fuses, the panel fabricator shall

furnish and install fuses as required for the protection of individual instruments against fault currents. Fuses shall be mounted on the back of the panel, in DIN rail, fused terminal blocks with knife-blade disconnect switch, blown fuse indicator (LED) and screw terminals for connecting circuit wiring and identified by a service name tag.

7. Where alarm units are single unit types, one switch may be used to disconnect not more than six alarm units located on the same or adjacent panels.

F. Material:

1. Wire for all 120 volt circuits shall be No. 14 AWG stranded with lugs with Type THWN or THHN insulation. All terminals for external wiring connections shall be suitable for wire size Nos. 16 through 12 AWG.

2. Flexible conduit shall not be allowed except when specifically approved by the ENGINEER in writing.

3. Conduit fittings shall be cast metal fittings as specified in the electrical specifications Section 16110, with PVC coating.

4. Splicing of wires in conduits shall not be permitted. All wire terminations/connections shall have crimped wire lugs and shall be landed terminated on strips or blocks in pull boxes or panels.

5. For case grounding, panels shall be furnished with a 1/4" x 1" copper ground bus complete with solderless connectors for one No. 4 AWG bare stranded copper cable. The copper cable shall be furnished and installed and connected to a system ground loop/ground rod.

G. Electrical Locations:

1. When Contract Drawings or Specifications call for thermocouple actuated instruments, the thermocouple lead wire shall be installed, without junction or splicing. The panel vendor shall furnish dedicated empty conduit or wireway running from the instrument(s) to the top or bottom of the panel as called for in the material specifications or as otherwise required. Sizing of the conduit or wireway shall be in accordance with the capacity and number of instrument wires of the instrument(s).

2. Terminal boxes for incoming and outgoing signal leads shall be located at the top or bottom of the panel as specified in the material specification, or as otherwise required.

H. Panel Annunciation

1. Unless otherwise noted, the following color code and inscriptions shall be followed for the lenses of all indicating lights:

STATUS	INSCRIPTION(S)	COLOR
ON	ON	RED
OFF	OFF	GREEN
OPEN	OPEN	RED

CLOSED	CLOSED	GREEN
LOW	LOW	RED
FAIL	FAIL	RED
HIGH	HIGH	RED

2. Lettering shall be black on white and amber lenses. Lettering shall be white on red and green lenses.

3. Unless otherwise noted, the following color codes and inscriptions shall be followed for all pushbuttons:

LABEL / ABBREV.	INSCRIPTION(S)	COLOR
OO	ON / OFF	RED/GREEN
OC	OPEN / CLOSE	RED/GREEN
OCA	OPEN / CLOSE / AUTO	RED/GREEN/BLUE
OOA	ON / OFF / AUTO	RED / GREEN / BLUE

MA	MANUAL / AUTO	AMBER / BLUE
SS	START / STOP	RED / GREEN
E-STOP	EMERGENCY STOP	RED
RESET	RESET	BLACK

All other buttons shall be black. Lettering shall be white on black labels and nameplates.

I. Construction Methods:

1. Materials: Type 316 Stainless Steel shall be standard. Other types may be proposed in writing for use in specific service locations but must be reviewed and approved in writing by the ENGINEER.

   a. Panel section faces shall be #10 gauge minimum thickness, 316 SS for free standing panels and #14 gauge minimum thickness 316 SS for smaller panels. All materials shall be selected for levelness and smoothness.

   b. Relay rack high density type panels shall utilize standard relay racks with 14 gauge 316 SS frame and supports.

   c. Structural Shapes and Strap 316 SS: ASTM A-283.

2. Construction:

   a. All dimensions shall be in accordance with Vendors' requirements and as required in the Contract Documents.

   b. The elevations and horizontal spacing shall be subject to the ENGINEER's approval.

J. Fabrication Requirements:

1. End plates, top plates and top closure panels (to hung ceiling) shall be furnished when required by the material requisition. End plates, top plates and top closure panels shall be removable with countersunk bolts to match panels. Top closure panels shall be furnished in lengths which match the widths of standard panels, except that one top closure panel may extend across two 4-feet 6-inches wide or five 2-feet 0-inches wide standard panels. The vertical joints of these panels shall align with the vertical joints of the standard panels.

2. End closure or rear closure doors shall be provided when specified. Such doors shall be flush fitting and gasketed and be of the hinged lift-off type with lockable door handles. A common key shall be provided for all doors on one panel assembly. Where removable access panels are specified, they shall be furnished with dished handle fasteners. Screwdriver 1/4 turn or Dzus type fasteners are not acceptable. Handles of adequate size, strength and number (provide in pairs with 2 minimum), shall be furnished and installed on each lift-out section to give a lifting effort of not more than 25 pounds per handle based on the weight of the panel section. Handles shall have padded non-slip surfaces for secure gripping to avoid accidents, and shall be large enough size to enable use of workman's gloves and adequate strength that there will be no bending or deformation in use even when sustaining twice the maximum indicated load.

3. The flanged edges of all panels shall be straight and smooth. Corners shall be welded and

ground smooth.

4. The face of the panel shall be true and level after flanging.

5. Panel cut-outs and holes shall be cut or drilled by a method that will not cause deformation, scarring or overheating of the surface. Burrs and sharp edges shall be ground smooth.

6. All seams shall be welded and ground smooth. There shall be no exposed sharp edges on the inside or outside of the enclosure.

7. The cabinet bottom flange for anchoring to the foundation pad shall be rolled (not welded) from the vertical walls of the cabinet and shall run around the entire inside perimeter of the enclosure at the manufacturer's standard width.

8. Adjacent panels shall assemble with faces flush. Gaps or cracks shall not be visible from the front of the assembled instrument board.

9. Stiffeners shall be welded to the back of panels as required to prevent panel deformation due to the weight of panel mounted instruments.

10. Data pocket shall be high impact thermoplastic.

11. Panel doors shall have Heavy duty ¼ turn 3-point latching mechanism constructed of 316L stainless Steel, with nylon rollers at the end of latch rods.

12. Panels shall be self-supporting as defined below.

K. Frameworks and Supports:

1. The rear of each panel section shall have a 316 SS framework assembled to it for supporting conduit, tubing, wireways, switches, air piping and all instrument accessory items such as relay or terminal enclosures, transducers, pressure switches, valves and air relays. The main framework shall be constructed of standard structural shapes. Special shapes such as 316 SS "Unistrut" may be used for secondary supports. Framework must not interfere with instrument connections or access needed for maintenance or adjustments.

2. Two removable lifting lugs shall be provided and shall be designed for moving the fully assembled control panel sections without causing distortion or bending.

L. Preparation of Panel Surface (following shall not apply to 316 stainless Steel):

1. The surface of the panel shall be prepared for finishing in a manner equal to that described below. The entire surface shall comprise the front and rear face of the panel top and bottom, both sides and the edges of all flanges, and the periphery of all holes or cut-outs.

2. All high spots, burrs, and rough spots and sharp edges shall be ground smooth.

3. The surfaces shall be sanded or sandblasted to a smooth, clean bright finish.

4. All traces of oil shall be removed with solvent.

5. The first coat of primer shall be applied immediately.

M. Panel Finishing (does not apply to 316 Stainless Steel):

1. A thin coat of primer shall be applied over the entire panel surface. Minimum dry film thickness of primer coat shall be 1 mil.

2. Wet sand to smooth clear finish and then dry.

3. At least two coats of air-dry, epoxy paint shall be applied over the entire surface. Dry film thickness of lacquer enamel shall be 1 to 2.5 mil. Color to be as approved by the ENGINEER.

4. Supply two one-pint containers of air drying, matching paint for field touch-up of the panel.

N. Instrument Finishing:

1. The final coats applied to painted surface of instrument cases, doors, or bezels which are visible from the front of panels shall be manufacturer's standard unless otherwise specified.

2. Black japan or "crinkle" finishes on instrument cases are not acceptable.

O. Preparation for Shipment and Shipping:

1. All panels shall be crated for shipment using a heavy framework and skids.

2. The panel sections shall further be cushioned satisfactorily to protect the finish of the instruments and panel during shipment.

3. All instruments which are shipped with the panel shall further have suitable shipping stops and cushioning material installed in a manner to protect instrument parts which could be damaged due to mechanical shock during shipment.

4. Each separate panel unit shall be provided with removable lifting lugs to facilitate handling.

5. All shipments shall be by air ride van, unless otherwise specified or approved.

P. Labor and Workmanship:

1. All panels shall be fabricated, piped and wired by fully qualified workers who are properly trained, experienced and supervised.

2. All personnel used on the project shall be subject to CITY approval.

Q. Drawings:

1. Furnish copies of preliminary drawings for approval. These drawings shall include:

a. Complete panel layouts showing all outside dimensions, locations and dimensions of panel cutouts, locations of back of panel stiffeners, and panel face drawings to exact scale.

b. Terminal point locations with coded identification for wiring, and piping connections (includes all pneumatic transmission lines).

c. Back of panel piping.

d. Back of panel wiring, including dimensioned location of connections.

2. Fabrication of panels, piping and wiring shall not proceed without the CITY's written release for fabrication or approval of shop drawings by the ENGINEER.

3. The ENGINEER's requirements for final certified drawings include final approved copies of the above described shop drawings as well as certified drawings of instrument equipment furnished by the panel fabricator.

4. The number of copies of final certified drawings required by the ENGINEER and the required procedure for identification of these drawings are covered by Section 01330, Shop Drawings/Submittals, of the GENERAL REQUIREMENTS.

R. Inspection and Approval:

1. Panel fabricator must carry out the following tests prior to arrival of the ENGINEER and the INSPECTOR for factory testing (FAT):

a. All air lines shall be purged and adequately tested for leaks.

b. All alarm circuits shall be rung out to determine their operability and proper function.

c. All electrical circuits shall be checked for continuity and where applicable, proper function.

d. All nameplates shall be checked for correct spelling and correct size of letters.

e. Perform any/all other tests needed to place the control panel in proper operating condition.

2. Furnish all necessary testing devices and manpower to perform the tests required by the ENGINEER and the INSPECTOR.

3. If the above tests have not been performed and confirmed prior to the arrival of the ENGINEER and the INSPECTOR, the CONTRACTOR shall be liable for back charges by the ENGINEER for the extra time required for the inspection services.

S. Photographs:

1. Fabricator shall furnish two (2) copies of 8 x 10 glossy photographs of the front, rear and all interior wiring and devices of the finished panel for the ENGINEER's record.

2. Additional photographs shall be provided at the ENGINEER's request where needed for proper documentation.

3. Photos shall be taken in digital format and shall be provided to the ENGINEER in both hard copy and digital form.

2.4 GENERAL ENCLOSURE COMPONENTS

A. Signal Isolators, Converters, and Power Supplies: Signal isolators shall be furnished and installed in each measurement and control loop, wherever required, to ensure adjacent component impedance match, or where feedback paths may be generated or to maintain loop integrity when the removal of a component of a loop is required. Signal converters shall be included where required to resolve any

signal level incompatibilities. Signal power supplies shall be as follows, as required by the manufacturer's instrument load characteristics, to ensure enough power to each loop component:

1. Moore Industries;
2. Acromag:
3. Red Lion;
4. Phoenix Contact:
5. Or equal.

B. General Purpose Relays: General purpose relays in the Control Panel (s) shall be plug-in type with 2DPDT contacts rated 10 amperes at 120 VAC. Each relay shall be enclosed in a clear plastic heat and shock resistant dust cover, relays shall also include manual test button, LED status light and hold-down clip. Sockets for relays shall have screw type terminals. Relays shall be:

1. Eaton;
2. Schneider Electric;
3. Allen Bradley;
4. Or equal.

C. Time Delay Relays: Time delay relays shall be pneumatic or electric on-delay or off-delay type, with contacts rated 10-amperes at 120 VAC. Units shall include adjustable dial with graduated scale covering the time range in each case. Time delay relays shall be:

1. Eaton;
2. Schneider Electric;
3. Allen Bradley;
4. Or equal.

D. Interposing/Slave Relays: Additional relays (interposing/slave relays) shall be installed and wired when the number or type of contacts indicated exceed the contact capacity of the specified relays and timers or to isolate field voltages. These relays shall be like general purpose relays as indicated in paragraph “B” above.

E. Circuit Breakers: Circuit breakers shall be single pole, 120 VAC, 15 ampere rating, or as required to protect wires and equipment and mounted inside the panels. Branch circuit breakers in control panels shall be miniature, DIN rail mounted.

F. Nameplates/tag numbers: Nameplates/tag numbers shall be provided for instruments, function titles for each group of instruments, and other components mounted on the front panel(s) as shown.

1. A nameplate and tag number shall be provided for each signal transducer, signal converter, signal isolator, each electronic trip, and the like, mounted inside the panel(s).

2. They shall be descriptive, to define the function and system of such element.

3. Nameplates/tag numbers shall be of the same material as those on the front of the panel(s).

4. The nameplates/tag numbers shall be descriptive to define the equipment tag, function and system.

5. The nameplates/tag numbers shall be, made from phenolic material 1/8-inch thick having a black exterior and white center.

6. Nameplates shall be fastened with stainless steel machine screws, or epoxy adhesive where penetrations to the panel are not permitted by the NEMA rating (i.e. NEMA 4/4X).

7. Tag numbers for instruments and equipment numbers for machinery shall be coded to CITY numbering system**.**

8. Nameplates/Tag numbers shall be fabricated from Laminated plastic**.** Colors, lettering, styles, abbreviations and sizes shall be in conformance with latest ISA-RP-60.6 standard with an intended viewing distance of three (3) to six (6) feet as shown or as selected by the ENGINEER.

9. Instrument tags made of 316 stainless steel shall be provided and installed for all field instruments located:
   a. Outdoors

   b. In underground pipe galleries

   c. In Tunnels

   d. In utility trenches

   e. Within 200 feet of any process area

   The Tags shall be stamped or engraved with the instrument Tag Number shown on the Contract Drawings and shall be attached to the instrument with 316 stainless steel wire.
   Otherwise, the Tags shall be made of engraved laminated plastic material (see Nameplates above) and shall be attached to the instrument with black zip ties guaranteed for sunlight exposure by the manufacturer.

10. Before being produced, submit a list indicating the wording and tag numbering of all equipment identification Nameplates/Tags along with a sample to the Engineer for approval.

    Manufacturers shall be:

    a. Brady

    b. Or equal.

G. Terminal Blocks: Terminal blocks shall be molded plastic with barriers and box lug/compression screw terminals and shall be rated 15 amperes at 600-volts. White marking strips, fastened securely to the molded sections, shall be provided and wire numbers or circuit identifications shall be marked thereon with permanent marking fluid. Terminal blocks shall be:

1. Allen Bradley;

2. Phoenix Contact;

3. Weidmuller**;**

4. Or equal.

H. Totalizer LED: Totalizers (counters) shall be electronic LED type with 7 (minimum) non-resettable digits. Counters shall be approximately 2"h x 2"w x 3"d and shall be suitable for front panel mounting. Character height shall be 0.140 inches minimum. Each electronic counter shall have a standby battery or non-volatile memory capable of maintaining the last totalized value for a minimum of 72 hours after a utility power failure. Totalizers (counters) shall be:

1. Allen Bradley;

2. Schneider Electric;

3. Or equal.

I. Signal Isolator: Signal isolators shall have complete isolation of the input, output and power circuits. Signal input shall be 4-20 mA into 50 ohms maximum; signal output shall be 4-20 mA into 1000 ohms minimum. Power input shall be 120 VAC 60 Hz. Span and zero shall be adjustable; accuracy shall be
±1 percent of span. Units shall be surface, or rack mounted. Signal isolators shall be:

1. Phoenix Contact;

2. Moore Industries.

3. AGM Electric;

4. Or equal.

J. Signal Converter: Signal converters shall have complete isolation of the input, output and power circuits. Signal input shall be 1-5 VDC into a minimum of 5 megohms input impedance. Signal output shall be 4-20 mA into 1000 ohms minimum. Power input shall be 120 VAC 60 Hz. Span and zero shall be adjustable; accuracy shall be ±0.1 percent of span. Units shall be surface, or rack mounted. Signal converters shall be:

1. Phoenix Contact;

2. Moore Industries;

3. AGM Electric.

4. Or equal.

K. Current Alarm Trip (Switches): Current alarm trips shall be single or dual type as shown. Units shall accept voltage or current input signals. Dead bands shall be adjustable over 100 percent of span for single/dual trips. Alarm trips shall be equipped with 10A DPDT contacts. Alarm trips shall include setpoint dials calibrated 0-100 percent for each trip point. Single alarm trips shall include a dead band adjustment dial calibrated 0-100 percent. Alarm trips shall be:

1. Phoenix Contact;

2. Moore Industries;

3. AGM Electric;

4. Or equal.

L. Selector and Pushbutton Switches: Selector and pushbutton switches shall be rated 10-amperes at 600 volts, shall be heavy-duty, oil-tight and shall have the number of positions and poles indicated. Operators shall be nickel or chrome plated. Switches shall be:

1. Allen Bradley;

2. Eaton;

3. Schneider Electric;

4. ABB

5. Or equal.

M. Indicating Lights: Indication lights shall be high-brightness LED, push-to-test type, and shall be NEMA heavy-duty, oil tight. Each light shall have a screwed-on glass prismatic lens approximately one-inch in diameter. Each light shall have a factory-engraved legend plate, as shown on the Drawings. Indicating lights shall be:

1. Allen Bradley;

2. Eaton;

3. Schneider Electric;

4. Or equal.

N. Signal and Control Circuit Wiring:

1. Wire type and sizes: Conductor shall be flexible stranded copper machine tool wire; these shall be UL listed Type MTW and shall be rated 600-volts. Wires for instrument signal circuits and alarm input circuits shall be No. 14 AWG. All other wires, including shielded cables, shall be No. 16 AWG minimum.

2. Analog signal, digital signals and power wiring shall each be run in separate conduits.

3. Wire Insulation Colors: Conductors supplying 120 VAC power on the line side of a disconnecting switch shall have a black insulation for the ungrounded conductor. Grounded circuit conductors shall have white insulation. Insulation for ungrounded 120 VAC control circuit conductors shall be red. All wires energized by a voltage source external to the Control Panel(s) shall have yellow insulation. Insulation for all DC conductors shall be blue.

4. Wire Marking: Each signal, control, alarm, and indicating circuit conductor connected to a given electrical point shall be designated by a single unique number which shall be shown on all shop drawings. These numbers shall be marked on all conductors at every terminal using white numbered wire markers which shall be plastic-coated cloth or shall be permanently machine marked heat-shrink plastic and easily visible and readable. Manufacturers shall be:

a. Brady,

b. Or equal

2.5 EQUIPMENT SPECIFICATIONS

A. Differential Pressure type Flow Transmitter: Differential pressure flow transmitters shall be two wire devices with the following features: continuously adjustable span, zero and damping adjustments, integral indicator scaled in engineering units, square root extraction, solid state circuitry and 4-20 mA output plus HART. The transmitter shall be rated to withstand up to 2000 psig on either side without incurring damage. Accuracy shall be ±0.25 percent of calibrated span. Process wetted materials shall be 316 SS. Body materials shall be 316 SS. Process connections shall be ½" NPT. A five-valve manifold shall be furnished with the transmitter. Unless otherwise specified, the manifold wetted materials shall be the same as specified for the transmitter. The differential pressure flow transmitter shall be:

1. Emerson- Rosemount;

2. Endress+ Hauser;

3. Honeywell,

4. Or equal.

B. Liquid Level Transmitter: The level transducer shall be a flanged, differential pressure sensing unit. The transmitter shall be a two wire device with the following features: continuously adjustable span, zero and damping adjustments, integral indicator scaled in engineering units, solid state circuitry, and 4-20 mA output plus HART. Accuracy shall be ±0.25 percent of span. Process wetted parts shall be 316SS Body and flange shall be 316SS. The flanged process connection shall be ANSI 3 or 4 inch 150 lbs. The level transmitter shall be:

1. Emerson- Rosemount;

2. Endress+ Hauser;

3. Honeywell**;**

4. Or equal.

C. Ultrasonic Level Transmitter: The system shall use ultrasonic ranging to measure the level of liquid and shall consist of a sensor with interconnecting cable and control transmitter unit which can be located up to 600 feet from the sensing unit. Level sensing shall be automatically compensated over the system temperature range of at least 0 to 50 degrees C and shall incorporate non-linear digital filtering and moving average techniques to reduce noise and atmospheric interference. Transmitter shall be microprocessor based. Calibration shall require no reference targets. Accuracy shall be 1 percent or better. In the case of momentary signal loss, relays shall maintain their last state. Output shall be 4 - 20 mA plus HART proportional to the range of level sensing. Ultrasonic transmitter shall also have a minimum of **five** programmable contacts rated at 10 amps and 115 VAC outputs (SPDT each) with adjustable set points and dead bands which can be used for pump control. The ultrasonic unit shall be powered by 120 VAC. Twenty-five feet of transducer to transmitter interconnecting cable shall be provided or as specified in the Instrument Schedule. Ultrasonic unit shall be:

1. Siemens/ Miltronics Hydroranger;

2. ABB;

3. Endress + Houser;

4. Or equal.

D. Bubbler Assemblies: Bubbler air regulating systems shall be furnished as shown including piping, pressure or level gages, shut-off valves, pressure regulating valves, filter, differential pressure regulator, rotameter, level transmitters, and/or pressure switches. For those bubbler systems not receiving plant air, a non-lubricated top end air compressor with receiving tank shall be furnished. The continuous air stream generated is intended to provide a self-purging action for low maintenance operation.

E. Pneumatic Systems: Each assembly shall consist of the electrical, electronic, and pneumatic components defined in the specifications and shown on the drawings. Interconnecting tubing for the low pressure connections shall be ½" stainless steel with stainless steel fittings. The connection from the low pressure connection on each level transmitter shall be piped to a screened breather-drain. Air pressure gages shall be scaled in psig, bubbler tube level gages shall be scaled in inches or feet of W.C. with minor division not to exceed 3" W.C. All level and pressure gages shall have indicating dials that are a minimum of 2.5" in diameter. The purge air flow shall be set by a needle valve and the flow rate shall be indicated on a direct reading rotameter scale. This scale shall be in standard cubic feet per hour (SCFH) units and shall have a scale range of 0.25 to 2.5 SCFH.

F. Pressure Transmitters: Pressure transmitters shall be two wire devices with the following features: continuously adjustable span, zero and damping adjustments, integral indicators scaled in engineering units, solid state circuitry and 4-20 mA output plus HART. The transmitter shall be rated to withstand up to 2000 psig without incurring damage to the transmitter. Accuracy shall be ±0.25 percent of span. Process wetted materials and body shall be 316 SS. Process connections shall be ½" NPT. The transmitter housing shall be rated NEMA 4X plus NEMA 7 or 9 for hazardous locations. Conduit hubs shall be cast integral with the instrument housing and shall be ¾" NPT. Pressure transmitter shall be.

1. Emerson- Rosemount;

2. Endress+ Hauser;

3. Honeywell**;**

4. Or equal.

G. Differential Pressure Transmitter: Differential pressure transmitters shall be two wire devices with the following features: continuously adjustable span, zero and damping adjustments, integral indicator scaled in engineering units, solid state circuitry and 4-20 mA output plus HART. Accuracy shall be ± 0.25 percent of span. Process wetted diaphragm materials shall be as shown on the specification sheets herein. Body materials shall be as shown on the specification sheets herein. Process connections shall be 1/4" or ½" NPT as indicated. The transmitter housing shall be rated NEMA 4X (plus NEMA 7 or 9 for hazardous locations).The differential pressure transmitter shall be:

1. Emerson- Rosemount;

2. Endress+ Hauser;

3. Honeywell**;**

4. Or equal.

H. Level Switch Float Tilt Type: Liquid level switches shall be float actuated type designed for use for wastewater sump control. The float when tilted magnetically actuates hermetically sealed SPDT switch within the unit. Switch rated at minimum of 240 VAC, 10 amps. Switch enclosure shall be the appropriate NEMA rating. Process wetted materials shall be PVC or polypropylene. Liquid level switches shall be:

1. Magnetrol Model T10;

2. Warrick Series 10;

3. Xylem Flygt ELM-10 ;

4. Or equal.

I. Pressure Switches: The pressure switches shall be double-pole, double-throw with adjustable differential range. Minimum differential shall be less than 10 percent of range. Allowable surge pressure shall be 1.5 times range or better. Each pressure switch shall have visible scale and visible contact operation. Pressure switches shall have a contact rating of 10 amperes at 120 volts AC. Pressure switches shall be non-mercury wetted type or snap switches and shall be in NEMA 4X rated enclosures (plus NEMA 7 or 9 for hazardous installations). All pressure switches shall be provided with diaphragm seals. Diaphragm seals shall be provided and included with the pressure switches at the locations shown on the Drawings. Pressure switches shall be:

1. Ashcroft Type 1125A with contacts;

2. Mercoid Series 1000;

3. Or equal.

J. Temperature Switches: Temperature switches shall be either bimetallic or filled system type with three-quarter inch (0.750 inch) NPT thermowell process connection per applicable piping code. Switches shall have SPDT contacts and provided with an adjustable set point. Enclosure shall be rated NEMA 4X plus NEMA 7 or 9 for hazardous environments.

K. Pressure and Vacuum Gages: Pressure gages shall be provided where shown. In all locations where pressure may vary from below to above atmospheric head, compound gages shall be installed.

1. Gage Construction: Gages shall be industrial grade with type 316 stainless steel movement and stainless steel or alloy case or phenol case. Unless otherwise shown or specified, gages shall have a 4-1/2-inch dial, ½-inch threaded connection, a Type 316 stainless steel snubber adapter, and a shut-off valve. Gages shall be calibrated to read in engineering units, with an accuracy of ±1 percent of reading, and shall withstand pressures equal to 150 percent of the rated working pressure or vacuum without failure or damage to the gage. All gages shall be vibration and shock resistant (sealed liquid filled). Pressure gages shall be:

   a. Ashcroft Duraguage;

   b. Ametek 1981

   c. Or equal.

2. Diaphragm Seal: Gages attached to systems involving chemical solutions, corrosive fluids, or other liquids containing one percent or less of solids, shall be equipped with diaphragm seals. For liquid having 1 percent or greater solids content saddle type diaphragm seals shall be used:

   a. Ametek;

   b. Rosemount;

   c. Or equal.

3. Elastomer Diaphragm Seal - For liquids containing solids, pulsating flow: Utilize seals of type 316 stainless steel for liquids having grit, solids or pulsating flows, and for pressures over 1 psi. Use an elastomer diaphragm for pressures of 1 psi and below. All nuts, bolts, fasteners and accessories shall be Type 316 stainless steel. Provide fill connection and valved flush port size 1/4-inch NPT, Gages/Seals shall be capable of disassembly without loss of fill fluid.

4. Installation: All gages and appurtenances shall be installed at the locations shown in the Contract Documents and in accordance with the manufacturer's printed instructions. Care shall be taken to minimize the effect of water hammer or vibrations on the gages. Where indicated or necessary for proper operation, gages shall be mounted independently of vibrating piping or machines and connected to the process with diaphragm seals and flexible capillary tubing.

L. Differential Pressure Gages with Alarm Set points: Differential pressure indicators shall have a six inch dial with differential pressure flow in engineering units. Accuracy shall be ±0.5 percent of full scale. Other requirements shall be like Gages above.

1. Each differential pressure gage (and other device – i.e. transmitters and switches) shall be furnished with a three valve manifold constructed entirely of **316 stainless steel.**

2. Differential pressure gages shall be complete with integral high and low alarm set points as shown on the Contract Documents. Alarm setpoint controls shall have indicating scales and shall be adjustable over the entire scale range. Each alarm output shall be a SPDT dry contact rated at 5 amps at 120 VAC minimum.

3. The enclosure shall be rated NEMA 4X (plus NEMA 7 or 9 for hazardous locations). Gages shall be:

   a. Dwyer Series 3000 with switch;

   b. Or equal.

2.6 ELECTRIC ACTUATORS

A. General: As applicable, see Instrument Data Sheet/s in Attachment C and the Contract Plans and other parts of these Specifications for additional requirements.

B. Equipment Requirements: Where electric motor actuators are shown, an electric motor-operated valve control unit shall be attached to the valve operating mechanism by means of a flanged motor adaptor piece. All electric motor operators shall be capable of operating at any mounting angle and position and shall be modulating or open-close type, multi-turn or ¼-turn as required by the application.

C. Gearing: The motor operator shall include the motor, reduction gearing, reversing starter, torque

switches, and limit switches in a weatherproof NEMA 4X and 6 and IP68 (submersible to 20 ft for 72 hours as a minimum) and other necessary equipment in the assembly. Additionally, comply with NEMA 7, Class 1 DIV 1 / 2 where applicable as indicated on the drawings and/or attached valve schedule or other parts of the Contract Documents. The actuator shall be designed and constructed to not require power to be connected during storage or prior to start-up/ commissioning to protect its interior. The operator shall be a single or double reduction unit consisting of spur or helical gears and worm gearing. The spur or helical gears shall be of hardened alloy steel and the worm gear shall be alloy bronze. All gearing shall be accurately cut with hobbling machines. All power gearing shall be oil lubricated to allow for mounting in ANY position, in a sealed housing. Ball or roller bearings shall be used throughout. Operator output speed changes shall be mechanically possible by removing the motor and changing the exposed or helical gear set ratio without further disassembly of the electric operator. For applications requiring the use of external gearboxes, to match a certain speed and torque, or for quarter-turn installations, all power gearing shall be accurately cut to assure minimum backlash. Nonmetallic, aluminum or cast gearing will not be acceptable. Anti-friction bearings shall be used throughout. Multi-turn applications shall use a heavy-duty bevel gearbox, and quarter-turn actuators shall use a heavy duty worm gearbox.

D. Hammer Blow Operation: The unit shall be so designed that a hammer blow is imparted to the stem nut when opening a closed valve or closing an open valve. The device should allow free movement at the stem nut before imparting the hammer blow, enabling the motor to reach full speed before engaging the stem load.

E. Torque Switches - Travel in the opening and closing directions shall be governed by a switch responsive to mechanical torque developed in seating the valve, or by an obstruction met in opening or closing. The torque switch shall be adjustable and shall function without auxiliary relays or other devices. Torque shall be adjustable from 40-100% of the actuator capacity, and adjustable in 1% increments, non-intrusively (no removal of covers).

F. Position Switches - Four contacts shall be provided which can be selected to indicate any position of the valve with each contact selectable as normally open or normally closed. The contacts shall be rated at 5A, 120V AC, 30V DC. Provision shall be made for 4 additional contacts should they be required or needed for the specified control.

G. Position Indication - The actuator shall provide a local display of the position of the valve and to track and monitor any manual operation of the actuator, even when the power supply is not present. The display shall be able to be rotated in 90° increments to provide easy viewing regardless of actuator mounting position. The local display shall be large enough to be readable from six (6) feet when the actuator is powered up. The actuator shall include a digital position indicator with a display indicating valve position from fully open to fully closed in 1% increments. Red, green, and yellow lights corresponding to Open, Closed, and Intermediate positions shall be included on the actuator.

H. The actuators transformer shall provide 24 VDC or 120 VAC power available for customer use.

I. Jammed valve protection: Torque switch and motor thermal protection shall be provided to prevent motor burn-out. Remote indication of availability/non-availability status of the actuator shall be provided for remote monitoring and control. Monitor relays shall be provided to detect a loss of local three phase or control voltage supply, motor thermostat trip, the local stop button locked off or the selector switch not set to the REMOTE position. Availability of the actuator for remote control shall be indicated by electrical contacts, series connected for all of the above conditions. These contacts shall be connected to a single interposing (monitor) relay integral with the actuator with dry contacts for remote wiring.

J. The remote-control signals shall be 24 VDC or 120 VAC without the need for additional relays.

K. The operator shall be wired in accordance with the schematic diagram and all wiring for external

connections shall be connected to marked terminals. The electric circuit diagram of the actuator shall not vary with valve type remaining identical regardless of whether the valve is to open or close on torque or position limit. Two 1-inch and one 1-1/4 or 1-1/2-inch conduit connections shall be provided in the enclosing case.

L. Handwheel Operation: A handwheel shall be provided for emergency operation engaged when the motor is declutched by a lever or similar means; the drive being restored to power automatically by starting the motor. The hand/auto selection lever shall be padlockable in both in Hand and Auto positions. It shall be possible to select hand operation while the actuator is running or start the actuator motor while the hand/auto selection lever is locked in Hand position without damage to the actuator.

M. The handwheel drive shall be mechanically independent of the motor drive, and any gearing shall be such as to permit emergency manual operation in a reasonable time. Worn or damaged gears shall not prevent manual operation. Clockwise operation of the handwheel shall give closing movement of the valve unless otherwise stated in the Contract specification. Valves mounted higher than 5 feet-6 inches above floor or operating level shall have chain operators and a remote-control station at ground level that performs all of the same functions as the actuator mounted station, and complying with all of the test laboratory, NEMA, and other ratings required for the actuator. Station shall be stand mounted per instrumentation mounting details found in the Contract Drawings.

N. For safety purposes, it shall be possible to disengage the electric drive with the declutch lever. This disengagement and any subsequent reengagement shall not cause any damage to the valve or actuator - even with the motor running.

O. The maximum torque required on the handwheel under the most adverse conditions specified herein shall not exceed 60 ft-lb, and the maximum force required on the rim of the handwheel shall not exceed 60 lb. An arrow and either the word "open" or "close" shall be cast on the handwheel to indicate the direction to turn for manual operation.

P. Motor: The motor shall be of the totally-enclosed, non-ventilated, high-starting torque, low-starting current type for full voltage starting or as otherwise required for modulating service. It shall be suitable for operation on 480-volt, 3-phase, 60-Hz input power, and have Class B insulation, and a motor frame with all dimensions in accordance with the latest revised NEMA Standards. The observed temperature rise by thermometer shall not exceed 55 degrees C above an ambient temperature of 40 degrees C when operating continuously for 15 minutes under full rated load, with a line voltage of not more than 10 percent above or 10 percent below the rated voltage, the motor shall develop full rated torque continuously for 15 minutes without causing the thermal contact protective devices, imbedded in the motor windings to trip or the starter overloads to drop out. All bearings shall be of the ball type and thrust bearings shall be provided where necessary. All bearings shall be provided with suitable seals to confine the lubricant and prevent the entrance of dirt and dust. Motor conduit connections shall be watertight. Motor construction shall incorporate the use of stator and rotor as independent components from the valve operation such that the failure of either item shall not require operator disassembly or gearing replacement. The actuator shall include a device to ensure that the motor runs with the correct rotation for the required direction of valve travel with either phase sequence of the three-phase power supply connected to the actuator. The motor shall be de-energized in the event of stall when attempting to unseat a jammed valve, or if single phasing occurs. Motor temperature shall be sensed by a thermostat to protect against overheating. For On/Off service, this starter shall be an electromechanical type suitable for 60 starts per hour and of a rating appropriate to the motor size. For modulating duty, a solid-state starter shall be supplied that is suitable for up to a maximum of 1,200 starts per hour. Instant reversal of actuator from one direction to another shall be protected by an automatic time delay circuit.

Q. Starter: There shall be furnished and installed in the integral weatherproof housing on the valve

actuator, unless otherwise shown, a suitably sized amperage rated reversing starter with its coils rated for operation on 120-VAC, 1-phase, 60-Hz current. A control power transformer shall be included to provide a 120-VAC source. The starter shall be equipped with 3 overload relays of the automatic reset type (NOTE! Space heaters are not required in properly sealed enclosures, per this revised specification).

R. Operator Appurtenances: The operator for each valve shall be supplied with a push button station with mechanical or electrical lockout device. The pushbutton station enclosure, if separate, shall also be rated for NEMA 4X environments and hazardous duty if needed to meet the arearequirements.

S. Terminal Compartment: A separate terminal compartment which is sealed from the rest of the actuator assembly, shall be provided as part of the actuator housing so that electrical components shall remain sealed (not exposed to the outside environment) during site wiring. The terminal compartment shall be O-ring sealed at the cover and also have an inner watertight and dustproof “O” ring seal between the terminal compartment and the internal electrical elements of the actuator, fully protecting the motor and all other internal components from ingress of moisture and dust when the terminal compartment cover is removed to perform wring on site. Enclosure shall be able to allow for temporary site storage without the need for temporary electrical power supply connection.

T. All external fasteners on the actuator shall be stainless steel and shall be lubricated with anti-seize compound to prevent galling. Threaded covers and other appurtenances shall also be lubricated with anti-seize.

U. Power terminals shall be of the stud type, segregated by an insulating cover. At least three conduit entries shall be provided, threaded with an NPT standard tap with 2/4 inch taper per foot. Fine stranded wire with solderless compression connectors (ring tongue type), shall be used for all electrical connections to the actuator. Terminals for remote controls shall be provided. No external wiring or conduit shall be used for interconnection of components on the actuator.

V. It shall be possible to carry out the setting of the torque, turns, and configuration of the indication contacts via an infra-red setting tool, without opening or removing any electrical compartment covers. Diagnostic information shall be available from both an integrally mounted display window and through non-intrusive means of reading and writing data to the actuator, Two way communication shall be possible to facilitate downloading actuator setup and reading/analyzing the “on board” Data Logger via an IrDA port and non-intrusive hand-held computer/PDA. Diagnostic information from the Data Logger shall include, as a minimum, historical valve torque profiles and an actuator events log that can be stored and analyzed. Provision shall be made to display valve torque demand as a percent of rated actuator torque and position simultaneously, in order to facilitate valve trouble shooting and diagnostics.

W. Closing and opening speeds: The electric actuators and motors shall be sized to close or open the valves at a speed of 12” per minute, unless otherwise shown on the drawings or spec. Startup Kit: Each actuator shall be supplied with a startup kit comprising of installation instructions, electrical wiring diagrams, and enough spare cover screws and seals to compensate for any site losses during the startup/commissioning period.

2.7 PENUMATIC ACTUATORS

A. The pneumatic actuators shall be used to modulate valves/dampers with a positioner. The pneumatic actuator shall have an integral pressure to milliamp transducer/positioner in order to be able to respond to analog signals of 4-20 mADC at 0 to 30 VDC. The actuator material shall be suitable for the environment that it will be operating in as well as requirements described in the attached design documents Contractor shall prepare and submit ISA data sheets to document compliance with specification requirements. All pneumatic tubing of the actuator shall

be 316 SS.

2.8 HYDRAULIC ACTUATORS

Refer to mechanical specifications.

PART 3 -- EXECUTION

3.1 INSTALLATION

A. The Instrumentation Subcontractor shall utilize personnel provided by its assigned organization to accomplish, or oversee the physical installation of all elements, instruments, accessories or assemblies which it furnishes. The Instrumentation Subcontractor shall employ installers who are skilled and experienced in the installation and connection of all elements, instruments, accessories, and assemblies being furnished under this Contract.

B. In summary, it is the general intent of this Contract that all field cabling external to the Local Control panels shall be furnished and installed under provisions of Division 16 Electrical. Further, it is the general intent that all field wiring, i.e., 4-20 mA signal circuits, process equipment control wiring, signal wiring to field instruments, LCPs and PCM input and output wiring, be furnished and installed under Division 16 and be terminated and identified under provisions of Division 17 Instrumentation and Control.

C. The Instrumentation Subcontractor's attention is directed to the electrical and mechanical schematics and details of this project. Referral to these portions of the contract documents shall be required in order to understand the full intent and scope of work required.

3.2 CONTROL PANEL SIGNAL AND CONTROL CIRCUIT WIRING

A. Wiring Installation: All wires shall be run in plastic wireways except (1) field wiring, (2) wiring run between mating blocks in adjacent sections, (3) wiring run from components on a swing-out panel to components on a part of the fixed structure, and (4) wiring run to panel-mounted components. Wiring run from components on a swing-out panel to other components on a fixed panel shall be made up in tied bundles. These bundles shall be tied with nylon wire ties and shall be secured to panels at both sides of the "hinge loop" so that conductors are not strained at the terminals.

B. Wiring run to control devices on the front panels shall be tied together at short intervals with nylon wire ties and secured to the inside face of the panel using adhesive mounts.

C. Wiring to rear terminals on panel-mount instruments shall be run in plastic wireways secured to horizontal brackets run above or below the instruments in about the same plane as the rear of the instruments.

D. Conformance to the above wiring installation requirements shall be reflected by details shown on the shop drawings for the ENGINEER'S review and approval.

E. Wire Marking: Each signal, control, alarm, and indicating circuit conductor connected to a given electrical point shall be designated by a single unique number which shall be shown on all shop drawings. These numbers shall be marked on all conductors at every terminal using white numbered wire markers which shall be plastic-coated cloth, or permanently machine marked heat-shrink plastic and easily visible and readable.

3.3 INSTRUMENT CABLE TESTS

A. General: The following tests shall be performed on each instrumentation and control system cable which is installed under this Contract. All tests shall be end-to-end tests of installed cables with the ends supported in free air, not adjacent to any grounded object. Complete records of all tests shall be made and delivered to the ENGINEER for review and approval.

B. Continuity tests shall be performed by measuring wire/shield loop resistance of each signal cable as the wires, taken one at a time, are shorted to the channel shield. No loop resistance measurement shall vary by more than ±2 ohms from the calculated average loop resistance value.

C. Insulation resistance tests shall be performed by using a 1000 volt Megger for insulations rated 600V or higher and 500 volts Megger for insulations rated 500V or lower. Megohmmeter shall be used to measure the insulation resistance between each conductor , between each conductor and the conductor shield, between individual conductor shields in a multi-channel cable, between each individual conductor shield and the overall cable shield in a multi conductor cable, between each conductor and ground, and between each shield and ground. Values of resistance less than 1 megohms will be unacceptable. For further detail refer to electrical specifications.

3.4 INSTALLATION, CALIBRATION, TESTING, PRECOMMISSIONING, START-UP

A. General: All systems specified in the applicable Sections of Division 17, shall be installed, Connected/terminated, calibrated and tested, and in coordination with the ENGINEER, shall be started to place the plant processes in operation. This shall include final calibration in concert with equipment specified elsewhere in these Contract Documents, including pumps, samplers, valves and chemical feeders. The installation personnel shall have a final reviewed copy of the shop drawings and data.

B. Installation and Connection: Install and connect all field-mounted components and assemblies under the criteria imposed in this Section under "Manufacturer's Representative Services." The installation personnel shall have a final reviewed copy of the shop drawings and data.

1. The instrument process sensing lines and air signal tubing shall, in general, be installed in a similar manner to the installation of conduit specified under Division 16 specifications. Individual tubes shall be run parallel and near the surfaces from which they are supported. Supports shall be used at intervals of not more than 3 feet of rigid tubing.

2. Bends shall be formed with the proper tool and to uniform radii and shall be made without deforming or thinning the walls of the tubing. Ends of tubing shall be square-cut and cleaned before being inserted in the fittings. Bulkhead fittings shall be provided at all panels requiring pipe and/or tubing entries.

3. All instruments and connecting lines shall have allowance made for movement of equipment caused by seismic loading, vibration, or expansion or contraction caused by temperature changes. This shall be demonstrated to the ENGINEER during witnessing of field installation work prior to startup.

4. All accessory items required for installation and proper operation of the equipment shall be provided. Such items may include instrument valves, seal pots pigtails.

5. Lines or connections open to atmosphere shall be protected against ingress of foreign matter.

Unprotected openings shall have a goose neck, or equivalent, attached to protect against falling particles. Bird screen and insect screens shall be installed.

6. Comply with installation detail in the specifications for mounting of the instrument.

7. Verify that all Differential Pressure elements have three valve 316 SS manifolds.

8. All flexible cables and capillary tubing shall be installed in flexible conduits. The lengths shall be enough to withdraw the element for periodic maintenance.

9. All power and signal wires shall be terminated with spade type lugs.

10. All connectors shall be, as a minimum, watertight.

11. All wires shall be mounted clearly with identification tags at both ends that is of a permanent and reusable nature.

12. All wire and cable shall be connected from terminal to terminal without splices unless specifically approved by the ENGINEER and arranged in a neat manner and securely supported in cable groups. All wiring shall be protected from sharp edges and corners.

13. Verify that all mounting stand and bracket materials and workmanship comply with requirements set forth in the specifications and drawings.

14. Provide a technical field representative to instruct the installation personnel on any and all installation requirements; thereafter, the technical field representative shall be readily available by telephone to answer questions and supply clarification when needed by the installation personnel.

15. Finally, after all installation and connection work has been completed, the technical field representative shall check for correctness, verifying polarity of electric power and signal connections, making sure all liquid or pneumatic process connections are free of leaks, and all other similar details. The technical field representative shall certify in writing that for each loop or system checked out, all discrepancies have been corrected by the installation personnel.

16. Bear all costs and provide all personnel, equipment and materials necessary to implement all activities specified herein.

C. Process Connections: Process Connections and root valves shall be located so that they are accessible. Root valves stem and handle shall be installed clear of mainline insulation.

1. Consistent with measuring needs, process connections shall be located to have minimum movement. Therefore, they shall be as close to the system anchor points as possible.

2. For instruments mounted on a local board, the process connection shall be located as close as practical to the board.

3. Process connections in pipelines shall be oriented to avoid gas pockets in the sensing lines for liquid and vapor, and to avoid liquid pockets in the sensing lines for gas.

D. Valves: Root valves shall conform in design to the main-line class. If a globe-pattern root valve is used for pressure ranges of 0-15 psig, or differential pressure ranges of 0-100 inches H_2O, or vacuum service, its stem shall be installed horizontally. All other globe-pattern root valves shall have the stem vertical. All valves shall be full port ball where available.

1. Relief valves shall be installed without isolation valves.

2. To allow isolation of instruments, each instrument, EXCEPT FOR RELIEF VALVES, shall have a shutoff valve that is close to the instrument and is readily accessible. Where the root valve serves this purpose, instrument valves are not required.

3. If the root valve for a test point is not accessible, pipe or tubing shall be added and an instrument valve installed at convenient location.

E. Instruments: Locate locally mounted instruments near the most convenient point of use consistent with good measuring practice and accessibility. Sensing lines shall be as short as practical.

1. When consistent with good measuring practice, local boards or racks may be used to mount instruments that are grouped together because of common locations or related function.

2. Sensing instruments are preferred to be elevated as follows relative to the process connection in order to avoid gas pockets in a liquid-sensing line or liquid pockets in a gas or vapor sensing line:

Fluid	Preferred Instrument Elevation
Liquid	Below Line
Slurry	Below Line
Steam over 20 psia	Below Line
Steam not over 20 psia	Above Line
Gas	Above Line

3. Instruments and local boards shall not block walkways. For use, calibration, and repair, they shall be accessible without requiring instrument disassembly or the removal of piping, grating, or other structure.

4. Instruments shall be 4' - 6" above the floor. Exceptions may be made for seismic supports, for instruments accessibility, or for other factors, but must be approved by the ENGINEER prior to the work being done. Enough lighting shall be provided for night-time use.

5. Instruments shall be protected against shock and vibration. Because of vibration, electro-pneumatic signal converters shall not be mounted on control valves.

6. High temperature, high humidity and other ambient factors must be considered when locating instruments that require access for service.

7. Fluid-filled sensing systems, or "capillary tubes", are sealed to the instrument by the instrument manufacturer and are not repairable in the field. Such systems shall not be opened or cut during or after installation and shall be routed and protected as required to guard against damage. Avoid sharp bends in capillary tubing (i.e. bend radius shall not be less than 10 times the diameter of the capillary tubing). Excess lengths of capillary tubing shall be neatly coiled in a protected area or enclosure, e.g., coiled inside a protective shipping cap for 12-inch pipe.

8. Manufacturer's installation requirements, including those relating to unsupported span and minimum bend-radius of capillary tubing, must be submitted for review and approval by the ENGINEER.

9. All instruments shall have nameplates and tag numbers engraved on tags made of 316

stainless steel and attached with 316 stainless steel wire.

F. Sensing Lines: Sensing lines shall have a continuous slope to promote their being kept either full or free of liquid, as appropriate. The slope shall be one inch, or more, per foot of run. For instruments sensing steam at pressures up to 20 psia, 2 inches per foot of run is required as minimum.

1. If an instrument having a large dynamic displacement, e.g., a U-tube manometer, is in liquid service and is mounted above the main line, the sensing line shall descend for at least 36" close to the process connection and before sloping up to the instrument with the intent of preventing the entrapment of a non-condensable in the sensing line and shall be located below process taps.

2. If a sensing line has a liquid purge, the line shall be arranged so that the purge flow is up. If a gas purge is used into a process liquid, the purge flow shall be down.

3. Low points, except for pigtails, shall have a valved drain connection. Drip or dirt chambers shall be installed where needed. For dirty or freezing services, drain valves shall be a gate or ball type suitable for rod out.

4. High points shall have a vent connection with a manual or automatic vent valve except when the fluid is a non-condensable gas and except for pigtails. Not for U-Tube Manometers.

5. The discharge of bleed connections shall be piped to a safe disposal point if opening the bleed may create a hazard. The outlet of the valve on an atmospheric bleed shall not be plugged or capped, otherwise potentially hazardous pressure buildup may occur downstream of the valve.

6. Process fluids shall not be piped to a control room, or control panel, except instrument air, nitrogen, or other inert gas at pressure not exceeding 150 psig.

7. Dead-end sensing lines shall preferably be not over 50 feet long when using 1/4" O.D. tubing. The tubing diameter shall be increased to **½" O.D.** if a line is over 50 feet long or if the sensing instrument has a large dynamic displacement.

8. Hydrostatic head in a sensing line may affect a measurement. The effect of head shall be considered, particularly for low measuring ranges or low operating pressures.

9. Instruments in steam or vapor service shall have a pigtail or equivalent wet-leg to keep the instrument cool. The pigtail shall be close to the instrument. A wet-leg shall have a filling connection, usually at the top. If the instrument is mounted above the line, it shall be insulated up to the pigtail to minimize refluxing.

10. Use of a condensate pot may be necessary for any measured variable. If used, condensate and seal pots shall be located as close as possible to the process connection.

11. Pulsation dampers, when required, shall be installed close to the instrument, downstream of the instrument block valve.

12. Sensing lines shall be protected against mechanical loads and wear. Otherwise, additional wall thickness shall be required for mechanical strength. Unsupported spans of process and pneumatic tubing shall not exceed 3 feet in length.

13. Expansion bends shall be provided as necessary to allow for movement of supporting structures or change of length due to temperature change.

14. Hot lines shall be covered with insulation for personnel protection.

15. The main-line pipe class shall apply up to the instrument side of the root valve. Beyond that point, the appropriate instrument pipe class shall be used.

G. Fittings: Fittings shall not be used between the process connection and the root valve nor for pipe on the process side of condensate or seal pots, except that displacement and float-type level instruments are normally installed using pipe fittings.

1. So far as practical, bends rather than fittings shall be used to change the direction of a run of tubing or pipe. The minimum bending radius for cold-bending of tubing shall be three times the outside diameter of tubing. .

2. The ferrule of a flareless tube fitting shall be harder than the tube on which it is used.

3. Lubricant and sealant compounds shall be used as required by the city and equipment suppliers.

4. Where a detail specifies a size and type of fitting, a combination of fittings of other sizes but of the same or equivalent type giving the same or better overall effect may be substituted for convenience or if the desired part is not available. Flareless or threaded connections may not be used where weld connections are required. Where a ½" socket-weld fitting is required, a pipe 1/2" tube socket-weld fitting plus a 1/2" x 3/8" tube socket-weld fitting may be substituted. A flareless-end valve may be substituted for a threaded valve with flareless connectors, or vice versa. A weld fitting may replace a threaded or flareless fitting unless maintenance access will require the ability to make and break the connection. Each substitution shall require written approval of the ENGINEER.

5. Welding shall conform to project requirements.

H. Instrument Installation Notes - Flow: Condensate pots are not required for a sensing element, e.g., a force balance flow transmitter, which has negligible dynamic displacement. If displacement is not negligible, as for a U-tube manometer, and if the process fluid is either steam, other condensable fluid, water hotter than 250 Deg. F, other fluid that may flash, or moisture laden air then condensate pots shall be used. The pots shall have a volume not less than three times the displaced volume.

1. A pair of condensate pots shall be at the same elevation and as high as, or higher than, the higher process connection.

2. The pipe from a process connection to a condensate pot shall be insulated for process fluids hotter than 250 Deg. F.

3. A pair of head-type sensing lines shall be run together to the maximum extent practical so as to keep both lines at the same temperature. If they are to be insulated, they shall be insulated together.

4. Head-type sensing lines shall be checked to make sure that they are connected to the proper sides, HP and LP, of the instrument.

5. The edges of the holes for orifice taps shall be square or slightly rounded, clean, and free

from burrs, wire edges, or other irregularities.

6. For all Differential Pressure type elements, use a 316 SS five valve manifold.

7. Flow meter Installation Criteria: The following table lists the straight pipe run requirement upstream and downstream of each type of meter in terms of the number of required pipe diameters.

TYPE	UPSTREAM	DOWNSTREAM
Orifice plates	20	5
Venturi Tubes	20	5
Pitot Tubes	40	10
Propeller Meters	15	4
Ultrasonic Meters	10	5
Magnetic Meters	5	3

I. Instrument Installation Notes - Level: The lower connection on a vessel for piping to a level instrument is preferred to be on the side of the vessel rather than to come vertically down from the bottom. The intent is to minimize the trapping of solids in the sensing lines.

1. Head-type level instruments shall be located below the process connections on the vessel unless a gas purge is used, in which case the instruments may be located at any convenient elevation.

2. A stilling well shall be used in all cases to reduce the turbulence for displacement type elements located inside a vessel. A well may be required to protect a bubble tube against excessive turbulence.

3. So far as practical, level devices shall be placed away from areas of turbulence and shall not interfere with other vessel parts or instruments, such as thermowells or sample nozzles that may be required.

4. Stilling wells and bubble tubes shall be firmly supported. Head room shall be provided to permit withdrawing the tubes for cleaning and maintenance.

5. Gage glasses and their associated level instruments shall be installed adjacent to each other. The gage glasses and the other instruments shall be visible from a walkway.

6. External-chamber level instruments shall be installed with main-line-class pipe. Gate valves shall be used for root valves and other shutoff valves for these instruments, except that the manufacturer's standard pattern may be used for gage-glass valves.

7. An external-chamber instrument or a differential-pressure-type instrument used to measure level in a vessel that is open to atmosphere may have one of its input connections, as appropriate, open to atmosphere instead of being connected to the vessel. An external-chamber instrument thus installed may require additional bracing.

8. A pair of sensing lines for head-type level measurement shall have an equalizing manifold with bleed valves. Because of support problems, commercial manifold assemblies having flanged outlets shall not be used in seismic applications. In other applications, their use is not recommended for the same reason.

9. The usual level-instrument connections on vessels are:

Head-type instruments:	
Piped	3/4"
Flanged-mounted	3"
Float or Displacement-type Switches	1-
1/2" Displacement-type Transmitters and Controllers:	
External	1-1/2" or 2"
Internal	4"
Multi-instrument standpipes	3"

10. Displacement and float-type level instruments shall be placed as close as possible to the vessel to improve response. If any external-chamber instrument or a standpipe unavoidably cannot be located close to the vessel, the size of the connecting pipes shall be enlarged to facilitate the transfer of liquid on level changes, thereby reducing the loss of response caused by the long sensing and equalizing lines. The ENGINEER shall review and approve such installation.

J. Instrument Installation Notes - Pressure Differential: Condensate pots are not required for a sensing element, e.g., a force-balance transmitter that has negligible dynamic displacement. If displacement is not negligible as for a U-tube manometer, and if the process fluid is either steam, other condensable fluid, water hotter than 250°F, or other fluid that may flash, then condensate pots shall be used. The pots shall have a volume not less than three times the displaced volume.

1. A pair differential-pressure sensing lines shall be run together to the maximum extent practical to keep both lines at the same temperature. If they are to be insulated, they shall be insulated together.

2. A pair of condensate pots must be at the same elevation and as high or higher than the higher process connection.

3. The pipe from a process connection to a condensate pot shall be insulated for process fluids hotter than 250°F.

4. The differential-pressure sensing lines shall be checked to make sure that they are connected to the proper sides, HP and LP, of the instrument.

5. A pair of differential-pressure sensing lines shall have an equalizing manifold with bleed valves. Because of support problems, commercial manifold assemblies having flanged outlets shall not be used in seismic applications. In other applications, their use is not recommended for the same reason.

K. Installation – Pressure gauges; All gages and appurtenances shall be installed at the locations shown in the Contract Documents and in accordance with the manufacturer's printed instructions.

1. Care shall be taken to minimize the effect of water hammer or vibrations on gages. Gages shall be filled with oil.

2. Where indicated or necessary for proper operation, gages shall be mounted independently of vibrating piping or machines, and connected to the process with diaphragm seals, snubbers, and flexible capillary tubing.

L. Instrument Installation Notes - Pneumatic: Air supply headers shall be sized as noted on the P&ID. Air-supply branch taps shall come off the top of the header but may come off the side if necessary.

1. Lines for air that is not dry shall be sloped. Dry air lines shall be sloped where possible. Low points shall have drain connections. Air header drains shall be 1/2" size.

2. Branch isolation valves shall be installed as required to reduce interdependence of branches and to facilitate maintenance.

3 Each pneumatic instrument shall have a local 5-Micron air filter, which may be part of an air set if the supply pressure is required to be reduced. When pressure is reduced for an instrument, a relief valve, which may be integral with the reducing regulator in an air set is generally required. The regulator shall be provided with a small output-pressure gage if the instrument does not have a supply-pressure gage.

4. Lubricated air may be required for certain piston actuators or other devices But shall not be used for any other pneumatic devices. If necessary, use a local lubricator.

M. Instrument Installation Notes - Temperature: Non-standard wells are not allowed to be connected to the process pipe or vessel. It is necessary to make sure that there is internal clearance for insertion and that no excessive obstruction to flow is created.

1. Direct-connected readout instruments, e.g., thermometers or indicating transmitters, shall be located near the most convenient point of use consistent with good measuring practice.

2. Filled-system temperature instruments shall follow the manufacturer's limitations, if any, regarding (a) relative elevations of bulb and measuring instrument, and (b) ambient temperatures.

3. Pressure and Temperature instruments shall be installed to minimize exposure to shock, vibration, and radioactivity, and to avoid temperature extremes.

4. Instruments shall not block walkways. For use, calibration, and repair, they shall be accessible without requiring instrument disassembly or the removal of piping, grating, or other structure.

5. Where a pipe is reduced or enlarged for a temperature connection, consideration shall be given to the orientation of the pipe and the possibility of the change of pipe size causing high- or low-point pockets that may affect the measurement by entrapment of material or that may accumulate a radioactive substance.

6. Temperature connections shall be located to provide external clearance for insertion and removal of their sensing elements.

7. The materials and pressure-temperature ratings of pipe fittings used for temperature connections shall conform to the applicable pipe class.

8. Welding shall conform to project requirements.

9. A temperature-well connection to a pipe, which is made by weld-attachment of a fitting or nozzle, shall be drilled to have a hole approximately the same size as the inside

diameter of the fitting or nozzle. The intent is to provide clearance for insertion of the well and to minimize the entrapping of fluid.

10. For threaded connections of stainless steel to stainless steel, lubrication is required to prevent seizing and galling.

11. Filled-system temperature elements shall be sealed to the instrument by the instrument manufacturer and are not repairable in the field. Filled systems shall not be opened or cut during installation and shall be routed and protected as required to guard against damage. Excess lengths of capillary tubing for filled systems shall be neatly coiled in a protected area or enclosure, e.g., coiled inside a protective shipping cap for 12 inch pipe, preferably avoiding ambient temperature extremes.

12. Manufacturer's installation requirements, including those relating to unsupported span and minimum bend-radius of capillary tubing, shall be followed.

N. Calibration: Analog instrumentation and control system equipment shall be calibrated and tested after installation to verify that control system requirements are satisfied.

1. The Instrumentation Subcontractor shall provide all necessary labor, tools, and equipment to calibrate and test each instrument in accordance with the manufacturer's specifications and instructions.

2. Each instrument shall be calibrated at a minimum of five points using test equipment to simulate inputs and read outputs. A fewer number of calibration steps may be used for selected instruments if prior written approval has been obtained from the ENGINEER.

3. All test equipment and instruments used to simulate inputs and read outputs shall be suitable for the purpose intended and shall have a current calibration record certified to an accuracy greater than that required for the instrument under test. Such test equipment shall have accuracy traceable to the National Bureau of Standards as applicable. All analog instruments shall be calibrated and tested in place without removal.

4. All test data shall be entered on test forms that verify compliance with all applicable contract accuracy requirements, instrument manufacturer published performance specifications, and permissible tolerances at each point of calibration.

5. A report shall be delivered to the ENGINEER for each instrument, certifying that the instrument has been calibrated, in the presence of the ENGINEER or the ENGINEER's designated representative and meets contract and system requirements. The report shall include but not be limited to pertinent manufacturers name plate data, units span setting, any error in percent at each test point, switch and alarm set points, valve stroking and controller balancing information.

O. Analog/Digital Loop Tests: The Instrumentation and Control System Subcontractor shall provide all necessary labor, tools, and equipment to field test, inspect and adjust each instrument installed under this contract to its specified performance requirement in accordance with manufacturer's specifications and instructions. Any instrument furnished by the Instrumentation and Control System Subcontractor which fails to meet any Contract requirement, or any published manufacturer performance specification for functional and operational parameters, shall be repaired or replaced, by Instrumentation Subcontractor at no cost to the CITY. The Instrumentation and Control System Subcontractor shall bear all costs and provide all personnel, equipment and materials necessary to implement all installation tests and inspection activities specified herein.

1. At least 15 days before the anticipated initiation of installation testing, the Instrumentation and Control System Subcontractor shall submit to the ENGINEER a detailed description, in duplicate, of the installation tests to be conducted to demonstrate the correct installation of the instrumentation and control system and the anticipated dates the testing will occur.

2. Elements such as controllers, electronic function modules, shall be tested and exercised by the Instrumentation Subcontractor to demonstrate correct operation, first individually and then collectively as functional analog networks. Each hardwired analog control network shall be tested to verify proper performance within specified accuracy tolerances. Specified accuracy tolerances for each analog network shall be defined as the root-mean-square (RMS) summation of individual component accuracy requirements. Individual component accuracy requirements shall be as specified by contract requirements or by published manufacturer accuracy specifications, whenever contract accuracy requirements are not specified.

3. Each analog network shall be tested by applying simulated analog/digital and/or discrete inputs to the first element(s) of an analog/digital network (i.e., applying simulated analog and/or discrete signals to element(s) of the network; e.g., controllers, alarms, indicators, valve operators). For networks which incorporate analog elements, simulated sensor inputs corresponding to 10 percent, 50 percent, and 90 percent of span shall be applied, and the resulting element outputs read to verify compliance to calculated root-mean-square- summation accuracy tolerance requirements. Continuously variable analog inputs shall be applied to verify the proper operation and setting off discrete devices (i.e., alarms). Provisional settings shall be made on controllers, alarms, during analog loop tests. All analog loop test data shall be recorded on test forms, which include calculated root-mean-square-summation system accuracy tolerance requirements for each output.

4. Air systems shall be tested for leaks in compliance with ISA RP7.1. When installation tests have been successfully completed for all individual instruments and all separate analog control networks, a certified copy of all test forms signed by the ENGINEER or the ENGINEER's representative as a witness, with test data entered, shall be furnished to the CITY together with an unequivocal statement that all instrumentation has been successfully calibrated, inspected, and tested.

5. Digital loops shall be tested for loop integrity and on/off function.

P. System Pre-commissioning: The Instrumentation and Control System Subcontractor shall submit an instrumentation and control system Pre-commissioning Completion Report, which shall state that all Contract requirements have been met and shall include a listing of all instrumentation and control system maintenance/repair activities conducted during the pre-commissioning testing. Acceptance of the instrumentation and control system pre- commissioning testing must be provided in writing by the engineer before the seven day operational testing may begin. Pre-commissioning shall commence after acceptance of all wire, calibration and loop tests, and all inspections have demonstrated instrumentation and control system compliance with all contract requirements. Pre-commissioning shall demonstrate proper operation of all systems under this Contract with process equipment operating over full operating ranges under actual operating conditions.

1. All pre-commissioning and test activities shall follow detailed test procedures, check lists previously developed by the Instrumentation and Control System Subcontractor and reviewed and accepted by the ENGINEER. All test data shall be acquired using equipment as specified and recorded on test forms, previously reviewed by the ENGINEER, which include calculated tolerance limits for each step. Completion of all system pre-commissioning and test activities shall be documented by a certified report, including all test forms with test data entered, delivered to the ENGINEER with a clear and unequivocal statement that all system pre-commissioning and test requirements have been satisfied.

2. Proper operation of all final control elements, control panels and instrumentation furnished under this Contract shall be verified by tests specified herein. Where feasible, system pre-commissioning activities shall, to the greatest extent possible, simulate normal final control element operating conditions in terms of applied process loads, operating ranges and environmental conditions (e.g. using water). Final control elements, control panels, and ancillary equipment shall be tested under start-up and steady-state operating conditions to verify that proper and stable control is achieved using motor control center and local field mounted control circuits. All hardwired and software control circuit interlocks and alarms shall be operational. The control of final control elements and ancillary equipment shall be tested using both manual and automatic (where provided) control circuits. The stable steady-state operation of final control elements running under the control of field mounted automatic analog controllers or software based controllers shall be assured by adjusting the controllers, as required, to eliminate oscillatory final control element operation. Transient stability of final control elements operating under the control of field mounted, and software based automatic analog controllers shall be verified by applying control signal disturbances, monitoring the amplitude and decay rate of control parameter oscillations (if any) and making necessary controller adjustments, as required, to eliminate excessive oscillatory amplitudes and decay rates.

3. All electronic control stations incorporating proportional, integral and/or differential control circuits shall be optimally tuned, experimentally, by applying control signal disturbances and adjusting the gain, reset and/or rate setting(s) as required to achieve a proper response. Measured final control element variable position/speed setpoint settings shall be compared to measured final control element position/speed values at 25 percent, 50 percent, 75 percent and 100 percent of span and the results checked against specified accuracy tolerances. Specified accuracy tolerances are defined as the root-mean-square-summation of individual component accuracy requirements. Individual component accuracy requirements shall be as specified in the Contract or as specified by published manufacturer accuracy specifications whenever Contract accuracy requirements are not specified.

Q. 30-Day Operational Testing: The Instrumentation and Control System Subcontractor shall provide start-up support to include the Instrumentation and Control System Subcontractor's personnel, electrical personnel, and any instrument manufacturers' representatives as required during the testing period to produce a fully operational system. This support shall be provided at no additional cost to the CITY.

R. Record Drawings: Keep current an approved set of complete loop and schematic diagrams which shall include all field and panel wiring, piping/tubing runs, routing, mounting details, point-to-point diagrams with cable, wire, tube and termination numbers. These drawings shall include all instruments and instrument elements for the complete instrument loop as furnished under Divisions 11, 13, 15, 16 and 17 of this Contract. Drawings shall be a record of work as actually constructed and shall be prepared and submitted as specified in the GENERAL REQUIREMENTS.

3.5 INSTRUMENT LOOP DESCRIPTION -- SEE LOOP DESCRIPTIONS in the drawings.

3.6 INSTRUMENT AND I/O SUMMARIES - SEE INSTRUMENT SUMMARY, included in the drawings.

A. General: An Instrument and I/O Summary has been compiled for most instruments specified to be furnished under this contract.

B. This index is intended to complement the plans and specifications and shall not be construed as representing a complete itemization of instruments specified to be furnished under this contract. Instruments not presently included in the index, but which can be inferred from the Contract Documents and/or are required elsewhere herein shall be included and incorporated into the

instrument and I/O summary.

3.7 INSTRUMENT DATA SHEETS - Contractor shall prepare and submit instrument data sheets for instruments specified to be furnished under this project. Data sheets are intended to complement the Instrument and I/O Summary, plans and specifications.

3.8 CALIBRATION FORMS – Contractor shall prepare and submit calibration forms for instruments specified to be furnished under this contract.

END OF SECTION

SECTION 17450
SCADA, PLCS, NETWORK AND COMMUNICATIONS

PART 1 -- GENERAL

1.1 THE REQUIREMENT

A. This section specifies requirements for PLCs, SCADA, networks, and data communications shown on the drawings.

B. The Contractor shall furnish, install, configure, test, and document, all copper and fiber-optic communications network systems, including cables, switches, firewalls, software, and software licenses. The work includes accessories and appurtenances needed to provide reliable communications systems, as specified.

C. Operator HMIs

1. The System Integrator shall create an overview display for the stormwater diversion system at the new Honeywell, or equal, HMI (in LCP-01) attached to the new ControlEdge PLC. Display screens to include alarms, trending, and provide gate control.

2. Venice pump station will monitor the PLC, via the new EPL connection. As part of the scope of this project, the LCP-01 HMI displays will be replicated on the Venice station's new Honeywell, or equal, DCS. The Contractor will provide an Allowance for Honeywell to perform Venice configuration and testing.

D. The Ethernet Private Line (EPL) communications will be provided between LCP-01 and Venice Pump Station. The Contractor to coordinate with the City to arrange installation and testing of the EPL communications line and mounting of the Service Provider's EPL modem/router and associated fiber-optic patch panel.

E. SCADA configuration at Venice Pump Station

1. Contractor and System Integrator shall coordinate with City and Honeywell, or equal, control system staff for implementation of control strategies, graphic user interface screens, alarming, reports, and communication connectivity.

2. Contractor and System Integrator shall lead a minimum of two (2) workshops with City to coordinate PLC and HMI approaches and interface requirements.

3. Contractor and System Integrator shall lead a minimum of two (2) field testing sessions to verify stormwater diversion controls and displays at Venice Pump Station.

1.2 RELATED WORK SPECIFIED ELSEWHERE

A. Other Sections of the Specifications, not referenced below, shall also apply to the extent required for proper performance of the WORK of this Section.

1. All Division 16000 Sections.

2. Section 17400 Process Instrumentation and Controls.

1.3 REFERENCE SPECIFICATIONS, CODES AND STANDARDS

A. The following documents referenced shall mean:

1. EIA Electronics Industry Alliance

2. TIA Telecommunications Industry Association

3. NEC National Electric Code. NFPA 70

4. NECA National Electrical Contractors Association

B. Comply with the applicable provisions of the latest edition of the following standards for design, materials, installation, and testing:

1. TIA/EIA-568-B Telecommunications Cabling Standard.

2. ANSI/ ICEA S-83-596 Optical Fiber Premise Distribution Cable.

3. ANSI/ ICEA S-87-640 Optical Fiber Outside Plant Communications Cable.

4. ANSI/ NECA 301 Standard for Installing and Testing Fiber Optic Cable.

5. TIA/ EIA-526-7 Measurement of Optical Power Loss of Installed Single Mode Fiber.

6. Bellcore GR-20-Core Generic Requirements for Optical Fiber and Optical Fiber Cable.

7. TIA/ EIA 568-B Telecommunications Cabling Standard.

1.4 SUBMITTALS

A. See submittal requirements of Section 17400 “Process Instrumentation and Control”.

B. Furnish submittals including shop drawings, product literature and datasheets,

C. Network and communications test plans: Submit a detailed test plan including the following:

1. Media to be verified and test methodology.

2. Test equipment to be used with calibration certificate.

3. Testing Procedures.

4. Network diagrams.

D. Control Systems testing procedure. See Section 17400.

E. The Shop Drawings: The shop drawings shall include a full description of the PLC system, including documentation of operation theory, programming methods, i.e. ladder logic diagram (All contacts, coils, timers, latches and each section of the ladder shall be clearly annotated and defined. The annotation of each of the input contacts representing a field device shall clearly define the status of the device.), data codes and security features, maintenance and trouble-shooting information. Schematics of all cards or units within the system along with point-to-point wiring diagrams shall be furnished after award of contract.

1. The documentation shall, also, provide a sequential flow chart of the logic implemented. The format of the flow chart and the annotation shall be proposed for acceptance by the ENGINEER before implementation.

2. Two sets of the program and documentation shall be forwarded for review and comments at least 30 days before factory test.

3. Control system architecture and interconnection cabling diagrams for the complete system. Include each cable fiber and copper network cable connection.

F. Product Data

1. Manufacturers brochures with proposed materials and options clearly marked.

2. Data sheets, including catalog numbers with code for determining catalog number code. Include data sheets for all cabinet components, instruments, cables, Ethernet switches, firewalls, and cable management.

3. Manufacturer’s installation instructions for equipment proposed.

4. Submit results of an un-witnessed test performed prior to the witnessed test. Any deficiencies found are to be noted and corrected before the witnessed test. Unwitnessed Test Results together with any re-testing, to be signed by Contractor as being correct.

G. Test Report results: Submit a hardcopy report for approval by the Engineer:

H. O&M Manual: Include in the submitted O&M Manual the following as a minimum:

1. Manufacturers network device data sheets and installation instructions.

2. System Network Diagram showing device model numbers and network addresses.

3. Documentation of all final device configuration settings, IP addresses and passwords.

1.5 QUALITY ASSURANCE

A. Training: A manufacturer's representative shall supply 40 hours of on-site training if required, for CITY personnel. The training shall include, but not be restricted to, operation of programming unit, trouble shooting of system hardware, software, and program development.

B. Communications system installer qualifications: The communications system installer shall:

1. Demonstrate direct experience with installation and testing of communications systems on at least two similar recent projects in the last three years.

2. Utilize qualified, experienced personnel, familiar with the design, installation, and configuration of communications systems.

3. Provide special tools and equipment needed for the installation and testing of the communications system, including but not limited to tools for terminating and testing copper/fiber-optic cables, jack stands for cable reels or cable winches, and OTDR testing

1.6 COMMUNICATIONS WITH VENICE PUMP STATION

A. The Contractor to coordinate with the City of LA and the selected Ethernet Private Line (EPL) Service Provider, to install and test the communications link to Venice Pump Station.

B. The Contractor shall install the Service Providers modem and fiber-optic patch panel in the Local Control Panel (LCP-01).

C. The Contractor to coordinate with Honeywell, or equal and the Engineer/ City to provide PLC register data to allow proper configuration of the SCADA screens at Venice Pump Station and testing of the communications link to the station.

D. The City’s Information Technology Agency (ITA) is responsible for selecting and contract with the EPL Service provider to establish the communications link.

PART 2 -- PRODUCTS

2.1 PROGRAMMABLE LOGIC CONTROLLER HARDWARE

A. PLC hardware shall be Honeywell, or equal – ControlEdge 900 platform, no equal, and provide the following features:

1. All PLC components, including power supplies, racks, CPUs, memory, I/O modules and cables shall be standardized to minimize the spare parts inventory and maximize interchangeability, and to conform to the City's LAWINS Standards.

2. All I/O modules shall be installed with appropriate type and size of Remote Termination Cables (RTP) and associated RTP module for field wiring terminations.

3. All CPUs shall have 16MBIts non-volatile memory for retention of key programming.

4. Each PLC shall have the ability to provide 4GBits of Dynamic memory capacity (RAM) and 2GBits of Program memory capacity (Flash)

5. Each PLC shall have the ability to operate in redundant or non-redundant modes and shall have the capability of a maximum of thirty-one (31) I/O bases and 372 Slots.

6. Each PLC shall be provided with redundant power supplies and shall be sized as required for I/O and field requirements. Power supplies shall provide a minimum of 5VDC @ 3.0A and 24VDC @ .6A. Power supply shall be Honeywell, or equal, 900P01-0101.

7. Input power: 120VAC, 60Hz

B. PLC Hardware shall be:

Honeywell, or equal, ControlEdge PLC Hardware		
Part Number	**Manufacturer**	**Description**
900CP1-0200	Honeywell or Equal	Control Processor Module (CPM), ControlEdge 900
900SP1-0200	Honeywell or Equal	Expansion Processor Module (EPM), ControlEdge 900
900R12-0200	Honeywell or Equal	12 I/0 Slot Rack
900P01-0301	Honeywell or Equal	120/240 VAC. 60W Rack Power Supply
900G32-0101	Honeywell or Equal	Digital Input, 24 VDC, 32 Channel
900H32-0102	Honeywell or Equal	Digital Output, 24 VDC, 32 Channel
900A16-0103	Honeywell or Equal	Analog Input High Level, 16 Channel
900B01-0301	Honeywell or Equal	Analog Output, 0 to 20 mA, 4 Channel
900TCK-0200	Honeywell or Equal	Digital I /0 - A/I - Terminal Block
900TEK-0200	Honeywell or Equal	Analog Output - Terminal Block
900TNF-0200	Honeywell or Equal	Filler Block Cover, Spare I/0 Slot

1. PLC I/O modules shall be Honeywell, or equal, Universal Input/Output Module (900U01-0100), or equal.

2. Interposing relays shall be provided for all relay outputs

2.2 HUMAN MACHINE INTERFACE HARDWARE (HMI-100)

A. The Where required, panel mounted HMI shall be Honeywell, Model HC 900 family, or equal.

B. The panel mounted HMIs shall have a keypad and touch-screen, including dedicated membrane keyboard to access up to 80 preformatted graphic displays.

C. The display screen shall be a minimum of 10.4” LCD color screen.

D. The HMI shall be capable of communicating with the PLC via an Ethernet TCP/IP or Modbus TCP connection.

E. Input power: 120VAC, 60Hz via 24VDC Power Supply.

2.3 PLC AND HMI PROGRAMMING DEVELOPMENT SOFTWARE

A. The PLC programming software shall be Honeywell, or equal, ControlEdge Builder– Latest Revision

1. The PLC programming software version for the PLCs shall be certified to run on the latest version of Microsoft Windows.

2. The PLC programming software shall comply with the International IEC 61131-3 standard and support Ladder Diagram, Sequential Function Chart and Structured Text programming language formats.

B. The HMI programming software shall be Honeywell MasterLogic ”Station Designer” for HC 900 family, or equal – Latest Revision

1. The HMI programming software version shall be certified to run on the latest Microsoft Windows platform.

2. The HMI programming software shall be capable of directly accessing tag information in the PLC by using the tag name, and not the memory address.

2.4 PLC APPLICATION OF SOFTWARE DESIGN CRITERIA

A. PLC Program Design:

1. CONTRACTOR shall organize the PLC application software into:

a. Sections

1). Contains all sequential control logic for a specific unit of operation

2). Each section consists of a general logic subsections, followed by unit operation subsections.

b. Subsections: Contains all sequential control logic for specific equipment such as a pump, valve or loop.

2. Program Documentation

a. Note and describe start of a new program section.

b. Annotate the PLC program

c. Briefly describe the control objectives.

d. Identify subsections
e. Subsection documentation includes brief description of control objective followed by a description and tag of the equipment being controlled

f. CONTRACTOR shall provide an, internal or external, organizational index for PLC application software that can be used to quickly search and locate a specific section, such as:

1). Flow, pressure and other process variable monitoring

2). Control valve or VFD PID control

3). Unit pump control

4). Unit blower control

5). Alarms

6). Data communications

7). System time-synchronization

8). PLC program initialization

g. The PLC program shall be able to initialize and bring a PLC unit from an inactive condition (e.g., power failure or hardware reset) to a state of operational readiness. Initialization shall include determination of system status prior to start-up of the operating system software and application software. Initialization shall also include the loading of all memory resident software, operator-entered setpoints, timers, counters, queues and all dynamic database values. For example, existing operator-entered setpoints shall not require operator re-entry after a power failure or after the downloading of a new PLC program.

2.5 HMI APPLICATION SOFTWARE DESIGN

A. General:

1. CONTRACTOR shall develop and submit HMI application software in accordance with ASM guidelines and in strict accordance with these requirements.

2. The following items outline the key objectives in designing the HMI graphic displays:

a. Easily navigated menus

b. Provide no more than three (3) mouse actions to navigate to any graphic display

c. Maintain consistency in graphic display and controls design

d. Maintain consistent and predictable window operations

e. Accurate representation of the facility and its operation

f. Represent control options in an easily understood fashion

g. Wherever possible, design overview displays similar to the physical layout of the facility. The perspective to the physical layout should be from the local main control room.

h. Provide operator access to process and alarm setpoints, including the following:

1). Process alarms (High-High, High, Low, and Low-Low)

2). Control setpoints.

3). Process timer setpoints

4). Sequence setpoints for volume, level, time, etc.

5). Set or correct the time and date of the Real Time Clock for both the PLC and HMI. The time and date of both the PLC and HMI shall be synchronized to the DCS clock once per day.

i. Provide an alarm/event screen with listing of current and historical alarms and events, e.g., operator login/commands/set-point entry, change in pump/blower/equipment status, including descriptions, times of occurrence, operator acknowledgement and return to normal status.

j. Configure the HMI to provide four levels of user access security.

1). Visitor: View screens only

2). Operator: View screens, enter process setpoints, and select equipment configuration.

3). Supervisor: All access provided to an Operator, but in addition ability to change alarm setpoints and PID controller parameters.

4). Administrator: Access to all functions.

B. HMI's graphics screens shall be programmed to comply with City (WINS) latest HMI standards including symbols, colors, layout, navigation. Provide the following:

1. Overall Facility Layout Operating/Monitoring/Troubleshooting screens.

2. Log – in screen.

3. Process status screen (s).

4. Plant configuration screens.

5. Setpoint entry screens.

6. Alarm logs.

7. Event log.

8. Maintenance screen.

9. Communication screen.

10. Trend screen.

11. Report screens.

12. All screens shall have top three lines to display latest alarms, with date and time stamp, with navigational buttons for navigating between screens.

13. Screen graphics presentation to follow the recommendations of ISA-101, and the existing plant SCADA screens symbols, color scheme, and alarming.

14. Provide pop-up windows for: mini-trends.

15. Provide active page connectors for navigation.

C. Provide pre-configured local trend displays of the following historical data with a choice of time ranges of at least 1hr, 4 hrs, 24 hrs and 7 days.

1. Stormwater diversion flow together wetwell and/or basin level.

2. Pump on/off together with pump discharge flow and pump kW.

3. Facility kW (15 minute average) and kW/1000 gallons of pump discharge flow.

D. PLC/HMI I/O DATABASE

1. CONTRACTOR shall segment all I/O and cards to increase the reliability of all systems and limit any single I/O card failure causing an outage.

2. CONTRACTOR shall provide, coordinate, manage and document a PLC Database in accordance with LAWINS tag naming conventions. The Database shall have the following functions:

a. The database shall contain all the fields necessary to configure the various points including the following per point type:

1). Discrete Point configuration: CONTRACTOR shall provide a PLC/HMI Discrete I/O database of all the analog and discrete points. The I/O list includes the following fields:

a). Loop Number

b). Tag number

c). Type

d). Point description

e). Alarm Description 1

f). Alarm Description 2

g). Closed Condition Input: Description of the state of the input parameter of device when the field or internal PLC contacts are in the CLOSED position.

h). Open Condition Input: Description of the state of the input parameter of device when the field or internal PLC contacts are in the OPEN position.

i). Closed Condition Output: Description of the state of the output signal in the CLOSED condition

j). Open Condition Output: Description of the state of the output signal in the OPEN condition.

k). PLC name and/or number

l). PLC network address

2). Analog Point Configuration: CONTRACTOR shall provide a PLC/HMI I/O database of all analog points that are communicated to and from the DCS and the HMI. The analog I/O database shall include, but is not limited to, the following fields:

a). Attributes that further define the function of the points as listed below: Note that the attributes will be used for sorting and development of the I/O driver configuration. Additional attributes shall be developed to meet the software needs:

i Setpoint read
ii Setpoint write
iii Process variable
iv Flow totalizer read
v Equipment run time

b). Point description

c). Alarm description 1

d). Alarm description 2

e). Engineering units

f). Scale range

g). Alarm ranges:
i High-High
ii High
iii Low
iv Low-Low
v Signal fail
vi Rate of Change
vii Other

h). PLC number

i). PLC I/O hardware address

j). PLC I/O memory address

E. System Growth

1. Contractor shall provide twenty (20) percent spare capacity. Spare capacity shall be based on current ‘equipped’ I/O counts

F. Operations and Maintenance Manuals: Furnish to the ENGINEER 10 complete sets of Operation and Maintenance manuals. The manuals shall include data sheets, catalog cuts, approved shop drawings, manufacturer’s technical manuals, information drawings, etc., for the system, subsystems, and all components, and shall include names, addresses and telephone numbers of equipment suppliers, representatives and repair facilities.

1. This shall include a complete description of the recommended operating procedures, maintenance procedures, and spare/replacement parts list for equipment items with catalog data, diagrams, and drawings or cuts describing the equipment..

2. Each set shall include full size assembly and wiring diagrams; drawings showing "as built" conditions shall be furnished to the CITY

2.6 PLC PANEL

A. Refer to Section 17400 “Process Instrumentation and Control”.

B. Provide 316 stainless steel NEMA 4X PLC cabinet with air conditioner. Size conditioner for a maximum ambient of 110 deg F. Provide cabinet thermal calculations with shop drawing submittal.

C. PLC cabinet to exclude motor starters, VFDs and any 480V devices.

2.7 SPARES

A. The following spare parts shall be provided:

1. One of each type of PLC controller module

2. One of each type of communications and remote I/O module.

3. One I/O module for each ten of each type installed, with a minimum of 2 per type

4. One spare PLC power supply.

5. One field termination module of each type for every ten installed, with a minimum of 2 per type.

6. One of each type of preformed interconnection cable

2.8 MANAGED INDUSTRIAL ETHERNET SWITCH WITH INTEGRAL FIREWALL.

A. Furnish industrial managed Ethernet switches with firewall as shown on the drawings and complying with the requirements of this Section, to provide network connectivity between network components.

B. The Ethernet switch manufacturer shall be CISCO, Industrial Security Appliance 3000, no exceptions

C. Provide the switch with the following minimum features:

1. Fan-less metal enclosure. DIN rail or rack mounting. Built for harsh environments.

2. Ports: As required. Minimum of two shielded RJ45 10/100 Mbps Ethernet ports with auto negotiation. One Ethernet RJ console port.

3. Support Small Form-factor Pluggable (SFP) transceivers, selectable for copper and single/ multi-mode fiber networks. Provide a minimum of 2 SFP ports.

4. SFP fiber transceivers as shown on the drawings. Coordinate transceiver model with the requirements of the ESL Service Provider.

5. Ethernet /IP support. Port security and access control.

6. Rapid Spanning Tree Protocol, and bandwidth control.

7. Power supply: 120 VAC

8. Minimum operating temperature range: -40 to 70 deg C (-40 to 158 deg F)

D. Provide threat defense/malware application and 5-year update subscription. License in the name of the City of LA

2.9 UNMANAGED INDUSTRIAL FAST ETHERNET SWITCH

A. Furnish industrial unmanaged Ethernet switch as shown on the drawings and complying with the requirements of this Section, to provide network connectivity between network components.

B. The Ethernet switch manufacturer shall be CISCO, Industrial Security Appliance 2000, Red Lion N-Tron series, Allen Bradley, or equal.

C. Provide the switch with the following minimum features:

1. Compact, fan-less metal enclosure. DIN rail mounting. Built for harsh environments.

2. Copper ports: As required. Minimum of four shielded RJ45 10/100 Mbps full duplex Ethernet ports with auto negotiation. One Ethernet RJ console port.

3. Support Small Form-factor Pluggable (SFP) transceivers, selectable for copper and single/ multi-mode fiber networks. Provide a minimum of 2 SFP ports.

4. SFP fiber transceivers as shown on the drawings. Coordinate transceiver model with the requirements of the ESL Service Provider.

5. Ethernet /IP support. Port security and access control.

6. Rapid Spanning Tree Protocol, and bandwidth control.

7. Power supply: 120 VAC

8. Minimum operating temperature range: -40 to 70 deg C (-40 to 158 deg F)

9. DIN rail mounting kit.

2.10 FIBER OPTIC PATCH PANELS

A. All fiber-optic cable terminations shall be made in optical patch panel assemblies. Patch panel assemblies shall be of the pre-assembled chassis type with associated rack or wall mounting hardware.

B. To facilitate the transition between outside plant cable and the pre-connectorized cable assemblies, the fibers shall be fusion spliced and housed in a splice tray. Splice tray shall be positioned in the optical patch panel assembly per manufactures recommendation. Splice attenuation shall not exceed 0.2 db. Splice shall be covered with a protective sleeve. Splice tray to provide fiber storage.

C. Provide one port for each fiber specified. Terminate all spare fibers within the patch panel.

D. Provide protection and strain relief for cables entering the patch panels.

E. Provide fiber-optic patch cords to connect between the fiber-optic panel and fiber-optic network equipment.

F. Provide machine printed port labels, and cable management items to maintain a greater than minimum cable bending radius.

G. Manufacturer shall be: Corning Cable Systems, Panduit, Commscope, or equal.

2.11 FIBER-OPTIC CABLE

A. Single mode fiber cables:

1. Type: Single mode, loose tube, gel-free, indoor/outdoor rated with water blocking layer.

2. Designed for inter-building and intra-building backbones Flame retardant, low smoke, zero halogen.

3. Core/ clad diameter: 8.2/ 125 micron

4. Number of fibers: As shown on the drawings. Minimum of 12.

5. Maximum attenuation: 0.4 dB/km at 1310 nm, 0.3 db at 1550 nm

6. Maximum connector loss: 0.75 db

7. Maximum splice loss: 0.2 db

B. Multimode fiber cables

1. Loose-tube, gel free, indoor/outdoor rated with water blocking layer. Color coded fibers according to TIA/EIA-598.

2. Designed for inter-building and intra-building backbones Flame retardant, low smoke, zero halogen.

3. Core/ Clad diameter: 50/125 micron

4. Number of fibers: As shown on the drawings. Minimum of 12 fibers.

5. Maximum attenuation: 2.5 dB/km at 850 nm, 0.3 db at 1550 nm

6. Maximum connector loss: 0.75 db

7. Maximum splice loss: 0.2 db

C. Connectors: LC/UPC-90° (TIA/EIA-604-10A) polished connectors unless required otherwise by equipment.

2.12 COPPER NETWORK CABLE

A. Category 5E, 6 network cable.

1. Cable: CAT 5E, 6 UTP, rated indoor/outdoor as required by NEC Article 800

2. Jacket: FEP/PVC

3. Conductors: 4 pair, 23 AWG minimum

4. Manufacturer: Belden, Berk-Tek, General Cable or equal.

PART 3 -- EXECUTION

3.1 INSTALLATION

A. Install communications equipment and cables as recommended by the manufacturer and in accordance with TIA-568-C.0/ C.1, C.2, C.3

B. Ensure maximum pulling tensions of communications cables are not exceeded, and cable bends maintain proper radius

C. Prior to installation, physically inspect cable for damage to the jacket as it is taken from the reel. Do not install damaged cable.

D. D. Install equipment and cables as recommended by the Manufacturer and in accordance with TIA-568-C.0/C.1,C.2, C.3.

E. Provide all device configuration required to implement the full functionality of the networks/ communication system. Document the final configuration parameters, IP addresses, and passwords. Include a copy in the submitted Operations and Maintenance Manuals.

F. Category 5E, 6 Ethernet network cable testing.

1. Test Ethernet cables with cable network test set (Fluke LinkIQ or similar) and record results.

2. Measure values and determine pass/fail result for each parameter. Include:
   a. Continuity and attenuation
   b. Shorts between conductors
   c. Crossed and reversed pairs
   d. Cable length
   e. Bandwidth.

3.2 TESTING - GENERAL

A. All control panels and other control system equipment shall be factory tested to verify all functions and features of the equipment; both the manufacturer's published specifications and compliance with all requirements of these Contract Specifications.

B. The ENGINEER may witness testing of the units.

C. Solid-state logic systems shall be tested as complete assemblies. Testing of individual components or modules will not be acceptable. All testing shall be witnessed by the representative of the City Engineer. All costs for travel, lodging, transportation, meals, per-diem and other related expense shall be paid by the Contractor as part of the Contract Bid price. See General Requirements, Section 01453: Sampling, Testing and Fabrication Inspection..

D. Seven Day Acceptance Test:

1. After startup has been completed, the System shall undergo a seven (7) day acceptance test. The System must run continuously for seven (7) consecutive days. During this period, all System functions shall be exercised, and any System interruption and accompanying component, subsystem, or program failure shall be logged for cause of failure, as well as time of occurrence and duration of each failure. A failure shall cause termination of the seven (7) day acceptance test. When the cause of a failure has been corrected, a new seven (7) day acceptance test shall be started. Skilled technicians shall respond to all trouble calls by the CITY.

2. The technician responding to a System malfunction, must prepare a report which includes details concerning the nature of the complaint or malfunction and the resulting repair action required and taken, plus time and date of occurrence and correction.

3. The System Malfunction Report form shall be submitted to the ENGINEER for review and approval before the time of re-start of testing. Failure to obtain ENGINEER approval for the Report form shall cause postponement of testing.

3.3 FIBER-OPTIC CABLE TESTING

A. Provide 100% attenuation testing of all cable fibers while on the reel and prior to installation. Document results including cable manufacturer, date of manufacture, shipping date, cable identification, length and fiber identification. Submit results for approval prior to installation

B. Install communications equipment and cables as recommended by the manufacturer and in accordance with TIA-568-C.0/ C.1, C.2, C.3

C. Ensure maximum pulling tensions of communications cables are not exceeded, and cable bends maintain proper radius..

D. Visual inspection for continuity. Connector and loss testing after installation.

1. Fiber Connector Inspection: Use a fiber optics microscope to check the quality of the termination. A well-made connector is smooth, polished, scratch free with no signs of cracks, chips or areas where the fiber is either protruding from the end of the ferrule or pulling back into it. Remake poor connections.

E. After cable installation use a power meter per EIA/TIA 455-78-B and OTDR per ANSI/TIA/EIA-455-8-2000 to perform bi-directional cable testing of each fiber/ connector system from end to end. Match the source type and wavelength (850, 1300, 1550 nm). Calculate the loss using the average of the two bi-directional measurements.

F. Fiber acceptance power loss for cable, connectors and splices:

1. For each mated connector pair, a maximum of 0.7 dB. Typical 0.5 dB.

2. For each splice a maximum of 0.2 dB

3. For fiber: Attenuation as specified by the manufacturer.

4. Maximum allowable link loss:

   Maximum loss = (0.7dB X # of mated pairs of connectors) +(0.2 dB X #of splices) +fiber loss of total length of cable

G. If the measured loss is greater than the allowable maximum loss, take necessary measures to bring the link loss into compliance.

END OF SECTION

BUREAU OF ENGINEERING

STARTHERN PARK NORTH STORMWATER CAPTURE PROJECT WORK ORDER NO. EW40080F

APPENDICES

APRIL 8, 2025

City of Los Angeles
California

Department of Public Works
Bureau of Engineering

APPENDICES

Geotechnical Evaluation Report

Strathern Park North

Geotechnical Evaluation

LABOE TOS No. 25
Stormwater Capture Parks Program
Strathern Park North
8041 Whitsett Avenue
North Hollywood, California

CDM Smith

600 Wilshire Boulevard, Suite 750 | Los Angeles, California 90017

August 31, 2020 | Project No. 211294001



Geotechnical | Environmental | Construction Inspection & Testing | Forensic Engineering & Expert Witness

Geophysics | Engineering Geology | Laboratory Testing | Industrial Hygiene | Occupational Safety | Air Quality | GIS

Ninyo & Moore
Geotechnical & Environmental Sciences Consultants

Ninyo & Moore
Geotechnical & Environmental Sciences Consultants

Geotechnical Evaluation

LABOE TOS No. 25
Stormwater Capture Parks Program
Strathern Park North
8041 Whitsett Avenue
North Hollywood, California

Mr. Scott Dellinger
CDM Smith
600 Wilshire Boulevard, Suite 750 | Los Angeles, California 90017

August 31, 2020 | Project No. 211294001

REGISTERED PROFESSIONAL ENGINEER
SPENCER MARCINEK
No. GE3127
GEOTECHNICAL
STATE OF CALIFORNIA

Spencer Marcinek, PE, GE
Senior Project Engineer

REGISTERED PROFESSIONAL ENGINEER
DANIEL B. CHU
No. GE2096
GEOTECHNICAL
STATE OF CALIFORNIA

Daniel Chu, PhD, PE, GE
Principal Engineer

CERTIFIED ENGINEERING GEOLOGIST
GREGORY M. CORSON
No. 2310
STATE OF CALIFORNIA

Greg M. Corson, PG, CEG
Principal Geologist

SCM/GMC/DBC/mlc

Distribution: (1) Addressee (via e-mail)

CONTENTS

1 INTRODUCTION 1
2 SCOPE OF SERVICES 1
3 SITE DESCRIPTION AND BACKGROUND 2
4 PROJECT DESCRIPTION AND PROPOSED CONSTRUCTION 3
5 SUBSURFACE EVALUATION AND LABORATORY TESTING 4
6 GEOLOGIC AND SUBSURFACE CONDITIONS 6
6.1 Undocumented Fill 6
6.2 Alluvium 7
7 GROUNDWATER 7
8 FIELD PERCOLATION TESTING 7
9 FLOOD HAZARDS 9
10 FAULTING AND SEISMICITY 10
10.1 Surface Fault Rupture 10
10.2 Site-Specific Ground Motion 10
10.3 Liquefaction 12
11 CONCLUSIONS 13
12 PRELIMINARY RECOMMENDATIONS 14
12.1 Waste 14
12.2 Earthwork 15
12.2.1 Pre-Construction Conference 15
12.2.2 Clearing and Site Preparation 15
12.2.3 Excavation Characteristics 16
12.2.4 Subgrade Preparation for the Infiltration Gallery 16
12.2.5 Subgrade Preparation for Other Buried Structures and At-Grade Structures 17
12.2.6 Temporary Excavations and Shoring 17
12.2.7 Fill Material 18
12.2.8 Fill Placement and Compaction 19
12.3 Underground Utilities 19
12.3.1 Pipe Bedding 19

12.3.2 Modulus of Soil Reaction for Pipe Design 19
12.4 Site-Specific Seismic Design Considerations 20
12.5 Foundations 20
12.5.1 Spread Footings for Infiltration Gallery and At-Grade Structures 20
12.5.2 Mat Foundations 21
12.6 Lateral Earth Pressures 21
12.7 Exterior Flatwork 22
12.8 Corrosivity 22
12.9 Concrete Placement 22
12.10 Stormwater Infiltration Gallery 23
12.11 Drainage 23
12.12 Landscaping 23
13 CONSTRUCTION OBSERVATION 24
14 LIMITATIONS 24
15 REFERENCES 26

TABLES

1 – Percolation Test Results 9
2 – 2019 California Building Code Seismic Design Criteria 20

FIGURES

1 – Site Location
2 – Site and Vicinity
3 – Proposed Project Layout (Alternative 1)
4 – Boring, Test Pit, Percolation Test, and CPT Locations
5 – Regional Geology
6 – Fault Locations
7 – Acceleration Response Spectra
8 – Seismic Hazard Zones
9 – Lateral Earth Pressures for Braced Excavation
10 – Lateral Earth Pressures for Temporary Cantilevered Shoring
11 – Lateral Earth Pressures for Underground Structures

APPENDICES

A – Boring Logs

B – Test Pit Logs

C – CPT Soundings

D – Geotechnical Laboratory Testing

E – Drum Characterization Test Results and Transportation Manifest

F – Site-Specific Ground Motion Hazard Analysis

1 INTRODUCTION

In accordance with your request and authorization, we have performed a geotechnical evaluation at Strathern Park North located at 8041 Whitsett Avenue in North Hollywood, California as part of the Los Angeles Bureau of Engineering (LABOE) Stormwater Capture Parks Program (Figure 1 [all figures are located at the end of the text of this report]). The purpose of our study was to evaluate the soil and geologic conditions at the site and to provide geotechnical recommendations for pre-design of proposed Best Management Practices (BMPs) at the site for stormwater infiltration. Our evaluation was performed in general accordance with Task Order Solicitation (TOS) No. 25 (LABOE, 2019a) and our referenced proposal dated May 18, 2020 (Ninyo & Moore, 2020a). This report presents our findings, conclusions, and recommendations for the Strathern Park North project. Concurrent with the subject geotechnical evaluation, we also performed a Limited Phase II Environmental Site Assessment (ESA) for the project in general accordance with Addendum No. 5 of TOS No. 25 (LABOE, 2019b). The results of our ESA are presented under separate cover (Ninyo & Moore, 2020b).

The intent of the Stormwater Capture Parks Program is to capture up to 2,912 acre-feet of stormwater and urban runoff per year that drain from 5,868 acres within a portion of the San Fernando Valley in order to reduce the potential for flooding, improve stormwater quality, increase water supplies through stormwater capture, and provide recreational, social, and economic benefits (LABOE, 2019a). The stormwater runoff will be diverted into proposed stormwater capture and infiltration BMPs within nine City of Los Angeles parks generally located along the SR-170 corridor, including the subject Strathern Park North, for replenishment of the San Fernando Groundwater Basin. According to the Conceptual Study Report (CSR) (Los Angeles Department of Water & Power [LADWP], 2018), the project at Strathern Park North is anticipated to capture and infiltrate stormwater runoff from a tributary area of approximately 485 acres.

2 SCOPE OF SERVICES

Our scope of geotechnical services was prepared based on our review and the conceptual design provided in the CSR (LADWP, 2018) and discussions with the client, CDM Smith, and included the following:

- Project coordination and planning with subcontractors and client, LABOE, and Los Angeles Department of Recreations and Parks (RAP) personnel, and attendance at a project kick-off meeting.
- Review of readily available background materials, including published topographic maps, geologic maps, fault and seismic hazard maps, groundwater data, stereoscopic aerial photographs, project related plans, and in-house geotechnical information.
- Acquisition of a Los Angeles County Environmental Health Department (LACEHD) permit.

- Field reconnaissance to observe and document the site conditions, mark-out proposed hollow-stem-auger (HSA) boring, test pit, and cone penetration test (CPT) sounding locations for underground utility clearance by Underground Service Alert, and meet with RAP personnel regarding site access and constraints.

- Performance of a geophysical survey to clear our proposed boring, CPT, and test pit locations of potential underground utility conflicts.

- Subsurface exploration consisting of the drilling, sampling, and logging of nine HSA borings to depths s ranging from approximately 17½ to 70½ feet, and six CPT soundings depths ranging from approximately 48.1 to 50.3 feet. The purpose of the borings and CPT soundings was to evaluate the subsurface soil conditions and percolation rates of the on-site soils.

- Performance of six test pits to depths ranging from approximately 8½ to 10 feet to evaluate the near-surface soil conditions and the potential depths and/or limits of reported landfill debris.

- Field percolation testing in six of the borings in general accordance with the methods presented in the County of Los Angeles Guidelines for Geotechnical Investigation and Reporting Low Impact Development Stormwater Infiltration (COLA, 2017).

- Geotechnical laboratory testing of representative soil samples to evaluate in-situ moisture content and dry density, gradation, percentage of particles finer than the No. 200 sieve, Atterberg limits, consolidation, direct shear strength, and soil corrosivity.

- Data compilation and engineering analysis of the information obtained from our background review, subsurface evaluation, infiltration testing, and laboratory testing.

- Preparation of this geotechnical report presenting our findings, conclusions, and preliminary recommendations pertaining to the design and construction of the proposed improvements.

3 SITE DESCRIPTION AND BACKGROUND

Strathern Park North is a City of Los Angeles park located on the eastern side of the San Fernando Valley, east of California State Route (SR) 170 and approximately 1mile south of Interstate 5 (I-5) (Figure 1). The park consists of a relatively flat, triangular-shaped lot bounded by a LADWP transmission line (TL) easement on the southwest, residential homes on the north, Whitsett Avenue on the east, Strathern Street on the south. (Figures 2 and 3). The east approximate half of the park is developed with four baseball fields, restroom and concession facilities an asphalt concrete (AC) parking lot, Portland cement concrete (PCC) walkways, landscaping, and other miscellaneous improvements. The west approximate half of the park is undeveloped (Figures 2 and 3). Based on our review of the CSR (LADWP, 2018), we understand that an existing 45-inch-diameter reinforced concrete pipe (RCP) storm drain is located along the east side of SR-170 and a 60-inch-diameter water pipeline traverses the LADWP TL easement. Based on our review of topographic maps (NavigateLA, 2020), the park slopes gently downward toward the southeast with site elevations ranging from approximately 808 feet above mean sea level (MSL) at the northwest corner of the park to approximately 800 feet (MSL) at the southeast corner.

Based on our discussion with CDM Smith, we understand that the City indicated that the park grounds may have formerly been used as a waste disposal site associated with past construction activities in the area. Based on our limited review of historical photographs, it does appear that the site was used for waste disposal in at least the early 1950's (Historical Aerials, 2020). Our review of 1952 aerial photographs indicate that the project site contained several unpaved roads that extended west from Whitsett Avenue and terminated at a round, raised area within the area of the baseball fields and the eastern portion of the undeveloped area west of the fields. Aerial photographs from 1953 indicate that additional surface disturbance occurred within these areas of the park and included a second similar raised area. The raised areas observed in each photograph are interpreted to be stockpiles of unknown material. In addition, the residences along the north side of the park were not present in the 1952 photographs; however, some of the residences had been constructed by 1953. Based on our review these photographs, the raised stockpiles and surface disturbances may have been related to waste disposal associated with residential construction projects in the area. The aerial photographs also suggest that the waste disposal may extend offsite, underlying some adjacent residences north of the park. Further discussion regarding our findings and aerial photograph review are presented in our separate ESA report (Ninyo & Moore, 2020b).

4 PROJECT DESCRIPTION AND PROPOSED CONSTRUCTION

Based on our review of TOS 25 (LABOE, 2019a), the project generally consists of the installation of new BMPs within the undeveloped western approximate half of Strathern Park North to infiltrate storm water diverted from the existing 45-inch-diameter RCP storm drain along SR-170 (Figure 4). The new BMPs would consist of the installation of an underground infiltration gallery, a catch basin, diversion structure, pump station, hydrodynamic separator (HDS) units, flow measuring devices, supervisory control and data acquisition (SCADA), educational signage, and park restoration/improvements. According to the CSR (LADWP, 2018), the conceptual infiltration gallery would be sized to store approximately 968,000 cubic feet of water and include a footprint of approximately 97,700 square feet (sf), an inner height of approximately 12 feet, and an invert depth of approximately 17 feet below the ground surface. We understand that the gallery will likely consist of prefabricated, modular concrete vaults with open bottoms underlain by drain rock over a layer of filter fabric. Based on our discussions with CDM Smith, it is our understanding that the gallery may be supported on concrete strip footings. Upon completion of the BMP installation, the BMPs will be buried with compacted fill and the ground surface returned to its existing condition for continued use and additional development as a park.

Subsequent to performing our subsurface exploration, presented herein, we received conceptual plans from our client (CDM Smith, 2020), which include four BMP options (Alternatives 1

through 4) for the project. The improvements associated with Alternatives 1 through 3 will generally be constructed within the undeveloped portion of the park (west of the baseball fields). Alternative 4 provides an option to build beneath the baseball fields. We understand that these proposed alternatives are subject to change as further design is performed. The four options are described below.

Alternative 1 – According to CDM Smith (2020), Alternative 1 consists of the installation of a subterranean infiltration gallery (73,000 sf) with an interior height of 14 feet and invert depth of approximately 18 feet, a diversion structure on the existing 45-inch-diameter RCP storm drain and a catch basin at the southern end of Potter Avenue. New 36 and 42-inch-diameter pipelines would be installed between the diversion structure and gallery with an in-line HDS unit and pump station. The catch basin will be connected to the gallery via an additional pipeline. The proposed layout of Alternative 1 is presented on Figure 3.

Alternative 2 – Alternative 2 is similar to Alternative 1 except that the diversion structure and pump station would be moved farther away from the transmission towers.

Alternative 3 – Alternative 3 consists of a smaller subterranean infiltration gallery (72,000 sf) with an interior height of 12 feet and invert depth of approximately 19½ feet. This alternative would also include the use of 12 approximately 50-foot-deep dry wells connected to the gallery. The pump station would be removed and the catch basin at the south end of Potter Avenue would drain into a bioswale along the north boundary of the park.

Alternative 4 – Alternative 4 consists of a subterranean infiltration gallery (73,000 sf) with an interior height of 14 feet and invert depth of approximately 18 feet beneath the existing baseball diamonds on the eastern portion of the park. This alternative also includes the installation of two approximately 50-foot-deep dry wells for dry weather runoff, a diversion structure on the existing 45-inch-diameter RCP storm drain and new 36 and 42-inch-diameter pipelines with an in-line HDS unit and pump station. Additional subsurface exploration would be necessary to further evaluate Alternative 4, if chosen for the project.

5 SUBSURFACE EVALUATION AND LABORATORY TESTING

Our subsurface evaluation was conducted on March 23 through 26, 2020, and consisted of the drilling, logging, and sampling of nine HSA borings (B-1, B-2, and B-3 and P-1 through P-6), six test pits (TP-1 through TP-6), and six CPT soundings (CPT-1 through CPT-6). The approximate locations of the borings, test pits, and CPTs are presented on Figure 4. The borings were drilled using a truck-mounted drill rig with 8-inch diameter augers to depths ranging from approximately 17½ to 70½ feet. The depths of the borings were based on the conceptual design depths for the

infiltration basin presented in the CSR (LADWP, 2018) and on our discussions with CDM Smith regarding the possible use of deeper dry wells. The test pits were excavated using a John Deere 310 SG backhoe to depths ranging from 8½ to 10 feet to evaluate the near-surface soil conditions and to evaluate the potential depths and/or limits of reported landfill debris. The borings and test pits were logged in the field by a representative of Ninyo & Moore and representative bulk and relatively undisturbed soil samples were collected from the borings at selected depths for laboratory testing. Percolation testing was performed in borings P-1 through P-6 as further discussed in Section 8 of this report. The CPT soundings (CPT-1 through CPT-6) were performed using a 30-ton CPT rig with a 15 square centimeter cone to depths ranging from approximately 48.1 to 50.3 feet, respectively. Refusal was encountered in CPT-6 at a depth of approximately 48.1 feet. Continuous soil profiles, including cone tip resistance and sleeve friction, were recorded during the soundings. A representative of Ninyo & Moore was on-site to observe the CPT soundings. The borings and CPTs were backfilled with cement-bentonite grout upon completion of the drilling and percolation testing in general accordance with the requirements of LACEHD. The test pits were backfilled with the excavated materials upon completion. Logs of the exploratory borings, test pits, and CPTs are provided in Appendices A, B, and C, respectively.

Geotechnical laboratory testing of representative soil samples included tests to evaluate in-situ moisture content and dry density, gradation, percentage of particles finer than the No. 200 sieve Atterberg limits, consolidation, direct shear strength, and soil corrosivity. Moisture and density test results are presented on the boring logs in Appendix A. The remaining test results are presented in Appendix D.

During our subsurface exploration, samples were collected from borings B-1, B-3, P-2, P-4, and P-6 for analytical testing in general accordance with Addendum 5 of TOS 25 (LABOE, 2019b). During drilling of these borings, soil gas was measured. The measured readings are provided on the boring logs presented in Appendix A. Further discussion regarding the soil gas readings and analytical sampling and testing are provided in our separate ESA report (Ninyo & Moore, 2020b).

Soil cuttings from the borings and CPTs were placed in 55-gallon drums, and two composite soil samples of the drummed soil were collected in an 8-ounce jar for waste characterization. The samples were stored in a chilled cooler and delivered to SunStar Laboratories, Inc. for analytical testing under chain-of-custody protocol. The samples were tested for total petroleum hydrocarbons (TPH) (gas and diesel range) per United Stated Environmental Protection Agency (EPA) Test Method 8015B, Title 22 metals per EPA Test Methods 6010B/7470/7471, and volatile organic compounds per EPA Test Method 8260B. Based on the characterization test results, the drums were disposed at an approved landfill (Soil Safe in Adelanto, California) by a licensed

transportation subcontractor (Belshire) as nonhazardous. The test results and a copy of the transportation manifest are provided in Appendix E.

6 GEOLOGIC AND SUBSURFACE CONDITIONS

The project site is within the San Fernando Valley, which is generally bounded by the Santa Monica Mountains on the south, Verdugo Mountains on the east, Santa Susana Mountains on the north, and Chatsworth Hills on the west. The valley along with these bounding mountain ranges are part of the Transverse Ranges Geomorphic Province. The province encompasses an approximately 40- to 60-mile-wide area (north to south) that extends approximately 320 miles (west to east) from Point Arguello and San Miguel Island to the Eagle and Pinto Mountains of the Mojave Desert (Norris and Webb, 1990). The province generally consists of a region of east to west-trending mountain ranges considered atypical to the predominant northwest to southeast structural fabric of California. The atypical trend of the Province is the result of a restraining bend ("the Big Bend") on the San Andreas Fault that has rotated and compressed the region to its current configuration. The compression has resulted in folding and reverse/thrust faulting with similar east to west trends, and regional uplift. The Santa Monica Mountains are the southernmost of the east to west trending ranges of the province and the San Fernando Valley is a synclinal valley infilled with relatively thick deposits of sedimentary rock overlain by alluvial deposits (Norris and Webb, 1980).

Review of regional geologic maps indicate that the site is generally underlain by Holocene-age wash deposits associated with deposition along the Tujunga Wash (Campbell et al., 2014) (Figure 5). The deposits are described as consisting of unconsolidated gravel, sand, and silt in active or recently active stream beds. The California Department of Mines and Geology (CDMG, 1997) has also mapped the site as being underlain by wash deposits consisting of loose to medium dense, sand, and silty sand with lesser quantities of silt and gravel.

During our subsurface evaluation, we encountered undocumented fill underlain by alluvium. Generalized descriptions of the materials encountered during our subsurface exploration are presented below. More detailed descriptions of the subsurface materials are presented on the boring, test pit, and CPT logs in Appendices A through C, respectively.

6.1 Undocumented Fill

Undocumented fill was encountered in the borings and test pits to depths ranging from approximately 3 to 13 feet below the ground surface. The fill generally consisted of granular deposits of light brown and brown, moist, very loose to medium dense, silty sand, clayey sand, poorly graded sand with silt, poorly graded sand with clay, poorly graded sand, well-graded sand

with silt, and sandy silt, and brown, moist, soft to firm, lean clay. The fill contained various amounts of gravel and scattered cobbles. Minor amounts of waste were observed within the undocumented fill at borings B-1, B-2, P-1, P-3, and P-5, and test pits TP-3 through TP-6. The observed waste generally consisted of pieces of AC, concrete, glass, bricks, and ceramic, plastic, glass bottles, and tires. Documentation regarding the limits of fill or the placement and compaction of the fill soils was not available for our review.

6.2 Alluvium

Alluvium was encountered beneath the undocumented fill, to the total depth explored of up to approximately 70½ feet. The alluvium generally consisted of interbedded granular deposits of light brown and brown, moist, loose to very dense, poorly graded sand, poorly graded sand with silt, poorly graded sand with clay, well-graded sand with silt, silty sand, and sandy silt. The alluvial deposits contain variable amounts of gravel and cobbles.

7 GROUNDWATER

Seepage and/or groundwater was not encountered in our borings or CPTs to the total depths explored of up to approximately 70½ feet. CDMG (1997) indicates that the historic high depth to groundwater at the project site ranges between approximately 110 to 120 feet below the ground surface. Groundwater monitoring well data (Wayne Perry, Inc., 2012) available on the State of California Water Resources Control Board's GeoTracker website (SWRCB, 2020) indicates that the depth to groundwater in 2012 was on the order of 194 feet below the ground surface at a former gas station site located approximately 2,800 feet northwest of the park. The depth to groundwater in a Los Angeles County groundwater monitoring well (Well ID 4898) located 800 feet southeast of the site was approximately 307 feet in 2009 (the latest posted measurement) (COLA, 2020). The depth to groundwater in this well ranged from approximately 204 and 335 feet between 1975 and 2009. It is anticipated that similar depths to groundwater are present at the park site. Fluctuations in the level of groundwater will occur due to variations in ground surface topography, subsurface stratification, rainfall, irrigation practices, groundwater pumping, and other factors that were not evident at the time of our field evaluation.

8 FIELD PERCOLATION TESTING

Percolation testing was performed in borings P-1 through P-6 in general accordance with the County of Los Angeles Guidelines for Geotechnical Investigation and Reporting Low Impact Development Stormwater Infiltration (COLA, 2017). The testing was performed to evaluate the infiltration rate of the on-site soils at the approximate depths of the proposed infiltration gallery (17 feet per the CSR [LABOE, 2018]) and dry wells (approximately 50 feet per CDM Smith) for

use in design of the BMPs by CDM Smith. The approximate locations of the percolation test borings are shown on Figure 4.

Borings P-1 through P-6 were drilled to depths ranging from 17½ to 51½ feet. Preparation of each boring for percolation testing included the installation of a 2-inch-diameter polyvinyl chloride (PVC) pipe in the borings, the lowest 15 feet of which was slotted, and backfilling the bottom approximately 15 feet of annular space between the borehole wall and pipe with clean gravel. The infiltration zones were pre-soaked with water for at least one hour prior to performing percolation testing. After the borings were pre-soaked, constant-head percolation testing was performed in each boring.

The constant-head testing was performed by placing clean water in the PVC pipe at a constant flow rate to establish a stabilized head. The flow rate was measured using a digital flow meter. Once a stabilized head was established in the borings, the constant-head test was initiated and the flow was maintained for a period of approximately 2 hours. The field percolation rate was calculated by measuring the total volume of water infiltrated during the total duration of the test and dividing by the surface area of the tested zone of the boring. The measured field percolation rates are presented in Table 1.

The County of Los Angeles guidelines (COLA, 2017) indicate that the measured field percolation rates should be reduced in order to account for the long-term performance of the proposed BMPs. The field percolation rates should be reduced by the Total Reduction Factor (RF), which is defined as the product of the "test-specific" reduction factor (RF_t), the "site variability" reduction factor (RF_v), and the "long-term siltation, plugging, and maintenance" reduction factor (RF_s) (i.e., $RF = RF_t \times RF_v \times RF_s$).

The guidelines (COLA, 2017) indicate that the RF_t should be applied to account for variations in the direction of flow during the test and the reliability of the different test methods. An RF_t value of 3 is specified for the constant head percolation test and this value was applied to the field percolation rates. The RF_v values range from 1 to 3 depending on the site variability, number of tests, and thoroughness of subsurface investigation. For the subject park, we applied an RF_v value of 1.9 due to the variability of the on-site soils and field percolations rates. The long-term siltation, plugging, and maintenance values (RF_s) also range from 1 to 3 and will generally vary on the level of pre-treatment performed prior to infiltration and the level of future maintenance of the system. Based on our discussions with the BMP designers, an RF_s value of 1 has been applied since pre-treatment systems will be used to remove silt prior to water entering the infiltration gallery/deep wells. The RF_s value and resulting RF should be adjusted by the BMP designer as needed. The RF_t, RF_v, RF_s, and resulting RF values are presented in Table 1. The

adjusted percolation rates are also presented in Table 1. The average of the adjusted rates is considered to be the Design Percolation Rate.

Table 1 – Percolation Test Results

Test Boring	Test Type	Approximate Depth of Tested Zone (feet)	Field Percolation Rate (inches/hour)	Reduction Factor				Adjusted Percolation Rate (inches/hour)
				RF_t	RF_v	RF_s	RF	
P-1	Constant Head	7 – 17½	16.5	3	1.9	1	5.7	2.9
P-2	Constant Head	41 – 51½	11.5	3	1.9	1	5.7	2.0
P-3	Constant Head	7 – 17½	28.5	3	1.9	1	5.7	5.0
P-4	Constant Head	41 – 51½	11.2	3	1.9	1	5.7	2.0
P-5	Constant Head	7½ – 17½	41.5	3	1.9	1	5.7	7.3
P-6	Constant Head	41 – 51½	29.1	3	1.9	1	5.7	5.1
Average Adjusted Percolation Rate (inches/hour)								4

Notes:
RF_t – Test Specific Reduction Factor
RF_v – Site Variability Reduction Factor
RF_s – Long-Term Siltation, Plugging, and Maintenance Reduction Factor (To be adjusted by the BMP designer)
RF – Total Reduction Factor

Based on our evaluation, we recommend that the average adjusted percolation rate of 4 inches per hour, following additional adjustment by the BMP designer to account for RFs, be used for design at Strathern Park North for both shallow and deep infiltration.

In addition, we recommend the new or existing buildings be set-back from the proposed infiltration gallery a minimum of 15 feet or a distance where the bottom of the lowest foundation element of the structure is 10 feet or more (horizontally) outside of an imaginary 1:1 (horizontal:vertical) plane projected downward and outward from the top of the gallery. Where basement levels are proposed that extend beneath the top of the infiltration gallery elevation, additional evaluation should be performed to confirm the appropriate set-back.

9 FLOOD HAZARDS

Based on our review of flood insurance rate maps for the project area (Federal Emergency Management Agency [FEMA], 2020), the project site is not located in the 100-year Flood Hazard Zone, A99. Zone A99 includes areas to be protected from a 100-year flood by the Federal Flood Protection System under construction at the time of publication of the FEMA map; no base flood elevations are given. The site is located within Other Flood Areas – Zone X, which includes areas of 500-year floods and areas of 100-year floods with average depths of less than one foot and areas protected by levees from 100-year floods.

10 FAULTING AND SEISMICITY

The site is in a seismically active area, as is the majority of southern California, and the potential for strong ground motion in the project area is considered significant during the design life of the proposed project. Figure 6 shows the approximate site location relative to the major known faults in the region. The site is not located within a State of California EFZ (formerly known as an Alquist-Priolo Special Studies Zone) (Hart and Bryant, 2018). The nearest mapped active fault to the site is the Verdugo fault located approximately 1.9 miles (3.1 kilometers) northeast of the site (United States Geological Survey [USGS], 2008).

The principal seismic hazards evaluated at the subject site are surface fault rupture, ground motion, and liquefaction. A brief description of these principal seismic hazards is discussed in the following sections.

10.1 Surface Fault Rupture

Surface fault rupture is the offset or rupturing of the ground surface by relative displacement across a fault during an earthquake. Based on our review of referenced geologic and fault hazard data, the project site is not transected by known active faults. Therefore, the potential for surface rupture is relatively low. However, lurching or cracking of the ground surface as a result of nearby seismic events is possible.

10.2 Site-Specific Ground Motion

Considering the proximity of the site to active faults capable of producing a M_{max} of 6.0 or more, the project area has a high potential for experiencing strong ground motion. The 2019 CBC specifies that the risk-targeted maximum considered earthquake (MCE_R) ground motion response accelerations be used to evaluate seismic loads for design of buildings and other structures.

In accordance with Chapter 20 of the American Society of Civil Engineers (ASCE) Publication 7-16 Minimum Design Loads and Associated Criteria for Building and Other Structures (2016), the Site Class should be classified based on the average shear wave velocity (V_S) in the upper 100 feet (i.e., 30 meters) (V_{S30}), the average field standard penetration resistance in the upper 100 feet (blow counts, N), or the average undrained shear strength in the upper 100 feet (S_u). After reviewing the blow counts obtained from our borings and correlations from our CPTs, the field penetration blow counts in the upper 100 feet are within the range of 15 to 50 blows per foot. Additionally, we estimated that the V_{S30} at the site is 918 feet per second (ft/s) (i.e., 280 meters per second (m/s) (CGS/Willis Site Classification Map) using the Open Seismic Hazard Analysis software developed by USGS (USGS, 2019). ASCE 7-16 defines a site as Site Class D (stiff soil)

if the V_{S30} ranges from 600 to 1,200 ft/s (180 to 370 m/s) and if the blow counts in the upper 100 feet range from 15 to 50 blows per foot. Accordingly, the site is classified as Site Class D.

Per the 2019 CBC, a site-specific ground motion hazard analysis shall be performed for structures on Site Class D with a mapped MCE_R, 5 percent damped, spectral response acceleration parameter at a period of 1 second (S_1) greater than or equal to 0.2g in accordance with Sections 21.2 and 21.3 of ASCE 7-16. We calculated that the S_1 for the site is equal to 0.658g using the 2020 Applied Technology Council [ATC] seismic design tool (web-based)]; therefore, a site-specific ground motion hazard analysis was performed for the project area.

The site-specific ground motion hazard analysis consisted of the review of available seismologic information for nearby faults and performance of probabilistic seismic hazard analysis (PSHA) and deterministic seismic hazard analysis (DSHA) to develop acceleration response spectrum (ARS) curves corresponding to the MCE_R for 5 percent damping. Prior to the site-specific ground motion hazard analysis, we obtained the mapped seismic ground motion values and developed the general MCE_R response spectrum for 5 percent damping in accordance with Section 11.4 of ASCE 7-16 (ATC, 2020). The V_{S30} is assumed to be 918 ft/s (i.e., 280 m/s) (CGS/Willis Site Classification Map) and the depths to V_S = 3,281 ft/s (i.e., 1,000 m/s) and V_S = 8,202 ft/s (i.e., 2,500 m/s) are assumed to be 1,148 feet (i.e., 350 meters) and 6,627 feet (i.e., 2,020 meters), respectively (Southern California Earthquake Center [SCEC] Velocity Model Version 4, Iteration 26, Basin Depth). These values were evaluated using the Open Seismic Hazard Analysis software developed by USGS (USGS, 2019).

The 2014 next generation attenuation (NGA) West-2 relationships were used to evaluate the site-specific ground motions. The NGA relationships that we used for developing the probabilistic and deterministic response spectra are by Chiou and Youngs (2014), Campbell and Bozorgnia (2014), Boore, Stewart, Seyhan, and Atkinson (2014), and Abrahamson, Silva, and Kamai (2014). The Open Seismic Hazard Analysis software developed by USGS (USGS, 2019) was used for performing the PSHA. The Calculation of Weighted Average 2014 NGA Models spreadsheet by the Pacific Earthquake Engineering Research Center was used for performing the DSHA (Seyhan, 2014).

PSHA was performed for earthquake hazards having a 2 percent chance of being exceeded in 50 years multiplied by the risk coefficients per ASCE 7-16. The maximum rotated components of ground motions were considered in PSHA with 5 percent damping. For the DSHA, we analyzed accelerations from characteristic earthquakes on active faults within the region using the California Department of Transportation (Caltrans) ARS (Caltrans, 2020) seismic design tool (web-based) and the hazard curves and deaggregation plots at the site using the USGS Unified

Hazard Tool application (USGS, 2020a). A magnitude 7.5 event on the Verdugo fault with a distance of 1.9 miles (i.e., 3.1 kilometers) from the site is the controlling earthquake. Hence, the DSHA was performed for the site using this event and corrections were made to the spectral accelerations for the 84th percentile of the maximum rotated component of ground motion with 5 percent damping. The results of our site-specific seismic hazard analysis are presented in Appendix F.

The site-specific MCE_R response spectrum was taken as the lesser of the spectral response acceleration at any period from the PSHA and DSHA, and the site-specific general response spectrum was determined by taking two-thirds of the MCE_R response spectrum with some conditions in accordance with Section 21.3 of ASCE 7-16. Figure 7 presents the site-specific MCE_R response spectrum and the site-specific design response spectrum. The general mapped design response spectrum calculated in accordance with Section 11.4 of ASCE 7-16 is also presented on Figure 7 for comparison. The site-specific spectral response acceleration parameters, consistent with the 2019 CBC, are provided in Section 12.4 of this report for the evaluation of seismic loads on buildings and other structures. The site-specific maximum considered earthquake geometric mean (MCE_G) peak ground acceleration, PGA_M, was calculated as 0.834g.

10.3 Liquefaction

Liquefaction is the phenomenon in which loosely deposited granular soils with silt and clay contents of less than approximately 35 percent and non-plastic silts located below the water table undergo rapid loss of shear strength when subjected to strong earthquake-induced ground shaking. Ground shaking of sufficient duration results in the loss of grain-to-grain contact due to a rapid rise in pore water pressure and causes the soil to behave as a fluid for a short period of time. Liquefaction is known generally to occur in saturated or near saturated cohesionless soils at depths shallower than 50 feet below the ground surface. Factors known to influence liquefaction potential include composition and thickness of soil layers, grain size, relative density, groundwater level, degree of saturation, and both intensity and duration of ground shaking.

The State of California Hazard Zones map (CDMG, 1998) indicates that the subject site is located within a mapped area that is not considered susceptible to seismically induced liquefaction (Figure 8). Based on the historic high groundwater depth of approximately 110 to 120 feet below the ground surface and the presence of dense sands with scattered gravel, it is our opinion that liquefaction and liquefaction-related seismic hazards (e.g., dynamic settlement, ground subsidence, and/or lateral spreading) are not design considerations for the project.

11 CONCLUSIONS

Based on the results of our evaluation, it is our opinion that the proposed BMPs at Strathern Park North are feasible from a geotechnical standpoint, provided the recommendations presented in this report are incorporated into the design and construction of the project. In general, the following conclusions were made:

- The subject site is underlain by up to approximately 13 feet of undocumented fill underlain by granular alluvial materials. The fill and alluvium generally consisting of moist, very loose to very dense, poorly graded sand, poorly graded sand with silt, poorly graded sand with clay, well-graded sand with silt, silty sand, clayey sand, and sandy silt. Variable amounts of gravel and cobbles were encountered in the fill and alluvium. Various amounts of waste consisting of pieces of asphalt concrete, concrete, brick, glass, ceramic, plastic, and tires were encountered in some of the fill. The fill and waste are considered to be potentially compressible.

- Based on our review of aerial photographs, discussions with the client, and subsurface exploration, portions of the site are underlain by waste placed at the site during at least the 1950's. The lateral extents of the waste are unknown.

- Our six percolation tests performed in borings P-1 through P-6 indicate that the on-site soils tested at depths ranging from approximately 17½ to 50½ feet have percolation rates ranging from approximately 3.7 to 13.8 inches per hour. For design purposes, we recommend using a percolation rate of 4 inches per hour for both shallow (gallery) and deep (dry well) infiltration systems. However, this rate should be adjusted as needed in accordance with COLA 2017 guidelines.

- In general, excavations and drilling in the existing undocumented fill, waste, and alluvium should be feasible with earthmoving equipment in good working condition. However, difficult excavating and drilling conditions should be anticipated by the contractor where excavations and drilling encounter cobbles or waste. Oversized materials should be anticipated in the undocumented fill, waste, and alluvium by the contractor.

- Due to the presence of waste at the site, project planning should include considerations for encountering these materials during construction, including preparation of a Soil Management Plan for use by site personnel, vapor monitoring, selective stockpiling, and characterization and disposal of the waste and impacted soil. Additional recommendations may apply based on further Phase II site assessment work planned for the site.

- We anticipate that the on-site excavated materials outside the lateral extents and/or below the depths of the on-site waste, should be suitable for re-use as engineered fill and trench backfill provided they are free of waste, debris, roots, contamination, deleterious materials, and cobbles or hard lumps of material in excess of 4 inches in diameter. Processing of the materials to bring them near the laboratory optimum moisture content per ASTM International (ASTM) test method D 1557 (i.e., drying and/or wetting) prior to use as fill should be planned by the contractor.

- The on-site soils are generally granular and will be prone to caving during excavation and drilling. The on-site soils should be considered as Type C soils in accordance with United States Department of Labor Occupational Safety Health Administration (OSHA) regulations. Accordingly, temporary excavations deeper than 4 feet in depth should be laid back at inclinations of 1½ to 1 (horizontal to vertical) or flatter.

- Where excavations cannot be laid back, temporary shoring is anticipated. Shoring should be designed by the contractor to support the excavation sidewalls and to reduce the potential

for settlement of adjacent structures, roadways, and other site improvements. Shoring should be designed in accordance with OSHA regulations.

- Groundwater was not encountered in our exploratory borings, test pits, and CPTs to the total depth explored of approximately 70½ feet. Historical high groundwater levels range from approximately 110 and 120 feet below the ground surface. Monitoring wells located approximately 800 feet southeast and 2,800 feet northwest of the site indicate that the depth to groundwater is on the order of 194 to 307 feet (Wayne Perry, Inc., 2012 and COLA, 2020). Fluctuations in the level of groundwater will occur due to variations in ground surface topography, subsurface stratification, rainfall, irrigation practices, groundwater pumping, and other factors that were not evident at the time of our field evaluation.

- The site is not located within a mapped Seismic Hazards Zone considered susceptible to liquefaction (CDMG, 1998).

- The site is not located within an Earthquake Fault Zone with the potential for fault rupture as defined by the Alquist-Priolo Earthquake Fault Zoning Act (Hart and Bryant, 2018).

- Hydro-collapse is not considered a design issue given the proposed depth of the infiltration gallery and dry wells (approximately 18 to 20 feet and 50 feet, respectively [CDM Smith, 2020])) and the results of our laboratory testing.

- The site is not located within a designated flood inundation zone from failure of a dam or the 100-year and 500-year flood events (FEMA, 2020).

- Based on our laboratory corrosion testing, the on-site soil can be classified as non-corrosive based on the Caltrans Corrosion Guidelines (Caltrans, 2018).

12 PRELIMINARY RECOMMENDATIONS

The following sections present our preliminary geotechnical recommendations for design and construction of the project. This project is in preliminary design phase and some aspects of the design will be subject to change. Detailed plans regarding the design of the BMPs have not been developed yet. Accordingly, the following recommendations should be considered preliminary. Ninyo & Moore should review the final plans and develop additional geotechnical recommendations as appropriate. These recommendations are based on our evaluation of the site geotechnical conditions, our understanding of the planned construction, and experience in the vicinity of the project. The work should be performed in conformance with the recommendations presented in this report, project specifications, and appropriate agency standards. The recommendations presented in our Limited Phase II ESA, which will be submitted under separate cover, should also be incorporated into the design and construction of the project.

12.1 Waste

As previously discussed, waste was encountered during our geotechnical evaluation to depths of up to approximately 13 feet and should be anticipated to be encountered during site earthwork. Additional information regarding the waste encountered is provided in our ESA report (Ninyo & Moore, 2020b). From a geotechnical standpoint, the waste should be removed from beneath

proposed improvements and disposed of offsite. Generally, it is anticipated that proposed excavations will remove the waste and expose alluvial deposits. However, removal, handling, and disposal of the waste should also be performed in accordance with mitigation recommendations based on environmental considerations for the project. We understand that additional Phase II environmental site assessment, including subsurface exploration and analytical testing, is being planned to further evaluate the waste types, depths and lateral extents, and potential site impacts in order to provide mitigation recommendations for the project, including implementation of a Soil Management Plan for encountering the waste and impacted soil, including soil handling, vapor monitoring, air-monitoring, selective stockpiling.

12.2 Earthwork

We anticipate that earthwork at the site will consist of cuts and fills associated with excavations to install the proposed BMP improvements, including the gallery, diversion structure, pump station, HDSs, pipelines, manholes, dry wells, etc. Based on the preliminary plans (CDM Smith, 2020), excavations for the proposed BMP improvements are anticipated to be on the order of 8 to 20 feet in depth and the dry wells are anticipated to be on the order of 50 feet in depth. The earthwork will involve the removal of undocumented fill and waste. Earthwork will also include finish grading for establishment of site drainage. Earthwork operations should be performed in accordance with the requirements of applicable governing agencies and the recommendations presented in the following sections.

12.2.1 Pre-Construction Conference

We recommend that grading and foundation plans be submitted to Ninyo & Moore for review to check for conformance to the recommendations provided in this report. We further recommend that a pre-construction conference be held to discuss the grading recommendations presented in this report. The owner and/or their representative, the governing agencies' representatives, the civil engineer, Ninyo & Moore, and the contractor should be in attendance to discuss the work plan, project schedule, and earthwork and mitigation requirements.

12.2.2 Clearing and Site Preparation

Prior to excavating or other earthwork, the proposed area of improvements should be cleared of surface obstructions, debris, pavement, abandoned utilities, and other deleterious materials. Obstructions that extend below finish grade, if any, should be removed and the resulting holes filled with compacted soils. Materials generated from the clearing operations should be removed from the project site and disposed at a legal dump site.

12.2.3 Excavation Characteristics

We anticipate that excavations and drilling in the undocumented fill, waste, and alluvium should be feasible with earthmoving equipment and drilling equipment in good working order. The fill and alluvial materials generally consist of moist, very loose to very dense, poorly graded sand, poorly graded sand with silt, poorly graded sand with clay, well-graded sand with silt, silty sand, clayey sand, and sandy silt. Variable amounts of gravel and cobbles were encountered in the fill and alluvium and should be anticipated in the excavations. The waste encountered in our exploratory excavations consisted of pieces of AC, PCC, brick, glass, ceramic, plastic, glass bottles, and tires. Other materials may also be present in the waste. The contractor should anticipate handling and disposal of oversize materials. Difficult excavating and drilling conditions should be anticipated by the contractor where excavations encounter dense gravel, cobbles, and waste within the fill and alluvium. Specialty equipment may also be needed for excavating and drilling through oversized waste. Processing of the materials to bring them near the laboratory optimum moisture content (i.e., drying and/or wetting) prior to use as fill should be planned by the contractor.

12.2.4 Subgrade Preparation for the Infiltration Gallery

Based on our exploratory borings, test pits, and CPTs, alluvium is anticipated at the bottom of the planned infiltration gallery that should be suitable for support of the gallery and overlying compacted fill. The excavation bottom should be evaluated by our representative during the excavation work. In the event that unsuitable material is encountered along the bottom of the excavation, including undocumented fill and/or waste, the unsuitable material should be removed and replaced with loosely-packed clean sand or gravel, such as additional drainage rock. The actual recommendations for removal and replacement should be based on our field observations. We recommend that minimal compaction be performed on the exposed subgrade, materials used to replace unsuitable materials (if needed), and/or rock blanket beneath the gallery. We recommend that the rock blanket consist of open-graded gravel of ¾-inch to 1½-inch diameter rock underlain by filter fabric consisting of Mirafi 140N or equivalent. Compaction of the subgrade could potentially reduce the infiltration rate of the gallery. If the subgrade of the infiltration gallery is compacted, we recommend that additional percolation testing be performed.

If foundations are to be installed along the bottom of the gallery, such as strip footings, the upper approximately 8-inches of subgrade, only beneath the foundations, should be scarified, moisture-conditioned to near optimum moisture content, and recompacted to a relative compaction of 90 percent as evaluated by ASTM D 1557. If unsuitable materials, including undocumented fill, waste, loose/soft, and/or wet materials, are encountered along the

excavation bottom that extend beneath proposed footings, specific recommendations for removal and replacement of these materials, if warranted, will be provided by our firm based on field observations.

12.2.5 Subgrade Preparation for Other Buried Structures and At-Grade Structures

In order to provide suitable support for proposed buried and/or at-grade structures, including, the new diversion structure, pump station, HDS units, and manholes, we recommend that the existing undocumented fill, waste, and upper loose alluvial deposits be removed from beneath the structures. In addition, the structure foundations should be founded on 2 feet or more of newly compacted fill material. The over-excavation should remove undocumented fill/waste and expose relatively dense alluvial deposits. Additional overexcavation of loose, soft, and/or wet areas may be appropriate. The excavation bottom should be evaluated by our representative during the excavation work and additional recommendations, if needed, be based on field observations. The limits of removal should extend approximately 2 feet beyond the footprint of the foundations. If drainage rock is placed beneath the foundations, this can be considered part of the 2-foot thick layer of compacted fill beneath the foundations. Prior to placing compacted fill and/or drainage rock, the upper approximately 8 inches of the exposed bottom should be scarified, moisture-conditioned to near optimum moisture content, and recompacted to a relative compaction of 90 percent as evaluated by ASTM D 1557.

12.2.6 Temporary Excavations and Shoring

We recommend that excavations be designed and constructed in accordance with OSHA regulations. These regulations provide shoring design parameters for excavations and trenches up to 20 feet deep based on the soil types encountered. Trenches over 20 feet deep should be designed by the contractor's engineer based on site-specific geotechnical analyses. For planning purposes, we recommend that fill and alluvium be considered as OSHA Type C soil. For trench or other excavations, OSHA requirements regarding personnel safety should be met by using appropriate shoring or by laying back the slopes no steeper than 1½:1 (horizontal to vertical) in the site fill and alluvium. Temporary excavations that encounter seepage may need shoring or may be mitigated by placing sandbags or gravel along the base of the seepage zone. Excavations encountering seepage should be evaluated on a case-by-case basis.

We anticipate that site excavations will be laid-back using temporary slopes. Where slopes cannot be laid back, shoring may be appropriate. If shoring systems are used for site excavations, they should be designed for the anticipated soil conditions using the lateral earth

pressure values shown on Figures 9 through 10 for braced and cantilevered excavations, respectively. The recommended design pressures are based on the assumption that the shoring system is constructed without raising the ground surface elevation behind the shored sidewalls of the excavation, that there are no surcharge loads, such as soil stockpiles and construction materials, and that no loads act above a 1:1 (horizontal to vertical) plane ascending from the base of the shoring system. For a shoring system subjected to the above-mentioned surcharge loads, the contractor should include the effect of these loads on the lateral earth pressures acting on the shored walls.

We anticipate that settlement of the ground surface will occur behind the shored excavations. The amount of settlement depends heavily on the type of shoring system, the contractor's workmanship, and soil conditions. To reduce the potential for distress to adjacent improvements, we recommend that the shoring system be designed to limit the ground settlement behind the shoring system to ½ inch or less. Possible causes of settlement that should be addressed include settlement during installation of the shoring elements, excavation for structure construction, construction vibrations, and removal of the support system. We recommend that shoring installation be evaluated carefully by the contractor prior to construction and that ground vibration and settlement monitoring be performed during construction.

The contractor should retain a qualified and experienced engineer to design the shoring system. The shoring parameters presented in this report are minimum requirements, and the contractor should evaluate the adequacy of these parameters and make the appropriate modifications for their design. We recommend that the contractor take appropriate measures to protect workers. OSHA requirements pertaining to worker safety should be observed.

12.2.7 Fill Material

In general, the on-site soils below or outside the lateral extents of the on-site waste materials should be suitable for reuse as fill materials, provided they are free of trash, debris, oversize material, or other deleterious materials. Fill should generally be free of rocks or lumps of material in excess of 4 inches in diameter. Rocks or hard lumps larger than approximately 4 inches in diameter should be broken into smaller pieces or should be removed from the site. The waste material should not be reused as fill material.

Imported fill material, if used, should also consist of clean, granular material with a low expansion potential, corresponding to an expansion index of 50 or less. The soil should also be tested for corrosive properties prior to importing. We recommend that the imported materials satisfy the Caltrans (2018) criteria for non-corrosive soils (i.e., soils having a

chloride concentration of 500 parts per million [ppm] or less, a soluble sulfate content of approximately 0.15 percent (1,500 ppm) or less, a pH value of 5.5 or higher, or an electrical resistivity of 1,100 ohm-centimeters or more). Materials for use as fill should be evaluated by Ninyo & Moore prior to importing. The contractor should be responsible for the uniformity of import material brought to the site.

12.2.8 Fill Placement and Compaction

In general, fill material, including retaining wall, trench backfill, fill placed beneath gallery footings, and other, should be moisture-conditioned and compacted in horizontal lifts to a relative compaction of 90 percent or more as evaluated by ASTM D 1557. Fill material with less than 5 percent fines (passing No. 200 sieve) should be compacted to 95 percent relative compaction in accordance with City of Los Angeles guidelines as evaluated by ASTM D 1557. The rock blanket and granular materials placed as fill along the bottom of the gallery excavation, with the exception of fill placed beneath footings, should generally not be compacted. Fill material should be moisture-conditioned to slightly above the laboratory optimum moisture content. The lift thickness for fill soils will depend on the type of compaction equipment used but generally should not exceed 8 inches in loose thickness. Special care should be exercised to avoid damaging pipes during compaction of trench backfill. Placement and compaction of the fill soils should be in general accordance with local grading ordinances and good construction practice.

12.3 Underground Utilities

We anticipate that underground pipelines will be supported on native alluvial deposits. Based on the preliminary plans, pipeline inverts may be on the order of 13 feet in depth.

12.3.1 Pipe Bedding

We recommend that pipes be supported on 6 inches or more of granular bedding material, such as sand, with a sand equivalent value of 30 or more. Bedding material should be placed around the pipe and 12 inches or more above the top of the pipe in accordance with the current “Greenbook” Standard Specifications for Public Works. Special care should be taken not to allow voids beneath the pipe. Compaction of the bedding material and backfill should proceed up both sides of the pipe. Trench backfill, including bedding material, should be placed in accordance with the recommendations presented in Section 12.2.

12.3.2 Modulus of Soil Reaction for Pipe Design

The modulus of soil reaction is used to characterize the stiffness of soil backfill placed along the sides of buried flexible pipelines for the purpose of evaluating deflection caused by the

weight of the backfill above the pipe. We recommend that a modulus of soil reaction of 1,000 pounds per square inch be used for design, provided that granular bedding material is placed adjacent to the pipe, as recommended in the previous section.

12.4 Site-Specific Seismic Design Considerations

Design of the proposed improvements should be performed in accordance with the requirements of governing jurisdictions and applicable building codes. Table 2 presents the site-specific spectral response acceleration parameters in accordance with the CBC (2019) guidelines.

Table 2 – 2019 California Building Code Seismic Design Criteria

Site Coefficients and Spectral Response Acceleration Parameters	Values
Site Class	D
Mapped Spectral Response Acceleration at 0.2-second Period, S_s	1.935g
Mapped Spectral Response Acceleration at 1.0-second Period, S_1	0.658g
Site-Specific Spectral Response Acceleration at 0.2-second Period, S_{MS}	2.182g
Site-Specific Spectral Response Acceleration at 1.0-second Period, S_{M1}	1.770g
Site-Specific Design Spectral Response Acceleration at 0.2-second Period, S_{DS}	1.455g
Site-Specific Design Spectral Response Acceleration at 1.0-second Period, S_{D1}	1.180g
Site-Specific Maximum Considered Earthquake Geometric Mean (MCE_G) Peak Ground Acceleration, PGA_M	0.834g

12.5 Foundations

It is our opinion that the proposed infiltration gallery may be supported on strip footings and that other underground structures (i.e., diversion structure, HDS units, etc.) may be supported by mat foundations. Spread foundations may also be used to support other at-grade structures, if planned. The following are our recommendations for project foundations:

12.5.1 Spread Footings for Infiltration Gallery and At-Grade Structures

Spread footings for the infiltration gallery (i.e., strip footings) should be placed directly on low expansion alluvial materials and/or compacted fill in accordance with the recommendations presented in the Earthwork section of this report. Spread footings for at-grade structures bearing on low expansion compacted fill in accordance with the recommendations presented in the Earthwork section of this report should extend 18 inches or more below the lowest adjacent finished grade. Continuous and isolated footings should have a width of 24 inches or more. Continuous footings should be reinforced with two No. 4 steel reinforcing bars, one placed near the top and one placed near the bottom of the footings, and further detailed in accordance with the recommendations of the structural engineer.

Footings, as described above and bearing on alluvial materials and compacted fill, may be designed using a net allowable bearing capacity of 2,500 pounds per square foot (psf). Total and differential settlements for footings designed in accordance with the above

recommendations are estimated to be less than approximately 1 inch and ½ inch over a horizontal span of 40 feet, respectively.

Footings bearing on alluvial materials and compacted fill may be designed using a coefficient of friction of 0.35, where the total frictional resistance equals the coefficient of friction times the dead load. Footings may be designed using a passive resistance value of 300 psf per foot of depth, with a maximum value of 3,000 psf. The allowable lateral resistance can be taken as the sum of the frictional resistance and passive resistance, provided the passive resistance does not exceed one-half of the total allowable resistance. The passive resistance (including the maximum value) may be increased by one-third when considering loads of short duration such as wind or seismic forces.

12.5.2 Mat Foundations

Mat foundations for other underground structures (i.e., diversion structure, HDS units, etc.) may be supported on alluvial materials and/or compacted fill in accordance with the recommendations presented in the Earthwork section of this report. Foundations should be designed in accordance with structural considerations and the following recommendations. In addition, requirements of the appropriate governing jurisdictions and applicable building codes should be considered in the design of the structures.

The mat foundations may be designed using a net allowable bearing capacity of 4,000 pounds per square foot (psf). The total and differential settlement corresponding to this allowable bearing load are estimated to be less than approximately 1 inch and ½ inch over a horizontal span of 40 feet, respectively.

Mat foundations typically experience some deflection due to loads placed on the mat and the reaction of the soils directly underlying the mat. A design modulus of subgrade reaction (K) of 50 tons per cubic foot (tcf) may be used for the subgrade soils in evaluating such deflections

12.6 Lateral Earth Pressures

Walls for below-grade structures when constructed as recommended above may be designed for lateral pressures represented by the pressure diagram on Figure 11. To reduce the potential for pipe-to-wall differential settlement, which could cause pipe shearing, we recommend that a flexible pipe joint be located close to the exterior of the wall. The type of joint should be such that minor relative movement can be accommodated without distress. The pipe connections should be sufficiently flexible to withstand differential settlement of approximately ¾ inch.

12.7 Exterior Flatwork

We recommend that new exterior concrete sidewalks and flatwork (hardscape) have a thickness of 4 inches and be reinforced with No. 3 steel reinforcing bars placed 24 inches on-center (each way) near the mid-height of the slab. The hardscape should be underlain by 4 inches of clean sand and installed with crack-control joints at an appropriate spacing as designed by the structural engineer to reduce the potential for shrinkage cracking. Positive drainage should be established and maintained adjacent to flatwork. To reduce the potential for differential offset, joints between the new hardscape and adjacent curbs, existing hardscape, building walls, and/or other structures, and between sections of new hardscape, should be doweled.

12.8 Corrosivity

Laboratory testing was performed on representative samples of near-surface soil to evaluate soil pH, electrical resistivity, water-soluble chloride content, and water-soluble sulfate content. The soil pH and electrical resistivity tests were performed in general accordance with California Test Method (CT) 643. Chloride content tests were performed in general accordance with CT 422. Sulfate testing was performed in general accordance with CT 417. The laboratory test results are presented in Appendix d.

The soil pH of the samples tested was measured to range from 6.9 to 7.4 and the electrical resistivity was measured to range from 2,363 to 6,922 ohm-centimeters. The chloride content of the samples was measured to be 30 ppm. The sulfate content of the samples was measured to range from 0.005 to 0.008 percent by weight (i.e., 50 to 80 ppm). Based on the laboratory test results and Caltrans criteria (2018), the project site can be classified as a non-corrosive site, which is defined as having earth materials with a pH of more than 5.5, an electrical resistivity of more than 1,100 ohm-centimeters, chloride concentrations of less than 500 ppm, and less than 0.15 percent sulfates (i.e., 1,500 ppm).

12.9 Concrete Placement

Concrete in contact with soil or water that contains high concentrations of water-soluble sulfates can be subject to premature chemical and/or physical deterioration. Based on the CBC (2019), the potential for sulfate attack is negligible for water-soluble sulfate contents in soil ranging from 0.00 to 0.10 percent by weight, moderate for water-soluble sulfate contents ranging from 0.10 to 0.20 percent by weight, severe for water-soluble sulfate contents ranging from 0.20 to 2.00 percent by weight, and very severe for water-soluble sulfate contents over 2.00 percent by weight. The soil samples tested for this evaluation, using CT 417, indicate a water-soluble sulfate content ranging from approximately 0.005 to 0.008 percent by weight (i.e., 50 to 80 ppm). Accordingly, the on-site soils are considered to have a negligible potential for sulfate attack.

However, due to the potential variability of the on-site soils, consideration should be given to using Type II/V cement for the project.

To reduce the potential for shrinkage cracks in the concrete during curing, we recommend that the concrete for the proposed improvements, if applicable, be placed with a slump of 4 inches based on ASTM C 143. The slump should be checked periodically at the site prior to concrete placement. We further recommend that concrete cover over reinforcing steel for foundations be provided in accordance with CBC (2019). The structural engineer should be consulted for additional concrete specifications.

12.10 Stormwater Infiltration Gallery

Based on our subsurface evaluation, the park is generally underlain by granular alluvial deposits consisting of poorly graded sand, poorly graded sand with silt, poorly graded sand with clay, well-graded sand with silt, silty sand, and sandy silt. The wide range of infiltration rates (1.9 to 6.9 inches per hour) is likely due to lateral and vertical variations in material types and densities, including higher fines contents of alluvial interbeds and lenses. Based on our review of our boring logs and laboratory test results, we recommend that an infiltration rate of 4 inches per hour, following adjustments by the BMP designer for RF_s, be used for design at Strathern Park North for both shallow and deep infiltration. However, we recommend that the bottoms of the infiltration BMPs be further evaluated during construction. Additional recommendations may be provided at that time if fine-grained materials are present along the bottom of the basin, such as removing the fine-grained material and replacing it with granular material.

Based on our evaluation, the potential for hydro-collapse settlement associated with infiltration is generally low due to the proposed depth of infiltration. However, we generally recommend a setback of 15 feet or more between settlement sensitive structures and proposed infiltration areas.

12.11 Drainage

Proper surface drainage is imperative for satisfactory site performance. Positive drainage should be provided and maintained to direct surface water away from existing foundations. Positive drainage is defined as a slope of 2 percent or more for a distance of 5 feet or more away from foundations and tops of slopes. Surface waters should not be allowed to pond adjacent to footings. We recommend that above-ground structures, if constructed, have roof drains and downspouts installed to collect runoff.

12.12 Landscaping

Project landscaping should consist of drought tolerant plants. Landscape irrigation should be kept to a level just sufficient to maintain plant vigor. Overwatering should not be permitted

13 CONSTRUCTION OBSERVATION

The recommendations provided in this report are based on our understanding of the proposed project and our evaluation of the data collected based on subsurface conditions disclosed by widely spaced exploratory borings, test pits, and CPTs. It is imperative that the geotechnical consultant checks the interpolated subsurface conditions during construction. We recommend that Ninyo & Moore review the project plans and specifications prior to construction. It should be noted that, upon review of these documents, some recommendations presented in this report may be revised or modified.

During construction we recommend that the duties of the geotechnical consultant include, but not be limited to:

- Observing site clearing, grubbing, and removals including undocumented fill and waste.
- Observing excavation bottoms, and the placement and compaction of fill, including trench backfill.
- Observing the drilling of dry wells, if chosen for the project.
- Evaluating imported materials prior to their use as fill (if used).
- Performing field tests to evaluate fill compaction.
- Observing foundation excavations for bearing materials and cleaning prior to placement of reinforcing steel or concrete.
- Performing material testing services including concrete compressive strength and steel tensile strength tests and inspections.

The recommendations provided in this report assume that Ninyo & Moore will be retained as the geotechnical consultant during the construction phase of this project. If another geotechnical consultant is selected, we request that the selected consultant indicate to the owner and to our firm in writing that our recommendations are understood and that they are in full agreement with our recommendations.

14 LIMITATIONS

The field evaluation, laboratory testing, and geotechnical analysis presented in this geotechnical report have been conducted in general accordance with current practice and the standard of care exercised by geotechnical consultants performing similar tasks in the project area. No warranty, expressed or implied, is made regarding the conclusions, recommendations, and opinions presented in this report. There is no evaluation detailed enough to reveal every subsurface condition. Variations may exist and conditions not observed or described in this report may be encountered during construction. Uncertainties relative to subsurface conditions can be reduced

through additional subsurface exploration. Additional subsurface evaluation will be performed upon request. Please also note that our evaluation was limited to assessment of the geotechnical aspects of the project, and did not include evaluation of structural issues, environmental concerns, or the presence of hazardous materials.

This document is intended to be used only in its entirety. No portion of the document, by itself, is designed to completely represent any aspect of the project described herein. Ninyo & Moore should be contacted if the reader requires additional information or has questions regarding the content, interpretations presented, or completeness of this document.

This report is intended for design purposes only. It does not provide sufficient data to prepare an accurate bid by contractors. It is suggested that the bidders and their geotechnical consultant perform an independent evaluation of the subsurface conditions in the project areas. The independent evaluations may include, but not be limited to, review of other geotechnical reports prepared for the adjacent areas, site reconnaissance, and additional exploration and laboratory testing.

Our conclusions, recommendations, and opinions are based on an analysis of the observed site conditions. If geotechnical conditions different from those described in this report are encountered, our office should be notified, and additional recommendations, if warranted, will be provided upon request. It should be understood that the conditions of a site could change with time as a result of natural processes or the activities of man at the subject site or nearby sites. In addition, changes to the applicable laws, regulations, codes, and standards of practice may occur due to government action or the broadening of knowledge. The findings of this report may, therefore, be invalidated over time, in part or in whole, by changes over which Ninyo & Moore has no control.

This report is intended exclusively for use by the client. Any use or reuse of the findings, conclusions, and/or recommendations of this report by parties other than the client is undertaken at said parties' sole risk.

15 REFERENCES

Abrahamson, N.A., Silva, W.J. and Kamai, R., 2014, Summary of the ASK14 Ground Motion Relation for Active Crustal Regions, Earthquake Spectra: Vol. 30, No. 3, pp. 1025-1055, dated August.

American Concrete Institute, 2019, Building Code Requirements for Structural Concrete (ACI 318-19) and Commentary (ACI 318R-19).

American Concrete Institute (ACI), 2016, ACI Manual of Concrete Practice.

American Society of Civil Engineers (ASCE), 2016, Minimum Design Loads for Building and Other Structures, Standard 7-16.

The Applied Technology Council (ATC), 2020, Hazards by Location, https://hazards.atcouncil.org/#/.

ASTM International (ASTM), 2019, Annual Book of ASTM Standards, West Conshohocken, Pennsylvania.

Bartlett, S.F., and Youd, T.L., 1995, Empirical Prediction of Liquefaction-Induced Lateral Spread Journal of Geotechnical Engineering, American Society of Civil Engineers, Vol. 121, No. 4, 316-329, dated April.

Boore, D.M., Stewart, J.P., Seyhan, E., and Atkinson, G.M., 2014, NGA-West2 Equations for Predicting PGA, PGV, and 5% Damped PSA for Shallow Crustal Earthquakes, Earthquake Spectra, Vol. 30, No. 3, pp. 1057-1085, dated August.

Bowles, J.E., 1996, Foundation Analysis and Design, Fifth Edition, The McGraw-Hill Companies, Inc.

Building Seismic Safety Council, 2009, National Earthquake Hazards Reduction Program (NEHRP) Recommended Seismic Provisions for New Buildings and Other Structures (FEMA P-750).

California Building Standards Commission, 2019, California Building Code (CBC): California Code of Regulations, Title 24, Part 2, Volumes 1 and 2, dated July 1.

California Department of Transportation, 2018, Corrosion Guidelines, Version 3.0, Division of Engineering Services, Materials Engineering and Testing Services, Corrosion Technology Branch, dated March.

California Department of Transportation, 2020, Caltrans ARS Online (V3.0.2), http://dap3.dot.ca.gov/ARS_Online/.

California Department of Conservation, Division of Mines and Geology, 1997, Seismic Hazard Zone Report for the Van Nuys 7.5-Minute Quadrangle, Los Angeles County, California: Seismic Hazard Zone Report 08.

California Department of Conservation, Division of Mines and Geology, 1998, Seismic Hazard Zones Official Map, Van Nuys Quadrangle, 7.5-Minute Series: Scale 1:24,000, dated February 1.

California Geological Survey, 2008, Guidelines for Evaluating and Mitigating Seismic Hazards in California, CDMG Special Publication 117A.

California Geological Survey, 2010, Fault Activity Map of California, http://maps.conservation.ca.gov/cgs/fam/.

California Geological Survey, 2007, Significant California Earthquakes (M > 6.5 or That Caused Loss of Life or More than $200,000* in Damage), *Damage Estimates Have Not Been Adjusted for Inflation, Website http://www.conservation.ca.gov/cgs/rghm/quakes/eq_chron.htm, last edited on June 11.

California Geological Survey, 2020, Earthquake Zones of Required Investigation, https://maps.conservation.ca.gov/cgs/EQZApp/app/.

Campbell, K.W., and Bozorgnia, Y., 2014, NGA-West2 Ground Motion Model for the Average Horizontal Components of PGA, PGV, and 5% Damped Linear Acceleration Response Spectra, Earthquake Spectra, Vol. 30, No. 3, pp. 1087-1115, dated August.

Campbell, R.H., Wills, C.J., Irvine, P.J., Swanson, B.J., 2014, Preliminary Geologic Map of the Los Angeles 30' x 60' Quadrangle, California, Version 2.0: United States Geological Survey, Scale 1:100,000.

CDM Smith, 2020, TOS 25 Stormwater Capture Parks Program, Strathern Site Layout, dated March 24.

Chiou, B. S.-J., and Youngs, R.R., 2014, Update of the Chiou and Youngs NGA Model for the Average Horizontal Component of Peak Ground Motion and Response Spectra, Earthquake Spectra, August 2014, Vol. 30, No. 3, dated August.

CivilTech Software, 2008, Liquefy Pro (Version 5.5j), A computer program for liquefaction and settlement analysis.

City of Los Angeles, 2004, Methane and Methane Buffer Zones, Bureau of Engineering, Department of Public Works, dated March 31.

City of Los Angeles, Department of Building and Safety, 2014, Site Testing Standards for Methane, Bulletin P/BC 2014-101.

City of Los Angeles, Department of Public Works, Bureau of Engineering, 2019a, Pre-Qualified On-Call Wastewater and Environmental Engineering Services Consultant Contract, Task Order Solicitation (TOS) No. 25, Stormwater Capture Parks Program, Pre-Design and Design Services, dated June 12.

City of Los Angeles, Department of Public Works, Bureau of Engineering, 2019b, Addendum No. 5, Task Order Solicitation (TOS) No. 25, Stormwater Capture Parks Program, Pre-Design and Design Services, dated August 2.

City of Los Angeles, Department of Public Works, Bureau of Engineering, 2020, NavigateLA, http://navigatela.lacity.org/navigatela/.

County of Los Angeles, Department of Public Works, Geotechnical and Materials Engineering Division, 2017, Guidelines for Geotechnical Investigation and Reporting, Low Impact Stormwater Infiltration, dated June 30.

County of Los Angeles, Department of Public Works, 2020, Well Measurement Data, Well Number 4898; www.dpw.lacounty.gov/general/wells.

Dibblee, T.W., Jr., 1991, Geologic Map of the Beverly Hills and South ½ Van Nuys Quadrangles, Los Angeles County, California: Dibblee Foundation, DF-31, Scale 1:24,000.

Federal Emergency Management Agency, 2020, Flood Insurance Rate Maps, Search by Address, https://msc.fema.gov/portal/search.

Google, 2020, Website for Viewing Aerial Photographs, http://maps.google.com/.

Hart, E.W., and Bryant, W.A., 2018, Earthquake Fault Zones, A Guide for Government Agencies, Property Owners/Developers, and Geoscience Practitioners for Assessing Fault Rupture Hazards in California.

Historical Aerials, 2020, Website for Viewing Aerial Photographs, www.historicaerials.com.

Ishihara, K. and Yoshimine, M. (1992) "Evaluation of settlements in sand deposits following liquefaction during earthquakes," Soils and Foundations, 32 (1), 173-188.

Jennings, C.W. and Bryant, W.A., 2010, Fault Activity Map of California and Adjacent Areas: California Division of Mines and Geology, California Geologic Data Map Series, Map No. 6, Scale 1:750,000.

Joint Cooperative Committee of the Southern California Chapter of the American Public Works Association and Southern California Districts of the Associated General Contractors of

California, 2018, “Greenbook,” Standard Specifications for Public Works Construction: BNI Building News, Los Angeles, California.

Los Angeles Department of Water and Power, Watershed Management Group and City of Los Angeles Sanitation – Watershed Protection Division, 2018, Conceptual Study Report, Strathern Park North, Stormwater Capture Project, dated October.

Naval Facilities Engineering Command, 1982, Foundations and Earth Structures Design Manuals, dated May

Ninyo & Moore, 2020a, Revised Proposal for Geotechnical and Environmental Consulting Services, Strathern, Fernangeles, and David M. Gonzales Parks, Stormwater Capture Parks Program, Los Angeles Bureau of Engineering Task Oder Solicitation (TOS) No. 25, Los Angeles, California, dated May 18.

Ninyo & Moore, 2020b, Limited Phase II Environmental Site Assessment (Draft), LABOE TOS No. 25, Stormwater Capture Parks Program, Strathern Park North, 8041 Whitsett Avenue, North Hollywood, California, dated June 18.

Norris, R.M. and Webb, R.W., 1990, Geology of California: John Wiley & Sons.

Seed, H.B., and Idriss, I.M., 1982, Ground Motions and Soil Liquefaction During Earthquakes, Volume 5 of Engineering Monographs on Earthquake Criteria, Structural Design, and Strong Motion Records: Berkeley, Earthquake Engineering Research Institute.

Seyhan, E, 2014, Weighted Average 2014 NGA West-2 GMPE, Pacific Earthquake Engineering Research Center.

Southern California Earthquake Center, 1999, Recommended Procedures for Implementation of DMG Special Publication 117 Guidelines for Analyzing and Mitigating Liquefaction Hazards in California.

Southern California Earthquake Data Center, 2011, SCEC/Harvard Community Velocity Model, Version 11.9.0.

State of California, State Water Resources Control Board, 2020, GeoTracker Database System, http://geotracker.swrcb.ca.gov/.

Structural Engineers Association of California (SEAOC) and California Office of Statewide Health Planning and Development (OSHPD), 2019, Web Based Seismic Design Maps Tool; https://seismicmaps.org.

Tokimatsu, K., and Seed, H.B., 1987, Evaluation of Settlements in Sands Due to Earthquake Shaking, Journal of the Geotechnical Engineering Division, ASCE, Vol. 113, No. 8, pp. 861-878.

United States Department of Agriculture (USDA), Aerial Photograph, Date 11-18-52, Flight AXJ-14K, Numbers 52 and 53, Scale 1:20,000.

United States Geological Survey, 2018, Van Nuys, California, Quadrangle Map, 7.5 Minute Series: Scale 1:24,000.

United States Geological Survey, 2008, National Seismic Hazard Maps, http://geohazards.usgs.gov/cfusion/hazfaults_search/hf_search_main.cfm.

United States Geological Survey and Southern California Earthquake Center, 2019, Open Seismic Hazard Analysis, http://www.opensha.org/.

United States Geological Survey, 2020a, Unified Hazard Tool; https://earthquake.usgs.gov/hazards/interactive/.

United States Geological Survey, 2020b, Slope Based Vs30 Map Viewer; https://usgs.maps.arcgis.com/apps/webappviewer/index.html?id=8ac19bc334f747e486550f32837578e1.

Wayne Perry, Inc., 2012, Additional Site Assessment Report, Shell-Branded Service Station, 12858 Roscoe Boulevard (at Coldwater Canyon), Sun Valley, California, dated July 13.

Wills, C.J., and Clahan, L.B., 2006, Developing a Map of Geologically Defined Site-Condition Categories for California, Bulletin of the Seismological Society of America, v. 96, no. 4A, p. 1483–1501.

Yerkes, R.F., 1996, Preliminary Geologic Map of the Van Nuys 7.5' Quadrangle, Southern California.

Youd, T.L., Idriss, I.M., Andrus, R.D., Arango, I., Castro, G., Christian, J.T., Dobry, R., Finn, W.D., Harder, L.F., Hynes, M.E., Ishihara, K., Koester, J.P., Liao, S.S.C., Marcuson, W.F., Martin, G.R., Mitchell, J.K., Moriwaki, Y., Power, M.S., Robertson, P.K., Seed, R.B., and Stokoe, K.H., II., 2001, Liquefaction Resistance of Soils: Summary Report from the 1996 NCEER and 1998 NCEER/NSF Workshops on Evaluation of Liquefaction Resistance of Soils, Journal of Geotechnical and Geoenvironmental Engineering, ASCE, 124(10), 817-833.

FIGURES

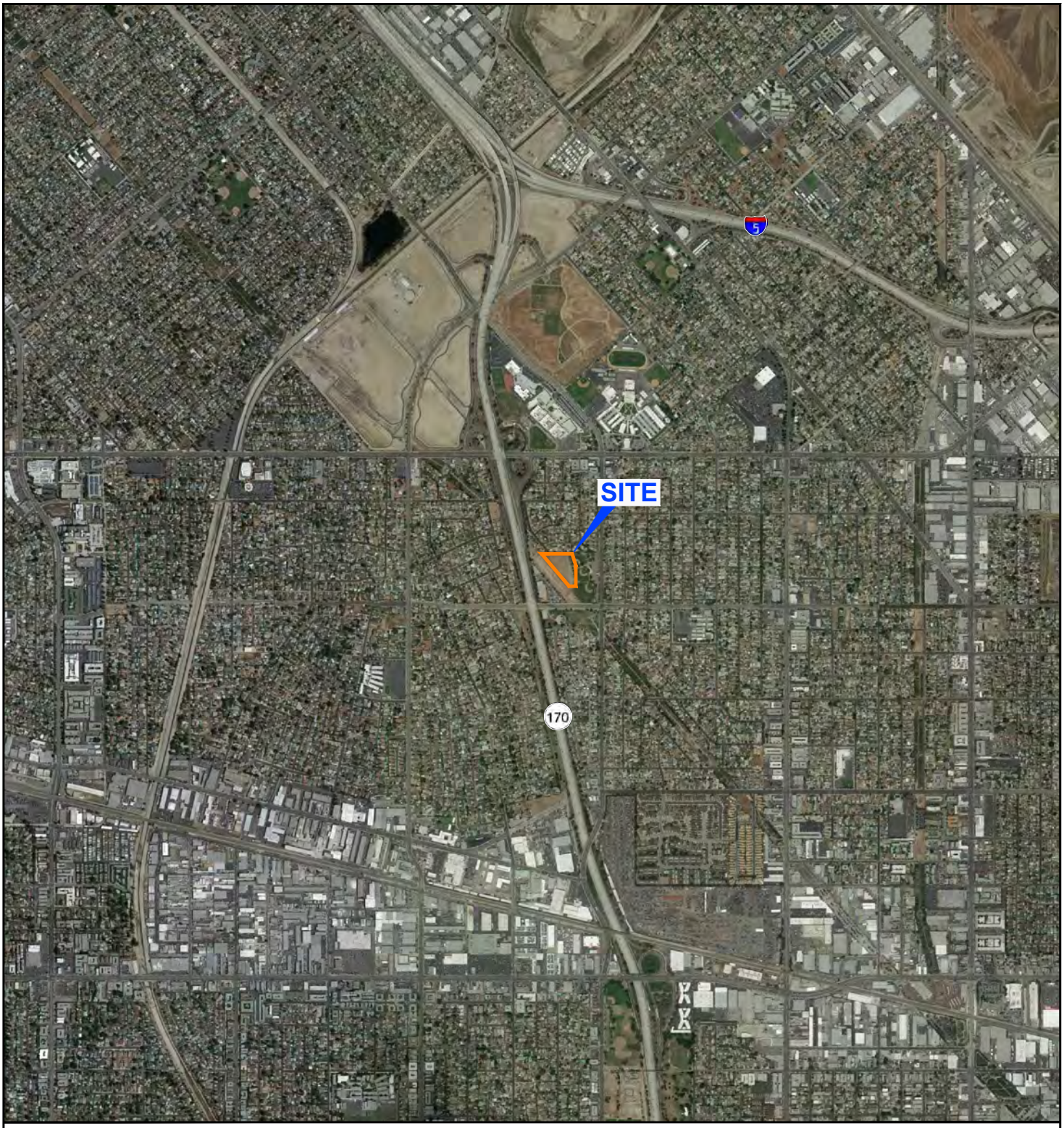

NOTE: DIMENSIONS, DIRECTIONS AND LOCATIONS ARE APPROXIMATE. I REFERENCE: GOOGLE EARTH, 2020.

N

FEET

0 2,000 4,000

FIGURE 1

SITE LOCATION

LABOE TOS NO. 25 - STRATHERN PARK NORTH
NORTH HOLLYWOOD, CALIFORNIA

211294001 I 8/20

Ninyo & Moore
Geotechnical & Environmental Sciences Consultants

210294004_SL.dwg 06/04/2020 JDP

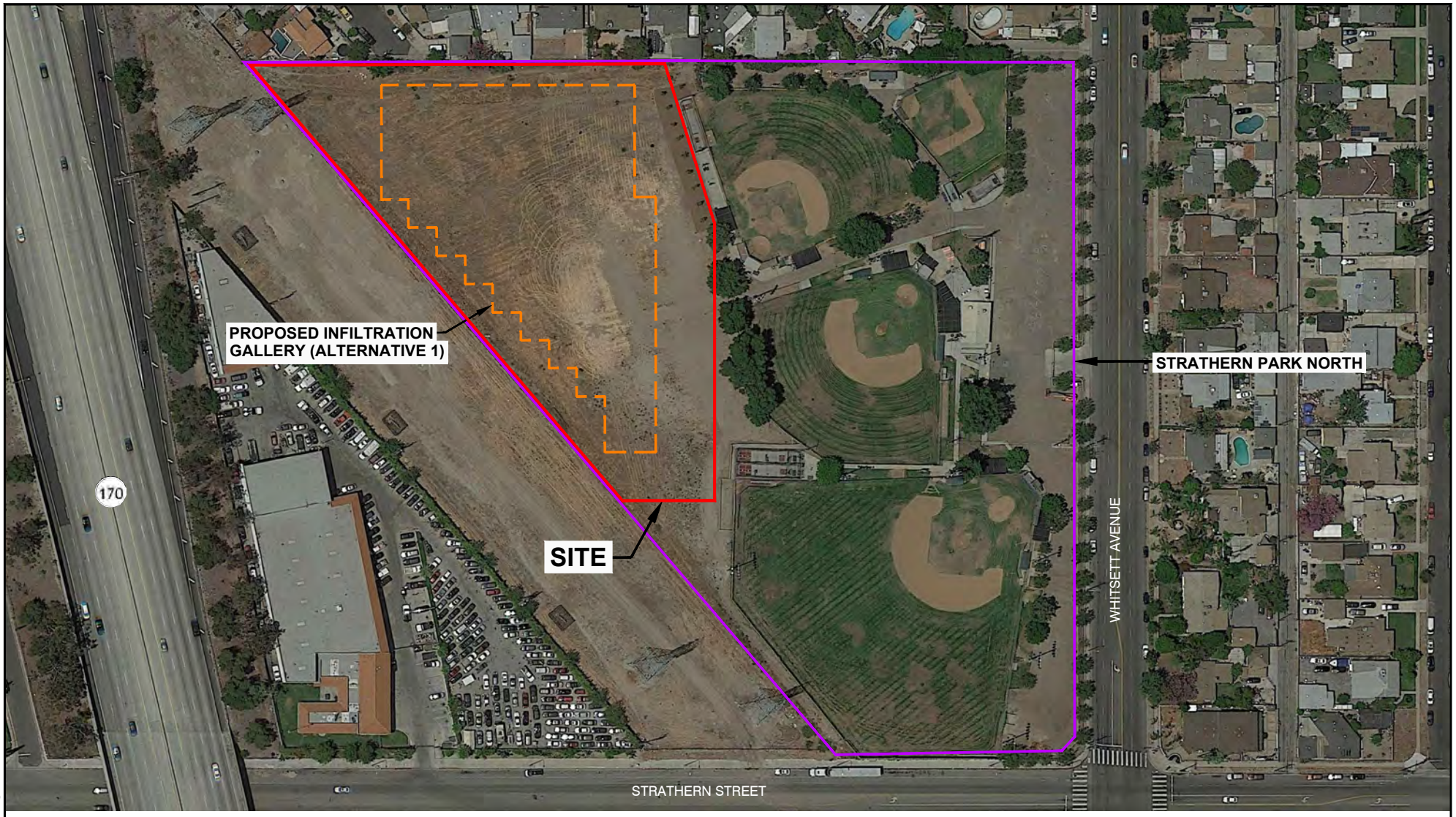

NOTE: DIMENSIONS, DIRECTIONS AND LOCATIONS ARE APPROXIMATE. I REFERENCE: GOOGLE EARTH, 2020.

N

FEET
0 150 300

211294001_SV.dwg 06/08/2020 JDP

FIGURE 2

SITE AND VICINITY

LABOE TOS NO. 25 - STRATHERN PARK NORTH
NORTH HOLLYWOOD, CALIFORNIA

211294001 I 8/20

Ninyo & Moore
Geotechnical & Environmental Sciences Consultants



NOTE: DIMENSIONS, DIRECTIONS AND LOCATIONS ARE APPROXIMATE. I REFERENCE: CDM SMITH, 2020.

211294004_SLO.dwg 06/01/2020 JDP

FIGURE 3

PROPOSED PROJECT LAYOUT (ALTERNATIVE 1)

LABOE TOS NO. 25 - STRATHERN PARK NORTH
NORTH HOLLYWOOD, CALIFORNIA

211294001 I 8/20

Ninyo & Moore
Geotechnical & Environmental Sciences Consultants

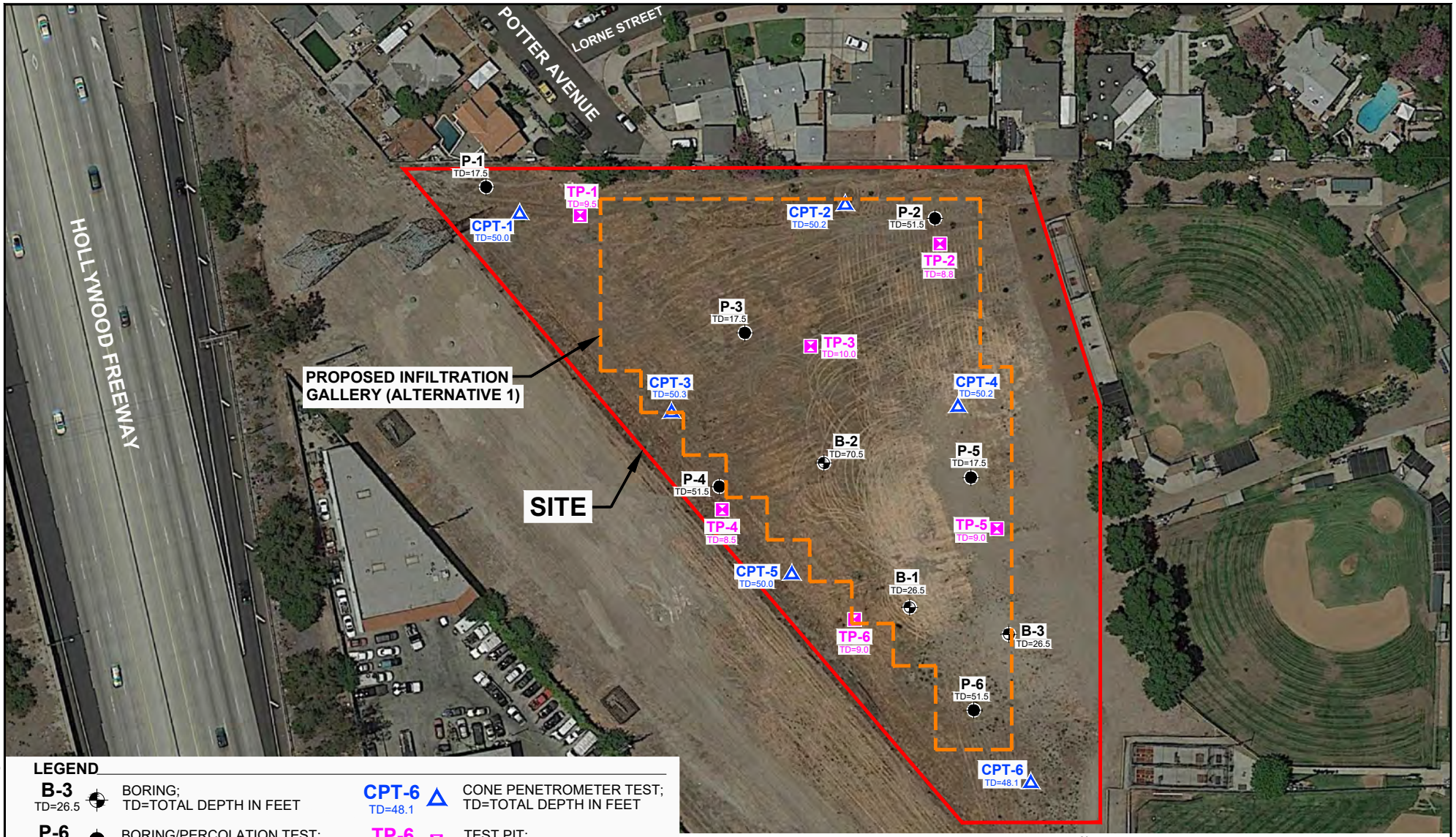

NOTE: DIMENSIONS, DIRECTIONS AND LOCATIONS ARE APPROXIMATE. I REFERENCE: GOOGLE EARTH, 2020.

211294001_SPBTPL.dwg 06/10/2020 JDP

FIGURE 4

BORING, TEST PIT, PERCOLATION TEST, AND CPT LOCATIONS

LABOE TOS NO. 25 - STRATHERN PARK NORTH
NORTH HOLLYWOOD, CALIFORNIA

211294001 I 8/20

Ninyo & Moore
Geotechnical & Environmental Sciences Consultants

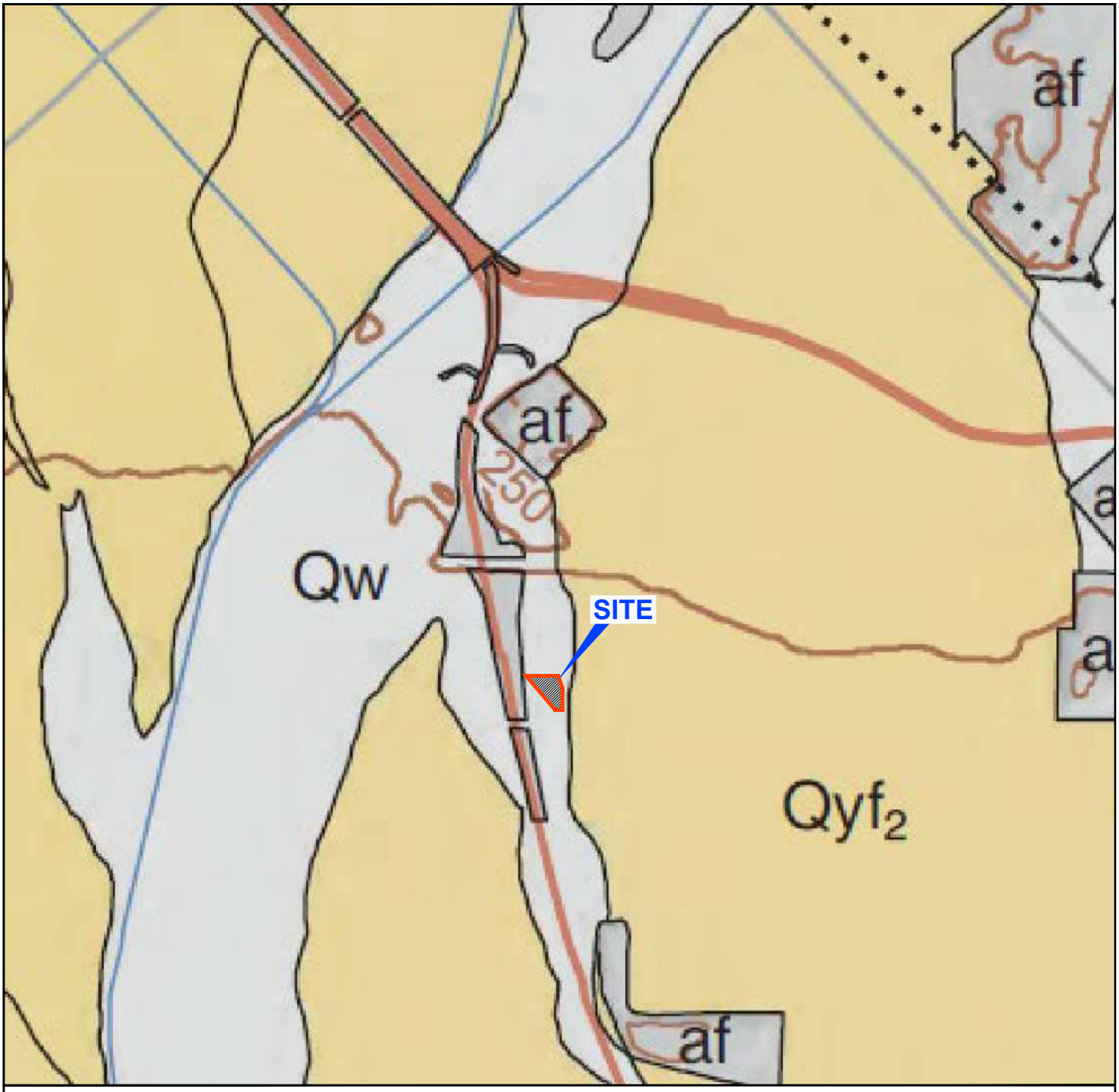

LEGEND

af	ARTIFICIAL FILL
Qw	WASH DEPOSITS
Qyf	YOUNG ALLUVIAL FAN DEPOSITS

FAULT; DOTTED WHERE BURIED

GEOLOGIC CONTACT

N

FEET

0 2,000 4,000

NOTE: DIMENSIONS, DIRECTIONS AND LOCATIONS ARE APPROXIMATE. I REFERENCE: R.H. CAMPBELL, ET AL., 2014.

211294001_RG.dwg 06/07/2020 JDP

FIGURE 5

Ninyo & Moore
Geotechnical & Environmental Sciences Consultants

REGIONAL GEOLOGY

LABOE TOS NO. 25 - STRATHERN PARK NORTH
NORTH HOLLYWOOD, CALIFORNIA

211294001 I 8/20

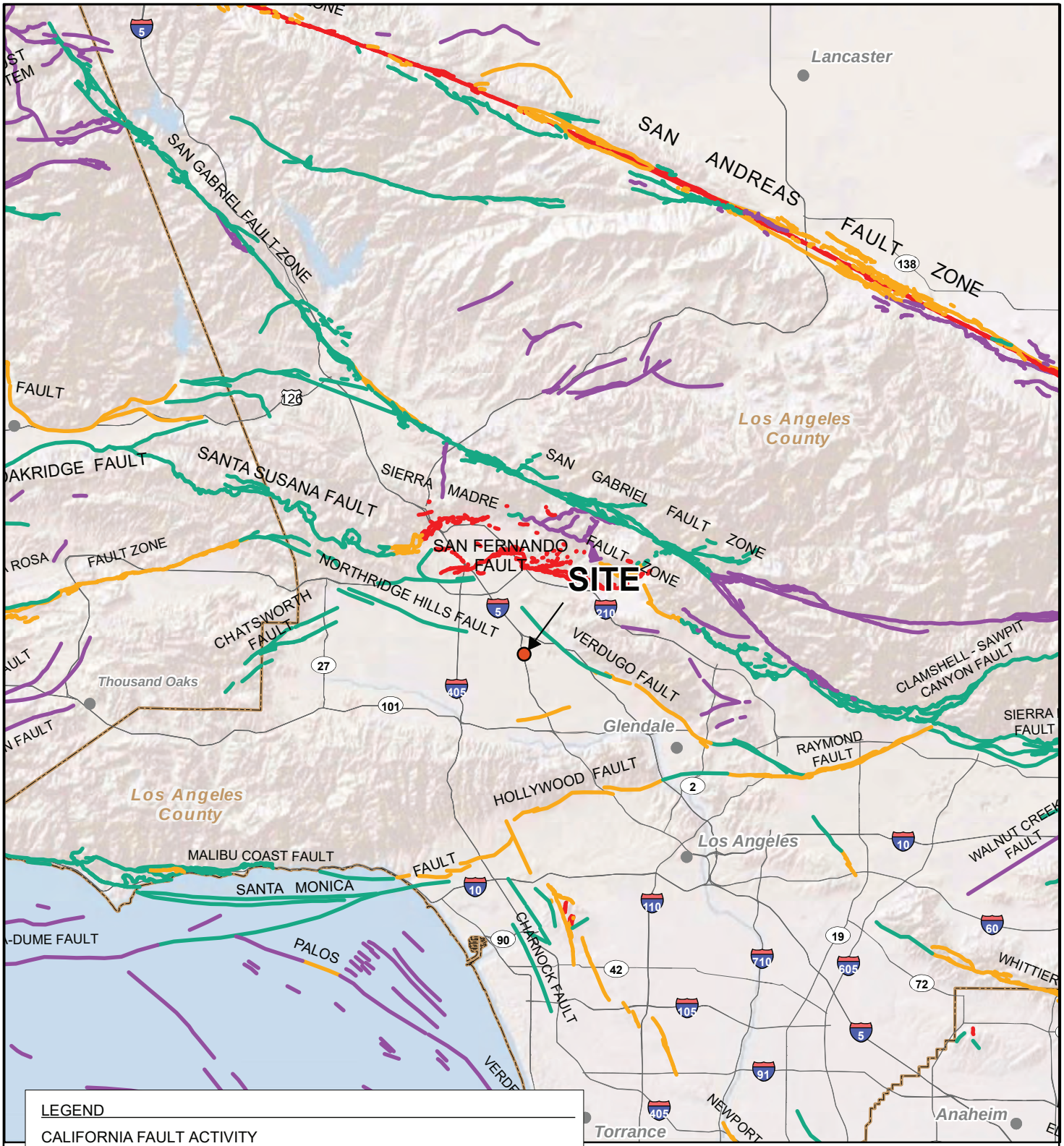

NOTE: DIRECTIONS, DIMENSIONS AND LOCATIONS ARE APPROXIMATE.

SOURCES: CALIFORNIA DIVISION OF MINES AND GEOLOGY, 1976, ENVIRONMENTAL GEOLOGY OF ORANGE COUNTY, CALIFORNIA, OPEN FILE REPORT 79-8.; JENNINGS, C.W., AND BRYANT, 2010, FAULT ACTIVITY MAP OF CALIFORNIA; ESRI SHADED RELIEF, 2017

211294001_FL.mxd 06/04/2020 JDP

FIGURE 6

FAULT LOCATIONS

LABOE TOS NO. 25 - STRATHERN PARK
NORTH HOLLYWOOD, CALIFORNIA

211294001 | 8/20

Ninyo & Moore
Geotechnical & Environmental Sciences Consultants

PERIOD (seconds)	SITE-SPECIFIC MCE_R RESPONSE SPECTRUM Sa (g)	SITE-SPECIFIC DESIGN RESPONSE SPECTRUM Sa (g)
0.010	0.886	0.591
0.020	0.891	0.594
0.030	0.914	0.609
0.050	1.018	0.679
0.075	1.199	0.799
0.100	1.379	0.919
0.150	1.649	1.099
0.200	1.866	1.244
0.250	2.056	1.371
0.300	2.228	1.486
0.400	2.326	1.551

PERIOD (seconds)	SITE-SPECIFIC MCE_R RESPONSE SPECTRUM Sa (g)	SITE-SPECIFIC DESIGN RESPONSE SPECTRUM Sa (g)
0.500	2.273	1.515
0.750	1.929	1.286
1.000	1.635	1.090
1.500	1.127	0.752
2.000	0.834	0.556
3.000	0.525	0.350
4.000	0.362	0.241
5.000	0.278	0.185
7.500	0.181	0.121
10.000	0.108	0.072

S_{DS} =	1.396 g	S_{D1} =	1.127 g	S_{MS} =	2.094 g	S_{M1} =	1.691 g	PGA_M =	0.828 g

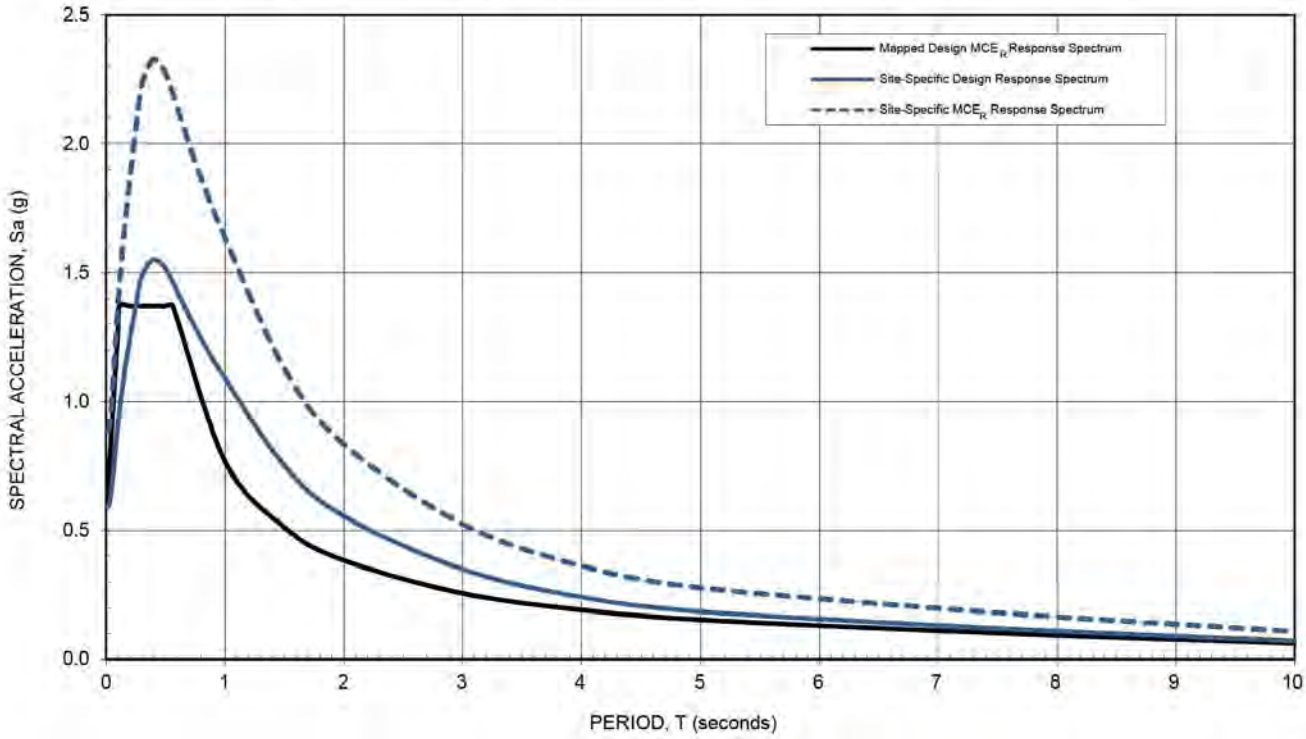

NOTES:

1 The probabilistic ground motion spectral response accelerations are based on the risk-targeted Maximum Considered Earthquake (MCE_R) having a 2% probability of exceedance in 50 years in the maximum direction using the Chiou & Youngs (2014), Campbell & Bozorgnia (2014), Boore et al. (2014), and Abrahamson et al. (2014) attenuation relationships and the risk coefficients.

2 The deterministic ground motion spectral response accelerations are for the 84th percentile of the geometric mean values in the maximum direction using the Chiou & Youngs (2014), Campbell & Bozorgnia (2014), Boore et al. (2014), and Abrahamson et al. (2014) attenuation relationships for deep soil sites considering a Mw 7.3 even on the Hollywood fault zone located 6.54 kilometers from the site. It conforms with the lower bound limit per ASCE 7-16 Section 21.2.2.

3 The Site-Specific MCE_R Response Spectrum is the lesser of spectral ordinates of deterministic and probabilistic accelerations at each period per ASCE 7-16 Section 21.2.3. The Site-Specific Design Response Spectrum conforms with lower bound limit per ASCE 7-16 Section 21.3.

4 The Mapped Design MCE_R Response Spectrum is computed from mapped spectral ordinates modified for Site Class D (stiff soil profile) per ASCE 7-16 Section 11.4. It is presented for the sake of comparison.

211294001_ARS.dwg 06/03/2020 JDP

FIGURE 7

ACCELERATION RESPONSE SPECTRA

LABOE TOS NO. 25 - STRATHERN PARK NORTH
NORTH HOLLYWOOD, CALIFORNIA

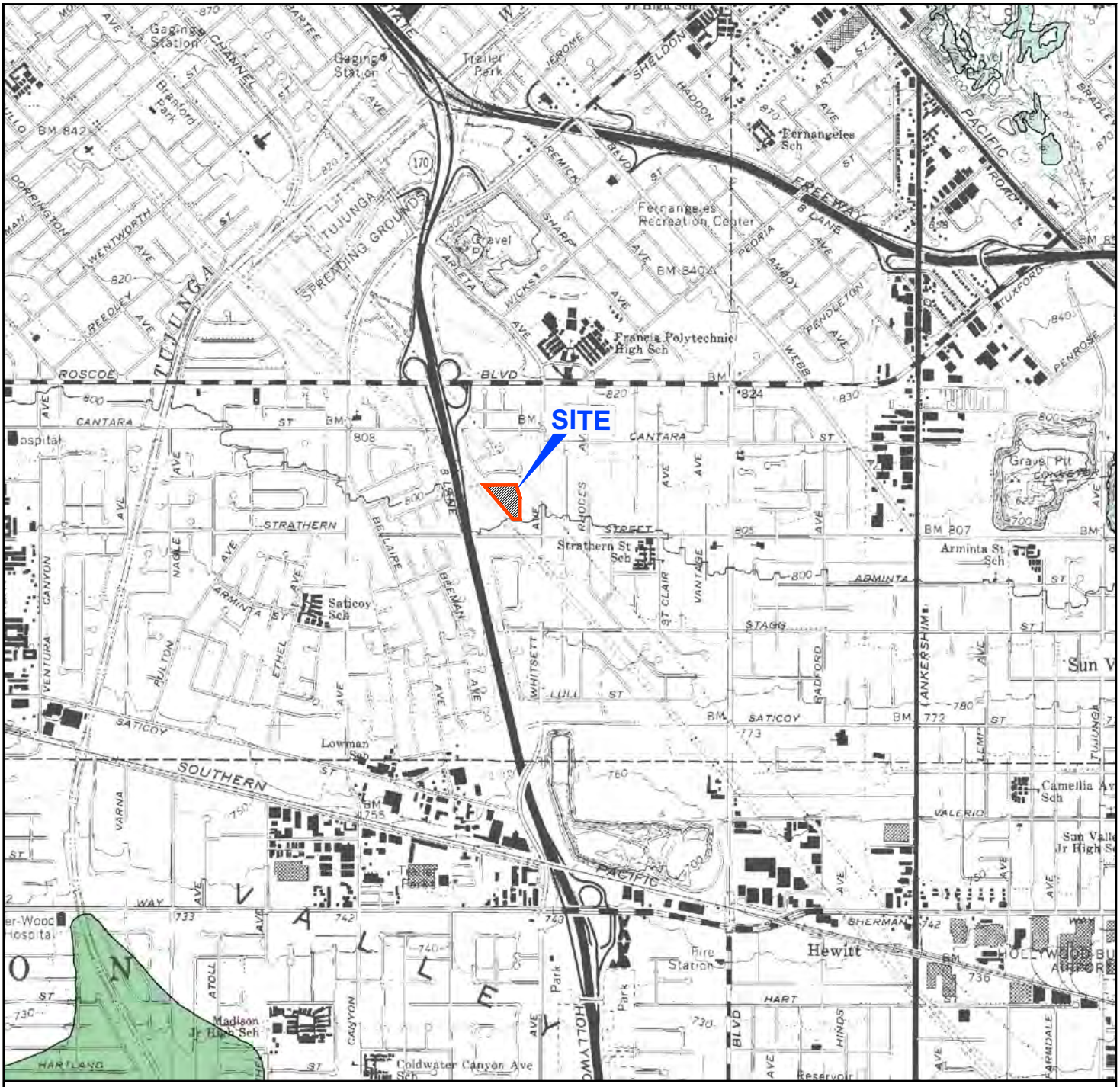

LEGEND

EARTHQUAKE-INDUCED LANDSLIDES

Areas where previous occurrence of landslide movement, or local topographic, geological, geotechnical and subsurface water conditions indicate a potential for permanent ground displacements such that mitigation as defined in Public Resources Code Section 2693(c) would be required.

LIQUEFACTION

Areas where historic occurrence of liquefaction, or local geological, geotechnical and groundwater conditions indicate a potential for permanent ground displacements such that mitigation as defined in Public Resources Code Section 2693(c) would be required.

NOTE: DIMENSIONS, DIRECTIONS AND LOCATIONS ARE APPROXIMATE. I REFERENCE: CDMG, 1998.

N

FEET

0 2,000 4,000

211294001_SHZ.dwg 06/07/2020 JDP

FIGURE 8

SEISMIC HAZARD ZONES

LABOE TOS NO. 25 - STRATHERN PARK NORTH
NORTH HOLLYWOOD, CALIFORNIA

211294001 I 8/20

Ninyo & Moore
Geotechnical & Environmental Sciences Consultants

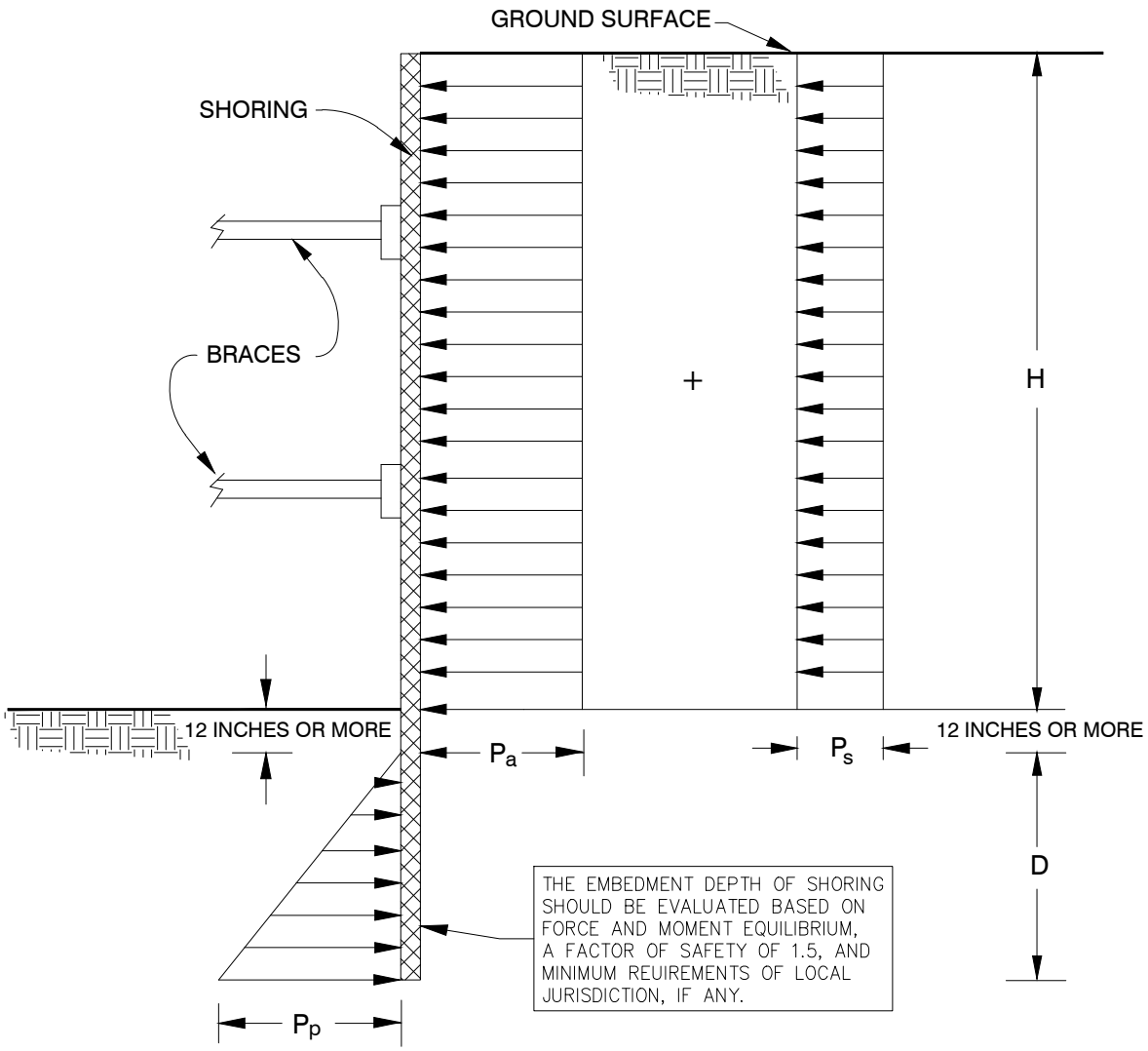

NOTES:

1. APPARENT LATERAL EARTH PRESSURE, P_a
   P_a = 26H psf
2. CONSTRUCTION TRAFFIC INDUCED SURCHARGE PRESSURE, P_s
   P_s = 120 psf
3. PASSIVE LATERAL EARTH PRESSURE, P_p
   P_p = 360D psf
4. ASSUMES GROUNDWATER IS NOT PRESENT
5. SURCHARGES FROM EXCAVATED SOIL OR CONSTRUCTION MATERIALS ARE NOT INCLUDED
6. H AND D ARE IN FEET

NOT TO SCALE

NOTE: DIMENSIONS, DIRECTIONS AND LOCATIONS ARE APPROXIMATE.

211294001_LEP-BE.dwg 06/07/2020 JDP

FIGURE 9

LATERAL EARTH PRESSURES FOR BRACED EXCAVATION

LABOE TOS NO. 25 - STRATHERN PARK NORTH
NORTH HOLLYWOOD, CALIFORNIA

Ninyo & Moore
Geotechnical & Environmental Sciences Consultants

211294001 I 8/20

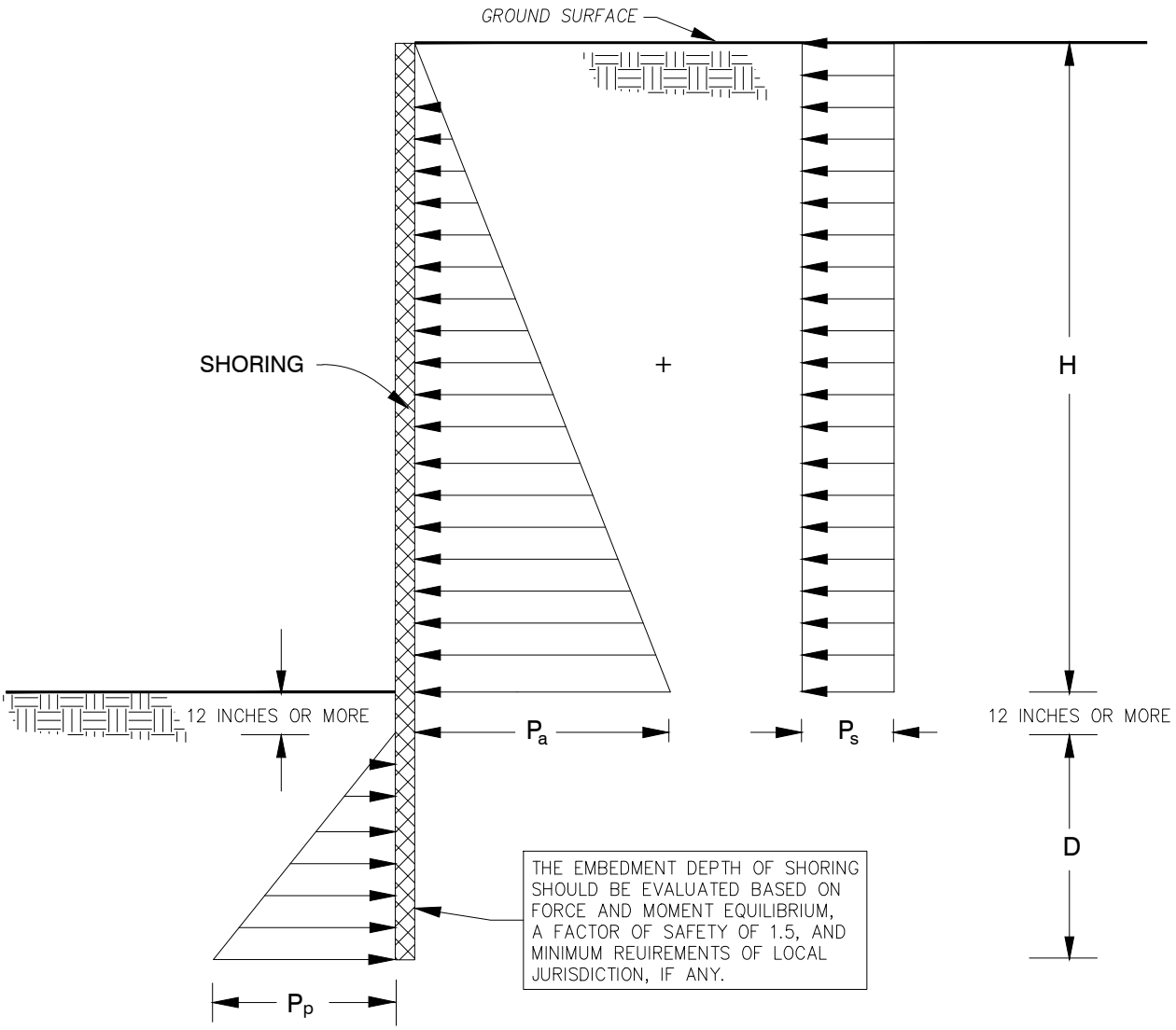

NOTES:

1. ACTIVE LATERAL EARTH PRESSURE, P_a
   P_a = 40 H psf
2. CONSTRUCTION TRAFFIC INDUCED SURCHARGE PRESSURE, P_s
   P_s = 120 psf
3. PASSIVE LATERAL EARTH PRESSURE, P_p
   P_p = 360 D psf
4. ASSUMES GROUNDWATER IS NOT PRESENT
5. SURCHARGES FROM EXCAVATED SOIL OR CONSTRUCTION MATERIALS ARE NOT INCLUDED
6. H AND D ARE IN FEET

NOT TO SCALE

NOTE: DIMENSIONS, DIRECTIONS AND LOCATIONS ARE APPROXIMATE.

211294001_LEP-CS.dwg 06/07/2020 JDP

FIGURE 10

LATERAL EARTH PRESSURES FOR TEMPORARY CANTILEVERED SHORING

LABOE TOS NO. 25 - STRATHERN PARK NORTH
NORTH HOLLYWOOD, CALIFORNIA

Ninyo & Moore
Geotechnical & Environmental Sciences Consultants

211294001 I 8/20

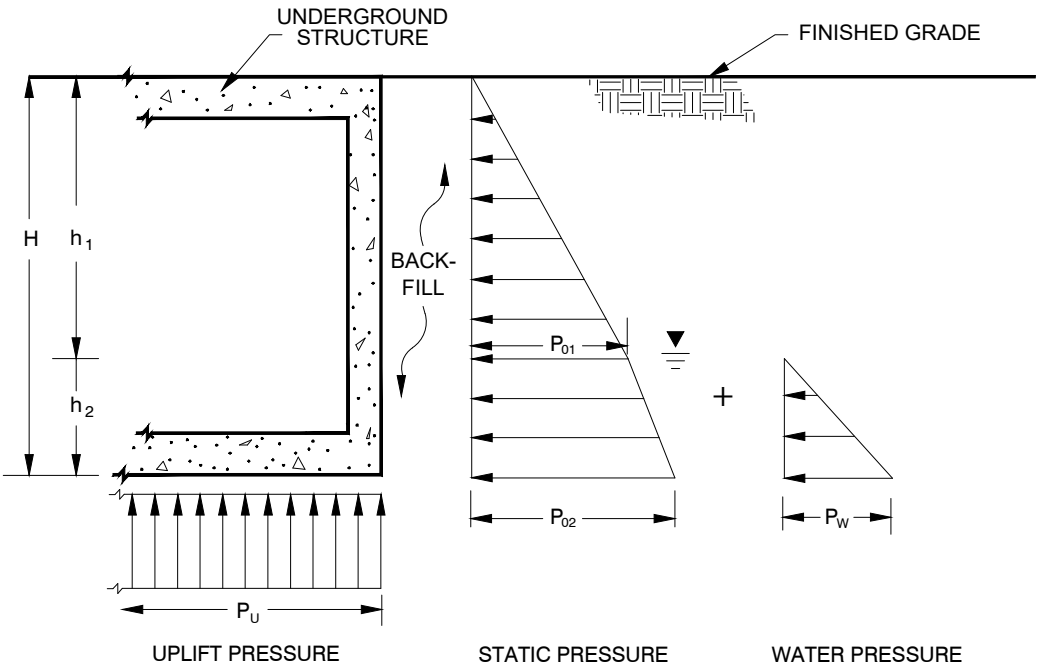

NOTES:

1. APPARENT LATERAL EARTH PRESSURES, P_{01} AND P_{02}
   $P_{01} = 57h_1$ psf
   $P_{02} = 57h_1 + 28h_2$ psf
2. HYDROSTATIC PRESSURE, P_w
   $P_w = 62.4\ h_2$ psf
3. UPLIFT PRESSURE, P_u
   $P_u = 62.4\ h_2$ psf
4. SURCHARGE PRESSURES CAUSED BY VEHICLES OR NEARBY STRUCTURES ARE NOT INCLUDED
5. H, h_1 AND h_2 ARE IN FEET
6. ▼ GROUNDWATER TABLE
7. THE GROUNDWATER TABLE IS RELATED TO THE FILL-LEVEL WITHIN THE OPEN-BOTTOM VAULTS AND THE HYDROSTATIC PRESSURE MAY ACT ON THE WALLS IN THE POSSIBLE CASE THAT THE VAULTS EXPERIENCE A RAPID DECREASE IN FILL-LEVEL BY BEING PUMPED OUT.

NOT TO SCALE

211294001_EP.dwg 06/07/2020 JDP

FIGURE 11

LATERAL EARTH PRESSURES FOR UNDERGROUND STRUCTURES

LABOE TOS NO. 25 - STRATHERN PARK NORTH
NORTH HOLLYWOOD, CALIFORNIA

Ninyo & Moore
Geotechnical & Environmental Sciences Consultants

APPENDIX A

Boring Logs

APPENDIX A

BORING LOGS

Field Procedure for the Collection of Disturbed Samples

Disturbed soil samples were obtained in the field using the following method.

Bulk Samples

Bulk samples of representative earth materials were obtained from the exploratory borings. The samples were bagged and transported to the laboratory for testing.

The Standard Penetration Test (SPT) Sampler

Disturbed drive samples of earth materials were obtained by means of a Standard Penetration Test sampler. The sampler is composed of a split barrel with an external diameter of 2 inches and an unlined internal diameter of 1-3/8 inches. The sampler was driven into the ground 12 to 18 inches with a 140-pound hammer free-falling from a height of 30 inches in general accordance with ASTM D 1586. The blow counts were recorded for every 6 inches of penetration; the blow counts reported on the logs are those for the last 12 inches of penetration. Soil samples were observed and removed from the sampler, bagged, sealed and transported to the laboratory for testing.

Field Procedure for the Collection of Relatively Undisturbed Samples

Relatively undisturbed soil samples were obtained in the field using the following method.

The Modified Split-Barrel Drive Sampler

The sampler, with an external diameter of 3 inches, was lined with 1-inch-long, thin brass rings with inside diameters of approximately 2.4 inches. The sample barrel was driven into the ground with the weight of a hammer in general accordance with ASTM D 3550. The driving weight was permitted to fall freely. The approximate length of the fall, the weight of the hammer, and the number of blows per foot of driving are presented on the boring logs as an index to the relative resistance of the materials sampled. The samples were removed from the sample barrel in the brass rings, sealed, and transported to the laboratory for testing.

ASTM D 2488

Primary Divisions			Secondary Divisions	
			Group Symbol	Group Name
COARSE-GRAINED SOILS more than 50% retained on No. 200 sieve	**GRAVEL** more than 50% of coarse fraction retained on No. 4 sieve	CLEAN GRAVEL	GW	well-graded GRAVEL
			GP	poorly graded GRAVEL
		GRAVEL with DUAL CLASSIFICATIONS	GW-GM	well-graded GRAVEL with silt
			GP-GM	poorly graded GRAVEL with silt
			GW-GC	well-graded GRAVEL with clay
			GP-GC	poorly graded GRAVEL with clay
		GRAVEL with FINES more than	GM	silty GRAVEL
			GC	clayey GRAVEL
			GC-GM	silty, clayey GRAVEL
	SAND 50% or more of coarse fraction passes No. 4 sieve	CLEAN SAND	SW	well-graded SAND
			SP	poorly graded SAND
		SAND with DUAL CLASSIFICATIONS	SW-SM	well-graded SAND with silt
			SP-SM	poorly graded SAND with silt
			SW-SC	well-graded SAND with clay
			SP-SC	poorly graded SAND with clay
		SAND with FINES more than	SM	silty SAND
			SC	clayey SAND
			SC-SM	silty, clayey SAND
FINE-GRAINED SOILS 50% or more passes No. 200 sieve	**SILT and CLAY** liquid limit less than 50%	INORGANIC	CL	lean CLAY
			ML	SILT
			CL-ML	silty CLAY
		ORGANIC	OL (PI > 4)	organic CLAY
			OL (PI < 4)	organic SILT
	SILT and CLAY liquid limit 50% or more	INORGANIC	CH	fat CLAY
			MH	elastic SILT
		ORGANIC	OH (plots on or above "A"-line)	organic CLAY
			OH (plots below "A"-line)	organic SILT
	Highly Organic Soils		PT	Peat

Grain Size

Description		Sieve Size	Grain Size	Approximate Size
Boulders		> 12"	> 12"	Larger than basketball-sized
Cobbles		3 - 12"	3 - 12"	Fist-sized to basketball-sized
Gravel	Coarse	3/4 - 3"	3/4 - 3"	Thumb-sized to
	Fine	#4 - 3/4"	0.19 - 0.75"	Pea-sized to thumb-sized
Sand	Coarse	#10 - #4	0.079 - 0.19"	Rock-salt-sized to pea-sized
	Medium	#40 - #10	0.017 - 0.079"	Sugar-sized to rock-salt-sized
	Fine	#200 - #40	0.0029 - 0.017"	Flour-sized to sugar-sized
Fines		Passing #200	< 0.0029"	Flour-sized and smaller

Plasticity Chart

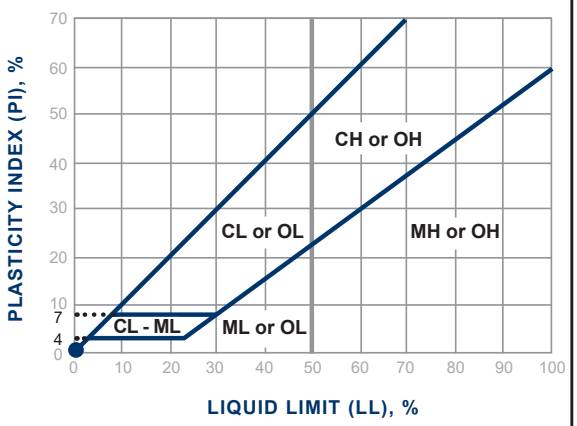

Apparent Density - Coarse-Grained Soil

Apparent Density	Spooling Cable or Cathead		Automatic Trip Hammer	
	SPT (blows/foot)	Split Barrel (blows/foot)	SPT (blows/foot)	Split Barrel (blows/foot)
Very Loose	≤ 4	≤ 8	≤ 3	≤ 5
Loose	5 - 10	9 - 21	4 - 7	6 - 14
Medium Dense	11 - 30	22 - 63	8 - 20	15 - 42
Dense	31 - 50	64 - 105	21 - 33	43 - 70
Very Dense	> 50	> 105	> 33	> 70

Consistency - Fine-Grained Soil

Consis-tency	Spooling Cable or Cathead		Automatic Trip Hammer	
	SPT (blows/foot)	Split Barrel (blows/foot)	SPT (blows/foot)	Split Barrel (blows/foot)
Very Soft	< 2	< 3	< 1	< 2
Soft	2 - 4	3 - 5	1 - 3	2 - 3
Firm	5 - 8	6 - 10	4 - 5	4 - 6
	9 - 15	11 - 20	6 - 10	7 - 13
V	16 - 30	21 - 39	11 - 20	14 - 26
Hard	> 30	> 39	> 20	> 26

Ninyo & Moore
Geotechnical & Environmental Sciences Consultants

USCS METHOD OF SOIL CLASSIFICATION

BORING LOG EXPLANATION SHEET

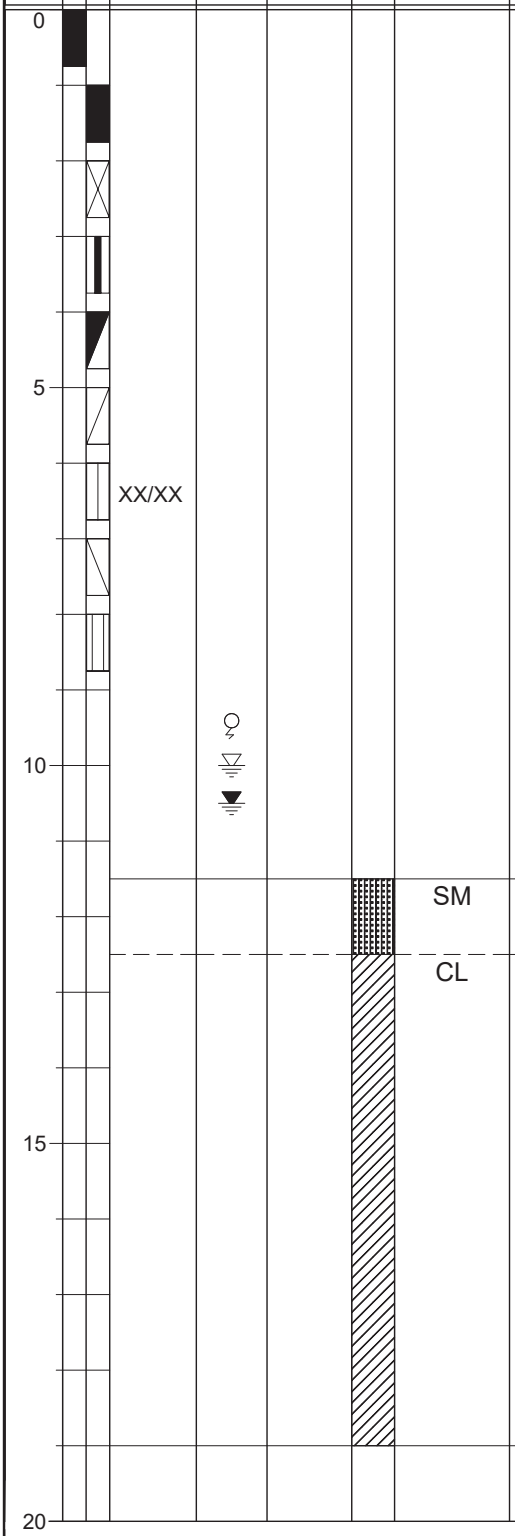

Bulk sample.

Modified split-barrel drive sampler.

No recovery with modified split-barrel drive sampler.

Sample retained by others.

Standard Penetration Test (SPT).

No recovery with a SPT.

Shelby tube sample. Distance pushed in inches/length of sample recovered in inches.

No recovery with Shelby tube sampler.

Continuous Push Sample.

Seepage.

Groundwater encountered during drilling.

Groundwater measured after drilling.

SM

MAJOR MATERIAL TYPE (SOIL):

Solid line denotes unit change.

CL

Dashed line denotes material change.

Attitudes: Strike/Dip
b: Bedding
c: Contact
j: Joint
f: Fracture
F: Fault
cs: Clay Seam
s: Shear
bss: Basal Slide Surface
sf: Shear Fracture
sz: Shear Zone
sbs: Shear Bedding Surface

The total depth line is a solid line that is drawn at the bottom of the boring.

DATE DRILLED 3/25/2020 BORING NO. B-1

GROUND ELEVATION 810' ± (MSL) SHEET 1 OF 1

METHOD OF DRILLING 8" Hollow-Stem Auger (Baja Exploration)

DRIVE WEIGHT 140 lbs. (Auto. Trip Hammer) DROP 30"

SAMPLED BY KMH LOGGED BY KMB REVIEWED BY GMC

DEPTH (feet)	SAMPLES Bulk	SAMPLES Driven	BLOWS/FOOT	MOISTURE (%)	DRY DENSITY (PCF)	PID READING (PPM)	SYMBOL	CLASSIFICATION U.S.C.S.	DESCRIPTION/INTERPRETATION
0						3.4		SC	FILL: Brown, moist, loose, clayey SAND; trace gravel and organic material.
						3.1		SM	FILL AND MINOR WASTES: Brown, moist, loose, silty SAND with gravel; few pieces of asphalt concrete.
			11	10.1	97.9	5.7			@ 5': LEL - 0%; O_2 - 20.5%, CO - 7 ppm, H_2S - 0.0 ppm
10			17			2.8			Light brown; medium dense. @ 10': LEL - 0%; O_2 - 19.1%, CO - 7 ppm, H_2S - 0.0 ppm
								SP	ALLUVIUM: Light brown, moist, medium dense, poorly graded SAND; trace gravel.
			20	2.0	110.7	1.4			@ 15': LEL - 0%; O_2 - 17.5%, CO - 7 ppm, H_2S - 0.0 ppm
20			17			2.1			@ 20': LEL - 0%; O_2 - 17.7%, CO - 11 pm, H_2S - 0.0 ppm
			35			3.0			@ 25': LEL - 0%; O_2 - 17.8%, CO - 5 ppm, H_2S - 0.0 ppm
30									Total Depth = 26.5 feet. Groundwater was not encountered during drilling. Backfilled with cement-bentonite grout on 3/25/20. Notes: Groundwater, though not encountered at the time of drilling, may rise to a higher level due to seasonal variations in precipitation and several other factors as discussed in the report. The ground elevation shown above is an estimation only. It is based on our interpretations of published maps and other documents reviewed for the purposes of this evaluation. It is not sufficiently accurate for preparing construction bids and design documents.
40									

FIGURE A- 1

Ninyo & Moore
Geotechnical & Environmental Sciences Consultants

LABOE TOS NO. 25 - STRATHERN PARK NORTH
NORTH HOLLYWOOD, CALIFORNIA

DATE DRILLED 3/26/2020 BORING NO. B-2

GROUND ELEVATION 810' ± (MSL) SHEET 1 OF 2

METHOD OF DRILLING 8" Hollow-Stem Auger (Baja Exploration)

DRIVE WEIGHT 140 lbs. (Auto. Trip Hammer) DROP 30"

SAMPLED BY KMH LOGGED BY KMB REVIEWED BY GMC

DEPTH (feet)	SAMPLES (Bulk / Driven)	BLOWS/FOOT	MOISTURE (%)	DRY DENSITY (PCF)	PID READING (PPM)	SYMBOL	CLASSIFICATION U.S.C.S.	DESCRIPTION/INTERPRETATION
0							SC	FILL: Brown, moist, loose, clayey SAND; few gravel and organics.
							SP-SM	FILL AND MINOR WASTES: Light brown to brown, moist, medium dense, poorly graded SAND with silt and gravel; cobbles; pieces of concrete and asphalt concrete.
		20						
10		47	3.1	120.8				Dark brown; dense; little gravel; pieces of asphalt concrete.
							SP	ALLUVIUM: Light brown, moist, dense, poorly graded SAND.
							SM	Light brown, moist, medium dense, silty SAND; trace gravel.
		19						
							SP	Light brown, moist, dense, poorly graded SAND; trace gravel.
20		40						
		23						Few gravel.
30		50/6"						Very dense; interbeds of poorly graded gravel with sand.
		30						Dense.
40								

FIGURE A- 2

Ninyo & Moore
Geotechnical & Environmental Sciences Consultants

LABOE TOS NO. 25 - STRATHERN PARK NORTH
NORTH HOLLYWOOD, CALIFORNIA

211294001 | 8/20

DATE DRILLED 3/26/2020 BORING NO. B-2

GROUND ELEVATION 810' ± (MSL) SHEET 2 OF 2

METHOD OF DRILLING 8" Hollow-Stem Auger (Baja Exploration)

DRIVE WEIGHT 140 lbs. (Auto. Trip Hammer) DROP 30"

SAMPLED BY KMH LOGGED BY KMB REVIEWED BY GMC

DEPTH (feet)	SAMPLES Bulk	SAMPLES Driven	BLOWS/FOOT	MOISTURE (%)	DRY DENSITY (PCF)	PID READING (PPM)	SYMBOL	CLASSIFICATION U.S.C.S.	DESCRIPTION/INTERPRETATION
40			52					SM	ALLUVIUM: (Continued) Light brown, moist, dense, silty SAND.
			20					SP	Light brown, moist, medium dense, poorly graded SAND; few gravel.
								SM	Brown, moist, medium dense, silty SAND.
50			33	12.7	115.2				
			50/5"						Light brown; very dense; few to little gravel.
60			50/6"						Brown; little to some gravel.
			50/6"						Light brown; little to some gravel.
70			50/6"						Brown. Total Depth = 70.5 feet. Groundwater was not encountered during drilling. Backfilled with cement-bentonite on 3/26/20.
80									Notes: Groundwater, though not encountered at the time of drilling, may rise to a higher level due to seasonal variations in precipitation and several other factors as discussed in the report. The ground elevation shown above is an estimation only. It is based on our interpretations of published maps and other documents reviewed for the purposes of this evaluation. It is not sufficiently accurate for preparing construction bids and design documents.

DATE DRILLED 3/25/2020 BORING NO. B-3

GROUND ELEVATION 810' ± (MSL) SHEET 1 OF 1

METHOD OF DRILLING 8" Hollow-Stem Auger (Baja Exploration)

DRIVE WEIGHT 140 lbs. (Auto. Trip Hammer) DROP 30"

SAMPLED BY KMH LOGGED BY KMB REVIEWED BY GMC

DEPTH (feet)	SAMPLES (Bulk / Driven)	BLOWS/FOOT	MOISTURE (%)	DRY DENSITY (PCF)	PID READING (PPM)	SYMBOL	CLASSIFICATION U.S.C.S.	DESCRIPTION/INTERPRETATION
0					2.4		SM	FILL: Brown, moist, loose, silty SAND; trace gravel and organics.
					1.7		SC	Brown, moist, loose, clayey SAND; trace gravel; cobbles.
		6	7.7	96.6	3.3		SP-SM	ALLUVIUM: Brown, moist, loose, poorly graded SAND with silt and gravel. @ 5': LEL - 0%; O_2 - 20.9%, CO - 0 ppm; H_2S - 0.0 ppm
10		16	-		4.1			Light brown; medium dense; trace gravel. @ 10': LEL - 0%; O_2 - 20.5%; CO - 0 ppm; H_2S - 0.0 ppm
		29	-		3.3			@ 15': LEL - 0%; O_2 - 17.5%; CO - 14 ppm; H_2S - 0. 0 ppm
20		20	-		6.3			@ 20': LEL - 0%; O_2 - 18.3%, CO - 10 ppm, H_2S - 0.0 ppm
		25	-		2.2			@ 25': LEL - 0%; O_2 - 17.7%, CO - 10 ppm, H_2S - 0.0 ppm
30								Total Depth = 26.5 feet. Groundwater was not encountered during drilling. Backfilled with cement-bentonite grout on 3/25/20. Notes: Groundwater, though not encountered at the time of drilling, may rise to a higher level due to seasonal variations in precipitation and several other factors as discussed in the report. The ground elevation shown above is an estimation only. It is based on our interpretations of published maps and other documents reviewed for the purposes of this evaluation. It is not sufficiently accurate for preparing construction bids and design documents.
40								

DATE DRILLED 3/25/2020 BORING NO. P-1

GROUND ELEVATION 806' ± (MSL) SHEET 1 OF 1

METHOD OF DRILLING 8" Hollow-Stem Auger (Baja Exploration)

DRIVE WEIGHT 140 lbs. (Auto. Trip Hammer) DROP 30"

SAMPLED BY KMB LOGGED BY KMB REVIEWED BY GMC

DEPTH (feet)	SAMPLES (Bulk / Driven)	BLOWS/FOOT	MOISTURE (%)	DRY DENSITY (PCF)	PID READING (PPM)	SYMBOL	CLASSIFICATION U.S.C.S.	DESCRIPTION/INTERPRETATION
0							SC	FILL: Brown, moist, loose, clayey SAND; few organics.
							SP-SC	FILL AND MINOR WASTES: Brown, moist, loose, poorly graded SAND with clay; trace gravel; pieces of brick and concrete.
							SP	ALLUVIUM: Light brown, moist, loose, poorly graded SAND; trace gravel.
		6					SM	Brown, moist, loose, silty SAND.
							SW-SM	Brown, moist, medium dense, well-graded SAND with silt; few gravel.
10		28	5.3	111.1			SP	Light brown, moist, medium dense, poorly graded SAND.
		20						Few gravel.
20								Total Depth = 17.5 feet. Groundwater was not encountered during drilling. In-situ percolation testing performed on 4/15/20. Backfilled with cement-bentonite grout on 4/16/20. Notes: Groundwater, though not encountered at the time of drilling, may rise to a higher level due to seasonal variations in precipitation and several other factors as discussed in the report. The ground elevation shown above is an estimation only. It is based on our interpretations of published maps and other documents reviewed for the purposes of this evaluation. It is not sufficiently accurate for preparing construction bids and design documents.
30								
40								

FIGURE A- 5

Ninyo & Moore
Geotechnical & Environmental Sciences Consultants

LABOE TOS NO. 25 - STRATHERN PARK NORTH
NORTH HOLLYWOOD, CALIFORNIA

DATE DRILLED 3/24/2020 BORING NO. P-2

GROUND ELEVATION 808' ± (MSL) SHEET 1 OF 2

METHOD OF DRILLING 8" Hollow-Stem Auger (Baja Exploration)

DRIVE WEIGHT 140 lbs. (Auto. Trip Hammer) DROP 30"

SAMPLED BY KMH LOGGED BY KMB REVIEWED BY GMC

DEPTH (feet)	SAMPLES Bulk	SAMPLES Driven	BLOWS/FOOT	MOISTURE (%)	DRY DENSITY (PCF)	PID READING (PPM)	SYMBOL	CLASSIFICATION U.S.C.S.	DESCRIPTION/INTERPRETATION
0						1.0		CL	FILL: Brown, moist, soft to firm, sandy lean CLAY; few gravel.
								SP	Brown to light brown, moist, loose, poorly graded SAND; few gravel.
						0.7			
			24			1.2			Light brown; medium dense; interbeds of gravel; cobbles. @ 5': LEL - 0%; O_2 - 20.9%, CO - 0 ppm, H_2S - 0.0 ppm
10			19			2.2			@ 10': LEL - 0%; O_2 - 20.7%, CO - 0 ppm; H_2S - 0.0 ppm
								SP-SM	ALLUVIUM: Light brown, moist, medium dense, poorly graded SAND with silt; few gravel.
								SP	Light brown, moist, medium dense, poorly graded SAND; few gravel.
			31	3.3	104.9	3.0			@ 15': LEL - 0%; O_2 - 19.9%, CO - 0 ppm; H_2S - 0.0 ppm
20			31			2.4			Dense. @ 20': LEL - 0%; O_2 - 19. 7%, CO - 4 ppm, H_2S - 0.0 ppm
			59			2.7			Interbeds of poorly graded gravel with sand. @ 25': LEL - 0%; O_2 - 19.5%, CO - 4 ppm, H_2S - 0.0 ppm
30			28						
								SP-SM	Light brown, moist, dense, poorly graded SAND with silt; few gravel.
			62						
40									

FIGURE A- 6

Ninyo & Moore
Geotechnical & Environmental Sciences Consultants

LABOE TOS NO. 25 - STRATHERN PARK NORTH
NORTH HOLLYWOOD, CALIFORNIA

DATE DRILLED 3/24/2020 BORING NO. P-2

GROUND ELEVATION 808' ± (MSL) SHEET 2 OF 2

METHOD OF DRILLING 8" Hollow-Stem Auger (Baja Exploration)

DRIVE WEIGHT 140 lbs. (Auto. Trip Hammer) DROP 30"

SAMPLED BY KMH LOGGED BY KMB REVIEWED BY GMC

DEPTH (feet)	SAMPLES Bulk	SAMPLES Driven	BLOWS/FOOT	MOISTURE (%)	DRY DENSITY (PCF)	PID READING (PPM)	SYMBOL	CLASSIFICATION U.S.C.S.	DESCRIPTION/INTERPRETATION
40			34					SP-SM	ALLUVIUM: (Continued) Light brown, moist, very dense, poorly graded SAND with silt; trace gravel.
			53						Dense.
50			33						Few to little gravel.
									Total Depth = 51.5 feet. Groundwater was not encountered during drilling. In-situ percolation testing performed on 4/16/20. Backfilled with cement-bentonite grout on 4/16/20. Notes: Groundwater, though not encountered at the time of drilling, may rise to a higher level due to seasonal variations in precipitation and several other factors as discussed in the report. The ground elevation shown above is an estimation only. It is based on our interpretations of published maps and other documents reviewed for the purposes of this evaluation. It is not sufficiently accurate for preparing construction bids and design documents.
60									
70									
80									

FIGURE A- 7

Ninyo & Moore
Geotechnical & Environmental Sciences Consultants

LABOE TOS NO. 25 - STRATHERN PARK NORTH
NORTH HOLLYWOOD, CALIFORNIA

DATE DRILLED 3/25/2020 BORING NO. P-3

GROUND ELEVATION 810' ± (MSL) SHEET 1 OF 1

METHOD OF DRILLING 8" Hollow-Stem Auger (Baja Exploration)

DRIVE WEIGHT 140 lbs. (Auto. Trip Hammer) DROP 30"

SAMPLED BY KMH LOGGED BY KMB REVIEWED BY GMC

DEPTH (feet)	SAMPLES Bulk	SAMPLES Driven	BLOWS/FOOT	MOISTURE (%)	DRY DENSITY (PCF)	PID READING (PPM)	SYMBOL	CLASSIFICATION U.S.C.S.	DESCRIPTION/INTERPRETATION
0								SC	FILL: Brown, moist, loose, clayey SAND; few organics.
								SC	FILL AND MINOR WASTE: Brown, moist, loose to medium dense, clayey SAND; trace gravel; cobbles; pieces of brick, asphalt concrete, and concrete.
			78	5.8	120.6			SP	ALLUVIUM: Light brown, moist, very dense, poorly graded SAND; trace gravel.
10			-						Blow counts not recorded.
			51						Dense.
20									Total Depth = 17.5 feet. Groundwater was not encountered during drilling. Base of waste not evaluated. In-situ percolation testing performed on 4/16/20. Backfilled with cement-bentonite grout on 4/16/20. Notes: Groundwater, though not encountered at the time of drilling, may rise to a higher level due to seasonal variations in precipitation and several other factors as discussed in the report. The ground elevation shown above is an estimation only. It is based on our interpretations of published maps and other documents reviewed for the purposes of this evaluation. It is not sufficiently accurate for preparing construction bids and design documents.
30									
40									

FIGURE A- 8

Ninyo & Moore
Geotechnical & Environmental Sciences Consultants

LABOE TOS NO. 25 - STRATHERN PARK NORTH
NORTH HOLLYWOOD, CALIFORNIA

DATE DRILLED 3/24/2020 BORING NO. P-4

GROUND ELEVATION 809' ± (MSL) SHEET 1 OF 2

METHOD OF DRILLING 8" Hollow-Stem Auger (Baja Exploration)

DRIVE WEIGHT 140 lbs. (Auto. Trip Hammer) DROP 30"

SAMPLED BY KMH LOGGED BY KMB REVIEWED BY GMC

DEPTH (feet)	SAMPLES (Bulk / Driven)	BLOWS/FOOT	MOISTURE (%)	DRY DENSITY (PCF)	PID READING (PPM)	SYMBOL	CLASSIFICATION U.S.C.S.	DESCRIPTION/INTERPRETATION
0					1.2 2.6		ML	FILL: Brown, moist, loose, sandy SILT; few to little gravel; trace organics.
		21			4.0		SP	FILL AND MINOR WASTE: Brown, medium dense, poorly graded SAND; trace gravel; cobbles; pieces of asphalt concrete. @ 5': LEL - 0%; O_2 - 20.9%, CO - 0 ppm, H_2S - 0.0 ppm
10		30			5.8		SP	ALLUVIUM: Light brown, moist, medium dense, poorly graded SAND; few to little gravel. @ 10': LEL - 0%; O_2 - 19.2%, CO - 0 ppm, H_2S - 0.0 ppm
		44			4.9			Dense. @ 15': LEL - 0%; O_2 - 18.2%, CO - 5 ppm, H_2S - 0.0 ppm
20		39			2.7			Medium dense. @ 20': LEL - 0%; O_2 - 19.2%, CO - 7 ppm, H_2S - 0.0 ppm
		54			2.5			Dense. @ 25': LEL - 0%; O_2 - 20.3%, CO - 4 ppm, H_2S - 0.0 ppm
30		68			-			
		77/8"			-			Very dense; possible cobbles/boulders.
40								

FIGURE A- 9

Ninyo & Moore
Geotechnical & Environmental Sciences Consultants

LABOE TOS NO. 25 - STRATHERN PARK NORTH
NORTH HOLLYWOOD, CALIFORNIA

211294001 | 8/20

DATE DRILLED 3/24/2020 BORING NO. P-4

GROUND ELEVATION 809' ± (MSL) SHEET 2 OF 2

METHOD OF DRILLING 8" Hollow-Stem Auger (Baja Exploration)

DRIVE WEIGHT 140 lbs. (Auto. Trip Hammer) DROP 30"

SAMPLED BY KMH LOGGED BY KMB REVIEWED BY GMC

DEPTH (feet)	SAMPLES Bulk	SAMPLES Driven	BLOWS/FOOT	MOISTURE (%)	DRY DENSITY (PCF)	PID READING (PPM)	SYMBOL	CLASSIFICATION U.S.C.S.	DESCRIPTION/INTERPRETATION
40			50/6"			-		SP	ALLUVIUM: (Continued) Light brown, moist, very dense, poorly graded SAND; trace gravel.
			50/6"			-			Few to little gravel.
50			37			-		ML	Brown, moist, medium dense, sandy SILT; trace gravel.
									Total Depth = 51.5 feet. Groundwater was not encountered during drilling. In-situ percolation testing performed on 4/15/20. Backfilled with cement-bentonite grout on 4/16/20. Notes: Groundwater, though not encountered at the time of drilling, may rise to a higher level due to seasonal variations in precipitation and several other factors as discussed in the report. The ground elevation shown above is an estimation only. It is based on our interpretations of published maps and other documents reviewed for the purposes of this evaluation. It is not sufficiently accurate for preparing construction bids and design documents.
60									
70									
80									

FIGURE A- 10

Ninyo & Moore
Geotechnical & Environmental Sciences Consultants

LABOE TOS NO. 25 - STRATHERN PARK NORTH
NORTH HOLLYWOOD, CALIFORNIA

DATE DRILLED 3/25/2020 BORING NO. P-5

GROUND ELEVATION 810' ± (MSL) SHEET 1 OF 1

METHOD OF DRILLING 8" Hollow-Stem Auger (Baja Exploration)

DRIVE WEIGHT 140 lbs. (Auto. Trip Hammer) DROP 30"

SAMPLED BY KMB LOGGED BY KMB REVIEWED BY GMC

DEPTH (feet)	SAMPLES Bulk	SAMPLES Driven	BLOWS/FOOT	MOISTURE (%)	DRY DENSITY (PCF)	PID READING (PPM)	SYMBOL	CLASSIFICATION U.S.C.S.	DESCRIPTION/INTERPRETATION
0								SC	FILL: Brown, moist, firm, clayey SAND; trace organics.
								SM	FILL AND MINOR WASTE: Brown, moist, very loose, silty SAND with gravel; cobbles; few pieces of brick and asphalt concrete.
			5	10.0	95.1				
10			13					SP	ALLUVIUM: Light brown, moist, medium dense, poorly graded SAND; trace gravel.
			-						Blow counts not recorded.
20									Total Depth = 17.5 feet. Groundwater was not encountered during drilling. In-situ percolation testing performed on 4/15/20. Backfilled with cement-bentonite grout on 4/16/20. Notes: Groundwater, though not encountered at the time of drilling, may rise to a higher level due to seasonal variations in precipitation and several other factors as discussed in the report. The ground elevation shown above is an estimation only. It is based on our interpretations of published maps and other documents reviewed for the purposes of this evaluation. It is not sufficiently accurate for preparing construction bids and design documents.
30									
40									

FIGURE A- 11

Ninyo & Moore
Geotechnical & Environmental Sciences Consultants

LABOE TOS NO. 25 - STRATHERN PARK NORTH
NORTH HOLLYWOOD, CALIFORNIA

DATE DRILLED 3/25/2020 BORING NO. P-6

GROUND ELEVATION 810' ± (MSL) SHEET 1 OF 2

METHOD OF DRILLING 8" Hollow-Stem Auger (Baja Exploration)

DRIVE WEIGHT 140 lbs. (Auto. Trip Hammer) DROP 30"

SAMPLED BY KMH LOGGED BY KMB REVIEWED BY GMC

DEPTH (feet)	SAMPLES (Bulk / Driven)	BLOWS/FOOT	MOISTURE (%)	DRY DENSITY (PCF)	PID READING (PPM)	SYMBOL	CLASSIFICATION U.S.C.S.	DESCRIPTION/INTERPRETATION
0					1.5		SC	FILL: Brown, moist, loose, clayey SAND; trace gravel and organics.
					1.2			
							SM	Brown, moist, loose, silty SAND; trace gravel; cobbles.
		13			2.8		SP	Light brown, moist, loose, poorly graded SAND; trace gravel. @ 5': LEL - 0%; O_2 - 20.9%, CO - 4 ppm, H_2S - 0.0 ppm
							SP	ALLUVIUM: Light brown, moist, medium dense, poorly graded SAND.
10		13			1.6			@ 10': LEL - 0%; O_2 - 20.9%, CO - 9 ppm, H_2S - 0.0 ppm
		-	2.8	108.6	3.4			Few to little gravel; blow counts not recorded. @ 15': LEL - 0%; O_2 - 20. 9%, CO - 0 ppm, H_2S - 0.0 ppm
20		21			1.9			Dense; trace gravel. @ 20': LEL - 0%; O_2 - 20.9%, CO - 0 ppm, H_2S - 0.0 ppm
		24			2.9			Medium dense. @ 25': LEL - 0%; O_2 - 19.3%, CO - 5 ppm, H_2S - 0.0 ppm
30		24			-			Dense.
		38	3.6	109.5	-			Medium dense; trace gravel.
40								

FIGURE A- 12

Ninyo & Moore
Geotechnical & Environmental Sciences Consultants

LABOE TOS NO. 25 - STRATHERN PARK NORTH
NORTH HOLLYWOOD, CALIFORNIA

DATE DRILLED 3/25/2020 BORING NO. P-6

GROUND ELEVATION 810' ± (MSL) SHEET 2 OF 2

METHOD OF DRILLING 8" Hollow-Stem Auger (Baja Exploration)

DRIVE WEIGHT 140 lbs. (Auto. Trip Hammer) DROP 30"

SAMPLED BY KMH LOGGED BY KMB REVIEWED BY GMC

DEPTH (feet)	SAMPLES Bulk	SAMPLES Driven	BLOWS/FOOT	MOISTURE (%)	DRY DENSITY (PCF)	PID READING (PPM)	SYMBOL	CLASSIFICATION U.S.C.S.	DESCRIPTION/INTERPRETATION
40			22			-		SP	ALLUVIUM: (Continued) Light brown, moist, dense, poorly graded SAND; trace gravel; few coarse sand.
			27					SP-SM	Light brown, moist, medium dense, poorly graded SAND with silt and gravel.
50			52						Very dense; few to little gravel.
									Total Depth = 51.5 feet. Groundwater was not encountered during drilling. In-situ percolation testing performed on 4/15/20. Backfilled with cement-bentonite grout on 4/16/20. Notes: Groundwater, though not encountered at the time of drilling, may rise to a higher level due to seasonal variations in precipitation and several other factors as discussed in the report. The ground elevation shown above is an estimation only. It is based on our interpretations of published maps and other documents reviewed for the purposes of this evaluation. It is not sufficiently accurate for preparing construction bids and design documents.
60									
70									
80									

FIGURE A- 13

Ninyo & Moore
Geotechnical & Environmental Sciences Consultants

LABOE TOS NO. 25 - STRATHERN PARK NORTH
NORTH HOLLYWOOD, CALIFORNIA

APPENDIX B

Test Pit Logs

APPENDIX B

TEST PIT LOGS

Field Procedure for the Collection of Disturbed Samples

Disturbed soil samples were obtained in the field using the following method.

Bulk Samples

Bulk samples of representative earth materials were obtained from the exploratory borings. The samples were bagged and transported to the laboratory for testing.

LOCATION: See Figure 4	TEST PIT NO.: TP-1	SAMPLES/ FIELD TESTS	MOISTURE (%)
GROUND ELEVATION: 807'± (msl)	LOGGED BY: KMB		
METHOD OF EXCAVATION: JD 310 SG Backhoe (Newman)	DATE EXCAVATED: 3/23/2020		

DESCRIPTION

FILL:

(1) Brown, moist, soft to firm, lean CLAY (CL); trace gravel; few organics.

(2) Brown to light brown, moist, loose to medium dense, poorly graded SAND (SP); few gravel; cobbles up to approximately 6 inches in diameter.

ALLUVIUM:

(3) Light brown, moist, loose to medium dense, poorly graded SAND with gravel and cobbles (SP); interbeds of poorly graded GRAVEL with sand and cobbles (GP).

4.0'-5.0': Bulk Bag

8.0'-9.0': Bulk Bag

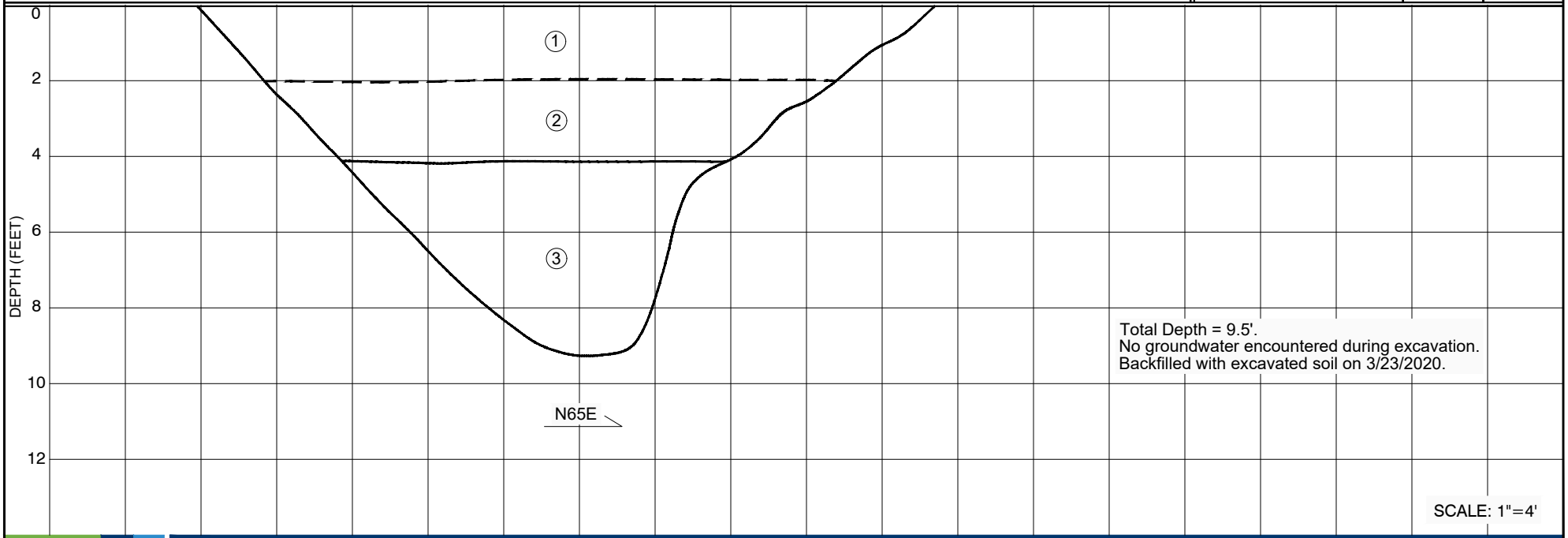

211294001_TP1.dwg 06/11/2020 JDP

FIGURE B-1

Ninyo & Moore
Geotechnical & Environmental Sciences Consultants

TEST PIT LOG

LABOE TOS NO. 25 - STRATHERN PARK NORTH
NORTH HOLLYWOOD, CALIFORNIA

211294001 I 8/20

LOCATION: See Figure 4	TEST PIT NO.: TP-2		
GROUND ELEVATION: 809'± (msl)	LOGGED BY: KMB		
METHOD OF EXCAVATION: JD 310 SG Backhoe (Newman)	DATE EXCAVATED: 3/23/2020		

DESCRIPTION	SAMPLES/ FIELD TESTS	MOISTURE (%)	DRY DENSITY (PCF)
FILL:			
① Brown, moist, loose, clayey SAND (SC); few gravel; cobbles; few organics.	0'-0.5': Bulk Bag		
② Light brown, moist, loose to medium dense, well-graded SAND with silt and gravel (SW-SM); cobbles up to approximately 6 inches in diameter.	1.5'-2.5': Bulk Bag		
ALLUVIUM:			
③ Light brown, moist, loose to medium dense, poorly graded SAND with gravel (SP); interbeds of poorly graded GRAVEL with sand and cobbles (GP).			

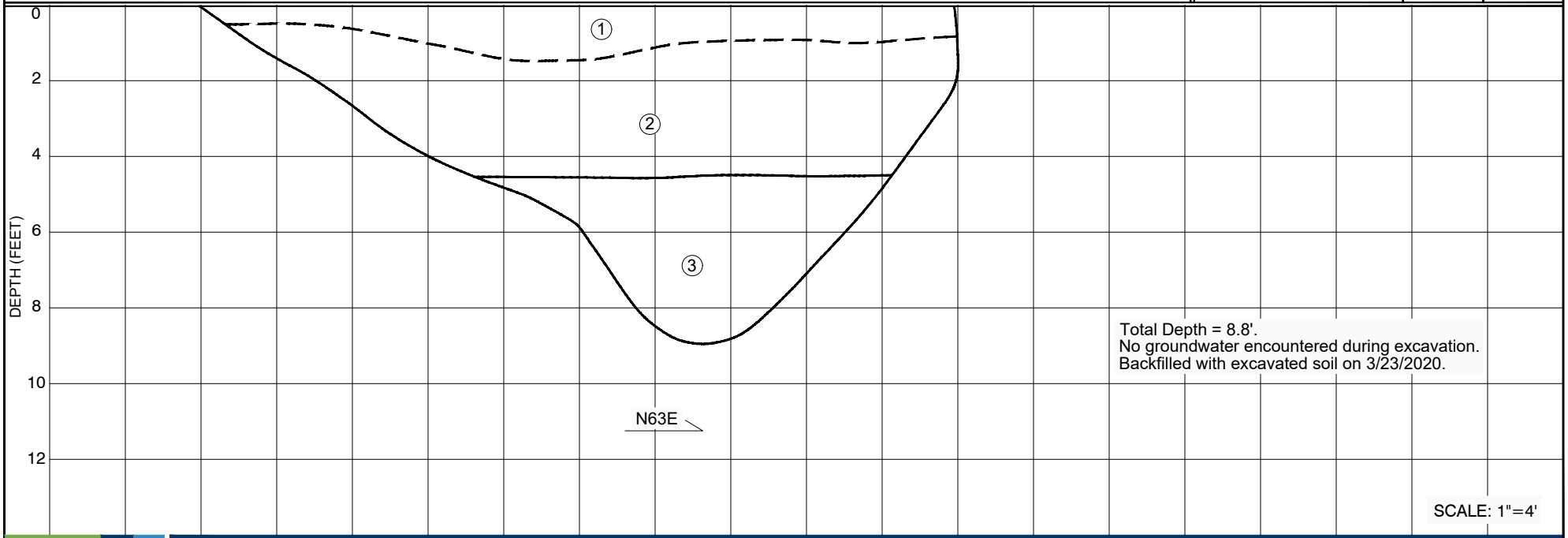

211294001_TP2.dwg 06/11/2020 JDP

FIGURE B-2

Ninyo & Moore
Geotechnical & Environmental Sciences Consultants

TEST PIT LOG

LABOE TOS NO. 25 - STRATHERN PARK NORTH
NORTH HOLLYWOOD, CALIFORNIA

211294001 I 8/20

LOCATION: See Figure 4	TEST PIT NO.: TP-3		
GROUND ELEVATION: 810'± (msl)	LOGGED BY: KMB		
METHOD OF EXCAVATION: JD 310 SG Backhoe (Newman)	DATE EXCAVATED: 3/23/2020		

DESCRIPTION	SAMPLES/ FIELD TESTS	MOISTURE (%)	DRY DENSITY (PCF)
FILL:			
① Brown, moist, loose, clayey SAND (SC); few gravel; lenses of reddish brown, moist, loose, clayey SAND (SC); few to little gravel.	0.5'-1.2': Bulk Bag		
FILL AND MINOR WASTE:			
② Light brown, moist, loose, poorly graded SAND (SP); few to little gravel; cobbles up to approximately 8 inches in diameter; minor waste consisting of asphalt concrete and a plastic Doritos bag.	1.5'-2.5': Bulk Bag		
ALLUVIUM:			
③ Light brown, moist, loose, poorly graded SAND (SP); interbeds of poorly graded GRAVEL with sand and cobbles (GP).			

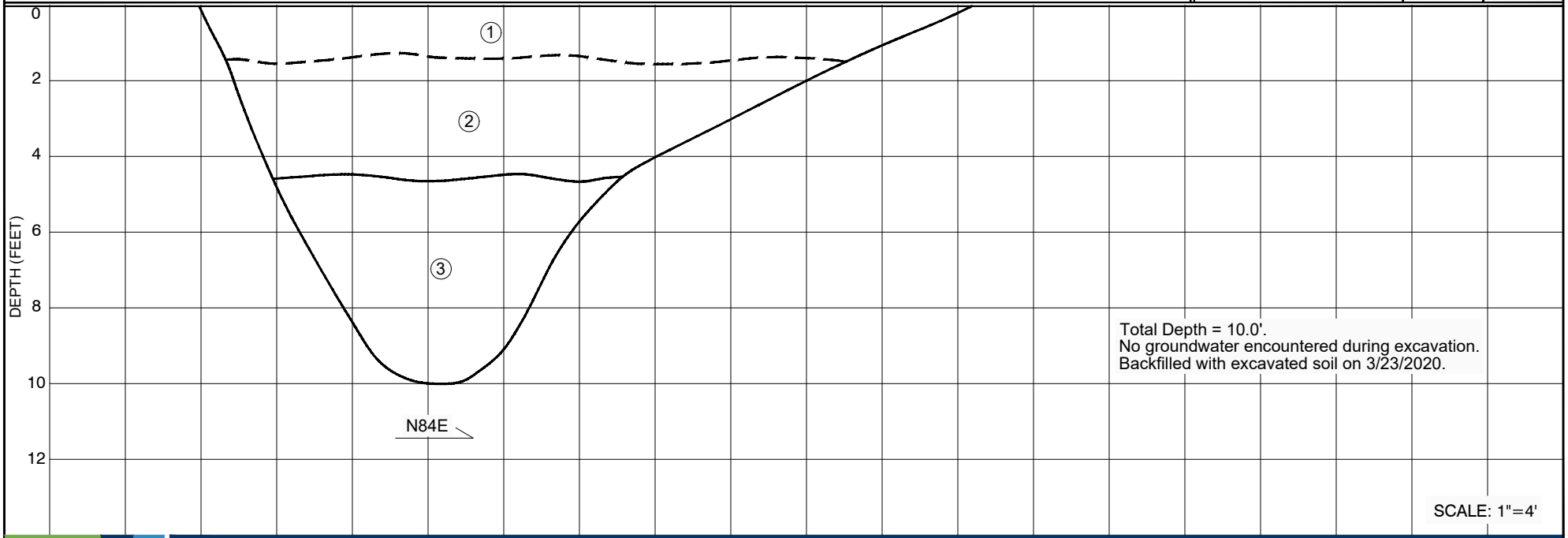

211294001_TP3.dwg 06/11/2020 JDP

FIGURE B-3

Ninyo & Moore
Geotechnical & Environmental Sciences Consultants

TEST PIT LOG

LABOE TOS NO. 25 - STRATHERN PARK NORTH
NORTH HOLLYWOOD, CALIFORNIA

211294001 I 8/20

LOCATION: See Figure 4	TEST PIT NO.: TP-4	SAMPLES/ FIELD TESTS	MOISTURE (%)
GROUND ELEVATION: 808'± (msl)	LOGGED BY: KMB		
METHOD OF EXCAVATION: JD 310 SG Backhoe (Newman)	DATE EXCAVATED: 3/23/2020		

DESCRIPTION

FILL:

① Brown, moist, loose, clayey SAND (SC); few gravel.

FILL AND MINOR WASTE:

② Brown to light brown, moist, loose to medium dense, poorly graded SAND (SP); few gravel; cobbles; minor waste consisting of bottles, tires, ceramics, and pieces of concrete.

3.0'-4.0': Bulk Bag

ALLUVIUM:

③ Light brown, moist, loose to medium dense, poorly graded SAND (SP); trace gravel; cobbles.

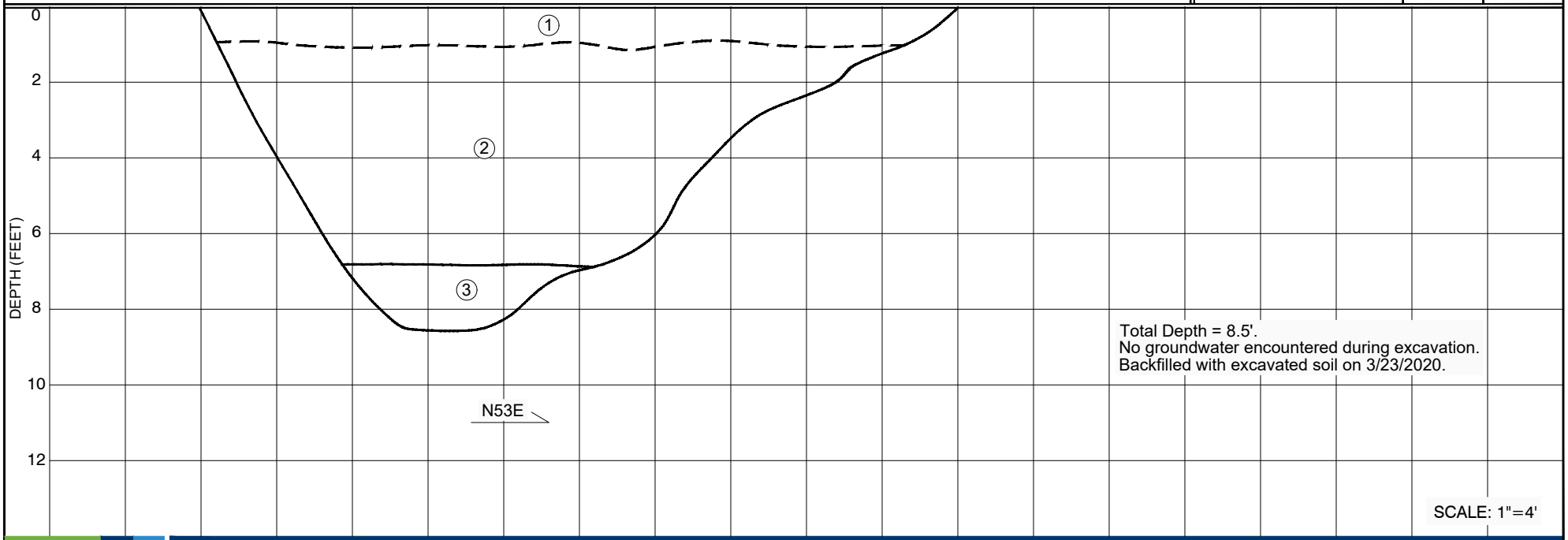

211294001_TP4.dwg 06/11/2020 JDP

FIGURE B-4

Ninyo & Moore
Geotechnical & Environmental Sciences Consultants

TEST PIT LOG

LABOE TOS NO. 25 - STRATHERN PARK NORTH
NORTH HOLLYWOOD, CALIFORNIA

211294001 I 8/20

LOCATION: See Figure 4	TEST PIT NO.: TP-5	SAMPLES/ FIELD TESTS	MOISTURE (%)
GROUND ELEVATION: 810'± (msl)	LOGGED BY: KMB		
METHOD OF EXCAVATION: JD 310 SG Backhoe (Newman)	DATE EXCAVATED: 3/23/2020		

DESCRIPTION

FILL:

(1) Brown, moist, soft to firm, sandy lean CLAY (CL); trace gravel, few organics.

FILL AND MINOR WASTE:

(2) Light brown, moist, loose, silty SAND with gravel and cobbles (SM); minor waste consisting of glass, metal, asphalt concrete, and brick.

2.0'-3.0': Bulk Bag

ALLUVIUM:

(3) Light brown, moist, loose, poorly graded SAND (SP); few gravel; interbeds of poorly graded GRAVEL with sand (GP).

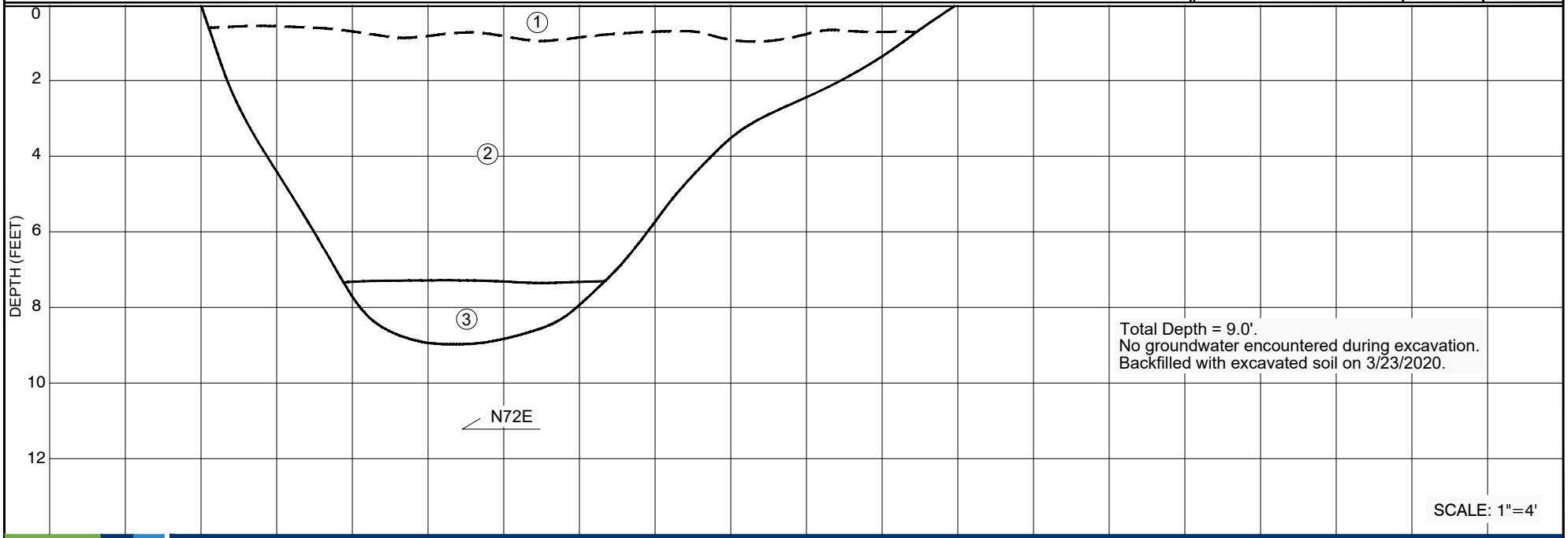

211294001_TP5.dwg 06/11/2020 JDP

FIGURE B-5

Ninyo & Moore
Geotechnical & Environmental Sciences Consultants

TEST PIT LOG

LABOE TOS NO. 25 - STRATHERN PARK NORTH
NORTH HOLLYWOOD, CALIFORNIA

211294001 I 8/20

LOCATION: See Figure 4	TEST PIT NO.: TP-6	SAMPLES/ FIELD TESTS	MOISTURE (%)
GROUND ELEVATION: 809'± (msl)	LOGGED BY: KMB		
METHOD OF EXCAVATION: JD 310 SG Backhoe (Newman)	DATE EXCAVATED: 3/23/2020		

DESCRIPTION

FILL:

(1) Brown, moist, soft, sandy lean CLAY (CL); few to little gravel; few organics.
(2) Light brown, moist, loose, poorly graded SAND with clay (SP-SC).

3.0'-4.5': Bulk Bag

FILL AND WASTE:

(3) Light brown, moist, loose, poorly graded SAND with clay (SP-SC); waste consisting of brick, ceramic, and concrete.

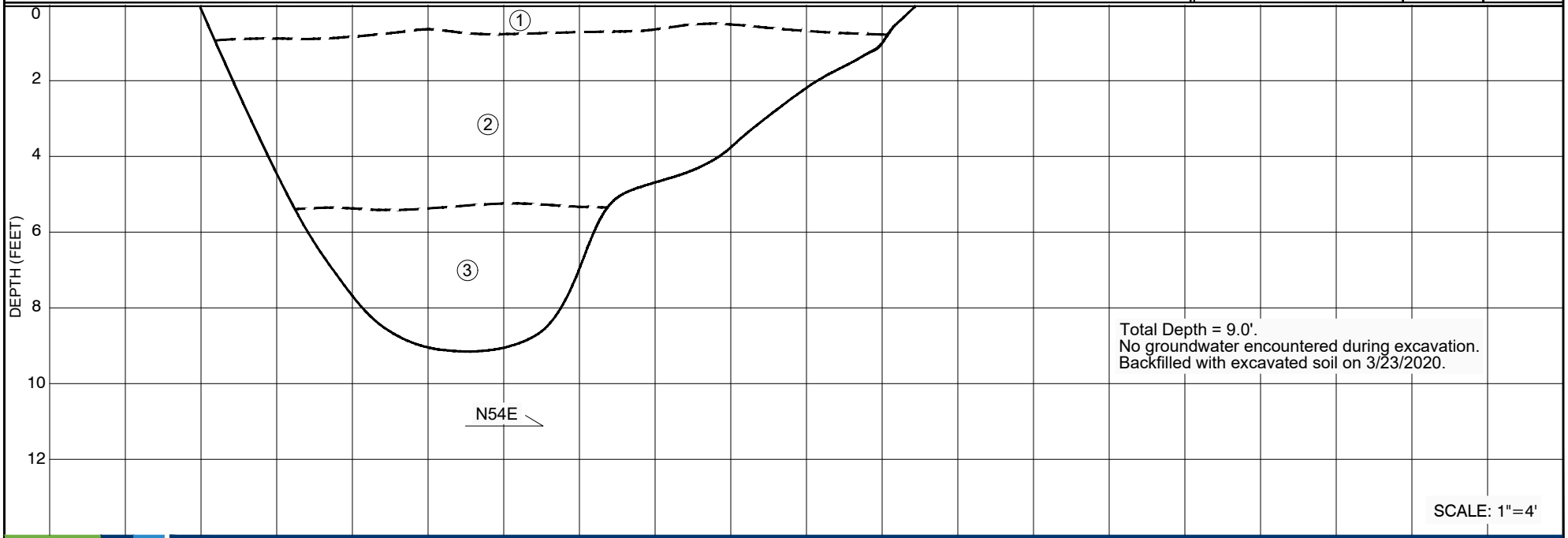

211294001_TP6.dwg 06/11/2020 JDP

FIGURE B-6

Ninyo & Moore
Geotechnical & Environmental Sciences Consultants

TEST PIT LOG

LABOE TOS NO. 25 - STRATHERN PARK NORTH
NORTH HOLLYWOOD, CALIFORNIA

211294001 I 8/20

APPENDIX C

CPT Soundings

APPENDIX C

CPT SOUNDINGS

Field Procedure for Cone Penetration Testing

The cone penetration testing (CPT) described in this report was conducted by Kehoe Testing and Engineering in general accordance with ASTM D 5778. The cone penetrometer assembly used for this project consisted of a conical tip and a cylindrical friction sleeve. The conical tip had an apex angle of 60 degrees and a cross-section area of approximately 15 square centimeters. The interior of the CPT probe was instrumented with strain gauges that allowed simultaneous measurement of cone tip resistance and friction sleeve resistance during penetration. The cone hydraulically pushed into the soil using the reaction mass of a specially designed 30-ton truck at a constant rate while the cone tip resistance and sleeve friction were recorded at an approximately 1-inch interval and stored in digital form. The computer generated logs presented in the following pages include cone resistance, sleeve friction, pore pressure, and soil behavior type.

Kehoe Testing and Engineering
714-901-7270
steve@kehoetesting.com
www.kehoetesting.com

Project: **Ninyo & Moore / Strathern Site**
Location: **Los Angeles County, CA**

CPT-1
Total depth: 50.03 ft, Date: 3/26/2020

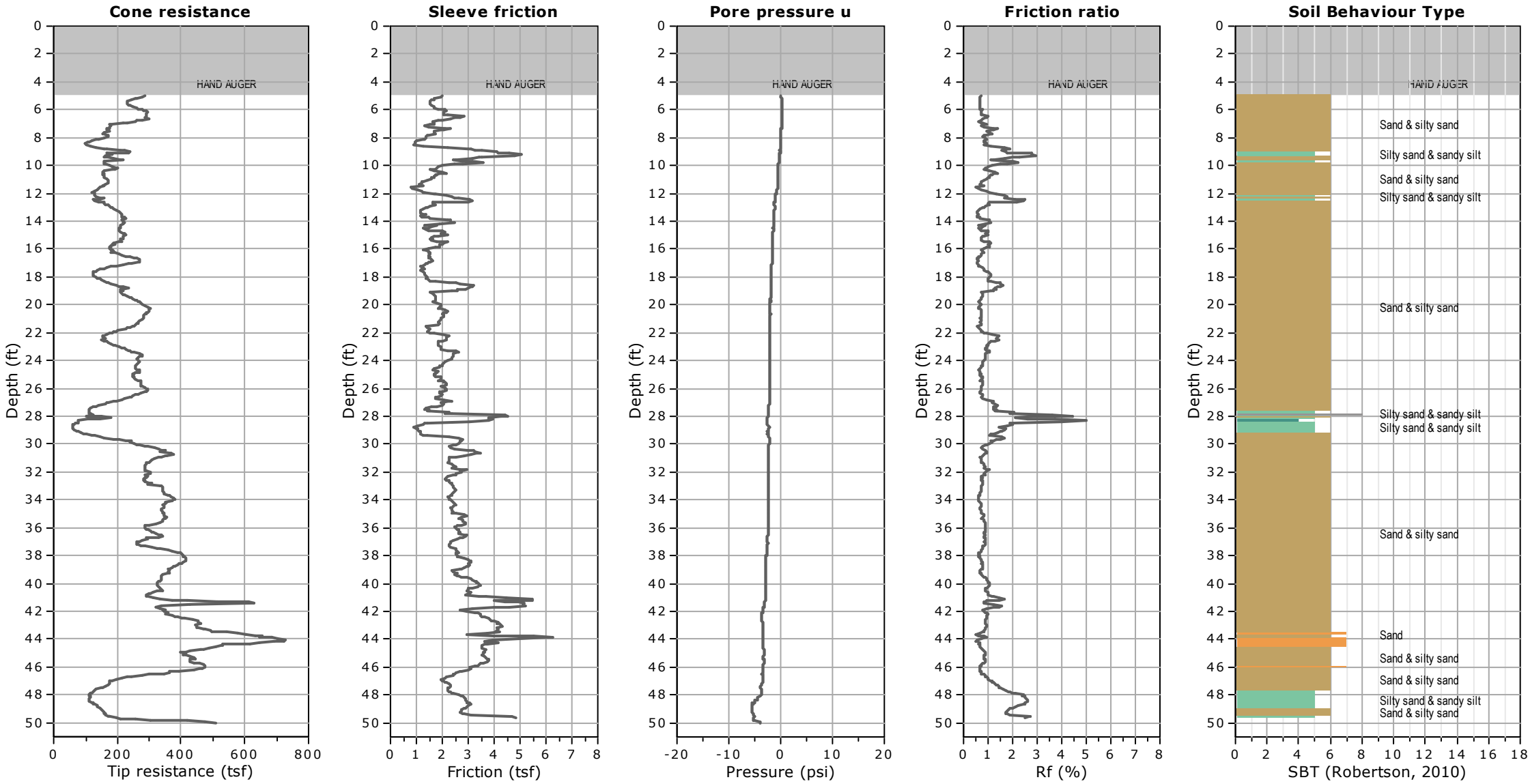

Kehoe Testing and Engineering
714-901-7270
steve@kehoetesting.com
www.kehoetesting.com

Project: **Ninyo & Moore / Strathern Site**
Location: **Los Angeles County, CA**

CPT-2
Total depth: 50.20 ft, Date: 3/26/2020

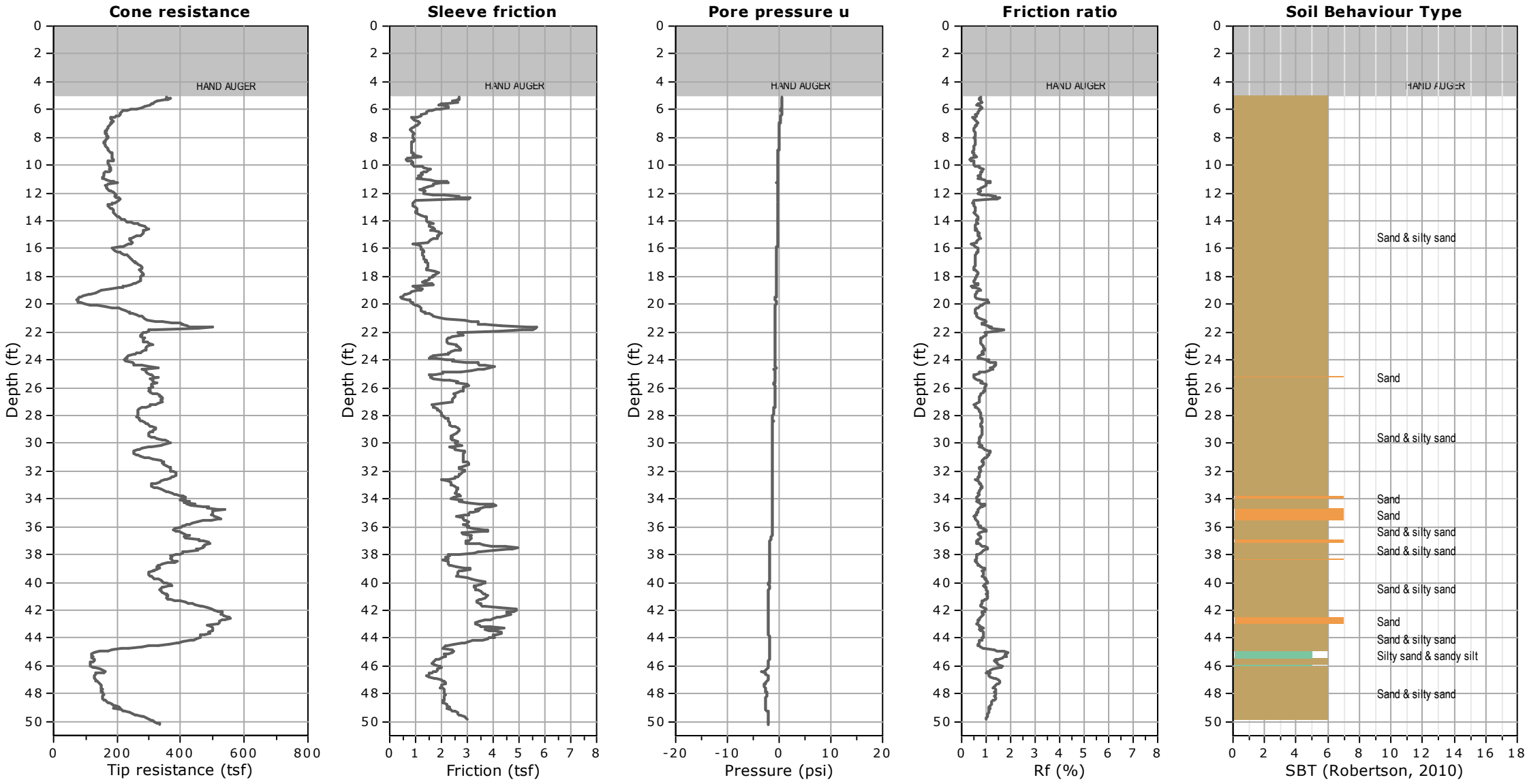

Kehoe Testing and Engineering
714-901-7270
steve@kehoetesting.com
www.kehoetesting.com

Project: **Ninyo & Moore / Strathern Site**
Location: **Los Angeles County, CA**

CPT-3
Total depth: 50.34 ft, Date: 3/26/2020

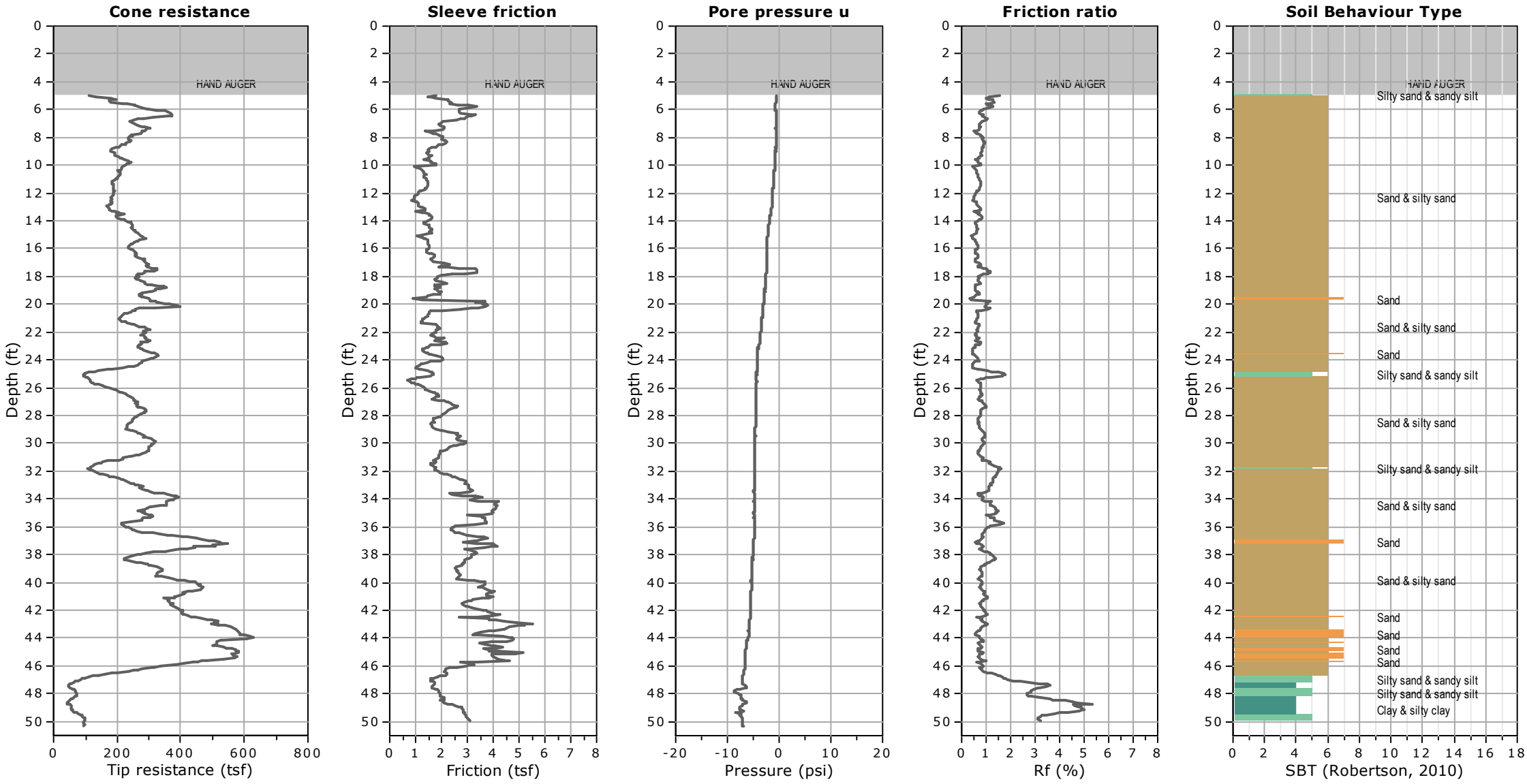

Kehoe Testing and Engineering
714-901-7270
steve@kehoetesting.com
www.kehoetesting.com

Project: **Ninyo & Moore / Strathern Site**
Location: **Los Angeles County, CA**

CPT-4
Total depth: 50.16 ft, Date: 3/26/2020

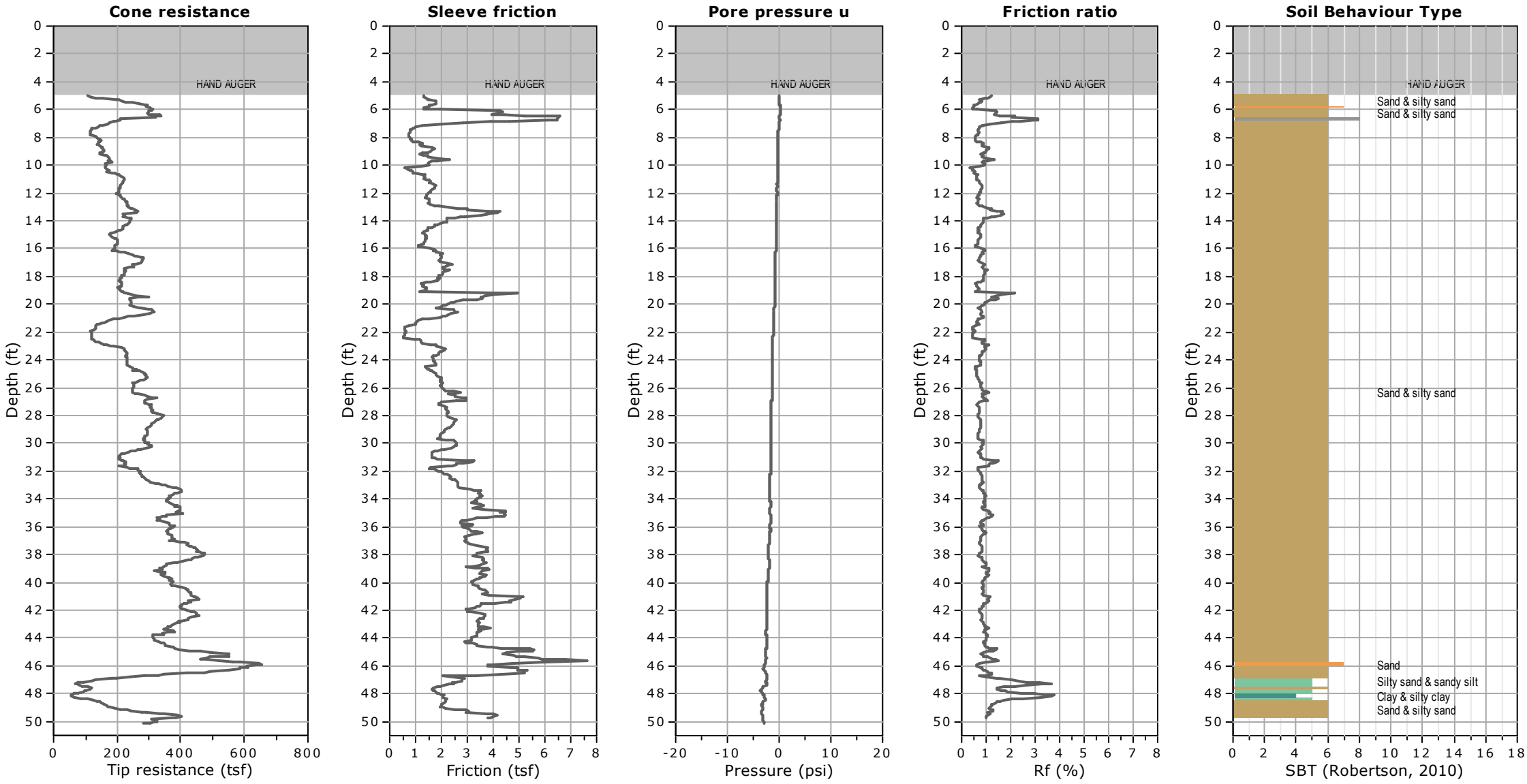

Kehoe Testing and Engineering
714-901-7270
steve@kehoetesting.com
www.kehoetesting.com

Project: **Ninyo & Moore / Strathern Site**
Location: **Los Angeles County, CA**

CPT-5
Total depth: 50.04 ft, Date: 3/26/2020

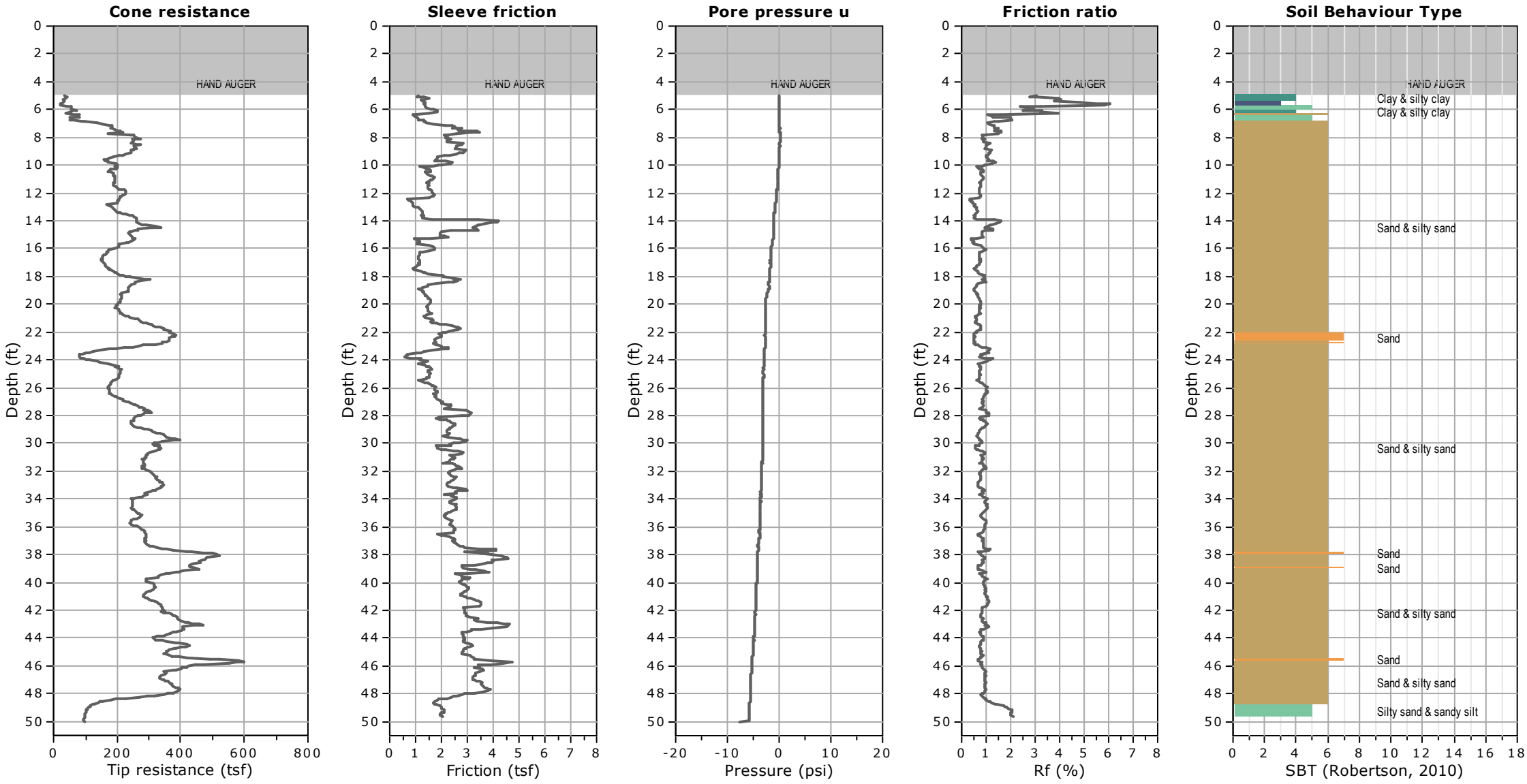

Kehoe Testing and Engineering
714-901-7270
steve@kehoetesting.com
www.kehoetesting.com

Project: **Ninyo & Moore / Strathern Site**
Location: **Los Angeles County, CA**

CPT-6
Total depth: 48.10 ft, Date: 3/26/2020

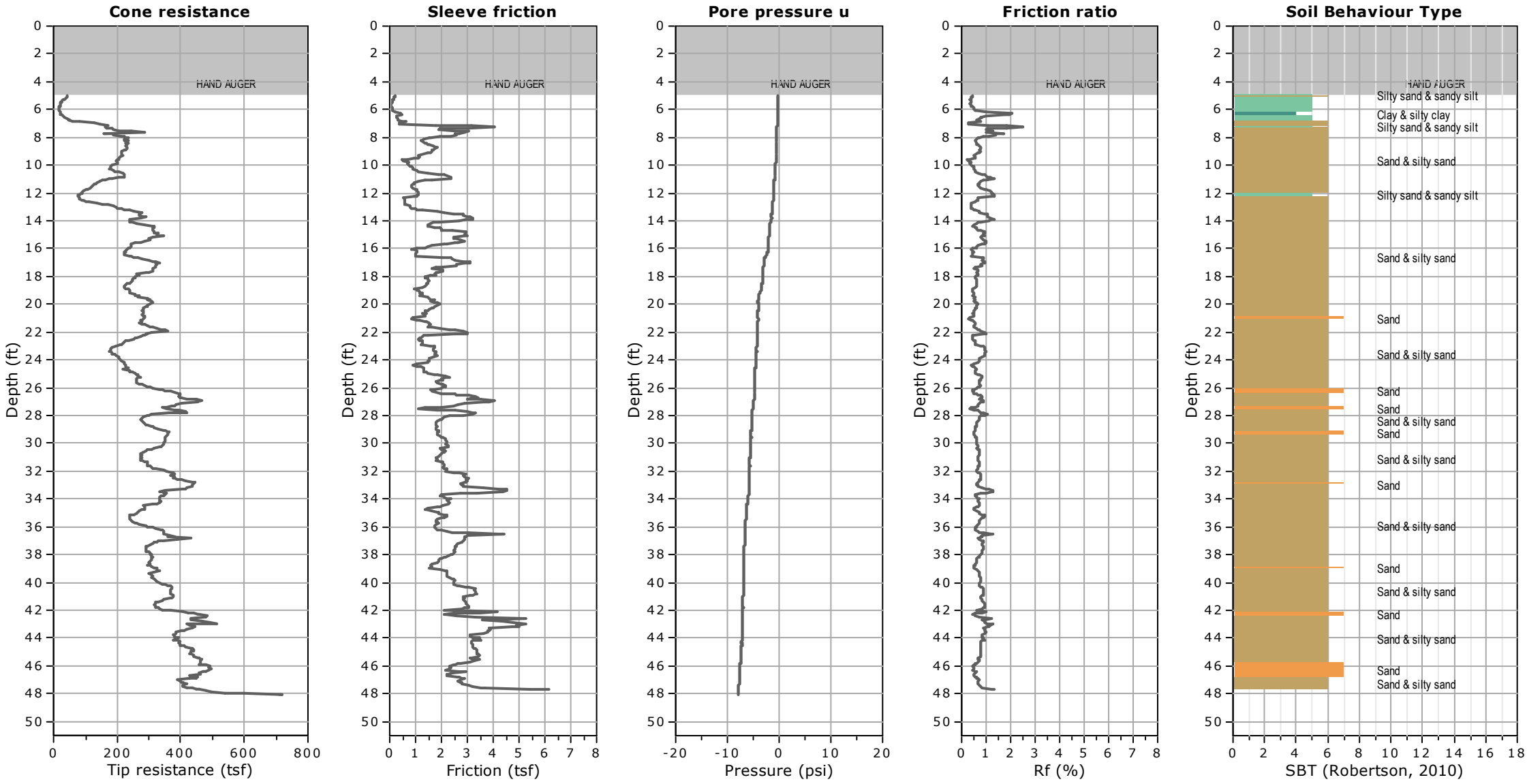

Kehoe Testing & Engineering
714-901-7270
steve@kehoetesting.com
www.kehoetesting.com

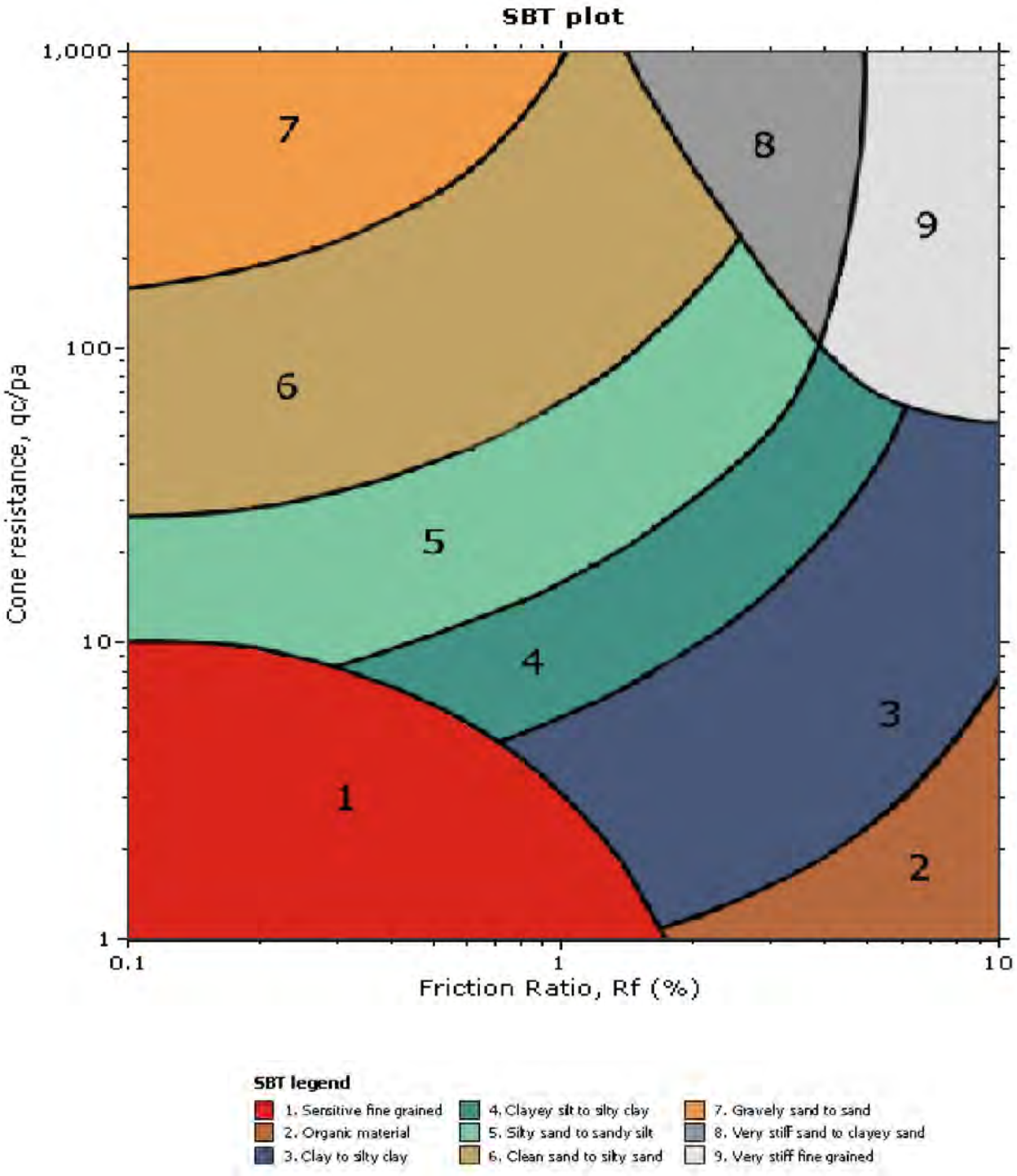

APPENDIX D

Geotechnical Laboratory Testing

APPENDIX D

GEOTECHNICAL LABORATORY TESTING

Classification
Soils were visually and texturally classified in accordance with the Unified Soil Classification System (USCS) in general accordance with ASTM D 2488. Soil classifications are indicated on the logs of the exploratory borings and test pit logs in Appendices B and C.

In-Place Moisture and Density Tests
The moisture content and dry density of relatively undisturbed samples obtained from the exploratory borings were evaluated in general accordance with ASTM D 2937. The test results are presented on the logs of the exploratory borings in Appendix B.

Gradation Analysis
Gradation analysis tests were performed on selected representative soil samples in general accordance with ASTM D 422. The grain-size distribution curves are shown on Figures D-1 through D-6. These test results were utilized in evaluating the soil classifications in accordance with the USCS.

200 Wash
An evaluation of the percentage of particles finer than the No. 200 sieve in selected soil samples was performed in general accordance with ASTM D 1140. The results of the tests are presented on Figure D-7.

Atterberg Limits
Tests were performed on a selected representative fine-grained soil sample to evaluate the liquid limit, plastic limit, and plasticity index in general accordance with ASTM D 4318. These test results were utilized to evaluate the soil classification in accordance with the USCS. The test results and classification are shown on Figure D-8.

Consolidation Test
Consolidation testing was performed on selected relatively undisturbed soil samples in general accordance with ASTM D 2435. The samples were inundated during testing to represent adverse field conditions. The percent of consolidation for each load cycle was recorded as a ratio of the amount of vertical compression to the original height of the sample. The results of the tests are summarized on Figures D-9 and D-10.

Direct Shear Tests
Direct shear tests were performed on relatively undisturbed samples in general accordance with ASTM D 3080 to evaluate the shear strength characteristics of selected materials. The samples were inundated during shearing to represent adverse field conditions. The results are shown on Figures D-11 and D-12.

Soil Corrosivity Tests
Soil pH and resistivity tests were performed on representative samples in general accordance with California Test (CT) 643. The soluble sulfate and chloride content of the selected samples were evaluated in general accordance with CT 417 and CT 422, respectively. The test results are presented on Figure D-13.

GRAVEL		SAND			FINES	
Coarse	Fine	Coarse	Medium	Fine	SILT	CLAY

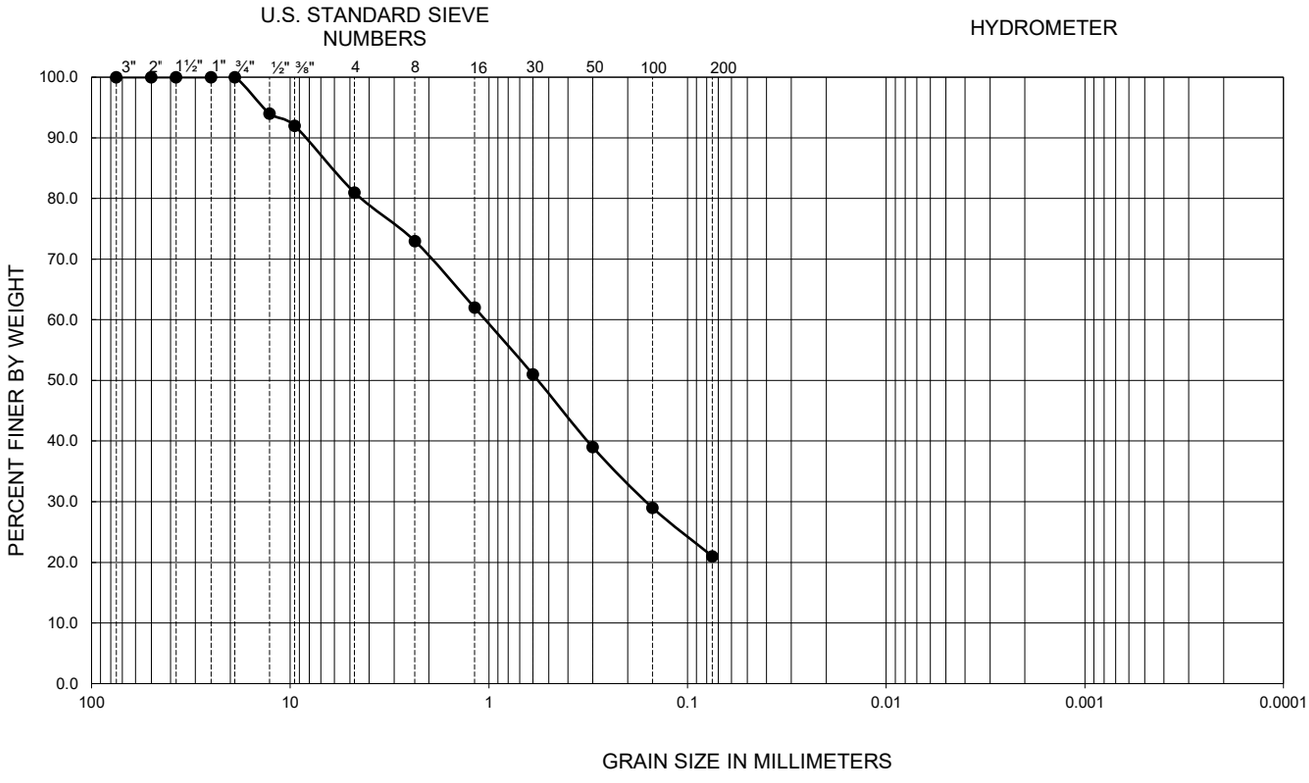

Symbol	Sample Location	Depth (ft)	Liquid Limit	Plastic Limit	Plasticity Index	D_{10}	D_{30}	D_{60}	C_u	C_c	Passing No. 200 (percent)	USCS
●	B-1	5.0-6.5	--	--	--	--	--	--	--	--	21	SM

PERFORMED IN GENERAL ACCORDANCE WITH ASTM D 422

FIGURE D-1

GRADATION TEST RESULTS

LABOE TOS NO. 25 - STRATHERN PARK NORTH
NORTH HOLLYWOOD, CALIFORNIA

211294001 | 8/20

Ninyo & Moore
Geotechnical & Environmental Sciences Consultants

211294001 Fig D-1 SIEVE w No 8 @ B-1 5.5-6.5

GRAVEL		SAND			FINES	
Coarse	Fine	Coarse	Medium	Fine	SILT	CLAY

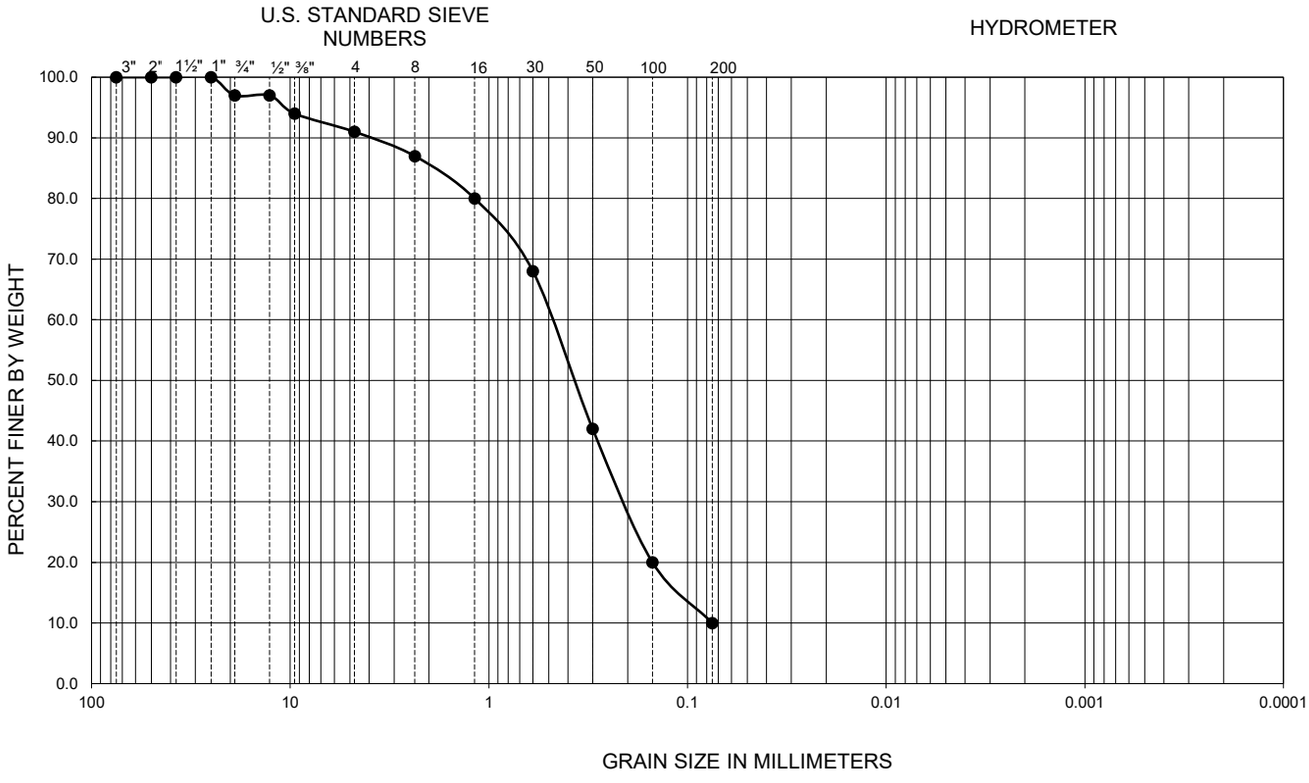

Symbol	Sample Location	Depth (ft)	Liquid Limit	Plastic Limit	Plasticity Index	D_{10}	D_{30}	D_{60}	C_u	C_c	Passing No. 200 (percent)	USCS
●	P-1	10.0-11.5	--	--	--	0.08	0.21	0.47	6.3	1.2	10	SW-SM

PERFORMED IN GENERAL ACCORDANCE WITH ASTM D 422

FIGURE D-2

GRADATION TEST RESULTS

LABOE TOS NO. 25 - STRATHERN PARK NORTH
NORTH HOLLYWOOD, CALIFORNIA

Ninyo & Moore
Geotechnical & Environmental Sciences Consultants

211294001 Fig D-2 SIEVE w No 8 @ P-1 10.0-11.0

GRAVEL		SAND			FINES	
Coarse	Fine	Coarse	Medium	Fine	SILT	CLAY

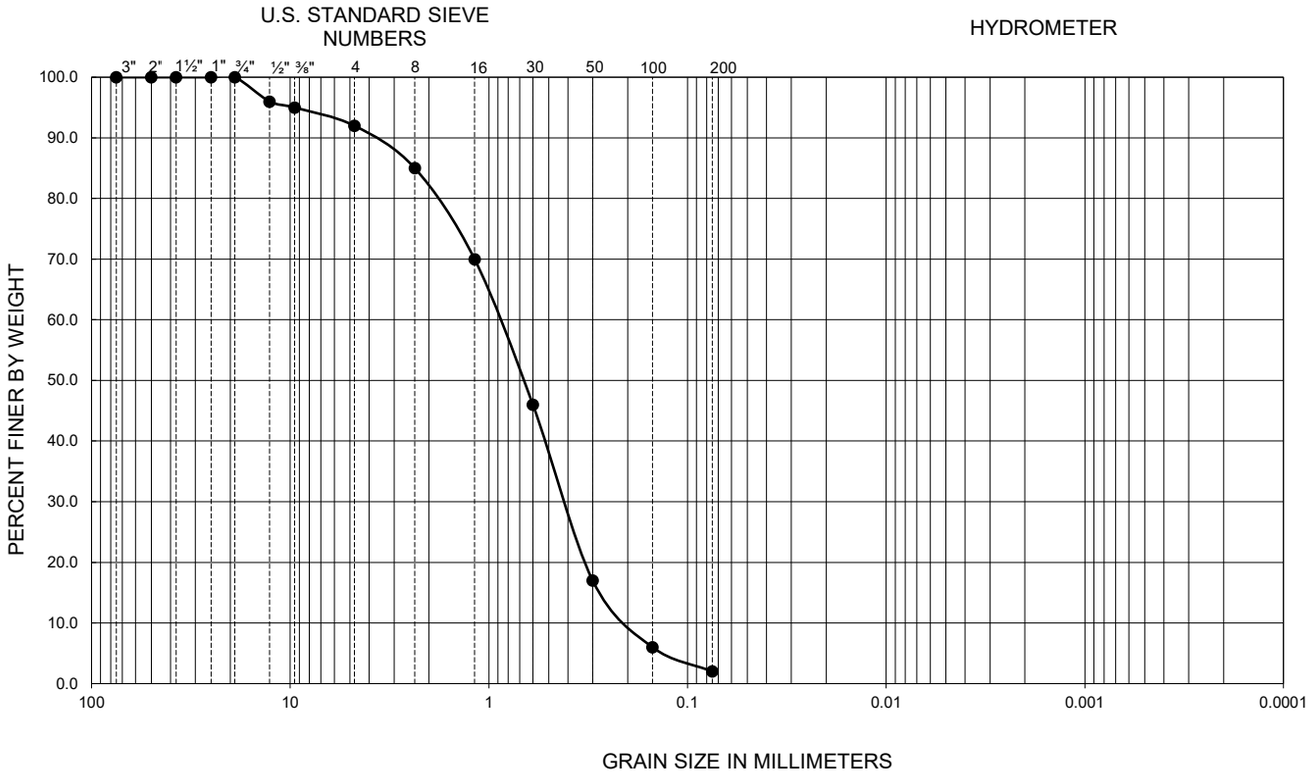

Symbol	Sample Location	Depth (ft)	Liquid Limit	Plastic Limit	Plasticity Index	D_{10}	D_{30}	D_{60}	C_u	C_c	Passing No. 200 (percent)	USCS
●	P-2	15.0-16.5	--	--	--	0.21	0.41	0.86	4.1	0.9	2	SP

PERFORMED IN GENERAL ACCORDANCE WITH ASTM D 422

FIGURE D-3

GRADATION TEST RESULTS

LABOE TOS NO. 25 - STRATHERN PARK NORTH
NORTH HOLLYWOOD, CALIFORNIA

Ninyo & Moore
Geotechnical & Environmental Sciences Consultants

211294001 Fig D-3 SIEVE w No 8 @ P-2 15.0-16.0

GRAVEL		SAND			FINES	
Coarse	Fine	Coarse	Medium	Fine	SILT	CLAY

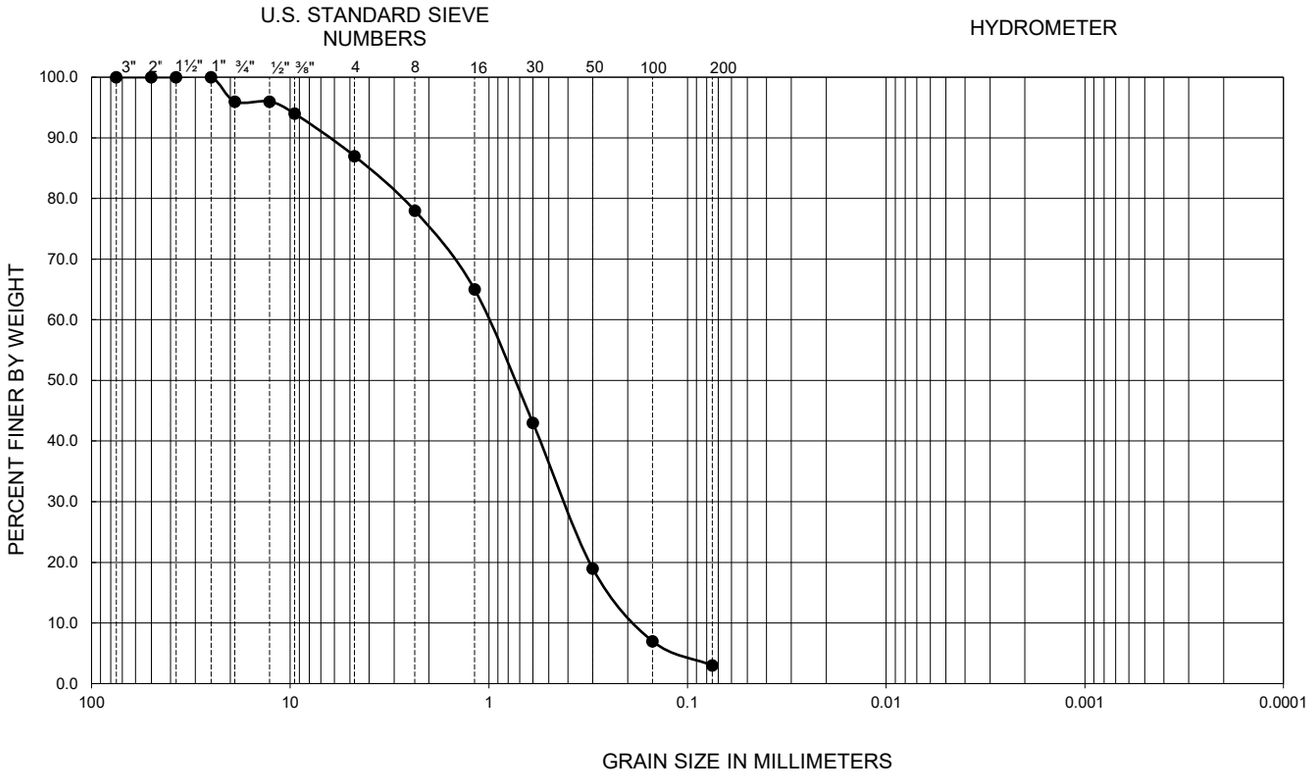

Symbol	Sample Location	Depth (ft)	Liquid Limit	Plastic Limit	Plasticity Index	D_{10}	D_{30}	D_{60}	C_u	C_c	Passing No. 200 (percent)	USCS
●	P-6	15.0-16.5	--	--	--	0.18	0.41	0.99	5.5	0.9	3	SP

PERFORMED IN GENERAL ACCORDANCE WITH ASTM D 422

FIGURE D-4

GRADATION TEST RESULTS

LABOE TOS NO. 25 - STRATHERN PARK NORTH
NORTH HOLLYWOOD, CALIFORNIA

Ninyo & Moore
Geotechnical & Environmental Sciences Consultants

211294001 Fig D-4 SIEVE w No 8 @ P-6 15.0-16.0

GRAVEL		SAND			FINES	
Coarse	Fine	Coarse	Medium	Fine	SILT	CLAY

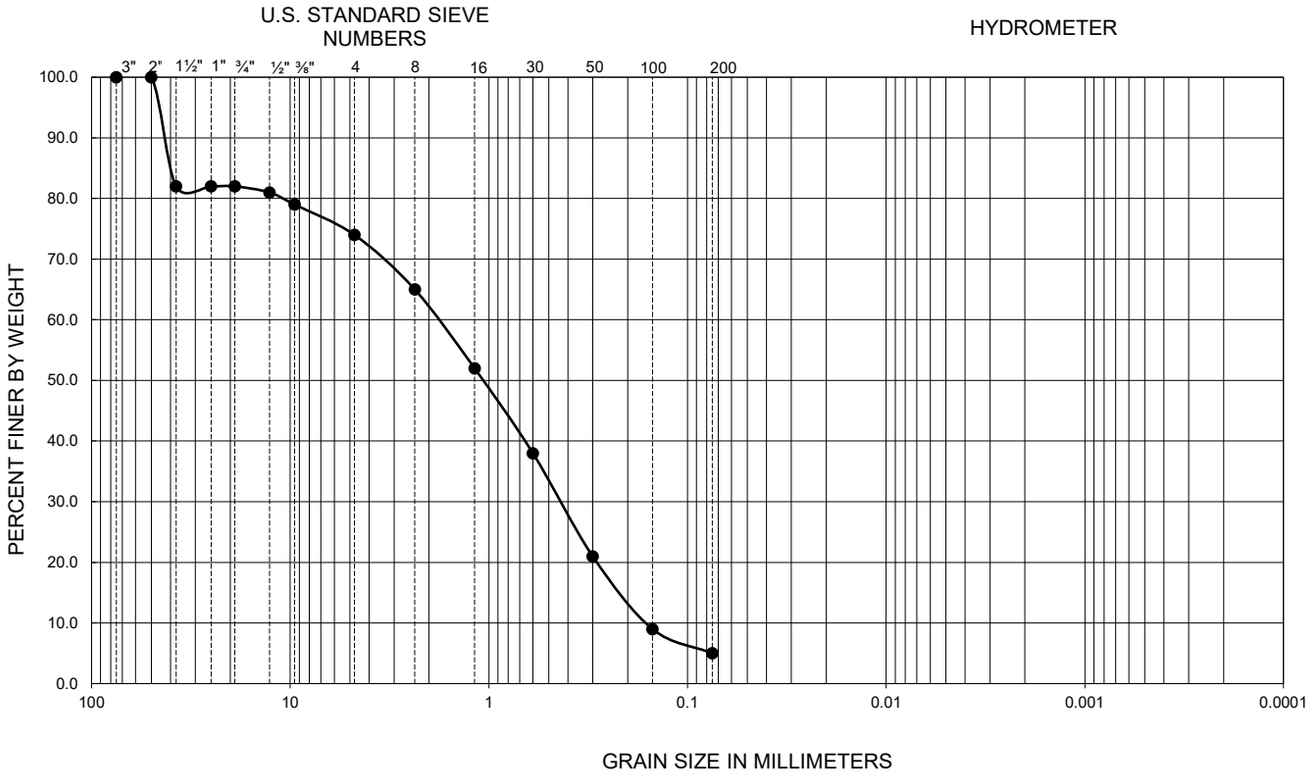

Symbol	Sample Location	Depth (ft)	Liquid Limit	Plastic Limit	Plasticity Index	D_{10}	D_{30}	D_{60}	C_u	C_c	Passing No. 200 (percent)	USCS
●	P-6	45.0-46.5	--	--	--	0.16	0.43	1.70	10.6	0.7	5	SP-SM

PERFORMED IN GENERAL ACCORDANCE WITH ASTM D 422

FIGURE D-5

GRADATION TEST RESULTS

LABOE TOS NO. 25 - STRATHERN PARK NORTH
NORTH HOLLYWOOD, CALIFORNIA

Ninyo & Moore
Geotechnical & Environmental Sciences Consultants

211294001 Fig D-5 SIEVE w No 8 @ P-6 45.0-46.0

GRAVEL		SAND			FINES	
Coarse	Fine	Coarse	Medium	Fine	SILT	CLAY

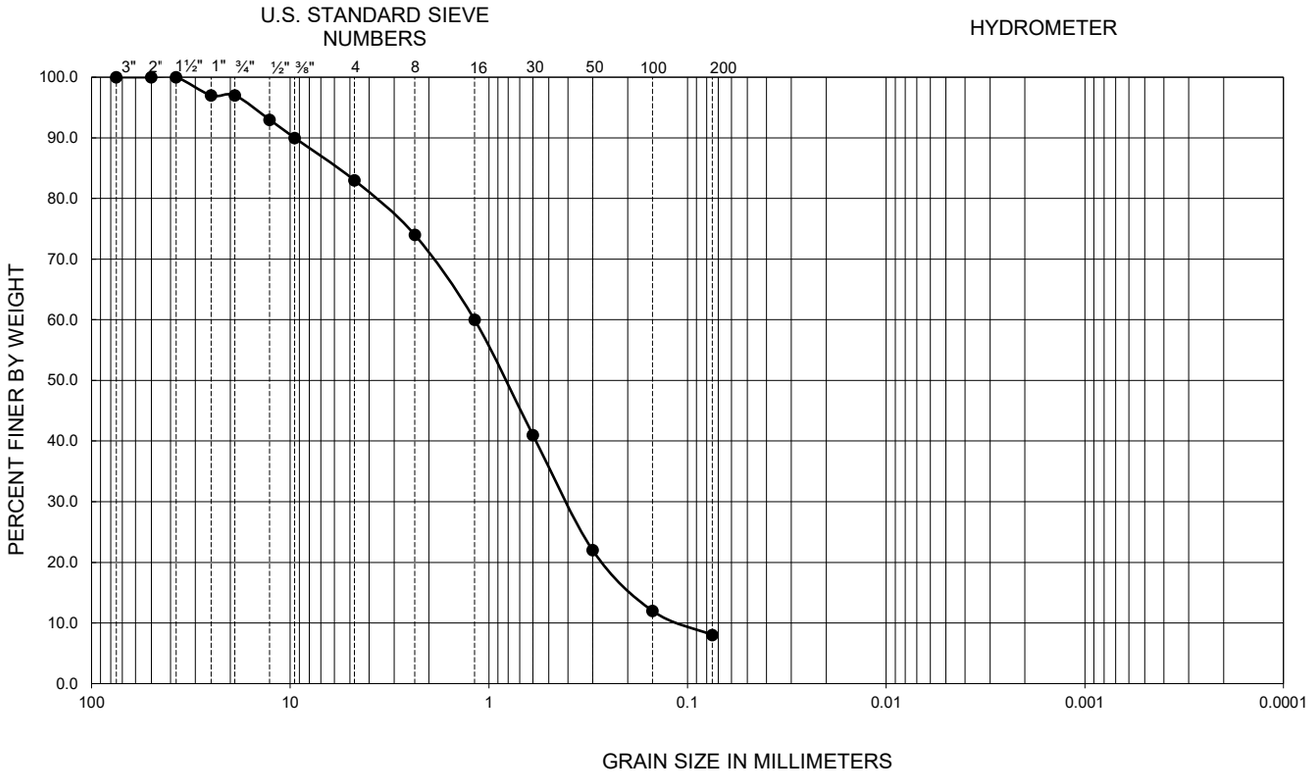

Symbol	Sample Location	Depth (ft)	Liquid Limit	Plastic Limit	Plasticity Index	D_{10}	D_{30}	D_{60}	C_u	C_c	Passing No. 200 (percent)	USCS
●	TP-2	1.5-2.5	--	--	--	0.11	0.41	1.18	10.5	1.3	8	SW-SM

PERFORMED IN GENERAL ACCORDANCE WITH ASTM D 422

FIGURE D-6

GRADATION TEST RESULTS

LABOE TOS NO. 25 - STRATHERN PARK NORTH
NORTH HOLLYWOOD, CALIFORNIA

Ninyo & Moore
Geotechnical & Environmental Sciences Consultants

211294001 Fig D-6 SIEVE w No 8 @ TP-2 1.5-2.5

SAMPLE LOCATION	SAMPLE DEPTH (ft)	DESCRIPTION	PERCENT PASSING NO. 4	PERCENT PASSING NO. 200	USCS (TOTAL SAMPLE)
B-2	5.0-6.5	POORLY GRADED SAND WITH SILT	88	5	SP-SM
B-2	15.0-16.5	SILTY SAND	97	45	SM
B-3	5.0-6.5	POORLY GRADED SAND WITH SILT AND GRAVEL	67	6	SP-SM
P-2	35.0-36.5	POORLY GRADED SAND WITH SILT	94	5	SP-SM
P-4	50.0-50.5	SANDY SILT	99	54	ML
P-5	5.0-6.5	SILTY SAND WITH GRAVEL	71	16	SM
TP-5	2.5-3.5	SILTY SAND WITH GRAVEL	73	18	SM

PERFORMED IN GENERAL ACCORDANCE WITH ASTM D 1140

FIGURE D-7

Ninyo & Moore
Geotechnical & Environmental Sciences Consultants

NO. 200 SIEVE ANALYSIS TEST RESULTS

LABOE TOS NO. 25 - STRATHERN PARK NORTH
NORTH HOLLYWOOD, CALIFORNIA

211294001 | 8/20

SYMBOL	LOCATION	DEPTH (ft)	LIQUID LIMIT	PLASTIC LIMIT	PLASTICITY INDEX	USCS CLASSIFICATION (Fraction Finer Than No. 40 Sieve)	USCS
●	P-4	0.0-5.0	29	25	4	ML	ML

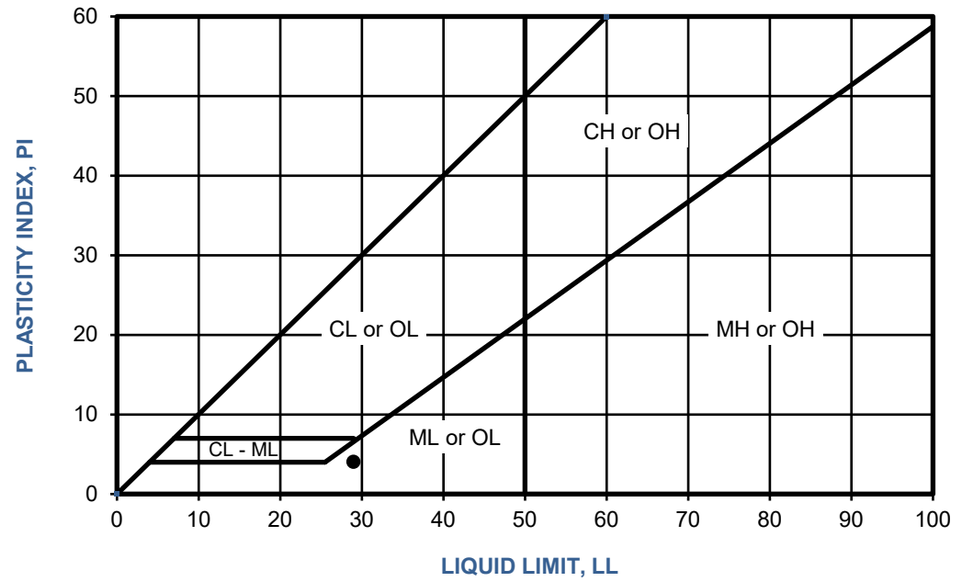

PERFORMED IN GENERAL ACCORDANCE WITH ASTM D 4318

FIGURE D-8

ATTERBERG LIMITS TEST RESULTS

LABOE TOS NO. 25 - STRATHERN PARK NORTH
NORTH HOLLYWOOD, CALIFORNIA

211294001 | 8/20

Ninyo & Moore
Geotechnical & Environmental Sciences Consultants

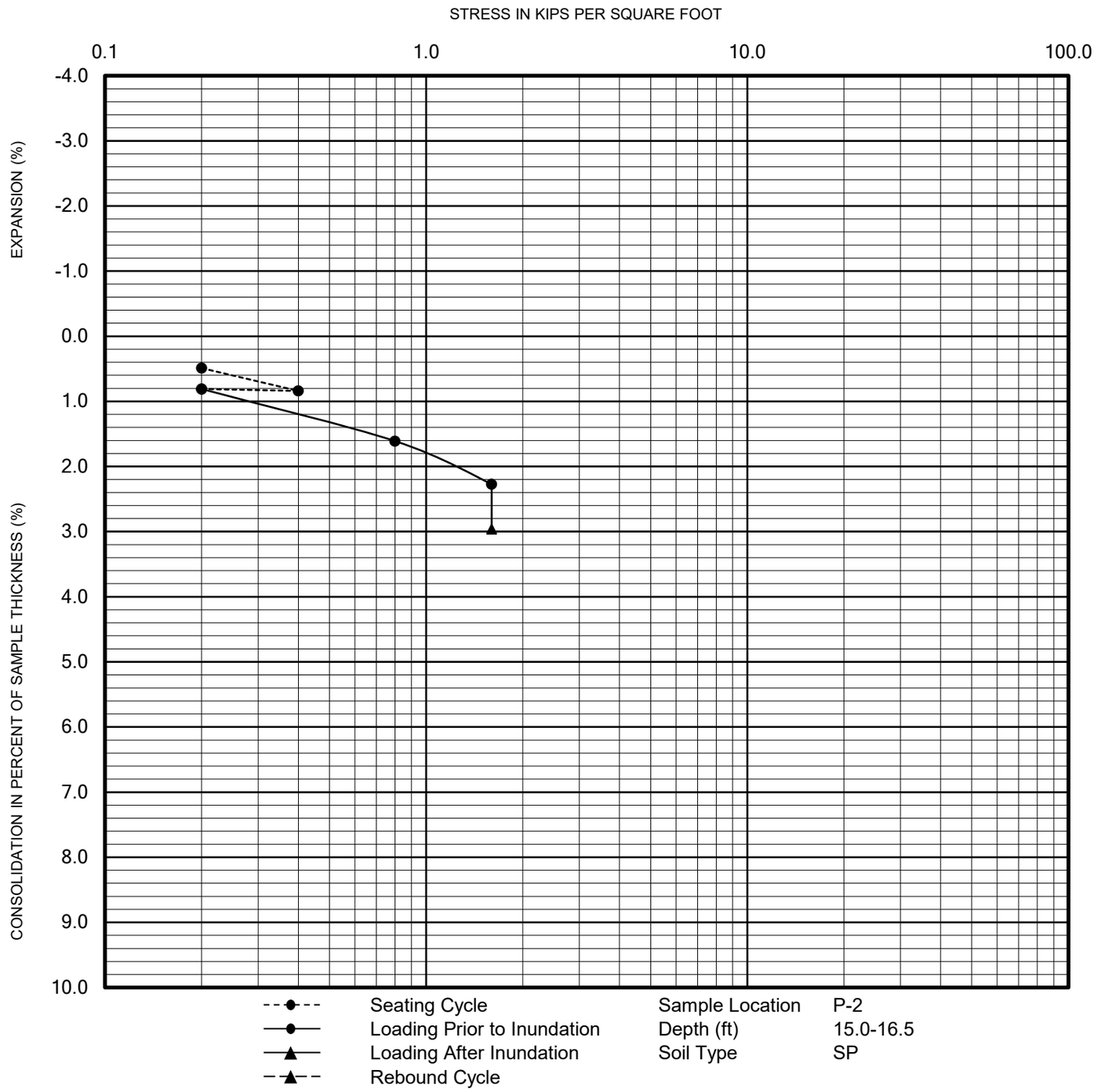

PERFORMED IN GENERAL ACCORDANCE WITH ASTM D 2435

FIGURE D-9

CONSOLIDATION TEST RESULTS

LABOE TOS NO. 25 - STRATHERN PARK NORTH
NORTH HOLLYWOOD, CALIFORNIA

211294001 | 8/20

Ninyo & Moore
Geotechnical & Environmental Sciences Consultants

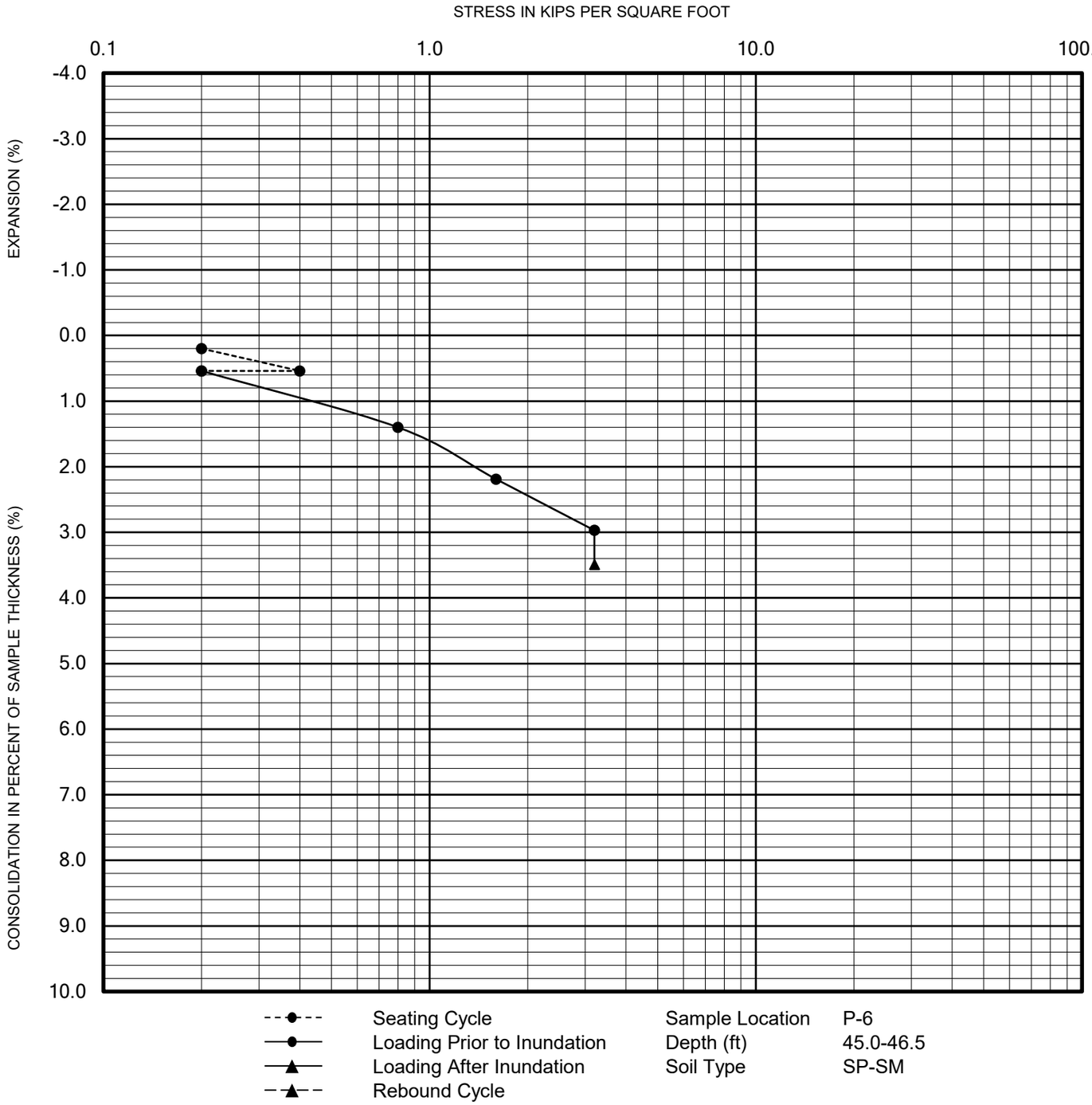

PERFORMED IN GENERAL ACCORDANCE WITH ASTM D 2435

FIGURE D-10

CONSOLIDATION TEST RESULTS

LABOE TOS NO. 25 - STRATHERN PARK NORTH
NORTH HOLLYWOOD, CALIFORNIA

211294001 | 8/20

Ninyo & Moore
Geotechnical & Environmental Sciences Consultants

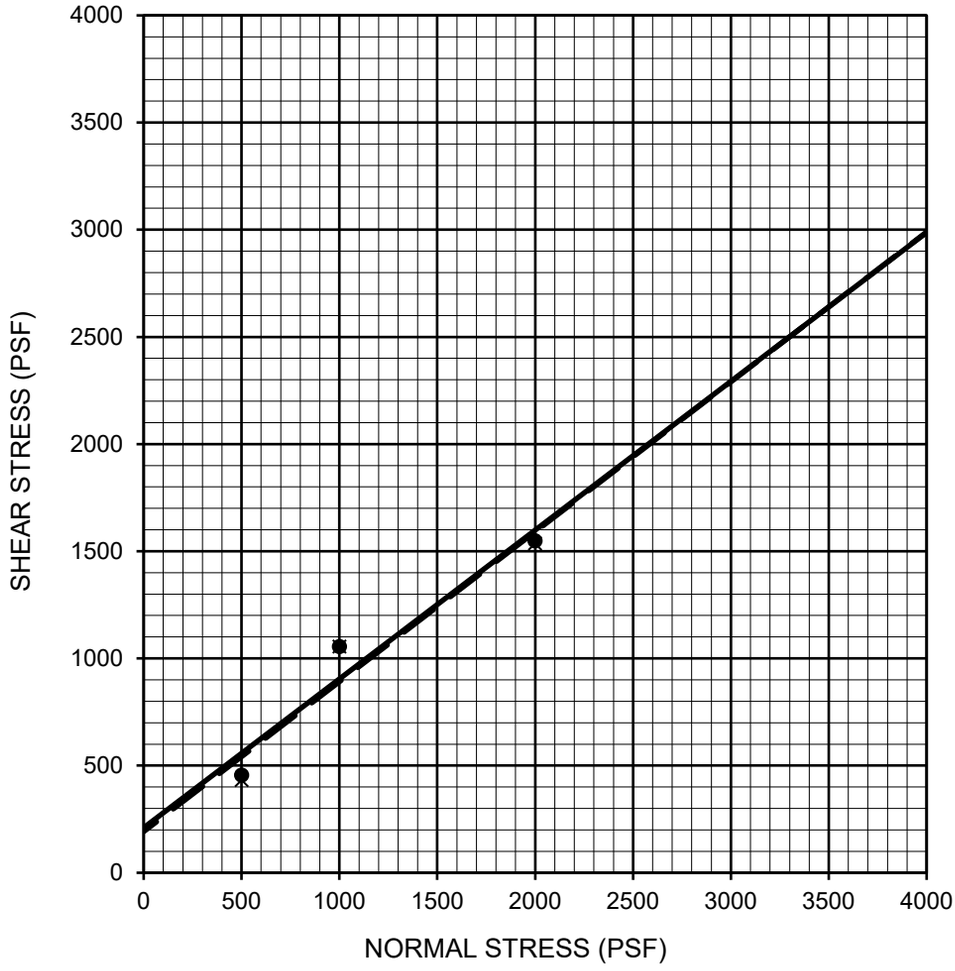

Description	Symbol	Sample Location	Depth (ft)	Shear Strength	Cohesion (psf)	Friction Angle (degrees)	Soil Type
POORLY GRADED SAND WITH SILT AND GRAVEL	—●—	B-3	5.0-6.5	Peak	210	35	SP-SM
POORLY GRADED SAND WITH SILT AND GRAVEL	– – X – –	B-3	5.0-6.5	Ultimate	192	35	SP-SM

PERFORMED IN GENERAL ACCORDANCE WITH ASTM D 3080

FIGURE D-11

DIRECT SHEAR TEST RESULTS

LABOE TOS NO. 25 - STRATHERN PARK NORTH
NORTH HOLLYWOOD, CALIFORNIA

211294001 | 8/20

Ninyo & Moore
Geotechnical & Environmental Sciences Consultants

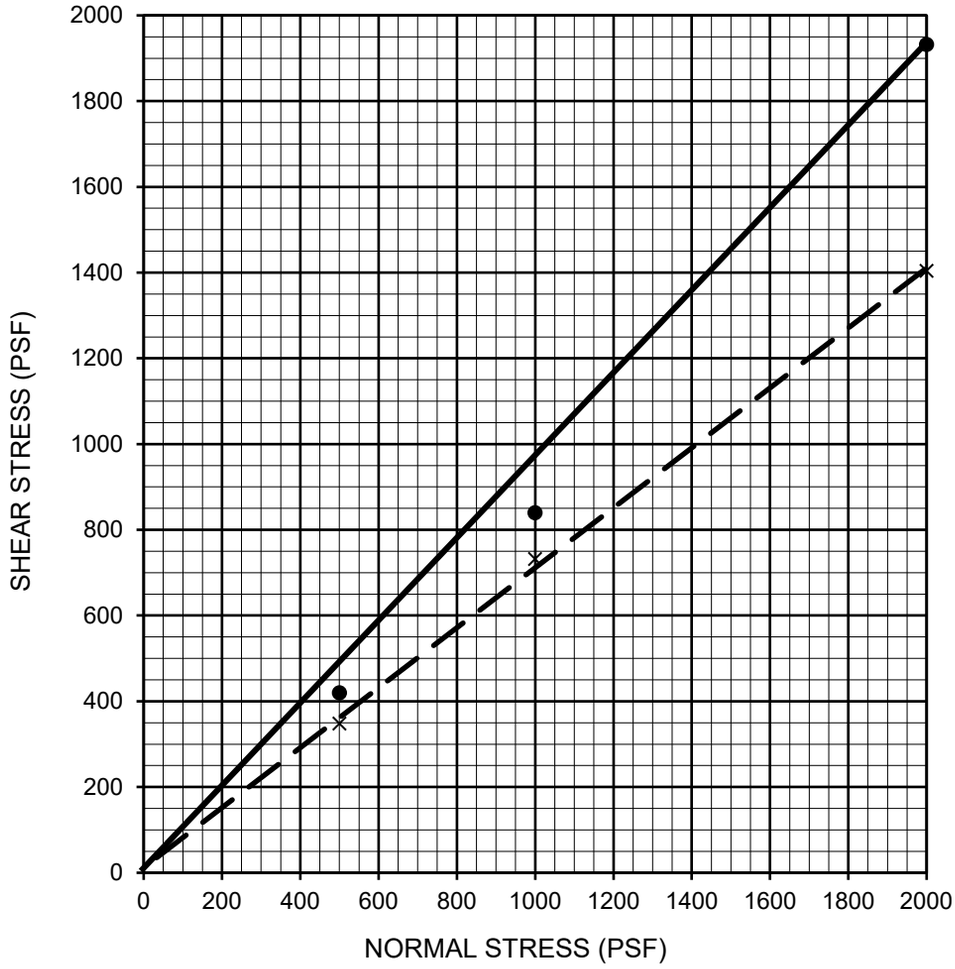

Description	Symbol	Sample Location	Depth (ft)	Shear Strength	Cohesion (psf)	Friction Angle (degrees)	Soil Type
WELL-GRADED SAND WITH SILT	●——	P-1	10.0-11.5	Peak	0	46	SW-SM
WELL-GRADED SAND WITH SILT	– – X – –	P-1	10.0-11.5	Ultimate	12	35	SW-SM

PERFORMED IN GENERAL ACCORDANCE WITH ASTM D 3080

FIGURE D-12

DIRECT SHEAR TEST RESULTS

LABOE TOS NO. 25 - STRATHERN PARK NORTH
NORTH HOLLYWOOD, CALIFORNIA

211294001 | 8/20

Ninyo & Moore
Geotechnical & Environmental Sciences Consultants

SAMPLE LOCATION	SAMPLE DEPTH (ft)	pH [1]	RESISTIVITY [1] (ohm-cm)	SULFATE CONTENT [2]		CHLORIDE CONTENT [3] (ppm)
				(ppm)	(%)	
B-3	0.0-5.0	7.4	6,922	50	0.005	30
P-4	0.0-5.0	6.9	2,363	80	0.008	30

[1] PERFORMED IN GENERAL ACCORDANCE WITH CALIFORNIA TEST METHOD 643
[2] PERFORMED IN GENERAL ACCORDANCE WITH CALIFORNIA TEST METHOD 417
[3] PERFORMED IN GENERAL ACCORDANCE WITH CALIFORNIA TEST METHOD 422

FIGURE D-13

CORROSIVITY TEST RESULTS

LABOE TOS NO. 25 - STRATHERN PARK NORTH
NORTH HOLLYWOOD, CALIFORNIA

211294001 | 8/20

Ninyo & Moore
Geotechnical & Environmental Sciences Consultants

APPENDIX E

Drum Characterization Test Results and Transportation Manifest

Enthalpy Analytical
931 West Barkley Ave
Orange, CA 92868
(714) 771-6900

enthalpy.com

Lab Job Number: 426449
Report Level: II
Report Date: 04/01/2020

Analytical Report *prepared for:*

Keith Gilbert
Ninyo & Moore
475 Goddard
Suite 200
Irvine, CA 92618

Location: Strathern Park Soil Sampling / 8041 Whitsett Ave., No. Hollywood, CA

Authorized for release by:

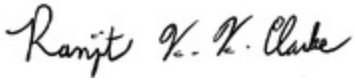

Ranjit K Clarke, Project Manager
(714) 771-9906
Ranjit.Clarke@enthalpy.com

This data package has been reviewed for technical correctness and completeness. Release of this data has been authorized by the Laboratory Manager or the Manager's designee, as verified by the above signature which applies to this PDF file as well as any associated electronic data deliverable files. The results contained in this report meet all requirements of NELAP and pertain only to those samples which were submitted for analysis. This report may be reproduced only in its entirety.

ENTHALPY ANALYTICAL

Sample Summary

Keith Gilbert Ninyo & Moore 475 Goddard Suite 200 Irvine, CA 92618	Lab Job #: Location: Date Received:	426449 Strathern Park Soil Sampling / 8041 Whitsett Ave., No. Hollywood, CA 03/25/20

Sample ID	Lab ID	Collected	Matrix
WC-1	426449-001	03/25/20 15:10	Soil
WC-2	426449-002	03/25/20 15:10	Soil

ENTHALPY ANALYTICAL

Case Narrative

Ninyo & Moore 475 Goddard Suite 200 Irvine, CA 92618 Keith Gilbert	Lab Job Number:	426449
	Location:	Strathern Park Soil Sampling / 8041 Whitsett Ave., No. Hollywood, CA
	Date Received:	03/25/20

This data package contains sample and QC results for two soil samples, requested for the above referenced project on 03/25/20. The samples were received cold and intact.

TPH-Extractables by GC (EPA 8015B):
High RPD was observed for diesel C10-C28 in the MS/MSD of P-4-10' (lab # 426382-012); the high RPD was not associated with any reported results. No other analytical problems were encountered.

Volatile Organics by GC/MS (EPA 8260B):
No analytical problems were encountered.

Metals (EPA 6010B and EPA 7471A):
Low recoveries were observed for barium and antimony in the MS/MSD of WC-1 (lab # 426449-001); the LCS was within limits, and the associated RPDs were within limits. No other analytical problems were encountered.

ENTHALPY ANALYTICAL

Chain of Custody Record

Lab No: 426449

Page: 1 of 1

Turn Around Time (rush by advanced notice only)

Standard:	X	5 Day:		3 Day:	
2 Day:		1 Day:		Custom TAT:	

Enthalpy Analytical - Orange

931 W. Barkley Avenue, Orange, CA 92868

Phone 714-771-6900

Matrix: A = Air S = Soil/Solid W = Water DW = Drinking Wate SD = Sediment PP = Pure Product SEA = Sea Water SW = Swab T = Tissue WP = Wipe O = Other

Preservatives: 1 = $Na_2S_2O_3$ 2 = HCl 3 = HNO_3 4 = H_2SO_4 5 = NaOH 6 = Other

Sample Receipt Temp: 3.4 / 1.1 (lab use only)

CUSTOMER INFORMATION		PROJECT INFORMATION	
Company:	Ninyo & Moore	Name:	Strathern Park Soil Sampling
Report To:	Keith Gilbert	Number:	211294004
Email:	kgilbert@ninyoandmoore.com	P.O. #:	
Address:	475 Goddard Ste 200	Address:	8041 Whitsett Avenue
	Irvine, CA 92618		North Hollywood, CA 91605
Phone:	949-753-7070	Global ID:	
Fax:	949-753-7071	Sampled By:	Kristina Hill (KMH)

	Sample ID	Sampling Date	Sampling Time	Matrix	Container No. / Size	Pres.	Title 22 Metals (6010B/7471A)	TRPH (1664)	TPHcc (8015M)	VOCs (8260B)	SVOCs (8270C)	PAHs (8270SIM)	OCPs (8081A	PCBs (8082)	CHs (8150	pH, nitrates, sulfates	Hold	Test Instructions / Comments
1	WC-1	3/25/2020	1510	SOIL	8oz jar	ICE	X		X	X								please cc results to khill@ninyoandmoore.com
2	WC-2	3/25/2020	1510	SOIL	8oz jar	ICE	X		X	X								
3																		
4																		
5																		
6																		
7		KMH 3/25/2020																
8																		
9																		
10																		

	Signature	Print Name	Company / Title	Date / Time
[1] Relinquished By:		Kristina Hill	Ninyo & Moore / Geologist	3/25/2020 1633
[1] Received By:		Elizabeth Palmer	EA	3/25/2020 16:33
[2] Relinquished By:				
[2] Received By:				
[3] Relinquished By:				
[3] Received By:				

ENTHALPY ANALYTICAL

SAMPLE ACCEPTANCE CHECKLIST

Section 1

Client: Ninyo & Moore

Project: Strathern Park Soil Sampling

Date Received: 03/25/2020

Sampler's Name Present: ☑ Yes ☐ No

Section 2

Sample(s) received in a cooler? ☑ Yes, How many? 1 ☐ No (skip section 2)

Sample Temp (°C) (No Cooler): _____

Sample Temp (°C), One from each cooler: #1: 3.4 #2: _____ #3: _____ #4: _____

(Acceptance range is < 6°C but not frozen (for Microbiology samples, acceptance range is < 10°C but not frozen). It is acceptable for samples collected the same day as sample receipt to have a higher temperature as long as there is evidence that cooling has begun.)

Shipping Information: _____

Section 3

Was the cooler packed with: ☑ Ice ☐ Ice Packs ☐ Bubble Wrap ☐ Styrofoam ☐ Paper ☐ None ☐ Other _____

Cooler Temp (°C): #1: 1.1 #2: _____ #3: _____ #4: _____

Section 4	YES	NO	N/A
Was a COC received?	✓		
Are sample IDs present?	✓		
Are sampling dates & times present?	✓		
Is a relinquished signature present?	✓		
Are the tests required clearly indicated on the COC?	✓		
Are custody seals present?		✓	
If custody seals are present, were they intact?			✓
Are all samples sealed in plastic bags? (Recommended for Microbiology samples)			✓
Did all samples arrive intact? If no, indicate in Section 4 below.	✓		
Did all bottle labels agree with COC? (ID, dates and times)	✓		
Were the samples collected in the correct containers for the required tests?	✓		
Are the containers labeled with the correct preservatives?			✓
Is there headspace in the VOA vials greater than 5-6 mm in diameter?			✓
Was a sufficient amount of sample submitted for the requested tests?	✓		

Section 5 Explanations/Comments

Section 6

For discrepancies, how was the Project Manager notified? ☐ Verbal PM Initials: _____ Date/Time _____ ☐ Email (email sent to/on): _____ / _____

Project Manager's response:

Completed By: _____ Date: 03/25/2020

ENTHALPY ANALYTICAL

Analysis Results for 426449

Keith Gilbert
Ninyo & Moore
475 Goddard
Suite 200
Irvine, CA 92618

Lab Job #: 426449
Location: Strathern Park Soil Sampling / 8041 Whitsett Ave., No. Hollywood, CA
Date Received: 03/25/20

Sample ID: WC-1 **Lab ID: 426449-001** **Collected: 03/25/20 15:10**
Matrix: Soil

426449-001 Analyte	Result	Qual	Units	RL	DF	Batch	Prepared	Analyzed	Chemist
Method: EPA 6010B Prep Method: EPA 3050B									
Antimony	ND		mg/Kg	2.9	0.96	243801	03/26/20	03/26/20	SBW
Arsenic	ND		mg/Kg	0.96	0.96	243801	03/26/20	03/26/20	SBW
Barium	**84**		mg/Kg	0.96	0.96	243801	03/26/20	03/26/20	SBW
Beryllium	ND		mg/Kg	0.48	0.96	243801	03/26/20	03/26/20	SBW
Cadmium	ND		mg/Kg	0.48	0.96	243801	03/26/20	03/26/20	SBW
Chromium	**6.9**		mg/Kg	0.96	0.96	243801	03/26/20	03/26/20	SBW
Cobalt	**4.9**		mg/Kg	0.48	0.96	243801	03/26/20	03/26/20	SBW
Copper	**6.6**		mg/Kg	0.96	0.96	243801	03/26/20	03/26/20	SBW
Lead	**3.4**		mg/Kg	0.96	0.96	243801	03/26/20	03/26/20	SBW
Molybdenum	**1.1**		mg/Kg	0.96	0.96	243801	03/26/20	03/26/20	SBW
Nickel	**4.5**		mg/Kg	1.4	0.96	243801	03/26/20	03/26/20	SBW
Selenium	ND		mg/Kg	2.9	0.96	243801	03/26/20	03/27/20	SBW
Silver	ND		mg/Kg	0.48	0.96	243801	03/26/20	03/26/20	SBW
Thallium	ND		mg/Kg	2.9	0.96	243801	03/26/20	03/26/20	SBW
Vanadium	**21**		mg/Kg	0.48	0.96	243801	03/26/20	03/26/20	SBW
Zinc	**22**		mg/Kg	4.8	0.96	243801	03/26/20	03/26/20	SBW
Method: EPA 7471A Prep Method: METHOD									
Mercury	ND		mg/Kg	0.14	1	243808	03/26/20	03/27/20	DLS
Method: EPA 8015B Prep Method: EPA 3580									
TPH C6-C12	ND		mg/Kg	10	1	243822	03/26/20	03/27/20	TJW
TPH C13-C22	ND		mg/Kg	10	1	243822	03/26/20	03/27/20	TJW
TPH C23-C44	**14**		mg/Kg	10	1	243822	03/26/20	03/27/20	TJW
Surrogates				**Limits**					
n-Triacontane	76%		%REC	50-150	1	243822	03/26/20	03/27/20	TJW
Method: EPA 8260B Prep Method: EPA 5030B									
3-Chloropropene	ND		ug/Kg	5.0	1	243906	03/29/20	03/29/20	LYZ
cis-1,4-Dichloro-2-butene	ND		ug/Kg	5.0	1	243906	03/29/20	03/29/20	LYZ
trans-1,4-Dichloro-2-butene	ND		ug/Kg	5.0	1	243906	03/29/20	03/29/20	LYZ
Isopropyl Ether (DIPE)	ND		ug/Kg	5.0	1	243906	03/29/20	03/29/20	LYZ
Ethyl tert-Butyl Ether (ETBE)	ND		ug/Kg	5.0	1	243906	03/29/20	03/29/20	LYZ
Methyl tert-Amyl Ether (TAME)	ND		ug/Kg	5.0	1	243906	03/29/20	03/29/20	LYZ

Results for any subcontracted analyses are not included in this section.

ENTHALPY ANALYTICAL

Analysis Results for 426449

426449-001 Analyte	Result	Qual	Units	RL	DF	Batch	Prepared	Analyzed	Chemist
tert-Butyl Alcohol (TBA)	ND		ug/Kg	10	1	243906	03/29/20	03/29/20	LYZ
Freon 12	ND		ug/Kg	5.0	1	243906	03/29/20	03/29/20	LYZ
Chloromethane	ND		ug/Kg	5.0	1	243906	03/29/20	03/29/20	LYZ
Vinyl Chloride	ND		ug/Kg	5.0	1	243906	03/29/20	03/29/20	LYZ
Bromomethane	ND		ug/Kg	5.0	1	243906	03/29/20	03/29/20	LYZ
Chloroethane	ND		ug/Kg	5.0	1	243906	03/29/20	03/29/20	LYZ
Trichlorofluoromethane	ND		ug/Kg	5.0	1	243906	03/29/20	03/29/20	LYZ
Acetone	ND		ug/Kg	100	1	243906	03/29/20	03/29/20	LYZ
Freon 113	ND		ug/Kg	5.0	1	243906	03/29/20	03/29/20	LYZ
1,1-Dichloroethene	ND		ug/Kg	5.0	1	243906	03/29/20	03/29/20	LYZ
Methylene Chloride	ND		ug/Kg	5.0	1	243906	03/29/20	03/29/20	LYZ
MTBE	ND		ug/Kg	5.0	1	243906	03/29/20	03/29/20	LYZ
trans-1,2-Dichloroethene	ND		ug/Kg	5.0	1	243906	03/29/20	03/29/20	LYZ
1,1-Dichloroethane	ND		ug/Kg	5.0	1	243906	03/29/20	03/29/20	LYZ
2-Butanone	ND		ug/Kg	100	1	243906	03/29/20	03/29/20	LYZ
cis-1,2-Dichloroethene	ND		ug/Kg	5.0	1	243906	03/29/20	03/29/20	LYZ
2,2-Dichloropropane	ND		ug/Kg	5.0	1	243906	03/29/20	03/29/20	LYZ
Chloroform	ND		ug/Kg	5.0	1	243906	03/29/20	03/29/20	LYZ
Bromochloromethane	ND		ug/Kg	5.0	1	243906	03/29/20	03/29/20	LYZ
1,1,1-Trichloroethane	ND		ug/Kg	5.0	1	243906	03/29/20	03/29/20	LYZ
1,1-Dichloropropene	ND		ug/Kg	5.0	1	243906	03/29/20	03/29/20	LYZ
Carbon Tetrachloride	ND		ug/Kg	5.0	1	243906	03/29/20	03/29/20	LYZ
1,2-Dichloroethane	ND		ug/Kg	5.0	1	243906	03/29/20	03/29/20	LYZ
Benzene	ND		ug/Kg	5.0	1	243906	03/29/20	03/29/20	LYZ
Trichloroethene	ND		ug/Kg	5.0	1	243906	03/29/20	03/29/20	LYZ
1,2-Dichloropropane	ND		ug/Kg	5.0	1	243906	03/29/20	03/29/20	LYZ
Bromodichloromethane	ND		ug/Kg	5.0	1	243906	03/29/20	03/29/20	LYZ
Dibromomethane	ND		ug/Kg	5.0	1	243906	03/29/20	03/29/20	LYZ
4-Methyl-2-Pentanone	ND		ug/Kg	5.0	1	243906	03/29/20	03/29/20	LYZ
cis-1,3-Dichloropropene	ND		ug/Kg	5.0	1	243906	03/29/20	03/29/20	LYZ
Toluene	ND		ug/Kg	5.0	1	243906	03/29/20	03/29/20	LYZ
trans-1,3-Dichloropropene	ND		ug/Kg	5.0	1	243906	03/29/20	03/29/20	LYZ
1,1,2-Trichloroethane	ND		ug/Kg	5.0	1	243906	03/29/20	03/29/20	LYZ
1,3-Dichloropropane	ND		ug/Kg	5.0	1	243906	03/29/20	03/29/20	LYZ
Tetrachloroethene	ND		ug/Kg	5.0	1	243906	03/29/20	03/29/20	LYZ
Dibromochloromethane	ND		ug/Kg	5.0	1	243906	03/29/20	03/29/20	LYZ
1,2-Dibromoethane	ND		ug/Kg	5.0	1	243906	03/29/20	03/29/20	LYZ
Chlorobenzene	ND		ug/Kg	5.0	1	243906	03/29/20	03/29/20	LYZ
1,1,1,2-Tetrachloroethane	ND		ug/Kg	5.0	1	243906	03/29/20	03/29/20	LYZ
Ethylbenzene	ND		ug/Kg	5.0	1	243906	03/29/20	03/29/20	LYZ
m,p-Xylenes	ND		ug/Kg	10	1	243906	03/29/20	03/29/20	LYZ
o-Xylene	ND		ug/Kg	5.0	1	243906	03/29/20	03/29/20	LYZ
Styrene	ND		ug/Kg	5.0	1	243906	03/29/20	03/29/20	LYZ
Bromoform	ND		ug/Kg	5.0	1	243906	03/29/20	03/29/20	LYZ
Isopropylbenzene	ND		ug/Kg	5.0	1	243906	03/29/20	03/29/20	LYZ
1,1,2,2-Tetrachloroethane	ND		ug/Kg	5.0	1	243906	03/29/20	03/29/20	LYZ

Results for any subcontracted analyses are not included in this section.

ENTHALPY ANALYTICAL

Analysis Results for 426449

426449-001 Analyte	Result	Qual	Units	RL	DF	Batch	Prepared	Analyzed	Chemist
1,2,3-Trichloropropane	ND		ug/Kg	5.0	1	243906	03/29/20	03/29/20	LYZ
Propylbenzene	ND		ug/Kg	5.0	1	243906	03/29/20	03/29/20	LYZ
Bromobenzene	ND		ug/Kg	5.0	1	243906	03/29/20	03/29/20	LYZ
1,3,5-Trimethylbenzene	ND		ug/Kg	5.0	1	243906	03/29/20	03/29/20	LYZ
2-Chlorotoluene	ND		ug/Kg	5.0	1	243906	03/29/20	03/29/20	LYZ
4-Chlorotoluene	ND		ug/Kg	5.0	1	243906	03/29/20	03/29/20	LYZ
tert-Butylbenzene	ND		ug/Kg	5.0	1	243906	03/29/20	03/29/20	LYZ
1,2,4-Trimethylbenzene	ND		ug/Kg	5.0	1	243906	03/29/20	03/29/20	LYZ
sec-Butylbenzene	ND		ug/Kg	5.0	1	243906	03/29/20	03/29/20	LYZ
para-Isopropyl Toluene	ND		ug/Kg	5.0	1	243906	03/29/20	03/29/20	LYZ
1,3-Dichlorobenzene	ND		ug/Kg	5.0	1	243906	03/29/20	03/29/20	LYZ
1,4-Dichlorobenzene	ND		ug/Kg	5.0	1	243906	03/29/20	03/29/20	LYZ
n-Butylbenzene	ND		ug/Kg	5.0	1	243906	03/29/20	03/29/20	LYZ
1,2-Dichlorobenzene	ND		ug/Kg	5.0	1	243906	03/29/20	03/29/20	LYZ
1,2-Dibromo-3-Chloropropane	ND		ug/Kg	5.0	1	243906	03/29/20	03/29/20	LYZ
1,2,4-Trichlorobenzene	ND		ug/Kg	5.0	1	243906	03/29/20	03/29/20	LYZ
Hexachlorobutadiene	ND		ug/Kg	5.0	1	243906	03/29/20	03/29/20	LYZ
Naphthalene	ND		ug/Kg	5.0	1	243906	03/29/20	03/29/20	LYZ
1,2,3-Trichlorobenzene	ND		ug/Kg	5.0	1	243906	03/29/20	03/29/20	LYZ
Xylene (total)	ND		ug/Kg	5.0	1	243906	03/29/20	03/29/20	LYZ
Surrogates				**Limits**					
Dibromofluoromethane	103%		%REC	70-145	1	243906	03/29/20	03/29/20	LYZ
1,2-Dichloroethane-d4	107%		%REC	70-145	1	243906	03/29/20	03/29/20	LYZ
Toluene-d8	104%		%REC	70-145	1	243906	03/29/20	03/29/20	LYZ
Bromofluorobenzene	97%		%REC	70-145	1	243906	03/29/20	03/29/20	LYZ

Results for any subcontracted analyses are not included in this section.

ENTHALPY ANALYTICAL

Analysis Results for 426449

Sample ID: WC-2	Lab ID: 426449-002	Collected: 03/25/20 15:10
	Matrix: Soil	

426449-002 Analyte	Result	Qual	Units	RL	DF	Batch	Prepared	Analyzed	Chemist
Method: EPA 6010B Prep Method: EPA 3050B									
Antimony	ND		mg/Kg	2.7	0.89	243801	03/26/20	03/26/20	SBW
Arsenic	ND		mg/Kg	0.89	0.89	243801	03/26/20	03/26/20	SBW
Barium	**45**		mg/Kg	0.89	0.89	243801	03/26/20	03/26/20	SBW
Beryllium	ND		mg/Kg	0.45	0.89	243801	03/26/20	03/26/20	SBW
Cadmium	**1.6**		mg/Kg	0.45	0.89	243801	03/26/20	03/26/20	SBW
Chromium	**6.9**		mg/Kg	0.89	0.89	243801	03/26/20	03/26/20	SBW
Cobalt	**5.2**		mg/Kg	0.45	0.89	243801	03/26/20	03/26/20	SBW
Copper	**6.0**		mg/Kg	0.89	0.89	243801	03/26/20	03/26/20	SBW
Lead	**4.2**		mg/Kg	0.89	0.89	243801	03/26/20	03/26/20	SBW
Molybdenum	**2.5**		mg/Kg	0.89	0.89	243801	03/26/20	03/26/20	SBW
Nickel	**4.6**		mg/Kg	1.3	0.89	243801	03/26/20	03/26/20	SBW
Selenium	ND		mg/Kg	2.7	0.89	243801	03/26/20	03/27/20	SBW
Silver	**0.89**	b	mg/Kg	0.45	0.89	243801	03/26/20	03/27/20	SBW
Thallium	ND		mg/Kg	2.7	0.89	243801	03/26/20	03/26/20	SBW
Vanadium	**19**		mg/Kg	0.45	0.89	243801	03/26/20	03/26/20	SBW
Zinc	**21**		mg/Kg	4.5	0.89	243801	03/26/20	03/26/20	SBW
Method: EPA 7471A Prep Method: METHOD									
Mercury	ND		mg/Kg	0.13	0.94	243808	03/26/20	03/27/20	DLS
Method: EPA 8015B Prep Method: EPA 3580									
TPH C6-C12	ND		mg/Kg	10	1	243822	03/26/20	03/27/20	TJW
TPH C13-C22	ND		mg/Kg	10	1	243822	03/26/20	03/27/20	TJW
TPH C23-C44	ND		mg/Kg	10	1	243822	03/26/20	03/27/20	TJW
Surrogates				**Limits**					
n-Triacontane	92%		%REC	50-150	1	243822	03/26/20	03/27/20	TJW
Method: EPA 8260B Prep Method: EPA 5030B									
3-Chloropropene	ND		ug/Kg	5.0	1	243906	03/29/20	03/29/20	LYZ
cis-1,4-Dichloro-2-butene	ND		ug/Kg	5.0	1	243906	03/29/20	03/29/20	LYZ
trans-1,4-Dichloro-2-butene	ND		ug/Kg	5.0	1	243906	03/29/20	03/29/20	LYZ
Isopropyl Ether (DIPE)	ND		ug/Kg	5.0	1	243906	03/29/20	03/29/20	LYZ
Ethyl tert-Butyl Ether (ETBE)	ND		ug/Kg	5.0	1	243906	03/29/20	03/29/20	LYZ
Methyl tert-Amyl Ether (TAME)	ND		ug/Kg	5.0	1	243906	03/29/20	03/29/20	LYZ
tert-Butyl Alcohol (TBA)	ND		ug/Kg	10	1	243906	03/29/20	03/29/20	LYZ
Freon 12	ND		ug/Kg	5.0	1	243906	03/29/20	03/29/20	LYZ
Chloromethane	ND		ug/Kg	5.0	1	243906	03/29/20	03/29/20	LYZ
Vinyl Chloride	ND		ug/Kg	5.0	1	243906	03/29/20	03/29/20	LYZ
Bromomethane	ND		ug/Kg	5.0	1	243906	03/29/20	03/29/20	LYZ
Chloroethane	ND		ug/Kg	5.0	1	243906	03/29/20	03/29/20	LYZ

Results for any subcontracted analyses are not included in this section.

ENTHALPY ANALYTICAL

Analysis Results for 426449

426449-002 Analyte	Result	Qual	Units	RL	DF	Batch	Prepared	Analyzed	Chemist
Trichlorofluoromethane	ND		ug/Kg	5.0	1	243906	03/29/20	03/29/20	LYZ
Acetone	ND		ug/Kg	100	1	243906	03/29/20	03/29/20	LYZ
Freon 113	ND		ug/Kg	5.0	1	243906	03/29/20	03/29/20	LYZ
1,1-Dichloroethene	ND		ug/Kg	5.0	1	243906	03/29/20	03/29/20	LYZ
Methylene Chloride	ND		ug/Kg	5.0	1	243906	03/29/20	03/29/20	LYZ
MTBE	ND		ug/Kg	5.0	1	243906	03/29/20	03/29/20	LYZ
trans-1,2-Dichloroethene	ND		ug/Kg	5.0	1	243906	03/29/20	03/29/20	LYZ
1,1-Dichloroethane	ND		ug/Kg	5.0	1	243906	03/29/20	03/29/20	LYZ
2-Butanone	ND		ug/Kg	100	1	243906	03/29/20	03/29/20	LYZ
cis-1,2-Dichloroethene	ND		ug/Kg	5.0	1	243906	03/29/20	03/29/20	LYZ
2,2-Dichloropropane	ND		ug/Kg	5.0	1	243906	03/29/20	03/29/20	LYZ
Chloroform	ND		ug/Kg	5.0	1	243906	03/29/20	03/29/20	LYZ
Bromochloromethane	ND		ug/Kg	5.0	1	243906	03/29/20	03/29/20	LYZ
1,1,1-Trichloroethane	ND		ug/Kg	5.0	1	243906	03/29/20	03/29/20	LYZ
1,1-Dichloropropene	ND		ug/Kg	5.0	1	243906	03/29/20	03/29/20	LYZ
Carbon Tetrachloride	ND		ug/Kg	5.0	1	243906	03/29/20	03/29/20	LYZ
1,2-Dichloroethane	ND		ug/Kg	5.0	1	243906	03/29/20	03/29/20	LYZ
Benzene	ND		ug/Kg	5.0	1	243906	03/29/20	03/29/20	LYZ
Trichloroethene	ND		ug/Kg	5.0	1	243906	03/29/20	03/29/20	LYZ
1,2-Dichloropropane	ND		ug/Kg	5.0	1	243906	03/29/20	03/29/20	LYZ
Bromodichloromethane	ND		ug/Kg	5.0	1	243906	03/29/20	03/29/20	LYZ
Dibromomethane	ND		ug/Kg	5.0	1	243906	03/29/20	03/29/20	LYZ
4-Methyl-2-Pentanone	ND		ug/Kg	5.0	1	243906	03/29/20	03/29/20	LYZ
cis-1,3-Dichloropropene	ND		ug/Kg	5.0	1	243906	03/29/20	03/29/20	LYZ
Toluene	ND		ug/Kg	5.0	1	243906	03/29/20	03/29/20	LYZ
trans-1,3-Dichloropropene	ND		ug/Kg	5.0	1	243906	03/29/20	03/29/20	LYZ
1,1,2-Trichloroethane	ND		ug/Kg	5.0	1	243906	03/29/20	03/29/20	LYZ
1,3-Dichloropropane	ND		ug/Kg	5.0	1	243906	03/29/20	03/29/20	LYZ
Tetrachloroethene	ND		ug/Kg	5.0	1	243906	03/29/20	03/29/20	LYZ
Dibromochloromethane	ND		ug/Kg	5.0	1	243906	03/29/20	03/29/20	LYZ
1,2-Dibromoethane	ND		ug/Kg	5.0	1	243906	03/29/20	03/29/20	LYZ
Chlorobenzene	ND		ug/Kg	5.0	1	243906	03/29/20	03/29/20	LYZ
1,1,1,2-Tetrachloroethane	ND		ug/Kg	5.0	1	243906	03/29/20	03/29/20	LYZ
Ethylbenzene	ND		ug/Kg	5.0	1	243906	03/29/20	03/29/20	LYZ
m,p-Xylenes	ND		ug/Kg	10	1	243906	03/29/20	03/29/20	LYZ
o-Xylene	ND		ug/Kg	5.0	1	243906	03/29/20	03/29/20	LYZ
Styrene	ND		ug/Kg	5.0	1	243906	03/29/20	03/29/20	LYZ
Bromoform	ND		ug/Kg	5.0	1	243906	03/29/20	03/29/20	LYZ
Isopropylbenzene	ND		ug/Kg	5.0	1	243906	03/29/20	03/29/20	LYZ
1,1,2,2-Tetrachloroethane	ND		ug/Kg	5.0	1	243906	03/29/20	03/29/20	LYZ
1,2,3-Trichloropropane	ND		ug/Kg	5.0	1	243906	03/29/20	03/29/20	LYZ
Propylbenzene	ND		ug/Kg	5.0	1	243906	03/29/20	03/29/20	LYZ
Bromobenzene	ND		ug/Kg	5.0	1	243906	03/29/20	03/29/20	LYZ
1,3,5-Trimethylbenzene	ND		ug/Kg	5.0	1	243906	03/29/20	03/29/20	LYZ
2-Chlorotoluene	ND		ug/Kg	5.0	1	243906	03/29/20	03/29/20	LYZ
4-Chlorotoluene	ND		ug/Kg	5.0	1	243906	03/29/20	03/29/20	LYZ

Results for any subcontracted analyses are not included in this section.

ENTHALPY ANALYTICAL

Analysis Results for 426449

426449-002 Analyte	Result	Qual	Units	RL	DF	Batch	Prepared	Analyzed	Chemist
tert-Butylbenzene	ND		ug/Kg	5.0	1	243906	03/29/20	03/29/20	LYZ
1,2,4-Trimethylbenzene	ND		ug/Kg	5.0	1	243906	03/29/20	03/29/20	LYZ
sec-Butylbenzene	ND		ug/Kg	5.0	1	243906	03/29/20	03/29/20	LYZ
para-Isopropyl Toluene	ND		ug/Kg	5.0	1	243906	03/29/20	03/29/20	LYZ
1,3-Dichlorobenzene	ND		ug/Kg	5.0	1	243906	03/29/20	03/29/20	LYZ
1,4-Dichlorobenzene	ND		ug/Kg	5.0	1	243906	03/29/20	03/29/20	LYZ
n-Butylbenzene	ND		ug/Kg	5.0	1	243906	03/29/20	03/29/20	LYZ
1,2-Dichlorobenzene	ND		ug/Kg	5.0	1	243906	03/29/20	03/29/20	LYZ
1,2-Dibromo-3-Chloropropane	ND		ug/Kg	5.0	1	243906	03/29/20	03/29/20	LYZ
1,2,4-Trichlorobenzene	ND		ug/Kg	5.0	1	243906	03/29/20	03/29/20	LYZ
Hexachlorobutadiene	ND		ug/Kg	5.0	1	243906	03/29/20	03/29/20	LYZ
Naphthalene	ND		ug/Kg	5.0	1	243906	03/29/20	03/29/20	LYZ
1,2,3-Trichlorobenzene	ND		ug/Kg	5.0	1	243906	03/29/20	03/29/20	LYZ
Xylene (total)	ND		ug/Kg	5.0	1	243906	03/29/20	03/29/20	LYZ
Surrogates				**Limits**					
Dibromofluoromethane	103%		%REC	70-145	1	243906	03/29/20	03/29/20	LYZ
1,2-Dichloroethane-d4	108%		%REC	70-145	1	243906	03/29/20	03/29/20	LYZ
Toluene-d8	104%		%REC	70-145	1	243906	03/29/20	03/29/20	LYZ
Bromofluorobenzene	97%		%REC	70-145	1	243906	03/29/20	03/29/20	LYZ

ND Not Detected
b See narrative

Results for any subcontracted analyses are not included in this section.

ENTHALPY ANALYTICAL

Batch QC

Type: Blank	**Lab ID:** QC863552	**Batch:** 243808
Matrix: Soil	**Method:** EPA 7471A	**Prep Method:** METHOD

QC863552 Analyte	Result	Qual	Units	RL	Prepared	Analyzed
Mercury	ND		mg/Kg	0.14	03/26/20	03/27/20

Type: Lab Control Sample	**Lab ID:** QC863553	**Batch:** 243808
Matrix: Soil	**Method:** EPA 7471A	**Prep Method:** METHOD

QC863553 Analyte	Result	Spiked	Units	Recovery	Qual	Limits
Mercury	0.7666	0.8333	mg/Kg	92%		80-120

Type: Matrix Spike	**Lab ID:** QC863554	**Batch:** 243808
Matrix (Source ID): Soil (426449-001)	**Method:** EPA 7471A	**Prep Method:** METHOD

QC863554 Analyte	Result	Source Sample Result	Spiked	Units	Recovery	Qual	Limits	DF
Mercury	0.8024	0	0.8333	mg/Kg	96%		75-125	1

Type: Matrix Spike Duplicate	**Lab ID:** QC863555	**Batch:** 243808
Matrix (Source ID): Soil (426449-001)	**Method:** EPA 7471A	**Prep Method:** METHOD

QC863555 Analyte	Result	Source Sample Result	Spiked	Units	Recovery	Qual	Limits	RPD	RPD Lim	DF
Mercury	0.7624	0	0.7937	mg/Kg	96%		75-125	0	20	0.95

Type: Blank	**Lab ID:** QC863571	**Batch:** 243822
Matrix: Soil	**Method:** EPA 8015B	**Prep Method:** EPA 3580

QC863571 Analyte	Result	Qual	Units	RL	Prepared	Analyzed
TPH C6-C12	ND		mg/Kg	10	03/26/20	03/26/20
TPH C13-C22	ND		mg/Kg	10	03/26/20	03/26/20
TPH C23-C44	ND		mg/Kg	10	03/26/20	03/26/20
Surrogates				**Limits**		
n-Triacontane	87%		%REC	50-150	03/26/20	03/26/20

ENTHALPY ANALYTICAL

Batch QC

Type: Lab Control Sample	**Lab ID:** QC863572	**Batch:** 243822
Matrix: Soil	**Method:** EPA 8015B	**Prep Method:** EPA 3580

QC863572 Analyte	Result	Spiked	Units	Recovery	Qual	Limits
Diesel C10-C28	244.9	250.0	mg/Kg	98%		70-130
Surrogates						
n-Triacontane	9.297	10.00	mg/Kg	93%		50-150

Type: Matrix Spike	**Lab ID:** QC863573	**Batch:** 243822
Matrix (Source ID): Soil (426382-012)	**Method:** EPA 8015B	**Prep Method:** EPA 3580

QC863573 Analyte	Result	Source Sample Result	Spiked	Units	Recovery	Qual	Limits	DF
Diesel C10-C28	220.4	0	251.3	mg/Kg	88%		70-130	1
Surrogates								
n-Triacontane	7.960		10.05	mg/Kg	79%		50-150	1

Type: Matrix Spike Duplicate	**Lab ID:** QC863574	**Batch:** 243822
Matrix (Source ID): Soil (426382-012)	**Method:** EPA 8015B	**Prep Method:** EPA 3580

QC863574 Analyte	Result	Source Sample Result	Spiked	Units	Recovery	Qual	Limits	RPD	RPD Lim	DF
Diesel C10-C28	274.6	0	247.5	mg/Kg	111%		70-130	23*	20	0.99
Surrogates										
n-Triacontane	9.070		9.901	mg/Kg	92%		50-150			0.99

ENTHALPY ANALYTICAL

Batch QC

Type: Blank	Lab ID: QC863531	Batch: 243801
Matrix: Soil	Method: EPA 6010B	Prep Method: EPA 3050B

QC863531 Analyte	Result	Qual	Units	RL	Prepared	Analyzed
Antimony	ND		mg/Kg	3.0	03/26/20	03/26/20
Arsenic	ND		mg/Kg	1.0	03/26/20	03/26/20
Barium	ND		mg/Kg	1.0	03/26/20	03/26/20
Beryllium	ND		mg/Kg	0.50	03/26/20	03/26/20
Cadmium	ND		mg/Kg	0.50	03/26/20	03/26/20
Chromium	ND		mg/Kg	1.0	03/26/20	03/26/20
Cobalt	ND		mg/Kg	0.50	03/26/20	03/26/20
Copper	ND		mg/Kg	1.0	03/26/20	03/26/20
Lead	ND		mg/Kg	1.0	03/26/20	03/26/20
Molybdenum	ND		mg/Kg	1.0	03/26/20	03/26/20
Nickel	ND		mg/Kg	1.5	03/26/20	03/26/20
Selenium	ND		mg/Kg	3.0	03/26/20	03/27/20
Silver	ND		mg/Kg	0.50	03/26/20	03/26/20
Thallium	ND		mg/Kg	3.0	03/26/20	03/26/20
Vanadium	ND		mg/Kg	0.50	03/26/20	03/26/20
Zinc	ND		mg/Kg	5.0	03/26/20	03/26/20

Type: Lab Control Sample	Lab ID: QC863532	Batch: 243801
Matrix: Soil	Method: EPA 6010B	Prep Method: EPA 3050B

QC863532 Analyte	Result	Spiked	Units	Recovery	Qual	Limits
Antimony	98.76	100.0	mg/Kg	99%		80-120
Arsenic	99.56	100.0	mg/Kg	100%		80-120
Barium	101.7	100.0	mg/Kg	102%		80-120
Beryllium	99.28	100.0	mg/Kg	99%		80-120
Cadmium	98.37	100.0	mg/Kg	98%		80-120
Chromium	98.95	100.0	mg/Kg	99%		80-120
Cobalt	100.1	100.0	mg/Kg	100%		80-120
Copper	97.24	100.0	mg/Kg	97%		80-120
Lead	106.4	100.0	mg/Kg	106%		80-120
Molybdenum	100.8	100.0	mg/Kg	101%		80-120
Nickel	103.5	100.0	mg/Kg	104%		80-120
Selenium	92.77	100.0	mg/Kg	93%		80-120
Silver	99.57	100.0	mg/Kg	100%	b	80-120
Thallium	100.9	100.0	mg/Kg	101%		80-120
Vanadium	107.8	100.0	mg/Kg	108%		80-120
Zinc	103.4	100.0	mg/Kg	103%		80-120

ENTHALPY ANALYTICAL

Batch QC

Type:	**Matrix Spike**	**Lab ID:**	**QC863533**	**Batch:**	**243801**
Matrix (Source ID):	**Soil (426449-001)**	**Method:**	**EPA 6010B**	**Prep Method:**	**EPA 3050B**

QC863533 Analyte	Result	Source Sample Result	Spiked	Units	Recovery	Qual	Limits	DF
Antimony	79.63	0	108.7	mg/Kg	73%	*	75-125	1.1
Arsenic	108.0	0.8173	108.7	mg/Kg	99%		75-125	1.1
Barium	170.1	84.10	108.7	mg/Kg	79%		75-125	1.1
Beryllium	106.3	0	108.7	mg/Kg	98%		75-125	1.1
Cadmium	112.8	0.3462	108.7	mg/Kg	103%		75-125	1.1
Chromium	117.1	6.875	108.7	mg/Kg	101%		75-125	1.1
Cobalt	115.0	4.856	108.7	mg/Kg	101%		75-125	1.1
Copper	111.1	6.625	108.7	mg/Kg	96%		75-125	1.1
Lead	114.1	3.423	108.7	mg/Kg	102%		75-125	1.1
Molybdenum	106.9	1.058	108.7	mg/Kg	97%		75-125	1.1
Nickel	115.3	4.529	108.7	mg/Kg	102%		75-125	1.1
Selenium	94.91	0	108.7	mg/Kg	87%		75-125	1.1
Silver	98.88	0	108.7	mg/Kg	91%	b	75-125	1.1
Thallium	94.14	0	108.7	mg/Kg	87%		75-125	1.1
Vanadium	135.3	21.01	108.7	mg/Kg	105%		75-125	1.1
Zinc	142.7	22.45	108.7	mg/Kg	111%		75-125	1.1

ENTHALPY ANALYTICAL

Batch QC

Type:	**Matrix Spike Duplicate**	**Lab ID:**	**QC863534**	**Batch:**	**243801**
Matrix (Source ID):	**Soil (426449-001)**	**Method:**	**EPA 6010B**	**Prep Method:**	**EPA 3050B**

QC863534 Analyte	Result	Source Sample Result	Spiked	Units	Recovery	Qual	Limits	RPD	RPD Lim	DF
Antimony	70.63	0	103.1	mg/Kg	69%	*	75-125	7	41	1
Arsenic	105.5	0.8173	103.1	mg/Kg	102%		75-125	3	35	1
Barium	152.0	84.10	103.1	mg/Kg	66%	*	75-125	8	20	1
Beryllium	100.9	0	103.1	mg/Kg	98%		75-125	0	20	1
Cadmium	99.14	0.3462	103.1	mg/Kg	96%		75-125	8	20	1
Chromium	106.6	6.875	103.1	mg/Kg	97%		75-125	4	20	1
Cobalt	103.7	4.856	103.1	mg/Kg	96%		75-125	5	20	1
Copper	101.7	6.625	103.1	mg/Kg	92%		75-125	4	20	1
Lead	111.8	3.423	103.1	mg/Kg	105%		75-125	3	20	1
Molybdenum	103.6	1.058	103.1	mg/Kg	99%		75-125	2	20	1
Nickel	103.9	4.529	103.1	mg/Kg	96%		75-125	5	20	1
Selenium	91.18	0	103.1	mg/Kg	88%		75-125	1	20	1
Silver	96.52	0	103.1	mg/Kg	94%	b	75-125	3	20	1
Thallium	90.67	0	103.1	mg/Kg	88%		75-125	2	20	1
Vanadium	124.4	21.01	103.1	mg/Kg	100%		75-125	4	20	1
Zinc	123.9	22.45	103.1	mg/Kg	98%		75-125	10	20	1

ENTHALPY ANALYTICAL

Batch QC

Type:	**Blank**	**Lab ID:**	**QC863786**	**Batch:**	**243906**
Matrix:	**Soil**	**Method:**	**EPA 8260B**	**Prep Method:**	**EPA 5030B**

QC863786 Analyte	Result	Qual	Units	RL	Prepared	Analyzed
3-Chloropropene	ND		ug/Kg	5.0	03/29/20	03/29/20
cis-1,4-Dichloro-2-butene	ND		ug/Kg	5.0	03/29/20	03/29/20
trans-1,4-Dichloro-2-butene	ND		ug/Kg	5.0	03/29/20	03/29/20
Isopropyl Ether (DIPE)	ND		ug/Kg	5.0	03/29/20	03/29/20
Ethyl tert-Butyl Ether (ETBE)	ND		ug/Kg	5.0	03/29/20	03/29/20
Methyl tert-Amyl Ether (TAME)	ND		ug/Kg	5.0	03/29/20	03/29/20
tert-Butyl Alcohol (TBA)	ND		ug/Kg	10	03/29/20	03/29/20
Freon 12	ND		ug/Kg	5.0	03/29/20	03/29/20
Chloromethane	ND		ug/Kg	5.0	03/29/20	03/29/20
Vinyl Chloride	ND		ug/Kg	5.0	03/29/20	03/29/20
Bromomethane	ND		ug/Kg	5.0	03/29/20	03/29/20
Chloroethane	ND		ug/Kg	5.0	03/29/20	03/29/20
Trichlorofluoromethane	ND		ug/Kg	5.0	03/29/20	03/29/20
Acetone	ND		ug/Kg	100	03/29/20	03/29/20
Freon 113	ND		ug/Kg	5.0	03/29/20	03/29/20
1,1-Dichloroethene	ND		ug/Kg	5.0	03/29/20	03/29/20
Methylene Chloride	ND		ug/Kg	5.0	03/29/20	03/29/20
MTBE	ND		ug/Kg	5.0	03/29/20	03/29/20
trans-1,2-Dichloroethene	ND		ug/Kg	5.0	03/29/20	03/29/20
1,1-Dichloroethane	ND		ug/Kg	5.0	03/29/20	03/29/20
2-Butanone	ND		ug/Kg	100	03/29/20	03/29/20
cis-1,2-Dichloroethene	ND		ug/Kg	5.0	03/29/20	03/29/20
2,2-Dichloropropane	ND		ug/Kg	5.0	03/29/20	03/29/20
Chloroform	ND		ug/Kg	5.0	03/29/20	03/29/20
Bromochloromethane	ND		ug/Kg	5.0	03/29/20	03/29/20
1,1,1-Trichloroethane	ND		ug/Kg	5.0	03/29/20	03/29/20
1,1-Dichloropropene	ND		ug/Kg	5.0	03/29/20	03/29/20
Carbon Tetrachloride	ND		ug/Kg	5.0	03/29/20	03/29/20
1,2-Dichloroethane	ND		ug/Kg	5.0	03/29/20	03/29/20
Benzene	ND		ug/Kg	5.0	03/29/20	03/29/20
Trichloroethene	ND		ug/Kg	5.0	03/29/20	03/29/20
1,2-Dichloropropane	ND		ug/Kg	5.0	03/29/20	03/29/20
Bromodichloromethane	ND		ug/Kg	5.0	03/29/20	03/29/20
Dibromomethane	ND		ug/Kg	5.0	03/29/20	03/29/20
4-Methyl-2-Pentanone	ND		ug/Kg	5.0	03/29/20	03/29/20
cis-1,3-Dichloropropene	ND		ug/Kg	5.0	03/29/20	03/29/20
Toluene	ND		ug/Kg	5.0	03/29/20	03/29/20
trans-1,3-Dichloropropene	ND		ug/Kg	5.0	03/29/20	03/29/20
1,1,2-Trichloroethane	ND		ug/Kg	5.0	03/29/20	03/29/20
1,3-Dichloropropane	ND		ug/Kg	5.0	03/29/20	03/29/20
Tetrachloroethene	ND		ug/Kg	5.0	03/29/20	03/29/20
Dibromochloromethane	ND		ug/Kg	5.0	03/29/20	03/29/20

ENTHALPY ANALYTICAL

Batch QC

QC863786 Analyte	Result	Qual	Units	RL	Prepared	Analyzed
1,2-Dibromoethane	ND		ug/Kg	5.0	03/29/20	03/29/20
Chlorobenzene	ND		ug/Kg	5.0	03/29/20	03/29/20
1,1,1,2-Tetrachloroethane	ND		ug/Kg	5.0	03/29/20	03/29/20
Ethylbenzene	ND		ug/Kg	5.0	03/29/20	03/29/20
m,p-Xylenes	ND		ug/Kg	10	03/29/20	03/29/20
o-Xylene	ND		ug/Kg	5.0	03/29/20	03/29/20
Styrene	ND		ug/Kg	5.0	03/29/20	03/29/20
Bromoform	ND		ug/Kg	5.0	03/29/20	03/29/20
Isopropylbenzene	ND		ug/Kg	5.0	03/29/20	03/29/20
1,1,2,2-Tetrachloroethane	ND		ug/Kg	5.0	03/29/20	03/29/20
1,2,3-Trichloropropane	ND		ug/Kg	5.0	03/29/20	03/29/20
Propylbenzene	ND		ug/Kg	5.0	03/29/20	03/29/20
Bromobenzene	ND		ug/Kg	5.0	03/29/20	03/29/20
1,3,5-Trimethylbenzene	ND		ug/Kg	5.0	03/29/20	03/29/20
2-Chlorotoluene	ND		ug/Kg	5.0	03/29/20	03/29/20
4-Chlorotoluene	ND		ug/Kg	5.0	03/29/20	03/29/20
tert-Butylbenzene	ND		ug/Kg	5.0	03/29/20	03/29/20
1,2,4-Trimethylbenzene	ND		ug/Kg	5.0	03/29/20	03/29/20
sec-Butylbenzene	ND		ug/Kg	5.0	03/29/20	03/29/20
para-Isopropyl Toluene	ND		ug/Kg	5.0	03/29/20	03/29/20
1,3-Dichlorobenzene	ND		ug/Kg	5.0	03/29/20	03/29/20
1,4-Dichlorobenzene	ND		ug/Kg	5.0	03/29/20	03/29/20
n-Butylbenzene	ND		ug/Kg	5.0	03/29/20	03/29/20
1,2-Dichlorobenzene	ND		ug/Kg	5.0	03/29/20	03/29/20
1,2-Dibromo-3-Chloropropane	ND		ug/Kg	5.0	03/29/20	03/29/20
1,2,4-Trichlorobenzene	ND		ug/Kg	5.0	03/29/20	03/29/20
Hexachlorobutadiene	ND		ug/Kg	5.0	03/29/20	03/29/20
Naphthalene	ND		ug/Kg	5.0	03/29/20	03/29/20
1,2,3-Trichlorobenzene	ND		ug/Kg	5.0	03/29/20	03/29/20
Xylene (total)	ND		ug/Kg	5.0	03/29/20	03/29/20
Surrogates				**Limits**		
Dibromofluoromethane	100%		%REC	70-145	03/29/20	03/29/20
1,2-Dichloroethane-d4	99%		%REC	70-145	03/29/20	03/29/20
Toluene-d8	104%		%REC	70-145	03/29/20	03/29/20
Bromofluorobenzene	97%		%REC	70-145	03/29/20	03/29/20

ENTHALPY ANALYTICAL

Batch QC

Type: Lab Control Sample	**Lab ID: QC863787**	**Batch: 243906**
Matrix: Soil	**Method: EPA 8260B**	**Prep Method: EPA 5030B**

QC863787 Analyte	Result	Spiked	Units	Recovery	Qual	Limits
1,1-Dichloroethene	57.68	50.00	ug/Kg	115%		59-172
MTBE	48.62	50.00	ug/Kg	97%		62-137
Benzene	53.77	50.00	ug/Kg	108%		62-137
Trichloroethene	50.32	50.00	ug/Kg	101%		66-142
Toluene	53.15	50.00	ug/Kg	106%		59-139
Chlorobenzene	48.99	50.00	ug/Kg	98%		60-133
Surrogates						
Dibromofluoromethane	49.34	50.00	ug/Kg	99%		70-145
1,2-Dichloroethane-d4	47.13	50.00	ug/Kg	94%		70-145
Toluene-d8	52.34	50.00	ug/Kg	105%		70-145
Bromofluorobenzene	46.75	50.00	ug/Kg	94%		70-145

Type: Lab Control Sample Duplicate	**Lab ID: QC863788**	**Batch: 243906**
Matrix: Soil	**Method: EPA 8260B**	**Prep Method: EPA 5030B**

QC863788 Analyte	Result	Spiked	Units	Recovery	Qual	Limits	RPD	RPD Lim
1,1-Dichloroethene	53.89	50.00	ug/Kg	108%		59-172	7	22
MTBE	50.72	50.00	ug/Kg	101%		62-137	4	21
Benzene	51.57	50.00	ug/Kg	103%		62-137	4	24
Trichloroethene	46.92	50.00	ug/Kg	94%		66-142	7	21
Toluene	50.43	50.00	ug/Kg	101%		59-139	5	21
Chlorobenzene	47.00	50.00	ug/Kg	94%		60-133	4	24
Surrogates								
Dibromofluoromethane	50.40	50.00	ug/Kg	101%		70-145		
1,2-Dichloroethane-d4	49.10	50.00	ug/Kg	98%		70-145		
Toluene-d8	51.58	50.00	ug/Kg	103%		70-145		
Bromofluorobenzene	47.03	50.00	ug/Kg	94%		70-145		

* Value is outside QC limits
ND Not Detected
b See narrative

Manifest

SOIL SAFE OF CA – TPST
Non-Hazardous Soils

↓ Manifest # ↓

Date of Shipment:	Responsible for Payment:	Transport Truck #:	Facility #:	Approval Number:	Load #
5/14/20		728/8300	A07	A5-1727	001

Generator and/or Consultant

Generator's Name and Billing Address: CITY OF LOS ANGELES DEPARTMENT OF RECREATION AND PARKS 211 NORTH FIGUEROA STREET 3RD FLOOR, SUITE 350 LOS ANGELES, CA 90012	Generator's Phone #: 213-241-9137 Person to Contact: FAX#:	Customer Account Number
Consultant's Name and Billing Address:	Consultant's Phone #: Person to Contact: FAX#:	Customer Account Number
Generation Site (Transport from): *(name & address)* STRATHERN PARK NORTH 8041 WHITSETT AVENUE NORTH HOLLYWOOD, CA 91605	Site Phone #: Person to Contact: FAX#:	
Designated Facility (Transport to): *(name & address)* SOIL SAFE 12328 HIBISCUS AVENUE ADELANTO, CA 92301	Facility Phone #: (800) 862-8001 Person to Contact: JOE PROVANSAL FAX#: (760) 246-8004	
Transporter Name and Mailing Address: BELSHIRE 25971 TOWNE CENTRE DRIVE FOOTHILL RANCH, CA 92610 BESI: 317814	Transporter's Phone #: 949-460-5200 Person to Contact: LARRY MOOTHART FAX#: 949-460-5210	CAR000183913 450647 Customer Account Number

Description of Soil	Moisture Content	Contaminated by:	Approx. Qty:	Description of Delivery	Gross Weight	Tare Weight	Net Weight
Sand ☐ Organic ☐ Clay ☐ Other ☐	0 - 10% ☐ 10 - 20% ☐ 20% - over ☐	Gas ☐ Diesel ☐ Other ☐	12 DM	Soil	46560	39100	7460
Sand ☐ Organic ☐ Clay ☐ Other ☐	0 - 10% ☐ 10 - 20% ☐ 20% - over ☐	Gas ☐ Diesel ☐ Other ☐					3.73

List any exception to items listed above: Scale Ticket # 160208

Generator's and/or consultant's certification: I/We certify that the soil referenced herein is taken entirely from those soils descried in the Soil Data Sheet completed and certified by me/us for the Generation Site shown above and nothing has been added or done to such soil that would alter it in any way.

Print or Type Name: Generator ☑ Consultant ☐	Signature and date:	Month	Day	Year
Michael Fusco	Michael Fusco	5	6	20

Transporter

Transporter's certification: I/We acknowledge receipt of the soil referenced above and certify that such soil is being delivered in exactly the same condition as when received. I/We further certify that the soil is being directly transported from the Generation Site to the Designated Facility without off-loading, adding to, subtracting from or in any way delaying delivery to such site.

Print or Type Name:	Signature and date:	Month	Day	Year
Carlos Villa	Carlos Villa	05	06	20

Recycling Facility

Discrepancies:
8041WHIT
2289299

Recycling Facility certifies the receipt of the soil covered by this manifest except as noted above:

Print or Type Name:	Signature and date:
J. PROVANSAL	5-14-20

Please print or type.

TRANSPORTER COPY

APPENDIX F

Site-Specific Ground Motion Hazard Analysis

Deterministic Seismic Hazard Analysis Input	
Verdugo	
M_W:	7.5
R_{RUP} (km):	3.12
R_{JB} (km):	3.12
R_X (km):	3.12
Ry0 (km):	999
V_{S30} (m/sec):	280
U:	0
F_{RV}:	1
F_{NM}:	0
F_{HW}:	0
Dip (deg):	55
Z_{TOR} (km):	0
Z_{HYP} (km):	999
$Z_{1.0}$ (km):	0.35
$Z_{2.5}$ (km):	2.02
W (km):	999
Vs30Flag:	inferred
F_{AS}:	no
Region	California

Deterministic Seismic Hazard Analysis Output (50th Percentile)

Chiou & Youngs (2014)		Campbell & Bozorgnia (2014)		Boore et al. (2014)		Abrahamson et al. (2014)	
Period (sec)	S_a (g)	Period (sec)	S_a (g)	Period (sec)	S_a (g)	Period (sec)	S_a (g)
0.01	0.623	0.01	0.426	0.01	0.512	0.01	0.454
0.02	0.628	0.02	0.440	0.02	0.498	0.02	0.452
0.03	0.635	0.03	0.462	0.03	0.493	0.03	0.434
0.05	0.682	0.05	0.523	0.05	0.525	0.05	0.446
0.075	0.792	0.075	0.597	0.075	0.615	0.075	0.516
0.1	0.904	0.1	0.651	0.1	0.739	0.1	0.614
0.15	1.073	0.15	0.717	0.15	0.922	0.15	0.850
0.2	1.235	0.2	0.747	0.2	1.038	0.2	1.055
0.25	1.362	0.25	0.840	0.25	1.093	0.25	1.205
0.3	1.430	0.3	0.897	0.3	1.147	0.3	1.308
0.4	1.472	0.4	0.973	0.4	1.122	0.4	1.324
0.5	1.463	0.5	0.963	0.5	1.063	0.5	1.212
0.75	1.261	0.75	0.846	0.75	0.838	0.75	0.912
1	1.029	1	0.762	1	0.701	1	0.710
1.5	0.677	1.5	0.582	1.5	0.497	1.5	0.497
2	0.495	2	0.457	2	0.365	2	0.353
3	0.291	3	0.321	3	0.229	3	0.231
4	0.180	4	0.215	4	0.159	4	0.176
5	0.115	5	0.153	5	0.118	5	0.137
7.5	0.049	7.5	0.064	7.5	0.062	7.5	0.078
10	0.026	10	0.036	10	0.037	10	0.048

Deterministic Seismic Hazard Analysis Output (84th Percentile)

Chiou & Youngs (2014)		Campbell & Bozorgnia (2014)		Boore et al. (2014)		Abrahamson et al. (2014)	
Period	S_a	Period	S_a	Period	S_a	Period	S_a
0.01	1.024	0.01	0.669	0.01	0.926	0.01	0.763
0.02	1.034	0.02	0.690	0.02	0.911	0.02	0.756
0.03	1.055	0.03	0.728	0.03	0.921	0.03	0.713
0.05	1.129	0.05	0.834	0.05	1.032	0.05	0.724
0.075	1.293	0.075	0.981	0.075	1.253	0.075	0.835
0.1	1.465	0.1	1.078	0.1	1.498	0.1	0.989
0.15	1.744	0.15	1.157	0.15	1.783	0.15	1.360
0.2	2.033	0.2	1.198	0.2	1.914	0.2	1.705
0.25	2.276	0.25	1.352	0.25	1.985	0.25	1.997
0.3	2.424	0.3	1.489	0.3	2.079	0.3	2.255
0.4	2.559	0.4	1.689	0.4	2.057	0.4	2.434
0.5	2.598	0.5	1.738	0.5	1.987	0.5	2.292
0.75	2.333	0.75	1.650	0.75	1.623	0.75	1.778
1	1.951	1	1.522	1	1.394	1	1.417
1.5	1.318	1.5	1.185	1.5	0.993	1.5	1.017
2	0.976	2	0.929	2	0.733	2	0.738
3	0.579	3	0.655	3	0.465	3	0.482
4	0.357	4	0.426	4	0.323	4	0.364
5	0.227	5	0.305	5	0.240	5	0.284
7.5	0.097	7.5	0.130	7.5	0.123	7.5	0.162
10	0.052	10	0.073	10	0.071	10	0.100

Chiou & Youngs (2014)		Campbell & Bozorgnia (2014)		Boore et al. (2014)		Abrahamson et al. (2014)	
Site Param List:		**Site Param List:**		**Site Param List:**		**Site Param List:**	
Longitude	-118.40719	Longitude	-118.40719	Longitude	-118.40719	Longitude	-118.40719
Latitude	34.217294	Latitude	34.217294	Latitude	34.217294	Latitude	34.217294
Vs30	280	Vs30	280	Vs30	280	Vs30	280
Vs30 Type	Inferred	Vs30 Type	Inferred	Vs30 Type	Inferred	Vs30 Type	Inferred
Depth 1.0 km/sec (m)	350	Depth 1.0 km/sec (m)	350	Depth 1.0 km/sec (m)	350	Depth 1.0 km/sec (m)	350
Depth 2.5 km/sec (km)	2.0	Depth 2.5 km/sec (km)	2.0	Depth 2.5 km/sec (km)	2.0	Depth 2.5 km/sec (km)	2.0

IMR Param List:	
Gaussian Truncation	None
Tectonic Region	Active Shallow Crust
Component	RotD50
Std Dev Type	Total
Additional Epistemic Uncertainty	(Disabled)
IML/Prob Param List:	
Map Type	IML@Prob
Probability	0.02
Forecast Param List:	
Eqk Rup Forecast	Mean UCERF3
Mean UCERF3 Presets	(POISSON ONLY) Both FM Branch Averaged
Apply Aftershock Filter	False
Aleatory Mag-Area StdDev	0
Background Seismicity	Include
Treat Background Seismicity As	Point Sources
Use Quad Surfaces (otherwise gridded)	False
Fault Grid Spacing	1
Probability Model	Poisson
Sect Upper Depth Averaging Tolerance (km)	100
Use Mean Upper Depth	True
Rup Mag Averaging Tolerance	1
Rupture Rake To Use	Def. Model Mean
Fault Model(s)	Both
Ignore Cache	FALSE
TimeSpan Param List:	
Duration (Years)	50

Probabilistic Seismic Hazard Analysis (2% in 50 years)							
Chiou & Youngs (2014)		Campbell & Bozorgnia (2014)		Boore et al. (2014)		Abrahamson et al. (2014)	
Period (sec)	S_a (g)	Period (sec)	S_a (g)	Period (sec)	S_a (g)	Period (sec)	S_a (g)
0.01	0.989	0.01	0.697	0.01	1.139	0.01	0.939
0.02	1.003	0.02	0.709	0.02	1.135	0.02	0.937
0.03	1.048	0.03	0.747	0.03	1.186	0.03	0.902
0.05	1.168	0.05	0.875	0.05	1.449	0.05	0.943
0.075	1.391	0.075	1.127	0.075	1.932	0.075	1.092
0.1	1.618	0.1	1.337	0.1	2.271	0.1	1.309
0.15	1.950	0.15	1.503	0.15	2.489	0.15	1.809
0.2	2.235	0.2	1.585	0.2	2.433	0.2	2.214
0.25	2.442	0.25	1.680	0.25	2.381	0.25	2.494
0.3	2.530	0.3	1.829	0.3	2.393	0.3	2.666
0.4	2.516	0.4	1.900	0.4	2.260	0.4	2.689
0.5	2.419	0.5	1.881	0.5	2.171	0.5	2.464
0.75	1.984	0.75	1.682	0.75	1.716	0.75	1.804
1	1.581	1	1.417	1	1.437	1	1.399
1.5	1.021	1.5	1.016	1.5	0.952	1.5	0.969
2	0.730	2	0.766	2	0.700	2	0.685
3	0.403	3	0.506	3	0.448	3	0.418
4	0.240	4	0.333	4	0.325	4	0.297
5	0.151	5	0.267	5	0.253	5	0.230
7.5	0.064	7.5	0.146	7.5	0.149	7.5	0.147
10	0.034	10	0.075	10	0.090	10	0.102

Site Class	Mapped Spectral Response Acceleration Parameters		Site Coefficients		Spectral Response Acceleration Parameters Adjusted for Site Effects		Design Spectral Response Acceleration Parameters		Period			Vs30 (m/sec)	Risk Coefficients			PGA		Site-Specific MCE_G PGA
	Ss (g)	S1 (g)	Fa	Fv	Sms (g)	Sm1 (g)	Sds (g)	Sd1 (g)	To (sec)	Ts (sec)	T_L (sec)		C_{RS}	C_{R1}	Ratio	F_{PGA}	PGA_M (g)	PGA_M (g)
D	1.935	0.658	1.000	1.700	1.935	1.119	1.290	0.746	0.116	0.578	8.0	280	0.911	0.9	-0.01375	1.1	0.868	0.834

Mapped Design MCE_R Response Spectrum (Fa and Fv per Section 11.4 of ASCE 7 -16)		Period (sec)	Probabilistic MCE_R Response Spectrum				Deterministic MCE_R Response Spectrum				Site-Specific MCE_R Response Spectrum	Site-Specific MCE_R Response Spectrum - 150% Limit of Design	Mapped Design MCE_R Response Spectrum (Fa and Fv per Section 21.3 of ASCE 7-16)	80% of Mapped Design MCE_R Response Spectrum (Fa and Fv per Section 21.3 of ASCE 7-16)	Site-Specific Design Response Spectrum	Site-Specific Design Response Spectrum with 80% Limit
			Geomean 2% in 50 Years	Max Horiz Direction Response to Geomean	Geomean 2% in 50 Years Rotated	1% Chance of Collapse in 50 Years (Method 1)	84th Percentile of Geomean	Max Horiz Direction Response to Geomean	84th Percentile of Geomean Rotated	Deterministic Limit on Response Spectrum						
Period (sec)	Sa (g)		Sa (g)	Max/Mean	Sa (g)	Sa (g)	Sa (g)	Max/Mean	Sa (g)	Sa (g)	Sa (g)	Sa (g)	Sa (g)	Sa (g)	Sa (g)	Sa (g)
0.01	0.583	0.01	0.927	1.100	1.020	0.929	0.834	1.100	0.917	0.917	0.917	0.917	0.562	0.449	0.611	**0.611**
0.02	0.650	0.02	0.932	1.100	1.026	0.934	0.837	1.100	0.921	0.921	0.921	0.921	0.607	0.486	0.614	**0.614**
0.03	0.717	0.03	0.956	1.100	1.052	0.959	0.843	1.100	0.927	0.927	0.927	0.927	0.653	0.522	0.618	**0.618**
0.05	0.851	0.05	1.087	1.100	1.196	1.089	0.916	1.100	1.007	1.007	1.007	1.007	0.744	0.595	0.672	**0.672**
0.075	1.018	0.075	1.349	1.100	1.483	1.351	1.073	1.100	1.181	1.181	1.181	1.181	0.857	0.686	0.787	**0.787**
0.1	1.185	0.1	1.592	1.100	1.752	1.596	1.237	1.100	1.360	1.360	1.360	1.360	0.971	0.777	0.907	**0.907**
0.116	1.290	0.15	1.906	1.100	2.097	1.910	1.487	1.100	1.636	1.636	1.636	1.636	1.042	0.834	1.091	**1.091**
0.2	1.290	0.2	2.090	1.100	2.299	2.095	1.679	1.100	1.847	1.847	1.847	1.847	1.290	1.032	1.231	**1.231**
0.25	1.290	0.25	2.222	1.113	2.472	2.250	1.869	1.113	2.079	2.079	2.079	2.079	1.290	1.032	1.386	**1.386**
0.3	1.290	0.3	2.331	1.125	2.622	2.385	2.028	1.125	2.282	2.282	2.282	2.282	1.290	1.032	1.521	**1.521**
0.4	1.290	0.4	2.322	1.150	2.670	2.425	2.157	1.150	2.480	2.480	2.425	2.425	1.290	1.032	1.617	**1.617**
0.5	1.290	0.5	2.221	1.175	2.610	2.367	2.130	1.175	2.502	2.502	2.367	2.367	1.290	1.032	1.578	**1.578**
0.578	1.290	0.75	1.793	1.238	2.219	2.004	1.826	1.238	2.259	2.259	2.004	2.004	1.290	1.032	1.336	**1.336**
1	0.746	1	1.457	1.300	1.894	1.705	1.556	1.300	2.023	2.023	1.705	1.705	1.097	0.877	1.136	**1.136**
1.5	0.497	1.5	0.989	1.325	1.311	1.180	1.121	1.325	1.485	1.485	1.180	1.180	0.731	0.585	0.786	**0.786**
2	0.373	2	0.720	1.350	0.972	0.874	0.837	1.350	1.130	1.130	0.874	0.874	0.548	0.439	0.583	**0.583**
3	0.249	3	0.442	1.400	0.619	0.557	0.540	1.400	0.756	0.756	0.557	0.557	0.366	0.292	0.371	**0.371**
4	0.186	4	0.296	1.450	0.430	0.387	0.365	1.450	0.530	0.530	0.387	0.387	0.274	0.219	0.258	**0.258**
5	0.149	5	0.220	1.500	0.330	0.297	0.262	1.500	0.393	0.393	0.297	0.297	0.219	0.175	0.198	**0.198**
7.5	0.099	7.5	0.120	1.500	0.179	0.161	0.126	1.500	0.189	0.189	0.161	0.175	0.146	0.117	0.108	**0.117**
10	0.060	10	0.070	1.500	0.105	0.094	0.072	1.500	0.108	0.108	0.094	0.105	0.088	0.070	0.063	**0.070**

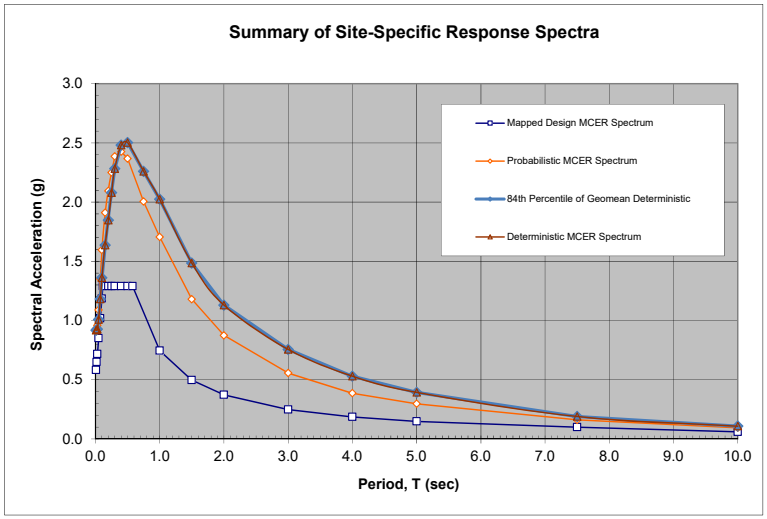

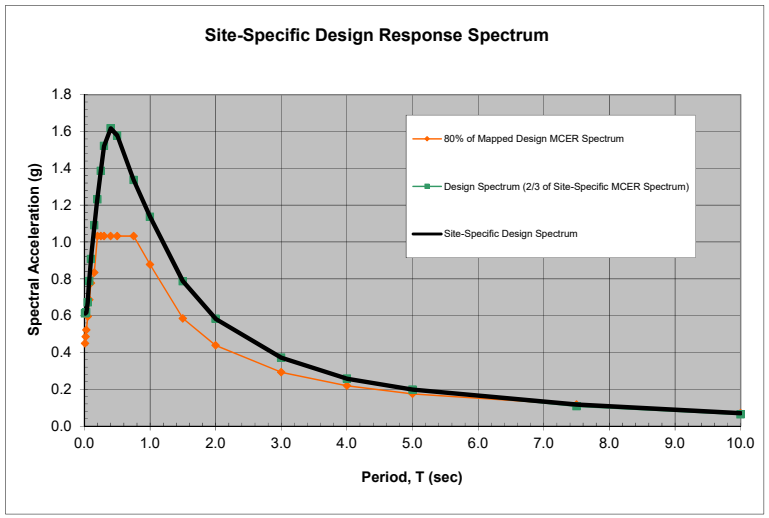

Ninyo & Moore

Geotechnical & Environmental Sciences Consultants

475 Goddard, Suite 200 | Irvine, California 92618 | p. 949.753.7070

ARIZONA | CALIFORNIA | COLORADO | NEVADA | TEXAS | UTAH

www.ninyoandmoore.com

Limited Phase II Environmental Site Assessment

Limited Phase II Environmental Site Assessment

LABOE TOS No. 25
Stormwater Capture Parks Program
Strathern Park North
8041 Whitsett Avenue
North Hollywood, California

CDM Smith

600 Wilshire Boulevard, Suite 750 | Los Angeles, California 90017

June 30, 2020 | Project No. 211294004









Geotechnical | Environmental | Construction Inspection & Testing | Forensic Engineering & Expert Witness

Geophysics | Engineering Geology | Laboratory Testing | Industrial Hygiene | Occupational Safety | Air Quality | GIS

Ninyo & Moore
Geotechnical & Environmental Sciences Consultants

Ninyo & Moore
Geotechnical & Environmental Sciences Consultants

Limited Phase II Environmental Site Assessment

LABOE TOS No. 25
Stormwater Capture Parks Program
Strathern Park North
8041 Whitsett Avenue
North Hollywood, California

Mr. Scott Dellinger
CDM Smith
600 Wilshire Boulevard, Suite 750 | Los Angeles, California 90017

June 30, 2020 | Project No. 211294004

Kristina Hill, PG
Senior Staff Geologist

Keith F. Gilbert, PG
Senior Geologist

PROFESSIONAL GEOLOGIST
KEITH F. GILBERT
P.G. 7261
STATE OF CALIFORNIA

Beth Abramson-Beck, PG
Principal Geologist

KMH/KFG/BAB/sc

Distribution: (1) Addressee (via e-mail)

CONTENTS

1	INTRODUCTION	1
2	PROJECT DESCRIPTION AND PROPOSED CONSTRUCTION	1
3	PROJECT OBJECTIVES	2
4	SCOPE OF WORK	3
5	SITE LOCATION AND DESCRIPTION	4
6	ENVIRONMENTAL BACKGROUND	4
7	HISTORICAL AERIAL PHOTOGRAPHS	5
8	GEOLOGIC AND SUBSURFACE CONDITIONS	5
8.1	Undocumented Fill	6
8.2	Alluvium	6
9	GROUNDWATER	6
10	LIMITED PHASE II ENVIRONMENTAL SITE ASSESSMENT	7
10.1	Permits and Notifications	8
10.2	Site Health and Safety Plan	8
10.3	Underground Service Alert (USA) and Geophysical Clearance of Exploration Locations	9
10.4	Drilling and Sampling	9
10.5	Exploratory Test Pits	10
10.6	Duplicate Sample Field Screening	10
10.7	Soil Gas Screening	11
10.8	Shallow Soil Sampling	11
10.9	Decontamination Procedures	11
10.10	Investigation Derived Wastes (IDW)	11
11	ANALYTICAL TESTING	12
12	QUALITY ASSURANCE/QUALITY CONTROL (QA/QC)	12
13	ANALYTICAL TESTING RESULTS	13
13.1	Title 22 Metals	13
13.2	Organochlorine Pesticides (OCPs)	13
13.3	Polychlorinated Biphenyls (PCBs)	14

13.4 Total Petroleum Hydrocarbons (TPH) 14
13.5 Semi-Volatile Organic Compounds (SVOCs) 14
13.6 Volatile Organic Compounds (VOCs), Polynuclear Aromatic Hydrocarbons (PAHs), Chlorinated Herbicides (CHs) and Total Recoverable Petroleum Hydrocarbons (TRPH) 14
14 SUMMARY OF FINDINGS 14
14.1 Analytical Results 15
14.2 Duplicate and Field Screening 16
15 RECOMMENDATIONS 16
16 LIMITATIONS 17
17 REFERENCES 19

TABLES

1 – GPS Coordinates – Environmental Borings and Shallow Soil Sample Locations

2 – Analytical Results – Title 22 Metals

3 – Analytical Results – Organochlorine Pesticides, Polychlorinated Biphenyls and Chlorinated Herbicides

4 – Analytical Results – Volatile Organic Compounds, Semi-Volatile Organic Compounds, Polynuclear Aromatic Hydrocarbons, Total Petroleum Hydrocarbons, and Total Recoverable Petroleum Hydrocarbons

FIGURES

1 – Site Location

2 – Site and Vicinity

3 – Site Layout

4 – Boring, Test Pit, Percolation Test, and CPT Locations

APPENDICES

A – Boring Logs, Test Pit Logs, and Photographs

B – City of Los Angeles Stormwater Capture Parks Program, Task Order Solicitation No. 25, Addendum No.5

C – 1953 Aerial Photograph

D – Boring Permit – LACDEH

E – Waste Manifests

F – Laboratory Analytical Reports

1 INTRODUCTION

Ninyo & Moore conducted a limited Phase II Environmental Site Assessment (Phase II ESA) at a portion of Strathern Park North located at 8041 Whitsett Avenue in North Hollywood, California as part of the Los Angeles Bureau of Engineering (LABOE) Stormwater Capture Parks Program (Figures 1 and 2). The Phase II ESA was performed in general accordance with the City of Los Angeles (City), Task Order Solicitation (TOS) No. 25 (LABOE, 2019a), Addendum No. 5 (Addendum No. 5), dated August 2, 2019 and our proposal dated January 23, 2020, that was based on the addendum (Ninyo & Moore, 2020a).

The Phase II ESA was performed in conjunction with a geotechnical evaluation, the purpose of which was to evaluate the soil and geologic conditions at the site and to provide geotechnical recommendations for pre-design of proposed Best Management Practices (BMPs) at the site for stormwater infiltration. The geotechnical study is provided as a separate report (Ninyo & Moore, 2020b). Boring and test pit logs from both the Phase II ESA and geotechnical evaluation are provided in this report for reference (Appendix A).

The intent of the Stormwater Capture Parks Program is to capture up to 2,912 acre-feet of stormwater and urban runoff per year that drain from 5,868 acres within a portion of the San Fernando Valley in order to reduce the potential for flooding, improve stormwater quality, increase water supplies through stormwater capture and groundwater recharge, and provide recreational, social, and economic benefits (LABOE, 2019a). The stormwater runoff will be diverted into proposed stormwater capture and groundwater recharge and infiltration BMPs within nine City parks generally located along the State Route (SR)-170 corridor, including the subject Strathern Park North, for replenishment of the San Fernando Groundwater Basin. According to the Conceptual Study Report (CSR) (Los Angeles Department of Water & Power [LADWP], 2018), the project at Strathern Park North is anticipated to capture and infiltrate stormwater runoff from a tributary area of approximately 485 acres.

2 PROJECT DESCRIPTION AND PROPOSED CONSTRUCTION

Based on our review of TOS 25 (LABOE, 2019a), the project generally consists of the installation of new BMPs within the undeveloped western approximate half of Strathern Park North to infiltrate storm water diverted from the existing 45-inch-diameter reinforced concrete pipe (RCP) storm drain along SR-170 (Figures 3 and 4). The new BMPs would consist of the installation of an underground infiltration gallery, a catch basin, diversion structure, pump station, hydrodynamic separator (HDS) units, flow measuring devices, supervisory control and data acquisition, educational signage, and park restoration/improvements. According to the CSR (LADWP, 2018),

the conceptual infiltration gallery would be sized to store approximately 968,000 cubic feet of water and include a footprint of approximately 97,700 square feet (sf), an inner height of approximately 12 feet, and an invert depth of approximately 17 feet below the ground surface (bgs). We understand that the galleries will likely consist of prefabricated, modular concrete vaults with open bottoms underlain by drain rock over a layer of filter fabric. Concrete foundations could be constructed depending on the type of system selected. We understand that upon completion of the BMP installation, the BMPs will be buried with compacted fill and the ground surface returned to its existing condition for continued use as a park.

Subsequent to performing the geotechnical evaluation and Limited Phase II ESA, we received conceptual plans from our client (CDM Smith, 2020), which include four BMP options (Alternatives 1 through 4) for the project. The improvements associated with Alternatives 1 through 3 will generally be constructed within the undeveloped portion of the park (west of the baseball fields). Alternative 4 provides an option to build beneath the baseball fields. We understand that these proposed alternatives are subject to change as further design is performed. The four options are described below.

Alternative 1 - According to CDM Smith (2020), Alternative 1 consists of the installation of a subterranean infiltration gallery (97,700 sf) with an interior height of 12 feet and invert depth of approximately 17 feet, a diversion structure on the existing 45-inch-diameter RCP storm drain and a catch basin at the southern end of Potter Avenue. New 36 and 42-inch-diameter pipelines would be installed between the diversion structure and gallery with an in-line HDS unit and pump station. The catch basin will be connected to the gallery via an additional pipeline. The proposed layout of Alternative 1 is presented on Figure 3.

Alternative 2 - Alternative 2 is similar to Alternative 1 except that the diversion structure and pump station would be moved farther away from the transmission towers.

Alternative 3 - Alternative 3 consists of a smaller subterranean infiltration gallery (72,000 sf) with an interior height of 12 feet and invert depth of approximately 19½ feet. This alternative would also include the use of 12 approximately 50-foot-deep dry wells connected to the gallery. The pump station would be removed and the catch basin at the south end of Potter Avenue would drain into a bioswale along the north boundary of the park.

Alternative 4 - Alternative 4 consists of a subterranean infiltration gallery (73,000 sf) with an interior height of 14 feet and invert depth of approximately 18 feet beneath the baseball diamonds. This alternative also includes the installation of two approximately 50-foot-deep dry wells for dry weather runoff, a diversion structure on the existing 45-inch-diameter RCP storm drain and new 36- and 42-inch-diameter pipelines with an in-line HDS unit and pump station. Additional subsurface exploration would be recommended to further evaluate Alternative 4, if chosen for the project.

3 PROJECT OBJECTIVES

Based on the requested Phase II ESA services specified in Addendum No. 5 (Appendix B), the project objective was to evaluate whether specific Constituents of Potential Concern (COPC) are

present at the site at concentrations exceeding applicable regulatory action levels. The requested SOW indicated in Addendum No. 5 did not indicate or request delineation of COPC (or wastes). Addendum No. 5 did not provide information or reference the site as being the possible location of waste disposal. However, based on our discussion with CDM Smith, we understand that the City indicated that the park may have previously been the location of a *"landfill."* The tasks indicated in Addendum No. 5 were not specific to waste disposal site characterization and delineation.

The site is not listed in the California Department of Resources, Recycling and Recovery (CalRecycle) Solid Waste Information System (SWIS) database; however, many waste disposal sites statewide are not included in the database, primarily because the regulatory agencies are unaware of their existence.

4 SCOPE OF WORK

The SOW for this Phase II ESA was that specifically indicated in Addendum No. 5 and our January 23, 2020 proposal, and additional environmental assessment activities requested by CDM Smith as follows:

- **Project Familiarization and Management** – This task included project management, coordination, and a field reconnaissance to observe and document the site conditions, mark-out proposed hollow-stem auger (HSA) boring and test pit locations for underground utility clearance by Underground Service Alert (USA), and meet with Recreational and Parks personnel regarding site access and constraints. Ninyo & Moore obtained a Los Angeles County Environmental Health Department (LACEHD) permit for the borings.

- **Site Health and Safety Plan** – Ninyo & Moore prepared a worker site health and safety plan in accordance with Occupational Safety and Health Administration (OSHA) and Hazardous Waste Operation Standards 29 that was reviewed and signed by our Certified Industrial Hygienist and used in the field during the environmental assessment.

- **Geophysical Survey** – Ninyo & Moore oversaw geophysical clearance of planned exploratory locations. A description of the geophysical survey methods is presented in Section 10.3.

- **Limited Phase II ESA** – The assessment consisted of drilling, logging, sampling and performing soil gas monitoring of five HSA borings to depths of approximately 25 feet bgs.

  CDM Smith additionally requested *"a day of backhoe test pits to further evaluate the depths and limits of the landfill at Strathern Park."* The scope of work generally consisted of excavating, logging, sampling and documenting with photographs the six test pits to depths of up to approximately nine feet bgs.

- **Environmental Testing** – The analytical testing program specified in the addendum provided a list of likely analytical tests to be performed on samples consisting of total recoverable petroleum hydrocarbons (TRPH) by United States Environmental Protection Agency (EPA) method 1664, total petroleum hydrocarbons (TPH) by EPA test method 8015M, volatile organic compounds (VOCs) by EPA method 8260B, semi-volatile organic compounds (SVOCs) by EPA methods 8270C and 8270C-SIM, Title 22 metals by EPA methods 6010B/7471A, organochlorine pesticides (OCPs) and polychlorinated biphenyls (PCBs) by

EPA test methods 8081A and 8082, respectively; and chlorinated herbicides by EPA method 8151A. The analytical testing was conducted in general accordance with that indicated in the addendum.

- **Phase II ESA Report** – Performed data compilation and analysis, performed quality assurance/quality control (QA/QC) of data obtained, tabulated analytical data and compared to appropriate regulatory levels, prepared this Limited Phase II ESA report that summarizes assessment methodologies and results, findings, and provides recommendations.
- **Disposal of Investigation Derived Wastes (IDW)** – The 12 drums of IDW were characterized and Ninyo & Moore oversaw disposal to an appropriately licensed facility. Management of the IDW is presented in Section 10.10.

Additionally, on-line regulatory agency database and readily available historical aerial photographs of the site and vicinity were reviewed to evaluate whether they indicated the presence of waste disposal at the site and vicinity.

5 SITE LOCATION AND DESCRIPTION

Strathern Park North is a City of Los Angeles park located on the eastern side of the San Fernando Valley, east of California SR-170 and approximately one-mile south of Interstate 5 (I-5). The park consists of a relatively level, triangular-shaped area bounded by an LADWP transmission line (TL) easement on the southwest, residential properties to the adjacent north, Whitsett Avenue followed by residential properties to the east, and Strathern Street followed by Jamie Beth Slaven Park to the south. The site that is the subject of this Phase II ESA and the geotechnical evaluation is the generally western area of the park that consists of undeveloped land (Figures 1 through 4).

The eastern approximate half of the park (adjacent to and east of the site) is developed with four baseball fields, restroom and concession facilities an asphalt concrete (AC) parking lot, Portland cement concrete (PCC) walkways, landscaping, and other miscellaneous improvements. Based on our review of the CSR (LADWP, 2018), we understand that a 45-inch-diameter RCP storm drain is located along the east side of SR-170 and a 60-inch-diameter water pipeline traverses the LADWP TL easement. Based on our review of topographic maps (NavigateLA, 2020), the park slopes gently toward the southeast with site elevations ranging from approximately 808 feet above mean sea level (MSL) at the northwest corner of the park to approximately 800 feet (MSL) at the southeast corner.

6 ENVIRONMENTAL BACKGROUND

Background environmental information was not provided by the client and Addendum No. 5 did not provide background environmental information or specify the type of possible contamination at the site. Because the client indicated at the kickoff meeting that the site may be the location of

a *"landfill,"* the SWIS database was searched and the site was not listed as a solid waste disposal site in the database.

7 HISTORICAL AERIAL PHOTOGRAPHS

Select, readily available historical aerial photographs were reviewed of the site and vicinity from the Nationwide Environmental Title Research, LLC (NETR) online database. The purpose of the cursory review was to evaluate whether evidence of waste disposal activities has occurred at the site. The 1952 aerial photograph indicates several unpaved roads extending westerly from unpaved Whitsett Avenue and from an area to the south and terminating at two bulbous-shaped raised areas that may correspond to possible dumping/waste disposal. The disturbed areas that may be related to waste disposal generally correspond to the current baseball fields and parking areas of the park to the adjacent east of the site and a portion of the site.

The 1953 aerial photograph indicates fairly significant surface disturbances, primarily at the baseball fields and parking areas of the park to the adjacent east of the site and extending westerly onto a portion of the site. The area extending onto the site is similar in appearance to what was observed in the 1952 photograph. The disturbed surface area to the adjacent east (baseball fields and parking area for the park) are a generally rectangular-shaped area, possibly perimeter access roads. Although not known, the described features are suggestive of dumping/waste disposal. The residences to the adjacent north of the site were not present in the 1952 photographs; some were constructed by 1953. Based on our interpretation of select limited historical aerial photographs, the baseball fields and parking areas and a portion of the site were the locations of surface disturbances that may have been related to waste disposal, possibly associated with residential construction projects in the area. The aerial photographs also suggest dumping/waste materials may extend offsite, possibly underlying some adjacent residences north of the park and possibly to the south of the park. Earlier photographs were not available for the site using the online database. A copy of the 1953 aerial photograph is provided as Appendix C as Ninyo & Moore has this photograph as part of our in-house photograph collection. The 1952 aerial photograph viewed online only is copyrighted material and therefore is not provided.

8 GEOLOGIC AND SUBSURFACE CONDITIONS

Review of regional geologic maps indicate that the site is generally underlain by Holocene-age wash deposits associated with deposition along the Tujunga Wash (Campbell et al., 2014). The deposits are described as consisting of unconsolidated gravel, sand, and silt in active or recently active stream beds. The California Department of Mines and Geology (CDMG, 1997) has also

mapped the site as being underlain by wash deposits consisting of loose to medium dense, sand and silty sand with lesser quantities of silt and gravel.

During the geotechnical evaluation and the Phase II ESA, we encountered undocumented fill and alluvium to the total depths explored. Generalized descriptions of the materials encountered during our subsurface exploration are presented below. More detailed descriptions of the subsurface materials are presented on the boring logs and test pit logs included as Appendix A to this report and CPT soundings included in the geotechnical evaluation (Ninyo & Moore, 2020b).

8.1 Undocumented Fill

Undocumented fill was encountered in the borings and test pits to depths ranging from approximately 3 to 13 feet bgs. The fill generally consists of granular deposits of light brown and brown, moist, very loose to medium dense, silty sand, clayey sand, poorly graded sand with silt, poorly graded sand with clay, poorly graded sand, well-graded sand with silt, and sandy silt, and brown, moist, soft to firm, lean clay and clayey sand. The fill contains various amounts of gravel and scattered cobbles. Minor amounts of waste materials were observed within the undocumented fill at borings B-1, B-2, P-1, P-3, and P-5, and test pits TP-3 through TP-6. The observed waste materials generally consist of pieces of AC, concrete, brick, bottles glass, ceramic, plastic, and tires. Documentation regarding the limits of fill or the placement and compaction of the fill soils was not available for our review.

8.2 Alluvium

Alluvium was encountered beneath the undocumented fill, to the total depth explored of up to approximately 70½ feet. The alluvium generally consists of interbedded granular deposits of light brown and brown, moist, loose to very dense, poorly graded sand, poorly graded sand with silt, poorly graded sand with clay, well-graded sand with silt, silty sand, and sandy silt. The alluvial deposits contain variable amounts of gravel and cobbles.

9 GROUNDWATER

The site lies within the Coastal Plain of Los Angeles Basin of the South Coast Hydrologic Region and is situated approximately 0.9 miles east of the Tujunga Wash (DWR, 2003). The California Division of Mines & Geology (CDMG, 1997) indicates that the historic high depth to groundwater at the site ranges from approximately 110 to 120 feet bgs. Ninyo & Moore reviewed available information pertaining to groundwater in the site vicinity on the State Water Resources Control Board (SWRCB) GeoTracker website. Based on the website, it appears that the closest site with available groundwater depth information is approximately 0.5 miles to the northwest, at 12858 Roscoe Boulevard. According to an Additional Site Assessment Report dated July 13, 2012, for

this site (Shell Service Station) prepared by Wayne Perry Inc., (Wayne Perry Inc., 2012), groundwater was encountered at a depth of approximately 130 feet bgs in soil boring B-7 at the property in July 2010. In May 2012, a groundwater monitoring well was drilled and it was reported, *"Depth to first saturation in the boring was observed at approximately 194 feet, however the well was dry on June 4 and 14, 2012."* The depth to groundwater in a Los Angeles County groundwater monitoring well (Well ID 4898) located 800 feet southeast of the site was approximately 307 feet in 2009 (the latest posted measurement) (COLA, 2020). The depth to groundwater in this well ranged from approximately 204 and 335 feet from 1975 to 2009. It is anticipated that the current depth to groundwater at the park is similar to the groundwater depth information provided in this report section.

According to the Upper Los Angeles River Area Watermaster Groundwater Pumping and Spreading Plan 2002-2007 Water Years, groundwater in the site vicinity is reported to flow south, following regional topography (ULARAW, 2003).

During the subject Phase II ESA and geotechnical evaluation, groundwater was not encountered in borings to depths of 71 feet bgs during drilling or during the percolation testing that included leaving borings open for 47 days. Groundwater levels, gradient, and flow direction can fluctuate due to seasonal variations, groundwater withdrawal or injection, changes in land use, and other factors.

10 LIMITED PHASE II ENVIRONMENTAL SITE ASSESSMENT

The following sections describe environmental activities that were conducted at the site for this Limited Phase II ESA as requested in Addendum No. 5 and our proposal (Ninyo & Moore, 2020a). The Phase II ESA was conducted concurrently with the geotechnical evaluation and as possible, exploratory locations combined geotechnical and environmental activities to maximize the information obtained for the project. The Limited Phase II ESA was conducted under the direction of a Ninyo & Moore California-Licensed Professional Geologist (PG).

The subsurface environmental assessment generally included the following:

- Drilling, sampling and logging five HSA borings (B-1, B-3, P-2, P-4, and P-6).
- Conducting soil gas field screening in each boring.
- Conducting shallow soil sampling by advancing eight shallow hand auger borings to collect samples at a depth of approximately 1-foot bgs (COMP-1 to COMP-8) for one composite sample analysis.
- Observing subsurface conditions in the six exploratory test pits.

The geotechnical evaluation included excavating six exploratory test pits, drilling additional borings and conducting six Cone Penetration Test (CPT) soundings. The approximate locations of the environmental and geotechnical borings, test pits, CPT soundings, and shallow soil sampling are presented in Figure 4. Global Positioning system (GPS) coordinates for each environmental sampling location are presented in Table 1. Boring and test pit logs accompanied by photographs of the field work are presented in Appendix A.

10.1 Permits and Notifications

Prior to implementing field activities, Ninyo & Moore obtained a well permit for fifteen borings from the Los Angeles County Department of Environmental Health (LACDEH). The permit was for three borings, six percolation test borings, and six CPT borings, for a total of 15 borings. Five of the 15 borings were specifically requested in Addendum No. 5 for the Phase II ESA and included environmental analysis, while the remaining permitted borings were related to the geotechnical evaluation. A copy of the permit is included as Appendix D. Permits were not required for the six exploratory test pits.

The City Addendum No. 5 did not provide information about the site history or that the site may be the location of a *"landfill"* or waste disposal site. However, after the project was awarded, the client indicated that the site was possibly the location of a *"landfill"* based on information from the City. The City of Los Angeles, Solid Waste Local Enforcement Agency (LEA) must be notified of subsurface activities at locations known (or suspected) to be waste disposal sites whether they are, or are not, listed in the CalRecycle SWIS database. Additional information related to LEA notification requirements are provided in the conclusions and recommendations section of this report. The client and LABOE were notified of the planned field work shortly after the schedule was established.

10.2 Site Health and Safety Plan

Prior to implementing the field activities, a worker Site Health and Safety Plan (SHSP) was prepared in general accordance with OSHA Hazardous Waste Operation Standards 29 Code of Federal Regulations (CFR) 1910.120. The plan was reviewed and approved by a certified industrial hygienist.

The SHSP provided worker site health and safety information and requirements based on the SOW specified in Addendum No. 5 and suspected COPCs that may be present at the site according to laboratory analysis specified in the addendum. Prior to the initiation of field activities, a site safety briefing was conducted to evaluate potential physical and chemical hazards and outline measures to be taken in the event of an emergency. On-site personnel signed the safety

form acknowledging their participation in the briefing. No health and safety emergencies related to fieldwork occurred during this assessment.

10.3 Underground Service Alert (USA) and Geophysical Clearance of Exploration Locations

Prior to conducting field activities, the proposed boring locations were marked with white spray paint or a pin flag was placed in the proposed location. USA of Southern California was notified of the intent to conduct the subsurface evaluation activities at least 72 hours prior to initiation of intrusive field tasks. An Inquiry identification number was obtained for the boring locations (A200650823).

On March 23, 2020, Spectrum Geophysics conducted a geophysical clearance of the proposed boring and test pit locations using a Vivax Proloc2 electromagnetic (EM) utility locator, Sensors and Software 500 megahertz (MHz) ground penetrating radar, Fisher TW-6 MSCOPE EM Induction, Radiodetection RD 4000 EM utility locator and a 3M Dynatel 500A EM utility locator for the purpose of locating potential underground utilities or obstructions to planned drilling and test pit excavation activities. An anomaly of unknown source was located within two feet of planned boring location P-6, which as a result, the planned boring was moved approximately 4 feet to the west. Additional anomalies at proposed exploratory locations were not encountered.

10.4 Drilling and Sampling

On March 24 and 25, 2020, Baja Exploration, a C-57 licensed drilling company, drilled five borings (B-1, B-3, P-2, P-4, and P-6) under the oversight of Ninyo & Moore staff and under the direction of a California-licensed PG. Boring locations were selected collectively by Ninyo & Moore and the client based on the proposed layout of the Conceptual Infiltration Basin (CIB) footprint at that time and communication with the LABOE. Drilling procedures, sample collection and depths, and QA/QC procedures were in general accordance with Addendum No. 5 and the *"Interim Guidance for Active Soil Gas Investigations"* by the Los Angeles Regional Water Quality Control Board. As specifically requested in the SOW, the five borings were sampled at depths of approximately 1, 2.5, 5, 10, 15, 20, and 25 feet bgs.

Each boring was initially hand-augured to approximately 5 feet bgs, then drilling continued using a CME 85 drill rig with nominal 8-inch, hollow stem augers. Borings B-1 and B-3 were drilled to depths of approximately 25 feet bgs. Percolation test/environmental borings P-2, P-4, and P-6 were initially drilled to depths of approximately 25 feet bgs for the Phase II ESA and drilling was continued to depths of approximately 70.5 feet bgs to facilitate the geotechnical evaluation (percolation testing).

Soil samples collected at depths of 1 and 2.5 feet bgs for analytical testing were deposited from the auger into new laboratory supplied 8-ounce glass jars. The sample jars were immediately labelled with the sample number, depth, date, and time of sample collection. Samples collected at depths of five feet or deeper were obtained using the hollow-stem split spoon sampler which was driven using a 140-pound hammer (approximate weight) dropping approximately 30 inches. Samples were collected (at each sample interval) into three new 6-inch long, 2-inch diameter stainless steel or brass, sampling tubes inside the split spoon sampler. Upon retrieving the sampler from the borehole, the least disturbed sample was covered on both ends by Teflon™ sheeting, sealed with plastic end caps, labeled and placed into a cooler with ice.

One sample from each of the hollow stem auger borings was collected for VOCs analysis in accordance with EPA Method 5035 and following the Department of Toxic Substances Control (DTSC) Method 5035 Guidance Document, dated November, 2004 (DTSC, 2004). The VOC sample was collected at depths ranging from 5 to 20 feet bgs, corresponding to the highest photoionization detector (PID) reading in that boring.

After drilling, the five borings were backfilled in general accordance with the LACDEH permit and California Well Standards 74-90 requirements using a cement grout mix ratio of approximately 5-6 gallons of water per 94-pound bag of Portland cement where up to 6% bentonite was added to the cement-based mix. The borings were backfilled with the cement-based mix to approximately one-foot bgs and topped with soil to generally match the surrounding area. Latitude and longitude measurements of the environmental borings were recorded for later reference.

The sample containers were labeled, placed in a cooler containing ice, and transported following standard chain-of-custody (COC) protocols to Enthalpy Analytical (Enthalpy), a state-certified laboratory, for analytical testing within 24 hours after their collection.

10.5 Exploratory Test Pits

Initially the focus of the exploratory test pits was related to evaluating waste materials. However, as the project progressed, the test pits were primarily excavated to evaluate subsurface materials for geotechnical design purposes. Please refer to the geotechnical report for information about the test pits and findings. Test pit logs and photographs are included in Appendix A.

10.6 Duplicate Sample Field Screening

During drilling activities, *a "duplicate sample"* from each sampling depth was placed into a Ziploc® baggy, sat in available sunlight for at least ten minutes, then the headspace in the baggy was measured for VOCs using a hexane-calibrated PID. The boring logs in Appendix A include the PID readings.

10.7 Soil Gas Screening

Oxygen (O_2), carbon monoxide (CO), hydrogen sulfide (H_2S), and methane as lower explosive limit (LEL) were measured in air in each of the five environmental boreholes during drilling at depths of approximately 5, 10, 15, 20, and 25 feet bgs. After advancing the drill bit, readings of the air in the borehole were obtained for O_2, CO, H_2S, and LEL by attaching a calibrated 4-gas meter with built in airflow pump to ¼-inch diameter Nylaflow® tubing.

The Nylaflow® tubing was lowered into each borehole immediately after the air monitoring depth was reached. The 4-gas meter pump was allowed to flow for approximately two minutes at each depth to allow the purge of gas present in the tubing before recording gas measurements at the surface from each sampling depth. Soil vapor field screening results are included on the boring logs in Appendix A.

10.8 Shallow Soil Sampling

As specified in the Addendum No. 5, shallow soil samples were collected from eight on-site locations and included two samples from planters located at the eastern perimeter of the site and the remainder of the samples at locations to obtain site coverage. In general, the samples were collected at the site perimeter and center (Figure 4).

The samples were collected at depths of approximately one-foot bgs and as requested in the addendum, were composited at the analytical testing laboratory for one analysis. Samples were collected using hand auger equipment and the samples were transferred from the auger into clean, laboratory–supplied, glass jars. The samples were immediately labeled and chain of custody procedures were followed as described for the boring samples.

10.9 Decontamination Procedures

Equipment coming into contact with potentially contaminated soil or waste materials was decontaminated to prevent potential cross contamination between samples collected from the hollow stem and hand auger borings and to assure the quality of samples collected.

10.10 Investigation Derived Wastes (IDW)

After drilling, the areas investigated were left in an orderly condition with equipment, unused materials, and other miscellaneous items resulting from, or used in, the assessment removed from the site. Drill cuttings and decontamination water from the investigation was temporarily stored on site in 12 Department of Transportation-approved 55-gallon drums. The drums were labeled with generator information including: site name and address, generator name and phone number, contents, date of accumulation, and hazardous waste classification. Other IDW was collected into trash bags and disposed as typical non-hazardous waste.

Two composite samples were collected from the drums for waste profile analytical testing of the IDW as requested by Belshire Environmental Services, Inc. (Belshire), a California-licensed waste hauler. Based on the analytical results of the waste drum samples, the cuttings generated from the 15 borings (environmental and geotechnical) were classified as non-hazardous.

On May 6, 2020, 12 drums were picked up by Belshire and transported and disposed of at Soil Safe in Adelanto, California. A copy of the uniform non-hazardous waste form and data and certification sheets are provided in Appendix E.

11 ANALYTICAL TESTING

The analytical testing program included those analyses indicated as likely to be conducted as specified in Addendum No. 5. Boring samples selected for VOC analytical testing were based on the highest PID reading from each environmental boring, for a total of five samples. Other boring samples analyzed were generally selected based on obtaining adequate site coverage and analytical data from various depths. Select samples were analyzed from the borings and the shallow composite sample, COMPOSITE 1-8 for the following Constituents of Potential Concern as summarized in the following table.

Summary of Analytical Testing

Constituents of Potential Concern	EPA Test Method	Number of Samples Analyzed
Title 22 Metals	6010B/7471A	12
Organochlorine Pesticides (OCPs)	8081A	6
Polychlorinated Biphenyls (PCBs)	8082	6
Chlorinated Herbicides (CHs)	8151A	6
Total Oil and Grease in Solids (Total Recoverable Petroleum Hydrocarbons (TRPH))	1664A M	17
Total Petroleum Hydrocarbons (TPH)	8015B	6
Volatile Organic Compounds (VOCs)	8260B/5035	6
Semi-Volatile Organic Compounds (SVOCs)	8270C	6
Polynuclear Aromatic Hydrocarbons (PAHs)	8270C-SIM	2

Analytical testing was conducted by Enthalpy with the exception of the chlorinated herbicide analyses which were conducted by American Environmental Testing (AETL), as a subcontractor to Enthalpy. AETL is also a state certified analytical testing laboratory.

12 QUALITY ASSURANCE/QUALITY CONTROL (QA/QC)

The laboratory analytical reports were reviewed as part of the QA/QC protocol. Enthalpy indicated that samples they received were in a cold and intact condition and were analyzed within their respective holding times. The Enthalpy laboratory reports contained case narratives regarding quality control results for the analyzed samples and the reader is referred to the analytical reports

included in Appendix F for specific information. Based on review of the analytical reports and conversation with the analytical testing laboratory, the data qualifiers do not affect the quality of the analytical data.

Field equipment used for air monitoring was calibrated by the equipment rental company prior to delivery to Ninyo & Moore. In addition, Ninyo & Moore field staff calibrated the equipment each field work day.

13 ANALYTICAL TESTING RESULTS

Analytical results are summarized in Tables 2, 3 and 4, and discussed in this section. Laboratory analytical reports are provided in Appendix F. Based on the planned construction project, it is anticipated that the project will require the excavation and removal of the subsurface waste materials encountered during this assessment and soils. Currently the locations and depths of wastes are not entirely known and the removal depths of the construction project have not yet been determined. However, based on the anticipated removal of subsurface materials which are anticipated to include wastes, the analytical results were compared to hazardous waste criteria in lieu of residential screening values as indicated in the proposal.

13.1 Title 22 Metals

Arsenic, barium, cadmium, chromium, cobalt, copper, molybdenum, nickel, vanadium, and zinc were detected in the 12 samples analyzed including the composite sample and thallium was detected in one sample from a boring. The concentrations of these metals in the samples analyzed were less than their respective Total Threshold Limit Concentrations (TTLC) and less than ten times their respective Soluble Threshold Limit Concentrations (STLC) (Table 2).

Lead was detected in 12 samples including the composite sample at concentrations ranging from 3.0 to 94 mg/kg. Three of these samples, B-1-2.5', B-3-1', and B-3-2.5' contain lead at concentrations of 72, 51 and 94 mg/kg, respectively. These concentrations are less than the lead TTLC of 1,000 mg/kg; however, these concentrations exceed 10 times the lead STLC of 50 mg/kg. Based on this, the samples were additionally analyzed for soluble lead by the waste extraction test (WET) method. Soluble lead concentrations ranged from 1.1 milligrams/liter (mg/l) to 1.4 mg/l and were less than the lead STLC of 5.0 mg/l threshold criteria.

13.2 Organochlorine Pesticides (OCPs)

4,4'-DDE and 4,4'-DDT were detected in one of the five samples analyzed, B-1-1', at concentrations of 250 micrograms per kilogram (µg/kg) and 90 ug/kg, respectively, and 4,4'-DDE was detected in the composite sample (COMPOSITE 1-8) at a concentration of 45 µg/kg. These

concentrations are less than the TTLC of 1.0 mg/kg threshold criteria. Other OCPs were not detected at concentrations greater than their respective LRLs in the samples analyzed (Table 3).

13.3 Polychlorinated Biphenyls (PCBs)

Aroclor 1254 was detected in one of the five samples analyzed, B-3-1', at a concentration of 1,100 µg/kg, significantly less than the TTLC of 50,000 µg/kg threshold criteria. Other PCBs were not detected at concentrations greater than their respective LRLs in the samples analyzed (Table 3).

13.4 Total Petroleum Hydrocarbons (TPH)

TPH as carbon chain C_{23}-C_{44} was detected in four of the five samples and the composite sample at concentrations ranging from 14 mg/kg in samples B-3-20' and P-2-15' to 52 mg/kg in sample P-6-15'. TTLC or STLC threshold criteria have not been established for TPH. TPH was not detected at a concentration greater than the LRL in the other sample analyzed (Table 4).

13.5 Semi-Volatile Organic Compounds (SVOCs)

Bis(2-ethylhexyl)-phthalate, fluoranthene, and pyrene were detected at concentrations of 260, 250, and 260 µg/kg, respectively, in sample B-1-5'. TTLC or STLC threshold criteria have not been established for these analytes. Other SVOCs were not detected at concentrations exceeding their respective LRLs in the samples analyzed (Table 4).

13.6 Volatile Organic Compounds (VOCs), Polynuclear Aromatic Hydrocarbons (PAHs), Chlorinated Herbicides (CHs) and Total Recoverable Petroleum Hydrocarbons (TRPH)

Concentrations of VOCs, PAHs, CHs, and TRPH were not detected above their respective LRLs in the samples analyzed (Tables 3 and 4).

14 SUMMARY OF FINDINGS

Based on the results of this Limited Phase II ESA, the following findings are provided at this time:

- Waste materials were encountered in six borings, B-1, B-2, P-1, P-3, P-4, and P-5 and four test pits TP-3, TP-4, TP-5 and TP-6 (Appendix A). At the locations explored, the waste materials generally were observed to consist of primarily construction debris (AC, concrete, brick); lesser amounts of plastic, glass, ceramic debris; bottles; and tires at depths of approximately 0.5 to 13 feet bgs (boring B-1). Waste materials were observed to extend to a depth greater than could be excavated (due to caving), approximately nine feet bgs in test pit TP6. At locations explored, the waste materials appear to be generally covered with approximately 0.5 to 2 feet of fill soil.
- The depth of waste materials at the site was not delineated and waste materials extend laterally outward from locations explored during this environmental assessment. Waste

materials delineation was not an objective of this limited assessment. Locations where waste materials were observed at the site are summarized on Figure 4.

- Prior to conducting the environmental assessment, there was mention that the park, or a portion, was the location of a *"landfill."* It is not known at this time whether there is background information available about waste disposal at the site.

- A cursory review of readily available historical aerial photographs shows surface disturbances at the site, other areas of the park and possibly outlying the park that may be interpreted to be related to waste disposal. These areas appear to be generally consistent with results of this environmental assessment (e.g., presence of wastes at the site).

- The waste disposal site is not listed in the online CalRecycle SWIS database meaning that it is not a known and/or documented waste disposal site. There are numerous undocumented waste disposal sites similar to this site, statewide and it has been our experience that parks are often previous locations of waste disposal sites. The park (or a portion of the park) and possibly other locations extending offsite, including residential properties, may be the location of an undocumented, pre-regulations waste disposal site.

14.1 Analytical Results

Analytical results were compared to hazardous waste criteria based on the planned construction project that will include removal of subsurface materials, including waste materials. The following summarizes the analytical results based on the samples analyzed. It should be noted that the sampling locations/depths are generally inconsistent with Phase II ESAs conducted at waste disposal sites which generally include sampling the waste cover (if present), wastes materials, as possible (or surrounding soils), and formation (alluvium) underlying the waste materials. In addition, the analytical testing program included some tests (e.g., TRPH) typically not conducted at waste disposal sites.

Title 22 Metals

Metal concentrations in samples analyzed did not exceed their respective TTLC values. Lead was the only metal with total concentrations in three samples that exceed 10 times the lead STLC. Additional WET (soluble) testing of these samples indicated concentrations less than the lead STLC of 5.0 mg/l. Based on this, metal concentrations in the samples analyzed are less than their respective hazardous waste criteria.

Organochlorine Pesticides

4,4'-DDE and 4,4'-DDT was detected at concentrations of 250 and 90 ug/kg, respectively, in one of the five boring samples and 4,4'-DDE was detected at a concentration of 45 µg/kg in the composite sample. These concentrations are less than their hazardous waste criteria.

Polychlorinated Biphenyls

Aroclor 1254 was detected in one of the five boring samples at a concentration of 1,100 µg/kg which is less than the hazardous waste criteria.

Semi-Volatile Organic Compounds (SVOCs)

Bis(2-ethylhexyl)-phthalate, fluoranthene, and pyrene were detected in one sample. TTLC or STLC threshold criteria have not been established for these analytes.

Total Petroleum Hydrocarbons

Relatively low concentrations of diesel and motor oil range TPH (C_{23}-C_{44}) were detected in four of the five boring samples and the composite sample at concentrations ranging from 14 to 52 mg/kg. TTLC or STLC threshold criteria have not been established for TPH.

Total Recoverable Petroleum Hydrocarbons, Polynuclear Aromatic Hydrocarbons, Chlorinated Herbicides and Volatile Organic Compounds

TRPH, PAHs, CHs and VOCs were not detected above their respective LRLs in the samples analyzed.

14.2 Duplicate and Field Screening

Field screening of the duplicate samples for soil vapor generally indicated low organic vapor readings.

H2S was not measured above zero parts per million (ppm) and methane was not measured above zero percent of the LEL during field screening in the five hollow stem auger borings. Carbon monoxide (CO) readings ranged from zero to 14 ppm. The highest CO readings were in boring B-3 and ranged from 10 to 14 ppm at 15 to 25 feet bgs. O2 readings ranged from 17.5 to 20.9%. The lowest oxygen levels were in boring B-1, which ranged from 17.5 to 17.8% volume from approximately 15 to 25 feet bgs.

15 RECOMMENDATIONS

Based on the Limited Phase II ESA, the following recommendations are provided at this time:

- Because waste materials were encountered at the site (portion of the park), the LEA should be notified and a copy of this report submitted for their review and comments. Other regulatory agencies may also require notifications.
- CCR Title 27, Section 21190, indicates that when there is a change in post-closure land use at a (known or previously unknown) waste disposal site, the LEA should be notified and a post closure land use plan (PCLUP) be prepared and submitted to the LEA for review, comment and approval.
- Based on our past experience on similar projects, we anticipate that the LEA will require additional environmental site assessment of the waste materials. The additional evaluation may include:
    - Conducting a limited historical study consisting of obtaining and reviewing available historical documents, including historical aerial photographs and readily available background documents/reports for the site, to evaluate the waste disposal history, disposal methods, the lateral extent of waste materials as much as possible and to assist with preparing a Phase II ESA work plan. It is possible that there is only minimal background information available about the waste disposal site/area since it was not a regulated site; however, geotechnical reports, grading plans and other documents not directly related to waste disposal may be available. It may also be worthwhile interviewing nearby residents, particularly those located adjacent to the park. This anticipated scope of work can be incorporated into the work plan (see next bullet).

- Prepare and submit a work plan for approval by the LEA and possibly also CalRecycle, and other appropriate regulatory agencies, as necessary, to perform an additional Phase II ESA at the park focused on characterizing and delineating the extent of the waste materials. The LEA will likely require the waste materials be delineated at the park (same ownership) as opposed to only the site (portion of the park); and therefore, the additional Phase II ESA may extend beyond the site that was the subject of this environmental assessment.

- Perform an additional Phase II ESA at the site consistent with conducting waste disposal site assessments which may consist of a geophysical survey and excavating and sampling exploratory test pits, and borings at locations that cannot be evaluated with test pits (recently paved parking lot, baseball fields, etc.). The purpose would be to further characterize and delineate the vertical and lateral extent of waste materials at the park; evaluate the presence and thickness of final cover, as applicable; and whether the waste materials have impacted the underlying and/or adjacent soils.

- Prepare a Phase II ESA report for submittal by LABOE to the LEA, and possibly CalRecycle, and other appropriate regulatory agencies for their review and approval. To expedite the project, improve efficiency, and realize cost savings, it may be possible to include the Phase II ESA report in the PCLUP (see next bullet).

- Prepare a PCLUP for submittal by LABOE to the LEA, and possibly CalRecycle, and other appropriate regulatory agencies to include the results of the additional Phase II ESA, and information about the planned post-closure land use(s) (e.g., planned construction project). The proposed post closure land use(s) will need to be approved by the LEA and possibly CalRecycle and other regulatory agencies.

16 LIMITATIONS

The environmental services described in this report have been conducted in general accordance with current regulatory guidelines and the standard-of-care exercised by environmental consultants performing similar work in the project area. No warranty, expressed or implied, is made regarding the professional opinions presented in this report. Variations in site conditions may exist and conditions not observed or described in this report may be encountered during subsequent activities. Please also note that this study did not include an evaluation of geotechnical conditions or potential geologic hazards.

Ninyo & Moore's opinions and recommendations regarding environmental conditions, as presented in this report, are based on limited subsurface assessment and chemical analysis. Further assessment of potential adverse environmental impacts from past on-site and/or nearby use of hazardous materials may be accomplished by a more comprehensive assessment. The samples collected and used for testing, and the observations made, are believed to be representative of the area(s) evaluated; however, conditions can vary significantly between sampling locations. Variations in soil and/or groundwater conditions will exist beyond the points explored in this evaluation.

The environmental interpretations and opinions contained in this report are based on the results of laboratory tests and analyses intended to detect the presence and concentration of specific chemical or physical constituents in samples collected from the site. The testing and analyses have been conducted by an independent laboratory which is certified by the State of California to conduct such tests. Ninyo & Moore has no involvement in, or control over, such testing and analysis. Ninyo & Moore, therefore, disclaims responsibility for any inaccuracy in such laboratory results.

Our conclusions, recommendations, and opinions are based on an analysis of the observed site conditions. It should be understood that the conditions of a site could change with time as a result of natural processes or the activities of man at the subject site or nearby sites. In addition, changes to the applicable laws, regulations, codes, and standards of practice may occur due to government action or the broadening of knowledge. The findings of this report may, therefore, be invalidated over time, in part or in whole, by changes over which Ninyo & Moore has no control.

This document is intended to be used only in its entirety. No portion of the document, by itself, is designed to completely represent any aspect of the project described herein. Ninyo & Moore should be contacted if the reader requires any additional information, or has questions regarding content, interpretations presented, or completeness of this document.

This report is intended exclusively for use by the client. Any use or reuse of the findings, conclusions, and/or recommendations of this report by parties other than the client is undertaken at said parties' sole risk.

17 REFERENCES

California Code of Regulations, Title 22, Division 4.5, Chapter 11, Article 3

California Code of Regulations Title 27, Section 21190

California Department of Conservation, Division of Mines and Geology, 1997, Seismic Hazard Zone Report for the Van Nuys 7.5-Minute Quadrangle, Los Angeles County, California: Seismic Hazard Zone Report 08.

California Department of Toxic Substances Control, 2004, Guidance Document for the Implementation of United States Environmental Protection Agency Method 5035: Methodologies for Collection, Preservation, Storage, and Preparation of Soils to be Analyzed for Volatile Organic Compounds, dated November.

California Department of Water Resources, 2003, Bulletin 118, California's Groundwater Update, Chapter 7: South Coast Hydrologic Region.

California Geologic Survey, 2012, Geologic Compilation of Quaternary Surficial Deposits in Southern California Los Angeles, 30' x 60' Quadrangle, dated July.

California State Water Resources Control Board, 2020, GeoTracker website, https://geotracker.waterboards.ca.gov/.

CGS, see California Geologic Survey

City of Los Angeles, 2019, Addendum No. 5 of the City of Los Angeles Stormwater Capture Parks Program, Pre-Design and Design Services, Task Order Solicitation (TOS) No. 25, dated August 2.

County of Los Angeles, Department of Public Works, 2020, Well Measurement Data, Well Number 4898; www.dpw.lacounty.gov/general/wells.

DTSC, see California Department of Toxic Substances Control.

DWR, see California Department of Water Resources.

EPA, see United States Environmental Protection Agency.

Los Angeles Department of Water and Power, Watershed Management Group and City of Los Angeles Sanitation – Watershed Protection Division, 2018, Conceptual Study Report, Strathern Park North, Stormwater Capture Project, dated October.

Los Angeles Regional Water Quality Control Board, 1997, Interim Guidance for Active Soil Gas Investigations, dated February 25.

Nationwide Environmental Title Research, LLC, https://www.historicaerials.com/

Ninyo & Moore 2020a, Revised Proposal for Geotechnical and Environmental Consulting Services, Strathern, Fernangeles, and David M. Gonzales Parks, Stormwater Capture Parks Program, Los Angeles Bureau of Engineering Task Order Solicitation (TOS) No. 25, Los Angeles, California, dated January 23.

Ninyo & Moore 2020b, Geotechnical Evaluation, LABOE TOS No. 25, Stormwater Capture Parks Program, Strathern Park North, 8041 Whitsett Avenue, North Hollywood, California, dated June 12.

SWRCB, see California State Water Resources Control Board.

ULARAW, see Upper Los Angeles River Area Watermaster.

United States Environmental Protection Agency, 2009, Hazardous Waste Characteristics, dated October.

United States Geological Survey, 2018, Topographic Map of Van Nuys Quadrangle, California, Los Angeles County, 7.5 Minute Series: Scale 1:24,000.

Upper Los Angeles River Area Watermaster, 2003, Groundwater Pumping and Spreading Plan for the Upper Los Angeles River Area Los Angeles County, California, 2002-2007 Water Years, dated July.

USGS, see United States Geological Survey.

Wayne Perry, 2012, Additional Site Assessment Report, Shell-Branded Service Station, 12858 Roscoe Boulevard (at Coldwater Canyon), Sun Valley, California, dated July 13.

TABLES

Table 1 – GPS Coordinates - Environmental Borings and Shallow Soil Sample Locations

Boring ID	Latitude (°)	Longitude (°)
B-1	34.217008	-118.406930
B-3	34.216822	-118.406818
P-2	34.217703	-118.407052
P-4	34.21719	-118.407491
P-6	34.216841	-118.406965
Comp-1	34.217762	-118.407961
Comp-2	34.217817	-118.407715
Comp-3	34.217751	-118.406881
Comp-4	34.217142	-118.407436
Comp-5	34.217184	-118.407101
Comp-6	34.217247	-118.406767
Comp-7	34.216751	-118.407061
Comp-8	34.21671	-118.406745

Notes:

GPS - global positioning system

ID - Identification

° - degrees

Table 2 – Analytical Results – Title 22 Metals

Sample ID	Sample Depth (feet bgs)	Date Sample Collected	Title 22 Metals EPA Method 6010B/7471A (mg/kg)																
			Antimony	Arsenic	Barium	Beryllium	Cadmium	Chromium	Cobalt	Copper	Lead	Soluble Lead (WET Method) mg/L	Mercury	Molybdenum	Nickel	Selenium	Silver	Thallium	Vanadium	Zinc
B-1-1'	1	3/25/2020	ND<2.7	ND<0.88	69	ND<0.44	0.50	9.6	5.9	11	22	--	ND<0.13	ND<0.88	7.1	ND<2.7	ND<0.44	ND<2.7	26	46
B-1-2.5'	2.5	3/25/2020	ND<2.9	2.1	150	ND<0.49	1.4	33	9.5	23	**72**	1.4	ND<0.12	1.8	25	ND<2.9	ND<0.49	ND<2.9	63	75
B-3-1'	1	3/25/2020	ND<3.2	3.0	120	ND<0.53	1.1	24	9.0	17	**51**	1.1	ND<0.12	1.5	17	ND<3.2	ND<0.53	ND<3.2	43	68
B-3-2.5'	2.5	3/25/2020	ND<3.0	5.6	180	ND<0.50	1.8	39	10	27	**94**	1.2	ND<0.12	2.0	30	ND<3.0	ND<0.50	ND<3.0	72	85
P-2-1'	1	3/24/2020	ND<3.0	2.1	37	ND<0.50	ND<0.50	6.2	3.8	4.0	6.1	--	ND<0.14	ND<0.99	3.2	ND<3.0	ND<0.50	ND<3.0	26	20
P-2-2.5'	2.5	3/24/2020	ND<3.0	2.4	37	ND<0.50	ND<0.50	5.7	3.6	4.7	3.9	--	ND<0.13	ND<1.0	2.6	ND<3.0	ND<0.50	ND<3.0	30	15
P-4-1'	1	3/24/2020	ND<3.2	6.4	140	ND<0.53	1.5	27	10	23	29	--	ND<0.14	3.7	22	ND<3.2	ND<0.53	ND<3.2	52	80
P-4-2.5'	2.5	3/24/2020	ND<3.0	ND<1.0	130	ND<0.50	0.61	13	8.2	15	23	--	ND<0.14	ND<1.0	9.5	ND<3.0	ND<0.50	3.3	35	67
P-4-10'	10	3/24/2020	ND<3.1	ND<1.0	46	ND<0.52	ND<0.52	23	3.7	4.4	3.0	--	ND<0.14	ND<1.0	4.1	ND<3.1	ND<0.52	ND<3.1	20	20
P-6-1'	1	3/25/2020	ND<2.6	ND<0.85	58	ND<0.43	ND<0.43	7.3	4.8	7.6	19	--	ND<0.12	1.2	5.9	ND<2.6	ND<0.43	ND<2.6	21	44
P-6-2.5'	2.5	3/25/2020	ND<3.0	ND<0.99	57	ND<0.50	ND<0.50	8.0	4.7	8.5	18	--	ND<0.12	1.0	6.3	ND<3.0	ND<0.50	ND<3.0	21	97
COMPOSITE 1-8	1	3/25/2020	ND<3.1	1.6	110	ND<0.52	0.81	17	7.6	17	22	--	ND<0.13	1.7	12	ND<3.1	ND<0.52	ND<3.1	33	70
Hazardous Waste Criteria																				
TTLC (mg/kg)			500	500	10,000	75	100	2,500	8,000	2,500	1,000	NA	20	3,500	2,000	100	500	700	2,400	5,000
STLC (mg/l)			15	5.0	100	0.75	1.0	5	80	25	5.0	5.0	0.2	350	20	1.0	5	7.0	24	250

Notes:

bold text indicates concentration exceeds ten times the STLC value

bgs - below ground surface

EPA - United States Environmental Protection Agency

ID - Identification

mg/kg - milligrams per kilogram

mg/l - milligrams per liter

NA - not applicable

ND< - not detected above the laboratory reporting limit

STLC - Soluble Threshold Limit Concentration

TTLC - Total threshold limit concentration

µg/kg - micrograms per kilogram

mg/l - milligrams per liter

WET - Waste Extraction Test

-- - not analyzed

Table 3 – Analytical Results – Organochlorine Pesticides, Polychlorinated Biphenyls and Chlorinated Herbicides

Sample ID	Sample Depth (feet bgs)	Date Sample Collected	OCPs by EPA Method 8081A (µg/kg)			PCBs by EPA Method 8082 (µg/kg)		CHs by EPA Method 8151A (µg/kg)
			4,4'-DDE	4,4'-DDT	Other OCPs	Aroclor-1254	Other PCBs	
B-1-1'	1	3/25/2020	250	90	ND	ND<50	ND	ND
B-1-2.5'	2.5	3/25/2020	--	--	--	--	--	--
B-3-1'	1	3/25/2020	ND<25	ND<25	ND	1,100	ND	ND
B-3-2.5'	2.5	3/25/2020	--	--	--	--	--	--
P-2-1'	1	3/24/2020	ND<5.0	ND<5.0	ND	ND<50	ND	ND
P-2-2.5'	2.5	3/24/2020	--	--	--	--	--	--
P-4-1'	1	3/24/2020	ND<9.8	ND<9.8	ND	ND<98	ND	ND
P-4-2.5'	2.5	3/24/2020	--	--	--	--	--	--
P-4-10'	10	3/24/2020	--	--	--	--	--	--
P-6-1'	1	3/25/2020	ND<50	ND<50	ND	ND<50	ND	ND
P-6-2.5'	2.5	3/25/2020	--	--	--	--	--	--
COMPOSITE 1-8	1	3/25/2020	45	ND<25	ND	ND<50	ND	ND
Hazardous Waste Criteria								
TTLC (µg/kg)			1,000	1,000	Various	NL	50,000	NL
STLC (µg/l)			100	100	Various	NL	5,000	NL

Notes:

bgs - below ground surface

CHs - Chlorinated Herbicides

EPA - United States Environmental Protection Agency

ID - Identification

NA - not applicable

ND< - not detected above the laboratory reporting limit

OCPs - organochlorine pesticides

PCBs - polychlorinated biphenyls

TTLC - Total threshold limit concentration

µg/kg - micrograms per kilogram

µg/l - micrograms per liter

-- - not analyzed

Table 4 – Analytical Results – Volatile Organic Compounds, Semi-Volatile Organic Compounds, Polynuclear Aromatic Hydrocarbons, Total Petroleum Hydrocarbons and Total Recoverable Petroleum Hydrocarbons

Sample ID	Sample Depth (feet bgs)	Date Sample Collected	VOCs by EPA Method 8260B (µg/kg)	SVOCs by EPA Method 8270C (µg/kg)				PAHs by EPA Method 8270 SIM (µg/kg)	TPH by EPA Method 8015B (mg/kg)		TRPH by EPA Method 1664A (mg/kg)
				bis(2-Ethylhexyl)-phthalate	Fluoranthene	Pyrene	Other SVOCs		TPH C23-C44	Other TPH (C6-C12 & C13-C22)	Total Oil and Grease
B-1-1'	1	3/25/2020	--	--	--	--	--	--	--	--	ND<500
B-1-2.5'	2.5	3/25/2020	--	--	--	--	--	--	--	--	ND<500
B-1-5'	5	3/25/2020	ND	260	250	260	ND	--	27	ND	ND<500
B-3-5'	5	3/25/2020	--	--	--	--	--	--	--	--	ND<500
B-3-10.5'	10.5	3/25/2020	--	--	--	--	--	--	--	--	ND<500
B-3-15'	15	3/25/2020	--	--	--	--	--	--	--	--	ND<500
B-3-20'	20	3/25/2020	ND	ND<250	ND<250	ND<250	ND	--	14	ND	ND<500
P-2-15'	15	3/24/2020	ND	ND<250	ND<250	ND<250	ND	ND	14	ND	ND<500
P-2-20.5'	20.5	3/24/2020	--	--	--	--	--	--	--	--	ND<500
P-2-25'	25	3/24/2020	--	--	--	--	--	--	--	--	ND<500
P-4-5'	5	3/24/2020	--	--	--	--	--	--	--	--	ND<500
P-4-10'	10	3/24/2020	ND	ND<250	ND<250	ND<250	ND	--	ND<10	ND	ND<500
P-4-15'	15	3/24/2020	--	--	--	--	--	--	--	--	ND<500
P-6-5'	5	3/25/2020	--	--	--	--	--	--	--	--	ND<500
P-6-15'	15	3/25/2020	ND	ND<250	ND<250	ND<250	ND	--	52	ND	ND<500
P-6-25'	25	3/25/2020	--	--	--	--	--	--	--	--	ND<500
COMPOSITE 1-8	1	3/25/2020	ND	ND<250	ND<250	ND<250	ND	ND	17	ND	ND<500
Hazardous Waste Criteria											
TTLC (µg/kg)			Various	NL	NL	NL	Various	NL	NL	NL	NL
STLC (µg/l)			Various	NL	NL	NL	Various	NL	NL	NL	NL

Notes:
bgs - below ground surface
EPA - United States Environmental Protection Agency
ID - Identification
mg/kg - milligrams per kilogram
ND< - not detected above the laboratory reporting limit
NL - not listed
PAHs - polyaromatic aromatic hydrocarbons
SIM - Selective Ion Monitoring
SVOCs - semi-volatile organic compounds
STLC - Soluble Threshold Limit Concentration
TCLP - Toxicity Characteristic Leaching Procedure
TPH - total petroleum hydrocarbons
TRPH - total recoverable petroleum hydrocarbons
TTLC - Total threshold limit concentration
VOCs - volatile organic compounds
µg/kg - micrograms per kilogram
µg/l - micrograms per liter
-- - not analyzed

FIGURES

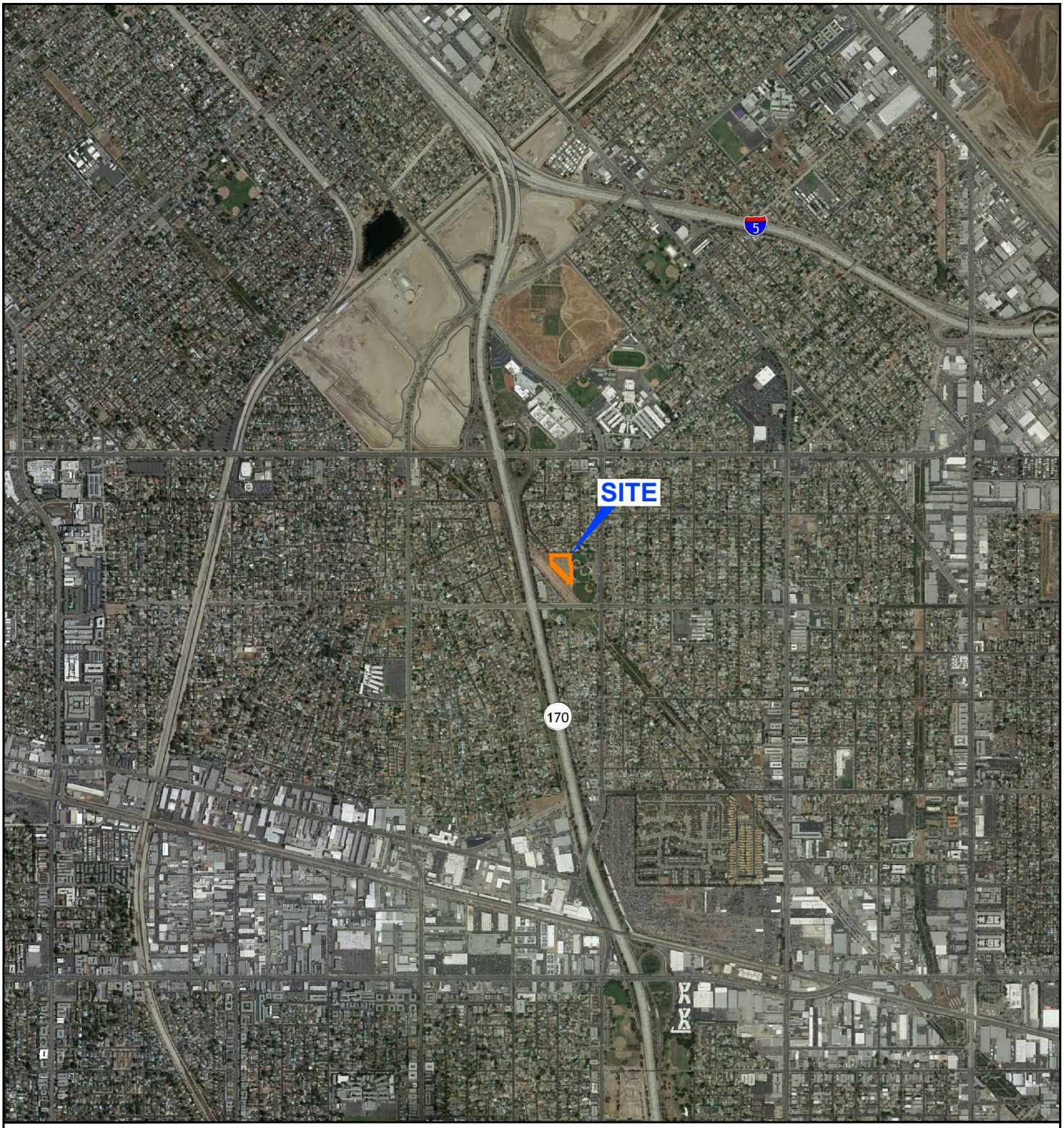

NOTE: DIMENSIONS, DIRECTIONS AND LOCATIONS ARE APPROXIMATE. I REFERENCE: GOOGLE EARTH, 2020.

N

FEET
0 2,000 4,000

FIGURE 1

SITE LOCATION

LABOE TOS NO. 25 - STRATHERN PARK
NORTH HOLLYWOOD, CALIFORNIA

211294004 I 6/20

Ninyo & Moore
Geotechnical & Environmental Sciences Consultants

210294004_SL.dwg 06/01/2020 JDP

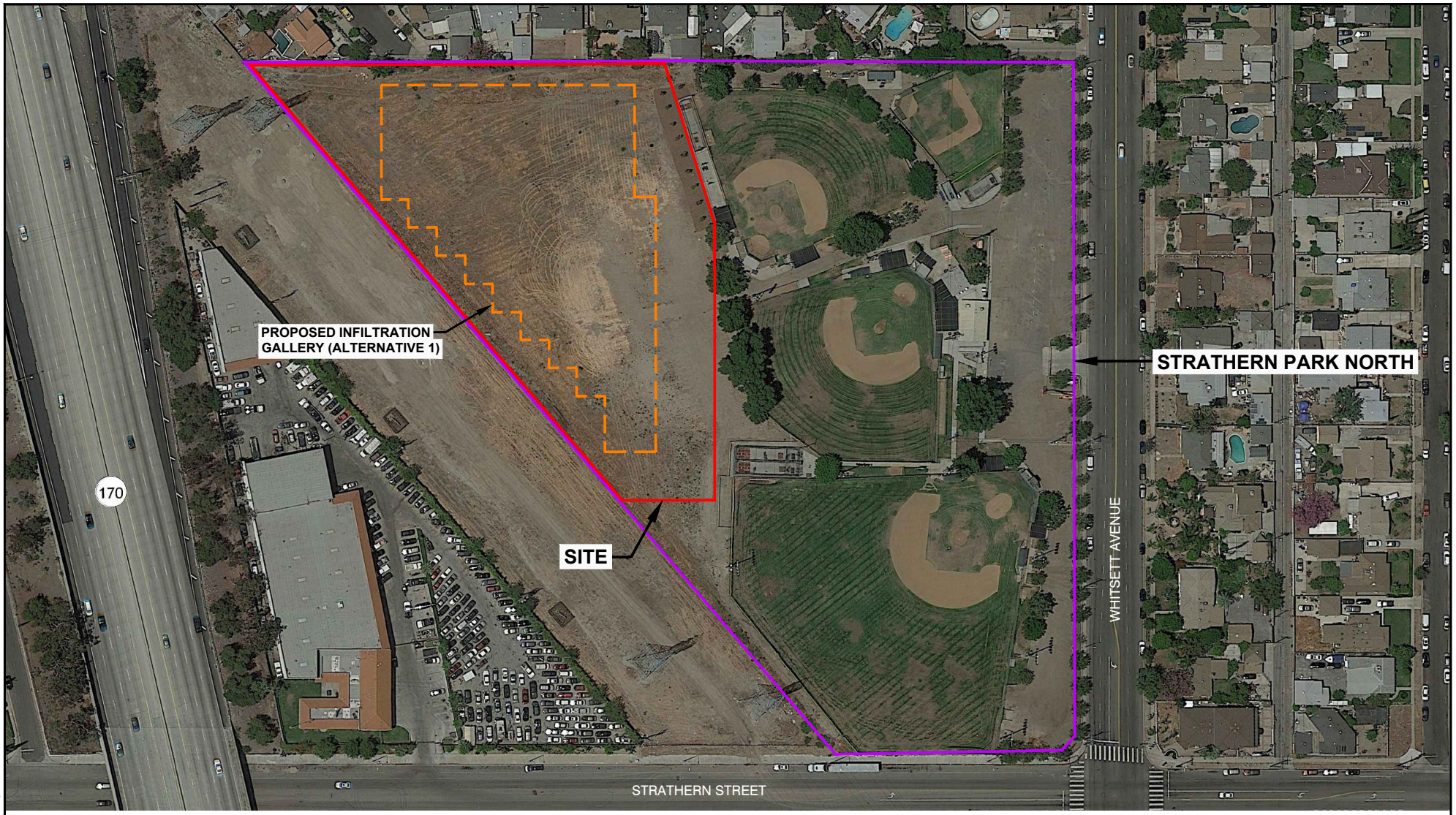

211294001_SV.dwg 06/07/2020 JDP

NOTE: DIMENSIONS, DIRECTIONS AND LOCATIONS ARE APPROXIMATE. I REFERENCE: GOOGLE EARTH, 2020.

N

FEET

0 150 300

FIGURE 2

SITE AND VICINITY

LABOE TOS NO. 25 - STRATHERN PARK NORTH
NORTH HOLLYWOOD, CALIFORNIA

211294001 I 6/20

Ninyo & Moore
Geotechnical & Environmental Sciences Consultants



NOTE: DIMENSIONS, DIRECTIONS AND LOCATIONS ARE APPROXIMATE. I REFERENCE: CDM SMITH, 2020.

211294004_SLO.dwg 06/01/2020 JDP

FIGURE 3

Ninyo & Moore
Geotechnical & Environmental Sciences Consultants

SITE LAYOUT

LABOE TOS NO. 25 - STRATHERN PARK
NORTH HOLLYWOOD, CALIFORNIA

211294004 I 6/20

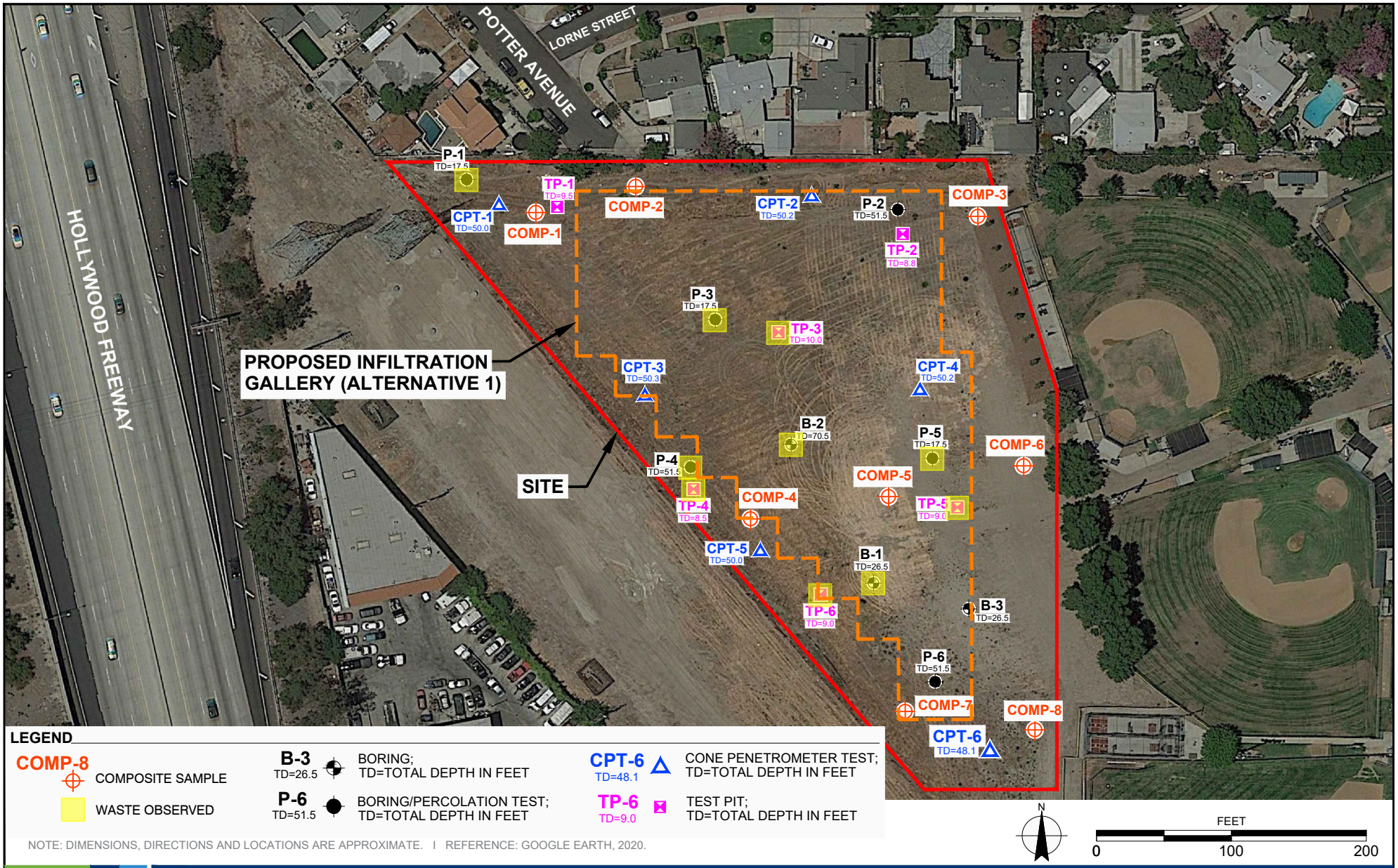

NOTE: DIMENSIONS, DIRECTIONS AND LOCATIONS ARE APPROXIMATE. I REFERENCE: GOOGLE EARTH, 2020.

211294001_SPBTPL.dwg 06/07/2020 JDP

FIGURE 4

BORING, TEST PIT, PERCOLATION TEST, AND CPT LOCATIONS

LABOE TOS NO. 25 - STRATHERN PARK NORTH
NORTH HOLLYWOOD, CALIFORNIA

211294001 I 6/20

Ninyo & Moore
Geotechnical & Environmental Sciences Consultants

APPENDIX A

Boring Logs, Test Pit Logs, and Photographs

Boring Logs

Soil Classification Chart Per ASTM D 2488

Primary Divisions			Secondary Divisions	
			Group Symbol	Group Name
COARSE-GRAINED SOILS more than 50% retained on No. 200 sieve	**GRAVEL** more than 50% of coarse fraction retained on No. 4 sieve	CLEAN GRAVEL less than 5% fines	GW	well-graded GRAVEL
			GP	poorly graded GRAVEL
		GRAVEL with DUAL CLASSIFICATIONS 5% to 12% fines	GW-GM	well-graded GRAVEL with silt
			GP-GM	poorly graded GRAVEL with silt
			GW-GC	well-graded GRAVEL with clay
			GP-GC	poorly graded GRAVEL with
		GRAVEL with FINES more than 12% fines	GM	silty GRAVEL
			GC	clayey GRAVEL
			GC-GM	silty, clayey GRAVEL
	SAND 50% or more of coarse fraction passes No. 4 sieve	CLEAN SAND less than 5% fines	SW	well-graded SAND
			SP	poorly graded SAND
		SAND with DUAL CLASSIFICATIONS 5% to 12% fines	SW-SM	well-graded SAND with silt
			SP-SM	poorly graded SAND with silt
			SW-SC	well-graded SAND with clay
			SP-SC	poorly graded SAND with clay
		SAND with FINES more than 12% fines	SM	silty SAND
			SC	clayey SAND
			SC-SM	silty, clayey SAND
FINE-GRAINED SOILS 50% or more passes No. 200 sieve	**SILT and CLAY** liquid limit less than 50%	INORGANIC	CL	lean CLAY
			ML	SILT
			CL-ML	silty CLAY
		ORGANIC	OL (PI > 4)	organic CLAY
			OL (PI < 4)	organic SILT
	SILT and CLAY liquid limit 50% or more	INORGANIC	CH	fat CLAY
			MH	elastic SILT
		ORGANIC	OH (plots on or above "A"-line)	organic CLAY
			OH (plots below "A"-line)	organic SILT
	Highly Organic Soils		PT	Peat

Grain Size

Description		Sieve Size	Grain Size	Approximate Size
Boulders		> 12"	> 12"	Larger than basketball-sized
Cobbles		3 - 12"	3 - 12"	Fist-sized to basketball-sized
Gravel	Coarse	3/4 - 3"	3/4 - 3"	Thumb-sized to fist-sized
	Fine	#4 - 3/4"	0.19 - 0.75"	Pea-sized to thumb-sized
Sand	Coarse	#10 - #4	0.079 - 0.19"	Rock-salt-sized to pea-sized
	Medium	#40 - #10	0.017 - 0.079"	Sugar-sized to rock-salt-sized
	Fine	#200 - #40	0.0029 - 0.017"	Flour-sized to sugar-sized
Fines		Passing #200	< 0.0029"	Flour-sized and smaller

Plasticity Chart

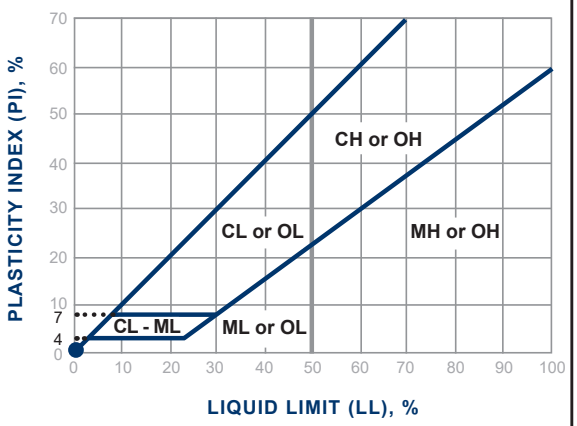

Apparent Density - Coarse-Grained Soil

Apparent Density	Spooling Cable or Cathead		Automatic Trip Hammer	
	SPT (blows/foot)	Modified Split Barrel (blows/foot)	SPT (blows/foot)	Modified Split Barrel (blows/foot)
Very Loose	≤ 4	≤ 8	≤ 3	≤ 5
Loose	5 - 10	9 - 21	4 - 7	6 - 14
Medium Dense	11 - 30	22 - 63	8 - 20	15 - 42
Dense	31 - 50	64 - 105	21 - 33	43 - 70
Very Dense	> 50	> 105	> 33	> 70

Consistency - Fine-Grained Soil

Consis-tency	Spooling Cable or Cathead		Automatic Trip Hammer	
	SPT (blows/foot)	Modified Split Barrel (blows/foot)	SPT (blows/foot)	Modified Split Barrel (blows/foot)
Very Soft	< 2	< 3	< 1	< 2
Soft	2 - 4	3 - 5	1 - 3	2 - 3
Firm	5 - 8	6 - 10	4 - 5	4 - 6
Stiff	9 - 15	11 - 20	6 - 10	7 - 13
Very Stiff	16 - 30	21 - 39	11 - 20	14 - 26
Hard	> 30	> 39	> 20	> 26

Ninyo & Moore
Geotechnical & Environmental Sciences Consultants

USCS METHOD OF SOIL CLASSIFICATION

BORING LOG EXPLANATION SHEET

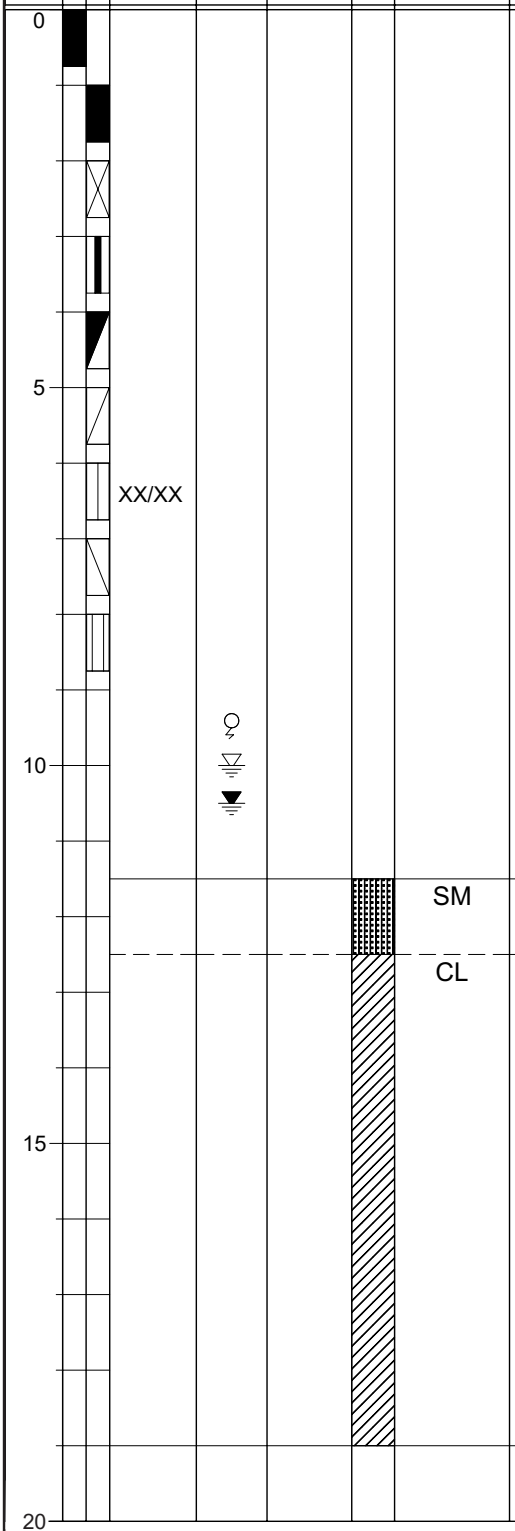

Bulk sample.

Modified split-barrel drive sampler.

No recovery with modified split-barrel drive sampler.

Sample retained by others.

Standard Penetration Test (SPT).

No recovery with a SPT.

Shelby tube sample. Distance pushed in inches/length of sample recovered in inches.

No recovery with Shelby tube sampler.

Continuous Push Sample.

Seepage.

Groundwater encountered during drilling.

Groundwater measured after drilling.

MAJOR MATERIAL TYPE (SOIL):

Solid line denotes unit change.

Dashed line denotes material change.

Attitudes: Strike/Dip
b: Bedding
c: Contact
j: Joint
f: Fracture
F: Fault
cs: Clay Seam
s: Shear
bss: Basal Slide Surface
sf: Shear Fracture
sz: Shear Zone
sbs: Shear Bedding Surface

The total depth line is a solid line that is drawn at the bottom of the boring.

DATE DRILLED 3/25/2020 BORING NO. B-1

GROUND ELEVATION 810' ± (MSL) SHEET 1 OF 1

METHOD OF DRILLING 8" Hollow-Stem Auger (Baja Exploration)

DRIVE WEIGHT 140 lbs. (Auto. Trip Hammer) DROP 30"

SAMPLED BY KMH LOGGED BY KMB REVIEWED BY GMC

DEPTH (feet)	SAMPLES (Bulk / Driven)	BLOWS/FOOT	MOISTURE (%)	DRY DENSITY (PCF)	PID READING (PPM)	SYMBOL	CLASSIFICATION U.S.C.S.	DESCRIPTION/INTERPRETATION
0					3.4		SC	FILL: Brown, moist, loose, clayey SAND; trace gravel and organic material.
					3.1		SM	FILL AND MINOR WASTES: Brown, moist, loose, silty SAND with gravel; few pieces of asphalt concrete.
		11	10.1	97.9	5.7			@ 5': LEL - 0%; O_2 - 20.5%, CO - 7 ppm, H_2S - 0.0 ppm
10		17			2.8			Light brown. @ 10': LEL - 0%; O_2 - 19.1%, CO - 7 ppm, H_2S - 0.0 ppm
							SP	ALLUVIUM: Light brown, moist, medium dense, poorly graded SAND; trace gravel.
		20	2.0	110.7	1.4			@ 15': LEL - 0%; O_2 - 17.5%, CO - 7 ppm, H_2S - 0.0 ppm
20		17			2.1			@ 20': LEL - 0%; O_2 - 17.7%, CO - 11 pm, H_2S - 0.0 ppm
		35			3.0			@ 25': LEL - 0%; O_2 - 17.8%, CO - 5 ppm, H_2S - 0.0 ppm
30								Total Depth = 26.5 feet. Groundwater was not encountered during drilling. Backfilled with cement-bentonite grout on 3/25/20. Notes: Groundwater, though not encountered at the time of drilling, may rise to a higher level due to seasonal variations in precipitation and several other factors as discussed in the report. The ground elevation shown above is an estimation only. It is based on our interpretations of published maps and other documents reviewed for the purposes of this evaluation. It is not sufficiently accurate for preparing construction bids and design documents.
40								

FIGURE A- 1

Ninyo & Moore
Geotechnical & Environmental Sciences Consultants

LABOE TOS NO. 25 - STRATHERN PARK NORTH
NORTH HOLLYWOOD, CALIFORNIA

DATE DRILLED 3/26/2020 BORING NO. B-2

GROUND ELEVATION 810' ± (MSL) SHEET 1 OF 2

METHOD OF DRILLING 8" Hollow-Stem Auger (Baja Exploration)

DRIVE WEIGHT 140 lbs. (Auto. Trip Hammer) DROP 30"

SAMPLED BY KMH LOGGED BY KMB REVIEWED BY GMC

DEPTH (feet)	SAMPLES (Bulk / Driven)	BLOWS/FOOT	MOISTURE (%)	DRY DENSITY (PCF)	PID READING (PPM)	SYMBOL	CLASSIFICATION U.S.C.S.	DESCRIPTION/INTERPRETATION
0							SC	FILL: Brown, moist, loose, clayey SAND; few gravel and organics.
							SP-SM	FILL AND MINOR WASTES: Light brown to brown, moist, medium dense, poorly graded SAND with silt and gravel; cobbles; pieces of concrete and asphalt concrete.
		20						
10		47	3.1	120.8				Dark brown; dense; little gravel; pieces of asphalt concrete.
							SP	ALLUVIUM: Light brown, moist, dense, poorly graded SAND.
							SM	Light brown, moist, medium dense, silty SAND; trace gravel.
		19						
							SP	Light brown, moist, dense, poorly graded SAND; trace gravel.
20		40						
		23						Few gravel.
30		50/6"						Very dense; interbeds of poorly graded gravel with sand.
		30						Dense.
40								

FIGURE A- 2A

Ninyo & Moore
Geotechnical & Environmental Sciences Consultants

LABOE TOS NO. 25 - STRATHERN PARK NORTH
NORTH HOLLYWOOD, CALIFORNIA

DATE DRILLED 3/26/2020 BORING NO. B-2

GROUND ELEVATION 810' ± (MSL) SHEET 2 OF 2

METHOD OF DRILLING 8" Hollow-Stem Auger (Baja Exploration)

DRIVE WEIGHT 140 lbs. (Auto. Trip Hammer) DROP 30"

SAMPLED BY KMH LOGGED BY KMB REVIEWED BY GMC

DEPTH (feet)	SAMPLES (Bulk / Driven)	BLOWS/FOOT	MOISTURE (%)	DRY DENSITY (PCF)	PID READING (PPM)	SYMBOL	CLASSIFICATION U.S.C.S.	DESCRIPTION/INTERPRETATION
40		52					SM	ALLUVIUM: (Continued) Light brown, moist, dense, silty SAND.
		20					SP	Light brown, moist, medium dense, poorly graded SAND; few gravel.
							SM	Brown, moist, medium dense, silty SAND.
50		33	12.7	115.2				
		50/5"						Light brown; very dense; few to little gravel.
60		50/6"						Brown; little to some gravel.
		50/6"						Light brown; little to some gravel.
70		50/6"						Brown. Total Depth = 70.5 feet. Groundwater was not encountered during drilling. Backfilled with cement-bentonite on 3/26/20.
80								Notes: Groundwater, though not encountered at the time of drilling, may rise to a higher level due to seasonal variations in precipitation and several other factors as discussed in the report. The ground elevation shown above is an estimation only. It is based on our interpretations of published maps and other documents reviewed for the purposes of this evaluation. It is not sufficiently accurate for preparing construction bids and design documents.

DATE DRILLED 3/25/2020 BORING NO. B-3

GROUND ELEVATION 810' ± (MSL) SHEET 1 OF 1

METHOD OF DRILLING 8" Hollow-Stem Auger (Baja Exploration)

DRIVE WEIGHT 140 lbs. (Auto. Trip Hammer) DROP 30"

SAMPLED BY KMH LOGGED BY KMB REVIEWED BY GMC

DEPTH (feet)	SAMPLES (Bulk / Driven)	BLOWS/FOOT	MOISTURE (%)	DRY DENSITY (PCF)	PID READING (PPM)	SYMBOL	CLASSIFICATION U.S.C.S.	DESCRIPTION/INTERPRETATION
0					2.4		SM	FILL: Brown, moist, loose, silty SAND; trace gravel and organics.
					1.7		SC	Brown, moist, loose, clayey SAND; trace gravel; cobbles.
		6	7.7	96.6	3.3		SP-SM	ALLUVIUM: Brown, moist, loose, poorly graded SAND with silt and gravel. @ 5': LEL - 0%; O_2 - 20.9%, CO - 0 ppm; H_2S - 0.0 ppm
10		16	-		4.1			Light brown; medium dense; trace gravel. @ 10': LEL - 0%; O_2 - 20.5%; CO - 0 ppm; H_2S - 0.0 ppm
		29	-		3.3			@ 15': LEL - 0%; O_2 - 17.5%; CO - 14 ppm; H_2S - 0. 0 ppm
20		20	-		6.3			@ 20': LEL - 0%; O_2 - 18.3%, CO - 10 ppm, H_2S - 0.0 ppm
		25	-		2.2			@ 25': LEL - 0%; O_2 - 17.7%, CO - 10 ppm, H_2S - 0.0 ppm
30								Total Depth = 26.5 feet. Groundwater was not encountered during drilling. Backfilled with cement-bentonite grout on 3/25/20. Notes: Groundwater, though not encountered at the time of drilling, may rise to a higher level due to seasonal variations in precipitation and several other factors as discussed in the report. The ground elevation shown above is an estimation only. It is based on our interpretations of published maps and other documents reviewed for the purposes of this evaluation. It is not sufficiently accurate for preparing construction bids and design documents.
40								

FIGURE A- 3

Ninyo & Moore
Geotechnical & Environmental Sciences Consultants

LABOE TOS NO. 25 - STRATHERN PARK NORTH
NORTH HOLLYWOOD, CALIFORNIA

DATE DRILLED 3/25/2020 BORING NO. P-1

GROUND ELEVATION 806' ± (MSL) SHEET 1 OF 1

METHOD OF DRILLING 8" Hollow-Stem Auger (Baja Exploration)

DRIVE WEIGHT 140 lbs. (Auto. Trip Hammer) DROP 30"

SAMPLED BY KMB LOGGED BY KMB REVIEWED BY GMC

DEPTH (feet)	SAMPLES Bulk	SAMPLES Driven	BLOWS/FOOT	MOISTURE (%)	DRY DENSITY (PCF)	PID READING (PPM)	SYMBOL	CLASSIFICATION U.S.C.S.	DESCRIPTION/INTERPRETATION
0								SC	FILL: Brown, moist, loose, clayey SAND; few organics.
								SP-SC	FILL AND MINOR WASTES: Brown, moist, loose, poorly graded SAND with clay; trace gravel; pieces of brick and concrete.
								SP	ALLUVIUM: Light brown, moist, loose, poorly graded SAND; trace gravel.
			6					SM	Brown, moist, loose, silty SAND.
								SW-SM	Brown, moist, medium dense, well-graded SAND with silt; few gravel.
10			28	5.3	111.1			SP	Light brown, moist, medium dense, poorly graded SAND.
			20						Few gravel.
20									Total Depth = 17.5 feet. Groundwater was not encountered during drilling. In-situ percolation testing performed on 4/15/20. Backfilled with cement-bentonite grout on 4/16/20. Notes: Groundwater, though not encountered at the time of drilling, may rise to a higher level due to seasonal variations in precipitation and several other factors as discussed in the report. The ground elevation shown above is an estimation only. It is based on our interpretations of published maps and other documents reviewed for the purposes of this evaluation. It is not sufficiently accurate for preparing construction bids and design documents.
30									
40									

FIGURE A- 4

Ninyo & Moore
Geotechnical & Environmental Sciences Consultants

LABOE TOS NO. 25 - STRATHERN PARK NORTH
NORTH HOLLYWOOD, CALIFORNIA

DATE DRILLED 3/24/2020 BORING NO. P-2

GROUND ELEVATION 808' ± (MSL) SHEET 1 OF 2

METHOD OF DRILLING 8" Hollow-Stem Auger (Baja Exploration)

DRIVE WEIGHT 140 lbs. (Auto. Trip Hammer) DROP 30"

SAMPLED BY KMH LOGGED BY KMB REVIEWED BY GMC

DEPTH (feet)	SAMPLES (Bulk / Driven)	BLOWS/FOOT	MOISTURE (%)	DRY DENSITY (PCF)	PID READING (PPM)	SYMBOL	CLASSIFICATION U.S.C.S.	DESCRIPTION/INTERPRETATION
0					1.0		CL	FILL: Brown, moist, soft to firm, sandy lean CLAY; few gravel.
							SP	Brown to light brown, moist, loose, poorly graded SAND; few gravel.
					0.7			
		24			1.2			Light brown; medium dense; interbeds of gravel; cobbles. @ 5': LEL - 0%; O_2 - 20.9%, CO - 0 ppm, H_2S - 0.0 ppm
10		19			2.2			@ 10': LEL - 0%; O_2 - 20.7%, CO - 0 ppm; H_2S - 0.0 ppm
							SP-SM	ALLUVIUM: Light brown, moist, medium dense, poorly graded SAND with silt; few gravel.
							SP	Light brown, moist, medium dense, poorly graded SAND; few gravel.
		31	3.3	104.9	3.0			@ 15': LEL - 0%; O_2 - 19.9%, CO - 0 ppm; H_2S - 0.0 ppm
20		31			2.4			Dense. @ 20': LEL - 0%; O_2 - 19. 7%, CO - 4 ppm, H_2S - 0.0 ppm
		59			2.7			Interbeds of poorly graded gravel with sand. @ 25': LEL - 0%; O_2 - 19.5%, CO - 4 ppm, H_2S - 0.0 ppm
30		28						
							SP-SM	Light brown, moist, dense, poorly graded SAND with silt; few gravel.
		62						
40								

FIGURE A- 5A

Ninyo & Moore
Geotechnical & Environmental Sciences Consultants

LABOE TOS NO. 25 - STRATHERN PARK NORTH
NORTH HOLLYWOOD, CALIFORNIA

DATE DRILLED 3/24/2020 BORING NO. P-2

GROUND ELEVATION 808' ± (MSL) SHEET 2 OF 2

METHOD OF DRILLING 8" Hollow-Stem Auger (Baja Exploration)

DRIVE WEIGHT 140 lbs. (Auto. Trip Hammer) DROP 30"

SAMPLED BY KMH LOGGED BY KMB REVIEWED BY GMC

DEPTH (feet)	SAMPLES Bulk	SAMPLES Driven	BLOWS/FOOT	MOISTURE (%)	DRY DENSITY (PCF)	PID READING (PPM)	SYMBOL	CLASSIFICATION U.S.C.S.	DESCRIPTION/INTERPRETATION
40			34					SP-SM	ALLUVIUM: (Continued) Light brown, moist, very dense, poorly graded SAND with silt; trace gravel.
			53						Dense.
50			33						Few to little gravel.
									Total Depth = 51.5 feet. Groundwater was not encountered during drilling. In-situ percolation testing performed on 4/16/20. Backfilled with cement-bentonite grout on 4/16/20. Notes: Groundwater, though not encountered at the time of drilling, may rise to a higher level due to seasonal variations in precipitation and several other factors as discussed in the report. The ground elevation shown above is an estimation only. It is based on our interpretations of published maps and other documents reviewed for the purposes of this evaluation. It is not sufficiently accurate for preparing construction bids and design documents.
60									
70									
80									

DATE DRILLED 3/25/2020 BORING NO. P-3

GROUND ELEVATION 810' ± (MSL) SHEET 1 OF 1

METHOD OF DRILLING 8" Hollow-Stem Auger (Baja Exploration)

DRIVE WEIGHT 140 lbs. (Auto. Trip Hammer) DROP 30"

SAMPLED BY KMH LOGGED BY KMB REVIEWED BY GMC

DEPTH (feet)	SAMPLES Bulk	SAMPLES Driven	BLOWS/FOOT	MOISTURE (%)	DRY DENSITY (PCF)	PID READING (PPM)	SYMBOL	CLASSIFICATION U.S.C.S.	DESCRIPTION/INTERPRETATION
0								SC	FILL: Brown, moist, loose, clayey SAND; few organics.
								SC	FILL AND MINOR WASTE: Brown, moist, loose to medium dense, clayey SAND; trace gravel; cobbles; pieces of brick, asphalt concrete, and concrete.
			78	5.8	120.6			SP	ALLUVIUM: Light brown, moist, very dense, poorly graded SAND; trace gravel.
10			-						Blow counts not recorded.
			51						Dense.
20									Total Depth = 17.5 feet. Groundwater was not encountered during drilling. Base of waste not evaluated. In-situ percolation testing performed on 4/16/20. Backfilled with cement-bentonite grout on 4/16/20. Notes: Groundwater, though not encountered at the time of drilling, may rise to a higher level due to seasonal variations in precipitation and several other factors as discussed in the report. The ground elevation shown above is an estimation only. It is based on our interpretations of published maps and other documents reviewed for the purposes of this evaluation. It is not sufficiently accurate for preparing construction bids and design documents.
30									
40									

FIGURE A- 6

Ninyo & Moore
Geotechnical & Environmental Sciences Consultants

LABOE TOS NO. 25 - STRATHERN PARK NORTH
NORTH HOLLYWOOD, CALIFORNIA

DATE DRILLED 3/24/2020 BORING NO. P-4

GROUND ELEVATION 809' ± (MSL) SHEET 1 OF 2

METHOD OF DRILLING 8" Hollow-Stem Auger (Baja Exploration)

DRIVE WEIGHT 140 lbs. (Auto. Trip Hammer) DROP 30"

SAMPLED BY KMH LOGGED BY KMB REVIEWED BY GMC

DEPTH (feet)	SAMPLES (Bulk / Driven)	BLOWS/FOOT	MOISTURE (%)	DRY DENSITY (PCF)	PID READING (PPM)	SYMBOL	CLASSIFICATION U.S.C.S.	DESCRIPTION/INTERPRETATION
0					1.2 2.6		ML	FILL: Brown, moist, loose, sandy SILT; few to little gravel; trace organics.
		21			4.0		SP	FILL AND MINOR WASTE: Brown, medium dense, poorly graded SAND; trace gravel; cobbles; pieces of asphalt concrete. @ 5': LEL - 0%; O_2 - 20.9%, CO - 0 ppm, H_2S - 0.0 ppm
10		30			5.8		SP	ALLUVIUM: Light brown, moist, medium dense, poorly graded SAND; few to little gravel. @ 10': LEL - 0%; O_2 - 19.2%, CO - 0 ppm, H_2S - 0.0 ppm
		44			4.9			Dense. @ 15': LEL - 0%; O_2 - 18.2%, CO - 5 ppm, H_2S - 0.0 ppm
20		39			2.7			Medium dense. @ 20': LEL - 0%; O_2 - 19.2%, CO - 7 ppm, H_2S - 0.0 ppm
		54			2.5			Dense. @ 25': LEL - 0%; O_2 - 20.3%, CO - 4 ppm, H_2S - 0.0 ppm
30		68			-			
		77/8"			-			Very dense; possible cobbles/boulders.
40								

FIGURE A- 7A

Ninyo & Moore
Geotechnical & Environmental Sciences Consultants

LABOE TOS NO. 25 - STRATHERN PARK NORTH
NORTH HOLLYWOOD, CALIFORNIA

DATE DRILLED 3/24/2020 BORING NO. P-4

GROUND ELEVATION 809' ± (MSL) SHEET 2 OF 2

METHOD OF DRILLING 8" Hollow-Stem Auger (Baja Exploration)

DRIVE WEIGHT 140 lbs. (Auto. Trip Hammer) DROP 30"

SAMPLED BY KMH LOGGED BY KMB REVIEWED BY GMC

DEPTH (feet)	SAMPLES Bulk	SAMPLES Driven	BLOWS/FOOT	MOISTURE (%)	DRY DENSITY (PCF)	PID READING (PPM)	SYMBOL	CLASSIFICATION U.S.C.S.	DESCRIPTION/INTERPRETATION
40			50/6"			-		SP	ALLUVIUM: (Continued) Light brown, moist, very dense, poorly graded SAND; trace gravel.
			50/6"			-			Few to little gravel.
50			37			-		ML	Brown, moist, medium dense, sandy SILT; trace gravel.
									Total Depth = 51.5 feet. Groundwater was not encountered during drilling. In-situ percolation testing performed on 4/15/20. Backfilled with cement-bentonite grout on 4/16/20. Notes: Groundwater, though not encountered at the time of drilling, may rise to a higher level due to seasonal variations in precipitation and several other factors as discussed in the report. The ground elevation shown above is an estimation only. It is based on our interpretations of published maps and other documents reviewed for the purposes of this evaluation. It is not sufficiently accurate for preparing construction bids and design documents.
60									
70									
80									

DATE DRILLED 3/25/2020 BORING NO. P-5

GROUND ELEVATION 810' ± (MSL) SHEET 1 OF 1

METHOD OF DRILLING 8" Hollow-Stem Auger (Baja Exploration)

DRIVE WEIGHT 140 lbs. (Auto. Trip Hammer) DROP 30"

SAMPLED BY KMB LOGGED BY KMB REVIEWED BY GMC

DEPTH (feet)	SAMPLES Bulk	SAMPLES Driven	BLOWS/FOOT	MOISTURE (%)	DRY DENSITY (PCF)	PID READING (PPM)	SYMBOL	CLASSIFICATION U.S.C.S.	DESCRIPTION/INTERPRETATION
0								SC	FILL: Brown, moist, firm, clayey SAND; trace organics.
								SM	FILL AND MINOR WASTE: Brown, moist, very loose, silty SAND with gravel; cobbles; few pieces of brick and asphalt concrete.
			5	10.0	95.1				
								SP	ALLUVIUM: Light brown, moist, medium dense, poorly graded SAND; trace gravel.
10			13						
			-						Blow counts not recorded.
20									Total Depth = 17.5 feet. Groundwater was not encountered during drilling. In-situ percolation testing performed on 4/15/20. Backfilled with cement-bentonite grout on 4/16/20. Notes: Groundwater, though not encountered at the time of drilling, may rise to a higher level due to seasonal variations in precipitation and several other factors as discussed in the report. The ground elevation shown above is an estimation only. It is based on our interpretations of published maps and other documents reviewed for the purposes of this evaluation. It is not sufficiently accurate for preparing construction bids and design documents.
30									
40									

FIGURE A- 8

Ninyo & Moore
Geotechnical & Environmental Sciences Consultants

LABOE TOS NO. 25 - STRATHERN PARK NORTH
NORTH HOLLYWOOD, CALIFORNIA

211294004 | 6/20

DATE DRILLED 3/25/2020 BORING NO. P-6

GROUND ELEVATION 810' ± (MSL) SHEET 1 OF 2

METHOD OF DRILLING 8" Hollow-Stem Auger (Baja Exploration)

DRIVE WEIGHT 140 lbs. (Auto. Trip Hammer) DROP 30"

SAMPLED BY KMH LOGGED BY KMB REVIEWED BY GMC

DEPTH (feet)	SAMPLES (Bulk / Driven)	BLOWS/FOOT	MOISTURE (%)	DRY DENSITY (PCF)	PID READING (PPM)	SYMBOL	CLASSIFICATION U.S.C.S.	DESCRIPTION/INTERPRETATION
0					1.5		SC	FILL: Brown, moist, loose, clayey SAND; trace gravel and organics.
					1.2			
							SM	Brown, moist, medium dense, silty SAND; trace gravel; cobbles.
		13			2.8		SP	Light brown, moist, medium dense, poorly graded SAND; trace gravel. @ 5': LEL - 0%; O_2 - 20.9%, CO - 4 ppm, H_2S - 0.0 ppm
							SP	ALLUVIUM: Light brown, moist, medium dense, poorly graded SAND.
10		13			1.6			@ 10': LEL - 0%; O_2 - 20.9%, CO - 9 ppm, H_2S - 0.0 ppm
		-	2.8	108.6	3.4			Few to little gravel; blow counts not recorded. @ 15': LEL - 0%; O_2 - 20. 9%, CO - 0 ppm, H_2S - 0.0 ppm
20		21			1.9			Dense; trace gravel. @ 20': LEL - 0%; O_2 - 20.9%, CO - 0 ppm, H_2S - 0.0 ppm
		24			2.9			Medium dense. @ 25': LEL - 0%; O_2 - 19.3%, CO - 5 ppm, H_2S - 0.0 ppm
30		24			-			Dense.
		38	3.6	109.5	-			Medium dense; trace gravel.
40								

FIGURE A- 9A

Ninyo & Moore
Geotechnical & Environmental Sciences Consultants

LABOE TOS NO. 25 - STRATHERN PARK NORTH
NORTH HOLLYWOOD, CALIFORNIA

DATE DRILLED 3/25/2020 BORING NO. P-6

GROUND ELEVATION 810' ± (MSL) SHEET 2 OF 2

METHOD OF DRILLING 8" Hollow-Stem Auger (Baja Exploration)

DRIVE WEIGHT 140 lbs. (Auto. Trip Hammer) DROP 30"

SAMPLED BY KMH LOGGED BY KMB REVIEWED BY GMC

DEPTH (feet)	SAMPLES Bulk	SAMPLES Driven	BLOWS/FOOT	MOISTURE (%)	DRY DENSITY (PCF)	PID READING (PPM)	SYMBOL	CLASSIFICATION U.S.C.S.	DESCRIPTION/INTERPRETATION
40			22			-		SP	ALLUVIUM: (Continued) Light brown, moist, dense, poorly graded SAND; trace gravel; few coarse sand.
			27					SP-SM	Light brown, moist, medium dense, poorly graded SAND with silt and gravel.
50			52						Very dense; few to little gravel.
									Total Depth = 51.5 feet. Groundwater was not encountered during drilling. In-situ percolation testing performed on 4/15/20. Backfilled with cement-bentonite grout on 4/16/20. Notes: Groundwater, though not encountered at the time of drilling, may rise to a higher level due to seasonal variations in precipitation and several other factors as discussed in the report. The ground elevation shown above is an estimation only. It is based on our interpretations of published maps and other documents reviewed for the purposes of this evaluation. It is not sufficiently accurate for preparing construction bids and design documents.
60									
70									
80									

Test Pit Logs

Soil Classification Chart Per ASTM D 2488

Primary Divisions			Secondary Divisions	
			Group Symbol	Group Name
COARSE-GRAINED SOILS more than 50% retained on No. 200 sieve	**GRAVEL** more than 50% of coarse fraction retained on No. 4 sieve	CLEAN GRAVEL less than 5% fines	GW	well-graded GRAVEL
			GP	poorly graded GRAVEL
		GRAVEL with DUAL CLASSIFICATIONS 5% to 12% fines	GW-GM	well-graded GRAVEL with silt
			GP-GM	poorly graded GRAVEL with silt
			GW-GC	well-graded GRAVEL with clay
			GP-GC	poorly graded GRAVEL with
		GRAVEL with FINES more than 12% fines	GM	silty GRAVEL
			GC	clayey GRAVEL
			GC-GM	silty, clayey GRAVEL
	SAND 50% or more of coarse fraction passes No. 4 sieve	CLEAN SAND less than 5% fines	SW	well-graded SAND
			SP	poorly graded SAND
		SAND with DUAL CLASSIFICATIONS 5% to 12% fines	SW-SM	well-graded SAND with silt
			SP-SM	poorly graded SAND with silt
			SW-SC	well-graded SAND with clay
			SP-SC	poorly graded SAND with clay
		SAND with FINES more than 12% fines	SM	silty SAND
			SC	clayey SAND
			SC-SM	silty, clayey SAND
FINE-GRAINED SOILS 50% or more passes No. 200 sieve	**SILT and CLAY** liquid limit less than 50%	INORGANIC	CL	lean CLAY
			ML	SILT
			CL-ML	silty CLAY
		ORGANIC	OL (PI > 4)	organic CLAY
			OL (PI < 4)	organic SILT
	SILT and CLAY liquid limit 50% or more	INORGANIC	CH	fat CLAY
			MH	elastic SILT
		ORGANIC	OH (plots on or above "A"-line)	organic CLAY
			OH (plots below "A"-line)	organic SILT
	Highly Organic Soils		PT	Peat

Grain Size

Description		Sieve Size	Grain Size	Approximate Size
Boulders		> 12"	> 12"	Larger than basketball-sized
Cobbles		3 - 12"	3 - 12"	Fist-sized to basketball-sized
Gravel	Coarse	3/4 - 3"	3/4 - 3"	Thumb-sized to fist-sized
	Fine	#4 - 3/4"	0.19 - 0.75"	Pea-sized to thumb-sized
Sand	Coarse	#10 - #4	0.079 - 0.19"	Rock-salt-sized to pea-sized
	Medium	#40 - #10	0.017 - 0.079"	Sugar-sized to rock-salt-sized
	Fine	#200 - #40	0.0029 - 0.017"	Flour-sized to sugar-sized
Fines		Passing #200	< 0.0029"	Flour-sized and smaller

Plasticity Chart

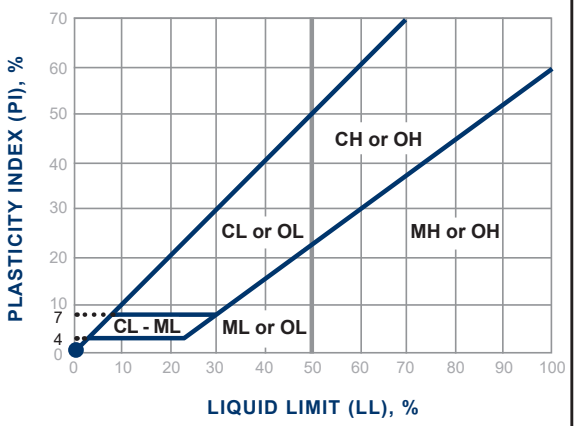

Apparent Density - Coarse-Grained Soil

Apparent Density	Spooling Cable or Cathead		Automatic Trip Hammer	
	SPT (blows/foot)	Modified Split Barrel (blows/foot)	SPT (blows/foot)	Modified Split Barrel (blows/foot)
Very Loose	≤ 4	≤ 8	≤ 3	≤ 5
Loose	5 - 10	9 - 21	4 - 7	6 - 14
Medium Dense	11 - 30	22 - 63	8 - 20	15 - 42
Dense	31 - 50	64 - 105	21 - 33	43 - 70
Very Dense	> 50	> 105	> 33	> 70

Consistency - Fine-Grained Soil

Consis-tency	Spooling Cable or Cathead		Automatic Trip Hammer	
	SPT (blows/foot)	Modified Split Barrel (blows/foot)	SPT (blows/foot)	Modified Split Barrel (blows/foot)
Very Soft	< 2	< 3	< 1	< 2
Soft	2 - 4	3 - 5	1 - 3	2 - 3
Firm	5 - 8	6 - 10	4 - 5	4 - 6
Stiff	9 - 15	11 - 20	6 - 10	7 - 13
Very Stiff	16 - 30	21 - 39	11 - 20	14 - 26
Hard	> 30	> 39	> 20	> 26

Ninyo & Moore
Geotechnical & Environmental Sciences Consultants

USCS METHOD OF SOIL CLASSIFICATION

DATE EXCAVATED _____

GROUND ELEVATION _____

METHOD OF EXCAVATION _____

TEST PIT DIAGRAM

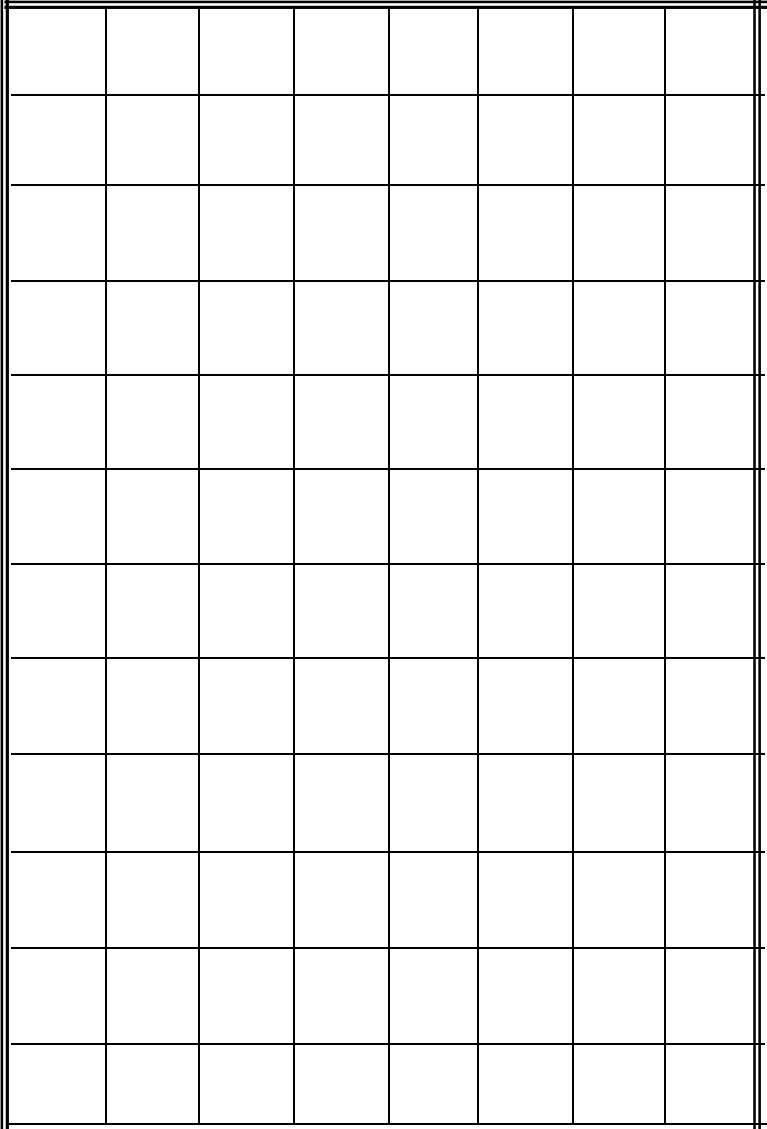

SCALE 1 inch = 2 feet

EXCAVATION LOG EXPLANATION SHEET

DEPTH (FEET)	SAMPLES: Bulk	SAMPLES: Driven	SAMPLES: Sand Cone	MOISTURE (%)	DRY DENSITY (PCF)	CLASSIFICATION U.S.C.S.	DESCRIPTION
0	■					SM	FILL:
1	■						Bulk sample.
		■				ML	Dashed line denotes material change.
2			■				Drive sample.
			■				Sand cone performed.
3		X		♀			Seepage.
		X		▽			Groundwater encountered during excavation.
4		X					No recovery with drive sampler.
		■		▼			Groundwater encountered after excavation.
5		■					Sample retained by others.
		|		xx/xx			Shelby tube sample. Distance pushed in inches/length of sample recovered in inches.
6		|					
7		\					No recovery with Shelby tube sampler.
						SM	ALLUVIUM:
8							Solid line denotes unit change.
							Attitude: Strike/Dip
9							b: Bedding — s: Shear
							c: Contact — bss: Basal Slide Surface
10							j: Joint — sf: Shear Fracture
							f: Fracture — sz: Shear Zone
11							F: Fault — sbs: Sheared Bedding Surface
							cs: Clay Seam
12							The total depth is a solid line that is drawn at the bottom of the excavation log.

FIGURE B-1

Ninyo & Moore
Geotechnical & Environmental Sciences Consultants

TEST PIT LOG
EXPLANATION OF TEST PIT, CORE, TRENCH AND HAND AUGER LOG SYMBOLS

LOCATION: See Figure 4	TEST PIT NO.: TP-1		
GROUND ELEVATION: 807'± (msl)	LOGGED BY: KMB		
METHOD OF EXCAVATION: JD 310 SG Backhoe (Newman)	DATE EXCAVATED: 3/23/2020		

DESCRIPTION	SAMPLES/ FIELD TESTS	MOISTURE (%)	DRY DENSITY (PCF)
FILL:			
(1) Brown, moist, soft to firm, lean CLAY (CL); trace gravel; few organics.			
(2) Brown to light brown, moist, loose to medium dense, poorly graded SAND (SP); few gravel; cobbles up to approximately 6 inches in diameter.			
ALLUVIUM:			
(3) Light brown, moist, loose to medium dense, poorly graded SAND with gravel and cobbles (SP); interbeds of poorly graded GRAVEL with sand and cobbles (GP).	4.0'-5.0': Bulk Bag 8.0'-9.0': Bulk Bag		

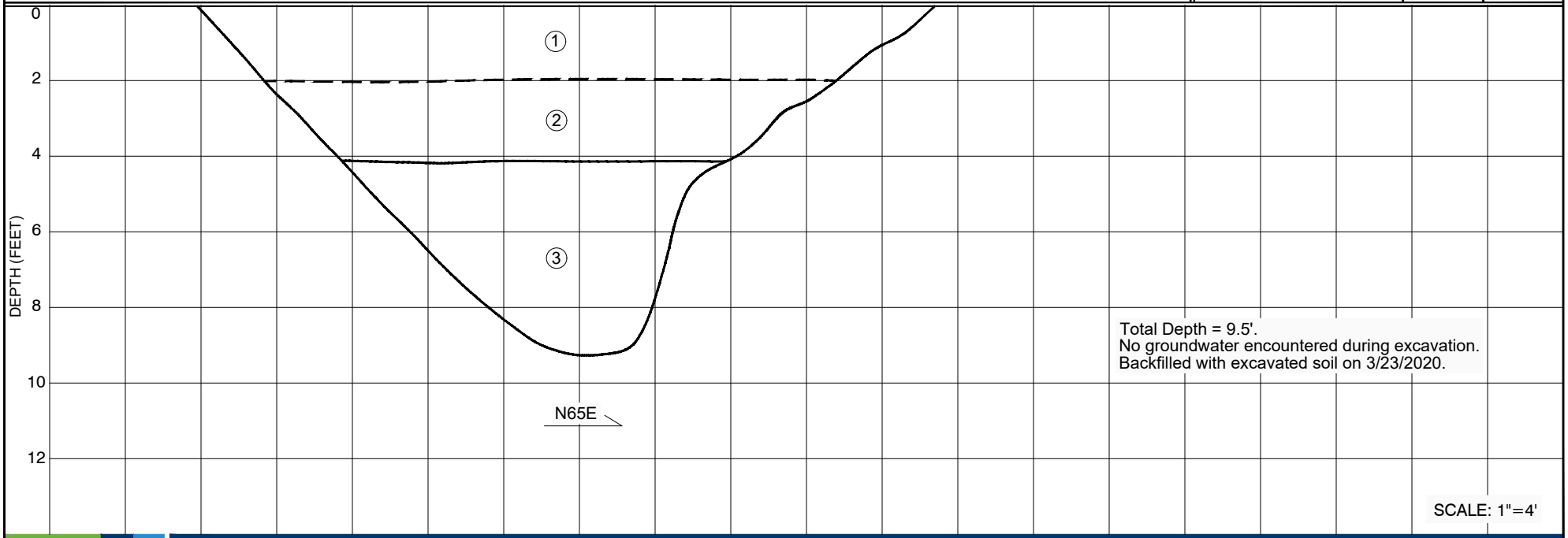

211294004_TP1.dwg 06/12/2020 JDP

FIGURE B-1

Ninyo & Moore
Geotechnical & Environmental Sciences Consultants

TEST PIT LOG

LABOE TOS NO. 25 - STRATHERN PARK NORTH
NORTH HOLLYWOOD, CALIFORNIA

211294004 I 6/20

LOCATION: See Figure 4	TEST PIT NO.: TP-2		
GROUND ELEVATION: 809'± (msl)	LOGGED BY: KMB		
METHOD OF EXCAVATION: JD 310 SG Backhoe (Newman)	DATE EXCAVATED: 3/23/2020		

DESCRIPTION	SAMPLES/ FIELD TESTS	MOISTURE (%)	DRY DENSITY (PCF)
FILL:			
① Brown, moist, loose, clayey SAND (SC); few gravel; cobbles; few organics.	0'-0.5': Bulk Bag		
② Light brown, moist, loose to medium dense, well-graded SAND with silt and gravel (SW-SM); cobbles up to approximately 6 inches in diameter.	1.5'-2.5': Bulk Bag		
ALLUVIUM:			
③ Light brown, moist, loose to medium dense, poorly graded SAND with gravel (SP); interbeds of poorly graded GRAVEL with sand and cobbles (GP).			

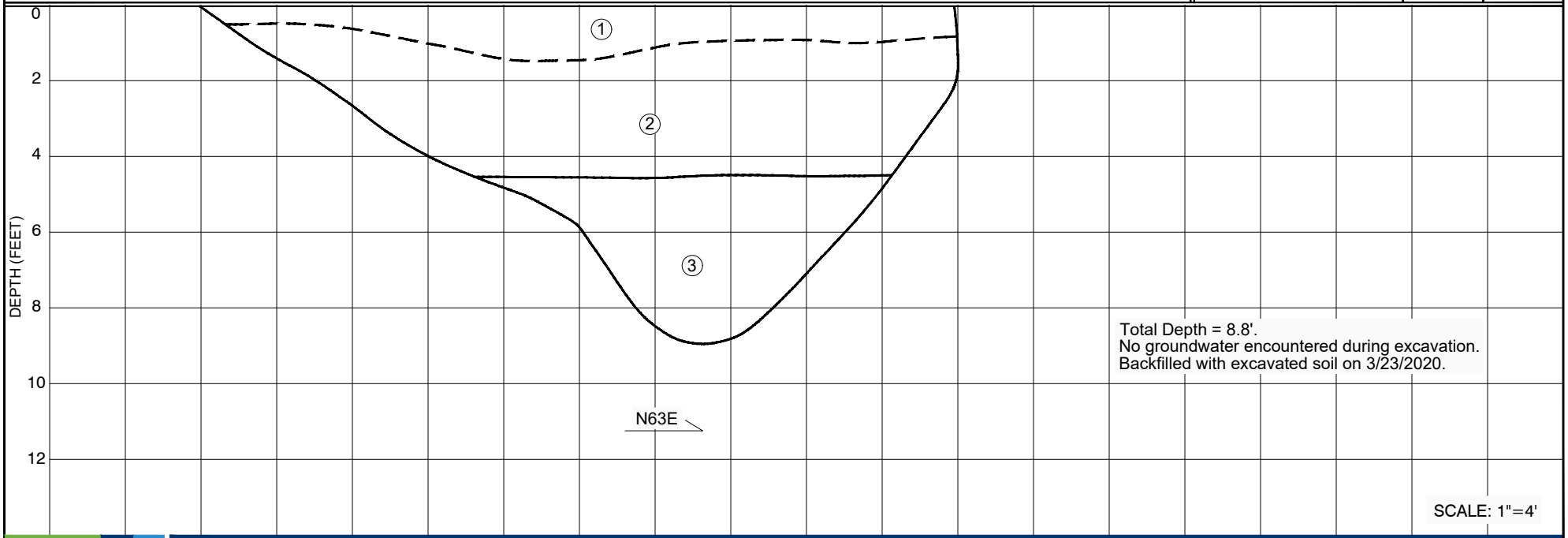

211294004_TP2.dwg 06/12/2020 JDP

FIGURE B-2

Ninyo & Moore
Geotechnical & Environmental Sciences Consultants

TEST PIT LOG

LABOE TOS NO. 25 - STRATHERN PARK NORTH
NORTH HOLLYWOOD, CALIFORNIA

211294004 I 6/20

LOCATION: See Figure 4	TEST PIT NO.: TP-3		
GROUND ELEVATION: 810'± (msl)	LOGGED BY: KMB		
METHOD OF EXCAVATION: JD 310 SG Backhoe (Newman)	DATE EXCAVATED: 3/23/2020		

DESCRIPTION	SAMPLES/ FIELD TESTS	MOISTURE (%)	DRY DENSITY (PCF)
FILL:			
① Brown, moist, loose, clayey SAND (SC); few gravel; lenses of reddish brown, moist, loose, clayey SAND (SC); few to little gravel.	0.5'-1.2': Bulk Bag		
FILL AND MINOR WASTE:			
② Light brown, moist, loose, poorly graded SAND (SP); few to little gravel; cobbles up to approximately 8 inches in diameter; minor waste consisting of asphalt concrete and a plastic Doritos bag.	1.5'-2.5': Bulk Bag		
ALLUVIUM:			
③ Light brown, moist, loose, poorly graded SAND (SP); interbeds of poorly graded GRAVEL with sand and cobbles (GP).			

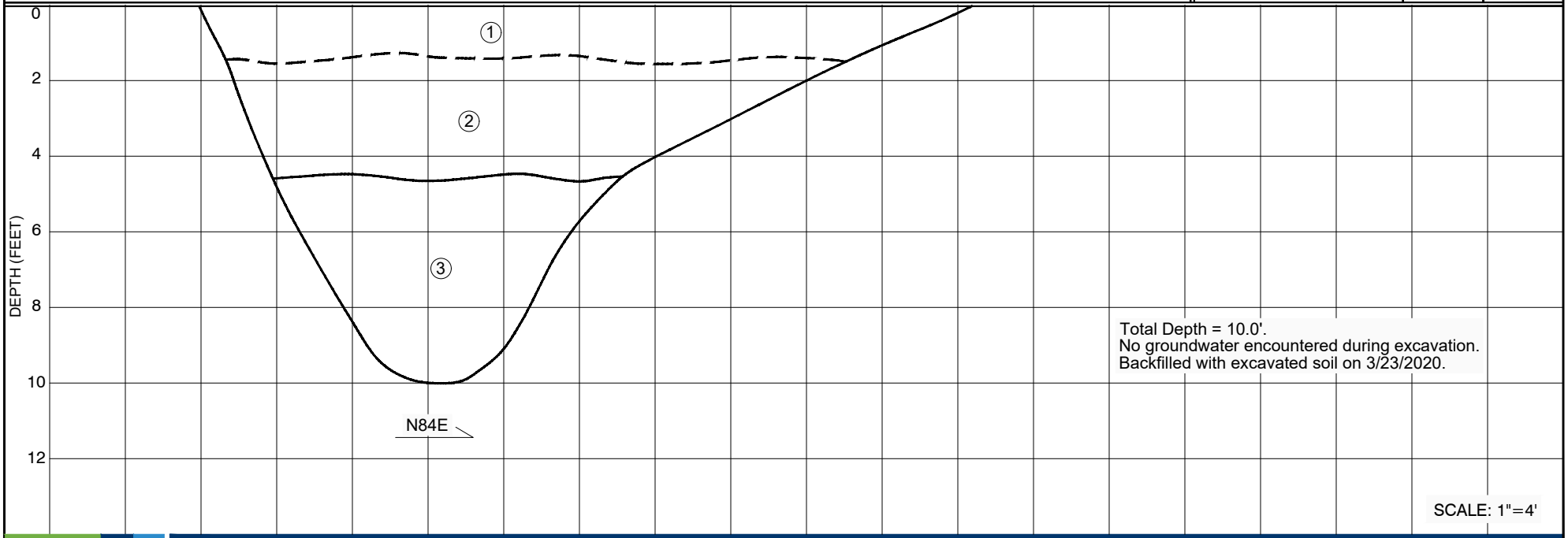

211294004_TP3.dwg 06/12/2020 JDP

FIGURE B-3

Ninyo & Moore
Geotechnical & Environmental Sciences Consultants

TEST PIT LOG

LABOE TOS NO. 25 - STRATHERN PARK NORTH
NORTH HOLLYWOOD, CALIFORNIA

211294004 I 6/20

LOCATION: See Figure 4	TEST PIT NO.: TP-4		
GROUND ELEVATION: 808'± (msl)	LOGGED BY: KMB		
METHOD OF EXCAVATION: JD 310 SG Backhoe (Newman)	DATE EXCAVATED: 3/23/2020		

DESCRIPTION	SAMPLES/ FIELD TESTS	MOISTURE (%)	DRY DENSITY (PCF)
FILL: (1) Brown, moist, loose, clayey SAND (SC); few gravel. FILL AND MINOR WASTE: (2) Brown to light brown, moist, loose to medium dense, poorly graded SAND (SP); few gravel; cobbles; minor waste consisting of bottles, tires, ceramics, and pieces of concrete. ALLUVIUM: (3) Light brown, moist, loose to medium dense, poorly graded SAND (SP); trace gravel; cobbles.	3.0'-4.0': Bulk Bag		

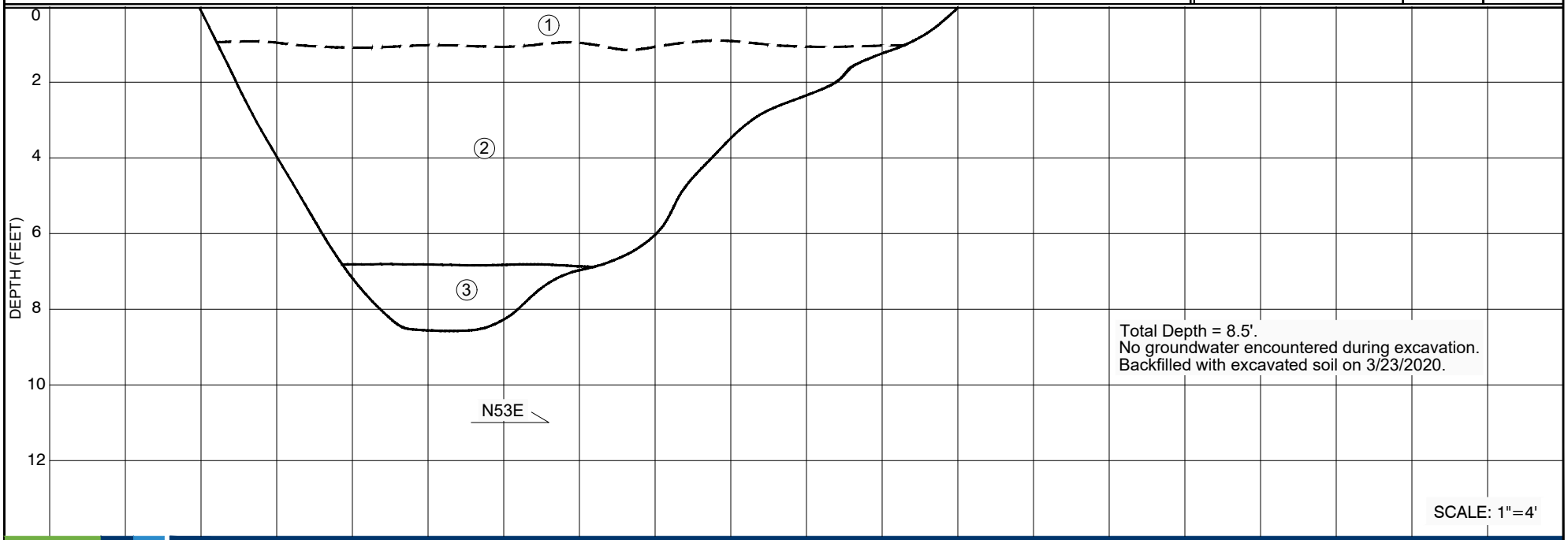

211294004_TP4.dwg 06/12/2020 JDP

FIGURE B-4

Ninyo & Moore
Geotechnical & Environmental Sciences Consultants

TEST PIT LOG

LABOE TOS NO. 25 - STRATHERN PARK NORTH
NORTH HOLLYWOOD, CALIFORNIA

211294004 I 6/20

LOCATION: See Figure 4	TEST PIT NO.: TP-5	SAMPLES/ FIELD TESTS	MOISTURE (%)
GROUND ELEVATION: 810'± (msl)	LOGGED BY: KMB		
METHOD OF EXCAVATION: JD 310 SG Backhoe (Newman)	DATE EXCAVATED: 3/23/2020		

DESCRIPTION

FILL:

(1) Brown, moist, soft to firm, sandy lean CLAY (CL); trace gravel, few organics.

FILL AND MINOR WASTE:

(2) Light brown, moist, loose, silty SAND with gravel and cobbles (SM); minor waste consisting of glass, metal, asphalt concrete, and brick.

2.0'-3.0': Bulk Bag

ALLUVIUM:

(3) Light brown, moist, loose, poorly graded SAND (SP); few gravel; interbeds of poorly graded GRAVEL with sand (GP).

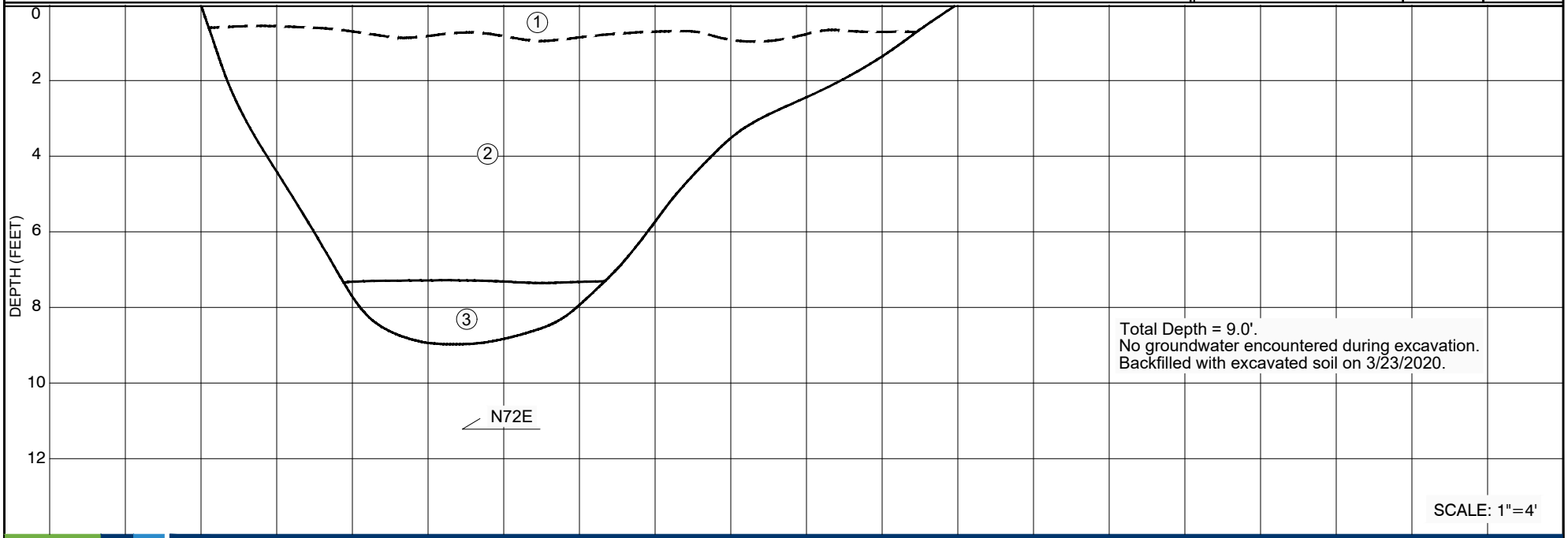

211294004_TP5.dwg 06/12/2020 JDP

FIGURE B-5

Ninyo & Moore
Geotechnical & Environmental Sciences Consultants

TEST PIT LOG

LABOE TOS NO. 25 - STRATHERN PARK NORTH
NORTH HOLLYWOOD, CALIFORNIA

211294004 I 6/20

LOCATION: See Figure 4	TEST PIT NO.: TP-6		
GROUND ELEVATION: 809'± (msl)	LOGGED BY: KMB		
METHOD OF EXCAVATION: JD 310 SG Backhoe (Newman)	DATE EXCAVATED: 3/23/2020		

DESCRIPTION	SAMPLES/ FIELD TESTS	MOISTURE (%)	DRY DENSITY (PCF)
FILL: (1) Brown, moist, soft, sandy lean CLAY (CL); few to little gravel; few organics. (2) Light brown, moist, loose, poorly graded SAND with clay (SP-SC). FILL AND WASTE: (3) Light brown, moist, loose, poorly graded SAND with clay (SP-SC); waste consisting of brick, ceramic, and concrete.	3.0'-4.5': Bulk Bag		

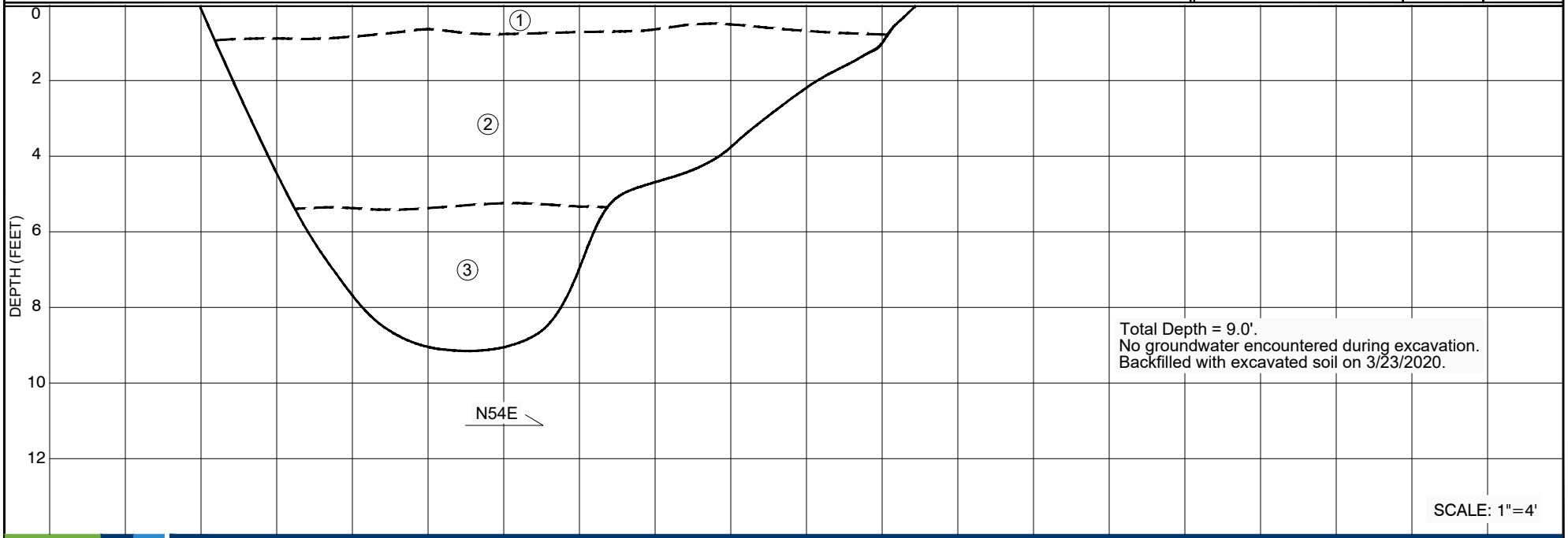

211294004_TP6.dwg 06/12/2020 JDP

FIGURE B-6

Ninyo & Moore
Geotechnical & Environmental Sciences Consultants

TEST PIT LOG

LABOE TOS NO. 25 - STRATHERN PARK NORTH
NORTH HOLLYWOOD, CALIFORNIA

211294004 I 6/20

Photographs



Photograph 1: View of hand auger drilling for upper five feet at boring P-2.



Photograph 2: View of hollow-stem auger (HSA) drilling activities at boring P-4.



Photograph 3: **View of soil vapor field screening activities at boring P-2.**



Photograph 4: **View of 4-gas meter field screening equipment.**



Photograph 5: View of PID headspace soil sample screening.



Photograph 6: View of hand auger set up at boring location Comp-1.



Photograph 7: **View of Test Pit TP1.**



Photograph 8: **View of Test Pit TP2.**



Photograph 9: **View of Test Pit TP3.**



Photograph 10: **View of Test Pit TP4.**



Photograph 11: **View of Test Pit TP5.**



Photograph 12: **View of Test Pit TP6.**

APPENDIX B

City of Los Angeles Stormwater Capture Parks Program, Task Order Solicitation No. 25, Addendum No. 5

ERIC GARCETTI
MAYOR

CITY OF LOS ANGELES
CALIFORNIA

ADDENDUM NO. 5
August 2, 2019

ENGINEERING
CITY OF LOS ANGELES
GARY LEE MOORE, PE, ENV SP
CITY ENGINEER

Stormwater Capture Parks Program
Pre-Design and Design Services

Task Order Solicitation (TOS) No. 25

This addendum consists of this 10-page transmittal.

I. MODIFICATIONS TO THE TOS

Respondents are hereby notified to add the following services to Section 3.2.1 of TOS 25 for the Strathern Park North project only:

The Strathern Park North project will include the following services which will be performed within the proposed BMP footprint identified in the Concept Report:

PHASE II ASSESSMENT

Task 1 – Project Familiarization and Project Management

A representative of the Consultant will be requested to attend a site walk with the City to mark boring locations with white paint or stakes and become familiar with site features, utilities, site traffic and parking issues. Boring locations will be identified then.

The Consultant will be responsible for notifying Underground Service Alert (USA) for utility marking a minimum of 48 hours before any excavations. The Consultant shall assume all responsibility, including repair and other costs, for damaging any underground utilities where they are marked at the surface prior to excavations. In addition, any structures and fencing damaged during site operations shall be repaired or replaced by the Consultant at no cost to the City.

The City will obtain a ROE form from the site owner before the start of work.

The selected Consultant shall provide traffic control for drilling, sampling and geophysical activities described below. This will most likely involve traffic cones and caution tape around the work areas; Caltrans may have more specific requirements.

For the purpose of this proposal, assume that all borings will be located in unpaved areas. Old pipelines, trenches, capped oil wells and vent lines may be present. Excavations must be covered or closed daily before leaving the site to keep nearby residents safe.

Stormwater Capture Parks Program
Pre-Design and Design Services

Task Order Solicitation (TOS) No. 25

Task 2 - Health & Safety Plan

The consultant shall prepare a site-specific Health & Safety Plan for this project, appropriate for drilling and sampling in commercial/industrial airport areas where crude oil, waste oil, fuel hydrocarbons, solvents, VOCs, PAHs and heavy metals may be anticipated in soil. Old concrete may contain asbestos. There exists the possibility of lead and asbestos in remaining structures. Methane, hydrogen sulfide, and carbon dioxide gasses and oxygen deficiency may be expected in all excavations. The Health & Safety Plan shall be in effect for all field work before drilling operations commence. The plan shall specify levels of contaminants that will require drill site personnel to wear protective gear and types of personal protective equipment which will be on-site at all times to prevent health-significant inhalation or dermal exposure to hydrocarbons or metals for the workers and neighbors. There will be appropriate measures to control dust, odors or vapors from leaving the site.

Employees and subcontractors who are managing sampling, drill cuttings or related disposals shall be licensed for hazardous material handling and the workers shall have sufficient health and safety training. The latter shall be in accordance with OSHA Hazardous Waste Operation Standards 29 CFR 1910.120. The consultant shall appoint a site safety officer and a copy of the site-specific Health and Safety Plan shall be kept at the site.

Task 3 - Geophysical Survey

Perform a surficial geophysical survey of the entire level portion of the site to detect buried USTs, vaults, pipelines, etc. which may require further investigation or affect excavation of foundations and utility trenches.

Task 4 - Site Assessment Exploratory Sampling

Budget for five (5) 25-foot deep soil borings to be drilled using a conventional 8- to 10-inch diameter hollow stem auger. Hand auger the upper 5 feet to help locate unmarked utilities. The locations of the borings will be provided by BOE in consultation with the Consultant using results from Task 2. The Consultant will arrange for Underground Service Alert clearance and will assume responsibility for damaging underground utilities where they are marked at the surface prior to drilling. Any utilities, fences or pavement damaged during drilling shall be repaired or replaced.

Also required are:

- Steam cleaning of the augers between borings
- Sampling with a clean split spoon or Shelby-type samplers lined with clean acetate liners or brass tubes
- Sealing, labeling and bagging of samples and placing in an iced cooler per current State of California site assessment method guidelines
- One sample from each boring shall be collected using EPA Method 5035 "encore" or equivalent sampling device for VOCs. The sample shall be collected at the depth displaying highest screening OVA/PID reading. If there are no significant OVA/PID readings, then any depth above groundwater displaying visible staining or an odor can be used.

Duplicate samples shall be collected from each sampling point. One of the undisturbed samples shall be place on ice and transported under chain of custody protocol to a State-certified environmental laboratory within 24 hours. The duplicate sample shall be placed in a new plastic zip-lock bag in a warm area for approximately 10 minutes for headspace measurements of VOCs. Measurements will be made with an organic vapor analyzer (OVA) equipped with a flame ionization detector (FID) or photo ionization detector (PID) that has been calibrated to factory specifications within the last 3 months of testing and recalibrated periodically with reference gas. Air in the bore holes shall also be sampled with clean plastic tubing and tested every 5 feet, until total depth or groundwater is reached, for methane, oxygen and hydrogen sulfide. A manual or electric air pump can be used to pull up the sample gas from depth and to clear out the tubing, which is connected to an LEL/H2S meter.

Borings in contaminated soil which are drilling through an aquitard (a clay layer greater than 5 feet thick) shall be halted until the Consultant's geologist and BOE confer. Vertical spreading of contamination shall be prevented. Groundwater wells will likely not be installed in borings with high pressure gas or if the borings exhibit free floating product.

All drill cuttings and rinse water from borings shall be placed in labeled steel drums and stored in a protected area of the site away from drainage areas and heavy traffic. Following laboratory analysis of the material, the cuttings or water shall be disposed of as described below.

Stormwater Capture Parks Program
Pre-Design and Design Services

Task Order Solicitation (TOS) No. 25

The borings will be logged and sampled under the direct supervision of a California Professional Geologist, a Certified Hydrogeologist or a Certified Engineering Geologist. The borings shall be annotated with OVA/FID and LEL readings, the presence of odors, staining, peat, organic material, fossils, asphalt bits and lithologic description. Copies of the field logs and complete chains of custody shall be received by the Bureau of Engineering (BOE) by 9:00 a.m. the day following drilling of each boring to confer with the Consultant on assigning of chemical tests per sample. The copies can be emailed to bryan.powell@lacity.org.

Environmental samples shall be collected in the borings at 1 foot (a composite sample from immediately under pavement to 1 foot depth bgs), 2.5 feet bgs, 5 feet bgs, and every 5 feet thereafter to total depth. The first 5 feet will be hand-augered to avoid shallow utilities (the 1 and 2.5-foot sample will be from the hand auger cuttings). Soil sampling shall terminate when groundwater is reached. Drilling will proceed to 25-feet bgs or to groundwater if encountered shallower, and a 'grab' sample of groundwater in one (1) boring shall be obtained for testing before boring termination.

All field work shall be documented in a field notebook, recording pertinent location data, weather conditions, observations and other information.

- Drill, log, and sample a total of 5 borings with a hollow-stem auger drill rig and sample with a clean California split spoon or Shelby-type sampler.
- The borings shall be drilled to a maximum of 25 feet below the ground surface, or into groundwater, whichever comes first.
- Sample and log all borings under the direct supervision of a California Certified Engineering Geologist or California Professional Geologist. Geologic features such as contacts, lithology, cobbles, joints, secondary mineralization, etc. shall be noted.
- Samples for VOCs shall be obtained using EPA Method 5035 protocol, the "encore" or equivalent equipment, and lower detection limits for VOS, to current LA Regional Water Quality Control Board standards.
- The first of the duplicate samples at each sample depth shall be sealed, labeled, bagged and placed in an ice chest and transported under chain of custody protocol to a State-certified environmental laboratory within 24 hours. If possible, exclude fragments of asphalt and wood, and note in the logs any presence of peat, wood or other organic matter.

- Organic vapor analyzer (OVA) or photo-ionization detector (PID) measurements of volatile organics will be made with an organic vapor analyzer (OVA) or photo ionizing detector (PID) that has been calibrated to factory specifications within the last 3 months of testing and recalibrated with gas daily. OVA or PID readings shall be obtained on duplicate samples at the surface from each sampling depth, which have been placed in new plastic sealed bags or clean glass jars and allowed to sit in the sun or warm area for 5-10 minutes. A Lower Explosive Limit (LEL) or combustible gas meter shall be at the ground surface area following each sample barrel removal. LEL, hydrogen sulfide concentration and OVA/PID readings shall be annotated on the logs. The OVA and LEL shall be calibrated daily according to manufacturer's instructions. Notify BOE immediately if contamination (obvious visual staining and/or OVA readings of more than 50 ppm) is encountered.
- Latitude and longitude of the boring locations as read from a handheld GPS (NAD 83 coordinate system) unit accurate to within 3 feet shall be included. Descriptions and measurements from prominent features such as curbs, buildings and fences shall be provided on each boring log.
- The borings in paved areas shall be backfilled with one-sack sand cement slurry or cement/bentonite mixture to approximately 4 inches below the base of the existing pavement or surface, by tremieing from the bottom of the holes. Asphalt or concrete removed during drilling shall be replaced to match the existing pavement.
- Assume all soil cuttings to be potentially contaminated and will be stored temporarily in 55-gallon drums, which will be sealed and clearly labelled. Removal shall be arranged as soon as the soil is characterized for disposal.
- If the boring soils are in contaminated material at the bottom 10 ft. of the boring, BOE shall be contacted for possible extension of the boring.

Sample collection and QA/QC procedures shall be in accordance with the latest version of the "Interim Guidance for Active Soil Gas Investigations" by the Los Angeles Regional Water Quality Control Board and be documented in the final report.

Also, manually obtain 8 surficial samples in planters, medians, etc. to a depth of 1 foot for one composite, bulk sample per location.

Task 5 - Environmental Laboratory Analysis of Samples

The following list provides the chemical tests that will likely be assigned for the soil boring samples. A California OHS-certified environmental laboratory shall be used.

Stormwater Capture Parks Program
Pre-Design and Design Services

Task Order Solicitation (TOS) No. 25

Assume for budgetary purposes that the following number of tests will be assigned (the actual assignment of testing will depend on OVA readings, odors, and staining encountered in the samples):

- 20 tests for EPA 1664 (TRPH),
- 6 tests for EPA 8015M (Carbon chain speciation),
- 6 tests for EPA 8260B or equivalent (VOCs, including oxygenates),
- 4 tests for EPA 8270C or equiv. (SVOCs),
- 2 tests for EPA 8310 (Polycyclic aromatic hydrocarbons/PAHs),
- 15 tests for EPA 6010B/Title 22 metals (TTLC), and assume 2 WET tests EACH for lead and arsenic,
- 5 tests for EPA 8081/2A or equiv. (Organochlorine Pesticides & PCBs),
- 5 Tests for EPA 8150 (Herbicides).
- The groundwater 'grab' sample from one well shall be tested for TRPH, VOCs, SVOCs, PAHs, heavy metals and general water quality parameters, including pH, nitrates, sulfates, etc.
- Laboratory reports with full QA/QC data and quantification limits shall be included in the final report. The presence of contaminants shall be summarized in a chart or table, highlighting levels exceeding residential USEPA Region 9 RSLs.
- Rush turnaround times are expected.

Task 6 - Phase II Site Assessment Report

The Consultant shall provide a final report, summarizing observations and field activities, background data collected, field and laboratory testing, and drilling and sampling methods. The investigation shall be directed by and the report stamped and signed by a California-licensed geologist, hydrogeologist or engineer.

A review copy should be sent to BOE before finalizing. One unbound hard copy and an electronic copy of the report is required.

The report shall include a scaled, drafted base map and plot plan showing the study location in a regional setting, well and sampling locations. The report will include appendices with well logs, and copies of field log book entries or data sheets

annotated with will head OVA/PID/LEL readings, site observations as detailed above, and laboratory data sheets with chain of custody and QA/QC forms. Laboratory data shall be summarized on a chart or table with significant measurements of contaminants and gases highlighted.

Report conclusions should include a comparison of contaminant levels with appropriate maximum regulatory levels and appropriate health-based levels such as State RSLs, PELs and TWAs for residential site use.

The report will consist of:

- A scaled plot plan of the site with boring locations, existing structures, roads and rail lines, vent structures, etc.
- Description of the field exploration including field and laboratory testing procedures. Include the geophysical grid locations and a map of anomalies found.
- Logs of all soil borings annotated with soil types, odors, staining and gas meter readings. Include elevations of tops and bottoms of excavations estimated to the nearest foot from topographic maps.
- Classification and description of soil, with contacts between geologic materials, strikes and dips of planar features, water seeps and depth to groundwater, odors, staining and other descriptions observed and all OVA, PID and/or LEL readings taken during excavations.
- Laboratory soil data as an appendix, with all QA/QC data and method quantification limits and chain-of-custody forms shall be attached. In the body of the report, summarize any positive findings of contaminants with comparison with PRGs or other relevant action levels.
- Conclusions, including comparison of contaminant levels with appropriate regulatory levels and appropriate health-based levels for residential use.
- One copy of the draft report shall be submitted to BOE for review. After review comments are incorporated into the report, one unbound original copy (wet signatures) and in pdf format, shall be submitted to BOE.

Note that latitude and longitude readings are required for all borings and test pits/hand augered borings. These values shall be obtained by reading the latitude and longitude at each sampling location with a standard consumer quality hand held GPS unit (NAD 83 Coordinate System). The coordinates from these units are only accurate to about a 50- foot radius, but that will be adequate for our purpose which is

to create and maintain a Geographic Information System (GIS) database of all boring locations in the City. Due to the inherent accuracy of the coordinates, a written description and measurements to monuments, curb faces, intersections, etc. will still be required.

Task 7 - Waste Disposal

Soil and decontamination water generated during the field activities will be temporarily contained in 55-gallon drums on the site away from drainage areas and secured from unauthorized entry until laboratory analytical results are received, allowing the most cost-effective disposal or recycling option. For budgeting purposes, assume that most soil and decontamination water produced during this task will be contaminated at non-hazardous levels with petroleum hydrocarbons and that off-site disposal at a Class II recycling facility in the Los Angeles area is possible. BOE has a list of such facilities. The Consultant or qualified subconsultant shall prepare waste manifests and arrange for proper transport and disposal of all drummed cuttings and water. BOE or other City representatives such as the site manager will sign the manifests as the Generator. Clearly legible copies of all manifests shall be provided as soon as available to BOE.

Any generated clean rinse or produced water is to be disposed of in the City sewer under a blanket waste discharge permit for non-contaminated water issued by Industrial Waste Division of the BOS. Assume for budgeting purposes that the water drums will require disposal at a contaminated water recycling facility.

Produced and rinse water and soil cuttings shall be stored in DOT-approved 55-gallon steel drums near the drilling sites, in protected areas away from drainages. The drums shall be disposed of following classification as hazardous or non-hazardous, within 90 calendar days. Drummed water with no detectible hydrocarbons and with metals below action levels may be emptied into the sewers; this office will help with getting a permit from the Industrial Waste Section, Bureau of Sanitation. The consultant shall prepare all manifests and arrange for the proper transportation and disposal of the cuttings and rinse water. BOE staff will sign as Generator. Legible copies shall be attached to the final report. It is anticipated that fuel- and oil-contaminated soil will be accepted at a Class II soil recycling facility in the Los Angeles area, which is the preferred disposal method by the City.

Stormwater Capture Parks Program
Pre-Design and Design Services

Task Order Solicitation (TOS) No. 25

CONTINGENCY ITEMS

In addition to the base tasks and associated costs outlined above, contingency costs shall be provided for the following items in case unusual and/or unforeseen conditions justify an increase in the approved scope of work. Contingency prices will also be considered in determining the value of the TO Proposal. Please provide unit costs for the following items:

- Cost per linear foot for additional drilling and sampling of borings.
- Cost to mobilize drill rig including any minimum charges for additional borings drilled on a different day than the base cost drilling. Please detail the items included in the cost.
- Cost per linear foot for additional borings to acquire contamination samples at 5-foot intervals, including the extra cost of obtaining the samples, storing the samples properly and maintaining a chain of custody.
- If signs of contamination are encountered and/or if OVA or PID readings of more than 50 ppm are detected, all drill cuttings shall be properly disposed of off the site. Provide cost per cubic foot to dispose of contaminated drill cuttings for various levels of contamination.
- Cost per linear foot for backfilling of borings with cement slurry to within 5-feet of the ground surface and compacted earth above.

II. QUESTIONS AND ANSWERS

Respondents are hereby notified to replace response A12 of TOS 25 Addendum 4 (issued July 29, 2019):

Q12. Will LADWP be involved with the selection process?
A12. No.

With the following:

Q12. Will LADWP be involved with the selection process?
A12. Yes.

Stormwater Capture Parks Program
Pre-Design and Design Services

Task Order Solicitation (TOS) No. 25

Sincerely,

Jonathan Arnold
for

Edick B. Ohanian, P.E.
Division Engineer
Project Award and Control Division
Bureau of Engineering

APPENDIX C

1953 Aerial Photograph



NOTE: DIRECTIONS, DIMENSIONS AND LOCATIONS ARE APPROXIMATE.

C1_211294004_AP53.mxd 7/1/2020 JDL

FIGURE C-1

1953 HISTORIC AERIAL PHOTOGRAPH

LABOE TOS NO. 25 - STRATHERN PARK NORTH
NORTH HOLLYWOOD, CALIFORNIA

211294004 | 6/20

Ninyo & Moore
Geotechnical & Environmental Sciences Consultants

APPENDIX D

Boring Permit – LACDEH

ENVIRONMENTAL HEALTH

Drinking Water Program

5050 Commerce Drive, Baldwin Park, CA 91706
Telephone: (626) 430-5420 • http://publichealth.lacounty.gov/eh/ep/dw/dw_main.htm

Work Plan Approval

WORK SITE ADDRESS	CITY	ZIP	EMAIL ADDRESS
8041 Whitsett Ave	North Hollywood	91601	kbrigham@ninyoandmoore.com

NOTICE:

- WORK PLAN APPROVALS ARE VALID FOR 180 DAYS. 30 DAY EXTENSIONS OF WORK PLAN APPROVALS ARE CONSIDERED ON AN INDIVIDUAL (CASE-BY-CASE) BASIS AND MAY BE SUBJECT TO ADDITIONAL PLAN REVIEW FEES (HOURLY RATE AS APPLICABLE).
- WORK PLAN MODIFICATIONS MAY BE REQUIRED IF WELL AND GEOLOGIC CONDITIONS ENCOUNTERED AT THE SITE INSPECTION ARE FOUND TO DIFFER FROM THE SCOPE OF WORK PRESENTED TO THE DEPARTMENT OF PUBLIC HEALTH—DRINKING WATER PROGRAM.
- WORK PLAN APPROVALS ARE LIMITED TO COMPLIANCE WITH THE CALIFORNIA WELL STANDARDS AND THE LOS ANGELES COUNTY CODE AND DOES NOT GRANT ANY RIGHTS TO CONSTRUCT, RENOVATE, OR DECOMMISSION ANY WELL. THE APPLICANT IS RESPONSIBLE FOR SECURING ALL OTHER NECESSARY PERMITS SUCH AS WATER RIGHTS, PROPERTY RIGHTS, COASTAL COMMISSION APPROVALS, USE COVENANTS, ENCROACHMENT PERMISSIONS, UTILITY LINE SETBACKS, CITY/COUNTY PUBLIC WORKS RIGHTS OF WAY, ETC.
- THIS PERMIT IS NOT COMPLETE UNTIL ALL OF THE FOLLOWING REQUIREMENTS ARE SIGNED BY THE DEPUTY HEALTH OFFICER. WORK SHALL NOT BE INITIATED WITHOUT A WORK PLAN APPROVAL STAMPED BY THE DEPARTMENT OF PUBLIC HEALTH—DRINKING WATER PROGRAM.

TO BE COMPLETED BY DEPARTMENT OF PUBLIC HEALTH—DRINKING WATER PROGRAM:

X	WORK PLAN APPROVED FOR: 15 Cone Penetrometer Tests	**PERMIT NUMBER:**	SR0213622	**DATE:**	2-11-2020

ADDITIONAL APPROVAL CONDITIONS:

- Work plan approval is issued for scope of work submitted to the Drinking Water Program. Any modifications to the scope of work will require additional work plan review.
- As discussed, please ensure the boring/exploration hole is backfilled within 24 hours of boring construction.
- Ensure to backfill using a tremie pipe under pressure or equivalent equipment with approved cement grout, proceeding upward from the bottom of the boring/exploration hole.
- Ensure soil borings are sealed per California Well Standards 74-90
  - Cement grout mix ratio of 5-6 gallons of water per 94-pound bag of Portland cement.
  - Up to 6% of Bentonite may be added to the cement-based mix.
  - No hydrated Bentonite chips
- Borings/Exploration holes must comply with all applicable requirements published in the California Well Standards (Bulletins 74-81 and 74-90) and the Los Angeles County Code, Title 11.

APPROVED BY:

Belinda Larsen, REHS
21515 Vanowen St. Ste. 116
Canoga Park, Ca 91303
(818) 593-7308

5838

APPENDIX E

Waste Manifests

SOIL SAFE OF CA – TPST
Non-Hazardous Soils

Date of Shipment:	Responsible for Payment:	Transport Truck #:	Facility #:	Approval Number:	Load #
/ /			A07		

Generator and/or Consultant

Generator's Name and Billing Address:
CITY OF LOS ANGELES DEPARTMENT OF RECREATION AND PARKS
211 NORTH FIGUEROA STREET
3RD FLOOR, SUITE 350
LOS ANGELES, CA 90012

Generator's Phone #: 213-241-9137
Person to Contact:
FAX#:
Customer Account Number

Consultant's Name and Billing Address:

Consultant's Phone #:
Person to Contact:
FAX#:
Customer Account Number

Generation Site (Transport from): *(name & address)*
STRATHERN PARK NORTH
8041 WHITSETT AVENUE
NORTH HOLLYWOOD , CA 91605

Site Phone #:
Person to Contact:
FAX#:

Designated Facility (Transport to): *(name & address)*
SOIL SAFE
12328 HIBISCUS AVENUE
ADELANTO, CA 92301

Facility Phone #: (800) 862-8001
Person to Contact: JOE PROVANSAL
FAX#: (760) 246-8004

Transporter Name and Mailing Address:
BELSHIRE
25971 TOWNE CENTRE DRIVE
FOOTHILL RANCH, CA 92610
BESI: 317814

Transporter's Phone #: 949-460-5200
CAR000183913
Person to Contact: LARRY MOOTHART
450647
FAX#: 949-460-5210
Customer Account Number

Description of Soil	Moisture Content	Contaminated by:	Approx. Qty:	Description of Delivery	Gross Weight	Tare Weight	Net Weight
Sand ☐ Organic ☐ Clay ☐ Other ☐	0 - 10% ☐ 10 - 20% ☐ 20% - over ☐	Gas ☐ Diesel ☐ Other ☐	12 DM	Soil			
Sand ☐ Organic ☐ Clay ☐ Other ☐	0 - 10% ☐ 10 - 20% ☐ 20% - over ☐	Gas ☐ Diesel ☐ Other ☐					

List any exception to items listed above: Scale Ticket #

Generator's and/or consultant's certification: I/We certify that the soil referenced herein is taken entirely from those soils descried in the Soil Data Sheet completed and certified by me/us for the Generation Site shown above and nothing has been added or done to such soil that would alter it in any way.

Print or Type Name: Generator ☑ Consultant ☐ MICHAEL FUSARO
Signature and date: Michael Fusaro
Month 5 Day 6 Year 20

Transporter

Transporter's certification: I/We acknowledge receipt of the soil referenced above and certify that such soil is being delivered in exactly the same condition as when received. I/We further certify that the soil is being directly transported from the Generation Site to the Designated Facility without off-loading, adding to, subtracting from or in any way delaying delivery to such site.

Print or Type Name: Carlos Villa
Signature and date: Carlos Villa
Month 05 Day 06 Year 20

Recycling Facility

Discrepancies:

Recycling Facility certifies the receipt of the soil covered by this manifest except as noted above:

Print or Type Name: J. PROVANSAL
Signature and date:

FACILITY COPY

Adelanto, CA Soil Recycling Facility	**Soil Safe** (Formerly TPST) **SOIL DATA AND CERTIFCATION SHEET**	**DATE:** **4/14/2020**

Generator (propery owner):

City of Los Angeles Department of Recreation a
211 North Figueroa Street
3rd Floor, Suite 350
Los Angeles, CA 90012

Consultant/Engineering Firm:

Belshire Environmental Services, Inc.
25971 Towne Centre Dr
Foothill Ranch CA 92610
Tel: (949) 460-5200
Fax: (949) 460-5210

[X] **Invoice BESI**
[ ] **Invoice Generator**
[ ] **Invoice Consultant**

Testing Laboratory:
Enthalpy Analytical

Sampling Procedures:
Grab Sample

Site History: Please list SITE NAME ADDRESS (including zip code), describe contamination type, contamination source, how contamination was stored, and past activities at site.-Attach additional documents)

Site Name & Address:
Strathern Park North
8041 WHITSETT AVENUE
NORTH HOLLYWOOD , CA 91605

BESI: 317814
Site No: 8041WHIT
Site Contact: Mike Fusano
Consultant: Ninyo & Moore
Contact Mike Fusano

Source of contamination (ust, ast, etc…): Environmental Investigation
(please list gas, diesel, combo, waste oil, etc…)

[X] **NON-HAZ** [ ] **HAZ**

ESTIMATED QUANTITY
Tons
12 Drums

Please check appropate box below and attach all required analytical reports. Unless otherwise noted, composite samples should be collected with the following frequency: 1sample for 100 cubic yards or less ; 3 samples for 500 cu yds or less ; 5 samples for 1000 cu yds 1 additional sample for each additional 500cu yds greater than 1000 cu yds

[ ]

I/we certify that the soil referenced herein is contaminated soley by Virgin petroleum products from leaking underground storage tank(s).

Attached is analytical data from state certified lab for the following

1) Total Petroleum Hydrocarbons (TPH, EPA 8015 Modified)

2) Benzene/Toluene/Ethylbenzene/xylene (BTEX, EPA 8020)

[X]

I/We certified that some or all of the contaminants in the soil referenced herein is waste oil, or some other non-virgin petroleum product, or virgin petroleum product from something other than a leaking underground storage tank.
Attached is analytical data from a state certified lab for the following:

1) Total metals concentration for a thru q below (TTLC test)

a) Antimony	g)Cobalt	m) Selenium
b) Arsenic	h)Copper	n) Silver
c) Barium	I) Lead	o) Thalium
d) Berylium	j) Mercury	p) Vanadium
e) Cadmium	k) Molybdenum	q) Zinc
f) Chromium	l) Nickel	

Note: If any item a thru q is greater than 10 times its Soluble Threshold Limit concentration (STLC) the soluble metal concentration must be determined by the Waste Extraction Test procedure.

2) TPH by:

EPA 418.1 or
EPA 8015 modified

3) BTEX/VOC by:

EPA 8020 EPA 8010
or EPA 8260(combines above)

4) PCB'S(waste oil only)
5) Additional analytical data as required.

No soils referenced herein may be delivered until the forgoing certificate is received and approved by the facility, and they issues manifests and assigns an approval number. If any soils delivered to the facility are found to be "Hazardous Waste" pursuant to federal or state regulations, the client shall be solely responsible for their removal. If the client fails to remove such soils, the facility, acting as client's agent, may arrange for such removal at client's expense. This is a complete and accurate description of the soil referenced herein; no deliberate or willful omissions have been made and all known or suspected hazards have been disclosed herein. I/We certify that the soil is not "hazardous" as defined by U.S. Department of Transportation (DOT), U.S. Environmental Protection Agency (EPA), State or local regulations. I/We further certify that the soils referenced herein contain no free liquids. All analysis reports attached.

Generator's Authorized Signatory: _____ **Date:** _____

Print Name: _____ **Title:** _____

Environmental Firm Signatory:  **Date:** **4/14/2020**

Print Name: **Larry Moothart** **Title:** **Manager**

APPENDIX F

Laboratory Analytical Reports

Enthalpy Analytical
931 West Barkley Ave
Orange, CA 92868
(714) 771-6900

enthalpy.com

Lab Job Number: 426382
Report Level: II
Report Date: 04/03/2020

Analytical Report *prepared for:*

Keith Gilbert
Ninyo & Moore
475 Goddard
Suite 200
Irvine, CA 92618

Location: Strathern Park Soil Sampling / 8041 Whitsett Ave., No. Hollywood, CA

Authorized for release by:

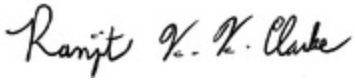

Ranjit K Clarke, Project Manager
(714) 771-9906
Ranjit.Clarke@enthalpy.com

This data package has been reviewed for technical correctness and completeness. Release of this data has been authorized by the Laboratory Manager or the Manager's designee, as verified by the above signature which applies to this PDF file as well as any associated electronic data deliverable files. The results contained in this report meet all requirements of NELAP and pertain only to those samples which were submitted for analysis. This report may be reproduced only in its entirety.

ENTHALPY ANALYTICAL

Sample Summary

Keith Gilbert
Ninyo & Moore
475 Goddard
Suite 200
Irvine, CA 92618

Lab Job #: 426382
Location: Strathern Park Soil Sampling / 8041 Whitsett Ave., No. Hollywood, CA
Date Received: 03/24/20

Sample ID	Lab ID	Collected	Matrix
P-2-1'	426382-001	03/24/20 08:08	Soil
P-2-2.5'	426382-002	03/24/20 08:12	Soil
P-2-5'	426382-003	03/24/20 08:30	Soil
P-2-10.5'	426382-004	03/24/20 10:00	Soil
P-2-11'	426382-005	03/24/20 10:00	Soil
P-2-15'	426382-006	03/24/20 10:30	Soil
P-2-20.5'	426382-007	03/24/20 10:40	Soil
P-2-25'	426382-008	03/24/20 10:50	Soil
P-4-1'	426382-009	03/24/20 12:25	Soil
P-4-2.5'	426382-010	03/24/20 12:30	Soil
P-4-5'	426382-011	03/24/20 12:55	Soil
P-4-10'	426382-012	03/24/20 13:05	Soil
P-4-15'	426382-013	03/24/20 13:10	Soil
P-4-20'	426382-014	03/24/20 13:20	Soil
P-4-25'	426382-015	03/24/20 13:30	Soil

ENTHALPY ANALYTICAL

Case Narrative

Ninyo & Moore 475 Goddard Suite 200 Irvine, CA 92618 Keith Gilbert	Lab Job Number:	426382
	Location:	Strathern Park Soil Sampling / 8041 Whitsett Ave., No. Hollywood, CA
	Date Received:	03/24/20

This data package contains sample and QC results for ten soil samples, requested for the above referenced project on 03/24/20. The samples were received cold and intact.

TPH-Extractables by GC (EPA 8015B):
High RPD was observed for diesel C10-C28 in the MS/MSD of P-4-10' (lab # 426382-012); the high RPD was not associated with any reported results. No other analytical problems were encountered.

Volatile Organics by GC/MS (EPA 8260B):
No analytical problems were encountered.

Semivolatile Organics by GC/MS (EPA 8270C):
High response was observed for 4-nitrophenol in the CCV analyzed 03/30/20 16:25; affected data was qualified with "b". High recovery was observed for 4-nitrophenol in the MS for batch 243926; the parent sample was not a project sample, the LCS was within limits, the associated RPD was within limits, and this analyte was not detected at or above the RL in the associated samples. No other analytical problems were encountered.

Semivolatile Organics by GC/MS SIM (EPA 8270C-SIM):
No analytical problems were encountered.

Pesticides (EPA 8081A):
All samples underwent sulfur cleanup using the copper option in EPA Method 3660B. All samples underwent florisil cleanup using EPA Method 3620C. Low surrogate recoveries were observed for TCMX in a number of samples; the corresponding decachlorobiphenyl surrogate recoveries were within limits. No other analytical problems were encountered.

PCBs (EPA 8082):
All samples underwent sulfuric acid cleanup using EPA Method 3665A. All samples underwent sulfur cleanup using the copper option in EPA Method 3660B. Low recoveries were observed for Aroclor-1016 and Aroclor-1260 in the MS of P-4-1' (lab # 426382-009); the LCS was within limits. High RPD was also observed for Aroclor-1016 and Aroclor-1260 in the MS/MSD of P-4-1' (lab # 426382-009); these analytes were not detected at or above the RL in the associated samples. Low surrogate recoveries were observed for decachlorobiphenyl (PCB) in P-4-1' (lab # 426382-009) and the MS of P-4-1' (lab # 426382-009). No other analytical problems were encountered.

Metals (EPA 6010B and EPA 7471A):
Low recoveries were observed for antimony in the MS/MSD for batch 243740; the parent sample was not a project sample, the LCS was within limits, and the associated RPD was within limits. No other analytical problems were encountered.

Total Oil and Grease in Solids (EPA 1664A M):
No analytical problems were encountered.

8151A Chlorinated Herbicides (EPA 8151A):
American Environmental Testing in Burbank, CA performed the analysis (not NELAP certified). Please see the American Environmental Testing case narrative.

ENTHALPY ANALYTICAL

Chain of Custody Record

Lab No: 420382

Page: 1 of 2

Turn Around Time (rush by advanced notice only)

Standard:	X	5 Day:		3 Day:	
2 Day:		1 Day:		Custom TAT:	

Enthalpy Analytical - Orange

931 W. Barkley Avenue, Orange, CA 92868

Phone 714-771-6900

Matrix: A = Air S = Soil/Solid W = Water DW = Drinking Wate SD = Sediment PP = Pure Product SEA = Sea Water SW = Swab T = Tissue WP = Wipe O = Other

Preservatives: 1 = $Na_2S_2O_3$ 2 = HCl 3 = HNO_3 4 = H_2SO_4 5 = NaOH 6 = Other

Sample Receipt Temp: 2.9/1.8 (lab use only)

CUSTOMER INFORMATION		PROJECT INFORMATION	
Company:	Ninyo & Moore	Name:	Strathern Park Soil Sampling
Report To:	Keith Gilbert	Number:	211294004
Email:	kgilbert@ninyoandmoore.com	P.O. #:	
Address:	475 Goddard Ste 200	Address:	8041 Whitsett Avenue
	Irvine, CA 92618		North Hollywood, CA 91605
Phone:	949-753-7070	Global ID:	
Fax:	949-753-7071	Sampled By:	Kristina Hill (KMH)

	Sample ID	Sampling Date	Sampling Time	Matrix	Container No. / Size	Pres.	Title 22 Metals (6010B/7471A)	TRPH (1664)	TPHcc (8015M)	VOCs (8260B/5035)	SVOCs (8270C)	PAHs (8270SIM)	OCPs (8081A	PCBs (8082)	CHs (8150	pH, nitrates, sulfates	Hold	Test Instructions / Comments
1	P-2-1'	3/24/2020	0808	SOIL	8oz jar	ICE	X						X	X	X			
2	P-2-2.5'		0812				X											
3	P-2-5'		0830														X	
4	P-2-10.5'		1000		6"x1.5" sleeve (1)												X	
5	P-2-11'		1000														X	
6	P-2-15'		1030		6"x 2.5" sleeve (1)			X	X	X	X	X						1 sleeve + 3 VOAs
7	P-2-20.5'		1040		6"x 1.5" sleeves (2)			X										
8	P-2-25'		1050		6"x 2.5" sleeve (1)			X										
9	P-4-1'		1225				X						X	X	X			
10	P-4-2.5'		1230				X											

	Signature	Print Name	Company / Title	Date / Time
[1] Relinquished By:		Kristina Hill	Ninyo & Moore / Geologist	3/24/2020 16:07
[1] Received By:		G Kim	EA	3/24/20 1604
[2] Relinquished By:				3/24/20 1607
[2] Received By:				
[3] Relinquished By:				
[3] Received By:				

ENTHALPY ANALYTICAL

Chain of Custody Record

Lab No:

Page: 2 of 2

Turn Around Time (rush by advanced notice only)

Standard:	X	5 Day:		3 Day:	
2 Day:		1 Day:		Custom TAT:	

Enthalpy Analytical - Orange

931 W. Barkley Avenue, Orange, CA 92868

Phone 714-771-6900

Matrix: A = Air S = Soil/Solid W = Water DW = Drinking Wate SD = Sediment PP = Pure Product SEA = Sea Water SW = Swab T = Tissue WP = Wipe O = Other

Preservatives: 1 = $Na_2S_2O_3$ 2 = HCl 3 = HNO_3 4 = H_2SO_4 5 = NaOH 6 = Other

Sample Receipt Temp: (lab use only)

CUSTOMER INFORMATION		PROJECT INFORMATION	
Company:	Ninyo & Moore	Name:	Strathern Park Soil Sampling
Report To:	Keith Gilbert	Number:	211294004
Email:	kgilbert@ninyoandmoore.com	P.O. #:	
Address:	475 Goddard Ste 200	Address:	8041 Whitsett Avenue
	Irvine, CA 92618		North Hollywood, CA 91605
Phone:	949-753-7070	Global ID:	
Fax:	949-753-7071	Sampled By:	Kristina Hill (KMH)

Test Instructions / Comments: please cc results to khill@ninyoandmoore.com

	Sample ID	Sampling Date	Sampling Time	Matrix	Container No. / Size	Pres.	Title 22 Metals (6010B/7471A)	TRPH (1664)	TPHcc (8015M)	VOCs (8260B/5035)	SVOCs (8270C)	PAHs (8270SIM)	OCPs (8081A	PCBs (8082)	CHs (8150	pH, nitrates, sulfates	Hold
1	P-4-5'	3/24/2020	1255	SOIL	1-6" sleeve	ICE		X									
2	P-4-10'	↓	1305	↓	1-6" sleeve 3 VOAs	↓	X	X	X	X	X						
3	P-4-15'		1310		1-6" sleeve			X									
4	P-4-20'		1320														X
5	P-4-25'	↓	1330	↓	↓	↓											X
6																	
7			KMH 3-24-2020														
8																	
9																	
10																	

	Signature	Print Name	Company / Title	Date / Time
[1] Relinquished By:		Kristina Hill	Ninyo & Moore / Geologist	3/24/2020 16:07
[1] Received By:		G Kim	EA	3/24/20 1605
[2] Relinquished By:				
[2] Received By:				
[3] Relinquished By:				
[3] Received By:				

ENTHALPY ANALYTICAL

SAMPLE ACCEPTANCE CHECKLIST

Section 1

Client: Ninyo & Moore Project: Strathern Park Soil Sampling

Date Received: 3/24/20 Sampler's Name Present: ☑ Yes ☐ No

Section 2

Sample(s) received in a cooler? ☑ Yes, How many? 1 ☐ No (skip section 2) Sample Temp (°C) (No Cooler): _____

Sample Temp (°C), One from each cooler: #1: 2.6 #2: _____ #3: _____ #4: _____

(Acceptance range is < 6°C but not frozen (for Microbiology samples, acceptance range is < 10°C but not frozen). It is acceptable for samples collected the same day as sample receipt to have a higher temperature as long as there is evidence that cooling has begun.)

Shipping Information: _____

Section 3

Was the cooler packed with: ☑ Ice ☐ Ice Packs ☐ Bubble Wrap ☐ Styrofoam ☐ Paper ☐ None ☐ Other _____

Cooler Temp (°C): #1: 1.8 #2: _____ #3: _____ #4: _____

Section 4	YES	NO	N/A
Was a COC received?	✓		
Are sample IDs present?	✓		
Are sampling dates & times present?	✓		
Is a relinquished signature present?	✓		
Are the tests required clearly indicated on the COC?	✓		
Are custody seals present?		✓	
If custody seals are present, were they intact?			✓
Are all samples sealed in plastic bags? (Recommended for Microbiology samples)	✓		
Did all samples arrive intact? If no, indicate in Section 4 below.	✓		
Did all bottle labels agree with COC? (ID, dates and times)	✓		
Were the samples collected in the correct containers for the required tests?	✓		
Are the containers labeled with the correct preservatives?	✓		
Is there headspace in the VOA vials greater than 5-6 mm in diameter?			✓
Was a sufficient amount of sample submitted for the requested tests?	✓		

Section 5 Explanations/Comments

Section 6

For discrepancies, how was the Project Manager notified? ☐ Verbal PM Initials: _____ Date/Time _____

☐ Email (email sent to/on): _____ / _____

Project Manager's response:

Completed By: _____ Date: 3/24/20

Enthalpy Analytical, a subsidiary of Montrose Environmental Group ,Inc.
931 W. Barkley Ave, Orange, CA 92868 • T: (714) 771-6900 • F: (714) 538-1209
www.enthalpy.com/socal

ENTHALPY ANALYTICAL

Analysis Results for 426382

Keith Gilbert
Ninyo & Moore
475 Goddard
Suite 200
Irvine, CA 92618

Lab Job #: 426382
Location: Strathern Park Soil Sampling / 8041 Whitsett Ave., No. Hollywood, CA
Date Received: 03/24/20

Sample ID: P-2-1' **Lab ID: 426382-001** **Collected: 03/24/20 08:08**
Matrix: Soil

426382-001 Analyte	Result	Qual	Units	RL	DF	Batch	Prepared	Analyzed	Chemist
Method: EPA 6010B Prep Method: EPA 3050B									
Antimony	ND		mg/Kg	3.0	0.99	243740	03/25/20	03/26/20	SBW
Arsenic	**2.1**		mg/Kg	0.99	0.99	243740	03/25/20	03/27/20	SBW
Barium	**37**		mg/Kg	0.99	0.99	243740	03/25/20	03/26/20	SBW
Beryllium	ND		mg/Kg	0.50	0.99	243740	03/25/20	03/26/20	SBW
Cadmium	ND		mg/Kg	0.50	0.99	243740	03/25/20	03/26/20	SBW
Chromium	**6.2**		mg/Kg	0.99	0.99	243740	03/25/20	03/26/20	SBW
Cobalt	**3.8**		mg/Kg	0.50	0.99	243740	03/25/20	03/26/20	SBW
Copper	**4.0**		mg/Kg	0.99	0.99	243740	03/25/20	03/26/20	SBW
Lead	**6.1**		mg/Kg	0.99	0.99	243740	03/25/20	03/26/20	SBW
Molybdenum	ND		mg/Kg	0.99	0.99	243740	03/25/20	03/26/20	SBW
Nickel	**3.2**		mg/Kg	1.5	0.99	243740	03/25/20	03/26/20	SBW
Selenium	ND		mg/Kg	3.0	0.99	243740	03/25/20	03/26/20	SBW
Silver	ND		mg/Kg	0.50	0.99	243740	03/25/20	03/26/20	SBW
Thallium	ND		mg/Kg	3.0	0.99	243740	03/25/20	03/26/20	SBW
Vanadium	**26**		mg/Kg	0.50	0.99	243740	03/25/20	03/26/20	SBW
Zinc	**20**		mg/Kg	5.0	0.99	243740	03/25/20	03/26/20	SBW
Method: EPA 7471A Prep Method: METHOD									
Mercury	ND		mg/Kg	0.14	1	243745	03/25/20	03/26/20	DLS
Method: EPA 8081A Prep Method: EPA 3546									
alpha-BHC	ND		ug/Kg	5.0	0.99	243862	03/27/20	03/31/20	MTS
beta-BHC	ND		ug/Kg	5.0	0.99	243862	03/27/20	03/31/20	MTS
gamma-BHC	ND		ug/Kg	5.0	0.99	243862	03/27/20	03/31/20	MTS
delta-BHC	ND		ug/Kg	5.0	0.99	243862	03/27/20	03/31/20	MTS
Heptachlor	ND		ug/Kg	5.0	0.99	243862	03/27/20	03/31/20	MTS
Aldrin	ND		ug/Kg	5.0	0.99	243862	03/27/20	03/31/20	MTS
Heptachlor epoxide	ND		ug/Kg	5.0	0.99	243862	03/27/20	03/31/20	MTS
Endosulfan I	ND		ug/Kg	5.0	0.99	243862	03/27/20	03/31/20	MTS
Dieldrin	ND		ug/Kg	5.0	0.99	243862	03/27/20	03/31/20	MTS
4,4'-DDE	ND		ug/Kg	5.0	0.99	243862	03/27/20	03/31/20	MTS
Endrin	ND		ug/Kg	5.0	0.99	243862	03/27/20	03/31/20	MTS
Endosulfan II	ND		ug/Kg	5.0	0.99	243862	03/27/20	03/31/20	MTS
Endosulfan sulfate	ND		ug/Kg	5.0	0.99	243862	03/27/20	03/31/20	MTS

Results for any subcontracted analyses are not included in this section.

ENTHALPY ANALYTICAL

Analysis Results for 426382

426382-001 Analyte	Result	Qual	Units	RL	DF	Batch	Prepared	Analyzed	Chemist
4,4'-DDD	ND		ug/Kg	5.0	0.99	243862	03/27/20	03/31/20	MTS
Endrin aldehyde	ND		ug/Kg	5.0	0.99	243862	03/27/20	03/31/20	MTS
Endrin ketone	ND		ug/Kg	5.0	0.99	243862	03/27/20	03/31/20	MTS
4,4'-DDT	ND		ug/Kg	5.0	0.99	243862	03/27/20	03/31/20	MTS
Methoxychlor	ND		ug/Kg	9.9	0.99	243862	03/27/20	03/31/20	MTS
Toxaphene	ND		ug/Kg	99	0.99	243862	03/27/20	03/31/20	MTS
Chlordane (Technical)	ND		ug/Kg	50	0.99	243862	03/27/20	03/31/20	MTS
Surrogates				**Limits**					
TCMX	38%	*	%REC	50-150	0.99	243862	03/27/20	03/31/20	MTS
Decachlorobiphenyl	37%		%REC	24-120	0.99	243862	03/27/20	03/31/20	MTS
Method: EPA 8082 Prep Method: EPA 3546									
Aroclor-1016	ND		ug/Kg	50	0.99	243862	03/27/20	03/31/20	MTS
Aroclor-1221	ND		ug/Kg	50	0.99	243862	03/27/20	03/31/20	MTS
Aroclor-1232	ND		ug/Kg	50	0.99	243862	03/27/20	03/31/20	MTS
Aroclor-1242	ND		ug/Kg	50	0.99	243862	03/27/20	03/31/20	MTS
Aroclor-1248	ND		ug/Kg	50	0.99	243862	03/27/20	03/31/20	MTS
Aroclor-1254	ND		ug/Kg	50	0.99	243862	03/27/20	03/31/20	MTS
Aroclor-1260	ND		ug/Kg	50	0.99	243862	03/27/20	03/31/20	MTS
Aroclor-1262	ND		ug/Kg	50	0.99	243862	03/27/20	03/31/20	MTS
Aroclor-1268	ND		ug/Kg	50	0.99	243862	03/27/20	03/31/20	MTS
Surrogates				**Limits**					
Decachlorobiphenyl (PCB)	51%		%REC	50-150	0.99	243862	03/27/20	03/31/20	MTS

Results for any subcontracted analyses are not included in this section.

ENTHALPY ANALYTICAL

Analysis Results for 426382

Sample ID: P-2-2.5'	Lab ID: 426382-002	Collected: 03/24/20 08:12
	Matrix: Soil	

426382-002 Analyte	Result	Qual	Units	RL	DF	Batch	Prepared	Analyzed	Chemist
Method: EPA 6010B Prep Method: EPA 3050B									
Antimony	ND		mg/Kg	3.0	1	243740	03/25/20	03/26/20	SBW
Arsenic	**2.4**		mg/Kg	1.0	1	243740	03/25/20	03/27/20	SBW
Barium	**37**		mg/Kg	1.0	1	243740	03/25/20	03/26/20	SBW
Beryllium	ND		mg/Kg	0.50	1	243740	03/25/20	03/26/20	SBW
Cadmium	ND		mg/Kg	0.50	1	243740	03/25/20	03/26/20	SBW
Chromium	**5.7**		mg/Kg	1.0	1	243740	03/25/20	03/26/20	SBW
Cobalt	**3.6**		mg/Kg	0.50	1	243740	03/25/20	03/26/20	SBW
Copper	**4.7**		mg/Kg	1.0	1	243740	03/25/20	03/27/20	SBW
Lead	**3.9**		mg/Kg	1.0	1	243740	03/25/20	03/26/20	SBW
Molybdenum	ND		mg/Kg	1.0	1	243740	03/25/20	03/26/20	SBW
Nickel	**2.6**		mg/Kg	1.5	1	243740	03/25/20	03/26/20	SBW
Selenium	ND		mg/Kg	3.0	1	243740	03/25/20	03/26/20	SBW
Silver	ND		mg/Kg	0.50	1	243740	03/25/20	03/26/20	SBW
Thallium	ND		mg/Kg	3.0	1	243740	03/25/20	03/26/20	SBW
Vanadium	**30**		mg/Kg	0.50	1	243740	03/25/20	03/26/20	SBW
Zinc	**15**		mg/Kg	5.0	1	243740	03/25/20	03/26/20	SBW
Method: EPA 7471A Prep Method: METHOD									
Mercury	ND		mg/Kg	0.13	0.9	243745	03/25/20	03/26/20	DLS

Results for any subcontracted analyses are not included in this section.

ENTHALPY ANALYTICAL

Analysis Results for 426382

Sample ID: P-2-15'	Lab ID: 426382-006	Collected: 03/24/20 10:30
	Matrix: Soil	

426382-006 Analyte	Result	Qual	Units	RL	DF	Batch	Prepared	Analyzed	Chemist
Method: EPA 1664A M									
Total Oil and Grease	ND		mg/Kg	500	1	243982	03/31/20	03/31/20	ECC
Method: EPA 8015B Prep Method: EPA 3580									
TPH C6-C12	ND		mg/Kg	9.9	0.99	243822	03/26/20	03/27/20	TJW
TPH C13-C22	ND		mg/Kg	9.9	0.99	243822	03/26/20	03/27/20	TJW
TPH C23-C44	**14**		mg/Kg	9.9	0.99	243822	03/26/20	03/27/20	TJW
Surrogates				**Limits**					
n-Triacontane	89%		%REC	50-150	50	243822	03/26/20	03/27/20	TJW
Method: EPA 8260B Prep Method: EPA 5035									
3-Chloropropene	ND		ug/Kg	5.3	1.1	243906	03/29/20	03/29/20	LYZ
cis-1,4-Dichloro-2-butene	ND		ug/Kg	5.3	1.1	243906	03/29/20	03/29/20	LYZ
trans-1,4-Dichloro-2-butene	ND		ug/Kg	5.3	1.1	243906	03/29/20	03/29/20	LYZ
Isopropyl Ether (DIPE)	ND		ug/Kg	5.3	1.1	243906	03/29/20	03/29/20	LYZ
Ethyl tert-Butyl Ether (ETBE)	ND		ug/Kg	5.3	1.1	243906	03/29/20	03/29/20	LYZ
Methyl tert-Amyl Ether (TAME)	ND		ug/Kg	5.3	1.1	243906	03/29/20	03/29/20	LYZ
tert-Butyl Alcohol (TBA)	ND		ug/Kg	11	1.1	243906	03/29/20	03/29/20	LYZ
Freon 12	ND		ug/Kg	5.3	1.1	243906	03/29/20	03/29/20	LYZ
Chloromethane	ND		ug/Kg	5.3	1.1	243906	03/29/20	03/29/20	LYZ
Vinyl Chloride	ND		ug/Kg	5.3	1.1	243906	03/29/20	03/29/20	LYZ
Bromomethane	ND		ug/Kg	5.3	1.1	243906	03/29/20	03/29/20	LYZ
Chloroethane	ND		ug/Kg	5.3	1.1	243906	03/29/20	03/29/20	LYZ
Trichlorofluoromethane	ND		ug/Kg	5.3	1.1	243906	03/29/20	03/29/20	LYZ
Acetone	ND		ug/Kg	110	1.1	243906	03/29/20	03/29/20	LYZ
Freon 113	ND		ug/Kg	5.3	1.1	243906	03/29/20	03/29/20	LYZ
1,1-Dichloroethene	ND		ug/Kg	5.3	1.1	243906	03/29/20	03/29/20	LYZ
Methylene Chloride	ND		ug/Kg	5.3	1.1	243906	03/29/20	03/29/20	LYZ
MTBE	ND		ug/Kg	5.3	1.1	243906	03/29/20	03/29/20	LYZ
trans-1,2-Dichloroethene	ND		ug/Kg	5.3	1.1	243906	03/29/20	03/29/20	LYZ
1,1-Dichloroethane	ND		ug/Kg	5.3	1.1	243906	03/29/20	03/29/20	LYZ
2-Butanone	ND		ug/Kg	110	1.1	243906	03/29/20	03/29/20	LYZ
cis-1,2-Dichloroethene	ND		ug/Kg	5.3	1.1	243906	03/29/20	03/29/20	LYZ
2,2-Dichloropropane	ND		ug/Kg	5.3	1.1	243906	03/29/20	03/29/20	LYZ
Chloroform	ND		ug/Kg	5.3	1.1	243906	03/29/20	03/29/20	LYZ
Bromochloromethane	ND		ug/Kg	5.3	1.1	243906	03/29/20	03/29/20	LYZ
1,1,1-Trichloroethane	ND		ug/Kg	5.3	1.1	243906	03/29/20	03/29/20	LYZ
1,1-Dichloropropene	ND		ug/Kg	5.3	1.1	243906	03/29/20	03/29/20	LYZ
Carbon Tetrachloride	ND		ug/Kg	5.3	1.1	243906	03/29/20	03/29/20	LYZ
1,2-Dichloroethane	ND		ug/Kg	5.3	1.1	243906	03/29/20	03/29/20	LYZ
Benzene	ND		ug/Kg	5.3	1.1	243906	03/29/20	03/29/20	LYZ
Trichloroethene	ND		ug/Kg	5.3	1.1	243906	03/29/20	03/29/20	LYZ

Results for any subcontracted analyses are not included in this section.

ENTHALPY ANALYTICAL

Analysis Results for 426382

426382-006 Analyte	Result	Qual	Units	RL	DF	Batch	Prepared	Analyzed	Chemist
1,2-Dichloropropane	ND		ug/Kg	5.3	1.1	243906	03/29/20	03/29/20	LYZ
Bromodichloromethane	ND		ug/Kg	5.3	1.1	243906	03/29/20	03/29/20	LYZ
Dibromomethane	ND		ug/Kg	5.3	1.1	243906	03/29/20	03/29/20	LYZ
4-Methyl-2-Pentanone	ND		ug/Kg	5.3	1.1	243906	03/29/20	03/29/20	LYZ
cis-1,3-Dichloropropene	ND		ug/Kg	5.3	1.1	243906	03/29/20	03/29/20	LYZ
Toluene	ND		ug/Kg	5.3	1.1	243906	03/29/20	03/29/20	LYZ
trans-1,3-Dichloropropene	ND		ug/Kg	5.3	1.1	243906	03/29/20	03/29/20	LYZ
1,1,2-Trichloroethane	ND		ug/Kg	5.3	1.1	243906	03/29/20	03/29/20	LYZ
1,3-Dichloropropane	ND		ug/Kg	5.3	1.1	243906	03/29/20	03/29/20	LYZ
Tetrachloroethene	ND		ug/Kg	5.3	1.1	243906	03/29/20	03/29/20	LYZ
Dibromochloromethane	ND		ug/Kg	5.3	1.1	243906	03/29/20	03/29/20	LYZ
1,2-Dibromoethane	ND		ug/Kg	5.3	1.1	243906	03/29/20	03/29/20	LYZ
Chlorobenzene	ND		ug/Kg	5.3	1.1	243906	03/29/20	03/29/20	LYZ
1,1,1,2-Tetrachloroethane	ND		ug/Kg	5.3	1.1	243906	03/29/20	03/29/20	LYZ
Ethylbenzene	ND		ug/Kg	5.3	1.1	243906	03/29/20	03/29/20	LYZ
m,p-Xylenes	ND		ug/Kg	11	1.1	243906	03/29/20	03/29/20	LYZ
o-Xylene	ND		ug/Kg	5.3	1.1	243906	03/29/20	03/29/20	LYZ
Styrene	ND		ug/Kg	5.3	1.1	243906	03/29/20	03/29/20	LYZ
Bromoform	ND		ug/Kg	5.3	1.1	243906	03/29/20	03/29/20	LYZ
Isopropylbenzene	ND		ug/Kg	5.3	1.1	243906	03/29/20	03/29/20	LYZ
1,1,2,2-Tetrachloroethane	ND		ug/Kg	5.3	1.1	243906	03/29/20	03/29/20	LYZ
1,2,3-Trichloropropane	ND		ug/Kg	5.3	1.1	243906	03/29/20	03/29/20	LYZ
Propylbenzene	ND		ug/Kg	5.3	1.1	243906	03/29/20	03/29/20	LYZ
Bromobenzene	ND		ug/Kg	5.3	1.1	243906	03/29/20	03/29/20	LYZ
1,3,5-Trimethylbenzene	ND		ug/Kg	5.3	1.1	243906	03/29/20	03/29/20	LYZ
2-Chlorotoluene	ND		ug/Kg	5.3	1.1	243906	03/29/20	03/29/20	LYZ
4-Chlorotoluene	ND		ug/Kg	5.3	1.1	243906	03/29/20	03/29/20	LYZ
tert-Butylbenzene	ND		ug/Kg	5.3	1.1	243906	03/29/20	03/29/20	LYZ
1,2,4-Trimethylbenzene	ND		ug/Kg	5.3	1.1	243906	03/29/20	03/29/20	LYZ
sec-Butylbenzene	ND		ug/Kg	5.3	1.1	243906	03/29/20	03/29/20	LYZ
para-Isopropyl Toluene	ND		ug/Kg	5.3	1.1	243906	03/29/20	03/29/20	LYZ
1,3-Dichlorobenzene	ND		ug/Kg	5.3	1.1	243906	03/29/20	03/29/20	LYZ
1,4-Dichlorobenzene	ND		ug/Kg	5.3	1.1	243906	03/29/20	03/29/20	LYZ
n-Butylbenzene	ND		ug/Kg	5.3	1.1	243906	03/29/20	03/29/20	LYZ
1,2-Dichlorobenzene	ND		ug/Kg	5.3	1.1	243906	03/29/20	03/29/20	LYZ
1,2-Dibromo-3-Chloropropane	ND		ug/Kg	5.3	1.1	243906	03/29/20	03/29/20	LYZ
1,2,4-Trichlorobenzene	ND		ug/Kg	5.3	1.1	243906	03/29/20	03/29/20	LYZ
Hexachlorobutadiene	ND		ug/Kg	5.3	1.1	243906	03/29/20	03/29/20	LYZ
Naphthalene	ND		ug/Kg	5.3	1.1	243906	03/29/20	03/29/20	LYZ
1,2,3-Trichlorobenzene	ND		ug/Kg	5.3	1.1	243906	03/29/20	03/29/20	LYZ
Xylene (total)	ND		ug/Kg	5.3	1.1	243906	03/29/20	03/29/20	LYZ
Surrogates				**Limits**					
Dibromofluoromethane	104%		%REC	70-145	1.1	243906	03/29/20	03/29/20	LYZ
1,2-Dichloroethane-d4	116%		%REC	70-145	1.1	243906	03/29/20	03/29/20	LYZ
Toluene-d8	102%		%REC	70-145	1.1	243906	03/29/20	03/29/20	LYZ
Bromofluorobenzene	95%		%REC	70-145	1.1	243906	03/29/20	03/29/20	LYZ

Results for any subcontracted analyses are not included in this section.

ENTHALPY ANALYTICAL

Analysis Results for 426382

426382-006 Analyte	Result	Qual	Units	RL	DF	Batch	Prepared	Analyzed	Chemist
Method: EPA 8270C-SIM Prep Method: EPA 3550C									
1-Methylnaphthalene	ND		ug/Kg	10	1	243741	03/24/20	03/27/20	MTS
2-Methylnaphthalene	ND		ug/Kg	10	1	243741	03/24/20	03/27/20	MTS
Naphthalene	ND		ug/Kg	10	1	243741	03/24/20	03/27/20	MTS
Acenaphthylene	ND		ug/Kg	10	1	243741	03/24/20	03/27/20	MTS
Acenaphthene	ND		ug/Kg	10	1	243741	03/24/20	03/27/20	MTS
Fluorene	ND		ug/Kg	10	1	243741	03/24/20	03/27/20	MTS
Phenanthrene	ND		ug/Kg	10	1	243741	03/24/20	03/27/20	MTS
Anthracene	ND		ug/Kg	10	1	243741	03/24/20	03/27/20	MTS
Fluoranthene	ND		ug/Kg	10	1	243741	03/24/20	03/27/20	MTS
Pyrene	ND		ug/Kg	10	1	243741	03/24/20	03/27/20	MTS
Benzo(a)anthracene	ND		ug/Kg	10	1	243741	03/24/20	03/27/20	MTS
Chrysene	ND		ug/Kg	10	1	243741	03/24/20	03/27/20	MTS
Benzo(b)fluoranthene	ND		ug/Kg	10	1	243741	03/24/20	03/27/20	MTS
Benzo(k)fluoranthene	ND		ug/Kg	10	1	243741	03/24/20	03/27/20	MTS
Benzo(a)pyrene	ND		ug/Kg	10	1	243741	03/24/20	03/27/20	MTS
Indeno(1,2,3-cd)pyrene	ND		ug/Kg	10	1	243741	03/24/20	03/27/20	MTS
Dibenz(a,h)anthracene	ND		ug/Kg	10	1	243741	03/24/20	03/27/20	MTS
Benzo(g,h,i)perylene	ND		ug/Kg	10	1	243741	03/24/20	03/27/20	MTS
Surrogates				**Limits**					
Nitrobenzene-d5	96%		%REC	27-125	1	243741	03/24/20	03/27/20	MTS
2-Fluorobiphenyl	100%		%REC	30-120	1	243741	03/24/20	03/27/20	MTS
Terphenyl-d14	110%		%REC	33-155	1	243741	03/24/20	03/27/20	MTS
Method: EPA 8270C Prep Method: EPA 3550C									
Carbazole	ND		ug/Kg	250	1	243926	03/30/20	03/30/20	MTS
1-Methylnaphthalene	ND		ug/Kg	250	1	243926	03/30/20	03/30/20	MTS
Pyridine	ND		ug/Kg	250	1	243926	03/30/20	03/30/20	MTS
N-Nitrosodimethylamine	ND		ug/Kg	250	1	243926	03/30/20	03/30/20	MTS
Phenol	ND		ug/Kg	250	1	243926	03/30/20	03/30/20	MTS
Aniline	ND		ug/Kg	250	1	243926	03/30/20	03/30/20	MTS
bis(2-Chloroethyl)ether	ND		ug/Kg	1,200	1	243926	03/30/20	03/30/20	MTS
2-Chlorophenol	ND		ug/Kg	250	1	243926	03/30/20	03/30/20	MTS
1,3-Dichlorobenzene	ND		ug/Kg	250	1	243926	03/30/20	03/30/20	MTS
1,4-Dichlorobenzene	ND		ug/Kg	250	1	243926	03/30/20	03/30/20	MTS
Benzyl alcohol	ND		ug/Kg	250	1	243926	03/30/20	03/30/20	MTS
1,2-Dichlorobenzene	ND		ug/Kg	250	1	243926	03/30/20	03/30/20	MTS
2-Methylphenol	ND		ug/Kg	250	1	243926	03/30/20	03/30/20	MTS
bis(2-Chloroisopropyl) ether	ND		ug/Kg	250	1	243926	03/30/20	03/30/20	MTS
3-,4-Methylphenol	ND		ug/Kg	400	1	243926	03/30/20	03/30/20	MTS
N-Nitroso-di-n-propylamine	ND		ug/Kg	250	1	243926	03/30/20	03/30/20	MTS
Hexachloroethane	ND		ug/Kg	250	1	243926	03/30/20	03/30/20	MTS
Nitrobenzene	ND		ug/Kg	1,200	1	243926	03/30/20	03/30/20	MTS
Isophorone	ND		ug/Kg	250	1	243926	03/30/20	03/30/20	MTS
2-Nitrophenol	ND		ug/Kg	250	1	243926	03/30/20	03/30/20	MTS

Results for any subcontracted analyses are not included in this section.

ENTHALPY ANALYTICAL

Analysis Results for 426382

426382-006 Analyte	Result	Qual	Units	RL	DF	Batch	Prepared	Analyzed	Chemist
2,4-Dimethylphenol	ND		ug/Kg	250	1	243926	03/30/20	03/30/20	MTS
Benzoic acid	ND		ug/Kg	1,200	1	243926	03/30/20	03/30/20	MTS
bis(2-Chloroethoxy)methane	ND		ug/Kg	250	1	243926	03/30/20	03/30/20	MTS
2,4-Dichlorophenol	ND		ug/Kg	250	1	243926	03/30/20	03/30/20	MTS
1,2,4-Trichlorobenzene	ND		ug/Kg	250	1	243926	03/30/20	03/30/20	MTS
Naphthalene	ND		ug/Kg	250	1	243926	03/30/20	03/30/20	MTS
4-Chloroaniline	ND		ug/Kg	250	1	243926	03/30/20	03/30/20	MTS
Hexachlorobutadiene	ND		ug/Kg	250	1	243926	03/30/20	03/30/20	MTS
4-Chloro-3-methylphenol	ND		ug/Kg	250	1	243926	03/30/20	03/30/20	MTS
2-Methylnaphthalene	ND		ug/Kg	250	1	243926	03/30/20	03/30/20	MTS
Hexachlorocyclopentadiene	ND		ug/Kg	1,200	1	243926	03/30/20	03/30/20	MTS
2,4,6-Trichlorophenol	ND		ug/Kg	250	1	243926	03/30/20	03/30/20	MTS
2,4,5-Trichlorophenol	ND		ug/Kg	250	1	243926	03/30/20	03/30/20	MTS
2-Chloronaphthalene	ND		ug/Kg	250	1	243926	03/30/20	03/30/20	MTS
2-Nitroaniline	ND		ug/Kg	250	1	243926	03/30/20	03/30/20	MTS
Dimethylphthalate	ND		ug/Kg	250	1	243926	03/30/20	03/30/20	MTS
Acenaphthylene	ND		ug/Kg	250	1	243926	03/30/20	03/30/20	MTS
2,6-Dinitrotoluene	ND		ug/Kg	250	1	243926	03/30/20	03/30/20	MTS
3-Nitroaniline	ND		ug/Kg	250	1	243926	03/30/20	03/30/20	MTS
Acenaphthene	ND		ug/Kg	250	1	243926	03/30/20	03/30/20	MTS
2,4-Dinitrophenol	ND		ug/Kg	1,200	1	243926	03/30/20	03/30/20	MTS
4-Nitrophenol	ND		ug/Kg	250	1	243926	03/30/20	03/30/20	MTS
Dibenzofuran	ND		ug/Kg	250	1	243926	03/30/20	03/30/20	MTS
2,4-Dinitrotoluene	ND		ug/Kg	250	1	243926	03/30/20	03/30/20	MTS
Diethylphthalate	ND		ug/Kg	250	1	243926	03/30/20	03/30/20	MTS
Fluorene	ND		ug/Kg	250	1	243926	03/30/20	03/30/20	MTS
4-Chlorophenyl-phenylether	ND		ug/Kg	250	1	243926	03/30/20	03/30/20	MTS
4-Nitroaniline	ND		ug/Kg	250	1	243926	03/30/20	03/30/20	MTS
4,6-Dinitro-2-methylphenol	ND		ug/Kg	250	1	243926	03/30/20	03/30/20	MTS
N-Nitrosodiphenylamine	ND		ug/Kg	250	1	243926	03/30/20	03/30/20	MTS
Azobenzene	ND		ug/Kg	250	1	243926	03/30/20	03/30/20	MTS
4-Bromophenyl-phenylether	ND		ug/Kg	250	1	243926	03/30/20	03/30/20	MTS
Hexachlorobenzene	ND		ug/Kg	250	1	243926	03/30/20	03/30/20	MTS
Pentachlorophenol	ND		ug/Kg	1,200	1	243926	03/30/20	03/30/20	MTS
Phenanthrene	ND		ug/Kg	250	1	243926	03/30/20	03/30/20	MTS
Anthracene	ND		ug/Kg	250	1	243926	03/30/20	03/30/20	MTS
Di-n-butylphthalate	ND		ug/Kg	250	1	243926	03/30/20	03/30/20	MTS
Fluoranthene	ND		ug/Kg	250	1	243926	03/30/20	03/30/20	MTS
Benzidine	ND		ug/Kg	1,200	1	243926	03/30/20	03/30/20	MTS
Pyrene	ND		ug/Kg	250	1	243926	03/30/20	03/30/20	MTS
Butylbenzylphthalate	ND		ug/Kg	250	1	243926	03/30/20	03/30/20	MTS
3,3'-Dichlorobenzidine	ND		ug/Kg	1,200	1	243926	03/30/20	03/30/20	MTS
Benzo(a)anthracene	ND		ug/Kg	250	1	243926	03/30/20	03/30/20	MTS
Chrysene	ND		ug/Kg	250	1	243926	03/30/20	03/30/20	MTS
bis(2-Ethylhexyl)phthalate	ND		ug/Kg	250	1	243926	03/30/20	03/30/20	MTS
Di-n-octylphthalate	ND		ug/Kg	250	1	243926	03/30/20	03/30/20	MTS

Results for any subcontracted analyses are not included in this section.

ENTHALPY ANALYTICAL

Analysis Results for 426382

426382-006 Analyte	Result	Qual	Units	RL	DF	Batch	Prepared	Analyzed	Chemist
Benzo(b)fluoranthene	ND		ug/Kg	250	1	243926	03/30/20	03/30/20	MTS
Benzo(k)fluoranthene	ND		ug/Kg	250	1	243926	03/30/20	03/30/20	MTS
Benzo(a)pyrene	ND		ug/Kg	250	1	243926	03/30/20	03/30/20	MTS
Indeno(1,2,3-cd)pyrene	ND		ug/Kg	250	1	243926	03/30/20	03/30/20	MTS
Dibenz(a,h)anthracene	ND		ug/Kg	250	1	243926	03/30/20	03/30/20	MTS
Benzo(g,h,i)perylene	ND		ug/Kg	250	1	243926	03/30/20	03/30/20	MTS
Surrogates				**Limits**					
2-Fluorophenol	80%		%REC	13-153	1	243926	03/30/20	03/30/20	MTS
Phenol-d6	79%		%REC	10-110	1	243926	03/30/20	03/30/20	MTS
2,4,6-Tribromophenol	74%		%REC	34-143	1	243926	03/30/20	03/30/20	MTS
Nitrobenzene-d5	85%		%REC	27-125	1	243926	03/30/20	03/30/20	MTS
2-Fluorobiphenyl	82%		%REC	41-125	1	243926	03/30/20	03/30/20	MTS
Terphenyl-d14	87%		%REC	33-155	1	243926	03/30/20	03/30/20	MTS

Sample ID: P-2-20.5' **Lab ID: 426382-007** **Collected: 03/24/20 10:40**
Matrix: Soil

426382-007 Analyte	Result	Qual	Units	RL	DF	Batch	Prepared	Analyzed	Chemist
Method: EPA 1664A M									
Total Oil and Grease	ND		mg/Kg	500	1	243982	03/31/20	03/31/20	ECC

Sample ID: P-2-25' **Lab ID: 426382-008** **Collected: 03/24/20 10:50**
Matrix: Soil

426382-008 Analyte	Result	Qual	Units	RL	DF	Batch	Prepared	Analyzed	Chemist
Method: EPA 1664A M									
Total Oil and Grease	ND		mg/Kg	500	1	243982	03/31/20	03/31/20	ECC

Results for any subcontracted analyses are not included in this section.

ENTHALPY ANALYTICAL

Analysis Results for 426382

Sample ID: P-4-1'	Lab ID: 426382-009	Collected: 03/24/20 12:25
	Matrix: Soil	

426382-009 Analyte	Result	Qual	Units	RL	DF	Batch	Prepared	Analyzed	Chemist
Method: EPA 6010B Prep Method: EPA 3050B									
Antimony	ND		mg/Kg	3.2	1.1	243740	03/25/20	03/26/20	SBW
Arsenic	**6.4**		mg/Kg	1.1	1.1	243740	03/25/20	03/26/20	SBW
Barium	**140**		mg/Kg	1.1	1.1	243740	03/25/20	03/26/20	SBW
Beryllium	ND		mg/Kg	0.53	1.1	243740	03/25/20	03/26/20	SBW
Cadmium	**1.5**		mg/Kg	0.53	1.1	243740	03/25/20	03/26/20	SBW
Chromium	**27**		mg/Kg	1.1	1.1	243740	03/25/20	03/26/20	SBW
Cobalt	**10**		mg/Kg	0.53	1.1	243740	03/25/20	03/26/20	SBW
Copper	**23**		mg/Kg	1.1	1.1	243740	03/25/20	03/27/20	SBW
Lead	**29**		mg/Kg	1.1	1.1	243740	03/25/20	03/26/20	SBW
Molybdenum	**3.7**		mg/Kg	1.1	1.1	243740	03/25/20	03/26/20	SBW
Nickel	**22**		mg/Kg	1.6	1.1	243740	03/25/20	03/26/20	SBW
Selenium	ND		mg/Kg	3.2	1.1	243740	03/25/20	03/26/20	SBW
Silver	ND		mg/Kg	0.53	1.1	243740	03/25/20	03/26/20	SBW
Thallium	ND		mg/Kg	3.2	1.1	243740	03/25/20	03/26/20	SBW
Vanadium	**52**		mg/Kg	0.53	1.1	243740	03/25/20	03/26/20	SBW
Zinc	**80**		mg/Kg	5.3	1.1	243740	03/25/20	03/26/20	SBW
Method: EPA 7471A Prep Method: METHOD									
Mercury	ND		mg/Kg	0.14	1	243745	03/25/20	03/26/20	DLS
Method: EPA 8081A Prep Method: EPA 3546									
alpha-BHC	ND		ug/Kg	9.8	2	243862	03/27/20	03/30/20	MTS
beta-BHC	ND		ug/Kg	9.8	2	243862	03/27/20	03/30/20	MTS
gamma-BHC	ND		ug/Kg	9.8	2	243862	03/27/20	03/30/20	MTS
delta-BHC	ND		ug/Kg	9.8	2	243862	03/27/20	03/30/20	MTS
Heptachlor	ND		ug/Kg	9.8	2	243862	03/27/20	03/30/20	MTS
Aldrin	ND		ug/Kg	9.8	2	243862	03/27/20	03/30/20	MTS
Heptachlor epoxide	ND		ug/Kg	9.8	2	243862	03/27/20	03/30/20	MTS
Endosulfan I	ND		ug/Kg	9.8	2	243862	03/27/20	03/30/20	MTS
Dieldrin	ND		ug/Kg	9.8	2	243862	03/27/20	03/30/20	MTS
4,4'-DDE	ND		ug/Kg	9.8	2	243862	03/27/20	03/30/20	MTS
Endrin	ND		ug/Kg	9.8	2	243862	03/27/20	03/30/20	MTS
Endosulfan II	ND		ug/Kg	9.8	2	243862	03/27/20	03/30/20	MTS
Endosulfan sulfate	ND		ug/Kg	9.8	2	243862	03/27/20	03/30/20	MTS
4,4'-DDD	ND		ug/Kg	9.8	2	243862	03/27/20	03/30/20	MTS
Endrin aldehyde	ND		ug/Kg	9.8	2	243862	03/27/20	03/30/20	MTS
Endrin ketone	ND		ug/Kg	9.8	2	243862	03/27/20	03/30/20	MTS
4,4'-DDT	ND		ug/Kg	9.8	2	243862	03/27/20	03/30/20	MTS
Methoxychlor	ND		ug/Kg	39	2	243862	03/27/20	03/30/20	MTS
Toxaphene	ND		ug/Kg	200	2	243862	03/27/20	03/30/20	MTS

Results for any subcontracted analyses are not included in this section.

ENTHALPY ANALYTICAL

Analysis Results for 426382

426382-009 Analyte	Result	Qual	Units	RL	DF	Batch	Prepared	Analyzed	Chemist
Chlordane (Technical)	ND		ug/Kg	98	2	243862	03/27/20	03/30/20	MTS
Surrogates				**Limits**					
TCMX	35%	*	%REC	50-150	2	243862	03/27/20	03/30/20	MTS
Decachlorobiphenyl	46%		%REC	24-120	2	243862	03/27/20	03/30/20	MTS
Method: EPA 8082 Prep Method: EPA 3546									
Aroclor-1016	ND		ug/Kg	98	2	243862	03/27/20	03/30/20	MTS
Aroclor-1221	ND		ug/Kg	98	2	243862	03/27/20	03/30/20	MTS
Aroclor-1232	ND		ug/Kg	98	2	243862	03/27/20	03/30/20	MTS
Aroclor-1242	ND		ug/Kg	98	2	243862	03/27/20	03/30/20	MTS
Aroclor-1248	ND		ug/Kg	98	2	243862	03/27/20	03/30/20	MTS
Aroclor-1254	ND		ug/Kg	98	2	243862	03/27/20	03/30/20	MTS
Aroclor-1260	ND		ug/Kg	98	2	243862	03/27/20	03/30/20	MTS
Aroclor-1262	ND		ug/Kg	98	2	243862	03/27/20	03/30/20	MTS
Aroclor-1268	ND		ug/Kg	98	2	243862	03/27/20	03/30/20	MTS
Surrogates				**Limits**					
Decachlorobiphenyl (PCB)	48%	*	%REC	50-150	2	243862	03/27/20	03/30/20	MTS

Sample ID: P-4-2.5' **Lab ID: 426382-010** **Collected: 03/24/20 12:30**
Matrix: Soil

426382-010 Analyte	Result	Qual	Units	RL	DF	Batch	Prepared	Analyzed	Chemist
Method: EPA 6010B Prep Method: EPA 3050B									
Antimony	ND		mg/Kg	3.0	1	243740	03/25/20	03/26/20	SBW
Arsenic	ND		mg/Kg	1.0	1	243740	03/25/20	03/26/20	SBW
Barium	**130**		mg/Kg	1.0	1	243740	03/25/20	03/26/20	SBW
Beryllium	ND		mg/Kg	0.50	1	243740	03/25/20	03/26/20	SBW
Cadmium	**0.61**		mg/Kg	0.50	1	243740	03/25/20	03/26/20	SBW
Chromium	**13**		mg/Kg	1.0	1	243740	03/25/20	03/26/20	SBW
Cobalt	**8.2**		mg/Kg	0.50	1	243740	03/25/20	03/26/20	SBW
Copper	**15**		mg/Kg	1.0	1	243740	03/25/20	03/27/20	SBW
Lead	**23**		mg/Kg	1.0	1	243740	03/25/20	03/26/20	SBW
Molybdenum	ND		mg/Kg	1.0	1	243740	03/25/20	03/26/20	SBW
Nickel	**9.5**		mg/Kg	1.5	1	243740	03/25/20	03/26/20	SBW
Selenium	ND		mg/Kg	3.0	1	243740	03/25/20	03/26/20	SBW
Silver	ND		mg/Kg	0.50	1	243740	03/25/20	03/26/20	SBW
Thallium	**3.3**		mg/Kg	3.0	1	243740	03/25/20	03/26/20	SBW
Vanadium	**35**		mg/Kg	0.50	1	243740	03/25/20	03/26/20	SBW
Zinc	**67**		mg/Kg	5.0	1	243740	03/25/20	03/26/20	SBW
Method: EPA 7471A Prep Method: METHOD									
Mercury	ND		mg/Kg	0.14	0.98	244040	04/01/20	04/02/20	DLS

Results for any subcontracted analyses are not included in this section.

ENTHALPY ANALYTICAL

Analysis Results for 426382

Sample ID: P-4-5'	Lab ID: 426382-011	Collected: 03/24/20 12:55
	Matrix: Soil	

426382-011 Analyte	Result	Qual	Units	RL	DF	Batch	Prepared	Analyzed	Chemist
Method: EPA 1664A M									
Total Oil and Grease	ND		mg/Kg	500	1	243982	03/31/20	03/31/20	ECC

Results for any subcontracted analyses are not included in this section.

ENTHALPY ANALYTICAL

Analysis Results for 426382

Sample ID: P-4-10'	Lab ID: 426382-012	Collected: 03/24/20 13:05
	Matrix: Soil	

426382-012 Analyte	Result	Qual	Units	RL	DF	Batch	Prepared	Analyzed	Chemist
Method: EPA 1664A M									
Total Oil and Grease	ND		mg/Kg	500	1	243982	03/31/20	03/31/20	ECC
Method: EPA 6010B Prep Method: EPA 3050B									
Antimony	ND		mg/Kg	3.1	1	243740	03/25/20	03/26/20	SBW
Arsenic	ND		mg/Kg	1.0	1	243740	03/25/20	03/26/20	SBW
Barium	**46**		mg/Kg	1.0	1	243740	03/25/20	03/26/20	SBW
Beryllium	ND		mg/Kg	0.52	1	243740	03/25/20	03/26/20	SBW
Cadmium	ND		mg/Kg	0.52	1	243740	03/25/20	03/26/20	SBW
Chromium	**23**		mg/Kg	1.0	1	243740	03/25/20	03/26/20	SBW
Cobalt	**3.7**		mg/Kg	0.52	1	243740	03/25/20	03/26/20	SBW
Copper	**4.4**		mg/Kg	1.0	1	243740	03/25/20	03/27/20	SBW
Lead	**3.0**		mg/Kg	1.0	1	243740	03/25/20	03/26/20	SBW
Molybdenum	ND		mg/Kg	1.0	1	243740	03/25/20	03/26/20	SBW
Nickel	**4.1**		mg/Kg	1.5	1	243740	03/25/20	03/26/20	SBW
Selenium	ND		mg/Kg	3.1	1	243740	03/25/20	03/26/20	SBW
Silver	ND		mg/Kg	0.52	1	243740	03/25/20	03/26/20	SBW
Thallium	ND		mg/Kg	3.1	1	243740	03/25/20	03/26/20	SBW
Vanadium	**20**		mg/Kg	0.52	1	243740	03/25/20	03/26/20	SBW
Zinc	**20**		mg/Kg	5.2	1	243740	03/25/20	03/26/20	SBW
Method: EPA 7471A Prep Method: METHOD									
Mercury	ND		mg/Kg	0.14	1	243745	03/25/20	03/26/20	DLS
Method: EPA 8015B Prep Method: EPA 3580									
TPH C6-C12	ND		mg/Kg	10	1	243822	03/26/20	03/26/20	TJW
TPH C13-C22	ND		mg/Kg	10	1	243822	03/26/20	03/26/20	TJW
TPH C23-C44	ND		mg/Kg	10	1	243822	03/26/20	03/26/20	TJW
Surrogates				**Limits**					
n-Triacontane	78%		%REC	50-150	50	243822	03/26/20	03/26/20	TJW
Method: EPA 8260B Prep Method: EPA 5035									
3-Chloropropene	ND		ug/Kg	4.7	0.94	243906	03/29/20	03/29/20	LYZ
cis-1,4-Dichloro-2-butene	ND		ug/Kg	4.7	0.94	243906	03/29/20	03/29/20	LYZ
trans-1,4-Dichloro-2-butene	ND		ug/Kg	4.7	0.94	243906	03/29/20	03/29/20	LYZ
Isopropyl Ether (DIPE)	ND		ug/Kg	4.7	0.94	243906	03/29/20	03/29/20	LYZ
Ethyl tert-Butyl Ether (ETBE)	ND		ug/Kg	4.7	0.94	243906	03/29/20	03/29/20	LYZ
Methyl tert-Amyl Ether (TAME)	ND		ug/Kg	4.7	0.94	243906	03/29/20	03/29/20	LYZ
tert-Butyl Alcohol (TBA)	ND		ug/Kg	9.4	0.94	243906	03/29/20	03/29/20	LYZ
Freon 12	ND		ug/Kg	4.7	0.94	243906	03/29/20	03/29/20	LYZ
Chloromethane	ND		ug/Kg	4.7	0.94	243906	03/29/20	03/29/20	LYZ

Results for any subcontracted analyses are not included in this section.

ENTHALPY ANALYTICAL

Analysis Results for 426382

426382-012 Analyte	Result	Qual	Units	RL	DF	Batch	Prepared	Analyzed	Chemist
Vinyl Chloride	ND		ug/Kg	4.7	0.94	243906	03/29/20	03/29/20	LYZ
Bromomethane	ND		ug/Kg	4.7	0.94	243906	03/29/20	03/29/20	LYZ
Chloroethane	ND		ug/Kg	4.7	0.94	243906	03/29/20	03/29/20	LYZ
Trichlorofluoromethane	ND		ug/Kg	4.7	0.94	243906	03/29/20	03/29/20	LYZ
Acetone	ND		ug/Kg	94	0.94	243906	03/29/20	03/29/20	LYZ
Freon 113	ND		ug/Kg	4.7	0.94	243906	03/29/20	03/29/20	LYZ
1,1-Dichloroethene	ND		ug/Kg	4.7	0.94	243906	03/29/20	03/29/20	LYZ
Methylene Chloride	ND		ug/Kg	4.7	0.94	243906	03/29/20	03/29/20	LYZ
MTBE	ND		ug/Kg	4.7	0.94	243906	03/29/20	03/29/20	LYZ
trans-1,2-Dichloroethene	ND		ug/Kg	4.7	0.94	243906	03/29/20	03/29/20	LYZ
1,1-Dichloroethane	ND		ug/Kg	4.7	0.94	243906	03/29/20	03/29/20	LYZ
2-Butanone	ND		ug/Kg	94	0.94	243906	03/29/20	03/29/20	LYZ
cis-1,2-Dichloroethene	ND		ug/Kg	4.7	0.94	243906	03/29/20	03/29/20	LYZ
2,2-Dichloropropane	ND		ug/Kg	4.7	0.94	243906	03/29/20	03/29/20	LYZ
Chloroform	ND		ug/Kg	4.7	0.94	243906	03/29/20	03/29/20	LYZ
Bromochloromethane	ND		ug/Kg	4.7	0.94	243906	03/29/20	03/29/20	LYZ
1,1,1-Trichloroethane	ND		ug/Kg	4.7	0.94	243906	03/29/20	03/29/20	LYZ
1,1-Dichloropropene	ND		ug/Kg	4.7	0.94	243906	03/29/20	03/29/20	LYZ
Carbon Tetrachloride	ND		ug/Kg	4.7	0.94	243906	03/29/20	03/29/20	LYZ
1,2-Dichloroethane	ND		ug/Kg	4.7	0.94	243906	03/29/20	03/29/20	LYZ
Benzene	ND		ug/Kg	4.7	0.94	243906	03/29/20	03/29/20	LYZ
Trichloroethene	ND		ug/Kg	4.7	0.94	243906	03/29/20	03/29/20	LYZ
1,2-Dichloropropane	ND		ug/Kg	4.7	0.94	243906	03/29/20	03/29/20	LYZ
Bromodichloromethane	ND		ug/Kg	4.7	0.94	243906	03/29/20	03/29/20	LYZ
Dibromomethane	ND		ug/Kg	4.7	0.94	243906	03/29/20	03/29/20	LYZ
4-Methyl-2-Pentanone	ND		ug/Kg	4.7	0.94	243906	03/29/20	03/29/20	LYZ
cis-1,3-Dichloropropene	ND		ug/Kg	4.7	0.94	243906	03/29/20	03/29/20	LYZ
Toluene	ND		ug/Kg	4.7	0.94	243906	03/29/20	03/29/20	LYZ
trans-1,3-Dichloropropene	ND		ug/Kg	4.7	0.94	243906	03/29/20	03/29/20	LYZ
1,1,2-Trichloroethane	ND		ug/Kg	4.7	0.94	243906	03/29/20	03/29/20	LYZ
1,3-Dichloropropane	ND		ug/Kg	4.7	0.94	243906	03/29/20	03/29/20	LYZ
Tetrachloroethene	ND		ug/Kg	4.7	0.94	243906	03/29/20	03/29/20	LYZ
Dibromochloromethane	ND		ug/Kg	4.7	0.94	243906	03/29/20	03/29/20	LYZ
1,2-Dibromoethane	ND		ug/Kg	4.7	0.94	243906	03/29/20	03/29/20	LYZ
Chlorobenzene	ND		ug/Kg	4.7	0.94	243906	03/29/20	03/29/20	LYZ
1,1,1,2-Tetrachloroethane	ND		ug/Kg	4.7	0.94	243906	03/29/20	03/29/20	LYZ
Ethylbenzene	ND		ug/Kg	4.7	0.94	243906	03/29/20	03/29/20	LYZ
m,p-Xylenes	ND		ug/Kg	9.4	0.94	243906	03/29/20	03/29/20	LYZ
o-Xylene	ND		ug/Kg	4.7	0.94	243906	03/29/20	03/29/20	LYZ
Styrene	ND		ug/Kg	4.7	0.94	243906	03/29/20	03/29/20	LYZ
Bromoform	ND		ug/Kg	4.7	0.94	243906	03/29/20	03/29/20	LYZ
Isopropylbenzene	ND		ug/Kg	4.7	0.94	243906	03/29/20	03/29/20	LYZ
1,1,2,2-Tetrachloroethane	ND		ug/Kg	4.7	0.94	243906	03/29/20	03/29/20	LYZ
1,2,3-Trichloropropane	ND		ug/Kg	4.7	0.94	243906	03/29/20	03/29/20	LYZ
Propylbenzene	ND		ug/Kg	4.7	0.94	243906	03/29/20	03/29/20	LYZ
Bromobenzene	ND		ug/Kg	4.7	0.94	243906	03/29/20	03/29/20	LYZ

Results for any subcontracted analyses are not included in this section.

ENTHALPY ANALYTICAL

Analysis Results for 426382

426382-012 Analyte	Result	Qual	Units	RL	DF	Batch	Prepared	Analyzed	Chemist
1,3,5-Trimethylbenzene	ND		ug/Kg	4.7	0.94	243906	03/29/20	03/29/20	LYZ
2-Chlorotoluene	ND		ug/Kg	4.7	0.94	243906	03/29/20	03/29/20	LYZ
4-Chlorotoluene	ND		ug/Kg	4.7	0.94	243906	03/29/20	03/29/20	LYZ
tert-Butylbenzene	ND		ug/Kg	4.7	0.94	243906	03/29/20	03/29/20	LYZ
1,2,4-Trimethylbenzene	ND		ug/Kg	4.7	0.94	243906	03/29/20	03/29/20	LYZ
sec-Butylbenzene	ND		ug/Kg	4.7	0.94	243906	03/29/20	03/29/20	LYZ
para-Isopropyl Toluene	ND		ug/Kg	4.7	0.94	243906	03/29/20	03/29/20	LYZ
1,3-Dichlorobenzene	ND		ug/Kg	4.7	0.94	243906	03/29/20	03/29/20	LYZ
1,4-Dichlorobenzene	ND		ug/Kg	4.7	0.94	243906	03/29/20	03/29/20	LYZ
n-Butylbenzene	ND		ug/Kg	4.7	0.94	243906	03/29/20	03/29/20	LYZ
1,2-Dichlorobenzene	ND		ug/Kg	4.7	0.94	243906	03/29/20	03/29/20	LYZ
1,2-Dibromo-3-Chloropropane	ND		ug/Kg	4.7	0.94	243906	03/29/20	03/29/20	LYZ
1,2,4-Trichlorobenzene	ND		ug/Kg	4.7	0.94	243906	03/29/20	03/29/20	LYZ
Hexachlorobutadiene	ND		ug/Kg	4.7	0.94	243906	03/29/20	03/29/20	LYZ
Naphthalene	ND		ug/Kg	4.7	0.94	243906	03/29/20	03/29/20	LYZ
1,2,3-Trichlorobenzene	ND		ug/Kg	4.7	0.94	243906	03/29/20	03/29/20	LYZ
Xylene (total)	ND		ug/Kg	4.7	0.94	243906	03/29/20	03/29/20	LYZ
Surrogates				**Limits**					
Dibromofluoromethane	105%		%REC	70-145	0.94	243906	03/29/20	03/29/20	LYZ
1,2-Dichloroethane-d4	116%		%REC	70-145	0.94	243906	03/29/20	03/29/20	LYZ
Toluene-d8	103%		%REC	70-145	0.94	243906	03/29/20	03/29/20	LYZ
Bromofluorobenzene	94%		%REC	70-145	0.94	243906	03/29/20	03/29/20	LYZ
Method: EPA 8270C Prep Method: EPA 3550C									
Carbazole	ND		ug/Kg	250	1	243926	03/30/20	03/30/20	MTS
1-Methylnaphthalene	ND		ug/Kg	250	1	243926	03/30/20	03/30/20	MTS
Pyridine	ND		ug/Kg	250	1	243926	03/30/20	03/30/20	MTS
N-Nitrosodimethylamine	ND		ug/Kg	250	1	243926	03/30/20	03/30/20	MTS
Phenol	ND		ug/Kg	250	1	243926	03/30/20	03/30/20	MTS
Aniline	ND		ug/Kg	250	1	243926	03/30/20	03/30/20	MTS
bis(2-Chloroethyl)ether	ND		ug/Kg	1,200	1	243926	03/30/20	03/30/20	MTS
2-Chlorophenol	ND		ug/Kg	250	1	243926	03/30/20	03/30/20	MTS
1,3-Dichlorobenzene	ND		ug/Kg	250	1	243926	03/30/20	03/30/20	MTS
1,4-Dichlorobenzene	ND		ug/Kg	250	1	243926	03/30/20	03/30/20	MTS
Benzyl alcohol	ND		ug/Kg	250	1	243926	03/30/20	03/30/20	MTS
1,2-Dichlorobenzene	ND		ug/Kg	250	1	243926	03/30/20	03/30/20	MTS
2-Methylphenol	ND		ug/Kg	250	1	243926	03/30/20	03/30/20	MTS
bis(2-Chloroisopropyl) ether	ND		ug/Kg	250	1	243926	03/30/20	03/30/20	MTS
3-,4-Methylphenol	ND		ug/Kg	400	1	243926	03/30/20	03/30/20	MTS
N-Nitroso-di-n-propylamine	ND		ug/Kg	250	1	243926	03/30/20	03/30/20	MTS
Hexachloroethane	ND		ug/Kg	250	1	243926	03/30/20	03/30/20	MTS
Nitrobenzene	ND		ug/Kg	1,200	1	243926	03/30/20	03/30/20	MTS
Isophorone	ND		ug/Kg	250	1	243926	03/30/20	03/30/20	MTS
2-Nitrophenol	ND		ug/Kg	250	1	243926	03/30/20	03/30/20	MTS
2,4-Dimethylphenol	ND		ug/Kg	250	1	243926	03/30/20	03/30/20	MTS
Benzoic acid	ND		ug/Kg	1,200	1	243926	03/30/20	03/30/20	MTS

Results for any subcontracted analyses are not included in this section.

ENTHALPY ANALYTICAL

Analysis Results for 426382

426382-012 Analyte	Result	Qual	Units	RL	DF	Batch	Prepared	Analyzed	Chemist
bis(2-Chloroethoxy)methane	ND		ug/Kg	250	1	243926	03/30/20	03/30/20	MTS
2,4-Dichlorophenol	ND		ug/Kg	250	1	243926	03/30/20	03/30/20	MTS
1,2,4-Trichlorobenzene	ND		ug/Kg	250	1	243926	03/30/20	03/30/20	MTS
Naphthalene	ND		ug/Kg	250	1	243926	03/30/20	03/30/20	MTS
4-Chloroaniline	ND		ug/Kg	250	1	243926	03/30/20	03/30/20	MTS
Hexachlorobutadiene	ND		ug/Kg	250	1	243926	03/30/20	03/30/20	MTS
4-Chloro-3-methylphenol	ND		ug/Kg	250	1	243926	03/30/20	03/30/20	MTS
2-Methylnaphthalene	ND		ug/Kg	250	1	243926	03/30/20	03/30/20	MTS
Hexachlorocyclopentadiene	ND		ug/Kg	1,200	1	243926	03/30/20	03/30/20	MTS
2,4,6-Trichlorophenol	ND		ug/Kg	250	1	243926	03/30/20	03/30/20	MTS
2,4,5-Trichlorophenol	ND		ug/Kg	250	1	243926	03/30/20	03/30/20	MTS
2-Chloronaphthalene	ND		ug/Kg	250	1	243926	03/30/20	03/30/20	MTS
2-Nitroaniline	ND		ug/Kg	250	1	243926	03/30/20	03/30/20	MTS
Dimethylphthalate	ND		ug/Kg	250	1	243926	03/30/20	03/30/20	MTS
Acenaphthylene	ND		ug/Kg	250	1	243926	03/30/20	03/30/20	MTS
2,6-Dinitrotoluene	ND		ug/Kg	250	1	243926	03/30/20	03/30/20	MTS
3-Nitroaniline	ND		ug/Kg	250	1	243926	03/30/20	03/30/20	MTS
Acenaphthene	ND		ug/Kg	250	1	243926	03/30/20	03/30/20	MTS
2,4-Dinitrophenol	ND		ug/Kg	1,200	1	243926	03/30/20	03/30/20	MTS
4-Nitrophenol	ND		ug/Kg	250	1	243926	03/30/20	03/30/20	MTS
Dibenzofuran	ND		ug/Kg	250	1	243926	03/30/20	03/30/20	MTS
2,4-Dinitrotoluene	ND		ug/Kg	250	1	243926	03/30/20	03/30/20	MTS
Diethylphthalate	ND		ug/Kg	250	1	243926	03/30/20	03/30/20	MTS
Fluorene	ND		ug/Kg	250	1	243926	03/30/20	03/30/20	MTS
4-Chlorophenyl-phenylether	ND		ug/Kg	250	1	243926	03/30/20	03/30/20	MTS
4-Nitroaniline	ND		ug/Kg	250	1	243926	03/30/20	03/30/20	MTS
4,6-Dinitro-2-methylphenol	ND		ug/Kg	250	1	243926	03/30/20	03/30/20	MTS
N-Nitrosodiphenylamine	ND		ug/Kg	250	1	243926	03/30/20	03/30/20	MTS
Azobenzene	ND		ug/Kg	250	1	243926	03/30/20	03/30/20	MTS
4-Bromophenyl-phenylether	ND		ug/Kg	250	1	243926	03/30/20	03/30/20	MTS
Hexachlorobenzene	ND		ug/Kg	250	1	243926	03/30/20	03/30/20	MTS
Pentachlorophenol	ND		ug/Kg	1,200	1	243926	03/30/20	03/30/20	MTS
Phenanthrene	ND		ug/Kg	250	1	243926	03/30/20	03/30/20	MTS
Anthracene	ND		ug/Kg	250	1	243926	03/30/20	03/30/20	MTS
Di-n-butylphthalate	ND		ug/Kg	250	1	243926	03/30/20	03/30/20	MTS
Fluoranthene	ND		ug/Kg	250	1	243926	03/30/20	03/30/20	MTS
Benzidine	ND		ug/Kg	1,200	1	243926	03/30/20	03/30/20	MTS
Pyrene	ND		ug/Kg	250	1	243926	03/30/20	03/30/20	MTS
Butylbenzylphthalate	ND		ug/Kg	250	1	243926	03/30/20	03/30/20	MTS
3,3'-Dichlorobenzidine	ND		ug/Kg	1,200	1	243926	03/30/20	03/30/20	MTS
Benzo(a)anthracene	ND		ug/Kg	250	1	243926	03/30/20	03/30/20	MTS
Chrysene	ND		ug/Kg	250	1	243926	03/30/20	03/30/20	MTS
bis(2-Ethylhexyl)phthalate	ND		ug/Kg	250	1	243926	03/30/20	03/30/20	MTS
Di-n-octylphthalate	ND		ug/Kg	250	1	243926	03/30/20	03/30/20	MTS
Benzo(b)fluoranthene	ND		ug/Kg	250	1	243926	03/30/20	03/30/20	MTS
Benzo(k)fluoranthene	ND		ug/Kg	250	1	243926	03/30/20	03/30/20	MTS

Results for any subcontracted analyses are not included in this section.

ENTHALPY ANALYTICAL

Analysis Results for 426382

426382-012 Analyte	Result	Qual	Units	RL	DF	Batch	Prepared	Analyzed	Chemist
Benzo(a)pyrene	ND		ug/Kg	250	1	243926	03/30/20	03/30/20	MTS
Indeno(1,2,3-cd)pyrene	ND		ug/Kg	250	1	243926	03/30/20	03/30/20	MTS
Dibenz(a,h)anthracene	ND		ug/Kg	250	1	243926	03/30/20	03/30/20	MTS
Benzo(g,h,i)perylene	ND		ug/Kg	250	1	243926	03/30/20	03/30/20	MTS
Surrogates				**Limits**					
2-Fluorophenol	84%		%REC	13-153	1	243926	03/30/20	03/30/20	MTS
Phenol-d6	85%		%REC	10-110	1	243926	03/30/20	03/30/20	MTS
2,4,6-Tribromophenol	77%		%REC	34-143	1	243926	03/30/20	03/30/20	MTS
Nitrobenzene-d5	87%		%REC	27-125	1	243926	03/30/20	03/30/20	MTS
2-Fluorobiphenyl	83%		%REC	41-125	1	243926	03/30/20	03/30/20	MTS
Terphenyl-d14	92%		%REC	33-155	1	243926	03/30/20	03/30/20	MTS

Sample ID: P-4-15' **Lab ID: 426382-013** **Collected: 03/24/20 13:10**
Matrix: Soil

426382-013 Analyte	Result	Qual	Units	RL	DF	Batch	Prepared	Analyzed	Chemist
Method: EPA 1664A M									
Total Oil and Grease	ND		mg/Kg	500	1	243982	03/31/20	03/31/20	ECC

* Value is outside QC limits
ND Not Detected

Results for any subcontracted analyses are not included in this section.

ENTHALPY ANALYTICAL

Batch QC

Type: Blank	**Lab ID: QC863401**	**Batch: 243745**
Matrix: Soil	**Method: EPA 7471A**	**Prep Method: METHOD**

QC863401 Analyte	Result	Qual	Units	RL	Prepared	Analyzed
Mercury	ND		mg/Kg	0.14	03/25/20	03/26/20

Type: Lab Control Sample	**Lab ID: QC863402**	**Batch: 243745**
Matrix: Soil	**Method: EPA 7471A**	**Prep Method: METHOD**

QC863402 Analyte	Result	Spiked	Units	Recovery	Qual	Limits
Mercury	0.8265	0.8333	mg/Kg	99%		80-120

Type: Matrix Spike	**Lab ID: QC863403**	**Batch: 243745**
Matrix (Source ID): Soil (426358-001)	**Method: EPA 7471A**	**Prep Method: METHOD**

QC863403 Analyte	Result	Source Sample Result	Spiked	Units	Recovery	Qual	Limits	DF
Mercury	0.8001	0.01146	0.8065	mg/Kg	98%		75-125	0.97

Type: Matrix Spike Duplicate	**Lab ID: QC863404**	**Batch: 243745**
Matrix (Source ID): Soil (426358-001)	**Method: EPA 7471A**	**Prep Method: METHOD**

QC863404 Analyte	Result	Source Sample Result	Spiked	Units	Recovery	Qual	Limits	RPD	RPD Lim	DF
Mercury	0.7872	0.01146	0.8065	mg/Kg	96%		75-125	2	20	0.97

Type: Blank	**Lab ID: QC863973**	**Batch: 243982**
Matrix: Soil	**Method: EPA 1664A M**	

QC863973 Analyte	Result	Qual	Units	RL	Prepared	Analyzed
Total Oil and Grease	ND		mg/Kg	500	03/31/20	03/31/20

Type: Lab Control Sample	**Lab ID: QC863974**	**Batch: 243982**
Matrix: Soil	**Method: EPA 1664A M**	

QC863974 Analyte	Result	Spiked	Units	Recovery	Qual	Limits
Total Oil and Grease	1,850	2000	mg/Kg	93%		80-120

ENTHALPY ANALYTICAL

Batch QC

Type:	**Lab Control Sample Duplicate**	**Lab ID:**	**QC863975**	**Batch:**	**243982**
Matrix:	**Soil**	**Method:**	**EPA 1664A M**		

QC863975 Analyte	Result	Spiked	Units	Recovery	Qual	Limits	RPD	RPD Lim
Total Oil and Grease	2,000	2000	mg/Kg	100%		80-120	8	20

ENTHALPY ANALYTICAL

Batch QC

Type:	**Blank**	**Lab ID:**	**QC863842**	**Batch:**	**243926**
Matrix:	**Soil**	**Method:**	**EPA 8270C**	**Prep Method:**	**EPA 3550C**

QC863842 Analyte	Result	Qual	Units	RL	Prepared	Analyzed
Carbazole	ND		ug/Kg	250	03/30/20	03/30/20
1-Methylnaphthalene	ND		ug/Kg	250	03/30/20	03/30/20
Pyridine	ND		ug/Kg	250	03/30/20	03/30/20
N-Nitrosodimethylamine	ND		ug/Kg	250	03/30/20	03/30/20
Phenol	ND		ug/Kg	250	03/30/20	03/30/20
Aniline	ND		ug/Kg	250	03/30/20	03/30/20
bis(2-Chloroethyl)ether	ND		ug/Kg	1,200	03/30/20	03/30/20
2-Chlorophenol	ND		ug/Kg	250	03/30/20	03/30/20
1,3-Dichlorobenzene	ND		ug/Kg	250	03/30/20	03/30/20
1,4-Dichlorobenzene	ND		ug/Kg	250	03/30/20	03/30/20
Benzyl alcohol	ND		ug/Kg	250	03/30/20	03/30/20
1,2-Dichlorobenzene	ND		ug/Kg	250	03/30/20	03/30/20
2-Methylphenol	ND		ug/Kg	250	03/30/20	03/30/20
bis(2-Chloroisopropyl) ether	ND		ug/Kg	250	03/30/20	03/30/20
3-,4-Methylphenol	ND		ug/Kg	400	03/30/20	03/30/20
N-Nitroso-di-n-propylamine	ND		ug/Kg	250	03/30/20	03/30/20
Hexachloroethane	ND		ug/Kg	250	03/30/20	03/30/20
Nitrobenzene	ND		ug/Kg	1,200	03/30/20	03/30/20
Isophorone	ND		ug/Kg	250	03/30/20	03/30/20
2-Nitrophenol	ND		ug/Kg	250	03/30/20	03/30/20
2,4-Dimethylphenol	ND		ug/Kg	250	03/30/20	03/30/20
Benzoic acid	ND		ug/Kg	1,200	03/30/20	03/30/20
bis(2-Chloroethoxy)methane	ND		ug/Kg	250	03/30/20	03/30/20
2,4-Dichlorophenol	ND		ug/Kg	250	03/30/20	03/30/20
1,2,4-Trichlorobenzene	ND		ug/Kg	250	03/30/20	03/30/20
Naphthalene	ND		ug/Kg	250	03/30/20	03/30/20
4-Chloroaniline	ND		ug/Kg	250	03/30/20	03/30/20
Hexachlorobutadiene	ND		ug/Kg	250	03/30/20	03/30/20
4-Chloro-3-methylphenol	ND		ug/Kg	250	03/30/20	03/30/20
2-Methylnaphthalene	ND		ug/Kg	250	03/30/20	03/30/20
Hexachlorocyclopentadiene	ND		ug/Kg	1,200	03/30/20	03/30/20
2,4,6-Trichlorophenol	ND		ug/Kg	250	03/30/20	03/30/20
2,4,5-Trichlorophenol	ND		ug/Kg	250	03/30/20	03/30/20
2-Chloronaphthalene	ND		ug/Kg	250	03/30/20	03/30/20
2-Nitroaniline	ND		ug/Kg	250	03/30/20	03/30/20
Dimethylphthalate	ND		ug/Kg	250	03/30/20	03/30/20
Acenaphthylene	ND		ug/Kg	250	03/30/20	03/30/20
2,6-Dinitrotoluene	ND		ug/Kg	250	03/30/20	03/30/20
3-Nitroaniline	ND		ug/Kg	250	03/30/20	03/30/20
Acenaphthene	ND		ug/Kg	250	03/30/20	03/30/20
2,4-Dinitrophenol	ND		ug/Kg	1,200	03/30/20	03/30/20
4-Nitrophenol	ND		ug/Kg	250	03/30/20	03/30/20

ENTHALPY ANALYTICAL

Batch QC

QC863842 Analyte	Result	Qual	Units	RL	Prepared	Analyzed
Dibenzofuran	ND		ug/Kg	250	03/30/20	03/30/20
2,4-Dinitrotoluene	ND		ug/Kg	250	03/30/20	03/30/20
Diethylphthalate	ND		ug/Kg	250	03/30/20	03/30/20
Fluorene	ND		ug/Kg	250	03/30/20	03/30/20
4-Chlorophenyl-phenylether	ND		ug/Kg	250	03/30/20	03/30/20
4-Nitroaniline	ND		ug/Kg	250	03/30/20	03/30/20
4,6-Dinitro-2-methylphenol	ND		ug/Kg	250	03/30/20	03/30/20
N-Nitrosodiphenylamine	ND		ug/Kg	250	03/30/20	03/30/20
Azobenzene	ND		ug/Kg	250	03/30/20	03/30/20
4-Bromophenyl-phenylether	ND		ug/Kg	250	03/30/20	03/30/20
Hexachlorobenzene	ND		ug/Kg	250	03/30/20	03/30/20
Pentachlorophenol	ND		ug/Kg	1,200	03/30/20	03/30/20
Phenanthrene	ND		ug/Kg	250	03/30/20	03/30/20
Anthracene	ND		ug/Kg	250	03/30/20	03/30/20
Di-n-butylphthalate	ND		ug/Kg	250	03/30/20	03/30/20
Fluoranthene	ND		ug/Kg	250	03/30/20	03/30/20
Benzidine	ND		ug/Kg	1,200	03/30/20	03/30/20
Pyrene	ND		ug/Kg	250	03/30/20	03/30/20
Butylbenzylphthalate	ND		ug/Kg	250	03/30/20	03/30/20
3,3'-Dichlorobenzidine	ND		ug/Kg	1,200	03/30/20	03/30/20
Benzo(a)anthracene	ND		ug/Kg	250	03/30/20	03/30/20
Chrysene	ND		ug/Kg	250	03/30/20	03/30/20
bis(2-Ethylhexyl)phthalate	ND		ug/Kg	250	03/30/20	03/30/20
Di-n-octylphthalate	ND		ug/Kg	250	03/30/20	03/30/20
Benzo(b)fluoranthene	ND		ug/Kg	250	03/30/20	03/30/20
Benzo(k)fluoranthene	ND		ug/Kg	250	03/30/20	03/30/20
Benzo(a)pyrene	ND		ug/Kg	250	03/30/20	03/30/20
Indeno(1,2,3-cd)pyrene	ND		ug/Kg	250	03/30/20	03/30/20
Dibenz(a,h)anthracene	ND		ug/Kg	250	03/30/20	03/30/20
Benzo(g,h,i)perylene	ND		ug/Kg	250	03/30/20	03/30/20
Surrogates				**Limits**		
2-Fluorophenol	104%		%REC	13-153	03/30/20	03/30/20
Phenol-d6	99%		%REC	10-110	03/30/20	03/30/20
2,4,6-Tribromophenol	97%		%REC	34-143	03/30/20	03/30/20
Nitrobenzene-d5	104%		%REC	27-125	03/30/20	03/30/20
2-Fluorobiphenyl	105%		%REC	41-125	03/30/20	03/30/20
Terphenyl-d14	109%		%REC	33-155	03/30/20	03/30/20

ENTHALPY ANALYTICAL

Batch QC

Type: Lab Control Sample	**Lab ID: QC863843**	**Batch: 243926**
Matrix: Soil	**Method: EPA 8270C**	**Prep Method: EPA 3550C**

QC863843 Analyte	Result	Spiked	Units	Recovery	Qual	Limits
Phenol	1,973	2000	ug/Kg	99%		51-111
2-Chlorophenol	1,961	2000	ug/Kg	98%		48-114
1,4-Dichlorobenzene	1,814	2000	ug/Kg	91%		30-116
3-,4-Methylphenol	1,843	2000	ug/Kg	92%		56-124
N-Nitroso-di-n-propylamine	1,966	2000	ug/Kg	98%		54-110
2,4-Dimethylphenol	1,365	2000	ug/Kg	68%		50-112
1,2,4-Trichlorobenzene	1,823	2000	ug/Kg	91%		43-111
4-Chloro-3-methylphenol	2,020	2000	ug/Kg	101%		61-122
2,4,5-Trichlorophenol	1,903	2000	ug/Kg	95%		57-125
Acenaphthene	1,896	2000	ug/Kg	95%		53-112
4-Nitrophenol	2,483	2000	ug/Kg	124%	b	54-126
2,4-Dinitrotoluene	2,007	2000	ug/Kg	100%		57-124
Pentachlorophenol	1,862	2000	ug/Kg	93%		41-103
Pyrene	1,865	2000	ug/Kg	93%		63-119
Chrysene	1,863	2000	ug/Kg	93%		59-117
Benzo(b)fluoranthene	2,217	2000	ug/Kg	111%		61-125
Surrogates						
2-Fluorophenol	2,089	2000	ug/Kg	104%		13-153
Phenol-d6	2,014	2000	ug/Kg	101%		10-110
2,4,6-Tribromophenol	1,975	2000	ug/Kg	99%		34-143
Nitrobenzene-d5	1,992	2000	ug/Kg	100%		27-125
2-Fluorobiphenyl	1,970	2000	ug/Kg	99%		41-125
Terphenyl-d14	2,005	2000	ug/Kg	100%		33-155

ENTHALPY ANALYTICAL

Batch QC

Type:	**Matrix Spike**	**Lab ID:**	**QC863844**	**Batch:**	**243926**
Matrix (Source ID):	**Soil (426456-003)**	**Method:**	**EPA 8270C**	**Prep Method:**	**EPA 3550C**

QC863844 Analyte	Result	Source Sample Result	Spiked	Units	Recovery	Qual	Limits	DF
Phenol	2,009	54.45	1990	ug/Kg	98%		46-116	1
2-Chlorophenol	1,843	0	1990	ug/Kg	93%		42-102	1
1,4-Dichlorobenzene	1,760	0	1990	ug/Kg	88%		39-95	1
3-,4-Methylphenol	1,892	0	1990	ug/Kg	95%		33-116	1
N-Nitroso-di-n-propylamine	1,899	0	1990	ug/Kg	95%		41-127	1
2,4-Dimethylphenol	1,478	0	1990	ug/Kg	74%		37-105	1
1,2,4-Trichlorobenzene	1,791	0	1990	ug/Kg	90%		35-93	1
4-Chloro-3-methylphenol	1,871	0	1990	ug/Kg	94%		33-120	1
2,4,5-Trichlorophenol	1,779	0	1990	ug/Kg	89%		44-108	1
Acenaphthene	1,718	0	1990	ug/Kg	86%		57-99	1
4-Nitrophenol	2,185	0	1990	ug/Kg	110%	b,*	37-107	1
2,4-Dinitrotoluene	1,800	0	1990	ug/Kg	90%		48-109	1
Pentachlorophenol	1,620	0	1990	ug/Kg	81%		43-120	1
Pyrene	1,742	0	1990	ug/Kg	88%		53-129	1
Chrysene	1,767	0	1990	ug/Kg	89%		68-120	1
Benzo(b)fluoranthene	1,963	0	1990	ug/Kg	99%		59-126	1
Surrogates								
2-Fluorophenol	1,874		1990	ug/Kg	94%		13-153	1
Phenol-d6	1,893		1990	ug/Kg	95%		10-110	1
2,4,6-Tribromophenol	1,718		1990	ug/Kg	86%		34-143	1
Nitrobenzene-d5	1,880		1990	ug/Kg	94%		27-125	1
2-Fluorobiphenyl	1,752		1990	ug/Kg	88%		41-125	1
Terphenyl-d14	1,839		1990	ug/Kg	92%		33-155	1

ENTHALPY ANALYTICAL

Batch QC

Type:	**Matrix Spike Duplicate**	**Lab ID:**	**QC863845**	**Batch:**	**243926**
Matrix (Source ID):	**Soil (426456-003)**	**Method:**	**EPA 8270C**	**Prep Method:**	**EPA 3550C**

QC863845 Analyte	Result	Source Sample Result	Spiked	Units	Recovery	Qual	Limits	RPD	RPD Lim	DF
Phenol	1,776	54.45	1980	ug/Kg	87%		46-116	12	30	0.99
2-Chlorophenol	1,676	0	1980	ug/Kg	85%		42-102	9	30	0.99
1,4-Dichlorobenzene	1,536	0	1980	ug/Kg	78%		39-95	13	30	0.99
3-,4-Methylphenol	1,597	0	1980	ug/Kg	81%		33-116	16	30	0.99
N-Nitroso-di-n-propylamine	1,708	0	1980	ug/Kg	86%		41-127	10	30	0.99
2,4-Dimethylphenol	1,401	0	1980	ug/Kg	71%		37-105	5	30	0.99
1,2,4-Trichlorobenzene	1,558	0	1980	ug/Kg	79%		35-93	13	30	0.99
4-Chloro-3-methylphenol	1,818	0	1980	ug/Kg	92%		33-120	2	30	0.99
2,4,5-Trichlorophenol	1,704	0	1980	ug/Kg	86%		44-108	4	30	0.99
Acenaphthene	1,686	0	1980	ug/Kg	85%		57-99	1	30	0.99
4-Nitrophenol	2,036	0	1980	ug/Kg	103%	b	37-107	7	30	0.99
2,4-Dinitrotoluene	1,787	0	1980	ug/Kg	90%		48-109	0	30	0.99
Pentachlorophenol	1,637	0	1980	ug/Kg	83%		43-120	2	30	0.99
Pyrene	1,713	0	1980	ug/Kg	87%		53-129	1	30	0.99
Chrysene	1,672	0	1980	ug/Kg	84%		68-120	5	30	0.99
Benzo(b)fluoranthene	1,846	0	1980	ug/Kg	93%		59-126	6	30	0.99
Surrogates										
2-Fluorophenol	1,700		1980	ug/Kg	86%		13-153			0.99
Phenol-d6	1,720		1980	ug/Kg	87%		10-110			0.99
2,4,6-Tribromophenol	1,728		1980	ug/Kg	87%		34-143			0.99
Nitrobenzene-d5	1,732		1980	ug/Kg	87%		27-125			0.99
2-Fluorobiphenyl	1,702		1980	ug/Kg	86%		41-125			0.99
Terphenyl-d14	1,819		1980	ug/Kg	92%		33-155			0.99

ENTHALPY ANALYTICAL

Batch QC

Type: Blank	**Lab ID: QC863786**	**Batch: 243906**
Matrix: Soil	**Method: EPA 8260B**	**Prep Method: EPA 5035**

QC863786 Analyte	Result	Qual	Units	RL	Prepared	Analyzed
3-Chloropropene	ND		ug/Kg	5.0	03/29/20	03/29/20
cis-1,4-Dichloro-2-butene	ND		ug/Kg	5.0	03/29/20	03/29/20
trans-1,4-Dichloro-2-butene	ND		ug/Kg	5.0	03/29/20	03/29/20
Isopropyl Ether (DIPE)	ND		ug/Kg	5.0	03/29/20	03/29/20
Ethyl tert-Butyl Ether (ETBE)	ND		ug/Kg	5.0	03/29/20	03/29/20
Methyl tert-Amyl Ether (TAME)	ND		ug/Kg	5.0	03/29/20	03/29/20
tert-Butyl Alcohol (TBA)	ND		ug/Kg	10	03/29/20	03/29/20
Freon 12	ND		ug/Kg	5.0	03/29/20	03/29/20
Chloromethane	ND		ug/Kg	5.0	03/29/20	03/29/20
Vinyl Chloride	ND		ug/Kg	5.0	03/29/20	03/29/20
Bromomethane	ND		ug/Kg	5.0	03/29/20	03/29/20
Chloroethane	ND		ug/Kg	5.0	03/29/20	03/29/20
Trichlorofluoromethane	ND		ug/Kg	5.0	03/29/20	03/29/20
Acetone	ND		ug/Kg	100	03/29/20	03/29/20
Freon 113	ND		ug/Kg	5.0	03/29/20	03/29/20
1,1-Dichloroethene	ND		ug/Kg	5.0	03/29/20	03/29/20
Methylene Chloride	ND		ug/Kg	5.0	03/29/20	03/29/20
MTBE	ND		ug/Kg	5.0	03/29/20	03/29/20
trans-1,2-Dichloroethene	ND		ug/Kg	5.0	03/29/20	03/29/20
1,1-Dichloroethane	ND		ug/Kg	5.0	03/29/20	03/29/20
2-Butanone	ND		ug/Kg	100	03/29/20	03/29/20
cis-1,2-Dichloroethene	ND		ug/Kg	5.0	03/29/20	03/29/20
2,2-Dichloropropane	ND		ug/Kg	5.0	03/29/20	03/29/20
Chloroform	ND		ug/Kg	5.0	03/29/20	03/29/20
Bromochloromethane	ND		ug/Kg	5.0	03/29/20	03/29/20
1,1,1-Trichloroethane	ND		ug/Kg	5.0	03/29/20	03/29/20
1,1-Dichloropropene	ND		ug/Kg	5.0	03/29/20	03/29/20
Carbon Tetrachloride	ND		ug/Kg	5.0	03/29/20	03/29/20
1,2-Dichloroethane	ND		ug/Kg	5.0	03/29/20	03/29/20
Benzene	ND		ug/Kg	5.0	03/29/20	03/29/20
Trichloroethene	ND		ug/Kg	5.0	03/29/20	03/29/20
1,2-Dichloropropane	ND		ug/Kg	5.0	03/29/20	03/29/20
Bromodichloromethane	ND		ug/Kg	5.0	03/29/20	03/29/20
Dibromomethane	ND		ug/Kg	5.0	03/29/20	03/29/20
4-Methyl-2-Pentanone	ND		ug/Kg	5.0	03/29/20	03/29/20
cis-1,3-Dichloropropene	ND		ug/Kg	5.0	03/29/20	03/29/20
Toluene	ND		ug/Kg	5.0	03/29/20	03/29/20
trans-1,3-Dichloropropene	ND		ug/Kg	5.0	03/29/20	03/29/20
1,1,2-Trichloroethane	ND		ug/Kg	5.0	03/29/20	03/29/20
1,3-Dichloropropane	ND		ug/Kg	5.0	03/29/20	03/29/20
Tetrachloroethene	ND		ug/Kg	5.0	03/29/20	03/29/20
Dibromochloromethane	ND		ug/Kg	5.0	03/29/20	03/29/20

ENTHALPY ANALYTICAL

Batch QC

QC863786 Analyte	Result	Qual	Units	RL	Prepared	Analyzed
1,2-Dibromoethane	ND		ug/Kg	5.0	03/29/20	03/29/20
Chlorobenzene	ND		ug/Kg	5.0	03/29/20	03/29/20
1,1,1,2-Tetrachloroethane	ND		ug/Kg	5.0	03/29/20	03/29/20
Ethylbenzene	ND		ug/Kg	5.0	03/29/20	03/29/20
m,p-Xylenes	ND		ug/Kg	10	03/29/20	03/29/20
o-Xylene	ND		ug/Kg	5.0	03/29/20	03/29/20
Styrene	ND		ug/Kg	5.0	03/29/20	03/29/20
Bromoform	ND		ug/Kg	5.0	03/29/20	03/29/20
Isopropylbenzene	ND		ug/Kg	5.0	03/29/20	03/29/20
1,1,2,2-Tetrachloroethane	ND		ug/Kg	5.0	03/29/20	03/29/20
1,2,3-Trichloropropane	ND		ug/Kg	5.0	03/29/20	03/29/20
Propylbenzene	ND		ug/Kg	5.0	03/29/20	03/29/20
Bromobenzene	ND		ug/Kg	5.0	03/29/20	03/29/20
1,3,5-Trimethylbenzene	ND		ug/Kg	5.0	03/29/20	03/29/20
2-Chlorotoluene	ND		ug/Kg	5.0	03/29/20	03/29/20
4-Chlorotoluene	ND		ug/Kg	5.0	03/29/20	03/29/20
tert-Butylbenzene	ND		ug/Kg	5.0	03/29/20	03/29/20
1,2,4-Trimethylbenzene	ND		ug/Kg	5.0	03/29/20	03/29/20
sec-Butylbenzene	ND		ug/Kg	5.0	03/29/20	03/29/20
para-Isopropyl Toluene	ND		ug/Kg	5.0	03/29/20	03/29/20
1,3-Dichlorobenzene	ND		ug/Kg	5.0	03/29/20	03/29/20
1,4-Dichlorobenzene	ND		ug/Kg	5.0	03/29/20	03/29/20
n-Butylbenzene	ND		ug/Kg	5.0	03/29/20	03/29/20
1,2-Dichlorobenzene	ND		ug/Kg	5.0	03/29/20	03/29/20
1,2-Dibromo-3-Chloropropane	ND		ug/Kg	5.0	03/29/20	03/29/20
1,2,4-Trichlorobenzene	ND		ug/Kg	5.0	03/29/20	03/29/20
Hexachlorobutadiene	ND		ug/Kg	5.0	03/29/20	03/29/20
Naphthalene	ND		ug/Kg	5.0	03/29/20	03/29/20
1,2,3-Trichlorobenzene	ND		ug/Kg	5.0	03/29/20	03/29/20
Xylene (total)	ND		ug/Kg	5.0	03/29/20	03/29/20
Surrogates				**Limits**		
Dibromofluoromethane	100%		%REC	70-145	03/29/20	03/29/20
1,2-Dichloroethane-d4	99%		%REC	70-145	03/29/20	03/29/20
Toluene-d8	104%		%REC	70-145	03/29/20	03/29/20
Bromofluorobenzene	97%		%REC	70-145	03/29/20	03/29/20

ENTHALPY ANALYTICAL

Batch QC

Type: Lab Control Sample	**Lab ID: QC863787**	**Batch: 243906**
Matrix: Soil	**Method: EPA 8260B**	**Prep Method: EPA 5035**

QC863787 Analyte	Result	Spiked	Units	Recovery	Qual	Limits
1,1-Dichloroethene	57.68	50.00	ug/Kg	115%		59-172
MTBE	48.62	50.00	ug/Kg	97%		62-137
Benzene	53.77	50.00	ug/Kg	108%		62-137
Trichloroethene	50.32	50.00	ug/Kg	101%		66-142
Toluene	53.15	50.00	ug/Kg	106%		59-139
Chlorobenzene	48.99	50.00	ug/Kg	98%		60-133
Surrogates						
Dibromofluoromethane	49.34	50.00	ug/Kg	99%		70-145
1,2-Dichloroethane-d4	47.13	50.00	ug/Kg	94%		70-145
Toluene-d8	52.34	50.00	ug/Kg	105%		70-145
Bromofluorobenzene	46.75	50.00	ug/Kg	94%		70-145

Type: Lab Control Sample Duplicate	**Lab ID: QC863788**	**Batch: 243906**
Matrix: Soil	**Method: EPA 8260B**	**Prep Method: EPA 5035**

QC863788 Analyte	Result	Spiked	Units	Recovery	Qual	Limits	RPD	RPD Lim
1,1-Dichloroethene	53.89	50.00	ug/Kg	108%		59-172	7	22
MTBE	50.72	50.00	ug/Kg	101%		62-137	4	21
Benzene	51.57	50.00	ug/Kg	103%		62-137	4	24
Trichloroethene	46.92	50.00	ug/Kg	94%		66-142	7	21
Toluene	50.43	50.00	ug/Kg	101%		59-139	5	21
Chlorobenzene	47.00	50.00	ug/Kg	94%		60-133	4	24
Surrogates								
Dibromofluoromethane	50.40	50.00	ug/Kg	101%		70-145		
1,2-Dichloroethane-d4	49.10	50.00	ug/Kg	98%		70-145		
Toluene-d8	51.58	50.00	ug/Kg	103%		70-145		
Bromofluorobenzene	47.03	50.00	ug/Kg	94%		70-145		

Type: Blank	**Lab ID: QC863571**	**Batch: 243822**
Matrix: Soil	**Method: EPA 8015B**	**Prep Method: EPA 3580**

QC863571 Analyte	Result	Qual	Units	RL	Prepared	Analyzed
TPH C6-C12	ND		mg/Kg	10	03/26/20	03/26/20
TPH C13-C22	ND		mg/Kg	10	03/26/20	03/26/20
TPH C23-C44	ND		mg/Kg	10	03/26/20	03/26/20
Surrogates				**Limits**		
n-Triacontane	87%		%REC	50-150	03/26/20	03/26/20

ENTHALPY ANALYTICAL

Batch QC

Type: Lab Control Sample	Lab ID: QC863572	Batch: 243822
Matrix: Soil	Method: EPA 8015B	Prep Method: EPA 3580

QC863572 Analyte	Result	Spiked	Units	Recovery	Qual	Limits
Diesel C10-C28	244.9	250.0	mg/Kg	98%		70-130
Surrogates						
n-Triacontane	9.297	10.00	mg/Kg	93%		50-150

Type: Matrix Spike	Lab ID: QC863573	Batch: 243822
Matrix (Source ID): Soil (426382-012)	Method: EPA 8015B	Prep Method: EPA 3580

QC863573 Analyte	Result	Source Sample Result	Spiked	Units	Recovery	Qual	Limits	DF
Diesel C10-C28	220.4	0	251.3	mg/Kg	88%		70-130	50
Surrogates								
n-Triacontane	7.960		10.05	mg/Kg	79%		50-150	50

Type: Matrix Spike Duplicate	Lab ID: QC863574	Batch: 243822
Matrix (Source ID): Soil (426382-012)	Method: EPA 8015B	Prep Method: EPA 3580

QC863574 Analyte	Result	Source Sample Result	Spiked	Units	Recovery	Qual	Limits	RPD	RPD Lim	DF
Diesel C10-C28	274.6	0	247.5	mg/Kg	111%		70-130	23*	20	50
Surrogates										
n-Triacontane	9.070		9.901	mg/Kg	92%		50-150			50

Type: Blank	Lab ID: QC864124	Batch: 244040
Matrix: Soil	Method: EPA 7471A	Prep Method: METHOD

QC864124 Analyte	Result	Qual	Units	RL	Prepared	Analyzed
Mercury	ND		mg/Kg	0.14	04/01/20	04/02/20

Type: Lab Control Sample	Lab ID: QC864125	Batch: 244040
Matrix: Soil	Method: EPA 7471A	Prep Method: METHOD

QC864125 Analyte	Result	Spiked	Units	Recovery	Qual	Limits
Mercury	0.7741	0.8333	mg/Kg	93%		80-120

ENTHALPY ANALYTICAL

Batch QC

Type:	**Matrix Spike**	**Lab ID:**	**QC864126**	**Batch:**	**244040**
Matrix (Source ID):	**Soil (426382-010)**	**Method:**	**EPA 7471A**	**Prep Method:**	**METHOD**

QC864126 Analyte	Result	Source Sample Result	Spiked	Units	Recovery	Qual	Limits	DF
Mercury	0.8043	0.03901	0.8065	mg/Kg	95%		75-125	0.97

Type:	**Matrix Spike Duplicate**	**Lab ID:**	**QC864127**	**Batch:**	**244040**
Matrix (Source ID):	**Soil (426382-010)**	**Method:**	**EPA 7471A**	**Prep Method:**	**METHOD**

QC864127 Analyte	Result	Source Sample Result	Spiked	Units	Recovery	Qual	Limits	RPD	RPD Lim	DF
Mercury	0.8566	0.03901	0.8333	mg/Kg	98%		75-125	3	20	1

Type:	**Blank**	**Lab ID:**	**QC863383**	**Batch:**	**243740**
Matrix:	**Soil**	**Method:**	**EPA 6010B**	**Prep Method:**	**EPA 3050B**

QC863383 Analyte	Result	Qual	Units	RL	Prepared	Analyzed
Antimony	ND		mg/Kg	3.0	03/25/20	03/26/20
Arsenic	ND		mg/Kg	1.0	03/25/20	03/26/20
Barium	ND		mg/Kg	1.0	03/25/20	03/26/20
Beryllium	ND		mg/Kg	0.50	03/25/20	03/26/20
Cadmium	ND		mg/Kg	0.50	03/25/20	03/26/20
Chromium	ND		mg/Kg	1.0	03/25/20	03/26/20
Cobalt	ND		mg/Kg	0.50	03/25/20	03/26/20
Copper	ND		mg/Kg	1.0	03/25/20	03/26/20
Lead	ND		mg/Kg	1.0	03/25/20	03/26/20
Molybdenum	ND		mg/Kg	1.0	03/25/20	03/26/20
Nickel	ND		mg/Kg	1.5	03/25/20	03/26/20
Selenium	ND		mg/Kg	3.0	03/25/20	03/26/20
Silver	ND		mg/Kg	0.50	03/25/20	03/26/20
Thallium	ND		mg/Kg	3.0	03/25/20	03/26/20
Vanadium	ND		mg/Kg	0.50	03/25/20	03/26/20
Zinc	ND		mg/Kg	5.0	03/25/20	03/26/20

ENTHALPY ANALYTICAL

Batch QC

Type: Lab Control Sample	Lab ID: QC863384	Batch: 243740
Matrix: Soil	Method: EPA 6010B	Prep Method: EPA 3050B

QC863384 Analyte	Result	Spiked	Units	Recovery	Qual	Limits
Antimony	114.4	100.0	mg/Kg	114%		80-120
Arsenic	102.8	100.0	mg/Kg	103%		80-120
Barium	109.7	100.0	mg/Kg	110%		80-120
Beryllium	97.96	100.0	mg/Kg	98%		80-120
Cadmium	106.4	100.0	mg/Kg	106%		80-120
Chromium	99.47	100.0	mg/Kg	99%		80-120
Cobalt	106.4	100.0	mg/Kg	106%		80-120
Copper	97.59	100.0	mg/Kg	98%		80-120
Lead	110.2	100.0	mg/Kg	110%		80-120
Molybdenum	104.6	100.0	mg/Kg	105%		80-120
Nickel	110.8	100.0	mg/Kg	111%		80-120
Selenium	97.88	100.0	mg/Kg	98%		80-120
Silver	102.1	100.0	mg/Kg	102%	b	80-120
Thallium	103.7	100.0	mg/Kg	104%		80-120
Vanadium	112.5	100.0	mg/Kg	113%		80-120
Zinc	110.4	100.0	mg/Kg	110%		80-120

Type: Matrix Spike	Lab ID: QC863385	Batch: 243740
Matrix (Source ID): Soil (426340-005)	Method: EPA 6010B	Prep Method: EPA 3050B

QC863385 Analyte	Result	Source Sample Result	Spiked	Units	Recovery	Qual	Limits	DF
Antimony	46.90	0	103.1	mg/Kg	45%	*	75-125	1
Arsenic	98.46	5.454	103.1	mg/Kg	90%		75-125	1
Barium	267.4	149.7	103.1	mg/Kg	114%		75-125	1
Beryllium	98.26	0	103.1	mg/Kg	95%		75-125	1
Cadmium	97.86	0.6082	103.1	mg/Kg	94%		75-125	1
Chromium	141.5	45.93	103.1	mg/Kg	93%		75-125	1
Cobalt	104.1	11.36	103.1	mg/Kg	90%		75-125	1
Copper	112.1	20.21	103.1	mg/Kg	89%		75-125	1
Lead	114.9	13.14	103.1	mg/Kg	99%		75-125	1
Molybdenum	90.23	0	103.1	mg/Kg	88%		75-125	1
Nickel	150.9	59.98	103.1	mg/Kg	88%		75-125	1
Selenium	83.77	0	103.1	mg/Kg	81%		75-125	1
Silver	94.61	0	103.1	mg/Kg	92%	b	75-125	1
Thallium	88.36	1.948	103.1	mg/Kg	84%		75-125	1
Vanadium	145.4	35.01	103.1	mg/Kg	107%		75-125	1
Zinc	147.1	49.96	103.1	mg/Kg	94%		75-125	1

ENTHALPY ANALYTICAL

Batch QC

Type:	**Matrix Spike Duplicate**	**Lab ID:**	**QC863386**	**Batch:**	**243740**
Matrix (Source ID):	**Soil (426340-005)**	**Method:**	**EPA 6010B**	**Prep Method:**	**EPA 3050B**

QC863386 Analyte	Result	Source Sample Result	Spiked	Units	Recovery	Qual	Limits	RPD	RPD Lim	DF
Antimony	57.88	0	102.0	mg/Kg	57%	*	75-125	22	41	1
Arsenic	109.6	5.454	102.0	mg/Kg	102%		75-125	12	35	1
Barium	251.0	149.7	102.0	mg/Kg	99%		75-125	6	20	1
Beryllium	98.39	0	102.0	mg/Kg	96%		75-125	1	20	1
Cadmium	102.4	0.6082	102.0	mg/Kg	100%		75-125	6	20	1
Chromium	142.0	45.93	102.0	mg/Kg	94%		75-125	1	20	1
Cobalt	109.5	11.36	102.0	mg/Kg	96%		75-125	6	20	1
Copper	117.2	20.21	102.0	mg/Kg	95%		75-125	5	20	1
Lead	121.5	13.14	102.0	mg/Kg	106%		75-125	6	20	1
Molybdenum	101.4	0	102.0	mg/Kg	99%		75-125	13	20	1
Nickel	160.7	59.98	102.0	mg/Kg	99%		75-125	7	20	1
Selenium	94.28	0	102.0	mg/Kg	92%		75-125	13	20	1
Silver	100.8	0	102.0	mg/Kg	99%	b	75-125	7	20	1
Thallium	100.2	1.948	102.0	mg/Kg	96%		75-125	14	20	1
Vanadium	143.5	35.01	102.0	mg/Kg	106%		75-125	1	20	1
Zinc	153.7	49.96	102.0	mg/Kg	102%		75-125	5	20	1

ENTHALPY ANALYTICAL

Batch QC

Type: Blank	Lab ID: QC863671	Batch: 243862
Matrix: Soil		

QC863671 Analyte	Result	Qual	Units	RL	Prepared	Analyzed
Method: EPA 8081A Prep Method: EPA 3546						
alpha-BHC	ND		ug/Kg	5.0	03/27/20	03/31/20
beta-BHC	ND		ug/Kg	5.0	03/27/20	03/31/20
gamma-BHC	ND		ug/Kg	5.0	03/27/20	03/31/20
delta-BHC	ND		ug/Kg	5.0	03/27/20	03/31/20
Heptachlor	ND		ug/Kg	5.0	03/27/20	03/31/20
Aldrin	ND		ug/Kg	5.0	03/27/20	03/31/20
Heptachlor epoxide	ND		ug/Kg	5.0	03/27/20	03/31/20
Endosulfan I	ND		ug/Kg	5.0	03/27/20	03/31/20
Dieldrin	ND		ug/Kg	5.0	03/27/20	03/31/20
4,4'-DDE	ND		ug/Kg	5.0	03/27/20	03/31/20
Endrin	ND		ug/Kg	5.0	03/27/20	03/31/20
Endosulfan II	ND		ug/Kg	5.0	03/27/20	03/31/20
Endosulfan sulfate	ND		ug/Kg	5.0	03/27/20	03/31/20
4,4'-DDD	ND		ug/Kg	5.0	03/27/20	03/31/20
Endrin aldehyde	ND		ug/Kg	5.0	03/27/20	03/31/20
Endrin ketone	ND		ug/Kg	5.0	03/27/20	03/31/20
4,4'-DDT	ND		ug/Kg	5.0	03/27/20	03/31/20
Methoxychlor	ND		ug/Kg	9.9	03/27/20	03/31/20
Toxaphene	ND		ug/Kg	99	03/27/20	03/31/20
Chlordane (Technical)	ND		ug/Kg	50	03/27/20	03/31/20
Surrogates				**Limits**		
TCMX	39%	*	%REC	50-150	03/27/20	03/31/20
Decachlorobiphenyl	40%		%REC	24-120	03/27/20	03/31/20
Method: EPA 8082 Prep Method: EPA 3546						
Aroclor-1016	ND		ug/Kg	50	03/27/20	03/30/20
Aroclor-1221	ND		ug/Kg	50	03/27/20	03/30/20
Aroclor-1232	ND		ug/Kg	50	03/27/20	03/30/20
Aroclor-1242	ND		ug/Kg	50	03/27/20	03/30/20
Aroclor-1248	ND		ug/Kg	50	03/27/20	03/30/20
Aroclor-1254	ND		ug/Kg	50	03/27/20	03/30/20
Aroclor-1260	ND		ug/Kg	50	03/27/20	03/30/20
Aroclor-1262	ND		ug/Kg	50	03/27/20	03/30/20
Aroclor-1268	ND		ug/Kg	50	03/27/20	03/30/20
Surrogates				**Limits**		
Decachlorobiphenyl (PCB)	50%		%REC	50-150	03/27/20	03/30/20

ENTHALPY ANALYTICAL

Batch QC

Type: Lab Control Sample	**Lab ID: QC863672**	**Batch: 243862**
Matrix: Soil	**Method: EPA 8081A**	**Prep Method: EPA 3546**

QC863672 Analyte	Result	Spiked	Units	Recovery	Qual	Limits
alpha-BHC	23.33	49.50	ug/Kg	47%		45-150
beta-BHC	28.48	49.50	ug/Kg	58%		42-156
gamma-BHC	24.23	49.50	ug/Kg	49%		47-151
delta-BHC	24.75	49.50	ug/Kg	50%		37-161
Heptachlor	25.42	49.50	ug/Kg	51%		50-144
Aldrin	22.79	49.50	ug/Kg	46%		46-142
Heptachlor epoxide	24.45	49.50	ug/Kg	49%		48-145
Endosulfan I	24.82	49.50	ug/Kg	50%		47-141
Dieldrin	26.09	49.50	ug/Kg	53%		47-151
4,4'-DDE	25.73	49.50	ug/Kg	52%		44-163
Endrin	25.90	49.50	ug/Kg	52%		47-160
Endosulfan II	27.93	49.50	ug/Kg	56%		44-156
Endosulfan sulfate	25.17	49.50	ug/Kg	51%		43-157
4,4'-DDD	25.45	49.50	ug/Kg	51%		43-172
Endrin aldehyde	17.20	49.50	ug/Kg	35%		32-127
Endrin ketone	24.73	49.50	ug/Kg	50%		48-159
4,4'-DDT	27.28	49.50	ug/Kg	55%		40-158
Methoxychlor	25.80	49.50	ug/Kg	52%		36-182
Surrogates						
TCMX	17.64	49.50	ug/Kg	36%	*	50-150
Decachlorobiphenyl	22.90	49.50	ug/Kg	46%		24-120

ENTHALPY ANALYTICAL

Batch QC

Type:	**Matrix Spike**	**Lab ID:**	**QC863673**	**Batch:**	**243862**
Matrix (Source ID):	**Soil (426382-009)**	**Method:**	**EPA 8081A**	**Prep Method:**	**EPA 3546**

QC863673 Analyte	Result	Source Sample Result	Spiked	Units	Recovery	Qual	Limits	DF
alpha-BHC	29.23	0	50.00	ug/Kg	58%		45-150	2
beta-BHC	35.06	0	50.00	ug/Kg	70%		42-156	2
gamma-BHC	30.16	0	50.00	ug/Kg	60%		47-151	2
delta-BHC	30.00	0	50.00	ug/Kg	60%		37-161	2
Heptachlor	31.15	0	50.00	ug/Kg	62%		50-144	2
Aldrin	29.76	0	50.00	ug/Kg	60%		46-142	2
Heptachlor epoxide	29.68	0	50.00	ug/Kg	59%		48-145	2
Endosulfan I	31.50	0	50.00	ug/Kg	63%		47-141	2
Dieldrin	34.08	0	50.00	ug/Kg	68%		47-151	2
4,4'-DDE	37.86	6.203	50.00	ug/Kg	63%		44-163	2
Endrin	30.58	0	50.00	ug/Kg	61%		47-160	2
Endosulfan II	30.69	0	50.00	ug/Kg	61%		44-156	2
Endosulfan sulfate	31.09	0	50.00	ug/Kg	62%		43-157	2
4,4'-DDD	31.40	0	50.00	ug/Kg	63%		43-172	2
Endrin aldehyde	24.69	0	50.00	ug/Kg	49%		32-127	2
Endrin ketone	33.55	0	50.00	ug/Kg	67%		48-159	2
4,4'-DDT	38.66	4.092	50.00	ug/Kg	69%		40-158	2
Methoxychlor	38.93	0	50.00	ug/Kg		DO	36-182	2
Surrogates								
TCMX	23.05		50.00	ug/Kg	46%	*	50-150	2
Decachlorobiphenyl	31.05		50.00	ug/Kg	62%		24-120	2

ENTHALPY ANALYTICAL

Batch QC

Type:	**Matrix Spike Duplicate**	**Lab ID:**	**QC863674**	**Batch:**	**243862**
Matrix (Source ID):	**Soil (426382-009)**	**Method:**	**EPA 8081A**	**Prep Method:**	**EPA 3546**

QC863674 Analyte	Result	Source Sample Result	Spiked	Units	Recovery	Qual	Limits	RPD	RPD Lim	DF
alpha-BHC	25.11	0	49.50	ug/Kg	51%		45-150	14	20	2
beta-BHC	30.86	0	49.50	ug/Kg	62%		42-156	12	20	2
gamma-BHC	26.27	0	49.50	ug/Kg	53%		47-151	13	20	2
delta-BHC	26.86	0	49.50	ug/Kg	54%		37-161	10	20	2
Heptachlor	26.50	0	49.50	ug/Kg	54%		50-144	15	20	2
Aldrin	25.62	0	49.50	ug/Kg	52%		46-142	14	20	2
Heptachlor epoxide	26.71	0	49.50	ug/Kg	54%		48-145	10	20	2
Endosulfan I	28.27	0	49.50	ug/Kg	57%		47-141	10	20	2
Dieldrin	30.46	0	49.50	ug/Kg	62%		47-151	10	20	2
4,4'-DDE	34.16	6.203	49.50	ug/Kg	56%		44-163	9	20	2
Endrin	27.90	0	49.50	ug/Kg	56%		47-160	8	20	2
Endosulfan II	28.23	0	49.50	ug/Kg	57%		44-156	7	20	2
Endosulfan sulfate	28.12	0	49.50	ug/Kg	57%		43-157	9	20	2
4,4'-DDD	28.55	0	49.50	ug/Kg	58%		43-172	9	20	2
Endrin aldehyde	22.30	0	49.50	ug/Kg	45%		32-127	9	20	2
Endrin ketone	28.42	0	49.50	ug/Kg	57%		48-159	16	20	2
4,4'-DDT	34.35	4.092	49.50	ug/Kg	61%		40-158	11	20	2
Methoxychlor	33.53	0	49.50	ug/Kg		DO	36-182		20	2
Surrogates										
TCMX	37.41		49.50	ug/Kg	76%		50-150			2
Decachlorobiphenyl	47.53		49.50	ug/Kg	96%		24-120			2

Type:	**Lab Control Sample**	**Lab ID:**	**QC863675**	**Batch:**	**243862**
Matrix:	**Soil**	**Method:**	**EPA 8082**	**Prep Method:**	**EPA 3546**

QC863675 Analyte	Result	Spiked	Units	Recovery	Qual	Limits
Aroclor-1016	344.6	490.2	ug/Kg	70%		70-130
Aroclor-1260	351.7	490.2	ug/Kg	72%		70-130
Surrogates						
Decachlorobiphenyl (PCB)	26.06	49.02	ug/Kg	53%		50-150

ENTHALPY ANALYTICAL

Batch QC

Type:	**Matrix Spike**	**Lab ID:**	**QC863676**	**Batch:**	**243862**
Matrix (Source ID):	**Soil (426382-009)**	**Method:**	**EPA 8082**	**Prep Method:**	**EPA 3546**

QC863676 Analyte	Result	Source Sample Result	Spiked	Units	Recovery	Qual	Limits	DF
Aroclor-1016	253.3	0	500.0	ug/Kg	51%	*	70-130	2
Aroclor-1260	318.6	0	500.0	ug/Kg	64%	*	70-130	2
Surrogates								
Decachlorobiphenyl (PCB)	20.39		50.00	ug/Kg	41%	*	50-150	2

Type:	**Matrix Spike Duplicate**	**Lab ID:**	**QC863677**	**Batch:**	**243862**
Matrix (Source ID):	**Soil (426382-009)**	**Method:**	**EPA 8082**	**Prep Method:**	**EPA 3546**

QC863677 Analyte	Result	Source Sample Result	Spiked	Units	Recovery	Qual	Limits	RPD	RPD Lim	DF
Aroclor-1016	396.3	0	500.0	ug/Kg	79%		70-130	44*	20	2
Aroclor-1260	435.0	0	500.0	ug/Kg	87%		70-130	31*	20	2
Surrogates										
Decachlorobiphenyl (PCB)	31.20		50.00	ug/Kg	62%		50-150			2

ENTHALPY ANALYTICAL

Batch QC

Type:	**Blank**	**Lab ID:**	**QC863387**	**Batch:**	**243741**
Matrix:	**Soil**	**Method:**	**EPA 8270C-SIM**	**Prep Method:**	**EPA 3550C**

QC863387 Analyte	Result	Qual	Units	RL	Prepared	Analyzed
1-Methylnaphthalene	ND		ug/Kg	10	03/24/20	03/27/20
2-Methylnaphthalene	ND		ug/Kg	10	03/24/20	03/27/20
Naphthalene	ND		ug/Kg	10	03/24/20	03/27/20
Acenaphthylene	ND		ug/Kg	10	03/24/20	03/27/20
Acenaphthene	ND		ug/Kg	10	03/24/20	03/27/20
Fluorene	ND		ug/Kg	10	03/24/20	03/27/20
Phenanthrene	ND		ug/Kg	10	03/24/20	03/27/20
Anthracene	ND		ug/Kg	10	03/24/20	03/27/20
Fluoranthene	ND		ug/Kg	10	03/24/20	03/27/20
Pyrene	ND		ug/Kg	10	03/24/20	03/27/20
Benzo(a)anthracene	ND		ug/Kg	10	03/24/20	03/27/20
Chrysene	ND		ug/Kg	10	03/24/20	03/27/20
Benzo(b)fluoranthene	ND		ug/Kg	10	03/24/20	03/27/20
Benzo(k)fluoranthene	ND		ug/Kg	10	03/24/20	03/27/20
Benzo(a)pyrene	ND		ug/Kg	10	03/24/20	03/27/20
Indeno(1,2,3-cd)pyrene	ND		ug/Kg	10	03/24/20	03/27/20
Dibenz(a,h)anthracene	ND		ug/Kg	10	03/24/20	03/27/20
Benzo(g,h,i)perylene	ND		ug/Kg	10	03/24/20	03/27/20
Surrogates				**Limits**		
Nitrobenzene-d5	106%		%REC	27-125	03/24/20	03/27/20
2-Fluorobiphenyl	99%		%REC	30-120	03/24/20	03/27/20
Terphenyl-d14	106%		%REC	33-155	03/24/20	03/27/20

ENTHALPY ANALYTICAL

Batch QC

Type:	**Lab Control Sample**	**Lab ID:**	**QC863388**	**Batch:**	**243741**
Matrix:	**Soil**	**Method:**	**EPA 8270C-SIM**	**Prep Method:**	**EPA 3550C**

QC863388 Analyte	Result	Spiked	Units	Recovery	Qual	Limits
1-Methylnaphthalene	27.55	50.00	ug/Kg	55%		28-130
2-Methylnaphthalene	31.41	50.00	ug/Kg	63%		33-130
Naphthalene	28.42	50.00	ug/Kg	57%		25-130
Acenaphthylene	29.89	50.00	ug/Kg	60%		28-130
Acenaphthene	28.16	50.00	ug/Kg	56%		32-130
Fluorene	30.90	50.00	ug/Kg	62%		35-130
Phenanthrene	30.68	50.00	ug/Kg	61%		35-132
Anthracene	24.22	50.00	ug/Kg	48%		34-136
Fluoranthene	33.49	50.00	ug/Kg	67%		34-139
Pyrene	32.30	50.00	ug/Kg	65%		35-134
Benzo(a)anthracene	31.42	50.00	ug/Kg	63%		30-132
Chrysene	26.42	50.00	ug/Kg	53%		29-130
Benzo(b)fluoranthene	32.34	50.00	ug/Kg	65%		32-137
Benzo(k)fluoranthene	30.61	50.00	ug/Kg	61%		32-130
Benzo(a)pyrene	19.84	50.00	ug/Kg	40%		10-138
Indeno(1,2,3-cd)pyrene	32.56	50.00	ug/Kg	65%		34-132
Dibenz(a,h)anthracene	29.11	50.00	ug/Kg	58%		32-130
Benzo(g,h,i)perylene	26.61	50.00	ug/Kg	53%		27-130
Surrogates						
Nitrobenzene-d5	33.25	50.00	ug/Kg	66%		27-125
2-Fluorobiphenyl	30.98	50.00	ug/Kg	62%		30-120
Terphenyl-d14	33.79	50.00	ug/Kg	68%		33-155

ENTHALPY ANALYTICAL

Batch QC

Type:	**Matrix Spike**	**Lab ID:**	**QC863389**	**Batch:**	**243741**
Matrix (Source ID):	**Soil (426259-001)**	**Method:**	**EPA 8270C-SIM**	**Prep Method:**	**EPA 3550C**

QC863389 Analyte	Result	Source Sample Result	Spiked	Units	Recovery	Qual	Limits	DF
1-Methylnaphthalene	32.95	0	50.00	ug/Kg	66%		25-130	10
2-Methylnaphthalene	32.57	0	50.00	ug/Kg	65%		32-133	10
Naphthalene	36.64	0	50.00	ug/Kg	73%		33-130	10
Acenaphthylene	31.69	0	50.00	ug/Kg	63%		14-157	10
Acenaphthene	34.08	0	50.00	ug/Kg	68%		28-134	10
Fluorene	33.05	1.823	50.00	ug/Kg	62%		27-140	10
Phenanthrene	31.29	2.978	50.00	ug/Kg	57%		29-147	10
Anthracene	31.80	2.423	50.00	ug/Kg	59%		24-156	10
Fluoranthene	44.54	6.680	50.00	ug/Kg	76%		28-160	10
Pyrene	43.46	7.786	50.00	ug/Kg	71%		26-153	10
Benzo(a)anthracene	40.26	6.134	50.00	ug/Kg	68%		26-174	10
Chrysene	33.63	6.983	50.00	ug/Kg	53%		40-139	10
Benzo(b)fluoranthene	44.73	0	50.00	ug/Kg	89%		36-164	10
Benzo(k)fluoranthene	33.63	0	50.00	ug/Kg	67%		36-161	10
Benzo(a)pyrene	45.25	8.507	50.00	ug/Kg	73%		18-173	10
Indeno(1,2,3-cd)pyrene	35.39	6.288	50.00	ug/Kg	58%		26-154	10
Dibenz(a,h)anthracene	30.09	0	50.00	ug/Kg	60%		38-132	10
Benzo(g,h,i)perylene	32.99	0	50.00	ug/Kg	66%		36-130	10
Surrogates								
Nitrobenzene-d5	24.10		50.00	ug/Kg	48%		27-125	10
2-Fluorobiphenyl	33.30		50.00	ug/Kg	67%		30-120	10
Terphenyl-d14	43.76		50.00	ug/Kg	88%		33-155	10

ENTHALPY ANALYTICAL

Batch QC

Type:	**Matrix Spike Duplicate**	**Lab ID:**	**QC863390**	**Batch:**	**243741**
Matrix (Source ID):	**Soil (426259-001)**	**Method:**	**EPA 8270C-SIM**	**Prep Method:**	**EPA 3550C**

QC863390 Analyte	Result	Source Sample Result	Spiked	Units	Recovery	Qual	Limits	RPD	RPD Lim	DF
1-Methylnaphthalene	33.42	0	49.75	ug/Kg	67%		25-130	2	35	10
2-Methylnaphthalene	33.28	0	49.75	ug/Kg	67%		32-133	3	35	10
Naphthalene	34.39	0	49.75	ug/Kg	69%		33-130	6	35	10
Acenaphthylene	38.03	0	49.75	ug/Kg	76%		14-157	19	35	10
Acenaphthene	31.37	0	49.75	ug/Kg	63%		28-134	8	35	10
Fluorene	33.23	1.823	49.75	ug/Kg	63%		27-140	1	35	10
Phenanthrene	30.18	2.978	49.75	ug/Kg	55%		29-147	3	35	10
Anthracene	30.32	2.423	49.75	ug/Kg	56%		24-156	4	35	10
Fluoranthene	43.29	6.680	49.75	ug/Kg	74%		28-160	2	35	10
Pyrene	39.53	7.786	49.75	ug/Kg	64%		26-153	9	35	10
Benzo(a)anthracene	38.48	6.134	49.75	ug/Kg	65%		26-174	4	35	10
Chrysene	34.28	6.983	49.75	ug/Kg	55%		40-139	2	35	10
Benzo(b)fluoranthene	42.66	0	49.75	ug/Kg	86%		36-164	4	35	10
Benzo(k)fluoranthene	37.69	0	49.75	ug/Kg	76%		36-161	12	35	10
Benzo(a)pyrene	43.93	8.507	49.75	ug/Kg	71%		18-173	3	35	10
Indeno(1,2,3-cd)pyrene	34.23	6.288	49.75	ug/Kg	56%		26-154	3	35	10
Dibenz(a,h)anthracene	27.45	0	49.75	ug/Kg	55%		38-132	9	35	10
Benzo(g,h,i)perylene	34.84	0	49.75	ug/Kg	70%		36-130	6	35	10
Surrogates										
Nitrobenzene-d5	21.99		49.75	ug/Kg	44%		27-125			10
2-Fluorobiphenyl	34.20		49.75	ug/Kg	69%		30-120			10
Terphenyl-d14	42.78		49.75	ug/Kg	86%		33-155			10

* Value is outside QC limits
DO Diluted Out
ND Not Detected
b See narrative

Laboratory Job Number 426382

Subcontracted Products

American Environmental Testing

American Environmental Testing Laboratory Inc.
2834 & 2908 North Naomi Street Burbank, CA 91504 • DOHS NO: 1541, LACSD NO: 10181
Tel: (888) 288-AETL • (818) 845-8200 • Fax: (818) 845-8840 • www.aetlab.com

Ordered By

Enthalpy Analytical **931 W. Barkley Ave.** **Orange, CA 92868-**

Number of Pages 3 **Date Received 03/25/2020** **Date Reported 04/01/2020**

Telephone: (714)771-6900
Attention: Ranjit Clarke

Job Number	Order Date	Client
104217	03/25/2020	ENTANA

Project ID: 426382
Project Name: PO# 1049061

Enclosed please find results of analyses of 2 soil samples which were analyzed as specified on the attached chain of custody. If there are any questions, please do not hesitate to call.

Checked By: _____ Approved By: _____

Joe Sevrean
Laboratory Director

ENTHALPY ANALYTICAL

Enthalpy Analytical - Orange 104217
Orange, CA 92868
(714) 771-6900 / Fax: (510) 486-0532

Subcontract Laboratory:
American Environmental Testing
2834 North Naomi Street
Burbank, CA 91504-2023
ATTN: Jim Lin
PO #: 1049061

Enthalpy Order: EO-426382
PM: Ranjit K Clarke
Email: Ranjit.Clarke@enthalpy.com
CC: incomingreports@enthalpy.com
Phone: (714) 771-9906

Results Due: 5 Day TAT (04/01/20)
Report Level: II
Report To: RL
EDDs: yes

Notes:

Sample ID	Collected	Lab ID	# Cont.	Matrix	Analysis Requested	Comment
P-2-1'	24-MAR-2020 08:08	426382-001	1	Soil	EPA 8151A Chlorinated Herbicides	104217.01
P-4-1'	24-MAR-2020 12:25	426382-009	1	Soil	EPA 8151A Chlorinated Herbicides	104217.02

Notes:	Relinquished By:	Received By:
	Date: 3/25/20 0854	Date: 3/25/20 0854
	Date: 3/25/20 1140	Date:
	Date:	Date: 3/25/20 1140

A KYZER LABS COMPANY

AMERICAN ENVIRONMENTAL TESTING LABORATORY
2834 NORTH NAOMI ST. BURBANK, CALIFORNIA 91504 ELAP # 1541 LACSD # 10181
TEL (888) 288-AETL (818) 845-8200 FAX (818) 845-8840 www.aetlab.com

COOLER RECEIPT FORM

Client Name: ENTHALPY - ANALYTICAL
Project Name:
AETL Job Number: 104217
Date Received: 3/25/20 Received by: Sanjis-P
Carrier: ☒ AETL Courier ☐ Client ☐ GSO ☐ FedEx ☐ UPS
☐ Others:

Samples were received in: ☒ Cooler (1) ☐ Other (Specify):
Inside temperature of shipping container No 1: 3.3°C, No 2: , No 3:
Type of sample containers: ☐ VOA, ☐ Glass bottles, ☒ Wide mouth jars, ☐ HDPE bottles, ☐ Metal sleeves, ☐ Others (Specify):
How are samples preserved: ☐ None, ☑ Ice , ☐ Blue Ice, ☐ Dry Ice
☑ None, ☐ HNO_3, ☐ NaOH, ☐ ZnOAc, ☐ HCl, ☐ $Na_2S_2O_3$, ☐ MeOH
☐ Other (Specify):

	Yes	No, explain below	Name, if client was notified.
1. Are the COCs Correct?	✓		
2. Are the Sample labels legible?	✓		
3. Do samples match the COC?	✓		
4. Are the required analyses clear?	✓		
5. Is there enough samples for required analysis?	✓		
6. Are samples sealed with evidence tape?	N/A		
7. Are sample containers in good condition?	✓		
8. Are samples preserved?	✓		
9. Are samples preserved properly for the intended analysis?	✓		
10. Are the VOAs free of headspace?	N/A		
11. Are the jars free of headspace?	✓		

PLEASE NOTE ALL SAMPLES WILL BE DISPOSED OF 30 DAYS AFTER RECEIVING DATE. IF AETL IS INFORMED OTHERWISE, THERE WILL BE A STORAGE CHARGE PER SAMPLE PER MONTH FOR ANY SAMPLE HELD BEYOND 30 DAYS.

Explain all "No" answers for above questions:

American Environmental Testing Laboratory Inc.
2834 & 2908 North Naomi Street Burbank, CA 91504 • DOHS NO: 1541, LACSD NO: 10181
Tel: (888) 288-AETL • (818) 845-8200 • Fax: (818) 845-8840 • www.aetlab.com

Ordered By

Enthalpy Analytical **931 W. Barkley Ave.** **Orange, CA 92868-**	**Project ID: 426382** **Date Received 03/25/2020** **Date Reported 04/01/2020**
Telephone: (714)771-6900 **Attention: Ranjit Clarke**	

Job Number	Order Date	Client
104217	03/25/2020	ENTANA

CERTIFICATE OF ANALYSIS
CASE NARRATIVE

AETL received 2 samples with the following specification on 03/25/2020.

Lab ID	Sample ID	Sample Date	Matrix	Quantity Of Containers
104217.01	P-2-1'	03/24/2020	Soil	1
104217.02	P-4-1'	03/24/2020	Soil	1

Method ^ Submethod	*Req Date*	*Priority*	*TAT*	*Units*
(8151A)	04/01/2020	2	Normal	ug/Kg

The samples were analyzed as specified on the enclosed chain of custody.
No analytical non-conformances were encountered.

Unless otherwise noted, all results of soil and solid samples are based on wet weight.

Checked By: _____ Approved By: _____

Joe Sevrean
Laboratory Director

American Environmental Testing Laboratory Inc.
2834 & 2908 North Naomi Street Burbank, CA 91504 • DOHS NO: 1541, LACSD NO: 10181
Tel: (888) 288-AETL • (818) 845-8200 • Fax: (818) 845-8840 • www.aetlab.com

ANALYTICAL RESULTS

Ordered By

Enthalpy Analytical
931 W. Barkley Ave.
Orange, CA 92868-

Telephone: (714)771-6900
Attn: Ranjit Clarke
Page: **2**

Project ID: 426382
Project Name: PO# 1049061

AETL Job Number	Submitted	Client
104217	03/25/2020	ENTANA

Method: (8151A), Chlorinated Herbicides by GC/ECD

QC Batch No: 032620MB1

Our Lab I.D.			Method Blank	**104217.01**	**104217.02**		
Client Sample I.D.				P-2-1'	P-4-1'		
Date Sampled				**03/24/2020**	**03/24/2020**		
Date Prepared			**03/26/2020**	**03/26/2020**	**03/26/2020**		
Preparation Method			**3550B**	**3550B**	**3550B**		
Date Analyzed			**03/26/2020**	**03/26/2020**	**03/26/2020**		
Matrix			Soil	Soil	Soil		
Units			ug/Kg	ug/Kg	ug/Kg		
Dilution Factor			1	1	1		
Analytes	**MDL**	**PQL**	**Results**	**Results**	**Results**		
Acifluorfen	**20**	**20**	**ND**	**ND**	**ND**		
Bentazon	**10**	**10**	**ND**	**ND**	**ND**		
Chloramben	**10**	**10**	**ND**	**ND**	**ND**		
2,4-D	**10**	**10**	**ND**	**ND**	**ND**		
Dalapon	**20**	**20**	**ND**	**ND**	**ND**		
2,4-DB	**10**	**10**	**ND**	**ND**	**ND**		
DCPA diacid	**20**	**20**	**ND**	**ND**	**ND**		
Dicamba	**10**	**10**	**ND**	**ND**	**ND**		
3,5-Dichlorobenzoic acid	**10**	**10**	**ND**	**ND**	**ND**		
Dichloroprop	**10**	**10**	**ND**	**ND**	**ND**		
Dinoseb (DNBP, 2-sec-Butyl-4, 6-dinitrophenol)	**20**	**20**	**ND**	**ND**	**ND**		
MCPA	**2000**	**2000**	**ND**	**ND**	**ND**		
MCPP	**2000**	**2000**	**ND**	**ND**	**ND**		
4-Nitrophenol	**10**	**10**	**ND**	**ND**	**ND**		
Pentachlorophenol (PCP)	**10**	**10**	**ND**	**ND**	**ND**		
Picloram	**10**	**10**	**ND**	**ND**	**ND**		
2,4,5-T (2,4,5-Trichlorophenoxyacetic acid)	**10**	**10**	**ND**	**ND**	**ND**		
2,4,5-TP	**10**	**10**	**ND**	**ND**	**ND**		
Our Lab I.D.			Method Blank	**104217.01**	**104217.02**		
Surrogates	**%Rec.Limit**		**% Rec.**	**% Rec.**	**% Rec.**		
DCAA	**40-150**		**56.8**	**58.2**	**60.8**		

American Environmental Testing Laboratory Inc.
2834 & 2908 North Naomi Street Burbank, CA 91504 • DOHS NO: 1541, LACSD NO: 10181
Tel: (888) 288-AETL • (818) 845-8200 • Fax: (818) 845-8840 • www.aetlab.com

QUALITY CONTROL RESULTS

Ordered By

Enthalpy Analytical
931 W. Barkley Ave.
Orange, CA 92868-

Telephone: (714)771-6900
Attn: Ranjit Clarke
Page: **3**

Project ID: 426382
Project Name: PO# 1049061

AETL Job Number	Submitted	Client
104217	03/25/2020	ENTANA

Method: (8151A), Chlorinated Herbicides by GC/ECD

QC Batch No: 032620MB1; Dup or Spiked Sample: 104179.01; LCS: Clean Sand; QC Prepared: 03/26/2020; QC Analyzed: 03/26/2020; Units: ug/Kg

Analytes	Sample Result	MS Concen	MS Recov	MS % REC	MS DUP Concen	MS DUP Recov	MS DUP % REC	RPD %	MS/MSD % Limit	MS RPD % Limit
2,4-D	0.00	25.0	27.7	111	25.0	23.4	93.6	17.0	40-140	<40
Dinoseb (DNBP, 2-sec-Butyl-4, 6-dinitrophenol)	0.00	25.0	16.8	67.2	25.0	23.6	94.4	33.7	40-140	<40
2,4,5-T (2,4,5-Trichlorophenoxyacetic acid)	0.00	25.0	16.8	67.2	25.0	19.6	78.4	15.4	40-140	<40
Surrogates										
DCAA	0.00	50.0	40.3	80.6	50.0	47.0	94.0	16.6	40-140	<40

QC Batch No: 032620MB1; Dup or Spiked Sample: 104179.01; LCS: Clean Sand; QC Prepared: 03/26/2020; QC Analyzed: 03/26/2020; Units: ug/Kg

Analytes	LCS Concen	LCS Recov	LCS % REC	LCS DUP Concen	LCS DUP Recov	LCS DUP % REC	LCS RPD % REC	LCS/LCSD % Limit	LCS RPD % Limit	
2,4-D	25.0	19.7	78.8	25.0	26.2	105	28.5	50-140	<40	
Dinoseb (DNBP, 2-sec-Butyl-4, 6-dinitrophenol)	25.0	15.3	61.2	25.0	16.9	67.6	9.94	50-140	<40	
2,4,5-T (2,4,5-Trichlorophenoxyacetic acid)	25.0	14.2	56.8	25.0	15.8	63.2	10.7	50-140	<40	
LCS										
Dalapon	25.0	18.9	75.6	25.0	19.9	79.6	5.15	50-140	<40	
2,4-DB	25.0	13.5	54.0	25.0	14.3	57.2	5.76	50-140	<40	
Dicamba	25.0	14.4	57.6	25.0	20.7	82.8	35.9	50-140	<40	
Dichloroprop	25.0	16.5	66.0	25.0	17.9	71.6	8.14	50-140	<40	
MCPA	2,500	1,580	63.1	2,500	2,220	88.8	33.8	50-140	<40	
MCPP	2,500	2,530	101	2,500	3,420	137	30.3	50-140	<40	
2,4,5-TP	25.0	14.2	56.8	25.0	13.9	55.6	2.14	50-140	<40	
Surrogates										
DCAA	50.0	37.6	75.2	50.0	47.6	95.2	26.6	50-140	<40	

American Environmental Testing Laboratory Inc.
2834 & 2908 North Naomi Street, Burbank, CA 91504 • DOHS NO: 1541, LACSD NO: 10181
Tel: (888) 288-AETL • (818) 845-8200 • Fax: (818) 845-8840 • www.aetlab.com

Data Qualifiers and Descriptors

Data Qualifier:

#:	Recovery is not within acceptable control limits.
*:	In the QC section, sample results have been taken directly from the ICP reading. No preparation factor has been applied.
B:	Analyte was present in the Method Blank.
D:	Result is from a diluted analysis.
E:	Result is beyond calibration limits and is estimated.
H:	Analysis was performed over the allowed holding time due to circumstances which were beyond laboratory control.
J:	Analyte was detected . However, the analyte concentration is an estimated value, which is between the Method Detection Limit (MDL) and the Practical Quantitation Limit (PQL).
M:	Matrix spike recovery is outside control limits due to matrix interference. Laboratory Control Sample recovery was acceptable.
MCL:	Maximum Contaminant Level
NS:	No Standard Available
S6:	Surrogate recovery is outside control limits due to matrix interference.
S8:	The analysis of the sample required a dilution such that the surrogate concentration was diluted below the method acceptance criteria.
X:	Results represent LCS and LCSD data.

Definition:

%Limi:	Percent acceptable limits.
%REC:	Percent recovery.
Con.L:	Acceptable Control Limits
Conce:	Added concentration to the sample.
LCS:	Laboratory Control Sample
MDL:	Method Detection Limit is a statistically derived number which is specific for each instrument, each method, and each compound. It indicates a distinctively detectable quantity with 99% probability.

American Environmental Testing Laboratory Inc.
2834 & 2908 North Naomi Street, Burbank, CA 91504 • DOHS NO: 1541, LACSD NO: 10181
Tel: (888) 288-AETL • (818) 845-8200 • Fax: (818) 845-8840 • www.aetlab.com

Data Qualifiers and Descriptors

MS:	Matrix Spike
MS DU:	Matrix Spike Duplicate
ND:	Analyte was not detected in the sample at or above MDL.
PQL:	Practical Quantitation Limit or ML (Minimum Level as per RWQCB) is the minimum concentration that can be quantified with more than 99% confidence. Taking into account all aspects of the entire analytical instrumentation and practice.
Recov:	Recovered concentration in the sample.
RPD:	Relative Percent Difference

Enthalpy Analytical
931 West Barkley Ave
Orange, CA 92868
(714) 771-6900

enthalpy.com

Lab Job Number:	426450
Report Level:	II
Report Date:	04/22/2020

Analytical Report *prepared for:*

Keith Gilbert
Ninyo & Moore
475 Goddard
Suite 200
Irvine, CA 92618

Location: Strathern Park Soil Sampling /8041 Whitsett Ave- Supplemental Report 1

Authorized for release by:

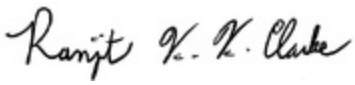

Ranjit K Clarke, Project Manager
(714) 771-9906
Ranjit.Clarke@enthalpy.com

This data package has been reviewed for technical correctness and completeness. Release of this data has been authorized by the Laboratory Manager or the Manager's designee, as verified by the above signature which applies to this PDF file as well as any associated electronic data deliverable files. The results contained in this report meet all requirements of NELAP and pertain only to those samples which were submitted for analysis. This report may be reproduced only in its entirety.

ENTHALPY ANALYTICAL

Sample Summary

Keith Gilbert
Ninyo & Moore
475 Goddard
Suite 200
Irvine, CA 92618

Lab Job #: 426450
Location: Strathern Park Soil Sampling /8041 Whitsett Ave- Supplemental Report 1
Date Received: 03/25/20

Sample ID	Lab ID	Collected	Matrix
P-6-1'	426450-001	03/25/20 07:28	Soil
P-6-2.5'	426450-002	03/25/20 07:32	Soil
P-6-5'	426450-003	03/25/20 08:00	Soil
P-6-10.5'	426450-004	03/25/20 08:10	Soil
P-6-11'	426450-005	03/25/20 08:10	Soil
P-6-15'	426450-006	03/25/20 08:15	Soil
P-6-20'	426450-007	03/25/20 08:20	Soil
P-6-25'	426450-008	03/25/20 08:30	Soil
B-3-1'	426450-009	03/25/20 09:45	Soil
B-3-2.5'	426450-010	03/25/20 09:50	Soil
B-3-5'	426450-011	03/25/20 10:15	Soil
B-3-10.5'	426450-012	03/25/20 10:20	Soil
B-3-15'	426450-013	03/25/20 10:30	Soil
B-3-20'	426450-014	03/25/20 10:35	Soil
B-3-25'	426450-015	03/25/20 10:40	Soil
B-1-1'	426450-016	03/25/20 11:00	Soil
B-1-2.5'	426450-017	03/25/20 11:05	Soil
B-1-5'	426450-018	03/25/20 11:20	Soil
B-1-10'	426450-019	03/25/20 11:25	Soil
B-1-15'	426450-020	03/25/20 11:35	Soil
B-1-20'	426450-021	03/25/20 11:40	Soil
B-1-25'	426450-022	03/25/20 11:50	Soil
COMP-1	426450-023	03/25/20 13:05	Soil
COMP-2	426450-024	03/25/20 13:20	Soil
COMP-3	426450-025	03/25/20 13:35	Soil
COMP-4	426450-026	03/25/20 14:25	Soil
COMP-5	426450-027	03/25/20 14:15	Soil
COMP-6	426450-028	03/25/20 13:55	Soil

ENTHALPY ANALYTICAL

Sample Summary

Keith Gilbert Ninyo & Moore 475 Goddard Suite 200 Irvine, CA 92618	Lab Job #: Location: Date Received:	426450 Strathern Park Soil Sampling /8041 Whitsett Ave- Supplemental Report 1 03/25/20

Sample ID	Lab ID	Collected	Matrix
COMP-7	426450-029	03/25/20 14:40	Soil
COMP-8	426450-030	03/25/20 15:00	Soil
COMPOSITE 1-8	426450-031	03/25/20 00:00	Soil

ENTHALPY ANALYTICAL

Case Narrative

Ninyo & Moore 475 Goddard Suite 200 Irvine, CA 92618 Keith Gilbert	Lab Job Number:	426450
	Location:	Strathern Park Soil Sampling /8041 Whitsett Ave- Supplemental Report 1
	Date Received:	03/25/20

This data package contains sample and QC results for fifteen soil samples, requested for the above referenced project on 03/25/20. The samples were received cold and intact.

TPH-Extractables by GC (EPA 8015B):
High RPD was observed for diesel C10-C28 in the MS/MSD of P-4-10' (lab # 426382-012); the high RPD was not associated with any reported results. No other analytical problems were encountered.

Volatile Organics by GC/MS (EPA 8260B):
No analytical problems were encountered.

Semivolatile Organics by GC/MS (EPA 8270C):
High response was observed for 4-nitrophenol in the CCV analyzed 03/30/20 16:25; affected data was qualified with "b". High recovery was observed for 4-nitrophenol in the MS for batch 243926; the parent sample was not a project sample, the LCS was within limits, the associated RPD was within limits, and this analyte was not detected at or above the RL in the associated samples. No other analytical problems were encountered.

Semivolatile Organics by GC/MS SIM (EPA 8270C-SIM):
No analytical problems were encountered.

Pesticides (EPA 8081A):
All samples underwent sulfur cleanup using the copper option in EPA Method 3660B. All samples underwent florisil cleanup using EPA Method 3620C. No analytical problems were encountered.

PCBs (EPA 8082):
All samples underwent sulfuric acid cleanup using EPA Method 3665A. All samples underwent sulfur cleanup using the copper option in EPA Method 3660B. No analytical problems were encountered.

Metals (EPA 6010B and EPA 7471A) Soil:
Low recoveries were observed for barium and antimony in the MS/MSD of WC-1 (lab # 426449-001); the LCS was within limits, and the associated RPDs were within limits. No other analytical problems were encountered.

Metals (EPA 6010B) WET Leachate:
No analytical problems were encountered.

Total Oil and Grease in Solids (EPA 1664A M):
No analytical problems were encountered.

8151A Chlorinated Herbicides (EPA 8151A):
American Environmental Testing in Burbank, CA performed the analysis (not NELAP certified). Please see the American Environmental Testing case narrative.

ENTHALPY ANALYTICAL

Chain of Custody Record

Lab No: 426450

Page: 1 of 3

Turn Around Time (rush by advanced notice only)

Standard:	X	5 Day:		3 Day:	
2 Day:		1 Day:		Custom TAT:	

Enthalpy Analytical - Orange

931 W. Barkley Avenue, Orange, CA 92868

Phone 714-771-6900

Matrix: A = Air S = Soil/Solid W = Water DW = Drinking Wate SD = Sediment PP = Pure Product SEA = Sea Water SW = Swab T = Tissue WP = Wipe O = Other

Preservatives: 1 = $Na_2S_2O_3$ 2 = HCl 3 = HNO_3 4 = H_2SO_4 5 = NaOH 6 = Other

Sample Receipt Temp: 3.4 / 1.1 (lab use only)

CUSTOMER INFORMATION		PROJECT INFORMATION	
Company:	Ninyo & Moore	Name:	Strathern Park Soil Sampling
Report To:	Keith Gilbert	Number:	211294004
Email:	kgilbert@ninyoandmoore.com	P.O. #:	
Address:	475 Goddard Ste 200	Address:	8041 Whitsett Avenue
	Irvine, CA 92618		North Hollywood, CA 91605
Phone:	949-753-7070	Global ID:	
Fax:	949-753-7071	Sampled By:	Kristina Hill (KMH)

Test Instructions / Comments: please cc results to khill@ninyoandmoore.com

	Sample ID	Sampling Date	Sampling Time	Matrix	Container No. / Size	Pres.	Title 22 Metals (6010B/7471A)	TRPH (1664)	TPHcc (8015M)	VOCs (8260B/5035)	SVOCs (8270C)	PAHs (8270SIM)	OCPs (8081A	PCBs (8082)	CHs (8150	pH, nitrates, sulfates	Hold
1	P-6-1'	3/25/2020	0728	Soil	8oz jar	ICE	X						X	X	X		
2	P-6-2.5'		0732				X										
3	P-6-5'		0800					X									
4	P-6-10.5'		0810		6"x1.5" sleeve (1)												X
5	P-6-11'		0810														X
6	P-6-15'		0815		6"x2.5" sleeve 3 VOAs (1)			X	X	X	X						
7	P-6-20'		0820		6"x1.5" sleeve (2)												
8	P-6-25'		0830		6"x2.5" sleeve (1)			X									
9	B-3-1'		0945		8oz jar		X						X	X	X		
10	B-3-2.5'		0950				X										

	Signature	Print Name	Company / Title	Date / Time
[1] Relinquished By:		Kristina Hill	Ninyo & Moore / Geologist	3/25/2020 1633
[1] Received By:		ElizabethRamirez	EA	3/25/2020 16:33
[2] Relinquished By:				
[2] Received By:				
[3] Relinquished By:				
[3] Received By:				

ENTHALPY ANALYTICAL

Chain of Custody Record

Lab No: 426450

Page: 2 of 3

Turn Around Time (rush by advanced notice only)

Standard:	X	5 Day:		3 Day:	
2 Day:		1 Day:		Custom TAT:	

Enthalpy Analytical - Orange

931 W. Barkley Avenue, Orange, CA 92868

Phone 714-771-6900

Matrix: A = Air S = Soil/Solid W = Water DW = Drinking Wate SD = Sediment PP = Pure Product SEA = Sea Water SW = Swab T = Tissue WP = Wipe O = Other

Preservatives: 1 = $Na_2S_2O_3$ 2 = HCl 3 = HNO_3 4 = H_2SO_4 5 = NaOH 6 = Other

Sample Receipt Temp: 3.4 / 1.1 (lab use only)

CUSTOMER INFORMATION		PROJECT INFORMATION	
Company:	Ninyo & Moore	Name:	Strathern Park Soil Sampling
Report To:	Keith Gilbert	Number:	211294004
Email:	kgilbert@ninyoandmoore.com	P.O. #:	
Address:	475 Goddard Ste 200	Address:	8041 Whitsett Avenue
	Irvine, CA 92618		North Hollywood, CA 91605
Phone:	949-753-7070	Global ID:	
Fax:	949-753-7071	Sampled By:	Kristina Hill (KMH)

Test Instructions / Comments: please cc results to khill@ninyoandmoore.com

	Sample ID	Sampling Date	Sampling Time	Matrix	Container No. / Size	Pres.	Title 22 Metals (6010B/7471A)	TRPH (1664)	TPHcc (8015M)	VOCs (8260B) (5035)	SVOCs (8270C)	PAHs (8270SIM)	OCPs (8081A	PCBs (8082)	CHs (8150	pH, nitrates, sulfates	Hold	Test Instructions / Comments
1	B-3-5'	3/25/2020	1015	SOIL	8oz jar	ICE		X										
2	B-3-10.5'		1020		6"x1.5" sleeve (1)			X										
3	B-3-15'		1030		6"x2.5" sleeve (1)			X										
4	B-3-20'		1035		6"x1.5" sleeve 3 VOAs (2)			X	X	X	X							
5	B-3-25'		1040		6"x2.5" sleeve (1)												X	
6	B-1-1'		1100		8oz jar		X	X					X	X	X			
7	B-1-2.5'		1105				X	X										
8	B-1-5'		1120		+3 VOAs			X	X	X	X							limited sample recovery
9	B-1-10'		1125														X	limited sample recovery
10	B-1-15'		1135		6"x2.5" sleeve (1)												X	

	Signature	Print Name	Company / Title	Date / Time
[1] Relinquished By:		Kristina Hill	Ninyo & Moore/Geologist	3/25/2020 1633
[1] Received By:		Elizabeth Ramirez	EA	3/25/2020 16:33
[2] Relinquished By:				
[2] Received By:				
[3] Relinquished By:				
[3] Received By:				

ENTHALPY ANALYTICAL

Chain of Custody Record

Lab No: 426450

Page: 3 of 3

Turn Around Time (rush by advanced notice only)

Standard:	X	5 Day:		3 Day:	
2 Day:		1 Day:		Custom TAT:	

Enthalpy Analytical - Orange

931 W. Barkley Avenue, Orange, CA 92868

Phone 714-771-6900

Matrix: A = Air S = Soil/Solid W = Water DW = Drinking Wate SD = Sediment PP = Pure Product SEA = Sea Water SW = Swab T = Tissue WP = Wipe O = Other

Preservatives: 1 = $Na_2S_2O_3$ 2 = HCl 3 = HNO_3 4 = H_2SO_4 5 = NaOH 6 = Other

Sample Receipt Temp: 3.4 / 1.1 (lab use only)

CUSTOMER INFORMATION		PROJECT INFORMATION	
Company:	Ninyo & Moore	Name:	Strathern Park Soil Sampling
Report To:	Keith Gilbert	Number:	211294004
Email:	kgilbert@ninyoandmoore.com	P.O. #:	
Address:	475 Goddard Ste 200	Address:	8041 Whitsett Avenue
	Irvine, CA 92618		North Hollywood, CA 91605
Phone:	949-753-7070	Global ID:	
Fax:	949-753-7071	Sampled By:	Kristina Hill (KMH)

Test Instructions / Comments

please cc results to khill@ninyoandmoore.com

C = please composite samples "Comp-1" through "Comp-8" into a single sample for composite analysis of all analytes marked "C" Please name composite "Composite 1-8"

	Sample ID	Sampling Date	Sampling Time	Matrix	Container No. / Size	Pres.	Title 22 Metals (6010B/7471A)	TRPH (1664)	TPHcc (8015M)	VOCs (8260B)	SVOCs (8270C)	PAHs (8270SIM)	OCPs (8081A	PCBs (8082)	CHs (8150)	pH, nitrates, sulfates	Hold
1	B-1-20'	3/25/2020	1140	SOIL	6" x 1.5" sleeve (2)	ICE											X
2	B-1-25'		1150		6" x 2.5" sleeve (1)												X
3	Comp-1		1305		8oz jar		C	C	C	C	C	C	C	C	C		
4	Comp-2		1320														
5	Comp-3		1335														
6	Comp-4	KMH 3/25/2020	~~1425~~ 1425														
7	Comp-5		1415														
8	Comp-6		1355														
9	Comp-7		1440														
10	Comp-8		1500														

	Signature	Print Name	Company / Title	Date / Time
[1] Relinquished By:	Kristina Hill	Kristina Hill	Ninyo & Moore / Geologist	3/25/2020 1633
[1] Received By:		Elizabeth Ramirez	EA	3/25/2020 16:33
[2] Relinquished By:				
[2] Received By:				
[3] Relinquished By:				
[3] Received By:				

ENTHALPY ANALYTICAL

SAMPLE ACCEPTANCE CHECKLIST

Section 1

Client: Ninyo & Moore Project: Strathern Park Soil Sampling

Date Received: 03/25/2020 Sampler's Name Present: ☑ Yes ☐ No

Section 2

Sample(s) received in a cooler? ☑ Yes, How many? 1 ☐ No (skip section 2) Sample Temp (°C) (No Cooler): _____

Sample Temp (°C), One from each cooler: #1: 3.4 #2: _____ #3: _____ #4: _____

(Acceptance range is < 6°C but not frozen (for Microbiology samples, acceptance range is < 10°C but not frozen). It is acceptable for samples collected the same day as sample receipt to have a higher temperature as long as there is evidence that cooling has begun.)

Shipping Information: _____

Section 3

Was the cooler packed with: ☑ Ice ☐ Ice Packs ☐ Bubble Wrap ☐ Styrofoam ☐ Paper ☐ None ☐ Other _____

Cooler Temp (°C): #1: 1.1 #2: _____ #3: _____ #4: _____

Section 4	YES	NO	N/A
Was a COC received?	✓		
Are sample IDs present?	✓		
Are sampling dates & times present?	✓		
Is a relinquished signature present?	✓		
Are the tests required clearly indicated on the COC?	✓		
Are custody seals present?		✓	
If custody seals are present, were they intact?			✓
Are all samples sealed in plastic bags? (Recommended for Microbiology samples)			✓
Did all samples arrive intact? If no, indicate in Section 4 below.	✓		
Did all bottle labels agree with COC? (ID, dates and times)	✓		
Were the samples collected in the correct containers for the required tests?	✓		
Are the containers labeled with the correct preservatives?			✓
Is there headspace in the VOA vials greater than 5-6 mm in diameter?			✓
Was a sufficient amount of sample submitted for the requested tests?	✓		

Section 5 Explanations/Comments

Sample ID "P-6-20'" on COC has no analysis. EN

Section 6

For discrepancies, how was the Project Manager notified? ☐ Verbal PM Initials: _____ Date/Time _____

☐ Email (email sent to/on): _____ / _____

Project Manager's response:

Completed By: _____ Date: 03/25/2020

Enthalpy Analytical, a subsidiary of Montrose Environmental Group ,Inc.
931 W. Barkley Ave, Orange, CA 92868 • T: (714) 771-6900 • F: (714) 538-1209
www.enthalpy.com/socal

Ranjit Clarke

From: Kristina Hill <khill@ninyoandmoore.com> on behalf of Kristina Hill
Sent: Thursday, April 16, 2020 5:05 PM
To: Ranjit.Clarke@enthalpy.com
Subject: Additional Analyses Request: Strathern Park Soil Sampling / 8041 Whitsett Ave., No. Hollywood, CA - Enthalpy (Orange) Data (426450)

Follow Up Flag: Follow up
Flag Status: Flagged

Hi Ranjit,

Can we please have the following 3 samples have analyzed for soluble lead (WET method) on 24 hour turnaround? (or as soon as possible if the process takes longer than that?)

B-1-2.5' – Total lead = 72 mg/kg
B-3-1' – Total lead = 51 mg/kg
B-3-2.5' – Total lead = 94 mg/kg

Thank you,

Kristina Hill, MS, GIT
Senior Staff Geologist
Ninyo & Moore
Geotechnical & Environmental Sciences Consultants
475 Goddard, Suite 200 | Irvine, CA 92618
(949) 753-7070 **ext. 12227** | (949) 795-2519 (Cell)
www.ninyoandmoore.com

30 Years of Quality Service

From: Ranjit K Clarke [mailto:Ranjit.Clarke@enthalpy.com]
Sent: Tuesday, April 7, 2020 3:15 PM
To: Kristina Hill <khill@ninyoandmoore.com>
Subject: Strathern Park Soil Sampling / 8041 Whitsett Ave., No. Hollywood, CA - Enthalpy (Orange) Data (426450)

Hi Kristina,

Data qualifiers and additional information necessary for the interpretation of the test results are contained in the PDF file and may not be included in the EDD.

Please find attached the following files:
• Invoice
• PDF Deliverable
• Standard Format EDD (426450_standard.zip)

You may also access this data at https://labline-orange.enthalpy.com/
Email was also sent to: kgilbert@ninyoandmoore.com, nmaccountspayable@ninyoandmoore.com

ENTHALPY ANALYTICAL

Analysis Results for 426450

Keith Gilbert
Ninyo & Moore
475 Goddard
Suite 200
Irvine, CA 92618

Lab Job #: 426450
Location: Strathern Park Soil Sampling /8041
Whitsett Ave- Supplemental Report 1
Date Received: 03/25/20

Sample ID: P-6-1' **Lab ID: 426450-001** **Collected: 03/25/20 07:28**
Matrix: Soil

426450-001 Analyte	Result	Qual	Units	RL	DF	Batch	Prepared	Analyzed	Chemist
Method: EPA 6010B Prep Method: EPA 3050B									
Antimony	ND		mg/Kg	2.6	0.85	243801	03/26/20	03/26/20	SBW
Arsenic	ND		mg/Kg	0.85	0.85	243801	03/26/20	03/26/20	SBW
Barium	**58**		mg/Kg	0.85	0.85	243801	03/26/20	03/26/20	SBW
Beryllium	ND		mg/Kg	0.43	0.85	243801	03/26/20	03/26/20	SBW
Cadmium	ND		mg/Kg	0.43	0.85	243801	03/26/20	03/26/20	SBW
Chromium	**7.3**		mg/Kg	0.85	0.85	243801	03/26/20	03/26/20	SBW
Cobalt	**4.8**		mg/Kg	0.43	0.85	243801	03/26/20	03/26/20	SBW
Copper	**7.6**		mg/Kg	0.85	0.85	243801	03/26/20	03/26/20	SBW
Lead	**19**		mg/Kg	0.85	0.85	243801	03/26/20	03/26/20	SBW
Molybdenum	**1.2**		mg/Kg	0.85	0.85	243801	03/26/20	03/26/20	SBW
Nickel	**5.9**		mg/Kg	1.3	0.85	243801	03/26/20	03/26/20	SBW
Selenium	ND		mg/Kg	2.6	0.85	243801	03/26/20	03/27/20	SBW
Silver	ND		mg/Kg	0.43	0.85	243801	03/26/20	03/26/20	SBW
Thallium	ND		mg/Kg	2.6	0.85	243801	03/26/20	03/26/20	SBW
Vanadium	**21**		mg/Kg	0.43	0.85	243801	03/26/20	03/26/20	SBW
Zinc	**44**		mg/Kg	4.3	0.85	243801	03/26/20	03/26/20	SBW
Method: EPA 7471A Prep Method: METHOD									
Mercury	ND		mg/Kg	0.12	0.86	243808	03/26/20	03/27/20	DLS
Method: EPA 8081A Prep Method: EPA 3546									
alpha-BHC	ND		ug/Kg	50	10	243775	03/25/20	03/30/20	MTS
beta-BHC	ND		ug/Kg	50	10	243775	03/25/20	03/30/20	MTS
gamma-BHC	ND		ug/Kg	50	10	243775	03/25/20	03/30/20	MTS
delta-BHC	ND		ug/Kg	50	10	243775	03/25/20	03/30/20	MTS
Heptachlor	ND		ug/Kg	50	10	243775	03/25/20	03/30/20	MTS
Aldrin	ND		ug/Kg	50	10	243775	03/25/20	03/30/20	MTS
Heptachlor epoxide	ND		ug/Kg	50	10	243775	03/25/20	03/30/20	MTS
Endosulfan I	ND		ug/Kg	50	10	243775	03/25/20	03/30/20	MTS
Dieldrin	ND		ug/Kg	50	10	243775	03/25/20	03/30/20	MTS
4,4'-DDE	ND		ug/Kg	50	10	243775	03/25/20	03/30/20	MTS
Endrin	ND		ug/Kg	50	10	243775	03/25/20	03/30/20	MTS
Endosulfan II	ND		ug/Kg	50	10	243775	03/25/20	03/30/20	MTS
Endosulfan sulfate	ND		ug/Kg	50	10	243775	03/25/20	03/30/20	MTS

Results for any subcontracted analyses are not included in this section.

ENTHALPY ANALYTICAL

Analysis Results for 426450

426450-001 Analyte	Result	Qual	Units	RL	DF	Batch	Prepared	Analyzed	Chemist
4,4'-DDD	ND		ug/Kg	50	10	243775	03/25/20	03/30/20	MTS
Endrin aldehyde	ND		ug/Kg	50	10	243775	03/25/20	03/30/20	MTS
Endrin ketone	ND		ug/Kg	50	10	243775	03/25/20	03/30/20	MTS
4,4'-DDT	ND		ug/Kg	50	10	243775	03/25/20	03/30/20	MTS
Methoxychlor	ND		ug/Kg	100	10	243775	03/25/20	03/30/20	MTS
Toxaphene	ND		ug/Kg	1,000	10	243775	03/25/20	03/30/20	MTS
Chlordane (Technical)	ND		ug/Kg	500	10	243775	03/25/20	03/30/20	MTS
Surrogates				**Limits**					
TCMX		DO	%REC	50-150	10	243775	03/25/20	03/30/20	MTS
Decachlorobiphenyl		DO	%REC	24-120	10	243775	03/25/20	03/30/20	MTS
Method: EPA 8082 Prep Method: EPA 3546									
Aroclor-1016	ND		ug/Kg	50	1	243775	03/25/20	03/30/20	MTS
Aroclor-1221	ND		ug/Kg	50	1	243775	03/25/20	03/30/20	MTS
Aroclor-1232	ND		ug/Kg	50	1	243775	03/25/20	03/30/20	MTS
Aroclor-1242	ND		ug/Kg	50	1	243775	03/25/20	03/30/20	MTS
Aroclor-1248	ND		ug/Kg	50	1	243775	03/25/20	03/30/20	MTS
Aroclor-1254	ND		ug/Kg	50	1	243775	03/25/20	03/30/20	MTS
Aroclor-1260	ND		ug/Kg	50	1	243775	03/25/20	03/30/20	MTS
Aroclor-1262	ND		ug/Kg	50	1	243775	03/25/20	03/30/20	MTS
Aroclor-1268	ND		ug/Kg	50	1	243775	03/25/20	03/30/20	MTS
Surrogates				**Limits**					
Decachlorobiphenyl (PCB)	61%		%REC	50-150	1	243775	03/25/20	03/30/20	MTS

Results for any subcontracted analyses are not included in this section.

ENTHALPY ANALYTICAL

Analysis Results for 426450

Sample ID: P-6-2.5'	Lab ID: 426450-002	Collected: 03/25/20 07:32
	Matrix: Soil	

426450-002 Analyte	Result	Qual	Units	RL	DF	Batch	Prepared	Analyzed	Chemist
Method: EPA 6010B Prep Method: EPA 3050B									
Antimony	ND		mg/Kg	3.0	0.99	243801	03/26/20	03/26/20	SBW
Arsenic	ND		mg/Kg	0.99	0.99	243801	03/26/20	03/27/20	SBW
Barium	**57**		mg/Kg	0.99	0.99	243801	03/26/20	03/26/20	SBW
Beryllium	ND		mg/Kg	0.50	0.99	243801	03/26/20	03/26/20	SBW
Cadmium	ND		mg/Kg	0.50	0.99	243801	03/26/20	03/26/20	SBW
Chromium	**8.0**		mg/Kg	0.99	0.99	243801	03/26/20	03/26/20	SBW
Cobalt	**4.7**		mg/Kg	0.50	0.99	243801	03/26/20	03/26/20	SBW
Copper	**8.5**		mg/Kg	0.99	0.99	243801	03/26/20	03/27/20	SBW
Lead	**18**		mg/Kg	0.99	0.99	243801	03/26/20	03/26/20	SBW
Molybdenum	**1.0**		mg/Kg	0.99	0.99	243801	03/26/20	03/26/20	SBW
Nickel	**6.3**		mg/Kg	1.5	0.99	243801	03/26/20	03/26/20	SBW
Selenium	ND		mg/Kg	3.0	0.99	243801	03/26/20	03/27/20	SBW
Silver	ND		mg/Kg	0.50	0.99	243801	03/26/20	03/26/20	SBW
Thallium	ND		mg/Kg	3.0	0.99	243801	03/26/20	03/26/20	SBW
Vanadium	**21**		mg/Kg	0.50	0.99	243801	03/26/20	03/26/20	SBW
Zinc	**97**		mg/Kg	5.0	0.99	243801	03/26/20	03/26/20	SBW
Method: EPA 7471A Prep Method: METHOD									
Mercury	ND		mg/Kg	0.12	0.88	243808	03/26/20	03/27/20	DLS

Sample ID: P-6-5'	Lab ID: 426450-003	Collected: 03/25/20 08:00
	Matrix: Soil	

426450-003 Analyte	Result	Qual	Units	RL	DF	Batch	Prepared	Analyzed	Chemist
Method: EPA 1664A M									
Total Oil and Grease	ND		mg/Kg	500	1	243982	03/31/20	03/31/20	ECC

Results for any subcontracted analyses are not included in this section.

ENTHALPY ANALYTICAL

Analysis Results for 426450

Sample ID: P-6-15'	Lab ID: 426450-006	Collected: 03/25/20 08:15
	Matrix: Soil	

426450-006 Analyte	Result	Qual	Units	RL	DF	Batch	Prepared	Analyzed	Chemist
Method: EPA 1664A M									
Total Oil and Grease	ND		mg/Kg	500	1	243982	03/31/20	03/31/20	ECC
Method: EPA 8015B Prep Method: EPA 3580									
TPH C6-C12	ND		mg/Kg	20	2	243822	03/26/20	03/27/20	TJW
TPH C13-C22	ND		mg/Kg	20	2	243822	03/26/20	03/27/20	TJW
TPH C23-C44	**52**		mg/Kg	20	2	243822	03/26/20	03/27/20	TJW
Surrogates				**Limits**					
n-Triacontane	110%		%REC	50-150	2	243822	03/26/20	03/27/20	TJW
Method: EPA 8260B Prep Method: EPA 5035									
3-Chloropropene	ND		ug/Kg	5.6	1.1	243906	03/29/20	03/29/20	LYZ
cis-1,4-Dichloro-2-butene	ND		ug/Kg	5.6	1.1	243906	03/29/20	03/29/20	LYZ
trans-1,4-Dichloro-2-butene	ND		ug/Kg	5.6	1.1	243906	03/29/20	03/29/20	LYZ
Isopropyl Ether (DIPE)	ND		ug/Kg	5.6	1.1	243906	03/29/20	03/29/20	LYZ
Ethyl tert-Butyl Ether (ETBE)	ND		ug/Kg	5.6	1.1	243906	03/29/20	03/29/20	LYZ
Methyl tert-Amyl Ether (TAME)	ND		ug/Kg	5.6	1.1	243906	03/29/20	03/29/20	LYZ
tert-Butyl Alcohol (TBA)	ND		ug/Kg	11	1.1	243906	03/29/20	03/29/20	LYZ
Freon 12	ND		ug/Kg	5.6	1.1	243906	03/29/20	03/29/20	LYZ
Chloromethane	ND		ug/Kg	5.6	1.1	243906	03/29/20	03/29/20	LYZ
Vinyl Chloride	ND		ug/Kg	5.6	1.1	243906	03/29/20	03/29/20	LYZ
Bromomethane	ND		ug/Kg	5.6	1.1	243906	03/29/20	03/29/20	LYZ
Chloroethane	ND		ug/Kg	5.6	1.1	243906	03/29/20	03/29/20	LYZ
Trichlorofluoromethane	ND		ug/Kg	5.6	1.1	243906	03/29/20	03/29/20	LYZ
Acetone	ND		ug/Kg	110	1.1	243906	03/29/20	03/29/20	LYZ
Freon 113	ND		ug/Kg	5.6	1.1	243906	03/29/20	03/29/20	LYZ
1,1-Dichloroethene	ND		ug/Kg	5.6	1.1	243906	03/29/20	03/29/20	LYZ
Methylene Chloride	ND		ug/Kg	5.6	1.1	243906	03/29/20	03/29/20	LYZ
MTBE	ND		ug/Kg	5.6	1.1	243906	03/29/20	03/29/20	LYZ
trans-1,2-Dichloroethene	ND		ug/Kg	5.6	1.1	243906	03/29/20	03/29/20	LYZ
1,1-Dichloroethane	ND		ug/Kg	5.6	1.1	243906	03/29/20	03/29/20	LYZ
2-Butanone	ND		ug/Kg	110	1.1	243906	03/29/20	03/29/20	LYZ
cis-1,2-Dichloroethene	ND		ug/Kg	5.6	1.1	243906	03/29/20	03/29/20	LYZ
2,2-Dichloropropane	ND		ug/Kg	5.6	1.1	243906	03/29/20	03/29/20	LYZ
Chloroform	ND		ug/Kg	5.6	1.1	243906	03/29/20	03/29/20	LYZ
Bromochloromethane	ND		ug/Kg	5.6	1.1	243906	03/29/20	03/29/20	LYZ
1,1,1-Trichloroethane	ND		ug/Kg	5.6	1.1	243906	03/29/20	03/29/20	LYZ
1,1-Dichloropropene	ND		ug/Kg	5.6	1.1	243906	03/29/20	03/29/20	LYZ
Carbon Tetrachloride	ND		ug/Kg	5.6	1.1	243906	03/29/20	03/29/20	LYZ
1,2-Dichloroethane	ND		ug/Kg	5.6	1.1	243906	03/29/20	03/29/20	LYZ
Benzene	ND		ug/Kg	5.6	1.1	243906	03/29/20	03/29/20	LYZ
Trichloroethene	ND		ug/Kg	5.6	1.1	243906	03/29/20	03/29/20	LYZ

Results for any subcontracted analyses are not included in this section.

ENTHALPY ANALYTICAL

Analysis Results for 426450

426450-006 Analyte	Result	Qual	Units	RL	DF	Batch	Prepared	Analyzed	Chemist
1,2-Dichloropropane	ND		ug/Kg	5.6	1.1	243906	03/29/20	03/29/20	LYZ
Bromodichloromethane	ND		ug/Kg	5.6	1.1	243906	03/29/20	03/29/20	LYZ
Dibromomethane	ND		ug/Kg	5.6	1.1	243906	03/29/20	03/29/20	LYZ
4-Methyl-2-Pentanone	ND		ug/Kg	5.6	1.1	243906	03/29/20	03/29/20	LYZ
cis-1,3-Dichloropropene	ND		ug/Kg	5.6	1.1	243906	03/29/20	03/29/20	LYZ
Toluene	ND		ug/Kg	5.6	1.1	243906	03/29/20	03/29/20	LYZ
trans-1,3-Dichloropropene	ND		ug/Kg	5.6	1.1	243906	03/29/20	03/29/20	LYZ
1,1,2-Trichloroethane	ND		ug/Kg	5.6	1.1	243906	03/29/20	03/29/20	LYZ
1,3-Dichloropropane	ND		ug/Kg	5.6	1.1	243906	03/29/20	03/29/20	LYZ
Tetrachloroethene	ND		ug/Kg	5.6	1.1	243906	03/29/20	03/29/20	LYZ
Dibromochloromethane	ND		ug/Kg	5.6	1.1	243906	03/29/20	03/29/20	LYZ
1,2-Dibromoethane	ND		ug/Kg	5.6	1.1	243906	03/29/20	03/29/20	LYZ
Chlorobenzene	ND		ug/Kg	5.6	1.1	243906	03/29/20	03/29/20	LYZ
1,1,1,2-Tetrachloroethane	ND		ug/Kg	5.6	1.1	243906	03/29/20	03/29/20	LYZ
Ethylbenzene	ND		ug/Kg	5.6	1.1	243906	03/29/20	03/29/20	LYZ
m,p-Xylenes	ND		ug/Kg	11	1.1	243906	03/29/20	03/29/20	LYZ
o-Xylene	ND		ug/Kg	5.6	1.1	243906	03/29/20	03/29/20	LYZ
Styrene	ND		ug/Kg	5.6	1.1	243906	03/29/20	03/29/20	LYZ
Bromoform	ND		ug/Kg	5.6	1.1	243906	03/29/20	03/29/20	LYZ
Isopropylbenzene	ND		ug/Kg	5.6	1.1	243906	03/29/20	03/29/20	LYZ
1,1,2,2-Tetrachloroethane	ND		ug/Kg	5.6	1.1	243906	03/29/20	03/29/20	LYZ
1,2,3-Trichloropropane	ND		ug/Kg	5.6	1.1	243906	03/29/20	03/29/20	LYZ
Propylbenzene	ND		ug/Kg	5.6	1.1	243906	03/29/20	03/29/20	LYZ
Bromobenzene	ND		ug/Kg	5.6	1.1	243906	03/29/20	03/29/20	LYZ
1,3,5-Trimethylbenzene	ND		ug/Kg	5.6	1.1	243906	03/29/20	03/29/20	LYZ
2-Chlorotoluene	ND		ug/Kg	5.6	1.1	243906	03/29/20	03/29/20	LYZ
4-Chlorotoluene	ND		ug/Kg	5.6	1.1	243906	03/29/20	03/29/20	LYZ
tert-Butylbenzene	ND		ug/Kg	5.6	1.1	243906	03/29/20	03/29/20	LYZ
1,2,4-Trimethylbenzene	ND		ug/Kg	5.6	1.1	243906	03/29/20	03/29/20	LYZ
sec-Butylbenzene	ND		ug/Kg	5.6	1.1	243906	03/29/20	03/29/20	LYZ
para-Isopropyl Toluene	ND		ug/Kg	5.6	1.1	243906	03/29/20	03/29/20	LYZ
1,3-Dichlorobenzene	ND		ug/Kg	5.6	1.1	243906	03/29/20	03/29/20	LYZ
1,4-Dichlorobenzene	ND		ug/Kg	5.6	1.1	243906	03/29/20	03/29/20	LYZ
n-Butylbenzene	ND		ug/Kg	5.6	1.1	243906	03/29/20	03/29/20	LYZ
1,2-Dichlorobenzene	ND		ug/Kg	5.6	1.1	243906	03/29/20	03/29/20	LYZ
1,2-Dibromo-3-Chloropropane	ND		ug/Kg	5.6	1.1	243906	03/29/20	03/29/20	LYZ
1,2,4-Trichlorobenzene	ND		ug/Kg	5.6	1.1	243906	03/29/20	03/29/20	LYZ
Hexachlorobutadiene	ND		ug/Kg	5.6	1.1	243906	03/29/20	03/29/20	LYZ
Naphthalene	ND		ug/Kg	5.6	1.1	243906	03/29/20	03/29/20	LYZ
1,2,3-Trichlorobenzene	ND		ug/Kg	5.6	1.1	243906	03/29/20	03/29/20	LYZ
Xylene (total)	ND		ug/Kg	5.6	1.1	243906	03/29/20	03/29/20	LYZ
Surrogates				**Limits**					
Dibromofluoromethane	104%		%REC	70-145	1.1	243906	03/29/20	03/29/20	LYZ
1,2-Dichloroethane-d4	118%		%REC	70-145	1.1	243906	03/29/20	03/29/20	LYZ
Toluene-d8	103%		%REC	70-145	1.1	243906	03/29/20	03/29/20	LYZ
Bromofluorobenzene	95%		%REC	70-145	1.1	243906	03/29/20	03/29/20	LYZ

Results for any subcontracted analyses are not included in this section.

ENTHALPY ANALYTICAL

Analysis Results for 426450

426450-006 Analyte	Result	Qual	Units	RL	DF	Batch	Prepared	Analyzed	Chemist
Method: EPA 8270C Prep Method: EPA 3550C									
Carbazole	ND		ug/Kg	250	1	243926	03/30/20	03/30/20	MTS
1-Methylnaphthalene	ND		ug/Kg	250	1	243926	03/30/20	03/30/20	MTS
Pyridine	ND		ug/Kg	250	1	243926	03/30/20	03/30/20	MTS
N-Nitrosodimethylamine	ND		ug/Kg	250	1	243926	03/30/20	03/30/20	MTS
Phenol	ND		ug/Kg	250	1	243926	03/30/20	03/30/20	MTS
Aniline	ND		ug/Kg	250	1	243926	03/30/20	03/30/20	MTS
bis(2-Chloroethyl)ether	ND		ug/Kg	1,200	1	243926	03/30/20	03/30/20	MTS
2-Chlorophenol	ND		ug/Kg	250	1	243926	03/30/20	03/30/20	MTS
1,3-Dichlorobenzene	ND		ug/Kg	250	1	243926	03/30/20	03/30/20	MTS
1,4-Dichlorobenzene	ND		ug/Kg	250	1	243926	03/30/20	03/30/20	MTS
Benzyl alcohol	ND		ug/Kg	250	1	243926	03/30/20	03/30/20	MTS
1,2-Dichlorobenzene	ND		ug/Kg	250	1	243926	03/30/20	03/30/20	MTS
2-Methylphenol	ND		ug/Kg	250	1	243926	03/30/20	03/30/20	MTS
bis(2-Chloroisopropyl) ether	ND		ug/Kg	250	1	243926	03/30/20	03/30/20	MTS
3-,4-Methylphenol	ND		ug/Kg	400	1	243926	03/30/20	03/30/20	MTS
N-Nitroso-di-n-propylamine	ND		ug/Kg	250	1	243926	03/30/20	03/30/20	MTS
Hexachloroethane	ND		ug/Kg	250	1	243926	03/30/20	03/30/20	MTS
Nitrobenzene	ND		ug/Kg	1,200	1	243926	03/30/20	03/30/20	MTS
Isophorone	ND		ug/Kg	250	1	243926	03/30/20	03/30/20	MTS
2-Nitrophenol	ND		ug/Kg	250	1	243926	03/30/20	03/30/20	MTS
2,4-Dimethylphenol	ND		ug/Kg	250	1	243926	03/30/20	03/30/20	MTS
Benzoic acid	ND		ug/Kg	1,200	1	243926	03/30/20	03/30/20	MTS
bis(2-Chloroethoxy)methane	ND		ug/Kg	250	1	243926	03/30/20	03/30/20	MTS
2,4-Dichlorophenol	ND		ug/Kg	250	1	243926	03/30/20	03/30/20	MTS
1,2,4-Trichlorobenzene	ND		ug/Kg	250	1	243926	03/30/20	03/30/20	MTS
Naphthalene	ND		ug/Kg	250	1	243926	03/30/20	03/30/20	MTS
4-Chloroaniline	ND		ug/Kg	250	1	243926	03/30/20	03/30/20	MTS
Hexachlorobutadiene	ND		ug/Kg	250	1	243926	03/30/20	03/30/20	MTS
4-Chloro-3-methylphenol	ND		ug/Kg	250	1	243926	03/30/20	03/30/20	MTS
2-Methylnaphthalene	ND		ug/Kg	250	1	243926	03/30/20	03/30/20	MTS
Hexachlorocyclopentadiene	ND		ug/Kg	1,200	1	243926	03/30/20	03/30/20	MTS
2,4,6-Trichlorophenol	ND		ug/Kg	250	1	243926	03/30/20	03/30/20	MTS
2,4,5-Trichlorophenol	ND		ug/Kg	250	1	243926	03/30/20	03/30/20	MTS
2-Chloronaphthalene	ND		ug/Kg	250	1	243926	03/30/20	03/30/20	MTS
2-Nitroaniline	ND		ug/Kg	250	1	243926	03/30/20	03/30/20	MTS
Dimethylphthalate	ND		ug/Kg	250	1	243926	03/30/20	03/30/20	MTS
Acenaphthylene	ND		ug/Kg	250	1	243926	03/30/20	03/30/20	MTS
2,6-Dinitrotoluene	ND		ug/Kg	250	1	243926	03/30/20	03/30/20	MTS
3-Nitroaniline	ND		ug/Kg	250	1	243926	03/30/20	03/30/20	MTS
Acenaphthene	ND		ug/Kg	250	1	243926	03/30/20	03/30/20	MTS
2,4-Dinitrophenol	ND		ug/Kg	1,200	1	243926	03/30/20	03/30/20	MTS
4-Nitrophenol	ND		ug/Kg	250	1	243926	03/30/20	03/30/20	MTS
Dibenzofuran	ND		ug/Kg	250	1	243926	03/30/20	03/30/20	MTS
2,4-Dinitrotoluene	ND		ug/Kg	250	1	243926	03/30/20	03/30/20	MTS

Results for any subcontracted analyses are not included in this section.

ENTHALPY ANALYTICAL

Analysis Results for 426450

426450-006 Analyte	Result	Qual	Units	RL	DF	Batch	Prepared	Analyzed	Chemist
Diethylphthalate	ND		ug/Kg	250	1	243926	03/30/20	03/30/20	MTS
Fluorene	ND		ug/Kg	250	1	243926	03/30/20	03/30/20	MTS
4-Chlorophenyl-phenylether	ND		ug/Kg	250	1	243926	03/30/20	03/30/20	MTS
4-Nitroaniline	ND		ug/Kg	250	1	243926	03/30/20	03/30/20	MTS
4,6-Dinitro-2-methylphenol	ND		ug/Kg	250	1	243926	03/30/20	03/30/20	MTS
N-Nitrosodiphenylamine	ND		ug/Kg	250	1	243926	03/30/20	03/30/20	MTS
Azobenzene	ND		ug/Kg	250	1	243926	03/30/20	03/30/20	MTS
4-Bromophenyl-phenylether	ND		ug/Kg	250	1	243926	03/30/20	03/30/20	MTS
Hexachlorobenzene	ND		ug/Kg	250	1	243926	03/30/20	03/30/20	MTS
Pentachlorophenol	ND		ug/Kg	1,200	1	243926	03/30/20	03/30/20	MTS
Phenanthrene	ND		ug/Kg	250	1	243926	03/30/20	03/30/20	MTS
Anthracene	ND		ug/Kg	250	1	243926	03/30/20	03/30/20	MTS
Di-n-butylphthalate	ND		ug/Kg	250	1	243926	03/30/20	03/30/20	MTS
Fluoranthene	ND		ug/Kg	250	1	243926	03/30/20	03/30/20	MTS
Benzidine	ND		ug/Kg	1,200	1	243926	03/30/20	03/30/20	MTS
Pyrene	ND		ug/Kg	250	1	243926	03/30/20	03/30/20	MTS
Butylbenzylphthalate	ND		ug/Kg	250	1	243926	03/30/20	03/30/20	MTS
3,3'-Dichlorobenzidine	ND		ug/Kg	1,200	1	243926	03/30/20	03/30/20	MTS
Benzo(a)anthracene	ND		ug/Kg	250	1	243926	03/30/20	03/30/20	MTS
Chrysene	ND		ug/Kg	250	1	243926	03/30/20	03/30/20	MTS
bis(2-Ethylhexyl)phthalate	ND		ug/Kg	250	1	243926	03/30/20	03/30/20	MTS
Di-n-octylphthalate	ND		ug/Kg	250	1	243926	03/30/20	03/30/20	MTS
Benzo(b)fluoranthene	ND		ug/Kg	250	1	243926	03/30/20	03/30/20	MTS
Benzo(k)fluoranthene	ND		ug/Kg	250	1	243926	03/30/20	03/30/20	MTS
Benzo(a)pyrene	ND		ug/Kg	250	1	243926	03/30/20	03/30/20	MTS
Indeno(1,2,3-cd)pyrene	ND		ug/Kg	250	1	243926	03/30/20	03/30/20	MTS
Dibenz(a,h)anthracene	ND		ug/Kg	250	1	243926	03/30/20	03/30/20	MTS
Benzo(g,h,i)perylene	ND		ug/Kg	250	1	243926	03/30/20	03/30/20	MTS
Surrogates				**Limits**					
2-Fluorophenol	56%		%REC	13-153	1	243926	03/30/20	03/30/20	MTS
Phenol-d6	57%		%REC	10-110	1	243926	03/30/20	03/30/20	MTS
2,4,6-Tribromophenol	58%		%REC	34-143	1	243926	03/30/20	03/30/20	MTS
Nitrobenzene-d5	57%		%REC	27-125	1	243926	03/30/20	03/30/20	MTS
2-Fluorobiphenyl	59%		%REC	41-125	1	243926	03/30/20	03/30/20	MTS
Terphenyl-d14	62%		%REC	33-155	1	243926	03/30/20	03/30/20	MTS

Sample ID: P-6-25' **Lab ID: 426450-008** **Collected: 03/25/20 08:30**
Matrix: Soil

426450-008 Analyte	Result	Qual	Units	RL	DF	Batch	Prepared	Analyzed	Chemist
Method: EPA 1664A M									
Total Oil and Grease	ND		mg/Kg	500	1	243982	03/31/20	03/31/20	ECC

Results for any subcontracted analyses are not included in this section.

ENTHALPY ANALYTICAL

Analysis Results for 426450

Sample ID: B-3-1'	Lab ID: 426450-009	Collected: 03/25/20 09:45

426450-009 Analyte	Result	Qual	Units	RL	Matrix	DF	Batch	Prepared	Analyzed	Chemist
Method: EPA 6010B Prep Method: EPA 3050B										
Antimony	ND		mg/Kg	3.2	Soil	1.1	243801	03/26/20	03/26/20	SBW
Arsenic	**3.0**		mg/Kg	1.1	Soil	1.1	243801	03/26/20	03/27/20	SBW
Barium	**120**		mg/Kg	1.1	Soil	1.1	243801	03/26/20	03/26/20	SBW
Beryllium	ND		mg/Kg	0.53	Soil	1.1	243801	03/26/20	03/26/20	SBW
Cadmium	**1.1**		mg/Kg	0.53	Soil	1.1	243801	03/26/20	03/26/20	SBW
Chromium	**24**		mg/Kg	1.1	Soil	1.1	243801	03/26/20	03/26/20	SBW
Cobalt	**9.0**		mg/Kg	0.53	Soil	1.1	243801	03/26/20	03/26/20	SBW
Copper	**17**		mg/Kg	1.1	Soil	1.1	243801	03/26/20	03/27/20	SBW
Lead	**51**		mg/Kg	1.1	Soil	1.1	243801	03/26/20	03/26/20	SBW
Molybdenum	**1.5**		mg/Kg	1.1	Soil	1.1	243801	03/26/20	03/26/20	SBW
Nickel	**17**		mg/Kg	1.6	Soil	1.1	243801	03/26/20	03/26/20	SBW
Selenium	ND		mg/Kg	3.2	Soil	1.1	243801	03/26/20	03/27/20	SBW
Silver	ND		mg/Kg	0.53	Soil	1.1	243801	03/26/20	03/26/20	SBW
Thallium	ND		mg/Kg	3.2	Soil	1.1	243801	03/26/20	03/26/20	SBW
Vanadium	**43**		mg/Kg	0.53	Soil	1.1	243801	03/26/20	03/26/20	SBW
Zinc	**68**		mg/Kg	5.3	Soil	1.1	243801	03/26/20	03/26/20	SBW
Method: EPA 6010B Prep Method: WET										
Lead	**1.1**	b	mg/L	0.15	WET Leachate	10	244914	04/22/20	04/22/20	SBW
Method: EPA 7471A Prep Method: METHOD										
Mercury	ND		mg/Kg	0.12	Soil	0.88	243808	03/26/20	03/27/20	DLS
Method: EPA 8081A Prep Method: EPA 3546										
alpha-BHC	ND		ug/Kg	25	Soil	5	243775	03/25/20	03/30/20	MTS
beta-BHC	ND		ug/Kg	25	Soil	5	243775	03/25/20	03/30/20	MTS
gamma-BHC	ND		ug/Kg	25	Soil	5	243775	03/25/20	03/30/20	MTS
delta-BHC	ND		ug/Kg	25	Soil	5	243775	03/25/20	03/30/20	MTS
Heptachlor	ND		ug/Kg	25	Soil	5	243775	03/25/20	03/30/20	MTS
Aldrin	ND		ug/Kg	25	Soil	5	243775	03/25/20	03/30/20	MTS
Heptachlor epoxide	ND		ug/Kg	25	Soil	5	243775	03/25/20	03/30/20	MTS
Endosulfan I	ND		ug/Kg	25	Soil	5	243775	03/25/20	03/30/20	MTS
Dieldrin	ND		ug/Kg	25	Soil	5	243775	03/25/20	03/30/20	MTS
4,4'-DDE	ND		ug/Kg	25	Soil	5	243775	03/25/20	03/30/20	MTS
Endrin	ND		ug/Kg	25	Soil	5	243775	03/25/20	03/30/20	MTS
Endosulfan II	ND		ug/Kg	25	Soil	5	243775	03/25/20	03/30/20	MTS
Endosulfan sulfate	ND		ug/Kg	25	Soil	5	243775	03/25/20	03/30/20	MTS
4,4'-DDD	ND		ug/Kg	25	Soil	5	243775	03/25/20	03/30/20	MTS
Endrin aldehyde	ND		ug/Kg	25	Soil	5	243775	03/25/20	03/30/20	MTS
Endrin ketone	ND		ug/Kg	25	Soil	5	243775	03/25/20	03/30/20	MTS
4,4'-DDT	ND		ug/Kg	25	Soil	5	243775	03/25/20	03/30/20	MTS

Results for any subcontracted analyses are not included in this section.

ENTHALPY ANALYTICAL

Analysis Results for 426450

426450-009 Analyte	Result	Qual	Units	RL	Matrix	DF	Batch	Prepared	Analyzed	Chemist
Methoxychlor	ND		ug/Kg	50	Soil	5	243775	03/25/20	03/30/20	MTS
Toxaphene	ND		ug/Kg	500	Soil	5	243775	03/25/20	03/30/20	MTS
Chlordane (Technical)	ND		ug/Kg	250	Soil	5	243775	03/25/20	03/30/20	MTS
Surrogates				**Limits**						
TCMX	57%		%REC	50-150	Soil	5	243775	03/25/20	03/30/20	MTS
Decachlorobiphenyl	69%		%REC	24-120	Soil	5	243775	03/25/20	03/30/20	MTS
Method: EPA 8082 Prep Method: EPA 3546										
Aroclor-1016	ND		ug/Kg	250	Soil	5	243775	03/25/20	03/31/20	MTS
Aroclor-1221	ND		ug/Kg	250	Soil	5	243775	03/25/20	03/31/20	MTS
Aroclor-1232	ND		ug/Kg	250	Soil	5	243775	03/25/20	03/31/20	MTS
Aroclor-1242	ND		ug/Kg	250	Soil	5	243775	03/25/20	03/31/20	MTS
Aroclor-1248	ND		ug/Kg	250	Soil	5	243775	03/25/20	03/31/20	MTS
Aroclor-1254	**1,100**		ug/Kg	250	Soil	5	243775	03/25/20	03/31/20	MTS
Aroclor-1260	ND		ug/Kg	250	Soil	5	243775	03/25/20	03/31/20	MTS
Aroclor-1262	ND		ug/Kg	250	Soil	5	243775	03/25/20	03/31/20	MTS
Aroclor-1268	ND		ug/Kg	250	Soil	5	243775	03/25/20	03/31/20	MTS
Surrogates				**Limits**						
Decachlorobiphenyl (PCB)	59%		%REC	50-150	Soil	5	243775	03/25/20	03/31/20	MTS

Results for any subcontracted analyses are not included in this section.

ENTHALPY ANALYTICAL

Analysis Results for 426450

Sample ID: B-3-2.5' Lab ID: 426450-010 Collected: 03/25/20 09:50

426450-010 Analyte	Result	Qual	Units	RL	Matrix	DF	Batch	Prepared	Analyzed	Chemist
Method: EPA 6010B Prep Method: EPA 3050B										
Antimony	ND		mg/Kg	3.0	Soil	0.99	243801	03/26/20	03/26/20	SBW
Arsenic	**5.6**		mg/Kg	0.99	Soil	0.99	243801	03/26/20	03/26/20	SBW
Barium	**180**		mg/Kg	0.99	Soil	0.99	243801	03/26/20	03/26/20	SBW
Beryllium	ND		mg/Kg	0.50	Soil	0.99	243801	03/26/20	03/26/20	SBW
Cadmium	**1.8**		mg/Kg	0.50	Soil	0.99	243801	03/26/20	03/26/20	SBW
Chromium	**39**		mg/Kg	0.99	Soil	0.99	243801	03/26/20	03/26/20	SBW
Cobalt	**10**		mg/Kg	0.50	Soil	0.99	243801	03/26/20	03/26/20	SBW
Copper	**27**		mg/Kg	0.99	Soil	0.99	243801	03/26/20	03/27/20	SBW
Lead	**94**		mg/Kg	0.99	Soil	0.99	243801	03/26/20	03/26/20	SBW
Molybdenum	**2.0**		mg/Kg	0.99	Soil	0.99	243801	03/26/20	03/26/20	SBW
Nickel	**30**		mg/Kg	1.5	Soil	0.99	243801	03/26/20	03/26/20	SBW
Selenium	ND		mg/Kg	3.0	Soil	0.99	243801	03/26/20	03/27/20	SBW
Silver	ND		mg/Kg	0.50	Soil	0.99	243801	03/26/20	03/26/20	SBW
Thallium	ND		mg/Kg	3.0	Soil	0.99	243801	03/26/20	03/26/20	SBW
Vanadium	**72**		mg/Kg	0.50	Soil	0.99	243801	03/26/20	03/26/20	SBW
Zinc	**85**		mg/Kg	5.0	Soil	0.99	243801	03/26/20	03/26/20	SBW
Method: EPA 6010B Prep Method: WET										
Lead	**1.2**	b	mg/L	0.15	WET Leachate	10	244914	04/22/20	04/22/20	SBW
Method: EPA 7471A Prep Method: METHOD										
Mercury	ND		mg/Kg	0.12	Soil	0.88	243808	03/26/20	03/27/20	DLS

Sample ID: B-3-5' Lab ID: 426450-011 Collected: 03/25/20 10:15
Matrix: Soil

426450-011 Analyte	Result	Qual	Units	RL	DF	Batch	Prepared	Analyzed	Chemist
Method: EPA 1664A M									
Total Oil and Grease	ND		mg/Kg	500	1	243982	03/31/20	03/31/20	ECC

Sample ID: B-3-10.5' Lab ID: 426450-012 Collected: 03/25/20 10:20
Matrix: Soil

426450-012 Analyte	Result	Qual	Units	RL	DF	Batch	Prepared	Analyzed	Chemist
Method: EPA 1664A M									
Total Oil and Grease	ND		mg/Kg	500	1	243982	03/31/20	03/31/20	ECC

Results for any subcontracted analyses are not included in this section.

ENTHALPY ANALYTICAL

Analysis Results for 426450

Sample ID: B-3-15'	Lab ID: 426450-013	Collected: 03/25/20 10:30
	Matrix: Soil	

426450-013 Analyte	Result	Qual	Units	RL	DF	Batch	Prepared	Analyzed	Chemist
Method: EPA 1664A M									
Total Oil and Grease	ND		mg/Kg	500	1	243982	03/31/20	03/31/20	ECC

Results for any subcontracted analyses are not included in this section.

ENTHALPY ANALYTICAL

Analysis Results for 426450

Sample ID: B-3-20'	Lab ID: 426450-014	Collected: 03/25/20 10:35
	Matrix: Soil	

426450-014 Analyte	Result	Qual	Units	RL	DF	Batch	Prepared	Analyzed	Chemist
Method: EPA 1664A M									
Total Oil and Grease	ND		mg/Kg	500	1	243982	03/31/20	03/31/20	ECC
Method: EPA 8015B Prep Method: EPA 3580									
TPH C6-C12	ND		mg/Kg	10	1	243822	03/26/20	03/27/20	TJW
TPH C13-C22	ND		mg/Kg	10	1	243822	03/26/20	03/27/20	TJW
TPH C23-C44	**14**		mg/Kg	10	1	243822	03/26/20	03/27/20	TJW
Surrogates				**Limits**					
n-Triacontane	125%		%REC	50-150	1	243822	03/26/20	03/27/20	TJW
Method: EPA 8260B Prep Method: EPA 5035									
3-Chloropropene	ND		ug/Kg	4.6	0.93	243906	03/29/20	03/29/20	LYZ
cis-1,4-Dichloro-2-butene	ND		ug/Kg	4.6	0.93	243906	03/29/20	03/29/20	LYZ
trans-1,4-Dichloro-2-butene	ND		ug/Kg	4.6	0.93	243906	03/29/20	03/29/20	LYZ
Isopropyl Ether (DIPE)	ND		ug/Kg	4.6	0.93	243906	03/29/20	03/29/20	LYZ
Ethyl tert-Butyl Ether (ETBE)	ND		ug/Kg	4.6	0.93	243906	03/29/20	03/29/20	LYZ
Methyl tert-Amyl Ether (TAME)	ND		ug/Kg	4.6	0.93	243906	03/29/20	03/29/20	LYZ
tert-Butyl Alcohol (TBA)	ND		ug/Kg	9.3	0.93	243906	03/29/20	03/29/20	LYZ
Freon 12	ND		ug/Kg	4.6	0.93	243906	03/29/20	03/29/20	LYZ
Chloromethane	ND		ug/Kg	4.6	0.93	243906	03/29/20	03/29/20	LYZ
Vinyl Chloride	ND		ug/Kg	4.6	0.93	243906	03/29/20	03/29/20	LYZ
Bromomethane	ND		ug/Kg	4.6	0.93	243906	03/29/20	03/29/20	LYZ
Chloroethane	ND		ug/Kg	4.6	0.93	243906	03/29/20	03/29/20	LYZ
Trichlorofluoromethane	ND		ug/Kg	4.6	0.93	243906	03/29/20	03/29/20	LYZ
Acetone	ND		ug/Kg	93	0.93	243906	03/29/20	03/29/20	LYZ
Freon 113	ND		ug/Kg	4.6	0.93	243906	03/29/20	03/29/20	LYZ
1,1-Dichloroethene	ND		ug/Kg	4.6	0.93	243906	03/29/20	03/29/20	LYZ
Methylene Chloride	ND		ug/Kg	4.6	0.93	243906	03/29/20	03/29/20	LYZ
MTBE	ND		ug/Kg	4.6	0.93	243906	03/29/20	03/29/20	LYZ
trans-1,2-Dichloroethene	ND		ug/Kg	4.6	0.93	243906	03/29/20	03/29/20	LYZ
1,1-Dichloroethane	ND		ug/Kg	4.6	0.93	243906	03/29/20	03/29/20	LYZ
2-Butanone	ND		ug/Kg	93	0.93	243906	03/29/20	03/29/20	LYZ
cis-1,2-Dichloroethene	ND		ug/Kg	4.6	0.93	243906	03/29/20	03/29/20	LYZ
2,2-Dichloropropane	ND		ug/Kg	4.6	0.93	243906	03/29/20	03/29/20	LYZ
Chloroform	ND		ug/Kg	4.6	0.93	243906	03/29/20	03/29/20	LYZ
Bromochloromethane	ND		ug/Kg	4.6	0.93	243906	03/29/20	03/29/20	LYZ
1,1,1-Trichloroethane	ND		ug/Kg	4.6	0.93	243906	03/29/20	03/29/20	LYZ
1,1-Dichloropropene	ND		ug/Kg	4.6	0.93	243906	03/29/20	03/29/20	LYZ
Carbon Tetrachloride	ND		ug/Kg	4.6	0.93	243906	03/29/20	03/29/20	LYZ
1,2-Dichloroethane	ND		ug/Kg	4.6	0.93	243906	03/29/20	03/29/20	LYZ
Benzene	ND		ug/Kg	4.6	0.93	243906	03/29/20	03/29/20	LYZ
Trichloroethene	ND		ug/Kg	4.6	0.93	243906	03/29/20	03/29/20	LYZ

Results for any subcontracted analyses are not included in this section.

ENTHALPY ANALYTICAL

Analysis Results for 426450

426450-014 Analyte	Result	Qual	Units	RL	DF	Batch	Prepared	Analyzed	Chemist
1,2-Dichloropropane	ND		ug/Kg	4.6	0.93	243906	03/29/20	03/29/20	LYZ
Bromodichloromethane	ND		ug/Kg	4.6	0.93	243906	03/29/20	03/29/20	LYZ
Dibromomethane	ND		ug/Kg	4.6	0.93	243906	03/29/20	03/29/20	LYZ
4-Methyl-2-Pentanone	ND		ug/Kg	4.6	0.93	243906	03/29/20	03/29/20	LYZ
cis-1,3-Dichloropropene	ND		ug/Kg	4.6	0.93	243906	03/29/20	03/29/20	LYZ
Toluene	ND		ug/Kg	4.6	0.93	243906	03/29/20	03/29/20	LYZ
trans-1,3-Dichloropropene	ND		ug/Kg	4.6	0.93	243906	03/29/20	03/29/20	LYZ
1,1,2-Trichloroethane	ND		ug/Kg	4.6	0.93	243906	03/29/20	03/29/20	LYZ
1,3-Dichloropropane	ND		ug/Kg	4.6	0.93	243906	03/29/20	03/29/20	LYZ
Tetrachloroethene	ND		ug/Kg	4.6	0.93	243906	03/29/20	03/29/20	LYZ
Dibromochloromethane	ND		ug/Kg	4.6	0.93	243906	03/29/20	03/29/20	LYZ
1,2-Dibromoethane	ND		ug/Kg	4.6	0.93	243906	03/29/20	03/29/20	LYZ
Chlorobenzene	ND		ug/Kg	4.6	0.93	243906	03/29/20	03/29/20	LYZ
1,1,1,2-Tetrachloroethane	ND		ug/Kg	4.6	0.93	243906	03/29/20	03/29/20	LYZ
Ethylbenzene	ND		ug/Kg	4.6	0.93	243906	03/29/20	03/29/20	LYZ
m,p-Xylenes	ND		ug/Kg	9.3	0.93	243906	03/29/20	03/29/20	LYZ
o-Xylene	ND		ug/Kg	4.6	0.93	243906	03/29/20	03/29/20	LYZ
Styrene	ND		ug/Kg	4.6	0.93	243906	03/29/20	03/29/20	LYZ
Bromoform	ND		ug/Kg	4.6	0.93	243906	03/29/20	03/29/20	LYZ
Isopropylbenzene	ND		ug/Kg	4.6	0.93	243906	03/29/20	03/29/20	LYZ
1,1,2,2-Tetrachloroethane	ND		ug/Kg	4.6	0.93	243906	03/29/20	03/29/20	LYZ
1,2,3-Trichloropropane	ND		ug/Kg	4.6	0.93	243906	03/29/20	03/29/20	LYZ
Propylbenzene	ND		ug/Kg	4.6	0.93	243906	03/29/20	03/29/20	LYZ
Bromobenzene	ND		ug/Kg	4.6	0.93	243906	03/29/20	03/29/20	LYZ
1,3,5-Trimethylbenzene	ND		ug/Kg	4.6	0.93	243906	03/29/20	03/29/20	LYZ
2-Chlorotoluene	ND		ug/Kg	4.6	0.93	243906	03/29/20	03/29/20	LYZ
4-Chlorotoluene	ND		ug/Kg	4.6	0.93	243906	03/29/20	03/29/20	LYZ
tert-Butylbenzene	ND		ug/Kg	4.6	0.93	243906	03/29/20	03/29/20	LYZ
1,2,4-Trimethylbenzene	ND		ug/Kg	4.6	0.93	243906	03/29/20	03/29/20	LYZ
sec-Butylbenzene	ND		ug/Kg	4.6	0.93	243906	03/29/20	03/29/20	LYZ
para-Isopropyl Toluene	ND		ug/Kg	4.6	0.93	243906	03/29/20	03/29/20	LYZ
1,3-Dichlorobenzene	ND		ug/Kg	4.6	0.93	243906	03/29/20	03/29/20	LYZ
1,4-Dichlorobenzene	ND		ug/Kg	4.6	0.93	243906	03/29/20	03/29/20	LYZ
n-Butylbenzene	ND		ug/Kg	4.6	0.93	243906	03/29/20	03/29/20	LYZ
1,2-Dichlorobenzene	ND		ug/Kg	4.6	0.93	243906	03/29/20	03/29/20	LYZ
1,2-Dibromo-3-Chloropropane	ND		ug/Kg	4.6	0.93	243906	03/29/20	03/29/20	LYZ
1,2,4-Trichlorobenzene	ND		ug/Kg	4.6	0.93	243906	03/29/20	03/29/20	LYZ
Hexachlorobutadiene	ND		ug/Kg	4.6	0.93	243906	03/29/20	03/29/20	LYZ
Naphthalene	ND		ug/Kg	4.6	0.93	243906	03/29/20	03/29/20	LYZ
1,2,3-Trichlorobenzene	ND		ug/Kg	4.6	0.93	243906	03/29/20	03/29/20	LYZ
Xylene (total)	ND		ug/Kg	4.6	0.93	243906	03/29/20	03/29/20	LYZ
Surrogates				**Limits**					
Dibromofluoromethane	104%		%REC	70-145	0.93	243906	03/29/20	03/29/20	LYZ
1,2-Dichloroethane-d4	120%		%REC	70-145	0.93	243906	03/29/20	03/29/20	LYZ
Toluene-d8	103%		%REC	70-145	0.93	243906	03/29/20	03/29/20	LYZ
Bromofluorobenzene	94%		%REC	70-145	0.93	243906	03/29/20	03/29/20	LYZ

Results for any subcontracted analyses are not included in this section.

ENTHALPY ANALYTICAL

Analysis Results for 426450

426450-014 Analyte	Result	Qual	Units	RL	DF	Batch	Prepared	Analyzed	Chemist
Method: EPA 8270C Prep Method: EPA 3550C									
Carbazole	ND		ug/Kg	250	1	243926	03/30/20	03/30/20	MTS
1-Methylnaphthalene	ND		ug/Kg	250	1	243926	03/30/20	03/30/20	MTS
Pyridine	ND		ug/Kg	250	1	243926	03/30/20	03/30/20	MTS
N-Nitrosodimethylamine	ND		ug/Kg	250	1	243926	03/30/20	03/30/20	MTS
Phenol	ND		ug/Kg	250	1	243926	03/30/20	03/30/20	MTS
Aniline	ND		ug/Kg	250	1	243926	03/30/20	03/30/20	MTS
bis(2-Chloroethyl)ether	ND		ug/Kg	1,200	1	243926	03/30/20	03/30/20	MTS
2-Chlorophenol	ND		ug/Kg	250	1	243926	03/30/20	03/30/20	MTS
1,3-Dichlorobenzene	ND		ug/Kg	250	1	243926	03/30/20	03/30/20	MTS
1,4-Dichlorobenzene	ND		ug/Kg	250	1	243926	03/30/20	03/30/20	MTS
Benzyl alcohol	ND		ug/Kg	250	1	243926	03/30/20	03/30/20	MTS
1,2-Dichlorobenzene	ND		ug/Kg	250	1	243926	03/30/20	03/30/20	MTS
2-Methylphenol	ND		ug/Kg	250	1	243926	03/30/20	03/30/20	MTS
bis(2-Chloroisopropyl) ether	ND		ug/Kg	250	1	243926	03/30/20	03/30/20	MTS
3-,4-Methylphenol	ND		ug/Kg	400	1	243926	03/30/20	03/30/20	MTS
N-Nitroso-di-n-propylamine	ND		ug/Kg	250	1	243926	03/30/20	03/30/20	MTS
Hexachloroethane	ND		ug/Kg	250	1	243926	03/30/20	03/30/20	MTS
Nitrobenzene	ND		ug/Kg	1,200	1	243926	03/30/20	03/30/20	MTS
Isophorone	ND		ug/Kg	250	1	243926	03/30/20	03/30/20	MTS
2-Nitrophenol	ND		ug/Kg	250	1	243926	03/30/20	03/30/20	MTS
2,4-Dimethylphenol	ND		ug/Kg	250	1	243926	03/30/20	03/30/20	MTS
Benzoic acid	ND		ug/Kg	1,200	1	243926	03/30/20	03/30/20	MTS
bis(2-Chloroethoxy)methane	ND		ug/Kg	250	1	243926	03/30/20	03/30/20	MTS
2,4-Dichlorophenol	ND		ug/Kg	250	1	243926	03/30/20	03/30/20	MTS
1,2,4-Trichlorobenzene	ND		ug/Kg	250	1	243926	03/30/20	03/30/20	MTS
Naphthalene	ND		ug/Kg	250	1	243926	03/30/20	03/30/20	MTS
4-Chloroaniline	ND		ug/Kg	250	1	243926	03/30/20	03/30/20	MTS
Hexachlorobutadiene	ND		ug/Kg	250	1	243926	03/30/20	03/30/20	MTS
4-Chloro-3-methylphenol	ND		ug/Kg	250	1	243926	03/30/20	03/30/20	MTS
2-Methylnaphthalene	ND		ug/Kg	250	1	243926	03/30/20	03/30/20	MTS
Hexachlorocyclopentadiene	ND		ug/Kg	1,200	1	243926	03/30/20	03/30/20	MTS
2,4,6-Trichlorophenol	ND		ug/Kg	250	1	243926	03/30/20	03/30/20	MTS
2,4,5-Trichlorophenol	ND		ug/Kg	250	1	243926	03/30/20	03/30/20	MTS
2-Chloronaphthalene	ND		ug/Kg	250	1	243926	03/30/20	03/30/20	MTS
2-Nitroaniline	ND		ug/Kg	250	1	243926	03/30/20	03/30/20	MTS
Dimethylphthalate	ND		ug/Kg	250	1	243926	03/30/20	03/30/20	MTS
Acenaphthylene	ND		ug/Kg	250	1	243926	03/30/20	03/30/20	MTS
2,6-Dinitrotoluene	ND		ug/Kg	250	1	243926	03/30/20	03/30/20	MTS
3-Nitroaniline	ND		ug/Kg	250	1	243926	03/30/20	03/30/20	MTS
Acenaphthene	ND		ug/Kg	250	1	243926	03/30/20	03/30/20	MTS
2,4-Dinitrophenol	ND		ug/Kg	1,200	1	243926	03/30/20	03/30/20	MTS
4-Nitrophenol	ND		ug/Kg	250	1	243926	03/30/20	03/30/20	MTS
Dibenzofuran	ND		ug/Kg	250	1	243926	03/30/20	03/30/20	MTS
2,4-Dinitrotoluene	ND		ug/Kg	250	1	243926	03/30/20	03/30/20	MTS

Results for any subcontracted analyses are not included in this section.

ENTHALPY ANALYTICAL

Analysis Results for 426450

426450-014 Analyte	Result	Qual	Units	RL	DF	Batch	Prepared	Analyzed	Chemist
Diethylphthalate	ND		ug/Kg	250	1	243926	03/30/20	03/30/20	MTS
Fluorene	ND		ug/Kg	250	1	243926	03/30/20	03/30/20	MTS
4-Chlorophenyl-phenylether	ND		ug/Kg	250	1	243926	03/30/20	03/30/20	MTS
4-Nitroaniline	ND		ug/Kg	250	1	243926	03/30/20	03/30/20	MTS
4,6-Dinitro-2-methylphenol	ND		ug/Kg	250	1	243926	03/30/20	03/30/20	MTS
N-Nitrosodiphenylamine	ND		ug/Kg	250	1	243926	03/30/20	03/30/20	MTS
Azobenzene	ND		ug/Kg	250	1	243926	03/30/20	03/30/20	MTS
4-Bromophenyl-phenylether	ND		ug/Kg	250	1	243926	03/30/20	03/30/20	MTS
Hexachlorobenzene	ND		ug/Kg	250	1	243926	03/30/20	03/30/20	MTS
Pentachlorophenol	ND		ug/Kg	1,200	1	243926	03/30/20	03/30/20	MTS
Phenanthrene	ND		ug/Kg	250	1	243926	03/30/20	03/30/20	MTS
Anthracene	ND		ug/Kg	250	1	243926	03/30/20	03/30/20	MTS
Di-n-butylphthalate	ND		ug/Kg	250	1	243926	03/30/20	03/30/20	MTS
Fluoranthene	ND		ug/Kg	250	1	243926	03/30/20	03/30/20	MTS
Benzidine	ND		ug/Kg	1,200	1	243926	03/30/20	03/30/20	MTS
Pyrene	ND		ug/Kg	250	1	243926	03/30/20	03/30/20	MTS
Butylbenzylphthalate	ND		ug/Kg	250	1	243926	03/30/20	03/30/20	MTS
3,3'-Dichlorobenzidine	ND		ug/Kg	1,200	1	243926	03/30/20	03/30/20	MTS
Benzo(a)anthracene	ND		ug/Kg	250	1	243926	03/30/20	03/30/20	MTS
Chrysene	ND		ug/Kg	250	1	243926	03/30/20	03/30/20	MTS
bis(2-Ethylhexyl)phthalate	ND		ug/Kg	250	1	243926	03/30/20	03/30/20	MTS
Di-n-octylphthalate	ND		ug/Kg	250	1	243926	03/30/20	03/30/20	MTS
Benzo(b)fluoranthene	ND		ug/Kg	250	1	243926	03/30/20	03/30/20	MTS
Benzo(k)fluoranthene	ND		ug/Kg	250	1	243926	03/30/20	03/30/20	MTS
Benzo(a)pyrene	ND		ug/Kg	250	1	243926	03/30/20	03/30/20	MTS
Indeno(1,2,3-cd)pyrene	ND		ug/Kg	250	1	243926	03/30/20	03/30/20	MTS
Dibenz(a,h)anthracene	ND		ug/Kg	250	1	243926	03/30/20	03/30/20	MTS
Benzo(g,h,i)perylene	ND		ug/Kg	250	1	243926	03/30/20	03/30/20	MTS
Surrogates				**Limits**					
2-Fluorophenol	94%		%REC	13-153	1	243926	03/30/20	03/30/20	MTS
Phenol-d6	96%		%REC	10-110	1	243926	03/30/20	03/30/20	MTS
2,4,6-Tribromophenol	90%		%REC	34-143	1	243926	03/30/20	03/30/20	MTS
Nitrobenzene-d5	96%		%REC	27-125	1	243926	03/30/20	03/30/20	MTS
2-Fluorobiphenyl	98%		%REC	41-125	1	243926	03/30/20	03/30/20	MTS
Terphenyl-d14	104%		%REC	33-155	1	243926	03/30/20	03/30/20	MTS

Results for any subcontracted analyses are not included in this section.

ENTHALPY ANALYTICAL

Analysis Results for 426450

Sample ID: B-1-1'	Lab ID: 426450-016	Collected: 03/25/20 11:00
	Matrix: Soil	

426450-016 Analyte	Result	Qual	Units	RL	DF	Batch	Prepared	Analyzed	Chemist
Method: EPA 1664A M									
Total Oil and Grease	ND		mg/Kg	500	1	243982	03/31/20	03/31/20	ECC
Method: EPA 6010B Prep Method: EPA 3050B									
Antimony	ND		mg/Kg	2.7	0.88	243801	03/26/20	03/26/20	SBW
Arsenic	ND		mg/Kg	0.88	0.88	243801	03/26/20	03/26/20	SBW
Barium	**69**		mg/Kg	0.88	0.88	243801	03/26/20	03/26/20	SBW
Beryllium	ND		mg/Kg	0.44	0.88	243801	03/26/20	03/26/20	SBW
Cadmium	**0.50**		mg/Kg	0.44	0.88	243801	03/26/20	03/26/20	SBW
Chromium	**9.6**		mg/Kg	0.88	0.88	243801	03/26/20	03/26/20	SBW
Cobalt	**5.9**		mg/Kg	0.44	0.88	243801	03/26/20	03/26/20	SBW
Copper	**11**		mg/Kg	0.88	0.88	243801	03/26/20	03/27/20	SBW
Lead	**22**		mg/Kg	0.88	0.88	243801	03/26/20	03/26/20	SBW
Molybdenum	ND		mg/Kg	0.88	0.88	243801	03/26/20	03/26/20	SBW
Nickel	**7.1**		mg/Kg	1.3	0.88	243801	03/26/20	03/26/20	SBW
Selenium	ND		mg/Kg	2.7	0.88	243801	03/26/20	03/27/20	SBW
Silver	ND		mg/Kg	0.44	0.88	243801	03/26/20	03/26/20	SBW
Thallium	ND		mg/Kg	2.7	0.88	243801	03/26/20	03/26/20	SBW
Vanadium	**26**		mg/Kg	0.44	0.88	243801	03/26/20	03/26/20	SBW
Zinc	**46**		mg/Kg	4.4	0.88	243801	03/26/20	03/26/20	SBW
Method: EPA 7471A Prep Method: METHOD									
Mercury	ND		mg/Kg	0.13	0.94	243808	03/26/20	03/27/20	DLS
Method: EPA 8081A Prep Method: EPA 3546									
alpha-BHC	ND		ug/Kg	25	5	243775	03/25/20	03/30/20	MTS
beta-BHC	ND		ug/Kg	25	5	243775	03/25/20	03/30/20	MTS
gamma-BHC	ND		ug/Kg	25	5	243775	03/25/20	03/30/20	MTS
delta-BHC	ND		ug/Kg	25	5	243775	03/25/20	03/30/20	MTS
Heptachlor	ND		ug/Kg	25	5	243775	03/25/20	03/30/20	MTS
Aldrin	ND		ug/Kg	25	5	243775	03/25/20	03/30/20	MTS
Heptachlor epoxide	ND		ug/Kg	25	5	243775	03/25/20	03/30/20	MTS
Endosulfan I	ND		ug/Kg	25	5	243775	03/25/20	03/30/20	MTS
Dieldrin	ND		ug/Kg	25	5	243775	03/25/20	03/30/20	MTS
4,4'-DDE	**250**		ug/Kg	25	5	243775	03/25/20	03/30/20	MTS
Endrin	ND		ug/Kg	25	5	243775	03/25/20	03/30/20	MTS
Endosulfan II	ND		ug/Kg	25	5	243775	03/25/20	03/30/20	MTS
Endosulfan sulfate	ND		ug/Kg	25	5	243775	03/25/20	03/30/20	MTS
4,4'-DDD	ND		ug/Kg	25	5	243775	03/25/20	03/30/20	MTS
Endrin aldehyde	ND		ug/Kg	25	5	243775	03/25/20	03/30/20	MTS
Endrin ketone	ND		ug/Kg	25	5	243775	03/25/20	03/30/20	MTS
4,4'-DDT	**90**		ug/Kg	25	5	243775	03/25/20	03/30/20	MTS

Results for any subcontracted analyses are not included in this section.

Analysis Results for 426450

426450-016 Analyte	Result	Qual	Units	RL	DF	Batch	Prepared	Analyzed	Chemist
Methoxychlor	ND		ug/Kg	50	5	243775	03/25/20	03/30/20	MTS
Toxaphene	ND		ug/Kg	500	5	243775	03/25/20	03/30/20	MTS
Chlordane (Technical)	ND		ug/Kg	250	5	243775	03/25/20	03/30/20	MTS
Surrogates				**Limits**					
TCMX	66%		%REC	50-150	5	243775	03/25/20	03/30/20	MTS
Decachlorobiphenyl	69%		%REC	24-120	5	243775	03/25/20	03/30/20	MTS
Method: EPA 8082 Prep Method: EPA 3546									
Aroclor-1016	ND		ug/Kg	50	1	243775	03/25/20	03/30/20	MTS
Aroclor-1221	ND		ug/Kg	50	1	243775	03/25/20	03/30/20	MTS
Aroclor-1232	ND		ug/Kg	50	1	243775	03/25/20	03/30/20	MTS
Aroclor-1242	ND		ug/Kg	50	1	243775	03/25/20	03/30/20	MTS
Aroclor-1248	ND		ug/Kg	50	1	243775	03/25/20	03/30/20	MTS
Aroclor-1254	ND		ug/Kg	50	1	243775	03/25/20	03/30/20	MTS
Aroclor-1260	ND		ug/Kg	50	1	243775	03/25/20	03/30/20	MTS
Aroclor-1262	ND		ug/Kg	50	1	243775	03/25/20	03/30/20	MTS
Aroclor-1268	ND		ug/Kg	50	1	243775	03/25/20	03/30/20	MTS
Surrogates				**Limits**					
Decachlorobiphenyl (PCB)	60%		%REC	50-150	1	243775	03/25/20	03/30/20	MTS

Results for any subcontracted analyses are not included in this section.

ENTHALPY ANALYTICAL

Analysis Results for 426450

Sample ID: B-1-2.5'	Lab ID: 426450-017	Collected: 03/25/20 11:05

426450-017 Analyte	Result	Qual	Units	RL	Matrix	DF	Batch	Prepared	Analyzed	Chemist
Method: EPA 1664A M										
Total Oil and Grease	ND		mg/Kg	500	Soil	1	243982	03/31/20	03/31/20	ECC
Method: EPA 6010B Prep Method: EPA 3050B										
Antimony	ND		mg/Kg	2.9	Soil	0.98	243801	03/26/20	03/26/20	SBW
Arsenic	**2.1**		mg/Kg	0.98	Soil	0.98	243801	03/26/20	03/26/20	SBW
Barium	**150**		mg/Kg	0.98	Soil	0.98	243801	03/26/20	03/26/20	SBW
Beryllium	ND		mg/Kg	0.49	Soil	0.98	243801	03/26/20	03/26/20	SBW
Cadmium	**1.4**		mg/Kg	0.49	Soil	0.98	243801	03/26/20	03/26/20	SBW
Chromium	**33**		mg/Kg	0.98	Soil	0.98	243801	03/26/20	03/26/20	SBW
Cobalt	**9.5**		mg/Kg	0.49	Soil	0.98	243801	03/26/20	03/26/20	SBW
Copper	**23**		mg/Kg	0.98	Soil	0.98	243801	03/26/20	03/27/20	SBW
Lead	**72**		mg/Kg	0.98	Soil	0.98	243801	03/26/20	03/26/20	SBW
Molybdenum	**1.8**		mg/Kg	0.98	Soil	0.98	243801	03/26/20	03/26/20	SBW
Nickel	**25**		mg/Kg	1.5	Soil	0.98	243801	03/26/20	03/26/20	SBW
Selenium	ND		mg/Kg	2.9	Soil	0.98	243801	03/26/20	03/27/20	SBW
Silver	ND		mg/Kg	0.49	Soil	0.98	243801	03/26/20	03/26/20	SBW
Thallium	ND		mg/Kg	2.9	Soil	0.98	243801	03/26/20	03/26/20	SBW
Vanadium	**63**		mg/Kg	0.49	Soil	0.98	243801	03/26/20	03/26/20	SBW
Zinc	**75**		mg/Kg	4.9	Soil	0.98	243801	03/26/20	03/26/20	SBW
Method: EPA 6010B Prep Method: WET										
Lead	**1.4**	b	mg/L	0.15	WET Leachate	10	244914	04/22/20	04/22/20	SBW
Method: EPA 7471A Prep Method: METHOD										
Mercury	ND		mg/Kg	0.12	Soil	0.88	243808	03/26/20	03/27/20	DLS

Results for any subcontracted analyses are not included in this section.

ENTHALPY ANALYTICAL

Analysis Results for 426450

Sample ID: B-1-5'	Lab ID: 426450-018	Collected: 03/25/20 11:20
	Matrix: Soil	

426450-018 Analyte	Result	Qual	Units	RL	DF	Batch	Prepared	Analyzed	Chemist
Method: EPA 1664A M									
Total Oil and Grease	ND		mg/Kg	500	1	243982	03/31/20	03/31/20	ECC
Method: EPA 8015B Prep Method: EPA 3580									
TPH C6-C12	ND		mg/Kg	10	1	243822	03/26/20	03/27/20	TJW
TPH C13-C22	ND		mg/Kg	10	1	243822	03/26/20	03/27/20	TJW
TPH C23-C44	**27**		mg/Kg	10	1	243822	03/26/20	03/27/20	TJW
Surrogates				**Limits**					
n-Triacontane	79%		%REC	50-150	1	243822	03/26/20	03/27/20	TJW
Method: EPA 8260B Prep Method: EPA 5035									
3-Chloropropene	ND		ug/Kg	4.2	0.85	243906	03/29/20	03/29/20	LYZ
cis-1,4-Dichloro-2-butene	ND		ug/Kg	4.2	0.85	243906	03/29/20	03/29/20	LYZ
trans-1,4-Dichloro-2-butene	ND		ug/Kg	4.2	0.85	243906	03/29/20	03/29/20	LYZ
Isopropyl Ether (DIPE)	ND		ug/Kg	4.2	0.85	243906	03/29/20	03/29/20	LYZ
Ethyl tert-Butyl Ether (ETBE)	ND		ug/Kg	4.2	0.85	243906	03/29/20	03/29/20	LYZ
Methyl tert-Amyl Ether (TAME)	ND		ug/Kg	4.2	0.85	243906	03/29/20	03/29/20	LYZ
tert-Butyl Alcohol (TBA)	ND		ug/Kg	8.5	0.85	243906	03/29/20	03/29/20	LYZ
Freon 12	ND		ug/Kg	4.2	0.85	243906	03/29/20	03/29/20	LYZ
Chloromethane	ND		ug/Kg	4.2	0.85	243906	03/29/20	03/29/20	LYZ
Vinyl Chloride	ND		ug/Kg	4.2	0.85	243906	03/29/20	03/29/20	LYZ
Bromomethane	ND		ug/Kg	4.2	0.85	243906	03/29/20	03/29/20	LYZ
Chloroethane	ND		ug/Kg	4.2	0.85	243906	03/29/20	03/29/20	LYZ
Trichlorofluoromethane	ND		ug/Kg	4.2	0.85	243906	03/29/20	03/29/20	LYZ
Acetone	ND		ug/Kg	85	0.85	243906	03/29/20	03/29/20	LYZ
Freon 113	ND		ug/Kg	4.2	0.85	243906	03/29/20	03/29/20	LYZ
1,1-Dichloroethene	ND		ug/Kg	4.2	0.85	243906	03/29/20	03/29/20	LYZ
Methylene Chloride	ND		ug/Kg	4.2	0.85	243906	03/29/20	03/29/20	LYZ
MTBE	ND		ug/Kg	4.2	0.85	243906	03/29/20	03/29/20	LYZ
trans-1,2-Dichloroethene	ND		ug/Kg	4.2	0.85	243906	03/29/20	03/29/20	LYZ
1,1-Dichloroethane	ND		ug/Kg	4.2	0.85	243906	03/29/20	03/29/20	LYZ
2-Butanone	ND		ug/Kg	85	0.85	243906	03/29/20	03/29/20	LYZ
cis-1,2-Dichloroethene	ND		ug/Kg	4.2	0.85	243906	03/29/20	03/29/20	LYZ
2,2-Dichloropropane	ND		ug/Kg	4.2	0.85	243906	03/29/20	03/29/20	LYZ
Chloroform	ND		ug/Kg	4.2	0.85	243906	03/29/20	03/29/20	LYZ
Bromochloromethane	ND		ug/Kg	4.2	0.85	243906	03/29/20	03/29/20	LYZ
1,1,1-Trichloroethane	ND		ug/Kg	4.2	0.85	243906	03/29/20	03/29/20	LYZ
1,1-Dichloropropene	ND		ug/Kg	4.2	0.85	243906	03/29/20	03/29/20	LYZ
Carbon Tetrachloride	ND		ug/Kg	4.2	0.85	243906	03/29/20	03/29/20	LYZ
1,2-Dichloroethane	ND		ug/Kg	4.2	0.85	243906	03/29/20	03/29/20	LYZ
Benzene	ND		ug/Kg	4.2	0.85	243906	03/29/20	03/29/20	LYZ
Trichloroethene	ND		ug/Kg	4.2	0.85	243906	03/29/20	03/29/20	LYZ

Results for any subcontracted analyses are not included in this section.

ENTHALPY ANALYTICAL

Analysis Results for 426450

426450-018 Analyte	Result	Qual	Units	RL	DF	Batch	Prepared	Analyzed	Chemist
1,2-Dichloropropane	ND		ug/Kg	4.2	0.85	243906	03/29/20	03/29/20	LYZ
Bromodichloromethane	ND		ug/Kg	4.2	0.85	243906	03/29/20	03/29/20	LYZ
Dibromomethane	ND		ug/Kg	4.2	0.85	243906	03/29/20	03/29/20	LYZ
4-Methyl-2-Pentanone	ND		ug/Kg	4.2	0.85	243906	03/29/20	03/29/20	LYZ
cis-1,3-Dichloropropene	ND		ug/Kg	4.2	0.85	243906	03/29/20	03/29/20	LYZ
Toluene	ND		ug/Kg	4.2	0.85	243906	03/29/20	03/29/20	LYZ
trans-1,3-Dichloropropene	ND		ug/Kg	4.2	0.85	243906	03/29/20	03/29/20	LYZ
1,1,2-Trichloroethane	ND		ug/Kg	4.2	0.85	243906	03/29/20	03/29/20	LYZ
1,3-Dichloropropane	ND		ug/Kg	4.2	0.85	243906	03/29/20	03/29/20	LYZ
Tetrachloroethene	ND		ug/Kg	4.2	0.85	243906	03/29/20	03/29/20	LYZ
Dibromochloromethane	ND		ug/Kg	4.2	0.85	243906	03/29/20	03/29/20	LYZ
1,2-Dibromoethane	ND		ug/Kg	4.2	0.85	243906	03/29/20	03/29/20	LYZ
Chlorobenzene	ND		ug/Kg	4.2	0.85	243906	03/29/20	03/29/20	LYZ
1,1,1,2-Tetrachloroethane	ND		ug/Kg	4.2	0.85	243906	03/29/20	03/29/20	LYZ
Ethylbenzene	ND		ug/Kg	4.2	0.85	243906	03/29/20	03/29/20	LYZ
m,p-Xylenes	ND		ug/Kg	8.5	0.85	243906	03/29/20	03/29/20	LYZ
o-Xylene	ND		ug/Kg	4.2	0.85	243906	03/29/20	03/29/20	LYZ
Styrene	ND		ug/Kg	4.2	0.85	243906	03/29/20	03/29/20	LYZ
Bromoform	ND		ug/Kg	4.2	0.85	243906	03/29/20	03/29/20	LYZ
Isopropylbenzene	ND		ug/Kg	4.2	0.85	243906	03/29/20	03/29/20	LYZ
1,1,2,2-Tetrachloroethane	ND		ug/Kg	4.2	0.85	243906	03/29/20	03/29/20	LYZ
1,2,3-Trichloropropane	ND		ug/Kg	4.2	0.85	243906	03/29/20	03/29/20	LYZ
Propylbenzene	ND		ug/Kg	4.2	0.85	243906	03/29/20	03/29/20	LYZ
Bromobenzene	ND		ug/Kg	4.2	0.85	243906	03/29/20	03/29/20	LYZ
1,3,5-Trimethylbenzene	ND		ug/Kg	4.2	0.85	243906	03/29/20	03/29/20	LYZ
2-Chlorotoluene	ND		ug/Kg	4.2	0.85	243906	03/29/20	03/29/20	LYZ
4-Chlorotoluene	ND		ug/Kg	4.2	0.85	243906	03/29/20	03/29/20	LYZ
tert-Butylbenzene	ND		ug/Kg	4.2	0.85	243906	03/29/20	03/29/20	LYZ
1,2,4-Trimethylbenzene	ND		ug/Kg	4.2	0.85	243906	03/29/20	03/29/20	LYZ
sec-Butylbenzene	ND		ug/Kg	4.2	0.85	243906	03/29/20	03/29/20	LYZ
para-Isopropyl Toluene	ND		ug/Kg	4.2	0.85	243906	03/29/20	03/29/20	LYZ
1,3-Dichlorobenzene	ND		ug/Kg	4.2	0.85	243906	03/29/20	03/29/20	LYZ
1,4-Dichlorobenzene	ND		ug/Kg	4.2	0.85	243906	03/29/20	03/29/20	LYZ
n-Butylbenzene	ND		ug/Kg	4.2	0.85	243906	03/29/20	03/29/20	LYZ
1,2-Dichlorobenzene	ND		ug/Kg	4.2	0.85	243906	03/29/20	03/29/20	LYZ
1,2-Dibromo-3-Chloropropane	ND		ug/Kg	4.2	0.85	243906	03/29/20	03/29/20	LYZ
1,2,4-Trichlorobenzene	ND		ug/Kg	4.2	0.85	243906	03/29/20	03/29/20	LYZ
Hexachlorobutadiene	ND		ug/Kg	4.2	0.85	243906	03/29/20	03/29/20	LYZ
Naphthalene	ND		ug/Kg	4.2	0.85	243906	03/29/20	03/29/20	LYZ
1,2,3-Trichlorobenzene	ND		ug/Kg	4.2	0.85	243906	03/29/20	03/29/20	LYZ
Xylene (total)	ND		ug/Kg	4.2	0.85	243906	03/29/20	03/29/20	LYZ
Surrogates				**Limits**					
Dibromofluoromethane	105%		%REC	70-145	0.85	243906	03/29/20	03/29/20	LYZ
1,2-Dichloroethane-d4	123%		%REC	70-145	0.85	243906	03/29/20	03/29/20	LYZ
Toluene-d8	102%		%REC	70-145	0.85	243906	03/29/20	03/29/20	LYZ
Bromofluorobenzene	93%		%REC	70-145	0.85	243906	03/29/20	03/29/20	LYZ

Results for any subcontracted analyses are not included in this section.

ENTHALPY ANALYTICAL

Analysis Results for 426450

426450-018 Analyte	Result	Qual	Units	RL	DF	Batch	Prepared	Analyzed	Chemist
Method: EPA 8270C Prep Method: EPA 3550C									
Carbazole	ND		ug/Kg	250	1	243926	03/30/20	03/31/20	MTS
1-Methylnaphthalene	ND		ug/Kg	250	1	243926	03/30/20	03/31/20	MTS
Pyridine	ND		ug/Kg	250	1	243926	03/30/20	03/31/20	MTS
N-Nitrosodimethylamine	ND		ug/Kg	250	1	243926	03/30/20	03/31/20	MTS
Phenol	ND		ug/Kg	250	1	243926	03/30/20	03/31/20	MTS
Aniline	ND		ug/Kg	250	1	243926	03/30/20	03/31/20	MTS
bis(2-Chloroethyl)ether	ND		ug/Kg	1,200	1	243926	03/30/20	03/31/20	MTS
2-Chlorophenol	ND		ug/Kg	250	1	243926	03/30/20	03/31/20	MTS
1,3-Dichlorobenzene	ND		ug/Kg	250	1	243926	03/30/20	03/31/20	MTS
1,4-Dichlorobenzene	ND		ug/Kg	250	1	243926	03/30/20	03/31/20	MTS
Benzyl alcohol	ND		ug/Kg	250	1	243926	03/30/20	03/31/20	MTS
1,2-Dichlorobenzene	ND		ug/Kg	250	1	243926	03/30/20	03/31/20	MTS
2-Methylphenol	ND		ug/Kg	250	1	243926	03/30/20	03/31/20	MTS
bis(2-Chloroisopropyl) ether	ND		ug/Kg	250	1	243926	03/30/20	03/31/20	MTS
3-,4-Methylphenol	ND		ug/Kg	400	1	243926	03/30/20	03/31/20	MTS
N-Nitroso-di-n-propylamine	ND		ug/Kg	250	1	243926	03/30/20	03/31/20	MTS
Hexachloroethane	ND		ug/Kg	250	1	243926	03/30/20	03/31/20	MTS
Nitrobenzene	ND		ug/Kg	1,200	1	243926	03/30/20	03/31/20	MTS
Isophorone	ND		ug/Kg	250	1	243926	03/30/20	03/31/20	MTS
2-Nitrophenol	ND		ug/Kg	250	1	243926	03/30/20	03/31/20	MTS
2,4-Dimethylphenol	ND		ug/Kg	250	1	243926	03/30/20	03/31/20	MTS
Benzoic acid	ND		ug/Kg	1,200	1	243926	03/30/20	03/31/20	MTS
bis(2-Chloroethoxy)methane	ND		ug/Kg	250	1	243926	03/30/20	03/31/20	MTS
2,4-Dichlorophenol	ND		ug/Kg	250	1	243926	03/30/20	03/31/20	MTS
1,2,4-Trichlorobenzene	ND		ug/Kg	250	1	243926	03/30/20	03/31/20	MTS
Naphthalene	ND		ug/Kg	250	1	243926	03/30/20	03/31/20	MTS
4-Chloroaniline	ND		ug/Kg	250	1	243926	03/30/20	03/31/20	MTS
Hexachlorobutadiene	ND		ug/Kg	250	1	243926	03/30/20	03/31/20	MTS
4-Chloro-3-methylphenol	ND		ug/Kg	250	1	243926	03/30/20	03/31/20	MTS
2-Methylnaphthalene	ND		ug/Kg	250	1	243926	03/30/20	03/31/20	MTS
Hexachlorocyclopentadiene	ND		ug/Kg	1,200	1	243926	03/30/20	03/31/20	MTS
2,4,6-Trichlorophenol	ND		ug/Kg	250	1	243926	03/30/20	03/31/20	MTS
2,4,5-Trichlorophenol	ND		ug/Kg	250	1	243926	03/30/20	03/31/20	MTS
2-Chloronaphthalene	ND		ug/Kg	250	1	243926	03/30/20	03/31/20	MTS
2-Nitroaniline	ND		ug/Kg	250	1	243926	03/30/20	03/31/20	MTS
Dimethylphthalate	ND		ug/Kg	250	1	243926	03/30/20	03/31/20	MTS
Acenaphthylene	ND		ug/Kg	250	1	243926	03/30/20	03/31/20	MTS
2,6-Dinitrotoluene	ND		ug/Kg	250	1	243926	03/30/20	03/31/20	MTS
3-Nitroaniline	ND		ug/Kg	250	1	243926	03/30/20	03/31/20	MTS
Acenaphthene	ND		ug/Kg	250	1	243926	03/30/20	03/31/20	MTS
2,4-Dinitrophenol	ND		ug/Kg	1,200	1	243926	03/30/20	03/31/20	MTS
4-Nitrophenol	ND		ug/Kg	250	1	243926	03/30/20	03/31/20	MTS
Dibenzofuran	ND		ug/Kg	250	1	243926	03/30/20	03/31/20	MTS
2,4-Dinitrotoluene	ND		ug/Kg	250	1	243926	03/30/20	03/31/20	MTS

Results for any subcontracted analyses are not included in this section.

ENTHALPY ANALYTICAL

Analysis Results for 426450

426450-018 Analyte	Result	Qual	Units	RL	DF	Batch	Prepared	Analyzed	Chemist
Diethylphthalate	ND		ug/Kg	250	1	243926	03/30/20	03/31/20	MTS
Fluorene	ND		ug/Kg	250	1	243926	03/30/20	03/31/20	MTS
4-Chlorophenyl-phenylether	ND		ug/Kg	250	1	243926	03/30/20	03/31/20	MTS
4-Nitroaniline	ND		ug/Kg	250	1	243926	03/30/20	03/31/20	MTS
4,6-Dinitro-2-methylphenol	ND		ug/Kg	250	1	243926	03/30/20	03/31/20	MTS
N-Nitrosodiphenylamine	ND		ug/Kg	250	1	243926	03/30/20	03/31/20	MTS
Azobenzene	ND		ug/Kg	250	1	243926	03/30/20	03/31/20	MTS
4-Bromophenyl-phenylether	ND		ug/Kg	250	1	243926	03/30/20	03/31/20	MTS
Hexachlorobenzene	ND		ug/Kg	250	1	243926	03/30/20	03/31/20	MTS
Pentachlorophenol	ND		ug/Kg	1,200	1	243926	03/30/20	03/31/20	MTS
Phenanthrene	ND		ug/Kg	250	1	243926	03/30/20	03/31/20	MTS
Anthracene	ND		ug/Kg	250	1	243926	03/30/20	03/31/20	MTS
Di-n-butylphthalate	ND		ug/Kg	250	1	243926	03/30/20	03/31/20	MTS
Fluoranthene	**250**		ug/Kg	250	1	243926	03/30/20	03/31/20	MTS
Benzidine	ND		ug/Kg	1,200	1	243926	03/30/20	03/31/20	MTS
Pyrene	**260**		ug/Kg	250	1	243926	03/30/20	03/31/20	MTS
Butylbenzylphthalate	ND		ug/Kg	250	1	243926	03/30/20	03/31/20	MTS
3,3'-Dichlorobenzidine	ND		ug/Kg	1,200	1	243926	03/30/20	03/31/20	MTS
Benzo(a)anthracene	ND		ug/Kg	250	1	243926	03/30/20	03/31/20	MTS
Chrysene	ND		ug/Kg	250	1	243926	03/30/20	03/31/20	MTS
bis(2-Ethylhexyl)phthalate	**260**		ug/Kg	250	1	243926	03/30/20	03/31/20	MTS
Di-n-octylphthalate	ND		ug/Kg	250	1	243926	03/30/20	03/31/20	MTS
Benzo(b)fluoranthene	ND		ug/Kg	250	1	243926	03/30/20	03/31/20	MTS
Benzo(k)fluoranthene	ND		ug/Kg	250	1	243926	03/30/20	03/31/20	MTS
Benzo(a)pyrene	ND		ug/Kg	250	1	243926	03/30/20	03/31/20	MTS
Indeno(1,2,3-cd)pyrene	ND		ug/Kg	250	1	243926	03/30/20	03/31/20	MTS
Dibenz(a,h)anthracene	ND		ug/Kg	250	1	243926	03/30/20	03/31/20	MTS
Benzo(g,h,i)perylene	ND		ug/Kg	250	1	243926	03/30/20	03/31/20	MTS
Surrogates				**Limits**					
2-Fluorophenol	81%		%REC	13-153	1	243926	03/30/20	03/31/20	MTS
Phenol-d6	82%		%REC	10-110	1	243926	03/30/20	03/31/20	MTS
2,4,6-Tribromophenol	93%		%REC	34-143	1	243926	03/30/20	03/31/20	MTS
Nitrobenzene-d5	84%		%REC	27-125	1	243926	03/30/20	03/31/20	MTS
2-Fluorobiphenyl	86%		%REC	41-125	1	243926	03/30/20	03/31/20	MTS
Terphenyl-d14	95%		%REC	33-155	1	243926	03/30/20	03/31/20	MTS

Results for any subcontracted analyses are not included in this section.

ENTHALPY ANALYTICAL

Analysis Results for 426450

Sample ID: COMPOSITE 1-8	Lab ID: 426450-031	Collected: 03/25/20
	Matrix: Soil	

426450-031 Analyte	Result	Qual	Units	RL	DF	Batch	Prepared	Analyzed	Chemist
Method: EPA 1664A M									
Total Oil and Grease	ND		mg/Kg	500	1	243982	03/31/20	03/31/20	ECC
Method: EPA 6010B Prep Method: EPA 3050B									
Antimony	ND		mg/Kg	3.1	1	243801	03/26/20	03/26/20	SBW
Arsenic	**1.6**		mg/Kg	1.0	1	243801	03/26/20	03/27/20	SBW
Barium	**110**		mg/Kg	1.0	1	243801	03/26/20	03/26/20	SBW
Beryllium	ND		mg/Kg	0.52	1	243801	03/26/20	03/26/20	SBW
Cadmium	**0.81**		mg/Kg	0.52	1	243801	03/26/20	03/26/20	SBW
Chromium	**17**		mg/Kg	1.0	1	243801	03/26/20	03/26/20	SBW
Cobalt	**7.6**		mg/Kg	0.52	1	243801	03/26/20	03/26/20	SBW
Copper	**17**		mg/Kg	1.0	1	243801	03/26/20	03/27/20	SBW
Lead	**22**		mg/Kg	1.0	1	243801	03/26/20	03/26/20	SBW
Molybdenum	**1.7**		mg/Kg	1.0	1	243801	03/26/20	03/26/20	SBW
Nickel	**12**		mg/Kg	1.5	1	243801	03/26/20	03/26/20	SBW
Selenium	ND		mg/Kg	3.1	1	243801	03/26/20	03/27/20	SBW
Silver	ND		mg/Kg	0.52	1	243801	03/26/20	03/26/20	SBW
Thallium	ND		mg/Kg	3.1	1	243801	03/26/20	03/26/20	SBW
Vanadium	**33**		mg/Kg	0.52	1	243801	03/26/20	03/26/20	SBW
Zinc	**70**		mg/Kg	5.2	1	243801	03/26/20	03/26/20	SBW
Method: EPA 7471A Prep Method: METHOD									
Mercury	ND		mg/Kg	0.13	0.95	243808	03/26/20	03/27/20	DLS
Method: EPA 8015B Prep Method: EPA 3580									
TPH C6-C12	ND		mg/Kg	10	1	243822	03/26/20	03/27/20	TJW
TPH C13-C22	ND		mg/Kg	10	1	243822	03/26/20	03/27/20	TJW
TPH C23-C44	**17**		mg/Kg	10	1	243822	03/26/20	03/27/20	TJW
Surrogates				**Limits**					
n-Triacontane	99%		%REC	50-150	1	243822	03/26/20	03/27/20	TJW
Method: EPA 8081A Prep Method: EPA 3546									
alpha-BHC	ND		ug/Kg	25	5	243775	03/25/20	03/30/20	MTS
beta-BHC	ND		ug/Kg	25	5	243775	03/25/20	03/30/20	MTS
gamma-BHC	ND		ug/Kg	25	5	243775	03/25/20	03/30/20	MTS
delta-BHC	ND		ug/Kg	25	5	243775	03/25/20	03/30/20	MTS
Heptachlor	ND		ug/Kg	25	5	243775	03/25/20	03/30/20	MTS
Aldrin	ND		ug/Kg	25	5	243775	03/25/20	03/30/20	MTS
Heptachlor epoxide	ND		ug/Kg	25	5	243775	03/25/20	03/30/20	MTS
Endosulfan I	ND		ug/Kg	25	5	243775	03/25/20	03/30/20	MTS
Dieldrin	ND		ug/Kg	25	5	243775	03/25/20	03/30/20	MTS

Results for any subcontracted analyses are not included in this section.

ENTHALPY ANALYTICAL

Analysis Results for 426450

426450-031 Analyte	Result	Qual	Units	RL	DF	Batch	Prepared	Analyzed	Chemist
4,4'-DDE	**45**		ug/Kg	25	5	243775	03/25/20	03/30/20	MTS
Endrin	ND		ug/Kg	25	5	243775	03/25/20	03/30/20	MTS
Endosulfan II	ND		ug/Kg	25	5	243775	03/25/20	03/30/20	MTS
Endosulfan sulfate	ND		ug/Kg	25	5	243775	03/25/20	03/30/20	MTS
4,4'-DDD	ND		ug/Kg	25	5	243775	03/25/20	03/30/20	MTS
Endrin aldehyde	ND		ug/Kg	25	5	243775	03/25/20	03/30/20	MTS
Endrin ketone	ND		ug/Kg	25	5	243775	03/25/20	03/30/20	MTS
4,4'-DDT	ND		ug/Kg	25	5	243775	03/25/20	03/30/20	MTS
Methoxychlor	ND		ug/Kg	50	5	243775	03/25/20	03/30/20	MTS
Toxaphene	ND		ug/Kg	500	5	243775	03/25/20	03/30/20	MTS
Chlordane (Technical)	ND		ug/Kg	250	5	243775	03/25/20	03/30/20	MTS
Surrogates				**Limits**					
TCMX	66%		%REC	50-150	5	243775	03/25/20	03/30/20	MTS
Decachlorobiphenyl	67%		%REC	24-120	5	243775	03/25/20	03/30/20	MTS
Method: EPA 8082 Prep Method: EPA 3546									
Aroclor-1016	ND		ug/Kg	50	0.99	243775	03/25/20	03/30/20	MTS
Aroclor-1221	ND		ug/Kg	50	0.99	243775	03/25/20	03/30/20	MTS
Aroclor-1232	ND		ug/Kg	50	0.99	243775	03/25/20	03/30/20	MTS
Aroclor-1242	ND		ug/Kg	50	0.99	243775	03/25/20	03/30/20	MTS
Aroclor-1248	ND		ug/Kg	50	0.99	243775	03/25/20	03/30/20	MTS
Aroclor-1254	ND		ug/Kg	50	0.99	243775	03/25/20	03/30/20	MTS
Aroclor-1260	ND		ug/Kg	50	0.99	243775	03/25/20	03/30/20	MTS
Aroclor-1262	ND		ug/Kg	50	0.99	243775	03/25/20	03/30/20	MTS
Aroclor-1268	ND		ug/Kg	50	0.99	243775	03/25/20	03/30/20	MTS
Surrogates				**Limits**					
Decachlorobiphenyl (PCB)	63%		%REC	50-150	0.99	243775	03/25/20	03/30/20	MTS
Method: EPA 8260B Prep Method: EPA 5030B									
3-Chloropropene	ND		ug/Kg	5.0	1	243915	03/30/20	03/30/20	JTB
cis-1,4-Dichloro-2-butene	ND		ug/Kg	5.0	1	243915	03/30/20	03/30/20	JTB
trans-1,4-Dichloro-2-butene	ND		ug/Kg	5.0	1	243915	03/30/20	03/30/20	JTB
Isopropyl Ether (DIPE)	ND		ug/Kg	5.0	1	243915	03/30/20	03/30/20	JTB
Ethyl tert-Butyl Ether (ETBE)	ND		ug/Kg	5.0	1	243915	03/30/20	03/30/20	JTB
Methyl tert-Amyl Ether (TAME)	ND		ug/Kg	5.0	1	243915	03/30/20	03/30/20	JTB
tert-Butyl Alcohol (TBA)	ND		ug/Kg	10	1	243915	03/30/20	03/30/20	JTB
Freon 12	ND		ug/Kg	5.0	1	243915	03/30/20	03/30/20	JTB
Chloromethane	ND		ug/Kg	5.0	1	243915	03/30/20	03/30/20	JTB
Vinyl Chloride	ND		ug/Kg	5.0	1	243915	03/30/20	03/30/20	JTB
Bromomethane	ND		ug/Kg	5.0	1	243915	03/30/20	03/30/20	JTB
Chloroethane	ND		ug/Kg	5.0	1	243915	03/30/20	03/30/20	JTB
Trichlorofluoromethane	ND		ug/Kg	5.0	1	243915	03/30/20	03/30/20	JTB
Acetone	ND		ug/Kg	100	1	243915	03/30/20	03/30/20	JTB
Freon 113	ND		ug/Kg	5.0	1	243915	03/30/20	03/30/20	JTB
1,1-Dichloroethene	ND		ug/Kg	5.0	1	243915	03/30/20	03/30/20	JTB
Methylene Chloride	ND		ug/Kg	5.0	1	243915	03/30/20	03/30/20	JTB

Results for any subcontracted analyses are not included in this section.

ENTHALPY ANALYTICAL

Analysis Results for 426450

426450-031 Analyte	Result	Qual	Units	RL	DF	Batch	Prepared	Analyzed	Chemist
MTBE	ND		ug/Kg	5.0	1	243915	03/30/20	03/30/20	JTB
trans-1,2-Dichloroethene	ND		ug/Kg	5.0	1	243915	03/30/20	03/30/20	JTB
1,1-Dichloroethane	ND		ug/Kg	5.0	1	243915	03/30/20	03/30/20	JTB
2-Butanone	ND		ug/Kg	100	1	243915	03/30/20	03/30/20	JTB
cis-1,2-Dichloroethene	ND		ug/Kg	5.0	1	243915	03/30/20	03/30/20	JTB
2,2-Dichloropropane	ND		ug/Kg	5.0	1	243915	03/30/20	03/30/20	JTB
Chloroform	ND		ug/Kg	5.0	1	243915	03/30/20	03/30/20	JTB
Bromochloromethane	ND		ug/Kg	5.0	1	243915	03/30/20	03/30/20	JTB
1,1,1-Trichloroethane	ND		ug/Kg	5.0	1	243915	03/30/20	03/30/20	JTB
1,1-Dichloropropene	ND		ug/Kg	5.0	1	243915	03/30/20	03/30/20	JTB
Carbon Tetrachloride	ND		ug/Kg	5.0	1	243915	03/30/20	03/30/20	JTB
1,2-Dichloroethane	ND		ug/Kg	5.0	1	243915	03/30/20	03/30/20	JTB
Benzene	ND		ug/Kg	5.0	1	243915	03/30/20	03/30/20	JTB
Trichloroethene	ND		ug/Kg	5.0	1	243915	03/30/20	03/30/20	JTB
1,2-Dichloropropane	ND		ug/Kg	5.0	1	243915	03/30/20	03/30/20	JTB
Bromodichloromethane	ND		ug/Kg	5.0	1	243915	03/30/20	03/30/20	JTB
Dibromomethane	ND		ug/Kg	5.0	1	243915	03/30/20	03/30/20	JTB
4-Methyl-2-Pentanone	ND		ug/Kg	5.0	1	243915	03/30/20	03/30/20	JTB
cis-1,3-Dichloropropene	ND		ug/Kg	5.0	1	243915	03/30/20	03/30/20	JTB
Toluene	ND		ug/Kg	5.0	1	243915	03/30/20	03/30/20	JTB
trans-1,3-Dichloropropene	ND		ug/Kg	5.0	1	243915	03/30/20	03/30/20	JTB
1,1,2-Trichloroethane	ND		ug/Kg	5.0	1	243915	03/30/20	03/30/20	JTB
1,3-Dichloropropane	ND		ug/Kg	5.0	1	243915	03/30/20	03/30/20	JTB
Tetrachloroethene	ND		ug/Kg	5.0	1	243915	03/30/20	03/30/20	JTB
Dibromochloromethane	ND		ug/Kg	5.0	1	243915	03/30/20	03/30/20	JTB
1,2-Dibromoethane	ND		ug/Kg	5.0	1	243915	03/30/20	03/30/20	JTB
Chlorobenzene	ND		ug/Kg	5.0	1	243915	03/30/20	03/30/20	JTB
1,1,1,2-Tetrachloroethane	ND		ug/Kg	5.0	1	243915	03/30/20	03/30/20	JTB
Ethylbenzene	ND		ug/Kg	5.0	1	243915	03/30/20	03/30/20	JTB
m,p-Xylenes	ND		ug/Kg	10	1	243915	03/30/20	03/30/20	JTB
o-Xylene	ND		ug/Kg	5.0	1	243915	03/30/20	03/30/20	JTB
Styrene	ND		ug/Kg	5.0	1	243915	03/30/20	03/30/20	JTB
Bromoform	ND		ug/Kg	5.0	1	243915	03/30/20	03/30/20	JTB
Isopropylbenzene	ND		ug/Kg	5.0	1	243915	03/30/20	03/30/20	JTB
1,1,2,2-Tetrachloroethane	ND		ug/Kg	5.0	1	243915	03/30/20	03/30/20	JTB
1,2,3-Trichloropropane	ND		ug/Kg	5.0	1	243915	03/30/20	03/30/20	JTB
Propylbenzene	ND		ug/Kg	5.0	1	243915	03/30/20	03/30/20	JTB
Bromobenzene	ND		ug/Kg	5.0	1	243915	03/30/20	03/30/20	JTB
1,3,5-Trimethylbenzene	ND		ug/Kg	5.0	1	243915	03/30/20	03/30/20	JTB
2-Chlorotoluene	ND		ug/Kg	5.0	1	243915	03/30/20	03/30/20	JTB
4-Chlorotoluene	ND		ug/Kg	5.0	1	243915	03/30/20	03/30/20	JTB
tert-Butylbenzene	ND		ug/Kg	5.0	1	243915	03/30/20	03/30/20	JTB
1,2,4-Trimethylbenzene	ND		ug/Kg	5.0	1	243915	03/30/20	03/30/20	JTB
sec-Butylbenzene	ND		ug/Kg	5.0	1	243915	03/30/20	03/30/20	JTB
para-Isopropyl Toluene	ND		ug/Kg	5.0	1	243915	03/30/20	03/30/20	JTB
1,3-Dichlorobenzene	ND		ug/Kg	5.0	1	243915	03/30/20	03/30/20	JTB

Results for any subcontracted analyses are not included in this section.

Analysis Results for 426450

426450-031 Analyte	Result	Qual	Units	RL	DF	Batch	Prepared	Analyzed	Chemist
1,4-Dichlorobenzene	ND		ug/Kg	5.0	1	243915	03/30/20	03/30/20	JTB
n-Butylbenzene	ND		ug/Kg	5.0	1	243915	03/30/20	03/30/20	JTB
1,2-Dichlorobenzene	ND		ug/Kg	5.0	1	243915	03/30/20	03/30/20	JTB
1,2-Dibromo-3-Chloropropane	ND		ug/Kg	5.0	1	243915	03/30/20	03/30/20	JTB
1,2,4-Trichlorobenzene	ND		ug/Kg	5.0	1	243915	03/30/20	03/30/20	JTB
Hexachlorobutadiene	ND		ug/Kg	5.0	1	243915	03/30/20	03/30/20	JTB
Naphthalene	ND		ug/Kg	5.0	1	243915	03/30/20	03/30/20	JTB
1,2,3-Trichlorobenzene	ND		ug/Kg	5.0	1	243915	03/30/20	03/30/20	JTB
Xylene (total)	ND		ug/Kg	5.0	1	243915	03/30/20	03/30/20	JTB
Surrogates				**Limits**					
Dibromofluoromethane	100%		%REC	70-145	1	243915	03/30/20	03/30/20	JTB
1,2-Dichloroethane-d4	98%		%REC	70-145	1	243915	03/30/20	03/30/20	JTB
Toluene-d8	103%		%REC	70-145	1	243915	03/30/20	03/30/20	JTB
Bromofluorobenzene	101%		%REC	70-145	1	243915	03/30/20	03/30/20	JTB
Method: EPA 8270C-SIM Prep Method: EPA 3550C									
1-Methylnaphthalene	ND		ug/Kg	100	10	243741	03/24/20	03/27/20	MTS
2-Methylnaphthalene	ND		ug/Kg	100	10	243741	03/24/20	03/27/20	MTS
Naphthalene	ND		ug/Kg	100	10	243741	03/24/20	03/27/20	MTS
Acenaphthylene	ND		ug/Kg	100	10	243741	03/24/20	03/27/20	MTS
Acenaphthene	ND		ug/Kg	100	10	243741	03/24/20	03/27/20	MTS
Fluorene	ND		ug/Kg	100	10	243741	03/24/20	03/27/20	MTS
Phenanthrene	ND		ug/Kg	100	10	243741	03/24/20	03/27/20	MTS
Anthracene	ND		ug/Kg	100	10	243741	03/24/20	03/27/20	MTS
Fluoranthene	ND		ug/Kg	100	10	243741	03/24/20	03/27/20	MTS
Pyrene	ND		ug/Kg	100	10	243741	03/24/20	03/27/20	MTS
Benzo(a)anthracene	ND		ug/Kg	100	10	243741	03/24/20	03/27/20	MTS
Chrysene	ND		ug/Kg	100	10	243741	03/24/20	03/27/20	MTS
Benzo(b)fluoranthene	ND		ug/Kg	100	10	243741	03/24/20	03/27/20	MTS
Benzo(k)fluoranthene	ND		ug/Kg	100	10	243741	03/24/20	03/27/20	MTS
Benzo(a)pyrene	ND		ug/Kg	100	10	243741	03/24/20	03/27/20	MTS
Indeno(1,2,3-cd)pyrene	ND		ug/Kg	100	10	243741	03/24/20	03/27/20	MTS
Dibenz(a,h)anthracene	ND		ug/Kg	100	10	243741	03/24/20	03/27/20	MTS
Benzo(g,h,i)perylene	ND		ug/Kg	100	10	243741	03/24/20	03/27/20	MTS
Surrogates				**Limits**					
Nitrobenzene-d5	47%		%REC	27-125	10	243741	03/24/20	03/27/20	MTS
2-Fluorobiphenyl	53%		%REC	30-120	10	243741	03/24/20	03/27/20	MTS
Terphenyl-d14	61%		%REC	33-155	10	243741	03/24/20	03/27/20	MTS
Method: EPA 8270C Prep Method: EPA 3550C									
Carbazole	ND		ug/Kg	250	1	243926	03/30/20	03/30/20	MTS
1-Methylnaphthalene	ND		ug/Kg	250	1	243926	03/30/20	03/30/20	MTS
Pyridine	ND		ug/Kg	250	1	243926	03/30/20	03/30/20	MTS
N-Nitrosodimethylamine	ND		ug/Kg	250	1	243926	03/30/20	03/30/20	MTS
Phenol	ND		ug/Kg	250	1	243926	03/30/20	03/30/20	MTS
Aniline	ND		ug/Kg	250	1	243926	03/30/20	03/30/20	MTS

Results for any subcontracted analyses are not included in this section.

ENTHALPY ANALYTICAL

Analysis Results for 426450

426450-031 Analyte	Result	Qual	Units	RL	DF	Batch	Prepared	Analyzed	Chemist
bis(2-Chloroethyl)ether	ND		ug/Kg	1,200	1	243926	03/30/20	03/30/20	MTS
2-Chlorophenol	ND		ug/Kg	250	1	243926	03/30/20	03/30/20	MTS
1,3-Dichlorobenzene	ND		ug/Kg	250	1	243926	03/30/20	03/30/20	MTS
1,4-Dichlorobenzene	ND		ug/Kg	250	1	243926	03/30/20	03/30/20	MTS
Benzyl alcohol	ND		ug/Kg	250	1	243926	03/30/20	03/30/20	MTS
1,2-Dichlorobenzene	ND		ug/Kg	250	1	243926	03/30/20	03/30/20	MTS
2-Methylphenol	ND		ug/Kg	250	1	243926	03/30/20	03/30/20	MTS
bis(2-Chloroisopropyl) ether	ND		ug/Kg	250	1	243926	03/30/20	03/30/20	MTS
3-,4-Methylphenol	ND		ug/Kg	400	1	243926	03/30/20	03/30/20	MTS
N-Nitroso-di-n-propylamine	ND		ug/Kg	250	1	243926	03/30/20	03/30/20	MTS
Hexachloroethane	ND		ug/Kg	250	1	243926	03/30/20	03/30/20	MTS
Nitrobenzene	ND		ug/Kg	1,200	1	243926	03/30/20	03/30/20	MTS
Isophorone	ND		ug/Kg	250	1	243926	03/30/20	03/30/20	MTS
2-Nitrophenol	ND		ug/Kg	250	1	243926	03/30/20	03/30/20	MTS
2,4-Dimethylphenol	ND		ug/Kg	250	1	243926	03/30/20	03/30/20	MTS
Benzoic acid	ND		ug/Kg	1,200	1	243926	03/30/20	03/30/20	MTS
bis(2-Chloroethoxy)methane	ND		ug/Kg	250	1	243926	03/30/20	03/30/20	MTS
2,4-Dichlorophenol	ND		ug/Kg	250	1	243926	03/30/20	03/30/20	MTS
1,2,4-Trichlorobenzene	ND		ug/Kg	250	1	243926	03/30/20	03/30/20	MTS
Naphthalene	ND		ug/Kg	250	1	243926	03/30/20	03/30/20	MTS
4-Chloroaniline	ND		ug/Kg	250	1	243926	03/30/20	03/30/20	MTS
Hexachlorobutadiene	ND		ug/Kg	250	1	243926	03/30/20	03/30/20	MTS
4-Chloro-3-methylphenol	ND		ug/Kg	250	1	243926	03/30/20	03/30/20	MTS
2-Methylnaphthalene	ND		ug/Kg	250	1	243926	03/30/20	03/30/20	MTS
Hexachlorocyclopentadiene	ND		ug/Kg	1,200	1	243926	03/30/20	03/30/20	MTS
2,4,6-Trichlorophenol	ND		ug/Kg	250	1	243926	03/30/20	03/30/20	MTS
2,4,5-Trichlorophenol	ND		ug/Kg	250	1	243926	03/30/20	03/30/20	MTS
2-Chloronaphthalene	ND		ug/Kg	250	1	243926	03/30/20	03/30/20	MTS
2-Nitroaniline	ND		ug/Kg	250	1	243926	03/30/20	03/30/20	MTS
Dimethylphthalate	ND		ug/Kg	250	1	243926	03/30/20	03/30/20	MTS
Acenaphthylene	ND		ug/Kg	250	1	243926	03/30/20	03/30/20	MTS
2,6-Dinitrotoluene	ND		ug/Kg	250	1	243926	03/30/20	03/30/20	MTS
3-Nitroaniline	ND		ug/Kg	250	1	243926	03/30/20	03/30/20	MTS
Acenaphthene	ND		ug/Kg	250	1	243926	03/30/20	03/30/20	MTS
2,4-Dinitrophenol	ND		ug/Kg	1,200	1	243926	03/30/20	03/30/20	MTS
4-Nitrophenol	ND		ug/Kg	250	1	243926	03/30/20	03/30/20	MTS
Dibenzofuran	ND		ug/Kg	250	1	243926	03/30/20	03/30/20	MTS
2,4-Dinitrotoluene	ND		ug/Kg	250	1	243926	03/30/20	03/30/20	MTS
Diethylphthalate	ND		ug/Kg	250	1	243926	03/30/20	03/30/20	MTS
Fluorene	ND		ug/Kg	250	1	243926	03/30/20	03/30/20	MTS
4-Chlorophenyl-phenylether	ND		ug/Kg	250	1	243926	03/30/20	03/30/20	MTS
4-Nitroaniline	ND		ug/Kg	250	1	243926	03/30/20	03/30/20	MTS
4,6-Dinitro-2-methylphenol	ND		ug/Kg	250	1	243926	03/30/20	03/30/20	MTS
N-Nitrosodiphenylamine	ND		ug/Kg	250	1	243926	03/30/20	03/30/20	MTS
Azobenzene	ND		ug/Kg	250	1	243926	03/30/20	03/30/20	MTS
4-Bromophenyl-phenylether	ND		ug/Kg	250	1	243926	03/30/20	03/30/20	MTS

Results for any subcontracted analyses are not included in this section.

ENTHALPY ANALYTICAL

Analysis Results for 426450

426450-031 Analyte	Result	Qual	Units	RL	DF	Batch	Prepared	Analyzed	Chemist
Hexachlorobenzene	ND		ug/Kg	250	1	243926	03/30/20	03/30/20	MTS
Pentachlorophenol	ND		ug/Kg	1,200	1	243926	03/30/20	03/30/20	MTS
Phenanthrene	ND		ug/Kg	250	1	243926	03/30/20	03/30/20	MTS
Anthracene	ND		ug/Kg	250	1	243926	03/30/20	03/30/20	MTS
Di-n-butylphthalate	ND		ug/Kg	250	1	243926	03/30/20	03/30/20	MTS
Fluoranthene	ND		ug/Kg	250	1	243926	03/30/20	03/30/20	MTS
Benzidine	ND		ug/Kg	1,200	1	243926	03/30/20	03/30/20	MTS
Pyrene	ND		ug/Kg	250	1	243926	03/30/20	03/30/20	MTS
Butylbenzylphthalate	ND		ug/Kg	250	1	243926	03/30/20	03/30/20	MTS
3,3'-Dichlorobenzidine	ND		ug/Kg	1,200	1	243926	03/30/20	03/30/20	MTS
Benzo(a)anthracene	ND		ug/Kg	250	1	243926	03/30/20	03/30/20	MTS
Chrysene	ND		ug/Kg	250	1	243926	03/30/20	03/30/20	MTS
bis(2-Ethylhexyl)phthalate	ND		ug/Kg	250	1	243926	03/30/20	03/30/20	MTS
Di-n-octylphthalate	ND		ug/Kg	250	1	243926	03/30/20	03/30/20	MTS
Benzo(b)fluoranthene	ND		ug/Kg	250	1	243926	03/30/20	03/30/20	MTS
Benzo(k)fluoranthene	ND		ug/Kg	250	1	243926	03/30/20	03/30/20	MTS
Benzo(a)pyrene	ND		ug/Kg	250	1	243926	03/30/20	03/30/20	MTS
Indeno(1,2,3-cd)pyrene	ND		ug/Kg	250	1	243926	03/30/20	03/30/20	MTS
Dibenz(a,h)anthracene	ND		ug/Kg	250	1	243926	03/30/20	03/30/20	MTS
Benzo(g,h,i)perylene	ND		ug/Kg	250	1	243926	03/30/20	03/30/20	MTS
Surrogates				**Limits**					
2-Fluorophenol	46%		%REC	13-153	1	243926	03/30/20	03/30/20	MTS
Phenol-d6	45%		%REC	10-110	1	243926	03/30/20	03/30/20	MTS
2,4,6-Tribromophenol	59%		%REC	34-143	1	243926	03/30/20	03/30/20	MTS
Nitrobenzene-d5	46%		%REC	27-125	1	243926	03/30/20	03/30/20	MTS
2-Fluorobiphenyl	47%		%REC	41-125	1	243926	03/30/20	03/30/20	MTS
Terphenyl-d14	64%		%REC	33-155	1	243926	03/30/20	03/30/20	MTS

DO Diluted Out
ND Not Detected
b See narrative

Results for any subcontracted analyses are not included in this section.

ENTHALPY ANALYTICAL

Batch QC

Type: Blank	Lab ID: QC863552	Batch: 243808
Matrix: Soil	Method: EPA 7471A	Prep Method: METHOD

QC863552 Analyte	Result	Qual	Units	RL	Prepared	Analyzed
Mercury	ND		mg/Kg	0.14	03/26/20	03/27/20

Type: Lab Control Sample	Lab ID: QC863553	Batch: 243808
Matrix: Soil	Method: EPA 7471A	Prep Method: METHOD

QC863553 Analyte	Result	Spiked	Units	Recovery	Qual	Limits
Mercury	0.7666	0.8333	mg/Kg	92%		80-120

Type: Matrix Spike	Lab ID: QC863554	Batch: 243808
Matrix (Source ID): Soil (426449-001)	Method: EPA 7471A	Prep Method: METHOD

QC863554 Analyte	Result	Source Sample Result	Spiked	Units	Recovery	Qual	Limits	DF
Mercury	0.8024	ND	0.8333	mg/Kg	96%		75-125	1

Type: Matrix Spike Duplicate	Lab ID: QC863555	Batch: 243808
Matrix (Source ID): Soil (426449-001)	Method: EPA 7471A	Prep Method: METHOD

QC863555 Analyte	Result	Source Sample Result	Spiked	Units	Recovery	Qual	Limits	RPD	RPD Lim	DF
Mercury	0.7624	ND	0.7937	mg/Kg	96%		75-125	0	20	0.95

ENTHALPY ANALYTICAL

Batch QC

Type: Blank	Lab ID: QC863472	Batch: 243775
Matrix: Soil		

QC863472 Analyte	Result	Qual	Units	RL	Prepared	Analyzed
Method: EPA 8081A Prep Method: EPA 3546						
alpha-BHC	ND		ug/Kg	5.0	03/25/20	03/26/20
beta-BHC	ND		ug/Kg	5.0	03/25/20	03/26/20
gamma-BHC	ND		ug/Kg	5.0	03/25/20	03/26/20
delta-BHC	ND		ug/Kg	5.0	03/25/20	03/26/20
Heptachlor	ND		ug/Kg	5.0	03/25/20	03/26/20
Aldrin	ND		ug/Kg	5.0	03/25/20	03/26/20
Heptachlor epoxide	ND		ug/Kg	5.0	03/25/20	03/26/20
Endosulfan I	ND		ug/Kg	5.0	03/25/20	03/26/20
Dieldrin	ND		ug/Kg	5.0	03/25/20	03/26/20
4,4'-DDE	ND		ug/Kg	5.0	03/25/20	03/26/20
Endrin	ND		ug/Kg	5.0	03/25/20	03/26/20
Endosulfan II	ND		ug/Kg	5.0	03/25/20	03/26/20
Endosulfan sulfate	ND		ug/Kg	5.0	03/25/20	03/26/20
4,4'-DDD	ND		ug/Kg	5.0	03/25/20	03/26/20
Endrin aldehyde	ND		ug/Kg	5.0	03/25/20	03/26/20
Endrin ketone	ND		ug/Kg	5.0	03/25/20	03/26/20
4,4'-DDT	ND		ug/Kg	5.0	03/25/20	03/26/20
Methoxychlor	ND		ug/Kg	10	03/25/20	03/26/20
Toxaphene	ND		ug/Kg	100	03/25/20	03/26/20
Chlordane (Technical)	ND		ug/Kg	50	03/25/20	03/26/20
Surrogates				**Limits**		
TCMX	75%		%REC	50-150	03/25/20	03/26/20
Decachlorobiphenyl	79%		%REC	24-120	03/25/20	03/26/20
Method: EPA 8082 Prep Method: EPA 3546						
Aroclor-1016	ND		ug/Kg	50	03/25/20	03/30/20
Aroclor-1221	ND		ug/Kg	50	03/25/20	03/30/20
Aroclor-1232	ND		ug/Kg	50	03/25/20	03/30/20
Aroclor-1242	ND		ug/Kg	50	03/25/20	03/30/20
Aroclor-1248	ND		ug/Kg	50	03/25/20	03/30/20
Aroclor-1254	ND		ug/Kg	50	03/25/20	03/30/20
Aroclor-1260	ND		ug/Kg	50	03/25/20	03/30/20
Aroclor-1262	ND		ug/Kg	50	03/25/20	03/30/20
Aroclor-1268	ND		ug/Kg	50	03/25/20	03/30/20
Surrogates				**Limits**		
Decachlorobiphenyl (PCB)	74%		%REC	50-150	03/25/20	03/30/20

ENTHALPY ANALYTICAL

Batch QC

Type: Lab Control Sample	**Lab ID: QC863473**	**Batch: 243775**
Matrix: Soil	**Method: EPA 8081A**	**Prep Method: EPA 3546**

QC863473 Analyte	Result	Spiked	Units	Recovery	Qual	Limits
alpha-BHC	40.40	50.00	ug/Kg	81%		45-150
beta-BHC	41.06	50.00	ug/Kg	82%		42-156
gamma-BHC	39.04	50.00	ug/Kg	78%		47-151
delta-BHC	43.22	50.00	ug/Kg	86%		37-161
Heptachlor	36.31	50.00	ug/Kg	73%	#	50-144
Aldrin	36.90	50.00	ug/Kg	74%		46-142
Heptachlor epoxide	39.22	50.00	ug/Kg	78%		48-145
Endosulfan I	39.88	50.00	ug/Kg	80%		47-141
Dieldrin	40.44	50.00	ug/Kg	81%		47-151
4,4'-DDE	42.19	50.00	ug/Kg	84%		44-163
Endrin	46.14	50.00	ug/Kg	92%		47-160
Endosulfan II	43.69	50.00	ug/Kg	87%		44-156
Endosulfan sulfate	45.71	50.00	ug/Kg	91%		43-157
4,4'-DDD	41.78	50.00	ug/Kg	84%		43-172
Endrin aldehyde	33.79	50.00	ug/Kg	68%	#	32-127
Endrin ketone	48.60	50.00	ug/Kg	97%		48-159
4,4'-DDT	46.44	50.00	ug/Kg	93%		40-158
Methoxychlor	49.17	50.00	ug/Kg	98%		36-182
Surrogates						
TCMX	37.06	50.00	ug/Kg	74%		50-150
Decachlorobiphenyl	41.16	50.00	ug/Kg	82%		24-120

ENTHALPY ANALYTICAL

Batch QC

Type:	Matrix Spike	Lab ID:	QC863474	Batch:	243775
Matrix (Source ID):	Soil (426193-005)	Method:	EPA 8081A	Prep Method:	EPA 3546

QC863474 Analyte	Result	Source Sample Result	Spiked	Units	Recovery	Qual	Limits	DF
alpha-BHC	39.75	ND	49.50	ug/Kg	80%		45-150	0.99
beta-BHC	40.00	ND	49.50	ug/Kg	81%		42-156	0.99
gamma-BHC	38.18	ND	49.50	ug/Kg	77%		47-151	0.99
delta-BHC	41.67	ND	49.50	ug/Kg	84%		37-161	0.99
Heptachlor	34.26	ND	49.50	ug/Kg	69%	#	50-144	0.99
Aldrin	35.56	ND	49.50	ug/Kg	72%		46-142	0.99
Heptachlor epoxide	35.84	ND	49.50	ug/Kg	72%		48-145	0.99
Endosulfan I	37.19	ND	49.50	ug/Kg	75%		47-141	0.99
Dieldrin	37.73	ND	49.50	ug/Kg	76%		47-151	0.99
4,4'-DDE	39.78	ND	49.50	ug/Kg	80%		44-163	0.99
Endrin	42.44	ND	49.50	ug/Kg	86%		47-160	0.99
Endosulfan II	39.99	ND	49.50	ug/Kg	81%		44-156	0.99
Endosulfan sulfate	42.88	ND	49.50	ug/Kg	87%		43-157	0.99
4,4'-DDD	38.32	ND	49.50	ug/Kg	77%		43-172	0.99
Endrin aldehyde	36.02	ND	49.50	ug/Kg	73%	#	32-127	0.99
Endrin ketone	47.35	ND	49.50	ug/Kg	96%		48-159	0.99
4,4'-DDT	43.76	ND	49.50	ug/Kg	88%		40-158	0.99
Methoxychlor	47.88	ND	49.50	ug/Kg	97%		36-182	0.99
Surrogates								
TCMX	33.43		49.50	ug/Kg	68%		50-150	0.99
Decachlorobiphenyl	37.32		49.50	ug/Kg	75%		24-120	0.99

ENTHALPY ANALYTICAL

Batch QC

Type:	**Matrix Spike Duplicate**	**Lab ID:**	**QC863475**	**Batch:**	**243775**
Matrix (Source ID):	**Soil (426193-005)**	**Method:**	**EPA 8081A**	**Prep Method:**	**EPA 3546**

QC863475 Analyte	Result	Source Sample Result	Spiked	Units	Recovery	Qual	Limits	RPD	RPD Lim	DF
alpha-BHC	38.54	ND	49.50	ug/Kg	78%		45-150	3	20	0.99
beta-BHC	38.94	ND	49.50	ug/Kg	79%		42-156	3	20	0.99
gamma-BHC	37.20	ND	49.50	ug/Kg	75%		47-151	3	20	0.99
delta-BHC	41.04	ND	49.50	ug/Kg	83%		37-161	2	20	0.99
Heptachlor	33.84	ND	49.50	ug/Kg	68%	#	50-144	1	20	0.99
Aldrin	34.72	ND	49.50	ug/Kg	70%		46-142	2	20	0.99
Heptachlor epoxide	35.90	ND	49.50	ug/Kg	73%		48-145	0	20	0.99
Endosulfan I	37.27	ND	49.50	ug/Kg	75%		47-141	0	20	0.99
Dieldrin	38.19	ND	49.50	ug/Kg	77%		47-151	1	20	0.99
4,4'-DDE	39.59	ND	49.50	ug/Kg	80%		44-163	0	20	0.99
Endrin	44.66	ND	49.50	ug/Kg	90%		47-160	5	20	0.99
Endosulfan II	41.51	ND	49.50	ug/Kg	84%		44-156	4	20	0.99
Endosulfan sulfate	43.34	ND	49.50	ug/Kg	88%		43-157	1	20	0.99
4,4'-DDD	39.86	ND	49.50	ug/Kg	81%		43-172	4	20	0.99
Endrin aldehyde	35.94	ND	49.50	ug/Kg	73%	#	32-127	0	20	0.99
Endrin ketone	47.71	ND	49.50	ug/Kg	96%		48-159	1	20	0.99
4,4'-DDT	45.60	ND	49.50	ug/Kg	92%		40-158	4	20	0.99
Methoxychlor	49.46	ND	49.50	ug/Kg	100%		36-182	3	20	0.99
Surrogates										
TCMX	33.61		49.50	ug/Kg	68%		50-150			0.99
Decachlorobiphenyl	38.27		49.50	ug/Kg	77%		24-120			0.99

Type:	**Lab Control Sample**	**Lab ID:**	**QC863476**	**Batch:**	**243775**
Matrix:	**Soil**	**Method:**	**EPA 8082**	**Prep Method:**	**EPA 3546**

QC863476 Analyte	Result	Spiked	Units	Recovery	Qual	Limits
Aroclor-1016	580.4	500.0	ug/Kg	116%		70-130
Aroclor-1260	564.0	500.0	ug/Kg	113%		70-130
Surrogates						
Decachlorobiphenyl (PCB)	48.27	50.00	ug/Kg	97%		50-150

ENTHALPY ANALYTICAL

Batch QC

Type:	**Matrix Spike**	**Lab ID:**	**QC863477**	**Batch:**	**243775**
Matrix (Source ID):	**Soil (426193-005)**	**Method:**	**EPA 8082**	**Prep Method:**	**EPA 3546**

QC863477 Analyte	Result	Source Sample Result	Spiked	Units	Recovery	Qual	Limits	DF
Aroclor-1016	468.4	ND	500.0	ug/Kg	94%		70-130	1
Aroclor-1260	488.2	ND	500.0	ug/Kg	98%		70-130	1
Surrogates								
Decachlorobiphenyl (PCB)	42.44		50.00	ug/Kg	85%		50-150	1

Type:	**Matrix Spike Duplicate**	**Lab ID:**	**QC863478**	**Batch:**	**243775**
Matrix (Source ID):	**Soil (426193-005)**	**Method:**	**EPA 8082**	**Prep Method:**	**EPA 3546**

QC863478 Analyte	Result	Source Sample Result	Spiked	Units	Recovery	Qual	Limits	RPD	RPD Lim	DF
Aroclor-1016	469.2	ND	500.0	ug/Kg	94%		70-130	0	20	1
Aroclor-1260	472.3	ND	500.0	ug/Kg	94%		70-130	3	20	1
Surrogates										
Decachlorobiphenyl (PCB)	43.51		50.00	ug/Kg	87%		50-150			1

Type:	**Blank**	**Lab ID:**	**QC863973**	**Batch:**	**243982**
Matrix:	**Soil**	**Method:**	**EPA 1664A M**		

QC863973 Analyte	Result	Qual	Units	RL	Prepared	Analyzed
Total Oil and Grease	ND		mg/Kg	500	03/31/20	03/31/20

Type:	**Lab Control Sample**	**Lab ID:**	**QC863974**	**Batch:**	**243982**
Matrix:	**Soil**	**Method:**	**EPA 1664A M**		

QC863974 Analyte	Result	Spiked	Units	Recovery	Qual	Limits
Total Oil and Grease	1,850	2000	mg/Kg	93%		80-120

Type:	**Lab Control Sample Duplicate**	**Lab ID:**	**QC863975**	**Batch:**	**243982**
Matrix:	**Soil**	**Method:**	**EPA 1664A M**		

QC863975 Analyte	Result	Spiked	Units	Recovery	Qual	Limits	RPD	RPD Lim
Total Oil and Grease	2,000	2000	mg/Kg	100%		80-120	8	20

ENTHALPY ANALYTICAL

Batch QC

Type:	**Blank**	**Lab ID:**	**QC863842**	**Batch:**	**243926**
Matrix:	**Soil**	**Method:**	**EPA 8270C**	**Prep Method:**	**EPA 3550C**

QC863842 Analyte	Result	Qual	Units	RL	Prepared	Analyzed
Carbazole	ND		ug/Kg	250	03/30/20	03/30/20
1-Methylnaphthalene	ND		ug/Kg	250	03/30/20	03/30/20
Pyridine	ND		ug/Kg	250	03/30/20	03/30/20
N-Nitrosodimethylamine	ND		ug/Kg	250	03/30/20	03/30/20
Phenol	ND		ug/Kg	250	03/30/20	03/30/20
Aniline	ND		ug/Kg	250	03/30/20	03/30/20
bis(2-Chloroethyl)ether	ND		ug/Kg	1,200	03/30/20	03/30/20
2-Chlorophenol	ND		ug/Kg	250	03/30/20	03/30/20
1,3-Dichlorobenzene	ND		ug/Kg	250	03/30/20	03/30/20
1,4-Dichlorobenzene	ND		ug/Kg	250	03/30/20	03/30/20
Benzyl alcohol	ND		ug/Kg	250	03/30/20	03/30/20
1,2-Dichlorobenzene	ND		ug/Kg	250	03/30/20	03/30/20
2-Methylphenol	ND		ug/Kg	250	03/30/20	03/30/20
bis(2-Chloroisopropyl) ether	ND		ug/Kg	250	03/30/20	03/30/20
3-,4-Methylphenol	ND		ug/Kg	400	03/30/20	03/30/20
N-Nitroso-di-n-propylamine	ND		ug/Kg	250	03/30/20	03/30/20
Hexachloroethane	ND		ug/Kg	250	03/30/20	03/30/20
Nitrobenzene	ND		ug/Kg	1,200	03/30/20	03/30/20
Isophorone	ND		ug/Kg	250	03/30/20	03/30/20
2-Nitrophenol	ND		ug/Kg	250	03/30/20	03/30/20
2,4-Dimethylphenol	ND		ug/Kg	250	03/30/20	03/30/20
Benzoic acid	ND		ug/Kg	1,200	03/30/20	03/30/20
bis(2-Chloroethoxy)methane	ND		ug/Kg	250	03/30/20	03/30/20
2,4-Dichlorophenol	ND		ug/Kg	250	03/30/20	03/30/20
1,2,4-Trichlorobenzene	ND		ug/Kg	250	03/30/20	03/30/20
Naphthalene	ND		ug/Kg	250	03/30/20	03/30/20
4-Chloroaniline	ND		ug/Kg	250	03/30/20	03/30/20
Hexachlorobutadiene	ND		ug/Kg	250	03/30/20	03/30/20
4-Chloro-3-methylphenol	ND		ug/Kg	250	03/30/20	03/30/20
2-Methylnaphthalene	ND		ug/Kg	250	03/30/20	03/30/20
Hexachlorocyclopentadiene	ND		ug/Kg	1,200	03/30/20	03/30/20
2,4,6-Trichlorophenol	ND		ug/Kg	250	03/30/20	03/30/20
2,4,5-Trichlorophenol	ND		ug/Kg	250	03/30/20	03/30/20
2-Chloronaphthalene	ND		ug/Kg	250	03/30/20	03/30/20
2-Nitroaniline	ND		ug/Kg	250	03/30/20	03/30/20
Dimethylphthalate	ND		ug/Kg	250	03/30/20	03/30/20
Acenaphthylene	ND		ug/Kg	250	03/30/20	03/30/20
2,6-Dinitrotoluene	ND		ug/Kg	250	03/30/20	03/30/20
3-Nitroaniline	ND		ug/Kg	250	03/30/20	03/30/20
Acenaphthene	ND		ug/Kg	250	03/30/20	03/30/20
2,4-Dinitrophenol	ND		ug/Kg	1,200	03/30/20	03/30/20
4-Nitrophenol	ND		ug/Kg	250	03/30/20	03/30/20

ENTHALPY ANALYTICAL

Batch QC

QC863842 Analyte	Result	Qual	Units	RL	Prepared	Analyzed
Dibenzofuran	ND		ug/Kg	250	03/30/20	03/30/20
2,4-Dinitrotoluene	ND		ug/Kg	250	03/30/20	03/30/20
Diethylphthalate	ND		ug/Kg	250	03/30/20	03/30/20
Fluorene	ND		ug/Kg	250	03/30/20	03/30/20
4-Chlorophenyl-phenylether	ND		ug/Kg	250	03/30/20	03/30/20
4-Nitroaniline	ND		ug/Kg	250	03/30/20	03/30/20
4,6-Dinitro-2-methylphenol	ND		ug/Kg	250	03/30/20	03/30/20
N-Nitrosodiphenylamine	ND		ug/Kg	250	03/30/20	03/30/20
Azobenzene	ND		ug/Kg	250	03/30/20	03/30/20
4-Bromophenyl-phenylether	ND		ug/Kg	250	03/30/20	03/30/20
Hexachlorobenzene	ND		ug/Kg	250	03/30/20	03/30/20
Pentachlorophenol	ND		ug/Kg	1,200	03/30/20	03/30/20
Phenanthrene	ND		ug/Kg	250	03/30/20	03/30/20
Anthracene	ND		ug/Kg	250	03/30/20	03/30/20
Di-n-butylphthalate	ND		ug/Kg	250	03/30/20	03/30/20
Fluoranthene	ND		ug/Kg	250	03/30/20	03/30/20
Benzidine	ND		ug/Kg	1,200	03/30/20	03/30/20
Pyrene	ND		ug/Kg	250	03/30/20	03/30/20
Butylbenzylphthalate	ND		ug/Kg	250	03/30/20	03/30/20
3,3'-Dichlorobenzidine	ND		ug/Kg	1,200	03/30/20	03/30/20
Benzo(a)anthracene	ND		ug/Kg	250	03/30/20	03/30/20
Chrysene	ND		ug/Kg	250	03/30/20	03/30/20
bis(2-Ethylhexyl)phthalate	ND		ug/Kg	250	03/30/20	03/30/20
Di-n-octylphthalate	ND		ug/Kg	250	03/30/20	03/30/20
Benzo(b)fluoranthene	ND		ug/Kg	250	03/30/20	03/30/20
Benzo(k)fluoranthene	ND		ug/Kg	250	03/30/20	03/30/20
Benzo(a)pyrene	ND		ug/Kg	250	03/30/20	03/30/20
Indeno(1,2,3-cd)pyrene	ND		ug/Kg	250	03/30/20	03/30/20
Dibenz(a,h)anthracene	ND		ug/Kg	250	03/30/20	03/30/20
Benzo(g,h,i)perylene	ND		ug/Kg	250	03/30/20	03/30/20
Surrogates				**Limits**		
2-Fluorophenol	104%		%REC	13-153	03/30/20	03/30/20
Phenol-d6	99%		%REC	10-110	03/30/20	03/30/20
2,4,6-Tribromophenol	97%		%REC	34-143	03/30/20	03/30/20
Nitrobenzene-d5	104%		%REC	27-125	03/30/20	03/30/20
2-Fluorobiphenyl	105%		%REC	41-125	03/30/20	03/30/20
Terphenyl-d14	109%		%REC	33-155	03/30/20	03/30/20

ENTHALPY ANALYTICAL

Batch QC

Type: Lab Control Sample	**Lab ID:** QC863843	**Batch:** 243926
Matrix: Soil	**Method:** EPA 8270C	**Prep Method:** EPA 3550C

QC863843 Analyte	Result	Spiked	Units	Recovery	Qual	Limits
Phenol	1,973	2000	ug/Kg	99%		51-111
2-Chlorophenol	1,961	2000	ug/Kg	98%		48-114
1,4-Dichlorobenzene	1,814	2000	ug/Kg	91%		30-116
3-,4-Methylphenol	1,843	2000	ug/Kg	92%		56-124
N-Nitroso-di-n-propylamine	1,966	2000	ug/Kg	98%		54-110
2,4-Dimethylphenol	1,365	2000	ug/Kg	68%		50-112
1,2,4-Trichlorobenzene	1,823	2000	ug/Kg	91%		43-111
4-Chloro-3-methylphenol	2,020	2000	ug/Kg	101%		61-122
2,4,5-Trichlorophenol	1,903	2000	ug/Kg	95%		57-125
Acenaphthene	1,896	2000	ug/Kg	95%		53-112
4-Nitrophenol	2,483	2000	ug/Kg	124%	b	54-126
2,4-Dinitrotoluene	2,007	2000	ug/Kg	100%		57-124
Pentachlorophenol	1,862	2000	ug/Kg	93%		41-103
Pyrene	1,865	2000	ug/Kg	93%		63-119
Chrysene	1,863	2000	ug/Kg	93%		59-117
Benzo(b)fluoranthene	2,217	2000	ug/Kg	111%		61-125
Surrogates						
2-Fluorophenol	2,089	2000	ug/Kg	104%		13-153
Phenol-d6	2,014	2000	ug/Kg	101%		10-110
2,4,6-Tribromophenol	1,975	2000	ug/Kg	99%		34-143
Nitrobenzene-d5	1,992	2000	ug/Kg	100%		27-125
2-Fluorobiphenyl	1,970	2000	ug/Kg	99%		41-125
Terphenyl-d14	2,005	2000	ug/Kg	100%		33-155

ENTHALPY ANALYTICAL

Batch QC

Type:	**Matrix Spike**	**Lab ID:**	**QC863844**	**Batch:**	**243926**
Matrix (Source ID):	**Soil (426456-003)**	**Method:**	**EPA 8270C**	**Prep Method:**	**EPA 3550C**

QC863844 Analyte	Result	Source Sample Result	Spiked	Units	Recovery	Qual	Limits	DF
Phenol	2,009	54.45	1990	ug/Kg	98%		46-116	1
2-Chlorophenol	1,843	ND	1990	ug/Kg	93%		42-102	1
1,4-Dichlorobenzene	1,760	ND	1990	ug/Kg	88%		39-95	1
3-,4-Methylphenol	1,892	ND	1990	ug/Kg	95%		33-116	1
N-Nitroso-di-n-propylamine	1,899	ND	1990	ug/Kg	95%		41-127	1
2,4-Dimethylphenol	1,478	ND	1990	ug/Kg	74%		37-105	1
1,2,4-Trichlorobenzene	1,791	ND	1990	ug/Kg	90%		35-93	1
4-Chloro-3-methylphenol	1,871	ND	1990	ug/Kg	94%		33-120	1
2,4,5-Trichlorophenol	1,779	ND	1990	ug/Kg	89%		44-108	1
Acenaphthene	1,718	ND	1990	ug/Kg	86%		57-99	1
4-Nitrophenol	2,185	ND	1990	ug/Kg	110%	b,*	37-107	1
2,4-Dinitrotoluene	1,800	ND	1990	ug/Kg	90%		48-109	1
Pentachlorophenol	1,620	ND	1990	ug/Kg	81%		43-120	1
Pyrene	1,742	ND	1990	ug/Kg	88%		53-129	1
Chrysene	1,767	ND	1990	ug/Kg	89%		68-120	1
Benzo(b)fluoranthene	1,963	ND	1990	ug/Kg	99%		59-126	1
Surrogates								
2-Fluorophenol	1,874		1990	ug/Kg	94%		13-153	1
Phenol-d6	1,893		1990	ug/Kg	95%		10-110	1
2,4,6-Tribromophenol	1,718		1990	ug/Kg	86%		34-143	1
Nitrobenzene-d5	1,880		1990	ug/Kg	94%		27-125	1
2-Fluorobiphenyl	1,752		1990	ug/Kg	88%		41-125	1
Terphenyl-d14	1,839		1990	ug/Kg	92%		33-155	1

ENTHALPY ANALYTICAL

Batch QC

Type:	**Matrix Spike Duplicate**	**Lab ID:**	**QC863845**	**Batch:**	**243926**
Matrix (Source ID):	**Soil (426456-003)**	**Method:**	**EPA 8270C**	**Prep Method:**	**EPA 3550C**

QC863845 Analyte	Result	Source Sample Result	Spiked	Units	Recovery	Qual	Limits	RPD	RPD Lim	DF
Phenol	1,776	54.45	1980	ug/Kg	87%		46-116	12	30	0.99
2-Chlorophenol	1,676	ND	1980	ug/Kg	85%		42-102	9	30	0.99
1,4-Dichlorobenzene	1,536	ND	1980	ug/Kg	78%		39-95	13	30	0.99
3-,4-Methylphenol	1,597	ND	1980	ug/Kg	81%		33-116	16	30	0.99
N-Nitroso-di-n-propylamine	1,708	ND	1980	ug/Kg	86%		41-127	10	30	0.99
2,4-Dimethylphenol	1,401	ND	1980	ug/Kg	71%		37-105	5	30	0.99
1,2,4-Trichlorobenzene	1,558	ND	1980	ug/Kg	79%		35-93	13	30	0.99
4-Chloro-3-methylphenol	1,818	ND	1980	ug/Kg	92%		33-120	2	30	0.99
2,4,5-Trichlorophenol	1,704	ND	1980	ug/Kg	86%		44-108	4	30	0.99
Acenaphthene	1,686	ND	1980	ug/Kg	85%		57-99	1	30	0.99
4-Nitrophenol	2,036	ND	1980	ug/Kg	103%	b	37-107	7	30	0.99
2,4-Dinitrotoluene	1,787	ND	1980	ug/Kg	90%		48-109	0	30	0.99
Pentachlorophenol	1,637	ND	1980	ug/Kg	83%		43-120	2	30	0.99
Pyrene	1,713	ND	1980	ug/Kg	87%		53-129	1	30	0.99
Chrysene	1,672	ND	1980	ug/Kg	84%		68-120	5	30	0.99
Benzo(b)fluoranthene	1,846	ND	1980	ug/Kg	93%		59-126	6	30	0.99
Surrogates										
2-Fluorophenol	1,700		1980	ug/Kg	86%		13-153			0.99
Phenol-d6	1,720		1980	ug/Kg	87%		10-110			0.99
2,4,6-Tribromophenol	1,728		1980	ug/Kg	87%		34-143			0.99
Nitrobenzene-d5	1,732		1980	ug/Kg	87%		27-125			0.99
2-Fluorobiphenyl	1,702		1980	ug/Kg	86%		41-125			0.99
Terphenyl-d14	1,819		1980	ug/Kg	92%		33-155			0.99

ENTHALPY ANALYTICAL

Batch QC

Type:	**Blank**	**Lab ID:**	**QC863786**	**Batch:**	**243906**
Matrix:	**Soil**	**Method:**	**EPA 8260B**	**Prep Method:**	**EPA 5030B**

QC863786 Analyte	Result	Qual	Units	RL	Prepared	Analyzed
3-Chloropropene	ND		ug/Kg	5.0	03/29/20	03/29/20
cis-1,4-Dichloro-2-butene	ND		ug/Kg	5.0	03/29/20	03/29/20
trans-1,4-Dichloro-2-butene	ND		ug/Kg	5.0	03/29/20	03/29/20
Isopropyl Ether (DIPE)	ND		ug/Kg	5.0	03/29/20	03/29/20
Ethyl tert-Butyl Ether (ETBE)	ND		ug/Kg	5.0	03/29/20	03/29/20
Methyl tert-Amyl Ether (TAME)	ND		ug/Kg	5.0	03/29/20	03/29/20
tert-Butyl Alcohol (TBA)	ND		ug/Kg	10	03/29/20	03/29/20
Freon 12	ND		ug/Kg	5.0	03/29/20	03/29/20
Chloromethane	ND		ug/Kg	5.0	03/29/20	03/29/20
Vinyl Chloride	ND		ug/Kg	5.0	03/29/20	03/29/20
Bromomethane	ND		ug/Kg	5.0	03/29/20	03/29/20
Chloroethane	ND		ug/Kg	5.0	03/29/20	03/29/20
Trichlorofluoromethane	ND		ug/Kg	5.0	03/29/20	03/29/20
Acetone	ND		ug/Kg	100	03/29/20	03/29/20
Freon 113	ND		ug/Kg	5.0	03/29/20	03/29/20
1,1-Dichloroethene	ND		ug/Kg	5.0	03/29/20	03/29/20
Methylene Chloride	ND		ug/Kg	5.0	03/29/20	03/29/20
MTBE	ND		ug/Kg	5.0	03/29/20	03/29/20
trans-1,2-Dichloroethene	ND		ug/Kg	5.0	03/29/20	03/29/20
1,1-Dichloroethane	ND		ug/Kg	5.0	03/29/20	03/29/20
2-Butanone	ND		ug/Kg	100	03/29/20	03/29/20
cis-1,2-Dichloroethene	ND		ug/Kg	5.0	03/29/20	03/29/20
2,2-Dichloropropane	ND		ug/Kg	5.0	03/29/20	03/29/20
Chloroform	ND		ug/Kg	5.0	03/29/20	03/29/20
Bromochloromethane	ND		ug/Kg	5.0	03/29/20	03/29/20
1,1,1-Trichloroethane	ND		ug/Kg	5.0	03/29/20	03/29/20
1,1-Dichloropropene	ND		ug/Kg	5.0	03/29/20	03/29/20
Carbon Tetrachloride	ND		ug/Kg	5.0	03/29/20	03/29/20
1,2-Dichloroethane	ND		ug/Kg	5.0	03/29/20	03/29/20
Benzene	ND		ug/Kg	5.0	03/29/20	03/29/20
Trichloroethene	ND		ug/Kg	5.0	03/29/20	03/29/20
1,2-Dichloropropane	ND		ug/Kg	5.0	03/29/20	03/29/20
Bromodichloromethane	ND		ug/Kg	5.0	03/29/20	03/29/20
Dibromomethane	ND		ug/Kg	5.0	03/29/20	03/29/20
4-Methyl-2-Pentanone	ND		ug/Kg	5.0	03/29/20	03/29/20
cis-1,3-Dichloropropene	ND		ug/Kg	5.0	03/29/20	03/29/20
Toluene	ND		ug/Kg	5.0	03/29/20	03/29/20
trans-1,3-Dichloropropene	ND		ug/Kg	5.0	03/29/20	03/29/20
1,1,2-Trichloroethane	ND		ug/Kg	5.0	03/29/20	03/29/20
1,3-Dichloropropane	ND		ug/Kg	5.0	03/29/20	03/29/20
Tetrachloroethene	ND		ug/Kg	5.0	03/29/20	03/29/20
Dibromochloromethane	ND		ug/Kg	5.0	03/29/20	03/29/20

ENTHALPY ANALYTICAL

Batch QC

QC863786 Analyte	Result	Qual	Units	RL	Prepared	Analyzed
1,2-Dibromoethane	ND		ug/Kg	5.0	03/29/20	03/29/20
Chlorobenzene	ND		ug/Kg	5.0	03/29/20	03/29/20
1,1,1,2-Tetrachloroethane	ND		ug/Kg	5.0	03/29/20	03/29/20
Ethylbenzene	ND		ug/Kg	5.0	03/29/20	03/29/20
m,p-Xylenes	ND		ug/Kg	10	03/29/20	03/29/20
o-Xylene	ND		ug/Kg	5.0	03/29/20	03/29/20
Styrene	ND		ug/Kg	5.0	03/29/20	03/29/20
Bromoform	ND		ug/Kg	5.0	03/29/20	03/29/20
Isopropylbenzene	ND		ug/Kg	5.0	03/29/20	03/29/20
1,1,2,2-Tetrachloroethane	ND		ug/Kg	5.0	03/29/20	03/29/20
1,2,3-Trichloropropane	ND		ug/Kg	5.0	03/29/20	03/29/20
Propylbenzene	ND		ug/Kg	5.0	03/29/20	03/29/20
Bromobenzene	ND		ug/Kg	5.0	03/29/20	03/29/20
1,3,5-Trimethylbenzene	ND		ug/Kg	5.0	03/29/20	03/29/20
2-Chlorotoluene	ND		ug/Kg	5.0	03/29/20	03/29/20
4-Chlorotoluene	ND		ug/Kg	5.0	03/29/20	03/29/20
tert-Butylbenzene	ND		ug/Kg	5.0	03/29/20	03/29/20
1,2,4-Trimethylbenzene	ND		ug/Kg	5.0	03/29/20	03/29/20
sec-Butylbenzene	ND		ug/Kg	5.0	03/29/20	03/29/20
para-Isopropyl Toluene	ND		ug/Kg	5.0	03/29/20	03/29/20
1,3-Dichlorobenzene	ND		ug/Kg	5.0	03/29/20	03/29/20
1,4-Dichlorobenzene	ND		ug/Kg	5.0	03/29/20	03/29/20
n-Butylbenzene	ND		ug/Kg	5.0	03/29/20	03/29/20
1,2-Dichlorobenzene	ND		ug/Kg	5.0	03/29/20	03/29/20
1,2-Dibromo-3-Chloropropane	ND		ug/Kg	5.0	03/29/20	03/29/20
1,2,4-Trichlorobenzene	ND		ug/Kg	5.0	03/29/20	03/29/20
Hexachlorobutadiene	ND		ug/Kg	5.0	03/29/20	03/29/20
Naphthalene	ND		ug/Kg	5.0	03/29/20	03/29/20
1,2,3-Trichlorobenzene	ND		ug/Kg	5.0	03/29/20	03/29/20
Xylene (total)	ND		ug/Kg	5.0	03/29/20	03/29/20
Surrogates				**Limits**		
Dibromofluoromethane	100%		%REC	70-145	03/29/20	03/29/20
1,2-Dichloroethane-d4	99%		%REC	70-145	03/29/20	03/29/20
Toluene-d8	104%		%REC	70-145	03/29/20	03/29/20
Bromofluorobenzene	97%		%REC	70-145	03/29/20	03/29/20

ENTHALPY ANALYTICAL

Batch QC

Type: Lab Control Sample	Lab ID: QC863787	Batch: 243906
Matrix: Soil	Method: EPA 8260B	Prep Method: EPA 5030B

QC863787 Analyte	Result	Spiked	Units	Recovery	Qual	Limits
1,1-Dichloroethene	57.68	50.00	ug/Kg	115%		59-172
MTBE	48.62	50.00	ug/Kg	97%		62-137
Benzene	53.77	50.00	ug/Kg	108%		62-137
Trichloroethene	50.32	50.00	ug/Kg	101%		66-142
Toluene	53.15	50.00	ug/Kg	106%		59-139
Chlorobenzene	48.99	50.00	ug/Kg	98%		60-133
Surrogates						
Dibromofluoromethane	49.34	50.00	ug/Kg	99%		70-145
1,2-Dichloroethane-d4	47.13	50.00	ug/Kg	94%		70-145
Toluene-d8	52.34	50.00	ug/Kg	105%		70-145
Bromofluorobenzene	46.75	50.00	ug/Kg	94%		70-145

Type: Lab Control Sample Duplicate	Lab ID: QC863788	Batch: 243906
Matrix: Soil	Method: EPA 8260B	Prep Method: EPA 5030B

QC863788 Analyte	Result	Spiked	Units	Recovery	Qual	Limits	RPD	RPD Lim
1,1-Dichloroethene	53.89	50.00	ug/Kg	108%		59-172	7	22
MTBE	50.72	50.00	ug/Kg	101%		62-137	4	21
Benzene	51.57	50.00	ug/Kg	103%		62-137	4	24
Trichloroethene	46.92	50.00	ug/Kg	94%		66-142	7	21
Toluene	50.43	50.00	ug/Kg	101%		59-139	5	21
Chlorobenzene	47.00	50.00	ug/Kg	94%		60-133	4	24
Surrogates								
Dibromofluoromethane	50.40	50.00	ug/Kg	101%		70-145		
1,2-Dichloroethane-d4	49.10	50.00	ug/Kg	98%		70-145		
Toluene-d8	51.58	50.00	ug/Kg	103%		70-145		
Bromofluorobenzene	47.03	50.00	ug/Kg	94%		70-145		

Type: Blank	Lab ID: QC863571	Batch: 243822
Matrix: Soil	Method: EPA 8015B	Prep Method: EPA 3580

QC863571 Analyte	Result	Qual	Units	RL	Prepared	Analyzed
TPH C6-C12	ND		mg/Kg	10	03/26/20	03/26/20
TPH C13-C22	ND		mg/Kg	10	03/26/20	03/26/20
TPH C23-C44	ND		mg/Kg	10	03/26/20	03/26/20
Surrogates				**Limits**		
n-Triacontane	87%		%REC	50-150	03/26/20	03/26/20

ENTHALPY ANALYTICAL

Batch QC

Type: Lab Control Sample	Lab ID: QC863572	Batch: 243822
Matrix: Soil	Method: EPA 8015B	Prep Method: EPA 3580

QC863572 Analyte	Result	Spiked	Units	Recovery	Qual	Limits
Diesel C10-C28	244.9	250.0	mg/Kg	98%		70-130
Surrogates						
n-Triacontane	9.297	10.00	mg/Kg	93%		50-150

Type: Matrix Spike	Lab ID: QC863573	Batch: 243822
Matrix (Source ID): Soil (426382-012)	Method: EPA 8015B	Prep Method: EPA 3580

QC863573 Analyte	Result	Source Sample Result	Spiked	Units	Recovery	Qual	Limits	DF
Diesel C10-C28	220.4	ND	251.3	mg/Kg	88%		70-130	1
Surrogates								
n-Triacontane	7.960		10.05	mg/Kg	79%		50-150	1

Type: Matrix Spike Duplicate	Lab ID: QC863574	Batch: 243822
Matrix (Source ID): Soil (426382-012)	Method: EPA 8015B	Prep Method: EPA 3580

QC863574 Analyte	Result	Source Sample Result	Spiked	Units	Recovery	Qual	Limits	RPD	RPD Lim	DF
Diesel C10-C28	274.6	ND	247.5	mg/Kg	111%		70-130	23*	20	0.99
Surrogates										
n-Triacontane	9.070		9.901	mg/Kg	92%		50-150			0.99

ENTHALPY ANALYTICAL

Batch QC

Type: Blank	Lab ID: QC863531	Batch: 243801
Matrix: Soil	Method: EPA 6010B	Prep Method: EPA 3050B

QC863531 Analyte	Result	Qual	Units	RL	Prepared	Analyzed
Antimony	ND		mg/Kg	3.0	03/26/20	03/26/20
Arsenic	ND		mg/Kg	1.0	03/26/20	03/26/20
Barium	ND		mg/Kg	1.0	03/26/20	03/26/20
Beryllium	ND		mg/Kg	0.50	03/26/20	03/26/20
Cadmium	ND		mg/Kg	0.50	03/26/20	03/26/20
Chromium	ND		mg/Kg	1.0	03/26/20	03/26/20
Cobalt	ND		mg/Kg	0.50	03/26/20	03/26/20
Copper	ND		mg/Kg	1.0	03/26/20	03/26/20
Lead	ND		mg/Kg	1.0	03/26/20	03/26/20
Molybdenum	ND		mg/Kg	1.0	03/26/20	03/26/20
Nickel	ND		mg/Kg	1.5	03/26/20	03/26/20
Selenium	ND		mg/Kg	3.0	03/26/20	03/27/20
Silver	ND		mg/Kg	0.50	03/26/20	03/26/20
Thallium	ND		mg/Kg	3.0	03/26/20	03/26/20
Vanadium	ND		mg/Kg	0.50	03/26/20	03/26/20
Zinc	ND		mg/Kg	5.0	03/26/20	03/26/20

Type: Lab Control Sample	Lab ID: QC863532	Batch: 243801
Matrix: Soil	Method: EPA 6010B	Prep Method: EPA 3050B

QC863532 Analyte	Result	Spiked	Units	Recovery	Qual	Limits
Antimony	98.76	100.0	mg/Kg	99%		80-120
Arsenic	99.56	100.0	mg/Kg	100%		80-120
Barium	101.7	100.0	mg/Kg	102%		80-120
Beryllium	99.28	100.0	mg/Kg	99%		80-120
Cadmium	98.37	100.0	mg/Kg	98%		80-120
Chromium	98.95	100.0	mg/Kg	99%		80-120
Cobalt	100.1	100.0	mg/Kg	100%		80-120
Copper	97.24	100.0	mg/Kg	97%		80-120
Lead	106.4	100.0	mg/Kg	106%		80-120
Molybdenum	100.8	100.0	mg/Kg	101%		80-120
Nickel	103.5	100.0	mg/Kg	104%		80-120
Selenium	92.77	100.0	mg/Kg	93%		80-120
Silver	99.57	100.0	mg/Kg	100%	b	80-120
Thallium	100.9	100.0	mg/Kg	101%		80-120
Vanadium	107.8	100.0	mg/Kg	108%		80-120
Zinc	103.4	100.0	mg/Kg	103%		80-120

ENTHALPY ANALYTICAL

Batch QC

Type:	Matrix Spike	Lab ID:	QC863533	Batch:	243801
Matrix (Source ID):	Soil (426449-001)	Method:	EPA 6010B	Prep Method:	EPA 3050B

QC863533 Analyte	Result	Source Sample Result	Spiked	Units	Recovery	Qual	Limits	DF
Antimony	79.63	ND	108.7	mg/Kg	73%	*	75-125	1.1
Arsenic	108.0	0.8173	108.7	mg/Kg	99%		75-125	1.1
Barium	170.1	84.10	108.7	mg/Kg	79%		75-125	1.1
Beryllium	106.3	ND	108.7	mg/Kg	98%		75-125	1.1
Cadmium	112.8	0.3462	108.7	mg/Kg	103%		75-125	1.1
Chromium	117.1	6.875	108.7	mg/Kg	101%		75-125	1.1
Cobalt	115.0	4.856	108.7	mg/Kg	101%		75-125	1.1
Copper	111.1	6.625	108.7	mg/Kg	96%		75-125	1.1
Lead	114.1	3.423	108.7	mg/Kg	102%		75-125	1.1
Molybdenum	106.9	1.058	108.7	mg/Kg	97%		75-125	1.1
Nickel	115.3	4.529	108.7	mg/Kg	102%		75-125	1.1
Selenium	94.91	ND	108.7	mg/Kg	87%		75-125	1.1
Silver	98.88	ND	108.7	mg/Kg	91%	b	75-125	1.1
Thallium	94.14	ND	108.7	mg/Kg	87%		75-125	1.1
Vanadium	135.3	21.01	108.7	mg/Kg	105%		75-125	1.1
Zinc	142.7	22.45	108.7	mg/Kg	111%		75-125	1.1

Type:	Matrix Spike Duplicate	Lab ID:	QC863534	Batch:	243801
Matrix (Source ID):	Soil (426449-001)	Method:	EPA 6010B	Prep Method:	EPA 3050B

QC863534 Analyte	Result	Source Sample Result	Spiked	Units	Recovery	Qual	Limits	RPD	RPD Lim	DF
Antimony	70.63	ND	103.1	mg/Kg	69%	*	75-125	7	41	1
Arsenic	105.5	0.8173	103.1	mg/Kg	102%		75-125	3	35	1
Barium	152.0	84.10	103.1	mg/Kg	66%	*	75-125	8	20	1
Beryllium	100.9	ND	103.1	mg/Kg	98%		75-125	0	20	1
Cadmium	99.14	0.3462	103.1	mg/Kg	96%		75-125	8	20	1
Chromium	106.6	6.875	103.1	mg/Kg	97%		75-125	4	20	1
Cobalt	103.7	4.856	103.1	mg/Kg	96%		75-125	5	20	1
Copper	101.7	6.625	103.1	mg/Kg	92%		75-125	4	20	1
Lead	111.8	3.423	103.1	mg/Kg	105%		75-125	3	20	1
Molybdenum	103.6	1.058	103.1	mg/Kg	99%		75-125	2	20	1
Nickel	103.9	4.529	103.1	mg/Kg	96%		75-125	5	20	1
Selenium	91.18	ND	103.1	mg/Kg	88%		75-125	1	20	1
Silver	96.52	ND	103.1	mg/Kg	94%	b	75-125	3	20	1
Thallium	90.67	ND	103.1	mg/Kg	88%		75-125	2	20	1
Vanadium	124.4	21.01	103.1	mg/Kg	100%		75-125	4	20	1
Zinc	123.9	22.45	103.1	mg/Kg	98%		75-125	10	20	1

ENTHALPY ANALYTICAL

Batch QC

Type: Blank	Lab ID: QC866205	Batch: 244914
Matrix: WET Leachate	Method: EPA 6010B	Prep Method: WET

QC866205 Analyte	Result	Qual	Units	RL	Prepared	Analyzed
Lead	ND	b	mg/L	0.15	04/22/20	04/22/20

Type: Lab Control Sample	Lab ID: QC866206	Batch: 244914
Matrix: WET Leachate	Method: EPA 6010B	Prep Method: WET

QC866206 Analyte	Result	Spiked	Units	Recovery	Qual	Limits
Lead	9.428	10.00	mg/L	94%	b	80-120

Type: Lab Control Sample Duplicate	Lab ID: QC866207	Batch: 244914
Matrix: WET Leachate	Method: EPA 6010B	Prep Method: WET

QC866207 Analyte	Result	Spiked	Units	Recovery	Qual	Limits	RPD	RPD Lim
Lead	9.769	10.00	mg/L	98%	b	80-120	4	20

Type: Blank	Lab ID: QC863387	Batch: 243741
Matrix: Soil	Method: EPA 8270C-SIM	Prep Method: EPA 3550C

QC863387 Analyte	Result	Qual	Units	RL	Prepared	Analyzed
1-Methylnaphthalene	ND		ug/Kg	10	03/24/20	03/27/20
2-Methylnaphthalene	ND		ug/Kg	10	03/24/20	03/27/20
Naphthalene	ND		ug/Kg	10	03/24/20	03/27/20
Acenaphthylene	ND		ug/Kg	10	03/24/20	03/27/20
Acenaphthene	ND		ug/Kg	10	03/24/20	03/27/20
Fluorene	ND		ug/Kg	10	03/24/20	03/27/20
Phenanthrene	ND		ug/Kg	10	03/24/20	03/27/20
Anthracene	ND		ug/Kg	10	03/24/20	03/27/20
Fluoranthene	ND		ug/Kg	10	03/24/20	03/27/20
Pyrene	ND		ug/Kg	10	03/24/20	03/27/20
Benzo(a)anthracene	ND		ug/Kg	10	03/24/20	03/27/20
Chrysene	ND		ug/Kg	10	03/24/20	03/27/20
Benzo(b)fluoranthene	ND		ug/Kg	10	03/24/20	03/27/20
Benzo(k)fluoranthene	ND		ug/Kg	10	03/24/20	03/27/20
Benzo(a)pyrene	ND		ug/Kg	10	03/24/20	03/27/20
Indeno(1,2,3-cd)pyrene	ND		ug/Kg	10	03/24/20	03/27/20
Dibenz(a,h)anthracene	ND		ug/Kg	10	03/24/20	03/27/20
Benzo(g,h,i)perylene	ND		ug/Kg	10	03/24/20	03/27/20
Surrogates				**Limits**		
Nitrobenzene-d5	106%		%REC	27-125	03/24/20	03/27/20
2-Fluorobiphenyl	99%		%REC	30-120	03/24/20	03/27/20
Terphenyl-d14	106%		%REC	33-155	03/24/20	03/27/20

ENTHALPY ANALYTICAL

Batch QC

Type:	**Lab Control Sample**	**Lab ID:**	**QC863388**	**Batch:**	**243741**
Matrix:	**Soil**	**Method:**	**EPA 8270C-SIM**	**Prep Method:**	**EPA 3550C**

QC863388 Analyte	Result	Spiked	Units	Recovery	Qual	Limits
1-Methylnaphthalene	27.55	50.00	ug/Kg	55%		28-130
2-Methylnaphthalene	31.41	50.00	ug/Kg	63%		33-130
Naphthalene	28.42	50.00	ug/Kg	57%		25-130
Acenaphthylene	29.89	50.00	ug/Kg	60%		28-130
Acenaphthene	28.16	50.00	ug/Kg	56%		32-130
Fluorene	30.90	50.00	ug/Kg	62%		35-130
Phenanthrene	30.68	50.00	ug/Kg	61%		35-132
Anthracene	24.22	50.00	ug/Kg	48%		34-136
Fluoranthene	33.49	50.00	ug/Kg	67%		34-139
Pyrene	32.30	50.00	ug/Kg	65%		35-134
Benzo(a)anthracene	31.42	50.00	ug/Kg	63%		30-132
Chrysene	26.42	50.00	ug/Kg	53%		29-130
Benzo(b)fluoranthene	32.34	50.00	ug/Kg	65%		32-137
Benzo(k)fluoranthene	30.61	50.00	ug/Kg	61%		32-130
Benzo(a)pyrene	19.84	50.00	ug/Kg	40%		10-138
Indeno(1,2,3-cd)pyrene	32.56	50.00	ug/Kg	65%		34-132
Dibenz(a,h)anthracene	29.11	50.00	ug/Kg	58%		32-130
Benzo(g,h,i)perylene	26.61	50.00	ug/Kg	53%		27-130
Surrogates						
Nitrobenzene-d5	33.25	50.00	ug/Kg	66%		27-125
2-Fluorobiphenyl	30.98	50.00	ug/Kg	62%		30-120
Terphenyl-d14	33.79	50.00	ug/Kg	68%		33-155

ENTHALPY ANALYTICAL

Batch QC

Type:	**Matrix Spike**	**Lab ID:**	**QC863389**	**Batch:**	**243741**
Matrix (Source ID):	**Soil (426259-001)**	**Method:**	**EPA 8270C-SIM**	**Prep Method:**	**EPA 3550C**

QC863389 Analyte	Result	Source Sample Result	Spiked	Units	Recovery	Qual	Limits	DF
1-Methylnaphthalene	32.95	ND	50.00	ug/Kg	66%		25-130	10
2-Methylnaphthalene	32.57	ND	50.00	ug/Kg	65%		32-133	10
Naphthalene	36.64	ND	50.00	ug/Kg	73%		33-130	10
Acenaphthylene	31.69	ND	50.00	ug/Kg	63%		14-157	10
Acenaphthene	34.08	ND	50.00	ug/Kg	68%		28-134	10
Fluorene	33.05	1.823	50.00	ug/Kg	62%		27-140	10
Phenanthrene	31.29	2.978	50.00	ug/Kg	57%		29-147	10
Anthracene	31.80	2.423	50.00	ug/Kg	59%		24-156	10
Fluoranthene	44.54	6.680	50.00	ug/Kg	76%		28-160	10
Pyrene	43.46	7.786	50.00	ug/Kg	71%		26-153	10
Benzo(a)anthracene	40.26	6.134	50.00	ug/Kg	68%		26-174	10
Chrysene	33.63	6.983	50.00	ug/Kg	53%		40-139	10
Benzo(b)fluoranthene	44.73	ND	50.00	ug/Kg	89%		36-164	10
Benzo(k)fluoranthene	33.63	ND	50.00	ug/Kg	67%		36-161	10
Benzo(a)pyrene	45.25	8.507	50.00	ug/Kg	73%		18-173	10
Indeno(1,2,3-cd)pyrene	35.39	6.288	50.00	ug/Kg	58%		26-154	10
Dibenz(a,h)anthracene	30.09	ND	50.00	ug/Kg	60%		38-132	10
Benzo(g,h,i)perylene	32.99	ND	50.00	ug/Kg	66%		36-130	10
Surrogates								
Nitrobenzene-d5	24.10		50.00	ug/Kg	48%		27-125	10
2-Fluorobiphenyl	33.30		50.00	ug/Kg	67%		30-120	10
Terphenyl-d14	43.76		50.00	ug/Kg	88%		33-155	10

ENTHALPY ANALYTICAL

Batch QC

Type:	**Matrix Spike Duplicate**	**Lab ID:**	**QC863390**	**Batch:**	**243741**
Matrix (Source ID):	**Soil (426259-001)**	**Method:**	**EPA 8270C-SIM**	**Prep Method:**	**EPA 3550C**

QC863390 Analyte	Result	Source Sample Result	Spiked	Units	Recovery	Qual	Limits	RPD	RPD Lim	DF
1-Methylnaphthalene	33.42	ND	49.75	ug/Kg	67%		25-130	2	35	10
2-Methylnaphthalene	33.28	ND	49.75	ug/Kg	67%		32-133	3	35	10
Naphthalene	34.39	ND	49.75	ug/Kg	69%		33-130	6	35	10
Acenaphthylene	38.03	ND	49.75	ug/Kg	76%		14-157	19	35	10
Acenaphthene	31.37	ND	49.75	ug/Kg	63%		28-134	8	35	10
Fluorene	33.23	1.823	49.75	ug/Kg	63%		27-140	1	35	10
Phenanthrene	30.18	2.978	49.75	ug/Kg	55%		29-147	3	35	10
Anthracene	30.32	2.423	49.75	ug/Kg	56%		24-156	4	35	10
Fluoranthene	43.29	6.680	49.75	ug/Kg	74%		28-160	2	35	10
Pyrene	39.53	7.786	49.75	ug/Kg	64%		26-153	9	35	10
Benzo(a)anthracene	38.48	6.134	49.75	ug/Kg	65%		26-174	4	35	10
Chrysene	34.28	6.983	49.75	ug/Kg	55%		40-139	2	35	10
Benzo(b)fluoranthene	42.66	ND	49.75	ug/Kg	86%		36-164	4	35	10
Benzo(k)fluoranthene	37.69	ND	49.75	ug/Kg	76%		36-161	12	35	10
Benzo(a)pyrene	43.93	8.507	49.75	ug/Kg	71%		18-173	3	35	10
Indeno(1,2,3-cd)pyrene	34.23	6.288	49.75	ug/Kg	56%		26-154	3	35	10
Dibenz(a,h)anthracene	27.45	ND	49.75	ug/Kg	55%		38-132	9	35	10
Benzo(g,h,i)perylene	34.84	ND	49.75	ug/Kg	70%		36-130	6	35	10
Surrogates										
Nitrobenzene-d5	21.99		49.75	ug/Kg	44%		27-125			10
2-Fluorobiphenyl	34.20		49.75	ug/Kg	69%		30-120			10
Terphenyl-d14	42.78		49.75	ug/Kg	86%		33-155			10

ENTHALPY ANALYTICAL

Batch QC

Type:	**Blank**	**Lab ID:**	**QC863815**	**Batch:**	**243915**
Matrix:	**Soil**	**Method:**	**EPA 8260B**	**Prep Method:**	**EPA 5030B**

QC863815 Analyte	Result	Qual	Units	RL	Prepared	Analyzed
3-Chloropropene	ND		ug/Kg	5.0	03/30/20	03/30/20
cis-1,4-Dichloro-2-butene	ND		ug/Kg	5.0	03/30/20	03/30/20
trans-1,4-Dichloro-2-butene	ND		ug/Kg	5.0	03/30/20	03/30/20
Isopropyl Ether (DIPE)	ND		ug/Kg	5.0	03/30/20	03/30/20
Ethyl tert-Butyl Ether (ETBE)	ND		ug/Kg	5.0	03/30/20	03/30/20
Methyl tert-Amyl Ether (TAME)	ND		ug/Kg	5.0	03/30/20	03/30/20
tert-Butyl Alcohol (TBA)	ND		ug/Kg	10	03/30/20	03/30/20
Freon 12	ND		ug/Kg	5.0	03/30/20	03/30/20
Chloromethane	ND		ug/Kg	5.0	03/30/20	03/30/20
Vinyl Chloride	ND		ug/Kg	5.0	03/30/20	03/30/20
Bromomethane	ND		ug/Kg	5.0	03/30/20	03/30/20
Chloroethane	ND		ug/Kg	5.0	03/30/20	03/30/20
Trichlorofluoromethane	ND		ug/Kg	5.0	03/30/20	03/30/20
Acetone	ND		ug/Kg	100	03/30/20	03/30/20
Freon 113	ND		ug/Kg	5.0	03/30/20	03/30/20
1,1-Dichloroethene	ND		ug/Kg	5.0	03/30/20	03/30/20
Methylene Chloride	ND		ug/Kg	5.0	03/30/20	03/30/20
MTBE	ND		ug/Kg	5.0	03/30/20	03/30/20
trans-1,2-Dichloroethene	ND		ug/Kg	5.0	03/30/20	03/30/20
1,1-Dichloroethane	ND		ug/Kg	5.0	03/30/20	03/30/20
2-Butanone	ND		ug/Kg	100	03/30/20	03/30/20
cis-1,2-Dichloroethene	ND		ug/Kg	5.0	03/30/20	03/30/20
2,2-Dichloropropane	ND		ug/Kg	5.0	03/30/20	03/30/20
Chloroform	ND		ug/Kg	5.0	03/30/20	03/30/20
Bromochloromethane	ND		ug/Kg	5.0	03/30/20	03/30/20
1,1,1-Trichloroethane	ND		ug/Kg	5.0	03/30/20	03/30/20
1,1-Dichloropropene	ND		ug/Kg	5.0	03/30/20	03/30/20
Carbon Tetrachloride	ND		ug/Kg	5.0	03/30/20	03/30/20
1,2-Dichloroethane	ND		ug/Kg	5.0	03/30/20	03/30/20
Benzene	ND		ug/Kg	5.0	03/30/20	03/30/20
Trichloroethene	ND		ug/Kg	5.0	03/30/20	03/30/20
1,2-Dichloropropane	ND		ug/Kg	5.0	03/30/20	03/30/20
Bromodichloromethane	ND		ug/Kg	5.0	03/30/20	03/30/20
Dibromomethane	ND		ug/Kg	5.0	03/30/20	03/30/20
4-Methyl-2-Pentanone	ND		ug/Kg	5.0	03/30/20	03/30/20
cis-1,3-Dichloropropene	ND		ug/Kg	5.0	03/30/20	03/30/20
Toluene	ND		ug/Kg	5.0	03/30/20	03/30/20
trans-1,3-Dichloropropene	ND		ug/Kg	5.0	03/30/20	03/30/20
1,1,2-Trichloroethane	ND		ug/Kg	5.0	03/30/20	03/30/20
1,3-Dichloropropane	ND		ug/Kg	5.0	03/30/20	03/30/20
Tetrachloroethene	ND		ug/Kg	5.0	03/30/20	03/30/20
Dibromochloromethane	ND		ug/Kg	5.0	03/30/20	03/30/20

ENTHALPY ANALYTICAL

Batch QC

QC863815 Analyte	Result	Qual	Units	RL	Prepared	Analyzed
1,2-Dibromoethane	ND		ug/Kg	5.0	03/30/20	03/30/20
Chlorobenzene	ND		ug/Kg	5.0	03/30/20	03/30/20
1,1,1,2-Tetrachloroethane	ND		ug/Kg	5.0	03/30/20	03/30/20
Ethylbenzene	ND		ug/Kg	5.0	03/30/20	03/30/20
m,p-Xylenes	ND		ug/Kg	10	03/30/20	03/30/20
o-Xylene	ND		ug/Kg	5.0	03/30/20	03/30/20
Styrene	ND		ug/Kg	5.0	03/30/20	03/30/20
Bromoform	ND		ug/Kg	5.0	03/30/20	03/30/20
Isopropylbenzene	ND		ug/Kg	5.0	03/30/20	03/30/20
1,1,2,2-Tetrachloroethane	ND		ug/Kg	5.0	03/30/20	03/30/20
1,2,3-Trichloropropane	ND		ug/Kg	5.0	03/30/20	03/30/20
Propylbenzene	ND		ug/Kg	5.0	03/30/20	03/30/20
Bromobenzene	ND		ug/Kg	5.0	03/30/20	03/30/20
1,3,5-Trimethylbenzene	ND		ug/Kg	5.0	03/30/20	03/30/20
2-Chlorotoluene	ND		ug/Kg	5.0	03/30/20	03/30/20
4-Chlorotoluene	ND		ug/Kg	5.0	03/30/20	03/30/20
tert-Butylbenzene	ND		ug/Kg	5.0	03/30/20	03/30/20
1,2,4-Trimethylbenzene	ND		ug/Kg	5.0	03/30/20	03/30/20
sec-Butylbenzene	ND		ug/Kg	5.0	03/30/20	03/30/20
para-Isopropyl Toluene	ND		ug/Kg	5.0	03/30/20	03/30/20
1,3-Dichlorobenzene	ND		ug/Kg	5.0	03/30/20	03/30/20
1,4-Dichlorobenzene	ND		ug/Kg	5.0	03/30/20	03/30/20
n-Butylbenzene	ND		ug/Kg	5.0	03/30/20	03/30/20
1,2-Dichlorobenzene	ND		ug/Kg	5.0	03/30/20	03/30/20
1,2-Dibromo-3-Chloropropane	ND		ug/Kg	5.0	03/30/20	03/30/20
1,2,4-Trichlorobenzene	ND		ug/Kg	5.0	03/30/20	03/30/20
Hexachlorobutadiene	ND		ug/Kg	5.0	03/30/20	03/30/20
Naphthalene	ND		ug/Kg	5.0	03/30/20	03/30/20
1,2,3-Trichlorobenzene	ND		ug/Kg	5.0	03/30/20	03/30/20
Xylene (total)	ND		ug/Kg	5.0	03/30/20	03/30/20
Surrogates				**Limits**		
Dibromofluoromethane	97%		%REC	70-145	03/30/20	03/30/20
1,2-Dichloroethane-d4	91%		%REC	70-145	03/30/20	03/30/20
Toluene-d8	104%		%REC	70-145	03/30/20	03/30/20
Bromofluorobenzene	104%		%REC	70-145	03/30/20	03/30/20

ENTHALPY ANALYTICAL

Batch QC

Type: Lab Control Sample	Lab ID: QC863816	Batch: 243915
Matrix: Soil	Method: EPA 8260B	Prep Method: EPA 5030B

QC863816 Analyte	Result	Spiked	Units	Recovery	Qual	Limits
1,1-Dichloroethene	51.08	50.00	ug/Kg	102%		59-172
MTBE	47.64	50.00	ug/Kg	95%		62-137
Benzene	49.89	50.00	ug/Kg	100%		62-137
Trichloroethene	47.21	50.00	ug/Kg	94%		66-142
Toluene	49.31	50.00	ug/Kg	99%		59-139
Chlorobenzene	46.08	50.00	ug/Kg	92%		60-133
Surrogates						
Dibromofluoromethane	49.62	50.00	ug/Kg	99%		70-145
1,2-Dichloroethane-d4	45.91	50.00	ug/Kg	92%		70-145
Toluene-d8	51.51	50.00	ug/Kg	103%		70-145
Bromofluorobenzene	49.12	50.00	ug/Kg	98%		70-145

Type: Lab Control Sample Duplicate	Lab ID: QC863817	Batch: 243915
Matrix: Soil	Method: EPA 8260B	Prep Method: EPA 5030B

QC863817 Analyte	Result	Spiked	Units	Recovery	Qual	Limits	RPD	RPD Lim
1,1-Dichloroethene	52.05	50.00	ug/Kg	104%		59-172	2	22
MTBE	49.17	50.00	ug/Kg	98%		62-137	3	21
Benzene	50.75	50.00	ug/Kg	102%		62-137	2	24
Trichloroethene	48.06	50.00	ug/Kg	96%		66-142	2	21
Toluene	49.70	50.00	ug/Kg	99%		59-139	1	21
Chlorobenzene	46.89	50.00	ug/Kg	94%		60-133	2	24
Surrogates								
Dibromofluoromethane	49.68	50.00	ug/Kg	99%		70-145		
1,2-Dichloroethane-d4	46.35	50.00	ug/Kg	93%		70-145		
Toluene-d8	51.78	50.00	ug/Kg	104%		70-145		
Bromofluorobenzene	48.87	50.00	ug/Kg	98%		70-145		

\# CCV drift outside limits; average CCV drift within limits per method requirements
* Value is outside QC limits
ND Not Detected
b See narrative

Laboratory Job Number 426450

Subcontracted Products

American Environmental Testing

American Environmental Testing Laboratory Inc.
2834 & 2908 North Naomi Street Burbank, CA 91504 • DOHS NO: 1541, LACSD NO: 10181
Tel: (888) 288-AETL • (818) 845-8200 • Fax: (818) 845-8840 • www.aetlab.com

Ordered By

Enthalpy Analytical **931 W. Barkley Ave.** **Orange, CA 92868-**

Number of Pages 5 **Date Received 03/26/2020** **Date Reported 04/07/2020**

Telephone: (714)771-6900
Attention: Ranjit Clarke

Job Number	Order Date	Client
104233	03/26/2020	ENTANA

Project ID: 426450
Project Name: PO# 1049140

Enclosed please find results of analyses of 4 soil samples which were analyzed as specified on the attached chain of custody. If there are any questions, please do not hesitate to call.

Checked By: _____ Approved By: _____

Joe Sevrean
Laboratory Director

ENTHALPY ANALYTICAL

Enthalpy Analytical - Orange
Orange, CA 92868
(714) 771-6900 / Fax: (510) 486-0532

Subcontract Laboratory:
American Environmental Testing
2834 North Naomi Street
Burbank, CA 91504-2023
ATTN: Jim Lin
PO #: 1049140

Enthalpy Order: EO-426450
PM: Ranjit K Clarke
Email: Ranjit.Clarke@enthalpy.com
CC: incomingreports@enthalpy.com
Phone: (714) 771-9906

Results Due: 5 Day TAT
Report Level: II
Report To: RL
EDDs: standard

104233

Notes:

ample ID	Collected	Lab ID	# Cont.	Matrix	Analysis Requested	Comment	
P-6-1'	25-MAR-2020 07:28	426450-001	1	Soil	EPA 8151A Chlorinated Herbicides		104233.01
B-3-1'	25-MAR-2020 09:45	426450-009	1	Soil	EPA 8151A Chlorinated Herbicides		104233.02
B-1-1'	25-MAR-2020 11:00	426450-016	1	Soil	EPA 8151A Chlorinated Herbicides		104233.03
COMPOSITE 1-8	25-MAR-2020 15:00	426450-031	1	Soil	EPA 8151A Chlorinated Herbicides		104233.04

Notes:	Relinquished By:	Received By:
	Date: 3/26/20 1350	Date: 3-26-20 1350
	Date:	Date: 03/26/20 1540
		AGT
	Date: 3-26-20 1540	Date:

1

AMERICAN ENVIRONMENTAL TESTING LABORATORY
2834 NORTH NAOMI ST. BURBANK, CALIFORNIA 91504 ELAP # 1541 LACSD # 10181
TEL (888) 288-AETL (818) 845-8200 FAX (818) 845-8840 www.aetlab.com
A KYZER LABS COMPANY

COOLER RECEIPT FORM

Client Name: Enthalpy

Project Name:

AETL Job Number: 104233

Date Received: 03/26/20 Received by: [signature]

Carrier: ☒ AETL Courier ☐ Client ☐ GSO ☐ FedEx ☐ UPS
☐ Others:

Samples were received in: ☒ Cooler (/) ☐ Other (Specify):

Inside temperature of shipping container No 1: 3.4°C, No 2: , No 3:

Type of sample containers: ☐ VOA, ☐ Glass bottles, ☒ Wide mouth jars, ☐ HDPE bottles, ☐ Metal sleeves, ☐ Others (Specify):

How are samples preserved: ☐ None, ☐ Ice, ☒ Blue Ice, ☐ Dry Ice
☒ None, ☐ HNO_3, ☐ NaOH, ☐ ZnOAc, ☐ HCl, ☐ $Na_2S_2O_3$, ☐ MeOH
☐ Other (Specify):

	Yes	No, explain below	Name, if client was notified.
1. Are the COCs Correct?	Y		
2. Are the Sample labels legible?	Y		
3. Do samples match the COC?	Y		
4. Are the required analyses clear?	Y		
5. Is there enough samples for required analysis?	Y		
6. Are samples sealed with evidence tape?		N	
7. Are sample containers in good condition?	Y		
8. Are samples preserved?	Y		
9. Are samples preserved properly for the intended analysis?	Y		
10. Are the VOAs free of headspace?	N/S		
11. Are the jars free of headspace?	Y		

PLEASE NOTE ALL SAMPLES WILL BE DISPOSED OF 30 DAYS AFTER RECEIVING DATE. IF AETL IS INFORMED OTHERWISE, THERE WILL BE A STORAGE CHARGE PER SAMPLE PER MONTH FOR ANY SAMPLE HELD BEYOND 30 DAYS.

Explain all "No" answers for above questions:

American Environmental Testing Laboratory Inc.
2834 & 2908 North Naomi Street Burbank, CA 91504 • DOHS NO: 1541, LACSD NO: 10181
Tel: (888) 288-AETL • (818) 845-8200 • Fax: (818) 845-8840 • www.aetlab.com

Ordered By

Enthalpy Analytical **931 W. Barkley Ave.** **Orange, CA 92868-**	**Project ID: 426450** **Date Received 03/26/2020** **Date Reported 04/07/2020**
Telephone: (714)771-6900 **Attention: Ranjit Clarke**	

Job Number	Order Date	Client
104233	03/26/2020	ENTANA

CERTIFICATE OF ANALYSIS
CASE NARRATIVE

AETL received 4 samples with the following specification on 03/26/2020.

Lab ID	Sample ID	Sample Date	Matrix	Quantity Of Containers
104233.01	P-6-1'	03/25/2020	Soil	1
104233.02	B-3-1'	03/25/2020	Soil	1
104233.03	B-1-1'	03/25/2020	Soil	1
104233.04	COMPOSITE 1-8	03/25/2020	Soil	1

Method ^ Submethod	*Req Date*	*Priority*	*TAT*	*Units*
(8151A)	04/02/2020	2	Normal	ug/Kg

The samples were analyzed as specified on the enclosed chain of custody.
No analytical non-conformances were encountered.

Unless otherwise noted, all results of soil and solid samples are based on wet weight.

Checked By: _____ Approved By: _____

Joe Sevrean
Laboratory Director

American Environmental Testing Laboratory Inc.
2834 & 2908 North Naomi Street Burbank, CA 91504 • DOHS NO: 1541, LACSD NO: 10181
Tel: (888) 288-AETL • (818) 845-8200 • Fax: (818) 845-8840 • www.aetlab.com

ANALYTICAL RESULTS

Ordered By

Enthalpy Analytical
931 W. Barkley Ave.
Orange, CA 92868-

Telephone: (714)771-6900
Attn: Ranjit Clarke
Page: **2**

Project ID: 426450
Project Name: PO# 1049140

AETL Job Number	Submitted	Client
104233	03/26/2020	ENTANA

Method: (8151A), Chlorinated Herbicides by GC/ECD

QC Batch No: 033120MB2

Our Lab I.D.			Method Blank	104233.02	104233.03	104233.04	
Client Sample I.D.				B-3-1'	B-1-1'	COMPOSITE 1-8	
Date Sampled				03/25/2020	03/25/2020	03/25/2020	
Date Prepared			03/31/2020	03/31/2020	03/31/2020	03/31/2020	
Preparation Method			3550B	3550B	3550B	3550B	
Date Analyzed			03/31/2020	03/31/2020	03/31/2020	03/31/2020	
Matrix			Soil	Soil	Soil	Soil	
Units			ug/Kg	ug/Kg	ug/Kg	ug/Kg	
Dilution Factor			1	1	1	1	
Analytes	**MDL**	**PQL**	**Results**	**Results**	**Results**	**Results**	
Acifluorfen	20	20	ND	ND	ND	ND	
Bentazon	10	10	ND	ND	ND	ND	
Chloramben	10	10	ND	ND	ND	ND	
2,4-D	10	10	ND	ND	ND	ND	
Dalapon	20	20	ND	ND	ND	ND	
2,4-DB	10	10	ND	ND	ND	ND	
DCPA diacid	20	20	ND	ND	ND	ND	
Dicamba	10	10	ND	ND	ND	ND	
3,5-Dichlorobenzoic acid	10	10	ND	ND	ND	ND	
Dichloroprop	10	10	ND	ND	ND	ND	
Dinoseb (DNBP, 2-sec-Butyl-4, 6-dinitrophenol)	20	20	ND	ND	ND	ND	
MCPA	2000	2000	ND	ND	ND	ND	
MCPP	2000	2000	ND	ND	ND	ND	
4-Nitrophenol	10	10	ND	ND	ND	ND	
Pentachlorophenol (PCP)	10	10	ND	ND	ND	ND	
Picloram	10	10	ND	ND	ND	ND	
2,4,5-T (2,4,5-Trichlorophenoxyacetic acid)	10	10	ND	ND	ND	ND	
2,4,5-TP	10	10	ND	ND	ND	ND	

American Environmental Testing Laboratory Inc.
2834 & 2908 North Naomi Street Burbank, CA 91504 • DOHS NO: 1541, LACSD NO: 10181
Tel: (888) 288-AETL • (818) 845-8200 • Fax: (818) 845-8840 • www.aetlab.com

ANALYTICAL RESULTS

Project ID: 426450
Project Name: PO# 1049140

AETL Job Number	Submitted	Client
104233	03/26/2020	ENTANA

Method: (8151A), Chlorinated Herbicides by GC/ECD

Our Lab I.D.			Method Blank	104233.02	104233.03	104233.04	
Surrogates	%Rec.Limit		% Rec.	% Rec.	% Rec.	% Rec.	
DCAA	40-150		61.8	54.0	50.2	49.2	

American Environmental Testing Laboratory Inc.
2834 & 2908 North Naomi Street Burbank, CA 91504 • DOHS NO: 1541, LACSD NO: 10181
Tel: (888) 288-AETL • (818) 845-8200 • Fax: (818) 845-8840 • www.aetlab.com

ANALYTICAL RESULTS

Ordered By

Enthalpy Analytical
931 W. Barkley Ave.
Orange, CA 92868-

Telephone: (714)771-6900
Attn: Ranjit Clarke
Page: **4**

Project ID: 426450
Project Name: PO# 1049140

AETL Job Number	Submitted	Client
104233	03/26/2020	ENTANA

Method: (8151A), Chlorinated Herbicides by GC/ECD

QC Batch No: 033120MB2

Our Lab I.D.			**104233.01**				
Client Sample I.D.			P-6-1'				
Date Sampled			**03/25/2020**				
Date Prepared			**03/31/2020**				
Preparation Method			**3550B**				
Date Analyzed			**03/31/2020**				
Matrix			Soil				
Units			ug/Kg				
Dilution Factor			2				
Analytes	**MDL**	**PQL**	**Results**				
Acifluorfen	**40**	**40**	**ND**				
Bentazon	**20**	**20**	**ND**				
Chloramben	**20**	**20**	**ND**				
2,4-D	**20**	**20**	**ND**				
Dalapon	**40**	**40**	**ND**				
2,4-DB	**20**	**20**	**ND**				
DCPA diacid	**40**	**40**	**ND**				
Dicamba	**20**	**20**	**ND**				
3,5-Dichlorobenzoic acid	**20**	**20**	**ND**				
Dichloroprop	**20**	**20**	**ND**				
Dinoseb (DNBP, 2-sec-Butyl-4, 6-dinitrophenol)	**40**	**40**	**ND**				
MCPA	**4000**	**4000**	**ND**				
MCPP	**4000**	**4000**	**ND**				
4-Nitrophenol	**20**	**20**	**ND**				
Pentachlorophenol (PCP)	**20**	**20**	**ND**				
Picloram	**20**	**20**	**ND**				
2,4,5-T (2,4,5-Trichlorophenoxyacetic acid)	**20**	**20**	**ND**				
2,4,5-TP	**20**	**20**	**ND**				
Our Lab I.D.			**104233.01**				
Surrogates	**%Rec.Limit**		**% Rec.**				
DCAA	**40-150**		**67.4**				

American Environmental Testing Laboratory Inc.
2834 & 2908 North Naomi Street Burbank, CA 91504 • DOHS NO: 1541, LACSD NO: 10181
Tel: (888) 288-AETL • (818) 845-8200 • Fax: (818) 845-8840 • www.aetlab.com

QUALITY CONTROL RESULTS

Ordered By

Enthalpy Analytical
931 W. Barkley Ave.
Orange, CA 92868-

Telephone: (714)771-6900
Attn: Ranjit Clarke
Page: **5**

Project ID: 426450
Project Name: PO# 1049140

AETL Job Number	Submitted	Client
104233	03/26/2020	ENTANA

Method: (8151A), Chlorinated Herbicides by GC/ECD

QC Batch No: 033120MB2; Dup or Spiked Sample: 104233.03; LCS: Clean Sand; QC Prepared: 03/31/2020; QC Analyzed: 03/31/2020; Units: ug/Kg

Analytes	Sample Result	MS Concen	MS Recov	MS % REC	MS DUP Concen	MS DUP Recov	MS DUP % REC	RPD %	MS/MSD % Limit	MS RPD % Limit
2,4-D	0.00	25.0	19.6	78.4	25.0	21.5	86.0	9.25	40-140	<40
Dinoseb (DNBP, 2-sec-Butyl-4, 6-dinitrophenol)	0.00	25.0	17.3	69.2	25.0	15.7	62.8	9.70	40-140	<40
2,4,5-T (2,4,5-Trichlorophenoxyacetic acid)	0.00	25.0	20.9	83.6	25.0	18.3	73.2	13.3	40-140	<40
Surrogates										
DCAA	0.00	50.0	36.7	73.4	50.0	38.4	76.8	4.63	40-140	<20

QC Batch No: 033120MB2; Dup or Spiked Sample: 104233.03; LCS: Clean Sand; QC Prepared: 03/31/2020; QC Analyzed: 03/31/2020; Units: ug/Kg

Analytes	LCS Concen	LCS Recov	LCS % REC	LCS DUP Concen	LCS DUP Recov	LCS DUP % REC	LCS RPD % REC	LCS/LCSD % Limit	LCS RPD % Limit	
2,4-D	25.0	21.8	87.2	25.0	21.5	86.0	1.39	50-140	<40	
Dinoseb (DNBP, 2-sec-Butyl-4, 6-dinitrophenol)	25.0	21.9	87.6	25.0	20.7	82.8	5.63	50-140	<40	
2,4,5-T (2,4,5-Trichlorophenoxyacetic acid)	25.0	17.0	68.0	25.0	15.9	63.6	6.69	50-140	<40	
LCS										
Dalapon	25.0	27.4	110	25.0	19.3	77.2	35.0	50-140	<40	
2,4-DB	25.0	15.1	60.4	25.0	12.6	50.4	18.1	50-140	<40	
Dicamba	25.0	14.5	58.0	25.0	19.7	78.8	30.4	50-140	<40	
Dichloroprop	25.0	15.3	61.2	25.0	13.0	51.9	16.4	50-140	<40	
MCPA	2,500	3,000	120	2,500	2,340	93.5	24.8	50-140	<40	
MCPP	2,500	2,100	84.2	2,500	3,000	120	35.1	50-140	<40	
2,4,5-TP	25.0	17.4	69.6	25.0	20.1	80.4	14.4	50-140	<40	
Surrogates										
DCAA	50.0	26.3	52.6	50.0	25.1	50.2	4.67	50-140	<20	

American Environmental Testing Laboratory Inc.
2834 & 2908 North Naomi Street, Burbank, CA 91504 • DOHS NO: 1541, LACSD NO: 10181
Tel: (888) 288-AETL • (818) 845-8200 • Fax: (818) 845-8840 • www.aetlab.com

Data Qualifiers and Descriptors

Data Qualifier:

#:	Recovery is not within acceptable control limits.
*:	In the QC section, sample results have been taken directly from the ICP reading. No preparation factor has been applied.
B:	Analyte was present in the Method Blank.
D:	Result is from a diluted analysis.
E:	Result is beyond calibration limits and is estimated.
H:	Analysis was performed over the allowed holding time due to circumstances which were beyond laboratory control.
J:	Analyte was detected . However, the analyte concentration is an estimated value, which is between the Method Detection Limit (MDL) and the Practical Quantitation Limit (PQL).
M:	Matrix spike recovery is outside control limits due to matrix interference. Laboratory Control Sample recovery was acceptable.
MCL:	Maximum Contaminant Level
NS:	No Standard Available
S6:	Surrogate recovery is outside control limits due to matrix interference.
S8:	The analysis of the sample required a dilution such that the surrogate concentration was diluted below the method acceptance criteria.
X:	Results represent LCS and LCSD data.

Definition:

%Limi:	Percent acceptable limits.
%REC:	Percent recovery.
Con.L:	Acceptable Control Limits
Conce:	Added concentration to the sample.
LCS:	Laboratory Control Sample
MDL:	Method Detection Limit is a statistically derived number which is specific for each instrument, each method, and each compound. It indicates a distinctively detectable quantity with 99% probability.

American Environmental Testing Laboratory Inc.
2834 & 2908 North Naomi Street, Burbank, CA 91504 • DOHS NO: 1541, LACSD NO: 10181
Tel: (888) 288-AETL • (818) 845-8200 • Fax: (818) 845-8840 • www.aetlab.com

Data Qualifiers and Descriptors

MS:	Matrix Spike
MS DU:	Matrix Spike Duplicate
ND:	Analyte was not detected in the sample at or above MDL.
PQL:	Practical Quantitation Limit or ML (Minimum Level as per RWQCB) is the minimum concentration that can be quantified with more than 99% confidence. Taking into account all aspects of the entire analytical instrumentation and practice.
Recov:	Recovered concentration in the sample.
RPD:	Relative Percent Difference

Enthalpy Analytical
931 West Barkley Ave
Orange, CA 92868
(714) 771-6900

enthalpy.com

Lab Job Number: 426449
Report Level: II
Report Date: 04/01/2020

Analytical Report *prepared for:*

Keith Gilbert
Ninyo & Moore
475 Goddard
Suite 200
Irvine, CA 92618

Location: Strathern Park Soil Sampling / 8041 Whitsett Ave., No. Hollywood, CA

Authorized for release by:

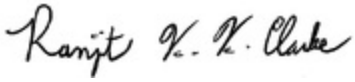

Ranjit K Clarke, Project Manager
(714) 771-9906
Ranjit.Clarke@enthalpy.com

This data package has been reviewed for technical correctness and completeness. Release of this data has been authorized by the Laboratory Manager or the Manager's designee, as verified by the above signature which applies to this PDF file as well as any associated electronic data deliverable files. The results contained in this report meet all requirements of NELAP and pertain only to those samples which were submitted for analysis. This report may be reproduced only in its entirety.

ENTHALPY ANALYTICAL

Sample Summary

Keith Gilbert Ninyo & Moore 475 Goddard Suite 200 Irvine, CA 92618	Lab Job #: Location: Date Received:	426449 Strathern Park Soil Sampling / 8041 Whitsett Ave., No. Hollywood, CA 03/25/20

Sample ID	Lab ID	Collected	Matrix
WC-1	426449-001	03/25/20 15:10	Soil
WC-2	426449-002	03/25/20 15:10	Soil

ENTHALPY ANALYTICAL

Case Narrative

Ninyo & Moore 475 Goddard Suite 200 Irvine, CA 92618 Keith Gilbert	Lab Job Number:	426449
	Location:	Strathern Park Soil Sampling / 8041 Whitsett Ave., No. Hollywood, CA
	Date Received:	03/25/20

This data package contains sample and QC results for two soil samples, requested for the above referenced project on 03/25/20. The samples were received cold and intact.

TPH-Extractables by GC (EPA 8015B):

High RPD was observed for diesel C10-C28 in the MS/MSD of P-4-10' (lab # 426382-012); the high RPD was not associated with any reported results. No other analytical problems were encountered.

Volatile Organics by GC/MS (EPA 8260B):

No analytical problems were encountered.

Metals (EPA 6010B and EPA 7471A):

Low recoveries were observed for barium and antimony in the MS/MSD of WC-1 (lab # 426449-001); the LCS was within limits, and the associated RPDs were within limits. No other analytical problems were encountered.

ENTHALPY ANALYTICAL

Chain of Custody Record

Lab No: 426449

Page: 1 of 1

Turn Around Time (rush by advanced notice only)

Standard:	X	5 Day:		3 Day:	
2 Day:		1 Day:		Custom TAT:	

Enthalpy Analytical - Orange

931 W. Barkley Avenue, Orange, CA 92868

Phone 714-771-6900

Matrix: A = Air S = Soil/Solid W = Water DW = Drinking Wate SD = Sediment PP = Pure Product SEA = Sea Water SW = Swab T = Tissue WP = Wipe O = Other

Preservatives: 1 = $Na_2S_2O_3$ 2 = HCl 3 = HNO_3 4 = H_2SO_4 5 = NaOH 6 = Other

Sample Receipt Temp: 3.4 / 1.1 (lab use only)

CUSTOMER INFORMATION		PROJECT INFORMATION	
Company:	Ninyo & Moore	Name:	Strathern Park Soil Sampling
Report To:	Keith Gilbert	Number:	211294004
Email:	kgilbert@ninyoandmoore.com	P.O. #:	
Address:	475 Goddard Ste 200	Address:	8041 Whitsett Avenue
	Irvine, CA 92618		North Hollywood, CA 91605
Phone:	949-753-7070	Global ID:	
Fax:	949-753-7071	Sampled By:	Kristina Hill (KMH)

	Sample ID	Sampling Date	Sampling Time	Matrix	Container No. / Size	Pres.	Title 22 Metals (6010B/7471A)	TRPH (1664)	TPHcc (8015M)	VOCs (8260B)	SVOCs (8270C)	PAHs (8270SIM)	OCPs (8081A	PCBs (8082)	CHs (8150	pH, nitrates, sulfates	Hold	Test Instructions / Comments
1	WC-1	3/25/2020	1510	SOIL	8oz jar	ICE	X		X	X								please cc results to khill@ninyoandmoore.com
2	WC-2	3/25/2020	1510	SOIL	8oz jar	ICE	X		X	X								
3																		
4																		
5																		
6																		
7																		
8																		
9																		
10																		

KMH 3/25/2020

	Signature	Print Name	Company / Title	Date / Time
[1] Relinquished By:		Kristina Hill	Ninyo & Moore / Geologist	3/25/2020 1633
[1] Received By:		Elizabeth Palmer	EA	3/25/2020 16:33
[2] Relinquished By:				
[2] Received By:				
[3] Relinquished By:				
[3] Received By:				

ENTHALPY ANALYTICAL

SAMPLE ACCEPTANCE CHECKLIST

Section 1

Client: Ninyo & Moore

Project: Strathern Park Soil Sampling

Date Received: 03/25/2020

Sampler's Name Present: ☑ Yes ☐ No

Section 2

Sample(s) received in a cooler? ☑ Yes, How many? 1 ☐ No (skip section 2)

Sample Temp (°C) (No Cooler): _____

Sample Temp (°C), One from each cooler: #1: 3.4 #2: _____ #3: _____ #4: _____

(Acceptance range is < 6°C but not frozen (for Microbiology samples, acceptance range is < 10°C but not frozen). It is acceptable for samples collected the same day as sample receipt to have a higher temperature as long as there is evidence that cooling has begun.)

Shipping Information: _____

Section 3

Was the cooler packed with: ☑ Ice ☐ Ice Packs ☐ Bubble Wrap ☐ Styrofoam ☐ Paper ☐ None ☐ Other _____

Cooler Temp (°C): #1: 1.1 #2: _____ #3: _____ #4: _____

Section 4	YES	NO	N/A
Was a COC received?	✓		
Are sample IDs present?	✓		
Are sampling dates & times present?	✓		
Is a relinquished signature present?	✓		
Are the tests required clearly indicated on the COC?	✓		
Are custody seals present?		✓	
If custody seals are present, were they intact?			✓
Are all samples sealed in plastic bags? (Recommended for Microbiology samples)			✓
Did all samples arrive intact? If no, indicate in Section 4 below.	✓		
Did all bottle labels agree with COC? (ID, dates and times)	✓		
Were the samples collected in the correct containers for the required tests?	✓		
Are the containers labeled with the correct preservatives?			✓
Is there headspace in the VOA vials greater than 5-6 mm in diameter?			✓
Was a sufficient amount of sample submitted for the requested tests?	✓		

Section 5 Explanations/Comments

Section 6

For discrepancies, how was the Project Manager notified? ☐ Verbal PM Initials: _____ Date/Time _____ ☐ Email (email sent to/on): _____ / _____

Project Manager's response:

Completed By: _____ Date: 03/25/2020

ENTHALPY ANALYTICAL

Analysis Results for 426449

Keith Gilbert
Ninyo & Moore
475 Goddard
Suite 200
Irvine, CA 92618

Lab Job #: 426449
Location: Strathern Park Soil Sampling / 8041 Whitsett Ave., No. Hollywood, CA
Date Received: 03/25/20

Sample ID: WC-1 **Lab ID: 426449-001** **Collected: 03/25/20 15:10**
Matrix: Soil

426449-001 Analyte	Result	Qual	Units	RL	DF	Batch	Prepared	Analyzed	Chemist
Method: EPA 6010B Prep Method: EPA 3050B									
Antimony	ND		mg/Kg	2.9	0.96	243801	03/26/20	03/26/20	SBW
Arsenic	ND		mg/Kg	0.96	0.96	243801	03/26/20	03/26/20	SBW
Barium	**84**		mg/Kg	0.96	0.96	243801	03/26/20	03/26/20	SBW
Beryllium	ND		mg/Kg	0.48	0.96	243801	03/26/20	03/26/20	SBW
Cadmium	ND		mg/Kg	0.48	0.96	243801	03/26/20	03/26/20	SBW
Chromium	**6.9**		mg/Kg	0.96	0.96	243801	03/26/20	03/26/20	SBW
Cobalt	**4.9**		mg/Kg	0.48	0.96	243801	03/26/20	03/26/20	SBW
Copper	**6.6**		mg/Kg	0.96	0.96	243801	03/26/20	03/26/20	SBW
Lead	**3.4**		mg/Kg	0.96	0.96	243801	03/26/20	03/26/20	SBW
Molybdenum	**1.1**		mg/Kg	0.96	0.96	243801	03/26/20	03/26/20	SBW
Nickel	**4.5**		mg/Kg	1.4	0.96	243801	03/26/20	03/26/20	SBW
Selenium	ND		mg/Kg	2.9	0.96	243801	03/26/20	03/27/20	SBW
Silver	ND		mg/Kg	0.48	0.96	243801	03/26/20	03/26/20	SBW
Thallium	ND		mg/Kg	2.9	0.96	243801	03/26/20	03/26/20	SBW
Vanadium	**21**		mg/Kg	0.48	0.96	243801	03/26/20	03/26/20	SBW
Zinc	**22**		mg/Kg	4.8	0.96	243801	03/26/20	03/26/20	SBW
Method: EPA 7471A Prep Method: METHOD									
Mercury	ND		mg/Kg	0.14	1	243808	03/26/20	03/27/20	DLS
Method: EPA 8015B Prep Method: EPA 3580									
TPH C6-C12	ND		mg/Kg	10	1	243822	03/26/20	03/27/20	TJW
TPH C13-C22	ND		mg/Kg	10	1	243822	03/26/20	03/27/20	TJW
TPH C23-C44	**14**		mg/Kg	10	1	243822	03/26/20	03/27/20	TJW
Surrogates				**Limits**					
n-Triacontane	76%		%REC	50-150	1	243822	03/26/20	03/27/20	TJW
Method: EPA 8260B Prep Method: EPA 5030B									
3-Chloropropene	ND		ug/Kg	5.0	1	243906	03/29/20	03/29/20	LYZ
cis-1,4-Dichloro-2-butene	ND		ug/Kg	5.0	1	243906	03/29/20	03/29/20	LYZ
trans-1,4-Dichloro-2-butene	ND		ug/Kg	5.0	1	243906	03/29/20	03/29/20	LYZ
Isopropyl Ether (DIPE)	ND		ug/Kg	5.0	1	243906	03/29/20	03/29/20	LYZ
Ethyl tert-Butyl Ether (ETBE)	ND		ug/Kg	5.0	1	243906	03/29/20	03/29/20	LYZ
Methyl tert-Amyl Ether (TAME)	ND		ug/Kg	5.0	1	243906	03/29/20	03/29/20	LYZ

Results for any subcontracted analyses are not included in this section.

ENTHALPY ANALYTICAL

Analysis Results for 426449

426449-001 Analyte	Result	Qual	Units	RL	DF	Batch	Prepared	Analyzed	Chemist
tert-Butyl Alcohol (TBA)	ND		ug/Kg	10	1	243906	03/29/20	03/29/20	LYZ
Freon 12	ND		ug/Kg	5.0	1	243906	03/29/20	03/29/20	LYZ
Chloromethane	ND		ug/Kg	5.0	1	243906	03/29/20	03/29/20	LYZ
Vinyl Chloride	ND		ug/Kg	5.0	1	243906	03/29/20	03/29/20	LYZ
Bromomethane	ND		ug/Kg	5.0	1	243906	03/29/20	03/29/20	LYZ
Chloroethane	ND		ug/Kg	5.0	1	243906	03/29/20	03/29/20	LYZ
Trichlorofluoromethane	ND		ug/Kg	5.0	1	243906	03/29/20	03/29/20	LYZ
Acetone	ND		ug/Kg	100	1	243906	03/29/20	03/29/20	LYZ
Freon 113	ND		ug/Kg	5.0	1	243906	03/29/20	03/29/20	LYZ
1,1-Dichloroethene	ND		ug/Kg	5.0	1	243906	03/29/20	03/29/20	LYZ
Methylene Chloride	ND		ug/Kg	5.0	1	243906	03/29/20	03/29/20	LYZ
MTBE	ND		ug/Kg	5.0	1	243906	03/29/20	03/29/20	LYZ
trans-1,2-Dichloroethene	ND		ug/Kg	5.0	1	243906	03/29/20	03/29/20	LYZ
1,1-Dichloroethane	ND		ug/Kg	5.0	1	243906	03/29/20	03/29/20	LYZ
2-Butanone	ND		ug/Kg	100	1	243906	03/29/20	03/29/20	LYZ
cis-1,2-Dichloroethene	ND		ug/Kg	5.0	1	243906	03/29/20	03/29/20	LYZ
2,2-Dichloropropane	ND		ug/Kg	5.0	1	243906	03/29/20	03/29/20	LYZ
Chloroform	ND		ug/Kg	5.0	1	243906	03/29/20	03/29/20	LYZ
Bromochloromethane	ND		ug/Kg	5.0	1	243906	03/29/20	03/29/20	LYZ
1,1,1-Trichloroethane	ND		ug/Kg	5.0	1	243906	03/29/20	03/29/20	LYZ
1,1-Dichloropropene	ND		ug/Kg	5.0	1	243906	03/29/20	03/29/20	LYZ
Carbon Tetrachloride	ND		ug/Kg	5.0	1	243906	03/29/20	03/29/20	LYZ
1,2-Dichloroethane	ND		ug/Kg	5.0	1	243906	03/29/20	03/29/20	LYZ
Benzene	ND		ug/Kg	5.0	1	243906	03/29/20	03/29/20	LYZ
Trichloroethene	ND		ug/Kg	5.0	1	243906	03/29/20	03/29/20	LYZ
1,2-Dichloropropane	ND		ug/Kg	5.0	1	243906	03/29/20	03/29/20	LYZ
Bromodichloromethane	ND		ug/Kg	5.0	1	243906	03/29/20	03/29/20	LYZ
Dibromomethane	ND		ug/Kg	5.0	1	243906	03/29/20	03/29/20	LYZ
4-Methyl-2-Pentanone	ND		ug/Kg	5.0	1	243906	03/29/20	03/29/20	LYZ
cis-1,3-Dichloropropene	ND		ug/Kg	5.0	1	243906	03/29/20	03/29/20	LYZ
Toluene	ND		ug/Kg	5.0	1	243906	03/29/20	03/29/20	LYZ
trans-1,3-Dichloropropene	ND		ug/Kg	5.0	1	243906	03/29/20	03/29/20	LYZ
1,1,2-Trichloroethane	ND		ug/Kg	5.0	1	243906	03/29/20	03/29/20	LYZ
1,3-Dichloropropane	ND		ug/Kg	5.0	1	243906	03/29/20	03/29/20	LYZ
Tetrachloroethene	ND		ug/Kg	5.0	1	243906	03/29/20	03/29/20	LYZ
Dibromochloromethane	ND		ug/Kg	5.0	1	243906	03/29/20	03/29/20	LYZ
1,2-Dibromoethane	ND		ug/Kg	5.0	1	243906	03/29/20	03/29/20	LYZ
Chlorobenzene	ND		ug/Kg	5.0	1	243906	03/29/20	03/29/20	LYZ
1,1,1,2-Tetrachloroethane	ND		ug/Kg	5.0	1	243906	03/29/20	03/29/20	LYZ
Ethylbenzene	ND		ug/Kg	5.0	1	243906	03/29/20	03/29/20	LYZ
m,p-Xylenes	ND		ug/Kg	10	1	243906	03/29/20	03/29/20	LYZ
o-Xylene	ND		ug/Kg	5.0	1	243906	03/29/20	03/29/20	LYZ
Styrene	ND		ug/Kg	5.0	1	243906	03/29/20	03/29/20	LYZ
Bromoform	ND		ug/Kg	5.0	1	243906	03/29/20	03/29/20	LYZ
Isopropylbenzene	ND		ug/Kg	5.0	1	243906	03/29/20	03/29/20	LYZ
1,1,2,2-Tetrachloroethane	ND		ug/Kg	5.0	1	243906	03/29/20	03/29/20	LYZ

Results for any subcontracted analyses are not included in this section.

ENTHALPY ANALYTICAL

Analysis Results for 426449

426449-001 Analyte	Result	Qual	Units	RL	DF	Batch	Prepared	Analyzed	Chemist
1,2,3-Trichloropropane	ND		ug/Kg	5.0	1	243906	03/29/20	03/29/20	LYZ
Propylbenzene	ND		ug/Kg	5.0	1	243906	03/29/20	03/29/20	LYZ
Bromobenzene	ND		ug/Kg	5.0	1	243906	03/29/20	03/29/20	LYZ
1,3,5-Trimethylbenzene	ND		ug/Kg	5.0	1	243906	03/29/20	03/29/20	LYZ
2-Chlorotoluene	ND		ug/Kg	5.0	1	243906	03/29/20	03/29/20	LYZ
4-Chlorotoluene	ND		ug/Kg	5.0	1	243906	03/29/20	03/29/20	LYZ
tert-Butylbenzene	ND		ug/Kg	5.0	1	243906	03/29/20	03/29/20	LYZ
1,2,4-Trimethylbenzene	ND		ug/Kg	5.0	1	243906	03/29/20	03/29/20	LYZ
sec-Butylbenzene	ND		ug/Kg	5.0	1	243906	03/29/20	03/29/20	LYZ
para-Isopropyl Toluene	ND		ug/Kg	5.0	1	243906	03/29/20	03/29/20	LYZ
1,3-Dichlorobenzene	ND		ug/Kg	5.0	1	243906	03/29/20	03/29/20	LYZ
1,4-Dichlorobenzene	ND		ug/Kg	5.0	1	243906	03/29/20	03/29/20	LYZ
n-Butylbenzene	ND		ug/Kg	5.0	1	243906	03/29/20	03/29/20	LYZ
1,2-Dichlorobenzene	ND		ug/Kg	5.0	1	243906	03/29/20	03/29/20	LYZ
1,2-Dibromo-3-Chloropropane	ND		ug/Kg	5.0	1	243906	03/29/20	03/29/20	LYZ
1,2,4-Trichlorobenzene	ND		ug/Kg	5.0	1	243906	03/29/20	03/29/20	LYZ
Hexachlorobutadiene	ND		ug/Kg	5.0	1	243906	03/29/20	03/29/20	LYZ
Naphthalene	ND		ug/Kg	5.0	1	243906	03/29/20	03/29/20	LYZ
1,2,3-Trichlorobenzene	ND		ug/Kg	5.0	1	243906	03/29/20	03/29/20	LYZ
Xylene (total)	ND		ug/Kg	5.0	1	243906	03/29/20	03/29/20	LYZ
Surrogates				**Limits**					
Dibromofluoromethane	103%		%REC	70-145	1	243906	03/29/20	03/29/20	LYZ
1,2-Dichloroethane-d4	107%		%REC	70-145	1	243906	03/29/20	03/29/20	LYZ
Toluene-d8	104%		%REC	70-145	1	243906	03/29/20	03/29/20	LYZ
Bromofluorobenzene	97%		%REC	70-145	1	243906	03/29/20	03/29/20	LYZ

Results for any subcontracted analyses are not included in this section.

ENTHALPY ANALYTICAL

Analysis Results for 426449

Sample ID: WC-2	Lab ID: 426449-002	Collected: 03/25/20 15:10
	Matrix: Soil	

426449-002 Analyte	Result	Qual	Units	RL	DF	Batch	Prepared	Analyzed	Chemist
Method: EPA 6010B Prep Method: EPA 3050B									
Antimony	ND		mg/Kg	2.7	0.89	243801	03/26/20	03/26/20	SBW
Arsenic	ND		mg/Kg	0.89	0.89	243801	03/26/20	03/26/20	SBW
Barium	**45**		mg/Kg	0.89	0.89	243801	03/26/20	03/26/20	SBW
Beryllium	ND		mg/Kg	0.45	0.89	243801	03/26/20	03/26/20	SBW
Cadmium	**1.6**		mg/Kg	0.45	0.89	243801	03/26/20	03/26/20	SBW
Chromium	**6.9**		mg/Kg	0.89	0.89	243801	03/26/20	03/26/20	SBW
Cobalt	**5.2**		mg/Kg	0.45	0.89	243801	03/26/20	03/26/20	SBW
Copper	**6.0**		mg/Kg	0.89	0.89	243801	03/26/20	03/26/20	SBW
Lead	**4.2**		mg/Kg	0.89	0.89	243801	03/26/20	03/26/20	SBW
Molybdenum	**2.5**		mg/Kg	0.89	0.89	243801	03/26/20	03/26/20	SBW
Nickel	**4.6**		mg/Kg	1.3	0.89	243801	03/26/20	03/26/20	SBW
Selenium	ND		mg/Kg	2.7	0.89	243801	03/26/20	03/27/20	SBW
Silver	**0.89**	b	mg/Kg	0.45	0.89	243801	03/26/20	03/27/20	SBW
Thallium	ND		mg/Kg	2.7	0.89	243801	03/26/20	03/26/20	SBW
Vanadium	**19**		mg/Kg	0.45	0.89	243801	03/26/20	03/26/20	SBW
Zinc	**21**		mg/Kg	4.5	0.89	243801	03/26/20	03/26/20	SBW
Method: EPA 7471A Prep Method: METHOD									
Mercury	ND		mg/Kg	0.13	0.94	243808	03/26/20	03/27/20	DLS
Method: EPA 8015B Prep Method: EPA 3580									
TPH C6-C12	ND		mg/Kg	10	1	243822	03/26/20	03/27/20	TJW
TPH C13-C22	ND		mg/Kg	10	1	243822	03/26/20	03/27/20	TJW
TPH C23-C44	ND		mg/Kg	10	1	243822	03/26/20	03/27/20	TJW
Surrogates				**Limits**					
n-Triacontane	92%		%REC	50-150	1	243822	03/26/20	03/27/20	TJW
Method: EPA 8260B Prep Method: EPA 5030B									
3-Chloropropene	ND		ug/Kg	5.0	1	243906	03/29/20	03/29/20	LYZ
cis-1,4-Dichloro-2-butene	ND		ug/Kg	5.0	1	243906	03/29/20	03/29/20	LYZ
trans-1,4-Dichloro-2-butene	ND		ug/Kg	5.0	1	243906	03/29/20	03/29/20	LYZ
Isopropyl Ether (DIPE)	ND		ug/Kg	5.0	1	243906	03/29/20	03/29/20	LYZ
Ethyl tert-Butyl Ether (ETBE)	ND		ug/Kg	5.0	1	243906	03/29/20	03/29/20	LYZ
Methyl tert-Amyl Ether (TAME)	ND		ug/Kg	5.0	1	243906	03/29/20	03/29/20	LYZ
tert-Butyl Alcohol (TBA)	ND		ug/Kg	10	1	243906	03/29/20	03/29/20	LYZ
Freon 12	ND		ug/Kg	5.0	1	243906	03/29/20	03/29/20	LYZ
Chloromethane	ND		ug/Kg	5.0	1	243906	03/29/20	03/29/20	LYZ
Vinyl Chloride	ND		ug/Kg	5.0	1	243906	03/29/20	03/29/20	LYZ
Bromomethane	ND		ug/Kg	5.0	1	243906	03/29/20	03/29/20	LYZ
Chloroethane	ND		ug/Kg	5.0	1	243906	03/29/20	03/29/20	LYZ

Results for any subcontracted analyses are not included in this section.

ENTHALPY ANALYTICAL

Analysis Results for 426449

426449-002 Analyte	Result	Qual	Units	RL	DF	Batch	Prepared	Analyzed	Chemist
Trichlorofluoromethane	ND		ug/Kg	5.0	1	243906	03/29/20	03/29/20	LYZ
Acetone	ND		ug/Kg	100	1	243906	03/29/20	03/29/20	LYZ
Freon 113	ND		ug/Kg	5.0	1	243906	03/29/20	03/29/20	LYZ
1,1-Dichloroethene	ND		ug/Kg	5.0	1	243906	03/29/20	03/29/20	LYZ
Methylene Chloride	ND		ug/Kg	5.0	1	243906	03/29/20	03/29/20	LYZ
MTBE	ND		ug/Kg	5.0	1	243906	03/29/20	03/29/20	LYZ
trans-1,2-Dichloroethene	ND		ug/Kg	5.0	1	243906	03/29/20	03/29/20	LYZ
1,1-Dichloroethane	ND		ug/Kg	5.0	1	243906	03/29/20	03/29/20	LYZ
2-Butanone	ND		ug/Kg	100	1	243906	03/29/20	03/29/20	LYZ
cis-1,2-Dichloroethene	ND		ug/Kg	5.0	1	243906	03/29/20	03/29/20	LYZ
2,2-Dichloropropane	ND		ug/Kg	5.0	1	243906	03/29/20	03/29/20	LYZ
Chloroform	ND		ug/Kg	5.0	1	243906	03/29/20	03/29/20	LYZ
Bromochloromethane	ND		ug/Kg	5.0	1	243906	03/29/20	03/29/20	LYZ
1,1,1-Trichloroethane	ND		ug/Kg	5.0	1	243906	03/29/20	03/29/20	LYZ
1,1-Dichloropropene	ND		ug/Kg	5.0	1	243906	03/29/20	03/29/20	LYZ
Carbon Tetrachloride	ND		ug/Kg	5.0	1	243906	03/29/20	03/29/20	LYZ
1,2-Dichloroethane	ND		ug/Kg	5.0	1	243906	03/29/20	03/29/20	LYZ
Benzene	ND		ug/Kg	5.0	1	243906	03/29/20	03/29/20	LYZ
Trichloroethene	ND		ug/Kg	5.0	1	243906	03/29/20	03/29/20	LYZ
1,2-Dichloropropane	ND		ug/Kg	5.0	1	243906	03/29/20	03/29/20	LYZ
Bromodichloromethane	ND		ug/Kg	5.0	1	243906	03/29/20	03/29/20	LYZ
Dibromomethane	ND		ug/Kg	5.0	1	243906	03/29/20	03/29/20	LYZ
4-Methyl-2-Pentanone	ND		ug/Kg	5.0	1	243906	03/29/20	03/29/20	LYZ
cis-1,3-Dichloropropene	ND		ug/Kg	5.0	1	243906	03/29/20	03/29/20	LYZ
Toluene	ND		ug/Kg	5.0	1	243906	03/29/20	03/29/20	LYZ
trans-1,3-Dichloropropene	ND		ug/Kg	5.0	1	243906	03/29/20	03/29/20	LYZ
1,1,2-Trichloroethane	ND		ug/Kg	5.0	1	243906	03/29/20	03/29/20	LYZ
1,3-Dichloropropane	ND		ug/Kg	5.0	1	243906	03/29/20	03/29/20	LYZ
Tetrachloroethene	ND		ug/Kg	5.0	1	243906	03/29/20	03/29/20	LYZ
Dibromochloromethane	ND		ug/Kg	5.0	1	243906	03/29/20	03/29/20	LYZ
1,2-Dibromoethane	ND		ug/Kg	5.0	1	243906	03/29/20	03/29/20	LYZ
Chlorobenzene	ND		ug/Kg	5.0	1	243906	03/29/20	03/29/20	LYZ
1,1,1,2-Tetrachloroethane	ND		ug/Kg	5.0	1	243906	03/29/20	03/29/20	LYZ
Ethylbenzene	ND		ug/Kg	5.0	1	243906	03/29/20	03/29/20	LYZ
m,p-Xylenes	ND		ug/Kg	10	1	243906	03/29/20	03/29/20	LYZ
o-Xylene	ND		ug/Kg	5.0	1	243906	03/29/20	03/29/20	LYZ
Styrene	ND		ug/Kg	5.0	1	243906	03/29/20	03/29/20	LYZ
Bromoform	ND		ug/Kg	5.0	1	243906	03/29/20	03/29/20	LYZ
Isopropylbenzene	ND		ug/Kg	5.0	1	243906	03/29/20	03/29/20	LYZ
1,1,2,2-Tetrachloroethane	ND		ug/Kg	5.0	1	243906	03/29/20	03/29/20	LYZ
1,2,3-Trichloropropane	ND		ug/Kg	5.0	1	243906	03/29/20	03/29/20	LYZ
Propylbenzene	ND		ug/Kg	5.0	1	243906	03/29/20	03/29/20	LYZ
Bromobenzene	ND		ug/Kg	5.0	1	243906	03/29/20	03/29/20	LYZ
1,3,5-Trimethylbenzene	ND		ug/Kg	5.0	1	243906	03/29/20	03/29/20	LYZ
2-Chlorotoluene	ND		ug/Kg	5.0	1	243906	03/29/20	03/29/20	LYZ
4-Chlorotoluene	ND		ug/Kg	5.0	1	243906	03/29/20	03/29/20	LYZ

Results for any subcontracted analyses are not included in this section.

ENTHALPY ANALYTICAL

Analysis Results for 426449

426449-002 Analyte	Result	Qual	Units	RL	DF	Batch	Prepared	Analyzed	Chemist
tert-Butylbenzene	ND		ug/Kg	5.0	1	243906	03/29/20	03/29/20	LYZ
1,2,4-Trimethylbenzene	ND		ug/Kg	5.0	1	243906	03/29/20	03/29/20	LYZ
sec-Butylbenzene	ND		ug/Kg	5.0	1	243906	03/29/20	03/29/20	LYZ
para-Isopropyl Toluene	ND		ug/Kg	5.0	1	243906	03/29/20	03/29/20	LYZ
1,3-Dichlorobenzene	ND		ug/Kg	5.0	1	243906	03/29/20	03/29/20	LYZ
1,4-Dichlorobenzene	ND		ug/Kg	5.0	1	243906	03/29/20	03/29/20	LYZ
n-Butylbenzene	ND		ug/Kg	5.0	1	243906	03/29/20	03/29/20	LYZ
1,2-Dichlorobenzene	ND		ug/Kg	5.0	1	243906	03/29/20	03/29/20	LYZ
1,2-Dibromo-3-Chloropropane	ND		ug/Kg	5.0	1	243906	03/29/20	03/29/20	LYZ
1,2,4-Trichlorobenzene	ND		ug/Kg	5.0	1	243906	03/29/20	03/29/20	LYZ
Hexachlorobutadiene	ND		ug/Kg	5.0	1	243906	03/29/20	03/29/20	LYZ
Naphthalene	ND		ug/Kg	5.0	1	243906	03/29/20	03/29/20	LYZ
1,2,3-Trichlorobenzene	ND		ug/Kg	5.0	1	243906	03/29/20	03/29/20	LYZ
Xylene (total)	ND		ug/Kg	5.0	1	243906	03/29/20	03/29/20	LYZ
Surrogates				**Limits**					
Dibromofluoromethane	103%		%REC	70-145	1	243906	03/29/20	03/29/20	LYZ
1,2-Dichloroethane-d4	108%		%REC	70-145	1	243906	03/29/20	03/29/20	LYZ
Toluene-d8	104%		%REC	70-145	1	243906	03/29/20	03/29/20	LYZ
Bromofluorobenzene	97%		%REC	70-145	1	243906	03/29/20	03/29/20	LYZ

ND Not Detected
b See narrative

Results for any subcontracted analyses are not included in this section.

ENTHALPY ANALYTICAL

Batch QC

Type: Blank	**Lab ID:** QC863552	**Batch:** 243808
Matrix: Soil	**Method:** EPA 7471A	**Prep Method:** METHOD

QC863552 Analyte	Result	Qual	Units	RL	Prepared	Analyzed
Mercury	ND		mg/Kg	0.14	03/26/20	03/27/20

Type: Lab Control Sample	**Lab ID:** QC863553	**Batch:** 243808
Matrix: Soil	**Method:** EPA 7471A	**Prep Method:** METHOD

QC863553 Analyte	Result	Spiked	Units	Recovery	Qual	Limits
Mercury	0.7666	0.8333	mg/Kg	92%		80-120

Type: Matrix Spike	**Lab ID:** QC863554	**Batch:** 243808
Matrix (Source ID): Soil (426449-001)	**Method:** EPA 7471A	**Prep Method:** METHOD

QC863554 Analyte	Result	Source Sample Result	Spiked	Units	Recovery	Qual	Limits	DF
Mercury	0.8024	0	0.8333	mg/Kg	96%		75-125	1

Type: Matrix Spike Duplicate	**Lab ID:** QC863555	**Batch:** 243808
Matrix (Source ID): Soil (426449-001)	**Method:** EPA 7471A	**Prep Method:** METHOD

QC863555 Analyte	Result	Source Sample Result	Spiked	Units	Recovery	Qual	Limits	RPD	RPD Lim	DF
Mercury	0.7624	0	0.7937	mg/Kg	96%		75-125	0	20	0.95

Type: Blank	**Lab ID:** QC863571	**Batch:** 243822
Matrix: Soil	**Method:** EPA 8015B	**Prep Method:** EPA 3580

QC863571 Analyte	Result	Qual	Units	RL	Prepared	Analyzed
TPH C6-C12	ND		mg/Kg	10	03/26/20	03/26/20
TPH C13-C22	ND		mg/Kg	10	03/26/20	03/26/20
TPH C23-C44	ND		mg/Kg	10	03/26/20	03/26/20
Surrogates				**Limits**		
n-Triacontane	87%		%REC	50-150	03/26/20	03/26/20

ENTHALPY ANALYTICAL

Batch QC

Type: Lab Control Sample	**Lab ID:** QC863572	**Batch:** 243822
Matrix: Soil	**Method:** EPA 8015B	**Prep Method:** EPA 3580

QC863572 Analyte	Result	Spiked	Units	Recovery	Qual	Limits
Diesel C10-C28	244.9	250.0	mg/Kg	98%		70-130
Surrogates						
n-Triacontane	9.297	10.00	mg/Kg	93%		50-150

Type: Matrix Spike	**Lab ID:** QC863573	**Batch:** 243822
Matrix (Source ID): Soil (426382-012)	**Method:** EPA 8015B	**Prep Method:** EPA 3580

QC863573 Analyte	Result	Source Sample Result	Spiked	Units	Recovery	Qual	Limits	DF
Diesel C10-C28	220.4	0	251.3	mg/Kg	88%		70-130	1
Surrogates								
n-Triacontane	7.960		10.05	mg/Kg	79%		50-150	1

Type: Matrix Spike Duplicate	**Lab ID:** QC863574	**Batch:** 243822
Matrix (Source ID): Soil (426382-012)	**Method:** EPA 8015B	**Prep Method:** EPA 3580

QC863574 Analyte	Result	Source Sample Result	Spiked	Units	Recovery	Qual	Limits	RPD	RPD Lim	DF
Diesel C10-C28	274.6	0	247.5	mg/Kg	111%		70-130	23*	20	0.99
Surrogates										
n-Triacontane	9.070		9.901	mg/Kg	92%		50-150			0.99

ENTHALPY ANALYTICAL

Batch QC

Type: Blank	**Lab ID: QC863531**	**Batch: 243801**
Matrix: Soil	**Method: EPA 6010B**	**Prep Method: EPA 3050B**

QC863531 Analyte	Result	Qual	Units	RL	Prepared	Analyzed
Antimony	ND		mg/Kg	3.0	03/26/20	03/26/20
Arsenic	ND		mg/Kg	1.0	03/26/20	03/26/20
Barium	ND		mg/Kg	1.0	03/26/20	03/26/20
Beryllium	ND		mg/Kg	0.50	03/26/20	03/26/20
Cadmium	ND		mg/Kg	0.50	03/26/20	03/26/20
Chromium	ND		mg/Kg	1.0	03/26/20	03/26/20
Cobalt	ND		mg/Kg	0.50	03/26/20	03/26/20
Copper	ND		mg/Kg	1.0	03/26/20	03/26/20
Lead	ND		mg/Kg	1.0	03/26/20	03/26/20
Molybdenum	ND		mg/Kg	1.0	03/26/20	03/26/20
Nickel	ND		mg/Kg	1.5	03/26/20	03/26/20
Selenium	ND		mg/Kg	3.0	03/26/20	03/27/20
Silver	ND		mg/Kg	0.50	03/26/20	03/26/20
Thallium	ND		mg/Kg	3.0	03/26/20	03/26/20
Vanadium	ND		mg/Kg	0.50	03/26/20	03/26/20
Zinc	ND		mg/Kg	5.0	03/26/20	03/26/20

Type: Lab Control Sample	**Lab ID: QC863532**	**Batch: 243801**
Matrix: Soil	**Method: EPA 6010B**	**Prep Method: EPA 3050B**

QC863532 Analyte	Result	Spiked	Units	Recovery	Qual	Limits
Antimony	98.76	100.0	mg/Kg	99%		80-120
Arsenic	99.56	100.0	mg/Kg	100%		80-120
Barium	101.7	100.0	mg/Kg	102%		80-120
Beryllium	99.28	100.0	mg/Kg	99%		80-120
Cadmium	98.37	100.0	mg/Kg	98%		80-120
Chromium	98.95	100.0	mg/Kg	99%		80-120
Cobalt	100.1	100.0	mg/Kg	100%		80-120
Copper	97.24	100.0	mg/Kg	97%		80-120
Lead	106.4	100.0	mg/Kg	106%		80-120
Molybdenum	100.8	100.0	mg/Kg	101%		80-120
Nickel	103.5	100.0	mg/Kg	104%		80-120
Selenium	92.77	100.0	mg/Kg	93%		80-120
Silver	99.57	100.0	mg/Kg	100%	b	80-120
Thallium	100.9	100.0	mg/Kg	101%		80-120
Vanadium	107.8	100.0	mg/Kg	108%		80-120
Zinc	103.4	100.0	mg/Kg	103%		80-120

ENTHALPY ANALYTICAL

Batch QC

Type:	**Matrix Spike**	**Lab ID:**	**QC863533**	**Batch:**	**243801**
Matrix (Source ID):	**Soil (426449-001)**	**Method:**	**EPA 6010B**	**Prep Method:**	**EPA 3050B**

QC863533 Analyte	Result	Source Sample Result	Spiked	Units	Recovery	Qual	Limits	DF
Antimony	79.63	0	108.7	mg/Kg	73%	*	75-125	1.1
Arsenic	108.0	0.8173	108.7	mg/Kg	99%		75-125	1.1
Barium	170.1	84.10	108.7	mg/Kg	79%		75-125	1.1
Beryllium	106.3	0	108.7	mg/Kg	98%		75-125	1.1
Cadmium	112.8	0.3462	108.7	mg/Kg	103%		75-125	1.1
Chromium	117.1	6.875	108.7	mg/Kg	101%		75-125	1.1
Cobalt	115.0	4.856	108.7	mg/Kg	101%		75-125	1.1
Copper	111.1	6.625	108.7	mg/Kg	96%		75-125	1.1
Lead	114.1	3.423	108.7	mg/Kg	102%		75-125	1.1
Molybdenum	106.9	1.058	108.7	mg/Kg	97%		75-125	1.1
Nickel	115.3	4.529	108.7	mg/Kg	102%		75-125	1.1
Selenium	94.91	0	108.7	mg/Kg	87%		75-125	1.1
Silver	98.88	0	108.7	mg/Kg	91%	b	75-125	1.1
Thallium	94.14	0	108.7	mg/Kg	87%		75-125	1.1
Vanadium	135.3	21.01	108.7	mg/Kg	105%		75-125	1.1
Zinc	142.7	22.45	108.7	mg/Kg	111%		75-125	1.1

ENTHALPY ANALYTICAL

Batch QC

Type:	**Matrix Spike Duplicate**	**Lab ID:**	**QC863534**	**Batch:**	**243801**
Matrix (Source ID):	**Soil (426449-001)**	**Method:**	**EPA 6010B**	**Prep Method:**	**EPA 3050B**

QC863534 Analyte	Result	Source Sample Result	Spiked	Units	Recovery	Qual	Limits	RPD	RPD Lim	DF
Antimony	70.63	0	103.1	mg/Kg	69%	*	75-125	7	41	1
Arsenic	105.5	0.8173	103.1	mg/Kg	102%		75-125	3	35	1
Barium	152.0	84.10	103.1	mg/Kg	66%	*	75-125	8	20	1
Beryllium	100.9	0	103.1	mg/Kg	98%		75-125	0	20	1
Cadmium	99.14	0.3462	103.1	mg/Kg	96%		75-125	8	20	1
Chromium	106.6	6.875	103.1	mg/Kg	97%		75-125	4	20	1
Cobalt	103.7	4.856	103.1	mg/Kg	96%		75-125	5	20	1
Copper	101.7	6.625	103.1	mg/Kg	92%		75-125	4	20	1
Lead	111.8	3.423	103.1	mg/Kg	105%		75-125	3	20	1
Molybdenum	103.6	1.058	103.1	mg/Kg	99%		75-125	2	20	1
Nickel	103.9	4.529	103.1	mg/Kg	96%		75-125	5	20	1
Selenium	91.18	0	103.1	mg/Kg	88%		75-125	1	20	1
Silver	96.52	0	103.1	mg/Kg	94%	b	75-125	3	20	1
Thallium	90.67	0	103.1	mg/Kg	88%		75-125	2	20	1
Vanadium	124.4	21.01	103.1	mg/Kg	100%		75-125	4	20	1
Zinc	123.9	22.45	103.1	mg/Kg	98%		75-125	10	20	1

ENTHALPY ANALYTICAL

Batch QC

Type:	**Blank**	**Lab ID:**	**QC863786**	**Batch:**	**243906**
Matrix:	**Soil**	**Method:**	**EPA 8260B**	**Prep Method:**	**EPA 5030B**

QC863786 Analyte	Result	Qual	Units	RL	Prepared	Analyzed
3-Chloropropene	ND		ug/Kg	5.0	03/29/20	03/29/20
cis-1,4-Dichloro-2-butene	ND		ug/Kg	5.0	03/29/20	03/29/20
trans-1,4-Dichloro-2-butene	ND		ug/Kg	5.0	03/29/20	03/29/20
Isopropyl Ether (DIPE)	ND		ug/Kg	5.0	03/29/20	03/29/20
Ethyl tert-Butyl Ether (ETBE)	ND		ug/Kg	5.0	03/29/20	03/29/20
Methyl tert-Amyl Ether (TAME)	ND		ug/Kg	5.0	03/29/20	03/29/20
tert-Butyl Alcohol (TBA)	ND		ug/Kg	10	03/29/20	03/29/20
Freon 12	ND		ug/Kg	5.0	03/29/20	03/29/20
Chloromethane	ND		ug/Kg	5.0	03/29/20	03/29/20
Vinyl Chloride	ND		ug/Kg	5.0	03/29/20	03/29/20
Bromomethane	ND		ug/Kg	5.0	03/29/20	03/29/20
Chloroethane	ND		ug/Kg	5.0	03/29/20	03/29/20
Trichlorofluoromethane	ND		ug/Kg	5.0	03/29/20	03/29/20
Acetone	ND		ug/Kg	100	03/29/20	03/29/20
Freon 113	ND		ug/Kg	5.0	03/29/20	03/29/20
1,1-Dichloroethene	ND		ug/Kg	5.0	03/29/20	03/29/20
Methylene Chloride	ND		ug/Kg	5.0	03/29/20	03/29/20
MTBE	ND		ug/Kg	5.0	03/29/20	03/29/20
trans-1,2-Dichloroethene	ND		ug/Kg	5.0	03/29/20	03/29/20
1,1-Dichloroethane	ND		ug/Kg	5.0	03/29/20	03/29/20
2-Butanone	ND		ug/Kg	100	03/29/20	03/29/20
cis-1,2-Dichloroethene	ND		ug/Kg	5.0	03/29/20	03/29/20
2,2-Dichloropropane	ND		ug/Kg	5.0	03/29/20	03/29/20
Chloroform	ND		ug/Kg	5.0	03/29/20	03/29/20
Bromochloromethane	ND		ug/Kg	5.0	03/29/20	03/29/20
1,1,1-Trichloroethane	ND		ug/Kg	5.0	03/29/20	03/29/20
1,1-Dichloropropene	ND		ug/Kg	5.0	03/29/20	03/29/20
Carbon Tetrachloride	ND		ug/Kg	5.0	03/29/20	03/29/20
1,2-Dichloroethane	ND		ug/Kg	5.0	03/29/20	03/29/20
Benzene	ND		ug/Kg	5.0	03/29/20	03/29/20
Trichloroethene	ND		ug/Kg	5.0	03/29/20	03/29/20
1,2-Dichloropropane	ND		ug/Kg	5.0	03/29/20	03/29/20
Bromodichloromethane	ND		ug/Kg	5.0	03/29/20	03/29/20
Dibromomethane	ND		ug/Kg	5.0	03/29/20	03/29/20
4-Methyl-2-Pentanone	ND		ug/Kg	5.0	03/29/20	03/29/20
cis-1,3-Dichloropropene	ND		ug/Kg	5.0	03/29/20	03/29/20
Toluene	ND		ug/Kg	5.0	03/29/20	03/29/20
trans-1,3-Dichloropropene	ND		ug/Kg	5.0	03/29/20	03/29/20
1,1,2-Trichloroethane	ND		ug/Kg	5.0	03/29/20	03/29/20
1,3-Dichloropropane	ND		ug/Kg	5.0	03/29/20	03/29/20
Tetrachloroethene	ND		ug/Kg	5.0	03/29/20	03/29/20
Dibromochloromethane	ND		ug/Kg	5.0	03/29/20	03/29/20

ENTHALPY ANALYTICAL

Batch QC

QC863786 Analyte	Result	Qual	Units	RL	Prepared	Analyzed
1,2-Dibromoethane	ND		ug/Kg	5.0	03/29/20	03/29/20
Chlorobenzene	ND		ug/Kg	5.0	03/29/20	03/29/20
1,1,1,2-Tetrachloroethane	ND		ug/Kg	5.0	03/29/20	03/29/20
Ethylbenzene	ND		ug/Kg	5.0	03/29/20	03/29/20
m,p-Xylenes	ND		ug/Kg	10	03/29/20	03/29/20
o-Xylene	ND		ug/Kg	5.0	03/29/20	03/29/20
Styrene	ND		ug/Kg	5.0	03/29/20	03/29/20
Bromoform	ND		ug/Kg	5.0	03/29/20	03/29/20
Isopropylbenzene	ND		ug/Kg	5.0	03/29/20	03/29/20
1,1,2,2-Tetrachloroethane	ND		ug/Kg	5.0	03/29/20	03/29/20
1,2,3-Trichloropropane	ND		ug/Kg	5.0	03/29/20	03/29/20
Propylbenzene	ND		ug/Kg	5.0	03/29/20	03/29/20
Bromobenzene	ND		ug/Kg	5.0	03/29/20	03/29/20
1,3,5-Trimethylbenzene	ND		ug/Kg	5.0	03/29/20	03/29/20
2-Chlorotoluene	ND		ug/Kg	5.0	03/29/20	03/29/20
4-Chlorotoluene	ND		ug/Kg	5.0	03/29/20	03/29/20
tert-Butylbenzene	ND		ug/Kg	5.0	03/29/20	03/29/20
1,2,4-Trimethylbenzene	ND		ug/Kg	5.0	03/29/20	03/29/20
sec-Butylbenzene	ND		ug/Kg	5.0	03/29/20	03/29/20
para-Isopropyl Toluene	ND		ug/Kg	5.0	03/29/20	03/29/20
1,3-Dichlorobenzene	ND		ug/Kg	5.0	03/29/20	03/29/20
1,4-Dichlorobenzene	ND		ug/Kg	5.0	03/29/20	03/29/20
n-Butylbenzene	ND		ug/Kg	5.0	03/29/20	03/29/20
1,2-Dichlorobenzene	ND		ug/Kg	5.0	03/29/20	03/29/20
1,2-Dibromo-3-Chloropropane	ND		ug/Kg	5.0	03/29/20	03/29/20
1,2,4-Trichlorobenzene	ND		ug/Kg	5.0	03/29/20	03/29/20
Hexachlorobutadiene	ND		ug/Kg	5.0	03/29/20	03/29/20
Naphthalene	ND		ug/Kg	5.0	03/29/20	03/29/20
1,2,3-Trichlorobenzene	ND		ug/Kg	5.0	03/29/20	03/29/20
Xylene (total)	ND		ug/Kg	5.0	03/29/20	03/29/20
Surrogates				**Limits**		
Dibromofluoromethane	100%		%REC	70-145	03/29/20	03/29/20
1,2-Dichloroethane-d4	99%		%REC	70-145	03/29/20	03/29/20
Toluene-d8	104%		%REC	70-145	03/29/20	03/29/20
Bromofluorobenzene	97%		%REC	70-145	03/29/20	03/29/20

ENTHALPY ANALYTICAL

Batch QC

Type: Lab Control Sample	**Lab ID: QC863787**	**Batch: 243906**
Matrix: Soil	**Method: EPA 8260B**	**Prep Method: EPA 5030B**

QC863787 Analyte	Result	Spiked	Units	Recovery	Qual	Limits
1,1-Dichloroethene	57.68	50.00	ug/Kg	115%		59-172
MTBE	48.62	50.00	ug/Kg	97%		62-137
Benzene	53.77	50.00	ug/Kg	108%		62-137
Trichloroethene	50.32	50.00	ug/Kg	101%		66-142
Toluene	53.15	50.00	ug/Kg	106%		59-139
Chlorobenzene	48.99	50.00	ug/Kg	98%		60-133
Surrogates						
Dibromofluoromethane	49.34	50.00	ug/Kg	99%		70-145
1,2-Dichloroethane-d4	47.13	50.00	ug/Kg	94%		70-145
Toluene-d8	52.34	50.00	ug/Kg	105%		70-145
Bromofluorobenzene	46.75	50.00	ug/Kg	94%		70-145

Type: Lab Control Sample Duplicate	**Lab ID: QC863788**	**Batch: 243906**
Matrix: Soil	**Method: EPA 8260B**	**Prep Method: EPA 5030B**

QC863788 Analyte	Result	Spiked	Units	Recovery	Qual	Limits	RPD	RPD Lim
1,1-Dichloroethene	53.89	50.00	ug/Kg	108%		59-172	7	22
MTBE	50.72	50.00	ug/Kg	101%		62-137	4	21
Benzene	51.57	50.00	ug/Kg	103%		62-137	4	24
Trichloroethene	46.92	50.00	ug/Kg	94%		66-142	7	21
Toluene	50.43	50.00	ug/Kg	101%		59-139	5	21
Chlorobenzene	47.00	50.00	ug/Kg	94%		60-133	4	24
Surrogates								
Dibromofluoromethane	50.40	50.00	ug/Kg	101%		70-145		
1,2-Dichloroethane-d4	49.10	50.00	ug/Kg	98%		70-145		
Toluene-d8	51.58	50.00	ug/Kg	103%		70-145		
Bromofluorobenzene	47.03	50.00	ug/Kg	94%		70-145		

* Value is outside QC limits
ND Not Detected
b See narrative

Ninyo & Moore

Geotechnical & Environmental Sciences Consultants

355 South Grand Avenue, Ste. 2450 | Los Angeles, California 90071 | p. 213.488.5111

ARIZONA | CALIFORNIA | COLORADO | NEVADA | TEXAS | UTAH

www.ninyoandmoore.com

Additional Phase II Environmental Site Assessment

Additional Phase II Environmental Site Assessment
LABOE TOS No. 25
Stormwater Capture Parks Program
Portion of Strathern Park North
8041 Whitsett Avenue
North Hollywood, California
SWIS #19-CR-0835

CDM Smith

600 Wilshire Boulevard, Suite 750 | Los Angeles, California 90017

July 30, 2021 | Project No. 2112940007







Geotechnical | Environmental | Construction Inspection & Testing | Forensic Engineering & Expert Witness

Geophysics | Engineering Geology | Laboratory Testing | Industrial Hygiene | Occupational Safety | Air Quality | GIS

Ninyo & Moore
Geotechnical & Environmental Sciences Consultants

Ninyo & Moore
Geotechnical & Environmental Sciences Consultants

CELEBRATING 35 YEARS 1986 2021 NINYO & MOORE

Additional Phase II Environmental Site Assessment
LABOE TOS No. 25
Stormwater Capture Parks Program
Portion of Strathern Park North
8041 Whitsett Avenue
North Hollywood, California
SWIS #19-CR-0835

Mr. Scott Dellinger
CDM Smith
600 Wilshire Boulevard, Suite 750 | Los Angeles, California 90017

July 30, 2021 | Project No. 211297007

PROFESSIONAL GEOLOGIST
BETH S. ABRAMSON-BECK
No. 4580
STATE OF CALIFORNIA

Beth Abramson-Beck, PG 4580
Principal Geologist

SCM/BAB/gg/mlc

CONTENTS

1	INTRODUCTION	1
2	PROJECT DESCRIPTION AND PROPOSED CONSTRUCTION	4
3	PROJECT OBJECTIVES	4
4	SITE DESCRIPTION	5
6	RESPONSIBLE AGENCIES AND PERSONS	7
7	ENVIRONMENTAL BACKGROUND	7
8	HISTORICAL AERIAL PHOTOGRAPHS AND TOPOGRAPHIC MAPS	13
9	PHYSICAL SETTING	16
9.1	Topography	16
9.2	Geology and Wastes	16
9.2.1	Undocumented Fill and Undocumented Fill + Wastes	17
9.2.2	Alluvium	18
9.3	Groundwater	18
11	DEVIATIONS FROM THE WORK PLAN	20
12	PHASE II ENVIRONMENTAL SITE ASSESSMENT	20
12.3	Community Health and Safety Plan	22
12.4	Site Utility Clearance	22
12.6	Test Pit Excavations	24
12.7	Sampling and Handling	25
12.8	Excavation Backfilling	26
12.9	Air Monitoring	26
12.10	Equipment and Materials Decontamination	27
12.11	Field Documentation	27
13	ANALYTICAL TESTING	27
14	QUALITY ASSURANCE/QUALITY CONTROL	29
15	SITE RESTORATION AND MANAGEMENT OF INVESTIGATIVE DERIVED WASTE	30
16	SUMMARY OF FINDINGS	30
16.1	Test Pit Logs	31

16.2 Waste Disposal Site History 31
16.3 Phase II Environmental Site Assessment 32
16.4 Analytical Results 33
16.5 Nature and Extent of Wastes 36
16.5.1 Waste Types 36
16.5.2 Estimated Extents of Wastes 37
17 RECOMMENDATIONS 38
18 LIMITATIONS 39
19 REFERENCES 41

TABLES

1 – Analytical Testing
2 – Summary of Metal Analytical Results
3 – Summary of Total Petroleum Hydrocarbons, Organochlorine Pesticides, Volatile Organic Compounds, Semi-Organic Compounds, and Polychlorinated Biphenyls Analytical Results

FIGURES

1 – Site Location
2 – Site and Vicinity
3 – Site and Locations of Previous Investigation with 2019 Aerial Photograph
4 – Exploratory Locations March 2020 and April 2021 with 2019 Aerial Photograph
5 – Exploratory Locations March 2020 and April 2021 with 1953 Aerial Photograph
6 – Exploratory Locations March 2020 and April 2021 with 2019 Aerial Photograph and Geophysical Overlay

APPENDICES

A – Select Background Information
B – Historical Aerial Photographs and Topographic Maps
C – Geophysical Survey Report
D – Test Pit Logs and Photographs – April 2021
E – Previous Test Pit Logs, Boring Logs, and Cone Penetrometer Tests – March 2020
F – Air Monitoring Logs
G – Laboratory Analytical Reports and Chain-of-Custody Documentation

1 INTRODUCTION

On March 27 and 28 2021, Ninyo & Moore conducted an additional Phase II Environmental Site Assessment (ESA) at a portion of Strathern Park North, (site) located at 8041 Whitsett Avenue in North Hollywood, California as part of the Los Angeles Bureau of Engineering (LABOE) Stormwater Capture Parks Program. The term site as used in this report, pertains to the western, undeveloped area of the park; generally corresponding to the planned Construction Project area, located west of the baseball fields and other developed areas of the park, corresponding to a portion of APN 2308-010-901 and does not include the transmission lines easement to the southwest and the eastern developed park area to the east (Figures 1 and 2).

Per the September 21, 2020 meeting notes provided by LABOE pertaining to the *"Undocumented Waste at Strathern Park"* for the Stormwater Capture Parks Program, the City of Los Angeles, Department of Building and Safety acting as the solid waste Local Enforcement Agency (LEA) indicated that waste delineation for this additional Phase II ESA can be limited to the Construction Project limits. This was again confirmed during the March 24, 2021 site reconnaissance/project kick off meeting at which time Mr. David Thompson, of the LEA confirmed that this additional Phase II ESA would be restricted to the western undeveloped portion of Strathern Park North (portion of APN 2308-010-901) and does not include the entire park. The LEA further indicated that if wastes are present at the site boundaries, that it would not be required to *"chase"* the lateral extent of the wastes offsite (e.g., to the east at the baseball fields). Results of this Phase II ESA suggest wastes extend offsite into the baseball fields and possibly other areas beyond the site.

Previous to this additional Phase II ESA, in March and April 2020, Ninyo & Moore conducted a limited Phase II ESA in conjunction with a geotechnical evaluation. The limited Phase II ESA partially characterized and delineated wastes at the site and the geotechnical study evaluated the soil and geologic conditions at the site and provided geotechnical recommendations for pre-design of proposed Best Management Practices (BMPs) for stormwater infiltration.

The results of the previous Limited Phase II ESA and the geotechnical evaluation generally indicated that wastes were encountered in six borings and four test pits, and at these locations generally were observed to consist of primarily what could be generally referred to as construction debris (concrete, asphalt); with lesser amounts of bricks, plastic, glass, ceramic debris; bottles; and tires at depths of approximately 0.5 to 13 feet bgs. At locations explored, the waste materials were reported to be generally covered with approximately 0.5 to 2 feet of fill (or cover) soil. The depth of wastes was not delineated and wastes extend laterally outward from locations explored; however, waste delineation was not an objective of the previous Limited Phase II ESA, the scope of work of which was provided by others. The Limited Phase II ESA (Ninyo & Moore, 2020b)

recommended that because wastes were encountered at the site, the LEA should be notified and a copy of the report submitted for their review and comments and that other regulatory agencies may also require notifications. The LEA was notified of wastes at the site and locations where wastes were observed during the earlier March 2020 Limited Phase II ESA are summarized on Figure 3 of this report.

In response to their review of the Limited Phase II ESA, the LEA prepared a letter dated October 1, 2020 pertaining to the undocumented waste at a portion of Strathern Park (LEA, 2020, Appendix A). The letter indicated that regulatory agencies did not have records or information pertaining to waste disposal at Strathern Park. Because of the presence of wastes at a portion of the park, the waste disposal site was added to the California Department of Resources Recycling and Recovery (CalRecycle) Solid Waste Information System (SWIS) online database on July 29, 2021, and assigned SWIS #19-CR-0835.

In their October 1, 2020 letter, the LEA stated the following:

"In order to avoid any major impacts to the site from the construction of the stormwater capture park, the agencies have the following conditions:

- *The undocumented waste should be delineated and sample for COCs (chemicals of concern) related to waste materials within the project site.*
- *The project should be designed so as not to be constructed within the waste mass to prevent issues with leachate and/or landfill gas generation.*
- *Infiltration galleries that need to be constructed within the waste mass will be required to remove waste material and to properly disposed of it at a permitted facility.*
- *Submit a work plan that document the results of the waste delineation, details the specifics of the construction project and how it relates to the onsite waste, the procedures for dealing with any waste that is encountered and the environmental monitoring procedures that will be utilized during the construction. Part of the work plan should consists [STET] of a soils management plan, that addresses any SWPPP requirements and potential impacts to storm water, fugitive dust etc.*
- *After the completion of the project, an as-built report should be submitted."*

An April 8, 2021 work plan for the additional Phase II ESA was submitted to the LEA for their review and approval. The plan provided methodologies to evaluate the waste cover, characterize wastes by sampling and testing, and delineate wastes by excavating exploratory test pits. Additionally, the plan stated that certain LEA-requested information as indicated in their October 2020 letter would not be included in the work plan since it was not consistent with conducting a Phase II ESA. More specifically, it was clarified that a soil management plan (SMP) (aka Waste Management

Plan [WMP]) and Storm Water Pollution Prevention Plan (SWPPP) were not applicable at the time in association with the planned additional Phase II ESA.

In an April 22, 2021 letter, the work plan for the additional Phase II ESA was approved by the LEA without conditions related to the planned investigation (LEA, 2021). As was anticipated, based on the presence of wastes at the site, the LEA stated and requested the following:

"On April 8, 2021, the City of Los Angeles Local Enforcement Agency (LEA) received the ***Work Plan to Conduct Additional Phase*** *II* ***Environmental Site Assessment,*** *dated April 7, 2021, for the Stormwater Capture Parks Program at a portion of Strathern Park North. The work plans objectives are to characterize and delineate the waste at the site, evaluate the current cover and conduct sampling and analytical testing to characterize the wastes. The LEA has shared the work plan with our partnering state agency, California Department of Resources Recycling and Recovery (CalRecycle) for their review and comment.*

After discussion with CalRecycle, the LEA has the following comments regarding the site:

- *The LEA approves of the Work Plan for the Additional Phase II Environmental Site Assessment. The operator can proceed with the work according to this plan. The LEA must be notified and grant approval of any substantial changes to this work plan prior to implementation.*

- *After completion of the Phase II ESA, a Waste Management Plan should be prepared to be used any time subsurface activities are conducted at Strathern Park North (a portion of which is the site) based on the park being the location of waste disposal. The WMP should include the entire park.*

- *Based on the original geotechnical investigation performed and information from boring and trench logs, the site is a disposal site and would be subject to solid waste state minimum standards.*

- *The site will need to be included on CalRecycle's Solid Waste Information System (SWIS) and obtain a site specific number. Please complete and return the attached form to the LEA with the necessary site owner and operator information. The LEA will work with CalRecycle on issuing the SWIS number.*

- *Pursuant to 27 CCR 21190, a post closure land use plan is required for this project. The plan should reflect the findings from this Phase II study. As part of this plan, a landfill gas monitoring plan should be included that demonstrates the protection of the adjacent residential property.*

- *It is recommended that clean-closure of the waste in the project site. If all of the waste cannot be removed, then the waste that remain in place will need to comply with state minimum standards and long-term maintenance and monitoring."*

2 PROJECT DESCRIPTION AND PROPOSED CONSTRUCTION

The Stormwater Capture Parks Program is a joint program between the Los Angeles Department of Public Works Bureau of Engineering (LABOE) and the Los Angeles Department of Water and Power (LADWP) to capture and infiltrate stormwater at nine parks located within the northeastern San Fernando Valley. The goals of the program include increased local water supply through the recharge of the groundwater basin, alleviate localized flooding, improve downstream receiving water quality by providing pollutant load reductions associated with the capture and infiltration of stormwater runoff, and improve park amenities, recreation opportunities, and environmental education opportunities for the local community. One of the parks included in this program is Strathern Park North.

Based on information provided, the Strathern Park North Stormwater Capture project includes diverting flows from an existing 45-inch storm drain that runs parallel to State Route (SR) - 170 on the western side of the site to an underground infiltration gallery located within the open field area between the LADWP transmission line right of way and the eastern park area consisting of baseball fields. Two new baseball fields are proposed to be constructed on the surface above the infiltration gallery with landscaping and a parking lot. In addition, BMPs for the project include a diversion structure, approximately 300 linear feet of 36” RCP storm drain pipe, a hydrodynamic separator, slide gate for facility isolation, and maintenance holes. The facilities were designed to capture and infiltrate approximately 24 acre feet per year of stormwater runoff from two tributary areas (total 447 acres) north of the park.

The infiltration gallery footprint is approximately 1.5 acres with an overall internal clear height of 8 feet and will be constructed using modular precast concrete structures with small drain holes at the bottom. The bottom of the infiltration gallery will be approximately 26 feet below existing ground surface and sits on top of an 18-inch layer of crushed stone, so the overall depth of excavation at the infiltration gallery will be about 20 feet. The soil underneath the crushed stone will not be compacted in order to not interfere with infiltration. A 24-inch layer of crushed stone will extend beyond the perimeter of the infiltration gallery with a vertical layer of filter fabric on the sides of the gallery. Compacted fill will be placed on top of the infiltration gallery to the newly graded surface for use as a park. The planned construction is referred to in this report as the Construction Project.

3 PROJECT OBJECTIVES

There does not appear to be background information available pertaining to waste disposal activities at the site. Aerial photographs from the early 1950s and possibly later in the late 1960’s of the site and vicinity appear to show surface disturbances suggestive/interpreted to be related

to waste disposal activities at the site, at the adjacent eastern developed park area, and possibly extending beyond the limits of the now developed portion of the park.

Based on this, the primary objectives of the Phase II ESA were as follows:

- Characterize and delineate the lateral and vertical extent of wastes at the site. As was expected, the lateral waste extent could not be completely delineated since wastes were observed in test pits located at the site boundary and based on this are assumed to continue to the east developed area of the park.
- Waste delineation was based on the following information:
    - Background information, primarily interpretation of historical aerial photographs (Appendix B).
    - Results of the previously conducted Limited Phase II ESA and geotechnical evaluation (Ninyo & Moore, 2020 b, c).
    - Results of the geophysical survey that was conducted generally concurrently at the site (Appendix C).
    - Results of the exploratory test pit excavations (additional Phase II ESA) indicating the presence or absence of wastes, and if present, the types of wastes (Appendix D).
- Evaluate the presence of cover overlying wastes by observing subsurface materials in the exploratory test pit excavations and characterizing the cover soil by sampling and analytical testing.
- Evaluate whether soils adjacent to and/or underlying wastes have been impacted by the wastes by collecting soil samples and analytical testing.
- Where present, conduct sampling and analytical testing to characterize the wastes. If the wastes were not conducive to sampling and testing (e.g., solid pieces of concrete, asphalt debris/rubble, etc.), samples of the soils mixed with wastes were collected for analytical testing.

The results of this additional Phase II ESA provide information about waste locations and extent in relation to the planned construction project, waste types and characterization. The information is anticipated to also be used in future regulatory agency submittals (e.g., WMP and Post Closure Land Use plan [PCLUP], as applicable).

4 SITE DESCRIPTION

Strathern Park North is a City of Los Angeles park located in North Hollywood, east of California SR-170, approximately one-mile south of Interstate 5 (I-5). The park consists of a relatively level, roughly triangular-shaped area bounded by a LADWP transmission line (TL) easement on the southwest followed by commercial/industrial properties and associated parking,

residential properties to the adjacent north (not separated by a street), Whitsett Avenue followed by residential properties to the east, and Strathern Street followed by Jamie Beth Slaven Park to the south.

The site that is the subject of this additional Phase II ESA and generally corresponds to the area of the planned Construction Project is the western area of the park that consists of undeveloped land and corresponds to a portion of Assessor's Parcel Number (APN) 2308-010-901. The eastern approximate half of the park (adjacent to and east of the site) is developed with four baseball fields, restroom and concession facilities an asphalt concrete (AC) parking lot, cement concrete walkways, landscaping, and other miscellaneous improvements and extends beyond the area of the planned Phase II ESA. The transmission line easement also occupies a portion of the same APN, and is outside the site boundary of this Phase II ESA. Based on review of topographic maps obtained from Environmental Data Resources (EDR) Inc., the park slopes gently toward the southeast with site elevations ranging from approximately 808 feet above mean sea level (MSL) at the northwest corner of the park to approximately 800 feet (MSL) at the southeast corner.

As observed during the April 27 and 28, 2021 Phase II ESA field work, the site consists of undeveloped land that is sparsely vegetated. The majority of the ground surface at the site was observed to be several feet higher in elevation than the adjacent transmission line easement to the southwest, and the adjacent residences to the north. This may be associated with the placement of cover soil over previously disposed wastes at the site. To the east, the site is approximately the same elevation as the developed eastern park area consisting primarily of baseball fields and associated improvements/structures. In the area of the northern site boundary, just south of the residences, scattered waste debris was observed on the ground surface, primarily consisting of concrete rubble and some metal rebar.

5 OWNERSHIP

Strathern Park North is addressed as 8041 Whitsett Avenue, North Hollywood and consists of two separate land parcels. The northern approximately 75 percent of the park is assigned APN 2308-010-901 and includes the western undeveloped area of the parcel that was the location of the additional Phase II ESA (Figure 3). The southern approximately 25 percent of the park is assigned APN 2308-010-902. Both land parcels that comprise the park and the electrical transmission easement to the southwest are owned by the City of Los Angeles.

6 RESPONSIBLE AGENCIES AND PERSONS

This section summarizes the parties responsible for the following tasks:

- **CDM Smith** - the engineering and construction firm that retained Ninyo & Moore to conduct the previous geotechnical study, previous limited Phase II ESA and this additional Phase II ESA. CDM Smith is the civil design engineer for the project (Stormwater Capture Parks Program). They are designing the BMPs for stormwater infiltration.

- **Los Angeles Bureau of Engineering (LABOE)** - supporting the planned Construction project.

- **The City of Los Angeles Department of Parks and Recreation** (**LADPR)** - property owner. They provided access to the property for the previous and current Phase II ESA.

- **City of Los Angeles LEA** - responsible for reviewing and approving the additional Phase II ESA work plan prior to conducting this Phase II ESA and reviewing and approving this additional Phase II ESA report. LEA staff was in the field during a majority of the Phase II ESA and observed the investigation.

- **Ninyo & Moore** - conducted the additional Phase II ESA in general accordance with the LEA-approved work plan, compiled the field and analytical data and summarized the information into this report.

7 ENVIRONMENTAL BACKGROUND

Background environmental information pertaining to waste disposal activities at the site does not appear to be available and it was indicated by the LEA that such information was not available from regulatory agencies. A request to the County of Los Angeles, Department of Public Health to check their records of waste disposal sites revealed no records of waste disposal at the site. With the exception of the Limited Phase II ESA and Geotechnical Study reports (Nnyo & Moore, 2021b, c), available background information is provided in (Appendices A and B).

The following summarizes available information pertaining to the site:

Limited Phase II Environmental Site Assessment, LABOE TOS No. 25, Stormwater Capture Parks Program, Strathern Park North, 8041 Whitsett Avenue, North Hollywood, California, Ninyo & Moore, June 2020

Ninyo & Moore conducted a Limited Phase II ESA at the westerly area of Strathern Park (APN 2308-010-902) in June 2020, as part of the LABOE Stormwater Capture Parks Program. The Phase II ESA was performed in conjunction with a geotechnical evaluation, the purpose of which was to evaluate the soil and geologic conditions and infiltration characteristics at the site and to provide geotechnical recommendations for pre-design of proposed Best Management Practices (BMPs) for stormwater infiltration. Relevant information from the Phase II ESA and the geotechnical study are summarized in the following paragraphs.

Limited background information, and results of the geotechnical evaluation and Limited Phase II ESA indicated the presence of wastes at the site and that these wastes likely continue into the eastern developed area of the park (i.e., baseball fields and parking lot) and possibly into adjacent areas outside the park limits. In general, the results of the previous geotechnical evaluation and Limited Phase II ESA indicated the following:

- Wastes were encountered at the site in six borings and four test pits and consisted primarily of construction debris (asphalt, concrete, brick) and lesser amounts of plastic, glass, and ceramic debris, bottles, and tires at depths of approximately 0.5 to 13 feet below ground surface (bgs). Locations where wastes were encountered are summarized on Figure 3 of this report.

- The depth of wastes at the site was not delineated and wastes appear to extend laterally outward from locations explored (site). Waste delineation was not an objective of the previous Limited Phase II ESA.

- At locations explored, the waste materials appear to be generally covered with approximately 0.5 to 2 feet of fill soil.

- A cursory review of readily available historical aerial photographs shows surface disturbances at the site over a period of years, other areas of the park, and possibly outlying the park that may be interpreted to be related to waste disposal. These areas appear to be generally consistent with results of this environmental assessment (e.g., presence of wastes at the site).

- The waste disposal site was not listed in the online CalRecycle SWIS database meaning that it is not a known and/or documented waste disposal site. As was mentioned in the report, there are numerous undocumented waste disposal sites similar to this site, statewide and it has been our experience that parks are often previous locations of waste disposal sites. The park (or a portion of the park) and possibly other locations extending offsite, including residential properties, may be the location of an undocumented, pre-regulations waste disposal site. Information pertaining to the possible lateral extent of wastes based on aerial photograph review and interpretation are provided in Section 7 of this report.

Stormwater Capture Parks Program, Meeting to Discuss Phase II ESA (Environmental Site Assessment) at Strathern Park North, June 9, 2020

The results of the limited Phase II ESA were presented by Ninyo & Moore staff during a June 9, 2020 online meeting. The following was discussed.

"Items of Discussion:

1. Ninyo & Moore presented their findings from Limited Phase II Site Assessment to LADWP and RAP

a. *Ninyo & Moore encountered waste materials, generally consisted of construction debris (i.e., concrete, asphalt, brick) and other miscellaneous materials (i.e., plastic, glass, ceramic, and tires)*

b. *The waste materials were encountered to depths of up to 13 feet bgs based on the locations explored.*

2. Next Steps & Recommendations:

a. *BOE to send email to Local Enforcement Agency (LEA) notifying them about inert waste found at the project site and attach Limited Phase II ESA Report for Strathern Park*

   i. *If the Limited Phase II ESA Report is completed by this week (6/12/20), BOE will forward that to LEA*

b. *Based on guidance from the LEA, the City will perform additional site investigations. CDM Smith and Ninyo & Moore will implement the additional site investigations by:*

   ii. *Developing a workplan*
   iii. *Performing additional historical investigations*
   iv. *Developing test pits locations*
      1. Test pits may be located within existing RAP baseball fields
   v. *Delineating the extent of waste*
   vi. *Characterizing the waste*

c. *The City, CDM Smith, and Ninyo & Moore will prepare a Post Closure Land Use Report for review by the LEA"*

Comment:

Based on a discussion with LEA staff while conducting the additional Phase II ESA, they seemed to be amenable to either having the PCLUP included as part of this report or submitted later as a separate document.

Notification to the LEA of Wastes Encountered at the Site, Email Correspondence to the LEA, June 12, 2020

Because wastes were encountered at the site (western park area), in an email dated June 12, 2020, the LEA was notified by LABOE of the presence of wastes at the site.

Undocumented Waste at Strathern, Teleconference Meeting Minutes, September 21, 2020

The teleconference meeting was attended by various parties associated with the construction project including the City of Los Angeles, LABOE, Los Angeles Department of Public Works, CDM Smith, Ninyo & Moore and the LEA (Appendix A). The LABOE provided the following summary of the meeting:

"Undocumented Waste at Strathern Meeting Minutes
September 21, 2020

1. Comments from LEA/RWQCB/CalRecycle on the Limited Phase II ESA report

a. *Could not find documentation of Strathern Park North as a landfill site.*

b. *RWQCB mentioned that a post-closure land use plan is not necessary since the waste was left at the site in the 1950s (before the Hazardous and Solid Waste Amendment - November 8, 1984).*

c. *Stormwater components shall not be constructed over waste material*

i. *Stormwater components shall not create leachate.*

ii. *Stormwater structures shall be constructed on proper subgrade. Remove waste material if necessary.*

iii. *Infiltration galleries will be installed approximately 20 to 25 feet below surface so galleries will likely require removal of waste and will be installed below the lowest point of waste encountered.*

1. Delineation of waste area

a. *LEA mentioned that the delineation of the waste can be limited to project limits. BOE does not have to explore the existing ballfield areas for waste.*

1. Miscellaneous

a. *Strathern Park North is not in a methane or methane buffer zone. Ninyo & Moore mentioned they performed a small test for methane with their borings and did not detect any methane gas.*

i. *See Section 10.7 Soil Gas Screening and Section 14.2 Duplicate and Field Screening of the draft Phase II ESA report.*

Action Items:

1. LEA to check with RWQCB and CalRecycle regarding the following:

a. *If BOE is only required to delineate waste within project limits.*

b. *Confirm with CalRecycle that a Post Closure Land Use Plan is not needed.*

c. *If a Post Closure Land Use Plan is not required, what sort of oversight documentation and reviews are required if any?*

1. LEA to send BOE a compiled list of comments from RWQCB and CalRecycle."

Comments:

The Water Board comment *"RWQCB mentioned that a post-closure land use plan is not necessary since the waste was left at the site in the 1950s (before the Hazardous and Solid Waste Amendment - November 8, 1984)"* does not make sense. Numerous pre-1984 waste disposal sites statewide have required a PCLUP when there is a change in land use. The Water Board should provide clarification and reference the source document for this determination.

The LEA stated that the Phase II ESA can be limited to the planned construction area of the park corresponding generally to the western undeveloped area, which is a portion of APN 2308-010-901 (Figure 3). Based on this, the lateral extent of wastes at the park likely would not be delineated.

LEA Comments on Undocumented Waste at Strathern Park, City of Los Angeles LEA, October 1, 2020

This LEA letter provided comments related to their review of the Limited Phase II ESA conducted at the site. The letter stated that regulatory agencies have searched their records and archives

and were not able to find any information regarding a *"landfill"* at Strathern Park. The letter further stated the following:

"In order to avoid any major impacts to the site from the construction of the stormwater capture park, the agencies have the following conditions:

- *The undocumented waste should be delineated and sample [STET] for COcs (chemicals of concern) related to waste materials within the project site.*
- *The project should be designed so as not to be constructed within the waste mass to prevent issues with leachate and/or landfill gas generation.*
- *Infiltration galleries that need to be constructed within the waste mass will be required to remove waste material and to properly disposed of it at a permitted facility.*
- *Submit a work plan that document the results of the waste delineation, details the specifics of the construction project and how it relates to the onsite waste, the procedures for dealing with any waste that is encountered and the environmental monitoring procedures that will be utilized during the construction. Part of the work plan should consists [STET] of a soils management plan, that addresses any SWPPP requirements and potential impacts to storm water, fugitive dust etc.*
- *After the completion of the project, an as-built report should be submitted."*

Work Plan to Conduct Additional Phase II Environmental Site Assessment, Stormwater Capture Parks Program, Portion of Strathern Park North, 8041 Whitsett Avenue, North Hollywood, California, Portion of APN 2308-010-901, Ninyo & Moore, April 7, 2021.

Ninyo & Moore prepared a work plan consistent with conducting Phase II ESAs at waste disposal sites that provided methodologies to characterize and delineate wastes, evaluate waste cover and whether soils adjacent to or underlying wastes may be impacted by the wastes. The work plan also clarified what would not be included in the plan that was requested by the LEA in their earlier October 2020 letter as follows:

"This work plan does not provide specific details of the construction project and how it relates to the onsite wastes because the location(s) of the wastes in relation to the construction project is not known at this time. The purpose of this work plan is to conduct an investigation to evaluate waste locations in relation to the planned construction project. This requested information is not consistent with a Phase II ESA work plan; however, this information can be included in the Phase II ESA report to be prepared after the investigation is conducted.

This work plan does not detail "… the specifics of the construction project and how it relates to the onsite waste" because the locations of the onsite waste are not known at this time and the purpose of the work plan is to identify locations of the onsite wastes. In addition, information pertaining to the planned construction project and how it relates to onsite wastes is typically contained in a PCLUP (or with regulatory approval, can be included as a modified plan in the Phase II ESA report) which details the change in land use from undeveloped land to a stormwater infiltration basin and shows the relationship of the wastes to the planned construction. This requested information is not consistent with a Phase II ESA work plan.

The work plan does not include procedures for managing wastes that are encountered and environmental monitoring during construction since such information is anticipated to be contained

in a subsequent Waste Management Plan (WMP). A WMP includes information on the types of wastes that may or will be encountered at the site based on results of the Phase II ESA and will provide information on how to manage the wastes encountered during construction and other possible future site activities that involve excavating into the subsurface (e.g., replacing piping, grading, etc.). Following completion of the additional Phase II ESA, a Phase II ESA report will be provided presenting the findings of the investigation. Other documents that rely on information presented in the Phase II ESA including the WMP and PCLUP (if separately provided) will be submitted separately to the LEA. However, to expedite the project and for efficiency, the Phase II ESA can include information that would be contained in a PCLUP.

A soil management plan (SMP) (aka WMP) and Storm Water Pollution Prevention Plan (SWPPP) are not applicable to a Phase II ESA work plan. The activities to be conducted during the planned Phase II ESA generally consist of excavating temporary exploratory test pits that will typically be "open" for about 30 minutes to an hour at each location and then the excavated materials will be immediately placed back into the excavation from which they were removed. Therefore, management of soils (or wastes) and a SWPPP are not applicable to this work plan. Requirements for a SMP or WMP and a SWPPP would be applicable prior to the construction phase of the project, not during the Phase II ESA work plan, investigation, or report."

Strathern Park North, LEA Approval of Work Plan for Phase II Assessment, City of Los Angeles LEA, April 22, 2021

In an April 22, 2021 letter, the work plan for the additional Phase II ESA was approved by the LEA without conditions related to the planned investigation (LEA, 2021). As was anticipated, based on the presence of wastes at the site, the LEA stated and requested the following:

"On April 8, 2021, the City of Los Angeles Local Enforcement Agency (LEA) received the ***Work Plan to Conduct Additional Phase*** *II* ***Environmental Site Assessment,*** *dated April 7, 2021, for the Stormwater Capture Parks Program at a portion of Strathern Park North. The work plans objectives are to characterize and delineate the waste at the site, evaluate the current cover and conduct sampling and analytical testing to characterize the wastes. The LEA has shared the work plan with our partnering state agency, California Department of Resources Recycling and Recovery (CalRecycle) for their review and comment.*

After discussion with CalRecycle, the LEA has the following comments regarding the site:

- *The LEA approves of the Work Plan for the Additional Phase II Environmental Site Assessment. The operator can proceed with the work according to this plan. The LEA must be notified and grant approval of any substantial changes to this work plan prior to implementation.*

- *After completion of the Phase II ESA, a Waste Management Plan should be prepared to be used any time subsurface activities are conducted at Strathern Park North (a portion of which is the site) based on the park being the location of waste disposal. The WMP should include the entire park.*

- *Based on the original geotechnical investigation performed and information from boring and trench logs, the site is a disposal site and would be subject to solid waste state minimum standards.*

- *The site will need to be included on CalRecycle's Solid Waste Information System (SWIS) and obtain a site specific number. Please complete and return the attached form to the LEA with the necessary site owner and operator information. The LEA will work with CalRecycle on issuing the SWIS number.*

- *Pursuant to 27 CCR 21190, a post closure land use plan is required for this project. The plan should reflect the findings from this Phase II study. As part of this plan, a landfill gas monitoring plan should be included that demonstrates the protection of the adjacent residential property.*

- *It is recommended that clean-closure of the waste in the project site. If all of the waste cannot be removed, then the waste that remain in place will need to comply with state minimum standards and long-term maintenance and monitoring."*

8 HISTORICAL AERIAL PHOTOGRAPHS AND TOPOGRAPHIC MAPS

Historical and current aerial photographs reviewed and generally summarized below are included as Appendix B. Historical aerial photographs obtained from EDR Lightbox and Google Earth™ were reviewed for the years 1928 to 2019. The historical aerial photographs include overlays of property boundaries and some current site features for reference. Historical topographic maps were also reviewed for the years 1894 to 2012; however, some of the historical topographic maps did not provide information considered relevant to the additional Phase II ESA and therefore are not summarized in this section. The historical aerial photographs and topographic maps are provided as Appendix B.

The historical aerial photograph review focused on identifying possibly former waste disposal activities at the site. **Therefore, this section summarizes only some of the most pertinent information derived from the aerial photographs and therefore should not be considered a complete description of the site and/or waste disposal operations.** Figure 5 is a recent aerial photograph (2020) with the 1953 aerial photograph as an overlay. Based on the aerial photograph, it appears that surface disturbances that may be related to waste disposal activities appear to extend to locations beyond the lateral extent of the site (e.g., east to the baseball fields).

1894 to 1927 Topographic Maps: the two earliest topographic maps dated 1894 and 1896 indicate the site and area as undeveloped land and located to the east of the "*Pacoima Wash."* By 1902 the *"Pacoima Wash"* has been renamed the *"Tujunga Wash."* An unpaved road parallels and separates the wash to the west of the site and then continues south where it turns to the east. The 1920 topographic map indicates the westernmost area of the site within the wash and the area is generally developed with unpaved roads. The site is shown bisected by a north-south trending unpaved road that appears to delineate the eastern extent of the wash. The 1927 topographic map indicates what appears to be the same road bisecting the site (the Strathern Park North outline provided by EDR may be slightly off and the unpaved road could correspond to current Whitsett Avenue). By 1927, two generally parallel northwest – southeast trending electric transmission lines traverse the park site, one is located onsite. The 1927 topographic map indicates one and possibly two structures on the west side of the unpaved road, likely dwellings appearing to correspond to the eastern park area (offsite).

1928 Aerial Photograph: this photograph indicates the site as undeveloped land with the northwestern most site area traversed by what appears to be an active portion of an alluvial wash (Tujunga Wash) and a band of vegetation. Offsite in the area corresponding to the eastern area of the park it appears the site is traversed by a north-south trending feature, possibly an unpaved road. Unpaved Whitsett Avenue is located to the east. Offsite, the northeast (Area of Field 1) and southeast (southeast and south of Field 4) areas of the park are developed with undiscernible

activities and possibly some structures/dwellings. The southeastern developed area appears to continue south into Strathern Street and into Jamie Beth Slaven Park. To the east of Whitsett Avenue is a structure/dwelling.

1938 Aerial Photograph: this photograph indicates the site as generally similar to the earlier 1928 photograph in that the site is undeveloped land that appears to be inundated partially by the Tujunga Wash (The northeastern most area of the site appears to be part of the active area of the wash.) The active wash area appears to split and also traverses the easternmost boundary of the park extending onto Whitsett Avenue. The structure to the south partially in Strathern Street appears to be located west of the active wash area.

1947 Aerial Photograph: this photograph is of poorer quality than the previous photographs. It appears that the site and immediately adjacent areas consist of undeveloped land with sparse vegetation that appear to be located within an inactive alluvial wash area. The two previous structures/dwelling do not appear to be present.

1952 Aerial Photograph: this photograph indicates the site as undeveloped land with sparse vegetation within what appears to be an inactive wash area. Offsite, where what will become the eastern park area, appears to be the location of numerous, generally parallel trending unpaved roads entering from the east in the area of Whitsett Avenue, which is paved by this time. The ground surface at the future eastern park area appears to be disturbed. Offsite to the east (future eastern park area), unpaved roads appear to terminate to the west and northwest at locations of what appear to be stockpiled soils/materials dumped at the site and at the eastern park area. The photograph appears to indicate the southernmost unpaved road terminates to the northwest onsite at what appears to be an area of stockpiled material/dumped materials and a faint unpaved road appears to be located around the perimeter of the stockpile (typical of dumping). To the east of Whitsett Avenue is a residential development. Although not known, it is possible that the dumped materials may be related to what appears to be a recent development east of Whitsett Avenue. What appears to be onsite and offsite dumping may also be related to what appears to be grading to the north-northeast of the future park. Offsite at the future eastern park area are several small structures. The reader should also refer to the larger scaled georeferenced photographs provided by EDR that are also included in Appendix B.

1927 to 1948 Topographic Maps: the site and vicinity are not covered on the topographic maps provided by EDR.

1953 Aerial Photograph: this photograph indicates most of the site surface as highly disturbed as well as similar surface features to the east in the area that will become the eastern park area. The surface disturbances on and off site are suggestive of waste disposal activities and appear to indicate dumping/stockpiles and various elevations, suggestive of burying materials. By 1953, the residential development to the adjacent north of the park is not separated by any streets and appears to be undergoing development. Although not known, the surface disturbances that appear to be related to waste disposal activities both on and offsite to the east (e.g., at Strathern Park) may be related in part to residential construction projects in the area. The presence of a structure offsite at the eastern area of the future park that appears to be accessed via Whitsett Avenue with unpaved roads that extend from the structure to disturbed areas on and offsite corresponding to most of Strathern Park North suggests that the site and eastern area may have been a more formal waste disposal site.

1953 Topographic Map: this map indicates the site as undeveloped land and the future Strathern Park North as traversed by two sets of parallel, northwest to southeast trending power lines. (The southwesterly power lines are likely offsite to the adjacent southwest) Strathern Street terminates at the eastern park boundary and residential developments are to the north of the site and east of the park.

1964 Aerial Photograph: this photograph is of relatively poor resolution. It appears that by 1964, the site and future eastern park area are no longer the location of what appears to have been active waste disposal activities. Onsite, what may have been stockpiled materials originally appearing in the 1952 aerial photograph may still be present in 1964, although it is not entirely clear. What may be a rudimentary baseball field is located to the east of the site. Offsite are what appear to be mass graded areas that appear to be related to future construction of the power lines area easement and future SR-170.

1966 and 1972 Topographic Map: the 1966 and 1972 topographic maps indicate the site as undeveloped land. By 1966, additional development of offsite properties is evident and surrounds most of the site and park. In 1966, to the east of the site, SR-170 is indicated as *"Under Construction"* and the freeway is shown as completed in this area by 1972.

1967 Aerial Photograph: this photograph is higher resolution than the previous 1964 photograph. It appears the site is the location of significant surface disturbances that appear to be unpaved roads and possibly stockpiled materials. Offsite to the east, it appears there are two southern baseball fields and there is possibly a field to the north.

1970 Aerial Photograph: this photograph indicates the site appears to have been recently graded with unpaved roads accessing the site from the southwest from the power line and easement area and Strathern Street. By this time SR-170 has been constructed. To the east of the site are three baseball fields.

1979 and 1983 Aerial Photographs: these photographs indicate the site as still undeveloped land with several unpaved roads at the western site area that are no longer present by 1983. The majority of the site except for the northern most area (and the area along the southern portion of the eastern site boundary, 1979 photograph only) is darker colored, possibly related to vegetation. To the east of the site, the park is developed with three baseball fields and some small structures in 1979 and by 1983 it appears the baseball fields are better defined and the small structures seen earlier may not be present; however, there is what appears to be another small structure in this area. In 1979, the area offsite to the southwest, past the power lines and easement and west of SR-170, appears to have been used for parked trucks and other vehicles that are no longer present by 1983; however, there is a small structure or structures near the southern property boundary, just north of Strathern Street. By 1983, the park to the south of Strathern Street appears to have begun to be developed.

1989 Aerial Photograph: this infrared photograph indicates the site as undeveloped land with several unpaved roads traversing the site. To the east, the park layout appears generally similar to earlier photographs with some changes related to the presence of small structures. To the southwest, past the power lines and easement a relatively large structure appears to be under construction. To the south of Strathern Street, the park appears to be developed.

1994, 2002 and 2005 Aerial Photographs: these photographs indicate the site as undeveloped land and the 2002 infrared photograph shows the site similar in appearance with a relatively wide linear trending surface feature traversing the central southern site area suggestive of a poorly defined road or access(?) area. The site is similar in the 2005 photograph; however, the feature described in the 2002 photograph appears poorly defined and there appears to be a poorly defined possible road or feature near the northeastern site area. By 2002, the park area to the east consists of an additional field (Field 1). By 2002, to the southwest, past the power lines and easement the property is developed with large buildings and parking areas.

2009 and 2012 Aerial Photographs: the 2009 photograph is of poor resolution; however, the site appears to contain darker and lighter colored areas or features and at the southeastern site area something is going on that cannot be discerned due to the poor quality of the image. The 2012 photograph suggests the site is or was the earlier location of something going on that cannot be discerned from the image, particularly at the southern portion and although not known, there may be stockpiled materials or possibly the site was used as a construction staging area, possibly associated with park development to the east. To the east, the park and fields appear to have undergone additional development.

2012 Topographic Map: the 2012 topographic map is not too informative showing the site as undeveloped land, absent of power lines and surrounded by development and the SR-170 to the west.

2016 and 2019 Aerial Photographs: the 2016 aerial photograph indicates the site as undeveloped land with little to no vegetation and the central eastern area of the site as the location of what appears to be recent surface disturbance/grading that appears to generally correspond to an area extending from the eastern park area between Fields 2 and 3. By 2019, it appears that the area of surface disturbance onsite has expanded and the central and southern areas appear to be disturbed/partially graded. The 2016 photograph shows that to the east, the fields in the park look to be in relatively poor condition and although not known, possibly the site to the west was used for materials to grade the eastern park area fields. In 2016, unidentifiable materials may be stockpiled in the power line area and easement.

9 PHYSICAL SETTING

The following summarizes topographic, geologic, and hydrogeologic information at, and in the vicinity, of the site, based upon the referenced documents reviewed and/or our site reconnaissance and field investigation.

9.1 Topography

Based on review of topographic maps (NavigateLA, 2020), the park slopes gently toward the southeast with site elevations ranging from approximately 808 feet (MSL) at the northwest corner of the park to approximately 800 feet (MSL) at the southeast corner.

9.2 Geology and Wastes

Review of regional geologic maps indicate that the site is generally underlain by Holocene-age (alluvial) wash deposits associated with deposition along the Tujunga Wash (Campbell et al., 2014). The deposits are described as consisting of unconsolidated gravel, sand, and silt in active or recently active stream beds. The California Department of Mines and Geology (CDMG, 1997) has also mapped the site as being underlain by wash deposits consisting of loose to medium dense, sand and silty sand with lesser quantities of silt and gravel.

During the previous geotechnical evaluation and both the Limited and additional Phase II ESAs, undocumented fill and alluvium was encountered to the total depths explored. Generalized descriptions of the materials encountered during this Phase II ESA are summarized in this report section and more detailed descriptions are provided on the individual test pit logs included as Appendix D. Previous test pit logs, boring logs, and cone penetrometer tests related to the earlier limited Phase II ESA are provided in Appendix E.

It is important to note that this additional Phase II ESA focused on identifying the locations of wastes, waste characterization, and to the extent possible, waste delineation. Geologic contacts differentiating subsurface materials on the individual test pit logs are only an interpretation of observed subsurface conditions. Since the purpose of this Phase II ESA was primarily to characterize and delineate wastes at the site; the investigation did not focus on classifying subsurface soils/materials. Generalized descriptions of the fill and alluvium encountered as indicated on the individual test pit logs (Appendix D) are based solely on cursory visual observations. Geotechnical testing for purposes of classification of soils/materials was not conducted as part of this investigation and for this reason, and those stated previously, this report is not intended to be used as a geotechnical evaluation report.

9.2.1 Undocumented Fill and Undocumented Fill + Wastes

The fill soils generally consist of light brown and brown, moist, very loose to medium dense, silty sand, clayey sand, poorly graded sand with silt, poorly graded sand with clay, poorly graded sand, well-graded sand with silt, and sandy silt, and brown, moist, soft to firm, lean clay. The fill contains various amounts of gravel and cobbles. Fill soils were observed to be overlying alluvium at locations where wastes were not observed, overlying construction wastes, or overlying some construction wastes and primarily burned wastes.

Two distinct types of wastes were observed at the site:

Construction Wastes - What is generally referred to as construction wastes were observed to consist primarily of concrete and asphalt, and lesser amounts of metal debris, bricks, bottles, glass, ceramics, plastic, and tires mixed with fill soils. These wastes are most common at the site.

Burned wastes - at three locations, test pits, TP-7, TP-10 and TP-21 burned wastes were encountered and typically consist of darkly colored ashy soils with abundant broken glass, fused and melted glass, metal debris and other wastes typical of sites where wastes were burned. At locations where the burned wastes were observed, they appear to underlie some construction wastes. The burned wastes appear to continue easterly offsite where they likely underlie the baseball fields.

Wastes depths were relatively consistent at the site, typically extending to maximum depths of 5 to 7.5 feet bgs (most commonly 6 to 6.5 feet bgs), based on locations explored.

At locations where wastes mixed with fill soils are present, it appears that for the most part, the wastes are adequately covered, typically with approximately 1.5 to 3 feet of cover soils. Some occasional or minor wastes were observed at/near the surface.

Wastes were observed mixed with fill soil at previous borings B-1, B-2, P-1 (minor scattered amounts), P-3, and P-5, and previous test pits TP-3 through TP-6. During this additional assessment, wastes were observed in test pits TP-2, TP-3 and TP-5 (minor scattered amounts), TP6, TP-7, TP-9, TP-10, TP-11, TP-16 (minor scattered amounts), TP-18, TP-19, TP-21 and TP-22 (minor scattered amounts) (Figures 4 and 5).

In general, it appears that wastes were not observed at the northern approximately 1/3 of the site with the exception of previous boring P-3 and previous test pit TP-3.

9.2.2 Alluvium

Each test pit excavated for this additional Phase II ESA were excavated into alluvium as confirmed in the field by Ninyo & Moore, as well as by LEA and CDM Smith staff that were in the field and observing the investigation. During this additional Phase II ESA, alluvium was encountered beneath the undocumented fill and wastes at relatively consistent depths of 5 to 7.5 feet bgs and was generally encountered at shallower depths at locations where wastes were not observed. Based on the previous geotechnical evaluation, the alluvium generally consists of interbedded light brown and brown, moist, loose to very dense, poorly graded sand, poorly graded sand with silt, poorly graded sand with clay, well-graded sand with silt, silty sand, and sandy silt. The alluvial deposits contain variable amounts of gravel and cobbles.

9.3 Groundwater

The site lies within the Coastal Plain of the Los Angeles Basin of the South Coast Hydrologic Region and is situated approximately 0.9 miles east of the present location of Tujunga Wash (DWR, 2003), which is an alluvial channel that historically migrated across a fairly large area of the San Fernando Valley. The California Division of Mines & Geology (CDMG, 1997) indicates that the historic high depth to groundwater at the site ranges from approximately 110 to 120 feet bgs. Ninyo & Moore reviewed available information pertaining to groundwater in the site vicinity on the State Water Resources Control Board (SWRCB) GeoTracker website. Based on the website, it appears that the closest site with available groundwater depth information is approximately 0.5 miles to the northwest, at 12858 Roscoe Boulevard. According to an Additional

Site Assessment Report dated July 13, 2012, for this site (Shell Service Station) prepared by Wayne Perry Inc., (Wayne Perry Inc., 2012), groundwater was encountered at a depth of approximately 130 feet bgs in soil boring B-7 at the property in July 2010. In May 2012, a groundwater monitoring well was drilled and it was reported, *"Depth to first saturation in the boring was observed at approximately 194 feet, however the well was dry on June 4 and 14, 2012."* The depth to groundwater in a Los Angeles County groundwater monitoring well (Well ID 4898) located 800 feet southeast of the site was approximately 307 feet in 2009 (the latest posted measurement) (COLA, 2020). The depth to groundwater in this well ranged from approximately 204 and 335 feet from 1975 to 2009. It is anticipated that the current depth to groundwater at the park is similar to the groundwater depth information provided in this report section.

According to the Upper Los Angeles River Area Watermaster Groundwater Pumping and Spreading Plan 2002-2007 Water Years, groundwater in the site vicinity is reported to flow south, following regional topography (ULARAW, 2003).

During the previous Limited Phase II ESA , the geotechnical evaluation, and this additional Phase II ESA, groundwater was not encountered in the test pits or borings to depths of 71 feet bgs during drilling or during the percolation testing that included leaving borings open for 47 days. Groundwater levels, gradient, and flow direction can fluctuate due to seasonal variations, groundwater withdrawal or injection, changes in land use, and other factors.

10 SCOPE OF WORK

The scope of work for this additional Phase II ESA was based on limited background information, primarily interpretation of historical aerial photographs, objectives of the planned Construction Project, and the previous limited Phase II ESA and geotechnical study. In general, the following scope of work was performed:

- Confirmed on site access for the planned additional Phase II ESA activities to ensure subcontractors had permission to access the site. LADPR granted access to the park to conduct the investigation. Ninyo & Moore and Innovative Construction Solutions (ICS), (excavation subcontractor) staff arranged for the gate on Whitsett Avenue to be unlocked for equipment and workers to access the site.

- Notified and coordinated with LEA staff the additional Phase II ESA schedule prior to conducting the fieldwork. LEA staff was at the site during most of the additional Phase II ESA.

- Notified Underground Service Alert (USA), a public utility locator, of the upcoming Phase II ESA area so that they could contact representatives of utility companies in the area.

- Retained Atlas Technical Consultants, LLC, (Atlas) who has a licensed geophysicist on staff, to conduct a geophysical survey. The purpose of the survey was to assist with delineating the lateral (and vertical as possible) extent of wastes.

- Retained a licensed, qualified, and experienced excavating contractor (ICS) to provide equipment and a 40-hour Hazardous Waste Operations and Emergency Response (HAZWOPER) trained operator to excavate/backfill exploratory test pits and a 40-hour HAZWOPER trained technician to provide assistance and dust control, as needed.

- Provided an experienced California-registered Professional Geologist (PG) to observe exploratory test pit excavations, spoils, and sidewalls, collect samples, and document observations and sample locations with photographs and on individual logs. The individual test pit logs include the depths/locations, types, and estimated percentages of wastes and cover, if present, based on field observations.

- Backfilled each test pit by placing the excavated materials from that location back into the test pit in the approximately reverse order that they were removed and generally tamping the materials with the bucket and then using the trackhoe excavator for additional compaction and to generally level the disturbed surface in the area of the excavation

- Submitted discrete samples for analytical testing to Enthalpy Analytical (Enthalpy), a California accredited analytical testing laboratory following standard chain-of-custody protocols.

- Documented field activities on individual test pit logs, air monitoring forms, chain of custody forms, and with photographs.

- Performed worker air monitoring/field screening during excavating/sampling and backfilling consistent with the Site Health and Safety Plan. Field screening of each test pit excavation and backfilling activities was conducted using a 5-gas meter that monitored lower explosion limit (LEL), oxygen, hydrogen sulfide, and carbon monoxide, and VOC readings for health and safety. The readings were recorded to document conditions (see Appendix F).

- Identified each test pit location on the field aerial photograph base map, obtained Global Positioning System (GPS) location coordinates of each test pit location, and obtained test pit orientation and length.

- Conducted fieldwork in accordance with applicable regulatory guidelines/requirements and consistent with the LEA-approved work plan.

- Performed data analysis, quality assurance/quality control, and compilation of environmental field and laboratory data.

- Prepared this additional Phase II ESA report that summarizes field activities, findings of the additional site investigation and provides conclusions related to waste disposal at the site and offsite areas. The report includes photographs, test pit logs, laboratory analytical reports, and relevant background data.

11 DEVIATIONS FROM THE WORK PLAN

There were no notable exceptions/deviations to the LEA-approved work plan.

12 PHASE II ENVIRONMENTAL SITE ASSESSMENT

The Phase II ESA was generally conducted in accordance with the LEA-approved work plan. The following sections describe the additional Phase II ESA.

12.1 Work Plan Approval, Site Access, Permits, and Notifications

The work plan for the additional Phase II ESA was submitted to the LEA who reviewed the plan and also forwarded it to CalRecycle for their review and comments. The LEA and CalRecycle both reviewed the work plan, and to expedite the project, the LEA in an email dated April 20, 2021 (Appendix A) stated, *"The LEA has no problems with you going ahead with the Phase II investigation of the Strathern Park North Site."* The email included recommendations to possibly contact other regulatory agencies and indicated that they had received comments from CalRecycle about the work plan and the planned Construction Project. The LEA provided a formal work plan approval letter dated April 22, 2021, included in Appendix A. The work plan was approved by the LEA, without conditions for conducting the Phase II ESA.

Property access was obtained by Ninyo & Moore and ICS to conduct the additional Phase II ESA. LADPR each morning opened the locked gate on Whitsett Avenue, to allow access to the site. Each day after completing the field work, the gate was locked to secure the site.

Permits from regulatory agencies were not required for the exploratory test pits.

The LEA, CalRecycle, LABOE, and the LADPR were notified of the planned Phase II ESA fieldwork as soon as the schedule was established. LEA staff was at the site during most of the field investigation and provided regulatory and investigation assistance.

12.2 Site Safety

An updated site-specific worker health and safety plan (SHSP) dated April 23, 2021 was prepared by Ninyo & Moore and used during field activities (Ninyo & Moore, 2021b). The plan indicated the required specific training and monitoring requirements to ensure workers are adequately protected, identified the potential chemical and physical hazards that may be encountered during the field activities and was prepared in compliance with Occupational Safety and Health Administration (OSHA) requirements. The plan addressed field procedures, personal protective equipment, anticipated contaminants, and established action levels for exposure to contaminants and contingency plans for emergencies that may arise during the fieldwork. The plan also addressed worker safety associated with planned field activities and provided requirements pertaining to the Site Safety Officer (SSO) during fieldwork. Air monitoring/field screening was conducted to comply with the SHSP.

Prior to beginning fieldwork each day, the SSO conducted a tailgate meeting and discussed the general scope of work that would be conducted that day and highlighted key safety features of the plan. Site workers read and signed the SHSP, acknowledging their familiarity with its

provisions and commitment to adhering to its requirements. The SHSP was implemented during fieldwork and a copy of the plan was available in the field in the Ninyo & Moore field vehicle. No emergencies arose during fieldwork.

12.3 Community Health and Safety Plan

A Community Health and Safety Plan (CHSP) was not required by the LEA.

12.4 Site Utility Clearance

Underground Service Alert (USA), a public utility locator that contacts utility companies that may have potential underground utilities or structures in the investigation area, was notified as required by law. Emails were received by various utility companies confirming that they did not have utilities at the site.

12.5 Geophysical Survey

On April 27, 2021, Atlas conducted a geophysical survey of the site; a copy of their report is included as Appendix C. Their survey was accomplished by collecting magnetic (MAG) and electromagnetic (EM) data to evaluate the areal extent of wastes and subsurface anomalies. The MAG and EM were used in conjunction to evaluate soil conductivity and the presence of subsurface metallic objects, potentially related to the lateral extent of waste debris.

Magnetometer data was collected at the site in order to assess the presence of ferromagnetic metals and the results are presented on Figure 3a of the geophysical report and Figure 6 of this report, using both contour lines and a color gradient image in gammas. The magnetometer measures the strength of the earth's magnetic field in units of gamma. Typically, relatively significant features are revealed in the MAG data as red/pink and blue/purple. The orange and yellow areas likely represent smaller objects.

The EM data was collected within the study boundary limits using a Geonics EM31-MK2 terrain conductivity meter in order to assess the presence of conductors and non-conductors in the subsurface. There are two components of the magnetic field that are measured by the EM31: the quadrature-phase (QP) and the in-phase (IP) components Both the QP and IP results are presented using contour lines and a color gradient image. Typically, relatively significant features are revealed as significant variations from the background values. In the IP results, high values are shown as red/pink colors and low values are shown as blue/purple colors. Typically, in the QP results blue/purple represent low conductivity (high resistivity) values and red/pink represent high conductivity (low resistivity) values. Figures 3b and 3c of the geophysical report summarize the EM results.

The geophysical report provided the following summary of findings/conclusions:

"The results of the MAG evaluation are illustrated in Figure 3a using both contour lines and a color gradient image in gammas. Relatively significant features are revealed in the MAG data as hot (red/purple) and cool (blue) colors. The results of the MAG data displayed several areas of high and low magnetic responses. These responses did not indicate a clear lateral landfill limit; however, the eastern portion of the site displays an anomalous area of concentrated high and low magnetic responses. This anomalous area may be related to landfilled material and/or zones of subsurface ferrous objects/materials; however, the exact cause and/or nature of this response in not known. Within this area, there appears to be an unidentified line that terminates towards the central portion of the site. Additionally, there appears to be an area of low magnetic response in the southern-most corner of the site. The cause and/or nature of this response is not known. It should be noted that the MAG data revealed several strong high and low magnetic responses boarding the site adjacent to the chain link fence; these are likely the result of surficial metallic objects such as chain link fencing, parking stops, baseball equipment and/or unidentified lines. However, these surficial features could mask subsurface debris and/or landfilled materials."

Burned wastes were observed at the eastern site area which also was the location of a chain link fence and other possible interferences as was mentioned in the geophysical report. However, as stated, the MAG results could also be related to the burned wastes which typically contain significant amounts of metallic debris. Figure 6 of this report is an overlay of the MAG data onto a recent aerial photograph showing the exploratory locations for this additional Phase II ESA and the previous limited Phase II ESA and geotechnical study.

"The results of the EM31 QP evaluation are illustrated in Figure 3b using both contour lines and a color gradient image in millimhos per meter (mmho/m). The cool colors (blue) represent lower conductivity values, whereas the warm colors (red/pink) represent higher conductivity values. The results of the QP data revealed a distinct regional change in values across the study area. Specifically, the northern portion of the site contained an area of lower conductivity materials, which appears to extend towards the central portion of the study area. The southern portion of the site has a more conductive response (Figure 3b). The exact cause and/or nature of these responses is not known; however, they could be related to changes in fill conductivity or moisture content. Additionally, there is a higher conductivity response along the perimeter of the study area. This response appears to be the effect of the chain link fencing and other surface metallic objects. The results of the EM31 IP evaluation are illustrated in Figure 3c using both contour lines and a color gradient image in parts per thousand (ppt). The cool colors (blue) represent lower values, whereas the warm colors (red/pink) represent higher values. The results of the IP data revealed a very subtle change in the central and southern portion of the study area. The scattered low amplitude responses in the central and south portions of the site appear to correlate well with the area of concentrated high and low magnetic responses in the MAG data (Figure 3a). The exact cause and/or nature of this response is not known; however, could be related to landfilled materials. Additionally, there appears to be a concentrated area of high and low responses in the southern-most corner of the site. This anomalous area correlates well with the results of the MAG and EM31 QP data (Figure 3a and 3c). The exact cause and/or nature of this response is not known.

In conclusion, the results of the MAG and EM31 IP evaluations appear to correlate well. They reveal an anomalous area of high and low magnetic responses in the eastern portion of the site and could be related to shallow buried metallic objects and/or landfilled materials. As previously discussed, the results of the EM31 QP data display a distinct regional change in conductivity. The northern portion of the site contains an area of lower conductivity values that extends towards and gradually becomes more conductive near the southern portion of the study area. The cause

and/or nature of this response is not known; however, it could be related to changes in soil conductivity and/or moisture content. Additionally, there appears to be an anomalous area in the southern-most corner of the site that is present in the MAG, QP, and IP results. The cause and/or nature of these responses are not known."

12.6 Test Pit Excavations

The exploratory test pits were located to as best as possible in the amount of time allotted for the project, to further evaluate wastes at the site. Wastes were characterized and delineated at the site; however, as previously indicated, this Phase II ESA confirmed that the lateral extent of wastes extends beyond the site boundary. In general, exploration locations were selected based on the following:

- Select historical aerial photographs indicating the locations of surface disturbances that may be related to waste disposal.
- Results of the previous limited Phase II ESA and the geotechnical study (Ninyo & Moore, 2020 b, c) indicating locations that were previously explored and at each location, whether wastes were present or absent.
- Locations where additional investigation appeared to be needed to delineate the lateral extent of wastes (e.g., locations where there were data gaps).
- To as best as possible in the time allotted, cover most of the site area and to as best as possible, characterize and delineate the wastes at the site.

On April 27 and 28, 2021, a total of 22 exploratory test pits were excavated to further evaluate subsurface wastes at the site. Test pits were located and oriented to obtain the maximum information about the extent of the wastes based on current site conditions, background information (historical aerial photographs and reports/figures) indicating suspected locations of where wastes are likely to be present. Test pits were located at areas suspected of containing wastes as well as outlying areas to prove their suspected absence.

An authoritative protocol was used during the investigation (e.g., adjusting the locations of exploratory test pits based on information obtained during the investigation) to maximize the amount of information obtained during the additional Phase II ESA and to take into account the evolving conceptual site model. Some of the exploratory test pit locations were adjusted to take into account findings of the investigation. Test pit locations were also selected to fill in data gaps or to better define the lateral extent of wastes.

Each test pit was logged by an experienced California-registered Professional Geologist (PG). Test pit locations were recorded using a cell phone GIS application and also on the field map. Each log indicated the subsurface materials encountered. The test pits only remained open long enough to log,

collect samples, and document the excavation and subsurface conditions on individual test pit logs and with photographs.

Excavation equipment was operated by an experienced OSHA 40-hour HAZWOPER certified operator. A trained and similarly certified assistant helped with directing excavation and backfilling, and controlled dust by applying water, when required and as possible. Excavations that encountered wastes were extended to depths interpreted to be into the underlying formation (alluvium) and the excavation typically extended approximately 1 to 2 feet deeper.

If wastes were not observed, the test pit excavation generally continued to depths adequate to confirm their absence and the presence of formation. In general, each test pit was excavated to a depth adequate to confirm the absence of wastes, and/or adequate to evaluate the depth of wastes, if present.

During excavation, test pit spoils were generally placed a minimum of 2 feet from the test pit excavation and in such a manner that the materials were prevented from falling back into the excavation. To the extent possible, during excavation, apparently *"clean"* soils were placed on one side of the excavation. Wastes mixed with soils, if encountered, were placed on the opposite side of the test pit to prevent commingling with other excavated material.

12.7 Sampling and Handling

Two to five samples were collected at each test pit excavation; the actual number depended on the depth of the excavation and subsurface materials encountered. At each location, one sample was collected at and or near to the surface. Typically, one additional sample was collected of the underlying formation (alluvium) from test pits where wastes were not encountered. At locations where wastes were encountered, one to several samples were typically collected of the wastes, depending on waste types and thickness, and a sample was collected in the underlying formation (alluvium).

Samples collected in wastes such as concrete, asphalt, bricks, etc., are not conducive to sampling and require the soils around these waste materials to be sampled as opposed to the actual wastes. Burned wastes can be directly sampled.

Samples were collected by coring the laboratory-supplied glass sample jar directly into the material to be sampled. For samples collected at the surface/near surface, the sample jar was typically cored directly into the excavated surface. For samples collected at greater depths, the sample jar was cored directly into the relatively intact soil and/or wastes and/or formation mass

brought to surface in the excavator bucket. Each time a sample was collected, the sampler used a new pair of disposable gloves to prevent potential cross contamination.

Each glass sample jar was immediately labeled to ensure proper identification for tracking by the analytical testing laboratory. Each jar was labeled with test pit identification, sample depth, date, and time the sample was collected, and project location and number. Sample jars from each test pit excavation were additionally placed into separate zip-lock ® plastic bags and labeled with the test pit sample identification. Samples were immediately placed into laboratory-supplied coolers, chilled with ice.

The chain-of-custody forms were completed for each sample at the time of collection and were maintained until samples were delivered to Enthalpy Analytical in Orange, California following completion of the field work. Chain-of-custody documentation recorded the description, possession, condition, and transfer of samples.

12.8 Excavation Backfilling

Following logging, sampling and documentation, each test pit excavation area was generally restored to the extent practical, to near its original condition, by backfilling with excavated materials from only that location. Each test pit was backfilled in the approximate reverse order in which it was excavated. Excavations were backfilled shortly after excavation and no excavations remained open overnight. The excavation equipment operator pushed the backfilled materials back into excavation and generally compacted the excavation in a typical manner using the bucket and/or driving over the excavation with the trackhoe. Surface and near surface disturbance of adjacent areas, such as ruts created by excavating and related equipment and vehicles, were mostly smoothed out, as practicable, to match the surrounding ground surface.

12.9 Air Monitoring

During the investigation, air monitoring was performed in general accordance with the SHSP (Ninyo & Moore, 2021b). Mitigation measures were implemented that controlled air pollution and dust, and included suppression by water spraying active work areas and excavated wastes as required and minimizing the waste drop height from the excavator's bucket onto the temporary excavated waste stockpiles.

During field activities, air monitoring was conducted by Ninyo & Moore staff to document that workers in the immediate vicinity of the excavation activities were not exposed to concentrations of constituents of potential concern (COPC) exceeding the action levels indicated in the SHSP. Air monitoring data was obtained and recorded in the breathing zone using a 5-gas meter for the

lower explosive limit (LEL) relative to methane, hydrogen sulfide, carbon monoxide, oxygen and volatile organic compounds (VOCs). The air monitoring readings did not exceed action levels, indicating site workers were not exposed to COPC (Appendix F).

12.10 Equipment and Materials Decontamination

To reduce potential cross-contamination, equipment or any item that may have come into contact with sample material was cleaned or obtained in an unused condition from the manufacturer/analytical laboratory before use at each sampling location. A new pair of disposable nitrile gloves was worn by the sampling staff each time a sample was collected and samples were collected directly into the laboratory-supplied glass jar reducing the potential for cross-contamination.

12.11 Field Documentation

As previously indicated, each test pit was logged by an experienced California-registered PG and test pit locations were recorded and coordinates of the approximate center location of each test pit was obtained as well as the general orientation using cell phone based GIS applications. This information was also recorded on the field map.

Each test pit log included a drawing of the test pit and indicated length, total depth excavated, subsurface materials encountered/lithologic/waste contacts, sample locations and depths and other relevant information. Waste descriptions included types and typically estimated percentages of wastes mixed with fill soils based solely on field observations. Cover soils, if present, were described and thicknesses recorded. The base of the waste depth was recorded on the logs. Each test pit and spoils were further documented with photographs.

At each test pit location, photographs were taken to document subsurface conditions, and investigative activities. Photographs documenting the test pits included the excavation and spoils. The photographs supplemented information contained in the individual test pit logs. Photographs included information identifying the test pit and date (Appendix D).

13 ANALYTICAL TESTING

The Phase II ESA consisted of additionally evaluating wastes at the site, more specifically, characterizing and delineating wastes, cover soils, (as applicable) and fill and formation/alluvium underlying/outlying wastes. There was no available background information pertaining to past waste disposal operations at the time of the additional Phase II ESA and available information from the earlier limited Phase II ESA and geotechnical evaluation did not indicate the presence of

burned wastes based on the locations explored, which usually results in elevated metal concentrations, typically lead. The previous limited Phase II ESA and geotechnical evaluation indicated that wastes encountered onsite typically consist of concrete, asphalt, bricks and lesser amounts of plastic, glass, and ceramic debris, bottles, and tires based on locations explored.

Based on this additional Phase II ESA, the majority of wastes at the site at locations explored are construction wastes typically consisting of concrete, asphalt, metal debris, and lesser amounts of other miscellaneous construction materials (tile, cinder blocks, bricks, etc.) and small amounts of other waste debris such as glass bottles and broken glass, and plastic. However, at three locations, at the eastern site area, burned wastes were encountered in the test pits and likely continues easterly into the existing playing fields.

Based on the waste types, and the analytical results of the previous limited analytical testing of the wastes, samples from this additional Phase II ESA that were assigned testing, were analyzed for Title 22 metals or lead only. At the three locations where burned wastes were encountered, some additional samples were collected of this waste type for additional metals analytical testing as this waste type typically contains elevated metal concentrations, particularly lead. Analytical results of previously tested waste samples from the site indicated some elevated lead concentrations and the presence of a few organochlorine pesticides (OCPs), polychlorinated biphenyls (PCB), semi volatile organic compounds (SVOCs), and some low petroleum hydrocarbon concentrations. Therefore, select samples, typically those that appeared to be at locations with the most amount of wastes, and the burned wastes, were analyzed for other COPCs in addition to metals. Volatile organic compounds (VOCs) were not detected in the samples previously analyzed.

As previously mentioned, except at locations where burned waste was encountered which is conducive to directly sampling, other samples collected in construction wastes (e.g., concrete, asphalt, etc.) which is not conducive to sampling, requires the soils around these waste materials to be sampled as opposed to the actual wastes.

The following analytical testing was conducted based on background information, particularly results of previously tested waste samples; experience conducting similar waste disposal site investigations statewide; and the types of wastes observed during the investigation.

Total metal concentrations (Title 22 metals) or total lead only by United States Environmental Protection Agency (EPA) test methods 6010B/7471A and 6010B, respectively. Metals are a common COPC at most waste disposal sites, particularly at sites where wastes were burned. Samples assigned analytical testing were analyzed for Title 22 metals or lead only analysis.

Soluble metal concentrations (specific Title 22 metals) select samples containing individual total metal concentrations exceeding 10 times their respective Soluble Threshold Limit Concentration (STLC) were additionally analyzed for STLC and select samples containing individual metal concentrations greater than 20 times their respective STLC were additionally analyzed for Toxicity Characteristic Leaching Procedure (TCLP). A sample containing the highest total lead concentration at the site based on samples collected and analyzed, was additionally analyzed for STLC and TCLP lead.

Total petroleum hydrocarbons (TPH) carbon chain identification (C_6-C_{44}) by EPA test method 8015M. Several waste samples previously analyzed contained some relatively low concentrations of petroleum hydrocarbons. For this additional Phase II ESA, 13 samples, typically those generally containing the most amount of observed wastes, were analyzed for TPH as gasoline range organics (GRO), diesel range organics (DRO) and oil range organics (ORO).

Polychlorinated Biphenyls (PCBs) by EPA test method 8082. PCBs are often present at waste disposal sites and were previously detected in some wastes at the site. Six samples, typically from locations containing the most amount of observed waste were analyzed for OCPs.

Semi-Volatile Organic Compounds (SVOCs) by EPA test method 8270C. SVOCs are often present at waste disposal sites, particularly at sites where wastes were burned. Eight samples, those generally from locations containing the most amount of observed wastes were analyzed for SVOCs.

Volatile Organic Compounds (VOCs) by EPA test method 8260B. VOCs are often present at waste disposal sites; however, none of the previous samples analyzed contained detectable VOCs. Based on this and the waste types, five samples, those generally from locations containing the most amount of observed wastes were analyzed for VOCs.

Organochlorine pesticides (OCPs) by EPA test method 8081A. OCPs are often present at waste disposal sites, particularly at locations where current or previous site uses were agricultural. Six samples, typically from locations containing the most amount of observed wastes were analyzed for OCPs.

Table 1 summarizes the analytical testing, test method and number of samples analyzed.

Table 1 – Analytical Testing

Constituents of Potential Concern (COPC)	EPA Test Method	Number of Samples
Title 22 metals	6010B/7471A	33
Total lead only	6010B	18
Total Petroleum Hydrocarbons (TPH)	8015B	13
Polychlorinated Biphenyls (PCBs)	8082	6
Semi-Volatile Organic Compounds (SVOCs)	8270C	8
Volatile Organic Compounds (VOCs)	8260B	5
Organochlorine Pesticides (OCPs)	8081A	6
Soluble Testing (STLC, TCLP)	6010B	12

Notes:
The samples selected for additional metals analyses and testing were typically those observed to contain the most amount of wastes based solely on field observations during the additional Phase II ESA.

14 QUALITY ASSURANCE/QUALITY CONTROL

Data validation associated with the analytical testing included evaluating the following:

- Sample holding time.

- Sample methods.
- Analytical method.
- Sample preservation.
- Chain-of-custody records.
- Detection limits.
- Possible transcription errors.
- Surrogate recoveries.
- Matrix spike recoveries and matrix spike duplicate recoveries.
- Calibration checks.

Field duplicates generally involve collecting two separate samples of the same matrix at the same time and same location, and using the same sampling procedures to document that sampling techniques are consistent and are not influencing the analytical results. However, burned wastes are inherently heterogeneous, therefore, even if two samples are collected in the same exact manner and side by side, the analytical results will often be different and may not be comparable because the wastes or materials that compose the fill are inherently different. Field duplicates of wastes are therefore not a reliable indicator of accuracy, representativeness, or precision and were therefore not collected.

A trip blank consists of a sample of deionized water provided by the laboratory that is kept with samples to be analyzed for VOCs, after sample collection and during transport to the laboratory. Waste samples collected as part of this investigation are solid, not liquid samples; therefore, trip blanks are not applicable to this investigation. The proposed sample collection methodology does not require using sampling equipment; therefore, equipment blanks are not required.

Based on the analytical report, it appears that there were no problems noted with the analytical testing and the results and the analytical data can be relied upon.

15 SITE RESTORATION AND MANAGEMENT OF INVESTIGATIVE DERIVED WASTE

After completion of field activities, each area investigated was left in an orderly condition with equipment, unused materials, and other miscellaneous items resulting from, or used in, the investigation removed from the site. Excavated materials were placed directly back into the excavation from which they were removed. Used personal protective equipment (PPE) (e.g., sampling gloves) were bagged and disposed of in a municipal refuse dumpster.

16 SUMMARY OF FINDINGS

The following summarizes the findings of the additional Phase II ESA:

16.1 Test Pit Logs

The following information was recorded on individual test pit logs included in Appendix D:

- Project name and number.
- Sample locations and depths, a unique test pit identifier was used (TP22-6) indicating test pit 22 and a sample collected at a depth of approximately 6 feet bgs.
- Date test pit was excavated/backfilled.
- Name of person logging and sampling the excavation.
- Depths and locations of samples collected; the logs indicated total depth excavated; depth of cover soils (if present) and wastes and formation (alluvium), as applicable.
- Descriptions/visual classification of subsurface materials encountered, based solely on observations, including:
    - General descriptions of cover soils overlying the wastes (as applicable).
    - General descriptions of subsurface materials (e.g., fill, wastes, formation; and typically an estimated percentage of wastes relative to fill soils based on visual observations and a general description of the primary constituents of the wastes (e.g., concrete, metal, glass, etc.).
    - Lithologic descriptions of the underlying formation (alluvium).

16.2 Waste Disposal Site History

There do not appear to be available records pertaining to waste disposal activities at the Strathern Park North (site) and the LEA reported that they were unaware of wastes at this property. Prior to the preparation of this Phase II ESA, the waste disposal site was not listed in the SWIS database meaning that it was not a known and/or documented waste disposal site. However, we were informed by CalRecycle staff on July 29, 2021, that the site was added to the SWIS database and assigned SWIS #19-CR-0835. There are numerous undocumented waste disposal sites similar to this site, statewide and it has been our experience that parks are often locations of previous waste disposal sites. The park (or a portion of the park) and possibly other locations extending offsite, including residential properties, appear to be the location of an undocumented, pre-regulations waste disposal site.

Historical aerial photographs were relied upon to assist with evaluating historic waste disposal activities particularly because there was an absence of other documentation about the site. Review and interpretation of the 1952 and 1953 historical aerial photographs suggest that prior to 1952, and sometime after 1947, the eastern area of the park corresponding to the existing baseball fields appears to be the location of significant surface disturbances that are likely the location of waste disposal activities. An unpaved road originating from the eastern park area in

the vicinity of structures continues onto the site and appears to terminate at a location interpreted to be a large stockpile of material. There are other areas of what appear to be highly disturbed areas stockpiled with rows of materials on site which are interpreted to be related to waste disposal which appears to be more concentrated at the eastern portion of the park area. These surface disturbances/waste disposal activities appear to have occurred prior to construction of the SR-170 freeway.

Although not known, the surface disturbances that appear to be related to waste disposal activities both on and offsite to the east (e.g., at Strathern Park) may be related in part to residential construction projects in the area. The presence of a structure offsite at the eastern area of the future park that appears to be accessed via Whitsett Avenue with unpaved roads that extend from the structure to disturbed areas on and offsite corresponding to most of Strathern Park North suggests that the site and eastern area may have been a more formal waste disposal site. The 1967 photograph indicates the site is the location of significant surface disturbances that appear to be unpaved roads and possibly stockpiled materials. Although not clear, the 1953 aerial photograph indicates similar surface disturbances to the south of the park, possibly extending into future Strathern Street and to the south into Jamie Beth Slaven Park, which may also be the location of past waste disposal activity.

In summary, it appears that surface disturbances at the site and offsite at the eastern developed park area (and possibly continuing beyond the park), suspected to be related to waste disposal activities, began sometime after 1947 and prior to 1952. It appears waste disposal activities may have stopped by 1964; however, the 1967 aerial photograph indicates significant surface disturbances at the site in 1967. The site was graded by 1970.

The locations/areas of surface disturbances observed in some of the historical aerial photographs that are suspected to be related to former waste disposal activities appear to be in locations where wastes were observed during the previous Phase II ESA and geotechnical evaluation, and this additional Phase II ESA.

16.3 Phase II Environmental Site Assessment

On April 27 and 28, 2021, 22 exploratory test pits were excavated at the site and were used to characterize and delineate wastes.

Test pits were located and oriented to obtain the maximum information about the extent of the wastes, locations were generally consistent with the LEA-approved work plan, and based on the following:

- Current site conditions and planned Construction Project layout at this time.
- Historical aerial photographs indicating the locations of surface disturbances that were interpreted to be related to waste disposal.
- To as best as possible in the time allotted, cover most of the site area.
- To fill in data gaps from the previous limited Phase II ESA and geotechnical study and/or to better define the lateral extent of wastes.

Authoritative protocol was used during the investigation (e.g., adjusting the locations of exploratory test pits based on information obtained during the investigation) to maximize the amount of information obtained during the additional Phase II ESA and to take into account the evolving conceptual site model.

16.4 Analytical Results

Analytical results were compared to hazardous waste criteria (when values were available), since the planned Construction Project will involve excavating the wastes as part of the design of the infiltration gallery, and offsite disposal of the wastes to an appropriate waste disposal facility/recycling facilities. However, since it is anticipated that some wastes will be remaining at the site, at locations outlying the lateral extent of the infiltration gallery and at the developed park area to the east, analytical results were also compared to human health screening levels. Metals analytical results are summarized on Table 2 and analytical results of other COPCs are summarized on Table 3. Analytical reports and chain-of-custody documentation are provided as Appendix G.

Title 22 Metals

Only those metals detected at concentrations exceeding hazardous waste criteria and/or human health screening levels are discussed in this section.

Arsenic

The 33 samples were analyzed for total arsenic concentrations. Arsenic was detected in 27 samples at concentrations ranging from 1.1 to 23 mg/kg. The arsenic concentrations significantly less than the arsenic Total Threshold Limit Concentration (TTLC) of 500 mg/kg and less than 10 times the arsenic Soluble Threshold Limit Concentration (STLC) of 5 mg/L (50 mg/L); therefore, do not exceed hazardous waste criteria.

The arsenic concentrations of the 27 samples exceed human health screening levels for residential and industrial/commercial soils. However, based on conducting numerous similar waste disposal site projects statewide and the DTSC Acceptable Cleanup Level of 12 mg/kg for southern California soils, it is our opinion that only the two samples of burned wastes from test pits TP7 and TP10, with arsenic concentrations (19 and 23 mg/kg) greater than 12 mg/kg would likely be considered impacted by arsenic.

Copper

The 33 samples were analyzed for total copper concentrations. Copper concentrations ranged from 2.8 to 350 mg/kg. The sample containing 350 mg/kg was from test pit TP10 which is one of the locations of burned wastes.

Only one sample contained copper at a concentration (350 mg/kg) that exceeded 10 times the copper STLC of 25 mg/L (250 mg/L). Based on this, the sample was additionally analyzed for soluble copper and the copper STLC was 17 mg/L, less than the STLC of 25 mg/L. None of the samples analyzed contained copper at a concentration that exceeded the copper TTLC of 2,500 mg/kg.

Total copper concentrations did not exceed human health screening levels.

Lead

The 51 samples were analyzed for total lead concentrations (assigned as Title 22 metals or lead analysis only). Lead concentrations ranged from not detected in one sample from a location outlying wastes to 1,800 mg/kg in a sample of burned wastes.

The three test pits (TP-7, TP-10 and TP-21) with burned wastes contain the highest lead concentrations ranging from 76 to 1,800 mg/kg (excluding a sample of unknown cobalt blue waste material analyzed from test pit TP-7). One burned waste sample from each of these test pits was additionally analyzed for soluble lead. Soluble lead concentrations were 7.4, 17, and 18 mg/L, exceeding the lead STLC of 5 mg/L. Based on this, if the wastes are excavated and compared to hazardous waste criteria, they would be classified as California hazardous for lead. (The sample containing 1,800 mg/kg and 18 mg/L soluble lead would be classified as California hazardous for both total and soluble lead.)

One sample from test pits TP16, TP18 and TP19, where burned wastes were not observed contained total lead concentrations ranging from 57 to 110 mg/kg, exceeding 10 times the lead STLC of 5 mg/L (50 mg/L). Soluble lead concentrations of these samples additionally analyzed ranged from not detected to 0,53 mg/L, less than the lead STLC of 5 mg/L.

None of the samples analyzed contained total lead at a concentration that exceeded the lead TTLC of 1,000 mg/kg.

Total lead concentrations of burned waste samples from test pits TP7, TP10 and TP21 exceeded human health screening levels for residential soils and/or industrial/commercial soils. Total lead concentrations from soil samples from test pit TP16 exceeded human health screening levels for residential soils.

Zinc

The 33 samples were analyzed for total zinc concentrations. Zinc concentrations ranged from 11 to 3,900 mg/kg. The sample containing 3,900 mg/kg was from test pit TP21 which is the location of burned wastes and is outside the anticipated limits of project-related ground-disturbing activity.

Only one sample contained zinc at a concentration (3,900 mg/kg) that exceeded 10 times the zinc STLC of 250 mg/L (2500 mg/L). Based on this, the sample was additionally analyzed for soluble zinc, and the zinc STLC was 700 mg/L, greater than 250 mg/L. Based on the soluble zinc concentration, if the wastes are excavated and compared to hazardous waste criteria, this waste would be classified as California hazardous. There is no TCLP value for zinc.

None of the samples analyzed contained total zinc at concentrations that exceeded the zinc TTLC of 5,000 mg/kg.

Total zinc concentrations did not exceed human health screening levels.

Total Petroleum Hydrocarbons (TPH)

Total Petroleum Hydrocarbons - Gasoline Range Organics (TPH-GRO) was not detected in the 13 samples analyzed.

TPH - Diesel Range Organics (DRO) was detected in two of the 13 samples analyzed, both at a relatively low concentration of 16 mg/kg.

TPH – Oil Range Organics (ORO) was detected in four of the 13 samples analyzed at relatively low concentrations ranging from 22 to 50 mg/kg.

There are no listed hazardous waste criteria levels for petroleum hydrocarbons and concentrations of samples analyzed were less than human health screening levels for residential and industrial/commercial soils.

Polychlorinated Biphenyls (PCBs)

PCBs were not detected in the six samples analyzed.

Organochlorine Pesticides (OCPs)

Six samples were analyzed for OCPs.

One sample from test pit TP19 contained chlordane at a concentration of 290 ug/kg, less than the hazardous waste criteria TTLC of 2,500 ug/kg (2.5 mg/kg).

One sample from test pit TP7 of burned wastes, contained 4,4'DDD at a concentration of 5.1 g/kg and 4,4'DDE at a concentration of 600 ug/kg, less than the hazardous waste criteria TTLC of 1,000 ug/kg (1 mg/kg). One sample from test pit TP21 also of burned wastes, contained 4,4'-DDE at a concentration of 6.9 ug/kg, also less than the hazardous waste criteria.

One sample from test pit TP20 contained 26 ug/kg 4,4'DDE less than the hazardous waste criteria.

No other OCPs were detected in the samples analyzed.

OCPs were not detected at concentrations exceeding hazardous waste criteria or human health screening levels.

Volatile Organic Compounds (VOCs)

VOCs were not detected in the five samples analyzed.

Semi-Volatile Organic Compounds (SVOCs)

SVOCs were not detected in the eight samples analyzed.

Summary of Analytical Results

Analytical results indicate that the wastes at the site contain some elevated metal concentrations. As would be expected, the higher lead concentrations are related to burned wastes.

One sample of burned wastes from test pit TP-7 contains total lead at a concentration of 1,800 mg/kg and soluble lead at 18 mg/L, exceeding the lead TTLC of 1,000 mg/kg and the lead STLC of 5 mg/L. Two samples, one each from test pits TP7 and TP10, contain soluble lead at concentrations of 7.4 and 17 mg/L, exceeding the lead STLC of 5 mg/L. One sample of burned wastes from test pit TP-21 contains soluble zinc at a concentration of 700 mg/L, exceeding the zinc STLC of 250 mg/L. Based on this, if these wastes are excavated, they would be classified as California hazardous for lead and zinc. It should be noted, however, that test pits TP-7 and TP-21 are located east and outside of the anticipated area of the planned stormwater infiltration project. No other samples analyzed contain metals at concentrations exceeding their respective hazardous waste criteria.

Analytical results of alluvium underlying wastes and of fill soils/alluvium outlying wastes generally indicate that soils have not been adversely impacted by COPCs.

The requested STLC and TCLP analytical testing was intended to provide additional analytical results to assist with hazardous waste criteria support and to indicate that the subsurface wastes are not adversely impacting soils (e.g., soluble/migrating). However, the available total metal concentrations analytical results of underlying and outlying soils is actually better evidence that metals are not soluble/migrating from the wastes.

16.5 Nature and Extent of Wastes

The following information is provided about the nature and extent of wastes and cover soils based on this additional Phase II ESA and other background information.

At the locations explored, the wastes typically are approximately 4 to 5.5 feet thick. The base of the wastes is typically at depths of approximately 5.5 to 6.5 feet bgs; however, it ranges from approximately 5 to 7.5 feet bgs. Wastes did not extend to depths greater than approximately 7.5 feet bgs based on the locations explored.

16.5.1 Waste Types

Results of this additional Phase II ESA indicate that there are generally two distinct types of wastes at the site as follows:

Construction Wastes with Minor Amounts of Other Wastes

What is generally referred to as construction wastes were observed at the majority of the site where wastes were encountered. The wastes were observed to generally consist primarily of concrete and asphalt, and lesser amounts of metal debris, including a few large pieces of structural steel, bricks, cinder blocks, bottles, glass, ceramics, plastic, metal cans, and tires at the locations explored.

Burned Wastes

Burned wastes were encountered in three test pits, TP-7, TP-10 and TP-21, and typically consist of darkly colored ashy soils with abundant broken glass, fused and melted glass, metal debris and other waste debris (e.g., ceramic, porcelain, etc.), typical of sites where wastes were burned.

At locations where the burned wastes were observed, they generally appear to underlie the construction wastes, likely because the burned wastes are older.

16.5.2 Estimated Extents of Wastes

The estimated waste extent is based on a review of select historical aerial photographs indicating surface features/disturbances, some interpreted to be related to waste disposal; and results of this additional Phase II ESA and the previous limited Phase II ESA and geotechnical study indicating where wastes were observed and where they were absent. The locations of the construction wastes appear to generally correlate with the area that has been interpreted to be the location of possible dumping/mounded area, as noted best on the 1953 aerial photograph (Figure 5 and Appendix B). Wastes also extend beyond this mound area. Waste locations and the estimated extent based on exploratory locations are shown on Figures 4 through 6.

Burned wastes were encountered at the easternmost area of the site and in the central southern area of the site and likely extend easterly offsite into the developed area of the park. Based on interpretation of the 1953 aerial photograph and results of this additional Phase II ESA, it appears likely that burned wastes may also underlie the majority of the easterly developed area of the park. Although not known, it is possible that wastes continue offsite to the south into Strathern Street and possibly Jamie Beth Slaven Park, further south.

Wastes at the site were characterized and delineated. Based on the current planned construction project, approximately 15 to 20 feet of excavation will be conducted for the infiltration basin; therefore, wastes within the construction envelope should be entirely removed as part of the construction project based on the relatively consistent maximum waste depths, which are less than the anticipated construction depth.

Although not known, interpretation of historical aerial photographs and the results of this additional Phase II ESA and the previous limited Phase II ESA and geotechnical study suggest that the easterly developed park area may have been the main area of waste disposal activities and likely some or most of the wastes that are suspected to exist at that location were burned. Some of the burned wastes from the eastern park area appear to extend westerly onto the site. The site appears to have been mostly used for dumping of Construction Wastes; however,

burned wastes are present at the site. In general, it appears that wastes were not observed at the northern approximately 1/3 of the site with the exception of previous boring P-3 and previous test pit TP-3.

Waste Cover

The topography of the site indicates the area of wastes appears to be at a higher elevation than properties to the north (residential) and southwest (transmission line easement), which may be related to covering the wastes. Based on site observations and results of the test pits where wastes were observed, wastes in general appear to be adequately covered, typically with 1 to 3.5 feet of fill soils, typically without wastes. However, at a few locations, some minor amounts of waste debris are present in the cover soils.

17 RECOMMENDATIONS

The following recommendations are provided at this time:

- This Phase II ESA report should be submitted to the LEA, CalRecycle and the Los Angeles Regional Water Quality Control Board.
- As indicated in the April 22, 2021 work plan approval letter, the LEA is requiring that a WMP be prepared and implemented any time subsurface activities are conducted at Strathern Park North (a portion of which is the site) based on the park being the location of waste disposal. The LEA stated the WMP should include the entire park The WMP should be prepared and submitted to the LEA for their approval prior to beginning the Construction Project.
- Based on the presence of wastes at the site, including burned wastes, which are classified as California hazardous, the park was assigned SWIS #19-CR-0835 and was entered into the database. It is likely the park will be inspected by the LEA at a frequency to be determined by them and the waste disposal site will need to meet state minimum standards and comply with applicable portions of Title 27 CCR.
- As anticipated, the LEA stated that pursuant to 27 CCR 21190, a PCLUP will be required to be prepared and submitted to the LEA and CalRecycle for their approval prior to beginning the Construction Project. As stated by the LEA, the plan should reflect the findings of this additional Phase II ESA (as well as the previous limited Phase II ESA and geotechnical study).
- Staff at the park should be notified of the possible presence of burned wastes at the site and particularly that they are anticipated to exist in the area of the existing playing fields in the event that subsurface work such as irrigation system development or replacement or other activities require excavating into known or suspected wastes. Additional waste evaluation may be warranted in the area of the baseball fields. At a minimum, these fields as well as any other areas at the park that are not covered with pavement need to be inspected to assure that wastes, if present are not exposed at the surface. Inspection requirements and frequency would likely be addressed in the forthcoming PCLUP.
- The LEA is requiring construction of Landfill Gas (LFG) monitoring wells. Based on the site configuration and presence of adjacent residences, it is anticipated that two to three LFG wells will be required at the site, one to the north and the other to the east and possibly one waste

LFG well in the eastern developed area of the park. Based on the waste depth, the LFG wells can be single completion wells to depths of approximately 10 feet bgs. The depth of the wells could change if a site investigation is conducted to the east and burned or other wastes are encountered at greater to depths. If a subsurface investigation is not conducted at the eastern developed area of the park prior to constructing the LFG wells, then the wells could be conservatively constructed to depths of approximately 15 feet bgs in the event that wastes, if present, extend to greater depths in this area of the park.

- The LEA recommended clean-closure (e.g., waste removal) within the construction project footprint and stated that if all of the waste cannot be removed, then the wastes that remain in place will need to comply with state minimum standards and long term maintenance and monitoring. Based on the current construction project design/layout, wastes are present beyond the lateral extent of the construction project and therefore a portion of the site and possibly also the eastern developed park area will be subject to state minimum standards, post closure operations and maintenance which will be addressed in the forthcoming PCLUP.

18 LIMITATIONS

The environmental services described in this report have been conducted in general accordance with current regulatory guidelines and the standard-of-care exercised by environmental consultants performing similar work in the project area. No warranty, expressed or implied, is made regarding the professional opinions presented in this report. Variations in site conditions may exist and conditions not observed or described in this report may be encountered during subsequent activities. Please also note that this study did not include an evaluation of geotechnical conditions or potential geologic hazards.

Ninyo & Moore's opinions and recommendations regarding environmental conditions, as presented in this report, are based on limited subsurface assessment and chemical analysis. Further assessment of potential adverse environmental impacts from past on-site and/or nearby use of hazardous materials may be accomplished by a more comprehensive assessment. The samples collected and used for testing, and the observations made, are believed to be representative of the area(s) evaluated; however, conditions can vary significantly between sampling locations. Variations in soil and/or groundwater conditions will exist beyond the points explored in this evaluation.

The environmental interpretations and opinions contained in this report are based on the results of laboratory tests and analyses intended to detect the presence and concentration of specific chemical or physical constituents in samples collected from the subject site. The testing and analyses have been conducted by an independent laboratory which is certified by the State of California to conduct such tests. Ninyo & Moore has no involvement in, or control over, such testing and analysis. Ninyo & Moore, therefore, disclaims responsibility for any inaccuracy in such laboratory results.

Our conclusions, recommendations, and opinions are based on an analysis of the observed site conditions. It should be understood that the conditions of a site could change with time as a result of natural processes or the activities of man at the subject site or nearby sites. In addition, changes to the applicable laws, regulations, codes, and standards of practice may occur due to government action or the broadening of knowledge. The findings of this report may, therefore, be invalidated over time, in part or in whole, by changes over which Ninyo & Moore has no control.

This document is intended to be used only in its entirety. No portion of the document, by itself, is designed to completely represent any aspect of the project described herein. Ninyo & Moore should be contacted if the reader requires any additional information, or has questions regarding content, interpretations presented, or completeness of this document.

This report is intended exclusively for use by the client. Any use or reuse of the findings, conclusions, and/or recommendations of this report by parties other than the client is undertaken at said parties' sole risk.

19 REFERENCES

California Code of Regulations Title 27, Section 21190

California Department of Conservation, Division of Mines and Geology, 1997, Seismic Hazard Zone Report for the Van Nuys 7.5-Minute Quadrangle, Los Angeles County, California: Seismic Hazard Zone Report 08.

California Department of Toxic Substances Control, 2004, Guidance Document for the Implementation of United States Environmental Protection Agency Method 5035: Methodologies for Collection, Preservation, Storage, and Preparation of Soils to be Analyzed for Volatile Organic Compounds dated November.

California Department of Water Resources, 2003, Bulletin 118, California's Groundwater Update, Chapter 7: South Coast Hydrologic Region.

California Geologic Survey, 2012, Geologic Compilation of Quaternary Surficial Deposits in Southern California Los Angeles, 30' x 60' Quadrangle: dated July.

California State Water Resources Control Board, 2020, GeoTracker website, https://geotracker.waterboards.ca.gov/.

Campbell, R.H., Wills, C.J., Irvine, P.J., Swanson, B.J., 2014, Preliminary Geologic Map of the Los Angeles 30' x 60' Quadrangle, California, Version 2.0: United States Geological Survey, Scale 1:100,000.

CGS, see California Geologic Survey

City of Los Angeles, California, Department of Building and Safety (aka Solid Waste Local Enforcement Agency), 2020, LEA Comments on Undocumented Waste at Strathern Park: dated October 1.

City of Los Angeles, California, Department of Building and Safety (aka Solid Waste Local Enforcement Agency), 2021, Strathern Park North, LEA Approval of Work Plan for Phase II Assessment: dated April 22.

County of Los Angeles, Department of Public Works, 2020, Well Measurement Data, Well Number 4898; www.dpw.lacounty.gov/general/wells.

DWR, see California Department of Water Resources.

Dibblee, T.W., Jr., 1991, Geologic Map of the Beverly Hills and South ½ Van Nuys Quadrangles, Los Angeles County, California: Dibblee Foundation, DF-31, Scale 1:24,000.

EDR, 2021, EDR Historical Topo Map Report, Strathern Park North, 8041 Whitsett Avenue, North Hollywood, California, Inquiry Number 6390781.1, dated March 4.

Nationwide Environmental Title Research, LLC, https://www.historicaerials.com/.

Ninyo & Moore, 2020a, Site Specific Health and Safety Plan, Stormwater Capture Parks Program, Strathern Park North, Fernangeles, and David M. Gonzales Parks, 8041 Whitsett Avenue, North Hollywood, California 91605, 8851 Laurel Canyon Boulevard, Sun Valley California 91352, 10943 Herrick Avenue Pacoima California, 91331: dated March 23.

Ninyo & Moore, 2020b, Limited Phase II Environmental Site Assessment, LABOE TOS No. 25, Stormwater Capture Parks Program, Strathern Park North, 8041 Whitsett Avenue, North Hollywood, California: dated June 30.

Ninyo & Moore 2020c, Geotechnical Evaluation, LABOE TOS No. 25, Stormwater Capture Parks Program, Strathern Park North, 8041 Whitsett Avenue, North Hollywood, California: dated August 31.

Ninyo & Moore 2020d, Revised Proposal to Provide Additional Phase II Environmental Site Assessment and Consulting Services Stormwater Capture Parks Program Los Angeles Bureau of Engineering Task Order Solicitation (TOS) No. 25 Strathern Park North, 8041 Whitsett Avenue, North Hollywood, California: dated October 23.

Ninyo & Moore 2021a, Work Plan to Conduct Additional Phase II Environmental Site Assessment, Stormwater Capture Parks Program, Portion of Strathern Park North, 8041 Whitsett Avenue, North Hollywood, California, Portion of APN 2308-010-901: dated April 7.

Ninyo & Moore 2021b, Site Specific Health and Safety Plan, Additional Phase II Environmental Site Assessment, Stormwater Capture Parks Program, Portion of Strathern Park North, 8041 Whitsett Avenue, North Hollywood, California, Portion of APN 2308-010-901: dated April 23.

SWRCB, see California State Water Resources Control Board.

ULARAW, see Upper Los Angeles River Area Watermaster.

United States Geological Survey, Various Topographic Maps, Van Nuys Quadrangle, NE Sunland Quadrangle, Santa Monica Quadrangle, and Los Angeles Quadrangle, California, Los Angeles County, 7.5 and 15 Minute Series: Scale 1:24,000.

Upper Los Angeles River Area Watermaster, 2003, Groundwater Pumping and Spreading Plan for the Upper Los Angeles River Area Los Angeles County, California, 2002-2007 Water Years: dated July.

USGS, see United States Geological Survey.

Wayne Perry, 2012, Additional Site Assessment Report, Shell-Branded Service Station, 12858 Roscoe Boulevard (at Coldwater Canyon), Sun Valley, California: dated July 13.

Table 2 - Summary of Metal Analytical Results

Test Pit ID	Sample ID	Sample Date	Sample Depth (ft. bgs)	Metals																				
				Antimony	Arsenic	Barium	Beryllium	Cadmium	Chromium	Cobalt	Copper		Lead			Mercury	Molybdenum	Nickel	Selenium	Silver	Thallium	Vanadium	Zinc	
				TTLC (mg/kg)	TTLC (mg/kg)	TTLC (mg/kg)	TTLC (mg/kg)	TTLC (mg/kg)	TTLC (mg/kg)	TTLC (mg/kg)	TTLC (mg/kg)	WET (mg/L)	TTLC (mg/kg)	TCLP (mg/L)	WET (mg/L)	TTLC (mg/kg)	TTLC (mg/kg)	TTLC (mg/kg)	TTLC (mg/kg)	TTLC (mg/kg)	TTLC (mg/kg)	TTLC (mg/kg)	TTLC (mg/kg)	WET (mg/L)
TP1	TP1-0.5	04/27/21	0.5	--	--	--	--	--	--	--	--	--	14	--	--	--	--	--	--	--	--	--	--	--
	TP1-3		3.0	ND<2.6	ND<0.87	33	ND<0.43	ND<0.43	1.1	1.4	2.8	--	ND<0.87	--	--	ND<0.16	ND<0.87	1.2	ND<2.6	ND<0.43	ND<2.6	7.2	11	--
	TP1-7.5		7.5	--	--	--	--	--	--	--	--	--	2.1	--	--	--	--	--	--	--	--	--	--	--
TP2	TP2-0.5	04/27/21	0.5	--	--	--	--	--	--	--	--	--	--	--	--	--	--	--	--	--	--	--	--	--
	TP2-3.5		3.5	--	--	--	--	--	--	--	--	--	--	--	--	--	--	--	--	--	--	--	--	--
	TP2-7		7.0	--	--	--	--	--	--	--	--	--	--	--	--	--	--	--	--	--	--	--	--	--
TP3	TP3-0.5	04/27/21	0.5	ND<3.3	2.9	89	ND<0.54	ND<0.54	12	5.3	16	--	26	--	--	ND<0.17	ND<1.1	8.9	ND<3.3	ND<0.54	ND<3.3	29	79	--
	TP3-5		5.0	ND<2.6	2.5	51	ND<0.43	ND<0.43	9.5	4.0	8.6	--	19	--	--	ND<0.16	ND<0.85	6.7	ND<2.6	ND<0.43	ND<2.6	26	38	--
	TP3-7.5		7.5	--	--	--	--	--	--	--	--	--	2.2	--	--	--	--	--	--	--	--	--	--	--
TP4	TP4-0.75	04/27/21	0.75	--	--	--	--	--	--	--	--	--	--	--	--	--	--	--	--	--	--	--	--	--
	TP4-6		6.0	--	--	--	--	--	--	--	--	--	--	--	--	--	--	--	--	--	--	--	--	--
TP5	TP5-0.5	04/27/21	0.5	--	--	--	--	--	--	--	--	--	27	--	--	--	--	--	--	--	--	--	--	--
	TP5-5		5.0	--	--	--	--	--	--	--	--	--	23	--	--	--	--	--	--	--	--	--	--	--
	TP5-7		7.0	--	--	--	--	--	--	--	--	--	1.4	--	--	--	--	--	--	--	--	--	--	--
TP6	TP6-0.75	04/27/21	0.75	ND<3.1	1.8	71	ND<0.52	ND<0.52	9.2	5.2	12	--	21	--	--	ND<0.14	ND<1	6.8	ND<3.1	ND<0.52	ND<3.1	29	56	--
	TP6-3		3.0	ND<2.7	4.1	110	ND<0.45	ND<0.45	21	7.4	19	--	28	--	--	ND<0.16	ND<0.9	15	ND<2.7	ND<0.45	ND<2.7	39	81	--
	TP6-6.5		6.5	ND<2.6	1.1	55	ND<0.43	ND<0.43	6.2	3.7	6.7	--	6.2	--	--	ND<0.15	ND<0.86	5.1	ND<2.6	ND<0.43	ND<2.6	20	24	--
TP7	TP7-1	04/27/21	1.00	ND<2.8	5.3	240	ND<0.46	0.64	27	10	39	--	110	--	--	ND<0.16	ND<0.93	19	ND<2.8	ND<0.46	ND<2.8	46	350	--
	TP7-3		3.0	ND<3.2	12	380	ND<0.53	0.65	28	10	95	--	380	--	--	ND<0.15	5.6	27	ND<3.2	0.68	ND<3.2	35	490	--
	TP7-4		4.0	ND<2.7	3.9	380	ND<0.45	ND<0.45	33	8.0	60	--	210	--	--	0.18	ND<0.89	14	ND<2.7	ND<0.45	ND<2.7	34	520	--
	TP7-BLUE		--	ND<3.3	2.4	130	0.85	ND<0.55	6.0	2.1	7.9	--	62	--	--	ND<0.16	ND<1.1	7.7	ND<3.3	ND<0.55	ND<3.3	6.8	85	--
	TP7-5.5		5.5	8.0	23	320	ND<0.45	2.5	41	17	140	--	700	1.2	7.4	ND<0.17	11	59	ND<2.7	ND<0.45	ND<2.7	15	700	--
	TP7-7		7.0	ND<2.7	ND<0.89	33	ND<0.45	ND<0.45	4.0	2.7	5.6	--	1.6			ND<0.16	ND<0.89	2.6	ND<2.7	ND<0.45	ND<2.7	13	19	--
TP8	TP8-1	04/27/21	1.0	--	--	--	--	--	--	--	--	--	--	--	--	--	--	--	--	--	--	--	--	--
	TP8-3		3.0	--	--	--	--	--	--	--	--	--	--	--	--	--	--	--	--	--	--	--	--	--
	TP8-5		5.0	--	--	--	--	--	--	--	--	--	--	--	--	--	--	--	--	--	--	--	--	--
TP9	TP9-1	04/27/21	1.0	ND<3.3	4.5	120	ND<0.56	ND<0.56	20	7.8	19	--	35	--	--	ND<0.14	ND<1.1	13	ND<3.3	ND<0.56	ND<3.3	40	90	--
	TP9-4		4.0	ND<2.8	4.2	150	ND<0.46	0.52	24	8.8	24	--	46	--	--	ND<0.17	1.0	17	ND<2.8	ND<0.46	ND<2.8	40	120	--
	TP9-6		6.0	--	--	--	--	--	--	--	--	--	2.8	--	--	--	--	--	--	--	--	--	--	--
TP10	TP10-1	04/27/21	1.0	ND<2.7	3.7	120	ND<0.44	ND<0.44	19	7.6	19	--	25	--	--	ND<0.16	1.3	16	ND<2.7	ND<0.44	ND<2.7	38	90	--
	TP10-3.5		3.5	--	--	--	--	--	--	--	--	--	220	--	--	--	--	--	--	--	--	--	--	--
	TP10-4		4.0	3.2	19	590	ND<0.51	2.8	30	10	350	17	620	3.5	17	0.19	2.3	18	ND<3.1	4.4	ND<3.1	38	920	--
	TP10-7		7.0	ND<2.8	1.5	47	ND<0.47	ND<0.47	7.2	4.0	6.5	--	1.8	--	--	ND<0.14	ND<0.94	4.4	ND<2.8	ND<0.47	ND<2.8	24	21	--
TP11	TP11-0.75	04/28/21	0.75	ND<2.6	5.8	140	ND<0.44	0.56	29	8.6	22	--	50	--	--	ND<0.14	1.1	23	ND<2.6	ND<0.44	ND<2.6	51	94	--
	TP11-3.5		3.5	ND<2.6	2.3	96	ND<0.44	ND<0.44	13	7.0	13	--	7.6	--	--	ND<0.15	ND<0.88	10	ND<2.6	ND<0.44	ND<2.6	33	50	--
	TP11-6		6.0	ND<2.9	ND<0.95	28	ND<0.48	ND<0.48	2.7	2.0	2.8	--	0.99	--	--	ND<0.17	ND<0.95	1.8	ND<2.9	ND<0.48	ND<2.9	12	12	--
TP12	TP12-1	04/28/21	1.0	--	--	--	--	--	--	--	--	--	28	--	--	--	--	--	--	--	--	--	--	--
	TP12-4		4.0	--	--	--	--	--	--	--	--	--	1.2	--	--	--	--	--	--	--	--	--	--	--
TP13	TP13-1	04/28/21	1.0	--	--	--	--	--	--	--	--	--	--	--	--	--	--	--	--	--	--	--	--	--
	TP13-4		4.0	--	--	--	--	--	--	--	--	--	--	--	--	--	--	--	--	--	--	--	--	--
TP14	TP14-1	04/28/21	1.0	--	--	--	--	--	--	--	--	--	41	--	--	--	--	--	--	--	--	--	--	--
	TP14-2		2.0	--	--	--	--	--	--	--	--	--	8	--	--	--	--	--	--	--	--	--	--	--
TP15	TP15-1	04/28/21	1.0	--	--	--	--	--	--	--	--	--	--	--	--	--	--	--	--	--	--	--	--	--
	TP15-3		3.0	--	--	--	--	--	--	--	--	--	--	--	--	--	--	--	--	--	--	--	--	--
TP16	TP16-0.75	04/28/21	0.75	ND<3.2	4.1	120	ND<0.53	ND<0.53	47	11	20	--	110	ND<0.015	0.28	ND<0.16	ND<1.1	20	ND<3.2	ND<0.53	ND<3.2	58	67	--
	TP16-3		3.0	--	--	--	--	--	--	--	--	--	2.6	--	--	--	--	--	--	--	--	--	--	--
TP17	TP17-1	04/28/21	1.0	--	--	--	--	--	--	--	--	--	24	--	--	--	--	--	--	--	--	--	--	--
	TP17-4		4.0	--	--	--	--	--	--	--	--	--	9	--	--	--	--	--	--	--	--	--	--	--

Table 2 - Summary of Metal Analytical Results

Test Pit ID	Sample ID	Sample Date	Sample Depth (ft. bgs)	Metals																				
				Antimony	Arsenic	Barium	Beryllium	Cadmium	Chromium	Cobalt	Copper		Lead			Mercury	Molybdenum	Nickel	Selenium	Silver	Thallium	Vanadium	Zinc	
TP18	TP18-1	04/28/21	1.0	ND<2.9	*3.6*	110	ND<0.48	ND<0.48	17	7.2	22	--	48	--	--	ND<0.16	1	14	ND<2.9	ND<0.48	ND<2.9	36	98	--
	TP18-3		3.0	ND<2.6	*3.4*	100	ND<0.43	ND<0.43	15	7.4	19	--	57	--	0.53	ND<0.15	ND<0.86	11	ND<2.6	ND<0.43	ND<2.6	33	100	--
	TP18-6.5		6.5	ND<3	*1.6*	23	ND<0.5	ND<0.5	7.8	3.5	4.7	--	2.3	--	--	ND<0.16	ND<1	2.9	ND<3	ND<0.5	ND<3	37	16	--
TP19	TP19-1	04/28/21	1.0	ND<2.7	*3.4*	110	ND<0.45	0.89	17	6.3	18	--	23	--	--	ND<0.17	1.8	17	ND<2.7	ND<0.45	ND<2.7	36	93	--
	TP19-3		3.0	ND<3	*3.1*	110	ND<0.5	ND<0.5	14	6.2	15	--	10	--	--	ND<0.15	1.3	16	ND<3	ND<0.5	ND<3	31	50	--
	TP19-6		6.0	ND<2.7	*5.2*	190	ND<0.44	0.89	33	9.3	24	--	65	--	ND<0.15	ND<0.14	1.4	29	ND<2.7	ND<0.44	ND<2.7	55	88	--
TP20	TP20-1	04/28/21	1.0	--	--	--	--	--	--	--	--	--	2.2	--	--	--	--	--	--	--	--	--	--	--
	TP20-3.5		3.5	ND<2.5	*1.7*	66	ND<0.42	ND<0.42	11	5.8	11	--	17	--	--	ND<0.17	ND<0.85	7.4	ND<2.5	ND<0.42	ND<2.5	28	46	--
	TP20-7.5		7.5	--	--	--	--	--	--	--	--	--	1.6	--	--	--	--	--	--	--	--	--	--	--
TP21	TP21-1	04/28/21	1.0	ND<2.9	*3.5*	110	ND<0.48	ND<0.48	16	8.1	20	--	42	--	--	ND<0.15	ND<0.95	11	ND<2.9	ND<0.48	ND<2.9	37	85	--
	TP21-3		3.0	ND<3.2	*1.6*	86	ND<0.53	ND<0.53	20	6.8	16	--	45	--	--	ND<0.15	ND<1.1	11	ND<3.2	ND<0.53	ND<3.2	35	75	--
	TP21-5		5.0	10	*2.6*	560	ND<0.46	3.9	23	5.5	140	--	*1,800*	3.8	18	ND<0.16	ND<0.92	30	ND<2.8	0.46	ND<2.8	35	3,900	700
	TP21-5.5		5.5	ND<2.8	*1.3*	150	ND<0.46	1.1	7.4	4	23	--	76	--	--	ND<0.16	ND<0.92	13	ND<2.8	ND<0.46	ND<2.8	26	1400	--
	TP21-7		7.0	ND<3.3	ND<1.1	52	ND<0.54	ND<0.54	3.8	2.5	7.4	--	9.6	--	--	ND<0.14	ND<1.1	2.3	ND<3.3	ND<0.54	ND<3.3	14	190	--
TP22	TP22-0.75	04/28/21	0.75	--	--	--	--	--	--	--	--	--	19	--	--	--	--	--	--	--	--	--	--	--
	TP22-3		3.0	--	--	--	--	--	--	--	--	--	40	--	--	--	--	--	--	--	--	--	--	--
	TP22-6		6.0	--	--	--	--	--	--	--	--	--	3.3	--	--	--	--	--	--	--	--	--	--	--
Hazardous Waste Criteria																								
TTLC (mg/kg)				500	500	10,000	75	100	2,500	8,000	2,500	--	1,000	--	--	20	3,500	2,000	100	500	700	2,400	5,000	--
STLC (mg/l)				15	5.0	100	0.75	1.0	5.0	80	--	25	5.0	--	5.0	0.2	350	20	1.0	5.0	7.0	24	--	250
TCLP (mg/l)				NL	5.0	100	NL	1.0	5.0	NL	NL	--	5.0	5.0	--	0.2	NL	NL	1.0	5.0	NL	NL	NL	--
STLC Trigger Value (mg/kg)				150	50	1,000	7.5	10	50	800	250	--	50	--	--	2.0	3,500	200	10	50	70	240	2,500	--
TCLP Trigger Value (mg/kg)				NL	100	2,000	NL	20	100	NL	NL	--	100	--	--	4.0	NL	NL	20	100	NL	NL	NL	--
Human Health Screening Levels (mg/kg)																								
EPA RSLs (Residential Soil)				31	0.68	15,000	160	71	NL	23	3,100	--	400	--	--	11	390	1,500	390	390	0.78	390	23,000	--
DTSC HERO HHRA (Residential Soil)				--	0.11	NL	16	NL	NL	NL	NL	--	80	--	--	1.0	NL	820	NL	NL	NL	NL	NL	--
EPA RSLs (Industrial Soil)				*NL*	*0.41*	*220,000*	*2,300*	*980*	*NL*	*350*	*47,000*	--	*800*	--	--	*46*	*5,800*	*22,000*	*5,800*	*5,800*	*12*	*5,800*	*350,000*	--
DTSC HERO HHRA (Commercial/Industrial Soil)				*NL*	*0.36*	*NL*	*230*	*780*	*NL*	*NL*	*NL*	--	*320*	--	--	*4.4*	*NL*	*11,000*	*NL*	*NL*	*NL*	*NL*	*NL*	--
DTSC Acceptable Clean Up Levels				NL	12	NL	NL	NL	NL	NL	NL	--	NL	--	--	NL	NL	NL	NL	NL	NL	NL	NL	--

Notes:

bgs = below ground surface
EPA = United States Environmental Protection Agency
DTSC Acceptable Clean Up Levels - DTSC's Determination of a Southern California Regional Background Arsenic concentrations in soil (March, 2008)
DTSC HERO HHRA - Department of Toxic Substances Control Human and Ecological Risk Office Human Health Risk Assessment, Note 3, Recommended Screening Levels (June 2020)
ID = identification
mg/kg = milligrams per kilogram
mg/l = milligrams per liter
-- = sample not analyzed
J = estimated value
ND = not detected above the laboratory reporting limit
NL = not listed
RSLs = United States Environmental Protection Agency Regional Screening Levels, May 2020
STLC = Soluble Threshold Limit Concentration
TCLP = Toxicity Characteristic Leaching Procedure
TTLC = Total Threshold Limit Concentration by EPA Method 6010B/7471A

xxx the concentration exceeds one or more human health screening levels for residential soil
xxx the concentration exceeds one or more human health screening levels for industrial and/or commercial/industrial soil
the concentration exceeds the Total Threshold Limit Concentration and/or the Soluble Threshold Limit Concentration (Cal Haz waste)
the concentration exceeds the Toxicity Characteristic Leaching Procedure (Fed Haz Waste)

Table 3 - Summary of Total Petroleum Hydrocarbons, Organochlorine Pesticides, Volatile Organic Compounds, Semi-Organic Compounds, and Polychlorinated Biphenyls Analytical Results

Test Pit ID	Sample ID	Sample Date	Sample Depth (ft. bgs)	Total Petroleum Hydrocarbons (TPH) EPA Method 8015B			Organochlorine Pesticides (OCPs) EPA Method 8081A				Volatile Organic Compounds (VOCs) EPA Method 8260B	Semi - Volatile Organic Compounds (SVOCs) EPA Method 8270C	Polychlorinated Biphenyls (PCBs) EPA Method 8082
				GRO C6-C10	DRO C10-C28	ORO C28-C44	Chlordane (Technical)	4,4'-DDD	4,4'-DDE	Other OCPs			
				mg/kg			µg/kg				µg/kg	µg/kg	µg/kg
TP1	TP1-0.5	04/27/21	0.5	--	--	--	--	--	--	--	--	--	--
	TP1-3		3.0	--	--	--	--	--	--	--	--	--	--
	TP1-7.5		7.5	--	--	--	--	--	--	--	--	--	--
TP2	TP2-0.5	04/27/21	0.5	--	--	--	--	--	--	--	--	--	--
	TP2-3.5		3.5	--	--	--	--	--	--	--	--	--	--
	TP2-7		7.0	--	--	--	--	--	--	--	--	--	--
TP3	TP3-0.5	04/27/21	0.5	--	--	--	--	--	--	--	--	--	--
	TP3-5		5.0	ND<100	ND<100	ND<200	ND<250	ND<25	ND<25	--	--	ND	ND
	TP3-7.5		7.5	--	--	--	--	--	--	--	--	--	--
TP4	TP4-0.75	04/27/21	0.75	--	--	--	--	--	--	--	--	--	--
	TP4-6		6.0	--	--	--	--	--	--	--	--	--	--
TP5	TP5-0.5	04/27/21	0.5	--	--	--	--	--	--	--	--	--	--
	TP5-5		5.0	--	--	--	--	--	--	--	--	--	--
	TP5-7		7.0	--	--	--	--	--	--	--	--	--	--
TP6	TP6-0.75	04/27/21	0.75	--	--	--	--	--	--	--	--	--	--
	TP6-3		3.0	--	--	--	--	--	--	--	--	--	--
	TP6-6.5		6.5	--	--	--	--	--	--	--	--	--	--
TP7	TP7-1	04/27/21	1.00	--	--	--	--	--	--	--	--	--	--
	TP7-3		3.0	--	--	--	--	--	--	--	--	--	--
	TP7-4		4.0	ND<10	16	50	--	--	--	--	--	--	--
	TP7-BLUE		--	--	--	--	--	--	--	--	--	--	--
	TP7-5.5		5.5	ND<100	ND<100	ND<200	ND<50	5.1	600	ND	ND	ND	ND
	TP7-7		7.0	ND<10	ND<10	ND<20	--	--	--	--	--	--	--
TP8	TP8-1	04/27/21	1.0	--	--	--	--	--	--	--	--	--	--
	TP8-3		3.0	--	--	--	--	--	--	--	--	--	--
	TP8-5		5.0	--	--	--	--	--	--	--	--	--	--
TP9	TP9-1	04/27/21	1.0	--	--	--	--	--	--	--	--	--	--
	TP9-4		4.0	ND<10	ND<10	22	--	--	--	--	ND	ND	--
	TP9-6		6.0	--	--	--	--	--	--	--	--	--	--
TP10	TP10-1	04/27/21	1.0	--	--	--	--	--	--	--	--	--	--
	TP10-3.5		3.5	--	--	--	--	--	--	--	--	--	--
	TP10-4		4.0	ND<100	ND<100	ND<200	ND<250	ND<25	ND<25	ND	ND	ND	ND
	TP10-7		7.0	--	--	--	--	--	--	--	--	--	--
TP11	TP11-0.75	04/28/21	0.75	--	--	--	--	--	--	--	--	--	--
	TP11-3.5		3.5	ND<10	ND<10	ND<20	--	--	--	--	--	ND	--
	TP11-6		6.0	ND<10	ND<10	ND<20	--	--	--	--	--	--	--
TP12	TP12-1	04/28/21	1.0	--	--	--	--	--	--	--	--	--	--
	TP12-4		4.0	--	--	--	--	--	--	--	--	--	--
TP13	TP13-1	04/28/21	1.0	--	--	--	--	--	--	--	--	--	--
	TP13-4		4.0	--	--	--	--	--	--	--	--	--	--
TP14	TP14-1	04/28/21	1.0	--	--	--	--	--	--	--	--	--	--
	TP14-2		2.0	--	--	--	--	--	--	--	--	--	--
TP15	TP15-1	04/28/21	1.0	--	--	--	--	--	--	--	--	--	--
	TP15-3		3.0	--	--	--	--	--	--	--	--	--	--
TP16	TP16-0.75	04/28/21	0.75	--	--	--	--	--	--	--	--	--	--
	TP16-3		3.0	--	--	--	--	--	--	--	--	--	--
TP17	TP17-1	04/28/21	1.0	--	--	--	--	--	--	--	--	--	--
	TP17-4		4.0	--	--	--	--	--	--	--	--	--	--

Table 3 - Summary of Total Petroleum Hydrocarbons, Organochlorine Pesticides, Volatile Organic Compounds, Semi-Organic Compounds, and Polychlorinated Biphenyls Analytical Results

Test Pit ID	Sample ID	Sample Date	Sample Depth (ft. bgs)	Total Petroleum Hydrocarbons (TPH) EPA Method 8015B			Organochlorine Pesticides (OCPs) EPA Method 8081A				Volatile Organic Compounds (VOCs) EPA Method 8260B	Semi - Volatile Organic Compounds (SVOCs) EPA Method 8270C	Polychlorinated Biphenyls (PCBs) EPA Method 8082
				GRO C6-C10	DRO C10-C28	ORO C28-C44	Chlordane (Technical)	4,4'-DDD	4,4'-DDE	Other OCPs			
TP18	TP18-1	04/28/21	1.0	ND<10	16	44	--	--	--	--	--	--	--
	TP18-3		3.0	--	--	--	--	--	--	--	--	--	--
	TP18-6.5		6.5	--	--	--	--	--	--	--	--	--	--
TP19	TP19-1	04/28/21	1.0	--	--	--	--	--	--	--	--	--	--
	TP19-3		3.0	ND<10	ND<10	29	290	ND<25	ND<25	ND	ND	ND	ND
	TP19-6		6.0	--	--	--	--	--	--	--	--	--	--
TP20	TP20-1	04/28/21	1.0	--	--	--	--	--	--	--	--	--	--
	TP20-3.5		3.5	ND<10	ND<10	ND<20	ND<50	ND<5	26	ND	--	ND	ND
	TP20-7.5		7.5	--	--	--	--	--	--	--	--	--	--
TP21	TP21-1	04/28/21	1.0	--	--	--	--	--	--	--	--	--	--
	TP21-3		3.0	--	--	--	--	--	--	--	--	--	--
	TP21-5		5.0	ND<10	ND<10	ND<20	ND<50	ND<5	6.9	ND	ND	ND	ND
	TP21-5.5		5.5	ND<200	ND<200	ND<400	--	--	--	--	--	--	--
	TP21-7		7.0	--	--	--	--	--	--	--	--	--	--
TP22	TP22-0.75	04/28/21	0.75	--	--	--	--	--	--	--	--	--	--
	TP22-3		3.0	--	--	--	--	--	--	--	--	--	--
	TP22-6		6.0	--	--	--	--	--	--	--	--	--	--
Hazardous Waste Criteria													
TTLC (mg/kg)				NL	NL	NL	2.5	1	1	various	various	various	various
STLC (mg/l)				NL	NL	NL	0.25	0.1	0.1	various	various	various	various
TCLP (mg/l)				NL	NL	NL	0.03	0.1	0.1	various	various	various	various
STLC Trigger Value (mg/kg)				--	--	--	2.5	1.0	1.0	--	various	--	--
TCLP Trigger Value (mg/kg)				--	--	--	0.6	2.0	2.0	various	--	various	various
Human Health Screening Levels (mg/kg)													
EPA RSLs (Residential Soil)				82,000	96	2,400	1.7	1.9	2	various	various	various	various
DTSC HERO HHRA (Residential Soil)				NL	NL	NL	1.7	1.9	2.0	various	various	various	various
EPA RSLs (Industrial Soil)				420,000	440	30,000	7.7	10	9.3	various	various	various	various
DTSC HERO HHRA (Commercial/Industrial Soil)				NL	NL	NL	6.1	6.2	9.3	various	various	various	various

Notes:

Gasoline Range Organics (GRO) = Screening level value obtained from the EPA RSL for TPH (Aromatic Low)
Diesel Range Organics (DRO) = screening level value obtained from the EPA RSL for TPH (Aliphatic Medium)
Oil Range Organics (ORO) = screening level value obtained from the EPA RSL for TPH (Aromatic High)
ID = identification
EPA = United States Environmental Protection Agency
mg/kg = milligrams per kilogram
µg/kg = micrograms per kilogram
mg/l = milligrams per liter
-- = sample not analyzed / no value
ND = not detected
NL = not listed
TTLC = Total Threshold Limit Concentration
xxx the concentration exceeds one or more human health screening levels for residential soil
xxx the concentration exceeds one or more human health screening levels for industrial and/or commercial/industrial soil
the concentration exceeds the Total Threshold Limit Concentration and/or the Soluble Threshold Limit Concentration (Cal Haz waste)
the concentration exceeds the Toxicity Characteristic Leaching Procedure (Fed Haz Waste)

FIGURES

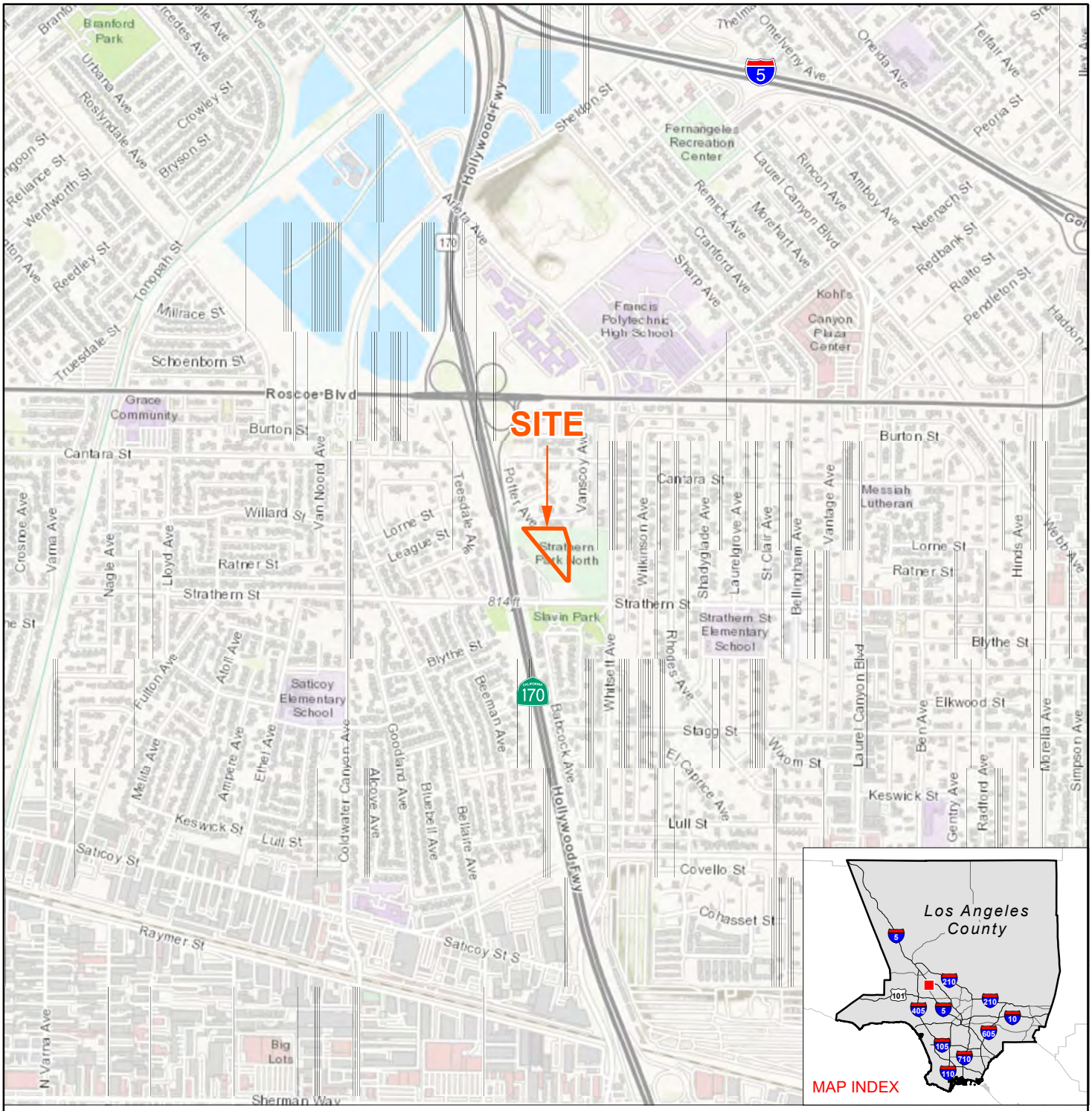

NOTE: DIRECTIONS, DIMENSIONS AND LOCATIONS ARE APPROXIMATE. |
SOURCES: PARCELS - LOS ANGELES COUNTY OFFICE OF THE ASSESSOR, 2020; ESRI WORLD TOPO, 2021

N

FEET

0 1,500 3,000

1_211294007_SL.mxd 6/26/2021 JDL

FIGURE 1

SITE LOCATION

PORTION OF STRATHERN PARK NORTH
8041 WHITSETT AVENUE, NORTH HOLLYWOOD, CALIFORNIA

211294007 | 7/21

Ninyo & Moore
Geotechnical & Environmental Sciences Consultants

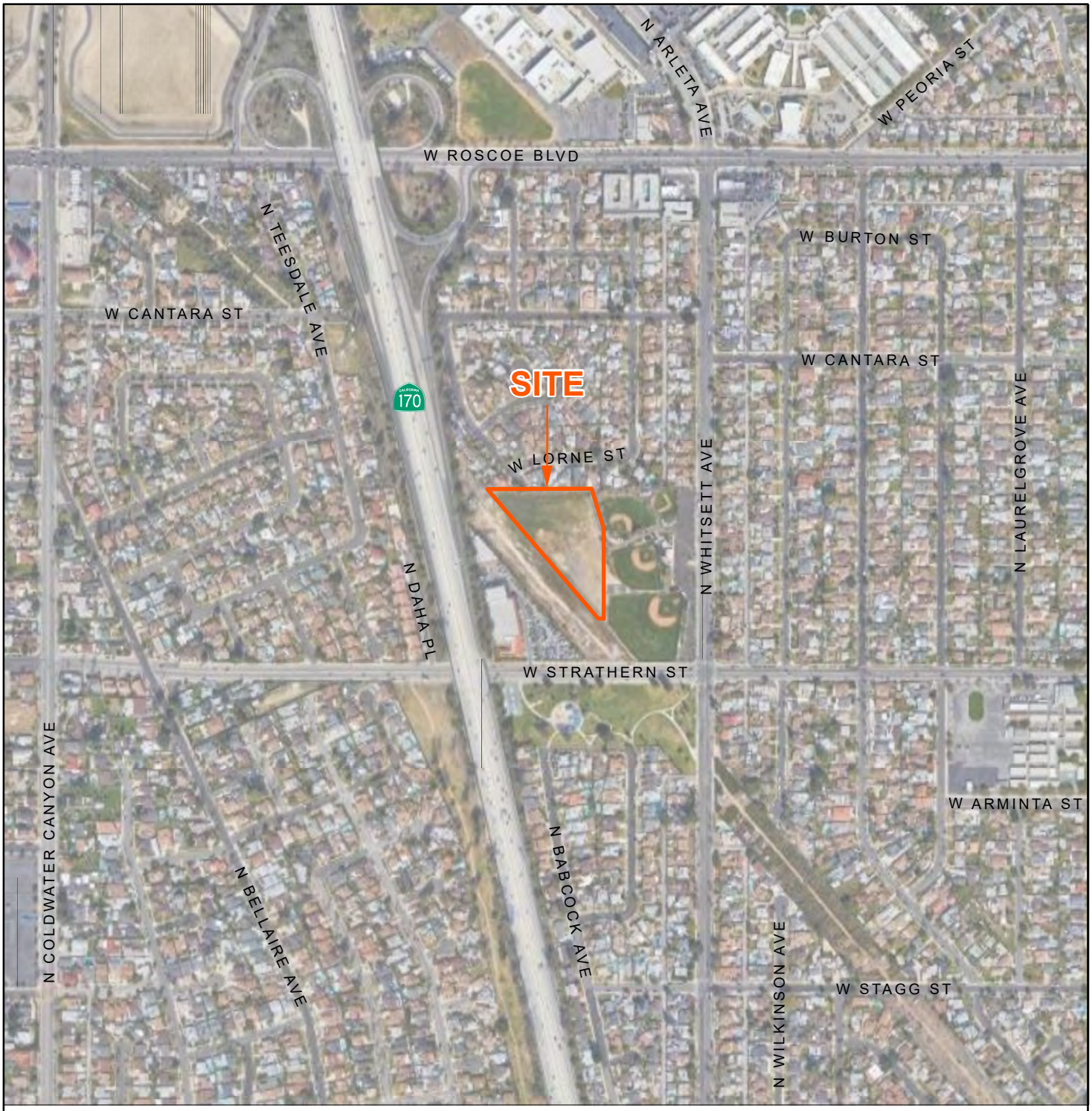

2_211294007_SV.mxd 6/26/2021 JDL

NOTE: DIRECTIONS, DIMENSIONS AND LOCATIONS ARE APPROXIMATE. | SOURCE: GOOGLE, 2021

N

FEET

0 600 1,200

FIGURE 2

SITE AND VICINITY

PORTION OF STRATHERN PARK NORTH
8041 WHITSETT AVENUE, NORTH HOLLYWOOD, CALIFORNIA

211294007 | 7/21

Ninyo & Moore
Geotechnical & Environmental Sciences Consultants

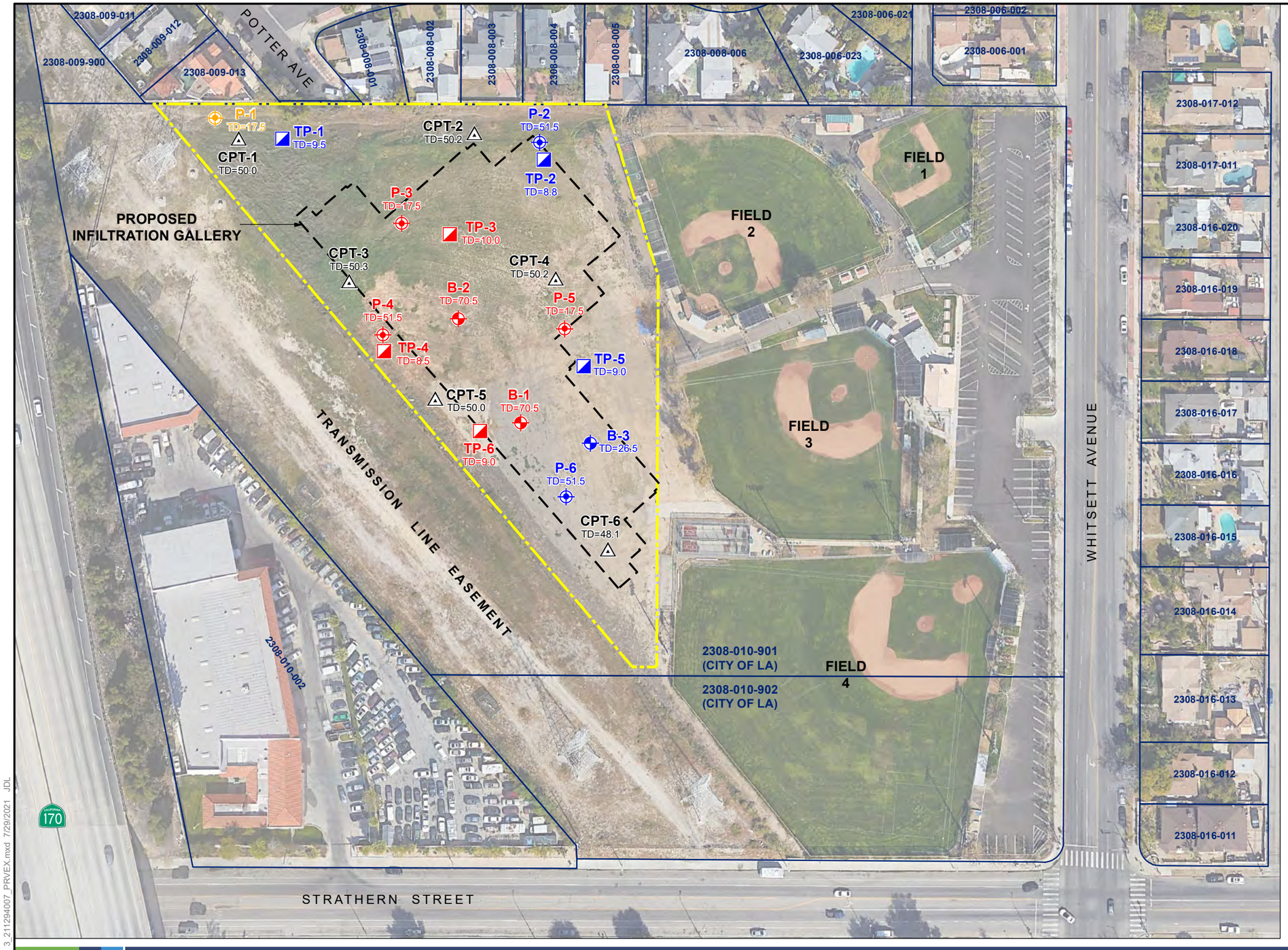

LEGEND

SITE BOUNDARY

PARCEL BOUNDARY WITH APN

PREVIOUS LIMITED PHASE II ESA AND GEOTECHNICAL EVALUATION (NINYO & MOORE, 2020)

- **B-3** TD=26.5 — BORING, WASTE NOT OBSERVED TD=TOTAL DEPTH IN FEET
- **B-2** TD=70.5 — BORING, WASTE OBSERVED TD=TOTAL DEPTH IN FEET
- **P-6** TD=51.5 — BORING/PERCOLATION TEST, WASTE NOT OBSERVED TD=TOTAL DEPTH IN FEET
- **P-5** TD=17.5 — BORING/PERCOLATION TEST, WASTE OBSERVED TD=TOTAL DEPTH IN FEET
- **P-1** TD=17.5 — BORING/PERCOLATION TEST, MINOR WASTES OBSERVED TD=TOTAL DEPTH IN FEET
- **CPT-6** TD=48.1 — CONE PENETROMETER TEST TD=TOTAL DEPTH IN FEET
- **TP-5** TD=9.0 — TEST PIT, WASTE NOT OBSERVED TD=TOTAL DEPTH IN FEET
- **TP-6** TD=9.0 — TEST PIT, WASTE OBSERVED TD=TOTAL DEPTH IN FEET

RED INDICATES BURNED WASTES / WASTE DEBRIS ENCOUNTERED
BLUE INDICATES BURNED WASTES / WASTE DEBRIS NOT OBSERVED
BLACK NO INFORMATION

N

FEET
0 100 200

NOTE: DIRECTIONS, DIMENSIONS AND LOCATIONS ARE APPROXIMATE.
SOURCE: GOOGLE EARTH, 2021

3_211294007_PRVEX.mxd 7/29/2021 JDL

FIGURE 3

SITE AND LOCATIONS OF PREVIOUS INVESTIGATION WITH 2019 AERIAL PHOTOGRAPH

PORTION OF STRATHERN PARK NORTH
8041 WHITSETT AVENUE, NORTH HOLLYWOOD, CALIFORNIA

211294007 | 7/21

Ninyo & Moore
Geotechnical & Environmental Sciences Consultants



LEGEND

- SITE BOUNDARY
- PARCEL BOUNDARY WITH APN
- ESTIMATED WASTE DISPOSAL AREA
- TP20 — TEST PIT CONTAINING WASTES
- TP22 — TEST PIT CONTAINING MINOR WASTES
- TP21 — TEST PIT CONTAINING BURNED WASTES
- TP17 — TEST PIT, WASTES NOT OBSERVED
- 3.5-5.8 — APPROXIMATE WASTE DEPTH (FEET)
- (2.3) — APPROXIMATE WASTE THICKNESS (FEET)

PREVIOUS LIMITED PHASE II ESA AND GEOTECHNICAL EVALUATION (NINYO & MOORE, 2020)

- B-3 TD=26.5 — BORING, WASTE NOT OBSERVED TD=TOTAL DEPTH IN FEET
- B-2 TD=70.5 — BORING, WASTE OBSERVED TD=TOTAL DEPTH IN FEET
- P-6 TD=51.5 — BORING/PERCOLATION TEST, WASTE NOT OBSERVED TD=TOTAL DEPTH IN FEET
- P-5 TD=17.5 — BORING/PERCOLATION TEST, WASTE OBSERVED TD=TOTAL DEPTH IN FEET
- P-1 TD=17.5 — BORING/PERCOLATION TEST, MINOR WASTES OBSERVED TD=TOTAL DEPTH IN FEET
- CPT-6 TD=48.1 — CONE PENETROMETER TEST TD=TOTAL DEPTH IN FEET
- TP-5 TD=9.0 — TEST PIT, WASTE NOT OBSERVED TD=TOTAL DEPTH IN FEET
- TP-6 TD=9.0 — TEST PIT, WASTE OBSERVED TD=TOTAL DEPTH IN FEET

RED INDICATES BURNED WASTES / WASTE DEBRIS ENCOUNTERED
BLUE INDICATES BURNED WASTES / WASTE DEBRIS NOT OBSERVED
BLACK NO INFORMATION

N

FEET
0 100 200

NOTE: DIRECTIONS, DIMENSIONS AND LOCATIONS ARE APPROXIMATE.
SOURCE: GOOGLE EARTH, 2021

4 211294007_TP.mxd 7/29/2021 JDL

FIGURE 4

EXPLORATORY LOCATIONS MARCH 2020 AND APRIL 2021 WITH 2019 AERIAL PHOTOGRAPH

PORTION OF STRATHERN PARK NORTH
8041 WHITSETT AVENUE, NORTH HOLLYWOOD, CALIFORNIA

211294007 | 7/21

Ninyo & Moore
Geotechnical & Environmental Sciences Consultants

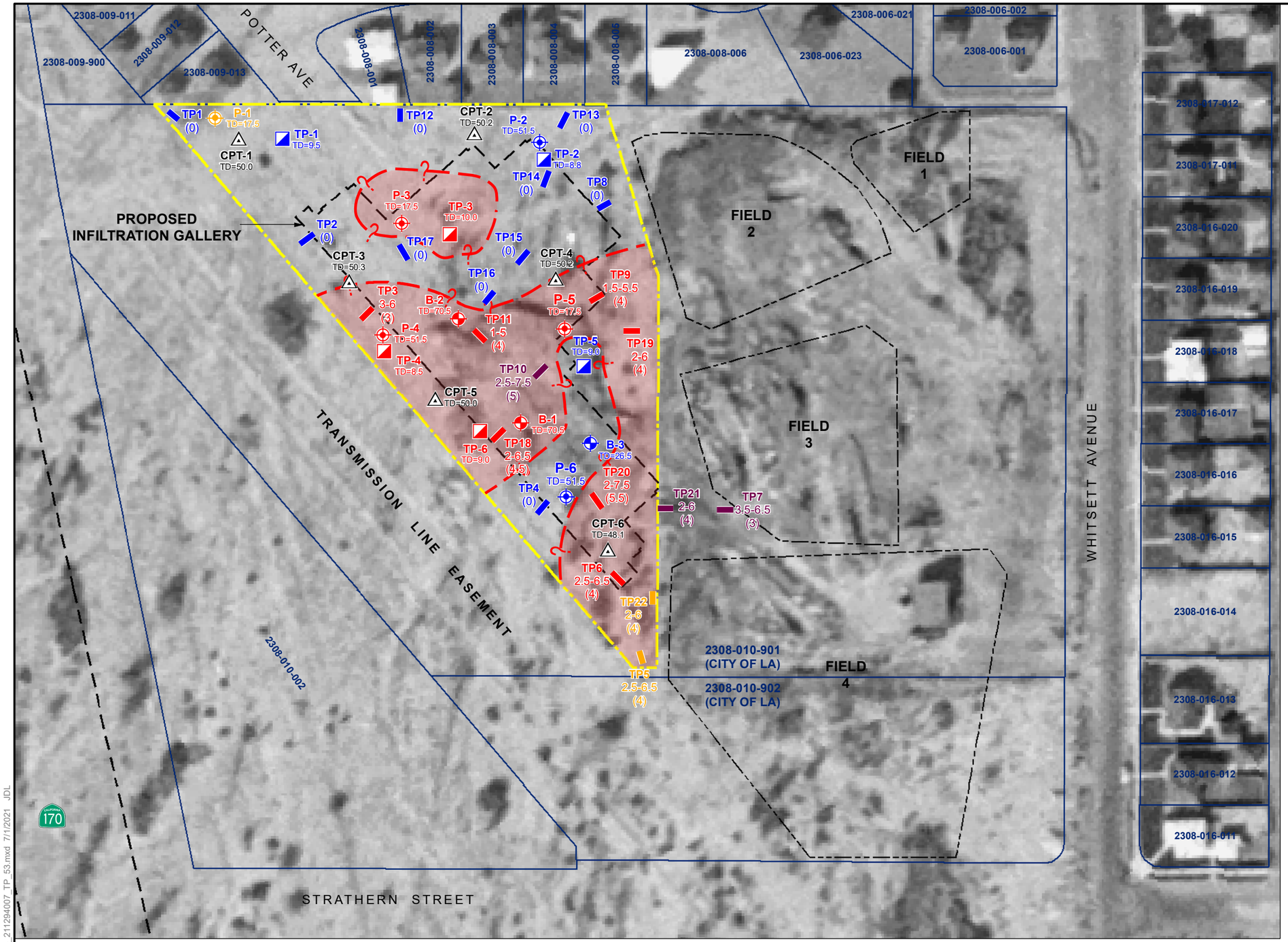

LEGEND

- SITE BOUNDARY
- PARCEL BOUNDARY WITH APN
- ESTIMATED WASTE DISPOSAL AREA
- TP20 — TEST PIT CONTAINING WASTES
- TP22 — TEST PIT CONTAINING MINOR WASTES
- TP21 — TEST PIT CONTAINING BURNED WASTES
- TP17 — TEST PIT, WASTES NOT OBSERVED
- 3.5-5.8 ← APPROXIMATE WASTE DEPTH (FEET)
- (2.3) ← APPROXIMATE WASTE THICKNESS (FEET)

PREVIOUS LIMITED PHASE II ESA AND GEOTECHNICAL EVALUATION (NINYO & MOORE, 2020)

- B-3 TD=26.5 — BORING, WASTE NOT OBSERVED TD=TOTAL DEPTH IN FEET
- B-2 TD=70.5 — BORING, WASTE OBSERVED TD=TOTAL DEPTH IN FEET
- P-6 TD=51.5 — BORING/PERCOLATION TEST, WASTE NOT OBSERVED TD=TOTAL DEPTH IN FEET
- P-5 TD=17.5 — BORING/PERCOLATION TEST, WASTE OBSERVED TD=TOTAL DEPTH IN FEET
- P-1 TD=17.5 — BORING/PERCOLATION TEST, MINOR WASTES OBSERVED TD=TOTAL DEPTH IN FEET
- CPT-6 TD=48.1 — CONE PENETROMETER TEST TD=TOTAL DEPTH IN FEET
- TP-5 TD=9.0 — TEST PIT, WASTE NOT OBSERVED TD=TOTAL DEPTH IN FEET
- TP-6 TD=9.0 — TEST PIT, WASTE OBSERVED TD=TOTAL DEPTH IN FEET

RED — INDICATES BURNED WASTES / WASTE DEBRIS ENCOUNTERED
BLUE — INDICATES BURNED WASTES / WASTE DEBRIS NOT OBSERVED
BLACK — NO INFORMATION

N

FEET
0 100 200

NOTE: DIRECTIONS, DIMENSIONS AND LOCATIONS ARE APPROXIMATE.
SOURCE: EDR, 2021

5_211294007_TP_53.mxd 7/1/2021 JDL

FIGURE 5

EXPLORATORY LOCATIONS MARCH 2020 AND APRIL 2021 WITH 1953 AERIAL PHOTOGRAPH

PORTION OF STRATHERN PARK NORTH
8041 WHITSETT AVENUE, NORTH HOLLYWOOD, CALIFORNIA

211294007 | 7/21

Ninyo & Moore
Geotechnical & Environmental Sciences Consultants

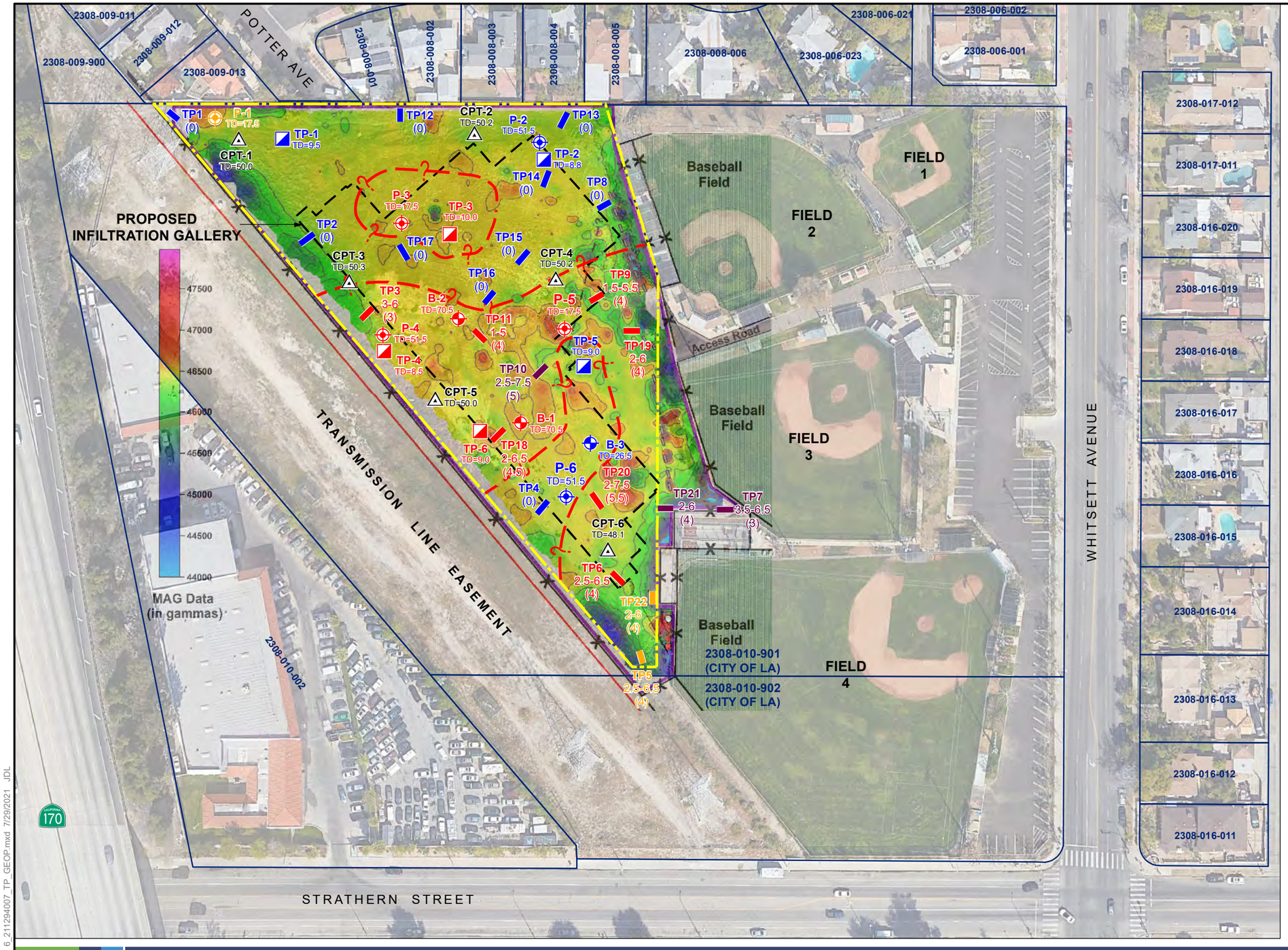

LEGEND

- SITE BOUNDARY
- PARCEL BOUNDARY WITH APN
- ESTIMATED WASTE DISPOSAL AREA
- TP20 — TEST PIT CONTAINING WASTES
- TP22 — TEST PIT CONTAINING MINOR WASTES
- TP21 — TEST PIT CONTAINING BURNED WASTES
- TP17 — TEST PIT, WASTES NOT OBSERVED
- 3.5-5.8 — APPROXIMATE WASTE DEPTH (FEET)
- (2.3) — APPROXIMATE WASTE THICKNESS (FEET)

PREVIOUS LIMITED PHASE II ESA AND GEOTECHNICAL EVALUATION (NINYO & MOORE, 2020)

- B-3 TD=26.5 — BORING, WASTE NOT OBSERVED TD=TOTAL DEPTH IN FEET
- B-2 TD=70.5 — BORING, WASTE OBSERVED TD=TOTAL DEPTH IN FEET
- P-6 TD=51.5 — BORING/PERCOLATION TEST, WASTE NOT OBSERVED TD=TOTAL DEPTH IN FEET
- P-5 TD=17.5 — BORING/PERCOLATION TEST, WASTE OBSERVED TD=TOTAL DEPTH IN FEET
- P-1 TD=17.5 — BORING/PERCOLATION TEST, MINOR WASTES OBSERVED TD=TOTAL DEPTH IN FEET
- CPT-6 TD=48.1 — CONE PENETROMETER TEST TD=TOTAL DEPTH IN FEET
- TP-5 TD=9.0 — TEST PIT, WASTE NOT OBSERVED TD=TOTAL DEPTH IN FEET
- TP-6 TD=9.0 — TEST PIT, WASTE OBSERVED TD=TOTAL DEPTH IN FEET

RED INDICATES BURNED WASTES / WASTE DEBRIS ENCOUNTERED
BLUE INDICATES BURNED WASTES / WASTE DEBRIS NOT OBSERVED
BLACK NO INFORMATION

N

FEET
0 100 200

NOTE: DIRECTIONS, DIMENSIONS AND LOCATIONS ARE APPROXIMATE.
SOURCE: GEOPHYSICAL SURVEY - ATLAS TECHNICAL CONSULTANTS, LLC., 6/21

6_211294007_TP_GEOP.mxd 7/29/2021 JDL

FIGURE 6

EXPLORATORY LOCATIONS MARCH 2020 AND APRIL 2021 WITH 2019 AERIAL PHOTOGRAPH AND GEOPHYSICAL SURVEY OVERLAY

PORTION OF STRATHERN PARK NORTH
8041 WHITSETT AVENUE, NORTH HOLLYWOOD, CALIFORNIA

211294007 | 7/21

Ninyo & Moore
Geotechnical & Environmental Sciences Consultants

APPENDIX A

Select Background Information

CITY OF LOS ANGELES

Bureau of Engineering

STORMWATER CAPTURE PARKS PROGRAM

Meeting to Discuss Phase II ESA (Environmental Site Assessment) at Strathern Park North

Location: Google Hangouts - Conference Call

Date: June 9, 2020

Time: 1:00 - 2:00 PM

Attendees:

Name	Organization	Email
Peter Tonthat	LADWP	peter.tonthat@ladwp.com
Darryl Ford	RAP	darryl.ford@lacity.org
Keith Gilbert	Ninyo & Moore	kgilbert@ninyoandmoore.com
Spencer Marcinek	Ninyo & Moore	smarcinek@ninyoandmoore.com
Beth Abramson-Beck	Ninyo & Moore	babramsonbeck@ninyoandmoore.com
Scott Dellinger	CDM Smith	dellingeras@cdmsmith.com
Larry Magura	CDM Smith	maguralm@comcast.net
Christopher Johnson	BOE/CWD	christopher.johnson@lacity.org
Bryan Powell	BOE/CWD	bryan.powell@lacity.org
Wirikit (Fa) Wichianchan	BOE/CWD	wirikit.wichianchan@lacity.org
Amy Lam	BOE/CWD	amy.lam@lacity.org

Items of Discussion:

1. **Ninyo & Moore presented their findings from Limited Phase II Site Assessment to LADWP and RAP**
    a. Ninyo & Moore encountered waste materials, generally consisted of construction debris (i.e., concrete, asphalt, brick) and other miscellaneous materials (i.e., plastic, glass, ceramic, and tires)
    b. The materials were encountered to depths of up to approximately 9 feet below the existing ground surface
2. **Next Steps & Recommendations:**
    a. BOE to send email to Local Enforcement Agency (LEA) notifying them about inert waste found at the project site and attach Limited Phase II ESA Report for Strathern Park
        i. If the Limited Phase II ESA Report is completed by this week (6/12/20), BOE will forward that to LEA
    b. Based on guidance from the LEA, the City will perform additional site investigations. CDM Smith and Ninyo & Moore will implement the additional site investigations by:
        i. Developing a workplan
        ii. Performing additional historical investigations
        iii. Developing test pits locations
            1. Test pits may be located within existing RAP baseball fields
        iv. Delineating the extent of waste
        v. Characterizing the waste
    c. The City, CDM Smith, and Ninyo & Moore will prepare a Post Closure Land Use Report for review by the LEA

From: Spencer Marcinek
Sent: Thursday, March 4, 2021 10:58 AM
To: Beth Abramson-Beck
Cc: Keith Gilbert
Subject: FW: Stormwater Capture Parks - Undocumented Waste at Strathern Park

From: Wirikit Wichianchan <wirikit.wichianchan@lacity.org>
Sent: Monday, September 21, 2020 4:35 PM
To: Amy Lam <amy.lam@lacity.org>; Andy Flores <andy.flores@lacity.org>; Bryan Powell <bryan.powell@lacity.org>; Lopez, Christopher <christopher.lopez@ladwp.com>; David Thompson <david.thompson@lacity.org>; Dellinger, Anthony S. <dellingeras@cdmsmith.com>; Tonthat, Peter <peter.tonthat@ladwp.com>; Spencer Marcinek <smarcinek@ninyoandmoore.com>; Aghakhani, Ryan <Ryan.Aghakhani@ladwp.com>; Caswell, Paul B. <caswellpb@cdmsmith.com>; Larry Magura <maguralm@comcast.net>; ricetc@cdmsmith.com
Subject: Stormwater Capture Parks - Undocumented Waste at Strathern Park

Hello Everyone,

Thank you for taking the time to attend our focus meeting on *Undocumented Waste at Strathern Park* for the Stormwater Capture Parks Program on 9/21/20. Please see below for the meeting minutes and action items from our meeting. Please let me know if you have any comments or questions.

Undocumented Waste at **Strathern Meeting Minutes**

September 21, 2020

1. Comments from LEA/RWQCB/CalRecycle on the Limited Phase II ESA report
    a. Could not find documentation of Strathern Park North as a landfill site.
    b. RWQCB mentioned that a post-closure land use plan is not necessary since the waste was left at the site in the 1950s (before the Hazardous and Solid Waste Amendment - November 8, 1984).
    c. Stormwater components shall not be constructed over waste material
        i. Stormwater components shall not create leachate.
        ii. Stormwater structures shall be constructed on proper subgrade. Remove waste material if necessary.
        iii. Infiltration galleries will be installed approximately 20 to 25 feet below surface so galleries will likely require removal of waste and will be installed below the lowest point of waste encountered.
1. Delineation of waste area
    a. LEA mentioned that the delineation of the waste can be limited to project limits. BOE does not have to explore the existing ballfield areas for waste.
1. Miscellaneous
    a. Strathern Park North is not in a methane or methane buffer zone. Ninyo & Moore mentioned they performed a small test for methane with their borings and did not detect any methane gas.
        i. See Section 10.7 Soil Gas Screening and Section 14.2 Duplicate and Field Screening of the draft Phase II ESA report.

Action Items:

1. LEA to check with RWQCB and CalRecycle regarding the following:
    a. If BOE is only required to delineate waste within project limits.
    b. Confirm with CalRecycle that a Post Closure Land Use Plan is not needed.
    c. If a Post Closure Land Use Plan is not required, what sort of oversight documentation and reviews are required if any?
1. LEA to send BOE a compiled list of comments from RWQCB and CalRecycle.

Thank you,
Fa

--
Wirikit (Fa) Wichianchan, M.S., ENV SP.
Clean Water Division | Civil Engineering Associate II
Bureau of Engineering | Department of Public Works
1149 S Broadway | Suite 600
Los Angeles, CA 90015
O: 213.485.1681 | F: 213.485.4590

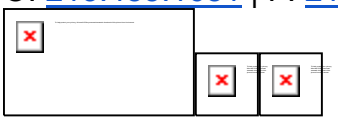

Proud Recipient of the Mayor's Office 2019 Gender Equity Award

BOARD OF
BUILDING AND SAFETY COMMISSIONERS

VAN AMBATIELOS
PRESIDENT

JAVIER NUNEZ
VICE PRESIDENT

JOSELYN GEAGA-ROSENTHAL
GEORGE HOVAGUIMIAN
ELVIN W. MOON

CITY OF LOS ANGELES
CALIFORNIA

ERIC GARCETTI
MAYOR

DEPARTMENT OF
BUILDING AND SAFETY
201 NORTH FIGUEROA STREET
LOS ANGELES, CA 90012

OSAMA YOUNAN, P.E.
GENERAL MANAGER
SUPERINTENDENT OF BUILDING

JOHN WEIGHT
EXECUTIVE OFFICER

October 1, 2020

Mr. Wirikit Wichianchan
City of Los Angeles
Bureau of Engineering
1149 S. Broadway, Suite 600
Los Angeles, CA 90015

Subject: LEA Comments on Undocumented Waste at Strathern Park

Dear Mr. Wichianchan,

The City of Los Angeles Local Enforcement Agency (LEA) has received the Limited Phase II Environmental Site Assessment, dated June 30, 2020, for the proposed stormwater capture parks program at Strathern Park North. Since the LEA shares jurisdiction with the California Department of Resources Recycling and Recovery (CalRecycle) and the Los Angeles Regional Water Quality Control Board (LARWQCB), the report was forwarded to these agencies for review and comment.

The agencies have all searched our records and archives and were not able to find any information regarding a landfill at this location. It appears from the report that the waste was found from 3 to 13 feet in depth and consisted mostly of AC, concrete, brick, bottles, glass ceramic, plastic and tires in the borings and test pits. It is speculated that this material may have been placed at this location during the 1950s from nearby construction projects. No methane gas was detected during the study.

In order to avoid any major impacts to the site from the construction of the stormwater capture park, the agencies have the following conditions:

- The undocumented waste should be delineated and sample for COcs (chemicals of concern) related to waste materials within the project site.

- The project should be designed so as not to be constructed within the waste mass to prevent issues with leachate and/or landfill gas generation.

- Infiltration galleries that need to be constructed within the waste mass will be required to remove waste material and to properly disposed of it at a permitted facility.

- Submit a work plan that document the results of the waste delineation, details the specifics of the construction project and how it relates to the onsite waste, the procedures for dealing with any waste that is encountered and the environmental monitoring procedures that will be utilized during the construction. Part of the work plan should consists of a soils management plan, that addresses any SWPPP requirements and potential impacts to storm water, fugitive dust etc.

- After the completion of the project, an as-built report should be submitted.

If you have any questions, please do not hesitate to contact me.

Sincerely,

David Thompson
LEA Program Manager

Cc: Wen Yang, LARWQCB
Dawn Liang, CalRecycle

COUNTY OF LOS ANGELES
Public Health

LOS ANGELES COUNTY
HEALTH AGENCY

BARBARA FERRER, Ph.D., M.P.H., M.Ed.
Director

MUNTU DAVIS, M.D., M.P.H.
Health Officer

CYNTHIA A. HARDING, M.P.H.
Chief Deputy Director

JEFFREY D. GUNZENHAUSER, M.D., M.P.H.
Director, Disease Control Bureau

SEIRA KURIAN, M.D., M.P.H.
Deputy Medical Director and Director, Division of Medical and Dental Affairs

MARILYN SMITH, M.P.H.
Director, Public Health Investigation Administration
5555 Ferguson Drive, Suite 120-04
Commerce, CA 90022
TEL (323) 914-7806 • FAX (323) 728-0217

www.publichealth.lacounty.gov

BOARD OF SUPERVISORS

Hilda L. Solis
First District

Holly Mitchel
Second District

Sheila Kuehl
Third District

Janice Hahn
Fourth District

Kathryn Barger
Fifth District

March 16, 2021

NINYO & MOORE
BETH ABRAMSON-BECK
BABRAMSONBECK@NINYOANDMOORE.COM

SUBJECT: STATHERN PARK IN NORTH HOLLYWOOD AREA

I, the undersigned, being the Custodian of Records, certify that a thorough search of our files, carried out under my direction and control, revealed no records as named in your request for records.

It is to be understood that this does not mean that records do not exist under another spelling, another name, or under another classification, but that with the information furnished our office, and to the best of our knowledge, no such records exist in our files.

However, this site is enforced by the City of Los Angeles LEA. Please contact Los Angeles Department of Building & Safety, Local Enforcement Agency Program. The address is 221 N. Figueroa St. Ste. 1250, Los Angeles, Ca 90012. The office number is (213) 252-3939.

Sincerely,

Tennille McKinney, Deputy Health Officer
Public Health Investigation

COR ID No. 21993

BOARD OF
BUILDING AND SAFETY
COMMISSIONERS

VAN AMBATIELOS
PRESIDENT

JAVIER NUNEZ
VICE PRESIDENT

JOSELYN GEAGA-ROSENTHAL
GEORGE HOVAGUIMIAN
ELVIN W. MOON

CITY OF LOS ANGELES
CALIFORNIA

ERIC GARCETTI
MAYOR

DEPARTMENT OF
BUILDING AND SAFETY
201 NORTH FIGUEROA STREET
LOS ANGELES, CA 90012

OSAMA YOUNAN, P.E.
GENERAL MANAGER
SUPERINTENDENT OF BUILDING

JOHN WEIGHT
EXECUTIVE OFFICER

April 22, 2021

Ms. Beth Abramson-Beck, Principal Geologist
Ninyo & Moore
5710 Ruffin Road
San Diego, CA 92123

Subject: Strathern Park North
LEA Approval of Work Plan for Phase II Assessment

Dear Ms. Abramson-Beck,

On April 8, 2021, the City of Los Angeles Local Enforcement Agency (LEA) received the ***Work Plan to Conduct Additional Phase II Environmental Site Assessment,*** dated April 7, 2021, for the Stormwater Capture Parks Program at a portion of Strathern Park North. The work plans objectives are to characterize and delineate the waste at the site, evaluate the current cover and conduct sampling and analytical testing to characterize the wastes. The LEA has shared the work plan with our partnering state agency, California Department of Resources Recycling and Recovery (CalRecycle) for their review and comment.

After discussion with CalRecycle, the LEA has the following comments regarding the site:

- The LEA approves of the Work Plan for the Additional Phase II Environmental Site Assessment. The operator can proceed with the work according to this plan. The LEA must be notified and grant approval of any substantial changes to this work plan prior to implementation.

- After completion of the Phase II ESA, a Waste Management Plan should be prepared to be used any time subsurface activities are conducted at Strathern Park North (a portion of which is the site) based on the park being the location of waste disposal. The WMP should include the entire park.

- Based on the original geotechnical investigation performed and information from boring and trench logs, the site is a disposal site and would be subject to solid waste state minimum standards.

- The site will need to be included on CalRecycle's Solid Waste Information System (SWIS) and obtain a site specific number. Please complete and return the attached form to the LEA with the necessary site owner and operator information. The LEA will work with CalRecycle on issuing the SWIS number.

- Pursuant to 27 CCR 21190, a post closure land use plan is required for this project. The plan should reflect the findings from this Phase II study. As part of this plan, a landfill gas monitoring plan should be included that demonstrates the protection of the adjacent residential property.

- It is recommended that clean-closure of the waste in the project site. If all of the waste cannot be removed, then the waste that remain in place will need to comply with state minimum standards and long-term maintenance and monitoring.

If you have any questions regarding this approval, please feel free to contact me at 213-252-3932.

Sincerely,

David Thompson
LEA Program Manager

Cc: Dawn Liang, CalRecycle

APPENDIX B

Historical Aerial Photographs and Topographic Maps

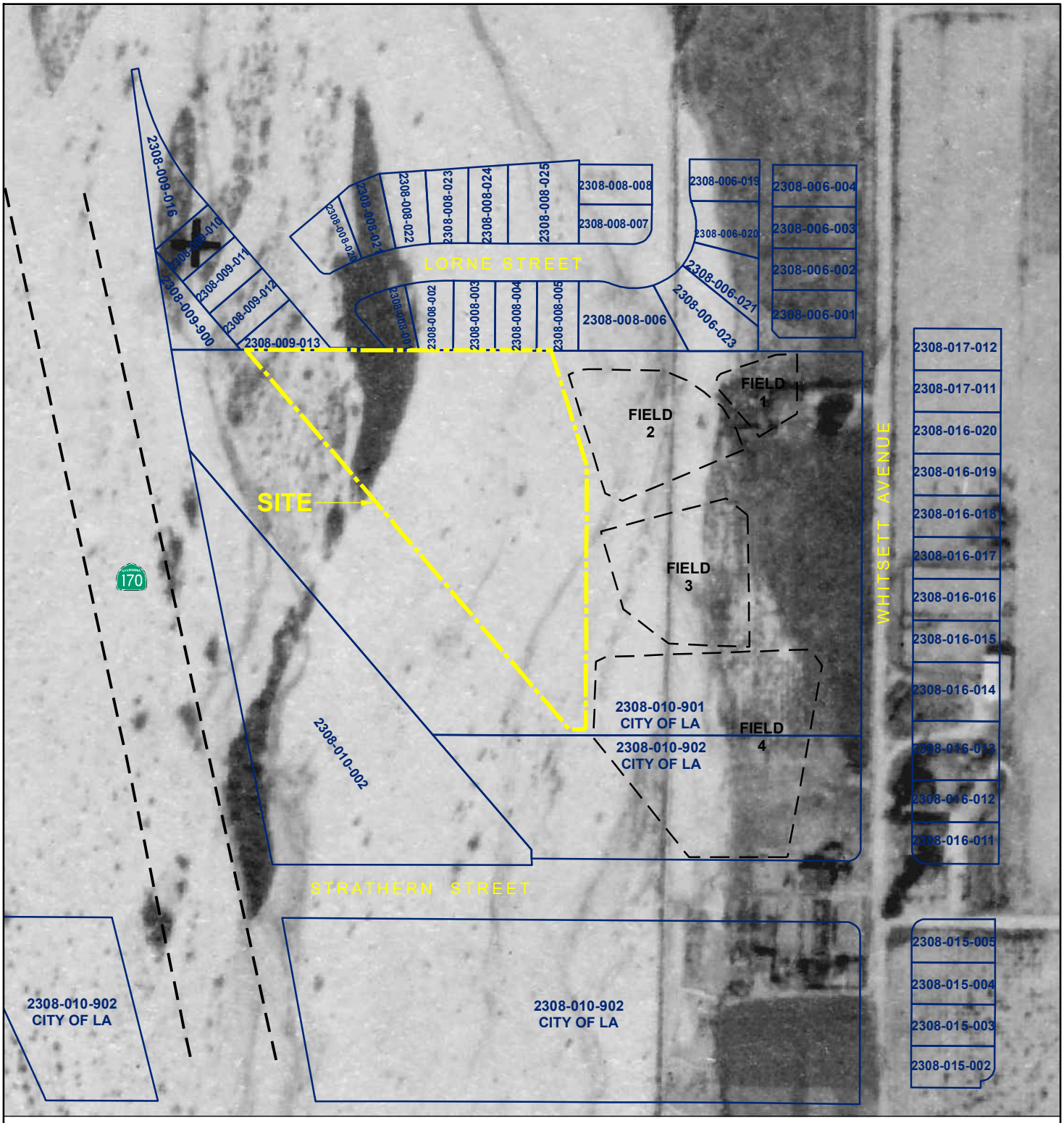

LEGEND

PARCEL BOUNDARY WITH APN

NOTE: DIRECTIONS, DIMENSIONS AND LOCATIONS ARE APPROXIMATE.
SOURCES: PARCELS - CITY OF LA (public.gis.lacounty.gov), 2021; EDR, 2021; GOOGLE, 2021

N

FEET
0 200 400

211294007_AER.mxd 6/26/2021 JDL

1928

Ninyo & Moore
Geotechnical & Environmental Sciences Consultants

HISTORIC AERIAL PHOTOGRAPH

PORTION OF STRATHERN PARK NORTH
8041 WHITSETT AVENUE
NORTH HOLLYWOOD, CALIFORNIA

211294007

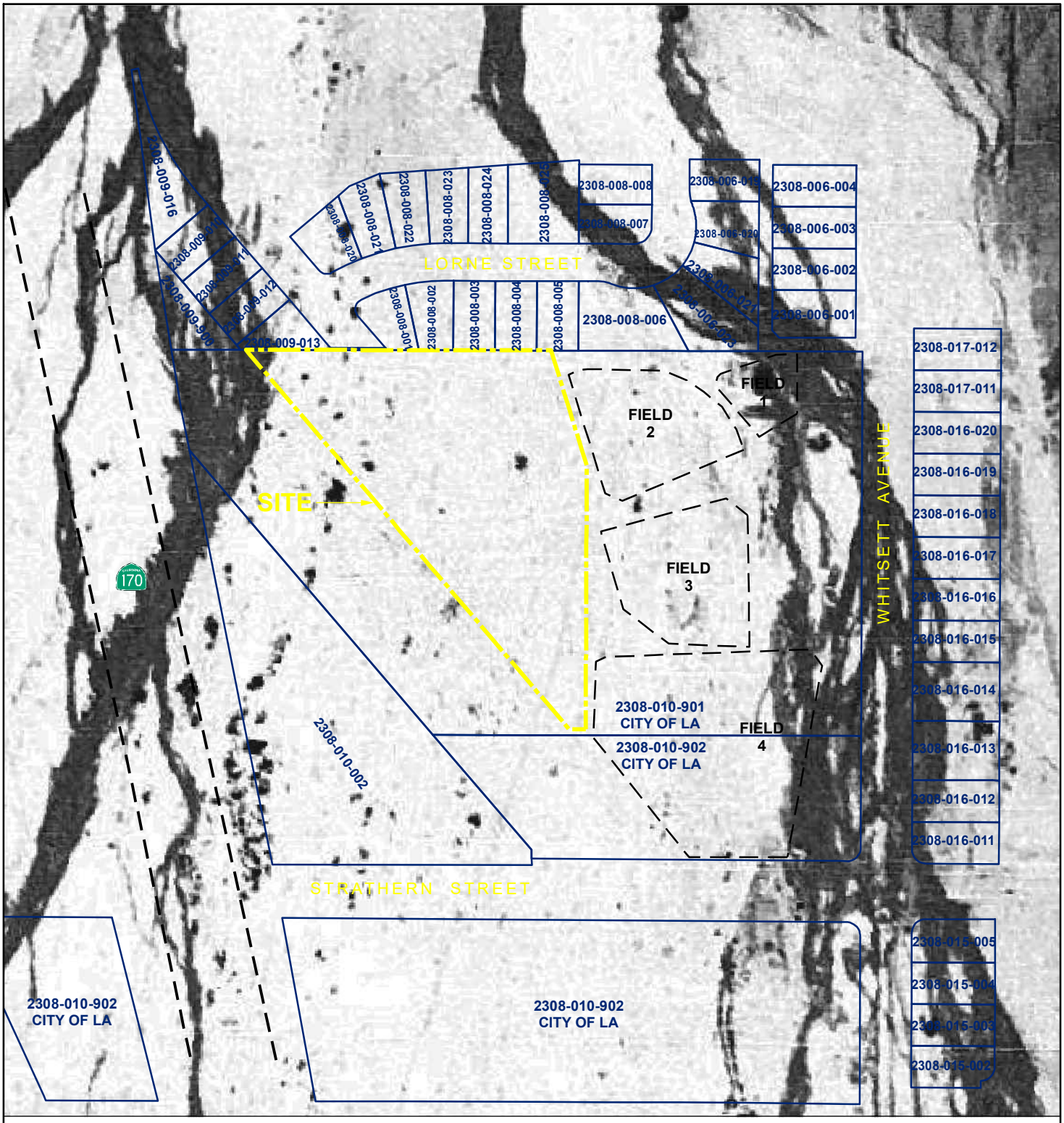

LEGEND

PARCEL BOUNDARY WITH APN

N

FEET

0 200 400

NOTE: DIRECTIONS, DIMENSIONS AND LOCATIONS ARE APPROXIMATE.
SOURCES: PARCELS - CITY OF LA (public.gis.lacounty.gov), 2021; EDR, 2021; GOOGLE, 2021

211294007_AER.mxd 6/26/2021 JDL

1938

Ninyo & Moore
Geotechnical & Environmental Sciences Consultants

HISTORIC AERIAL PHOTOGRAPH

PORTION OF STRATHERN PARK NORTH
8041 WHITSETT AVENUE
NORTH HOLLYWOOD, CALIFORNIA

211294007

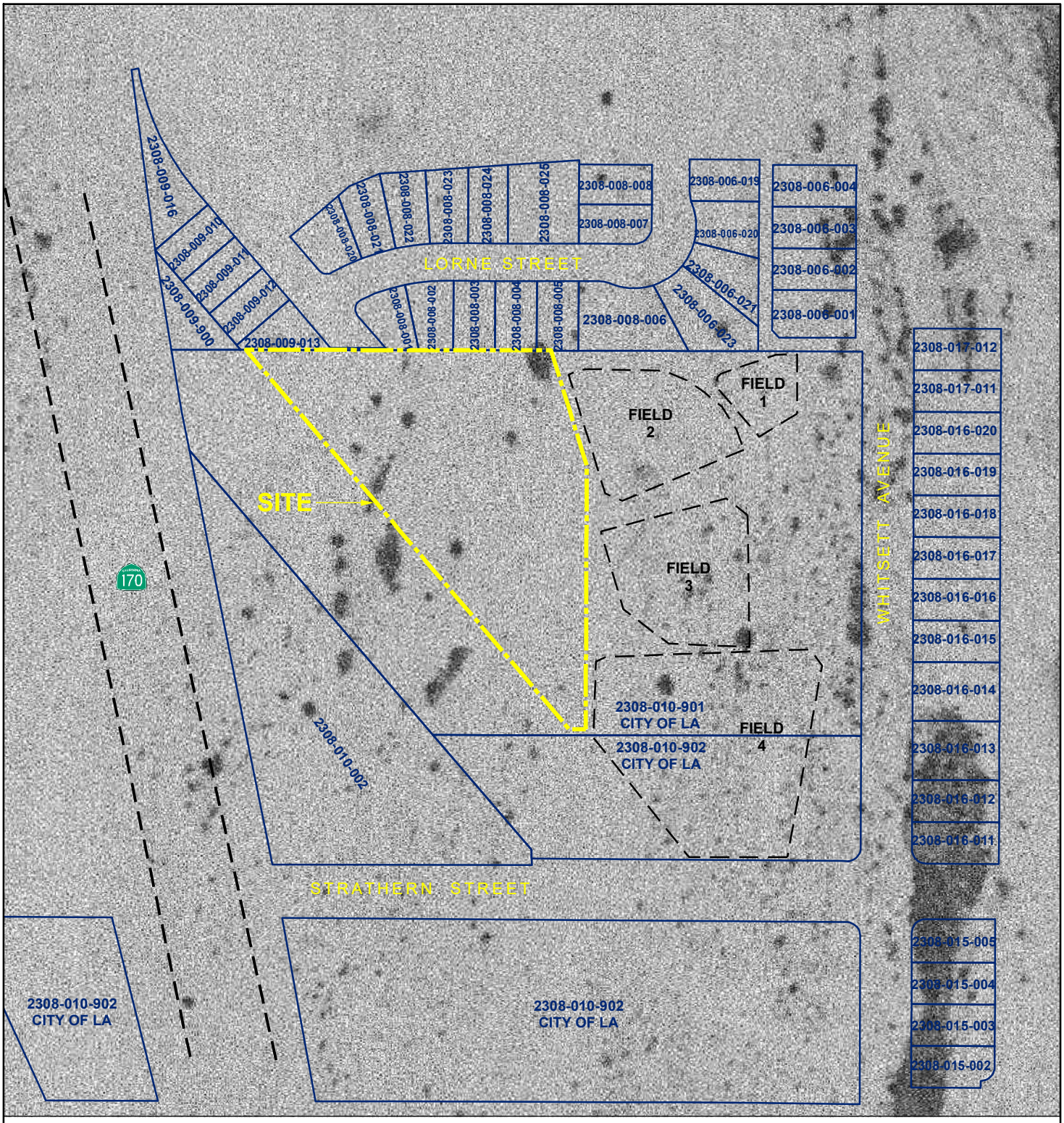

LEGEND

PARCEL BOUNDARY WITH APN

NOTE: DIRECTIONS, DIMENSIONS AND LOCATIONS ARE APPROXIMATE.
SOURCES: PARCELS - CITY OF LA (public.gis.lacounty.gov), 2021; EDR, 2021; GOOGLE, 2021

N

FEET
0 200 400

211294007_AER.mxd 6/26/2021 JDL

1947

Ninyo & Moore
Geotechnical & Environmental Sciences Consultants

HISTORIC AERIAL PHOTOGRAPH

PORTION OF STRATHERN PARK NORTH
8041 WHITSETT AVENUE
NORTH HOLLYWOOD, CALIFORNIA

211294007

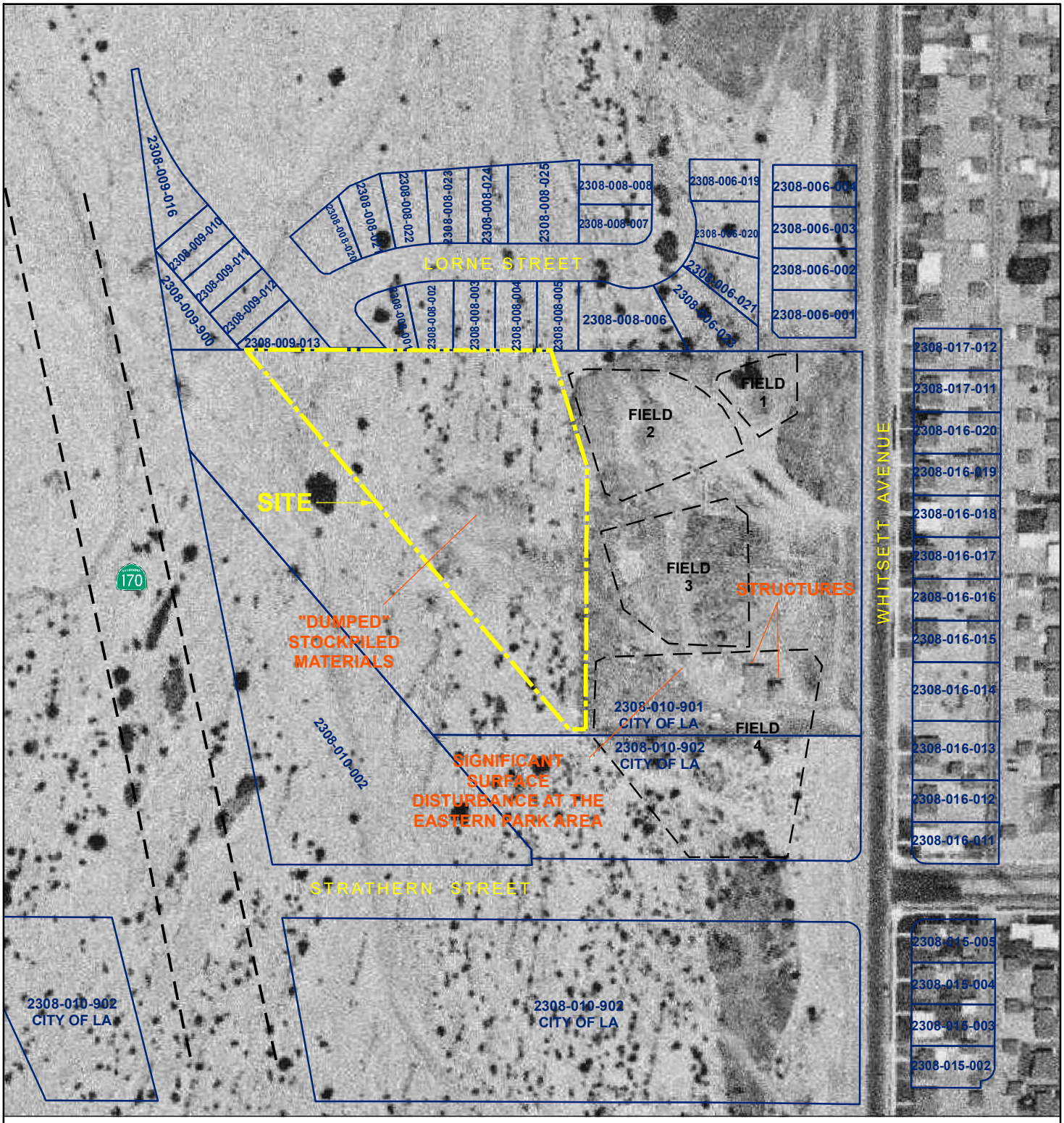

LEGEND

PARCEL BOUNDARY WITH APN

NOTE: DIRECTIONS, DIMENSIONS AND LOCATIONS ARE APPROXIMATE.
SOURCES: PARCELS - CITY OF LA (public.gis.lacounty.gov), 2021; EDR, 2021; GOOGLE, 2021

N

FEET
0 200 400

211294007_AER_1952.mxd 6/26/2021 JDL

1952

Ninyo & Moore
Geotechnical & Environmental Sciences Consultants

HISTORIC AERIAL PHOTOGRAPH

PORTION OF STRATHERN PARK NORTH
8041 WHITSETT AVENUE
NORTH HOLLYWOOD, CALIFORNIA

211294007



LEGEND

PARCEL BOUNDARY WITH APN

NOTE: DIRECTIONS, DIMENSIONS AND LOCATIONS ARE APPROXIMATE.
SOURCES: PARCELS - CITY OF LA (public.gis.lacounty.gov), 2021; EDR, 2021; GOOGLE, 2021

N

FEET
0 200 400

211294007_AER_1953.mxd 6/26/2021 JDL

1953

Ninyo & Moore
Geotechnical & Environmental Sciences Consultants

HISTORIC AERIAL PHOTOGRAPH

PORTION OF STRATHERN PARK NORTH
8041 WHITSETT AVENUE
NORTH HOLLYWOOD, CALIFORNIA

211294007

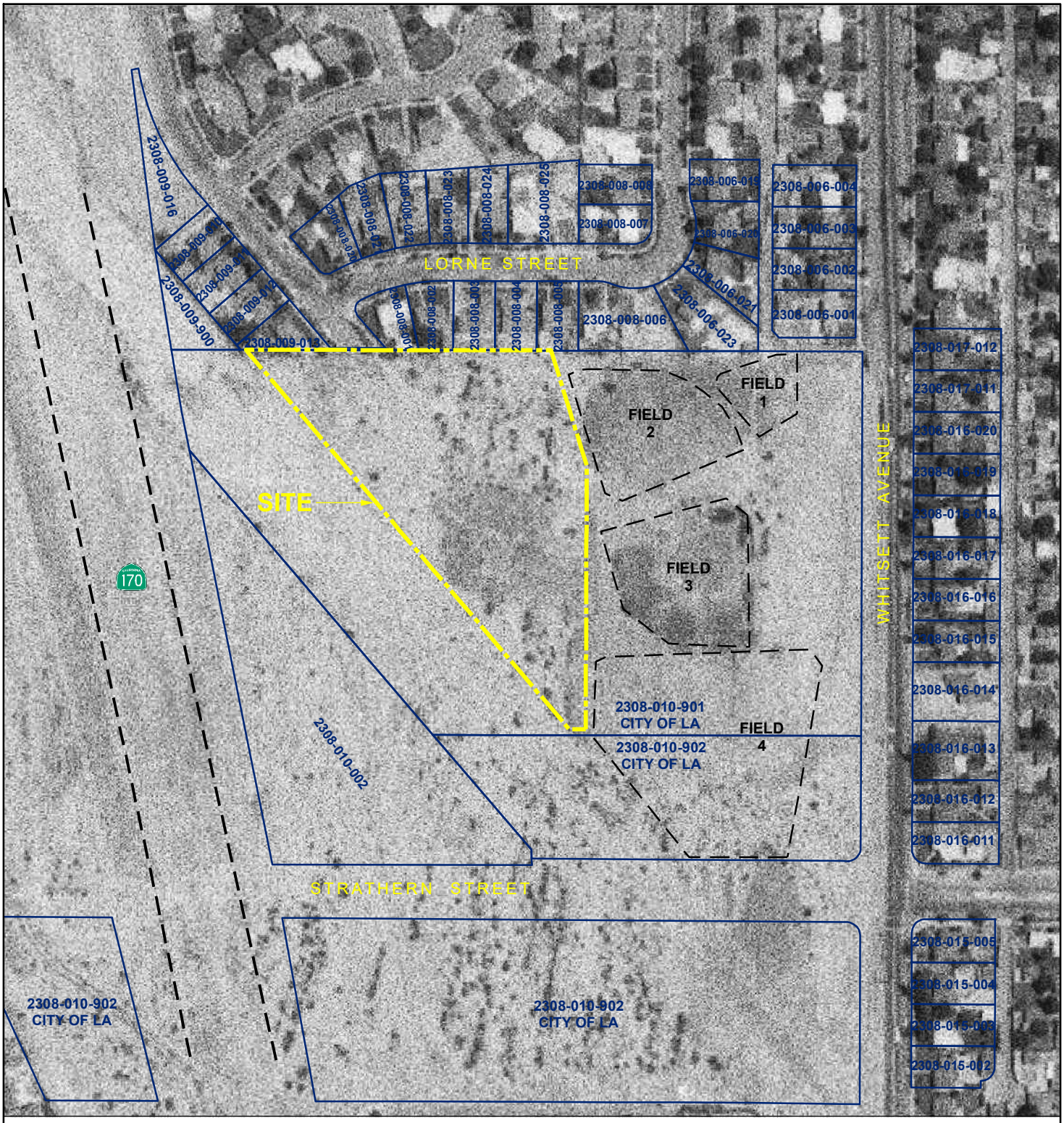

LEGEND

PARCEL BOUNDARY WITH APN

NOTE: DIRECTIONS, DIMENSIONS AND LOCATIONS ARE APPROXIMATE.
SOURCES: PARCELS - CITY OF LA (public.gis.lacounty.gov), 2021; EDR, 2021; GOOGLE, 2021

N

FEET
0 200 400

211294007_AER.mxd 6/26/2021 JDL

1964

Ninyo & Moore
Geotechnical & Environmental Sciences Consultants

HISTORIC AERIAL PHOTOGRAPH

PORTION OF STRATHERN PARK NORTH
8041 WHITSETT AVENUE
NORTH HOLLYWOOD, CALIFORNIA

211294007

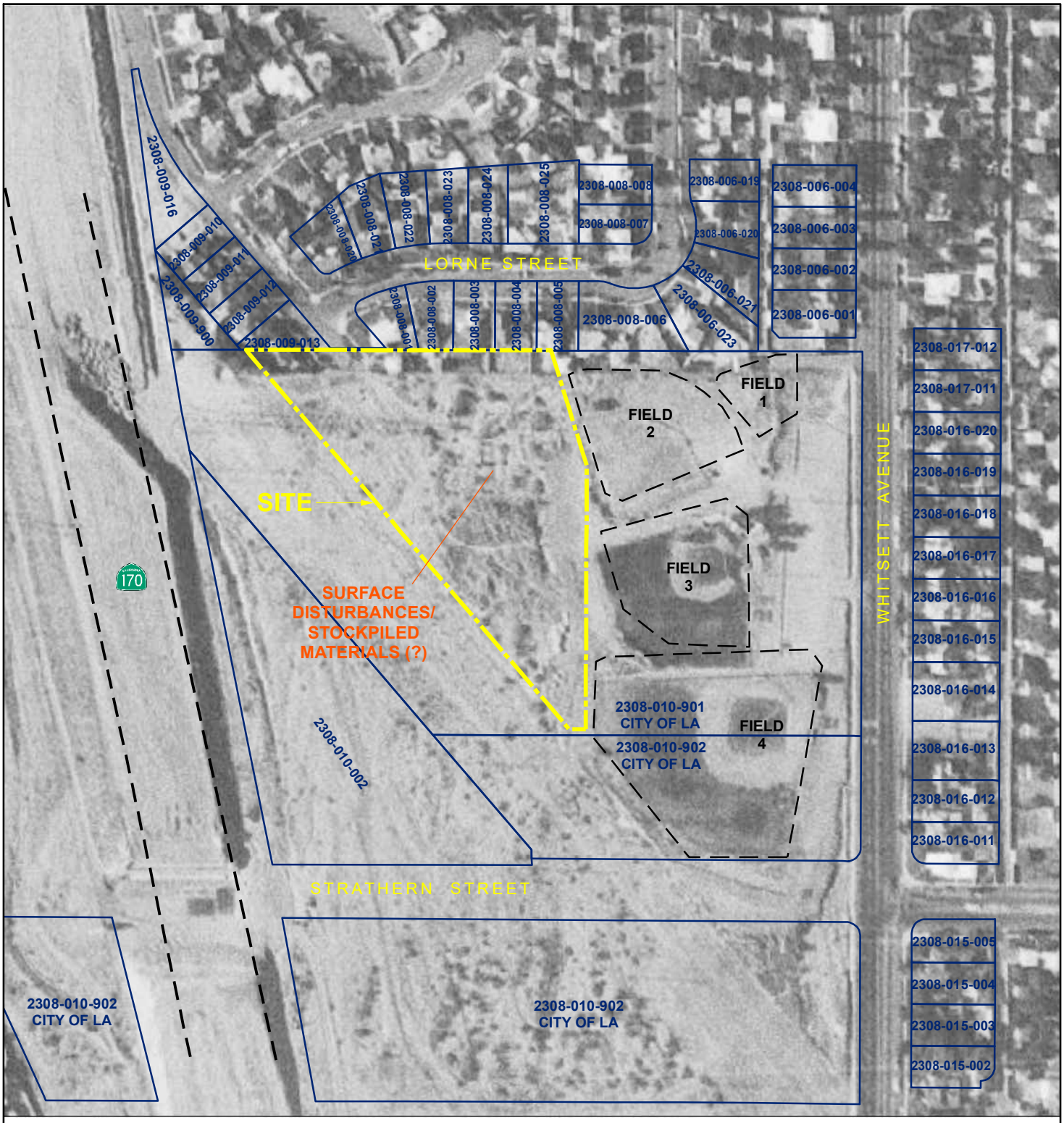

LEGEND

PARCEL BOUNDARY WITH APN

NOTE: DIRECTIONS, DIMENSIONS AND LOCATIONS ARE APPROXIMATE.
SOURCES: PARCELS - CITY OF LA (public.gis.lacounty.gov), 2021; EDR, 2021; GOOGLE, 2021

N

FEET
0 200 400

211294007_AER_1967.mxd 6/26/2021 JDL

1967

Ninyo & Moore
Geotechnical & Environmental Sciences Consultants

HISTORIC AERIAL PHOTOGRAPH

PORTION OF STRATHERN PARK NORTH
8041 WHITSETT AVENUE
NORTH HOLLYWOOD, CALIFORNIA

211294007



211294007_AER_1970.mxd 6/26/2021 JDL

LEGEND

PARCEL BOUNDARY WITH APN

NOTE: DIRECTIONS, DIMENSIONS AND LOCATIONS ARE APPROXIMATE.
SOURCES: PARCELS - CITY OF LA (public.gis.lacounty.gov), 2021; EDR, 2021; GOOGLE, 2021

N

FEET
0 200 400

1970

Ninyo & Moore
Geotechnical & Environmental Sciences Consultants

HISTORIC AERIAL PHOTOGRAPH

PORTION OF STRATHERN PARK NORTH
8041 WHITSETT AVENUE
NORTH HOLLYWOOD, CALIFORNIA

211294007



211294007_AER.mxd 6/26/2021 JDL

LEGEND

PARCEL BOUNDARY WITH APN

NOTE: DIRECTIONS, DIMENSIONS AND LOCATIONS ARE APPROXIMATE.
SOURCES: PARCELS - CITY OF LA (public.gis.lacounty.gov), 2021; EDR, 2021; GOOGLE, 2021

N

FEET
0 200 400

1979

Ninyo & Moore
Geotechnical & Environmental Sciences Consultants

HISTORIC AERIAL PHOTOGRAPH

PORTION OF STRATHERN PARK NORTH
8041 WHITSETT AVENUE
NORTH HOLLYWOOD, CALIFORNIA

211294007



LEGEND

PARCEL BOUNDARY WITH APN

NOTE: DIRECTIONS, DIMENSIONS AND LOCATIONS ARE APPROXIMATE.
SOURCES: PARCELS - CITY OF LA (public.gis.lacounty.gov), 2021; EDR, 2021; GOOGLE, 2021

N

FEET
0 200 400

211294007_AER.mxd 6/26/2021 JDL

1983

Ninyo & Moore
Geotechnical & Environmental Sciences Consultants

HISTORIC AERIAL PHOTOGRAPH

PORTION OF STRATHERN PARK NORTH
8041 WHITSETT AVENUE
NORTH HOLLYWOOD, CALIFORNIA

211294007

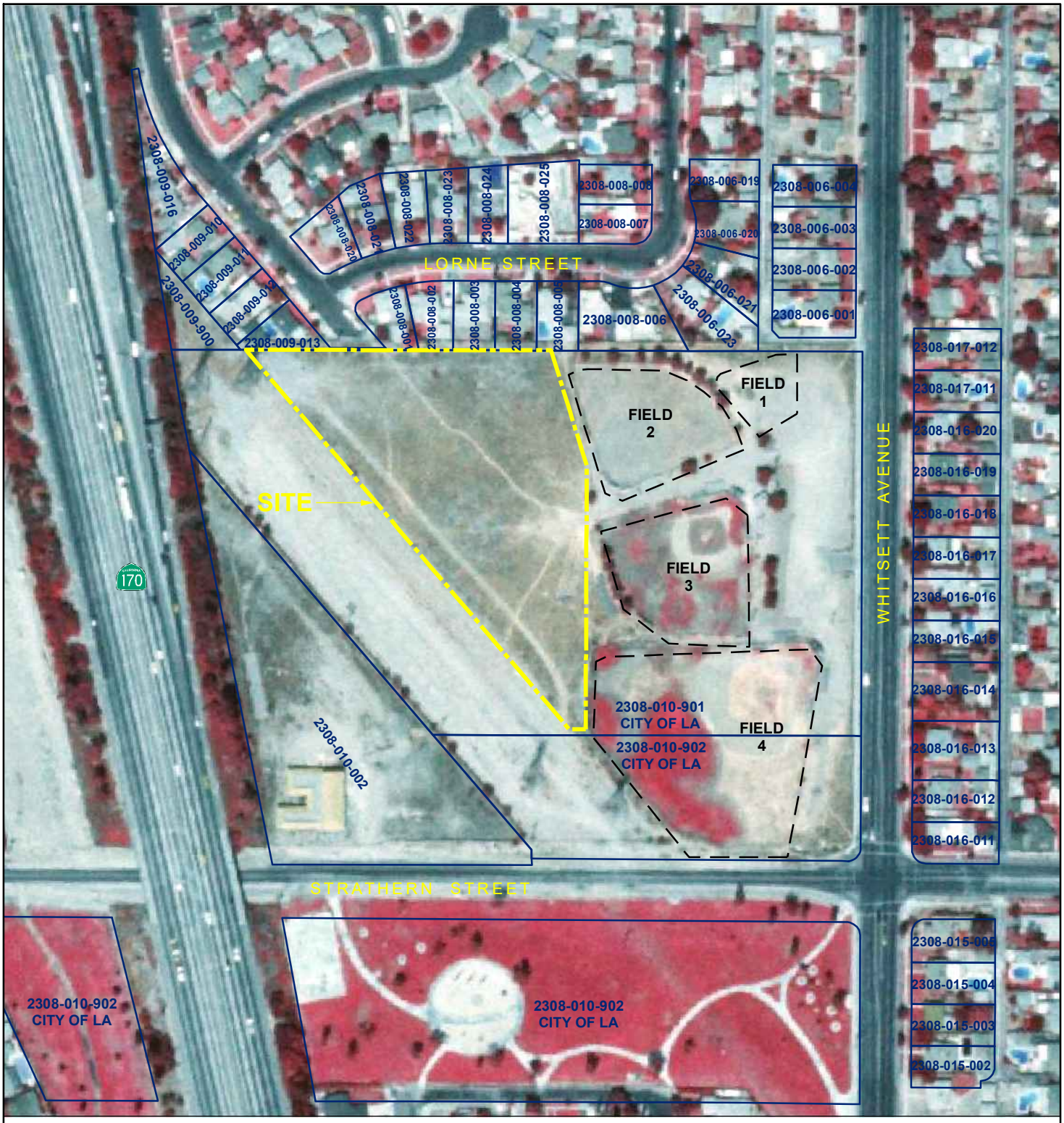

LEGEND

PARCEL BOUNDARY WITH APN

NOTE: DIRECTIONS, DIMENSIONS AND LOCATIONS ARE APPROXIMATE.
SOURCES: PARCELS - CITY OF LA (public.gis.lacounty.gov), 2021; EDR, 2021; GOOGLE, 2021

N

FEET
0 200 400

211294007_AER.mxd 6/26/2021 JDL

1989

Ninyo & Moore
Geotechnical & Environmental Sciences Consultants

HISTORIC AERIAL PHOTOGRAPH

PORTION OF STRATHERN PARK NORTH
8041 WHITSETT AVENUE
NORTH HOLLYWOOD, CALIFORNIA

211294007



211294007_AER.mxd 6/26/2021 JDL

LEGEND

PARCEL BOUNDARY WITH APN

NOTE: DIRECTIONS, DIMENSIONS AND LOCATIONS ARE APPROXIMATE.
SOURCES: PARCELS - CITY OF LA (public.gis.lacounty.gov), 2021; EDR, 2021; GOOGLE, 2021

N

FEET
0 200 400

1994

Ninyo & Moore
Geotechnical & Environmental Sciences Consultants

HISTORIC AERIAL PHOTOGRAPH

PORTION OF STRATHERN PARK NORTH
8041 WHITSETT AVENUE
NORTH HOLLYWOOD, CALIFORNIA

211294007



211294007_AER.mxd 6/26/2021 JDL

LEGEND

PARCEL BOUNDARY WITH APN

NOTE: DIRECTIONS, DIMENSIONS AND LOCATIONS ARE APPROXIMATE.
SOURCES: PARCELS - CITY OF LA (public.gis.lacounty.gov), 2021; EDR, 2021; GOOGLE, 2021

N

FEET
0 200 400

2002

Ninyo & Moore
Geotechnical & Environmental Sciences Consultants

HISTORIC AERIAL PHOTOGRAPH

PORTION OF STRATHERN PARK NORTH
8041 WHITSETT AVENUE
NORTH HOLLYWOOD, CALIFORNIA

211294007

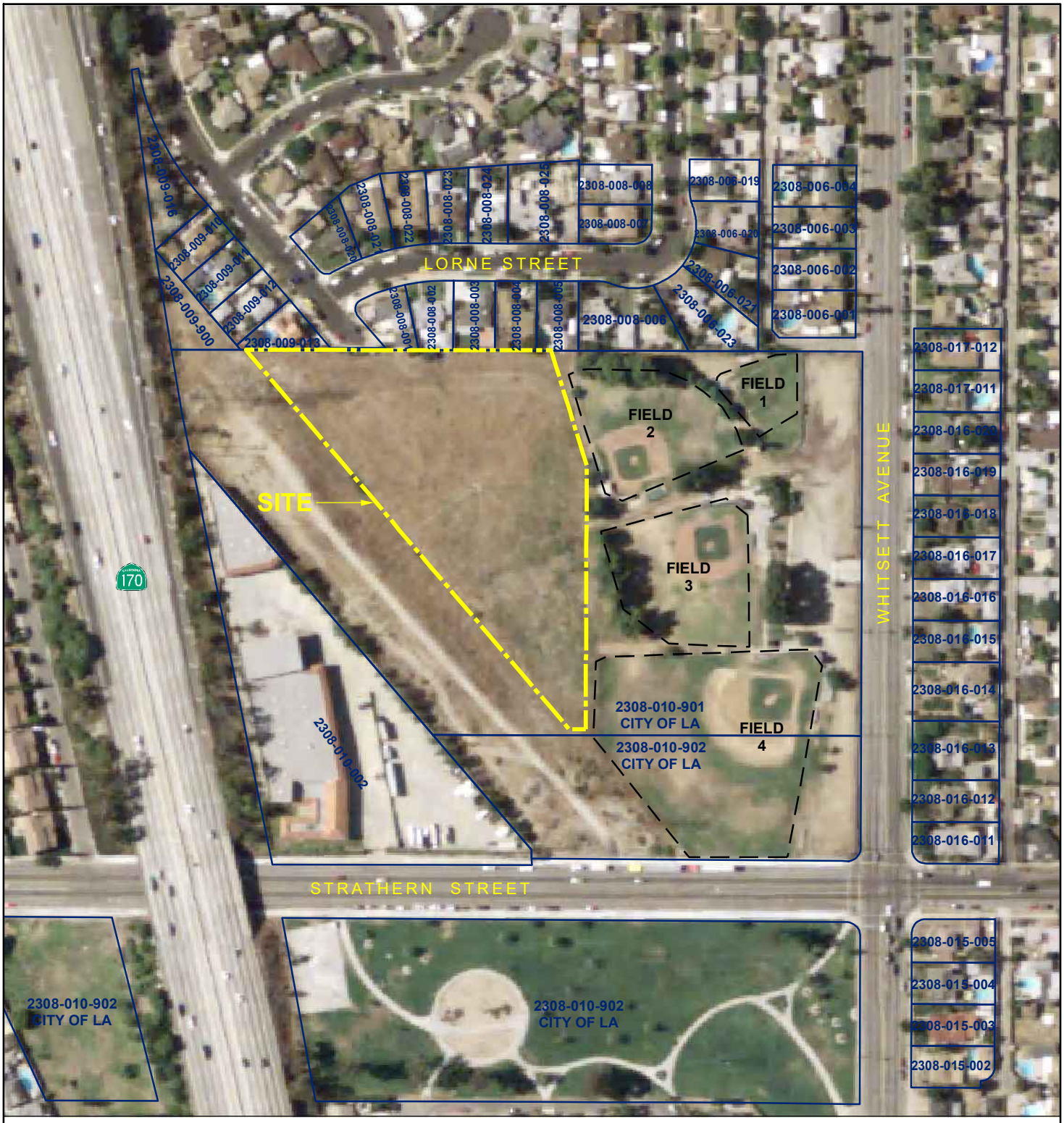

211294007_AER.mxd 6/26/2021 JDL

LEGEND

PARCEL BOUNDARY WITH APN

NOTE: DIRECTIONS, DIMENSIONS AND LOCATIONS ARE APPROXIMATE.
SOURCES: PARCELS - CITY OF LA (public.gis.lacounty.gov), 2021; EDR, 2021; GOOGLE, 2021

N

FEET
0 200 400

2005

Ninyo & Moore
Geotechnical & Environmental Sciences Consultants

HISTORIC AERIAL PHOTOGRAPH

PORTION OF STRATHERN PARK NORTH
8041 WHITSETT AVENUE
NORTH HOLLYWOOD, CALIFORNIA

211294007



LEGEND

PARCEL BOUNDARY WITH APN

NOTE: DIRECTIONS, DIMENSIONS AND LOCATIONS ARE APPROXIMATE.
SOURCES: PARCELS - CITY OF LA (public.gis.lacounty.gov), 2021; EDR, 2021; GOOGLE, 2021

N

FEET
0 200 400

211294007_AER.mxd 6/26/2021 JDL

2009

Ninyo & Moore
Geotechnical & Environmental Sciences Consultants

HISTORIC AERIAL PHOTOGRAPH

PORTION OF STRATHERN PARK NORTH
8041 WHITSETT AVENUE
NORTH HOLLYWOOD, CALIFORNIA

211294007

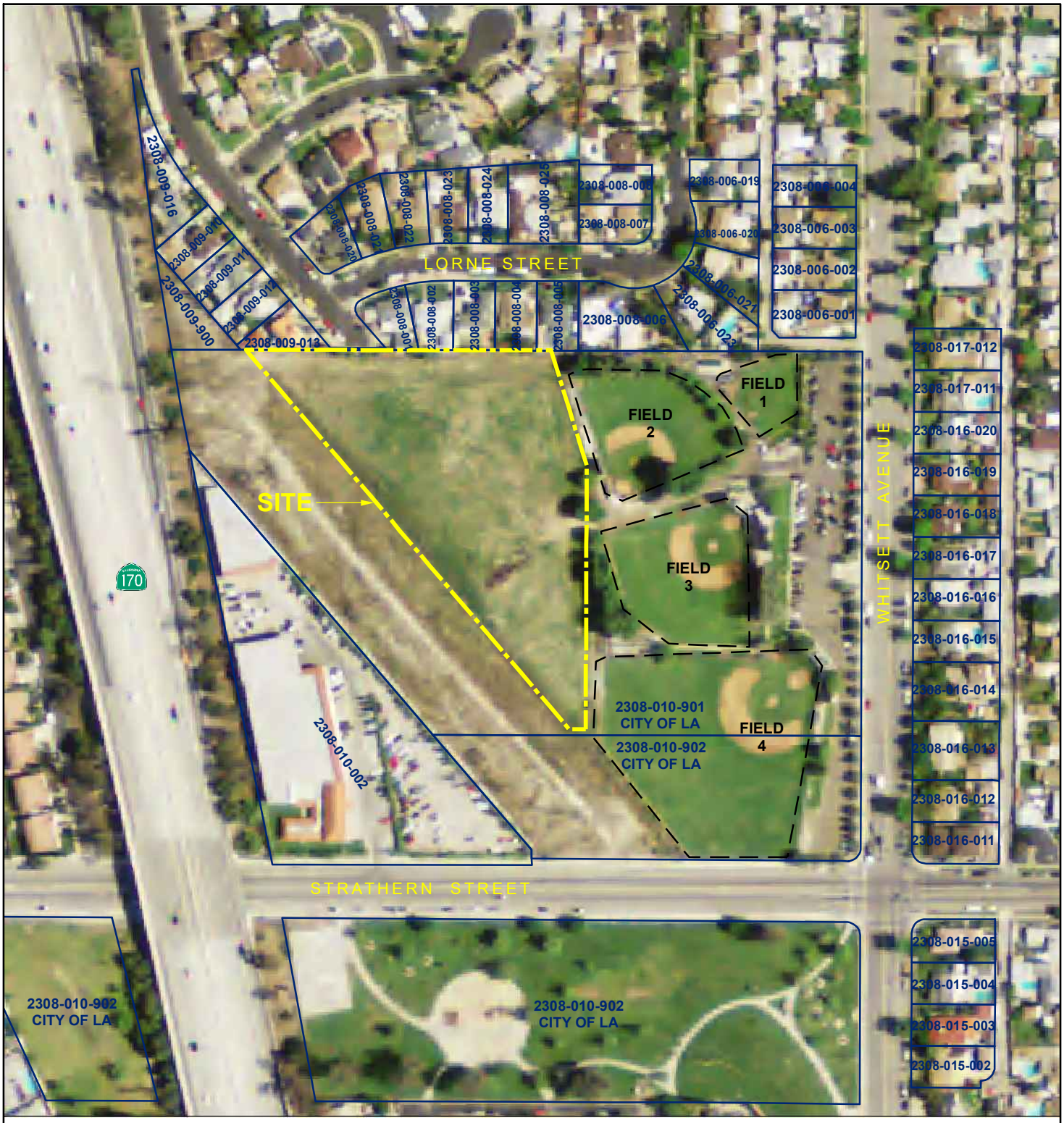

211294007_AER.mxd 6/26/2021 JDL

LEGEND

PARCEL BOUNDARY WITH APN

NOTE: DIRECTIONS, DIMENSIONS AND LOCATIONS ARE APPROXIMATE.
SOURCES: PARCELS - CITY OF LA (public.gis.lacounty.gov), 2021; EDR, 2021; GOOGLE, 2021

N

FEET
0 200 400

2012

Ninyo & Moore
Geotechnical & Environmental Sciences Consultants

HISTORIC AERIAL PHOTOGRAPH

PORTION OF STRATHERN PARK NORTH
8041 WHITSETT AVENUE
NORTH HOLLYWOOD, CALIFORNIA

211294007

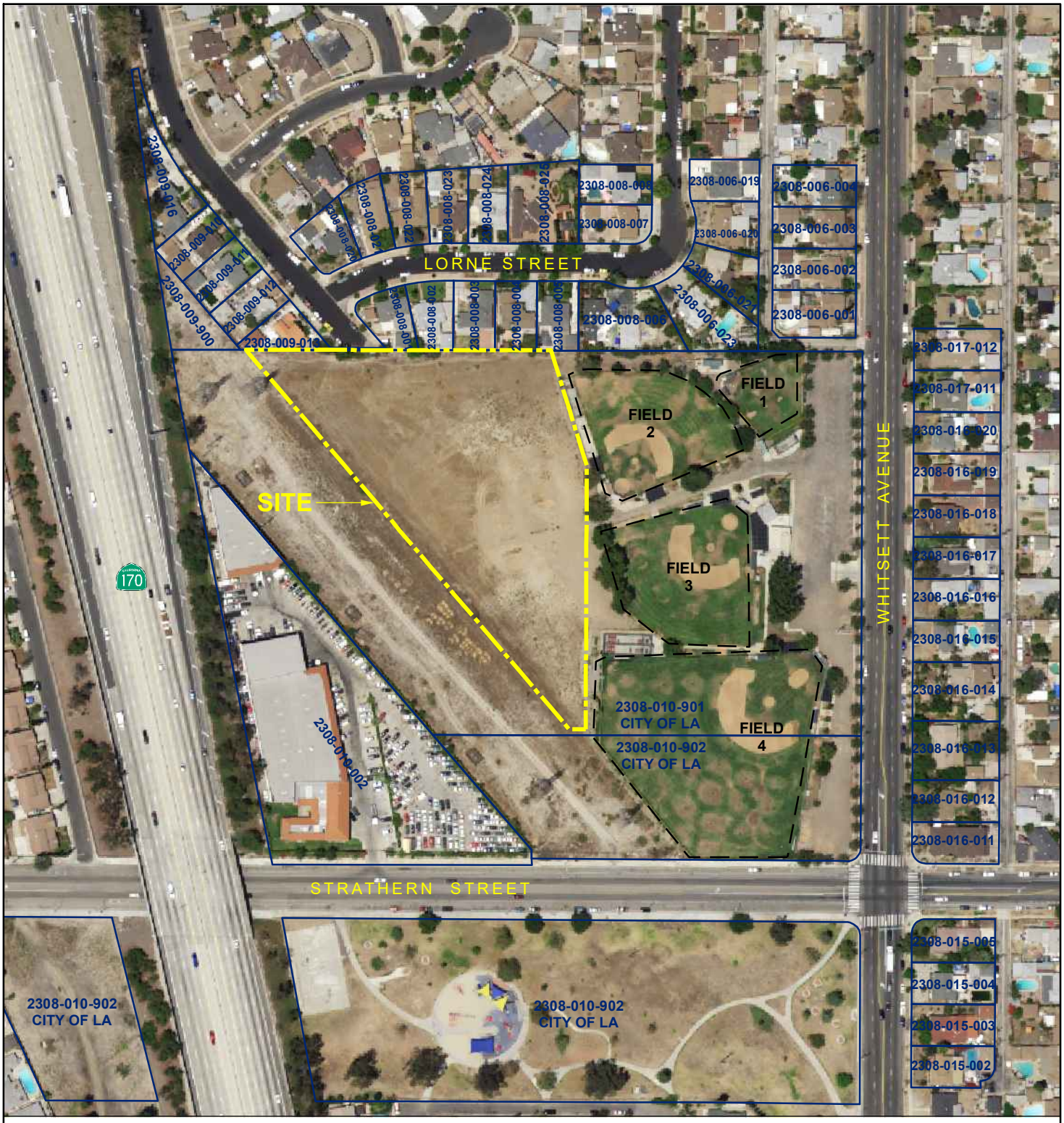

211294007_AER.mxd 6/26/2021 JDL

LEGEND

PARCEL BOUNDARY WITH APN

NOTE: DIRECTIONS, DIMENSIONS AND LOCATIONS ARE APPROXIMATE.
SOURCES: PARCELS - CITY OF LA (public.gis.lacounty.gov), 2021; EDR, 2021; GOOGLE, 2021

N

FEET
0 200 400

2016

Ninyo & Moore
Geotechnical & Environmental Sciences Consultants

HISTORIC AERIAL PHOTOGRAPH

PORTION OF STRATHERN PARK NORTH
8041 WHITSETT AVENUE
NORTH HOLLYWOOD, CALIFORNIA

211294007

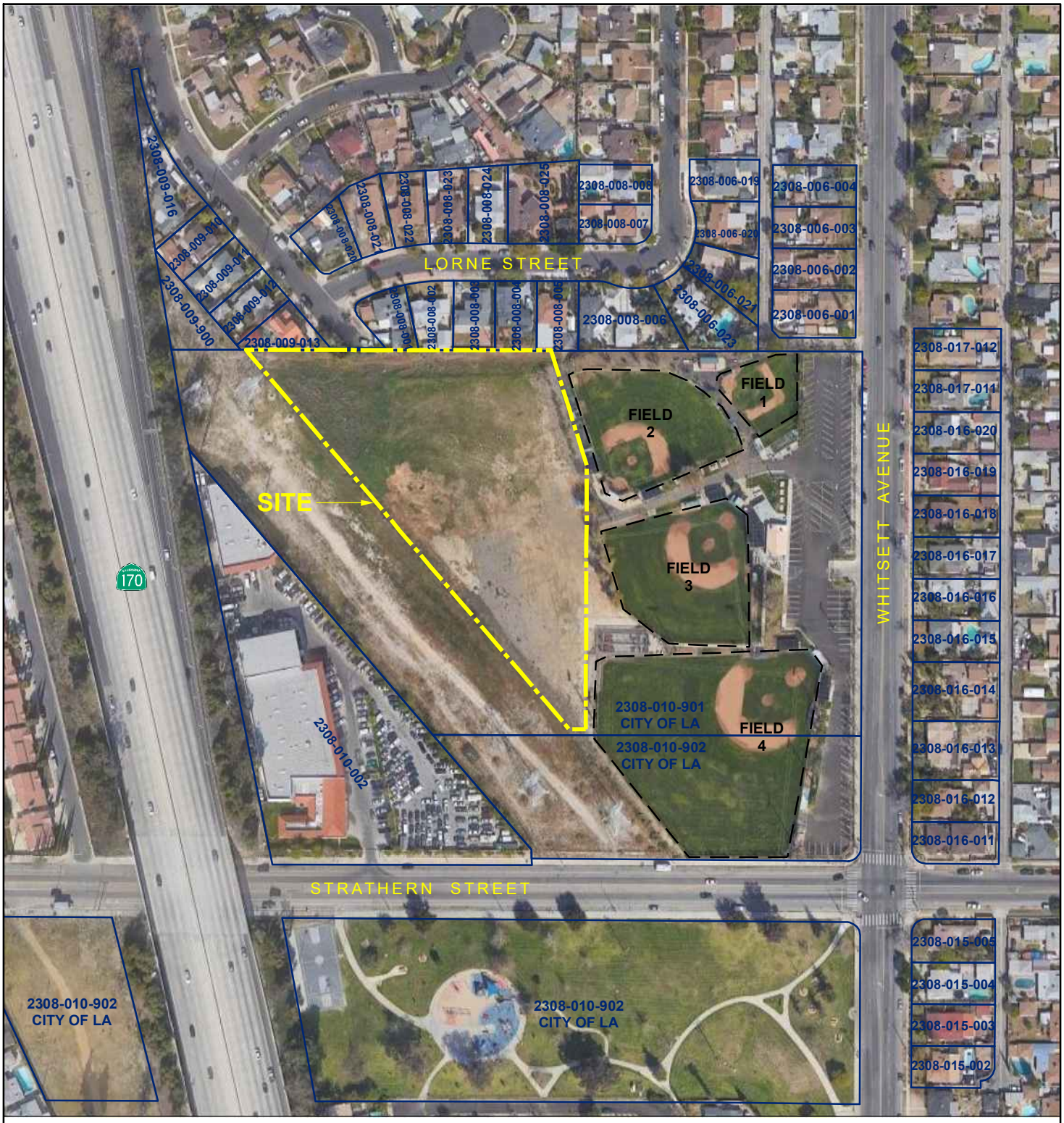

LEGEND

PARCEL BOUNDARY WITH APN

NOTE: DIRECTIONS, DIMENSIONS AND LOCATIONS ARE APPROXIMATE.
SOURCES: PARCELS - CITY OF LA (public.gis.lacounty.gov), 2021; EDR, 2021; GOOGLE, 2021

N

FEET
0 200 400

211294007_AER.mxd 6/26/2021 JDL

2019

Ninyo & Moore
Geotechnical & Environmental Sciences Consultants

HISTORIC AERIAL PHOTOGRAPH

PORTION OF STRATHERN PARK NORTH
8041 WHITSETT AVENUE
NORTH HOLLYWOOD, CALIFORNIA

211294007

Strathern Park North
8041 Whitsett Avenue
North Hollywood, CA 91605

Inquiry Number: 6390781.1
March 04, 2021

EDR Historical Topo Map Report

with QuadMatch™

6 Armstrong Road, 4th floor
Shelton, CT 06484
Toll Free: 800.352.0050
www.edrnet.com

EDR Historical Topo Map Report

03/04/21

Site Name:	Client Name:
Strathern Park North	Ninyo & Moore
8041 Whitsett Avenue	5710 Ruffin Rd
North Hollywood, CA 91605	San Diego, CA 92123
EDR Inquiry # 6390781.1	Contact: Beth Abramson-Beck

EDR Topographic Map Library has been searched by EDR and maps covering the target property location as provided by Ninyo & Moore were identified for the years listed below. EDR's Historical Topo Map Report is designed to assist professionals in evaluating potential liability on a target property resulting from past activities. EDRs Historical Topo Map Report includes a search of a collection of public and private color historical topographic maps, dating back to the late 1800s.

Search Results:

P.O.# 211294007

Project: Strathern Park North

Coordinates:

Latitude:	34.217165 34° 13' 2" North
Longitude:	-118.406791 -118° 24' 24" West
UTM Zone:	Zone 11 North
UTM X Meters:	370412.61
UTM Y Meters:	3787129.94
Elevation:	805.00' above sea level

Maps Provided:

2012	1927
1972	1921
1966	1920
1953	1902
1948	1900
1942	1898
1933	1896
1932	1894

Disclaimer - Copyright and Trademark Notice

This Report contains certain information obtained from a variety of public and other sources reasonably available to Environmental Data Resources, Inc. It cannot be concluded from this Report that coverage information for the target and surrounding properties does not exist from other sources. NO WARRANTY EXPRESSED OR IMPLIED, IS MADE WHATSOEVER IN CONNECTION WITH THIS REPORT. ENVIRONMENTAL DATA RESOURCES, INC. SPECIFICALLY DISCLAIMS THE MAKING OF ANY SUCH WARRANTIES, INCLUDING WITHOUT LIMITATION, MERCHANTABILITY OR FITNESS FOR A PARTICULAR USE OR PURPOSE. ALL RISK IS ASSUMED BY THE USER. IN NO EVENT SHALL ENVIRONMENTAL DATA RESOURCES, INC. BE LIABLE TO ANYONE, WHETHER ARISING OUT OF ERRORS OR OMISSIONS, NEGLIGENCE, ACCIDENT OR ANY OTHER CAUSE, FOR ANY LOSS OF DAMAGE, INCLUDING, WITHOUT LIMITATION, SPECIAL, INCIDENTAL, CONSEQUENTIAL, OR EXEMPLARY DAMAGES. ANY LIABILITY ON THE PART OF ENVIRONMENTAL DATA RESOURCES, INC. IS STRICTLY LIMITED TO A REFUND OF THE AMOUNT PAID FOR THIS REPORT. Purchaser accepts this Report "AS IS". Any analyses, estimates, ratings, environmental risk levels or risk codes provided in this Report are provided for illustrative purposes only, and are not intended to provide, nor should they be interpreted as providing any facts regarding, or prediction or forecast of, any environmental risk for any property. Only a Phase I Environmental Site Assessment performed by an environmental professional can provide information regarding the environmental risk for any property. Additionally, the information provided in this Report is not to be construed as legal advice.

Copyright 2021 by Environmental Data Resources, Inc. All rights reserved. Reproduction in any media or format, in whole or in part, of any report or map of Environmental Data Resources, Inc., or its affiliates, is prohibited without prior written permission.

EDR and its logos (including Sanborn and Sanborn Map) are trademarks of Environmental Data Resources, Inc. or its affiliates. All other trademarks used herein are the property of their respective owners.

Topo Sheet Key

This EDR Topo Map Report is based upon the following USGS topographic map sheets.

2012 Source Sheets



Van Nuys
2012
7.5-minute, 24000

1972 Source Sheets



Van Nuys
1972
7.5-minute, 24000
Aerial Photo Revised 1972

1966 Source Sheets



Van Nuys
1966
7.5-minute, 24000
Aerial Photo Revised 1964

1953 Source Sheets

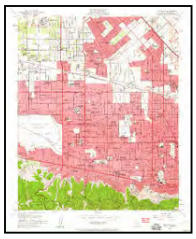

Van Nuys
1953
7.5-minute, 24000
Aerial Photo Revised 1952

Topo Sheet Key

This EDR Topo Map Report is based upon the following USGS topographic map sheets.

1948 Source Sheets



Sunland
1948
7.5-minute, 24000



Burbank
1948
7.5-minute, 24000

1942 Source Sheets



Sunland
1942
7.5-minute, 24000

1933 Source Sheets



Sunland
1933
7.5-minute, 24000

1932 Source Sheets



Sunland
1932
7.5-minute, 24000

Topo Sheet Key

This EDR Topo Map Report is based upon the following USGS topographic map sheets.

1927 Source Sheets



Pacoima
1927
7.5-minute, 24000

1921 Source Sheets



Santa Monica
1921
15-minute, 62500

1920 Source Sheets

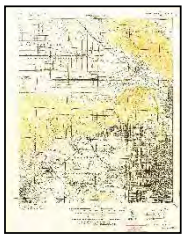

SANTA MONICA
1920
15-minute, 62500

1902 Source Sheets



Santa Monica
1902
15-minute, 62500

Topo Sheet Key

This EDR Topo Map Report is based upon the following USGS topographic map sheets.

1900 Source Sheets



Los Angeles
1900
15-minute, 62500

1898 Source Sheets



Santa Monica
1898
15-minute, 62500

1896 Source Sheets



Santa Monica
1896
15-minute, 62500

1894 Source Sheets



Los Angeles
1894
15-minute, 62500

Historical Topo Map

2012

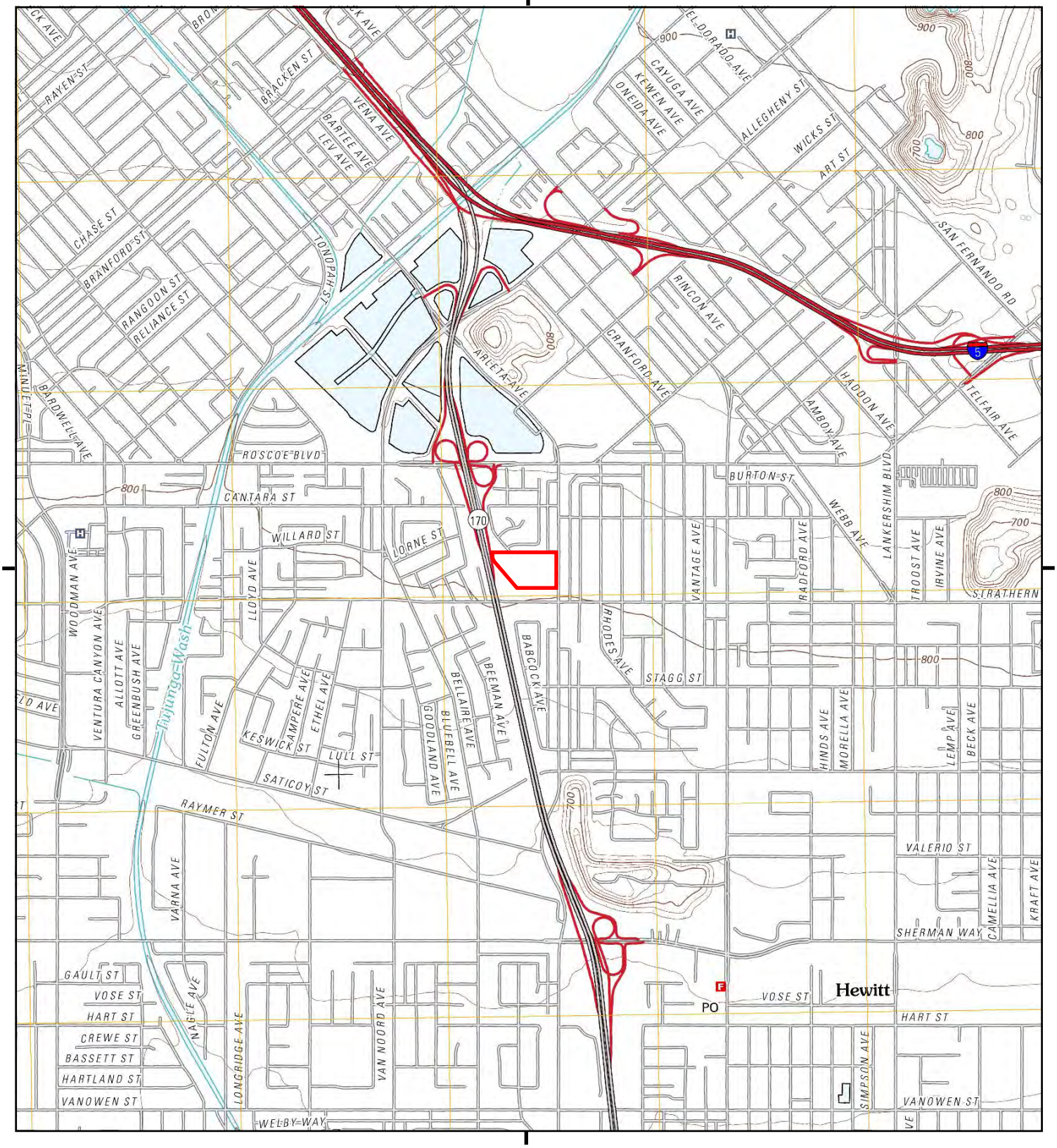

This report includes information from the following map sheet(s).

0 Miles 0.25 0.5 1 1.5

NW N NE
W E
SW S SE

TP, Van Nuys, 2012, 7.5-minute

SITE NAME: Strathern Park North
ADDRESS: 8041 Whitsett Avenue
North Hollywood, CA 91605
CLIENT: Ninyo & Moore

N

Historical Topo Map

1972

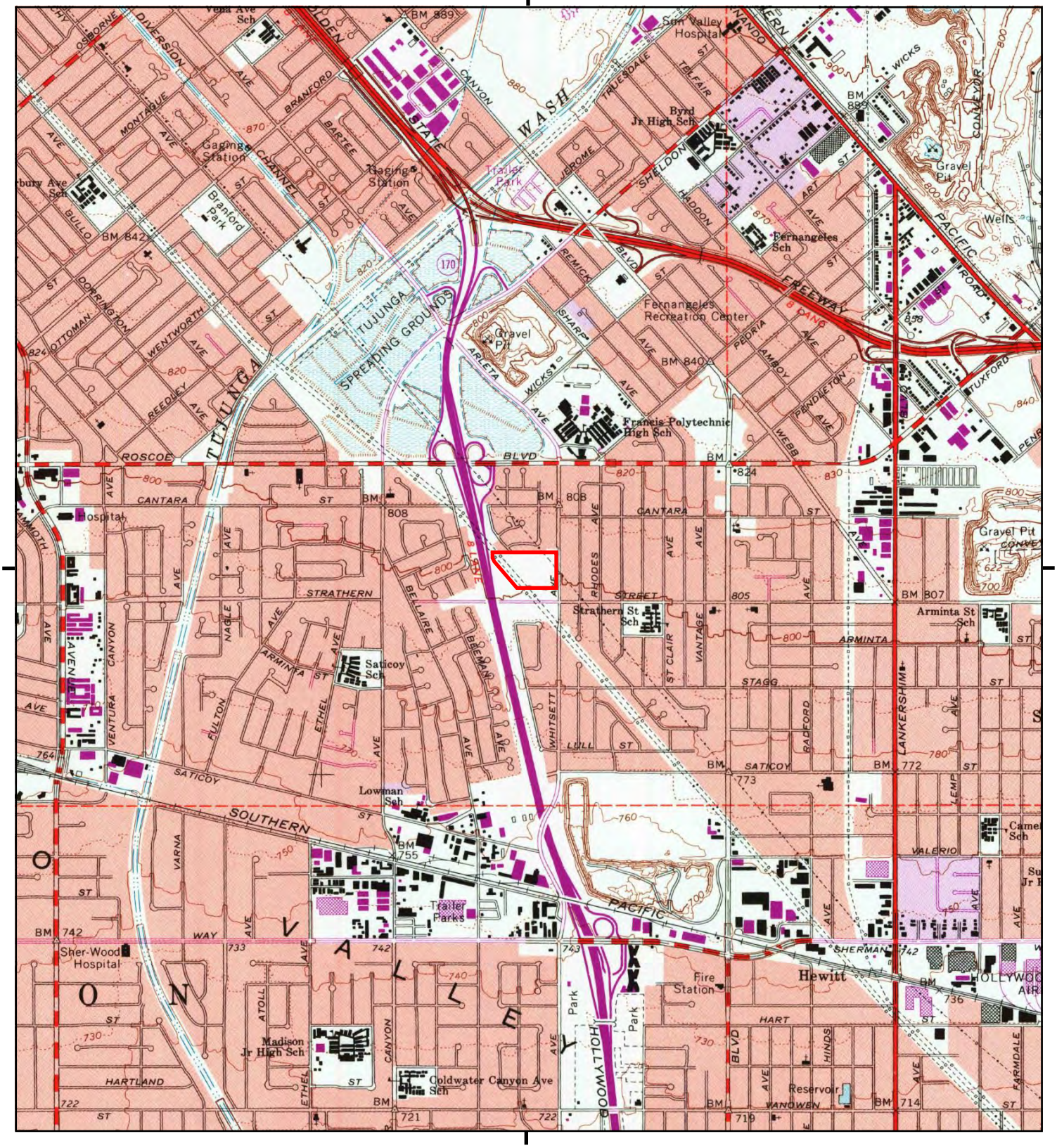

This report includes information from the following map sheet(s).

0 Miles 0.25 0.5 1 1.5

NW N NE
W E
SW S SE

TP, Van Nuys, 1972, 7.5-minute

SITE NAME: Strathern Park North
ADDRESS: 8041 Whitsett Avenue
North Hollywood, CA 91605
CLIENT: Ninyo & Moore

N

Historical Topo Map

1966

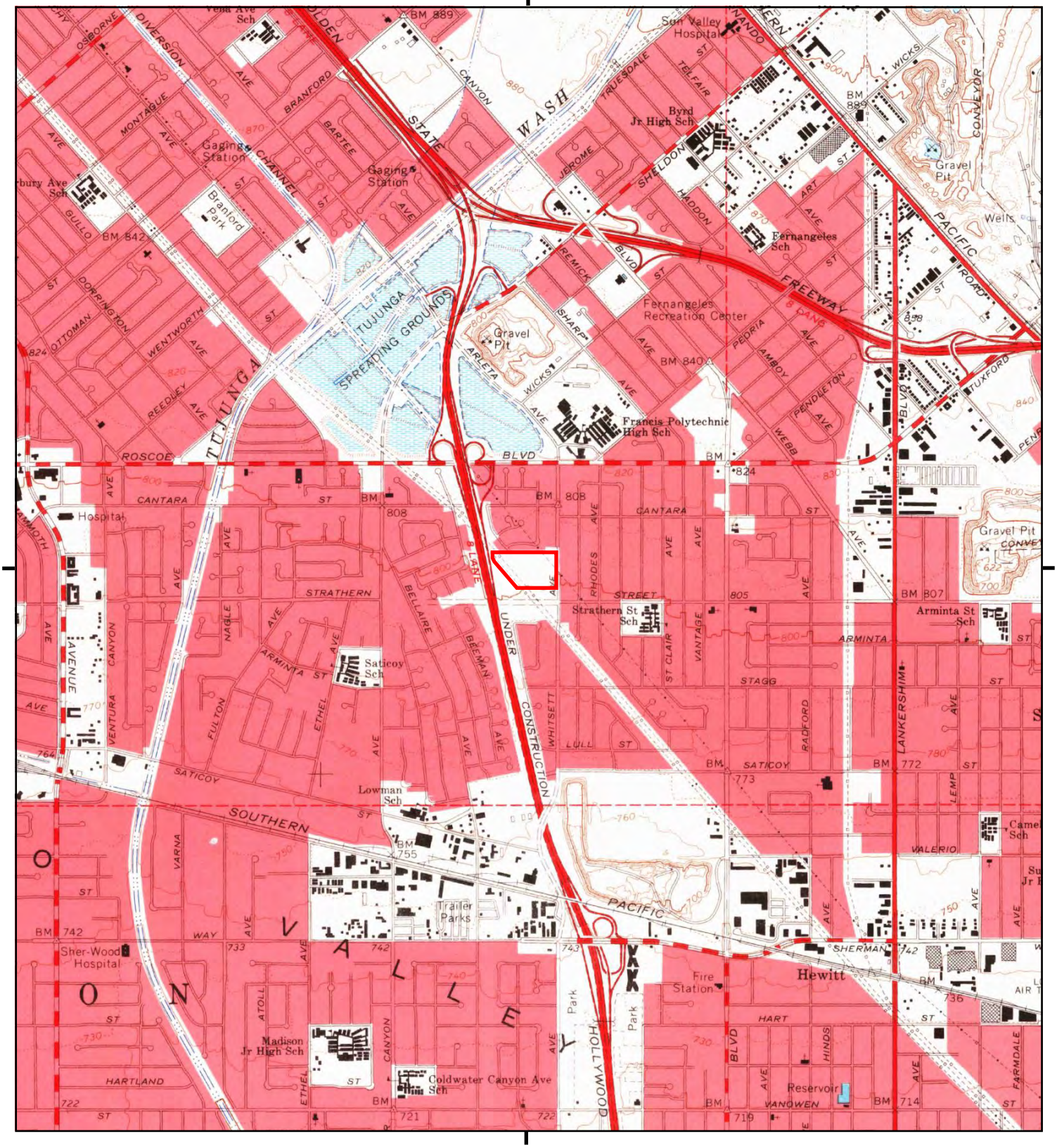

This report includes information from the following map sheet(s).

0 Miles 0.25 0.5 1 1.5

NW N NE
W E
SW S SE

TP, Van Nuys, 1966, 7.5-minute

SITE NAME: Strathern Park North
ADDRESS: 8041 Whitsett Avenue
North Hollywood, CA 91605
CLIENT: Ninyo & Moore

N

Historical Topo Map

1953

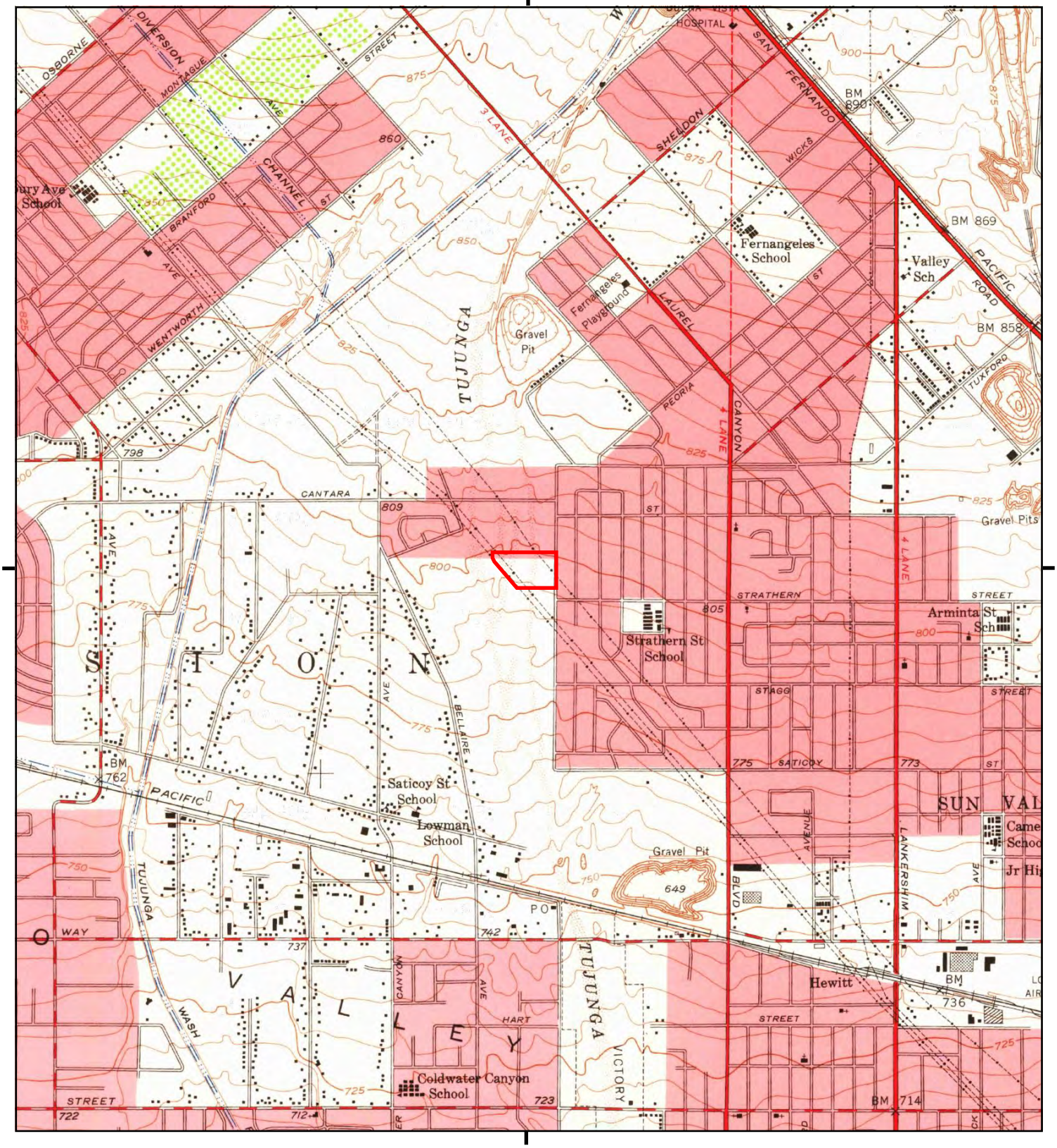

This report includes information from the following map sheet(s).

0 Miles 0.25 0.5 1 1.5

NW N NE
W E
SW S SE

TP, Van Nuys, 1953, 7.5-minute

SITE NAME: Strathern Park North
ADDRESS: 8041 Whitsett Avenue
North Hollywood, CA 91605
CLIENT: Ninyo & Moore

N

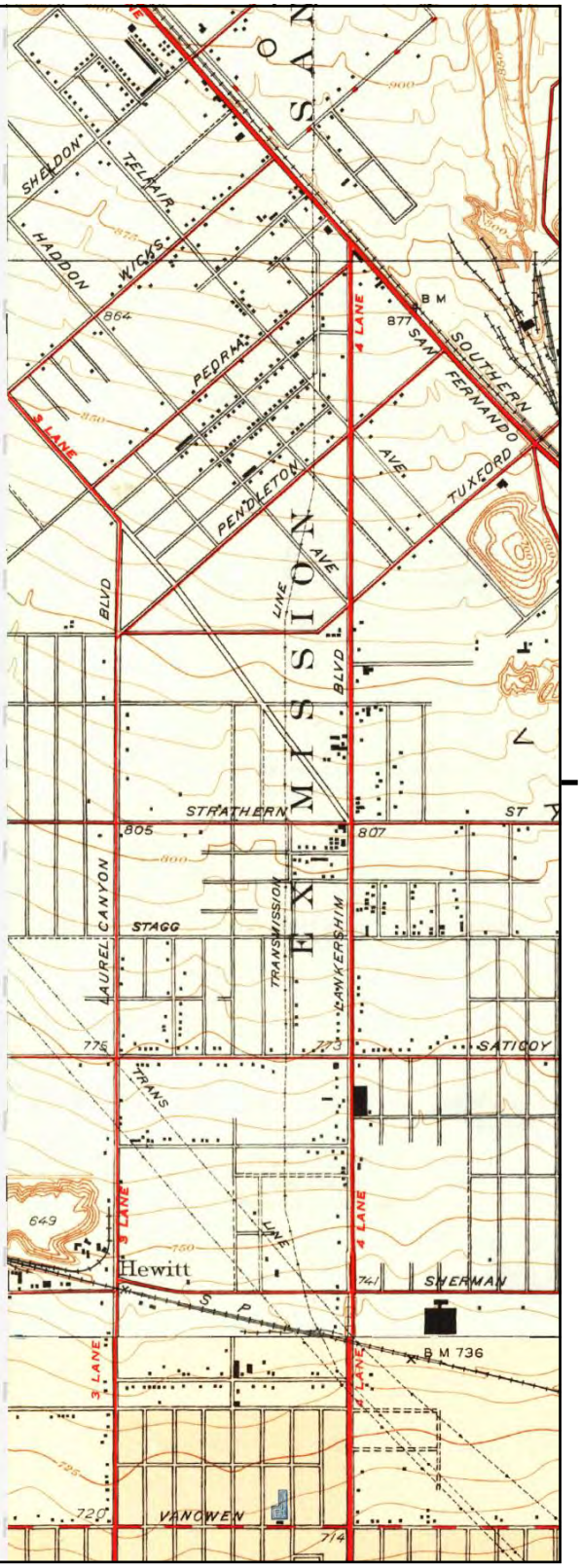

This report includes information from the following map sheet(s).

0 Miles 0.25 0.5 1 1.5

NW N NE
W E
SW S SE

NE, Sunland, 1948, 7.5-minute
SE, Burbank, 1948, 7.5-minute

SITE NAME: Strathern Park North
ADDRESS: 8041 Whitsett Avenue
North Hollywood, CA 91605
CLIENT: Ninyo & Moore

N

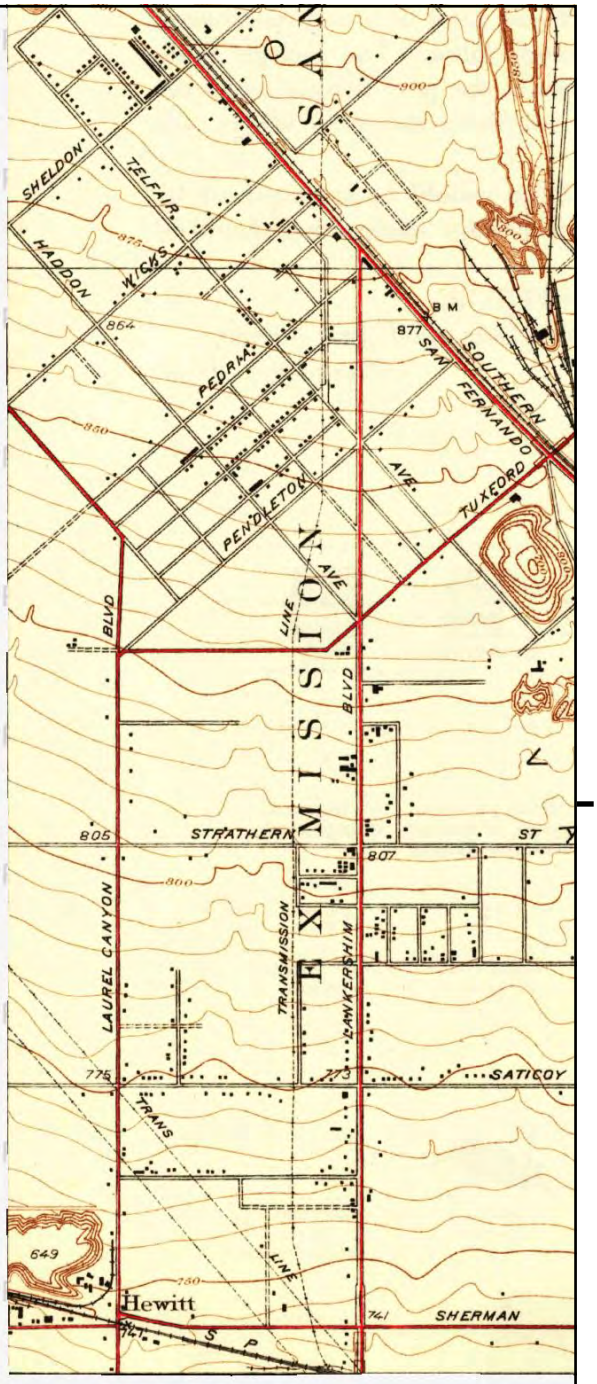

This report includes information from the following map sheet(s).

0 Miles 0.25 0.5 1 1.5

NW N NE
W E
SW S SE

NE, Sunland, 1942, 7.5-minute

SITE NAME: Strathern Park North
ADDRESS: 8041 Whitsett Avenue
North Hollywood, CA 91605
CLIENT: Ninyo & Moore

N



This report includes information from the following map sheet(s).

0 Miles 0.25 0.5 1 1.5

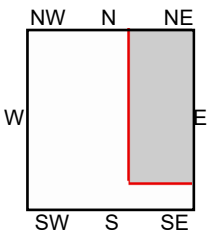

NE, Sunland, 1933, 7.5-minute

SITE NAME: Strathern Park North
ADDRESS: 8041 Whitsett Avenue
North Hollywood, CA 91605
CLIENT: Ninyo & Moore

N

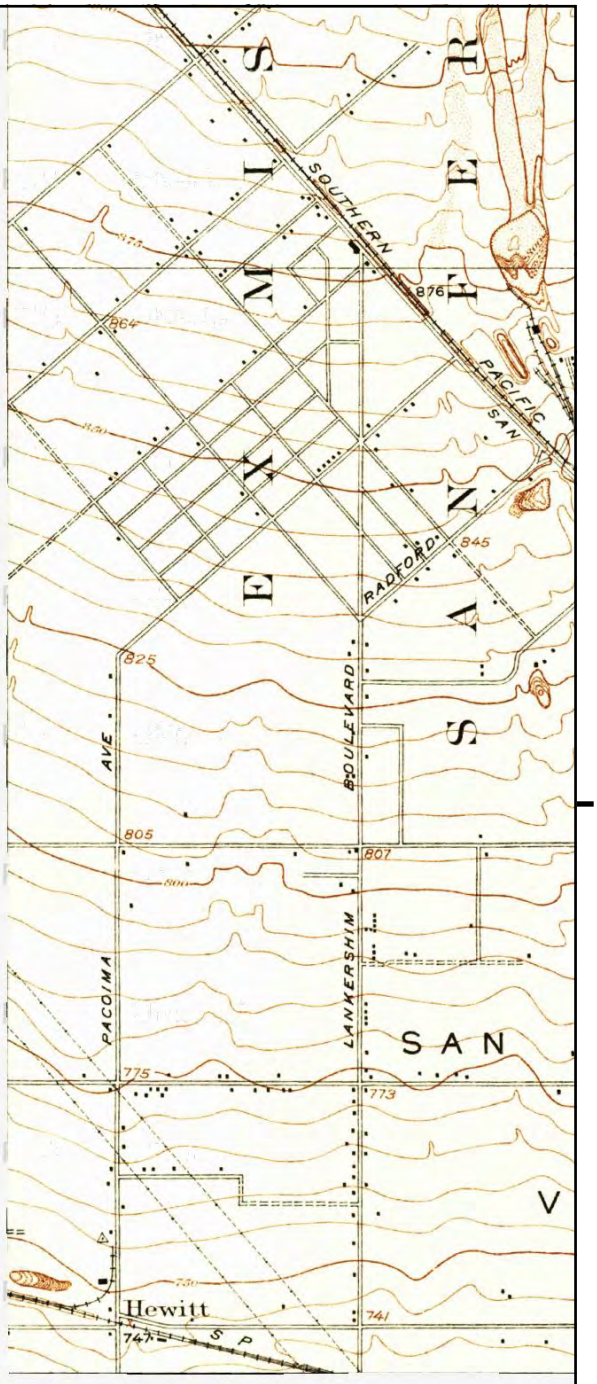

This report includes information from the following map sheet(s).

0 Miles 0.25 0.5 1 1.5

NW N NE
W E
SW S SE

NE, Sunland, 1932, 7.5-minute

SITE NAME: Strathern Park North
ADDRESS: 8041 Whitsett Avenue
North Hollywood, CA 91605
CLIENT: Ninyo & Moore

N

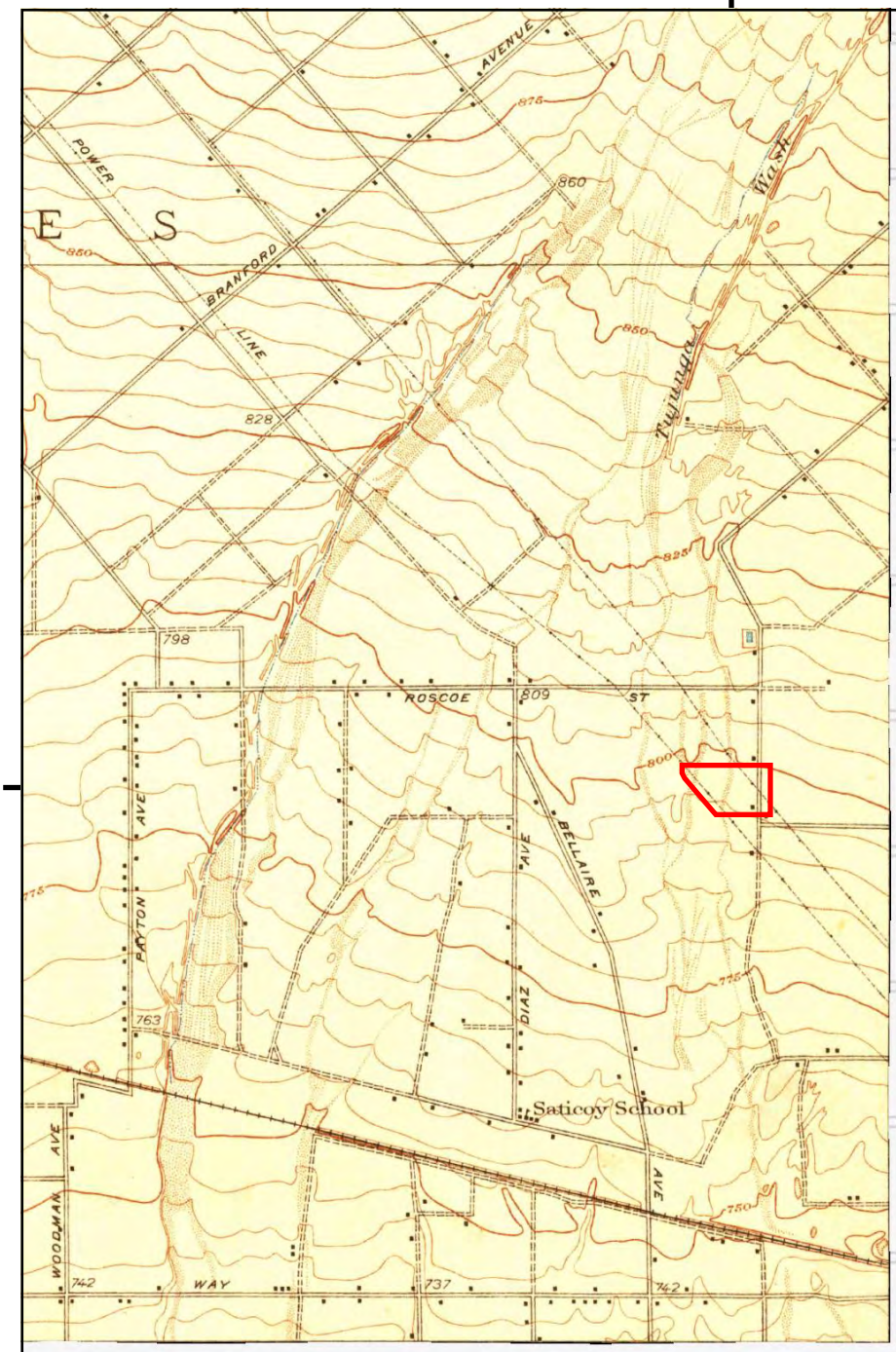

UNMAPPED

This report includes information from the following map sheet(s).

0 Miles 0.25 0.5 1 1.5

NW N NE
W E
SW S SE

TP, Pacoima, 1927, 7.5-minute

SITE NAME: Strathern Park North
ADDRESS: 8041 Whitsett Avenue
North Hollywood, CA 91605
CLIENT: Ninyo & Moore

N

Historical Topo Map

1921

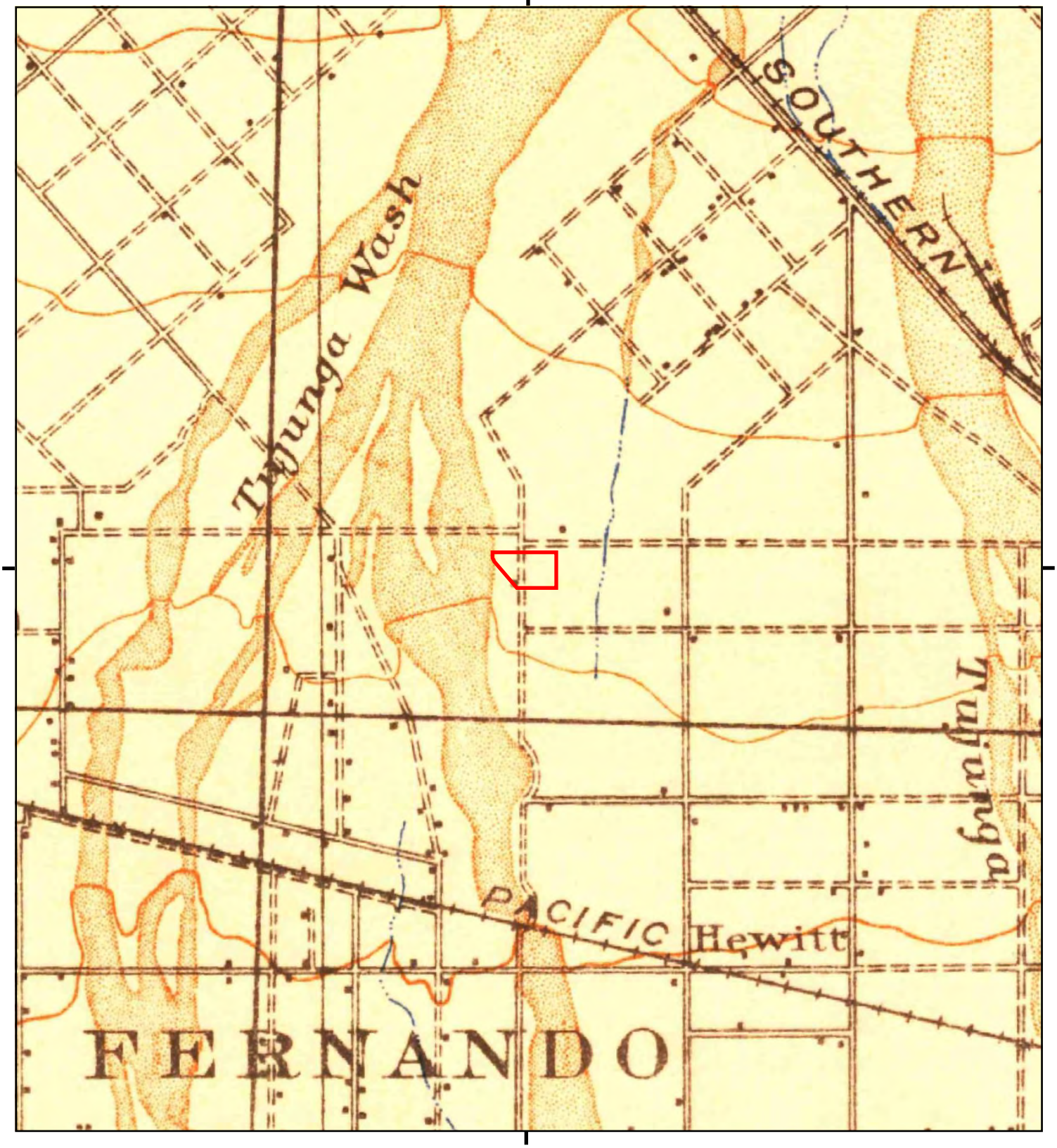

This report includes information from the following map sheet(s).

0 Miles 0.25 0.5 1 1.5

NW N NE
W E
SW S SE

TP, Santa Monica, 1921, 15-minute

SITE NAME: Strathern Park North
ADDRESS: 8041 Whitsett Avenue
North Hollywood, CA 91605
CLIENT: Ninyo & Moore

N

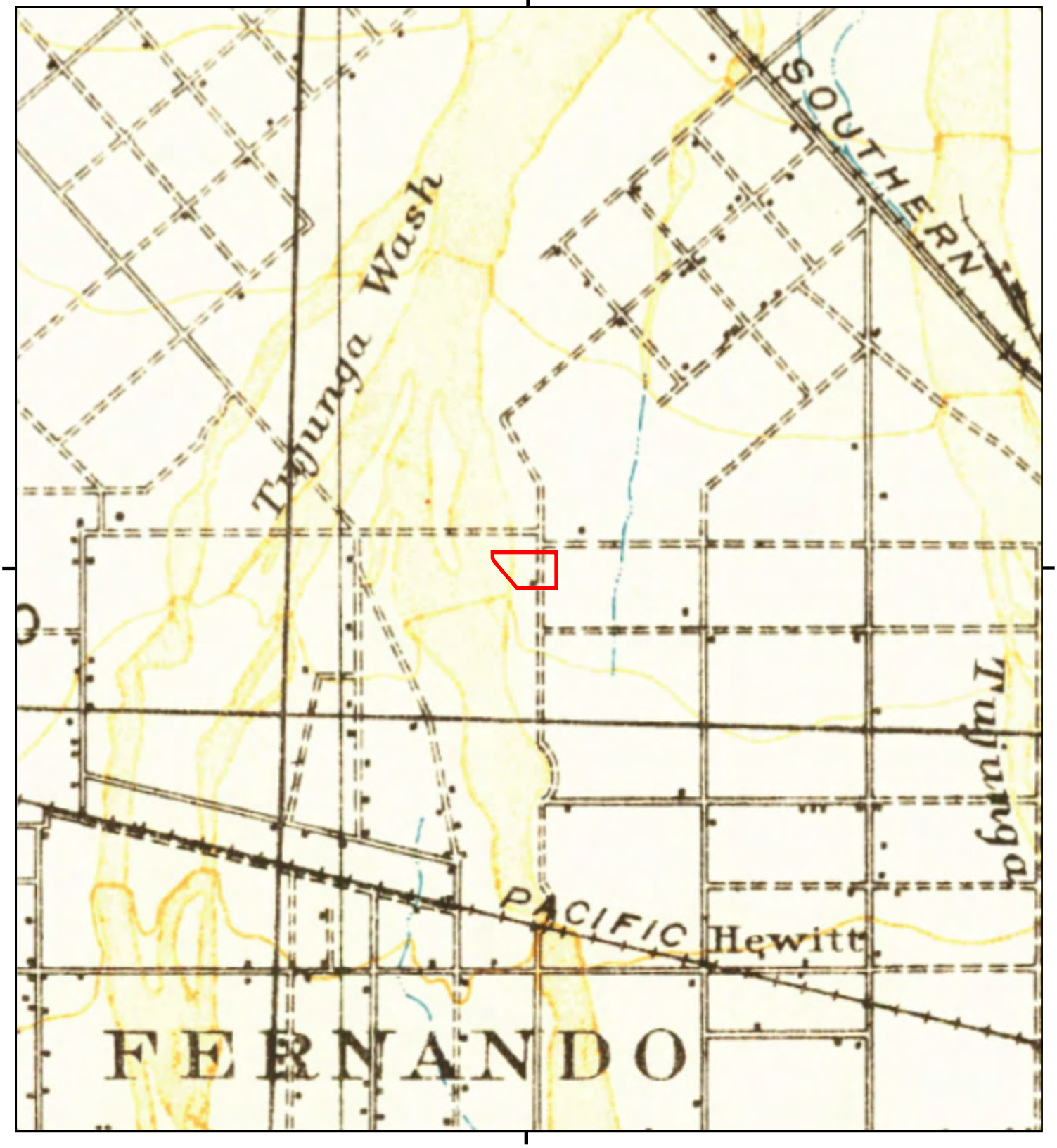

This report includes information from the following map sheet(s).

0 Miles 0.25 0.5 1 1.5

NW N NE
W E
SW S SE

TP, SANTA MONICA, 1920, 15-minute

SITE NAME: Strathern Park North
ADDRESS: 8041 Whitsett Avenue
North Hollywood, CA 91605
CLIENT: Ninyo & Moore

N

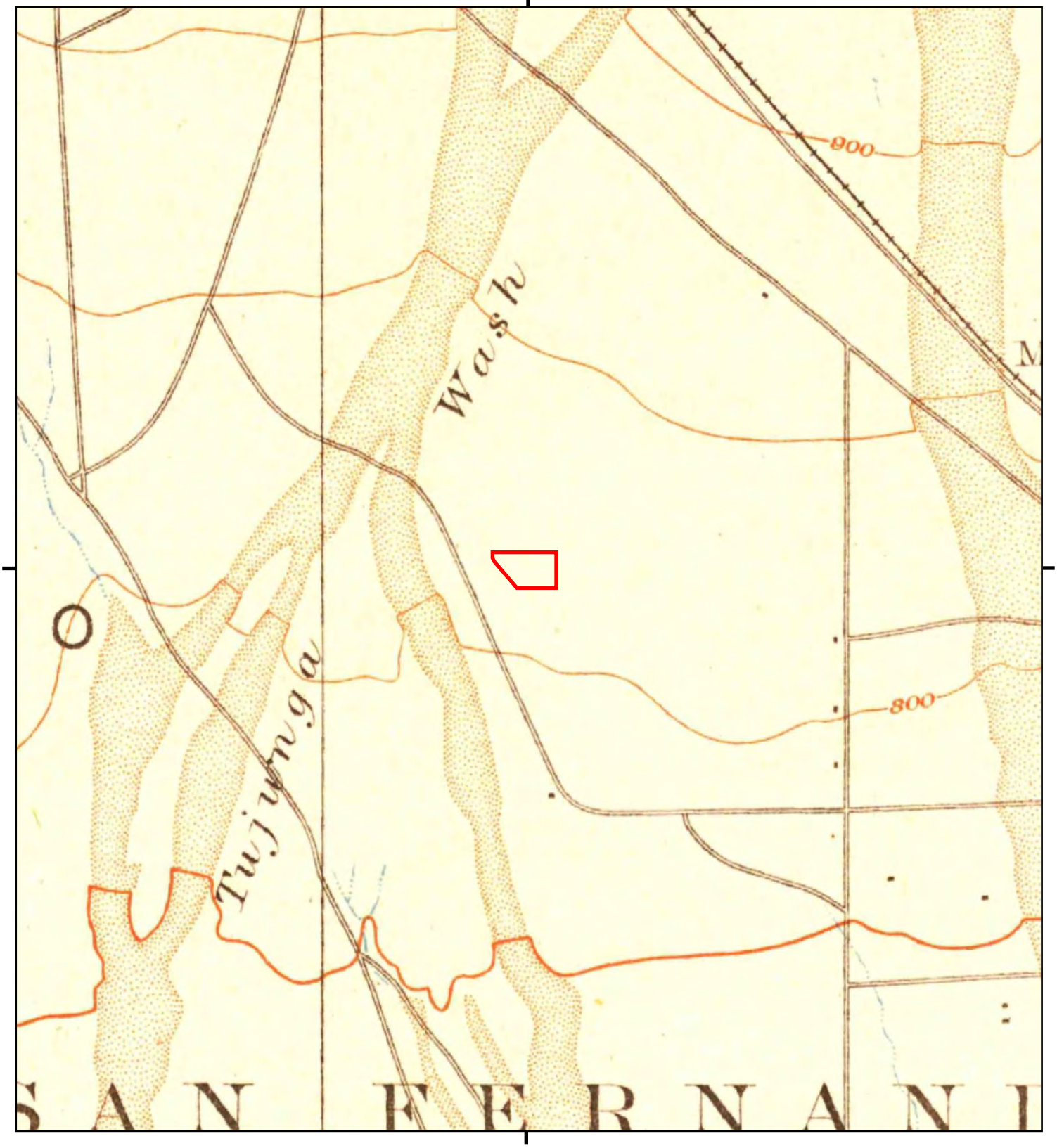

This report includes information from the following map sheet(s).

0 Miles 0.25 0.5 1 1.5

NW N NE
W E
SW S SE

TP, Santa Monica, 1902, 15-minute

SITE NAME: Strathern Park North
ADDRESS: 8041 Whitsett Avenue
North Hollywood, CA 91605
CLIENT: Ninyo & Moore

N

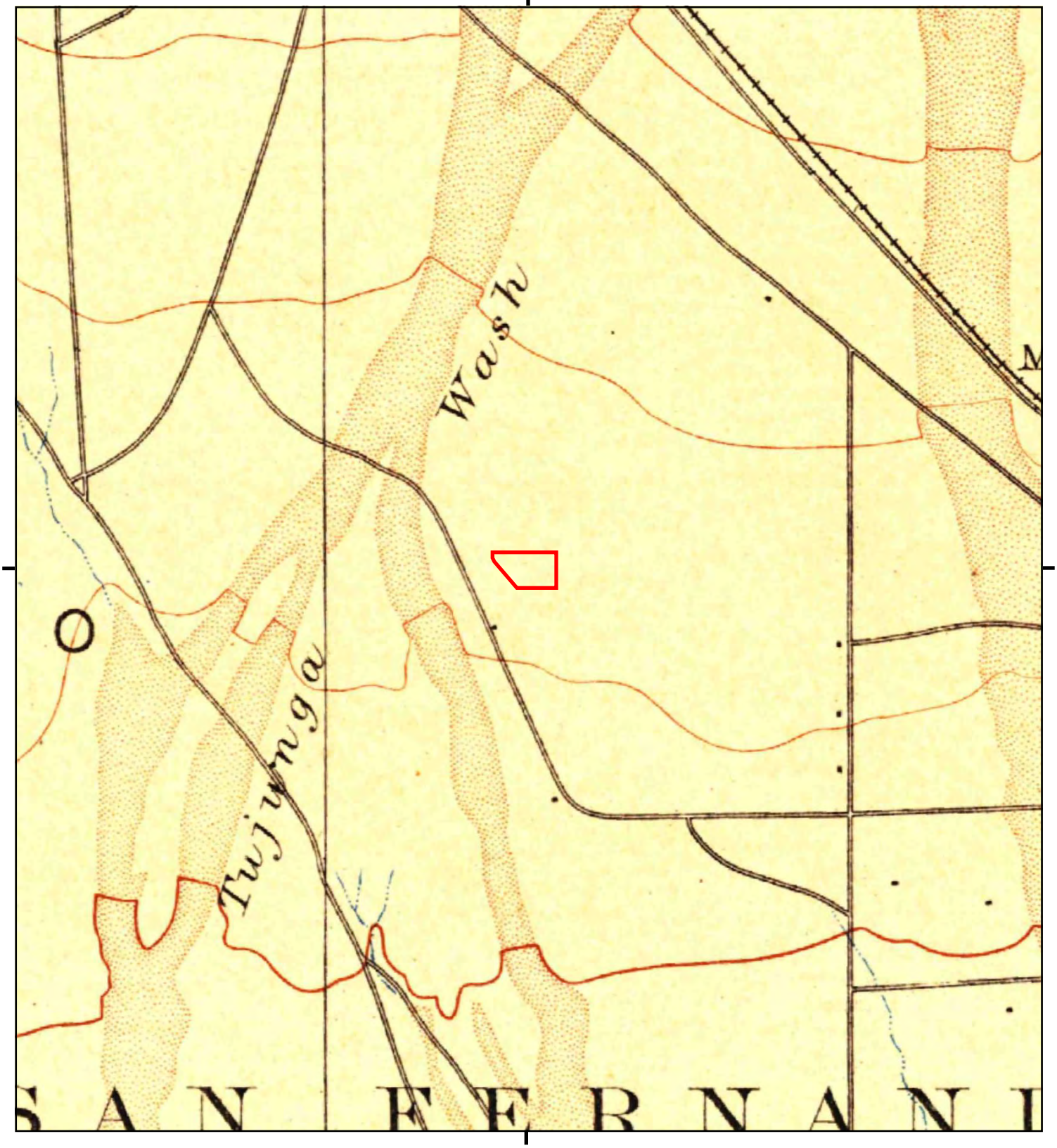

This report includes information from the following map sheet(s).

0 Miles 0.25 0.5 1 1.5

NW N NE
W E
SW S SE

TP, Los Angeles, 1900, 15-minute

SITE NAME: Strathern Park North
ADDRESS: 8041 Whitsett Avenue
North Hollywood, CA 91605
CLIENT: Ninyo & Moore

N

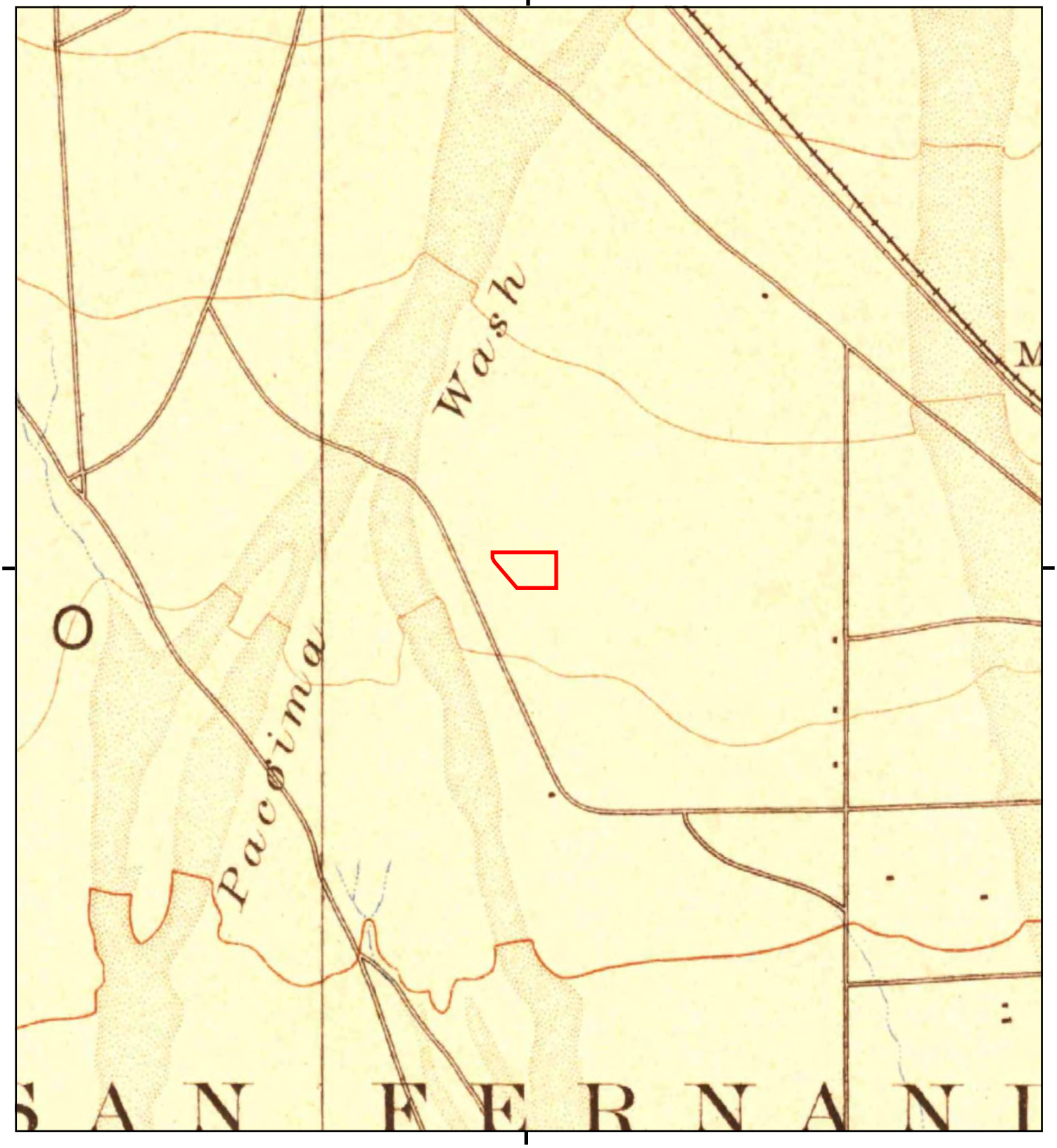

This report includes information from the following map sheet(s).

0 Miles 0.25 0.5 1 1.5

NW N NE
W E
SW S SE

TP, Santa Monica, 1898, 15-minute

SITE NAME: Strathern Park North
ADDRESS: 8041 Whitsett Avenue
North Hollywood, CA 91605
CLIENT: Ninyo & Moore

N

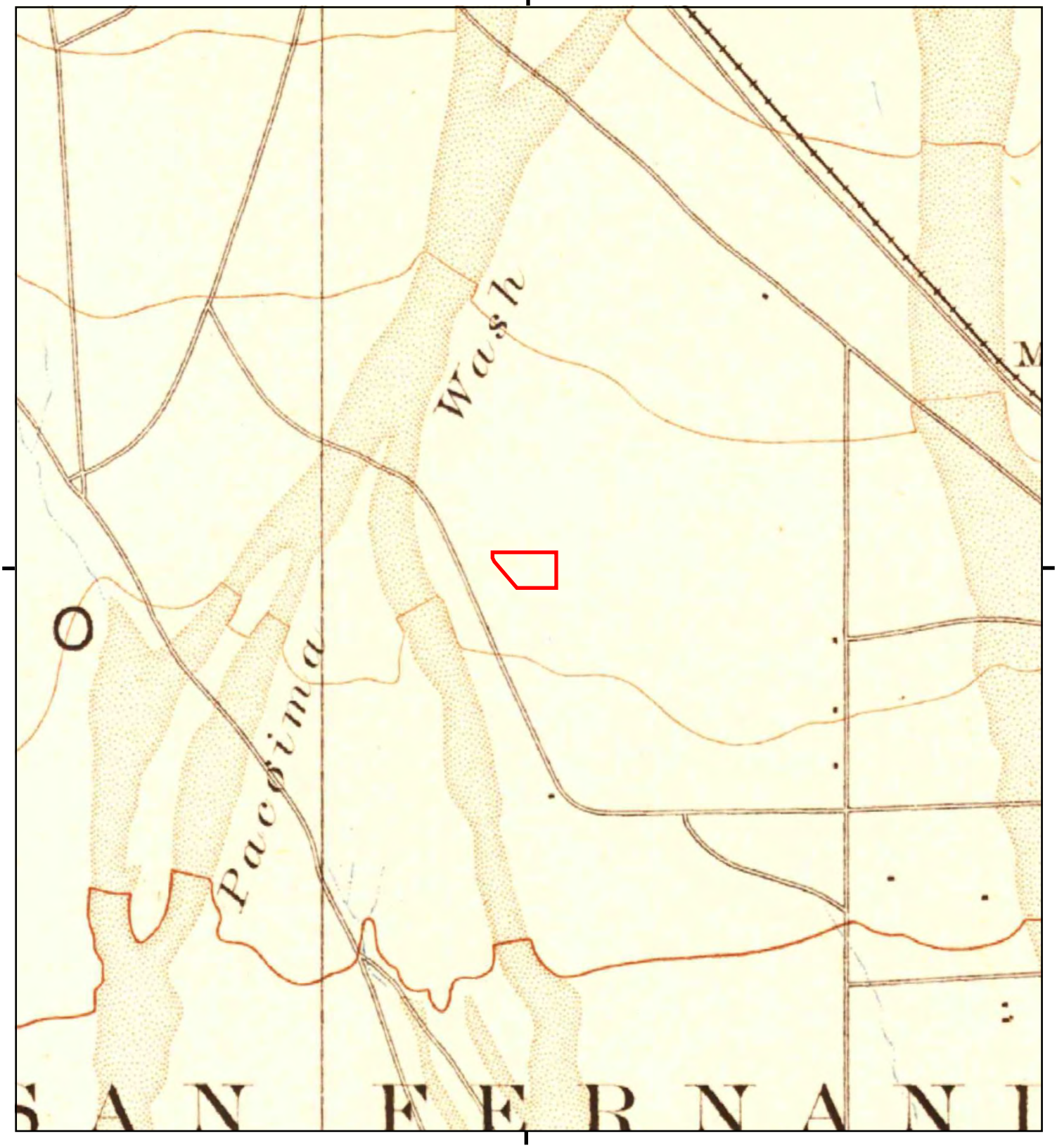

This report includes information from the following map sheet(s).

0 Miles 0.25 0.5 1 1.5

NW N NE
W E
SW S SE

TP, Santa Monica, 1896, 15-minute

SITE NAME: Strathern Park North
ADDRESS: 8041 Whitsett Avenue
North Hollywood, CA 91605
CLIENT: Ninyo & Moore

N

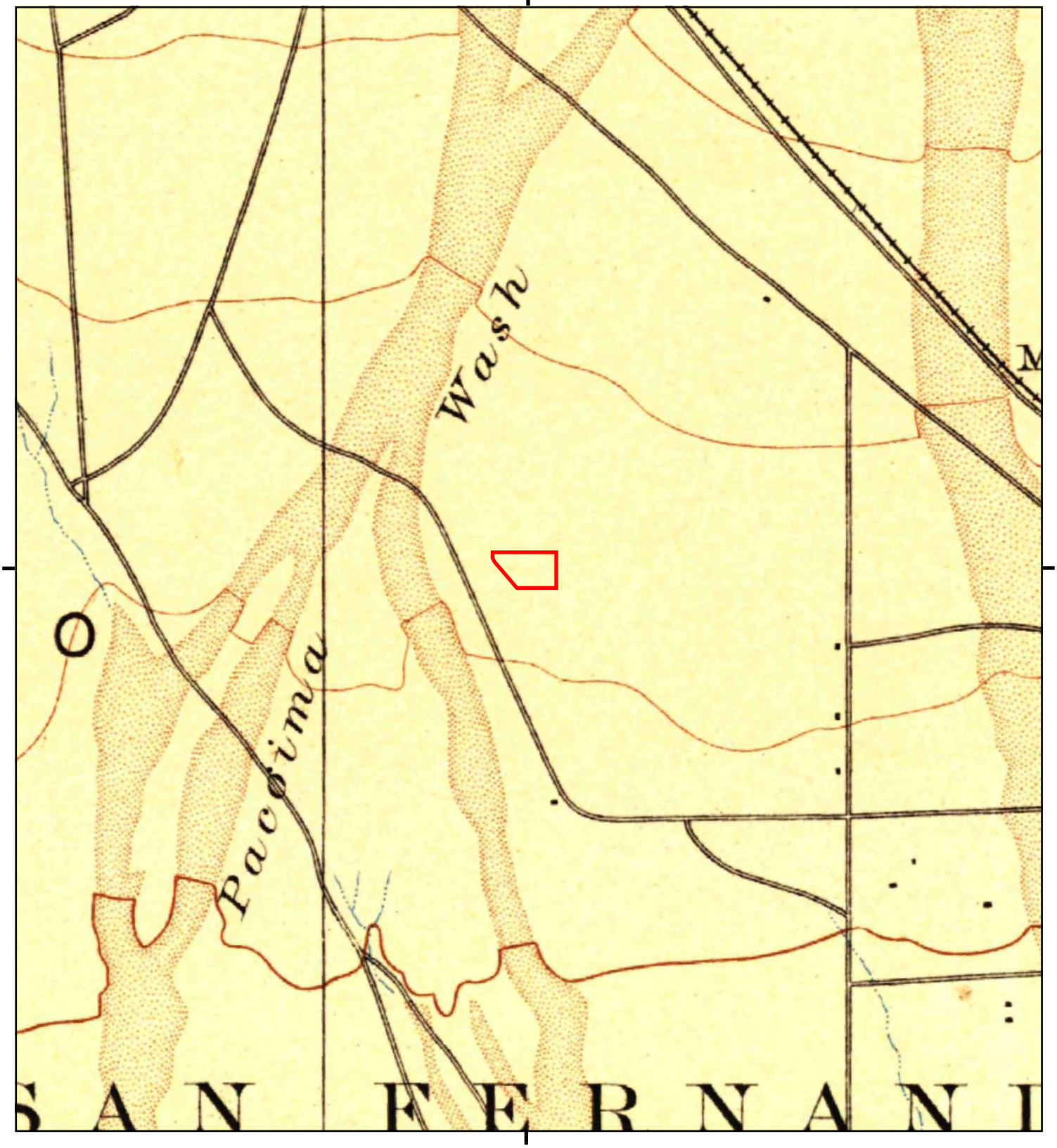

This report includes information from the following map sheet(s).

0 Miles 0.25 0.5 1 1.5

NW N NE
W E
SW S SE

TP, Los Angeles, 1894, 15-minute

SITE NAME: Strathern Park North
ADDRESS: 8041 Whitsett Avenue
North Hollywood, CA 91605
CLIENT: Ninyo & Moore

N

APPENDIX C

Geophysical Survey Report



GEOPHYSICAL EVALUATION

STRATHERN PARK NORTH

North Hollywood, California

PREPARED FOR:

Ninyo & Moore
5710 Ruffin Road
San Diego, CA 92123

PREPARED BY:

Atlas Technical Consultants LLC
6280 Riverdale Street, Suite 200
San Diego, CA 92120

June 30, 2021

6280 Riverdale Street
San Diego, CA 92120
(877) 215-4321 | oneatlas.com

June 30, 2021

Atlas No. 121162SWG
Report No. 1

MS. BETH ABRAMSON-BECK, PG
NINYO & MOORE
5710 RUFFIN ROAD
SAN DIEGO, CA 92123

SUBJECT: Geophysical Evaluation
Strathern Park North
8041 Whitsett Avenue, North Hollywood, California

Dear Ms. Abramson-Beck:

In accordance with your authorization, Atlas Technical Consultants LLC (Atlas) has performed a geophysical evaluation pertaining to a portion of the Strathern Park North project located at 8041 Whitsett Avenue in North Hollywood, California. Specifically, our services included the performance of magnetic (MAG) and electromagnetic (EM) evaluations at preselected portions of the site. The purpose of the study was to delineate the limits of the preexisting landfill, as well as evaluate the presence of subsurface objects/debris within the study boundary limits. Our services were conducted on April 27th, 2021. This report presents the survey methodology, equipment used, analysis, and findings.

We appreciate the opportunity to be of service on this project. Should you have any questions related to this report, please contact the undersigned at your convenience.

Respectfully submitted,



Stephan A. Callas
Senior Staff Geophysicist

Patrick F. Lehrmann, P.G., P.Gp.
Principal Geologist/Geophysicist

SAC:AIS:pfl:ds:af

Distribution: Beth Abramson-Beck at BAbramsonBeck@NinyoAndMoore.com

CONTENTS

1. INTRODUCTION 1
2. SCOPE OF SERVICES 1
3. SITE AND PROJECT DESCRIPTION 1
4. GEOPHYSICAL INSTRUMENTATION AND APPLICATIONS 1
   - 4.1 MAG Evaluation 2
   - 4.2 EM31 Evaluation 2
5. FINDINGS AND CONCLUSIONS 3
6. LIMITATIONS 4
7. SELECTED REFERENCES 5

FIGURES

Figure 1 Site Location Map
Figure 2 Site Map
Figure 3a Site Data Map – MAG Data
Figure 3b Site Data Map – EM31 QP Data
Figure 3c Site Data Map – EM31 IP Data

1. INTRODUCTION

In accordance with your authorization, Atlas Technical Consultants LLC (Atlas) has performed a geophysical evaluation pertaining to a portion of the Strathern Park North project located at 8041 Whitsett Avenue in North Hollywood, California (Figure 1). Specifically, our services included the performance of magnetic (MAG) and electromagnetic (EM) evaluations at preselected portions of the site. The purpose of the study was to delineate the limits of the preexisting landfill, as well as evaluate the presence of subsurface objects/debris within the study boundary limits. Our services were conducted on April 27th, 2021. This report presents the survey methodology, equipment used, analysis, and findings.

2. SCOPE OF SERVICES

Our scope of services included:

- Performance of MAG and EM evaluations across accessible portions of the site using a Geometrics G858 cesium vapor magnetometer and Geonics EM31-MK2 terrain conductivity meter in conjunction with a Trimble Pro XRS global positioning system (GPS) for spatial control.
- Compilation and geophysical analysis of the collected data.
- Preparation of this report presenting our findings and conclusions.

3. SITE AND PROJECT DESCRIPTION

The study area is generally located just east of California State Route 170 (The Hollywood Freeway) on the northwest corner of the intersection between Strathern Street and Whitsett Avenue. Specifically, the project site is located at 8041 Whitsett Avenue in North Hollywood, California (Figure 1).

Based on our discussions with you and review of historical aerial images, it is our understanding that the limits of the preexisting landfill at the project site are unknown. It is also our understanding that your office is conducting an environmental assessment of the former landfill. Our study included the use of MAG and EM evaluations for an approximately 3-acre portion of the site. The study limits were selected by a representative of your office based on reported information regarding the preexisting landfill materials. Figure 2 presents the current site conditions.

4. GEOPHYSICAL INSTRUMENTATION AND APPLICATIONS

Our geophysical evaluation was accomplished through the collection of MAG and EM31 data. Specifically, to assess the areal extent of landfill materials and subsurface anomalies, the MAG and EM31 were used in conjunction to evaluate soil conductivity and the presence of subsurface metallic objects, potentially related to the lateral extent of landfill debris. The following sections detail the methods and instrumentation used.

4.1 MAG Evaluation

Magnetometer data was collected within the study boundary limits in order to assess the presence of ferromagnetic metals. The MAG data was acquired using a Geometrics G-858 cesium vapor magnetometer, which measures the strength of the earth's magnetic field and the superposed magnetic field of ferromagnetic materials in its vicinity. The precision of the instrument is approximately 1/10th gamma. The earth's magnetic field strength at the project site's latitude was roughly 46,566.7 gammas on April 27th, 2021 (https://www.ngdc.noaa.gov/geomag-web/#igrfwmm). The earth's magnetic field is inclined in the direction of the north magnetic pole. Because of this inclination, a buried ferromagnetic object is typically expressed as a paired anomaly with a positive (above background) slightly to the south and a negative slightly in the direction of magnetic north. Solar geomagnetic activity for the magnetometer survey was predominantly quiet, according to the National Oceanic and Atmospheric Administration (NOAA) (ftp://ftp.swpc.noaa.gov/ pub/warehouse). In addition, pre- and post-survey measurements were collected at a test station to assess diurnal variations. Variations of less than 20 gammas were observed. Due to these relatively small magnetic field variances, no diurnal corrections were made to the recorded magnetometer data.

The MAG data was collected in conjunction with a Trimble Pro XRS GPS along profile lines that were spaced approximately 5 to 10 feet apart, access permitting. The data was later downloaded to a laptop computer and then processed and analyzed using Magmap (Geometrics, 2017) and Surfer (Golden Software, Inc., 2002). The results are presented using both contour lines and a color gradient image in gammas. Typically, relatively significant features are revealed in the MAG data as red/pink and blue/purple. The orange and yellow areas likely represent smaller objects.

4.2 EM31 Evaluation

EM data was collected within the study boundary limits using a Geonics EM31-MK2 terrain conductivity meter in order to assess the presence of conductors and non-conductors in the subsurface. The EM31 is a frequency domain terrain conductivity meter that operates at a frequency of 9.8 kHz and has an effective exploration depth of approximately 20 feet. It is comprised of two coils: a transmitter coil and receiver coil. The transmitter coil induces circular eddy currents that generate a magnetic field in the subsurface, which is related to the terrain conductivity. There are two components of the magnetic field that are measured by the EM31: the quadrature-phase (QP) and the in-phase (IP) components. The QP provides an electrical conductivity measurement, in millimho per meter (mmho/m). The IP measurements represent the ratio of the induced secondary magnetic field to the primary magnetic field in parts per thousand (ppt). The IP measurement is significantly more sensitive to large metallic objects than the QP. Before the collection of EM31 datasets, calibration of the instrument was performed.

The EM data was collected in conjunction with a Trimble Pro XRS GPS along profile lines that were roughly spaced 5 to 10 feet apart, access permitting. The data was downloaded to a laptop computer and then processed and analyzed using DAT31W (Geonics, Inc., 2018) and Surfer (Golden Software, Inc., 2002). Both the QP and IP results are presented using contour lines and a color gradient image. Typically, relatively significant features are revealed as significant

variations from the background values. In the IP results, high values are shown as red/pink colors and low values are shown as blue/purple colors. Typically, in the QP results blue/purple represent low conductivity (high resistivity) values and red/pink represent high conductivity (low resistivity) values.

5. FINDINGS AND CONCLUSIONS

As previously discussed, the primary purpose of our study was to delineate the limits of the preexisting landfill as well as evaluate the presence of subsurface objects/debris within the study boundary limits. This was accomplished by assessing ferromagnetic, conductive, and resistive materials in the study areas through the collection of MAG and EM31 data. The results of the MAG evaluation are illustrated in Figure 3a. The results of the EM31 QP and IP evaluations are presented in Figures 3b and 3c, respectively.

The results of the MAG evaluation are illustrated in Figure 3a using both contour lines and a color gradient image in gammas. Relatively significant features are revealed in the MAG data as hot (red/purple) and cool (blue) colors. The results of the MAG data displayed several areas of high and low magnetic responses. These responses did not indicate a clear lateral landfill limit; however, the eastern portion of the site displays an anomalous area of concentrated high and low magnetic responses. This anomalous area may be related to landfilled material and/or zones of subsurface ferrous objects/materials; however, the exact cause and/or nature of this response in not known. Within this area, there appears to be an unidentified line that terminates towards the central portion of the site. Additionally, there appears to be an area of low magnetic response in the southern-most corner of the site. The cause and/or nature of this response is not known. It should be noted that the MAG data revealed several strong high and low magnetic responses boarding the site adjacent to the chain link fence; these are likely the result of surficial metallic objects such as chain link fencing, parking stops, baseball equipment and/or unidentified lines. However, these surficial features could mask subsurface debris and/or landfilled materials.

The results of the EM31 QP evaluation are illustrated in Figure 3b using both contour lines and a color gradient image in millimhos per meter (mmho/m). The cool colors (blue) represent lower conductivity values, whereas the warm colors (red/pink) represent higher conductivity values. The results of the QP data revealed a distinct regional change in values across the study area. Specifically, the northern portion of the site contained an area of lower conductivity materials, which appears to extend towards the central portion of the study area. The southern portion of the site has a more conductive response (Figure 3b). The exact cause and/or nature of these responses is not known; however, they could be related to changes in fill conductivity or moisture content. Additionally, there is a higher conductivity response along the perimeter of the study area. This response appears to be the effect of the chain link fencing and other surface metallic objects.

The results of the EM31 IP evaluation are illustrated in Figure 3c using both contour lines and a color gradient image in parts per thousand (ppt). The cool colors (blue) represent lower values, whereas the warm colors (red/pink) represent higher values. The results of the IP data revealed a very subtle change in the central and southern portion of the study area. The scattered low

amplitude responses in the central and south portions of the site appear to correlate well with the area of concentrated high and low magnetic responses in the MAG data (Figure 3a). The exact cause and/or nature of this response is not known; however, could be related to landfilled materials. Additionally, there appears to be a concentrated area of high and low responses in the southern-most corner of the site. This anomalous area correlates well with the results of the MAG and EM31 QP data (Figure 3a and 3c). The exact cause and/or nature of this response is not known.

In conclusion, the results of the MAG and EM31 IP evaluations appear to correlate well. They reveal an anomalous area of high and low magnetic responses in the eastern portion of the site and could be related to shallow buried metallic objects and/or landfilled materials. As previously discussed, the results of the EM31 QP data display a distinct regional change in conductivity. The northern portion of the site contains an area of lower conductivity values that extends towards and gradually becomes more conductive near the southern portion of the study area. The cause and/or nature of this response is not known; however, it could be related to changes in soil conductivity and/or moisture content. Additionally, there appears to be an anomalous area in the southern-most corner of the site that is present in the MAG, QP, and IP results. The cause and/or nature of these responses are not known.

Our study utilized industry standard equipment (i.e. magnetic electromagnetic instruments) and was conducted in general accordance with current practice. It should be noted that the presence of existing structures and surface objects (i.e. fences, reinforced concrete parking stoppers, etc.) may have potentially limited the study. Where obstructions were present, subsurface data could not be collected. Moreover, EM/magnetic responses produced by metal surface objects and underground lines can potentially obscure subsurface features. Figure 2 present the general site conditions and some of the obstructions encountered.

6. LIMITATIONS

The field evaluation and geophysical analyses presented in this report have been conducted in general accordance with current practice and the standard of care exercised by consultants performing similar tasks in the project area. No warranty, express or implied, is made regarding the conclusions and opinions presented in this report. There is no evaluation detailed enough to reveal every subsurface condition. Variations may exist and conditions not observed or described in this report may be present. Uncertainties relative to subsurface conditions can be reduced through additional subsurface exploration.

This document is intended to be used only in its entirety. No portion of the document, by itself, is designed to completely represent any aspect of the project described herein. Atlas should be contacted if the reader requires additional information or has questions regarding the content, interpretations presented, or completeness of this document. This report is intended exclusively for use by the client. Any use or reuse of the findings, conclusions, and/or recommendations of this report by parties other than the client is undertaken at said parties' sole risk.

7. SELECTED REFERENCES

Breiner, S., 1999, Applications Manual for Portable Magnetometers: Geometrics, Inc.

Burger, H.R., Sheehan, A.F., and Jones, C.H., 2006, Introduction to Applied Geophysics; Exploring the Shallow Subsurface, W.W. Norton & Company, Inc.

Geometrics, Inc., 2017, Magmap 2017: Version 5.04.

Golden Software, Inc., 2002, Surfer, Surface Mapping System: Version 8.00.

Jackson School of Geosciences, 2012, University of Texas at Austin, Some Useful Numbers on the Engineering Properties of Materials (Geologic and Otherwise).

Mooney, H.M., 1976, Handbook of Engineering Geophysics, dated February.

Telford, W.M., Geldart, L.P., Sheriff, R.E., and Keys, D.A., 1976, Applied Geophysics, Cambridge University Press.

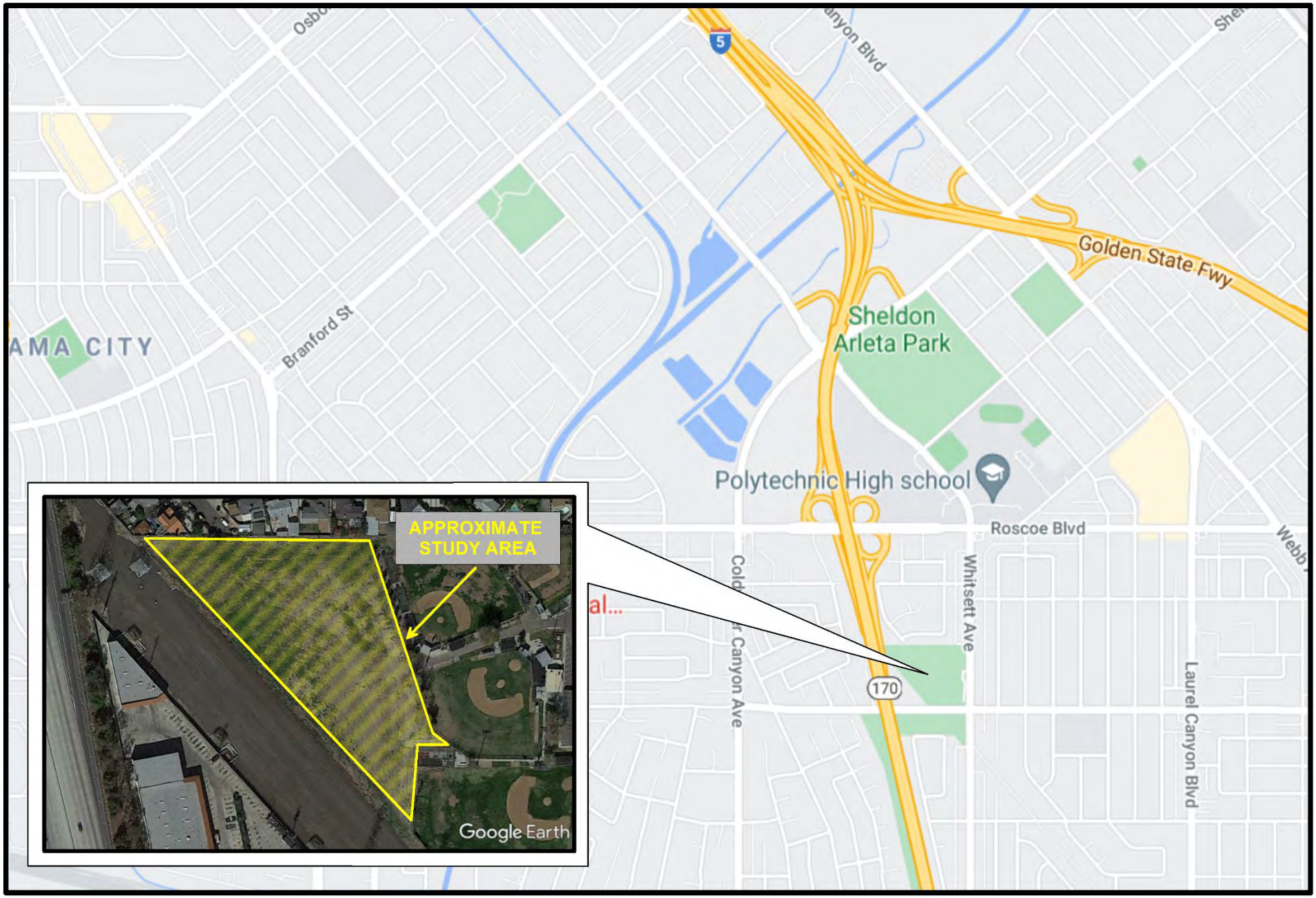

SITE LOCATION MAP	N	Strathern Park North North Hollywood, California	ATLAS
		Project No.: 121162SWG / Date: 06/21	Figure 1

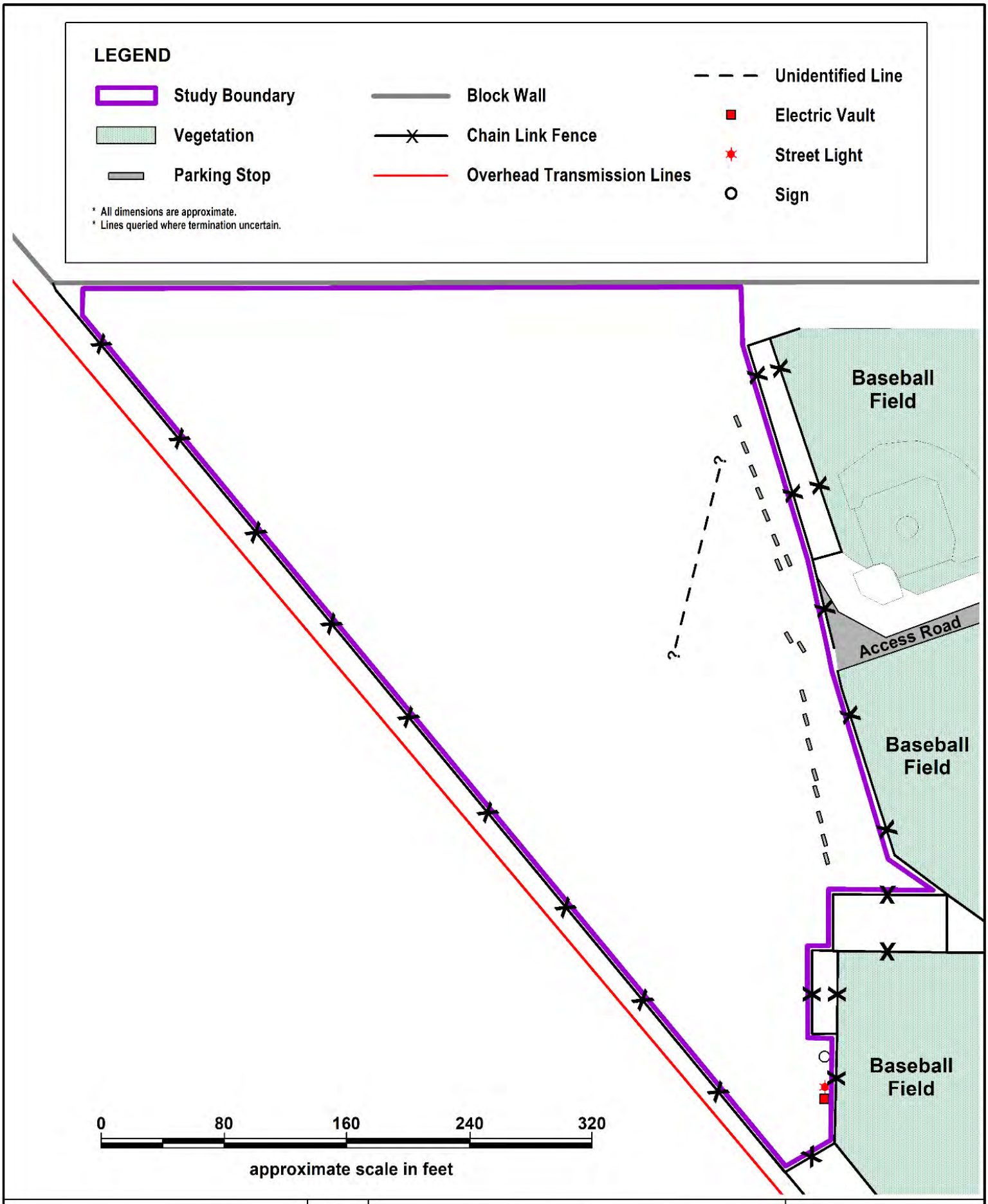

SITE MAP

N

Strathern Park North
North Hollywood, California

Project No.: 121162SWG

Date: 06/21

ATLAS

Figure 2

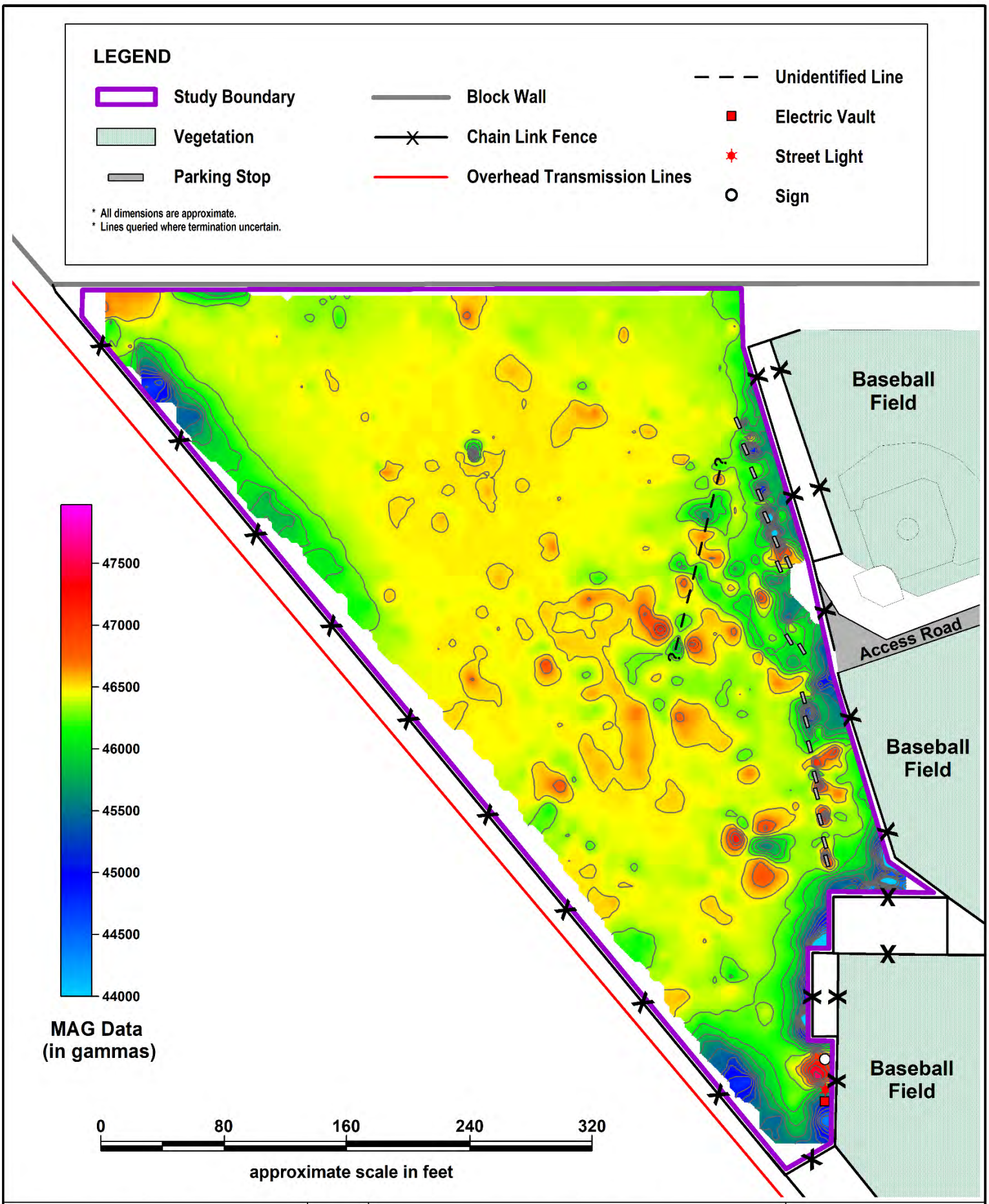

SITE DATA MAP

MAG Data CI = 200 gammas

N

Strathern Park North
North Hollywood, California

Project No.: 121162SWG | Date: 06/21

ATLAS

Figure 3a

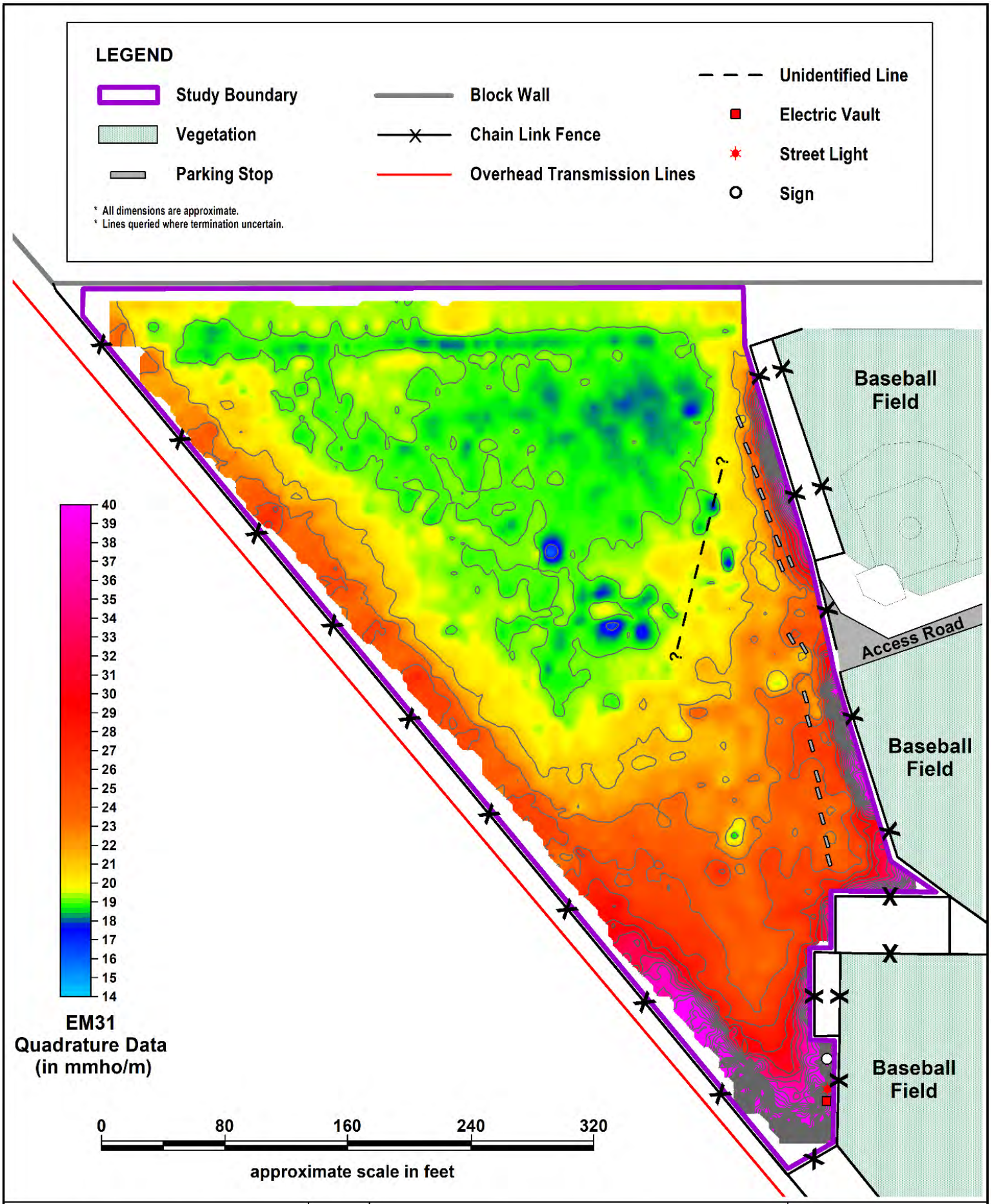

SITE DATA MAP
EM31 Quadrature Data
CI = 2 mmho/m

N

Strathern Park North
North Hollywood, California

Project No.: 121162SWG | Date: 06/21

ATLAS

Figure 3b

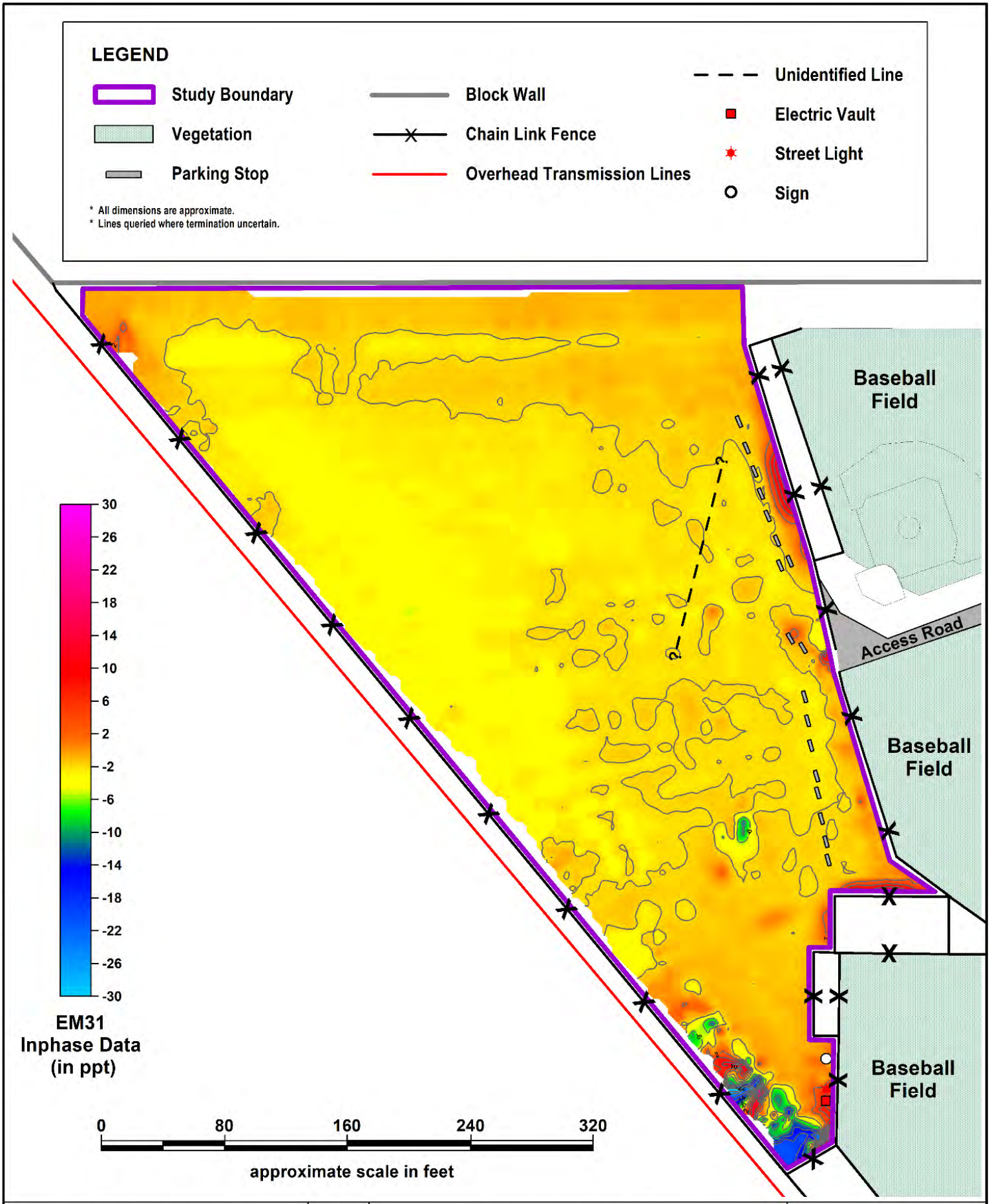

SITE DATA MAP
EM31 Inphase Data
CI = 4 ppt

N

Strathern Park North
North Hollywood, California

Project No.: 121162SWG | Date: 06/21

ATLAS

Figure 3c

APPENDIX D

Test Pit Logs and Photographs – April 2021

Ninyo & Moore

TEST PIT LOG

STRATHERN PARK
NORTH HOLLYWOOD, CALIFORNIA

PROJECT NO.	DATE
211294007	7/21

DATE EXCAVATED 4/27/21 TEST PIT NO. TP1

GROUND ELEVATION ~810' ± (MSL) LOGGED BY BAB

METHOD OF EXCAVATION Trackhoe Excavator

LOCATION See Figure 4

DESCRIPTION / INTERPRETATION

① FILL:
Light to medium gray and brown, dry to moist, silty, clayey fine to very coarse SAND; with gravels and cobbles.

② ALLUVIUM:
Gray to gray brown, moist, SAND; with gravels and cobbles; layered and laminated.

NOTES

Total Depth = 7.5 feet.
Groundwater not encountered during excavation.
Excavation backfilled on 04/27/21.

NOTES:
-Waste not observed.

SE N55°W NW

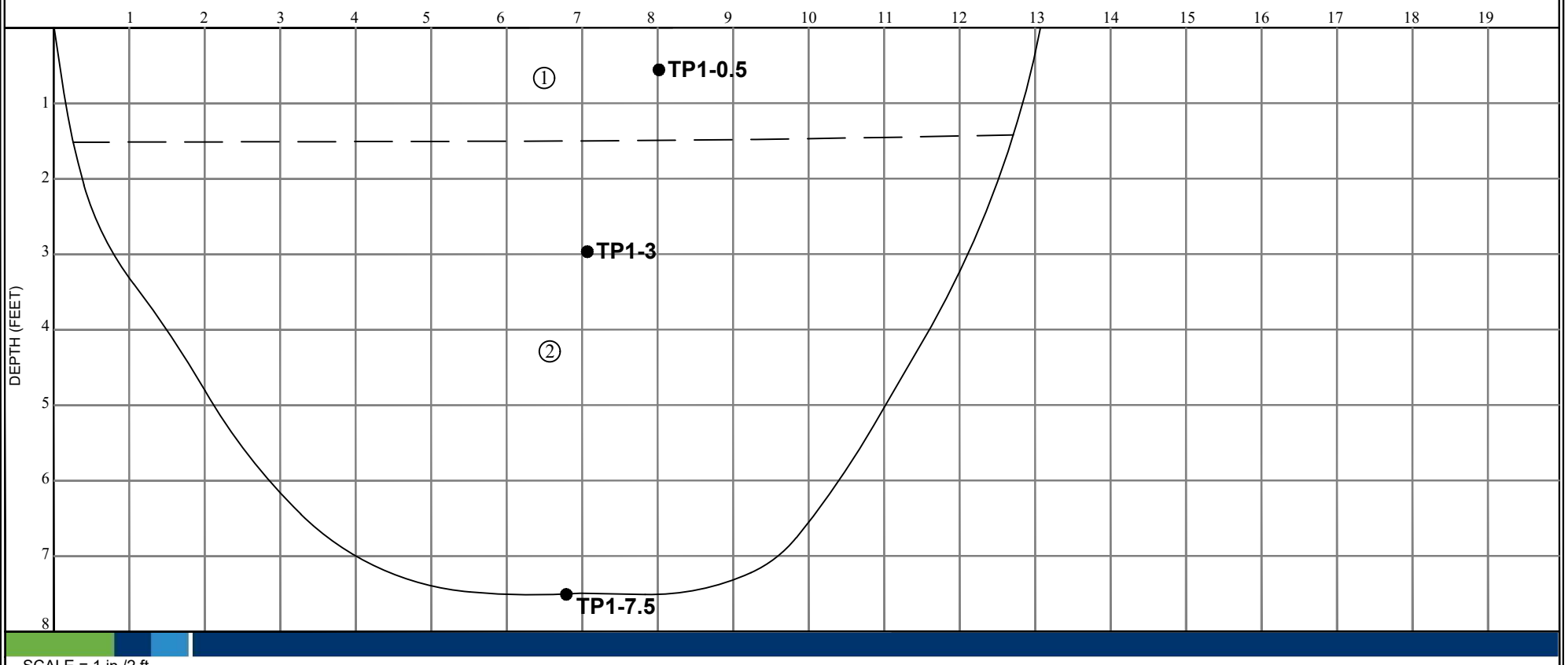

SCALE = 1 in./2 ft.

FIGURE A-1

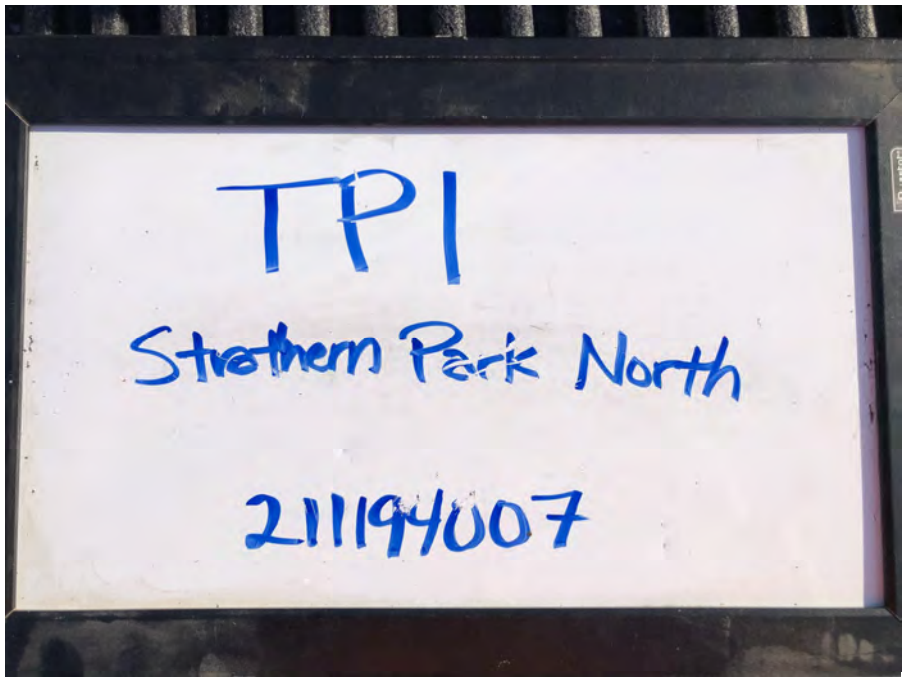
TP1
Strathern Park North
21119A007


TP1
Strathern Park North
21119A007

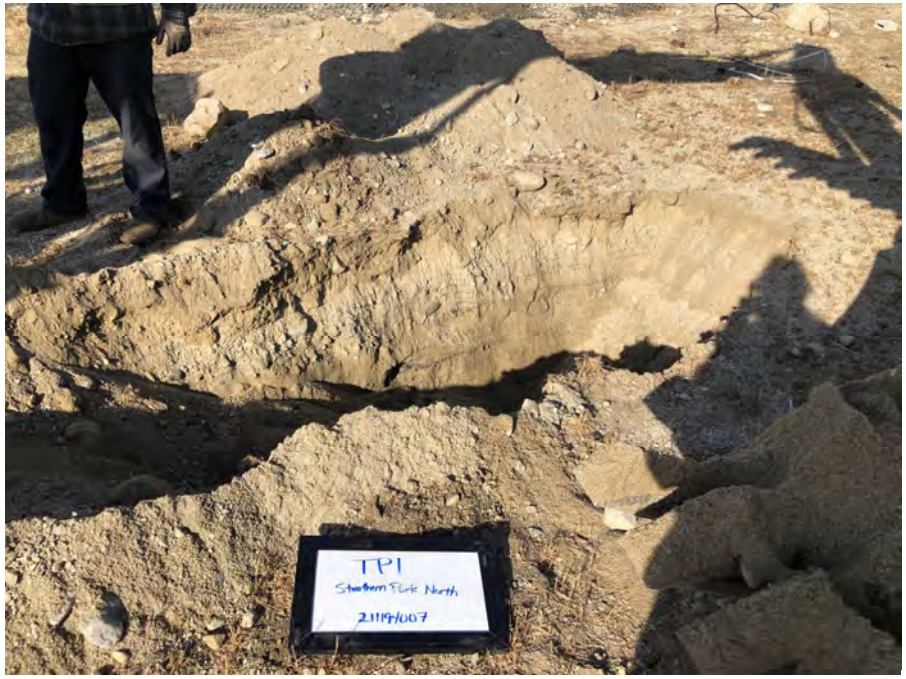
TP1
Strathern Park North
21119A007


TP1
Strathern Park North
21119A007

TP1









TP1


TP1
Southern Park North
211194007




TP1
Southern Park North
211194007



Ninyo & Moore

TEST PIT LOG

STRATHERN PARK
NORTH HOLLYWOOD, CALIFORNIA

PROJECT NO.	DATE
211294007	7/21

DATE EXCAVATED 4/27/21 TEST PIT NO. TP2

GROUND ELEVATION ~810' ± (MSL) LOGGED BY BAB

METHOD OF EXCAVATION Trackhoe Excavator

LOCATION See Figure 4

DESCRIPTION / INTERPRETATION

① FILL:
Dark brown, dry to moist, fine sandy, clayey SILT.

② FILL + MINOR WASTE:
Brownish yellowish red, moist, clayey silt SAND; with minor amounts of wastes, estimated at less than 1 percent, consisting primarily of occasional concrete rubble and brick fragments.

③ ALLUVIUM:
Light gray, moist, SAND; with gravels and cobbles up to approximately 6 inches in diameter; interbedded/laminated.

NOTES

Total Depth = 7.5 feet.
Groundwater not encountered during excavation.
Excavation backfilled on 04/27/21.

NOTES:
-Minor amounts of waste, estimated at approximately less than 1 percent

NE N54°E SW

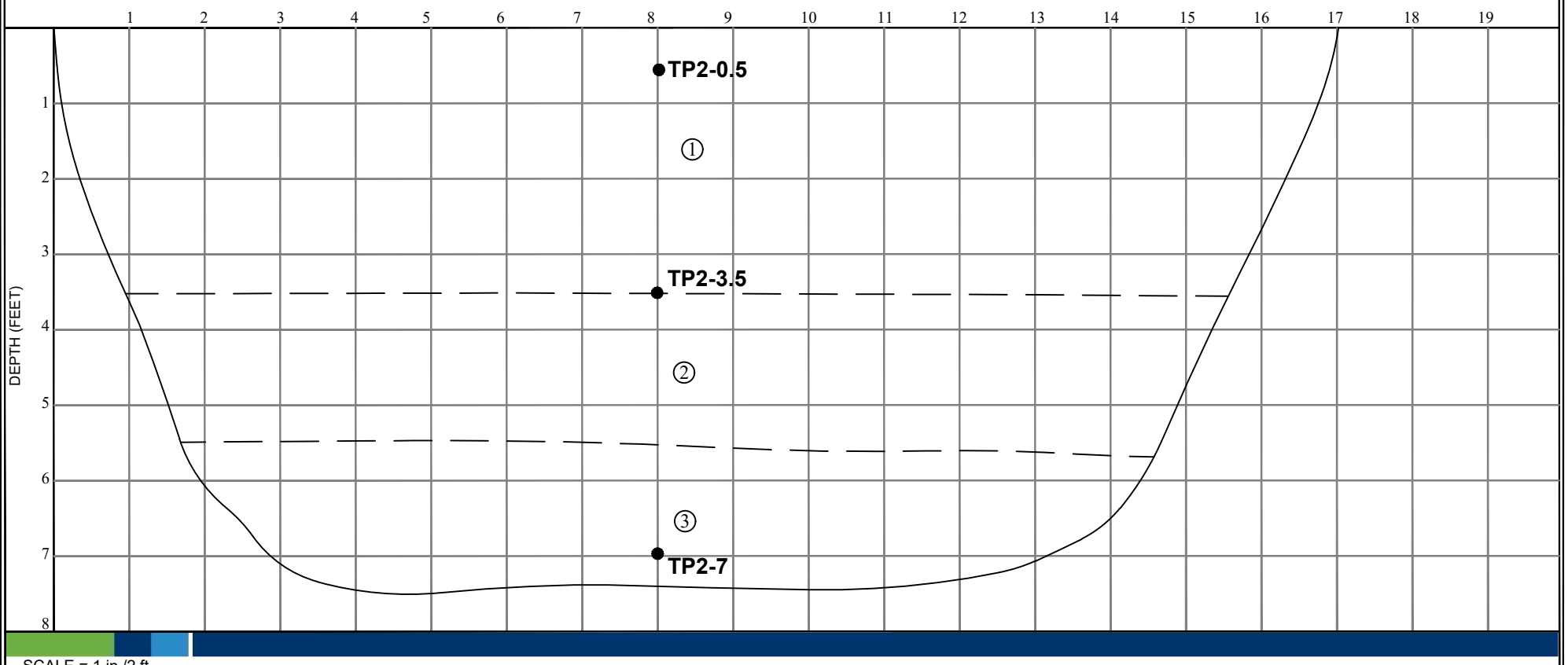

SCALE = 1 in./2 ft.

FIGURE A-2

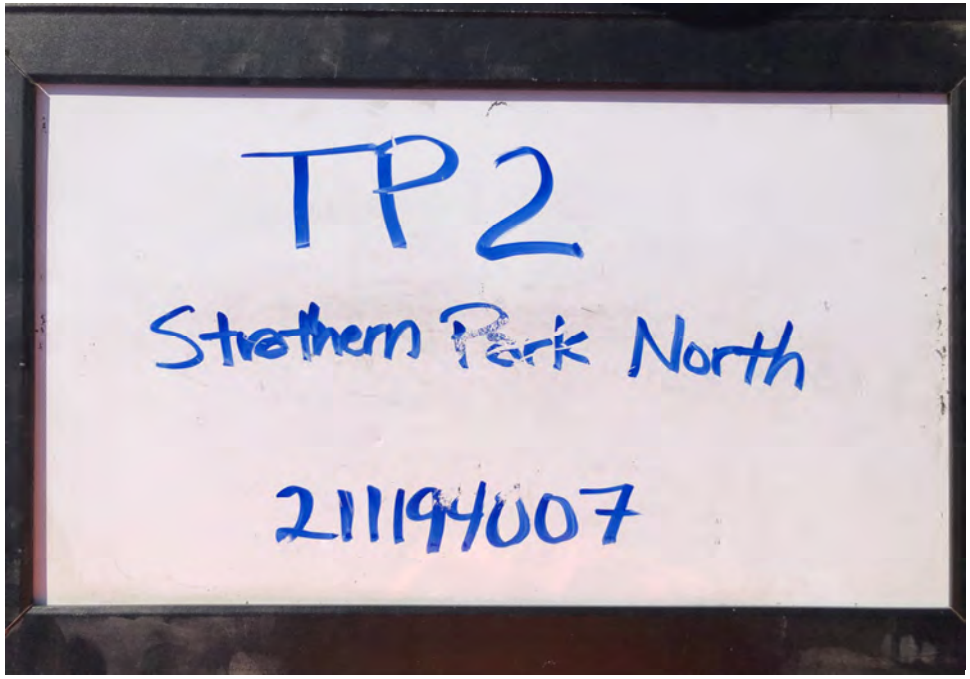
TP2
Strathern Park North
21119400 7


Altec






TP2
Strathern Park North
21119/007


TP2
Strathern Park North
21119/007


TP2
Strathern Park North
21119/007



Ninyo & Moore

TEST PIT LOG

STRATHERN PARK
NORTH HOLLYWOOD, CALIFORNIA

PROJECT NO.	DATE
211294007	7/21

DATE EXCAVATED 4/27/21 TEST PIT NO. TP3

GROUND ELEVATION ~810' ± (MSL) LOGGED BY BAB

METHOD OF EXCAVATION Trackhoe Excavator

LOCATION See Figure 4

DESCRIPTION / INTERPRETATION

① FILL:
Light brown, dry, clayey silty SAND becomes dark brown, moist, fine sandy silty CLAY.

② FILL + WASTE:
Brownish yellowish red, clayey silty SAND; with some gravels; with wastes, estimated at approximately 30 to 40 percent consisting primarily of concrete rubble, concrete slabs, asphalt; lesser painted concrete, occasional plastic, and metal can.

③ ALLUVIUM:
Light gray, moist, SAND; with gravels and cobbles subrounded to subangular.

NOTES

Total Depth = 7.5 feet.
Groundwater not encountered during excavation.
Excavation backfilled on 04/27/21.

NE N45°E SW

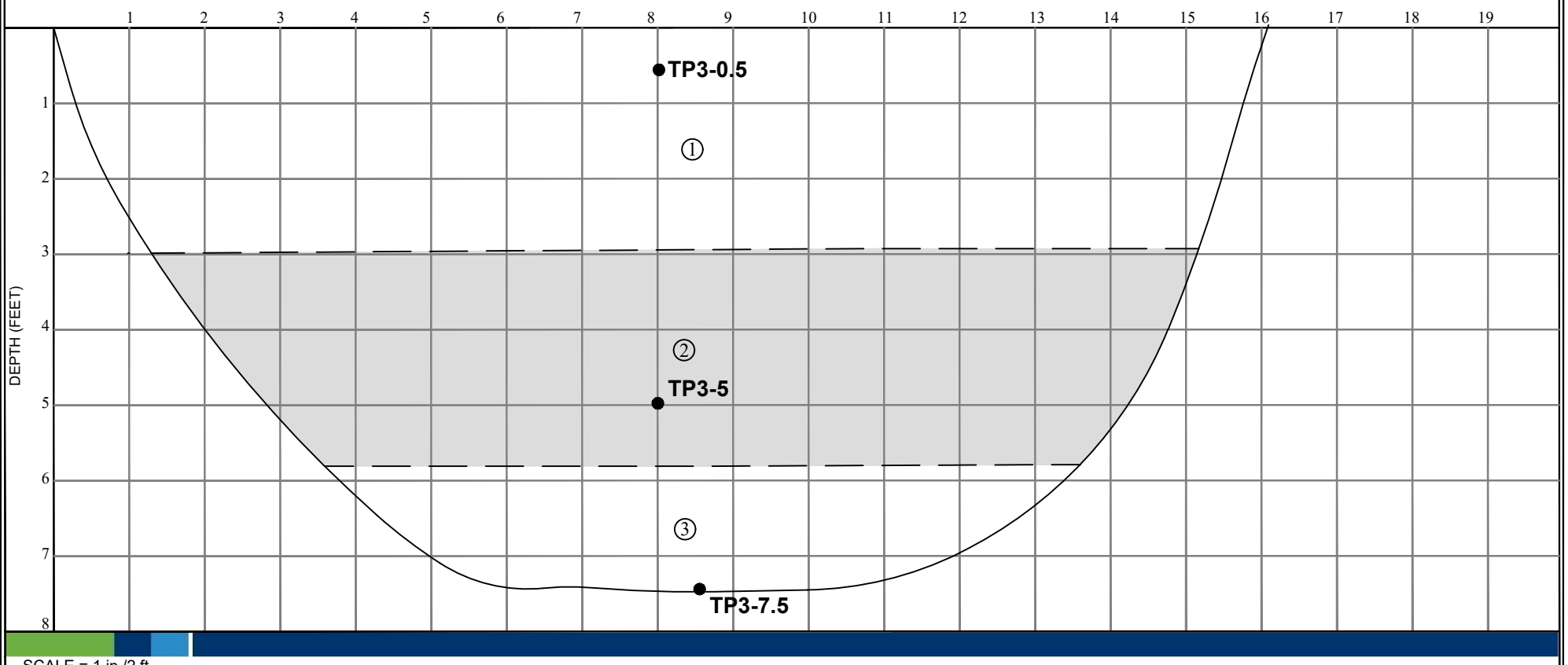

FIGURE A-3

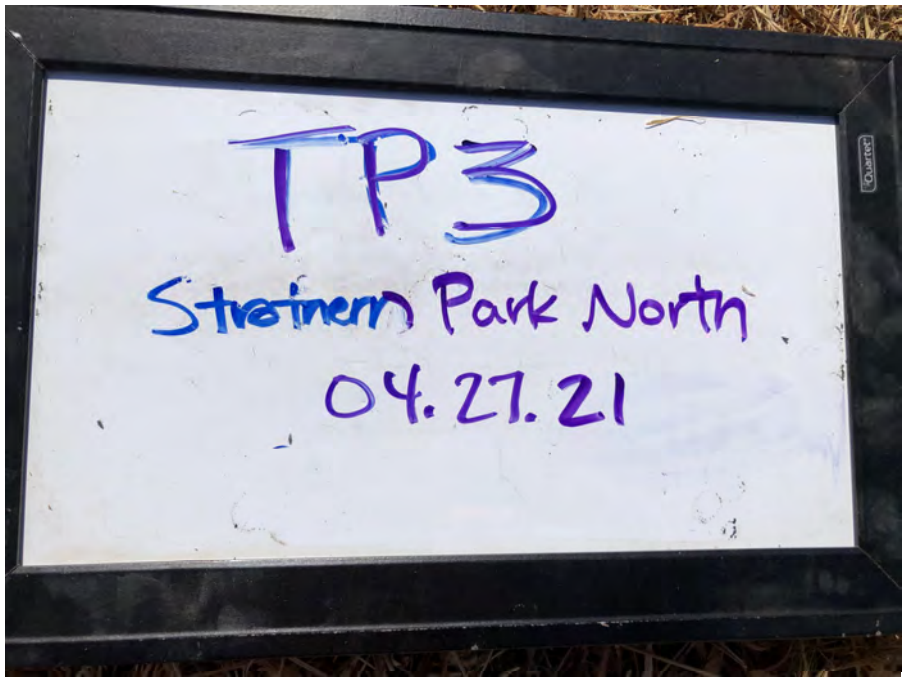
TP3
Strainern Park North
04.27.21







TP3


TP3
Shulman Park North
04.27.21


TP3


TP3
Shulman Park North
04.27.21


TP3

TP3












TP3
Swenson Park North
04.27.21




TP3
Swenson Park North
04.27.21


TP3

Ninyo & Moore

TEST PIT LOG

STRATHERN PARK
NORTH HOLLYWOOD, CALIFORNIA

PROJECT NO.	DATE
211294007	7/21

DATE EXCAVATED 4/27/21 TEST PIT NO. TP4

GROUND ELEVATION ~810' ± (MSL) LOGGED BY BAB

METHOD OF EXCAVATION Trackhoe Excavator

LOCATION See Figure 4

DESCRIPTION / INTERPRETATION

① FILL:
Light brown, dry, clayey silty SAND; with some gravels; cobbles; subrounded to subangular up to approximately 4 to 5 inches in size.

② Light brownish yellowish red, moist SAND; with gravels and cobbles; one piece of plastic.

③ ALLUVIUM:
Grayish brown, moist, SAND; with gravels and cobbles.

NOTES

Total Depth = 8.5 feet.
Groundwater not encountered during excavation.
Excavation backfilled on 04/27/21.

NOTES:
-Waste not observed except for one piece of plastic.

NE N40°E SW

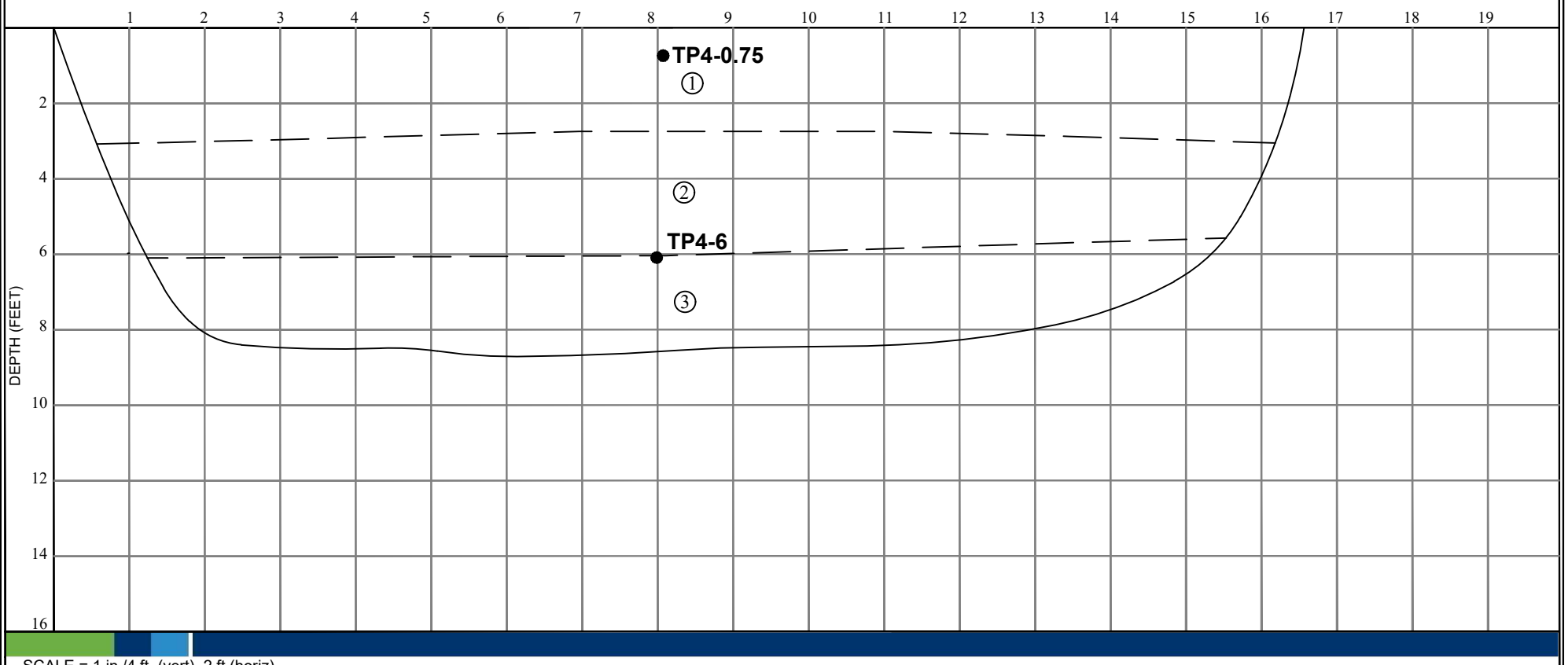

SCALE = 1 in./4 ft. (vert), 2 ft (horiz).

FIGURE A-4

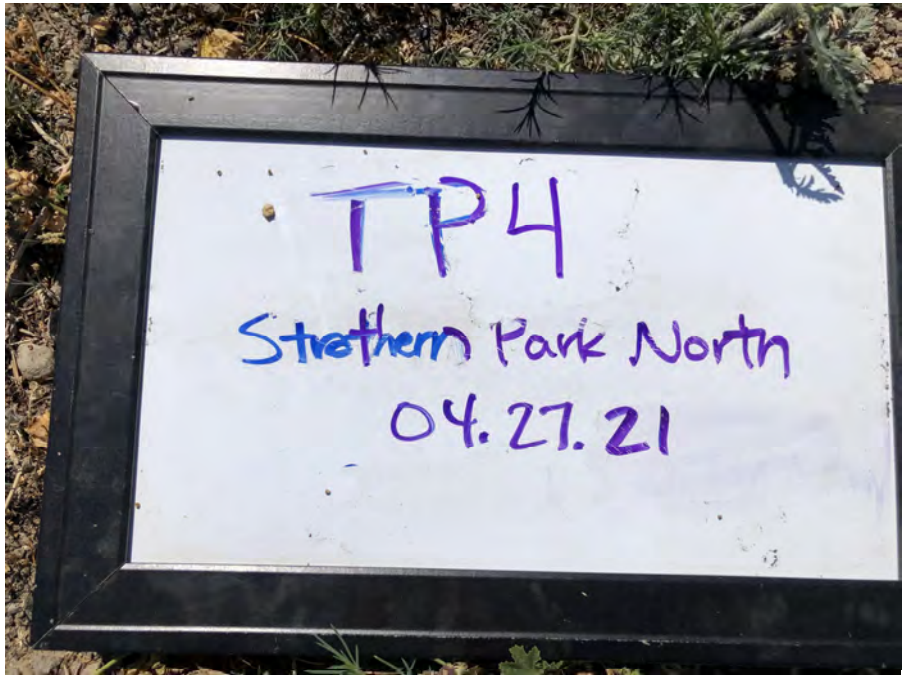
TP4
Strathern Park North
04.27.21





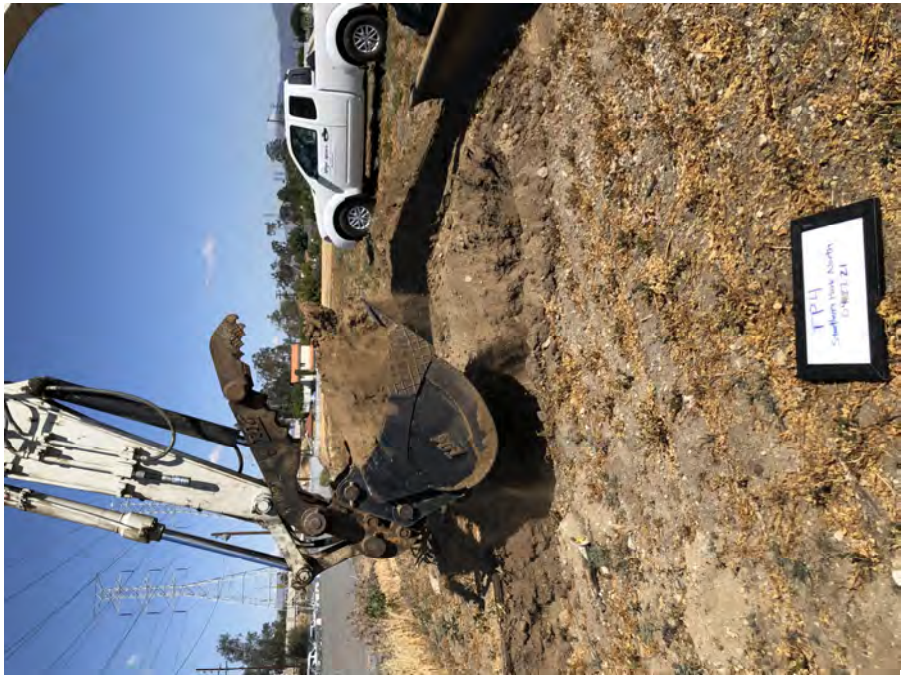

TP4










TP4
Strathern Park North
04.27.21




TP4
Strathern Park North
04.27.21



Ninyo & Moore

TEST PIT LOG

STRATHERN PARK
NORTH HOLLYWOOD, CALIFORNIA

PROJECT NO.	DATE
211294007	7/21

DATE EXCAVATED 4/27/21 TEST PIT NO. TP5

GROUND ELEVATION ~810' ± (MSL) LOGGED BY BAB

METHOD OF EXCAVATION Trackhoe Excavator

LOCATION See Figure 4

DESCRIPTION / INTERPRETATION

① FILL + MINOR WASTE:
Light brown to brown dry, clayey silty SAND; with gravels and cobbles; with minor amounts of wastes consisting primarily of concrete, metal stake; metal pipe within upper 6 inches.

② FILL + MINOR WASTE:
Brown, moist, silty SAND; with gravels and cobbles; with wastes, estimated at approximately 1 to 3 percent, consisting primarily of concrete; with large angular/subangular pieces of rock.

③ ALLUVIUM:
Gray, moist, SAND; with gravels and cobbles.

NOTES

Total Depth = 7 feet.
Groundwater not encountered during excavation.
Excavation backfilled on 04/27/21.

NOTES:
-Minor waste in the upper fill

SE N25°W NW

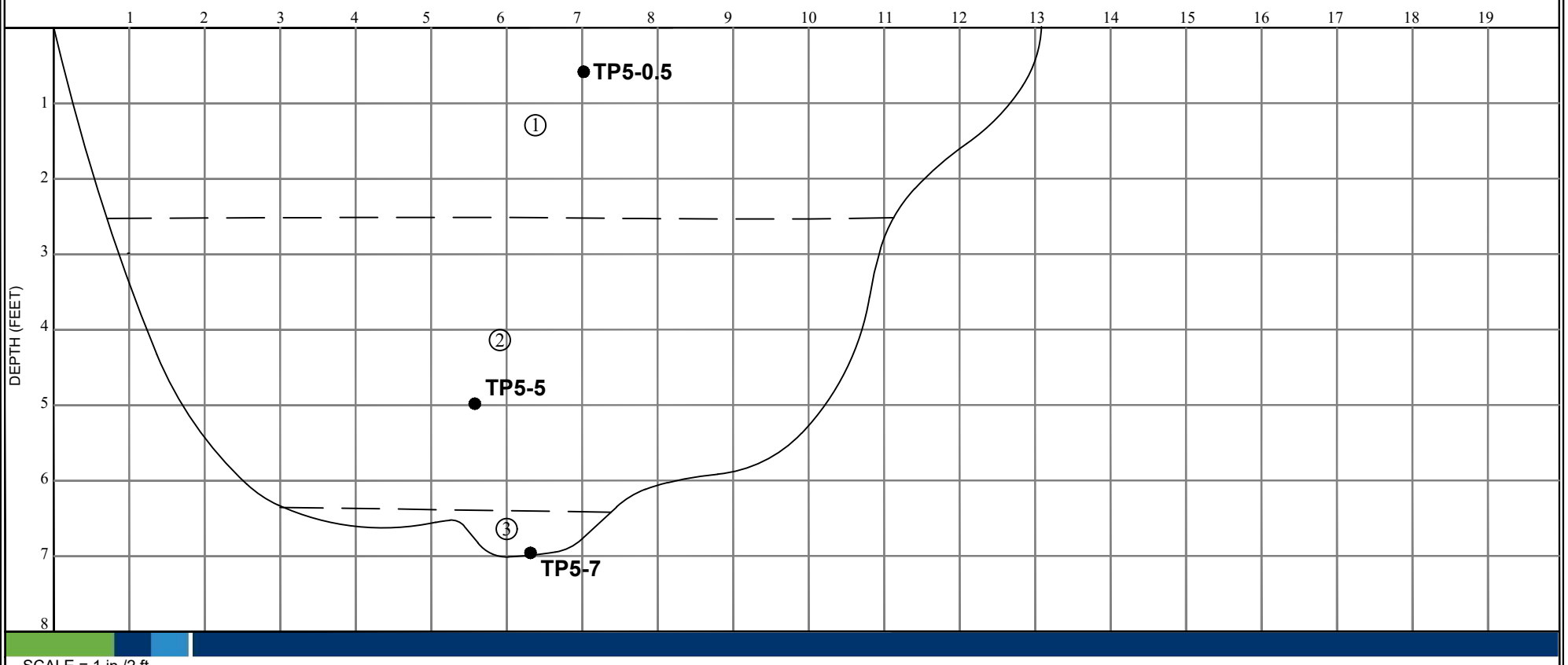

FIGURE A-5

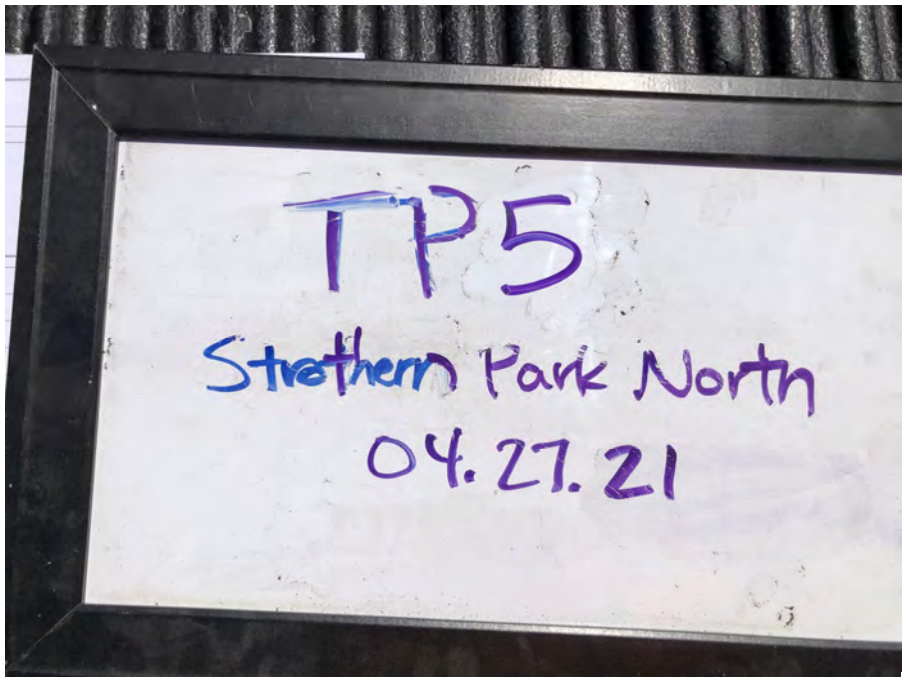
TP5
Strathern Park North
04.27.21







TP5









TP5









TP5


TP5


TP5
Shelburn Park North
04.27.21


TP5
Shelburn Park North
04.27.21






TP5
Stratton Park North
04.27.21

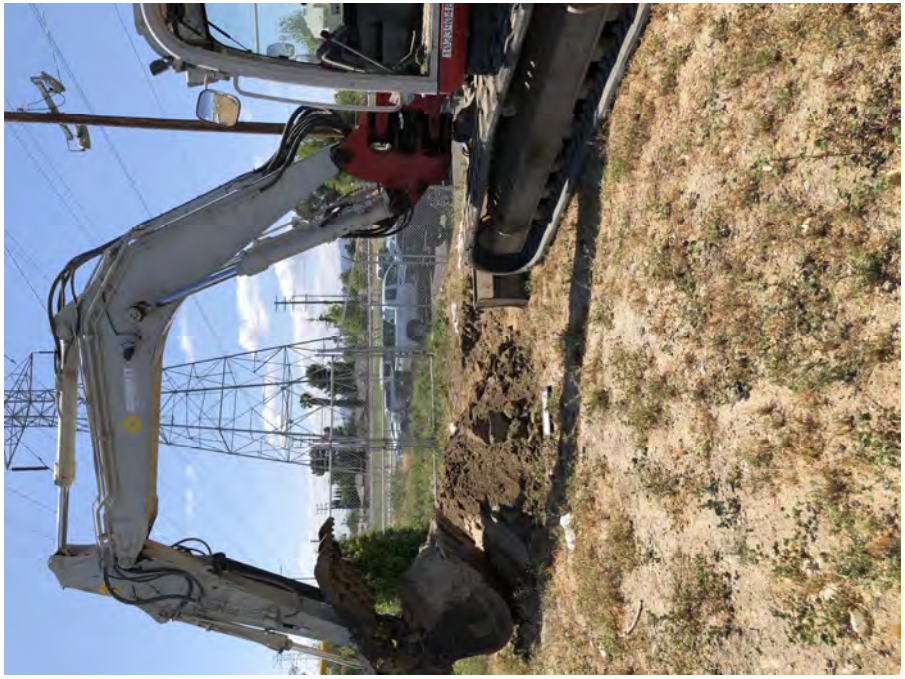

Ninyo & Moore

TEST PIT LOG

STRATHERN PARK
NORTH HOLLYWOOD, CALIFORNIA

PROJECT NO.	DATE
211294007	7/21

DATE EXCAVATED 4/27/21 TEST PIT NO. TP6

GROUND ELEVATION ~810' ± (MSL) LOGGED BY BAB

METHOD OF EXCAVATION Trackhoe Excavator

LOCATION See Figure 4

DESCRIPTION / INTERPRETATION

① FILL:
Brown, moist, clayey silty SAND

② FILL + WASTE:
Brown, moist, clayey silty SAND; with wastes, estimated at approximately 40 to 45 percent, consisting primarily of concrete rubble, voltage sign.

③ ALLUVIUM:
Gray to gray brown, moist, SAND; with gravels and cobbles.

NOTES

Total Depth = 7.5 feet.
Groundwater not encountered during excavation.
Excavation backfilled on 04/27/21.

NW N45°W SE

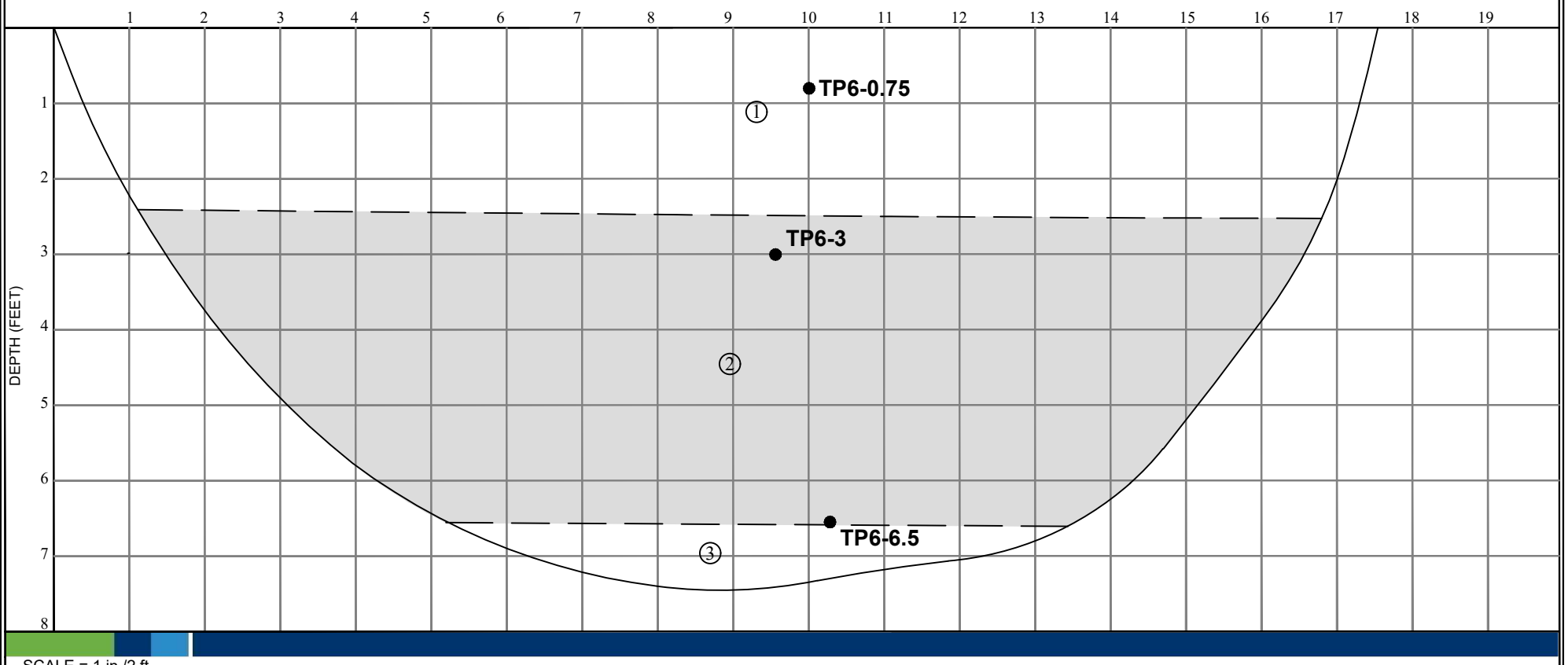

FIGURE A-6


TP6
Stratham Park North
04.27.21


TP6
Stratham Park North
04.27.21


TP6
Stratham Park North
04.27.21


TP6
Stratham Park North

TP6










TP6
Strathern Park North
04.27.21


TP6
Strathern Park North
04.27.21


TP6
Strathern Park North
04.27.21


TP6
Strathern Park North
04.27.21

TP6







Ninyo & Moore

TEST PIT LOG

STRATHERN PARK
NORTH HOLLYWOOD, CALIFORNIA

PROJECT NO.	DATE
211294007	7/21

DATE EXCAVATED 4/27/21 TEST PIT NO. TP7

GROUND ELEVATION ~810' ± (MSL) LOGGED BY BAB

METHOD OF EXCAVATION Trackhoe Excavator

LOCATION See Figure 4

DESCRIPTION / INTERPRETATION

① ROAD BASE:
Approximately 0.5 inch thick.

② FILL + MINOR WASTE:
Dark brown, moist, clayey silty SAND; with minor amounts of wastes, concrete.

③ FILL + BURNED WASTE:
Mottled black brown to brown, moist, clayey silty SAND; with burned wastes, estimated at approximately 75 percent consisting primarily of abundant broken glass, bricks, glass bottles, melted/fused glass, tire, metal wire.

④ ALLUVIUM:
Gray and brown gray, moist SAND with gravels.

NOTES

Total Depth = 7.5 feet.
Groundwater not encountered during excavation.
Excavation backfilled on 04/27/21.

NOTES:

Test pit was the location of primarily burned wastes that appear to continue easterly into the baseball fields. Burned wastes appear to underlie other minor amounts of waste?

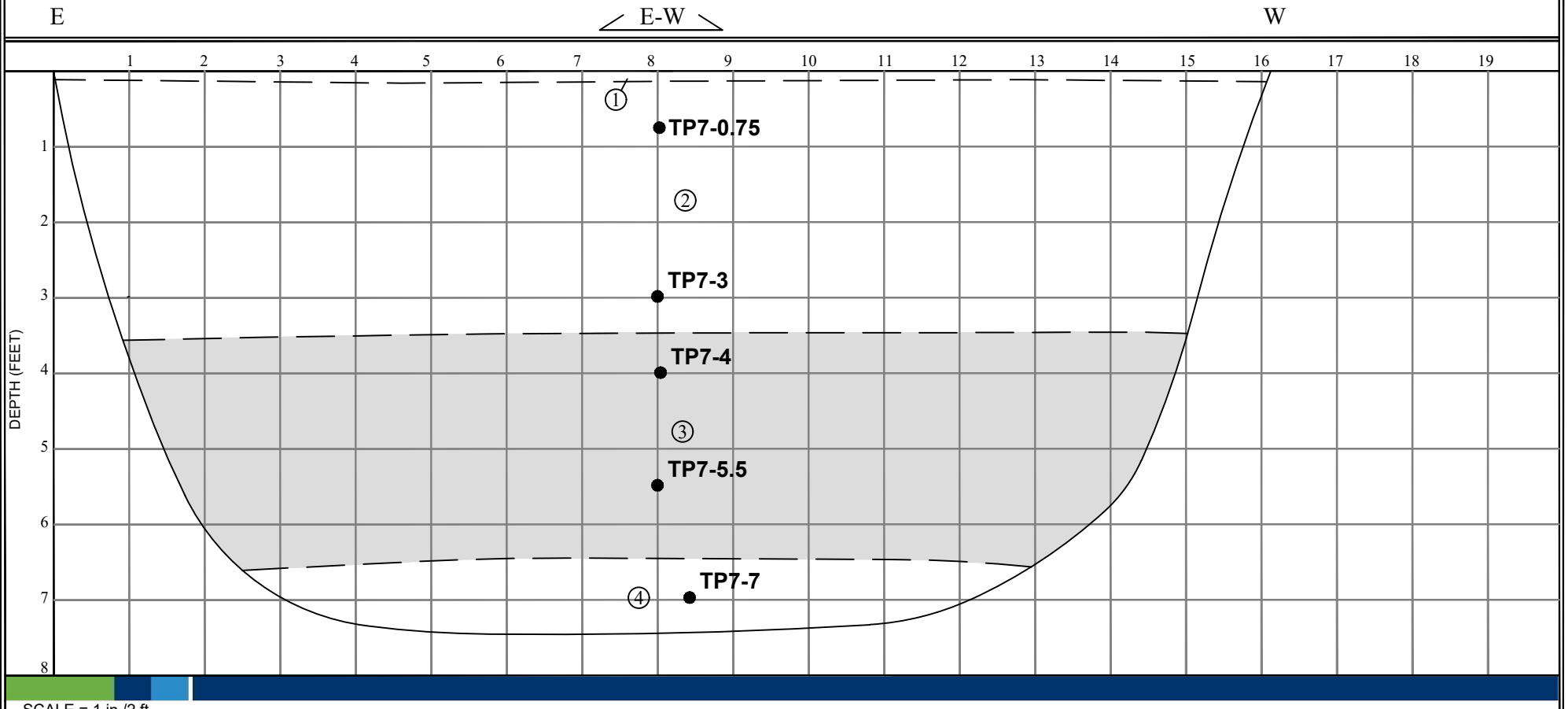

FIGURE A-7


TP7
Strathern Park North
04.27.21




TP7
Strathern Park North
04.27.21


TP7
Strathern Park North
04.27.21


TP7
Southern Park North
04.27.21


TP7
Southern Park North
04.27.21


TP7
Southern Park North
04.27.21


TP7
Southern Park North
04.27.21






TP7
Shotton Pond North
04.21.21


TP7




TP7
Stratham Park North
04.27.21


TP7


TP7
Stratham Park North
04.27.21

TP7









TP7


TP7
Stephens Park North
04.27.21


TP7
Stephens Park North
04.27.21





TP7





Ninyo & Moore

TEST PIT LOG

STRATHERN PARK
NORTH HOLLYWOOD, CALIFORNIA

PROJECT NO.	DATE
211294007	7/21

DATE EXCAVATED 4/27/21 TEST PIT NO. TP8

GROUND ELEVATION ~810' ± (MSL) LOGGED BY BAB

METHOD OF EXCAVATION Trackhoe Excavator

LOCATION See Figure 4

DESCRIPTION / INTERPRETATION

① FILL:
Medium brown to gray, dry to moist clayey silty SAND; with gravels.

② @ 2.5': Medium reddish brown; moist, clayey silty sand; some gravels.

③ ALLUVIUM:
Gray and brown gray, moist SAND; with gravels and cobbles

NOTES

Total Depth = 5.5 feet.
Groundwater not encountered during excavation.
Excavation backfilled on 04/27/21.

NOTES:
-Waste not observed.

SW N60°E NE

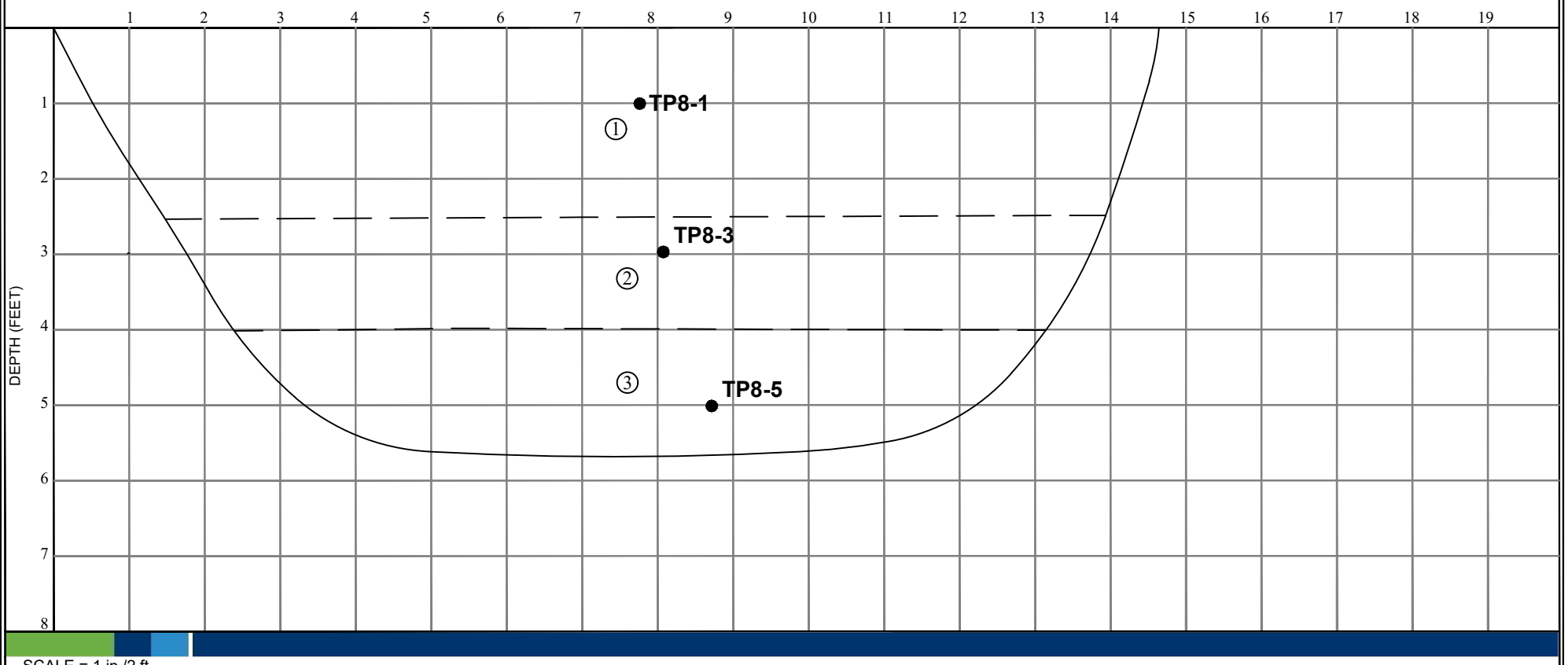

SCALE = 1 in./2 ft.

FIGURE A-8

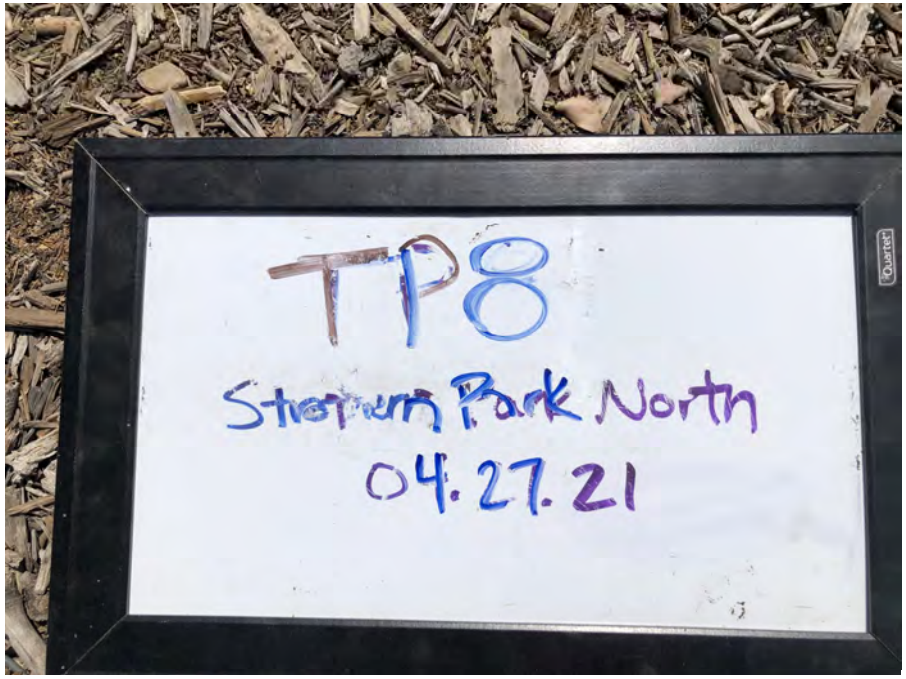
TP8
Sherburn Park North
04.27.21


TP8
Sherburn Park North
04.27.21


TP8
Sherburn Park North
04.27.21


TP8
Sherburn Park North
04.27.21




TP8
Sherwin Park North
04.27.21



Ninyo & Moore

TEST PIT LOG

STRATHERN PARK
NORTH HOLLYWOOD, CALIFORNIA

PROJECT NO.	DATE
211294007	7/21

DATE EXCAVATED 4/27/21 TEST PIT NO. TP9

GROUND ELEVATION ~810' ± (MSL) LOGGED BY BAB

METHOD OF EXCAVATION Trackhoe Excavator

LOCATION See Figure 4

DESCRIPTION / INTERPRETATION

① FILL:
Medium brown gray, dry to moist, clayey silty SAND; with gravels.

② FILL + WASTE:
Brownish reddish, moist clayey silty SAND; with wastes, estimated at approximately 25 to 35 percent, consisting primarily of concrete rubble, one piece of concrete is several feet in length, asphalt, bricks, plastic, rebar, rebar in concrete.

③ ALLUVIUM:
Gray to gray brown, moist, SAND; with gravels and cobbles.

NOTES

Total Depth = 6.5 feet.
Groundwater not encountered during excavation.
Excavation backfilled on 04/27/21.

SW N60°E NE

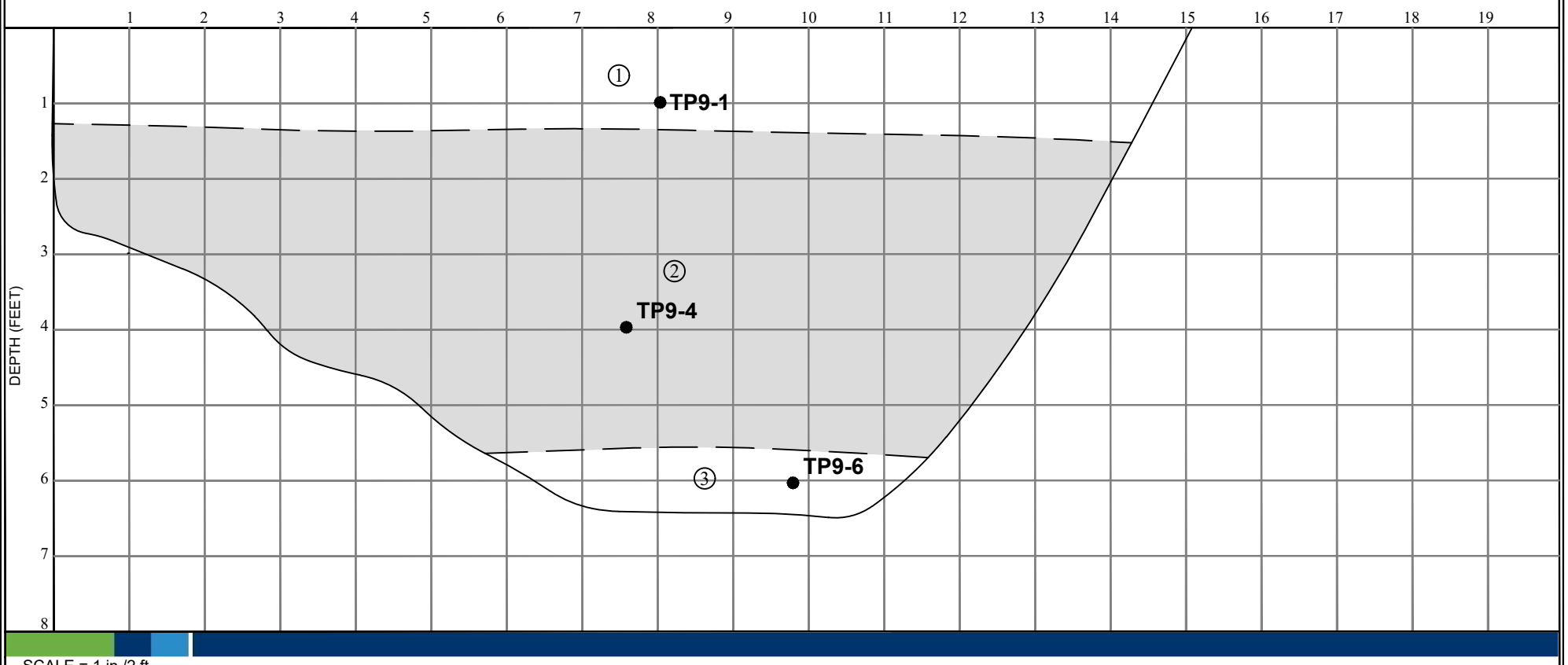

FIGURE A-9


TP9
Sherwin Park North
04.27.21


TP9
Sherwin Park North
04.27.21


TP9
Sherwin Park North
04.27.21


TP9
Sherwin Park North
04.27.21

TP9




TP9
Sherman Park North
04.27.21




TP9
Sherman Park North
04.27.21

TP9







Ninyo & Moore

TEST PIT LOG

STRATHERN PARK
NORTH HOLLYWOOD, CALIFORNIA

PROJECT NO.	DATE
211294007	7/21

DATE EXCAVATED 4/27/21 TEST PIT NO. TP10

GROUND ELEVATION ~810' ± (MSL) LOGGED BY BAB

METHOD OF EXCAVATION Trackhoe Excavator

LOCATION See Figure 4

DESCRIPTION / INTERPRETATION

① FILL;
Medium brown gray, dry to moist, clayey silty SAND; with gravels.

② FILL + WASTE+BURNED WASTE(?);
Medium brown, moist, clayey silty SAND; with wastes, estimated at approximately 35 to 40 percent, consisting primarily of concrete, asphalt, head lamp, metal, metal piping, broken bottles, broken glass, metal wire, and ashy soil at approximately 4 feet, hard plastic, metal pipe steel pipe, melted glass, charcoal.

③ ALLUVIUM:
Gray to gray brown, moist, SAND; with gravels and cobbles.

NOTES

Total Depth = 8 feet.
Groundwater not encountered during excavation.
Excavation backfilled on 04/27/21.

NOTES:
Burned wastes appear to underlie other waste?

SW N45°E NE

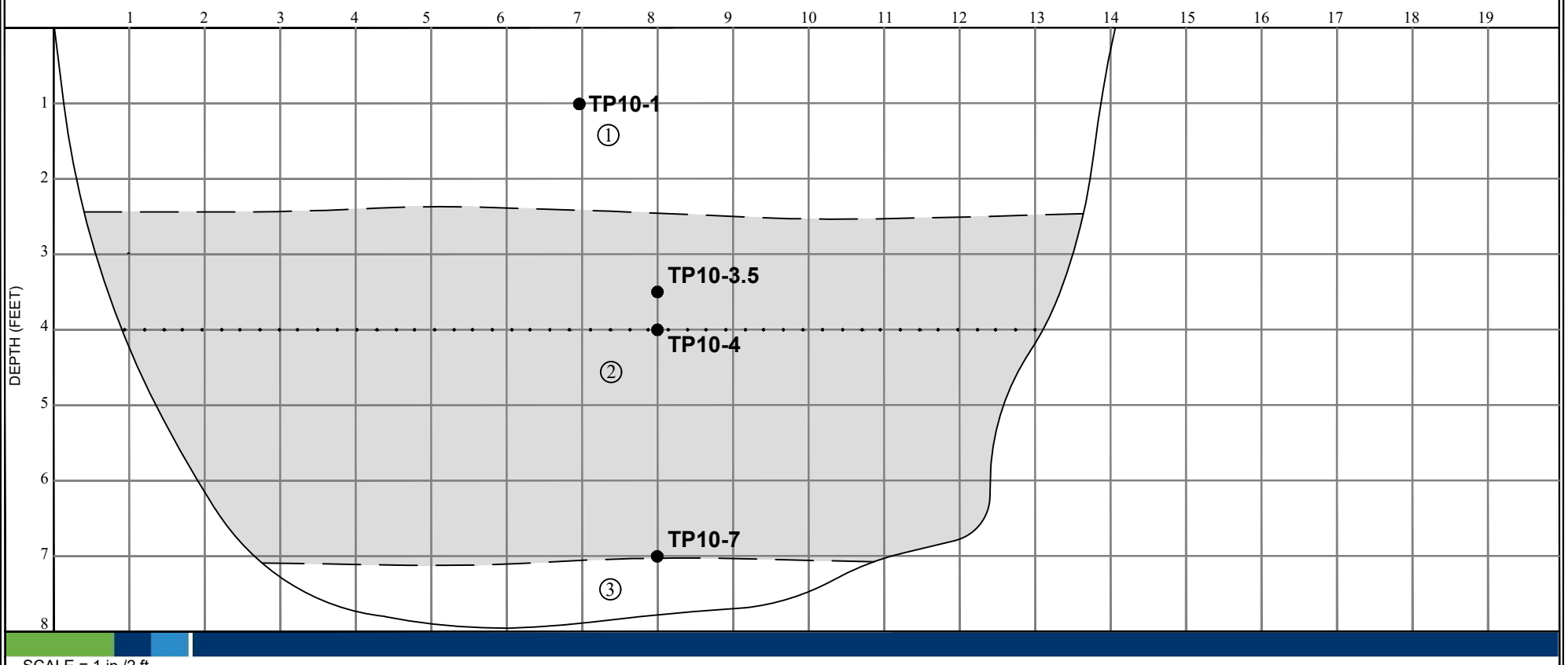

SCALE = 1 in./2 ft.

FIGURE A-10


TP10
Stetson Park North
04.27.21


TP10
Stetson Park North
04.27.21


TP10
Stetson Park North
04.27.21


TP10
Stetson Park North
04.27.21


TP10
Sherwin Park North
04.27.21






TP10
Sherwin Park North
04.27.21

TP10















Ninyo & Moore

TEST PIT LOG

STRATHERN PARK
NORTH HOLLYWOOD, CALIFORNIA

PROJECT NO.	DATE
211294007	7/21

DATE EXCAVATED 4/28/21 TEST PIT NO. TP11

GROUND ELEVATION ~810' ± (MSL) LOGGED BY BAB

METHOD OF EXCAVATION Trackhoe Excavator

LOCATION See Figure 4

DESCRIPTION / INTERPRETATION

① FILL:
Brownish, dry, clayey silty SAND; with broken glass and plastic wrapper.

② FILL + WASTE:
Brown, dry to moist, clayey silty SAND; with gravels and cobbles; with waste, estimated at approximately 50 to 60 percent, consisting primarily of asphalt, concrete rubble, bricks, tile, metal wire, tiles, painted concrete, occasional glass bottle, with rounded rock.

③ ALLUVIUM:
Gray, moist, SAND; with gravels and cobbles.

NOTES

Total Depth = 6.5 feet.
Groundwater not encountered during excavation.
Excavation backfilled on 04/28/21.

NW N45°W SE

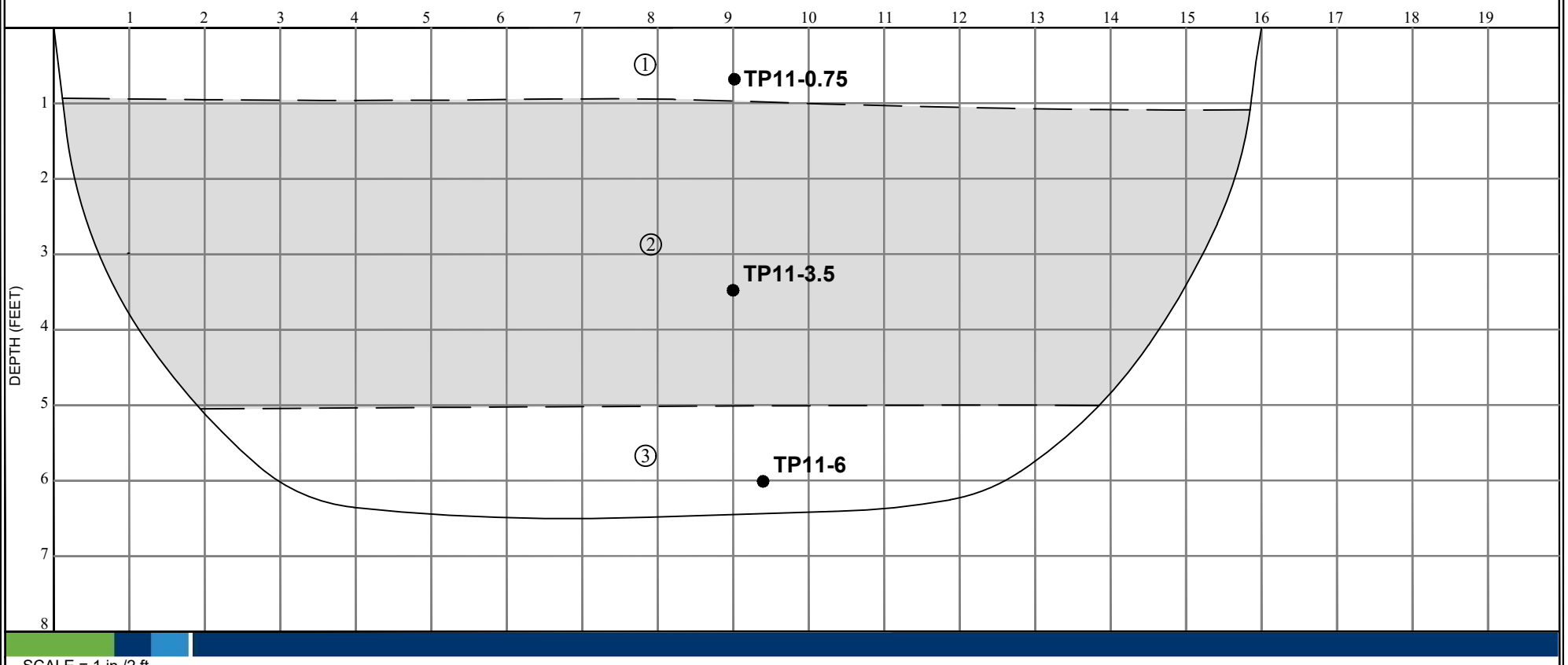

SCALE = 1 in./2 ft.

FIGURE A-11

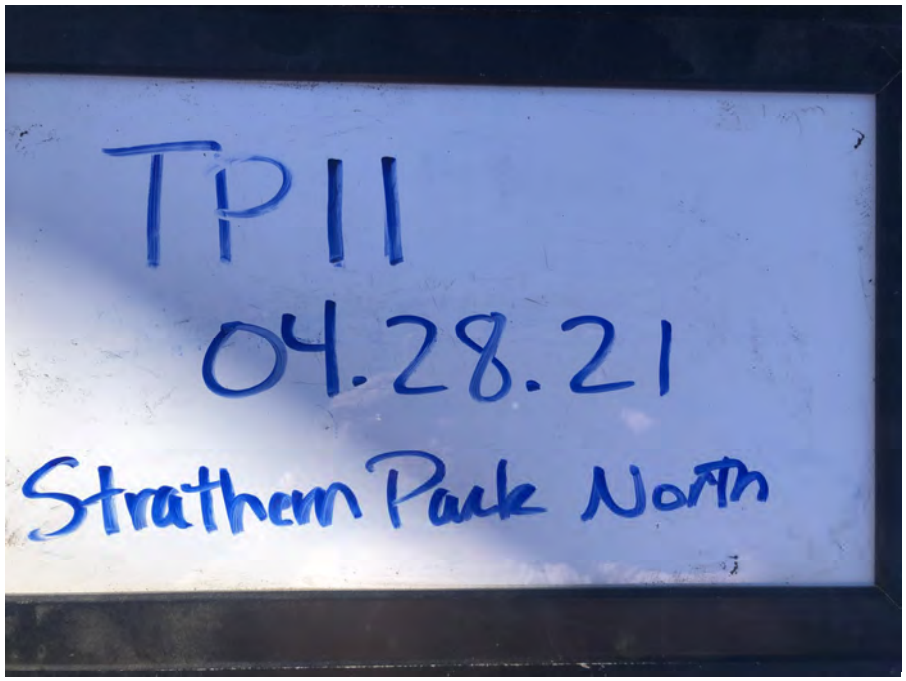
TP11
04.28.21
Strathern Park North


TP11
04.28.21
Strathern Park North


TP11
04.28.21
Strathern Park North



TP11












TP11
04.28.21

Ninyo & Moore

TEST PIT LOG

STRATHERN PARK
NORTH HOLLYWOOD, CALIFORNIA

PROJECT NO.	DATE
211294007	7/21

DATE EXCAVATED 4/28/21 TEST PIT NO. TP12

GROUND ELEVATION ~810' ± (MSL) LOGGED BY BAB

METHOD OF EXCAVATION Trackhoe Excavator

LOCATION See Figure 4

DESCRIPTION / INTERPRETATION

① FILL:
Brown, dry to moist, clayey silty SAND; with some gravels and cobbles; one piece of metal.

② ALLUVIUM:
Gray, moist, loose SAND; with gravels and cobbles subrounded to subangular.

NOTES

Total Depth = 4 feet.
Groundwater not encountered during excavation.
Excavation backfilled on 04/28/21.

NOTES:
-Waste not observed.

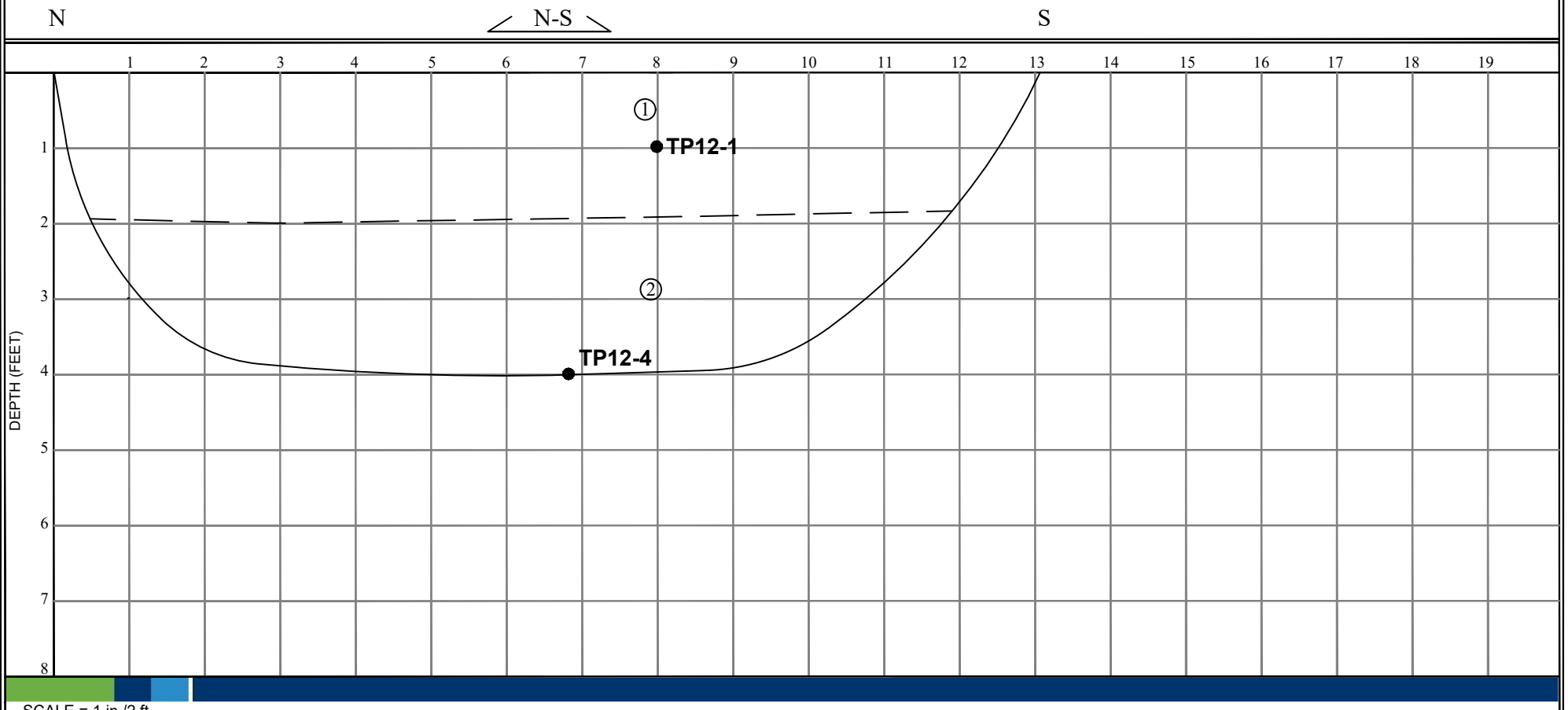

FIGURE A-12

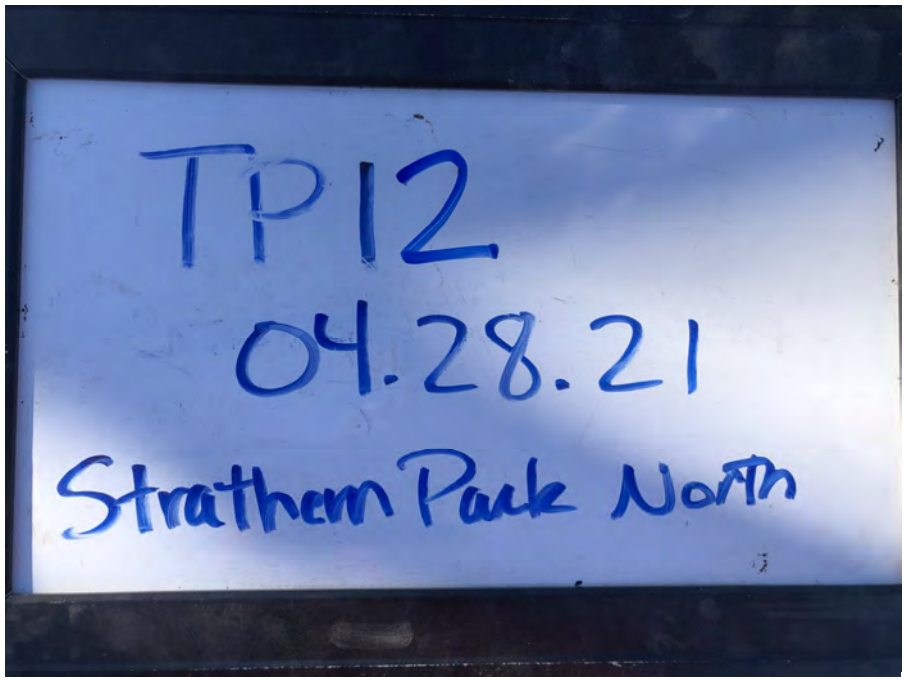
TP12
04.28.21
Strathern Park North




TP12
04.28.21
Strathern Park North


TP12
04.28.21
Strathern Park North




TP12
04.28.21
Strathern Park North

Ninyo & Moore

TEST PIT LOG

STRATHERN PARK
NORTH HOLLYWOOD, CALIFORNIA

PROJECT NO.	DATE
211294007	7/21

DATE EXCAVATED 4/28/21 TEST PIT NO. TP13

GROUND ELEVATION ~810' ± (MSL) LOGGED BY BAB

METHOD OF EXCAVATION Trackhoe Excavator

LOCATION See Figure 4

DESCRIPTION / INTERPRETATION

① FILL:
Brown, dry to moist, clayey silty SAND; with gravels and cobbles.

② ALLUVIUM:
Gray, moist, loose, SAND; with gravels and cobbles.

NOTES

Total Depth = 5 feet.
Groundwater not encountered during excavation.
Excavation backfilled on 04/28/21.

NOTES:
-Waste not observed.

NE ⟋ N28°E SW

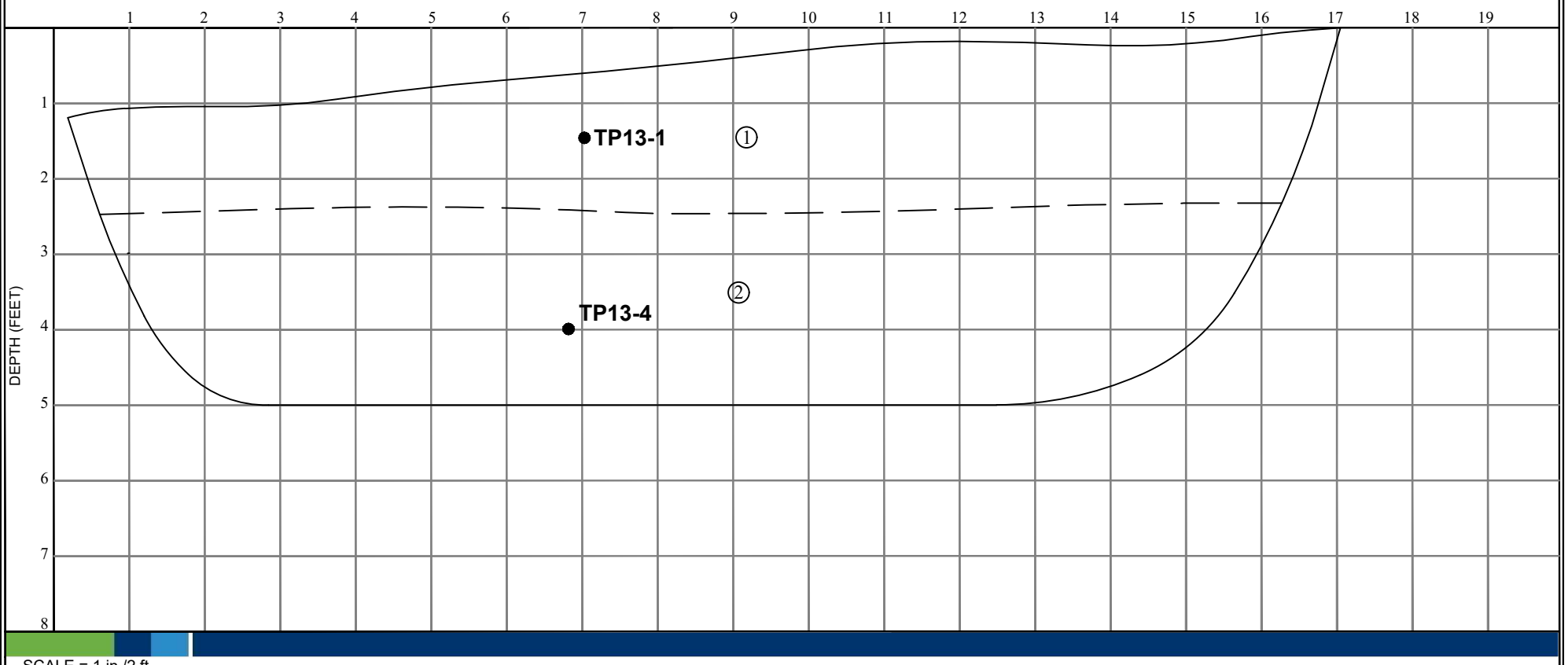

FIGURE A-13

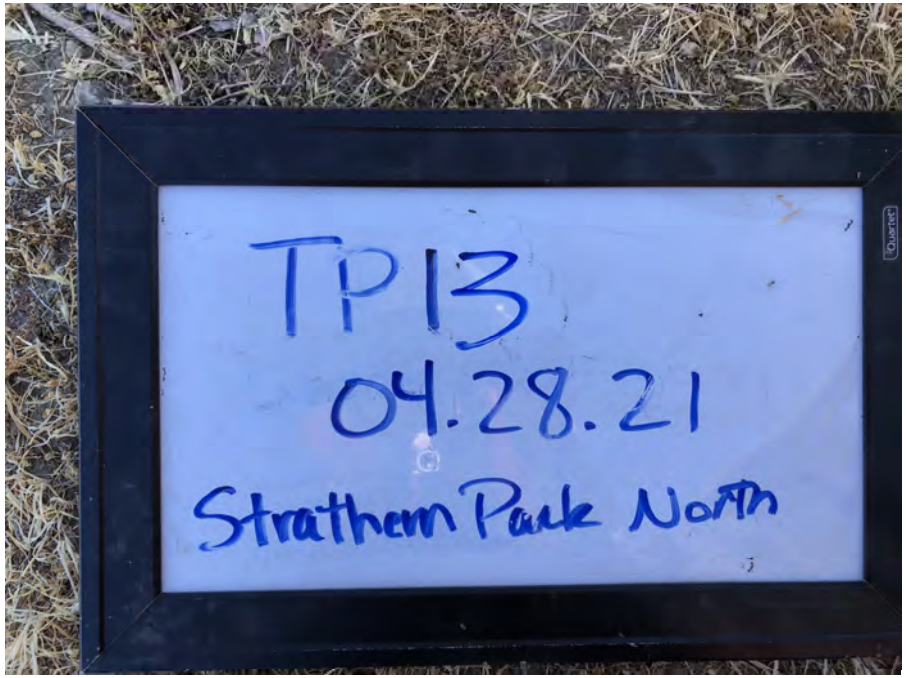
TP13
04.28.21
Strathern Park North


TP13
04.28.21
Strathern Park North




TP13
04.28.21
Strathern Park North


TP13
04.28.21


TP13
04.28.21


TP13
04.28.21




TP13
04.28.21
Strathern Park North

Ninyo & Moore

TEST PIT LOG

STRATHERN PARK
NORTH HOLLYWOOD, CALIFORNIA

PROJECT NO.	DATE
211294007	7/21

DATE EXCAVATED 4/28/21 TEST PIT NO. TP14

GROUND ELEVATION ~810' ± (MSL) LOGGED BY BAB

METHOD OF EXCAVATION Trackhoe Excavator

LOCATION See Figure 4

DESCRIPTION / INTERPRETATION

① FILL + MINOR WASTE:
Brown, dry to moist, clayey silty SAND; with some gravels/cobbles; occasional piece of concrete.

② ALLUVIUM:
Gray, moist, loose, SAND; with gravels and cobbles.

NOTES

Total Depth = 4 feet.
Groundwater not encountered during excavation.
Excavation backfilled on 04/28/21.

NOTES:
-Test pit is an extension of test pit TP-13.
-Waste not observed except for occasional piece of concrete.

SW N20°E NE

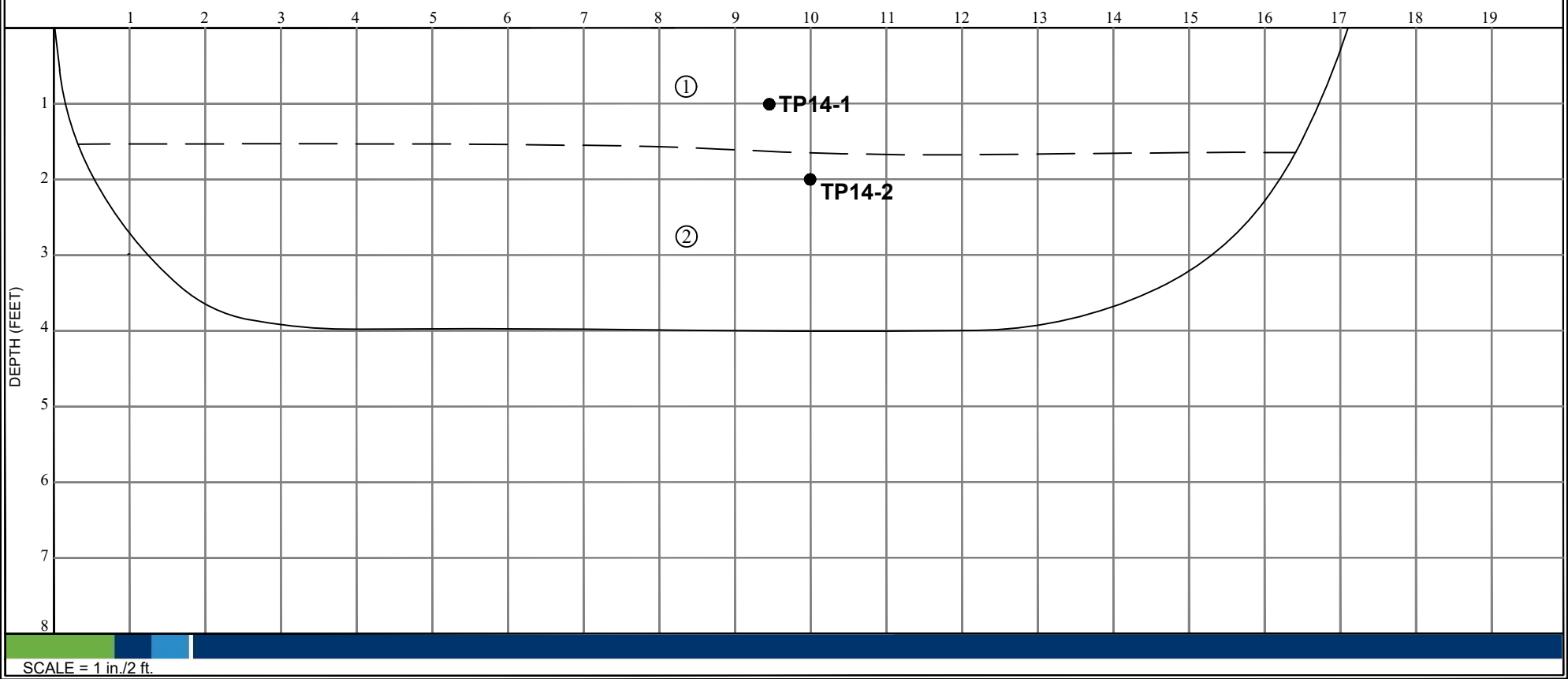

SCALE = 1 in./2 ft.

FIGURE A-14


TP14
04.28.21
Strathern Park North








TP14
04.28.21
Strathern Park North


TP14
04.28.21
Strathern Park North




TP14
04.28.21
Strathern Park North


TP14
04.28.21
Strathmore Park North

Ninyo & Moore

TEST PIT LOG

STRATHERN PARK
NORTH HOLLYWOOD, CALIFORNIA

PROJECT NO.	DATE
211294007	7/21

DATE EXCAVATED 4/28/21 TEST PIT NO. TP15

GROUND ELEVATION ~810' ± (MSL) LOGGED BY BAB

METHOD OF EXCAVATION Trackhoe Excavator

LOCATION See Figure 4

DESCRIPTION / INTERPRETATION

① FILL:
Brown, dry to moist, clayey silty SAND.

② ALLUVIUM:
Gray, moist, loose, SAND; with gravels and cobbles.

NOTES

Total Depth = 7.5 feet.
Groundwater not encountered during excavation.
Excavation backfilled on 04/28/21.

NOTES:
-Test pit is an extension of test pits TP-13 and TP-14.
-Waste not observed.

SW N40°E NE

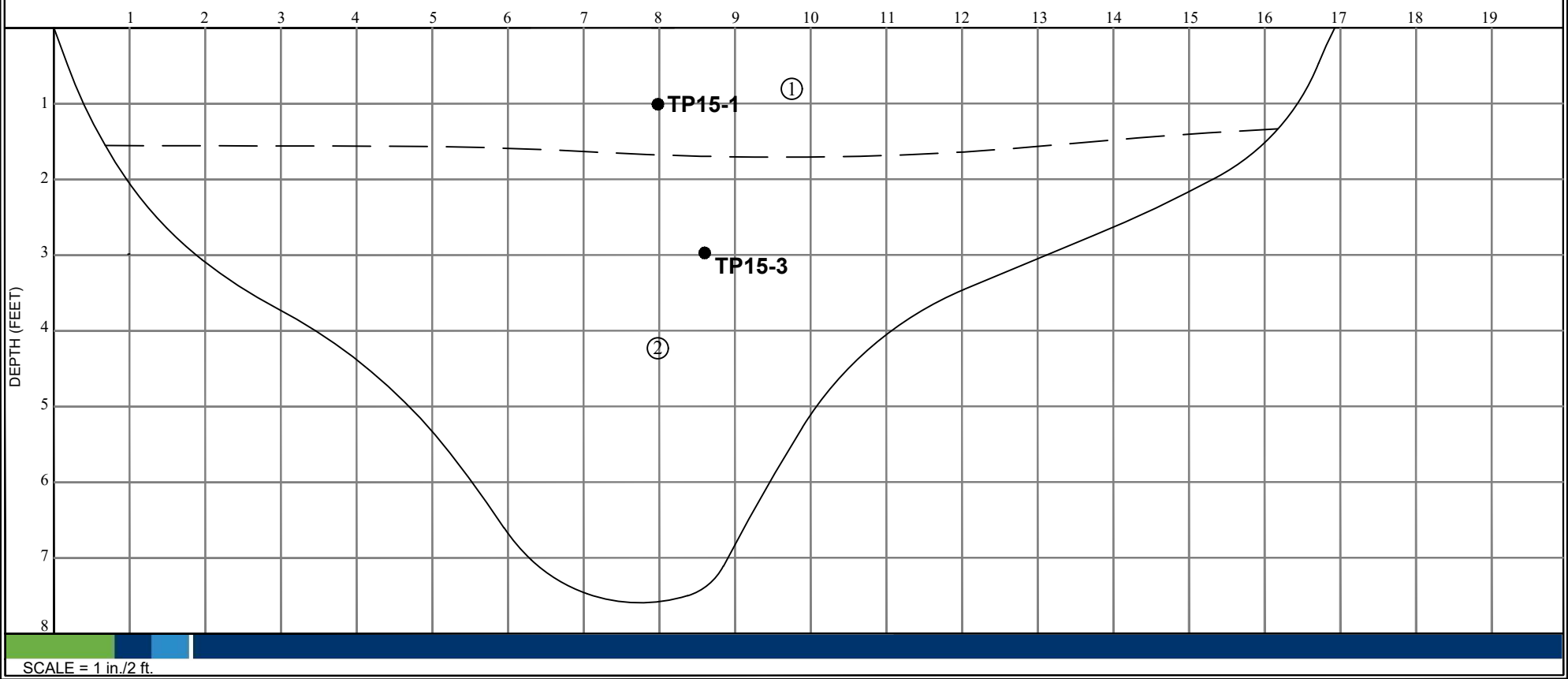

FIGURE A-15

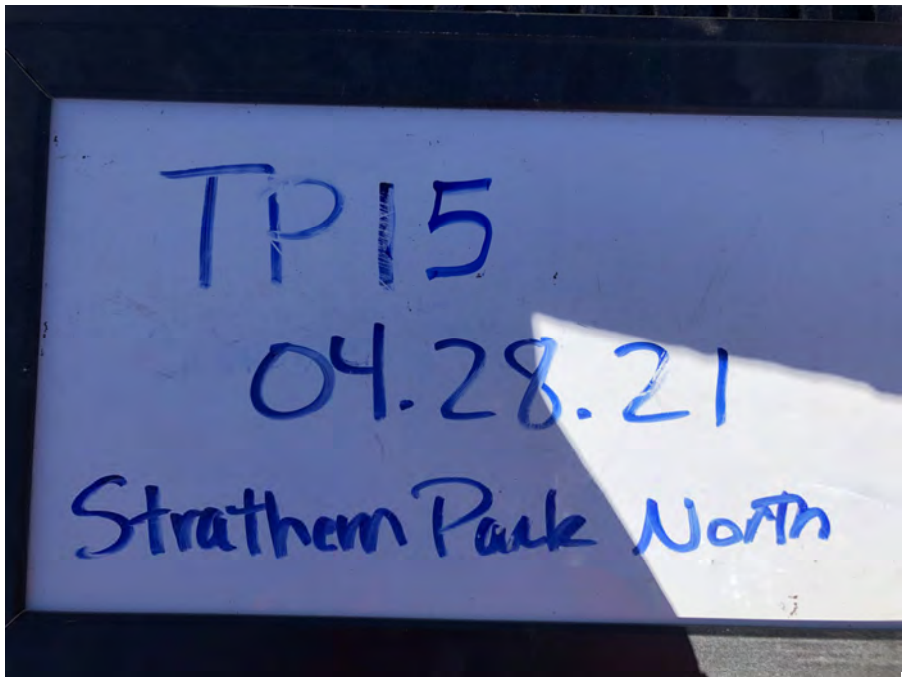
TP15
04.28.21
Strathern Park North


TP15
04.28.21
Strathern Park North


TP15
04.28.21
Strathern Park North


TP15
04.28.21
Strathern Park North




TP15
04.28.21
Strathern Park North




TP15
04.28.21

Ninyo & Moore

TEST PIT LOG

STRATHERN PARK
NORTH HOLLYWOOD, CALIFORNIA

PROJECT NO.	DATE
211294007	7/21

DATE EXCAVATED 4/28/21 TEST PIT NO. TP16

GROUND ELEVATION ~810' ± (MSL) LOGGED BY BAB

METHOD OF EXCAVATION Trackhoe Excavator

LOCATION See Figure 4

DESCRIPTION / INTERPRETATION

① FILL + MINOR WASTE:
Brown, dry to moist, clayey silty SAND; with some gravels and cobbles; with minor wastes, consisting of concrete and large metal/steel (?), beam.

② ALLUVIUM:
Gray, moist, loose, SAND; with gravels and cobbles.

NOTES

Total Depth = 4.5 feet.
Groundwater not encountered during excavation.
Excavation backfilled on 04/28/21.

NOTES:
-Waste contact between test pits TP16 and TP11.
-Test pit is an extension of test pits TP-13, TP-14, and TP-15.

SW N40°E NE

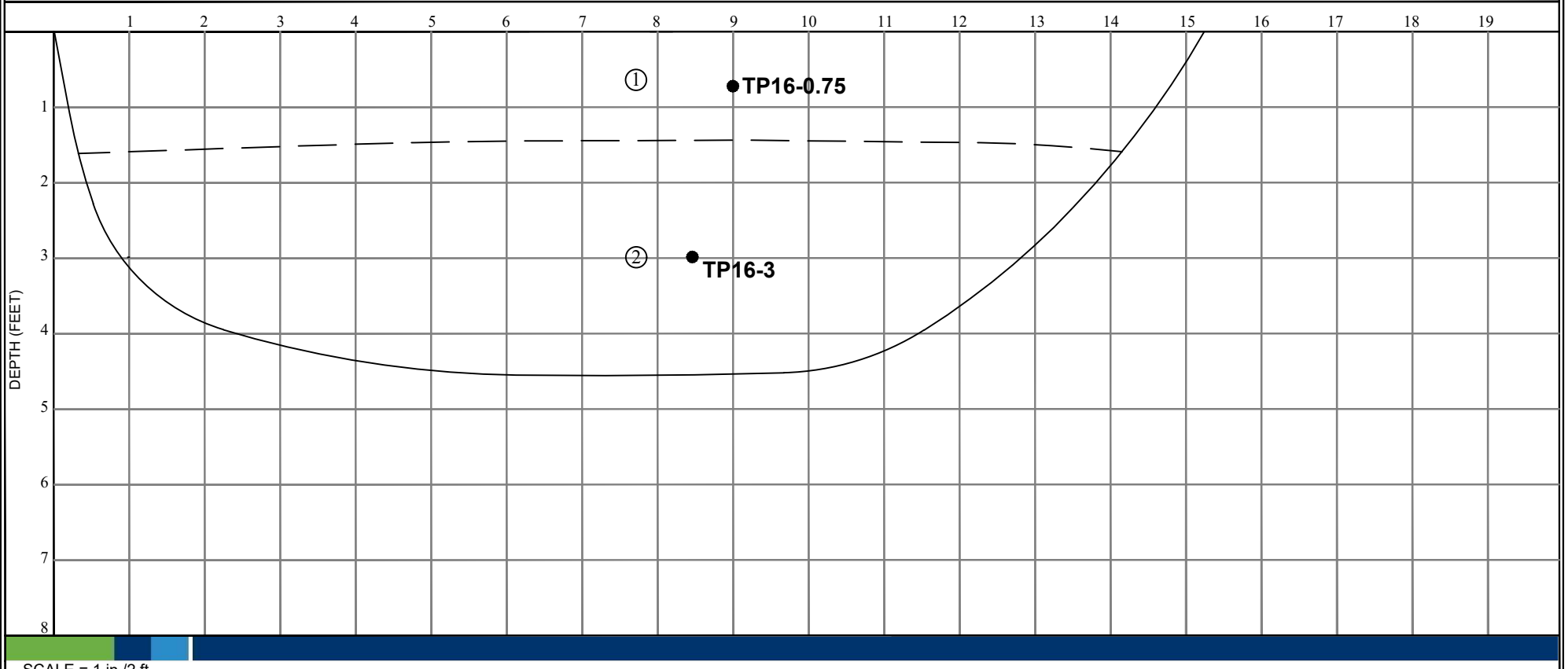

SCALE = 1 in./2 ft.

FIGURE A-16

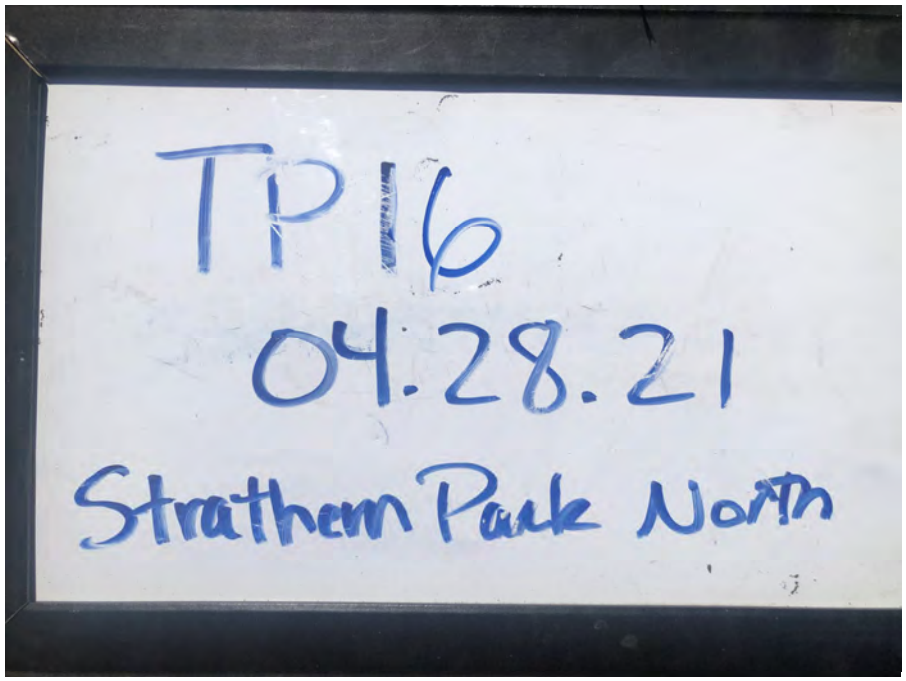
TP16
04.28.21
Strathern Park North


TP16
04.28.21
Strathern Park North





TP16


TP16
04.28.21
Strathern Park North




TP16
04.28.21
Strathern Park North


TP16
04.28.21
Strathern Park North


TP16
04.28.21
Strathcona Park North


TP16
04.28.21
Strathcona Park North

Ninyo & Moore

TEST PIT LOG

STRATHERN PARK
NORTH HOLLYWOOD, CALIFORNIA

PROJECT NO.	DATE
211294007	7/21

DATE EXCAVATED 4/28/21 TEST PIT NO. TP17

GROUND ELEVATION ~810' ± (MSL) LOGGED BY BAB

METHOD OF EXCAVATION Trackhoe Excavator

LOCATION See Figure 4

DESCRIPTION / INTERPRETATION

① FILL:
Brown, dry to moist, clayey silty SAND, one piece of brick.

② ALLUVIUM:
Gray, dry to moist, loose, SAND; with gravels.

NOTES

Total Depth = 7 feet.
Groundwater not encountered during excavation.
Excavation backfilled on 04/28/21.

NOTES:
-Waste not observed except for one piece of brick.

SE N30°W NW

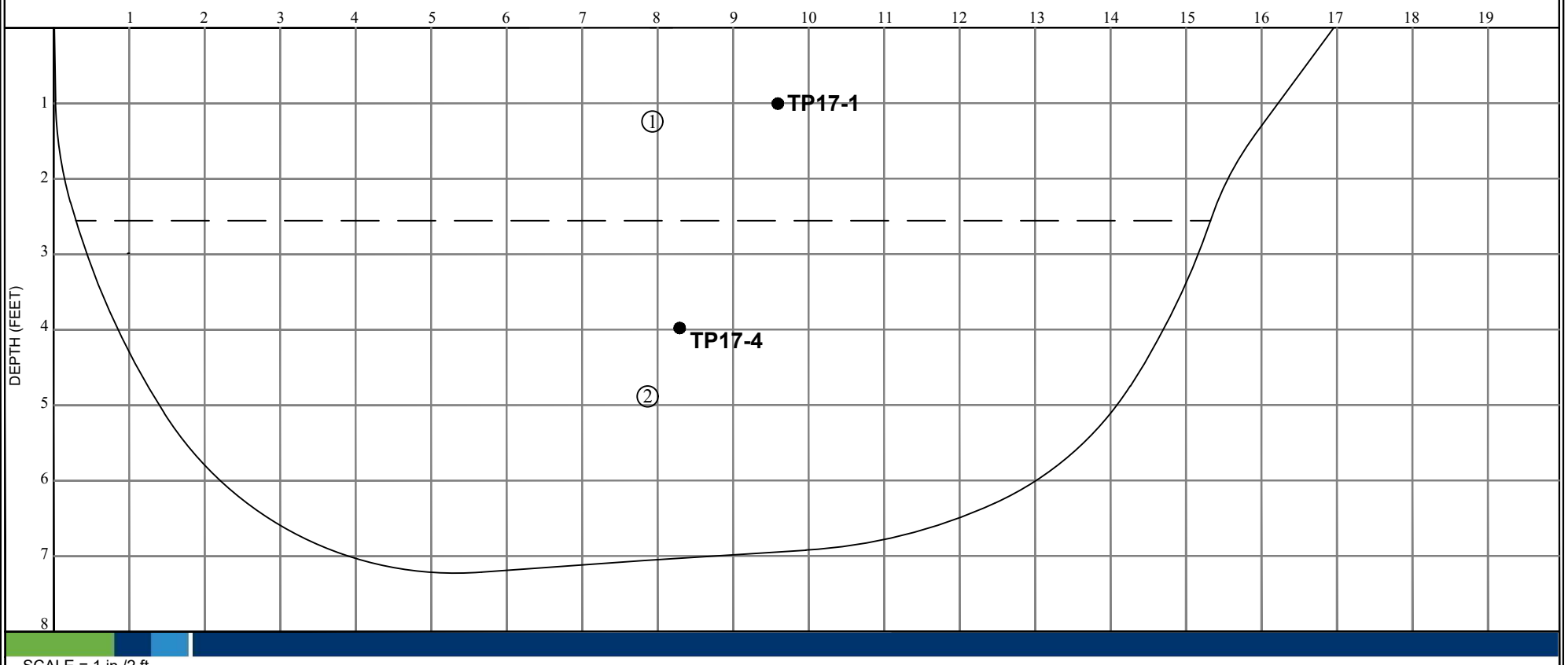

FIGURE A-17


TP17
04.28.21
Sirathern Park North


TP17
04.28.21
Sirathern Park North


TP17
04.28.21


TP17
04.28.21
Sirathern Park North




TP17
04.28.21
Strathern Park North






TP17
CH2M 21


TP17
CH2M 21

Ninyo & Moore

TEST PIT LOG

STRATHERN PARK
NORTH HOLLYWOOD, CALIFORNIA

PROJECT NO.	DATE
211294007	7/21

DATE EXCAVATED 4/28/21 TEST PIT NO. TP18

GROUND ELEVATION ~810' ± (MSL) LOGGED BY BAB

METHOD OF EXCAVATION Trackhoe Excavator

LOCATION See Figure 4

DESCRIPTION / INTERPRETATION

① FILL:
Light brown to brown, dry to moist, clayey silty SAND.

② FILL + WASTE:
Light brown to brown, moist, silty SAND; with wastes, estimated at approximately 35 to 40 percent, consisting primarily of concrete rubble and slabs, asphalt, cinder blocks, brick, metal wire, occasional glass bottle, occasional wood, tile, brillo pad, reinforced wire mesh.

③ ALLUVIUM:
Gray, moist, loose, SAND.

NOTES

Total Depth = 9 feet.
Groundwater not encountered during excavation.
Excavation backfilled on 04/28/21.

SW N45°E NE

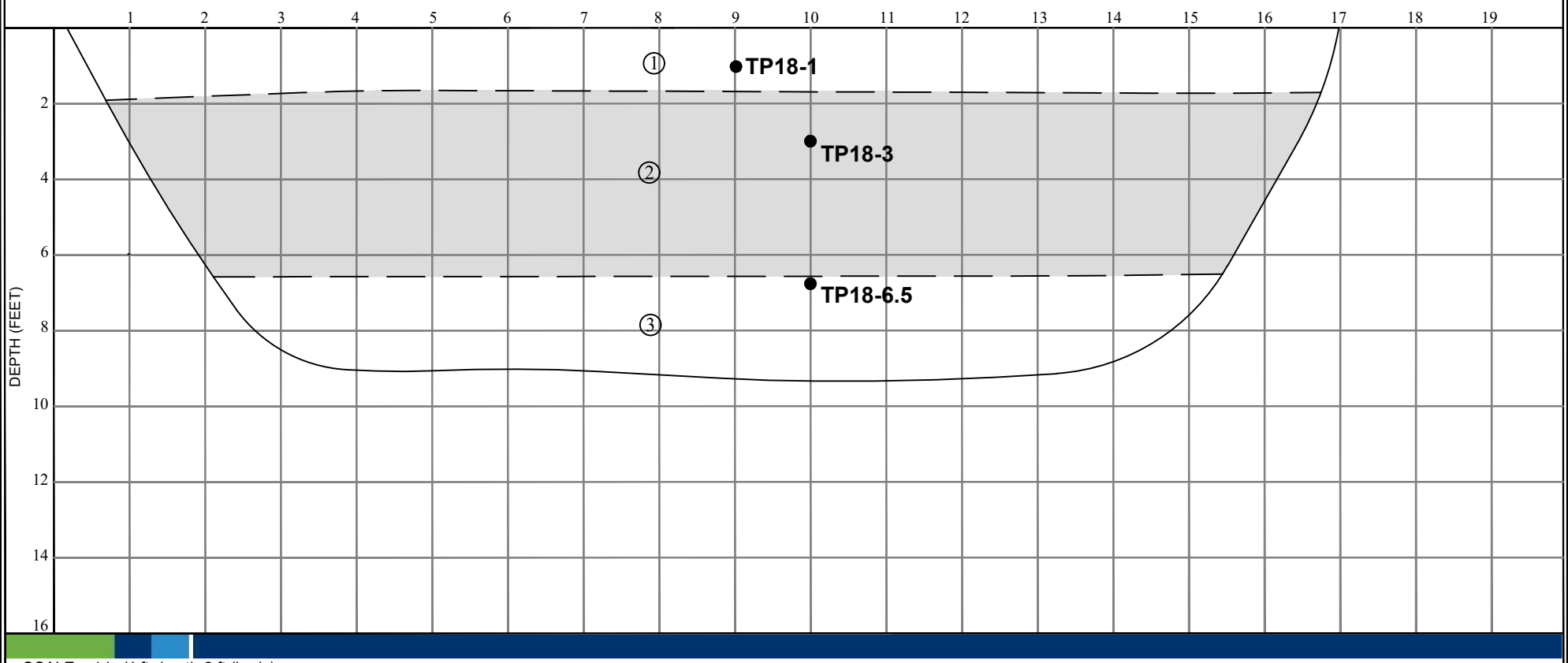

SCALE = 1 in./4 ft. (vert), 2 ft (horiz).

FIGURE A-18

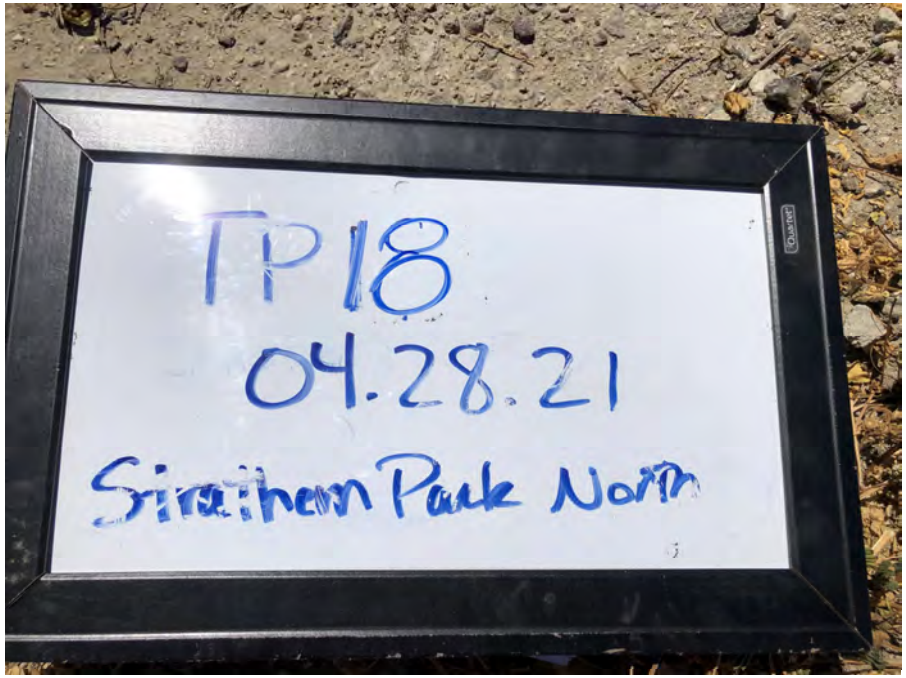
TP18
04.28.21
Strathern Park North







TP18




TP18
04.28.21
Sirathon Park North


TP18
04.28.21
Sirathon Park North








TP18
04.28.21

Ninyo & Moore

TEST PIT LOG

STRATHERN PARK
NORTH HOLLYWOOD, CALIFORNIA

PROJECT NO.	DATE
211294007	7/21

DATE EXCAVATED 4/28/21 TEST PIT NO. TP19

GROUND ELEVATION ~810' ± (MSL) LOGGED BY BAB

METHOD OF EXCAVATION Trackhoe Excavator

LOCATION See Figure 4

DESCRIPTION / INTERPRETATION

① FILL:
Brownish, moist, clayey silty SAND; with occasional concrete; plastic and asphalt.

② FILL + WASTE:
Brownish, moist, clayey silty SAND; with wastes, estimated at approximately 35 to 40 percent, consisting primarily of concrete rubble, some large pieces of cinder blocks, brick, asphalt, metal wire, metal pipe.

③ ALLUVIUM:
Gray, moist, loose, SAND; with gravels and cobbles.

NOTES

Total Depth = 6.5 feet.
Groundwater not encountered during excavation.
Excavation backfilled on 04/28/21.

NOTES:
-Severe caving of excavation.

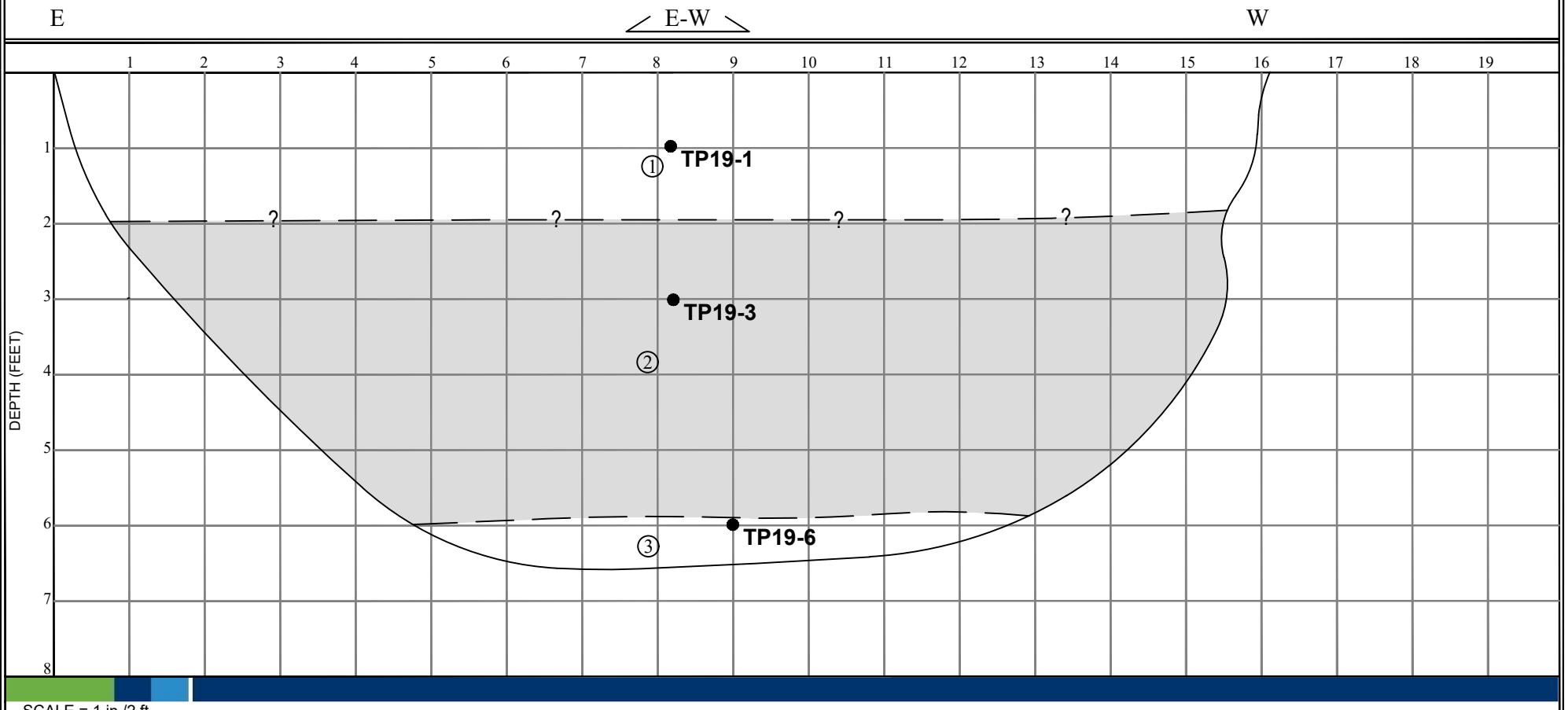

FIGURE A-19

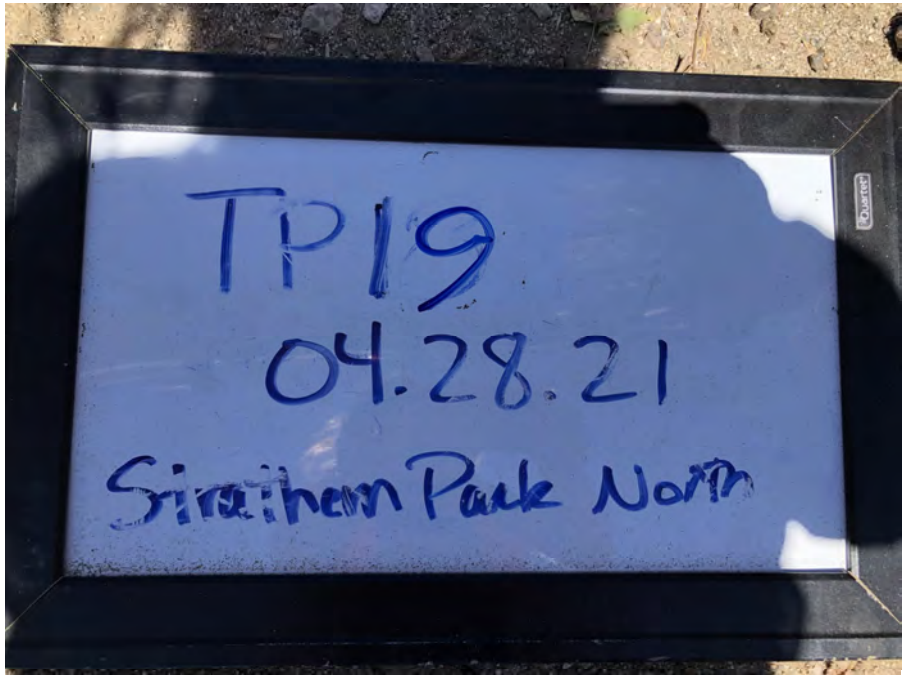
TP19
04.28.21
Strathearn Park North






TP19
04.28.21
Strathearn Park North

TP19









TP19


TP19
04.28.21
Sirathem Park North


TP19
04.28.21
Sirathem Park North


TP19
04.28.21
Sirathem Park North


TP19
04.28.21
Sirathem Park North


TP19
04.28.21


TP19
04.28.21


TP19
04.28.21


TP19
04.28.21





Ninyo & Moore

TEST PIT LOG

STRATHERN PARK
NORTH HOLLYWOOD, CALIFORNIA

PROJECT NO.	DATE
211294007	7/21

DATE EXCAVATED 4/28/21 TEST PIT NO. TP20

GROUND ELEVATION ~810' ± (MSL) LOGGED BY BAB

METHOD OF EXCAVATION Trackhoe Excavator

LOCATION See Figure 4

DESCRIPTION / INTERPRETATION

① FILL:
Brown, dry to moist, clayey silty SAND.

② FILL + WASTE:
Brown, dry to moist, loose, clayey silty SAND; with fine gravels; with wastes, estimated at approximately 35 to 40 percent, consisting primarily of concrete rubble, asphalt, some large pieces, occasional broken glass, metal wire, Coors flip top cans, plastic, straw.

③ ALLUVIUM:
Gray, moist, loose, SAND; with gravels and cobbles.

NOTES

Total Depth = 7.5 feet.
Groundwater not encountered during excavation.
Excavation backfilled on 04/28/21.

NOTES:
-Severe caving of excavation.

NW N35°W SE

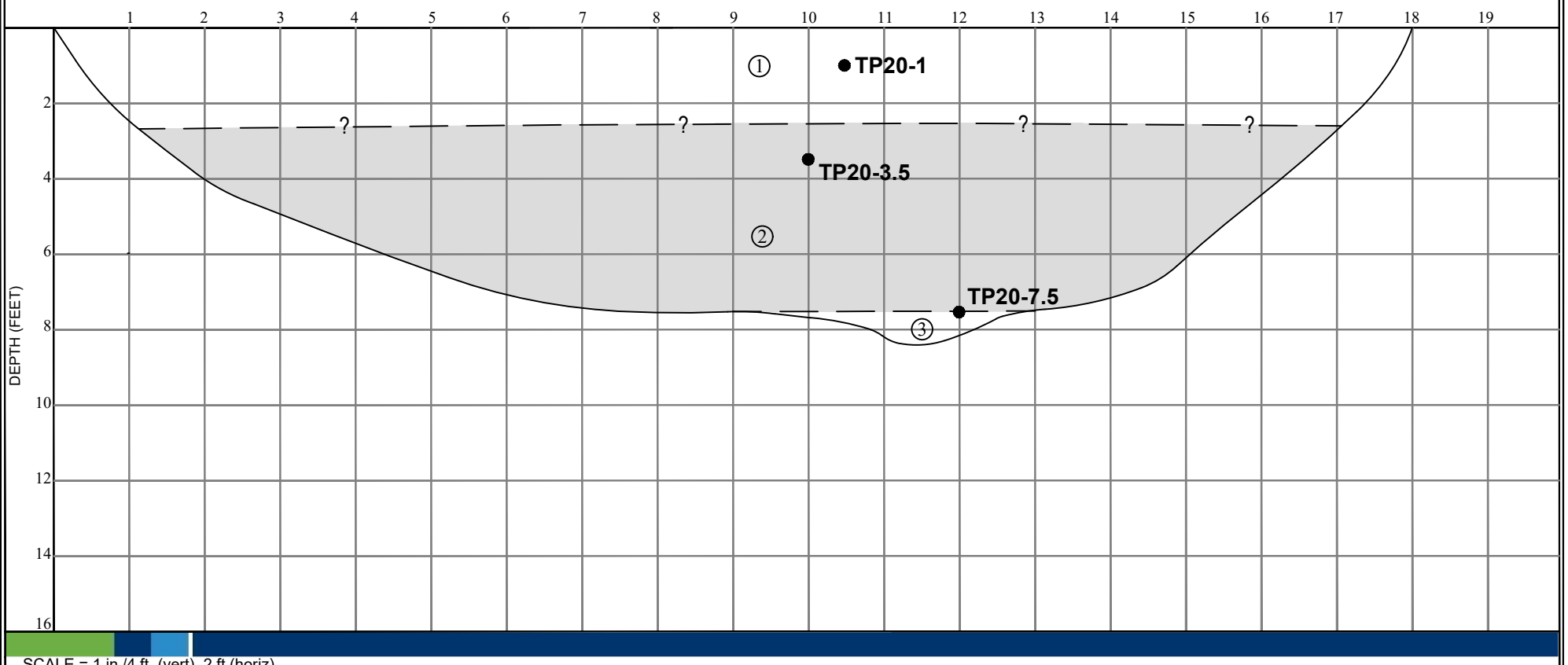

SCALE = 1 in./4 ft. (vert), 2 ft (horiz).

FIGURE A-20


TP20
04.28.21
Strathern Park North










TP20
04.28.21
Stratham Park North




TP20
04.28.21








TP20
04.28.21





Ninyo & Moore

TEST PIT LOG

STRATHERN PARK
NORTH HOLLYWOOD, CALIFORNIA

PROJECT NO.	DATE
211294007	7/21

DATE EXCAVATED 4/28/21 TEST PIT NO. TP21

GROUND ELEVATION ~810' ± (MSL) LOGGED BY BAB

METHOD OF EXCAVATION Trackhoe Excavator

LOCATION See Figure 4

DESCRIPTION / INTERPRETATION

① BASE:
Approximately 0.5 feet thick.

② FILL:
Brown, moist, silty fine SAND; not definitive contact.

③ FILL + WASTE:
Dark brown, moist loose, clayey silty SAND; with wastes, estimated at approximately 25 percent, consisting primarily of asphalt, concrete, occasional metal wire, brick, occasional broken glass, metal rebar.

④ FILL + BURNED WASTE:
Mottled black brown to brown, moist, clayey silty SAND; with burned wastes, estimated at approximately 50 to 75 percent, consisting primarily of broken and melted glass, fused glass, metal debris.

⑤ ALLUVIUM:
Gray, moist, loose, SAND; with gravels and cobbles.

NOTES

Total Depth = 7 feet.
Groundwater not encountered during excavation.
Excavation backfilled on 04/28/21.

NOTES:
-Test pit located west of TP7 to delineate burned waste.
-Wastes at TP7 extend west to TP21.

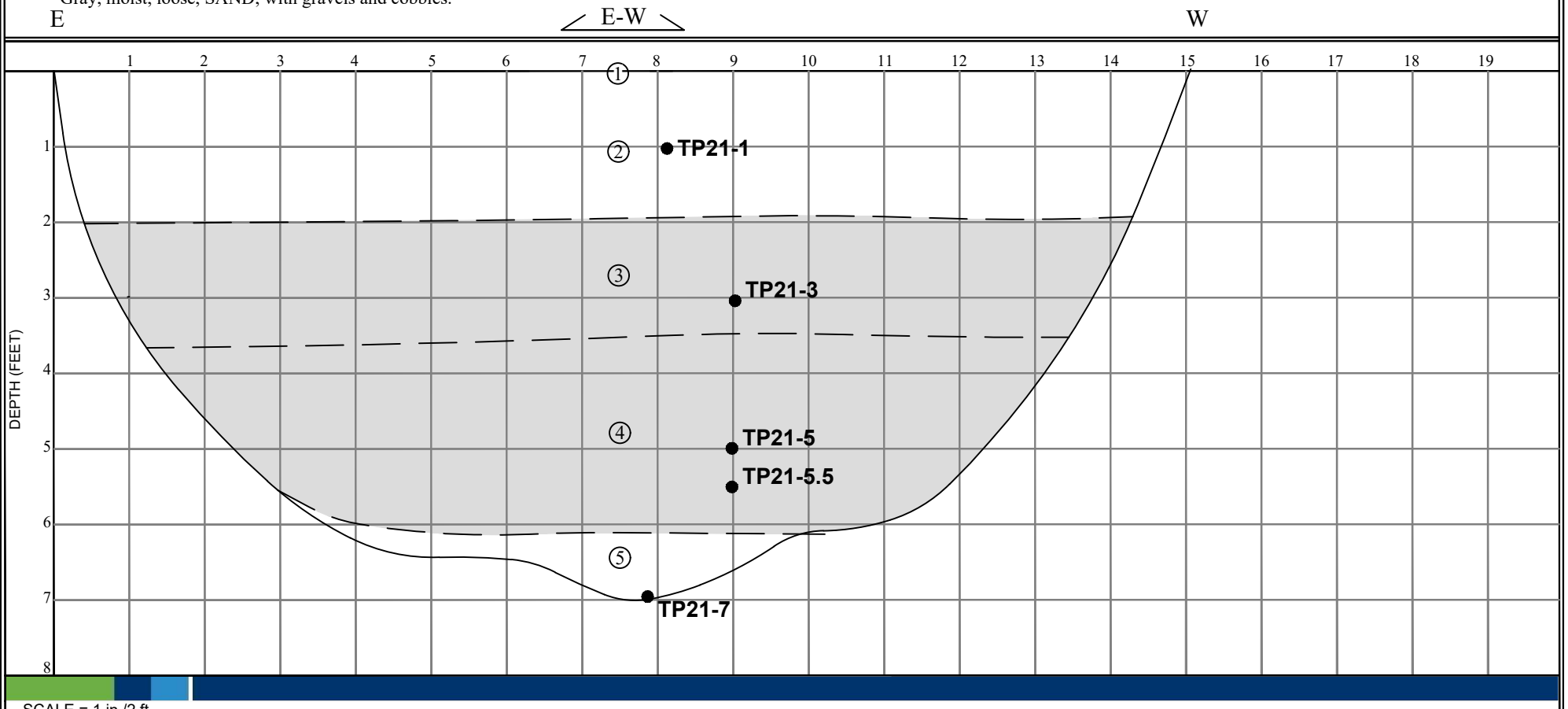

FIGURE A-20

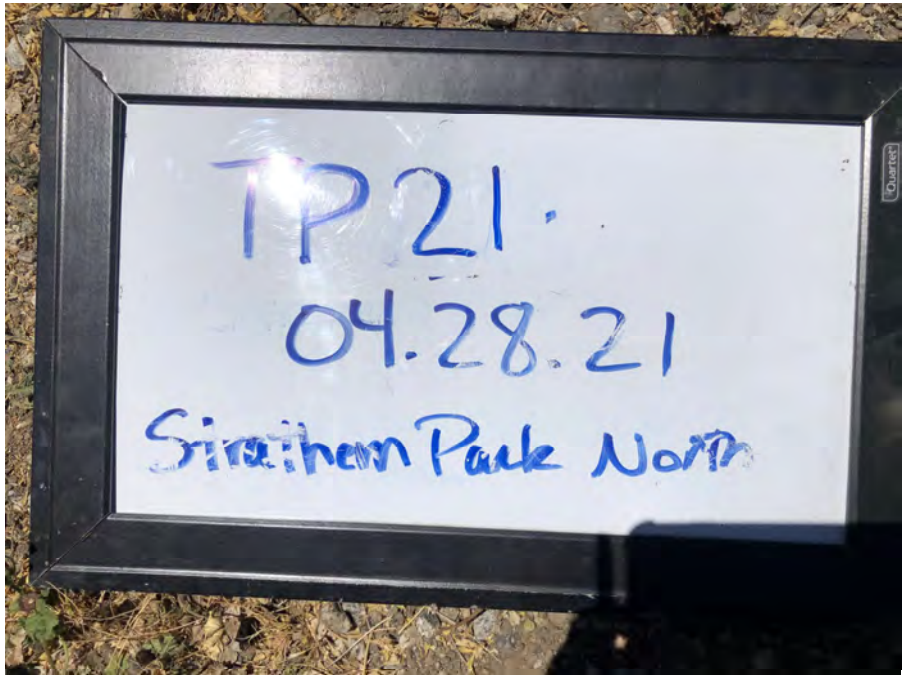
TP21
04.28.21
Griffith Park North






TP21
04.28.21








TP21
04.28.21

TP21









TP21












TP 21
04.28.21




TP 21
04.28.21


TP21
04.28.21
Sirathon Paule Nord


TP21
04.28.21
Sirathon Paule Nord




TP21
04.28.21
Sirathon Paule Nord


TP21
04.28.21


TP21
04.28.21


TP21
04.28.21



Ninyo & Moore

TEST PIT LOG

STRATHERN PARK
NORTH HOLLYWOOD, CALIFORNIA

PROJECT NO.	DATE
211294007	7/21

DATE EXCAVATED 4/28/21 TEST PIT NO. TP22

GROUND ELEVATION ~810' ± (MSL) LOGGED BY BAB

METHOD OF EXCAVATION Trackhoe Excavator

LOCATION See Figure 4

DESCRIPTION / INTERPRETATION

① FILL:
Medium brown, dry to moist, clayey silty SAND; with gravels and small cobbles.

② FILL + MINOR WASTE:
Medium brown, dry to moist, clayey silty SAND; with wastes, estimated at approximately 2 to 5 percent, consisting primarily of concrete, asphalt, transite pipe, wood.

③ ALLUVIUM:
Gray, moist, SAND; with gravels and cobbles.

NOTES

Total Depth = 6.5 feet.
Groundwater not encountered during excavation.
Excavation backfilled on 04/28/21.

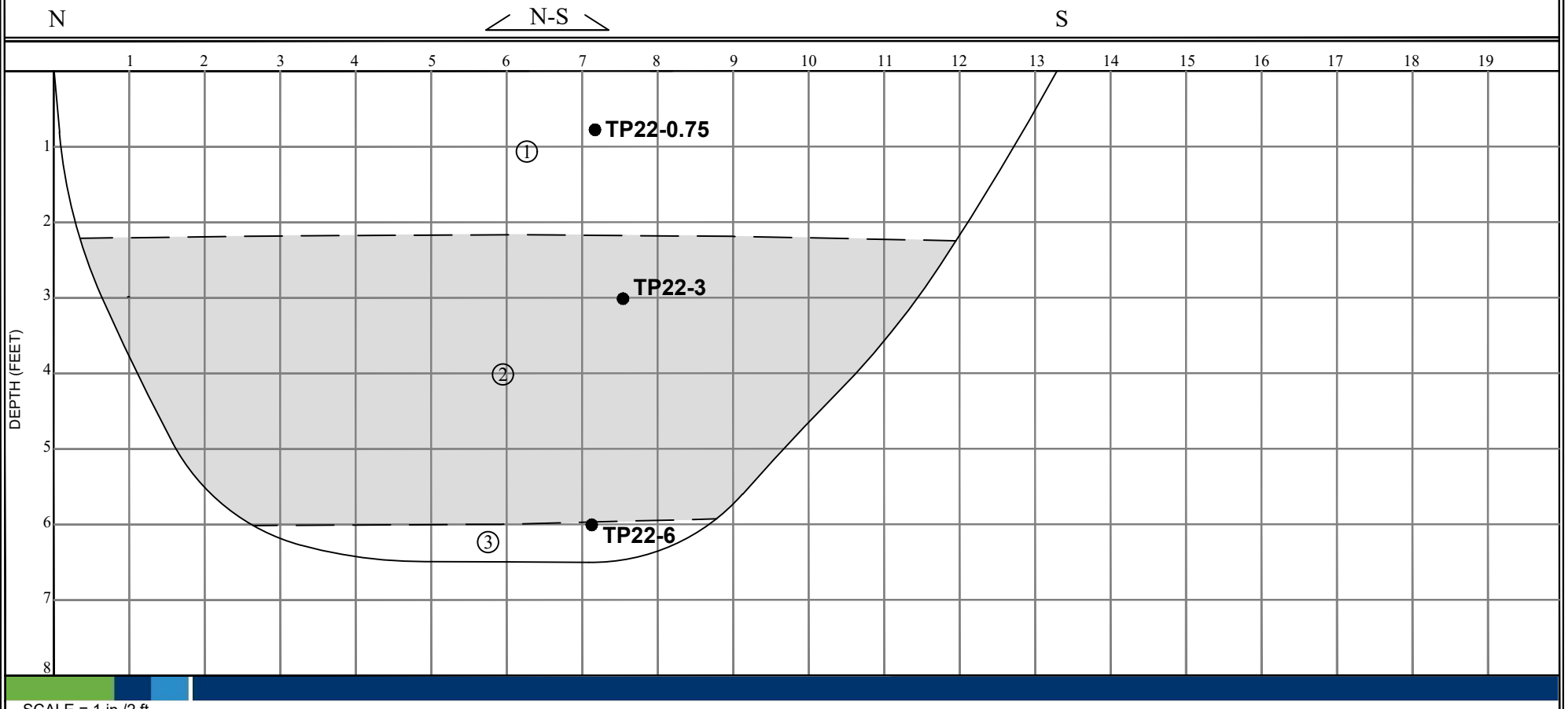

FIGURE A-20

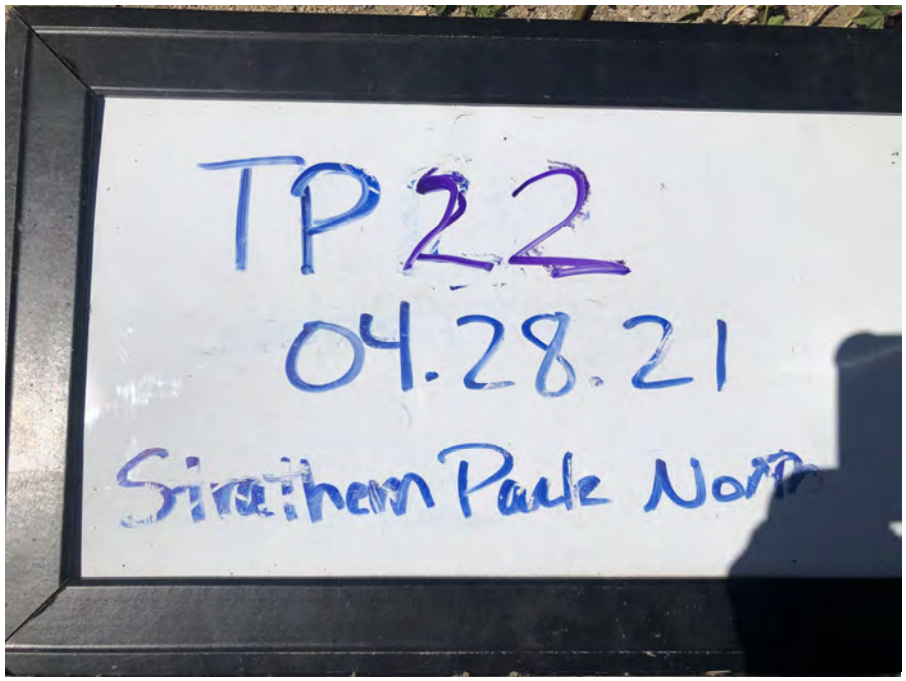
TP22
04.28.21








TP22
04.28.21


TP22
04.28.21






TP22
04.28.21


TP22
04.28.21





TP22







APPENDIX E

Previous Test Pit Logs, Boring Logs, and Cone Penetrometer Tests – March 2020

Soil Classification Chart Per ASTM D 2488

Primary Divisions			Secondary Divisions	
			Group Symbol	Group Name
COARSE-GRAINED SOILS more than 50% retained on No. 4 sieve	**GRAVEL** more than 50% of coarse fraction retained on No. 4 sieve	CLEAN GRAVEL less than 5% fines	GW	well-graded GRAVEL
			GP	poorly graded GRAVEL
		GRAVEL with DUAL CLASSIFICATIONS 5% to 12% fines	GW-GM	well-graded GRAVEL with silt
			GP-GM	poorly graded GRAVEL with silt
			GW-GC	well-graded GRAVEL with clay
			GP-GC	poorly graded GRAVEL with clay
		GRAVEL with FINES more than 12% fines	GM	silty GRAVEL
			GC	clayey GRAVEL
			GC-GM	silty, clayey GRAVEL
	SAND 50% or more of coarse fraction passes No. 4 sieve	CLEAN SAND less than 5% fines	SW	well-graded SAND
			SP	poorly graded SAND
		SAND with DUAL CLASSIFICATIONS 5% to 12% fines	SW-SM	well-graded SAND with silt
			SP-SM	poorly graded SAND with silt
			SW-SC	well-graded SAND with clay
			SP-SC	poorly graded SAND with clay
		SAND with FINES more than 12% fines	SM	silty SAND
			SC	clayey SAND
			SC-SM	silty, clayey SAND
FINE-GRAINED SOILS 50% or more passes No. 200 sieve	**SILT and CLAY** liquid limit less than 50%	INORGANIC	CL	lean CLAY
			ML	SILT
			CL-ML	silty CLAY
		ORGANIC	OL (PI > 4)	organic CLAY
			OL (PI < 4)	organic SILT
	SILT and CLAY liquid limit 50% or more	INORGANIC	CH	fat CLAY
			MH	elastic SILT
		ORGANIC	OH (plots on or above "A"-line)	organic CLAY
			OH (plots below "A"-line)	organic SILT
	Highly Organic Soils		PT	Peat

Grain Size

Description		Sieve Size	Grain Size	Approximate Size
Boulders		> 12"	> 12"	Larger than basketball-sized
Cobbles		3 - 12"	3 - 12"	Fist-sized to basketball-sized
Gravel	Coarse	3/4 - 3"	3/4 - 3"	Thumb-sized to fist-sized
	Fine	#4 - 3/4"	0.19 - 0.75"	Pea-sized to thumb-sized
Sand	Coarse	#10 - #4	0.079 - 0.19"	Rock-salt-sized to pea-sized
	Medium	#40 - #10	0.017 - 0.079"	Sugar-sized to rock-salt-sized
	Fine	#200 - #40	0.0029 - 0.017"	Flour-sized to sugar-sized
Fines		Passing #200	< 0.0029"	Flour-sized and smaller

Plasticity Chart

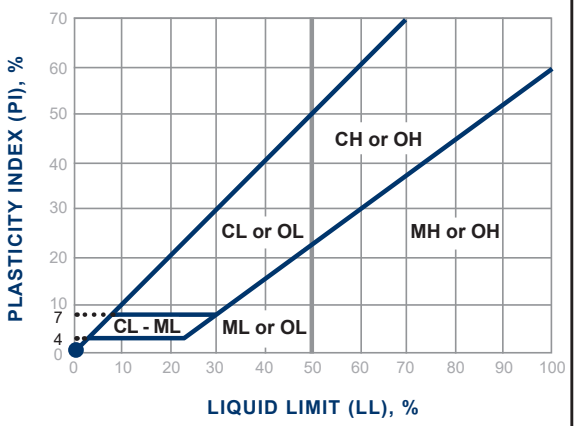

Apparent Density - Coarse-Grained Soil

Apparent Density	Spooling Cable or Cathead		Automatic Trip Hammer	
	SPT (blows/foot)	Modified Split Barrel (blows/foot)	SPT (blows/foot)	Modified Split Barrel (blows/foot)
Very Loose	≤ 4	≤ 8	≤ 3	≤ 5
Loose	5 - 10	9 - 21	4 - 7	6 - 14
Medium Dense	11 - 30	22 - 63	8 - 20	15 - 42
Dense	31 - 50	64 - 105	21 - 33	43 - 70
Very Dense	> 50	> 105	> 33	> 70

Consistency - Fine-Grained Soil

Consis-tency	Spooling Cable or Cathead		Automatic Trip Hammer	
	SPT (blows/foot)	Modified Split Barrel (blows/foot)	SPT (blows/foot)	Modified Split Barrel (blows/foot)
Very Soft	< 2	< 3	< 1	< 2
Soft	2 - 4	3 - 5	1 - 3	2 - 3
Firm	5 - 8	6 - 10	4 - 5	4 - 6
Stiff	9 - 15	11 - 20	6 - 10	7 - 13
Very Stiff	16 - 30	21 - 39	11 - 20	14 - 26
Hard	> 30	> 39	> 20	> 26

Ninyo & Moore
Geotechnical & Environmental Sciences Consultants

USCS METHOD OF SOIL CLASSIFICATION

BORING LOG EXPLANATION SHEET

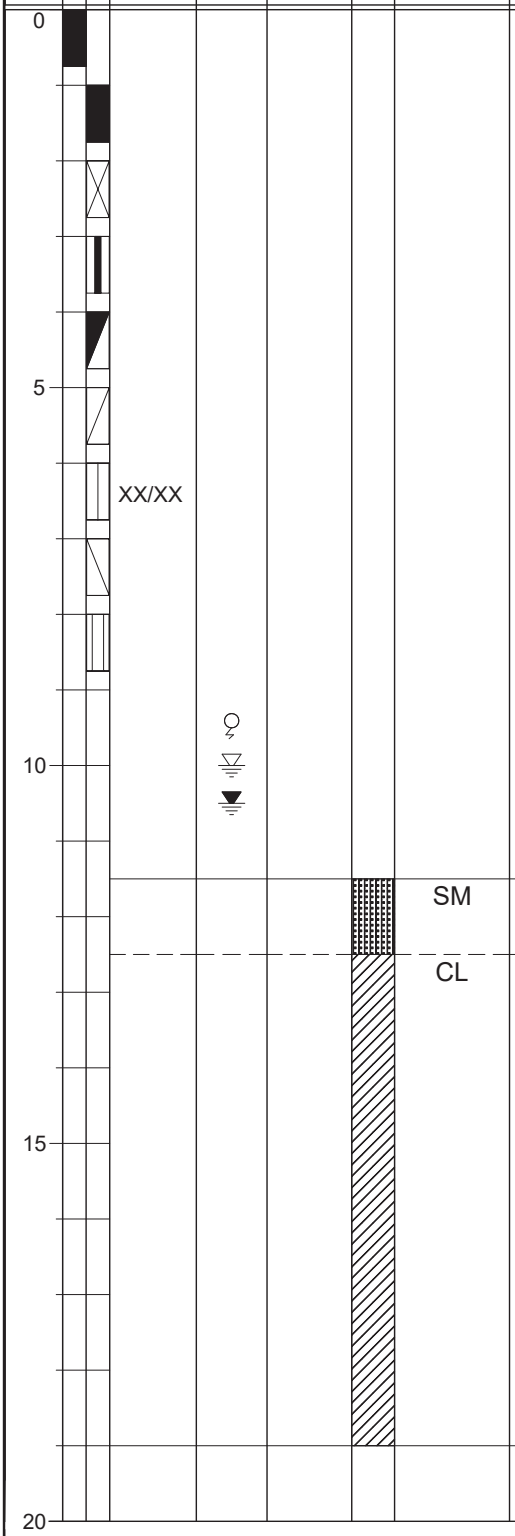

Bulk sample.

Modified split-barrel drive sampler.

No recovery with modified split-barrel drive sampler.

Sample retained by others.

Standard Penetration Test (SPT).

No recovery with a SPT.

Shelby tube sample. Distance pushed in inches/length of sample recovered in inches.

No recovery with Shelby tube sampler.

Continuous Push Sample.

Seepage.

Groundwater encountered during drilling.

Groundwater measured after drilling.

SM

MAJOR MATERIAL TYPE (SOIL):

Solid line denotes unit change.

CL

Dashed line denotes material change.

Attitudes: Strike/Dip
b: Bedding
c: Contact
j: Joint
f: Fracture
F: Fault
cs: Clay Seam
s: Shear
bss: Basal Slide Surface
sf: Shear Fracture
sz: Shear Zone
sbs: Shear Bedding Surface

The total depth line is a solid line that is drawn at the bottom of the boring.

DATE DRILLED 3/25/2020 BORING NO. B-1

GROUND ELEVATION 810' ± (MSL) SHEET 1 OF 1

METHOD OF DRILLING 8" Hollow-Stem Auger (Baja Exploration)

DRIVE WEIGHT 140 lbs. (Auto. Trip Hammer) DROP 30"

SAMPLED BY KMH LOGGED BY KMB REVIEWED BY GMC

DEPTH (feet)	SAMPLES Bulk	SAMPLES Driven	BLOWS/FOOT	MOISTURE (%)	DRY DENSITY (PCF)	PID READING (PPM)	SYMBOL	CLASSIFICATION U.S.C.S.	DESCRIPTION/INTERPRETATION
0						3.4		SC	FILL: Brown, moist, loose, clayey SAND; trace gravel and organic material.
						3.1		SM	FILL AND MINOR WASTES: Brown, moist, loose, silty SAND with gravel; few pieces of asphalt concrete.
			11	10.1	97.9	5.7			@ 5': LEL - 0%; O_2 - 20.5%, CO - 7 ppm, H_2S - 0.0 ppm
10			17			2.8			Light brown; medium dense. @ 10': LEL - 0%; O_2 - 19.1%, CO - 7 ppm, H_2S - 0.0 ppm
			20	2.0	110.7	1.4		SP	ALLUVIUM: Light brown, moist, medium dense, poorly graded SAND; trace gravel. @ 15': LEL - 0%; O_2 - 17.5%, CO - 7 ppm, H_2S - 0.0 ppm
20			17			2.1			@ 20': LEL - 0%; O_2 - 17.7%, CO - 11 pm, H_2S - 0.0 ppm
			35			3.0			@ 25': LEL - 0%; O_2 - 17.8%, CO - 5 ppm, H_2S - 0.0 ppm
30									Total Depth = 26.5 feet. Groundwater was not encountered during drilling. Backfilled with cement-bentonite grout on 3/25/20. Notes: Groundwater, though not encountered at the time of drilling, may rise to a higher level due to seasonal variations in precipitation and several other factors as discussed in the report. The ground elevation shown above is an estimation only. It is based on our interpretations of published maps and other documents reviewed for the purposes of this evaluation. It is not sufficiently accurate for preparing construction bids and design documents.
40									

FIGURE A- 1

Ninyo & Moore
Geotechnical & Environmental Sciences Consultants

LABOE TOS NO. 25 - STRATHERN PARK NORTH
NORTH HOLLYWOOD, CALIFORNIA

DATE DRILLED 3/26/2020 BORING NO. B-2

GROUND ELEVATION 810' ± (MSL) SHEET 1 OF 2

METHOD OF DRILLING 8" Hollow-Stem Auger (Baja Exploration)

DRIVE WEIGHT 140 lbs. (Auto. Trip Hammer) DROP 30"

SAMPLED BY KMH LOGGED BY KMB REVIEWED BY GMC

DEPTH (feet)	SAMPLES (Bulk / Driven)	BLOWS/FOOT	MOISTURE (%)	DRY DENSITY (PCF)	PID READING (PPM)	SYMBOL	CLASSIFICATION U.S.C.S.	DESCRIPTION/INTERPRETATION
0							SC	FILL: Brown, moist, loose, clayey SAND; few gravel and organics.
							SP-SM	FILL AND MINOR WASTES: Light brown to brown, moist, medium dense, poorly graded SAND with silt and gravel; cobbles; pieces of concrete and asphalt concrete.
		20						
10		47	3.1	120.8				Dark brown; dense; little gravel; pieces of asphalt concrete.
							SP	ALLUVIUM: Light brown, moist, dense, poorly graded SAND.
							SM	Light brown, moist, medium dense, silty SAND; trace gravel.
		19						
							SP	Light brown, moist, dense, poorly graded SAND; trace gravel.
20		40						
		23						Few gravel.
30		50/6"						Very dense; interbeds of poorly graded gravel with sand.
		30						Dense.
40								

FIGURE A- 2

Ninyo & Moore
Geotechnical & Environmental Sciences Consultants

LABOE TOS NO. 25 - STRATHERN PARK NORTH
NORTH HOLLYWOOD, CALIFORNIA

DATE DRILLED 3/26/2020 BORING NO. B-2

GROUND ELEVATION 810' ± (MSL) SHEET 2 OF 2

METHOD OF DRILLING 8" Hollow-Stem Auger (Baja Exploration)

DRIVE WEIGHT 140 lbs. (Auto. Trip Hammer) DROP 30"

SAMPLED BY KMH LOGGED BY KMB REVIEWED BY GMC

DEPTH (feet)	SAMPLES (Bulk / Driven)	BLOWS/FOOT	MOISTURE (%)	DRY DENSITY (PCF)	PID READING (PPM)	SYMBOL	CLASSIFICATION U.S.C.S.	DESCRIPTION/INTERPRETATION
40		52					SM	ALLUVIUM: (Continued) Light brown, moist, dense, silty SAND.
		20					SP	Light brown, moist, medium dense, poorly graded SAND; few gravel.
							SM	Brown, moist, medium dense, silty SAND.
50		33	12.7	115.2				
		50/5"						Light brown; very dense; few to little gravel.
60		50/6"						Brown; little to some gravel.
		50/6"						Light brown; little to some gravel.
70		50/6"						Brown. Total Depth = 70.5 feet. Groundwater was not encountered during drilling. Backfilled with cement-bentonite on 3/26/20.
80								Notes: Groundwater, though not encountered at the time of drilling, may rise to a higher level due to seasonal variations in precipitation and several other factors as discussed in the report. The ground elevation shown above is an estimation only. It is based on our interpretations of published maps and other documents reviewed for the purposes of this evaluation. It is not sufficiently accurate for preparing construction bids and design documents.

DATE DRILLED 3/25/2020 BORING NO. B-3

GROUND ELEVATION 810' ± (MSL) SHEET 1 OF 1

METHOD OF DRILLING 8" Hollow-Stem Auger (Baja Exploration)

DRIVE WEIGHT 140 lbs. (Auto. Trip Hammer) DROP 30"

SAMPLED BY KMH LOGGED BY KMB REVIEWED BY GMC

DEPTH (feet)	SAMPLES (Bulk / Driven)	BLOWS/FOOT	MOISTURE (%)	DRY DENSITY (PCF)	PID READING (PPM)	SYMBOL	CLASSIFICATION U.S.C.S.	DESCRIPTION/INTERPRETATION
0					2.4		SM	FILL: Brown, moist, loose, silty SAND; trace gravel and organics.
					1.7		SC	Brown, moist, loose, clayey SAND; trace gravel; cobbles.
		6	7.7	96.6	3.3		SP-SM	ALLUVIUM: Brown, moist, loose, poorly graded SAND with silt and gravel. @ 5': LEL - 0%; O_2 - 20.9%, CO - 0 ppm; H_2S - 0.0 ppm
10		16	-		4.1			Light brown; medium dense; trace gravel. @ 10': LEL - 0%; O_2 - 20.5%; CO - 0 ppm; H_2S - 0.0 ppm
		29	-		3.3			@ 15': LEL - 0%; O_2 - 17.5%; CO - 14 ppm; H_2S - 0. 0 ppm
20		20	-		6.3			@ 20': LEL - 0%; O_2 - 18.3%, CO - 10 ppm, H_2S - 0.0 ppm
		25	-		2.2			@ 25': LEL - 0%; O_2 - 17.7%, CO - 10 ppm, H_2S - 0.0 ppm
30								Total Depth = 26.5 feet. Groundwater was not encountered during drilling. Backfilled with cement-bentonite grout on 3/25/20. Notes: Groundwater, though not encountered at the time of drilling, may rise to a higher level due to seasonal variations in precipitation and several other factors as discussed in the report. The ground elevation shown above is an estimation only. It is based on our interpretations of published maps and other documents reviewed for the purposes of this evaluation. It is not sufficiently accurate for preparing construction bids and design documents.
40								

DATE DRILLED 3/25/2020 BORING NO. P-1

GROUND ELEVATION 806' ± (MSL) SHEET 1 OF 1

METHOD OF DRILLING 8" Hollow-Stem Auger (Baja Exploration)

DRIVE WEIGHT 140 lbs. (Auto. Trip Hammer) DROP 30"

SAMPLED BY KMB LOGGED BY KMB REVIEWED BY GMC

DEPTH (feet)	SAMPLES (Bulk / Driven)	BLOWS/FOOT	MOISTURE (%)	DRY DENSITY (PCF)	PID READING (PPM)	SYMBOL	CLASSIFICATION U.S.C.S.	DESCRIPTION/INTERPRETATION
0							SC	FILL: Brown, moist, loose, clayey SAND; few organics.
							SP-SC	FILL AND MINOR WASTES: Brown, moist, loose, poorly graded SAND with clay; trace gravel; pieces of brick and concrete.
							SP	ALLUVIUM: Light brown, moist, loose, poorly graded SAND; trace gravel.
		6					SM	Brown, moist, loose, silty SAND.
							SW-SM	Brown, moist, medium dense, well-graded SAND with silt; few gravel.
10		28	5.3	111.1			SP	Light brown, moist, medium dense, poorly graded SAND.
		20						Few gravel.
20								Total Depth = 17.5 feet. Groundwater was not encountered during drilling. In-situ percolation testing performed on 4/15/20. Backfilled with cement-bentonite grout on 4/16/20. Notes: Groundwater, though not encountered at the time of drilling, may rise to a higher level due to seasonal variations in precipitation and several other factors as discussed in the report. The ground elevation shown above is an estimation only. It is based on our interpretations of published maps and other documents reviewed for the purposes of this evaluation. It is not sufficiently accurate for preparing construction bids and design documents.
30								
40								

FIGURE A- 5

Ninyo & Moore
Geotechnical & Environmental Sciences Consultants

LABOE TOS NO. 25 - STRATHERN PARK NORTH
NORTH HOLLYWOOD, CALIFORNIA

DATE DRILLED 3/24/2020 BORING NO. P-2

GROUND ELEVATION 808' ± (MSL) SHEET 1 OF 2

METHOD OF DRILLING 8" Hollow-Stem Auger (Baja Exploration)

DRIVE WEIGHT 140 lbs. (Auto. Trip Hammer) DROP 30"

SAMPLED BY KMH LOGGED BY KMB REVIEWED BY GMC

DEPTH (feet)	SAMPLES (Bulk / Driven)	BLOWS/FOOT	MOISTURE (%)	DRY DENSITY (PCF)	PID READING (PPM)	SYMBOL	CLASSIFICATION U.S.C.S.	DESCRIPTION/INTERPRETATION
0					1.0		CL	FILL: Brown, moist, soft to firm, sandy lean CLAY; few gravel.
							SP	Brown to light brown, moist, loose, poorly graded SAND; few gravel.
					0.7			
		24			1.2			Light brown; medium dense; interbeds of gravel; cobbles. @ 5': LEL - 0%; O_2 - 20.9%, CO - 0 ppm, H_2S - 0.0 ppm
10		19			2.2			@ 10': LEL - 0%; O_2 - 20.7%, CO - 0 ppm; H_2S - 0.0 ppm
							SP-SM	ALLUVIUM: Light brown, moist, medium dense, poorly graded SAND with silt; few gravel.
							SP	Light brown, moist, medium dense, poorly graded SAND; few gravel.
		31	3.3	104.9	3.0			@ 15': LEL - 0%; O_2 - 19.9%, CO - 0 ppm; H_2S - 0.0 ppm
20		31			2.4			Dense. @ 20': LEL - 0%; O_2 - 19. 7%, CO - 4 ppm, H_2S - 0.0 ppm
		59			2.7			Interbeds of poorly graded gravel with sand. @ 25': LEL - 0%; O_2 - 19.5%, CO - 4 ppm, H_2S - 0.0 ppm
30		28						
							SP-SM	Light brown, moist, dense, poorly graded SAND with silt; few gravel.
		62						
40								

FIGURE A- 6

Ninyo & Moore
Geotechnical & Environmental Sciences Consultants

LABOE TOS NO. 25 - STRATHERN PARK NORTH
NORTH HOLLYWOOD, CALIFORNIA

DATE DRILLED 3/24/2020 BORING NO. P-2

GROUND ELEVATION 808' ± (MSL) SHEET 2 OF 2

METHOD OF DRILLING 8" Hollow-Stem Auger (Baja Exploration)

DRIVE WEIGHT 140 lbs. (Auto. Trip Hammer) DROP 30"

SAMPLED BY KMH LOGGED BY KMB REVIEWED BY GMC

DEPTH (feet)	SAMPLES Bulk	SAMPLES Driven	BLOWS/FOOT	MOISTURE (%)	DRY DENSITY (PCF)	PID READING (PPM)	SYMBOL	CLASSIFICATION U.S.C.S.	DESCRIPTION/INTERPRETATION
40			34					SP-SM	ALLUVIUM: (Continued) Light brown, moist, very dense, poorly graded SAND with silt; trace gravel.
			53						Dense.
50			33						Few to little gravel.
									Total Depth = 51.5 feet. Groundwater was not encountered during drilling. In-situ percolation testing performed on 4/16/20. Backfilled with cement-bentonite grout on 4/16/20. Notes: Groundwater, though not encountered at the time of drilling, may rise to a higher level due to seasonal variations in precipitation and several other factors as discussed in the report. The ground elevation shown above is an estimation only. It is based on our interpretations of published maps and other documents reviewed for the purposes of this evaluation. It is not sufficiently accurate for preparing construction bids and design documents.
60									
70									
80									

FIGURE A- 7

Ninyo & Moore
Geotechnical & Environmental Sciences Consultants

LABOE TOS NO. 25 - STRATHERN PARK NORTH
NORTH HOLLYWOOD, CALIFORNIA

DATE DRILLED 3/25/2020 BORING NO. P-3

GROUND ELEVATION 810' ± (MSL) SHEET 1 OF 1

METHOD OF DRILLING 8" Hollow-Stem Auger (Baja Exploration)

DRIVE WEIGHT 140 lbs. (Auto. Trip Hammer) DROP 30"

SAMPLED BY KMH LOGGED BY KMB REVIEWED BY GMC

DEPTH (feet)	SAMPLES Bulk	SAMPLES Driven	BLOWS/FOOT	MOISTURE (%)	DRY DENSITY (PCF)	PID READING (PPM)	SYMBOL	CLASSIFICATION U.S.C.S.	DESCRIPTION/INTERPRETATION
0								SC	FILL: Brown, moist, loose, clayey SAND; few organics.
								SC	FILL AND MINOR WASTE: Brown, moist, loose to medium dense, clayey SAND; trace gravel; cobbles; pieces of brick, asphalt concrete, and concrete.
			78	5.8	120.6			SP	ALLUVIUM: Light brown, moist, very dense, poorly graded SAND; trace gravel.
10			-						Blow counts not recorded.
			51						Dense.
20									Total Depth = 17.5 feet. Groundwater was not encountered during drilling. Base of waste not evaluated. In-situ percolation testing performed on 4/16/20. Backfilled with cement-bentonite grout on 4/16/20. Notes: Groundwater, though not encountered at the time of drilling, may rise to a higher level due to seasonal variations in precipitation and several other factors as discussed in the report. The ground elevation shown above is an estimation only. It is based on our interpretations of published maps and other documents reviewed for the purposes of this evaluation. It is not sufficiently accurate for preparing construction bids and design documents.
30									
40									

FIGURE A- 8

Ninyo & Moore
Geotechnical & Environmental Sciences Consultants

LABOE TOS NO. 25 - STRATHERN PARK NORTH
NORTH HOLLYWOOD, CALIFORNIA

DATE DRILLED 3/24/2020 BORING NO. P-4

GROUND ELEVATION 809' ± (MSL) SHEET 1 OF 2

METHOD OF DRILLING 8" Hollow-Stem Auger (Baja Exploration)

DRIVE WEIGHT 140 lbs. (Auto. Trip Hammer) DROP 30"

SAMPLED BY KMH LOGGED BY KMB REVIEWED BY GMC

DEPTH (feet)	SAMPLES Bulk	SAMPLES Driven	BLOWS/FOOT	MOISTURE (%)	DRY DENSITY (PCF)	PID READING (PPM)	SYMBOL	CLASSIFICATION U.S.C.S.	DESCRIPTION/INTERPRETATION
0						1.2		ML	FILL: Brown, moist, loose, sandy SILT; few to little gravel; trace organics.
						2.6			
			21			4.0		SP	FILL AND MINOR WASTE: Brown, medium dense, poorly graded SAND; trace gravel; cobbles; pieces of asphalt concrete. @ 5': LEL - 0%; O_2 - 20.9%, CO - 0 ppm, H_2S - 0.0 ppm
10			30			5.8		SP	ALLUVIUM: Light brown, moist, medium dense, poorly graded SAND; few to little gravel. @ 10': LEL - 0%; O_2 - 19.2%, CO - 0 ppm, H_2S - 0.0 ppm
			44			4.9			Dense. @ 15': LEL - 0%; O_2 - 18.2%, CO - 5 ppm, H_2S - 0.0 ppm
20			39			2.7			Medium dense. @ 20': LEL - 0%; O_2 - 19.2%, CO - 7 ppm, H_2S - 0.0 ppm
			54			2.5			Dense. @ 25': LEL - 0%; O_2 - 20.3%, CO - 4 ppm, H_2S - 0.0 ppm
30			68			-			
			77/8"			-			Very dense; possible cobbles/boulders.
40									

FIGURE A- 9

Ninyo & Moore
Geotechnical & Environmental Sciences Consultants

LABOE TOS NO. 25 - STRATHERN PARK NORTH
NORTH HOLLYWOOD, CALIFORNIA

DATE DRILLED 3/24/2020 BORING NO. P-4

GROUND ELEVATION 809' ± (MSL) SHEET 2 OF 2

METHOD OF DRILLING 8" Hollow-Stem Auger (Baja Exploration)

DRIVE WEIGHT 140 lbs. (Auto. Trip Hammer) DROP 30"

SAMPLED BY KMH LOGGED BY KMB REVIEWED BY GMC

DEPTH (feet)	SAMPLES Bulk	SAMPLES Driven	BLOWS/FOOT	MOISTURE (%)	DRY DENSITY (PCF)	PID READING (PPM)	SYMBOL	CLASSIFICATION U.S.C.S.	DESCRIPTION/INTERPRETATION
40			50/6"			-		SP	ALLUVIUM: (Continued) Light brown, moist, very dense, poorly graded SAND; trace gravel.
			50/6"			-			Few to little gravel.
50			37			-		ML	Brown, moist, medium dense, sandy SILT; trace gravel.
									Total Depth = 51.5 feet. Groundwater was not encountered during drilling. In-situ percolation testing performed on 4/15/20. Backfilled with cement-bentonite grout on 4/16/20. Notes: Groundwater, though not encountered at the time of drilling, may rise to a higher level due to seasonal variations in precipitation and several other factors as discussed in the report. The ground elevation shown above is an estimation only. It is based on our interpretations of published maps and other documents reviewed for the purposes of this evaluation. It is not sufficiently accurate for preparing construction bids and design documents.
60									
70									
80									

FIGURE A- 10

Ninyo & Moore
Geotechnical & Environmental Sciences Consultants

LABOE TOS NO. 25 - STRATHERN PARK NORTH
NORTH HOLLYWOOD, CALIFORNIA

DATE DRILLED 3/25/2020 BORING NO. P-5

GROUND ELEVATION 810' ± (MSL) SHEET 1 OF 1

METHOD OF DRILLING 8" Hollow-Stem Auger (Baja Exploration)

DRIVE WEIGHT 140 lbs. (Auto. Trip Hammer) DROP 30"

SAMPLED BY KMB LOGGED BY KMB REVIEWED BY GMC

DEPTH (feet)	SAMPLES Bulk	SAMPLES Driven	BLOWS/FOOT	MOISTURE (%)	DRY DENSITY (PCF)	PID READING (PPM)	SYMBOL	CLASSIFICATION U.S.C.S.	DESCRIPTION/INTERPRETATION
0								SC	FILL: Brown, moist, firm, clayey SAND; trace organics.
								SM	FILL AND MINOR WASTE: Brown, moist, very loose, silty SAND with gravel; cobbles; few pieces of brick and asphalt concrete.
			5	10.0	95.1				
10			13					SP	ALLUVIUM: Light brown, moist, medium dense, poorly graded SAND; trace gravel.
			-						Blow counts not recorded.
20									Total Depth = 17.5 feet. Groundwater was not encountered during drilling. In-situ percolation testing performed on 4/15/20. Backfilled with cement-bentonite grout on 4/16/20. Notes: Groundwater, though not encountered at the time of drilling, may rise to a higher level due to seasonal variations in precipitation and several other factors as discussed in the report. The ground elevation shown above is an estimation only. It is based on our interpretations of published maps and other documents reviewed for the purposes of this evaluation. It is not sufficiently accurate for preparing construction bids and design documents.
30									
40									

FIGURE A- 11

Ninyo & Moore
Geotechnical & Environmental Sciences Consultants

LABOE TOS NO. 25 - STRATHERN PARK NORTH
NORTH HOLLYWOOD, CALIFORNIA

DATE DRILLED 3/25/2020 BORING NO. P-6

GROUND ELEVATION 810' ± (MSL) SHEET 1 OF 2

METHOD OF DRILLING 8" Hollow-Stem Auger (Baja Exploration)

DRIVE WEIGHT 140 lbs. (Auto. Trip Hammer) DROP 30"

SAMPLED BY KMH LOGGED BY KMB REVIEWED BY GMC

DEPTH (feet)	SAMPLES (Bulk / Driven)	BLOWS/FOOT	MOISTURE (%)	DRY DENSITY (PCF)	PID READING (PPM)	SYMBOL	CLASSIFICATION U.S.C.S.	DESCRIPTION/INTERPRETATION
0					1.5		SC	FILL: Brown, moist, loose, clayey SAND; trace gravel and organics.
					1.2			
							SM	Brown, moist, loose, silty SAND; trace gravel; cobbles.
		13			2.8		SP	Light brown, moist, loose, poorly graded SAND; trace gravel. @ 5': LEL - 0%; O_2 - 20.9%, CO - 4 ppm, H_2S - 0.0 ppm
							SP	ALLUVIUM: Light brown, moist, medium dense, poorly graded SAND.
10		13			1.6			@ 10': LEL - 0%; O_2 - 20.9%, CO - 9 ppm, H_2S - 0.0 ppm
		-	2.8	108.6	3.4			Few to little gravel; blow counts not recorded. @ 15': LEL - 0%; O_2 - 20. 9%, CO - 0 ppm, H_2S - 0.0 ppm
20		21			1.9			Dense; trace gravel. @ 20': LEL - 0%; O_2 - 20.9%, CO - 0 ppm, H_2S - 0.0 ppm
		24			2.9			Medium dense. @ 25': LEL - 0%; O_2 - 19.3%, CO - 5 ppm, H_2S - 0.0 ppm
30		24			-			Dense.
		38	3.6	109.5	-			Medium dense; trace gravel.
40								

FIGURE A- 12

Ninyo & Moore
Geotechnical & Environmental Sciences Consultants

LABOE TOS NO. 25 - STRATHERN PARK NORTH
NORTH HOLLYWOOD, CALIFORNIA

DATE DRILLED 3/25/2020 BORING NO. P-6

GROUND ELEVATION 810' ± (MSL) SHEET 2 OF 2

METHOD OF DRILLING 8" Hollow-Stem Auger (Baja Exploration)

DRIVE WEIGHT 140 lbs. (Auto. Trip Hammer) DROP 30"

SAMPLED BY KMH LOGGED BY KMB REVIEWED BY GMC

DEPTH (feet)	SAMPLES Bulk	SAMPLES Driven	BLOWS/FOOT	MOISTURE (%)	DRY DENSITY (PCF)	PID READING (PPM)	SYMBOL	CLASSIFICATION U.S.C.S.	DESCRIPTION/INTERPRETATION
40			22			-		SP	ALLUVIUM: (Continued) Light brown, moist, dense, poorly graded SAND; trace gravel; few coarse sand.
			27					SP-SM	Light brown, moist, medium dense, poorly graded SAND with silt and gravel.
50			52						Very dense; few to little gravel.
									Total Depth = 51.5 feet. Groundwater was not encountered during drilling. In-situ percolation testing performed on 4/15/20. Backfilled with cement-bentonite grout on 4/16/20. Notes: Groundwater, though not encountered at the time of drilling, may rise to a higher level due to seasonal variations in precipitation and several other factors as discussed in the report. The ground elevation shown above is an estimation only. It is based on our interpretations of published maps and other documents reviewed for the purposes of this evaluation. It is not sufficiently accurate for preparing construction bids and design documents.
60									
70									
80									

FIGURE A- 13

Ninyo & Moore
Geotechnical & Environmental Sciences Consultants

LABOE TOS NO. 25 - STRATHERN PARK NORTH
NORTH HOLLYWOOD, CALIFORNIA

LOCATION: See Figure 4	TEST PIT NO.: TP-1	SAMPLES/ FIELD TESTS	MOISTURE (%)
GROUND ELEVATION: 807'± (msl)	LOGGED BY: KMB		
METHOD OF EXCAVATION: JD 310 SG Backhoe (Newman)	DATE EXCAVATED: 3/23/2020		

DESCRIPTION

FILL:

(1) Brown, moist, soft to firm, lean CLAY (CL); trace gravel; few organics.

(2) Brown to light brown, moist, loose to medium dense, poorly graded SAND (SP); few gravel; cobbles up to approximately 6 inches in diameter.

ALLUVIUM:

(3) Light brown, moist, loose to medium dense, poorly graded SAND with gravel and cobbles (SP); interbeds of poorly graded GRAVEL with sand and cobbles (GP).

4.0'-5.0': Bulk Bag

8.0'-9.0': Bulk Bag

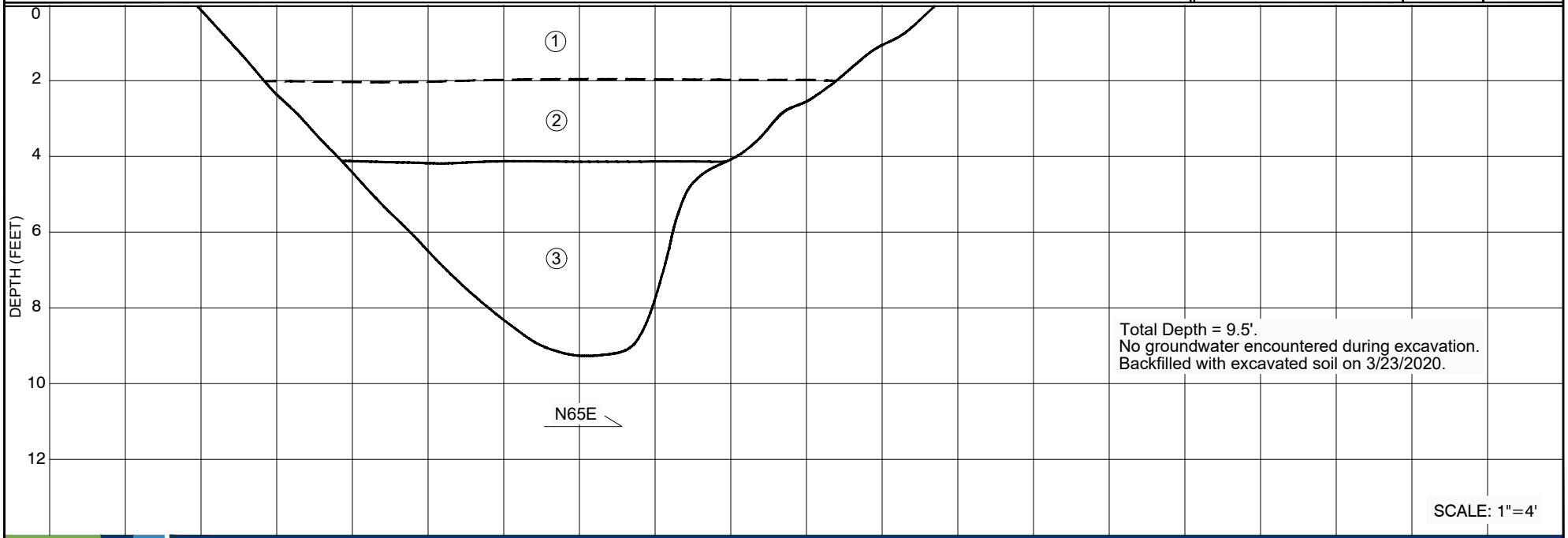

211294001_TP1.dwg 06/11/2020 JDP

FIGURE B-1

Ninyo & Moore
Geotechnical & Environmental Sciences Consultants

TEST PIT LOG

LABOE TOS NO. 25 - STRATHERN PARK NORTH
NORTH HOLLYWOOD, CALIFORNIA

211294001 I 8/20

LOCATION: See Figure 4	TEST PIT NO.: TP-2		
GROUND ELEVATION: 809'± (msl)	LOGGED BY: KMB		
METHOD OF EXCAVATION: JD 310 SG Backhoe (Newman)	DATE EXCAVATED: 3/23/2020		

DESCRIPTION	SAMPLES/ FIELD TESTS	MOISTURE (%)	DRY DENSITY (PCF)
FILL:			
① Brown, moist, loose, clayey SAND (SC); few gravel; cobbles; few organics.	0'-0.5': Bulk Bag		
② Light brown, moist, loose to medium dense, well-graded SAND with silt and gravel (SW-SM); cobbles up to approximately 6 inches in diameter.	1.5'-2.5': Bulk Bag		
ALLUVIUM:			
③ Light brown, moist, loose to medium dense, poorly graded SAND with gravel (SP); interbeds of poorly graded GRAVEL with sand and cobbles (GP).			

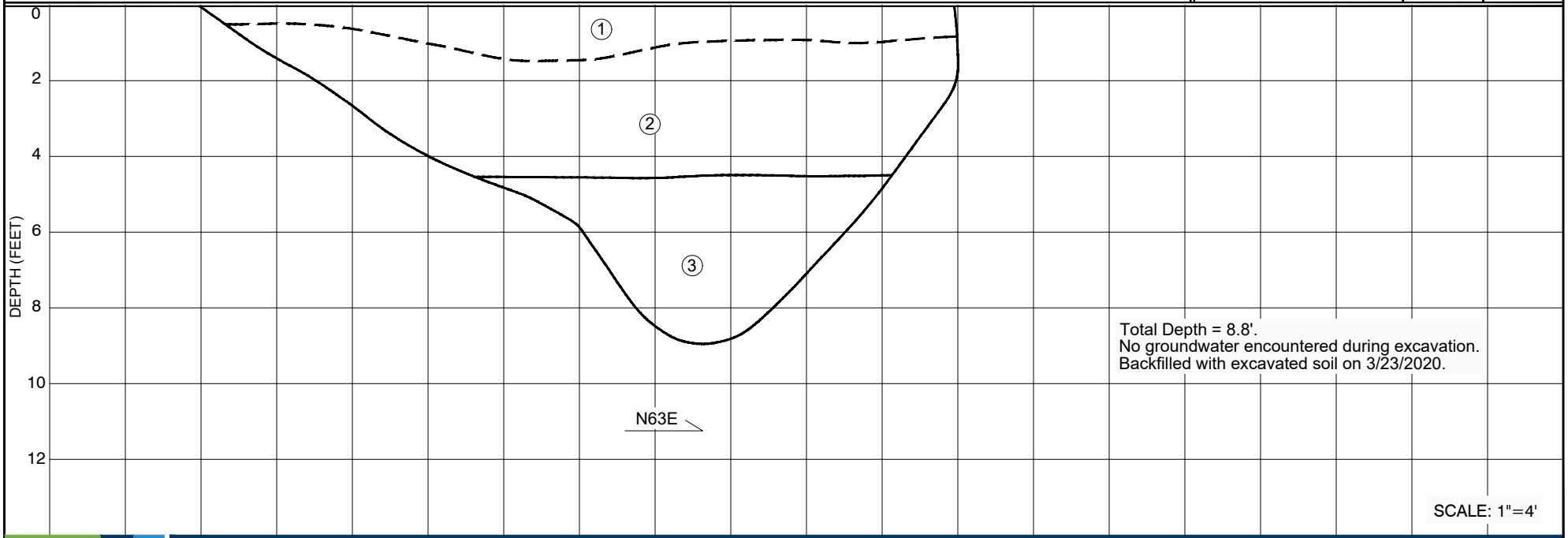

211294001_TP2.dwg 06/11/2020 JDP

FIGURE B-2

Ninyo & Moore
Geotechnical & Environmental Sciences Consultants

TEST PIT LOG

LABOE TOS NO. 25 - STRATHERN PARK NORTH
NORTH HOLLYWOOD, CALIFORNIA

211294001 I 8/20

LOCATION: See Figure 4	TEST PIT NO.: TP-3		
GROUND ELEVATION: 810'± (msl)	LOGGED BY: KMB		
METHOD OF EXCAVATION: JD 310 SG Backhoe (Newman)	DATE EXCAVATED: 3/23/2020		

DESCRIPTION	SAMPLES/ FIELD TESTS	MOISTURE (%)	DRY DENSITY (PCF)
FILL:			
① Brown, moist, loose, clayey SAND (SC); few gravel; lenses of reddish brown, moist, loose, clayey SAND (SC); few to little gravel.	0.5'-1.2': Bulk Bag		
FILL AND MINOR WASTE:			
② Light brown, moist, loose, poorly graded SAND (SP); few to little gravel; cobbles up to approximately 8 inches in diameter; minor waste consisting of asphalt concrete and a plastic Doritos bag.	1.5'-2.5': Bulk Bag		
ALLUVIUM:			
③ Light brown, moist, loose, poorly graded SAND (SP); interbeds of poorly graded GRAVEL with sand and cobbles (GP).			

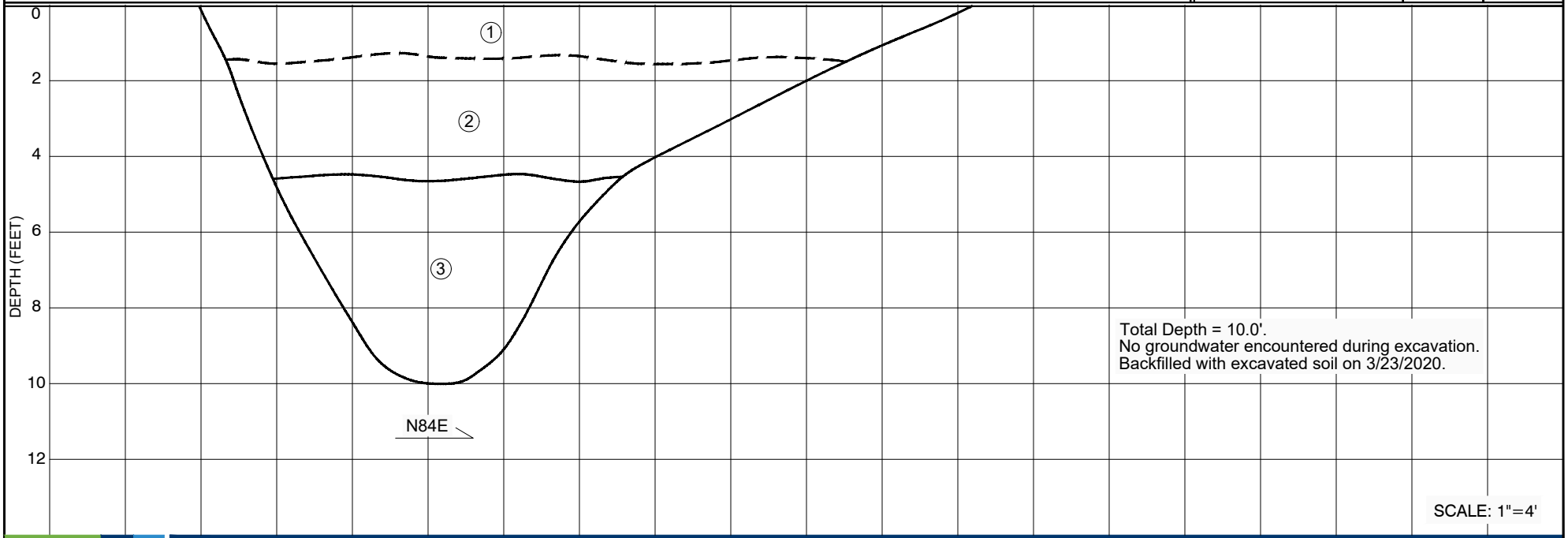

211294001_TP3.dwg 06/11/2020 JDP

FIGURE B-3

Ninyo & Moore
Geotechnical & Environmental Sciences Consultants

TEST PIT LOG

LABOE TOS NO. 25 - STRATHERN PARK NORTH
NORTH HOLLYWOOD, CALIFORNIA

211294001 I 8/20

LOCATION: See Figure 4	TEST PIT NO.: TP-4	SAMPLES/ FIELD TESTS	MOISTURE (%)
GROUND ELEVATION: 808'± (msl)	LOGGED BY: KMB		
METHOD OF EXCAVATION: JD 310 SG Backhoe (Newman)	DATE EXCAVATED: 3/23/2020		

DESCRIPTION

FILL:

① Brown, moist, loose, clayey SAND (SC); few gravel.

FILL AND MINOR WASTE:

② Brown to light brown, moist, loose to medium dense, poorly graded SAND (SP); few gravel; cobbles; minor waste consisting of bottles, tires, ceramics, and pieces of concrete.

3.0'-4.0': Bulk Bag

ALLUVIUM:

③ Light brown, moist, loose to medium dense, poorly graded SAND (SP); trace gravel; cobbles.

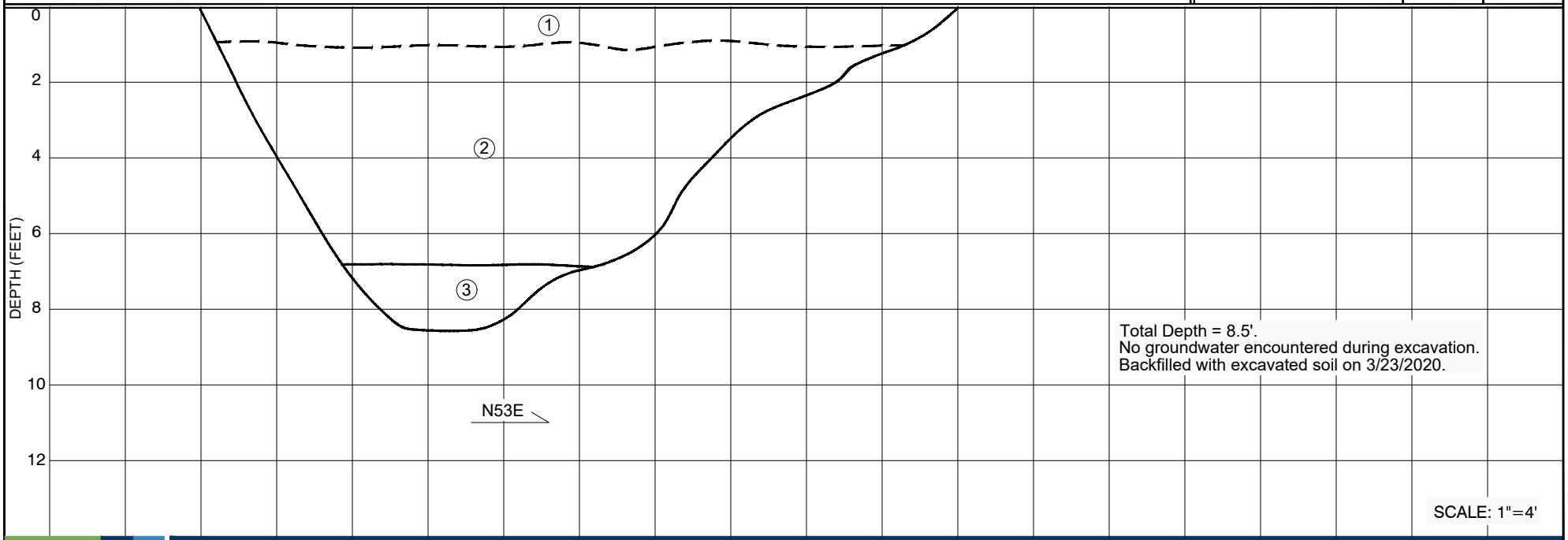

211294001_TP4.dwg 06/11/2020 JDP

FIGURE B-4

Ninyo & Moore
Geotechnical & Environmental Sciences Consultants

TEST PIT LOG

LABOE TOS NO. 25 - STRATHERN PARK NORTH
NORTH HOLLYWOOD, CALIFORNIA

211294001 I 8/20

LOCATION: See Figure 4	TEST PIT NO.: TP-5	SAMPLES/ FIELD TESTS	MOISTURE (%)
GROUND ELEVATION: 810'± (msl)	LOGGED BY: KMB		
METHOD OF EXCAVATION: JD 310 SG Backhoe (Newman)	DATE EXCAVATED: 3/23/2020		

DESCRIPTION

FILL:

(1) Brown, moist, soft to firm, sandy lean CLAY (CL); trace gravel, few organics.

FILL AND MINOR WASTE:

(2) Light brown, moist, loose, silty SAND with gravel and cobbles (SM); minor waste consisting of glass, metal, asphalt concrete, and brick.

2.0'-3.0': Bulk Bag

ALLUVIUM:

(3) Light brown, moist, loose, poorly graded SAND (SP); few gravel; interbeds of poorly graded GRAVEL with sand (GP).

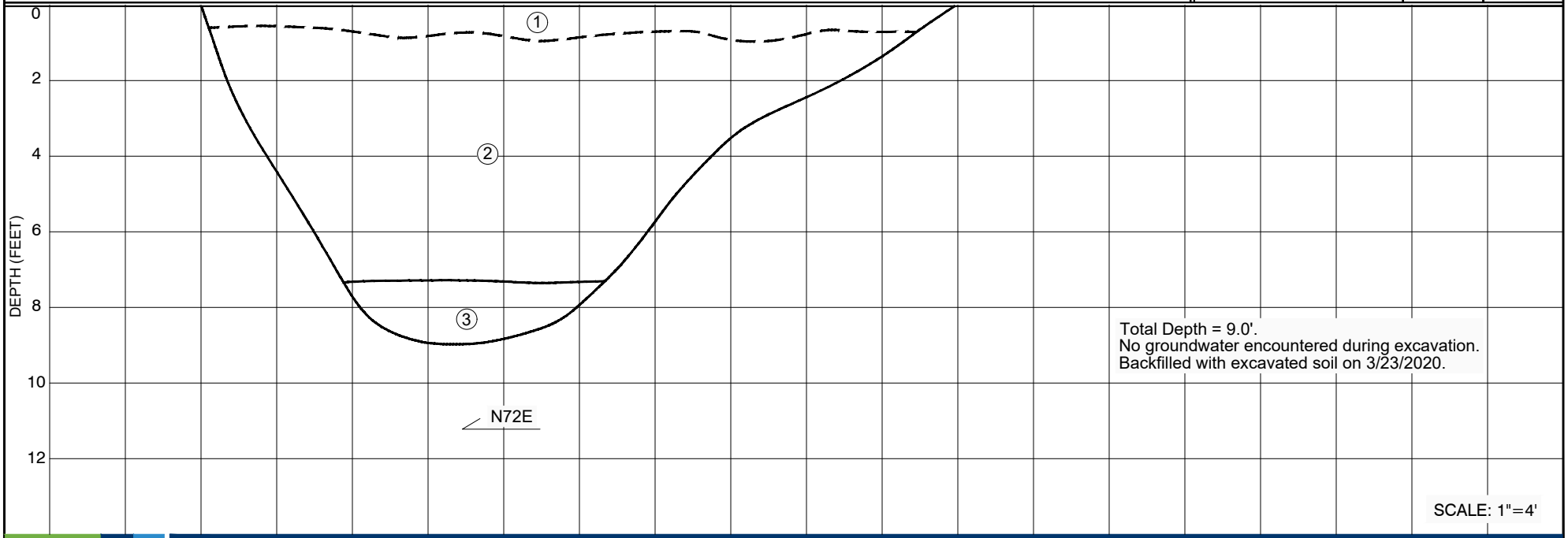

211294001_TP5.dwg 06/11/2020 JDP

FIGURE B-5

Ninyo & Moore
Geotechnical & Environmental Sciences Consultants

TEST PIT LOG

LABOE TOS NO. 25 - STRATHERN PARK NORTH
NORTH HOLLYWOOD, CALIFORNIA

211294001 I 8/20

LOCATION: See Figure 4	TEST PIT NO.: TP-6	SAMPLES/ FIELD TESTS	MOISTURE (%)
GROUND ELEVATION: 809'± (msl)	LOGGED BY: KMB		
METHOD OF EXCAVATION: JD 310 SG Backhoe (Newman)	DATE EXCAVATED: 3/23/2020		

DESCRIPTION

FILL:

(1) Brown, moist, soft, sandy lean CLAY (CL); few to little gravel; few organics.
(2) Light brown, moist, loose, poorly graded SAND with clay (SP-SC).

3.0'-4.5': Bulk Bag

FILL AND WASTE:

(3) Light brown, moist, loose, poorly graded SAND with clay (SP-SC); waste consisting of brick, ceramic, and concrete.

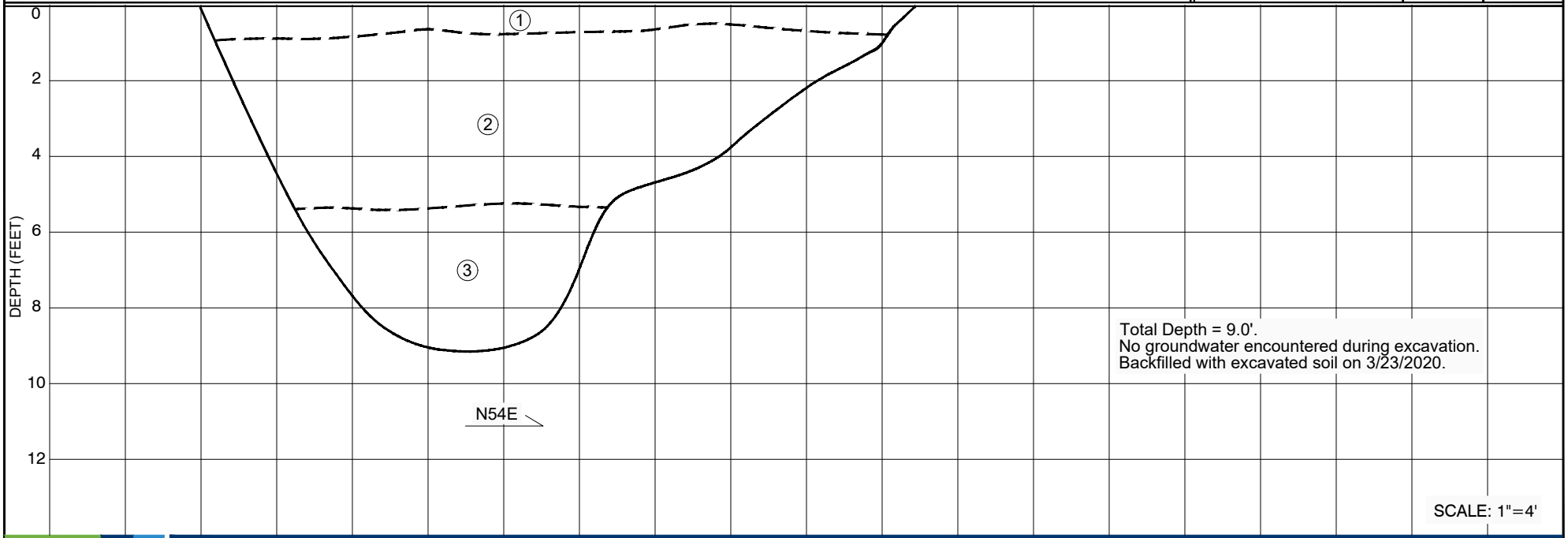

211294001_TP6.dwg 06/11/2020 JDP

FIGURE B-6

Ninyo & Moore
Geotechnical & Environmental Sciences Consultants

TEST PIT LOG

LABOE TOS NO. 25 - STRATHERN PARK NORTH
NORTH HOLLYWOOD, CALIFORNIA

211294001 I 8/20

Kehoe Testing and Engineering
714-901-7270
steve@kehoetesting.com
www.kehoetesting.com

Project: **Ninyo & Moore / Strathern Site**
Location: **Los Angeles County, CA**

CPT-1
Total depth: 50.03 ft, Date: 3/26/2020

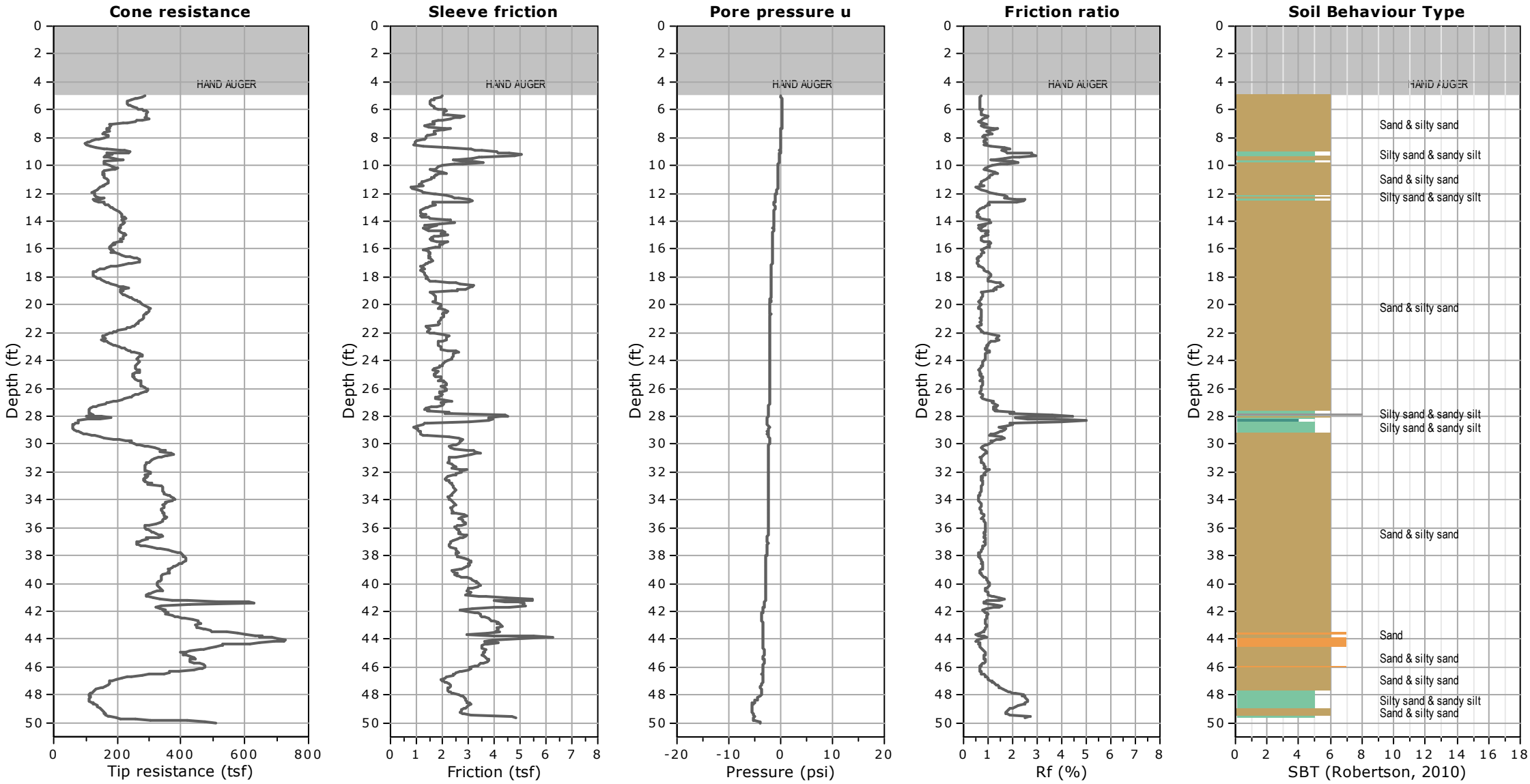

Kehoe Testing and Engineering
714-901-7270
steve@kehoetesting.com
www.kehoetesting.com

Project: **Ninyo & Moore / Strathern Site**
Location: **Los Angeles County, CA**

CPT-2
Total depth: 50.20 ft, Date: 3/26/2020

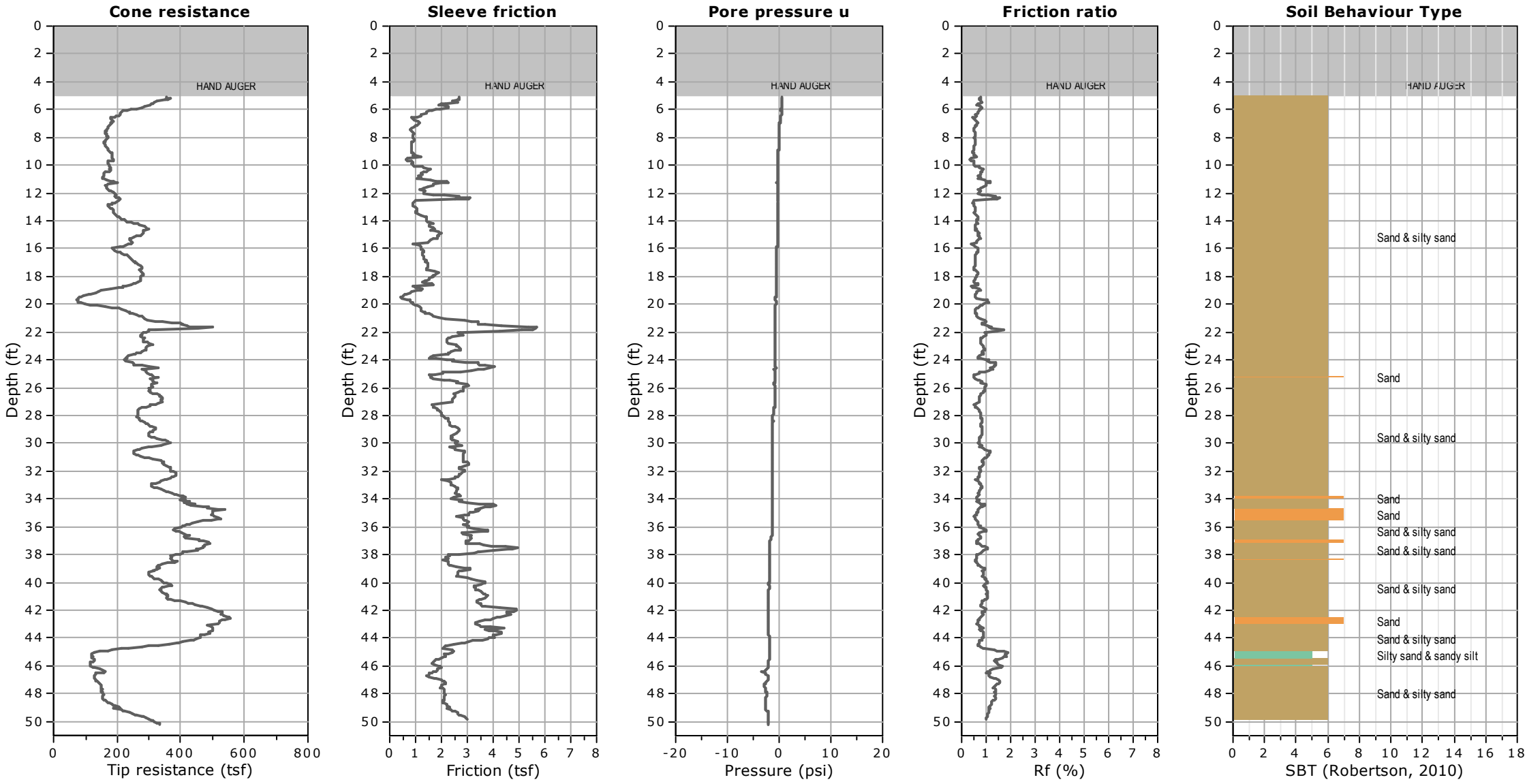

Kehoe Testing and Engineering
714-901-7270
steve@kehoetesting.com
www.kehoetesting.com

Project: **Ninyo & Moore / Strathern Site**
Location: **Los Angeles County, CA**

CPT-3
Total depth: 50.34 ft, Date: 3/26/2020

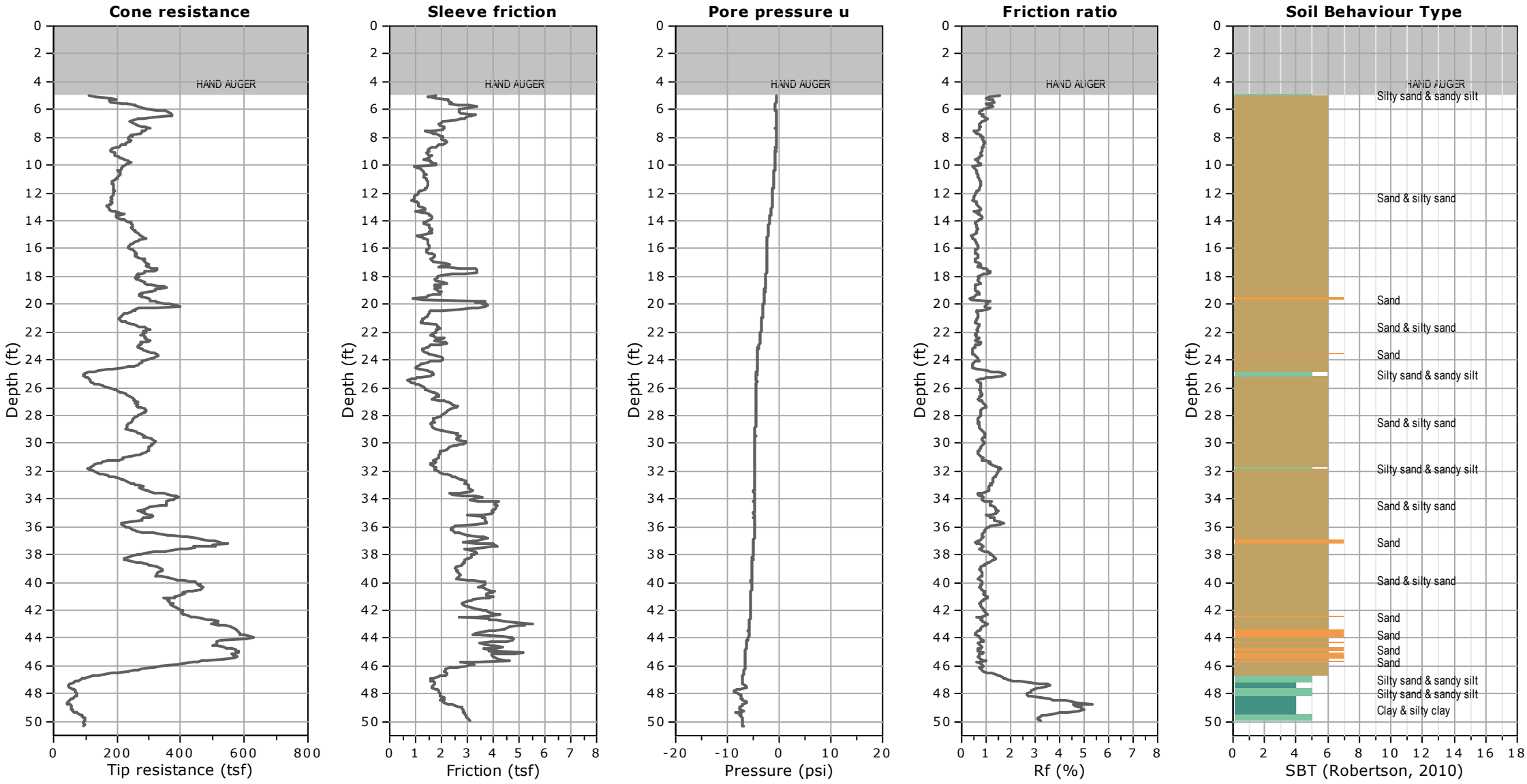

Kehoe Testing and Engineering
714-901-7270
steve@kehoetesting.com
www.kehoetesting.com

Project: **Ninyo & Moore / Strathern Site**
Location: **Los Angeles County, CA**

CPT-4
Total depth: 50.16 ft, Date: 3/26/2020

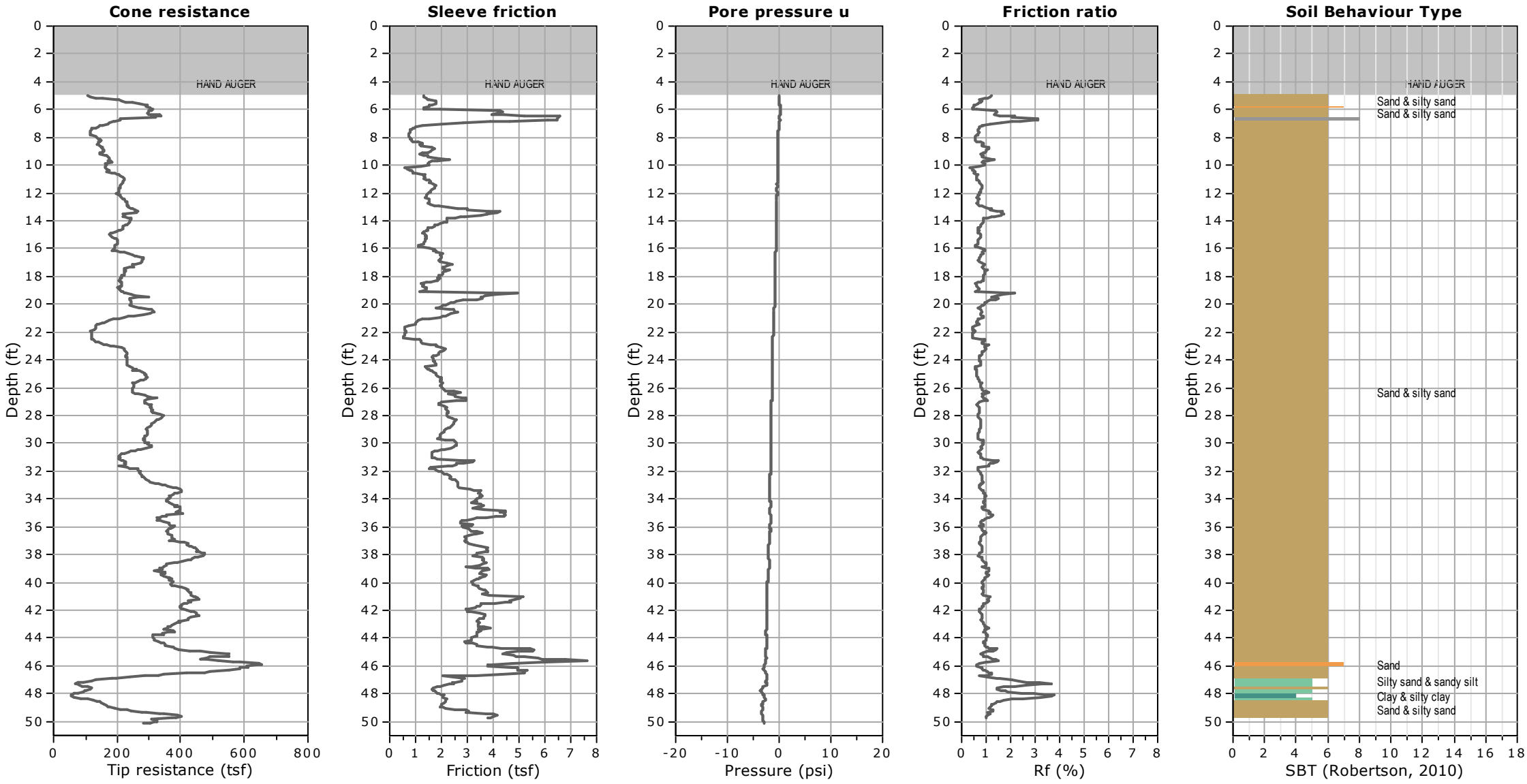

Kehoe Testing and Engineering
714-901-7270
steve@kehoetesting.com
www.kehoetesting.com

Project: **Ninyo & Moore / Strathern Site**
Location: **Los Angeles County, CA**

CPT-5
Total depth: 50.04 ft, Date: 3/26/2020

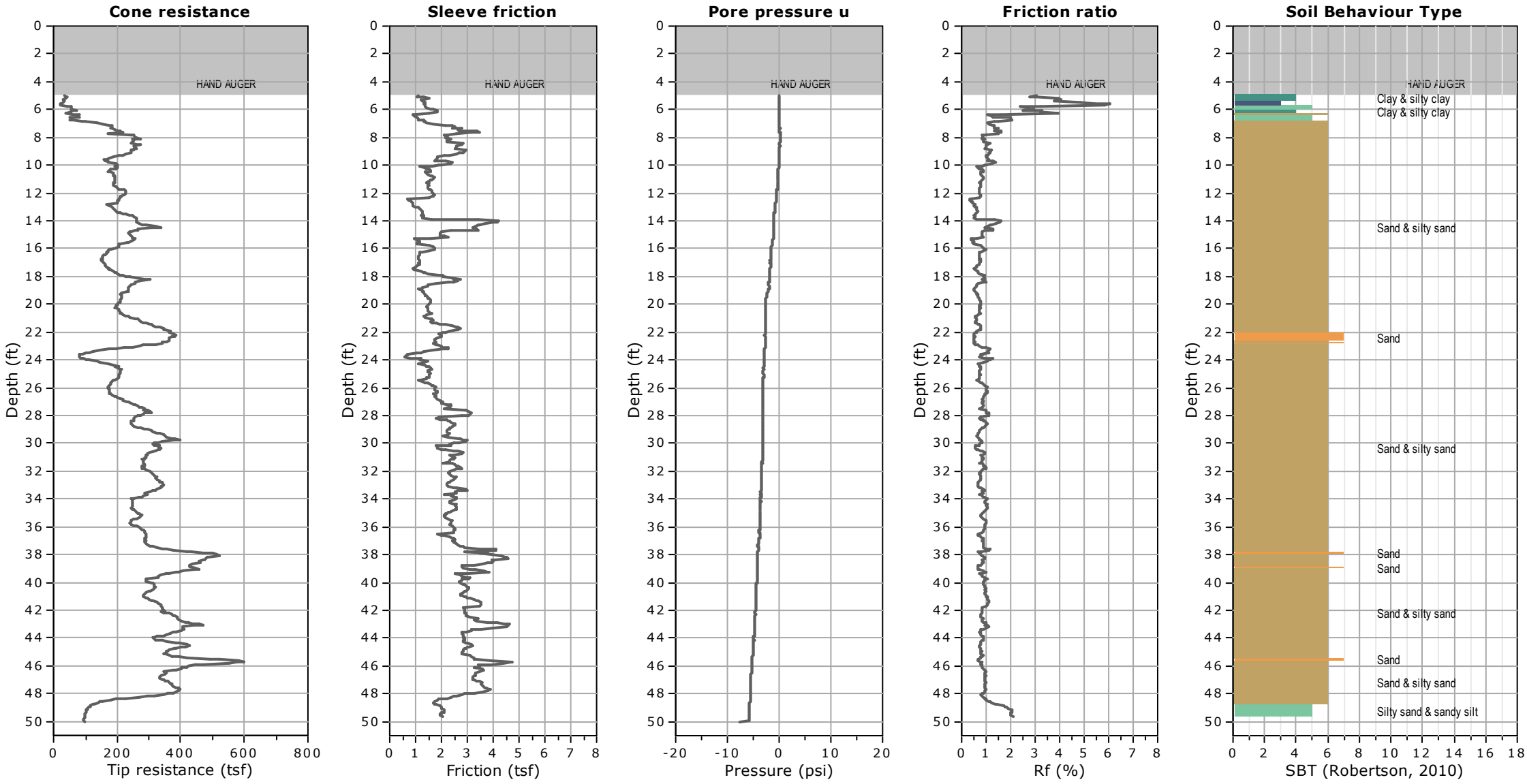

Kehoe Testing and Engineering
714-901-7270
steve@kehoetesting.com
www.kehoetesting.com

Project: **Ninyo & Moore / Strathern Site**
Location: **Los Angeles County, CA**

CPT-6
Total depth: 48.10 ft, Date: 3/26/2020

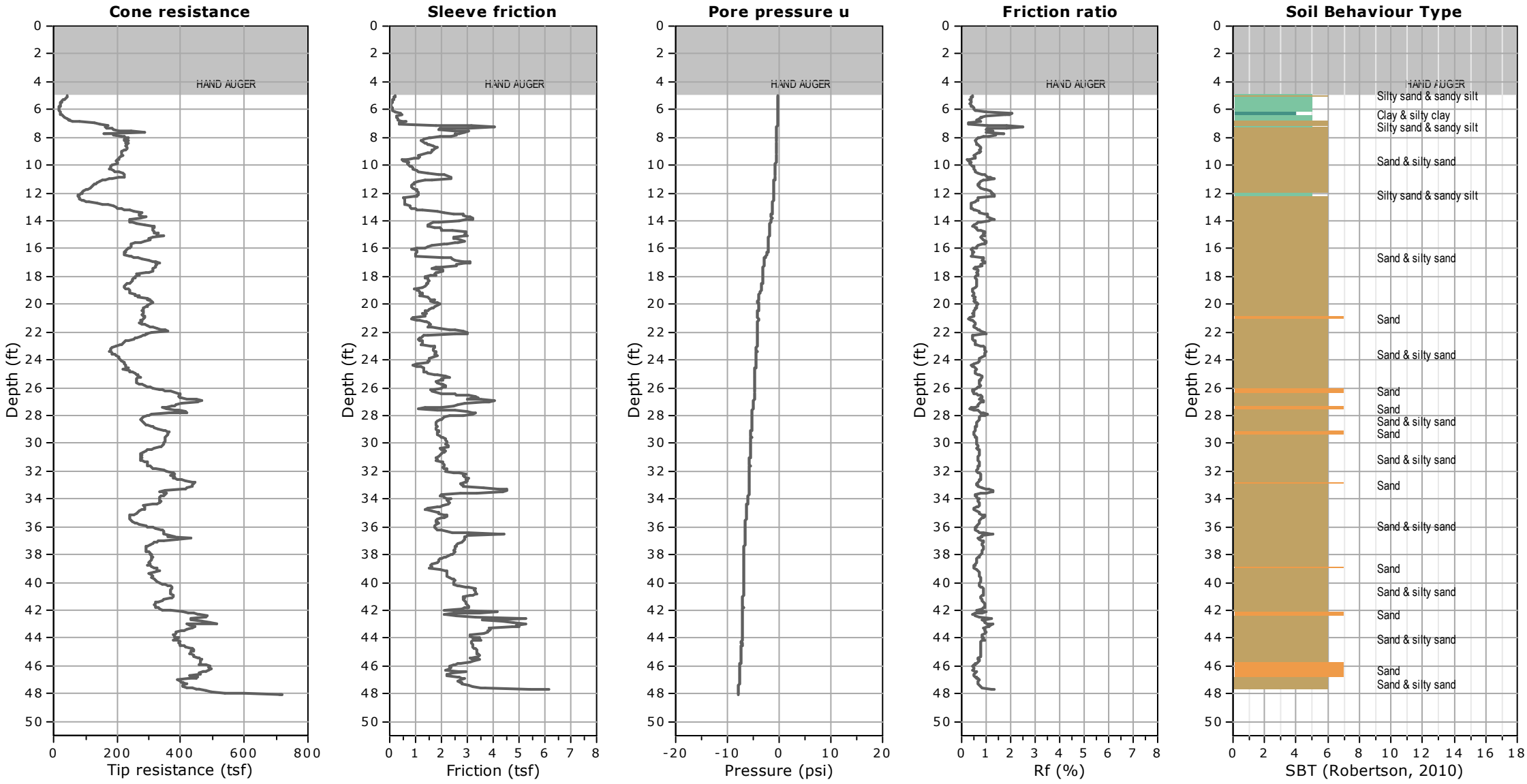

Kehoe Testing & Engineering
714-901-7270
steve@kehoetesting.com
www.kehoetesting.com

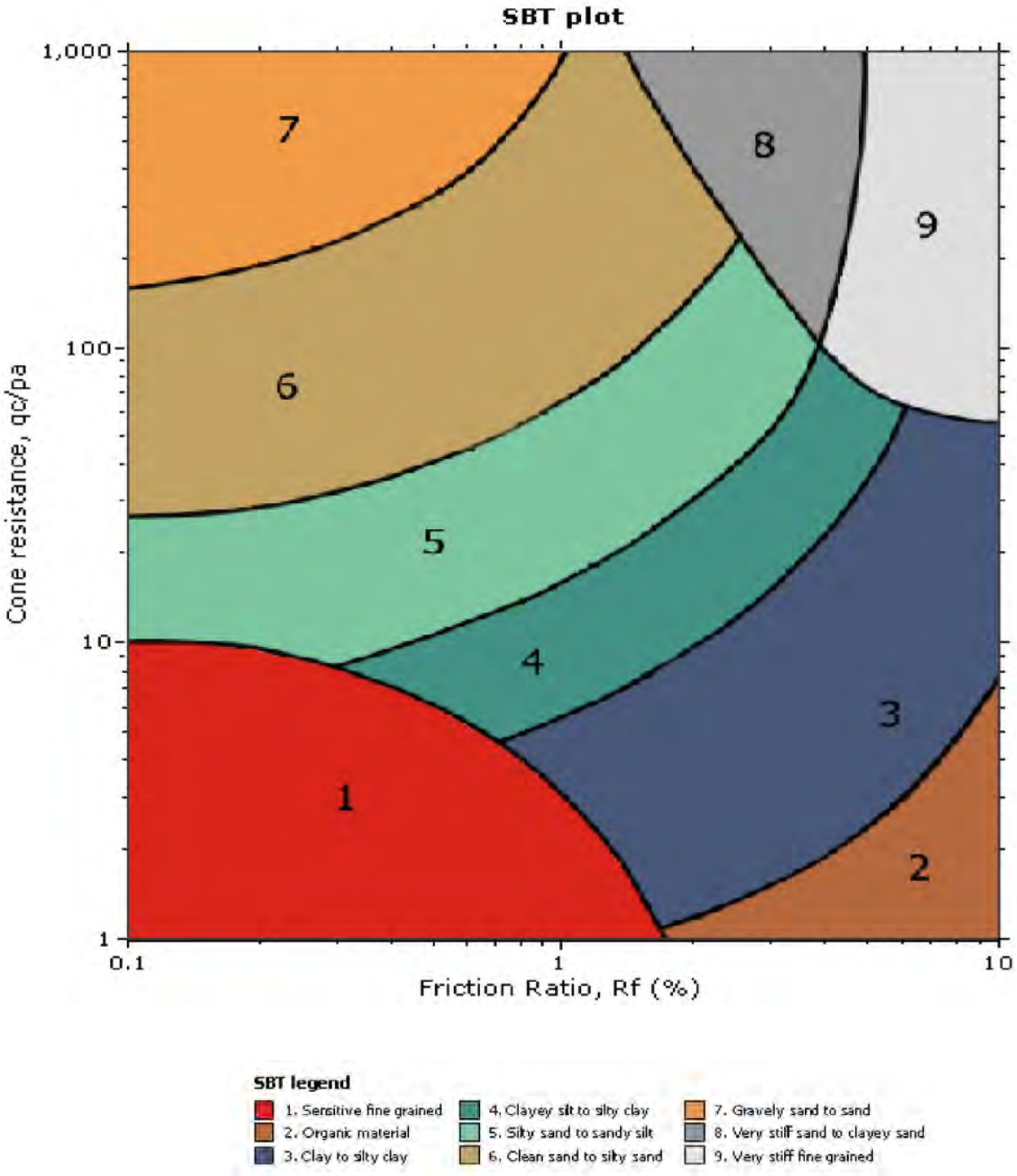

APPENDIX F

Air Monitoring Logs

Air Monitoring Logs

Test Pit ID	Date	Time	Oxygen	Lower Explosive Limit	Carbon Monoxide	Hydrogen Sulfide	Volatile Organic Compounds
			Percent	Percent	Parts Per Million	Parts Per Million	Parts Per Million
TP1	4/27/2021	0815	20.9	0.0	0.0	0.0	0.0
	4/27/2021	0819	20.9	0.0	0.0	0.0	0.0
TP2	4/27/2021	0845	20.9	0.0	0.0	0.0	0.0
	4/27/2021	0855	20.9	0.0	0.0	0.0	0.0
	4/27/2021	0901	20.9	0.0	0.0	0.0	0.0
TP3	4/27/2021	0935	20.9	0.0	0.0	0.0	0.0
	4/27/2021	0955	20.9	0.0	0.0	0.0	0.0
TP4	4/27/2021	1020	20.9	0.0	0.0	0.0	0.0
	4/27/2021	1035	20.9	0.0	0.0	0.0	0.1
TP5	4/27/2021	1100	20.9	0.0	0.0	0.0	0.3
	4/27/2021	1125	20.9	0.0	0.0	0.0	0.2
TP6	4/27/2021	1240	21.2	0.0	0.0	0.0	0.1
TP7	4/27/2021	1345	21.2	0.0	0.0	0.0	0.1
TP8	4/27/2021	1400	21.2	0.0	0.0	0.0	0.1
	4/27/2021	1415	21.3	0.0	0.0	0.0	0.2
TP9	4/27/2021	1505	21.3	0.0	0.0	0.0	0.2
TP10	4/27/2021	1535	21.3	0.0	0.0	0.0	0.2
	4/27/2021	1550	21.3	0.0	0.0	0.0	0.2
TP12	4/28/2021	0800	21.9	0.0	0.0	0.0	0.0
TP13	4/28/2021	0840	21.9	0.0	0.0	0.0	0.0
TP14	4/28/2021	0905	21.9	0.0	0.0	0.0	0.0
TP15	4/28/2021	0925	21.9	0.0	0.0	0.0	0.0
TP16	4/28/2021	0945	21.9	0.0	0.0	0.0	0.0
TP17	4/28/2021	1015	21.9	0.0	0.0	0.0	0.0
TP19	4/28/2021	1220	21.2	0.0	0.0	0.0	0.2
TP20	4/28/2021	1255	21.4	0.0	0.0	0.0	0.2
TP21	4/28/2021	1330	21.3	0.0	0.0	0.0	0.2
TP22	4/28/2021	1420	21.4	0.0	0.0	0.0	0.2

APPENDIX G

Laboratory Analytical Reports and Chain-of-Custody Documentation

Enthalpy Analytical
931 West Barkley Ave
Orange, CA 92868
(714) 771-6900

enthalpy.com

Lab Job Number: 444657
Report Level: II
Report Date: 05/25/2021

Analytical Report *prepared for:*

Beth Abramson Beck
Ninyo & Moore
475 Goddard
Suite 200
Irvine, CA 92618

Location: Strathern Park North

Authorized for release by:

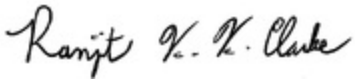

Ranjit K Clarke, Project Manager
(714) 771-9906
Ranjit.Clarke@enthalpy.com

This data package has been reviewed for technical correctness and completeness. Release of this data has been authorized by the Laboratory Manager or the Manager's designee, as verified by the above signature which applies to this PDF file as well as any associated electronic data deliverable files. The results contained in this report meet all requirements of NELAP and pertain only to those samples which were submitted for analysis. This report may be reproduced only in its entirety.

CA ELAP# 1338, NELAP# 4038, SCAQMD LAP# 18LA0518, LACSD ID# 10105, CDC ELITE Member

ENTHALPY ANALYTICAL

Sample Summary

Beth Abramson Beck
Ninyo & Moore
475 Goddard
Suite 200
Irvine, CA 92618

Lab Job #: 444657
Location: Strathern Park North
Date Received: 04/28/21

Sample ID	Lab ID	Collected	Matrix
TP1-0.5	444657-001	04/27/21 08:05	Soil
TP1-3	444657-002	04/27/21 08:15	Soil
TP1-7.5	444657-003	04/27/21 08:20	Soil
TP2-0.5	444657-004	04/27/21 08:45	Soil
TP2-3.5	444657-005	04/27/21 08:50	Soil
TP2-7	444657-006	04/27/21 09:05	Soil
TP3-0.5	444657-007	04/27/21 09:30	Soil
TP3-5	444657-008	04/27/21 09:40	Soil
TP3-7.5	444657-009	04/27/21 10:00	Soil
TP4-0.75	444657-010	04/27/21 10:25	Soil
TP4-6	444657-011	04/27/21 10:40	Soil
TP5-0.5	444657-012	04/27/21 11:00	Soil
TP5-5	444657-013	04/27/21 11:20	Soil
TP5-7	444657-014	04/27/21 11:25	Soil
TP6-0.75	444657-015	04/27/21 12:40	Soil
TP6-3	444657-016	04/27/21 12:45	Soil
TP6-6.5	444657-017	04/27/21 12:55	Soil
TP7-1	444657-018	04/27/21 13:20	Soil
TP7-3	444657-019	04/27/21 13:30	Soil
TP7-4	444657-020	04/27/21 13:45	Soil
TP7-BLUE	444657-021	04/27/21 13:45	Soil
TP7-5.5	444657-022	04/27/21 13:50	Soil
TP7-7	444657-023	04/27/21 13:55	Soil
TP8-1	444657-024	04/27/21 14:30	Soil
TP8-3	444657-025	04/27/21 14:35	Soil
TP8-5	444657-026	04/27/21 14:40	Soil
TP9-1	444657-027	04/27/21 15:00	Soil
TP9-4	444657-028	04/27/21 15:10	Soil

ENTHALPY ANALYTICAL

Sample Summary

Beth Abramson Beck
Ninyo & Moore
475 Goddard
Suite 200
Irvine, CA 92618

Lab Job #: 444657
Location: Strathern Park North
Date Received: 04/28/21

Sample ID	Lab ID	Collected	Matrix
TP9-6	444657-029	04/27/21 15:15	Soil
TP10-1	444657-030	04/27/21 15:35	Soil
TP10-3.5	444657-031	04/27/21 15:40	Soil
TP10-4	444657-032	04/27/21 15:45	Soil
TP10-7	444657-033	04/27/21 15:50	Soil
TP11-0.75	444657-034	04/28/21 07:45	Soil
TP11-3.5	444657-035	04/28/21 07:50	Soil
TP11-6	444657-036	04/28/21 08:00	Soil
TP12-1	444657-037	04/28/21 08:20	Soil
TP12-4	444657-038	04/28/21 08:30	Soil
TP13-1	444657-039	04/28/21 08:45	Soil
TP13-4	444657-040	04/28/21 08:50	Soil
TP14-1	444657-041	04/28/21 09:00	Soil
TP14-2	444657-042	04/28/21 09:11	Soil
TP15-1	444657-043	04/28/21 09:25	Soil
TP15-3	444657-044	04/28/21 09:30	Soil
TP16-0.75	444657-045	04/28/21 09:55	Soil
TP16-3	444657-046	04/28/21 10:00	Soil
TP17-1	444657-047	04/28/21 10:10	Soil
TP17-4	444657-048	04/28/21 10:15	Soil
TP18-1	444657-049	04/28/21 10:50	Soil
TP18-3	444657-050	04/28/21 10:55	Soil
TP18-6.5	444657-051	04/28/21 11:05	Soil
TP19-1	444657-052	04/28/21 12:10	Soil
TP19-3	444657-053	04/28/21 12:15	Soil
TP19-6	444657-054	04/28/21 12:25	Soil
TP20-1	444657-055	04/28/21 12:55	Soil
TP20-3.5	444657-056	04/28/21 13:10	Soil

ENTHALPY ANALYTICAL

Sample Summary

Beth Abramson Beck
Ninyo & Moore
475 Goddard
Suite 200
Irvine, CA 92618

Lab Job #: 444657
Location: Strathern Park North
Date Received: 04/28/21

Sample ID	Lab ID	Collected	Matrix
TP20-7.5	444657-057	04/28/21 13:00	Soil
TP21-1	444657-058	04/28/21 13:30	Soil
TP21-3	444657-059	04/28/21 13:35	Soil
TP21-7	444657-060	04/28/21 13:50	Soil
TP21-5	444657-061	04/28/21 14:15	Soil
TP21-5.5	444657-062	04/28/21 14:30	Soil
TP22-0.75	444657-063	04/28/21 14:30	Soil
TP22-3	444657-064	04/28/21 14:35	Soil
TP22-6	444657-065	04/28/21 14:45	Soil

ENTHALPY ANALYTICAL

Chain of Custody Record

Lab No: 444657 EM 4/26/21

Page: 1 of 4

Turn Around Time (Rush must be pre-arranged)

Standard:	X	4 Day:		3 Day:	
2 Day:		1 Day:		Same Day:	(1)

Enthalpy Analytical - Orange

931 W. Barkley Avenue, Orange, CA 92868

Phone 714-771-6900

Matrix: A = Air DW = Drinking Water F = Food SD = Sediment T = Tissue PP = Pure Product S = Solid/Soil SeaW = Sea Water SW = Swab W = Water WP = Wipe O = Other

Preservatives: 1 = $Na_2S_2O_3$ 2 = HCl 3 = HNO_3 4 = H_2SO_4 5 = NaOH 6 = Other

5.5/1.3 , 5.0/1.2

CUSTOMER INFORMATION		PROJECT INFORMATION	
Company:	Ninyo + Moore	Name:	~~Beth Abramson Beck~~
Report To:	Beth Abramson Beck	Number:	211194007
Email:	babramsonbeck@ninyoandmoore.com	P.O. #:	Strathern Park North
Address:	5710 Ruffin Rd SD	Address:	
Phone:	858 576-1000	Global ID:	
Fax:		Sampled By:	BAB

	Sample ID	Sampling Date	Sampling Time	Matrix	Container No. / Size	Pres.	Total Metal 6010B/7471A	lead only 6010B	TPH 8015	SVOCs 8270C	VOCs 8260B	OCPs 8081A	PCBs 8082	Test Instructions / Comments
1	TP1-0.5	04.27.21	8:05	SOIL	JAR									WILL ASSIGN ALL TESTS 04.29.2021
2	TP1-3		8:15											
3	TP1-7.5		8:20											
4	TP2-0.5		8:45											
5	TP2-3.5		8:50											
6	TP2-7		9:05											
7	TP3-0.5		9:30											
8	TP3-5		9:40											AC in sample
9	TP3-7.5		10:00											
10	TP4-0.75		10:05											

	Signature	Print Name	Company / Title	Date / Time
[1] Relinquished By:		Beth Abramson Beck	NMW	04/28/21 16:58
[1] Received By:		Elizabeth Ramu	EA	4/28/21 16:58
[2] Relinquished By:				
[2] Received By:				
[3] Relinquished By:				
[3] Received By:				

ENTHALPY ANALYTICAL

Chain of Custody Record

Lab No: 444657 EDF 4/29

Page: 2 of 4

Turn Around Time (Rush must be pre-arranged)

Standard:	X	4 Day:		3 Day:	2
2 Day:		1 Day:		Same Day:	

Enthalpy Analytical - Orange

931 W. Barkley Avenue, Orange, CA 92868

Phone 714-771-6900

Matrix: A = Air DW = Drinking Water F = Food SD = Sediment T = Tissue PP = Pure Product S = Solid/Soil SeaW = Sea Water SW = Swab W = Water WP = Wipe O = Other

Preservatives: 1 = $Na_2S_2O_3$ 2 = HCl 3 = HNO_3 4 = H_2SO_4 5 = NaOH 6 = Other

CUSTOMER INFORMATION		PROJECT INFORMATION	
Company:	Ninyo & Moore	Name:	Strathern Park North
Report To:	Beth Abramson Beck	Number:	211194007
Email:	babramsonbeck@ninyoandmoore.com	P.O. #:	
Address:	5710 Ruffin Rd SD 92007	Address:	
Phone:	858 576 1000	Global ID:	
Fax:		Sampled By:	

	Sample ID	Sampling Date	Sampling Time	Matrix	Container No. / Size	Pres.	Analysis Request: TPHe 22 metals 6010B/7471A	lead only 6010B	TPH 8015	SVOCs 8270C	VOCs 8260B	OCPs	PCBs				Test Instructions / Comments
11	TP4-6	04/27/21	1040	SOIL	9oz jar												
12	TP5-0.5	04/27/21	1100														
13	TP5-5		1120														
14	TP5-7		1125														
15	TP6-0.75	04/27/21	1240														
16	TP6-3		1245														
17	TP6-6.5		1255														
18	TP7-1		1260				X										
19	TP7-3		1300														
20	TP7-4		1305				X										

	Signature	Print Name	Company / Title	Date / Time
1 Relinquished By:		BE Abramson Beck	N. Moore	04/28/21 5-
1 Received By:		Elizabeth Ramirez	EA	4/28/21 16:58
2 Relinquished By:				
2 Received By:				
3 Relinquished By:				
3 Received By:				

ENTHALPY ANALYTICAL

Chain of Custody Record

Lab No: 444657 EA 4/20/21

Page: 3 of 4

Turn Around Time (Rush must be pre-arranged)

Standard:	X	4 Day:		3 Day:	3
2 Day:		1 Day:		Same Day:	

Enthalpy Analytical - Orange

931 W. Barkley Avenue, Orange, CA 92868

Phone 714-771-6900

Matrix: A = Air DW = Drinking Water F = Food SD = Sediment T = Tissue PP = Pure Product S = Solid/Soil SeaW = Sea Water SW = Swab W = Water WP = Wipe O = Other

Preservatives: 1 = $Na_2S_2O_3$ 2 = HCl 3 = HNO_3 4 = H_2SO_4 5 = NaOH 6 = Other

CUSTOMER INFORMATION		PROJECT INFORMATION	
Company:	Ninyo & Moore	Name:	Strathern Park North
Report To:	Beth Abramson Beck	Number:	211194007
Email:	babramsonbeck@ninyoandmoore.com	P.O. #:	
Address:	5710 Ruffin Rd SD	Address:	
Phone:	858 576-1000	Global ID:	
Fax:		Sampled By:	

Analysis Request

	Sample ID	Sampling Date	Sampling Time	Matrix	Container No. / Size	Pres.	Title 22 Metals 6000B/7471A	lead only 6010B	TPH 8015	SVOCs 8270C	VOCs 8260B	OCPs	PCBs				Test Instructions / Comments
21	TP7-blue	04.27.21	1:45	solid	glassjar		X										unknown cobalt/indigo blue substance
22	TP7-5.5		1:50				X										
23	TP7-7		1:55					X									
24	TP8-1		2:30														
25	TP8-3		2:35														
26	TP8-5		2:40														
27	TP9-1		3-														
28	TP9-4		3:10														
29	TP9-6		3:15														
30	TP10-1		3:35														

	Signature	Print Name	Company / Title	Date / Time
1 Relinquished By:	[signature]	B S Abramson Beck	N. Moore	04.28.21 / 5:01
1 Received By:	[signature]	Elizabeth Ramirez	EA	4/28/21 16:58
2 Relinquished By:				
2 Received By:				
3 Relinquished By:				
3 Received By:				

ENTHALPY ANALYTICAL

Chain of Custody Record

Lab No: 444657

Page: 4 of ~~4~~ 4/20/21

Turn Around Time (Rush must be pre-arranged)

Standard:		4 Day:		3 Day:	4
2 Day:		1 Day:		Same Day:	

Enthalpy Analytical - Orange

931 W. Barkley Avenue, Orange, CA 92868

Phone 714-771-6900

Matrix: A = Air DW = Drinking Water F = Food SD = Sediment T = Tissue PP = Pure Product S = Solid/Soil SeaW = Sea Water SW = Swab W = Water WP = Wipe O = Other

Preservatives: 1 = $Na_2S_2O_3$ 2 = HCl 3 = HNO_3 4 = H_2SO_4 5 = NaOH 6 = Other

CUSTOMER INFORMATION		PROJECT INFORMATION	
Company:	Beth Abramson Beck	Name:	Strathern Park North
Report To:	Ninyoa Moore	Number:	21119A007
Email:	babramsonbeck@ninyoandmoore.com	P.O. #:	
Address:	5710 Ruffin Rd SD	Address:	
Phone:	858 576 1000	Global ID:	
Fax:		Sampled By:	

Analysis Request

	Sample ID	Sampling Date	Sampling Time	Matrix	Container No. / Size	Pres.	Title 22 metals 6010B/7471	lead only 6010B	SVOCs 8270C	VOCs 8260B	OCPs	PCBs					Test Instructions / Comments
31	TP10-3[illegible]	04/27/21	340	SOIL	Glass jar												
32	TP[illegible]-4	↓	3[illegible]	↓	↓		X										
33	[illegible]	↓	3[illegible]0	↓	↓												
4																	
5																	
6																	
7																	
8																	
9																	
10																	

	Signature	Print Name	Company / Title	Date / Time
1 Relinquished By:	[signature]	Beth S Abramson Beck	Ninyoa Moore	04.28.21 16:58
1 Received By:	[signature]	Elizabeth Ramm	EA	4/20/21 16:50
2 Relinquished By:				
2 Received By:				
3 Relinquished By:				
3 Received By:				

ENTHALPY ANALYTICAL

Chain of Custody Record

Lab No: 444657

Page: of

Turn Around Time (Rush must be pre-arranged)

Standard:		4 Day:		3 Day:	5
2 Day:		1 Day:		Same Day:	

Enthalpy Analytical - Orange

931 W. Barkley Avenue, Orange, CA 92868

Phone 714-771-6900

Matrix: A = Air DW = Drinking Water F = Food SD = Sediment T = Tissue PP = Pure Product S = Solid/Soil SeaW = Sea Water SW = Swab W = Water WP = Wipe O = Other

Preservatives: 1 = $Na_2S_2O_3$ 2 = HCl 3 = HNO_3 4 = H_2SO_4 5 = NaOH 6 = Other

CUSTOMER INFORMATION		PROJECT INFORMATION	
Company:	Ninyo & Moore	Name:	Strathern Park North
Report To:	Beth Abramson Beck	Number:	211294007
Email:	babramsonbeck@ninyoandmoore.com	P.O. #:	
Address:		Address:	
Phone:	858 576 1000	Global ID:	
Fax:		Sampled By:	

Analysis Request

	Sample ID	Sampling Date	Sampling Time	Matrix	Container No. / Size	Pres.	Title 22 metals 6010B/7471A	lead only 6010B	TPH 8015B	SVOCs 8270C	VOCs 8260B	OCPs 8081A	PCBs 8082				Test Instructions / Comments
1	TP11-0.75	04.28.21	745	Soil	grass jars												
2	TP11-3.5																AC in sample
3	TP11-6		8—														
4	TP12-1		820														
5	TP12-4		830														
6	TP13-1		845														
7	TP13-4		850														
8	TP14-1		9—														
9	TP14-2		911														
10	TP15-1		925														

	Signature	Print Name	Company / Title	Date / Time
1 Relinquished By:	[signature]	Beth Abramson Beck	Ninyo & Moore	04.28.21 16:58
1 Received By:	[signature]	Elizabeth Ramu	EA	4/28/21 16:58
2 Relinquished By:				
2 Received By:				
3 Relinquished By:				
3 Received By:				

(7)

ENTHALPY ANALYTICAL

Chain of Custody Record

Lab No: 444657

Page: of

Turn Around Time (Rush must be pre-arranged)

Standard:	4 Day:	3 Day:
2 Day:	1 Day:	Same Day:

6

Enthalpy Analytical - Orange

931 W. Barkley Avenue, Orange, CA 92868

Phone 714-771-6900

Matrix: A = Air DW = Drinking Water F = Food SD = Sediment T = Tissue PP = Pure Product S = Solid/Soil SeaW = Sea Water SW = Swab W = Water WP = Wipe O = Other

Preservatives: 1 = $Na_2S_2O_3$ 2 = HCl 3 = HNO_3 4 = H_2SO_4 5 = NaOH 6 = Other

CUSTOMER INFORMATION		PROJECT INFORMATION	
Company:	Ninyo & Moore	Name:	
Report To:		Number:	
Email:		P.O. #:	
Address:		Address:	
Phone:		Global ID:	
Fax:		Sampled By:	

Analysis Request

	Sample ID	Sampling Date	Sampling Time	Matrix	Container No. / Size	Pres.	Title 22 metals 6003/7471	lead only 6010B	TPH 8015	SVOCs 8270C	VOCs 8260B	OCPs 8081A	PCBs 8082				Test Instructions / Comments
1	TP15-3	04 28 21	930	soil	glass												
2	TP16-0.85	04 28 21	955		jar												
3	TP16-3	04 28 21	10—														
4	TP17-1	04/28/21	1010														
5	TP17-4	04/28/21	1015														
6	TP18-1	04/28/21	1050														
7	TP18-3	04/28/21	1055														
8	TP18-6.5		1105														
9	TP19-1		1210														
10	TP19-3		1215														

	Signature	Print Name	Company / Title	Date / Time
1 Relinquished By:	[signature]	Beth Sabarma Bach	Ninyo & Moore	04.28.21 16:58
1 Received By:	[signature]	Elizabeth Ramu	EA	04/28/21 16:58
2 Relinquished By:				
2 Received By:				
3 Relinquished By:				
3 Received By:				

ENTHALPY ANALYTICAL

Chain of Custody Record

Lab No: 444657

Page: of

Turn Around Time (Rush must be pre-arranged)

Standard:	X	4 Day:		3 Day:	7
2 Day:		1 Day:		Same Day:	

Enthalpy Analytical - Orange

931 W. Barkley Avenue, Orange, CA 92868

Phone 714-771-6900

Matrix: A = Air DW = Drinking Water F = Food SD = Sediment T = Tissue PP = Pure Product S = Solid/Soil SeaW = Sea Water SW = Swab W = Water WP = Wipe O = Other

Preservatives: 1 = $Na_2S_2O_3$ 2 = HCl 3 = HNO_3 4 = H_2SO_4 5 = NaOH 6 = Other

CUSTOMER INFORMATION		PROJECT INFORMATION	
Company:	Ninyo Moore	Name:	
Report To:		Number:	
Email:		P.O. #:	
Address:		Address:	
Phone:		Global ID:	
Fax:		Sampled By:	

Analysis Request

	Sample ID	Sampling Date	Sampling Time	Matrix	Container No. / Size	Pres.	Title 22 metals 6010B/7471A	Lead only 6010B	TPH 8015	SVOCs 8270C	VOCs 8260B	OCPs 8081A	PCBs 8082				Test Instructions / Comments
54 1	TP19-6	04/28/21	1225	SOIL	GLASS												
55 2	TP20-1		1255		JAR												
56 3	TP20-3.5		1:10														
57 4	TP20-7.5		1:00														
58 5	TP21-1		130														
59 6	TP21-3		135														
60 7	TP21-7		150				X										AllW
1 8	TP21-5		215				X	X	X	X	X	X					BW
2 9	TP21-5.5		230				X										BW
3 10	TP22-0.75		230														

	Signature	Print Name	Company / Title	Date / Time
1 Relinquished By:	[signature]	Bob S Abramson	Ninyo & Moore	04.28.21 16:58
1 Received By:	[signature]	Elizabeth Ramos	EA	4/28/21 16:58
2 Relinquished By:				
2 Received By:				
3 Relinquished By:				
3 Received By:				

ENTHALPY ANALYTICAL

Chain of Custody Record

Lab No: 444657

Page: 8 of 8

Turn Around Time (Rush must be pre-arranged)

Standard:	X	4 Day:		3 Day:	8
2 Day:		1 Day:		Same Day:	

Enthalpy Analytical - Orange

931 W. Barkley Avenue, Orange, CA 92868

Phone 714-771-6900

Matrix: A = Air DW = Drinking Water F = Food SD = Sediment T = Tissue PP = Pure Product S = Solid/Soil SeaW = Sea Water SW = Swab W = Water WP = Wipe O = Other

Preservatives: 1 = $Na_2S_2O_3$ 2 = HCl 3 = HNO_3 4 = H_2SO_4 5 = NaOH 6 = Other

CUSTOMER INFORMATION		PROJECT INFORMATION	
Company:	Ninyo & Moore	Name:	
Report To:		Number:	
Email:		P.O. #:	
Address:		Address:	
Phone:		Global ID:	
Fax:		Sampled By:	

Analysis Request

	Sample ID	Sampling Date	Sampling Time	Matrix	Container No. / Size	Pres.	TW22 metals 6010/B/7471A	Pb lead only 6010B	TPH 8015	SVOCs 8270C	VOCs 8260B	OCPs 8081A	PCBs 8082				Test Instructions / Comments
1	TP22-3	04.28.21	235	soil	glass jar												
2	TP22-6	↓	245	↓													
3																	
4																	
5																	
6																	
7																	
8																	
9																	
10																	

	Signature	Print Name	Company / Title	Date / Time
1 Relinquished By:	[signature]	Beth S Abramo Bell	Ninyo & Moore	04.28.21 16:58
1 Received By:	[signature]	Elizabeth Ramne	EA	4/28/21 16:58
2 Relinquished By:				
2 Received By:				
3 Relinquished By:				
3 Received By:				

ENTHALPY ANALYTICAL

SAMPLE ACCEPTANCE CHECKLIST

Section 1

Client: Ninyo & Moore Project: Strathern Park North

Date Received: 4/28/2021 Sampler's Name Present: ☑ Yes ☐ No

Section 2

Sample(s) received in a cooler? ☑ Yes, How many? 2 ☐ No (skip section 2) Sample Temp (°C) (No Cooler): _____

Sample Temp (°C), One from each cooler: #1: 5.5 #2: 5.0 #3: _____ #4: _____

(Acceptance range is < 6°C but not frozen (for Microbiology samples, acceptance range is < 10°C but not frozen). It is acceptable for samples collected the same day as sample receipt to have a higher temperature as long as there is evidence that cooling has begun.)

Shipping Information: _____

Section 3

Was the cooler packed with: ☑ Ice ☐ Ice Packs ☐ Bubble Wrap ☐ Styrofoam ☐ Paper ☐ None ☐ Other _____

Cooler Temp (°C): #1: 1.3 #2: 1.2 #3: _____ #4: _____

Section 4	YES	NO	N/A
Was a COC received?	✔		
Are sample IDs present?	✔		
Are sampling dates & times present?	✔		
Is a relinquished signature present?	✔		
Are the tests required clearly indicated on the COC?		✔	
Are custody seals present?		✔	
If custody seals are present, were they intact?			✔
Are all samples sealed in plastic bags? (Recommended for Microbiology samples)	✔		✔ ER 4/28/21
Did all samples arrive intact? If no, indicate in Section 4 below.	✔		
Did all bottle labels agree with COC? (ID, dates and times)	✔		
Were the samples collected in the correct containers for the required tests?	✔		
Are the containers labeled with the correct preservatives?			✔
Is there headspace in the VOA vials greater than 5-6 mm in diameter?			✔
Was a sufficient amount of sample submitted for the requested tests?	✔		

Section 5 Explanations/Comments

Per client, will assign tests. No sampling time on COC for Sample 35 (TP11-3.5) per container time is 07:50.

Section 6

For discrepancies, how was the Project Manager notified? ☐ Verbal PM Initials: _____ Date/Time _____

☑ Email (email sent to/on): RKC / 4/28/2021

Project Manager's response:

Completed By: _____ Date: 4/28/2021

ENTHALPY ANALYTICAL

Enthalpy Analytical - Orange
931 W. Barkley Avenue, Orange, CA 92868
Phone 714-771-6900

Chain of Custody Record
Lab No:
Page: 1 of 4

Turn Around Time (Rush must be pre-arranged)

Standard:	X	4 Day:		3 Day:	
2 Day:		1 Day:		Same Day:	1

Matrix: A = Air DW = Drinking Water F = Food SD = Sediment T = Tissue PP = Pure Product S = Solid/Soil SeaW = Sea Water SW = Swab W = Water WP = Wipe O = Other

Preservatives: 1 = $Na_2S_2O_3$ 2 = HCl 3 = HNO_3 4 = H_2SO_4 5 = NaOH 6 = Other
5.5/1.3 , 5.0/1.2

CUSTOMER INFORMATION		PROJECT INFORMATION	
Company:	Ninyo & Moore	Name:	Strathern Park North
Report To:	Beth Abramson Beck	Number:	211294007
Email:	babramsonbeck@ninyoandmoore.com	P.O. #:	
Address:	5710 Ruffin Rd SD	Address:	
Phone:	858 576-1000	Global ID:	
Fax:		Sampled By:	BAB

Analysis Request

	Sample ID	Sampling Date	Sampling Time	Matrix	Container No. / Size	Pres.	Total metal 6010B/7471A	lead only 6010B	TPH carbon chain ID 8015	SVOCs 8270C	VOCs 8260B	OCPs 8081A	PCBs 8082A				Test Instructions / Comments
1	TP1-0.5	04.27.21	8:05	SOIL	JAR			X									
2	TP1-3		8:15				X										
3	TP1-7.5		8:20					X									
4	TP2-0.5		8:45														
5	TP2-3.5		8:50														
6	TP2-7		9:05														
7	TP3-0.5		9:30				X										
8	TP3-5		9:40				X		X	X		X	X				AC in sample
9	TP3-7.5		10:00					X									
10	TP4-0.75		10:25														

ASSIGNED 04.29.21
~~WILL~~ ASSIGN ALL TESTS 04.29.2021
TPH cc ID PLS

	Signature	Print Name	Company / Title	Date / Time
1 Relinquished By:	[signature]	Beth S Abramson Beck	NLM/P	04/28/21 16:58
1 Received By:	[signature]	Elizabeth Ramu	EA	4/28/21 16:58
2 Relinquished By:				
2 Received By:				
3 Relinquished By:				
3 Received By:				

ENTHALPY ANALYTICAL

Chain of Custody Record

Lab No:

Page: 2 of 4

Turn Around Time (Rush must be pre-arranged)

Standard:	X	4 Day:		3 Day:	
2 Day:		1 Day:		Same Day:	

(2)

Enthalpy Analytical - Orange

931 W. Barkley Avenue, Orange, CA 92868

Phone 714-771-6900

Matrix: A = Air DW = Drinking Water F = Food SD = Sediment T = Tissue PP = Pure Product S = Solid/Soil SeaW = Sea Water SW = Swab W = Water WP = Wipe O = Other

Preservatives: 1 = $Na_2S_2O_3$ 2 = HCl 3 = HNO_3 4 = H_2SO_4 5 = NaOH 6 = Other

CUSTOMER INFORMATION		PROJECT INFORMATION	
Company:	Ninyo & Moore	Name:	Strathern Park North
Report To:	Beth Abrams-Beck	Number:	211894007
Email:	babramsonbeck@ninyoandmoore.com	P.O. #:	
Address:	5710 Ruffin Rd SD 92007	Address:	
Phone:	858 576 1000	Global ID:	
Fax:		Sampled By:	

	Sample ID	Sampling Date	Sampling Time	Matrix	Container No. / Size	Pres.	Analysis Request: Title 22 metals 6010B/7471A	lead only 6010B	TPH 8015	SVOCs 8270C	VOCs 8260B	OCPs	PCBs			Test Instructions / Comments
1	TP4-6	04/27/21	1040	SOL	9 oz jar											
2	TP5-0.5	04/27/21	11-					X								
3	TP5-5		1120					X								
4	TP5-7		1125					X								
5	TP6-0.75	04/27/21	1240				X									
6	TP6-3		1245				X									
7	TP6-6.5		1255				X									
8	TP7-1		120				X									
9	TP7-3		130				X									grab
10	TP7-4	↓	145	↓	↓		X		X							grab

	Signature	Print Name	Company / Title	Date / Time
[1] Relinquished By:		BE Abrams-Beck	N. Moore	04/28/21 5-
[1] Received By:		Elizabeth Ramos	EA	4/28/21 16:58
[2] Relinquished By:				
[2] Received By:				
[3] Relinquished By:				
[3] Received By:				

ENTHALPY ANALYTICAL

Chain of Custody Record

Lab No:

Page: 3 of 4

Turn Around Time (Rush must be pre-arranged)

Standard:	X	4 Day:		3 Day:	(3)
2 Day:		1 Day:		Same Day:	

Enthalpy Analytical - Orange

931 W. Barkley Avenue, Orange, CA 92868

Phone 714-771-6900

Matrix: A = Air DW = Drinking Water F = Food SD = Sediment T = Tissue PP = Pure Product S = Solid/Soil SeaW = Sea Water SW = Swab W = Water WP = Wipe O = Other

Preservatives: 1 = $Na_2S_2O_3$ 2 = HCl 3 = HNO_3 4 = H_2SO_4 5 = NaOH 6 = Other

CUSTOMER INFORMATION		PROJECT INFORMATION	
Company:	Ninyo & Moore	Name:	Stratham Park North
Report To:	Beth Abramson Beck	Number:	210294007
Email:	babramsonbeck@ninyoandmoore.com	P.O. #:	
Address:	5710 Ruffin Rd SD	Address:	
Phone:	858 576-1000	Global ID:	
Fax:		Sampled By:	

	Sample ID	Sampling Date	Sampling Time	Matrix	Container No. / Size	Pres.	Analysis Request: Title 22 Metals 6008/7471A	Lead only 6010B	TPH 8015	SVOCs 8270C	VOCs 8260B	OCPs	PCBs	Test Instructions / Comments
1	TP7-blue	04.27.21	1:~~45~~	solid	glass jar		X							unknown cobalt/indigo blue substance
2	TP7-5.5		1:50				X		X	X	X	X	X	glass
3	TP7-7		1:55				X		X					
4	TP8-1		2:30											
5	TP8-3		2:35											
6	TP8-5		2:40											
7	TP9-1		3:—				X							
8	TP9-4		3:10				X		X	X	X			
9	TP9-6		3:15					X						
10	TP10-1		3:35				X							

	Signature	Print Name	Company / Title	Date / Time
[1] Relinquished By:		B Stratham	N. Moore	04.28.21 / 5:01
[1] Received By:		Elizabeth Ramirez	EA	4/28/21 / 16:58
[2] Relinquished By:				
[2] Received By:				
[3] Relinquished By:				
[3] Received By:				

ENTHALPY ANALYTICAL

Chain of Custody Record

Lab No:

Page: 4 of 4

Turn Around Time (Rush must be pre-arranged)

Standard:		4 Day:		3 Day:	4
2 Day:		1 Day:		Same Day:	

Enthalpy Analytical - Orange

931 W. Barkley Avenue, Orange, CA 92868

Phone 714-771-6900

Matrix: A = Air DW = Drinking Water F = Food SD = Sediment T = Tissue PP = Pure Product S = Solid/Soil SeaW = Sea Water SW = Swab W = Water WP = Wipe O = Other

Preservatives: 1 = $Na_2S_2O_3$ 2 = HCl 3 = HNO_3 4 = H_2SO_4 5 = NaOH 6 = Other

CUSTOMER INFORMATION		PROJECT INFORMATION	
Company:	Bob Abramson Beck	Name:	Strathern Park North
Report To:	Ninyo Moore	Number:	211949007
Email:	babramsonbeck@ninyoandmoore.com	P.O. #:	
Address:	5710 Ruffin Rd SD	Address:	
Phone:	858 576 1000	Global ID:	
Fax:		Sampled By:	

	Sample ID	Sampling Date	Sampling Time	Matrix	Container No. / Size	Pres.	Analysis Request: Title 22 metals 6010B/7471A	lead only 6010B	SVOCs 8270C	VOCs 8260B	OCPs	PCBs 8082A	TPH 8015M	Test Instructions / Comments
1	TP10-3.5	04/27/21	340	SOIL	Glass jar			X						Please note lab sample order is different
2	TP10-4		345				X	X	X	X	X	X	X	
3	TP10-7		350				X							
4														
5														
6														
7														
8														
9														
10														

	Signature	Print Name	Company / Title	Date / Time
1 Relinquished By:		Bob Abramson Beck	Ninyo Moore	04.28.21 15:58
1 Received By:		Elizabeth Ramm	EA	4/28/21 16:58
2 Relinquished By:				
2 Received By:				
3 Relinquished By:				
3 Received By:				

ENTHALPY ANALYTICAL

Chain of Custody Record

Lab No:

Page: of

Turn Around Time (Rush must be pre-arranged)

Standard:		4 Day:		3 Day:	5
~~2 Day:~~		1 Day:		Same Day:	

Enthalpy Analytical - Orange

931 W. Barkley Avenue, Orange, CA 92868

Phone 714-771-6900

Matrix: A = Air DW = Drinking Water F = Food SD = Sediment T = Tissue PP = Pure Product S = Solid/Soil SeaW = Sea Water SW = Swab W = Water WP = Wipe O = Other

Preservatives: 1 = $Na_2S_2O_3$ 2 = HCl 3 = HNO_3 4 = H_2SO_4 5 = NaOH 6 = Other

CUSTOMER INFORMATION		PROJECT INFORMATION	
Company:	Ninyo & Moore	Name:	Stratham Bike North
Report To:	Bob Stanmeyer Beck	Number:	211294007
Email:	bstanmeyerbeck@ninyoandmoore.com	P.O. #:	
Address:		Address:	
Phone:	858 576 1000	Global ID:	
Fax:		Sampled By:	

	Sample ID	Sampling Date	Sampling Time	Matrix	Container No. / Size	Pres.
1	TP11-0.75	04.28.21	745	Soil	8oz jars	
2	TP11-3.5					
3	TP11-6		8—			
4	TP12-1		820			
5	TP12-4		830			
6	TP13-1		845			
7	TP13-4		850			
8	TP14-1		9—			
9	TP14-2		9:11			
10	TP15-1		925			

Analysis Request

Title 22 metals (6010B/7471A)	lead only (6010B)	TPH (8015)	SVOCs (8270C)	VOCs (8260B)	OCPs (8081A)	PCBs (8082)
X						
X		X	X			
X		X				
	X					
	X					
	X					
	X					
	X					
	X					
	X					

Test Instructions / Comments

AC in sample

	Signature	Print Name	Company / Title	Date / Time
1 Relinquished By:		Bob Stanmeyer Beck	Ninyo & Moore	04.28.21 16:58
1 Received By:		Elizabeth Ramos	EA	4/28/21 16:58
2 Relinquished By:				
2 Received By:				
3 Relinquished By:				
3 Received By:				

(7)

ENTHALPY ANALYTICAL

Chain of Custody Record

Lab No:

Page: of

Turn Around Time (Rush must be pre-arranged)

Standard:	X	4 Day:		3 Day:	6
2 Day:		1 Day:		Same Day:	

Enthalpy Analytical - Orange

931 W. Barkley Avenue, Orange, CA 92868

Phone 714-771-6900

Matrix: A = Air DW = Drinking Water F = Food SD = Sediment T = Tissue PP = Pure Product S = Solid/Soil SeaW = Sea Water SW = Swab W = Water WP = Wipe O = Other

Preservatives: 1 = $Na_2S_2O_3$ 2 = HCl 3 = HNO_3 4 = H_2SO_4 5 = NaOH 6 = Other

CUSTOMER INFORMATION		PROJECT INFORMATION	
Company:	Ninyo & Moore	Name:	
Report To:		Number:	
Email:		P.O. #:	
Address:		Address:	
Phone:		Global ID:	
Fax:		Sampled By:	

Analysis Request

	Sample ID	Sampling Date	Sampling Time	Matrix	Container No. / Size	Pres.	Title 22 metals 6003/7471A	lead only 6010B	TPH 8015	SVOCs 8270C	VOCs 8260B	OCPs 8081A	PCBs 8082				Test Instructions / Comments
1	TP15-3	04 28 21	930	soil	glass												
2	TP16-0.85	04 28 21	955		jar		X										
3	TP16-3	04 28 21	10					X									
4	TP17-1	04/28/21	1010					X									
5	TP17-4	04/28/21	1015					X									
6	TP18-1	04/28/21	1050				X		X								
7	TP18-3	04 28 21	1055				X										
8	TP18-6.5		1105				X										
9	TP19-1		1210				X										
10	TP19-3		1215				X		X	X	X	X	X				

	Signature	Print Name	Company / Title	Date / Time
1 Relinquished By:	[signature]	[illegible]	Ninyo & Moore	04.28.21 16:58
1 Received By:	[signature]	Elizabeth Ramu	EA	04/28/21 16:58
2 Relinquished By:				
2 Received By:				
3 Relinquished By:				
3 Received By:				

ENTHALPY ANALYTICAL

Chain of Custody Record

Lab No:

Page: of

Turn Around Time (Rush must be pre-arranged)

Standard:	4 Day:	3 Day:
2 Day:	1 Day:	Same Day: 7

Enthalpy Analytical - Orange
931 W. Barkley Avenue, Orange, CA 92868
Phone 714-771-6900

Matrix: A = Air DW = Drinking Water F = Food SD = Sediment T = Tissue PP = Pure Product S = Solid/Soil SeaW = Sea Water SW = Swab W = Water WP = Wipe O = Other

Preservatives: 1 = $Na_2S_2O_3$ 2 = HCl 3 = HNO_3 4 = H_2SO_4 5 = NaOH 6 = Other

CUSTOMER INFORMATION		PROJECT INFORMATION	
Company:	Ninyo Moore	Name:	
Report To:		Number:	
Email:		P.O. #:	
Address:		Address:	
Phone:		Global ID:	
Fax:		Sampled By:	

	Sample ID	Sampling Date	Sampling Time	Matrix	Container No. / Size	Pres.	TPH 22 metals 6010B/7471A	Lead only 6010B	TPH 8015	SVOCs 8270C	VOCs 8260B	OCPs 8081A	PCBs 8082	Test Instructions / Comments
1	TP19-6	04/28/21	1225	SOIL	GLASS		X							
2	TP20-1		1235		JAR			X						
3	TP20-3.5		1:10				X		X	X		X	X	
4	TP20-7.5		1:00					X						
5	TP21-1		130				X							
6	TP21-3		135				X							
7	TP21-7		150				X							AIW
8	TP21-5		215				X		X	X	X	X	X	SW, GLASS
9	TP21-5.5		230				X		X					SW Glass
10	TP22-0.5	↓	230	↓	↓			X						

	Signature	Print Name	Company / Title	Date / Time
[1] Relinquished By:			Ninyo & Moore	04.28.21 16:58
[1] Received By:			EA	4/28/21 16:58
[2] Relinquished By:				
[2] Received By:				
[3] Relinquished By:				
[3] Received By:				

ENTHALPY ANALYTICAL

Chain of Custody Record

Lab No:

Page: 8 of 8

Turn Around Time (Rush must be pre-arranged)

Standard:	X	4 Day:		3 Day:	
2 Day:		1 Day:		Same Day:	8

Enthalpy Analytical - Orange

931 W. Barkley Avenue, Orange, CA 92868

Phone 714-771-6900

Matrix: A = Air DW = Drinking Water F = Food SD = Sediment T = Tissue PP = Pure Product S = Solid/Soil SeaW = Sea Water SW = Swab W = Water WP = Wipe O = Other

Preservatives: 1 = $Na_2S_2O_3$ 2 = HCl 3 = HNO_3 4 = H_2SO_4 5 = NaOH 6 = Other

CUSTOMER INFORMATION		PROJECT INFORMATION	
Company:	Ninyo & Moore	Name:	
Report To:		Number:	
Email:		P.O. #:	
Address:		Address:	
Phone:		Global ID:	
Fax:		Sampled By:	

	Sample ID	Sampling Date	Sampling Time	Matrix	Container No. / Size	Pres.
1	TP22-3	04.28.21	245	Soil	glass jar	
2	TP22-6	↓	245	↓		
3						
4						
5						
6						
7						
8						
9						
10						

Analysis Request

Total CAM 17 metals (6010B/7471A)	Filtered only (6010B)	TRPH (8015M) (C10-C40)	SVOCs (8270C)	VOCs (8260B)	OCPs (8081A)	PCBs (8082)
X	X					

Test Instructions / Comments

	Signature	Print Name	Company / Title	Date / Time
1 Relinquished By:		Beth Stadnicka-Ball	Ninyo & Moore	04.28.21 16:58
1 Received By:		Elizabeth Ramos	EA	4/28/21 16:58
2 Relinquished By:				
2 Received By:				
3 Relinquished By:				
3 Received By:				

ENTHALPY ANALYTICAL

Analysis Results for 444657

Beth Abramson Beck
Ninyo & Moore - San Diego
5710 Ruffin Road
San Diego, CA 92123

Lab Job #: 444657
Location: Strathem Park North
Date Received: 04/28/21

Sample ID: TP1-0.5 **Lab ID: 444657-001** **Collected: 04/27/21 08:05**
Matrix: Soil

444657-001 Analyte	Result	Qual	Units	RL	DF	Batch	Prepared	Analyzed	Chemist
Method: EPA 6010B Prep Method: EPA 3050B									
Lead	**14**		mg/Kg	0.90	0.9	266286	04/30/21	04/30/21	SBW

Sample ID: TP1-3 **Lab ID: 444657-002** **Collected: 04/27/21 08:15**
Matrix: Soil

444657-002 Analyte	Result	Qual	Units	RL	DF	Batch	Prepared	Analyzed	Chemist
Method: EPA 6010B Prep Method: EPA 3050B									
Antimony	ND		mg/Kg	2.6	0.87	266286	04/30/21	04/30/21	SBW
Arsenic	ND		mg/Kg	0.87	0.87	266286	04/30/21	04/30/21	SBW
Barium	**33**		mg/Kg	0.87	0.87	266286	04/30/21	04/30/21	SBW
Beryllium	ND		mg/Kg	0.43	0.87	266286	04/30/21	04/30/21	SBW
Cadmium	ND		mg/Kg	0.43	0.87	266286	04/30/21	04/30/21	SBW
Chromium	**1.1**		mg/Kg	0.87	0.87	266286	04/30/21	04/30/21	SBW
Cobalt	**1.4**		mg/Kg	0.43	0.87	266286	04/30/21	04/30/21	SBW
Copper	**2.8**		mg/Kg	0.87	0.87	266286	04/30/21	04/30/21	SBW
Lead	ND		mg/Kg	0.87	0.87	266286	04/30/21	04/30/21	SBW
Molybdenum	ND		mg/Kg	0.87	0.87	266286	04/30/21	04/30/21	SBW
Nickel	**1.2**		mg/Kg	0.87	0.87	266286	04/30/21	04/30/21	SBW
Selenium	ND		mg/Kg	2.6	0.87	266286	04/30/21	04/30/21	SBW
Silver	ND		mg/Kg	0.43	0.87	266286	04/30/21	04/30/21	SBW
Thallium	ND		mg/Kg	2.6	0.87	266286	04/30/21	04/30/21	SBW
Vanadium	**7.2**		mg/Kg	0.87	0.87	266286	04/30/21	04/30/21	SBW
Zinc	**11**		mg/Kg	4.3	0.87	266286	04/30/21	04/30/21	SBW
Method: EPA 7471A Prep Method: METHOD									
Mercury	ND		mg/Kg	0.16	1.2	266325	04/30/21	04/30/21	JDB

Sample ID: TP1-7.5 **Lab ID: 444657-003** **Collected: 04/27/21 08:20**
Matrix: Soil

444657-003 Analyte	Result	Qual	Units	RL	DF	Batch	Prepared	Analyzed	Chemist
Method: EPA 6010B Prep Method: EPA 3050B									
Lead	**2.1**		mg/Kg	0.89	0.89	266286	04/30/21	04/30/21	SBW

Results for any subcontracted analyses are not included in this section.

ENTHALPY ANALYTICAL

Analysis Results for 444657

Sample ID: TP3-0.5	Lab ID: 444657-007	Collected: 04/27/21 09:30
	Matrix: Soil	

444657-007 Analyte	Result	Qual	Units	RL	DF	Batch	Prepared	Analyzed	Chemist
Method: EPA 6010B Prep Method: EPA 3050B									
Antimony	ND		mg/Kg	3.3	1.1	266286	04/30/21	04/30/21	SBW
Arsenic	**2.9**		mg/Kg	1.1	1.1	266286	04/30/21	04/30/21	SBW
Barium	**89**		mg/Kg	1.1	1.1	266286	04/30/21	04/30/21	SBW
Beryllium	ND		mg/Kg	0.54	1.1	266286	04/30/21	04/30/21	SBW
Cadmium	ND		mg/Kg	0.54	1.1	266286	04/30/21	04/30/21	SBW
Chromium	**12**		mg/Kg	1.1	1.1	266286	04/30/21	04/30/21	SBW
Cobalt	**5.3**		mg/Kg	0.54	1.1	266286	04/30/21	04/30/21	SBW
Copper	**16**		mg/Kg	1.1	1.1	266286	04/30/21	04/30/21	SBW
Lead	**26**		mg/Kg	1.1	1.1	266286	04/30/21	04/30/21	SBW
Molybdenum	ND		mg/Kg	1.1	1.1	266286	04/30/21	04/30/21	SBW
Nickel	**8.9**		mg/Kg	1.1	1.1	266286	04/30/21	04/30/21	SBW
Selenium	ND		mg/Kg	3.3	1.1	266286	04/30/21	04/30/21	SBW
Silver	ND		mg/Kg	0.54	1.1	266286	04/30/21	04/30/21	SBW
Thallium	ND		mg/Kg	3.3	1.1	266286	04/30/21	04/30/21	SBW
Vanadium	**29**		mg/Kg	1.1	1.1	266286	04/30/21	04/30/21	SBW
Zinc	**79**		mg/Kg	5.4	1.1	266286	04/30/21	04/30/21	SBW
Method: EPA 7471A Prep Method: METHOD									
Mercury	ND		mg/Kg	0.17	1.2	266325	04/30/21	04/30/21	JDB

Results for any subcontracted analyses are not included in this section.

ENTHALPY ANALYTICAL

Analysis Results for 444657

Sample ID: TP3-5	Lab ID: 444657-008	Collected: 04/27/21 09:40
	Matrix: Soil	

444657-008 Analyte	Result	Qual	Units	RL	DF	Batch	Prepared	Analyzed	Chemist
Method: EPA 6010B Prep Method: EPA 3050B									
Antimony	ND		mg/Kg	2.6	0.85	266286	04/30/21	04/30/21	SBW
Arsenic	**2.5**		mg/Kg	0.85	0.85	266286	04/30/21	04/30/21	SBW
Barium	**51**		mg/Kg	0.85	0.85	266286	04/30/21	04/30/21	SBW
Beryllium	ND		mg/Kg	0.43	0.85	266286	04/30/21	04/30/21	SBW
Cadmium	ND		mg/Kg	0.43	0.85	266286	04/30/21	04/30/21	SBW
Chromium	**9.5**		mg/Kg	0.85	0.85	266286	04/30/21	04/30/21	SBW
Cobalt	**4.0**		mg/Kg	0.43	0.85	266286	04/30/21	04/30/21	SBW
Copper	**8.6**		mg/Kg	0.85	0.85	266286	04/30/21	04/30/21	SBW
Lead	**19**		mg/Kg	0.85	0.85	266286	04/30/21	04/30/21	SBW
Molybdenum	ND		mg/Kg	0.85	0.85	266286	04/30/21	04/30/21	SBW
Nickel	**6.7**		mg/Kg	0.85	0.85	266286	04/30/21	04/30/21	SBW
Selenium	ND		mg/Kg	2.6	0.85	266286	04/30/21	04/30/21	SBW
Silver	ND		mg/Kg	0.43	0.85	266286	04/30/21	04/30/21	SBW
Thallium	ND		mg/Kg	2.6	0.85	266286	04/30/21	04/30/21	SBW
Vanadium	**26**		mg/Kg	0.85	0.85	266286	04/30/21	04/30/21	SBW
Zinc	**38**		mg/Kg	4.3	0.85	266286	04/30/21	04/30/21	SBW
Method: EPA 7471A Prep Method: METHOD									
Mercury	ND		mg/Kg	0.16	1.2	266325	04/30/21	04/30/21	JDB
Method: EPA 8015B Prep Method: EPA 3580									
GRO C6-C10	ND		mg/Kg	100	10	266432	05/03/21	05/05/21	MES
DRO C10-C28	ND		mg/Kg	100	10	266432	05/03/21	05/05/21	MES
ORO C28-C44	ND		mg/Kg	200	10	266432	05/03/21	05/05/21	MES
Surrogates				**Limits**					
n-Triacontane		DO	%REC	70-130	10	266432	05/03/21	05/05/21	MES
Method: EPA 8081A Prep Method: EPA 3546									
alpha-BHC	ND		ug/Kg	25	5	266417	05/03/21	05/04/21	KTD
beta-BHC	ND		ug/Kg	25	5	266417	05/03/21	05/04/21	KTD
gamma-BHC	ND		ug/Kg	25	5	266417	05/03/21	05/04/21	KTD
delta-BHC	ND		ug/Kg	25	5	266417	05/03/21	05/04/21	KTD
Heptachlor	ND		ug/Kg	25	5	266417	05/03/21	05/04/21	KTD
Aldrin	ND		ug/Kg	25	5	266417	05/03/21	05/04/21	KTD
Heptachlor epoxide	ND		ug/Kg	25	5	266417	05/03/21	05/04/21	KTD
Endosulfan I	ND		ug/Kg	25	5	266417	05/03/21	05/04/21	KTD
Dieldrin	ND		ug/Kg	25	5	266417	05/03/21	05/04/21	KTD
4,4'-DDE	ND		ug/Kg	25	5	266417	05/03/21	05/04/21	KTD
Endrin	ND		ug/Kg	25	5	266417	05/03/21	05/04/21	KTD
Endosulfan II	ND		ug/Kg	25	5	266417	05/03/21	05/04/21	KTD

Results for any subcontracted analyses are not included in this section.

Analysis Results for 444657

444657-008 Analyte	Result	Qual	Units	RL	DF	Batch	Prepared	Analyzed	Chemist
Endosulfan sulfate	ND		ug/Kg	25	5	266417	05/03/21	05/04/21	KTD
4,4'-DDD	ND		ug/Kg	25	5	266417	05/03/21	05/04/21	KTD
Endrin aldehyde	ND		ug/Kg	25	5	266417	05/03/21	05/04/21	KTD
Endrin ketone	ND		ug/Kg	25	5	266417	05/03/21	05/04/21	KTD
4,4'-DDT	ND		ug/Kg	25	5	266417	05/03/21	05/04/21	KTD
Methoxychlor	ND		ug/Kg	50	5	266417	05/03/21	05/04/21	KTD
Toxaphene	ND		ug/Kg	500	5	266417	05/03/21	05/04/21	KTD
Chlordane (Technical)	ND		ug/Kg	250	5	266417	05/03/21	05/04/21	KTD
Surrogates				**Limits**					
TCMX	101%		%REC	23-120	5	266417	05/03/21	05/04/21	KTD
Decachlorobiphenyl	88%		%REC	24-120	5	266417	05/03/21	05/04/21	KTD
Method: EPA 8082 Prep Method: EPA 3546									
Aroclor-1016	ND		ug/Kg	50	1	266417	05/03/21	05/05/21	KTD
Aroclor-1221	ND		ug/Kg	50	1	266417	05/03/21	05/05/21	KTD
Aroclor-1232	ND		ug/Kg	50	1	266417	05/03/21	05/05/21	KTD
Aroclor-1242	ND		ug/Kg	50	1	266417	05/03/21	05/05/21	KTD
Aroclor-1248	ND		ug/Kg	50	1	266417	05/03/21	05/05/21	KTD
Aroclor-1254	ND		ug/Kg	50	1	266417	05/03/21	05/05/21	KTD
Aroclor-1260	ND		ug/Kg	50	1	266417	05/03/21	05/05/21	KTD
Aroclor-1262	ND		ug/Kg	50	1	266417	05/03/21	05/05/21	KTD
Aroclor-1268	ND		ug/Kg	50	1	266417	05/03/21	05/05/21	KTD
Surrogates				**Limits**					
Decachlorobiphenyl (PCB)	64%		%REC	19-121	1	266417	05/03/21	05/05/21	KTD
Method: EPA 8270C Prep Method: EPA 3546									
Carbazole	ND		ug/Kg	2,500	10	266473	05/04/21	05/06/21	DJL
1-Methylnaphthalene	ND		ug/Kg	2,500	10	266473	05/04/21	05/06/21	DJL
Pyridine	ND		ug/Kg	2,500	10	266473	05/04/21	05/06/21	DJL
N-Nitrosodimethylamine	ND		ug/Kg	2,500	10	266473	05/04/21	05/06/21	DJL
Phenol	ND		ug/Kg	2,500	10	266473	05/04/21	05/06/21	DJL
Aniline	ND		ug/Kg	2,500	10	266473	05/04/21	05/06/21	DJL
bis(2-Chloroethyl)ether	ND		ug/Kg	12,000	10	266473	05/04/21	05/06/21	DJL
2-Chlorophenol	ND		ug/Kg	2,500	10	266473	05/04/21	05/06/21	DJL
1,3-Dichlorobenzene	ND		ug/Kg	2,500	10	266473	05/04/21	05/06/21	DJL
1,4-Dichlorobenzene	ND		ug/Kg	2,500	10	266473	05/04/21	05/06/21	DJL
Benzyl alcohol	ND		ug/Kg	2,500	10	266473	05/04/21	05/06/21	DJL
1,2-Dichlorobenzene	ND		ug/Kg	2,500	10	266473	05/04/21	05/06/21	DJL
2-Methylphenol	ND		ug/Kg	2,500	10	266473	05/04/21	05/06/21	DJL
bis(2-Chloroisopropyl) ether	ND		ug/Kg	2,500	10	266473	05/04/21	05/06/21	DJL
3-,4-Methylphenol	ND		ug/Kg	4,000	10	266473	05/04/21	05/06/21	DJL
N-Nitroso-di-n-propylamine	ND		ug/Kg	2,500	10	266473	05/04/21	05/06/21	DJL
Hexachloroethane	ND		ug/Kg	2,500	10	266473	05/04/21	05/06/21	DJL
Nitrobenzene	ND		ug/Kg	12,000	10	266473	05/04/21	05/06/21	DJL
Isophorone	ND		ug/Kg	2,500	10	266473	05/04/21	05/06/21	DJL
2-Nitrophenol	ND		ug/Kg	2,500	10	266473	05/04/21	05/06/21	DJL

Results for any subcontracted analyses are not included in this section.

ENTHALPY ANALYTICAL

Analysis Results for 444657

444657-008 Analyte	Result	Qual	Units	RL	DF	Batch	Prepared	Analyzed	Chemist
2,4-Dimethylphenol	ND		ug/Kg	2,500	10	266473	05/04/21	05/06/21	DJL
Benzoic acid	ND		ug/Kg	12,000	10	266473	05/04/21	05/06/21	DJL
bis(2-Chloroethoxy)methane	ND		ug/Kg	2,500	10	266473	05/04/21	05/06/21	DJL
2,4-Dichlorophenol	ND		ug/Kg	2,500	10	266473	05/04/21	05/06/21	DJL
1,2,4-Trichlorobenzene	ND		ug/Kg	2,500	10	266473	05/04/21	05/06/21	DJL
Naphthalene	ND		ug/Kg	2,500	10	266473	05/04/21	05/06/21	DJL
4-Chloroaniline	ND		ug/Kg	2,500	10	266473	05/04/21	05/06/21	DJL
Hexachlorobutadiene	ND		ug/Kg	2,500	10	266473	05/04/21	05/06/21	DJL
4-Chloro-3-methylphenol	ND		ug/Kg	2,500	10	266473	05/04/21	05/06/21	DJL
2-Methylnaphthalene	ND		ug/Kg	2,500	10	266473	05/04/21	05/06/21	DJL
Hexachlorocyclopentadiene	ND		ug/Kg	12,000	10	266473	05/04/21	05/06/21	DJL
2,4,6-Trichlorophenol	ND		ug/Kg	2,500	10	266473	05/04/21	05/06/21	DJL
2,4,5-Trichlorophenol	ND		ug/Kg	2,500	10	266473	05/04/21	05/06/21	DJL
2-Chloronaphthalene	ND		ug/Kg	2,500	10	266473	05/04/21	05/06/21	DJL
2-Nitroaniline	ND		ug/Kg	2,500	10	266473	05/04/21	05/06/21	DJL
Dimethylphthalate	ND		ug/Kg	2,500	10	266473	05/04/21	05/06/21	DJL
Acenaphthylene	ND		ug/Kg	2,500	10	266473	05/04/21	05/06/21	DJL
2,6-Dinitrotoluene	ND		ug/Kg	2,500	10	266473	05/04/21	05/06/21	DJL
3-Nitroaniline	ND		ug/Kg	2,500	10	266473	05/04/21	05/06/21	DJL
Acenaphthene	ND		ug/Kg	2,500	10	266473	05/04/21	05/06/21	DJL
2,4-Dinitrophenol	ND		ug/Kg	12,000	10	266473	05/04/21	05/06/21	DJL
4-Nitrophenol	ND		ug/Kg	2,500	10	266473	05/04/21	05/06/21	DJL
Dibenzofuran	ND		ug/Kg	2,500	10	266473	05/04/21	05/06/21	DJL
2,4-Dinitrotoluene	ND		ug/Kg	2,500	10	266473	05/04/21	05/06/21	DJL
Diethylphthalate	ND		ug/Kg	2,500	10	266473	05/04/21	05/06/21	DJL
Fluorene	ND		ug/Kg	2,500	10	266473	05/04/21	05/06/21	DJL
4-Chlorophenyl-phenylether	ND		ug/Kg	2,500	10	266473	05/04/21	05/06/21	DJL
4-Nitroaniline	ND		ug/Kg	2,500	10	266473	05/04/21	05/06/21	DJL
4,6-Dinitro-2-methylphenol	ND		ug/Kg	2,500	10	266473	05/04/21	05/06/21	DJL
N-Nitrosodiphenylamine	ND		ug/Kg	2,500	10	266473	05/04/21	05/06/21	DJL
1,2-diphenylhydrazine (as azobenzene)	ND		ug/Kg	2,500	10	266473	05/04/21	05/06/21	DJL
4-Bromophenyl-phenylether	ND		ug/Kg	2,500	10	266473	05/04/21	05/06/21	DJL
Hexachlorobenzene	ND		ug/Kg	2,500	10	266473	05/04/21	05/06/21	DJL
Pentachlorophenol	ND		ug/Kg	12,000	10	266473	05/04/21	05/06/21	DJL
Phenanthrene	ND		ug/Kg	2,500	10	266473	05/04/21	05/06/21	DJL
Anthracene	ND		ug/Kg	2,500	10	266473	05/04/21	05/06/21	DJL
Di-n-butylphthalate	ND		ug/Kg	2,500	10	266473	05/04/21	05/06/21	DJL
Fluoranthene	ND		ug/Kg	2,500	10	266473	05/04/21	05/06/21	DJL
Benzidine	ND		ug/Kg	12,000	10	266473	05/04/21	05/06/21	DJL
Pyrene	ND		ug/Kg	2,500	10	266473	05/04/21	05/06/21	DJL
Butylbenzylphthalate	ND		ug/Kg	2,500	10	266473	05/04/21	05/06/21	DJL
3,3'-Dichlorobenzidine	ND		ug/Kg	12,000	10	266473	05/04/21	05/06/21	DJL
Benzo(a)anthracene	ND		ug/Kg	2,500	10	266473	05/04/21	05/06/21	DJL
Chrysene	ND		ug/Kg	2,500	10	266473	05/04/21	05/06/21	DJL
bis(2-Ethylhexyl)phthalate	ND		ug/Kg	2,500	10	266473	05/04/21	05/06/21	DJL
Di-n-octylphthalate	ND		ug/Kg	2,500	10	266473	05/04/21	05/06/21	DJL

Results for any subcontracted analyses are not included in this section.

Analysis Results for 444657

444657-008 Analyte	Result	Qual	Units	RL	DF	Batch	Prepared	Analyzed	Chemist
Benzo(b)fluoranthene	ND		ug/Kg	2,500	10	266473	05/04/21	05/06/21	DJL
Benzo(k)fluoranthene	ND		ug/Kg	2,500	10	266473	05/04/21	05/06/21	DJL
Benzo(a)pyrene	ND		ug/Kg	2,500	10	266473	05/04/21	05/06/21	DJL
Indeno(1,2,3-cd)pyrene	ND		ug/Kg	2,500	10	266473	05/04/21	05/06/21	DJL
Dibenz(a,h)anthracene	ND		ug/Kg	2,500	10	266473	05/04/21	05/06/21	DJL
Benzo(g,h,i)perylene	ND		ug/Kg	2,500	10	266473	05/04/21	05/06/21	DJL
Surrogates				**Limits**					
2-Fluorophenol	58%		%REC	29-120	10	266473	05/04/21	05/06/21	DJL
Phenol-d6	65%		%REC	30-120	10	266473	05/04/21	05/06/21	DJL
2,4,6-Tribromophenol	52%		%REC	32-120	10	266473	05/04/21	05/06/21	DJL
Nitrobenzene-d5	61%		%REC	33-120	10	266473	05/04/21	05/06/21	DJL
2-Fluorobiphenyl	62%		%REC	39-120	10	266473	05/04/21	05/06/21	DJL
Terphenyl-d14	71%		%REC	44-125	10	266473	05/04/21	05/06/21	DJL

Sample ID: TP3-7.5 **Lab ID: 444657-009** **Collected: 04/27/21 10:00**
Matrix: Soil

444657-009 Analyte	Result	Qual	Units	RL	DF	Batch	Prepared	Analyzed	Chemist
Method: EPA 6010B Prep Method: EPA 3050B									
Lead	**2.2**		mg/Kg	1.1	1.1	266286	04/30/21	04/30/21	SBW

Sample ID: TP5-0.5 **Lab ID: 444657-012** **Collected: 04/27/21 11:00**
Matrix: Soil

444657-012 Analyte	Result	Qual	Units	RL	DF	Batch	Prepared	Analyzed	Chemist
Method: EPA 6010B Prep Method: EPA 3050B									
Lead	**27**		mg/Kg	0.98	0.98	266286	04/30/21	04/30/21	SBW

Sample ID: TP5-5 **Lab ID: 444657-013** **Collected: 04/27/21 11:20**
Matrix: Soil

444657-013 Analyte	Result	Qual	Units	RL	DF	Batch	Prepared	Analyzed	Chemist
Method: EPA 6010B Prep Method: EPA 3050B									
Lead	**23**		mg/Kg	1.0	1	266286	04/30/21	04/30/21	SBW

Results for any subcontracted analyses are not included in this section.

ENTHALPY ANALYTICAL

Analysis Results for 444657

Sample ID: TP5-7	Lab ID: 444657-014	Collected: 04/27/21 11:25
	Matrix: Soil	

444657-014 Analyte	Result	Qual	Units	RL	DF	Batch	Prepared	Analyzed	Chemist
Method: EPA 6010B Prep Method: EPA 3050B									
Lead	**1.4**		mg/Kg	0.87	0.87	266286	04/30/21	04/30/21	SBW

Sample ID: TP6-0.75	Lab ID: 444657-015	Collected: 04/27/21 12:40
	Matrix: Soil	

444657-015 Analyte	Result	Qual	Units	RL	DF	Batch	Prepared	Analyzed	Chemist
Method: EPA 6010B Prep Method: EPA 3050B									
Antimony	ND		mg/Kg	3.1	1	266286	04/30/21	04/30/21	SBW
Arsenic	**1.8**		mg/Kg	1.0	1	266286	04/30/21	04/30/21	SBW
Barium	**71**		mg/Kg	1.0	1	266286	04/30/21	04/30/21	SBW
Beryllium	ND		mg/Kg	0.52	1	266286	04/30/21	04/30/21	SBW
Cadmium	ND		mg/Kg	0.52	1	266286	04/30/21	04/30/21	SBW
Chromium	**9.2**		mg/Kg	1.0	1	266286	04/30/21	04/30/21	SBW
Cobalt	**5.2**		mg/Kg	0.52	1	266286	04/30/21	04/30/21	SBW
Copper	**12**		mg/Kg	1.0	1	266286	04/30/21	04/30/21	SBW
Lead	**21**		mg/Kg	1.0	1	266286	04/30/21	04/30/21	SBW
Molybdenum	ND		mg/Kg	1.0	1	266286	04/30/21	04/30/21	SBW
Nickel	**6.8**		mg/Kg	1.0	1	266286	04/30/21	04/30/21	SBW
Selenium	ND		mg/Kg	3.1	1	266286	04/30/21	04/30/21	SBW
Silver	ND		mg/Kg	0.52	1	266286	04/30/21	04/30/21	SBW
Thallium	ND		mg/Kg	3.1	1	266286	04/30/21	04/30/21	SBW
Vanadium	**29**		mg/Kg	1.0	1	266286	04/30/21	04/30/21	SBW
Zinc	**56**		mg/Kg	5.2	1	266286	04/30/21	04/30/21	SBW
Method: EPA 7471A Prep Method: METHOD									
Mercury	ND		mg/Kg	0.14	1	266325	04/30/21	04/30/21	JDB

Results for any subcontracted analyses are not included in this section.

ENTHALPY ANALYTICAL

Analysis Results for 444657

Sample ID: TP6-3	Lab ID: 444657-016	Collected: 04/27/21 12:45
	Matrix: Soil	

444657-016 Analyte	Result	Qual	Units	RL	DF	Batch	Prepared	Analyzed	Chemist
Method: EPA 6010B Prep Method: EPA 3050B									
Antimony	ND		mg/Kg	2.7	0.9	266286	04/30/21	04/30/21	SBW
Arsenic	**4.1**		mg/Kg	0.90	0.9	266286	04/30/21	04/30/21	SBW
Barium	**110**		mg/Kg	0.90	0.9	266286	04/30/21	04/30/21	SBW
Beryllium	ND		mg/Kg	0.45	0.9	266286	04/30/21	04/30/21	SBW
Cadmium	ND		mg/Kg	0.45	0.9	266286	04/30/21	04/30/21	SBW
Chromium	**21**		mg/Kg	0.90	0.9	266286	04/30/21	04/30/21	SBW
Cobalt	**7.4**		mg/Kg	0.45	0.9	266286	04/30/21	04/30/21	SBW
Copper	**19**		mg/Kg	0.90	0.9	266286	04/30/21	04/30/21	SBW
Lead	**28**		mg/Kg	0.90	0.9	266286	04/30/21	04/30/21	SBW
Molybdenum	ND		mg/Kg	0.90	0.9	266286	04/30/21	04/30/21	SBW
Nickel	**15**		mg/Kg	0.90	0.9	266286	04/30/21	04/30/21	SBW
Selenium	ND		mg/Kg	2.7	0.9	266286	04/30/21	04/30/21	SBW
Silver	ND		mg/Kg	0.45	0.9	266286	04/30/21	04/30/21	SBW
Thallium	ND		mg/Kg	2.7	0.9	266286	04/30/21	04/30/21	SBW
Vanadium	**39**		mg/Kg	0.90	0.9	266286	04/30/21	04/30/21	SBW
Zinc	**81**		mg/Kg	4.5	0.9	266286	04/30/21	04/30/21	SBW
Method: EPA 7471A Prep Method: METHOD									
Mercury	ND		mg/Kg	0.16	1.1	266325	04/30/21	04/30/21	JDB

Results for any subcontracted analyses are not included in this section.

ENTHALPY ANALYTICAL

Analysis Results for 444657

Sample ID: TP6-6.5	Lab ID: 444657-017	Collected: 04/27/21 12:55
	Matrix: Soil	

444657-017 Analyte	Result	Qual	Units	RL	DF	Batch	Prepared	Analyzed	Chemist
Method: EPA 6010B Prep Method: EPA 3050B									
Antimony	ND		mg/Kg	2.6	0.86	266286	04/30/21	04/30/21	SBW
Arsenic	**1.1**		mg/Kg	0.86	0.86	266286	04/30/21	04/30/21	SBW
Barium	**55**		mg/Kg	0.86	0.86	266286	04/30/21	04/30/21	SBW
Beryllium	ND		mg/Kg	0.43	0.86	266286	04/30/21	04/30/21	SBW
Cadmium	ND		mg/Kg	0.43	0.86	266286	04/30/21	04/30/21	SBW
Chromium	**6.2**		mg/Kg	0.86	0.86	266286	04/30/21	04/30/21	SBW
Cobalt	**3.7**		mg/Kg	0.43	0.86	266286	04/30/21	04/30/21	SBW
Copper	**6.7**		mg/Kg	0.86	0.86	266286	04/30/21	04/30/21	SBW
Lead	**6.2**		mg/Kg	0.86	0.86	266286	04/30/21	04/30/21	SBW
Molybdenum	ND		mg/Kg	0.86	0.86	266286	04/30/21	04/30/21	SBW
Nickel	**5.1**		mg/Kg	0.86	0.86	266286	04/30/21	04/30/21	SBW
Selenium	ND		mg/Kg	2.6	0.86	266286	04/30/21	04/30/21	SBW
Silver	ND		mg/Kg	0.43	0.86	266286	04/30/21	05/05/21	SBW
Thallium	ND		mg/Kg	2.6	0.86	266286	04/30/21	04/30/21	SBW
Vanadium	**20**		mg/Kg	0.86	0.86	266286	04/30/21	04/30/21	SBW
Zinc	**24**		mg/Kg	4.3	0.86	266286	04/30/21	04/30/21	SBW
Method: EPA 7471A Prep Method: METHOD									
Mercury	ND		mg/Kg	0.15	1.1	266325	04/30/21	04/30/21	JDB

Results for any subcontracted analyses are not included in this section.

ENTHALPY ANALYTICAL

Analysis Results for 444657

Sample ID: TP7-1	Lab ID: 444657-018	Collected: 04/27/21 13:20
	Matrix: Soil	

444657-018 Analyte	Result	Qual	Units	RL	DF	Batch	Prepared	Analyzed	Chemist
Method: EPA 6010B Prep Method: EPA 3050B									
Antimony	ND		mg/Kg	2.8	0.93	266286	04/30/21	04/30/21	SBW
Arsenic	**5.3**		mg/Kg	0.93	0.93	266286	04/30/21	04/30/21	SBW
Barium	**240**		mg/Kg	0.93	0.93	266286	04/30/21	04/30/21	SBW
Beryllium	ND		mg/Kg	0.46	0.93	266286	04/30/21	04/30/21	SBW
Cadmium	**0.64**		mg/Kg	0.46	0.93	266286	04/30/21	04/30/21	SBW
Chromium	**27**		mg/Kg	0.93	0.93	266286	04/30/21	04/30/21	SBW
Cobalt	**10**		mg/Kg	0.46	0.93	266286	04/30/21	04/30/21	SBW
Copper	**39**		mg/Kg	0.93	0.93	266286	04/30/21	04/30/21	SBW
Lead	**110**		mg/Kg	0.93	0.93	266286	04/30/21	04/30/21	SBW
Molybdenum	ND		mg/Kg	0.93	0.93	266286	04/30/21	04/30/21	SBW
Nickel	**19**		mg/Kg	0.93	0.93	266286	04/30/21	04/30/21	SBW
Selenium	ND		mg/Kg	2.8	0.93	266286	04/30/21	04/30/21	SBW
Silver	ND		mg/Kg	0.46	0.93	266286	04/30/21	05/03/21	SBW
Thallium	ND		mg/Kg	2.8	0.93	266286	04/30/21	04/30/21	SBW
Vanadium	**46**		mg/Kg	0.93	0.93	266286	04/30/21	04/30/21	SBW
Zinc	**350**		mg/Kg	4.6	0.93	266286	04/30/21	04/30/21	SBW
Method: EPA 7471A Prep Method: METHOD									
Mercury	ND		mg/Kg	0.16	1.2	266325	04/30/21	04/30/21	JDB

Results for any subcontracted analyses are not included in this section.

ENTHALPY ANALYTICAL

Analysis Results for 444657

Sample ID: TP7-3	Lab ID: 444657-019	Collected: 04/27/21 13:30
	Matrix: Soil	

444657-019 Analyte	Result	Qual	Units	RL	DF	Batch	Prepared	Analyzed	Chemist
Method: EPA 6010B Prep Method: EPA 3050B									
Antimony	ND		mg/Kg	3.2	1.1	266286	04/30/21	04/30/21	SBW
Arsenic	**12**		mg/Kg	1.1	1.1	266286	04/30/21	04/30/21	SBW
Barium	**380**		mg/Kg	1.1	1.1	266286	04/30/21	04/30/21	SBW
Beryllium	ND		mg/Kg	0.53	1.1	266286	04/30/21	04/30/21	SBW
Cadmium	**0.65**		mg/Kg	0.53	1.1	266286	04/30/21	04/30/21	SBW
Chromium	**28**		mg/Kg	1.1	1.1	266286	04/30/21	04/30/21	SBW
Cobalt	**10**		mg/Kg	0.53	1.1	266286	04/30/21	04/30/21	SBW
Copper	**95**		mg/Kg	1.1	1.1	266286	04/30/21	04/30/21	SBW
Lead	**380**		mg/Kg	1.1	1.1	266286	04/30/21	04/30/21	SBW
Molybdenum	**5.6**		mg/Kg	1.1	1.1	266286	04/30/21	04/30/21	SBW
Nickel	**27**		mg/Kg	1.1	1.1	266286	04/30/21	04/30/21	SBW
Selenium	ND		mg/Kg	3.2	1.1	266286	04/30/21	04/30/21	SBW
Silver	**0.68**		mg/Kg	0.53	1.1	266286	04/30/21	05/03/21	SBW
Thallium	ND		mg/Kg	3.2	1.1	266286	04/30/21	04/30/21	SBW
Vanadium	**35**		mg/Kg	1.1	1.1	266286	04/30/21	04/30/21	SBW
Zinc	**490**		mg/Kg	5.3	1.1	266286	04/30/21	04/30/21	SBW
Method: EPA 7471A Prep Method: METHOD									
Mercury	ND		mg/Kg	0.15	1.1	266325	04/30/21	04/30/21	JDB

Results for any subcontracted analyses are not included in this section.

ENTHALPY ANALYTICAL

Analysis Results for 444657

Sample ID: TP7-4	Lab ID: 444657-020	Collected: 04/27/21 13:45
	Matrix: Soil	

444657-020 Analyte	Result	Qual	Units	RL	DF	Batch	Prepared	Analyzed	Chemist
Method: EPA 6010B Prep Method: EPA 3050B									
Antimony	ND		mg/Kg	2.7	0.89	266286	04/30/21	04/30/21	SBW
Arsenic	**3.9**		mg/Kg	0.89	0.89	266286	04/30/21	04/30/21	SBW
Barium	**380**		mg/Kg	0.89	0.89	266286	04/30/21	04/30/21	SBW
Beryllium	ND		mg/Kg	0.45	0.89	266286	04/30/21	04/30/21	SBW
Cadmium	ND		mg/Kg	0.45	0.89	266286	04/30/21	04/30/21	SBW
Chromium	**33**		mg/Kg	0.89	0.89	266286	04/30/21	04/30/21	SBW
Cobalt	**8.0**		mg/Kg	0.45	0.89	266286	04/30/21	04/30/21	SBW
Copper	**60**		mg/Kg	0.89	0.89	266286	04/30/21	04/30/21	SBW
Lead	**210**		mg/Kg	0.89	0.89	266286	04/30/21	04/30/21	SBW
Molybdenum	ND		mg/Kg	0.89	0.89	266286	04/30/21	04/30/21	SBW
Nickel	**14**		mg/Kg	0.89	0.89	266286	04/30/21	04/30/21	SBW
Selenium	ND		mg/Kg	2.7	0.89	266286	04/30/21	04/30/21	SBW
Silver	ND		mg/Kg	0.45	0.89	266286	04/30/21	05/03/21	SBW
Thallium	ND		mg/Kg	2.7	0.89	266286	04/30/21	04/30/21	SBW
Vanadium	**34**		mg/Kg	0.89	0.89	266286	04/30/21	04/30/21	SBW
Zinc	**520**		mg/Kg	4.5	0.89	266286	04/30/21	04/30/21	SBW
Method: EPA 7471A Prep Method: METHOD									
Mercury	**0.18**		mg/Kg	0.15	1.1	266325	04/30/21	04/30/21	JDB
Method: EPA 8015B Prep Method: EPA 3580									
GRO C6-C10	ND		mg/Kg	10	1	266432	05/03/21	05/05/21	MES
DRO C10-C28	**16**		mg/Kg	10	1	266432	05/03/21	05/05/21	MES
ORO C28-C44	**50**		mg/Kg	20	1	266432	05/03/21	05/05/21	MES
Surrogates				**Limits**					
n-Triacontane	112%		%REC	70-130	1	266432	05/03/21	05/05/21	MES

Results for any subcontracted analyses are not included in this section.

ENTHALPY ANALYTICAL

Analysis Results for 444657

Sample ID: TP7-BLUE	Lab ID: 444657-021	Collected: 04/27/21 13:45
	Matrix: Soil	

444657-021 Analyte	Result	Qual	Units	RL	DF	Batch	Prepared	Analyzed	Chemist
Method: EPA 6010B Prep Method: EPA 3050B									
Antimony	ND		mg/Kg	3.3	1.1	266286	04/30/21	04/30/21	SBW
Arsenic	**2.4**		mg/Kg	1.1	1.1	266286	04/30/21	04/30/21	SBW
Barium	**130**		mg/Kg	1.1	1.1	266286	04/30/21	04/30/21	SBW
Beryllium	**0.85**		mg/Kg	0.55	1.1	266286	04/30/21	04/30/21	SBW
Cadmium	ND		mg/Kg	0.55	1.1	266286	04/30/21	04/30/21	SBW
Chromium	**6.0**		mg/Kg	1.1	1.1	266286	04/30/21	04/30/21	SBW
Cobalt	**2.1**		mg/Kg	0.55	1.1	266286	04/30/21	04/30/21	SBW
Copper	**7.9**		mg/Kg	1.1	1.1	266286	04/30/21	04/30/21	SBW
Lead	**62**		mg/Kg	2.2	2.2	266286	04/30/21	05/03/21	SBW
Molybdenum	ND		mg/Kg	1.1	1.1	266286	04/30/21	04/30/21	SBW
Nickel	**7.7**		mg/Kg	1.1	1.1	266286	04/30/21	04/30/21	SBW
Selenium	ND		mg/Kg	3.3	1.1	266286	04/30/21	04/30/21	SBW
Silver	ND		mg/Kg	0.55	1.1	266286	04/30/21	05/03/21	SBW
Thallium	ND		mg/Kg	3.3	1.1	266286	04/30/21	04/30/21	SBW
Vanadium	**6.8**		mg/Kg	1.1	1.1	266286	04/30/21	04/30/21	SBW
Zinc	**85**		mg/Kg	5.5	1.1	266286	04/30/21	04/30/21	SBW
Method: EPA 7471A Prep Method: METHOD									
Mercury	ND		mg/Kg	0.16	1.2	266325	04/30/21	04/30/21	JDB

Results for any subcontracted analyses are not included in this section.

ENTHALPY ANALYTICAL

Analysis Results for 444657

Sample ID: TP7-5.5	Lab ID: 444657-022	Collected: 04/27/21 13:50
	Matrix: Soil	

444657-022 Analyte	Result	Qual	Units	RL	DF	Batch	Prepared	Analyzed	Chemist
Method: EPA 6010B Prep Method: EPA 3050B									
Antimony	**8.0**		mg/Kg	2.7	0.9	266286	04/30/21	04/30/21	SBW
Arsenic	**23**		mg/Kg	0.90	0.9	266286	04/30/21	04/30/21	SBW
Barium	**320**		mg/Kg	0.90	0.9	266286	04/30/21	04/30/21	SBW
Beryllium	ND		mg/Kg	0.45	0.9	266286	04/30/21	04/30/21	SBW
Cadmium	**2.5**		mg/Kg	0.45	0.9	266286	04/30/21	04/30/21	SBW
Chromium	**41**		mg/Kg	0.90	0.9	266286	04/30/21	04/30/21	SBW
Cobalt	**17**		mg/Kg	0.45	0.9	266286	04/30/21	04/30/21	SBW
Copper	**140**		mg/Kg	0.90	0.9	266286	04/30/21	04/30/21	SBW
Lead	**700**		mg/Kg	0.90	0.9	266286	04/30/21	04/30/21	SBW
Molybdenum	**11**		mg/Kg	0.90	0.9	266286	04/30/21	04/30/21	SBW
Nickel	**59**		mg/Kg	0.90	0.9	266286	04/30/21	04/30/21	SBW
Selenium	ND		mg/Kg	2.7	0.9	266286	04/30/21	04/30/21	SBW
Silver	ND		mg/Kg	0.45	0.9	266286	04/30/21	05/03/21	SBW
Thallium	ND		mg/Kg	2.7	0.9	266286	04/30/21	04/30/21	SBW
Vanadium	**15**		mg/Kg	0.90	0.9	266286	04/30/21	04/30/21	SBW
Zinc	**700**		mg/Kg	4.5	0.9	266286	04/30/21	04/30/21	SBW
Method: EPA 7471A Prep Method: METHOD									
Mercury	ND		mg/Kg	0.17	1.2	266325	04/30/21	04/30/21	JDB
Method: EPA 8015B Prep Method: EPA 3580									
GRO C6-C10	ND		mg/Kg	100	10	266432	05/03/21	05/05/21	MES
DRO C10-C28	ND		mg/Kg	100	10	266432	05/03/21	05/05/21	MES
ORO C28-C44	ND		mg/Kg	200	10	266432	05/03/21	05/05/21	MES
Surrogates				**Limits**					
n-Triacontane		DO	%REC	70-130	10	266432	05/03/21	05/05/21	MES
Method: EPA 8081A Prep Method: EPA 3546									
alpha-BHC	ND		ug/Kg	5.0	1	266300	04/30/21	05/01/21	KTD
beta-BHC	ND		ug/Kg	5.0	1	266300	04/30/21	05/01/21	KTD
gamma-BHC	ND		ug/Kg	5.0	1	266300	04/30/21	05/01/21	KTD
delta-BHC	ND		ug/Kg	5.0	1	266300	04/30/21	05/01/21	KTD
Heptachlor	ND		ug/Kg	5.0	1	266300	04/30/21	05/01/21	KTD
Aldrin	ND		ug/Kg	5.0	1	266300	04/30/21	05/01/21	KTD
Heptachlor epoxide	ND		ug/Kg	5.0	1	266300	04/30/21	05/01/21	KTD
Endosulfan I	ND		ug/Kg	5.0	1	266300	04/30/21	05/01/21	KTD
Dieldrin	ND		ug/Kg	5.0	1	266300	04/30/21	05/01/21	KTD
4,4'-DDE	**600**		ug/Kg	50	10	266300	04/30/21	05/06/21	KTD
Endrin	ND		ug/Kg	5.0	1	266300	04/30/21	05/01/21	KTD
Endosulfan II	ND		ug/Kg	5.0	1	266300	04/30/21	05/01/21	KTD

Results for any subcontracted analyses are not included in this section.

Analysis Results for 444657

444657-022 Analyte	Result	Qual	Units	RL	DF	Batch	Prepared	Analyzed	Chemist
Endosulfan sulfate	ND		ug/Kg	5.0	1	266300	04/30/21	05/01/21	KTD
4,4'-DDD	**5.1**		ug/Kg	5.0	1	266300	04/30/21	05/01/21	KTD
Endrin aldehyde	ND		ug/Kg	5.0	1	266300	04/30/21	05/01/21	KTD
Endrin ketone	ND		ug/Kg	5.0	1	266300	04/30/21	05/01/21	KTD
4,4'-DDT	ND		ug/Kg	5.0	1	266300	04/30/21	05/01/21	KTD
Methoxychlor	ND		ug/Kg	10	1	266300	04/30/21	05/01/21	KTD
Toxaphene	ND		ug/Kg	100	1	266300	04/30/21	05/01/21	KTD
Chlordane (Technical)	ND		ug/Kg	50	1	266300	04/30/21	05/01/21	KTD
Surrogates				**Limits**					
TCMX	71%		%REC	23-120	1	266300	04/30/21	05/01/21	KTD
Decachlorobiphenyl	78%		%REC	24-120	1	266300	04/30/21	05/01/21	KTD
Method: EPA 8082 Prep Method: EPA 3546									
Aroclor-1016	ND		ug/Kg	50	1	266300	04/30/21	05/01/21	KTD
Aroclor-1221	ND		ug/Kg	50	1	266300	04/30/21	05/01/21	KTD
Aroclor-1232	ND		ug/Kg	50	1	266300	04/30/21	05/01/21	KTD
Aroclor-1242	ND		ug/Kg	50	1	266300	04/30/21	05/01/21	KTD
Aroclor-1248	ND		ug/Kg	50	1	266300	04/30/21	05/01/21	KTD
Aroclor-1254	ND		ug/Kg	50	1	266300	04/30/21	05/01/21	KTD
Aroclor-1260	ND		ug/Kg	50	1	266300	04/30/21	05/01/21	KTD
Aroclor-1262	ND		ug/Kg	50	1	266300	04/30/21	05/01/21	KTD
Aroclor-1268	ND		ug/Kg	50	1	266300	04/30/21	05/01/21	KTD
Surrogates				**Limits**					
Decachlorobiphenyl (PCB)	70%		%REC	19-121	1	266300	04/30/21	05/01/21	KTD
Method: EPA 8260B Prep Method: EPA 5030B									
3-Chloropropene	ND		ug/Kg	5.0	1	266284	04/30/21	04/30/21	TCN
cis-1,4-Dichloro-2-butene	ND		ug/Kg	5.0	1	266284	04/30/21	04/30/21	TCN
trans-1,4-Dichloro-2-butene	ND		ug/Kg	5.0	1	266284	04/30/21	04/30/21	TCN
Isopropyl Ether (DIPE)	ND		ug/Kg	5.0	1	266284	04/30/21	04/30/21	TCN
Ethyl tert-Butyl Ether (ETBE)	ND		ug/Kg	5.0	1	266284	04/30/21	04/30/21	TCN
Methyl tert-Amyl Ether (TAME)	ND		ug/Kg	5.0	1	266284	04/30/21	04/30/21	TCN
tert-Butyl Alcohol (TBA)	ND		ug/Kg	10	1	266284	04/30/21	04/30/21	TCN
Freon 12	ND		ug/Kg	5.0	1	266284	04/30/21	04/30/21	TCN
Chloromethane	ND		ug/Kg	5.0	1	266284	04/30/21	04/30/21	TCN
Vinyl Chloride	ND		ug/Kg	5.0	1	266284	04/30/21	04/30/21	TCN
Bromomethane	ND		ug/Kg	5.0	1	266284	04/30/21	04/30/21	TCN
Chloroethane	ND		ug/Kg	5.0	1	266284	04/30/21	04/30/21	TCN
Trichlorofluoromethane	ND		ug/Kg	5.0	1	266284	04/30/21	04/30/21	TCN
Acetone	ND		ug/Kg	100	1	266284	04/30/21	04/30/21	TCN
Freon 113	ND		ug/Kg	5.0	1	266284	04/30/21	04/30/21	TCN
1,1-Dichloroethene	ND		ug/Kg	5.0	1	266284	04/30/21	04/30/21	TCN
Methylene Chloride	ND		ug/Kg	5.0	1	266284	04/30/21	04/30/21	TCN
MTBE	ND		ug/Kg	5.0	1	266284	04/30/21	04/30/21	TCN
trans-1,2-Dichloroethene	ND		ug/Kg	5.0	1	266284	04/30/21	04/30/21	TCN
1,1-Dichloroethane	ND		ug/Kg	5.0	1	266284	04/30/21	04/30/21	TCN

Results for any subcontracted analyses are not included in this section.

ENTHALPY ANALYTICAL

Analysis Results for 444657

444657-022 Analyte	Result	Qual	Units	RL	DF	Batch	Prepared	Analyzed	Chemist
2-Butanone	ND		ug/Kg	100	1	266284	04/30/21	04/30/21	TCN
cis-1,2-Dichloroethene	ND		ug/Kg	5.0	1	266284	04/30/21	04/30/21	TCN
2,2-Dichloropropane	ND		ug/Kg	5.0	1	266284	04/30/21	04/30/21	TCN
Chloroform	ND		ug/Kg	5.0	1	266284	04/30/21	04/30/21	TCN
Bromochloromethane	ND		ug/Kg	5.0	1	266284	04/30/21	04/30/21	TCN
1,1,1-Trichloroethane	ND		ug/Kg	5.0	1	266284	04/30/21	04/30/21	TCN
1,1-Dichloropropene	ND		ug/Kg	5.0	1	266284	04/30/21	04/30/21	TCN
Carbon Tetrachloride	ND		ug/Kg	5.0	1	266284	04/30/21	04/30/21	TCN
1,2-Dichloroethane	ND		ug/Kg	5.0	1	266284	04/30/21	04/30/21	TCN
Benzene	ND		ug/Kg	5.0	1	266284	04/30/21	04/30/21	TCN
Trichloroethene	ND		ug/Kg	5.0	1	266284	04/30/21	04/30/21	TCN
1,2-Dichloropropane	ND		ug/Kg	5.0	1	266284	04/30/21	04/30/21	TCN
Bromodichloromethane	ND		ug/Kg	5.0	1	266284	04/30/21	04/30/21	TCN
Dibromomethane	ND		ug/Kg	5.0	1	266284	04/30/21	04/30/21	TCN
4-Methyl-2-Pentanone	ND		ug/Kg	5.0	1	266284	04/30/21	04/30/21	TCN
cis-1,3-Dichloropropene	ND		ug/Kg	5.0	1	266284	04/30/21	04/30/21	TCN
Toluene	ND		ug/Kg	5.0	1	266284	04/30/21	04/30/21	TCN
trans-1,3-Dichloropropene	ND		ug/Kg	5.0	1	266284	04/30/21	04/30/21	TCN
1,1,2-Trichloroethane	ND		ug/Kg	5.0	1	266284	04/30/21	04/30/21	TCN
1,3-Dichloropropane	ND		ug/Kg	5.0	1	266284	04/30/21	04/30/21	TCN
Tetrachloroethene	ND		ug/Kg	5.0	1	266284	04/30/21	04/30/21	TCN
Dibromochloromethane	ND		ug/Kg	5.0	1	266284	04/30/21	04/30/21	TCN
1,2-Dibromoethane	ND		ug/Kg	5.0	1	266284	04/30/21	04/30/21	TCN
Chlorobenzene	ND		ug/Kg	5.0	1	266284	04/30/21	04/30/21	TCN
1,1,1,2-Tetrachloroethane	ND		ug/Kg	5.0	1	266284	04/30/21	04/30/21	TCN
Ethylbenzene	ND		ug/Kg	5.0	1	266284	04/30/21	04/30/21	TCN
m,p-Xylenes	ND		ug/Kg	10	1	266284	04/30/21	04/30/21	TCN
o-Xylene	ND		ug/Kg	5.0	1	266284	04/30/21	04/30/21	TCN
Styrene	ND		ug/Kg	5.0	1	266284	04/30/21	04/30/21	TCN
Bromoform	ND		ug/Kg	5.0	1	266284	04/30/21	04/30/21	TCN
Isopropylbenzene	ND		ug/Kg	5.0	1	266284	04/30/21	04/30/21	TCN
1,1,2,2-Tetrachloroethane	ND		ug/Kg	5.0	1	266284	04/30/21	04/30/21	TCN
1,2,3-Trichloropropane	ND		ug/Kg	5.0	1	266284	04/30/21	04/30/21	TCN
Propylbenzene	ND		ug/Kg	5.0	1	266284	04/30/21	04/30/21	TCN
Bromobenzene	ND		ug/Kg	5.0	1	266284	04/30/21	04/30/21	TCN
1,3,5-Trimethylbenzene	ND		ug/Kg	5.0	1	266284	04/30/21	04/30/21	TCN
2-Chlorotoluene	ND		ug/Kg	5.0	1	266284	04/30/21	04/30/21	TCN
4-Chlorotoluene	ND		ug/Kg	5.0	1	266284	04/30/21	04/30/21	TCN
tert-Butylbenzene	ND		ug/Kg	5.0	1	266284	04/30/21	04/30/21	TCN
1,2,4-Trimethylbenzene	ND		ug/Kg	5.0	1	266284	04/30/21	04/30/21	TCN
sec-Butylbenzene	ND		ug/Kg	5.0	1	266284	04/30/21	04/30/21	TCN
para-Isopropyl Toluene	ND		ug/Kg	5.0	1	266284	04/30/21	04/30/21	TCN
1,3-Dichlorobenzene	ND		ug/Kg	5.0	1	266284	04/30/21	04/30/21	TCN
1,4-Dichlorobenzene	ND		ug/Kg	5.0	1	266284	04/30/21	04/30/21	TCN
n-Butylbenzene	ND		ug/Kg	5.0	1	266284	04/30/21	04/30/21	TCN
1,2-Dichlorobenzene	ND		ug/Kg	5.0	1	266284	04/30/21	04/30/21	TCN

Results for any subcontracted analyses are not included in this section.

Analysis Results for 444657

444657-022 Analyte	Result	Qual	Units	RL	DF	Batch	Prepared	Analyzed	Chemist
1,2-Dibromo-3-Chloropropane	ND		ug/Kg	5.0	1	266284	04/30/21	04/30/21	TCN
1,2,4-Trichlorobenzene	ND		ug/Kg	5.0	1	266284	04/30/21	04/30/21	TCN
Hexachlorobutadiene	ND		ug/Kg	5.0	1	266284	04/30/21	04/30/21	TCN
Naphthalene	ND		ug/Kg	5.0	1	266284	04/30/21	04/30/21	TCN
1,2,3-Trichlorobenzene	ND		ug/Kg	5.0	1	266284	04/30/21	04/30/21	TCN
Xylene (total)	ND		ug/Kg	5.0	1	266284	04/30/21	04/30/21	TCN
Surrogates				**Limits**					
Dibromofluoromethane	100%		%REC	70-145	1	266284	04/30/21	04/30/21	TCN
1,2-Dichloroethane-d4	92%		%REC	70-145	1	266284	04/30/21	04/30/21	TCN
Toluene-d8	99%		%REC	70-145	1	266284	04/30/21	04/30/21	TCN
Bromofluorobenzene	92%		%REC	70-145	1	266284	04/30/21	04/30/21	TCN
Method: EPA 8270C Prep Method: EPA 3550C									
Carbazole	ND		ug/Kg	13,000	50	266475	05/04/21	05/11/21	DJL
1-Methylnaphthalene	ND		ug/Kg	13,000	50	266475	05/04/21	05/11/21	DJL
Pyridine	ND		ug/Kg	13,000	50	266475	05/04/21	05/11/21	DJL
N-Nitrosodimethylamine	ND		ug/Kg	13,000	50	266475	05/04/21	05/11/21	DJL
Phenol	ND		ug/Kg	13,000	50	266475	05/04/21	05/11/21	DJL
Aniline	ND		ug/Kg	13,000	50	266475	05/04/21	05/11/21	DJL
bis(2-Chloroethyl)ether	ND		ug/Kg	60,000	50	266475	05/04/21	05/11/21	DJL
2-Chlorophenol	ND		ug/Kg	13,000	50	266475	05/04/21	05/11/21	DJL
1,3-Dichlorobenzene	ND		ug/Kg	13,000	50	266475	05/04/21	05/11/21	DJL
1,4-Dichlorobenzene	ND		ug/Kg	13,000	50	266475	05/04/21	05/11/21	DJL
Benzyl alcohol	ND		ug/Kg	13,000	50	266475	05/04/21	05/11/21	DJL
1,2-Dichlorobenzene	ND		ug/Kg	13,000	50	266475	05/04/21	05/11/21	DJL
2-Methylphenol	ND		ug/Kg	13,000	50	266475	05/04/21	05/11/21	DJL
bis(2-Chloroisopropyl) ether	ND		ug/Kg	13,000	50	266475	05/04/21	05/11/21	DJL
3-,4-Methylphenol	ND		ug/Kg	20,000	50	266475	05/04/21	05/11/21	DJL
N-Nitroso-di-n-propylamine	ND		ug/Kg	13,000	50	266475	05/04/21	05/11/21	DJL
Hexachloroethane	ND		ug/Kg	13,000	50	266475	05/04/21	05/11/21	DJL
Nitrobenzene	ND		ug/Kg	60,000	50	266475	05/04/21	05/11/21	DJL
Isophorone	ND		ug/Kg	13,000	50	266475	05/04/21	05/11/21	DJL
2-Nitrophenol	ND		ug/Kg	13,000	50	266475	05/04/21	05/11/21	DJL
2,4-Dimethylphenol	ND		ug/Kg	13,000	50	266475	05/04/21	05/11/21	DJL
Benzoic acid	ND		ug/Kg	60,000	50	266475	05/04/21	05/11/21	DJL
bis(2-Chloroethoxy)methane	ND		ug/Kg	13,000	50	266475	05/04/21	05/11/21	DJL
2,4-Dichlorophenol	ND		ug/Kg	13,000	50	266475	05/04/21	05/11/21	DJL
1,2,4-Trichlorobenzene	ND		ug/Kg	13,000	50	266475	05/04/21	05/11/21	DJL
Naphthalene	ND		ug/Kg	13,000	50	266475	05/04/21	05/11/21	DJL
4-Chloroaniline	ND		ug/Kg	13,000	50	266475	05/04/21	05/11/21	DJL
Hexachlorobutadiene	ND		ug/Kg	13,000	50	266475	05/04/21	05/11/21	DJL
4-Chloro-3-methylphenol	ND		ug/Kg	13,000	50	266475	05/04/21	05/11/21	DJL
2-Methylnaphthalene	ND		ug/Kg	13,000	50	266475	05/04/21	05/11/21	DJL
Hexachlorocyclopentadiene	ND		ug/Kg	60,000	50	266475	05/04/21	05/11/21	DJL
2,4,6-Trichlorophenol	ND		ug/Kg	13,000	50	266475	05/04/21	05/11/21	DJL
2,4,5-Trichlorophenol	ND		ug/Kg	13,000	50	266475	05/04/21	05/11/21	DJL

Results for any subcontracted analyses are not included in this section.

ENTHALPY ANALYTICAL

Analysis Results for 444657

444657-022 Analyte	Result	Qual	Units	RL	DF	Batch	Prepared	Analyzed	Chemist
2-Chloronaphthalene	ND		ug/Kg	13,000	50	266475	05/04/21	05/11/21	DJL
2-Nitroaniline	ND		ug/Kg	13,000	50	266475	05/04/21	05/11/21	DJL
Dimethylphthalate	ND		ug/Kg	13,000	50	266475	05/04/21	05/11/21	DJL
Acenaphthylene	ND		ug/Kg	13,000	50	266475	05/04/21	05/11/21	DJL
2,6-Dinitrotoluene	ND		ug/Kg	13,000	50	266475	05/04/21	05/11/21	DJL
3-Nitroaniline	ND		ug/Kg	13,000	50	266475	05/04/21	05/11/21	DJL
Acenaphthene	ND		ug/Kg	13,000	50	266475	05/04/21	05/11/21	DJL
2,4-Dinitrophenol	ND		ug/Kg	60,000	50	266475	05/04/21	05/11/21	DJL
4-Nitrophenol	ND		ug/Kg	13,000	50	266475	05/04/21	05/11/21	DJL
Dibenzofuran	ND		ug/Kg	13,000	50	266475	05/04/21	05/11/21	DJL
2,4-Dinitrotoluene	ND		ug/Kg	13,000	50	266475	05/04/21	05/11/21	DJL
Diethylphthalate	ND		ug/Kg	13,000	50	266475	05/04/21	05/11/21	DJL
Fluorene	ND		ug/Kg	13,000	50	266475	05/04/21	05/11/21	DJL
4-Chlorophenyl-phenylether	ND		ug/Kg	13,000	50	266475	05/04/21	05/11/21	DJL
4-Nitroaniline	ND		ug/Kg	13,000	50	266475	05/04/21	05/11/21	DJL
4,6-Dinitro-2-methylphenol	ND		ug/Kg	13,000	50	266475	05/04/21	05/11/21	DJL
N-Nitrosodiphenylamine	ND		ug/Kg	13,000	50	266475	05/04/21	05/11/21	DJL
1,2-diphenylhydrazine (as azobenzene)	ND		ug/Kg	13,000	50	266475	05/04/21	05/11/21	DJL
4-Bromophenyl-phenylether	ND		ug/Kg	13,000	50	266475	05/04/21	05/11/21	DJL
Hexachlorobenzene	ND		ug/Kg	13,000	50	266475	05/04/21	05/11/21	DJL
Pentachlorophenol	ND		ug/Kg	60,000	50	266475	05/04/21	05/11/21	DJL
Phenanthrene	ND		ug/Kg	13,000	50	266475	05/04/21	05/11/21	DJL
Anthracene	ND		ug/Kg	13,000	50	266475	05/04/21	05/11/21	DJL
Di-n-butylphthalate	ND		ug/Kg	13,000	50	266475	05/04/21	05/11/21	DJL
Fluoranthene	ND		ug/Kg	13,000	50	266475	05/04/21	05/11/21	DJL
Benzidine	ND		ug/Kg	60,000	50	266475	05/04/21	05/11/21	DJL
Pyrene	ND		ug/Kg	13,000	50	266475	05/04/21	05/11/21	DJL
Butylbenzylphthalate	ND		ug/Kg	13,000	50	266475	05/04/21	05/11/21	DJL
3,3'-Dichlorobenzidine	ND		ug/Kg	60,000	50	266475	05/04/21	05/11/21	DJL
Benzo(a)anthracene	ND		ug/Kg	13,000	50	266475	05/04/21	05/11/21	DJL
Chrysene	ND		ug/Kg	13,000	50	266475	05/04/21	05/11/21	DJL
bis(2-Ethylhexyl)phthalate	ND		ug/Kg	13,000	50	266475	05/04/21	05/11/21	DJL
Di-n-octylphthalate	ND		ug/Kg	13,000	50	266475	05/04/21	05/11/21	DJL
Benzo(b)fluoranthene	ND		ug/Kg	13,000	50	266475	05/04/21	05/11/21	DJL
Benzo(k)fluoranthene	ND		ug/Kg	13,000	50	266475	05/04/21	05/11/21	DJL
Benzo(a)pyrene	ND		ug/Kg	13,000	50	266475	05/04/21	05/11/21	DJL
Indeno(1,2,3-cd)pyrene	ND		ug/Kg	13,000	50	266475	05/04/21	05/11/21	DJL
Dibenz(a,h)anthracene	ND		ug/Kg	13,000	50	266475	05/04/21	05/11/21	DJL
Benzo(g,h,i)perylene	ND		ug/Kg	13,000	50	266475	05/04/21	05/11/21	DJL
Surrogates				**Limits**					
2-Fluorophenol		DO	%REC	29-120	50	266475	05/04/21	05/11/21	DJL
Phenol-d6		DO	%REC	30-120	50	266475	05/04/21	05/11/21	DJL
2,4,6-Tribromophenol		DO	%REC	32-120	50	266475	05/04/21	05/11/21	DJL
Nitrobenzene-d5		DO	%REC	33-120	50	266475	05/04/21	05/11/21	DJL
2-Fluorobiphenyl		DO	%REC	39-120	50	266475	05/04/21	05/11/21	DJL
Terphenyl-d14		DO	%REC	44-125	50	266475	05/04/21	05/11/21	DJL

Results for any subcontracted analyses are not included in this section.

ENTHALPY ANALYTICAL

Analysis Results for 444657

Sample ID: TP7-7	Lab ID: 444657-023	Collected: 04/27/21 13:55
	Matrix: Soil	

444657-023 Analyte	Result	Qual	Units	RL	DF	Batch	Prepared	Analyzed	Chemist
Method: EPA 6010B Prep Method: EPA 3050B									
Antimony	ND		mg/Kg	2.7	0.89	266286	04/30/21	04/30/21	SBW
Arsenic	ND		mg/Kg	0.89	0.89	266286	04/30/21	04/30/21	SBW
Barium	**33**		mg/Kg	0.89	0.89	266286	04/30/21	04/30/21	SBW
Beryllium	ND		mg/Kg	0.45	0.89	266286	04/30/21	04/30/21	SBW
Cadmium	ND		mg/Kg	0.45	0.89	266286	04/30/21	04/30/21	SBW
Chromium	**4.0**		mg/Kg	0.89	0.89	266286	04/30/21	04/30/21	SBW
Cobalt	**2.7**		mg/Kg	0.45	0.89	266286	04/30/21	04/30/21	SBW
Copper	**5.6**		mg/Kg	0.89	0.89	266286	04/30/21	04/30/21	SBW
Lead	**1.6**		mg/Kg	0.89	0.89	266286	04/30/21	04/30/21	SBW
Molybdenum	ND		mg/Kg	0.89	0.89	266286	04/30/21	04/30/21	SBW
Nickel	**2.6**		mg/Kg	0.89	0.89	266286	04/30/21	04/30/21	SBW
Selenium	ND		mg/Kg	2.7	0.89	266286	04/30/21	04/30/21	SBW
Silver	ND		mg/Kg	0.45	0.89	266286	04/30/21	05/03/21	SBW
Thallium	ND		mg/Kg	2.7	0.89	266286	04/30/21	04/30/21	SBW
Vanadium	**13**		mg/Kg	0.89	0.89	266286	04/30/21	04/30/21	SBW
Zinc	**19**		mg/Kg	4.5	0.89	266286	04/30/21	04/30/21	SBW
Method: EPA 7471A Prep Method: METHOD									
Mercury	ND		mg/Kg	0.16	1.1	266325	04/30/21	04/30/21	JDB
Method: EPA 8015B Prep Method: EPA 3580									
GRO C6-C10	ND		mg/Kg	10	1	266432	05/03/21	05/03/21	MES
DRO C10-C28	ND		mg/Kg	10	1	266432	05/03/21	05/03/21	MES
ORO C28-C44	ND		mg/Kg	20	1	266432	05/03/21	05/03/21	MES
Surrogates				**Limits**					
n-Triacontane	99%		%REC	70-130	1	266432	05/03/21	05/03/21	MES

Results for any subcontracted analyses are not included in this section.

ENTHALPY ANALYTICAL

Analysis Results for 444657

Sample ID: TP9-1	Lab ID: 444657-027	Collected: 04/27/21 15:00
	Matrix: Soil	

444657-027 Analyte	Result	Qual	Units	RL	DF	Batch	Prepared	Analyzed	Chemist
Method: EPA 6010B Prep Method: EPA 3050B									
Antimony	ND		mg/Kg	3.3	1.1	266286	04/30/21	04/30/21	SBW
Arsenic	**4.5**		mg/Kg	1.1	1.1	266286	04/30/21	04/30/21	SBW
Barium	**120**		mg/Kg	1.1	1.1	266286	04/30/21	04/30/21	SBW
Beryllium	ND		mg/Kg	0.56	1.1	266286	04/30/21	04/30/21	SBW
Cadmium	ND		mg/Kg	0.56	1.1	266286	04/30/21	04/30/21	SBW
Chromium	**20**		mg/Kg	1.1	1.1	266286	04/30/21	04/30/21	SBW
Cobalt	**7.8**		mg/Kg	0.56	1.1	266286	04/30/21	04/30/21	SBW
Copper	**19**		mg/Kg	1.1	1.1	266286	04/30/21	04/30/21	SBW
Lead	**35**		mg/Kg	1.1	1.1	266286	04/30/21	04/30/21	SBW
Molybdenum	ND		mg/Kg	1.1	1.1	266286	04/30/21	04/30/21	SBW
Nickel	**13**		mg/Kg	1.1	1.1	266286	04/30/21	04/30/21	SBW
Selenium	ND		mg/Kg	3.3	1.1	266286	04/30/21	04/30/21	SBW
Silver	ND		mg/Kg	0.56	1.1	266286	04/30/21	05/03/21	SBW
Thallium	ND		mg/Kg	3.3	1.1	266286	04/30/21	04/30/21	SBW
Vanadium	**40**		mg/Kg	1.1	1.1	266286	04/30/21	04/30/21	SBW
Zinc	**90**		mg/Kg	5.6	1.1	266286	04/30/21	04/30/21	SBW
Method: EPA 7471A Prep Method: METHOD									
Mercury	ND		mg/Kg	0.14	1	266325	04/30/21	04/30/21	JDB

Results for any subcontracted analyses are not included in this section.

ENTHALPY ANALYTICAL

Analysis Results for 444657

Sample ID: TP9-4	Lab ID: 444657-028	Collected: 04/27/21 15:10
	Matrix: Soil	

444657-028 Analyte	Result	Qual	Units	RL	DF	Batch	Prepared	Analyzed	Chemist
Method: EPA 6010B Prep Method: EPA 3050B									
Antimony	ND		mg/Kg	2.8	0.92	266286	04/30/21	04/30/21	SBW
Arsenic	**4.2**		mg/Kg	0.92	0.92	266286	04/30/21	04/30/21	SBW
Barium	**150**		mg/Kg	0.92	0.92	266286	04/30/21	04/30/21	SBW
Beryllium	ND		mg/Kg	0.46	0.92	266286	04/30/21	04/30/21	SBW
Cadmium	**0.52**		mg/Kg	0.46	0.92	266286	04/30/21	04/30/21	SBW
Chromium	**24**		mg/Kg	0.92	0.92	266286	04/30/21	04/30/21	SBW
Cobalt	**8.8**		mg/Kg	0.46	0.92	266286	04/30/21	04/30/21	SBW
Copper	**24**		mg/Kg	0.92	0.92	266286	04/30/21	04/30/21	SBW
Lead	**46**		mg/Kg	0.92	0.92	266286	04/30/21	04/30/21	SBW
Molybdenum	**1.0**		mg/Kg	0.92	0.92	266286	04/30/21	04/30/21	SBW
Nickel	**17**		mg/Kg	0.92	0.92	266286	04/30/21	04/30/21	SBW
Selenium	ND		mg/Kg	2.8	0.92	266286	04/30/21	04/30/21	SBW
Silver	ND		mg/Kg	0.46	0.92	266286	04/30/21	05/03/21	SBW
Thallium	ND		mg/Kg	2.8	0.92	266286	04/30/21	04/30/21	SBW
Vanadium	**40**		mg/Kg	0.92	0.92	266286	04/30/21	04/30/21	SBW
Zinc	**120**		mg/Kg	4.6	0.92	266286	04/30/21	04/30/21	SBW
Method: EPA 7471A Prep Method: METHOD									
Mercury	ND		mg/Kg	0.17	1.2	266325	04/30/21	04/30/21	JDB
Method: EPA 8015B Prep Method: EPA 3580									
GRO C6-C10	ND		mg/Kg	10	1	266432	05/03/21	05/05/21	MES
DRO C10-C28	ND		mg/Kg	10	1	266432	05/03/21	05/05/21	MES
ORO C28-C44	**22**		mg/Kg	20	1	266432	05/03/21	05/05/21	MES
Surrogates				**Limits**					
n-Triacontane	94%		%REC	70-130	1	266432	05/03/21	05/05/21	MES
Method: EPA 8260B Prep Method: EPA 5030B									
3-Chloropropene	ND		ug/Kg	5.0	1	266284	04/30/21	04/30/21	TCN
cis-1,4-Dichloro-2-butene	ND		ug/Kg	5.0	1	266284	04/30/21	04/30/21	TCN
trans-1,4-Dichloro-2-butene	ND		ug/Kg	5.0	1	266284	04/30/21	04/30/21	TCN
Isopropyl Ether (DIPE)	ND		ug/Kg	5.0	1	266284	04/30/21	04/30/21	TCN
Ethyl tert-Butyl Ether (ETBE)	ND		ug/Kg	5.0	1	266284	04/30/21	04/30/21	TCN
Methyl tert-Amyl Ether (TAME)	ND		ug/Kg	5.0	1	266284	04/30/21	04/30/21	TCN
tert-Butyl Alcohol (TBA)	ND		ug/Kg	10	1	266284	04/30/21	04/30/21	TCN
Freon 12	ND		ug/Kg	5.0	1	266284	04/30/21	04/30/21	TCN
Chloromethane	ND		ug/Kg	5.0	1	266284	04/30/21	04/30/21	TCN
Vinyl Chloride	ND		ug/Kg	5.0	1	266284	04/30/21	04/30/21	TCN
Bromomethane	ND		ug/Kg	5.0	1	266284	04/30/21	04/30/21	TCN
Chloroethane	ND		ug/Kg	5.0	1	266284	04/30/21	04/30/21	TCN

Results for any subcontracted analyses are not included in this section.

ENTHALPY ANALYTICAL

Analysis Results for 444657

444657-028 Analyte	Result	Qual	Units	RL	DF	Batch	Prepared	Analyzed	Chemist
Trichlorofluoromethane	ND		ug/Kg	5.0	1	266284	04/30/21	04/30/21	TCN
Acetone	ND		ug/Kg	100	1	266284	04/30/21	04/30/21	TCN
Freon 113	ND		ug/Kg	5.0	1	266284	04/30/21	04/30/21	TCN
1,1-Dichloroethene	ND		ug/Kg	5.0	1	266284	04/30/21	04/30/21	TCN
Methylene Chloride	ND		ug/Kg	5.0	1	266284	04/30/21	04/30/21	TCN
MTBE	ND		ug/Kg	5.0	1	266284	04/30/21	04/30/21	TCN
trans-1,2-Dichloroethene	ND		ug/Kg	5.0	1	266284	04/30/21	04/30/21	TCN
1,1-Dichloroethane	ND		ug/Kg	5.0	1	266284	04/30/21	04/30/21	TCN
2-Butanone	ND		ug/Kg	100	1	266284	04/30/21	04/30/21	TCN
cis-1,2-Dichloroethene	ND		ug/Kg	5.0	1	266284	04/30/21	04/30/21	TCN
2,2-Dichloropropane	ND		ug/Kg	5.0	1	266284	04/30/21	04/30/21	TCN
Chloroform	ND		ug/Kg	5.0	1	266284	04/30/21	04/30/21	TCN
Bromochloromethane	ND		ug/Kg	5.0	1	266284	04/30/21	04/30/21	TCN
1,1,1-Trichloroethane	ND		ug/Kg	5.0	1	266284	04/30/21	04/30/21	TCN
1,1-Dichloropropene	ND		ug/Kg	5.0	1	266284	04/30/21	04/30/21	TCN
Carbon Tetrachloride	ND		ug/Kg	5.0	1	266284	04/30/21	04/30/21	TCN
1,2-Dichloroethane	ND		ug/Kg	5.0	1	266284	04/30/21	04/30/21	TCN
Benzene	ND		ug/Kg	5.0	1	266284	04/30/21	04/30/21	TCN
Trichloroethene	ND		ug/Kg	5.0	1	266284	04/30/21	04/30/21	TCN
1,2-Dichloropropane	ND		ug/Kg	5.0	1	266284	04/30/21	04/30/21	TCN
Bromodichloromethane	ND		ug/Kg	5.0	1	266284	04/30/21	04/30/21	TCN
Dibromomethane	ND		ug/Kg	5.0	1	266284	04/30/21	04/30/21	TCN
4-Methyl-2-Pentanone	ND		ug/Kg	5.0	1	266284	04/30/21	04/30/21	TCN
cis-1,3-Dichloropropene	ND		ug/Kg	5.0	1	266284	04/30/21	04/30/21	TCN
Toluene	ND		ug/Kg	5.0	1	266284	04/30/21	04/30/21	TCN
trans-1,3-Dichloropropene	ND		ug/Kg	5.0	1	266284	04/30/21	04/30/21	TCN
1,1,2-Trichloroethane	ND		ug/Kg	5.0	1	266284	04/30/21	04/30/21	TCN
1,3-Dichloropropane	ND		ug/Kg	5.0	1	266284	04/30/21	04/30/21	TCN
Tetrachloroethene	ND		ug/Kg	5.0	1	266284	04/30/21	04/30/21	TCN
Dibromochloromethane	ND		ug/Kg	5.0	1	266284	04/30/21	04/30/21	TCN
1,2-Dibromoethane	ND		ug/Kg	5.0	1	266284	04/30/21	04/30/21	TCN
Chlorobenzene	ND		ug/Kg	5.0	1	266284	04/30/21	04/30/21	TCN
1,1,1,2-Tetrachloroethane	ND		ug/Kg	5.0	1	266284	04/30/21	04/30/21	TCN
Ethylbenzene	ND		ug/Kg	5.0	1	266284	04/30/21	04/30/21	TCN
m,p-Xylenes	ND		ug/Kg	10	1	266284	04/30/21	04/30/21	TCN
o-Xylene	ND		ug/Kg	5.0	1	266284	04/30/21	04/30/21	TCN
Styrene	ND		ug/Kg	5.0	1	266284	04/30/21	04/30/21	TCN
Bromoform	ND		ug/Kg	5.0	1	266284	04/30/21	04/30/21	TCN
Isopropylbenzene	ND		ug/Kg	5.0	1	266284	04/30/21	04/30/21	TCN
1,1,2,2-Tetrachloroethane	ND		ug/Kg	5.0	1	266284	04/30/21	04/30/21	TCN
1,2,3-Trichloropropane	ND		ug/Kg	5.0	1	266284	04/30/21	04/30/21	TCN
Propylbenzene	ND		ug/Kg	5.0	1	266284	04/30/21	04/30/21	TCN
Bromobenzene	ND		ug/Kg	5.0	1	266284	04/30/21	04/30/21	TCN
1,3,5-Trimethylbenzene	ND		ug/Kg	5.0	1	266284	04/30/21	04/30/21	TCN
2-Chlorotoluene	ND		ug/Kg	5.0	1	266284	04/30/21	04/30/21	TCN
4-Chlorotoluene	ND		ug/Kg	5.0	1	266284	04/30/21	04/30/21	TCN

Results for any subcontracted analyses are not included in this section.

ENTHALPY ANALYTICAL

Analysis Results for 444657

444657-028 Analyte	Result	Qual	Units	RL	DF	Batch	Prepared	Analyzed	Chemist
tert-Butylbenzene	ND		ug/Kg	5.0	1	266284	04/30/21	04/30/21	TCN
1,2,4-Trimethylbenzene	ND		ug/Kg	5.0	1	266284	04/30/21	04/30/21	TCN
sec-Butylbenzene	ND		ug/Kg	5.0	1	266284	04/30/21	04/30/21	TCN
para-Isopropyl Toluene	ND		ug/Kg	5.0	1	266284	04/30/21	04/30/21	TCN
1,3-Dichlorobenzene	ND		ug/Kg	5.0	1	266284	04/30/21	04/30/21	TCN
1,4-Dichlorobenzene	ND		ug/Kg	5.0	1	266284	04/30/21	04/30/21	TCN
n-Butylbenzene	ND		ug/Kg	5.0	1	266284	04/30/21	04/30/21	TCN
1,2-Dichlorobenzene	ND		ug/Kg	5.0	1	266284	04/30/21	04/30/21	TCN
1,2-Dibromo-3-Chloropropane	ND		ug/Kg	5.0	1	266284	04/30/21	04/30/21	TCN
1,2,4-Trichlorobenzene	ND		ug/Kg	5.0	1	266284	04/30/21	04/30/21	TCN
Hexachlorobutadiene	ND		ug/Kg	5.0	1	266284	04/30/21	04/30/21	TCN
Naphthalene	ND		ug/Kg	5.0	1	266284	04/30/21	04/30/21	TCN
1,2,3-Trichlorobenzene	ND		ug/Kg	5.0	1	266284	04/30/21	04/30/21	TCN
Xylene (total)	ND		ug/Kg	5.0	1	266284	04/30/21	04/30/21	TCN
Surrogates				**Limits**					
Dibromofluoromethane	105%		%REC	70-145	1	266284	04/30/21	04/30/21	TCN
1,2-Dichloroethane-d4	97%		%REC	70-145	1	266284	04/30/21	04/30/21	TCN
Toluene-d8	99%		%REC	70-145	1	266284	04/30/21	04/30/21	TCN
Bromofluorobenzene	90%		%REC	70-145	1	266284	04/30/21	04/30/21	TCN
Method: EPA 8270C Prep Method: EPA 3546									
Carbazole	ND		ug/Kg	1,000	4	266473	05/04/21	05/06/21	DJL
1-Methylnaphthalene	ND		ug/Kg	1,000	4	266473	05/04/21	05/06/21	DJL
Pyridine	ND		ug/Kg	1,000	4	266473	05/04/21	05/06/21	DJL
N-Nitrosodimethylamine	ND		ug/Kg	1,000	4	266473	05/04/21	05/06/21	DJL
Phenol	ND		ug/Kg	1,000	4	266473	05/04/21	05/06/21	DJL
Aniline	ND		ug/Kg	1,000	4	266473	05/04/21	05/06/21	DJL
bis(2-Chloroethyl)ether	ND		ug/Kg	4,800	4	266473	05/04/21	05/06/21	DJL
2-Chlorophenol	ND		ug/Kg	1,000	4	266473	05/04/21	05/06/21	DJL
1,3-Dichlorobenzene	ND		ug/Kg	1,000	4	266473	05/04/21	05/06/21	DJL
1,4-Dichlorobenzene	ND		ug/Kg	1,000	4	266473	05/04/21	05/06/21	DJL
Benzyl alcohol	ND		ug/Kg	1,000	4	266473	05/04/21	05/06/21	DJL
1,2-Dichlorobenzene	ND		ug/Kg	1,000	4	266473	05/04/21	05/06/21	DJL
2-Methylphenol	ND		ug/Kg	1,000	4	266473	05/04/21	05/06/21	DJL
bis(2-Chloroisopropyl) ether	ND		ug/Kg	1,000	4	266473	05/04/21	05/06/21	DJL
3-,4-Methylphenol	ND		ug/Kg	1,600	4	266473	05/04/21	05/06/21	DJL
N-Nitroso-di-n-propylamine	ND		ug/Kg	1,000	4	266473	05/04/21	05/06/21	DJL
Hexachloroethane	ND		ug/Kg	1,000	4	266473	05/04/21	05/06/21	DJL
Nitrobenzene	ND		ug/Kg	4,800	4	266473	05/04/21	05/06/21	DJL
Isophorone	ND		ug/Kg	1,000	4	266473	05/04/21	05/06/21	DJL
2-Nitrophenol	ND		ug/Kg	1,000	4	266473	05/04/21	05/06/21	DJL
2,4-Dimethylphenol	ND		ug/Kg	1,000	4	266473	05/04/21	05/06/21	DJL
Benzoic acid	ND		ug/Kg	4,800	4	266473	05/04/21	05/06/21	DJL
bis(2-Chloroethoxy)methane	ND		ug/Kg	1,000	4	266473	05/04/21	05/06/21	DJL
2,4-Dichlorophenol	ND		ug/Kg	1,000	4	266473	05/04/21	05/06/21	DJL
1,2,4-Trichlorobenzene	ND		ug/Kg	1,000	4	266473	05/04/21	05/06/21	DJL

Results for any subcontracted analyses are not included in this section.

ENTHALPY ANALYTICAL

Analysis Results for 444657

444657-028 Analyte	Result	Qual	Units	RL	DF	Batch	Prepared	Analyzed	Chemist
Naphthalene	ND		ug/Kg	1,000	4	266473	05/04/21	05/06/21	DJL
4-Chloroaniline	ND		ug/Kg	1,000	4	266473	05/04/21	05/06/21	DJL
Hexachlorobutadiene	ND		ug/Kg	1,000	4	266473	05/04/21	05/06/21	DJL
4-Chloro-3-methylphenol	ND		ug/Kg	1,000	4	266473	05/04/21	05/06/21	DJL
2-Methylnaphthalene	ND		ug/Kg	1,000	4	266473	05/04/21	05/06/21	DJL
Hexachlorocyclopentadiene	ND		ug/Kg	4,800	4	266473	05/04/21	05/06/21	DJL
2,4,6-Trichlorophenol	ND		ug/Kg	1,000	4	266473	05/04/21	05/06/21	DJL
2,4,5-Trichlorophenol	ND		ug/Kg	1,000	4	266473	05/04/21	05/06/21	DJL
2-Chloronaphthalene	ND		ug/Kg	1,000	4	266473	05/04/21	05/06/21	DJL
2-Nitroaniline	ND		ug/Kg	1,000	4	266473	05/04/21	05/06/21	DJL
Dimethylphthalate	ND		ug/Kg	1,000	4	266473	05/04/21	05/06/21	DJL
Acenaphthylene	ND		ug/Kg	1,000	4	266473	05/04/21	05/06/21	DJL
2,6-Dinitrotoluene	ND		ug/Kg	1,000	4	266473	05/04/21	05/06/21	DJL
3-Nitroaniline	ND		ug/Kg	1,000	4	266473	05/04/21	05/06/21	DJL
Acenaphthene	ND		ug/Kg	1,000	4	266473	05/04/21	05/06/21	DJL
2,4-Dinitrophenol	ND		ug/Kg	4,800	4	266473	05/04/21	05/06/21	DJL
4-Nitrophenol	ND		ug/Kg	1,000	4	266473	05/04/21	05/06/21	DJL
Dibenzofuran	ND		ug/Kg	1,000	4	266473	05/04/21	05/06/21	DJL
2,4-Dinitrotoluene	ND		ug/Kg	1,000	4	266473	05/04/21	05/06/21	DJL
Diethylphthalate	ND		ug/Kg	1,000	4	266473	05/04/21	05/06/21	DJL
Fluorene	ND		ug/Kg	1,000	4	266473	05/04/21	05/06/21	DJL
4-Chlorophenyl-phenylether	ND		ug/Kg	1,000	4	266473	05/04/21	05/06/21	DJL
4-Nitroaniline	ND		ug/Kg	1,000	4	266473	05/04/21	05/06/21	DJL
4,6-Dinitro-2-methylphenol	ND		ug/Kg	1,000	4	266473	05/04/21	05/06/21	DJL
N-Nitrosodiphenylamine	ND		ug/Kg	1,000	4	266473	05/04/21	05/06/21	DJL
1,2-diphenylhydrazine (as azobenzene)	ND		ug/Kg	1,000	4	266473	05/04/21	05/06/21	DJL
4-Bromophenyl-phenylether	ND		ug/Kg	1,000	4	266473	05/04/21	05/06/21	DJL
Hexachlorobenzene	ND		ug/Kg	1,000	4	266473	05/04/21	05/06/21	DJL
Pentachlorophenol	ND		ug/Kg	4,800	4	266473	05/04/21	05/06/21	DJL
Phenanthrene	ND		ug/Kg	1,000	4	266473	05/04/21	05/06/21	DJL
Anthracene	ND		ug/Kg	1,000	4	266473	05/04/21	05/06/21	DJL
Di-n-butylphthalate	ND		ug/Kg	1,000	4	266473	05/04/21	05/06/21	DJL
Fluoranthene	ND		ug/Kg	1,000	4	266473	05/04/21	05/06/21	DJL
Benzidine	ND		ug/Kg	4,800	4	266473	05/04/21	05/06/21	DJL
Pyrene	ND		ug/Kg	1,000	4	266473	05/04/21	05/06/21	DJL
Butylbenzylphthalate	ND		ug/Kg	1,000	4	266473	05/04/21	05/06/21	DJL
3,3'-Dichlorobenzidine	ND		ug/Kg	4,800	4	266473	05/04/21	05/06/21	DJL
Benzo(a)anthracene	ND		ug/Kg	1,000	4	266473	05/04/21	05/06/21	DJL
Chrysene	ND		ug/Kg	1,000	4	266473	05/04/21	05/06/21	DJL
bis(2-Ethylhexyl)phthalate	ND		ug/Kg	1,000	4	266473	05/04/21	05/06/21	DJL
Di-n-octylphthalate	ND		ug/Kg	1,000	4	266473	05/04/21	05/06/21	DJL
Benzo(b)fluoranthene	ND		ug/Kg	1,000	4	266473	05/04/21	05/06/21	DJL
Benzo(k)fluoranthene	ND		ug/Kg	1,000	4	266473	05/04/21	05/06/21	DJL
Benzo(a)pyrene	ND		ug/Kg	1,000	4	266473	05/04/21	05/06/21	DJL
Indeno(1,2,3-cd)pyrene	ND		ug/Kg	1,000	4	266473	05/04/21	05/06/21	DJL
Dibenz(a,h)anthracene	ND		ug/Kg	1,000	4	266473	05/04/21	05/06/21	DJL

Results for any subcontracted analyses are not included in this section.

Analysis Results for 444657

444657-028 Analyte	Result	Qual	Units	RL	DF	Batch	Prepared	Analyzed	Chemist
Benzo(g,h,i)perylene	ND		ug/Kg	1,000	4	266473	05/04/21	05/06/21	DJL
Surrogates				**Limits**					
2-Fluorophenol	30%		%REC	29-120	4	266473	05/04/21	05/06/21	DJL
Phenol-d6	35%		%REC	30-120	4	266473	05/04/21	05/06/21	DJL
2,4,6-Tribromophenol	34%		%REC	32-120	4	266473	05/04/21	05/06/21	DJL
Nitrobenzene-d5	38%		%REC	33-120	4	266473	05/04/21	05/06/21	DJL
2-Fluorobiphenyl	40%		%REC	39-120	4	266473	05/04/21	05/06/21	DJL
Terphenyl-d14	50%		%REC	44-125	4	266473	05/04/21	05/06/21	DJL

Sample ID: TP9-6 **Lab ID: 444657-029** **Collected: 04/27/21 15:15**
Matrix: Soil

444657-029 Analyte	Result	Qual	Units	RL	DF	Batch	Prepared	Analyzed	Chemist
Method: EPA 6010B Prep Method: EPA 3050B									
Lead	**2.8**		mg/Kg	0.92	0.92	266287	04/30/21	04/30/21	SBW

Sample ID: TP10-1 **Lab ID: 444657-030** **Collected: 04/27/21 15:35**
Matrix: Soil

444657-030 Analyte	Result	Qual	Units	RL	DF	Batch	Prepared	Analyzed	Chemist
Method: EPA 6010B Prep Method: EPA 3050B									
Antimony	ND		mg/Kg	2.7	0.88	266287	04/30/21	04/30/21	SBW
Arsenic	**3.7**		mg/Kg	0.88	0.88	266287	04/30/21	04/30/21	SBW
Barium	**120**		mg/Kg	0.88	0.88	266287	04/30/21	04/30/21	SBW
Beryllium	ND		mg/Kg	0.44	0.88	266287	04/30/21	04/30/21	SBW
Cadmium	ND		mg/Kg	0.44	0.88	266287	04/30/21	04/30/21	SBW
Chromium	**19**		mg/Kg	0.88	0.88	266287	04/30/21	04/30/21	SBW
Cobalt	**7.6**		mg/Kg	0.44	0.88	266287	04/30/21	04/30/21	SBW
Copper	**19**		mg/Kg	0.88	0.88	266287	04/30/21	04/30/21	SBW
Lead	**25**		mg/Kg	0.88	0.88	266287	04/30/21	04/30/21	SBW
Molybdenum	**1.3**		mg/Kg	0.88	0.88	266287	04/30/21	04/30/21	SBW
Nickel	**16**		mg/Kg	0.88	0.88	266287	04/30/21	04/30/21	SBW
Selenium	ND		mg/Kg	2.7	0.88	266287	04/30/21	04/30/21	SBW
Silver	ND		mg/Kg	0.44	0.88	266287	04/30/21	05/03/21	SBW
Thallium	ND		mg/Kg	2.7	0.88	266287	04/30/21	04/30/21	SBW
Vanadium	**38**		mg/Kg	0.88	0.88	266287	04/30/21	04/30/21	SBW
Zinc	**90**		mg/Kg	4.4	0.88	266287	04/30/21	04/30/21	SBW
Method: EPA 7471A Prep Method: METHOD									
Mercury	ND		mg/Kg	0.16	1.2	266325	04/30/21	04/30/21	JDB

Results for any subcontracted analyses are not included in this section.

Analysis Results for 444657

Sample ID: TP10-3.5	Lab ID: 444657-031	Collected: 04/27/21 15:40
	Matrix: Soil	

444657-031 Analyte	Result	Qual	Units	RL	DF	Batch	Prepared	Analyzed	Chemist
Method: EPA 6010B Prep Method: EPA 3050B									
Lead	**220**		mg/Kg	1.1	1.1	266287	04/30/21	04/30/21	SBW

Results for any subcontracted analyses are not included in this section.

ENTHALPY ANALYTICAL

Analysis Results for 444657

Sample ID: TP10-4	Lab ID: 444657-032	Collected: 04/27/21 15:45
	Matrix: Soil	

444657-032 Analyte	Result	Qual	Units	RL	DF	Batch	Prepared	Analyzed	Chemist
Method: EPA 6010B Prep Method: EPA 3050B									
Antimony	**3.2**		mg/Kg	3.1	1	266287	04/30/21	04/30/21	SBW
Arsenic	**19**		mg/Kg	1.0	1	266287	04/30/21	04/30/21	SBW
Barium	**590**		mg/Kg	1.0	1	266287	04/30/21	04/30/21	SBW
Beryllium	ND		mg/Kg	0.51	1	266287	04/30/21	04/30/21	SBW
Cadmium	**2.8**		mg/Kg	0.51	1	266287	04/30/21	04/30/21	SBW
Chromium	**30**		mg/Kg	1.0	1	266287	04/30/21	04/30/21	SBW
Cobalt	**10**		mg/Kg	0.51	1	266287	04/30/21	04/30/21	SBW
Copper	**350**		mg/Kg	1.0	1	266287	04/30/21	04/30/21	SBW
Lead	**620**		mg/Kg	1.0	1	266287	04/30/21	04/30/21	SBW
Molybdenum	**2.3**		mg/Kg	1.0	1	266287	04/30/21	04/30/21	SBW
Nickel	**18**		mg/Kg	1.0	1	266287	04/30/21	04/30/21	SBW
Selenium	ND		mg/Kg	3.1	1	266287	04/30/21	04/30/21	SBW
Silver	**4.4**		mg/Kg	0.51	1	266287	04/30/21	05/03/21	SBW
Thallium	ND		mg/Kg	3.1	1	266287	04/30/21	04/30/21	SBW
Vanadium	**38**		mg/Kg	1.0	1	266287	04/30/21	04/30/21	SBW
Zinc	**920**		mg/Kg	5.1	1	266287	04/30/21	04/30/21	SBW
Method: EPA 7471A Prep Method: METHOD									
Mercury	**0.19**		mg/Kg	0.16	1.2	266325	04/30/21	04/30/21	JDB
Method: EPA 8015B Prep Method: EPA 3580									
GRO C6-C10	ND		mg/Kg	100	10	266432	05/03/21	05/05/21	MES
DRO C10-C28	ND		mg/Kg	100	10	266432	05/03/21	05/05/21	MES
ORO C28-C44	ND		mg/Kg	200	10	266432	05/03/21	05/05/21	MES
Surrogates				**Limits**					
n-Triacontane		DO	%REC	70-130	10	266432	05/03/21	05/05/21	MES
Method: EPA 8081A Prep Method: EPA 3546									
alpha-BHC	ND		ug/Kg	25	5	266300	04/30/21	05/01/21	KTD
beta-BHC	ND		ug/Kg	25	5	266300	04/30/21	05/01/21	KTD
gamma-BHC	ND		ug/Kg	25	5	266300	04/30/21	05/01/21	KTD
delta-BHC	ND		ug/Kg	25	5	266300	04/30/21	05/01/21	KTD
Heptachlor	ND		ug/Kg	25	5	266300	04/30/21	05/01/21	KTD
Aldrin	ND		ug/Kg	25	5	266300	04/30/21	05/01/21	KTD
Heptachlor epoxide	ND		ug/Kg	25	5	266300	04/30/21	05/01/21	KTD
Endosulfan I	ND		ug/Kg	25	5	266300	04/30/21	05/01/21	KTD
Dieldrin	ND		ug/Kg	25	5	266300	04/30/21	05/01/21	KTD
4,4'-DDE	ND		ug/Kg	25	5	266300	04/30/21	05/01/21	KTD
Endrin	ND		ug/Kg	25	5	266300	04/30/21	05/01/21	KTD
Endosulfan II	ND		ug/Kg	25	5	266300	04/30/21	05/01/21	KTD

Results for any subcontracted analyses are not included in this section.

Analysis Results for 444657

444657-032 Analyte	Result	Qual	Units	RL	DF	Batch	Prepared	Analyzed	Chemist
Endosulfan sulfate	ND		ug/Kg	25	5	266300	04/30/21	05/01/21	KTD
4,4'-DDD	ND		ug/Kg	25	5	266300	04/30/21	05/01/21	KTD
Endrin aldehyde	ND		ug/Kg	25	5	266300	04/30/21	05/01/21	KTD
Endrin ketone	ND		ug/Kg	25	5	266300	04/30/21	05/01/21	KTD
4,4'-DDT	ND		ug/Kg	25	5	266300	04/30/21	05/01/21	KTD
Methoxychlor	ND		ug/Kg	50	5	266300	04/30/21	05/01/21	KTD
Toxaphene	ND		ug/Kg	500	5	266300	04/30/21	05/01/21	KTD
Chlordane (Technical)	ND		ug/Kg	250	5	266300	04/30/21	05/01/21	KTD
Surrogates				**Limits**					
TCMX	81%		%REC	23-120	5	266300	04/30/21	05/01/21	KTD
Decachlorobiphenyl	88%		%REC	24-120	5	266300	04/30/21	05/01/21	KTD
Method: EPA 8082 Prep Method: EPA 3546									
Aroclor-1016	ND		ug/Kg	50	1	266300	04/30/21	05/05/21	KTD
Aroclor-1221	ND		ug/Kg	50	1	266300	04/30/21	05/05/21	KTD
Aroclor-1232	ND		ug/Kg	50	1	266300	04/30/21	05/05/21	KTD
Aroclor-1242	ND		ug/Kg	50	1	266300	04/30/21	05/05/21	KTD
Aroclor-1248	ND		ug/Kg	50	1	266300	04/30/21	05/05/21	KTD
Aroclor-1254	ND		ug/Kg	50	1	266300	04/30/21	05/05/21	KTD
Aroclor-1260	ND		ug/Kg	50	1	266300	04/30/21	05/05/21	KTD
Aroclor-1262	ND		ug/Kg	50	1	266300	04/30/21	05/05/21	KTD
Aroclor-1268	ND		ug/Kg	50	1	266300	04/30/21	05/05/21	KTD
Surrogates				**Limits**					
Decachlorobiphenyl (PCB)	54%		%REC	19-121	1	266300	04/30/21	05/05/21	KTD
Method: EPA 8260B Prep Method: EPA 5030B									
3-Chloropropene	ND		ug/Kg	5.0	1	266284	04/30/21	04/30/21	TCN
cis-1,4-Dichloro-2-butene	ND		ug/Kg	5.0	1	266284	04/30/21	04/30/21	TCN
trans-1,4-Dichloro-2-butene	ND		ug/Kg	5.0	1	266284	04/30/21	04/30/21	TCN
Isopropyl Ether (DIPE)	ND		ug/Kg	5.0	1	266284	04/30/21	04/30/21	TCN
Ethyl tert-Butyl Ether (ETBE)	ND		ug/Kg	5.0	1	266284	04/30/21	04/30/21	TCN
Methyl tert-Amyl Ether (TAME)	ND		ug/Kg	5.0	1	266284	04/30/21	04/30/21	TCN
tert-Butyl Alcohol (TBA)	ND		ug/Kg	10	1	266284	04/30/21	04/30/21	TCN
Freon 12	ND		ug/Kg	5.0	1	266284	04/30/21	04/30/21	TCN
Chloromethane	ND		ug/Kg	5.0	1	266284	04/30/21	04/30/21	TCN
Vinyl Chloride	ND		ug/Kg	5.0	1	266284	04/30/21	04/30/21	TCN
Bromomethane	ND		ug/Kg	5.0	1	266284	04/30/21	04/30/21	TCN
Chloroethane	ND		ug/Kg	5.0	1	266284	04/30/21	04/30/21	TCN
Trichlorofluoromethane	ND		ug/Kg	5.0	1	266284	04/30/21	04/30/21	TCN
Acetone	ND		ug/Kg	100	1	266284	04/30/21	04/30/21	TCN
Freon 113	ND		ug/Kg	5.0	1	266284	04/30/21	04/30/21	TCN
1,1-Dichloroethene	ND		ug/Kg	5.0	1	266284	04/30/21	04/30/21	TCN
Methylene Chloride	ND		ug/Kg	5.0	1	266284	04/30/21	04/30/21	TCN
MTBE	ND		ug/Kg	5.0	1	266284	04/30/21	04/30/21	TCN
trans-1,2-Dichloroethene	ND		ug/Kg	5.0	1	266284	04/30/21	04/30/21	TCN
1,1-Dichloroethane	ND		ug/Kg	5.0	1	266284	04/30/21	04/30/21	TCN

Results for any subcontracted analyses are not included in this section.

ENTHALPY ANALYTICAL

Analysis Results for 444657

444657-032 Analyte	Result	Qual	Units	RL	DF	Batch	Prepared	Analyzed	Chemist
2-Butanone	ND		ug/Kg	100	1	266284	04/30/21	04/30/21	TCN
cis-1,2-Dichloroethene	ND		ug/Kg	5.0	1	266284	04/30/21	04/30/21	TCN
2,2-Dichloropropane	ND		ug/Kg	5.0	1	266284	04/30/21	04/30/21	TCN
Chloroform	ND		ug/Kg	5.0	1	266284	04/30/21	04/30/21	TCN
Bromochloromethane	ND		ug/Kg	5.0	1	266284	04/30/21	04/30/21	TCN
1,1,1-Trichloroethane	ND		ug/Kg	5.0	1	266284	04/30/21	04/30/21	TCN
1,1-Dichloropropene	ND		ug/Kg	5.0	1	266284	04/30/21	04/30/21	TCN
Carbon Tetrachloride	ND		ug/Kg	5.0	1	266284	04/30/21	04/30/21	TCN
1,2-Dichloroethane	ND		ug/Kg	5.0	1	266284	04/30/21	04/30/21	TCN
Benzene	ND		ug/Kg	5.0	1	266284	04/30/21	04/30/21	TCN
Trichloroethene	ND		ug/Kg	5.0	1	266284	04/30/21	04/30/21	TCN
1,2-Dichloropropane	ND		ug/Kg	5.0	1	266284	04/30/21	04/30/21	TCN
Bromodichloromethane	ND		ug/Kg	5.0	1	266284	04/30/21	04/30/21	TCN
Dibromomethane	ND		ug/Kg	5.0	1	266284	04/30/21	04/30/21	TCN
4-Methyl-2-Pentanone	ND		ug/Kg	5.0	1	266284	04/30/21	04/30/21	TCN
cis-1,3-Dichloropropene	ND		ug/Kg	5.0	1	266284	04/30/21	04/30/21	TCN
Toluene	ND		ug/Kg	5.0	1	266284	04/30/21	04/30/21	TCN
trans-1,3-Dichloropropene	ND		ug/Kg	5.0	1	266284	04/30/21	04/30/21	TCN
1,1,2-Trichloroethane	ND		ug/Kg	5.0	1	266284	04/30/21	04/30/21	TCN
1,3-Dichloropropane	ND		ug/Kg	5.0	1	266284	04/30/21	04/30/21	TCN
Tetrachloroethene	ND		ug/Kg	5.0	1	266284	04/30/21	04/30/21	TCN
Dibromochloromethane	ND		ug/Kg	5.0	1	266284	04/30/21	04/30/21	TCN
1,2-Dibromoethane	ND		ug/Kg	5.0	1	266284	04/30/21	04/30/21	TCN
Chlorobenzene	ND		ug/Kg	5.0	1	266284	04/30/21	04/30/21	TCN
1,1,1,2-Tetrachloroethane	ND		ug/Kg	5.0	1	266284	04/30/21	04/30/21	TCN
Ethylbenzene	ND		ug/Kg	5.0	1	266284	04/30/21	04/30/21	TCN
m,p-Xylenes	ND		ug/Kg	10	1	266284	04/30/21	04/30/21	TCN
o-Xylene	ND		ug/Kg	5.0	1	266284	04/30/21	04/30/21	TCN
Styrene	ND		ug/Kg	5.0	1	266284	04/30/21	04/30/21	TCN
Bromoform	ND		ug/Kg	5.0	1	266284	04/30/21	04/30/21	TCN
Isopropylbenzene	ND		ug/Kg	5.0	1	266284	04/30/21	04/30/21	TCN
1,1,2,2-Tetrachloroethane	ND		ug/Kg	5.0	1	266284	04/30/21	04/30/21	TCN
1,2,3-Trichloropropane	ND		ug/Kg	5.0	1	266284	04/30/21	04/30/21	TCN
Propylbenzene	ND		ug/Kg	5.0	1	266284	04/30/21	04/30/21	TCN
Bromobenzene	ND		ug/Kg	5.0	1	266284	04/30/21	04/30/21	TCN
1,3,5-Trimethylbenzene	ND		ug/Kg	5.0	1	266284	04/30/21	04/30/21	TCN
2-Chlorotoluene	ND		ug/Kg	5.0	1	266284	04/30/21	04/30/21	TCN
4-Chlorotoluene	ND		ug/Kg	5.0	1	266284	04/30/21	04/30/21	TCN
tert-Butylbenzene	ND		ug/Kg	5.0	1	266284	04/30/21	04/30/21	TCN
1,2,4-Trimethylbenzene	ND		ug/Kg	5.0	1	266284	04/30/21	04/30/21	TCN
sec-Butylbenzene	ND		ug/Kg	5.0	1	266284	04/30/21	04/30/21	TCN
para-Isopropyl Toluene	ND		ug/Kg	5.0	1	266284	04/30/21	04/30/21	TCN
1,3-Dichlorobenzene	ND		ug/Kg	5.0	1	266284	04/30/21	04/30/21	TCN
1,4-Dichlorobenzene	ND		ug/Kg	5.0	1	266284	04/30/21	04/30/21	TCN
n-Butylbenzene	ND		ug/Kg	5.0	1	266284	04/30/21	04/30/21	TCN
1,2-Dichlorobenzene	ND		ug/Kg	5.0	1	266284	04/30/21	04/30/21	TCN

Results for any subcontracted analyses are not included in this section.

ENTHALPY ANALYTICAL

Analysis Results for 444657

444657-032 Analyte	Result	Qual	Units	RL	DF	Batch	Prepared	Analyzed	Chemist
1,2-Dibromo-3-Chloropropane	ND		ug/Kg	5.0	1	266284	04/30/21	04/30/21	TCN
1,2,4-Trichlorobenzene	ND		ug/Kg	5.0	1	266284	04/30/21	04/30/21	TCN
Hexachlorobutadiene	ND		ug/Kg	5.0	1	266284	04/30/21	04/30/21	TCN
Naphthalene	ND		ug/Kg	5.0	1	266284	04/30/21	04/30/21	TCN
1,2,3-Trichlorobenzene	ND		ug/Kg	5.0	1	266284	04/30/21	04/30/21	TCN
Xylene (total)	ND		ug/Kg	5.0	1	266284	04/30/21	04/30/21	TCN
Surrogates				**Limits**					
Dibromofluoromethane	101%		%REC	70-145	1	266284	04/30/21	04/30/21	TCN
1,2-Dichloroethane-d4	100%		%REC	70-145	1	266284	04/30/21	04/30/21	TCN
Toluene-d8	100%		%REC	70-145	1	266284	04/30/21	04/30/21	TCN
Bromofluorobenzene	102%		%REC	70-145	1	266284	04/30/21	04/30/21	TCN
Method: EPA 8270C Prep Method: EPA 3546									
Carbazole	ND		ug/Kg	2,500	10	266473	05/04/21	05/06/21	DJL
1-Methylnaphthalene	ND		ug/Kg	2,500	10	266473	05/04/21	05/06/21	DJL
Pyridine	ND		ug/Kg	2,500	10	266473	05/04/21	05/06/21	DJL
N-Nitrosodimethylamine	ND		ug/Kg	2,500	10	266473	05/04/21	05/06/21	DJL
Phenol	ND		ug/Kg	2,500	10	266473	05/04/21	05/06/21	DJL
Aniline	ND		ug/Kg	2,500	10	266473	05/04/21	05/06/21	DJL
bis(2-Chloroethyl)ether	ND		ug/Kg	12,000	10	266473	05/04/21	05/06/21	DJL
2-Chlorophenol	ND		ug/Kg	2,500	10	266473	05/04/21	05/06/21	DJL
1,3-Dichlorobenzene	ND		ug/Kg	2,500	10	266473	05/04/21	05/06/21	DJL
1,4-Dichlorobenzene	ND		ug/Kg	2,500	10	266473	05/04/21	05/06/21	DJL
Benzyl alcohol	ND		ug/Kg	2,500	10	266473	05/04/21	05/06/21	DJL
1,2-Dichlorobenzene	ND		ug/Kg	2,500	10	266473	05/04/21	05/06/21	DJL
2-Methylphenol	ND		ug/Kg	2,500	10	266473	05/04/21	05/06/21	DJL
bis(2-Chloroisopropyl) ether	ND		ug/Kg	2,500	10	266473	05/04/21	05/06/21	DJL
3-,4-Methylphenol	ND		ug/Kg	4,000	10	266473	05/04/21	05/06/21	DJL
N-Nitroso-di-n-propylamine	ND		ug/Kg	2,500	10	266473	05/04/21	05/06/21	DJL
Hexachloroethane	ND		ug/Kg	2,500	10	266473	05/04/21	05/06/21	DJL
Nitrobenzene	ND		ug/Kg	12,000	10	266473	05/04/21	05/06/21	DJL
Isophorone	ND		ug/Kg	2,500	10	266473	05/04/21	05/06/21	DJL
2-Nitrophenol	ND		ug/Kg	2,500	10	266473	05/04/21	05/06/21	DJL
2,4-Dimethylphenol	ND		ug/Kg	2,500	10	266473	05/04/21	05/06/21	DJL
Benzoic acid	ND		ug/Kg	12,000	10	266473	05/04/21	05/06/21	DJL
bis(2-Chloroethoxy)methane	ND		ug/Kg	2,500	10	266473	05/04/21	05/06/21	DJL
2,4-Dichlorophenol	ND		ug/Kg	2,500	10	266473	05/04/21	05/06/21	DJL
1,2,4-Trichlorobenzene	ND		ug/Kg	2,500	10	266473	05/04/21	05/06/21	DJL
Naphthalene	ND		ug/Kg	2,500	10	266473	05/04/21	05/06/21	DJL
4-Chloroaniline	ND		ug/Kg	2,500	10	266473	05/04/21	05/06/21	DJL
Hexachlorobutadiene	ND		ug/Kg	2,500	10	266473	05/04/21	05/06/21	DJL
4-Chloro-3-methylphenol	ND		ug/Kg	2,500	10	266473	05/04/21	05/06/21	DJL
2-Methylnaphthalene	ND		ug/Kg	2,500	10	266473	05/04/21	05/06/21	DJL
Hexachlorocyclopentadiene	ND		ug/Kg	12,000	10	266473	05/04/21	05/06/21	DJL
2,4,6-Trichlorophenol	ND		ug/Kg	2,500	10	266473	05/04/21	05/06/21	DJL
2,4,5-Trichlorophenol	ND		ug/Kg	2,500	10	266473	05/04/21	05/06/21	DJL

Results for any subcontracted analyses are not included in this section.

ENTHALPY ANALYTICAL

Analysis Results for 444657

444657-032 Analyte	Result	Qual	Units	RL	DF	Batch	Prepared	Analyzed	Chemist
2-Chloronaphthalene	ND		ug/Kg	2,500	10	266473	05/04/21	05/06/21	DJL
2-Nitroaniline	ND		ug/Kg	2,500	10	266473	05/04/21	05/06/21	DJL
Dimethylphthalate	ND		ug/Kg	2,500	10	266473	05/04/21	05/06/21	DJL
Acenaphthylene	ND		ug/Kg	2,500	10	266473	05/04/21	05/06/21	DJL
2,6-Dinitrotoluene	ND		ug/Kg	2,500	10	266473	05/04/21	05/06/21	DJL
3-Nitroaniline	ND		ug/Kg	2,500	10	266473	05/04/21	05/06/21	DJL
Acenaphthene	ND		ug/Kg	2,500	10	266473	05/04/21	05/06/21	DJL
2,4-Dinitrophenol	ND		ug/Kg	12,000	10	266473	05/04/21	05/06/21	DJL
4-Nitrophenol	ND		ug/Kg	2,500	10	266473	05/04/21	05/06/21	DJL
Dibenzofuran	ND		ug/Kg	2,500	10	266473	05/04/21	05/06/21	DJL
2,4-Dinitrotoluene	ND		ug/Kg	2,500	10	266473	05/04/21	05/06/21	DJL
Diethylphthalate	ND		ug/Kg	2,500	10	266473	05/04/21	05/06/21	DJL
Fluorene	ND		ug/Kg	2,500	10	266473	05/04/21	05/06/21	DJL
4-Chlorophenyl-phenylether	ND		ug/Kg	2,500	10	266473	05/04/21	05/06/21	DJL
4-Nitroaniline	ND		ug/Kg	2,500	10	266473	05/04/21	05/06/21	DJL
4,6-Dinitro-2-methylphenol	ND		ug/Kg	2,500	10	266473	05/04/21	05/06/21	DJL
N-Nitrosodiphenylamine	ND		ug/Kg	2,500	10	266473	05/04/21	05/06/21	DJL
1,2-diphenylhydrazine (as azobenzene)	ND		ug/Kg	2,500	10	266473	05/04/21	05/06/21	DJL
4-Bromophenyl-phenylether	ND		ug/Kg	2,500	10	266473	05/04/21	05/06/21	DJL
Hexachlorobenzene	ND		ug/Kg	2,500	10	266473	05/04/21	05/06/21	DJL
Pentachlorophenol	ND		ug/Kg	12,000	10	266473	05/04/21	05/06/21	DJL
Phenanthrene	ND		ug/Kg	2,500	10	266473	05/04/21	05/06/21	DJL
Anthracene	ND		ug/Kg	2,500	10	266473	05/04/21	05/06/21	DJL
Di-n-butylphthalate	ND		ug/Kg	2,500	10	266473	05/04/21	05/06/21	DJL
Fluoranthene	ND		ug/Kg	2,500	10	266473	05/04/21	05/06/21	DJL
Benzidine	ND		ug/Kg	12,000	10	266473	05/04/21	05/06/21	DJL
Pyrene	ND		ug/Kg	2,500	10	266473	05/04/21	05/06/21	DJL
Butylbenzylphthalate	ND		ug/Kg	2,500	10	266473	05/04/21	05/06/21	DJL
3,3'-Dichlorobenzidine	ND		ug/Kg	12,000	10	266473	05/04/21	05/06/21	DJL
Benzo(a)anthracene	ND		ug/Kg	2,500	10	266473	05/04/21	05/06/21	DJL
Chrysene	ND		ug/Kg	2,500	10	266473	05/04/21	05/06/21	DJL
bis(2-Ethylhexyl)phthalate	ND		ug/Kg	2,500	10	266473	05/04/21	05/06/21	DJL
Di-n-octylphthalate	ND		ug/Kg	2,500	10	266473	05/04/21	05/06/21	DJL
Benzo(b)fluoranthene	ND		ug/Kg	2,500	10	266473	05/04/21	05/06/21	DJL
Benzo(k)fluoranthene	ND		ug/Kg	2,500	10	266473	05/04/21	05/06/21	DJL
Benzo(a)pyrene	ND		ug/Kg	2,500	10	266473	05/04/21	05/06/21	DJL
Indeno(1,2,3-cd)pyrene	ND		ug/Kg	2,500	10	266473	05/04/21	05/06/21	DJL
Dibenz(a,h)anthracene	ND		ug/Kg	2,500	10	266473	05/04/21	05/06/21	DJL
Benzo(g,h,i)perylene	ND		ug/Kg	2,500	10	266473	05/04/21	05/06/21	DJL
Surrogates				**Limits**					
2-Fluorophenol	36%		%REC	29-120	10	266473	05/04/21	05/06/21	DJL
Phenol-d6	46%		%REC	30-120	10	266473	05/04/21	05/06/21	DJL
2,4,6-Tribromophenol	32%		%REC	32-120	10	266473	05/04/21	05/06/21	DJL
Nitrobenzene-d5	37%		%REC	33-120	10	266473	05/04/21	05/06/21	DJL
2-Fluorobiphenyl	46%		%REC	39-120	10	266473	05/04/21	05/06/21	DJL
Terphenyl-d14	45%		%REC	44-125	10	266473	05/04/21	05/06/21	DJL

Results for any subcontracted analyses are not included in this section.

ENTHALPY ANALYTICAL

Analysis Results for 444657

Sample ID: TP10-7	Lab ID: 444657-033	Collected: 04/27/21 15:50
	Matrix: Soil	

444657-033 Analyte	Result	Qual	Units	RL	DF	Batch	Prepared	Analyzed	Chemist
Method: EPA 6010B Prep Method: EPA 3050B									
Antimony	ND		mg/Kg	2.8	0.94	266287	04/30/21	04/30/21	SBW
Arsenic	**1.5**		mg/Kg	0.94	0.94	266287	04/30/21	04/30/21	SBW
Barium	**47**		mg/Kg	0.94	0.94	266287	04/30/21	04/30/21	SBW
Beryllium	ND		mg/Kg	0.47	0.94	266287	04/30/21	04/30/21	SBW
Cadmium	ND		mg/Kg	0.47	0.94	266287	04/30/21	04/30/21	SBW
Chromium	**7.2**		mg/Kg	0.94	0.94	266287	04/30/21	04/30/21	SBW
Cobalt	**4.0**		mg/Kg	0.47	0.94	266287	04/30/21	04/30/21	SBW
Copper	**6.5**		mg/Kg	0.94	0.94	266287	04/30/21	04/30/21	SBW
Lead	**1.8**		mg/Kg	0.94	0.94	266287	04/30/21	04/30/21	SBW
Molybdenum	ND		mg/Kg	0.94	0.94	266287	04/30/21	04/30/21	SBW
Nickel	**4.4**		mg/Kg	0.94	0.94	266287	04/30/21	04/30/21	SBW
Selenium	ND		mg/Kg	2.8	0.94	266287	04/30/21	04/30/21	SBW
Silver	ND		mg/Kg	0.47	0.94	266287	04/30/21	05/03/21	SBW
Thallium	ND		mg/Kg	2.8	0.94	266287	04/30/21	04/30/21	SBW
Vanadium	**24**		mg/Kg	0.94	0.94	266287	04/30/21	04/30/21	SBW
Zinc	**21**		mg/Kg	4.7	0.94	266287	04/30/21	04/30/21	SBW
Method: EPA 7471A Prep Method: METHOD									
Mercury	ND		mg/Kg	0.14	1	266325	04/30/21	04/30/21	JDB

Results for any subcontracted analyses are not included in this section.

ENTHALPY ANALYTICAL

Analysis Results for 444657

Sample ID: TP11-0.75	Lab ID: 444657-034	Collected: 04/28/21 07:45
	Matrix: Soil	

444657-034 Analyte	Result	Qual	Units	RL	DF	Batch	Prepared	Analyzed	Chemist
Method: EPA 6010B Prep Method: EPA 3050B									
Antimony	ND		mg/Kg	2.6	0.88	266287	04/30/21	04/30/21	SBW
Arsenic	**5.8**		mg/Kg	0.88	0.88	266287	04/30/21	04/30/21	SBW
Barium	**140**		mg/Kg	0.88	0.88	266287	04/30/21	04/30/21	SBW
Beryllium	ND		mg/Kg	0.44	0.88	266287	04/30/21	04/30/21	SBW
Cadmium	**0.56**		mg/Kg	0.44	0.88	266287	04/30/21	04/30/21	SBW
Chromium	**29**		mg/Kg	0.88	0.88	266287	04/30/21	04/30/21	SBW
Cobalt	**8.6**		mg/Kg	0.44	0.88	266287	04/30/21	04/30/21	SBW
Copper	**22**		mg/Kg	0.88	0.88	266287	04/30/21	04/30/21	SBW
Lead	**50**		mg/Kg	0.88	0.88	266287	04/30/21	04/30/21	SBW
Molybdenum	**1.1**		mg/Kg	0.88	0.88	266287	04/30/21	04/30/21	SBW
Nickel	**23**		mg/Kg	0.88	0.88	266287	04/30/21	04/30/21	SBW
Selenium	ND		mg/Kg	2.6	0.88	266287	04/30/21	04/30/21	SBW
Silver	ND		mg/Kg	0.44	0.88	266287	04/30/21	05/03/21	SBW
Thallium	ND		mg/Kg	2.6	0.88	266287	04/30/21	04/30/21	SBW
Vanadium	**51**		mg/Kg	0.88	0.88	266287	04/30/21	04/30/21	SBW
Zinc	**94**		mg/Kg	4.4	0.88	266287	04/30/21	04/30/21	SBW
Method: EPA 7471A Prep Method: METHOD									
Mercury	ND		mg/Kg	0.14	1	266325	04/30/21	04/30/21	JDB

Results for any subcontracted analyses are not included in this section.

ENTHALPY ANALYTICAL

Analysis Results for 444657

Sample ID: TP11-3.5	Lab ID: 444657-035	Collected: 04/28/21 07:50
	Matrix: Soil	

444657-035 Analyte	Result	Qual	Units	RL	DF	Batch	Prepared	Analyzed	Chemist
Method: EPA 6010B Prep Method: EPA 3050B									
Antimony	ND		mg/Kg	2.6	0.88	266287	04/30/21	04/30/21	SBW
Arsenic	**2.3**		mg/Kg	0.88	0.88	266287	04/30/21	04/30/21	SBW
Barium	**96**		mg/Kg	0.88	0.88	266287	04/30/21	04/30/21	SBW
Beryllium	ND		mg/Kg	0.44	0.88	266287	04/30/21	04/30/21	SBW
Cadmium	ND		mg/Kg	0.44	0.88	266287	04/30/21	04/30/21	SBW
Chromium	**13**		mg/Kg	0.88	0.88	266287	04/30/21	04/30/21	SBW
Cobalt	**7.0**		mg/Kg	0.44	0.88	266287	04/30/21	04/30/21	SBW
Copper	**13**		mg/Kg	0.88	0.88	266287	04/30/21	04/30/21	SBW
Lead	**7.6**		mg/Kg	0.88	0.88	266287	04/30/21	04/30/21	SBW
Molybdenum	ND		mg/Kg	0.88	0.88	266287	04/30/21	04/30/21	SBW
Nickel	**10**		mg/Kg	0.88	0.88	266287	04/30/21	04/30/21	SBW
Selenium	ND		mg/Kg	2.6	0.88	266287	04/30/21	04/30/21	SBW
Silver	ND		mg/Kg	0.44	0.88	266287	04/30/21	05/03/21	SBW
Thallium	ND		mg/Kg	2.6	0.88	266287	04/30/21	04/30/21	SBW
Vanadium	**33**		mg/Kg	0.88	0.88	266287	04/30/21	04/30/21	SBW
Zinc	**50**		mg/Kg	4.4	0.88	266287	04/30/21	04/30/21	SBW
Method: EPA 7471A Prep Method: METHOD									
Mercury	ND		mg/Kg	0.15	1.1	266325	04/30/21	04/30/21	JDB
Method: EPA 8015B Prep Method: EPA 3580									
GRO C6-C10	ND		mg/Kg	10	1	266432	05/03/21	05/05/21	MES
DRO C10-C28	ND		mg/Kg	10	1	266432	05/03/21	05/05/21	MES
ORO C28-C44	ND		mg/Kg	20	1	266432	05/03/21	05/05/21	MES
Surrogates				**Limits**					
n-Triacontane	104%		%REC	70-130	1	266432	05/03/21	05/05/21	MES
Method: EPA 8270C Prep Method: EPA 3546									
Carbazole	ND		ug/Kg	5,000	20	266473	05/04/21	05/06/21	DJL
1-Methylnaphthalene	ND		ug/Kg	5,000	20	266473	05/04/21	05/06/21	DJL
Pyridine	ND		ug/Kg	5,000	20	266473	05/04/21	05/06/21	DJL
N-Nitrosodimethylamine	ND		ug/Kg	5,000	20	266473	05/04/21	05/06/21	DJL
Phenol	ND		ug/Kg	5,000	20	266473	05/04/21	05/06/21	DJL
Aniline	ND		ug/Kg	5,000	20	266473	05/04/21	05/06/21	DJL
bis(2-Chloroethyl)ether	ND		ug/Kg	24,000	20	266473	05/04/21	05/06/21	DJL
2-Chlorophenol	ND		ug/Kg	5,000	20	266473	05/04/21	05/06/21	DJL
1,3-Dichlorobenzene	ND		ug/Kg	5,000	20	266473	05/04/21	05/06/21	DJL
1,4-Dichlorobenzene	ND		ug/Kg	5,000	20	266473	05/04/21	05/06/21	DJL
Benzyl alcohol	ND		ug/Kg	5,000	20	266473	05/04/21	05/06/21	DJL
1,2-Dichlorobenzene	ND		ug/Kg	5,000	20	266473	05/04/21	05/06/21	DJL

Results for any subcontracted analyses are not included in this section.

ENTHALPY ANALYTICAL

Analysis Results for 444657

444657-035 Analyte	Result	Qual	Units	RL	DF	Batch	Prepared	Analyzed	Chemist
2-Methylphenol	ND		ug/Kg	5,000	20	266473	05/04/21	05/06/21	DJL
bis(2-Chloroisopropyl) ether	ND		ug/Kg	5,000	20	266473	05/04/21	05/06/21	DJL
3-,4-Methylphenol	ND		ug/Kg	8,000	20	266473	05/04/21	05/06/21	DJL
N-Nitroso-di-n-propylamine	ND		ug/Kg	5,000	20	266473	05/04/21	05/06/21	DJL
Hexachloroethane	ND		ug/Kg	5,000	20	266473	05/04/21	05/06/21	DJL
Nitrobenzene	ND		ug/Kg	24,000	20	266473	05/04/21	05/06/21	DJL
Isophorone	ND		ug/Kg	5,000	20	266473	05/04/21	05/06/21	DJL
2-Nitrophenol	ND		ug/Kg	5,000	20	266473	05/04/21	05/06/21	DJL
2,4-Dimethylphenol	ND		ug/Kg	5,000	20	266473	05/04/21	05/06/21	DJL
Benzoic acid	ND		ug/Kg	24,000	20	266473	05/04/21	05/06/21	DJL
bis(2-Chloroethoxy)methane	ND		ug/Kg	5,000	20	266473	05/04/21	05/06/21	DJL
2,4-Dichlorophenol	ND		ug/Kg	5,000	20	266473	05/04/21	05/06/21	DJL
1,2,4-Trichlorobenzene	ND		ug/Kg	5,000	20	266473	05/04/21	05/06/21	DJL
Naphthalene	ND		ug/Kg	5,000	20	266473	05/04/21	05/06/21	DJL
4-Chloroaniline	ND		ug/Kg	5,000	20	266473	05/04/21	05/06/21	DJL
Hexachlorobutadiene	ND		ug/Kg	5,000	20	266473	05/04/21	05/06/21	DJL
4-Chloro-3-methylphenol	ND		ug/Kg	5,000	20	266473	05/04/21	05/06/21	DJL
2-Methylnaphthalene	ND		ug/Kg	5,000	20	266473	05/04/21	05/06/21	DJL
Hexachlorocyclopentadiene	ND		ug/Kg	24,000	20	266473	05/04/21	05/06/21	DJL
2,4,6-Trichlorophenol	ND		ug/Kg	5,000	20	266473	05/04/21	05/06/21	DJL
2,4,5-Trichlorophenol	ND		ug/Kg	5,000	20	266473	05/04/21	05/06/21	DJL
2-Chloronaphthalene	ND		ug/Kg	5,000	20	266473	05/04/21	05/06/21	DJL
2-Nitroaniline	ND		ug/Kg	5,000	20	266473	05/04/21	05/06/21	DJL
Dimethylphthalate	ND		ug/Kg	5,000	20	266473	05/04/21	05/06/21	DJL
Acenaphthylene	ND		ug/Kg	5,000	20	266473	05/04/21	05/06/21	DJL
2,6-Dinitrotoluene	ND		ug/Kg	5,000	20	266473	05/04/21	05/06/21	DJL
3-Nitroaniline	ND		ug/Kg	5,000	20	266473	05/04/21	05/06/21	DJL
Acenaphthene	ND		ug/Kg	5,000	20	266473	05/04/21	05/06/21	DJL
2,4-Dinitrophenol	ND		ug/Kg	24,000	20	266473	05/04/21	05/06/21	DJL
4-Nitrophenol	ND		ug/Kg	5,000	20	266473	05/04/21	05/06/21	DJL
Dibenzofuran	ND		ug/Kg	5,000	20	266473	05/04/21	05/06/21	DJL
2,4-Dinitrotoluene	ND		ug/Kg	5,000	20	266473	05/04/21	05/06/21	DJL
Diethylphthalate	ND		ug/Kg	5,000	20	266473	05/04/21	05/06/21	DJL
Fluorene	ND		ug/Kg	5,000	20	266473	05/04/21	05/06/21	DJL
4-Chlorophenyl-phenylether	ND		ug/Kg	5,000	20	266473	05/04/21	05/06/21	DJL
4-Nitroaniline	ND		ug/Kg	5,000	20	266473	05/04/21	05/06/21	DJL
4,6-Dinitro-2-methylphenol	ND		ug/Kg	5,000	20	266473	05/04/21	05/06/21	DJL
N-Nitrosodiphenylamine	ND		ug/Kg	5,000	20	266473	05/04/21	05/06/21	DJL
1,2-diphenylhydrazine (as azobenzene)	ND		ug/Kg	5,000	20	266473	05/04/21	05/06/21	DJL
4-Bromophenyl-phenylether	ND		ug/Kg	5,000	20	266473	05/04/21	05/06/21	DJL
Hexachlorobenzene	ND		ug/Kg	5,000	20	266473	05/04/21	05/06/21	DJL
Pentachlorophenol	ND		ug/Kg	24,000	20	266473	05/04/21	05/06/21	DJL
Phenanthrene	ND		ug/Kg	5,000	20	266473	05/04/21	05/06/21	DJL
Anthracene	ND		ug/Kg	5,000	20	266473	05/04/21	05/06/21	DJL
Di-n-butylphthalate	ND		ug/Kg	5,000	20	266473	05/04/21	05/06/21	DJL
Fluoranthene	ND		ug/Kg	5,000	20	266473	05/04/21	05/06/21	DJL

Results for any subcontracted analyses are not included in this section.

ENTHALPY ANALYTICAL

Analysis Results for 444657

444657-035 Analyte	Result	Qual	Units	RL	DF	Batch	Prepared	Analyzed	Chemist
Benzidine	ND		ug/Kg	24,000	20	266473	05/04/21	05/06/21	DJL
Pyrene	ND		ug/Kg	5,000	20	266473	05/04/21	05/06/21	DJL
Butylbenzylphthalate	ND		ug/Kg	5,000	20	266473	05/04/21	05/06/21	DJL
3,3'-Dichlorobenzidine	ND		ug/Kg	24,000	20	266473	05/04/21	05/06/21	DJL
Benzo(a)anthracene	ND		ug/Kg	5,000	20	266473	05/04/21	05/06/21	DJL
Chrysene	ND		ug/Kg	5,000	20	266473	05/04/21	05/06/21	DJL
bis(2-Ethylhexyl)phthalate	ND		ug/Kg	5,000	20	266473	05/04/21	05/06/21	DJL
Di-n-octylphthalate	ND		ug/Kg	5,000	20	266473	05/04/21	05/06/21	DJL
Benzo(b)fluoranthene	ND		ug/Kg	5,000	20	266473	05/04/21	05/06/21	DJL
Benzo(k)fluoranthene	ND		ug/Kg	5,000	20	266473	05/04/21	05/06/21	DJL
Benzo(a)pyrene	ND		ug/Kg	5,000	20	266473	05/04/21	05/06/21	DJL
Indeno(1,2,3-cd)pyrene	ND		ug/Kg	5,000	20	266473	05/04/21	05/06/21	DJL
Dibenz(a,h)anthracene	ND		ug/Kg	5,000	20	266473	05/04/21	05/06/21	DJL
Benzo(g,h,i)perylene	ND		ug/Kg	5,000	20	266473	05/04/21	05/06/21	DJL
Surrogates				**Limits**					
2-Fluorophenol	48%		%REC	29-120	20	266473	05/04/21	05/06/21	DJL
Phenol-d6	53%		%REC	30-120	20	266473	05/04/21	05/06/21	DJL
2,4,6-Tribromophenol	40%		%REC	32-120	20	266473	05/04/21	05/06/21	DJL
Nitrobenzene-d5	46%		%REC	33-120	20	266473	05/04/21	05/06/21	DJL
2-Fluorobiphenyl	52%		%REC	39-120	20	266473	05/04/21	05/06/21	DJL
Terphenyl-d14	49%		%REC	44-125	20	266473	05/04/21	05/06/21	DJL

Results for any subcontracted analyses are not included in this section.

ENTHALPY ANALYTICAL

Analysis Results for 444657

Sample ID: TP11-6	Lab ID: 444657-036	Collected: 04/28/21 08:00
	Matrix: Soil	

444657-036 Analyte	Result	Qual	Units	RL	DF	Batch	Prepared	Analyzed	Chemist
Method: EPA 6010B Prep Method: EPA 3050B									
Antimony	ND		mg/Kg	2.9	0.95	266287	04/30/21	04/30/21	SBW
Arsenic	ND		mg/Kg	0.95	0.95	266287	04/30/21	04/30/21	SBW
Barium	**28**		mg/Kg	0.95	0.95	266287	04/30/21	04/30/21	SBW
Beryllium	ND		mg/Kg	0.48	0.95	266287	04/30/21	04/30/21	SBW
Cadmium	ND		mg/Kg	0.48	0.95	266287	04/30/21	04/30/21	SBW
Chromium	**2.7**		mg/Kg	0.95	0.95	266287	04/30/21	04/30/21	SBW
Cobalt	**2.0**		mg/Kg	0.48	0.95	266287	04/30/21	04/30/21	SBW
Copper	**2.8**		mg/Kg	0.95	0.95	266287	04/30/21	04/30/21	SBW
Lead	**0.99**		mg/Kg	0.95	0.95	266287	04/30/21	04/30/21	SBW
Molybdenum	ND		mg/Kg	0.95	0.95	266287	04/30/21	04/30/21	SBW
Nickel	**1.8**		mg/Kg	0.95	0.95	266287	04/30/21	04/30/21	SBW
Selenium	ND		mg/Kg	2.9	0.95	266287	04/30/21	04/30/21	SBW
Silver	ND		mg/Kg	0.48	0.95	266287	04/30/21	05/03/21	SBW
Thallium	ND		mg/Kg	2.9	0.95	266287	04/30/21	04/30/21	SBW
Vanadium	**12**		mg/Kg	0.95	0.95	266287	04/30/21	04/30/21	SBW
Zinc	**12**		mg/Kg	4.8	0.95	266287	04/30/21	04/30/21	SBW
Method: EPA 7471A Prep Method: METHOD									
Mercury	ND		mg/Kg	0.17	1.2	266325	04/30/21	04/30/21	JDB
Method: EPA 8015B Prep Method: EPA 3580									
GRO C6-C10	ND		mg/Kg	10	1	266432	05/03/21	05/05/21	MES
DRO C10-C28	ND		mg/Kg	10	1	266432	05/03/21	05/05/21	MES
ORO C28-C44	ND		mg/Kg	20	1	266432	05/03/21	05/05/21	MES
Surrogates				**Limits**					
n-Triacontane	108%		%REC	70-130	1	266432	05/03/21	05/05/21	MES

Sample ID: TP12-1	Lab ID: 444657-037	Collected: 04/28/21 08:20
	Matrix: Soil	

444657-037 Analyte	Result	Qual	Units	RL	DF	Batch	Prepared	Analyzed	Chemist
Method: EPA 6010B Prep Method: EPA 3050B									
Lead	**28**		mg/Kg	1.0	1	266287	04/30/21	04/30/21	SBW

Results for any subcontracted analyses are not included in this section.

Analysis Results for 444657

Sample ID: TP12-4	Lab ID: 444657-038	Collected: 04/28/21 08:30
	Matrix: Soil	

444657-038 Analyte	Result	Qual	Units	RL	DF	Batch	Prepared	Analyzed	Chemist
Method: EPA 6010B Prep Method: EPA 3050B									
Lead	**1.2**		mg/Kg	1.1	1.1	266287	04/30/21	04/30/21	SBW

Sample ID: TP14-1	Lab ID: 444657-041	Collected: 04/28/21 09:00
	Matrix: Soil	

444657-041 Analyte	Result	Qual	Units	RL	DF	Batch	Prepared	Analyzed	Chemist
Method: EPA 6010B Prep Method: EPA 3050B									
Lead	**41**		mg/Kg	1.0	1	266287	04/30/21	04/30/21	SBW

Sample ID: TP14-2	Lab ID: 444657-042	Collected: 04/28/21 09:11
	Matrix: Soil	

444657-042 Analyte	Result	Qual	Units	RL	DF	Batch	Prepared	Analyzed	Chemist
Method: EPA 6010B Prep Method: EPA 3050B									
Lead	**8.0**		mg/Kg	1.1	1.1	266287	04/30/21	04/30/21	SBW

Results for any subcontracted analyses are not included in this section.

ENTHALPY ANALYTICAL

Analysis Results for 444657

Sample ID: TP16-0.75 **Lab ID: 444657-045** **Collected: 04/28/21 09:55**
Matrix: Soil

444657-045 Analyte	Result	Qual	Units	RL	DF	Batch	Prepared	Analyzed	Chemist
Method: EPA 6010B Prep Method: EPA 3050B									
Antimony	ND		mg/Kg	3.2	1.1	266287	04/30/21	04/30/21	SBW
Arsenic	**4.1**		mg/Kg	1.1	1.1	266287	04/30/21	04/30/21	SBW
Barium	**120**		mg/Kg	1.1	1.1	266287	04/30/21	04/30/21	SBW
Beryllium	ND		mg/Kg	0.53	1.1	266287	04/30/21	04/30/21	SBW
Cadmium	ND		mg/Kg	0.53	1.1	266287	04/30/21	04/30/21	SBW
Chromium	**47**		mg/Kg	1.1	1.1	266287	04/30/21	04/30/21	SBW
Cobalt	**11**		mg/Kg	0.53	1.1	266287	04/30/21	04/30/21	SBW
Copper	**20**		mg/Kg	1.1	1.1	266287	04/30/21	04/30/21	SBW
Lead	**110**		mg/Kg	1.1	1.1	266287	04/30/21	04/30/21	SBW
Molybdenum	ND		mg/Kg	1.1	1.1	266287	04/30/21	04/30/21	SBW
Nickel	**20**		mg/Kg	1.1	1.1	266287	04/30/21	04/30/21	SBW
Selenium	ND		mg/Kg	3.2	1.1	266287	04/30/21	04/30/21	SBW
Silver	ND		mg/Kg	0.53	1.1	266287	04/30/21	05/03/21	SBW
Thallium	ND		mg/Kg	3.2	1.1	266287	04/30/21	04/30/21	SBW
Vanadium	**58**		mg/Kg	1.1	1.1	266287	04/30/21	04/30/21	SBW
Zinc	**67**		mg/Kg	5.3	1.1	266287	04/30/21	04/30/21	SBW
Method: EPA 7471A Prep Method: METHOD									
Mercury	ND		mg/Kg	0.16	1.2	266326	04/30/21	04/30/21	JDB

Sample ID: TP16-3 **Lab ID: 444657-046** **Collected: 04/28/21 10:00**
Matrix: Soil

444657-046 Analyte	Result	Qual	Units	RL	DF	Batch	Prepared	Analyzed	Chemist
Method: EPA 6010B Prep Method: EPA 3050B									
Lead	**2.6**		mg/Kg	1.0	1	266287	04/30/21	04/30/21	SBW

Sample ID: TP17-1 **Lab ID: 444657-047** **Collected: 04/28/21 10:10**
Matrix: Soil

444657-047 Analyte	Result	Qual	Units	RL	DF	Batch	Prepared	Analyzed	Chemist
Method: EPA 6010B Prep Method: EPA 3050B									
Lead	**24**		mg/Kg	1.0	1	266287	04/30/21	04/30/21	SBW

Results for any subcontracted analyses are not included in this section.

ENTHALPY ANALYTICAL

Analysis Results for 444657

Sample ID: TP17-4	Lab ID: 444657-048	Collected: 04/28/21 10:15
	Matrix: Soil	

444657-048 Analyte	Result	Qual	Units	RL	DF	Batch	Prepared	Analyzed	Chemist
Method: EPA 6010B Prep Method: EPA 3050B									
Lead	**9.0**		mg/Kg	0.83	0.83	266287	04/30/21	04/30/21	SBW

Sample ID: TP18-1	Lab ID: 444657-049	Collected: 04/28/21 10:50
	Matrix: Soil	

444657-049 Analyte	Result	Qual	Units	RL	DF	Batch	Prepared	Analyzed	Chemist
Method: EPA 6010B Prep Method: EPA 3050B									
Antimony	ND		mg/Kg	2.9	0.96	266287	04/30/21	04/30/21	SBW
Arsenic	**3.6**		mg/Kg	0.96	0.96	266287	04/30/21	04/30/21	SBW
Barium	**110**		mg/Kg	0.96	0.96	266287	04/30/21	04/30/21	SBW
Beryllium	ND		mg/Kg	0.48	0.96	266287	04/30/21	04/30/21	SBW
Cadmium	ND		mg/Kg	0.48	0.96	266287	04/30/21	04/30/21	SBW
Chromium	**17**		mg/Kg	0.96	0.96	266287	04/30/21	04/30/21	SBW
Cobalt	**7.2**		mg/Kg	0.48	0.96	266287	04/30/21	04/30/21	SBW
Copper	**22**		mg/Kg	0.96	0.96	266287	04/30/21	04/30/21	SBW
Lead	**48**		mg/Kg	0.96	0.96	266287	04/30/21	04/30/21	SBW
Molybdenum	**1.0**		mg/Kg	0.96	0.96	266287	04/30/21	04/30/21	SBW
Nickel	**14**		mg/Kg	0.96	0.96	266287	04/30/21	04/30/21	SBW
Selenium	ND		mg/Kg	2.9	0.96	266287	04/30/21	04/30/21	SBW
Silver	ND		mg/Kg	0.48	0.96	266287	04/30/21	05/03/21	SBW
Thallium	ND		mg/Kg	2.9	0.96	266287	04/30/21	04/30/21	SBW
Vanadium	**36**		mg/Kg	0.96	0.96	266287	04/30/21	04/30/21	SBW
Zinc	**98**		mg/Kg	4.8	0.96	266287	04/30/21	04/30/21	SBW
Method: EPA 7471A Prep Method: METHOD									
Mercury	ND		mg/Kg	0.16	1.1	266326	04/30/21	04/30/21	JDB
Method: EPA 8015B Prep Method: EPA 3580									
GRO C6-C10	ND		mg/Kg	10	1	266432	05/03/21	05/05/21	MES
DRO C10-C28	**16**		mg/Kg	10	1	266432	05/03/21	05/05/21	MES
ORO C28-C44	**44**		mg/Kg	20	1	266432	05/03/21	05/05/21	MES
Surrogates				**Limits**					
n-Triacontane	90%		%REC	70-130	1	266432	05/03/21	05/05/21	MES

Results for any subcontracted analyses are not included in this section.

ENTHALPY ANALYTICAL

Analysis Results for 444657

Sample ID: TP18-3	Lab ID: 444657-050	Collected: 04/28/21 10:55
	Matrix: Soil	

444657-050 Analyte	Result	Qual	Units	RL	DF	Batch	Prepared	Analyzed	Chemist
Method: EPA 6010B Prep Method: EPA 3050B									
Antimony	ND		mg/Kg	2.6	0.86	266287	04/30/21	04/30/21	SBW
Arsenic	**3.4**		mg/Kg	0.86	0.86	266287	04/30/21	04/30/21	SBW
Barium	**100**		mg/Kg	0.86	0.86	266287	04/30/21	04/30/21	SBW
Beryllium	ND		mg/Kg	0.43	0.86	266287	04/30/21	04/30/21	SBW
Cadmium	ND		mg/Kg	0.43	0.86	266287	04/30/21	04/30/21	SBW
Chromium	**15**		mg/Kg	0.86	0.86	266287	04/30/21	04/30/21	SBW
Cobalt	**7.4**		mg/Kg	0.43	0.86	266287	04/30/21	04/30/21	SBW
Copper	**19**		mg/Kg	0.86	0.86	266287	04/30/21	04/30/21	SBW
Lead	**57**		mg/Kg	0.86	0.86	266287	04/30/21	04/30/21	SBW
Molybdenum	ND		mg/Kg	0.86	0.86	266287	04/30/21	04/30/21	SBW
Nickel	**11**		mg/Kg	0.86	0.86	266287	04/30/21	04/30/21	SBW
Selenium	ND		mg/Kg	2.6	0.86	266287	04/30/21	04/30/21	SBW
Silver	ND		mg/Kg	0.43	0.86	266287	04/30/21	05/03/21	SBW
Thallium	ND		mg/Kg	2.6	0.86	266287	04/30/21	04/30/21	SBW
Vanadium	**33**		mg/Kg	0.86	0.86	266287	04/30/21	04/30/21	SBW
Zinc	**100**		mg/Kg	4.3	0.86	266287	04/30/21	04/30/21	SBW
Method: EPA 7471A Prep Method: METHOD									
Mercury	ND		mg/Kg	0.15	1.1	266326	04/30/21	04/30/21	JDB

Results for any subcontracted analyses are not included in this section.

ENTHALPY ANALYTICAL

Analysis Results for 444657

Sample ID: TP18-6.5	Lab ID: 444657-051	Collected: 04/28/21 11:05
	Matrix: Soil	

444657-051 Analyte	Result	Qual	Units	RL	DF	Batch	Prepared	Analyzed	Chemist
Method: EPA 6010B Prep Method: EPA 3050B									
Antimony	ND		mg/Kg	3.0	1	266287	04/30/21	04/30/21	SBW
Arsenic	**1.6**		mg/Kg	1.0	1	266287	04/30/21	04/30/21	SBW
Barium	**23**		mg/Kg	1.0	1	266287	04/30/21	04/30/21	SBW
Beryllium	ND		mg/Kg	0.50	1	266287	04/30/21	04/30/21	SBW
Cadmium	ND		mg/Kg	0.50	1	266287	04/30/21	04/30/21	SBW
Chromium	**7.8**		mg/Kg	1.0	1	266287	04/30/21	04/30/21	SBW
Cobalt	**3.5**		mg/Kg	0.50	1	266287	04/30/21	04/30/21	SBW
Copper	**4.7**		mg/Kg	1.0	1	266287	04/30/21	04/30/21	SBW
Lead	**2.3**		mg/Kg	1.0	1	266287	04/30/21	04/30/21	SBW
Molybdenum	ND		mg/Kg	1.0	1	266287	04/30/21	04/30/21	SBW
Nickel	**2.9**		mg/Kg	1.0	1	266287	04/30/21	04/30/21	SBW
Selenium	ND		mg/Kg	3.0	1	266287	04/30/21	04/30/21	SBW
Silver	ND		mg/Kg	0.50	1	266287	04/30/21	05/03/21	SBW
Thallium	ND		mg/Kg	3.0	1	266287	04/30/21	04/30/21	SBW
Vanadium	**37**		mg/Kg	1.0	1	266287	04/30/21	04/30/21	SBW
Zinc	**16**		mg/Kg	5.0	1	266287	04/30/21	04/30/21	SBW
Method: EPA 7471A Prep Method: METHOD									
Mercury	ND		mg/Kg	0.16	1.1	266326	04/30/21	04/30/21	JDB

Results for any subcontracted analyses are not included in this section.

ENTHALPY ANALYTICAL

Analysis Results for 444657

Sample ID: TP19-1	Lab ID: 444657-052	Collected: 04/28/21 12:10
	Matrix: Soil	

444657-052 Analyte	Result	Qual	Units	RL	DF	Batch	Prepared	Analyzed	Chemist
Method: EPA 6010B Prep Method: EPA 3050B									
Antimony	ND		mg/Kg	2.7	0.91	266287	04/30/21	04/30/21	SBW
Arsenic	**3.4**		mg/Kg	0.91	0.91	266287	04/30/21	04/30/21	SBW
Barium	**110**		mg/Kg	0.91	0.91	266287	04/30/21	04/30/21	SBW
Beryllium	ND		mg/Kg	0.45	0.91	266287	04/30/21	04/30/21	SBW
Cadmium	**0.89**		mg/Kg	0.45	0.91	266287	04/30/21	04/30/21	SBW
Chromium	**17**		mg/Kg	0.91	0.91	266287	04/30/21	04/30/21	SBW
Cobalt	**6.3**		mg/Kg	0.45	0.91	266287	04/30/21	04/30/21	SBW
Copper	**18**		mg/Kg	0.91	0.91	266287	04/30/21	04/30/21	SBW
Lead	**23**		mg/Kg	0.91	0.91	266287	04/30/21	04/30/21	SBW
Molybdenum	**1.8**		mg/Kg	0.91	0.91	266287	04/30/21	04/30/21	SBW
Nickel	**17**		mg/Kg	0.91	0.91	266287	04/30/21	04/30/21	SBW
Selenium	ND		mg/Kg	2.7	0.91	266287	04/30/21	04/30/21	SBW
Silver	ND		mg/Kg	0.45	0.91	266287	04/30/21	05/03/21	SBW
Thallium	ND		mg/Kg	2.7	0.91	266287	04/30/21	04/30/21	SBW
Vanadium	**36**		mg/Kg	0.91	0.91	266287	04/30/21	04/30/21	SBW
Zinc	**93**		mg/Kg	4.5	0.91	266287	04/30/21	04/30/21	SBW
Method: EPA 7471A Prep Method: METHOD									
Mercury	ND		mg/Kg	0.17	1.2	266326	04/30/21	04/30/21	JDB

Results for any subcontracted analyses are not included in this section.

ENTHALPY ANALYTICAL

Analysis Results for 444657

Sample ID: TP19-3	Lab ID: 444657-053	Collected: 04/28/21 12:15
	Matrix: Soil	

444657-053 Analyte	Result	Qual	Units	RL	DF	Batch	Prepared	Analyzed	Chemist
Method: EPA 6010B Prep Method: EPA 3050B									
Antimony	ND		mg/Kg	3.0	0.99	266289	04/30/21	04/30/21	SBW
Arsenic	**3.1**		mg/Kg	0.99	0.99	266289	04/30/21	04/30/21	SBW
Barium	**110**		mg/Kg	0.99	0.99	266289	04/30/21	04/30/21	SBW
Beryllium	ND		mg/Kg	0.50	0.99	266289	04/30/21	04/30/21	SBW
Cadmium	ND		mg/Kg	0.50	0.99	266289	04/30/21	04/30/21	SBW
Chromium	**14**		mg/Kg	0.99	0.99	266289	04/30/21	04/30/21	SBW
Cobalt	**6.2**		mg/Kg	0.50	0.99	266289	04/30/21	04/30/21	SBW
Copper	**15**		mg/Kg	0.99	0.99	266289	04/30/21	04/30/21	SBW
Lead	**10**		mg/Kg	0.99	0.99	266289	04/30/21	04/30/21	SBW
Molybdenum	**1.3**		mg/Kg	0.99	0.99	266289	04/30/21	04/30/21	SBW
Nickel	**16**		mg/Kg	0.99	0.99	266289	04/30/21	04/30/21	SBW
Selenium	ND		mg/Kg	3.0	0.99	266289	04/30/21	04/30/21	SBW
Silver	ND		mg/Kg	0.50	0.99	266289	04/30/21	05/03/21	SBW
Thallium	ND		mg/Kg	3.0	0.99	266289	04/30/21	04/30/21	SBW
Vanadium	**31**		mg/Kg	0.99	0.99	266289	04/30/21	04/30/21	SBW
Zinc	**50**		mg/Kg	5.0	0.99	266289	04/30/21	04/30/21	SBW
Method: EPA 7471A Prep Method: METHOD									
Mercury	ND		mg/Kg	0.15	1.1	266326	04/30/21	04/30/21	JDB
Method: EPA 8015B Prep Method: EPA 3580									
GRO C6-C10	ND		mg/Kg	10	1	266432	05/03/21	05/05/21	MES
DRO C10-C28	ND		mg/Kg	10	1	266432	05/03/21	05/05/21	MES
ORO C28-C44	**29**		mg/Kg	20	1	266432	05/03/21	05/05/21	MES
Surrogates				**Limits**					
n-Triacontane	102%		%REC	70-130	1	266432	05/03/21	05/05/21	MES
Method: EPA 8081A Prep Method: EPA 3546									
alpha-BHC	ND		ug/Kg	25	5	266300	04/30/21	05/01/21	KTD
beta-BHC	ND		ug/Kg	25	5	266300	04/30/21	05/01/21	KTD
gamma-BHC	ND		ug/Kg	25	5	266300	04/30/21	05/01/21	KTD
delta-BHC	ND		ug/Kg	25	5	266300	04/30/21	05/01/21	KTD
Heptachlor	ND		ug/Kg	25	5	266300	04/30/21	05/01/21	KTD
Aldrin	ND		ug/Kg	25	5	266300	04/30/21	05/01/21	KTD
Heptachlor epoxide	ND		ug/Kg	25	5	266300	04/30/21	05/01/21	KTD
Endosulfan I	ND		ug/Kg	25	5	266300	04/30/21	05/01/21	KTD
Dieldrin	ND		ug/Kg	25	5	266300	04/30/21	05/01/21	KTD
4,4'-DDE	ND		ug/Kg	25	5	266300	04/30/21	05/01/21	KTD
Endrin	ND		ug/Kg	25	5	266300	04/30/21	05/01/21	KTD
Endosulfan II	ND		ug/Kg	25	5	266300	04/30/21	05/01/21	KTD

Results for any subcontracted analyses are not included in this section.

ENTHALPY ANALYTICAL

Analysis Results for 444657

444657-053 Analyte	Result	Qual	Units	RL	DF	Batch	Prepared	Analyzed	Chemist
Endosulfan sulfate	ND		ug/Kg	25	5	266300	04/30/21	05/01/21	KTD
4,4'-DDD	ND		ug/Kg	25	5	266300	04/30/21	05/01/21	KTD
Endrin aldehyde	ND		ug/Kg	25	5	266300	04/30/21	05/01/21	KTD
Endrin ketone	ND		ug/Kg	25	5	266300	04/30/21	05/01/21	KTD
4,4'-DDT	ND		ug/Kg	25	5	266300	04/30/21	05/01/21	KTD
Methoxychlor	ND		ug/Kg	50	5	266300	04/30/21	05/01/21	KTD
Toxaphene	ND		ug/Kg	500	5	266300	04/30/21	05/01/21	KTD
Chlordane (Technical)	**290**		ug/Kg	250	5	266300	04/30/21	05/01/21	KTD
Surrogates				**Limits**					
TCMX	82%		%REC	23-120	5	266300	04/30/21	05/01/21	KTD
Decachlorobiphenyl	85%		%REC	24-120	5	266300	04/30/21	05/01/21	KTD
Method: EPA 8082 Prep Method: EPA 3546									
Aroclor-1016	ND		ug/Kg	50	1	266300	04/30/21	05/04/21	KTD
Aroclor-1221	ND		ug/Kg	50	1	266300	04/30/21	05/04/21	KTD
Aroclor-1232	ND		ug/Kg	50	1	266300	04/30/21	05/04/21	KTD
Aroclor-1242	ND		ug/Kg	50	1	266300	04/30/21	05/04/21	KTD
Aroclor-1248	ND		ug/Kg	50	1	266300	04/30/21	05/04/21	KTD
Aroclor-1254	ND		ug/Kg	50	1	266300	04/30/21	05/04/21	KTD
Aroclor-1260	ND		ug/Kg	50	1	266300	04/30/21	05/04/21	KTD
Aroclor-1262	ND		ug/Kg	50	1	266300	04/30/21	05/04/21	KTD
Aroclor-1268	ND		ug/Kg	50	1	266300	04/30/21	05/04/21	KTD
Surrogates				**Limits**					
Decachlorobiphenyl (PCB)	78%		%REC	19-121	1	266300	04/30/21	05/04/21	KTD
Method: EPA 8260B Prep Method: EPA 5030B									
3-Chloropropene	ND		ug/Kg	5.0	1	266284	04/30/21	04/30/21	TCN
cis-1,4-Dichloro-2-butene	ND		ug/Kg	5.0	1	266284	04/30/21	04/30/21	TCN
trans-1,4-Dichloro-2-butene	ND		ug/Kg	5.0	1	266284	04/30/21	04/30/21	TCN
Isopropyl Ether (DIPE)	ND		ug/Kg	5.0	1	266284	04/30/21	04/30/21	TCN
Ethyl tert-Butyl Ether (ETBE)	ND		ug/Kg	5.0	1	266284	04/30/21	04/30/21	TCN
Methyl tert-Amyl Ether (TAME)	ND		ug/Kg	5.0	1	266284	04/30/21	04/30/21	TCN
tert-Butyl Alcohol (TBA)	ND		ug/Kg	10	1	266284	04/30/21	04/30/21	TCN
Freon 12	ND		ug/Kg	5.0	1	266284	04/30/21	04/30/21	TCN
Chloromethane	ND		ug/Kg	5.0	1	266284	04/30/21	04/30/21	TCN
Vinyl Chloride	ND		ug/Kg	5.0	1	266284	04/30/21	04/30/21	TCN
Bromomethane	ND		ug/Kg	5.0	1	266284	04/30/21	04/30/21	TCN
Chloroethane	ND		ug/Kg	5.0	1	266284	04/30/21	04/30/21	TCN
Trichlorofluoromethane	ND		ug/Kg	5.0	1	266284	04/30/21	04/30/21	TCN
Acetone	ND		ug/Kg	100	1	266284	04/30/21	04/30/21	TCN
Freon 113	ND		ug/Kg	5.0	1	266284	04/30/21	04/30/21	TCN
1,1-Dichloroethene	ND		ug/Kg	5.0	1	266284	04/30/21	04/30/21	TCN
Methylene Chloride	ND		ug/Kg	5.0	1	266284	04/30/21	04/30/21	TCN
MTBE	ND		ug/Kg	5.0	1	266284	04/30/21	04/30/21	TCN
trans-1,2-Dichloroethene	ND		ug/Kg	5.0	1	266284	04/30/21	04/30/21	TCN
1,1-Dichloroethane	ND		ug/Kg	5.0	1	266284	04/30/21	04/30/21	TCN

Results for any subcontracted analyses are not included in this section.

ENTHALPY ANALYTICAL

Analysis Results for 444657

444657-053 Analyte	Result	Qual	Units	RL	DF	Batch	Prepared	Analyzed	Chemist
2-Butanone	ND		ug/Kg	100	1	266284	04/30/21	04/30/21	TCN
cis-1,2-Dichloroethene	ND		ug/Kg	5.0	1	266284	04/30/21	04/30/21	TCN
2,2-Dichloropropane	ND		ug/Kg	5.0	1	266284	04/30/21	04/30/21	TCN
Chloroform	ND		ug/Kg	5.0	1	266284	04/30/21	04/30/21	TCN
Bromochloromethane	ND		ug/Kg	5.0	1	266284	04/30/21	04/30/21	TCN
1,1,1-Trichloroethane	ND		ug/Kg	5.0	1	266284	04/30/21	04/30/21	TCN
1,1-Dichloropropene	ND		ug/Kg	5.0	1	266284	04/30/21	04/30/21	TCN
Carbon Tetrachloride	ND		ug/Kg	5.0	1	266284	04/30/21	04/30/21	TCN
1,2-Dichloroethane	ND		ug/Kg	5.0	1	266284	04/30/21	04/30/21	TCN
Benzene	ND		ug/Kg	5.0	1	266284	04/30/21	04/30/21	TCN
Trichloroethene	ND		ug/Kg	5.0	1	266284	04/30/21	04/30/21	TCN
1,2-Dichloropropane	ND		ug/Kg	5.0	1	266284	04/30/21	04/30/21	TCN
Bromodichloromethane	ND		ug/Kg	5.0	1	266284	04/30/21	04/30/21	TCN
Dibromomethane	ND		ug/Kg	5.0	1	266284	04/30/21	04/30/21	TCN
4-Methyl-2-Pentanone	ND		ug/Kg	5.0	1	266284	04/30/21	04/30/21	TCN
cis-1,3-Dichloropropene	ND		ug/Kg	5.0	1	266284	04/30/21	04/30/21	TCN
Toluene	ND		ug/Kg	5.0	1	266284	04/30/21	04/30/21	TCN
trans-1,3-Dichloropropene	ND		ug/Kg	5.0	1	266284	04/30/21	04/30/21	TCN
1,1,2-Trichloroethane	ND		ug/Kg	5.0	1	266284	04/30/21	04/30/21	TCN
1,3-Dichloropropane	ND		ug/Kg	5.0	1	266284	04/30/21	04/30/21	TCN
Tetrachloroethene	ND		ug/Kg	5.0	1	266284	04/30/21	04/30/21	TCN
Dibromochloromethane	ND		ug/Kg	5.0	1	266284	04/30/21	04/30/21	TCN
1,2-Dibromoethane	ND		ug/Kg	5.0	1	266284	04/30/21	04/30/21	TCN
Chlorobenzene	ND		ug/Kg	5.0	1	266284	04/30/21	04/30/21	TCN
1,1,1,2-Tetrachloroethane	ND		ug/Kg	5.0	1	266284	04/30/21	04/30/21	TCN
Ethylbenzene	ND		ug/Kg	5.0	1	266284	04/30/21	04/30/21	TCN
m,p-Xylenes	ND		ug/Kg	10	1	266284	04/30/21	04/30/21	TCN
o-Xylene	ND		ug/Kg	5.0	1	266284	04/30/21	04/30/21	TCN
Styrene	ND		ug/Kg	5.0	1	266284	04/30/21	04/30/21	TCN
Bromoform	ND		ug/Kg	5.0	1	266284	04/30/21	04/30/21	TCN
Isopropylbenzene	ND		ug/Kg	5.0	1	266284	04/30/21	04/30/21	TCN
1,1,2,2-Tetrachloroethane	ND		ug/Kg	5.0	1	266284	04/30/21	04/30/21	TCN
1,2,3-Trichloropropane	ND		ug/Kg	5.0	1	266284	04/30/21	04/30/21	TCN
Propylbenzene	ND		ug/Kg	5.0	1	266284	04/30/21	04/30/21	TCN
Bromobenzene	ND		ug/Kg	5.0	1	266284	04/30/21	04/30/21	TCN
1,3,5-Trimethylbenzene	ND		ug/Kg	5.0	1	266284	04/30/21	04/30/21	TCN
2-Chlorotoluene	ND		ug/Kg	5.0	1	266284	04/30/21	04/30/21	TCN
4-Chlorotoluene	ND		ug/Kg	5.0	1	266284	04/30/21	04/30/21	TCN
tert-Butylbenzene	ND		ug/Kg	5.0	1	266284	04/30/21	04/30/21	TCN
1,2,4-Trimethylbenzene	ND		ug/Kg	5.0	1	266284	04/30/21	04/30/21	TCN
sec-Butylbenzene	ND		ug/Kg	5.0	1	266284	04/30/21	04/30/21	TCN
para-Isopropyl Toluene	ND		ug/Kg	5.0	1	266284	04/30/21	04/30/21	TCN
1,3-Dichlorobenzene	ND		ug/Kg	5.0	1	266284	04/30/21	04/30/21	TCN
1,4-Dichlorobenzene	ND		ug/Kg	5.0	1	266284	04/30/21	04/30/21	TCN
n-Butylbenzene	ND		ug/Kg	5.0	1	266284	04/30/21	04/30/21	TCN
1,2-Dichlorobenzene	ND		ug/Kg	5.0	1	266284	04/30/21	04/30/21	TCN

Results for any subcontracted analyses are not included in this section.

ENTHALPY ANALYTICAL

Analysis Results for 444657

444657-053 Analyte	Result	Qual	Units	RL	DF	Batch	Prepared	Analyzed	Chemist
1,2-Dibromo-3-Chloropropane	ND		ug/Kg	5.0	1	266284	04/30/21	04/30/21	TCN
1,2,4-Trichlorobenzene	ND		ug/Kg	5.0	1	266284	04/30/21	04/30/21	TCN
Hexachlorobutadiene	ND		ug/Kg	5.0	1	266284	04/30/21	04/30/21	TCN
Naphthalene	ND		ug/Kg	5.0	1	266284	04/30/21	04/30/21	TCN
1,2,3-Trichlorobenzene	ND		ug/Kg	5.0	1	266284	04/30/21	04/30/21	TCN
Xylene (total)	ND		ug/Kg	5.0	1	266284	04/30/21	04/30/21	TCN
Surrogates				**Limits**					
Dibromofluoromethane	102%		%REC	70-145	1	266284	04/30/21	04/30/21	TCN
1,2-Dichloroethane-d4	95%		%REC	70-145	1	266284	04/30/21	04/30/21	TCN
Toluene-d8	99%		%REC	70-145	1	266284	04/30/21	04/30/21	TCN
Bromofluorobenzene	105%		%REC	70-145	1	266284	04/30/21	04/30/21	TCN
Method: EPA 8270C Prep Method: EPA 3546									
Carbazole	ND		ug/Kg	5,000	20	266473	05/04/21	05/06/21	DJL
1-Methylnaphthalene	ND		ug/Kg	5,000	20	266473	05/04/21	05/06/21	DJL
Pyridine	ND		ug/Kg	5,000	20	266473	05/04/21	05/06/21	DJL
N-Nitrosodimethylamine	ND		ug/Kg	5,000	20	266473	05/04/21	05/06/21	DJL
Phenol	ND		ug/Kg	5,000	20	266473	05/04/21	05/06/21	DJL
Aniline	ND		ug/Kg	5,000	20	266473	05/04/21	05/06/21	DJL
bis(2-Chloroethyl)ether	ND		ug/Kg	24,000	20	266473	05/04/21	05/06/21	DJL
2-Chlorophenol	ND		ug/Kg	5,000	20	266473	05/04/21	05/06/21	DJL
1,3-Dichlorobenzene	ND		ug/Kg	5,000	20	266473	05/04/21	05/06/21	DJL
1,4-Dichlorobenzene	ND		ug/Kg	5,000	20	266473	05/04/21	05/06/21	DJL
Benzyl alcohol	ND		ug/Kg	5,000	20	266473	05/04/21	05/06/21	DJL
1,2-Dichlorobenzene	ND		ug/Kg	5,000	20	266473	05/04/21	05/06/21	DJL
2-Methylphenol	ND		ug/Kg	5,000	20	266473	05/04/21	05/06/21	DJL
bis(2-Chloroisopropyl) ether	ND		ug/Kg	5,000	20	266473	05/04/21	05/06/21	DJL
3-,4-Methylphenol	ND		ug/Kg	8,000	20	266473	05/04/21	05/06/21	DJL
N-Nitroso-di-n-propylamine	ND		ug/Kg	5,000	20	266473	05/04/21	05/06/21	DJL
Hexachloroethane	ND		ug/Kg	5,000	20	266473	05/04/21	05/06/21	DJL
Nitrobenzene	ND		ug/Kg	24,000	20	266473	05/04/21	05/06/21	DJL
Isophorone	ND		ug/Kg	5,000	20	266473	05/04/21	05/06/21	DJL
2-Nitrophenol	ND		ug/Kg	5,000	20	266473	05/04/21	05/06/21	DJL
2,4-Dimethylphenol	ND		ug/Kg	5,000	20	266473	05/04/21	05/06/21	DJL
Benzoic acid	ND		ug/Kg	24,000	20	266473	05/04/21	05/06/21	DJL
bis(2-Chloroethoxy)methane	ND		ug/Kg	5,000	20	266473	05/04/21	05/06/21	DJL
2,4-Dichlorophenol	ND		ug/Kg	5,000	20	266473	05/04/21	05/06/21	DJL
1,2,4-Trichlorobenzene	ND		ug/Kg	5,000	20	266473	05/04/21	05/06/21	DJL
Naphthalene	ND		ug/Kg	5,000	20	266473	05/04/21	05/06/21	DJL
4-Chloroaniline	ND		ug/Kg	5,000	20	266473	05/04/21	05/06/21	DJL
Hexachlorobutadiene	ND		ug/Kg	5,000	20	266473	05/04/21	05/06/21	DJL
4-Chloro-3-methylphenol	ND		ug/Kg	5,000	20	266473	05/04/21	05/06/21	DJL
2-Methylnaphthalene	ND		ug/Kg	5,000	20	266473	05/04/21	05/06/21	DJL
Hexachlorocyclopentadiene	ND		ug/Kg	24,000	20	266473	05/04/21	05/06/21	DJL
2,4,6-Trichlorophenol	ND		ug/Kg	5,000	20	266473	05/04/21	05/06/21	DJL
2,4,5-Trichlorophenol	ND		ug/Kg	5,000	20	266473	05/04/21	05/06/21	DJL

Results for any subcontracted analyses are not included in this section.

ENTHALPY ANALYTICAL

Analysis Results for 444657

444657-053 Analyte	Result	Qual	Units	RL	DF	Batch	Prepared	Analyzed	Chemist
2-Chloronaphthalene	ND		ug/Kg	5,000	20	266473	05/04/21	05/06/21	DJL
2-Nitroaniline	ND		ug/Kg	5,000	20	266473	05/04/21	05/06/21	DJL
Dimethylphthalate	ND		ug/Kg	5,000	20	266473	05/04/21	05/06/21	DJL
Acenaphthylene	ND		ug/Kg	5,000	20	266473	05/04/21	05/06/21	DJL
2,6-Dinitrotoluene	ND		ug/Kg	5,000	20	266473	05/04/21	05/06/21	DJL
3-Nitroaniline	ND		ug/Kg	5,000	20	266473	05/04/21	05/06/21	DJL
Acenaphthene	ND		ug/Kg	5,000	20	266473	05/04/21	05/06/21	DJL
2,4-Dinitrophenol	ND		ug/Kg	24,000	20	266473	05/04/21	05/06/21	DJL
4-Nitrophenol	ND		ug/Kg	5,000	20	266473	05/04/21	05/06/21	DJL
Dibenzofuran	ND		ug/Kg	5,000	20	266473	05/04/21	05/06/21	DJL
2,4-Dinitrotoluene	ND		ug/Kg	5,000	20	266473	05/04/21	05/06/21	DJL
Diethylphthalate	ND		ug/Kg	5,000	20	266473	05/04/21	05/06/21	DJL
Fluorene	ND		ug/Kg	5,000	20	266473	05/04/21	05/06/21	DJL
4-Chlorophenyl-phenylether	ND		ug/Kg	5,000	20	266473	05/04/21	05/06/21	DJL
4-Nitroaniline	ND		ug/Kg	5,000	20	266473	05/04/21	05/06/21	DJL
4,6-Dinitro-2-methylphenol	ND		ug/Kg	5,000	20	266473	05/04/21	05/06/21	DJL
N-Nitrosodiphenylamine	ND		ug/Kg	5,000	20	266473	05/04/21	05/06/21	DJL
1,2-diphenylhydrazine (as azobenzene)	ND		ug/Kg	5,000	20	266473	05/04/21	05/06/21	DJL
4-Bromophenyl-phenylether	ND		ug/Kg	5,000	20	266473	05/04/21	05/06/21	DJL
Hexachlorobenzene	ND		ug/Kg	5,000	20	266473	05/04/21	05/06/21	DJL
Pentachlorophenol	ND		ug/Kg	24,000	20	266473	05/04/21	05/06/21	DJL
Phenanthrene	ND		ug/Kg	5,000	20	266473	05/04/21	05/06/21	DJL
Anthracene	ND		ug/Kg	5,000	20	266473	05/04/21	05/06/21	DJL
Di-n-butylphthalate	ND		ug/Kg	5,000	20	266473	05/04/21	05/06/21	DJL
Fluoranthene	ND		ug/Kg	5,000	20	266473	05/04/21	05/06/21	DJL
Benzidine	ND		ug/Kg	24,000	20	266473	05/04/21	05/06/21	DJL
Pyrene	ND		ug/Kg	5,000	20	266473	05/04/21	05/06/21	DJL
Butylbenzylphthalate	ND		ug/Kg	5,000	20	266473	05/04/21	05/06/21	DJL
3,3'-Dichlorobenzidine	ND		ug/Kg	24,000	20	266473	05/04/21	05/06/21	DJL
Benzo(a)anthracene	ND		ug/Kg	5,000	20	266473	05/04/21	05/06/21	DJL
Chrysene	ND		ug/Kg	5,000	20	266473	05/04/21	05/06/21	DJL
bis(2-Ethylhexyl)phthalate	ND		ug/Kg	5,000	20	266473	05/04/21	05/06/21	DJL
Di-n-octylphthalate	ND		ug/Kg	5,000	20	266473	05/04/21	05/06/21	DJL
Benzo(b)fluoranthene	ND		ug/Kg	5,000	20	266473	05/04/21	05/06/21	DJL
Benzo(k)fluoranthene	ND		ug/Kg	5,000	20	266473	05/04/21	05/06/21	DJL
Benzo(a)pyrene	ND		ug/Kg	5,000	20	266473	05/04/21	05/06/21	DJL
Indeno(1,2,3-cd)pyrene	ND		ug/Kg	5,000	20	266473	05/04/21	05/06/21	DJL
Dibenz(a,h)anthracene	ND		ug/Kg	5,000	20	266473	05/04/21	05/06/21	DJL
Benzo(g,h,i)perylene	ND		ug/Kg	5,000	20	266473	05/04/21	05/06/21	DJL
Surrogates				**Limits**					
2-Fluorophenol	53%		%REC	29-120	20	266473	05/04/21	05/06/21	DJL
Phenol-d6	53%		%REC	30-120	20	266473	05/04/21	05/06/21	DJL
2,4,6-Tribromophenol	47%		%REC	32-120	20	266473	05/04/21	05/06/21	DJL
Nitrobenzene-d5	60%		%REC	33-120	20	266473	05/04/21	05/06/21	DJL
2-Fluorobiphenyl	62%		%REC	39-120	20	266473	05/04/21	05/06/21	DJL
Terphenyl-d14	58%		%REC	44-125	20	266473	05/04/21	05/06/21	DJL

Results for any subcontracted analyses are not included in this section.

Analysis Results for 444657

Sample ID: TP19-6	Lab ID: 444657-054	Collected: 04/28/21 12:25
	Matrix: Soil	

444657-054 Analyte	Result	Qual	Units	RL	DF	Batch	Prepared	Analyzed	Chemist
Method: EPA 6010B Prep Method: EPA 3050B									
Antimony	ND		mg/Kg	2.7	0.88	266289	04/30/21	04/30/21	SBW
Arsenic	**5.2**		mg/Kg	0.88	0.88	266289	04/30/21	04/30/21	SBW
Barium	**190**		mg/Kg	0.88	0.88	266289	04/30/21	04/30/21	SBW
Beryllium	ND		mg/Kg	0.44	0.88	266289	04/30/21	04/30/21	SBW
Cadmium	**0.89**		mg/Kg	0.44	0.88	266289	04/30/21	04/30/21	SBW
Chromium	**33**		mg/Kg	0.88	0.88	266289	04/30/21	04/30/21	SBW
Cobalt	**9.3**		mg/Kg	0.44	0.88	266289	04/30/21	04/30/21	SBW
Copper	**24**		mg/Kg	0.88	0.88	266289	04/30/21	04/30/21	SBW
Lead	**65**		mg/Kg	0.88	0.88	266289	04/30/21	04/30/21	SBW
Molybdenum	**1.4**		mg/Kg	0.88	0.88	266289	04/30/21	04/30/21	SBW
Nickel	**29**		mg/Kg	0.88	0.88	266289	04/30/21	04/30/21	SBW
Selenium	ND		mg/Kg	2.7	0.88	266289	04/30/21	04/30/21	SBW
Silver	ND		mg/Kg	0.44	0.88	266289	04/30/21	05/03/21	SBW
Thallium	ND		mg/Kg	2.7	0.88	266289	04/30/21	04/30/21	SBW
Vanadium	**55**		mg/Kg	0.88	0.88	266289	04/30/21	04/30/21	SBW
Zinc	**88**		mg/Kg	4.4	0.88	266289	04/30/21	04/30/21	SBW
Method: EPA 7471A Prep Method: METHOD									
Mercury	ND		mg/Kg	0.14	1	266326	04/30/21	04/30/21	JDB

Sample ID: TP20-1	Lab ID: 444657-055	Collected: 04/28/21 12:55
	Matrix: Soil	

444657-055 Analyte	Result	Qual	Units	RL	DF	Batch	Prepared	Analyzed	Chemist
Method: EPA 6010B Prep Method: EPA 3050B									
Lead	**2.2**		mg/Kg	0.96	0.96	266289	04/30/21	04/30/21	SBW

Results for any subcontracted analyses are not included in this section.

ENTHALPY ANALYTICAL

Analysis Results for 444657

Sample ID: TP20-3.5	Lab ID: 444657-056	Collected: 04/28/21 13:10
	Matrix: Soil	

444657-056 Analyte	Result	Qual	Units	RL	DF	Batch	Prepared	Analyzed	Chemist
Method: EPA 6010B Prep Method: EPA 3050B									
Antimony	ND		mg/Kg	2.5	0.85	266289	04/30/21	04/30/21	SBW
Arsenic	**1.7**		mg/Kg	0.85	0.85	266289	04/30/21	04/30/21	SBW
Barium	**66**		mg/Kg	0.85	0.85	266289	04/30/21	04/30/21	SBW
Beryllium	ND		mg/Kg	0.42	0.85	266289	04/30/21	04/30/21	SBW
Cadmium	ND		mg/Kg	0.42	0.85	266289	04/30/21	04/30/21	SBW
Chromium	**11**		mg/Kg	0.85	0.85	266289	04/30/21	04/30/21	SBW
Cobalt	**5.8**		mg/Kg	0.42	0.85	266289	04/30/21	04/30/21	SBW
Copper	**11**		mg/Kg	0.85	0.85	266289	04/30/21	04/30/21	SBW
Lead	**17**		mg/Kg	0.85	0.85	266289	04/30/21	04/30/21	SBW
Molybdenum	ND		mg/Kg	0.85	0.85	266289	04/30/21	04/30/21	SBW
Nickel	**7.4**		mg/Kg	0.85	0.85	266289	04/30/21	04/30/21	SBW
Selenium	ND		mg/Kg	2.5	0.85	266289	04/30/21	04/30/21	SBW
Silver	ND		mg/Kg	0.42	0.85	266289	04/30/21	05/03/21	SBW
Thallium	ND		mg/Kg	2.5	0.85	266289	04/30/21	04/30/21	SBW
Vanadium	**28**		mg/Kg	0.85	0.85	266289	04/30/21	04/30/21	SBW
Zinc	**46**		mg/Kg	4.2	0.85	266289	04/30/21	04/30/21	SBW
Method: EPA 7471A Prep Method: METHOD									
Mercury	ND		mg/Kg	0.17	1.2	266326	04/30/21	04/30/21	JDB
Method: EPA 8015B Prep Method: EPA 3580									
GRO C6-C10	ND		mg/Kg	10	1	266432	05/03/21	05/05/21	MES
DRO C10-C28	ND		mg/Kg	10	1	266432	05/03/21	05/05/21	MES
ORO C28-C44	ND		mg/Kg	20	1	266432	05/03/21	05/05/21	MES
Surrogates				**Limits**					
n-Triacontane	104%		%REC	70-130	1	266432	05/03/21	05/05/21	MES
Method: EPA 8081A Prep Method: EPA 3546									
alpha-BHC	ND		ug/Kg	5.0	1	266300	04/30/21	05/01/21	KTD
beta-BHC	ND		ug/Kg	5.0	1	266300	04/30/21	05/01/21	KTD
gamma-BHC	ND		ug/Kg	5.0	1	266300	04/30/21	05/01/21	KTD
delta-BHC	ND		ug/Kg	5.0	1	266300	04/30/21	05/01/21	KTD
Heptachlor	ND		ug/Kg	5.0	1	266300	04/30/21	05/01/21	KTD
Aldrin	ND		ug/Kg	5.0	1	266300	04/30/21	05/01/21	KTD
Heptachlor epoxide	ND		ug/Kg	5.0	1	266300	04/30/21	05/01/21	KTD
Endosulfan I	ND		ug/Kg	5.0	1	266300	04/30/21	05/01/21	KTD
Dieldrin	ND		ug/Kg	5.0	1	266300	04/30/21	05/01/21	KTD
4,4'-DDE	**26**		ug/Kg	5.0	1	266300	04/30/21	05/01/21	KTD
Endrin	ND		ug/Kg	5.0	1	266300	04/30/21	05/01/21	KTD
Endosulfan II	ND		ug/Kg	5.0	1	266300	04/30/21	05/01/21	KTD

Results for any subcontracted analyses are not included in this section.

ENTHALPY ANALYTICAL

Analysis Results for 444657

444657-056 Analyte	Result	Qual	Units	RL	DF	Batch	Prepared	Analyzed	Chemist
Endosulfan sulfate	ND		ug/Kg	5.0	1	266300	04/30/21	05/01/21	KTD
4,4'-DDD	ND		ug/Kg	5.0	1	266300	04/30/21	05/01/21	KTD
Endrin aldehyde	ND		ug/Kg	5.0	1	266300	04/30/21	05/01/21	KTD
Endrin ketone	ND		ug/Kg	5.0	1	266300	04/30/21	05/01/21	KTD
4,4'-DDT	**9.8**		ug/Kg	5.0	1	266300	04/30/21	05/01/21	KTD
Methoxychlor	ND		ug/Kg	10	1	266300	04/30/21	05/01/21	KTD
Toxaphene	ND		ug/Kg	100	1	266300	04/30/21	05/01/21	KTD
Chlordane (Technical)	ND		ug/Kg	50	1	266300	04/30/21	05/01/21	KTD
Surrogates				**Limits**					
TCMX	81%		%REC	23-120	1	266300	04/30/21	05/01/21	KTD
Decachlorobiphenyl	84%		%REC	24-120	1	266300	04/30/21	05/01/21	KTD
Method: EPA 8082 Prep Method: EPA 3546									
Aroclor-1016	ND		ug/Kg	50	1	266300	04/30/21	05/01/21	KTD
Aroclor-1221	ND		ug/Kg	50	1	266300	04/30/21	05/01/21	KTD
Aroclor-1232	ND		ug/Kg	50	1	266300	04/30/21	05/01/21	KTD
Aroclor-1242	ND		ug/Kg	50	1	266300	04/30/21	05/01/21	KTD
Aroclor-1248	ND		ug/Kg	50	1	266300	04/30/21	05/01/21	KTD
Aroclor-1254	ND		ug/Kg	50	1	266300	04/30/21	05/01/21	KTD
Aroclor-1260	ND		ug/Kg	50	1	266300	04/30/21	05/01/21	KTD
Aroclor-1262	ND		ug/Kg	50	1	266300	04/30/21	05/01/21	KTD
Aroclor-1268	ND		ug/Kg	50	1	266300	04/30/21	05/01/21	KTD
Surrogates				**Limits**					
Decachlorobiphenyl (PCB)	77%		%REC	19-121	1	266300	04/30/21	05/01/21	KTD
Method: EPA 8270C Prep Method: EPA 3546									
Carbazole	ND		ug/Kg	250	1	266473	05/04/21	05/06/21	DJL
1-Methylnaphthalene	ND		ug/Kg	250	1	266473	05/04/21	05/06/21	DJL
Pyridine	ND		ug/Kg	250	1	266473	05/04/21	05/06/21	DJL
N-Nitrosodimethylamine	ND		ug/Kg	250	1	266473	05/04/21	05/06/21	DJL
Phenol	ND		ug/Kg	250	1	266473	05/04/21	05/06/21	DJL
Aniline	ND		ug/Kg	250	1	266473	05/04/21	05/06/21	DJL
bis(2-Chloroethyl)ether	ND		ug/Kg	1,200	1	266473	05/04/21	05/06/21	DJL
2-Chlorophenol	ND		ug/Kg	250	1	266473	05/04/21	05/06/21	DJL
1,3-Dichlorobenzene	ND		ug/Kg	250	1	266473	05/04/21	05/06/21	DJL
1,4-Dichlorobenzene	ND		ug/Kg	250	1	266473	05/04/21	05/06/21	DJL
Benzyl alcohol	ND		ug/Kg	250	1	266473	05/04/21	05/06/21	DJL
1,2-Dichlorobenzene	ND		ug/Kg	250	1	266473	05/04/21	05/06/21	DJL
2-Methylphenol	ND		ug/Kg	250	1	266473	05/04/21	05/06/21	DJL
bis(2-Chloroisopropyl) ether	ND		ug/Kg	250	1	266473	05/04/21	05/06/21	DJL
3-,4-Methylphenol	ND		ug/Kg	400	1	266473	05/04/21	05/06/21	DJL
N-Nitroso-di-n-propylamine	ND		ug/Kg	250	1	266473	05/04/21	05/06/21	DJL
Hexachloroethane	ND		ug/Kg	250	1	266473	05/04/21	05/06/21	DJL
Nitrobenzene	ND		ug/Kg	1,200	1	266473	05/04/21	05/06/21	DJL
Isophorone	ND		ug/Kg	250	1	266473	05/04/21	05/06/21	DJL
2-Nitrophenol	ND		ug/Kg	250	1	266473	05/04/21	05/06/21	DJL

Results for any subcontracted analyses are not included in this section.

ENTHALPY ANALYTICAL

Analysis Results for 444657

444657-056 Analyte	Result	Qual	Units	RL	DF	Batch	Prepared	Analyzed	Chemist
2,4-Dimethylphenol	ND		ug/Kg	250	1	266473	05/04/21	05/06/21	DJL
Benzoic acid	ND		ug/Kg	1,200	1	266473	05/04/21	05/06/21	DJL
bis(2-Chloroethoxy)methane	ND		ug/Kg	250	1	266473	05/04/21	05/06/21	DJL
2,4-Dichlorophenol	ND		ug/Kg	250	1	266473	05/04/21	05/06/21	DJL
1,2,4-Trichlorobenzene	ND		ug/Kg	250	1	266473	05/04/21	05/06/21	DJL
Naphthalene	ND		ug/Kg	250	1	266473	05/04/21	05/06/21	DJL
4-Chloroaniline	ND		ug/Kg	250	1	266473	05/04/21	05/06/21	DJL
Hexachlorobutadiene	ND		ug/Kg	250	1	266473	05/04/21	05/06/21	DJL
4-Chloro-3-methylphenol	ND		ug/Kg	250	1	266473	05/04/21	05/06/21	DJL
2-Methylnaphthalene	ND		ug/Kg	250	1	266473	05/04/21	05/06/21	DJL
Hexachlorocyclopentadiene	ND		ug/Kg	1,200	1	266473	05/04/21	05/06/21	DJL
2,4,6-Trichlorophenol	ND		ug/Kg	250	1	266473	05/04/21	05/06/21	DJL
2,4,5-Trichlorophenol	ND		ug/Kg	250	1	266473	05/04/21	05/06/21	DJL
2-Chloronaphthalene	ND		ug/Kg	250	1	266473	05/04/21	05/06/21	DJL
2-Nitroaniline	ND		ug/Kg	250	1	266473	05/04/21	05/06/21	DJL
Dimethylphthalate	ND		ug/Kg	250	1	266473	05/04/21	05/06/21	DJL
Acenaphthylene	ND		ug/Kg	250	1	266473	05/04/21	05/06/21	DJL
2,6-Dinitrotoluene	ND		ug/Kg	250	1	266473	05/04/21	05/06/21	DJL
3-Nitroaniline	ND		ug/Kg	250	1	266473	05/04/21	05/06/21	DJL
Acenaphthene	ND		ug/Kg	250	1	266473	05/04/21	05/06/21	DJL
2,4-Dinitrophenol	ND		ug/Kg	1,200	1	266473	05/04/21	05/06/21	DJL
4-Nitrophenol	ND		ug/Kg	250	1	266473	05/04/21	05/06/21	DJL
Dibenzofuran	ND		ug/Kg	250	1	266473	05/04/21	05/06/21	DJL
2,4-Dinitrotoluene	ND		ug/Kg	250	1	266473	05/04/21	05/06/21	DJL
Diethylphthalate	ND		ug/Kg	250	1	266473	05/04/21	05/06/21	DJL
Fluorene	ND		ug/Kg	250	1	266473	05/04/21	05/06/21	DJL
4-Chlorophenyl-phenylether	ND		ug/Kg	250	1	266473	05/04/21	05/06/21	DJL
4-Nitroaniline	ND		ug/Kg	250	1	266473	05/04/21	05/06/21	DJL
4,6-Dinitro-2-methylphenol	ND		ug/Kg	250	1	266473	05/04/21	05/06/21	DJL
N-Nitrosodiphenylamine	ND		ug/Kg	250	1	266473	05/04/21	05/06/21	DJL
1,2-diphenylhydrazine (as azobenzene)	ND		ug/Kg	250	1	266473	05/04/21	05/06/21	DJL
4-Bromophenyl-phenylether	ND		ug/Kg	250	1	266473	05/04/21	05/06/21	DJL
Hexachlorobenzene	ND		ug/Kg	250	1	266473	05/04/21	05/06/21	DJL
Pentachlorophenol	ND		ug/Kg	1,200	1	266473	05/04/21	05/06/21	DJL
Phenanthrene	ND		ug/Kg	250	1	266473	05/04/21	05/06/21	DJL
Anthracene	ND		ug/Kg	250	1	266473	05/04/21	05/06/21	DJL
Di-n-butylphthalate	ND		ug/Kg	250	1	266473	05/04/21	05/06/21	DJL
Fluoranthene	ND		ug/Kg	250	1	266473	05/04/21	05/06/21	DJL
Benzidine	ND		ug/Kg	1,200	1	266473	05/04/21	05/06/21	DJL
Pyrene	ND		ug/Kg	250	1	266473	05/04/21	05/06/21	DJL
Butylbenzylphthalate	ND		ug/Kg	250	1	266473	05/04/21	05/06/21	DJL
3,3'-Dichlorobenzidine	ND		ug/Kg	1,200	1	266473	05/04/21	05/06/21	DJL
Benzo(a)anthracene	ND		ug/Kg	250	1	266473	05/04/21	05/06/21	DJL
Chrysene	ND		ug/Kg	250	1	266473	05/04/21	05/06/21	DJL
bis(2-Ethylhexyl)phthalate	ND		ug/Kg	250	1	266473	05/04/21	05/06/21	DJL
Di-n-octylphthalate	ND		ug/Kg	250	1	266473	05/04/21	05/06/21	DJL

Results for any subcontracted analyses are not included in this section.

Analysis Results for 444657

444657-056 Analyte	Result	Qual	Units	RL	DF	Batch	Prepared	Analyzed	Chemist
Benzo(b)fluoranthene	ND		ug/Kg	250	1	266473	05/04/21	05/06/21	DJL
Benzo(k)fluoranthene	ND		ug/Kg	250	1	266473	05/04/21	05/06/21	DJL
Benzo(a)pyrene	ND		ug/Kg	250	1	266473	05/04/21	05/06/21	DJL
Indeno(1,2,3-cd)pyrene	ND		ug/Kg	250	1	266473	05/04/21	05/06/21	DJL
Dibenz(a,h)anthracene	ND		ug/Kg	250	1	266473	05/04/21	05/06/21	DJL
Benzo(g,h,i)perylene	ND		ug/Kg	250	1	266473	05/04/21	05/06/21	DJL
Surrogates				**Limits**					
2-Fluorophenol	55%		%REC	29-120	1	266473	05/04/21	05/06/21	DJL
Phenol-d6	56%		%REC	30-120	1	266473	05/04/21	05/06/21	DJL
2,4,6-Tribromophenol	49%		%REC	32-120	1	266473	05/04/21	05/06/21	DJL
Nitrobenzene-d5	59%		%REC	33-120	1	266473	05/04/21	05/06/21	DJL
2-Fluorobiphenyl	58%		%REC	39-120	1	266473	05/04/21	05/06/21	DJL
Terphenyl-d14	57%		%REC	44-125	1	266473	05/04/21	05/06/21	DJL

Sample ID: TP20-7.5 **Lab ID: 444657-057** **Collected: 04/28/21 13:00**
Matrix: Soil

444657-057 Analyte	Result	Qual	Units	RL	DF	Batch	Prepared	Analyzed	Chemist
Method: EPA 6010B Prep Method: EPA 3050B									
Lead	**1.6**		mg/Kg	1.1	1.1	266289	04/30/21	04/30/21	SBW

Results for any subcontracted analyses are not included in this section.

ENTHALPY ANALYTICAL

Analysis Results for 444657

Sample ID: TP21-1	Lab ID: 444657-058	Collected: 04/28/21 13:30
	Matrix: Soil	

444657-058 Analyte	Result	Qual	Units	RL	DF	Batch	Prepared	Analyzed	Chemist
Method: EPA 6010B Prep Method: EPA 3050B									
Antimony	ND		mg/Kg	2.9	0.95	266289	04/30/21	04/30/21	SBW
Arsenic	**3.5**		mg/Kg	0.95	0.95	266289	04/30/21	04/30/21	SBW
Barium	**110**		mg/Kg	0.95	0.95	266289	04/30/21	04/30/21	SBW
Beryllium	ND		mg/Kg	0.48	0.95	266289	04/30/21	04/30/21	SBW
Cadmium	ND		mg/Kg	0.48	0.95	266289	04/30/21	04/30/21	SBW
Chromium	**16**		mg/Kg	0.95	0.95	266289	04/30/21	04/30/21	SBW
Cobalt	**8.1**		mg/Kg	0.48	0.95	266289	04/30/21	04/30/21	SBW
Copper	**20**		mg/Kg	0.95	0.95	266289	04/30/21	04/30/21	SBW
Lead	**42**		mg/Kg	0.95	0.95	266289	04/30/21	04/30/21	SBW
Molybdenum	ND		mg/Kg	0.95	0.95	266289	04/30/21	04/30/21	SBW
Nickel	**11**		mg/Kg	0.95	0.95	266289	04/30/21	04/30/21	SBW
Selenium	ND		mg/Kg	2.9	0.95	266289	04/30/21	04/30/21	SBW
Silver	ND		mg/Kg	0.48	0.95	266289	04/30/21	05/03/21	SBW
Thallium	ND		mg/Kg	2.9	0.95	266289	04/30/21	04/30/21	SBW
Vanadium	**37**		mg/Kg	0.95	0.95	266289	04/30/21	04/30/21	SBW
Zinc	**85**		mg/Kg	4.8	0.95	266289	04/30/21	04/30/21	SBW
Method: EPA 7471A Prep Method: METHOD									
Mercury	ND		mg/Kg	0.15	1.1	266326	04/30/21	04/30/21	JDB

Results for any subcontracted analyses are not included in this section.

ENTHALPY ANALYTICAL

Analysis Results for 444657

Sample ID: TP21-3	Lab ID: 444657-059	Collected: 04/28/21 13:35
	Matrix: Soil	

444657-059 Analyte	Result	Qual	Units	RL	DF	Batch	Prepared	Analyzed	Chemist
Method: EPA 6010B Prep Method: EPA 3050B									
Antimony	ND		mg/Kg	3.2	1.1	266289	04/30/21	04/30/21	SBW
Arsenic	**1.6**		mg/Kg	1.1	1.1	266289	04/30/21	04/30/21	SBW
Barium	**86**		mg/Kg	1.1	1.1	266289	04/30/21	04/30/21	SBW
Beryllium	ND		mg/Kg	0.53	1.1	266289	04/30/21	04/30/21	SBW
Cadmium	ND		mg/Kg	0.53	1.1	266289	04/30/21	04/30/21	SBW
Chromium	**20**		mg/Kg	1.1	1.1	266289	04/30/21	04/30/21	SBW
Cobalt	**6.8**		mg/Kg	0.53	1.1	266289	04/30/21	04/30/21	SBW
Copper	**16**		mg/Kg	1.1	1.1	266289	04/30/21	04/30/21	SBW
Lead	**45**		mg/Kg	1.1	1.1	266289	04/30/21	04/30/21	SBW
Molybdenum	ND		mg/Kg	1.1	1.1	266289	04/30/21	04/30/21	SBW
Nickel	**11**		mg/Kg	1.1	1.1	266289	04/30/21	04/30/21	SBW
Selenium	ND		mg/Kg	3.2	1.1	266289	04/30/21	04/30/21	SBW
Silver	ND		mg/Kg	0.53	1.1	266289	04/30/21	05/03/21	SBW
Thallium	ND		mg/Kg	3.2	1.1	266289	04/30/21	04/30/21	SBW
Vanadium	**35**		mg/Kg	1.1	1.1	266289	04/30/21	04/30/21	SBW
Zinc	**75**		mg/Kg	5.3	1.1	266289	04/30/21	04/30/21	SBW
Method: EPA 7471A Prep Method: METHOD									
Mercury	ND		mg/Kg	0.15	1.1	266326	04/30/21	04/30/21	JDB

Results for any subcontracted analyses are not included in this section.

ENTHALPY ANALYTICAL

Analysis Results for 444657

Sample ID: TP21-7	Lab ID: 444657-060	Collected: 04/28/21 13:50
	Matrix: Soil	

444657-060 Analyte	Result	Qual	Units	RL	DF	Batch	Prepared	Analyzed	Chemist
Method: EPA 6010B Prep Method: EPA 3050B									
Antimony	ND		mg/Kg	3.3	1.1	266289	04/30/21	04/30/21	SBW
Arsenic	ND		mg/Kg	1.1	1.1	266289	04/30/21	04/30/21	SBW
Barium	**52**		mg/Kg	1.1	1.1	266289	04/30/21	04/30/21	SBW
Beryllium	ND		mg/Kg	0.54	1.1	266289	04/30/21	04/30/21	SBW
Cadmium	ND		mg/Kg	0.54	1.1	266289	04/30/21	04/30/21	SBW
Chromium	**3.8**		mg/Kg	1.1	1.1	266289	04/30/21	04/30/21	SBW
Cobalt	**2.5**		mg/Kg	0.54	1.1	266289	04/30/21	04/30/21	SBW
Copper	**7.4**		mg/Kg	1.1	1.1	266289	04/30/21	04/30/21	SBW
Lead	**9.6**		mg/Kg	1.1	1.1	266289	04/30/21	04/30/21	SBW
Molybdenum	ND		mg/Kg	1.1	1.1	266289	04/30/21	04/30/21	SBW
Nickel	**2.3**		mg/Kg	1.1	1.1	266289	04/30/21	04/30/21	SBW
Selenium	ND		mg/Kg	3.3	1.1	266289	04/30/21	04/30/21	SBW
Silver	ND		mg/Kg	0.54	1.1	266289	04/30/21	05/03/21	SBW
Thallium	ND		mg/Kg	3.3	1.1	266289	04/30/21	04/30/21	SBW
Vanadium	**14**		mg/Kg	1.1	1.1	266289	04/30/21	04/30/21	SBW
Zinc	**190**		mg/Kg	5.4	1.1	266289	04/30/21	04/30/21	SBW
Method: EPA 7471A Prep Method: METHOD									
Mercury	ND		mg/Kg	0.14	1	266326	04/30/21	04/30/21	JDB

Results for any subcontracted analyses are not included in this section.

ENTHALPY ANALYTICAL

Analysis Results for 444657

Sample ID: TP21-5	Lab ID: 444657-061	Collected: 04/28/21 14:15
	Matrix: Soil	

444657-061 Analyte	Result	Qual	Units	RL	DF	Batch	Prepared	Analyzed	Chemist
Method: EPA 6010B Prep Method: EPA 3050B									
Antimony	**10**		mg/Kg	2.8	0.92	266289	04/30/21	04/30/21	SBW
Arsenic	**2.6**		mg/Kg	0.92	0.92	266289	04/30/21	04/30/21	SBW
Barium	**560**		mg/Kg	0.92	0.92	266289	04/30/21	04/30/21	SBW
Beryllium	ND		mg/Kg	0.46	0.92	266289	04/30/21	04/30/21	SBW
Cadmium	**3.9**		mg/Kg	0.46	0.92	266289	04/30/21	04/30/21	SBW
Chromium	**23**		mg/Kg	0.92	0.92	266289	04/30/21	04/30/21	SBW
Cobalt	**5.5**		mg/Kg	0.46	0.92	266289	04/30/21	04/30/21	SBW
Copper	**140**		mg/Kg	0.92	0.92	266289	04/30/21	04/30/21	SBW
Lead	**1,800**		mg/Kg	0.92	0.92	266289	04/30/21	04/30/21	SBW
Molybdenum	ND		mg/Kg	0.92	0.92	266289	04/30/21	04/30/21	SBW
Nickel	**30**		mg/Kg	0.92	0.92	266289	04/30/21	04/30/21	SBW
Selenium	ND		mg/Kg	2.8	0.92	266289	04/30/21	04/30/21	SBW
Silver	**0.46**		mg/Kg	0.46	0.92	266289	04/30/21	05/03/21	SBW
Thallium	ND		mg/Kg	2.8	0.92	266289	04/30/21	04/30/21	SBW
Vanadium	**35**		mg/Kg	0.92	0.92	266289	04/30/21	04/30/21	SBW
Zinc	**3,900**		mg/Kg	4.6	0.92	266289	04/30/21	04/30/21	SBW
Method: EPA 7471A Prep Method: METHOD									
Mercury	ND		mg/Kg	0.16	1.1	266326	04/30/21	04/30/21	JDB
Method: EPA 8015B Prep Method: EPA 3580									
GRO C6-C10	ND		mg/Kg	10	1	266432	05/03/21	05/05/21	MES
DRO C10-C28	ND		mg/Kg	10	1	266432	05/03/21	05/05/21	MES
ORO C28-C44	ND		mg/Kg	20	1	266432	05/03/21	05/05/21	MES
Surrogates				**Limits**					
n-Triacontane	103%		%REC	70-130	1	266432	05/03/21	05/05/21	MES
Method: EPA 8081A Prep Method: EPA 3546									
alpha-BHC	ND		ug/Kg	5.0	1	266300	04/30/21	05/01/21	KTD
beta-BHC	ND		ug/Kg	5.0	1	266300	04/30/21	05/01/21	KTD
gamma-BHC	ND		ug/Kg	5.0	1	266300	04/30/21	05/01/21	KTD
delta-BHC	ND		ug/Kg	5.0	1	266300	04/30/21	05/01/21	KTD
Heptachlor	ND		ug/Kg	5.0	1	266300	04/30/21	05/01/21	KTD
Aldrin	ND		ug/Kg	5.0	1	266300	04/30/21	05/01/21	KTD
Heptachlor epoxide	ND		ug/Kg	5.0	1	266300	04/30/21	05/01/21	KTD
Endosulfan I	ND		ug/Kg	5.0	1	266300	04/30/21	05/01/21	KTD
Dieldrin	ND		ug/Kg	5.0	1	266300	04/30/21	05/01/21	KTD
4,4'-DDE	**6.9**		ug/Kg	5.0	1	266300	04/30/21	05/01/21	KTD
Endrin	ND		ug/Kg	5.0	1	266300	04/30/21	05/01/21	KTD
Endosulfan II	ND		ug/Kg	5.0	1	266300	04/30/21	05/01/21	KTD

Results for any subcontracted analyses are not included in this section.

Analysis Results for 444657

444657-061 Analyte	Result	Qual	Units	RL	DF	Batch	Prepared	Analyzed	Chemist
Endosulfan sulfate	ND		ug/Kg	5.0	1	266300	04/30/21	05/01/21	KTD
4,4'-DDD	ND		ug/Kg	5.0	1	266300	04/30/21	05/01/21	KTD
Endrin aldehyde	ND		ug/Kg	5.0	1	266300	04/30/21	05/01/21	KTD
Endrin ketone	ND		ug/Kg	5.0	1	266300	04/30/21	05/01/21	KTD
4,4'-DDT	ND		ug/Kg	5.0	1	266300	04/30/21	05/01/21	KTD
Methoxychlor	ND		ug/Kg	10	1	266300	04/30/21	05/01/21	KTD
Toxaphene	ND		ug/Kg	100	1	266300	04/30/21	05/01/21	KTD
Chlordane (Technical)	ND		ug/Kg	50	1	266300	04/30/21	05/01/21	KTD
Surrogates				**Limits**					
TCMX	69%		%REC	23-120	1	266300	04/30/21	05/01/21	KTD
Decachlorobiphenyl	68%		%REC	24-120	1	266300	04/30/21	05/01/21	KTD
Method: EPA 8082 Prep Method: EPA 3546									
Aroclor-1016	ND		ug/Kg	50	1	266300	04/30/21	05/01/21	KTD
Aroclor-1221	ND		ug/Kg	50	1	266300	04/30/21	05/01/21	KTD
Aroclor-1232	ND		ug/Kg	50	1	266300	04/30/21	05/01/21	KTD
Aroclor-1242	ND		ug/Kg	50	1	266300	04/30/21	05/01/21	KTD
Aroclor-1248	ND		ug/Kg	50	1	266300	04/30/21	05/01/21	KTD
Aroclor-1254	ND		ug/Kg	50	1	266300	04/30/21	05/01/21	KTD
Aroclor-1260	ND		ug/Kg	50	1	266300	04/30/21	05/01/21	KTD
Aroclor-1262	ND		ug/Kg	50	1	266300	04/30/21	05/01/21	KTD
Aroclor-1268	ND		ug/Kg	50	1	266300	04/30/21	05/01/21	KTD
Surrogates				**Limits**					
Decachlorobiphenyl (PCB)	61%		%REC	19-121	1	266300	04/30/21	05/01/21	KTD
Method: EPA 8260B Prep Method: EPA 5030B									
3-Chloropropene	ND		ug/Kg	5.0	1	266284	04/30/21	04/30/21	TCN
cis-1,4-Dichloro-2-butene	ND		ug/Kg	5.0	1	266284	04/30/21	04/30/21	TCN
trans-1,4-Dichloro-2-butene	ND		ug/Kg	5.0	1	266284	04/30/21	04/30/21	TCN
Isopropyl Ether (DIPE)	ND		ug/Kg	5.0	1	266284	04/30/21	04/30/21	TCN
Ethyl tert-Butyl Ether (ETBE)	ND		ug/Kg	5.0	1	266284	04/30/21	04/30/21	TCN
Methyl tert-Amyl Ether (TAME)	ND		ug/Kg	5.0	1	266284	04/30/21	04/30/21	TCN
tert-Butyl Alcohol (TBA)	ND		ug/Kg	10	1	266284	04/30/21	04/30/21	TCN
Freon 12	ND		ug/Kg	5.0	1	266284	04/30/21	04/30/21	TCN
Chloromethane	ND		ug/Kg	5.0	1	266284	04/30/21	04/30/21	TCN
Vinyl Chloride	ND		ug/Kg	5.0	1	266284	04/30/21	04/30/21	TCN
Bromomethane	ND		ug/Kg	5.0	1	266284	04/30/21	04/30/21	TCN
Chloroethane	ND		ug/Kg	5.0	1	266284	04/30/21	04/30/21	TCN
Trichlorofluoromethane	ND		ug/Kg	5.0	1	266284	04/30/21	04/30/21	TCN
Acetone	ND		ug/Kg	100	1	266284	04/30/21	04/30/21	TCN
Freon 113	ND		ug/Kg	5.0	1	266284	04/30/21	04/30/21	TCN
1,1-Dichloroethene	ND		ug/Kg	5.0	1	266284	04/30/21	04/30/21	TCN
Methylene Chloride	ND		ug/Kg	5.0	1	266284	04/30/21	04/30/21	TCN
MTBE	ND		ug/Kg	5.0	1	266284	04/30/21	04/30/21	TCN
trans-1,2-Dichloroethene	ND		ug/Kg	5.0	1	266284	04/30/21	04/30/21	TCN
1,1-Dichloroethane	ND		ug/Kg	5.0	1	266284	04/30/21	04/30/21	TCN

Results for any subcontracted analyses are not included in this section.

ENTHALPY ANALYTICAL

Analysis Results for 444657

444657-061 Analyte	Result	Qual	Units	RL	DF	Batch	Prepared	Analyzed	Chemist
2-Butanone	ND		ug/Kg	100	1	266284	04/30/21	04/30/21	TCN
cis-1,2-Dichloroethene	ND		ug/Kg	5.0	1	266284	04/30/21	04/30/21	TCN
2,2-Dichloropropane	ND		ug/Kg	5.0	1	266284	04/30/21	04/30/21	TCN
Chloroform	ND		ug/Kg	5.0	1	266284	04/30/21	04/30/21	TCN
Bromochloromethane	ND		ug/Kg	5.0	1	266284	04/30/21	04/30/21	TCN
1,1,1-Trichloroethane	ND		ug/Kg	5.0	1	266284	04/30/21	04/30/21	TCN
1,1-Dichloropropene	ND		ug/Kg	5.0	1	266284	04/30/21	04/30/21	TCN
Carbon Tetrachloride	ND		ug/Kg	5.0	1	266284	04/30/21	04/30/21	TCN
1,2-Dichloroethane	ND		ug/Kg	5.0	1	266284	04/30/21	04/30/21	TCN
Benzene	ND		ug/Kg	5.0	1	266284	04/30/21	04/30/21	TCN
Trichloroethene	ND		ug/Kg	5.0	1	266284	04/30/21	04/30/21	TCN
1,2-Dichloropropane	ND		ug/Kg	5.0	1	266284	04/30/21	04/30/21	TCN
Bromodichloromethane	ND		ug/Kg	5.0	1	266284	04/30/21	04/30/21	TCN
Dibromomethane	ND		ug/Kg	5.0	1	266284	04/30/21	04/30/21	TCN
4-Methyl-2-Pentanone	ND		ug/Kg	5.0	1	266284	04/30/21	04/30/21	TCN
cis-1,3-Dichloropropene	ND		ug/Kg	5.0	1	266284	04/30/21	04/30/21	TCN
Toluene	ND		ug/Kg	5.0	1	266284	04/30/21	04/30/21	TCN
trans-1,3-Dichloropropene	ND		ug/Kg	5.0	1	266284	04/30/21	04/30/21	TCN
1,1,2-Trichloroethane	ND		ug/Kg	5.0	1	266284	04/30/21	04/30/21	TCN
1,3-Dichloropropane	ND		ug/Kg	5.0	1	266284	04/30/21	04/30/21	TCN
Tetrachloroethene	ND		ug/Kg	5.0	1	266284	04/30/21	04/30/21	TCN
Dibromochloromethane	ND		ug/Kg	5.0	1	266284	04/30/21	04/30/21	TCN
1,2-Dibromoethane	ND		ug/Kg	5.0	1	266284	04/30/21	04/30/21	TCN
Chlorobenzene	ND		ug/Kg	5.0	1	266284	04/30/21	04/30/21	TCN
1,1,1,2-Tetrachloroethane	ND		ug/Kg	5.0	1	266284	04/30/21	04/30/21	TCN
Ethylbenzene	ND		ug/Kg	5.0	1	266284	04/30/21	04/30/21	TCN
m,p-Xylenes	ND		ug/Kg	10	1	266284	04/30/21	04/30/21	TCN
o-Xylene	ND		ug/Kg	5.0	1	266284	04/30/21	04/30/21	TCN
Styrene	ND		ug/Kg	5.0	1	266284	04/30/21	04/30/21	TCN
Bromoform	ND		ug/Kg	5.0	1	266284	04/30/21	04/30/21	TCN
Isopropylbenzene	ND		ug/Kg	5.0	1	266284	04/30/21	04/30/21	TCN
1,1,2,2-Tetrachloroethane	ND		ug/Kg	5.0	1	266284	04/30/21	04/30/21	TCN
1,2,3-Trichloropropane	ND		ug/Kg	5.0	1	266284	04/30/21	04/30/21	TCN
Propylbenzene	ND		ug/Kg	5.0	1	266284	04/30/21	04/30/21	TCN
Bromobenzene	ND		ug/Kg	5.0	1	266284	04/30/21	04/30/21	TCN
1,3,5-Trimethylbenzene	ND		ug/Kg	5.0	1	266284	04/30/21	04/30/21	TCN
2-Chlorotoluene	ND		ug/Kg	5.0	1	266284	04/30/21	04/30/21	TCN
4-Chlorotoluene	ND		ug/Kg	5.0	1	266284	04/30/21	04/30/21	TCN
tert-Butylbenzene	ND		ug/Kg	5.0	1	266284	04/30/21	04/30/21	TCN
1,2,4-Trimethylbenzene	ND		ug/Kg	5.0	1	266284	04/30/21	04/30/21	TCN
sec-Butylbenzene	ND		ug/Kg	5.0	1	266284	04/30/21	04/30/21	TCN
para-Isopropyl Toluene	ND		ug/Kg	5.0	1	266284	04/30/21	04/30/21	TCN
1,3-Dichlorobenzene	ND		ug/Kg	5.0	1	266284	04/30/21	04/30/21	TCN
1,4-Dichlorobenzene	ND		ug/Kg	5.0	1	266284	04/30/21	04/30/21	TCN
n-Butylbenzene	ND		ug/Kg	5.0	1	266284	04/30/21	04/30/21	TCN
1,2-Dichlorobenzene	ND		ug/Kg	5.0	1	266284	04/30/21	04/30/21	TCN

Results for any subcontracted analyses are not included in this section.

ENTHALPY ANALYTICAL

Analysis Results for 444657

444657-061 Analyte	Result	Qual	Units	RL	DF	Batch	Prepared	Analyzed	Chemist
1,2-Dibromo-3-Chloropropane	ND		ug/Kg	5.0	1	266284	04/30/21	04/30/21	TCN
1,2,4-Trichlorobenzene	ND		ug/Kg	5.0	1	266284	04/30/21	04/30/21	TCN
Hexachlorobutadiene	ND		ug/Kg	5.0	1	266284	04/30/21	04/30/21	TCN
Naphthalene	ND		ug/Kg	5.0	1	266284	04/30/21	04/30/21	TCN
1,2,3-Trichlorobenzene	ND		ug/Kg	5.0	1	266284	04/30/21	04/30/21	TCN
Xylene (total)	ND		ug/Kg	5.0	1	266284	04/30/21	04/30/21	TCN
Surrogates				**Limits**					
Dibromofluoromethane	103%		%REC	70-145	1	266284	04/30/21	04/30/21	TCN
1,2-Dichloroethane-d4	93%		%REC	70-145	1	266284	04/30/21	04/30/21	TCN
Toluene-d8	102%		%REC	70-145	1	266284	04/30/21	04/30/21	TCN
Bromofluorobenzene	95%		%REC	70-145	1	266284	04/30/21	04/30/21	TCN
Method: EPA 8270C Prep Method: EPA 3546									
Carbazole	ND		ug/Kg	250	1	266473	05/04/21	05/06/21	DJL
1-Methylnaphthalene	ND		ug/Kg	250	1	266473	05/04/21	05/06/21	DJL
Pyridine	ND		ug/Kg	250	1	266473	05/04/21	05/06/21	DJL
N-Nitrosodimethylamine	ND		ug/Kg	250	1	266473	05/04/21	05/06/21	DJL
Phenol	ND		ug/Kg	250	1	266473	05/04/21	05/06/21	DJL
Aniline	ND		ug/Kg	250	1	266473	05/04/21	05/06/21	DJL
bis(2-Chloroethyl)ether	ND		ug/Kg	1,200	1	266473	05/04/21	05/06/21	DJL
2-Chlorophenol	ND		ug/Kg	250	1	266473	05/04/21	05/06/21	DJL
1,3-Dichlorobenzene	ND		ug/Kg	250	1	266473	05/04/21	05/06/21	DJL
1,4-Dichlorobenzene	ND		ug/Kg	250	1	266473	05/04/21	05/06/21	DJL
Benzyl alcohol	ND		ug/Kg	250	1	266473	05/04/21	05/06/21	DJL
1,2-Dichlorobenzene	ND		ug/Kg	250	1	266473	05/04/21	05/06/21	DJL
2-Methylphenol	ND		ug/Kg	250	1	266473	05/04/21	05/06/21	DJL
bis(2-Chloroisopropyl) ether	ND		ug/Kg	250	1	266473	05/04/21	05/06/21	DJL
3-,4-Methylphenol	ND		ug/Kg	400	1	266473	05/04/21	05/06/21	DJL
N-Nitroso-di-n-propylamine	ND		ug/Kg	250	1	266473	05/04/21	05/06/21	DJL
Hexachloroethane	ND		ug/Kg	250	1	266473	05/04/21	05/06/21	DJL
Nitrobenzene	ND		ug/Kg	1,200	1	266473	05/04/21	05/06/21	DJL
Isophorone	ND		ug/Kg	250	1	266473	05/04/21	05/06/21	DJL
2-Nitrophenol	ND		ug/Kg	250	1	266473	05/04/21	05/06/21	DJL
2,4-Dimethylphenol	ND		ug/Kg	250	1	266473	05/04/21	05/06/21	DJL
Benzoic acid	ND		ug/Kg	1,200	1	266473	05/04/21	05/06/21	DJL
bis(2-Chloroethoxy)methane	ND		ug/Kg	250	1	266473	05/04/21	05/06/21	DJL
2,4-Dichlorophenol	ND		ug/Kg	250	1	266473	05/04/21	05/06/21	DJL
1,2,4-Trichlorobenzene	ND		ug/Kg	250	1	266473	05/04/21	05/06/21	DJL
Naphthalene	ND		ug/Kg	250	1	266473	05/04/21	05/06/21	DJL
4-Chloroaniline	ND		ug/Kg	250	1	266473	05/04/21	05/06/21	DJL
Hexachlorobutadiene	ND		ug/Kg	250	1	266473	05/04/21	05/06/21	DJL
4-Chloro-3-methylphenol	ND		ug/Kg	250	1	266473	05/04/21	05/06/21	DJL
2-Methylnaphthalene	ND		ug/Kg	250	1	266473	05/04/21	05/06/21	DJL
Hexachlorocyclopentadiene	ND		ug/Kg	1,200	1	266473	05/04/21	05/06/21	DJL
2,4,6-Trichlorophenol	ND		ug/Kg	250	1	266473	05/04/21	05/06/21	DJL
2,4,5-Trichlorophenol	ND		ug/Kg	250	1	266473	05/04/21	05/06/21	DJL

Results for any subcontracted analyses are not included in this section.

ENTHALPY ANALYTICAL

Analysis Results for 444657

444657-061 Analyte	Result	Qual	Units	RL	DF	Batch	Prepared	Analyzed	Chemist
2-Chloronaphthalene	ND		ug/Kg	250	1	266473	05/04/21	05/06/21	DJL
2-Nitroaniline	ND		ug/Kg	250	1	266473	05/04/21	05/06/21	DJL
Dimethylphthalate	ND		ug/Kg	250	1	266473	05/04/21	05/06/21	DJL
Acenaphthylene	ND		ug/Kg	250	1	266473	05/04/21	05/06/21	DJL
2,6-Dinitrotoluene	ND		ug/Kg	250	1	266473	05/04/21	05/06/21	DJL
3-Nitroaniline	ND		ug/Kg	250	1	266473	05/04/21	05/06/21	DJL
Acenaphthene	ND		ug/Kg	250	1	266473	05/04/21	05/06/21	DJL
2,4-Dinitrophenol	ND		ug/Kg	1,200	1	266473	05/04/21	05/06/21	DJL
4-Nitrophenol	ND		ug/Kg	250	1	266473	05/04/21	05/06/21	DJL
Dibenzofuran	ND		ug/Kg	250	1	266473	05/04/21	05/06/21	DJL
2,4-Dinitrotoluene	ND		ug/Kg	250	1	266473	05/04/21	05/06/21	DJL
Diethylphthalate	ND		ug/Kg	250	1	266473	05/04/21	05/06/21	DJL
Fluorene	ND		ug/Kg	250	1	266473	05/04/21	05/06/21	DJL
4-Chlorophenyl-phenylether	ND		ug/Kg	250	1	266473	05/04/21	05/06/21	DJL
4-Nitroaniline	ND		ug/Kg	250	1	266473	05/04/21	05/06/21	DJL
4,6-Dinitro-2-methylphenol	ND		ug/Kg	250	1	266473	05/04/21	05/06/21	DJL
N-Nitrosodiphenylamine	ND		ug/Kg	250	1	266473	05/04/21	05/06/21	DJL
1,2-diphenylhydrazine (as azobenzene)	ND		ug/Kg	250	1	266473	05/04/21	05/06/21	DJL
4-Bromophenyl-phenylether	ND		ug/Kg	250	1	266473	05/04/21	05/06/21	DJL
Hexachlorobenzene	ND		ug/Kg	250	1	266473	05/04/21	05/06/21	DJL
Pentachlorophenol	ND		ug/Kg	1,200	1	266473	05/04/21	05/06/21	DJL
Phenanthrene	ND		ug/Kg	250	1	266473	05/04/21	05/06/21	DJL
Anthracene	ND		ug/Kg	250	1	266473	05/04/21	05/06/21	DJL
Di-n-butylphthalate	ND		ug/Kg	250	1	266473	05/04/21	05/06/21	DJL
Fluoranthene	ND		ug/Kg	250	1	266473	05/04/21	05/06/21	DJL
Benzidine	ND		ug/Kg	1,200	1	266473	05/04/21	05/06/21	DJL
Pyrene	ND		ug/Kg	250	1	266473	05/04/21	05/06/21	DJL
Butylbenzylphthalate	ND		ug/Kg	250	1	266473	05/04/21	05/06/21	DJL
3,3'-Dichlorobenzidine	ND		ug/Kg	1,200	1	266473	05/04/21	05/06/21	DJL
Benzo(a)anthracene	ND		ug/Kg	250	1	266473	05/04/21	05/06/21	DJL
Chrysene	ND		ug/Kg	250	1	266473	05/04/21	05/06/21	DJL
bis(2-Ethylhexyl)phthalate	ND		ug/Kg	250	1	266473	05/04/21	05/06/21	DJL
Di-n-octylphthalate	ND		ug/Kg	250	1	266473	05/04/21	05/06/21	DJL
Benzo(b)fluoranthene	ND		ug/Kg	250	1	266473	05/04/21	05/06/21	DJL
Benzo(k)fluoranthene	ND		ug/Kg	250	1	266473	05/04/21	05/06/21	DJL
Benzo(a)pyrene	ND		ug/Kg	250	1	266473	05/04/21	05/06/21	DJL
Indeno(1,2,3-cd)pyrene	ND		ug/Kg	250	1	266473	05/04/21	05/06/21	DJL
Dibenz(a,h)anthracene	ND		ug/Kg	250	1	266473	05/04/21	05/06/21	DJL
Benzo(g,h,i)perylene	ND		ug/Kg	250	1	266473	05/04/21	05/06/21	DJL
Surrogates				**Limits**					
2-Fluorophenol	66%		%REC	29-120	1	266473	05/04/21	05/06/21	DJL
Phenol-d6	67%		%REC	30-120	1	266473	05/04/21	05/06/21	DJL
2,4,6-Tribromophenol	64%		%REC	32-120	1	266473	05/04/21	05/06/21	DJL
Nitrobenzene-d5	69%		%REC	33-120	1	266473	05/04/21	05/06/21	DJL
2-Fluorobiphenyl	67%		%REC	39-120	1	266473	05/04/21	05/06/21	DJL
Terphenyl-d14	65%		%REC	44-125	1	266473	05/04/21	05/06/21	DJL

Results for any subcontracted analyses are not included in this section.

Analysis Results for 444657

Sample ID: TP21-5.5	Lab ID: 444657-062	Collected: 04/28/21 14:30
	Matrix: Soil	

444657-062 Analyte	Result	Qual	Units	RL	DF	Batch	Prepared	Analyzed	Chemist
Method: EPA 6010B Prep Method: EPA 3050B									
Antimony	ND		mg/Kg	2.8	0.92	266289	04/30/21	04/30/21	SBW
Arsenic	**1.3**		mg/Kg	0.92	0.92	266289	04/30/21	04/30/21	SBW
Barium	**150**		mg/Kg	0.92	0.92	266289	04/30/21	04/30/21	SBW
Beryllium	ND		mg/Kg	0.46	0.92	266289	04/30/21	04/30/21	SBW
Cadmium	**1.1**		mg/Kg	0.46	0.92	266289	04/30/21	04/30/21	SBW
Chromium	**7.4**		mg/Kg	0.92	0.92	266289	04/30/21	04/30/21	SBW
Cobalt	**4.0**		mg/Kg	0.46	0.92	266289	04/30/21	04/30/21	SBW
Copper	**23**		mg/Kg	0.92	0.92	266289	04/30/21	04/30/21	SBW
Lead	**76**		mg/Kg	0.92	0.92	266289	04/30/21	04/30/21	SBW
Molybdenum	ND		mg/Kg	0.92	0.92	266289	04/30/21	04/30/21	SBW
Nickel	**13**		mg/Kg	0.92	0.92	266289	04/30/21	04/30/21	SBW
Selenium	ND		mg/Kg	2.8	0.92	266289	04/30/21	04/30/21	SBW
Silver	ND		mg/Kg	0.46	0.92	266289	04/30/21	05/03/21	SBW
Thallium	ND		mg/Kg	2.8	0.92	266289	04/30/21	04/30/21	SBW
Vanadium	**26**		mg/Kg	0.92	0.92	266289	04/30/21	04/30/21	SBW
Zinc	**1,400**		mg/Kg	4.6	0.92	266289	04/30/21	04/30/21	SBW
Method: EPA 7471A Prep Method: METHOD									
Mercury	ND		mg/Kg	0.16	1.2	266326	04/30/21	04/30/21	JDB
Method: EPA 8015B Prep Method: EPA 3580									
GRO C6-C10	ND		mg/Kg	200	20	266432	05/03/21	05/05/21	MES
DRO C10-C28	ND		mg/Kg	200	20	266432	05/03/21	05/05/21	MES
ORO C28-C44	ND		mg/Kg	400	20	266432	05/03/21	05/05/21	MES
Surrogates				**Limits**					
n-Triacontane		DO	%REC	70-130	20	266432	05/03/21	05/05/21	MES

Sample ID: TP22-0.75	Lab ID: 444657-063	Collected: 04/28/21 14:30
	Matrix: Soil	

444657-063 Analyte	Result	Qual	Units	RL	DF	Batch	Prepared	Analyzed	Chemist
Method: EPA 6010B Prep Method: EPA 3050B									
Lead	**19**		mg/Kg	0.95	0.95	266289	04/30/21	04/30/21	SBW

Results for any subcontracted analyses are not included in this section.

Analysis Results for 444657

Sample ID: TP22-3	Lab ID: 444657-064	Collected: 04/28/21 14:35
	Matrix: Soil	

444657-064 Analyte	Result	Qual	Units	RL	DF	Batch	Prepared	Analyzed	Chemist
Method: EPA 6010B Prep Method: EPA 3050B									
Lead	**40**		mg/Kg	0.95	0.95	266289	04/30/21	04/30/21	SBW

Sample ID: TP22-6	Lab ID: 444657-065	Collected: 04/28/21 14:45
	Matrix: Soil	

444657-065 Analyte	Result	Qual	Units	RL	DF	Batch	Prepared	Analyzed	Chemist
Method: EPA 6010B Prep Method: EPA 3050B									
Lead	**3.3**		mg/Kg	0.85	0.85	266289	04/30/21	04/30/21	SBW

DO Diluted Out
ND Not Detected

Results for any subcontracted analyses are not included in this section.

ENTHALPY ANALYTICAL

Batch QC

Type:	**Blank**	**Lab ID:**	**QC922527**	**Batch:**	**266284**
Matrix:	**Soil**	**Method:**	**EPA 8260B**	**Prep Method:**	**EPA 5030B**

QC922527 Analyte	Result	Qual	Units	RL	Prepared	Analyzed
3-Chloropropene	ND		ug/Kg	5.0	04/30/21	04/30/21
cis-1,4-Dichloro-2-butene	ND		ug/Kg	5.0	04/30/21	04/30/21
trans-1,4-Dichloro-2-butene	ND		ug/Kg	5.0	04/30/21	04/30/21
Isopropyl Ether (DIPE)	ND		ug/Kg	5.0	04/30/21	04/30/21
Ethyl tert-Butyl Ether (ETBE)	ND		ug/Kg	5.0	04/30/21	04/30/21
Methyl tert-Amyl Ether (TAME)	ND		ug/Kg	5.0	04/30/21	04/30/21
tert-Butyl Alcohol (TBA)	ND		ug/Kg	10	04/30/21	04/30/21
Freon 12	ND		ug/Kg	5.0	04/30/21	04/30/21
Chloromethane	ND		ug/Kg	5.0	04/30/21	04/30/21
Vinyl Chloride	ND		ug/Kg	5.0	04/30/21	04/30/21
Bromomethane	ND		ug/Kg	5.0	04/30/21	04/30/21
Chloroethane	ND		ug/Kg	5.0	04/30/21	04/30/21
Trichlorofluoromethane	ND		ug/Kg	5.0	04/30/21	04/30/21
Acetone	ND		ug/Kg	100	04/30/21	04/30/21
Freon 113	ND		ug/Kg	5.0	04/30/21	04/30/21
1,1-Dichloroethene	ND		ug/Kg	5.0	04/30/21	04/30/21
Methylene Chloride	ND		ug/Kg	5.0	04/30/21	04/30/21
MTBE	ND		ug/Kg	5.0	04/30/21	04/30/21
trans-1,2-Dichloroethene	ND		ug/Kg	5.0	04/30/21	04/30/21
1,1-Dichloroethane	ND		ug/Kg	5.0	04/30/21	04/30/21
2-Butanone	ND		ug/Kg	100	04/30/21	04/30/21
cis-1,2-Dichloroethene	ND		ug/Kg	5.0	04/30/21	04/30/21
2,2-Dichloropropane	ND		ug/Kg	5.0	04/30/21	04/30/21
Chloroform	ND		ug/Kg	5.0	04/30/21	04/30/21
Bromochloromethane	ND		ug/Kg	5.0	04/30/21	04/30/21
1,1,1-Trichloroethane	ND		ug/Kg	5.0	04/30/21	04/30/21
1,1-Dichloropropene	ND		ug/Kg	5.0	04/30/21	04/30/21
Carbon Tetrachloride	ND		ug/Kg	5.0	04/30/21	04/30/21
1,2-Dichloroethane	ND		ug/Kg	5.0	04/30/21	04/30/21
Benzene	ND		ug/Kg	5.0	04/30/21	04/30/21
Trichloroethene	ND		ug/Kg	5.0	04/30/21	04/30/21
1,2-Dichloropropane	ND		ug/Kg	5.0	04/30/21	04/30/21
Bromodichloromethane	ND		ug/Kg	5.0	04/30/21	04/30/21
Dibromomethane	ND		ug/Kg	5.0	04/30/21	04/30/21
4-Methyl-2-Pentanone	ND		ug/Kg	5.0	04/30/21	04/30/21
cis-1,3-Dichloropropene	ND		ug/Kg	5.0	04/30/21	04/30/21
Toluene	ND		ug/Kg	5.0	04/30/21	04/30/21
trans-1,3-Dichloropropene	ND		ug/Kg	5.0	04/30/21	04/30/21
1,1,2-Trichloroethane	ND		ug/Kg	5.0	04/30/21	04/30/21
1,3-Dichloropropane	ND		ug/Kg	5.0	04/30/21	04/30/21
Tetrachloroethene	ND		ug/Kg	5.0	04/30/21	04/30/21
Dibromochloromethane	ND		ug/Kg	5.0	04/30/21	04/30/21

ENTHALPY ANALYTICAL

Batch QC

QC922527 Analyte	Result	Qual	Units	RL	Prepared	Analyzed
1,2-Dibromoethane	ND		ug/Kg	5.0	04/30/21	04/30/21
Chlorobenzene	ND		ug/Kg	5.0	04/30/21	04/30/21
1,1,1,2-Tetrachloroethane	ND		ug/Kg	5.0	04/30/21	04/30/21
Ethylbenzene	ND		ug/Kg	5.0	04/30/21	04/30/21
m,p-Xylenes	ND		ug/Kg	10	04/30/21	04/30/21
o-Xylene	ND		ug/Kg	5.0	04/30/21	04/30/21
Styrene	ND		ug/Kg	5.0	04/30/21	04/30/21
Bromoform	ND		ug/Kg	5.0	04/30/21	04/30/21
Isopropylbenzene	ND		ug/Kg	5.0	04/30/21	04/30/21
1,1,2,2-Tetrachloroethane	ND		ug/Kg	5.0	04/30/21	04/30/21
1,2,3-Trichloropropane	ND		ug/Kg	5.0	04/30/21	04/30/21
Propylbenzene	ND		ug/Kg	5.0	04/30/21	04/30/21
Bromobenzene	ND		ug/Kg	5.0	04/30/21	04/30/21
1,3,5-Trimethylbenzene	ND		ug/Kg	5.0	04/30/21	04/30/21
2-Chlorotoluene	ND		ug/Kg	5.0	04/30/21	04/30/21
4-Chlorotoluene	ND		ug/Kg	5.0	04/30/21	04/30/21
tert-Butylbenzene	ND		ug/Kg	5.0	04/30/21	04/30/21
1,2,4-Trimethylbenzene	ND		ug/Kg	5.0	04/30/21	04/30/21
sec-Butylbenzene	ND		ug/Kg	5.0	04/30/21	04/30/21
para-Isopropyl Toluene	ND		ug/Kg	5.0	04/30/21	04/30/21
1,3-Dichlorobenzene	ND		ug/Kg	5.0	04/30/21	04/30/21
1,4-Dichlorobenzene	ND		ug/Kg	5.0	04/30/21	04/30/21
n-Butylbenzene	ND		ug/Kg	5.0	04/30/21	04/30/21
1,2-Dichlorobenzene	ND		ug/Kg	5.0	04/30/21	04/30/21
1,2-Dibromo-3-Chloropropane	ND		ug/Kg	5.0	04/30/21	04/30/21
1,2,4-Trichlorobenzene	ND		ug/Kg	5.0	04/30/21	04/30/21
Hexachlorobutadiene	ND		ug/Kg	5.0	04/30/21	04/30/21
Naphthalene	ND		ug/Kg	5.0	04/30/21	04/30/21
1,2,3-Trichlorobenzene	ND		ug/Kg	5.0	04/30/21	04/30/21
Xylene (total)	ND		ug/Kg	5.0	04/30/21	04/30/21
Surrogates				**Limits**		
Dibromofluoromethane	99%		%REC	70-130	04/30/21	04/30/21
1,2-Dichloroethane-d4	95%		%REC	70-145	04/30/21	04/30/21
Toluene-d8	103%		%REC	70-145	04/30/21	04/30/21
Bromofluorobenzene	99%		%REC	70-145	04/30/21	04/30/21

ENTHALPY ANALYTICAL

Batch QC

Type: Lab Control Sample	Lab ID: QC922528	Batch: 266284
Matrix: Soil	Method: EPA 8260B	Prep Method: EPA 5030B

QC922528 Analyte	Result	Spiked	Units	Recovery	Qual	Limits
1,1-Dichloroethene	50.56	50.00	ug/Kg	101%		70-131
MTBE	43.88	50.00	ug/Kg	88%		69-130
Benzene	47.45	50.00	ug/Kg	95%		70-130
Trichloroethene	46.99	50.00	ug/Kg	94%		70-130
Toluene	48.87	50.00	ug/Kg	98%		70-130
Chlorobenzene	47.71	50.00	ug/Kg	95%		70-130
Surrogates						
Dibromofluoromethane	50.21	50.00	ug/Kg	100%		70-130
1,2-Dichloroethane-d4	44.09	50.00	ug/Kg	88%		70-145
Toluene-d8	53.38	50.00	ug/Kg	107%		70-145
Bromofluorobenzene	52.98	50.00	ug/Kg	106%		70-145

Type: Lab Control Sample Duplicate	Lab ID: QC922529	Batch: 266284
Matrix: Soil	Method: EPA 8260B	Prep Method: EPA 5030B

QC922529 Analyte	Result	Spiked	Units	Recovery	Qual	Limits	RPD	RPD Lim
1,1-Dichloroethene	49.91	50.00	ug/Kg	100%		70-131	1	33
MTBE	49.60	50.00	ug/Kg	99%		69-130	12	30
Benzene	49.31	50.00	ug/Kg	99%		70-130	4	30
Trichloroethene	48.08	50.00	ug/Kg	96%		70-130	2	30
Toluene	49.94	50.00	ug/Kg	100%		70-130	2	30
Chlorobenzene	49.59	50.00	ug/Kg	99%		70-130	4	30
Surrogates								
Dibromofluoromethane	49.03	50.00	ug/Kg	98%		70-130		
1,2-Dichloroethane-d4	43.92	50.00	ug/Kg	88%		70-145		
Toluene-d8	52.33	50.00	ug/Kg	105%		70-145		
Bromofluorobenzene	53.27	50.00	ug/Kg	107%		70-145		

ENTHALPY ANALYTICAL

Batch QC

Type: Blank	**Lab ID: QC922541**	**Batch: 266286**
Matrix: Soil	**Method: EPA 6010B**	**Prep Method: EPA 3050B**

QC922541 Analyte	Result	Qual	Units	RL	Prepared	Analyzed
Antimony	ND		mg/Kg	3.0	04/30/21	04/30/21
Arsenic	ND		mg/Kg	1.0	04/30/21	04/30/21
Barium	ND		mg/Kg	1.0	04/30/21	04/30/21
Beryllium	ND		mg/Kg	0.50	04/30/21	04/30/21
Cadmium	ND		mg/Kg	0.50	04/30/21	04/30/21
Chromium	ND		mg/Kg	1.0	04/30/21	04/30/21
Cobalt	ND		mg/Kg	0.50	04/30/21	04/30/21
Copper	ND		mg/Kg	1.0	04/30/21	04/30/21
Lead	ND		mg/Kg	1.0	04/30/21	04/30/21
Molybdenum	ND		mg/Kg	1.0	04/30/21	04/30/21
Nickel	ND		mg/Kg	1.0	04/30/21	04/30/21
Selenium	ND		mg/Kg	3.0	04/30/21	04/30/21
Silver	ND		mg/Kg	0.50	04/30/21	04/30/21
Thallium	ND		mg/Kg	3.0	04/30/21	05/03/21
Vanadium	ND		mg/Kg	1.0	04/30/21	04/30/21
Zinc	ND		mg/Kg	5.0	04/30/21	04/30/21

Type: Lab Control Sample	**Lab ID: QC922542**	**Batch: 266286**
Matrix: Soil	**Method: EPA 6010B**	**Prep Method: EPA 3050B**

QC922542 Analyte	Result	Spiked	Units	Recovery	Qual	Limits
Antimony	90.02	100.0	mg/Kg	90%		80-120
Arsenic	96.56	100.0	mg/Kg	97%		80-120
Barium	95.60	100.0	mg/Kg	96%		80-120
Beryllium	91.37	100.0	mg/Kg	91%		80-120
Cadmium	92.37	100.0	mg/Kg	92%		80-120
Chromium	93.60	100.0	mg/Kg	94%		80-120
Cobalt	99.10	100.0	mg/Kg	99%		80-120
Copper	91.39	100.0	mg/Kg	91%		80-120
Lead	102.0	100.0	mg/Kg	102%		80-120
Molybdenum	95.90	100.0	mg/Kg	96%		80-120
Nickel	98.88	100.0	mg/Kg	99%		80-120
Selenium	86.69	100.0	mg/Kg	87%		80-120
Silver	43.17	50.00	mg/Kg	86%		80-120
Thallium	98.67	100.0	mg/Kg	99%		80-120
Vanadium	98.40	100.0	mg/Kg	98%		80-120
Zinc	105.3	100.0	mg/Kg	105%		80-120

ENTHALPY ANALYTICAL

Batch QC

Type:	Matrix Spike	Lab ID:	QC922543	Batch:	266286
Matrix (Source ID):	Soil (444657-001)	Method:	EPA 6010B	Prep Method:	EPA 3050B

QC922543 Analyte	Result	Source Sample Result	Spiked	Units	Recovery	Qual	Limits	DF
Antimony	50.60	1.464	90.09	mg/Kg	55%	*	75-125	0.9
Arsenic	87.71	1.088	90.09	mg/Kg	96%		75-125	0.9
Barium	119.0	32.66	90.09	mg/Kg	96%		75-125	0.9
Beryllium	79.78	0.09090	90.09	mg/Kg	88%		75-125	0.9
Cadmium	81.94	ND	90.09	mg/Kg	91%		75-125	0.9
Chromium	87.01	5.211	90.09	mg/Kg	91%		75-125	0.9
Cobalt	87.98	3.135	90.09	mg/Kg	94%		75-125	0.9
Copper	88.04	6.637	90.09	mg/Kg	90%		75-125	0.9
Lead	102.8	13.51	90.09	mg/Kg	99%		75-125	0.9
Molybdenum	82.77	ND	90.09	mg/Kg	92%		75-125	0.9
Nickel	88.25	3.535	90.09	mg/Kg	94%		75-125	0.9
Selenium	77.13	ND	90.09	mg/Kg	86%		75-125	0.9
Silver	37.62	ND	45.05	mg/Kg	84%		75-125	0.9
Thallium	83.62	1.849	90.09	mg/Kg	91%		75-125	0.9
Vanadium	103.7	16.89	90.09	mg/Kg	96%		75-125	0.9
Zinc	123.9	28.61	90.09	mg/Kg	106%		75-125	0.9

Type:	Matrix Spike Duplicate	Lab ID:	QC922544	Batch:	266286
Matrix (Source ID):	Soil (444657-001)	Method:	EPA 6010B	Prep Method:	EPA 3050B

QC922544 Analyte	Result	Source Sample Result	Spiked	Units	Recovery	Qual	Limits	RPD	RPD Lim	DF
Antimony	57.00	1.464	94.34	mg/Kg	59%	*	75-125	7	41	0.94
Arsenic	93.68	1.088	94.34	mg/Kg	98%		75-125	2	35	0.94
Barium	125.2	32.66	94.34	mg/Kg	98%		75-125	2	20	0.94
Beryllium	86.15	0.09090	94.34	mg/Kg	91%		75-125	3	20	0.94
Cadmium	87.42	ND	94.34	mg/Kg	93%		75-125	2	20	0.94
Chromium	93.44	5.211	94.34	mg/Kg	94%		75-125	3	20	0.94
Cobalt	94.54	3.135	94.34	mg/Kg	97%		75-125	3	20	0.94
Copper	94.53	6.637	94.34	mg/Kg	93%		75-125	3	20	0.94
Lead	110.8	13.51	94.34	mg/Kg	103%		75-125	3	20	0.94
Molybdenum	88.84	ND	94.34	mg/Kg	94%		75-125	2	20	0.94
Nickel	94.63	3.535	94.34	mg/Kg	97%		75-125	3	20	0.94
Selenium	82.03	ND	94.34	mg/Kg	87%		75-125	2	20	0.94
Silver	39.80	ND	47.17	mg/Kg	84%		75-125	1	20	0.94
Thallium	90.00	1.849	94.34	mg/Kg	93%		75-125	3	20	0.94
Vanadium	108.8	16.89	94.34	mg/Kg	97%		75-125	1	20	0.94
Zinc	131.0	28.61	94.34	mg/Kg	109%		75-125	2	20	0.94

ENTHALPY ANALYTICAL

Batch QC

Type: Blank	**Lab ID: QC922545**	**Batch: 266287**
Matrix: Soil	**Method: EPA 6010B**	**Prep Method: EPA 3050B**

QC922545 Analyte	Result	Qual	Units	RL	Prepared	Analyzed
Antimony	ND		mg/Kg	3.0	04/30/21	04/30/21
Arsenic	ND		mg/Kg	1.0	04/30/21	04/30/21
Barium	ND		mg/Kg	1.0	04/30/21	04/30/21
Beryllium	ND		mg/Kg	0.50	04/30/21	04/30/21
Cadmium	ND		mg/Kg	0.50	04/30/21	04/30/21
Chromium	ND		mg/Kg	1.0	04/30/21	04/30/21
Cobalt	ND		mg/Kg	0.50	04/30/21	04/30/21
Copper	ND		mg/Kg	1.0	04/30/21	04/30/21
Lead	ND		mg/Kg	1.0	04/30/21	04/30/21
Molybdenum	ND		mg/Kg	1.0	04/30/21	04/30/21
Nickel	ND		mg/Kg	1.0	04/30/21	04/30/21
Selenium	ND		mg/Kg	3.0	04/30/21	04/30/21
Silver	ND		mg/Kg	0.50	04/30/21	05/03/21
Thallium	ND		mg/Kg	3.0	04/30/21	04/30/21
Vanadium	ND		mg/Kg	1.0	04/30/21	04/30/21
Zinc	ND		mg/Kg	5.0	04/30/21	04/30/21

Type: Lab Control Sample	**Lab ID: QC922546**	**Batch: 266287**
Matrix: Soil	**Method: EPA 6010B**	**Prep Method: EPA 3050B**

QC922546 Analyte	Result	Spiked	Units	Recovery	Qual	Limits
Antimony	94.11	100.0	mg/Kg	94%		80-120
Arsenic	97.52	100.0	mg/Kg	98%		80-120
Barium	96.25	100.0	mg/Kg	96%		80-120
Beryllium	92.25	100.0	mg/Kg	92%		80-120
Cadmium	93.46	100.0	mg/Kg	93%		80-120
Chromium	94.88	100.0	mg/Kg	95%		80-120
Cobalt	100.2	100.0	mg/Kg	100%		80-120
Copper	92.41	100.0	mg/Kg	92%		80-120
Lead	103.3	100.0	mg/Kg	103%		80-120
Molybdenum	96.28	100.0	mg/Kg	96%		80-120
Nickel	99.73	100.0	mg/Kg	100%		80-120
Selenium	87.76	100.0	mg/Kg	88%		80-120
Silver	45.59	50.00	mg/Kg	91%		80-120
Thallium	98.60	100.0	mg/Kg	99%		80-120
Vanadium	99.46	100.0	mg/Kg	99%		80-120
Zinc	106.2	100.0	mg/Kg	106%		80-120

ENTHALPY ANALYTICAL

Batch QC

Type:	Matrix Spike	Lab ID:	QC922547	Batch:	266287
Matrix (Source ID):	Soil (444657-029)	Method:	EPA 6010B	Prep Method:	EPA 3050B

QC922547 Analyte	Result	Source Sample Result	Spiked	Units	Recovery	Qual	Limits	DF
Antimony	63.22	ND	92.59	mg/Kg	68%	*	75-125	0.93
Arsenic	99.25	9.049	92.59	mg/Kg	97%		75-125	0.93
Barium	118.4	27.71	92.59	mg/Kg	98%		75-125	0.93
Beryllium	83.94	0.1029	92.59	mg/Kg	91%		75-125	0.93
Cadmium	86.13	ND	92.59	mg/Kg	93%		75-125	0.93
Chromium	96.18	13.78	92.59	mg/Kg	89%		75-125	0.93
Cobalt	95.66	6.233	92.59	mg/Kg	97%		75-125	0.93
Copper	93.89	8.906	92.59	mg/Kg	92%		75-125	0.93
Lead	92.89	2.837	92.59	mg/Kg	97%		75-125	0.93
Molybdenum	87.48	ND	92.59	mg/Kg	94%		75-125	0.93
Nickel	92.53	3.007	92.59	mg/Kg	97%		75-125	0.93
Selenium	80.55	ND	92.59	mg/Kg	87%		75-125	0.93
Silver	41.77	ND	46.30	mg/Kg	90%		75-125	0.93
Thallium	87.30	ND	92.59	mg/Kg	94%		75-125	0.93
Vanadium	140.7	65.86	92.59	mg/Kg	81%		75-125	0.93
Zinc	112.3	15.96	92.59	mg/Kg	104%		75-125	0.93

Type:	Matrix Spike Duplicate	Lab ID:	QC922548	Batch:	266287
Matrix (Source ID):	Soil (444657-029)	Method:	EPA 6010B	Prep Method:	EPA 3050B

QC922548 Analyte	Result	Source Sample Result	Spiked	Units	Recovery	Qual	Limits	RPD	RPD Lim	DF
Antimony	75.14	ND	100.0	mg/Kg	75%		75-125	10	41	1
Arsenic	106.9	9.049	100.0	mg/Kg	98%		75-125	0	35	1
Barium	118.4	27.71	100.0	mg/Kg	91%		75-125	6	20	1
Beryllium	91.87	0.1029	100.0	mg/Kg	92%		75-125	1	20	1
Cadmium	93.56	ND	100.0	mg/Kg	94%		75-125	1	20	1
Chromium	108.2	13.78	100.0	mg/Kg	94%		75-125	5	20	1
Cobalt	103.7	6.233	100.0	mg/Kg	97%		75-125	1	20	1
Copper	100.3	8.906	100.0	mg/Kg	91%		75-125	0	20	1
Lead	102.4	2.837	100.0	mg/Kg	100%		75-125	2	20	1
Molybdenum	97.65	ND	100.0	mg/Kg	98%		75-125	3	20	1
Nickel	102.0	3.007	100.0	mg/Kg	99%		75-125	2	20	1
Selenium	85.34	ND	100.0	mg/Kg	85%		75-125	2	20	1
Silver	45.29	ND	50.00	mg/Kg	91%		75-125	0	20	1
Thallium	95.97	ND	100.0	mg/Kg	96%		75-125	2	20	1
Vanadium	145.9	65.86	100.0	mg/Kg	80%		75-125	1	20	1
Zinc	120.3	15.96	100.0	mg/Kg	104%		75-125	0	20	1

ENTHALPY ANALYTICAL

Batch QC

Type: Blank	Lab ID: QC922555	Batch: 266289
Matrix: Soil	Method: EPA 6010B	Prep Method: EPA 3050B

QC922555 Analyte	Result	Qual	Units	RL	Prepared	Analyzed
Antimony	ND		mg/Kg	3.0	04/30/21	04/30/21
Arsenic	ND		mg/Kg	1.0	04/30/21	04/30/21
Barium	ND		mg/Kg	1.0	04/30/21	04/30/21
Beryllium	ND		mg/Kg	0.50	04/30/21	04/30/21
Cadmium	ND		mg/Kg	0.50	04/30/21	04/30/21
Chromium	ND		mg/Kg	1.0	04/30/21	04/30/21
Cobalt	ND		mg/Kg	0.50	04/30/21	04/30/21
Copper	ND		mg/Kg	1.0	04/30/21	04/30/21
Lead	ND		mg/Kg	1.0	04/30/21	04/30/21
Molybdenum	ND		mg/Kg	1.0	04/30/21	04/30/21
Nickel	ND		mg/Kg	1.0	04/30/21	04/30/21
Selenium	ND		mg/Kg	3.0	04/30/21	04/30/21
Silver	ND		mg/Kg	0.50	04/30/21	05/03/21
Thallium	ND		mg/Kg	3.0	04/30/21	04/30/21
Vanadium	ND		mg/Kg	1.0	04/30/21	04/30/21
Zinc	ND		mg/Kg	5.0	04/30/21	04/30/21

Type: Lab Control Sample	Lab ID: QC922556	Batch: 266289
Matrix: Soil	Method: EPA 6010B	Prep Method: EPA 3050B

QC922556 Analyte	Result	Spiked	Units	Recovery	Qual	Limits
Antimony	91.88	100.0	mg/Kg	92%		80-120
Arsenic	93.96	100.0	mg/Kg	94%		80-120
Barium	93.10	100.0	mg/Kg	93%		80-120
Beryllium	91.40	100.0	mg/Kg	91%		80-120
Cadmium	90.42	100.0	mg/Kg	90%		80-120
Chromium	91.62	100.0	mg/Kg	92%		80-120
Cobalt	96.83	100.0	mg/Kg	97%		80-120
Copper	89.41	100.0	mg/Kg	89%		80-120
Lead	100.5	100.0	mg/Kg	100%		80-120
Molybdenum	92.47	100.0	mg/Kg	92%		80-120
Nickel	96.45	100.0	mg/Kg	96%		80-120
Selenium	84.55	100.0	mg/Kg	85%		80-120
Silver	44.14	50.00	mg/Kg	88%		80-120
Thallium	95.23	100.0	mg/Kg	95%		80-120
Vanadium	96.79	100.0	mg/Kg	97%		80-120
Zinc	102.0	100.0	mg/Kg	102%		80-120

ENTHALPY ANALYTICAL

Batch QC

Type:	Matrix Spike	Lab ID:	QC922557	Batch:	266289
Matrix (Source ID):	Soil (444657-053)	Method:	EPA 6010B	Prep Method:	EPA 3050B

QC922557 Analyte	Result	Source Sample Result	Spiked	Units	Recovery	Qual	Limits	DF
Antimony	40.90	ND	107.5	mg/Kg	38%	*	75-125	1.1
Arsenic	107.5	3.109	107.5	mg/Kg	97%		75-125	1.1
Barium	184.5	111.5	107.5	mg/Kg	68%	*	75-125	1.1
Beryllium	100.7	0.2252	107.5	mg/Kg	93%		75-125	1.1
Cadmium	100.1	0.3048	107.5	mg/Kg	93%		75-125	1.1
Chromium	115.4	14.44	107.5	mg/Kg	94%		75-125	1.1
Cobalt	109.4	6.196	107.5	mg/Kg	96%		75-125	1.1
Copper	113.7	15.06	107.5	mg/Kg	92%		75-125	1.1
Lead	114.5	10.49	107.5	mg/Kg	97%		75-125	1.1
Molybdenum	98.48	1.259	107.5	mg/Kg	90%		75-125	1.1
Nickel	114.9	16.36	107.5	mg/Kg	92%		75-125	1.1
Selenium	93.24	ND	107.5	mg/Kg	87%		75-125	1.1
Silver	48.80	ND	53.76	mg/Kg	91%		75-125	1.1
Thallium	100.6	ND	107.5	mg/Kg	94%		75-125	1.1
Vanadium	143.5	31.12	107.5	mg/Kg	104%		75-125	1.1
Zinc	157.0	50.31	107.5	mg/Kg	99%		75-125	1.1

Type:	Matrix Spike Duplicate	Lab ID:	QC922558	Batch:	266289
Matrix (Source ID):	Soil (444657-053)	Method:	EPA 6010B	Prep Method:	EPA 3050B

QC922558 Analyte	Result	Source Sample Result	Spiked	Units	Recovery	Qual	Limits	RPD	RPD Lim	DF
Antimony	39.38	ND	94.34	mg/Kg	42%	*	75-125	9	41	0.94
Arsenic	93.38	3.109	94.34	mg/Kg	96%		75-125	1	35	0.94
Barium	156.9	111.5	94.34	mg/Kg	48%	*	75-125	10	20	0.94
Beryllium	88.20	0.2252	94.34	mg/Kg	93%		75-125	0	20	0.94
Cadmium	87.90	0.3048	94.34	mg/Kg	93%		75-125	0	20	0.94
Chromium	100.2	14.44	94.34	mg/Kg	91%		75-125	3	20	0.94
Cobalt	96.61	6.196	94.34	mg/Kg	96%		75-125	0	20	0.94
Copper	100.1	15.06	94.34	mg/Kg	90%		75-125	1	20	0.94
Lead	105.1	10.49	94.34	mg/Kg	100%		75-125	3	20	0.94
Molybdenum	87.03	1.259	94.34	mg/Kg	91%		75-125	1	20	0.94
Nickel	99.12	16.36	94.34	mg/Kg	88%		75-125	4	20	0.94
Selenium	81.18	ND	94.34	mg/Kg	86%		75-125	1	20	0.94
Silver	42.52	ND	47.17	mg/Kg	90%		75-125	1	20	0.94
Thallium	88.09	ND	94.34	mg/Kg	93%		75-125	0	20	0.94
Vanadium	125.9	31.12	94.34	mg/Kg	100%		75-125	3	20	0.94
Zinc	142.5	50.31	94.34	mg/Kg	98%		75-125	1	20	0.94

ENTHALPY ANALYTICAL

Batch QC

Type: Blank	Lab ID: QC922596	Batch: 266300
Matrix: Soil		

QC922596 Analyte	Result	Qual	Units	RL	Prepared	Analyzed
Method: EPA 8081A Prep Method: EPA 3546						
alpha-BHC	ND		ug/Kg	5.0	04/30/21	05/01/21
beta-BHC	ND		ug/Kg	5.0	04/30/21	05/01/21
gamma-BHC	ND		ug/Kg	5.0	04/30/21	05/01/21
delta-BHC	ND		ug/Kg	5.0	04/30/21	05/01/21
Heptachlor	ND		ug/Kg	5.0	04/30/21	05/01/21
Aldrin	ND		ug/Kg	5.0	04/30/21	05/01/21
Heptachlor epoxide	ND		ug/Kg	5.0	04/30/21	05/01/21
Endosulfan I	ND		ug/Kg	5.0	04/30/21	05/01/21
Dieldrin	ND		ug/Kg	5.0	04/30/21	05/01/21
4,4'-DDE	ND		ug/Kg	5.0	04/30/21	05/01/21
Endrin	ND		ug/Kg	5.0	04/30/21	05/01/21
Endosulfan II	ND		ug/Kg	5.0	04/30/21	05/01/21
Endosulfan sulfate	ND		ug/Kg	5.0	04/30/21	05/01/21
4,4'-DDD	ND		ug/Kg	5.0	04/30/21	05/01/21
Endrin aldehyde	ND		ug/Kg	5.0	04/30/21	05/01/21
Endrin ketone	ND		ug/Kg	5.0	04/30/21	05/01/21
4,4'-DDT	ND		ug/Kg	5.0	04/30/21	05/01/21
Methoxychlor	ND		ug/Kg	10	04/30/21	05/01/21
Toxaphene	ND		ug/Kg	100	04/30/21	05/01/21
Chlordane (Technical)	ND		ug/Kg	50	04/30/21	05/01/21
Surrogates				**Limits**		
TCMX	89%		%REC	23-120	04/30/21	05/01/21
Decachlorobiphenyl	102%		%REC	24-120	04/30/21	05/01/21
Method: EPA 8082 Prep Method: EPA 3546						
Aroclor-1016	ND		ug/Kg	50	04/30/21	05/04/21
Aroclor-1221	ND		ug/Kg	50	04/30/21	05/04/21
Aroclor-1232	ND		ug/Kg	50	04/30/21	05/04/21
Aroclor-1242	ND		ug/Kg	50	04/30/21	05/04/21
Aroclor-1248	ND		ug/Kg	50	04/30/21	05/04/21
Aroclor-1254	ND		ug/Kg	50	04/30/21	05/04/21
Aroclor-1260	ND		ug/Kg	50	04/30/21	05/04/21
Aroclor-1262	ND		ug/Kg	50	04/30/21	05/04/21
Aroclor-1268	ND		ug/Kg	50	04/30/21	05/04/21
Surrogates				**Limits**		
Decachlorobiphenyl (PCB)	84%		%REC	19-121	04/30/21	05/04/21

ENTHALPY ANALYTICAL

Batch QC

Type: Lab Control Sample	**Lab ID: QC922597**	**Batch: 266300**
Matrix: Soil	**Method: EPA 8081A**	**Prep Method: EPA 3546**

QC922597 Analyte	Result	Spiked	Units	Recovery	Qual	Limits
alpha-BHC	40.61	50.00	ug/Kg	81%		22-129
beta-BHC	38.16	50.00	ug/Kg	76%		28-125
gamma-BHC	40.70	50.00	ug/Kg	81%		22-128
delta-BHC	40.87	50.00	ug/Kg	82%		24-131
Heptachlor	39.71	50.00	ug/Kg	79%		18-124
Aldrin	37.47	50.00	ug/Kg	75%		23-120
Heptachlor epoxide	37.78	50.00	ug/Kg	76%		26-120
Endosulfan I	41.66	50.00	ug/Kg	83%		25-126
Dieldrin	41.66	50.00	ug/Kg	83%		23-124
4,4'-DDE	41.37	50.00	ug/Kg	83%		28-121
Endrin	42.74	50.00	ug/Kg	85%		25-127
Endosulfan II	42.58	50.00	ug/Kg	85%		29-121
Endosulfan sulfate	42.36	50.00	ug/Kg	85%		30-121
4,4'-DDD	39.84	50.00	ug/Kg	80%		26-120
Endrin aldehyde	28.11	50.00	ug/Kg	56%		10-120
Endrin ketone	42.58	50.00	ug/Kg	85%		28-125
4,4'-DDT	44.94	50.00	ug/Kg	90%		22-125
Methoxychlor	47.27	50.00	ug/Kg	95%		28-130
Surrogates						
TCMX	37.35	50.00	ug/Kg	75%		23-120
Decachlorobiphenyl	45.96	50.00	ug/Kg	92%		24-120

ENTHALPY ANALYTICAL

Batch QC

Type:	**Matrix Spike**	**Lab ID:**	**QC922598**	**Batch:**	**266300**
Matrix (Source ID):	**Soil (444657-053)**	**Method:**	**EPA 8081A**	**Prep Method:**	**EPA 3546**

QC922598 Analyte	Result	Source Sample Result	Spiked	Units	Recovery	Qual	Limits	DF
alpha-BHC	38.02	ND	50.00	ug/Kg	76%		46-120	5
beta-BHC	39.10	ND	50.00	ug/Kg	78%		41-120	5
gamma-BHC	38.79	ND	50.00	ug/Kg	78%		41-120	5
delta-BHC	39.13	ND	50.00	ug/Kg	78%		38-123	5
Heptachlor	40.78	ND	50.00	ug/Kg	82%		39-120	5
Aldrin	39.79	ND	50.00	ug/Kg	80%		34-120	5
Heptachlor epoxide	38.75	ND	50.00	ug/Kg	78%		43-120	5
Endosulfan I	42.35	ND	50.00	ug/Kg	85%		45-120	5
Dieldrin	39.28	ND	50.00	ug/Kg	79%		45-120	5
4,4'-DDE	44.08	ND	50.00	ug/Kg	88%		34-120	5
Endrin	39.68	ND	50.00	ug/Kg	79%		40-120	5
Endosulfan II	42.10	ND	50.00	ug/Kg	84%		41-120	5
Endosulfan sulfate	39.45	ND	50.00	ug/Kg	79%		42-120	5
4,4'-DDD	37.47	ND	50.00	ug/Kg	75%		41-120	5
Endrin aldehyde	27.16	ND	50.00	ug/Kg	54%		30-120	5
Endrin ketone	30.26	ND	50.00	ug/Kg	61%		45-120	5
4,4'-DDT	40.63	ND	50.00	ug/Kg	81%		35-127	5
Methoxychlor	31.59	ND	50.00	ug/Kg	63%		42-136	5
Surrogates								
TCMX	37.46		50.00	ug/Kg	75%		23-120	5
Decachlorobiphenyl	35.72		50.00	ug/Kg	71%		24-120	5

ENTHALPY ANALYTICAL

Batch QC

Type:	**Matrix Spike Duplicate**	**Lab ID:**	**QC922599**	**Batch:**	**266300**
Matrix (Source ID):	**Soil (444657-053)**	**Method:**	**EPA 8081A**	**Prep Method:**	**EPA 3546**

QC922599 Analyte	Result	Source Sample Result	Spiked	Units	Recovery	Qual	Limits	RPD	RPD Lim	DF
alpha-BHC	39.54	ND	50.00	ug/Kg	79%		46-120	4	30	5
beta-BHC	39.89	ND	50.00	ug/Kg	80%		41-120	2	30	5
gamma-BHC	40.01	ND	50.00	ug/Kg	80%		41-120	3	30	5
delta-BHC	40.16	ND	50.00	ug/Kg	80%		38-123	3	30	5
Heptachlor	41.30	ND	50.00	ug/Kg	83%		39-120	1	30	5
Aldrin	38.96	ND	50.00	ug/Kg	78%		34-120	2	30	5
Heptachlor epoxide	39.71	ND	50.00	ug/Kg	79%		43-120	2	30	5
Endosulfan I	42.33	ND	50.00	ug/Kg	85%		45-120	0	30	5
Dieldrin	40.64	ND	50.00	ug/Kg	81%		45-120	3	30	5
4,4'-DDE	44.05	ND	50.00	ug/Kg	88%		34-120	0	30	5
Endrin	40.14	ND	50.00	ug/Kg	80%		40-120	1	30	5
Endosulfan II	41.63	ND	50.00	ug/Kg	83%		41-120	1	30	5
Endosulfan sulfate	45.61	ND	50.00	ug/Kg	91%		42-120	14	30	5
4,4'-DDD	37.63	ND	50.00	ug/Kg	75%		41-120	0	30	5
Endrin aldehyde	24.27	ND	50.00	ug/Kg	49%		30-120	11	30	5
Endrin ketone	30.63	ND	50.00	ug/Kg	61%		45-120	1	30	5
4,4'-DDT	36.98	ND	50.00	ug/Kg	74%		35-127	9	30	5
Methoxychlor	30.15	ND	50.00	ug/Kg	60%		42-136	5	30	5
Surrogates										
TCMX	38.53		50.00	ug/Kg	77%		23-120			5
Decachlorobiphenyl	35.11		50.00	ug/Kg	70%		24-120			5

Type:	**Lab Control Sample**	**Lab ID:**	**QC922600**	**Batch:**	**266300**
Matrix:	**Soil**	**Method:**	**EPA 8082**	**Prep Method:**	**EPA 3546**

QC922600 Analyte	Result	Spiked	Units	Recovery	Qual	Limits
Aroclor-1016	460.6	500.0	ug/Kg	92%		14-150
Aroclor-1260	396.8	500.0	ug/Kg	79%		10-150
Surrogates						
Decachlorobiphenyl (PCB)	30.15	50.00	ug/Kg	60%		19-121

ENTHALPY ANALYTICAL

Batch QC

Type:	**Matrix Spike**	**Lab ID:**	**QC922601**	**Batch:**	**266300**
Matrix (Source ID):	**Soil (444657-053)**	**Method:**	**EPA 8082**	**Prep Method:**	**EPA 3546**

QC922601 Analyte	Result	Source Sample Result	Spiked	Units	Recovery	Qual	Limits	DF
Aroclor-1016	555.1	ND	500.0	ug/Kg	111%		42-127	1
Aroclor-1260	558.3	44.53	500.0	ug/Kg	103%		38-130	1
Surrogates								
Decachlorobiphenyl (PCB)	42.56		50.00	ug/Kg	85%		19-121	1

Type:	**Matrix Spike Duplicate**	**Lab ID:**	**QC922602**	**Batch:**	**266300**
Matrix (Source ID):	**Soil (444657-053)**	**Method:**	**EPA 8082**	**Prep Method:**	**EPA 3546**

QC922602 Analyte	Result	Source Sample Result	Spiked	Units	Recovery	Qual	Limits	RPD	RPD Lim	DF
Aroclor-1016	538.5	ND	500.0	ug/Kg	108%		42-127	3	30	1
Aroclor-1260	586.7	44.53	500.0	ug/Kg	108%		38-130	5	30	1
Surrogates										
Decachlorobiphenyl (PCB)	42.26		50.00	ug/Kg	85%		19-121			1

Type:	**Blank**	**Lab ID:**	**QC922674**	**Batch:**	**266325**
Matrix:	**Soil**	**Method:**	**EPA 7471A**	**Prep Method:**	**METHOD**

QC922674 Analyte	Result	Qual	Units	RL	Prepared	Analyzed
Mercury	ND		mg/Kg	0.14	04/30/21	04/30/21

Type:	**Lab Control Sample**	**Lab ID:**	**QC922675**	**Batch:**	**266325**
Matrix:	**Soil**	**Method:**	**EPA 7471A**	**Prep Method:**	**METHOD**

QC922675 Analyte	Result	Spiked	Units	Recovery	Qual	Limits
Mercury	0.7860	0.8333	mg/Kg	94%		80-120

Type:	**Matrix Spike**	**Lab ID:**	**QC922676**	**Batch:**	**266325**
Matrix (Source ID):	**Soil (444657-002)**	**Method:**	**EPA 7471A**	**Prep Method:**	**METHOD**

QC922676 Analyte	Result	Source Sample Result	Spiked	Units	Recovery	Qual	Limits	DF
Mercury	0.9261	ND	0.9804	mg/Kg	94%		75-125	1.2

Batch QC

Type:	Matrix Spike Duplicate	Lab ID:	QC922677	Batch:	266325
Matrix (Source ID):	Soil (444657-002)	Method:	EPA 7471A	Prep Method:	METHOD

QC922677 Analyte	Result	Source Sample Result	Spiked	Units	Recovery	Qual	Limits	RPD	RPD Lim	DF
Mercury	0.8198	ND	0.8621	mg/Kg	95%		75-125	1	20	1

Type:	Blank	Lab ID:	QC922678	Batch:	266326
Matrix:	Soil	Method:	EPA 7471A	Prep Method:	METHOD

QC922678 Analyte	Result	Qual	Units	RL	Prepared	Analyzed
Mercury	ND		mg/Kg	0.14	04/30/21	04/30/21

Type:	Lab Control Sample	Lab ID:	QC922679	Batch:	266326
Matrix:	Soil	Method:	EPA 7471A	Prep Method:	METHOD

QC922679 Analyte	Result	Spiked	Units	Recovery	Qual	Limits
Mercury	0.7890	0.8333	mg/Kg	95%		80-120

Type:	Matrix Spike	Lab ID:	QC922680	Batch:	266326
Matrix (Source ID):	Soil (444657-053)	Method:	EPA 7471A	Prep Method:	METHOD

QC922680 Analyte	Result	Source Sample Result	Spiked	Units	Recovery	Qual	Limits	DF
Mercury	0.8435	ND	0.8475	mg/Kg	100%		75-125	1

Type:	Matrix Spike Duplicate	Lab ID:	QC922681	Batch:	266326
Matrix (Source ID):	Soil (444657-053)	Method:	EPA 7471A	Prep Method:	METHOD

QC922681 Analyte	Result	Source Sample Result	Spiked	Units	Recovery	Qual	Limits	RPD	RPD Lim	DF
Mercury	0.9426	ND	0.9615	mg/Kg	98%		75-125	2	20	1.2

ENTHALPY ANALYTICAL

Batch QC

Type: Blank	Lab ID: QC922967	Batch: 266417
Matrix: Soil		

QC922967 Analyte	Result	Qual	Units	RL	Prepared	Analyzed
Method: EPA 8081A Prep Method: EPA 3546						
alpha-BHC	ND		ug/Kg	5.0	05/03/21	05/04/21
beta-BHC	ND		ug/Kg	5.0	05/03/21	05/04/21
gamma-BHC	ND		ug/Kg	5.0	05/03/21	05/04/21
delta-BHC	ND		ug/Kg	5.0	05/03/21	05/04/21
Heptachlor	ND		ug/Kg	5.0	05/03/21	05/04/21
Aldrin	ND		ug/Kg	5.0	05/03/21	05/04/21
Heptachlor epoxide	ND		ug/Kg	5.0	05/03/21	05/04/21
Endosulfan I	ND		ug/Kg	5.0	05/03/21	05/04/21
Dieldrin	ND		ug/Kg	5.0	05/03/21	05/04/21
4,4'-DDE	ND		ug/Kg	5.0	05/03/21	05/04/21
Endrin	ND		ug/Kg	5.0	05/03/21	05/04/21
Endosulfan II	ND		ug/Kg	5.0	05/03/21	05/04/21
Endosulfan sulfate	ND		ug/Kg	5.0	05/03/21	05/04/21
4,4'-DDD	ND		ug/Kg	5.0	05/03/21	05/04/21
Endrin aldehyde	ND		ug/Kg	5.0	05/03/21	05/04/21
Endrin ketone	ND		ug/Kg	5.0	05/03/21	05/04/21
4,4'-DDT	ND		ug/Kg	5.0	05/03/21	05/04/21
Methoxychlor	ND		ug/Kg	10	05/03/21	05/04/21
Toxaphene	ND		ug/Kg	100	05/03/21	05/04/21
Chlordane (Technical)	ND		ug/Kg	50	05/03/21	05/04/21
Surrogates				**Limits**		
TCMX	87%		%REC	23-120	05/03/21	05/04/21
Decachlorobiphenyl	98%		%REC	24-120	05/03/21	05/04/21
Method: EPA 8082 Prep Method: EPA 3546						
Aroclor-1016	ND		ug/Kg	50	05/03/21	05/05/21
Aroclor-1221	ND		ug/Kg	50	05/03/21	05/05/21
Aroclor-1232	ND		ug/Kg	50	05/03/21	05/05/21
Aroclor-1242	ND		ug/Kg	50	05/03/21	05/05/21
Aroclor-1248	ND		ug/Kg	50	05/03/21	05/05/21
Aroclor-1254	ND		ug/Kg	50	05/03/21	05/05/21
Aroclor-1260	ND		ug/Kg	50	05/03/21	05/05/21
Aroclor-1262	ND		ug/Kg	50	05/03/21	05/05/21
Aroclor-1268	ND		ug/Kg	50	05/03/21	05/05/21
Surrogates				**Limits**		
Decachlorobiphenyl (PCB)	57%		%REC	19-121	05/03/21	05/05/21

ENTHALPY ANALYTICAL

Batch QC

Type: Lab Control Sample	**Lab ID: QC922968**	**Batch: 266417**
Matrix: Soil	**Method: EPA 8081A**	**Prep Method: EPA 3546**

QC922968 Analyte	Result	Spiked	Units	Recovery	Qual	Limits
alpha-BHC	46.01	50.00	ug/Kg	92%		22-129
beta-BHC	46.41	50.00	ug/Kg	93%		28-125
gamma-BHC	45.27	50.00	ug/Kg	91%		22-128
delta-BHC	47.59	50.00	ug/Kg	95%		24-131
Heptachlor	44.26	50.00	ug/Kg	89%		18-124
Aldrin	42.09	50.00	ug/Kg	84%		23-120
Heptachlor epoxide	44.71	50.00	ug/Kg	89%		26-120
Endosulfan I	48.58	50.00	ug/Kg	97%		25-126
Dieldrin	46.08	50.00	ug/Kg	92%		23-124
4,4'-DDE	47.67	50.00	ug/Kg	95%		28-121
Endrin	48.95	50.00	ug/Kg	98%		25-127
Endosulfan II	50.61	50.00	ug/Kg	101%		29-121
Endosulfan sulfate	46.52	50.00	ug/Kg	93%		30-121
4,4'-DDD	46.51	50.00	ug/Kg	93%		26-120
Endrin aldehyde	30.90	50.00	ug/Kg	62%		10-120
Endrin ketone	47.59	50.00	ug/Kg	95%		28-125
4,4'-DDT	54.32	50.00	ug/Kg	109%		22-125
Methoxychlor	46.67	50.00	ug/Kg	93%	#	28-130
Surrogates						
TCMX	39.72	50.00	ug/Kg	79%		23-120
Decachlorobiphenyl	45.72	50.00	ug/Kg	91%		24-120

ENTHALPY ANALYTICAL

Batch QC

Type:	**Matrix Spike**	**Lab ID:**	**QC922969**	**Batch:**	**266417**
Matrix (Source ID):	**Soil (444780-001)**	**Method:**	**EPA 8081A**	**Prep Method:**	**EPA 3546**

QC922969 Analyte	Result	Source Sample Result	Spiked	Units	Recovery	Qual	Limits	DF
alpha-BHC	46.12	ND	50.00	ug/Kg	92%		46-120	5
beta-BHC	54.92	ND	50.00	ug/Kg	110%		41-120	5
gamma-BHC	51.96	ND	50.00	ug/Kg	104%		41-120	5
delta-BHC	49.97	ND	50.00	ug/Kg	100%		38-123	5
Heptachlor	46.47	ND	50.00	ug/Kg	93%		39-120	5
Aldrin	70.13	ND	50.00	ug/Kg	140%	*	34-120	5
Heptachlor epoxide	49.11	ND	50.00	ug/Kg	98%		43-120	5
Endosulfan I	48.07	ND	50.00	ug/Kg	96%		45-120	5
Dieldrin	51.37	ND	50.00	ug/Kg	103%		45-120	5
4,4'-DDE	46.34	ND	50.00	ug/Kg	93%		34-120	5
Endrin	48.23	ND	50.00	ug/Kg	96%	#	40-120	5
Endosulfan II	54.79	ND	50.00	ug/Kg	110%		41-120	5
Endosulfan sulfate	46.10	ND	50.00	ug/Kg	92%		42-120	5
4,4'-DDD	44.75	ND	50.00	ug/Kg	89%		41-120	5
Endrin aldehyde	31.17	ND	50.00	ug/Kg	62%		30-120	5
Endrin ketone	45.59	ND	50.00	ug/Kg	91%		45-120	5
4,4'-DDT	49.75	ND	50.00	ug/Kg	100%	#	35-127	5
Methoxychlor	51.55	ND	50.00	ug/Kg	103%	#	42-136	5
Surrogates								
TCMX	53.41		50.00	ug/Kg	107%		23-120	5
Decachlorobiphenyl	42.02		50.00	ug/Kg	84%		24-120	5

ENTHALPY ANALYTICAL

Batch QC

Type:	**Matrix Spike Duplicate**	**Lab ID:**	**QC922970**	**Batch:**	**266417**
Matrix (Source ID):	**Soil (444780-001)**	**Method:**	**EPA 8081A**	**Prep Method:**	**EPA 3546**

QC922970 Analyte	Result	Source Sample Result	Spiked	Units	Recovery	Qual	Limits	RPD	RPD Lim	DF
alpha-BHC	38.04	ND	50.00	ug/Kg	76%		46-120	19	30	5
beta-BHC	42.77	ND	50.00	ug/Kg	86%		41-120	25	30	5
gamma-BHC	40.97	ND	50.00	ug/Kg	82%		41-120	24	30	5
delta-BHC	36.64	ND	50.00	ug/Kg	73%		38-123	31*	30	5
Heptachlor	36.00	ND	50.00	ug/Kg	72%		39-120	25	30	5
Aldrin	50.86	ND	50.00	ug/Kg	102%		34-120	32*	30	5
Heptachlor epoxide	52.12	ND	50.00	ug/Kg	104%		43-120	6	30	5
Endosulfan I	26.70	ND	50.00	ug/Kg	53%		45-120	57*	30	5
Dieldrin	69.49	ND	50.00	ug/Kg	139%	*	45-120	30	30	5
4,4'-DDE	30.34	ND	50.00	ug/Kg	61%		34-120	42*	30	5
Endrin	57.56	ND	50.00	ug/Kg	115%	#	40-120	18	30	5
Endosulfan II	150.6	ND	50.00	ug/Kg	301%	*	41-120	93*	30	5
Endosulfan sulfate	0	ND	50.00	ug/Kg	0%	*	42-120		30	5
4,4'-DDD	33.00	ND	50.00	ug/Kg	66%		41-120	30	30	5
Endrin aldehyde	82.48	ND	50.00	ug/Kg	165%	*	30-120	90*	30	5
Endrin ketone	35.71	ND	50.00	ug/Kg	71%		45-120	24	30	5
4,4'-DDT	224.8	ND	50.00	ug/Kg	450%	#,*	35-127	128*	30	5
Methoxychlor	9.831	ND	50.00	ug/Kg	0%	#,*	42-136	136*	30	5
Surrogates										
TCMX	45.84		50.00	ug/Kg	92%		23-120			5
Decachlorobiphenyl	40.25		50.00	ug/Kg	81%		24-120			5

Type:	**Lab Control Sample**	**Lab ID:**	**QC922971**	**Batch:**	**266417**
Matrix:	**Soil**	**Method:**	**EPA 8082**	**Prep Method:**	**EPA 3546**

QC922971 Analyte	Result	Spiked	Units	Recovery	Qual	Limits
Aroclor-1016	288.9	500.0	ug/Kg	58%		14-150
Aroclor-1260	396.8	500.0	ug/Kg	79%		10-150
Surrogates						
Decachlorobiphenyl (PCB)	25.56	50.00	ug/Kg	51%		19-121

Batch QC

Type:	**Matrix Spike**	**Lab ID:**	**QC922972**	**Batch:**	**266417**
Matrix (Source ID):	**Soil (444780-001)**	**Method:**	**EPA 8082**	**Prep Method:**	**EPA 3546**

QC922972 Analyte	Result	Source Sample Result	Spiked	Units	Recovery	Qual	Limits	DF
Aroclor-1016	399.5	ND	500.0	ug/Kg	80%		42-127	1
Aroclor-1260	422.4	50.63	500.0	ug/Kg	74%		38-130	1
Surrogates								
Decachlorobiphenyl (PCB)	25.21		50.00	ug/Kg	50%		19-121	1

Type:	**Matrix Spike Duplicate**	**Lab ID:**	**QC922973**	**Batch:**	**266417**
Matrix (Source ID):	**Soil (444780-001)**	**Method:**	**EPA 8082**	**Prep Method:**	**EPA 3546**

QC922973 Analyte	Result	Source Sample Result	Spiked	Units	Recovery	Qual	Limits	RPD	RPD Lim	DF
Aroclor-1016	417.6	ND	500.0	ug/Kg	84%		42-127	4	30	1
Aroclor-1260	659.8	50.63	500.0	ug/Kg	122%		38-130	44*	30	1
Surrogates										
Decachlorobiphenyl (PCB)	25.83		50.00	ug/Kg	52%		19-121			1

Type:	**Blank**	**Lab ID:**	**QC923012**	**Batch:**	**266432**
Matrix:	**Soil**	**Method:**	**EPA 8015B**	**Prep Method:**	**EPA 3580**

QC923012 Analyte	Result	Qual	Units	RL	Prepared	Analyzed
GRO C6-C10	ND		mg/Kg	10	05/03/21	05/03/21
DRO C10-C28	ND		mg/Kg	10	05/03/21	05/03/21
ORO C28-C44	ND		mg/Kg	20	05/03/21	05/03/21
Surrogates				**Limits**		
n-Triacontane	109%		%REC	70-130	05/03/21	05/03/21

Type:	**Lab Control Sample**	**Lab ID:**	**QC923013**	**Batch:**	**266432**
Matrix:	**Soil**	**Method:**	**EPA 8015B**	**Prep Method:**	**EPA 3580**

QC923013 Analyte	Result	Spiked	Units	Recovery	Qual	Limits
Diesel C10-C28	193.8	250.0	mg/Kg	78%		76-122
Surrogates						
n-Triacontane	10.09	10.00	mg/Kg	101%		70-130

Batch QC

Type:	Matrix Spike	Lab ID:	QC923014	Batch:	266432
Matrix (Source ID):	Soil (444657-023)	Method:	EPA 8015B	Prep Method:	EPA 3580

QC923014 Analyte	Result	Source Sample Result	Spiked	Units	Recovery	Qual	Limits	DF
Diesel C10-C28	199.5	1.972	250.0	mg/Kg	79%		62-126	1
Surrogates								
n-Triacontane	11.29		10.00	mg/Kg	113%		70-130	1

Type:	Matrix Spike Duplicate	Lab ID:	QC923015	Batch:	266432
Matrix (Source ID):	Soil (444657-023)	Method:	EPA 8015B	Prep Method:	EPA 3580

QC923015 Analyte	Result	Source Sample Result	Spiked	Units	Recovery	Qual	Limits	RPD	RPD Lim	DF
Diesel C10-C28	192.6	1.972	250.0	mg/Kg	76%		62-126	4	35	1
Surrogates										
n-Triacontane	11.05		10.00	mg/Kg	111%		70-130			1

ENTHALPY ANALYTICAL

Batch QC

Type:	**Blank**	**Lab ID:**	**QC923138**	**Batch:**	**266473**
Matrix:	**Soil**	**Method:**	**EPA 8270C**	**Prep Method:**	**EPA 3546**

QC923138 Analyte	Result	Qual	Units	RL	Prepared	Analyzed
Carbazole	ND		ug/Kg	250	05/04/21	05/04/21
1-Methylnaphthalene	ND		ug/Kg	250	05/04/21	05/04/21
Pyridine	ND		ug/Kg	250	05/04/21	05/04/21
N-Nitrosodimethylamine	ND		ug/Kg	250	05/04/21	05/04/21
Phenol	ND		ug/Kg	250	05/04/21	05/04/21
Aniline	ND		ug/Kg	250	05/04/21	05/04/21
bis(2-Chloroethyl)ether	ND		ug/Kg	1,200	05/04/21	05/04/21
2-Chlorophenol	ND		ug/Kg	250	05/04/21	05/04/21
1,3-Dichlorobenzene	ND		ug/Kg	250	05/04/21	05/04/21
1,4-Dichlorobenzene	ND		ug/Kg	250	05/04/21	05/04/21
Benzyl alcohol	ND		ug/Kg	250	05/04/21	05/04/21
1,2-Dichlorobenzene	ND		ug/Kg	250	05/04/21	05/04/21
2-Methylphenol	ND		ug/Kg	250	05/04/21	05/04/21
bis(2-Chloroisopropyl) ether	ND		ug/Kg	250	05/04/21	05/04/21
3-,4-Methylphenol	ND		ug/Kg	400	05/04/21	05/04/21
N-Nitroso-di-n-propylamine	ND		ug/Kg	250	05/04/21	05/04/21
Hexachloroethane	ND		ug/Kg	250	05/04/21	05/04/21
Nitrobenzene	ND		ug/Kg	1,200	05/04/21	05/04/21
Isophorone	ND		ug/Kg	250	05/04/21	05/04/21
2-Nitrophenol	ND		ug/Kg	250	05/04/21	05/04/21
2,4-Dimethylphenol	ND		ug/Kg	250	05/04/21	05/04/21
Benzoic acid	ND		ug/Kg	1,200	05/04/21	05/04/21
bis(2-Chloroethoxy)methane	ND		ug/Kg	250	05/04/21	05/04/21
2,4-Dichlorophenol	ND		ug/Kg	250	05/04/21	05/04/21
1,2,4-Trichlorobenzene	ND		ug/Kg	250	05/04/21	05/04/21
Naphthalene	ND		ug/Kg	250	05/04/21	05/04/21
4-Chloroaniline	ND		ug/Kg	250	05/04/21	05/04/21
Hexachlorobutadiene	ND		ug/Kg	250	05/04/21	05/04/21
4-Chloro-3-methylphenol	ND		ug/Kg	250	05/04/21	05/04/21
2-Methylnaphthalene	ND		ug/Kg	250	05/04/21	05/04/21
Hexachlorocyclopentadiene	ND		ug/Kg	1,200	05/04/21	05/04/21
2,4,6-Trichlorophenol	ND		ug/Kg	250	05/04/21	05/04/21
2,4,5-Trichlorophenol	ND		ug/Kg	250	05/04/21	05/04/21
2-Chloronaphthalene	ND		ug/Kg	250	05/04/21	05/04/21
2-Nitroaniline	ND		ug/Kg	250	05/04/21	05/04/21
Dimethylphthalate	ND		ug/Kg	250	05/04/21	05/04/21
Acenaphthylene	ND		ug/Kg	250	05/04/21	05/04/21
2,6-Dinitrotoluene	ND		ug/Kg	250	05/04/21	05/04/21
3-Nitroaniline	ND		ug/Kg	250	05/04/21	05/04/21
Acenaphthene	ND		ug/Kg	250	05/04/21	05/04/21
2,4-Dinitrophenol	ND		ug/Kg	1,200	05/04/21	05/04/21
4-Nitrophenol	ND		ug/Kg	250	05/04/21	05/04/21

ENTHALPY ANALYTICAL

Batch QC

QC923138 Analyte	Result	Qual	Units	RL	Prepared	Analyzed
Dibenzofuran	ND		ug/Kg	250	05/04/21	05/04/21
2,4-Dinitrotoluene	ND		ug/Kg	250	05/04/21	05/04/21
Diethylphthalate	ND		ug/Kg	250	05/04/21	05/04/21
Fluorene	ND		ug/Kg	250	05/04/21	05/04/21
4-Chlorophenyl-phenylether	ND		ug/Kg	250	05/04/21	05/04/21
4-Nitroaniline	ND		ug/Kg	250	05/04/21	05/04/21
4,6-Dinitro-2-methylphenol	ND		ug/Kg	250	05/04/21	05/04/21
N-Nitrosodiphenylamine	ND		ug/Kg	250	05/04/21	05/04/21
1,2-diphenylhydrazine (as azobenzene)	ND		ug/Kg	250	05/04/21	05/04/21
4-Bromophenyl-phenylether	ND		ug/Kg	250	05/04/21	05/04/21
Hexachlorobenzene	ND		ug/Kg	250	05/04/21	05/04/21
Pentachlorophenol	ND		ug/Kg	1,200	05/04/21	05/04/21
Phenanthrene	ND		ug/Kg	250	05/04/21	05/04/21
Anthracene	ND		ug/Kg	250	05/04/21	05/04/21
Di-n-butylphthalate	ND		ug/Kg	250	05/04/21	05/04/21
Fluoranthene	ND		ug/Kg	250	05/04/21	05/04/21
Benzidine	ND		ug/Kg	1,200	05/04/21	05/04/21
Pyrene	ND		ug/Kg	250	05/04/21	05/04/21
Butylbenzylphthalate	ND		ug/Kg	250	05/04/21	05/04/21
3,3'-Dichlorobenzidine	ND		ug/Kg	1,200	05/04/21	05/04/21
Benzo(a)anthracene	ND		ug/Kg	250	05/04/21	05/04/21
Chrysene	ND		ug/Kg	250	05/04/21	05/04/21
bis(2-Ethylhexyl)phthalate	ND		ug/Kg	250	05/04/21	05/04/21
Di-n-octylphthalate	ND		ug/Kg	250	05/04/21	05/04/21
Benzo(b)fluoranthene	ND		ug/Kg	250	05/04/21	05/04/21
Benzo(k)fluoranthene	ND		ug/Kg	250	05/04/21	05/04/21
Benzo(a)pyrene	ND		ug/Kg	250	05/04/21	05/04/21
Indeno(1,2,3-cd)pyrene	ND		ug/Kg	250	05/04/21	05/04/21
Dibenz(a,h)anthracene	ND		ug/Kg	250	05/04/21	05/04/21
Benzo(g,h,i)perylene	ND		ug/Kg	250	05/04/21	05/04/21
Surrogates				**Limits**		
2-Fluorophenol	86%		%REC	29-120	05/04/21	05/04/21
Phenol-d6	89%		%REC	30-120	05/04/21	05/04/21
2,4,6-Tribromophenol	94%		%REC	32-120	05/04/21	05/04/21
Nitrobenzene-d5	79%		%REC	33-120	05/04/21	05/04/21
2-Fluorobiphenyl	81%		%REC	39-120	05/04/21	05/04/21
Terphenyl-d14	98%		%REC	44-125	05/04/21	05/04/21

ENTHALPY ANALYTICAL

Batch QC

Type: Lab Control Sample	**Lab ID: QC923139**	**Batch: 266473**
Matrix: Soil	**Method: EPA 8270C**	**Prep Method: EPA 3546**

QC923139 Analyte	Result	Spiked	Units	Recovery	Qual	Limits
Phenol	1,936	2000	ug/Kg	97%		42-120
2-Chlorophenol	1,887	2000	ug/Kg	94%		41-120
1,4-Dichlorobenzene	1,853	2000	ug/Kg	93%		36-120
3-,4-Methylphenol	1,934	2000	ug/Kg	97%		42-120
N-Nitroso-di-n-propylamine	1,798	2000	ug/Kg	90%		43-121
2,4-Dimethylphenol	1,762	2000	ug/Kg	88%		25-120
1,2,4-Trichlorobenzene	1,833	2000	ug/Kg	92%		38-120
4-Chloro-3-methylphenol	1,917	2000	ug/Kg	96%		40-125
2,4,5-Trichlorophenol	1,986	2000	ug/Kg	99%		40-124
Acenaphthene	1,882	2000	ug/Kg	94%		35-126
4-Nitrophenol	1,683	2000	ug/Kg	84%		24-128
2,4-Dinitrotoluene	1,938	2000	ug/Kg	97%		40-131
Pentachlorophenol	1,473	2000	ug/Kg	74%		35-120
Pyrene	1,901	2000	ug/Kg	95%		37-135
Chrysene	1,967	2000	ug/Kg	98%		38-132
Benzo(b)fluoranthene	2,294	2000	ug/Kg	115%		38-135
Surrogates						
2-Fluorophenol	2,101	2000	ug/Kg	105%		29-120
Phenol-d6	2,115	2000	ug/Kg	106%		30-120
2,4,6-Tribromophenol	2,090	2000	ug/Kg	105%		32-120
Nitrobenzene-d5	1,944	2000	ug/Kg	97%		33-120
2-Fluorobiphenyl	1,883	2000	ug/Kg	94%		39-120
Terphenyl-d14	2,117	2000	ug/Kg	106%		44-125

ENTHALPY ANALYTICAL

Batch QC

Type:	Matrix Spike	Lab ID:	QC923140	Batch:	266473
Matrix (Source ID):	Soil (444657-008)	Method:	EPA 8270C	Prep Method:	EPA 3546

QC923140 Analyte	Result	Source Sample Result	Spiked	Units	Recovery	Qual	Limits	DF
Phenol	1,199	ND	2000	ug/Kg	60%		37-120	10
2-Chlorophenol	1,280	ND	2000	ug/Kg	64%		33-120	10
1,4-Dichlorobenzene	1,097	ND	2000	ug/Kg	55%		32-120	10
3-,4-Methylphenol	1,255	ND	2000	ug/Kg	63%		37-120	10
N-Nitroso-di-n-propylamine	1,148	ND	2000	ug/Kg	57%		32-120	10
2,4-Dimethylphenol	1,239	ND	2000	ug/Kg	62%		32-120	10
1,2,4-Trichlorobenzene	1,179	ND	2000	ug/Kg	59%		33-120	10
4-Chloro-3-methylphenol	1,362	ND	2000	ug/Kg	68%		41-121	10
2,4,5-Trichlorophenol	1,275	ND	2000	ug/Kg		DO	40-120	10
Acenaphthene	1,222	ND	2000	ug/Kg	61%		37-120	10
4-Nitrophenol	2,058	ND	2000	ug/Kg		DO	20-141	10
2,4-Dinitrotoluene	1,019	ND	2000	ug/Kg	51%		33-128	10
Pentachlorophenol	3,016	ND	2000	ug/Kg		DO	28-132	10
Pyrene	1,170	ND	2000	ug/Kg	59%		39-135	10
Chrysene	1,284	ND	2000	ug/Kg	64%		37-135	10
Benzo(b)fluoranthene	1,468	ND	2000	ug/Kg	73%		34-139	10
Surrogates								
2-Fluorophenol	1,318		2000	ug/Kg	66%		29-120	10
Phenol-d6	1,517		2000	ug/Kg	76%		30-120	10
2,4,6-Tribromophenol	1,289		2000	ug/Kg	64%		32-120	10
Nitrobenzene-d5	1,217		2000	ug/Kg	61%		33-120	10
2-Fluorobiphenyl	1,263		2000	ug/Kg	63%		39-120	10
Terphenyl-d14	1,339		2000	ug/Kg	67%		44-125	10

ENTHALPY ANALYTICAL

Batch QC

Type:	**Matrix Spike Duplicate**	**Lab ID:**	**QC923141**	**Batch:**	**266473**
Matrix (Source ID):	**Soil (444657-008)**	**Method:**	**EPA 8270C**	**Prep Method:**	**EPA 3546**

QC923141 Analyte	Result	Source Sample Result	Spiked	Units	Recovery	Qual	Limits	RPD	RPD Lim	DF
Phenol	1,249	ND	2000	ug/Kg	62%		37-120	4	49	10
2-Chlorophenol	1,226	ND	2000	ug/Kg	61%		33-120	4	52	10
1,4-Dichlorobenzene	1,219	ND	2000	ug/Kg	61%		32-120	11	50	10
3-,4-Methylphenol	1,223	ND	2000	ug/Kg	61%		37-120	3	54	10
N-Nitroso-di-n-propylamine	1,167	ND	2000	ug/Kg	58%		32-120	2	50	10
2,4-Dimethylphenol	1,119	ND	2000	ug/Kg	56%		32-120	10	50	10
1,2,4-Trichlorobenzene	1,233	ND	2000	ug/Kg	62%		33-120	4	50	10
4-Chloro-3-methylphenol	1,346	ND	2000	ug/Kg	67%		41-121	1	43	10
2,4,5-Trichlorophenol	1,181	ND	2000	ug/Kg		DO	40-120		47	10
Acenaphthene	1,320	ND	2000	ug/Kg	66%		37-120	8	48	10
4-Nitrophenol	2,207	ND	2000	ug/Kg		DO	20-141		30	10
2,4-Dinitrotoluene	1,045	ND	2000	ug/Kg	52%		33-128	3	50	10
Pentachlorophenol	3,013	ND	2000	ug/Kg		DO	28-132		30	10
Pyrene	1,289	ND	2000	ug/Kg	64%		39-135	10	41	10
Chrysene	1,390	ND	2000	ug/Kg	70%		37-135	8	46	10
Benzo(b)fluoranthene	1,499	ND	2000	ug/Kg	75%		34-139	2	47	10
Surrogates										
2-Fluorophenol	1,451		2000	ug/Kg	73%		29-120			10
Phenol-d6	1,419		2000	ug/Kg	71%		30-120			10
2,4,6-Tribromophenol	1,491		2000	ug/Kg	75%		32-120			10
Nitrobenzene-d5	1,217		2000	ug/Kg	61%		33-120			10
2-Fluorobiphenyl	1,306		2000	ug/Kg	65%		39-120			10
Terphenyl-d14	1,447		2000	ug/Kg	72%		44-125			10

ENTHALPY ANALYTICAL

Batch QC

Type:	**Blank**	**Lab ID:**	**QC923145**	**Batch:**	**266475**
Matrix:	**Soil**	**Method:**	**EPA 8270C**	**Prep Method:**	**EPA 3550C**

QC923145 Analyte	Result	Qual	Units	RL	Prepared	Analyzed
Carbazole	ND		ug/Kg	250	05/04/21	05/11/21
1-Methylnaphthalene	ND		ug/Kg	250	05/04/21	05/11/21
Pyridine	ND		ug/Kg	250	05/04/21	05/11/21
N-Nitrosodimethylamine	ND		ug/Kg	250	05/04/21	05/11/21
Phenol	ND		ug/Kg	250	05/04/21	05/11/21
Aniline	ND		ug/Kg	250	05/04/21	05/11/21
bis(2-Chloroethyl)ether	ND		ug/Kg	1,200	05/04/21	05/11/21
2-Chlorophenol	ND		ug/Kg	250	05/04/21	05/11/21
1,3-Dichlorobenzene	ND		ug/Kg	250	05/04/21	05/11/21
1,4-Dichlorobenzene	ND		ug/Kg	250	05/04/21	05/11/21
Benzyl alcohol	ND		ug/Kg	250	05/04/21	05/11/21
1,2-Dichlorobenzene	ND		ug/Kg	250	05/04/21	05/11/21
2-Methylphenol	ND		ug/Kg	250	05/04/21	05/11/21
bis(2-Chloroisopropyl) ether	ND		ug/Kg	250	05/04/21	05/11/21
3-,4-Methylphenol	ND		ug/Kg	400	05/04/21	05/11/21
N-Nitroso-di-n-propylamine	ND		ug/Kg	250	05/04/21	05/11/21
Hexachloroethane	ND		ug/Kg	250	05/04/21	05/11/21
Nitrobenzene	ND		ug/Kg	1,200	05/04/21	05/11/21
Isophorone	ND		ug/Kg	250	05/04/21	05/11/21
2-Nitrophenol	ND		ug/Kg	250	05/04/21	05/11/21
2,4-Dimethylphenol	ND		ug/Kg	250	05/04/21	05/11/21
Benzoic acid	ND		ug/Kg	1,200	05/04/21	05/11/21
bis(2-Chloroethoxy)methane	ND		ug/Kg	250	05/04/21	05/11/21
2,4-Dichlorophenol	ND		ug/Kg	250	05/04/21	05/11/21
1,2,4-Trichlorobenzene	ND		ug/Kg	250	05/04/21	05/11/21
Naphthalene	ND		ug/Kg	250	05/04/21	05/11/21
4-Chloroaniline	ND		ug/Kg	250	05/04/21	05/11/21
Hexachlorobutadiene	ND		ug/Kg	250	05/04/21	05/11/21
4-Chloro-3-methylphenol	ND		ug/Kg	250	05/04/21	05/11/21
2-Methylnaphthalene	ND		ug/Kg	250	05/04/21	05/11/21
Hexachlorocyclopentadiene	ND		ug/Kg	1,200	05/04/21	05/11/21
2,4,6-Trichlorophenol	ND		ug/Kg	250	05/04/21	05/11/21
2,4,5-Trichlorophenol	ND		ug/Kg	250	05/04/21	05/11/21
2-Chloronaphthalene	ND		ug/Kg	250	05/04/21	05/11/21
2-Nitroaniline	ND		ug/Kg	250	05/04/21	05/11/21
Dimethylphthalate	ND		ug/Kg	250	05/04/21	05/11/21
Acenaphthylene	ND		ug/Kg	250	05/04/21	05/11/21
2,6-Dinitrotoluene	ND		ug/Kg	250	05/04/21	05/11/21
3-Nitroaniline	ND		ug/Kg	250	05/04/21	05/11/21
Acenaphthene	ND		ug/Kg	250	05/04/21	05/11/21
2,4-Dinitrophenol	ND		ug/Kg	1,200	05/04/21	05/11/21
4-Nitrophenol	ND		ug/Kg	250	05/04/21	05/11/21

ENTHALPY ANALYTICAL

Batch QC

QC923145 Analyte	Result	Qual	Units	RL	Prepared	Analyzed
Dibenzofuran	ND		ug/Kg	250	05/04/21	05/11/21
2,4-Dinitrotoluene	ND		ug/Kg	250	05/04/21	05/11/21
Diethylphthalate	ND		ug/Kg	250	05/04/21	05/11/21
Fluorene	ND		ug/Kg	250	05/04/21	05/11/21
4-Chlorophenyl-phenylether	ND		ug/Kg	250	05/04/21	05/11/21
4-Nitroaniline	ND		ug/Kg	250	05/04/21	05/11/21
4,6-Dinitro-2-methylphenol	ND		ug/Kg	250	05/04/21	05/11/21
N-Nitrosodiphenylamine	ND		ug/Kg	250	05/04/21	05/11/21
1,2-diphenylhydrazine (as azobenzene)	ND		ug/Kg	250	05/04/21	05/11/21
4-Bromophenyl-phenylether	ND		ug/Kg	250	05/04/21	05/11/21
Hexachlorobenzene	ND		ug/Kg	250	05/04/21	05/11/21
Pentachlorophenol	ND		ug/Kg	1,200	05/04/21	05/11/21
Phenanthrene	ND		ug/Kg	250	05/04/21	05/11/21
Anthracene	ND		ug/Kg	250	05/04/21	05/11/21
Di-n-butylphthalate	ND		ug/Kg	250	05/04/21	05/11/21
Fluoranthene	ND		ug/Kg	250	05/04/21	05/11/21
Benzidine	ND		ug/Kg	1,200	05/04/21	05/11/21
Pyrene	ND		ug/Kg	250	05/04/21	05/11/21
Butylbenzylphthalate	ND		ug/Kg	250	05/04/21	05/11/21
3,3'-Dichlorobenzidine	ND		ug/Kg	1,200	05/04/21	05/11/21
Benzo(a)anthracene	ND		ug/Kg	250	05/04/21	05/11/21
Chrysene	ND		ug/Kg	250	05/04/21	05/11/21
bis(2-Ethylhexyl)phthalate	ND		ug/Kg	250	05/04/21	05/11/21
Di-n-octylphthalate	ND		ug/Kg	250	05/04/21	05/11/21
Benzo(b)fluoranthene	ND		ug/Kg	250	05/04/21	05/11/21
Benzo(k)fluoranthene	ND		ug/Kg	250	05/04/21	05/11/21
Benzo(a)pyrene	ND		ug/Kg	250	05/04/21	05/11/21
Indeno(1,2,3-cd)pyrene	ND		ug/Kg	250	05/04/21	05/11/21
Dibenz(a,h)anthracene	ND		ug/Kg	250	05/04/21	05/11/21
Benzo(g,h,i)perylene	ND		ug/Kg	250	05/04/21	05/11/21
Surrogates				**Limits**		
2-Fluorophenol	82%		%REC	29-120	05/04/21	05/11/21
Phenol-d6	87%		%REC	30-120	05/04/21	05/11/21
2,4,6-Tribromophenol	64%		%REC	32-120	05/04/21	05/11/21
Nitrobenzene-d5	75%		%REC	33-120	05/04/21	05/11/21
2-Fluorobiphenyl	75%		%REC	39-120	05/04/21	05/11/21
Terphenyl-d14	73%		%REC	44-125	05/04/21	05/11/21

ENTHALPY ANALYTICAL

Batch QC

Type: Lab Control Sample	**Lab ID:** QC923146	**Batch:** 266475
Matrix: Soil	**Method:** EPA 8270C	**Prep Method:** EPA 3550C

QC923146 Analyte	Result	Spiked	Units	Recovery	Qual	Limits
Phenol	1,489	2000	ug/Kg	74%		42-120
2-Chlorophenol	1,429	2000	ug/Kg	71%		41-120
1,4-Dichlorobenzene	1,322	2000	ug/Kg	66%		36-120
3-,4-Methylphenol	1,591	2000	ug/Kg	80%		42-120
N-Nitroso-di-n-propylamine	1,387	2000	ug/Kg	69%		43-121
2,4-Dimethylphenol	1,552	2000	ug/Kg	78%		25-120
1,2,4-Trichlorobenzene	1,379	2000	ug/Kg	69%		38-120
4-Chloro-3-methylphenol	1,476	2000	ug/Kg	74%		40-125
2,4,5-Trichlorophenol	1,616	2000	ug/Kg	81%		40-124
Acenaphthene	1,309	2000	ug/Kg	65%		35-126
4-Nitrophenol	1,364	2000	ug/Kg	68%		24-128
2,4-Dinitrotoluene	1,438	2000	ug/Kg	72%		40-131
Pentachlorophenol	1,193	2000	ug/Kg	60%		35-120
Pyrene	1,323	2000	ug/Kg	66%		37-135
Chrysene	1,411	2000	ug/Kg	71%		38-132
Benzo(b)fluoranthene	1,392	2000	ug/Kg	70%		38-135
Surrogates						
2-Fluorophenol	1,504	2000	ug/Kg	75%		29-120
Phenol-d6	1,618	2000	ug/Kg	81%		30-120
2,4,6-Tribromophenol	1,452	2000	ug/Kg	73%		32-120
Nitrobenzene-d5	1,478	2000	ug/Kg	74%		33-120
2-Fluorobiphenyl	1,455	2000	ug/Kg	73%		39-120
Terphenyl-d14	1,456	2000	ug/Kg	73%		44-125

ENTHALPY ANALYTICAL

Batch QC

Type:	**Lab Control Sample Duplicate**	**Lab ID:**	**QC923147**	**Batch:**	**266475**
Matrix:	**Soil**	**Method:**	**EPA 8270C**	**Prep Method:**	**EPA 3550C**

QC923147 Analyte	Result	Spiked	Units	Recovery	Qual	Limits	RPD	RPD Lim
Phenol	1,535	2000	ug/Kg	77%		42-120	3	20
2-Chlorophenol	1,485	2000	ug/Kg	74%		41-120	4	20
1,4-Dichlorobenzene	1,334	2000	ug/Kg	67%		36-120	1	20
3-,4-Methylphenol	1,612	2000	ug/Kg	81%		42-120	1	20
N-Nitroso-di-n-propylamine	1,452	2000	ug/Kg	73%		43-121	5	20
2,4-Dimethylphenol	1,593	2000	ug/Kg	80%		25-120	3	20
1,2,4-Trichlorobenzene	1,415	2000	ug/Kg	71%		38-120	3	20
4-Chloro-3-methylphenol	1,507	2000	ug/Kg	75%		40-125	2	20
2,4,5-Trichlorophenol	1,655	2000	ug/Kg	83%		40-124	2	20
Acenaphthene	1,330	2000	ug/Kg	67%		35-126	2	20
4-Nitrophenol	1,392	2000	ug/Kg	70%		24-128	2	20
2,4-Dinitrotoluene	1,509	2000	ug/Kg	75%		40-131	5	20
Pentachlorophenol	1,213	2000	ug/Kg	61%		35-120	2	20
Pyrene	1,293	2000	ug/Kg	65%		37-135	2	20
Chrysene	1,379	2000	ug/Kg	69%		38-132	2	20
Benzo(b)fluoranthene	1,307	2000	ug/Kg	65%		38-135	6	20
Surrogates								
2-Fluorophenol	1,496	2000	ug/Kg	75%		29-120		
Phenol-d6	1,654	2000	ug/Kg	83%		30-120		
2,4,6-Tribromophenol	1,480	2000	ug/Kg	74%		32-120		
Nitrobenzene-d5	1,531	2000	ug/Kg	77%		33-120		
2-Fluorobiphenyl	1,466	2000	ug/Kg	73%		39-120		
Terphenyl-d14	1,432	2000	ug/Kg	72%		44-125		

\# CCV drift outside limits; average CCV drift within limits per method requirements
* Value is outside QC limits
DO Diluted Out
ND Not Detected

Enthalpy Analytical
931 West Barkley Ave
Orange, CA 92868
(714) 771-6900

enthalpy.com

Lab Job Number:	446930
Report Level:	II
Report Date:	06/25/2021

Analytical Report *prepared for:*

Spencer Marcinek
Ninyo & Moore
475 Goddard
Suite 200
Irvine, CA 92618

Location: Strathern Park North

Authorized for release by:

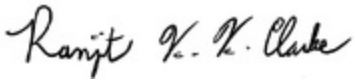

Ranjit K Clarke, Project Manager
(714) 771-9906
Ranjit.Clarke@enthalpy.com

This data package has been reviewed for technical correctness and completeness. Release of this data has been authorized by the Laboratory Manager or the Manager's designee, as verified by the above signature which applies to this PDF file as well as any associated electronic data deliverable files. The results contained in this report meet all requirements of NELAP and pertain only to those samples which were submitted for analysis. This report may be reproduced only in its entirety.

CA ELAP# 1338, NELAP# 4038, SCAQMD LAP# 18LA0518, LACSD ID# 10105, CDC ELITE Member

ENTHALPY ANALYTICAL

Sample Summary

Spencer Marcinek
Ninyo & Moore
475 Goddard
Suite 200
Irvine, CA 92618

Lab Job #: 446930
Location: Strathern Park North
Date Received: 04/28/21

Sample ID	Lab ID	Collected	Matrix
TP7-5.5	446930-001	04/27/21 13:50	Soil
TP10-4	446930-002	04/27/21 15:45	Soil
TP16-0.75	446930-003	04/28/21 09:55	Soil
TP18-3	446930-004	04/28/21 10:55	Soil
TP19-6	446930-005	04/28/21 12:25	Soil
TP21-5	446930-006	04/28/21 14:15	Soil

Ranjit Clarke

From: Beth Abramson-Beck <babramsonbeck@ninyoandmoore.com> on behalf of Beth Abramson-Beck
Sent: Friday, June 18, 2021 2:26 PM
To: Ranjit.Clarke@enthalpy.com
Cc: Spencer Marcinek
Subject: [EXTERNAL] RE: Strathern Park North - Enthalpy Data (444657) (Invoice CINV-033567)
Attachments: Strathern Park soluble testing.pdf

Flag Status: Flagged

Hi Ranjit,
Hope all is well.
Please conduct the following additional testing indicated as a blue x with pink highlight and blue circle.
Thank you so much!

Beth Abramson-Beck, PG
Principal Geologist
Ninyo & Moore | Geotechnical & Environmental Sciences Consultants
5710 Ruffin Road | San Diego, CA 92123
858.576.1000
35 Years of Quality Service | ninyoandmoore.com

From: Ranjit K Clarke [mailto:Ranjit.Clarke@enthalpy.com]
Sent: Tuesday, May 25, 2021 3:19 PM
To: Beth Abramson-Beck <babramsonbeck@ninyoandmoore.com>
Subject: Strathern Park North - Enthalpy Data (444657) (Invoice CINV-033567)

Hi Beth Abramson,

Project ID changed from "Strathem Park North" to "Strathern Park North". The office being invoiced has also been changed from Ninyo - San Diego to Ninyo - Irvine per Dan Chavez.

Please find attached the following files:
• Invoice
• PDF Deliverable
• Standard Format EDD (444657_standard.zip)

Email was also sent to: kgilbert@ninyoandmoore.com, nmaccountspayable@ninyoandmoore.com

ENTHALPY ANALYTICAL

Chain of Custody Record

Lab No:

Page: 1 of 4

Turn Around Time (Rush must be pre-arranged)

Standard:	X	4 Day:		3 Day:	
2 Day:		1 Day:		Same Day:	1

Enthalpy Analytical - Orange

931 W. Barkley Avenue, Orange, CA 92868

Phone 714-771-6900

Matrix: A = Air DW = Drinking Water F = Food SD = Sediment T = Tissue PP = Pure Product S = Solid/Soil SeaW = Sea Water SW = Swab W = Water WP = Wipe O = Other

Preservatives: 1 = $Na_2S_2O_3$ 2 = HCl 3 = HNO_3 4 = H_2SO_4 5 = NaOH 6 = Other

5.5/1.3, 5.0/1.2

CUSTOMER INFORMATION		PROJECT INFORMATION	
Company:	Ninyo & Moore	Name:	Strathern Park North
Report To:	Beth Abramson Beck	Number:	211294007
Email:	babramsonbeck@ninyoandmoore.com	P.O. #:	
Address:	5710 Ruffin Rd SD	Address:	
Phone:	858 576-1000	Global ID:	
Fax:		Sampled By:	BAB

	Sample ID	Sampling Date	Sampling Time	Matrix	Container No. / Size	Pres.	Total Metals (6010B/7471A)	lead only (6010B)	TPH (carbon chain) 8015	SVOCs 8270C	VOCs 8260B	OCPs 8081A	PCBs 8082A	STLC lead	TCLP lead	STLC copper	STLC zinc	Test Instructions / Comments
1	TP1-0.5	04.27.21	8:05	SIL	JAR			X										ASSIGNED 04.29.21 WILL ASSIGN ALTESTS 04.29.2021 TPH & ID PLS
2	TP1-3		8:15				X											
3	TP1-7.5		8:20					X										
4	TP2-0.5		8:45															
5	TP2-3.5		8:50															
6	TP2-7		9:05															
7	TP3-0.5		9:30				X											
8	TP3-5		9:40				X		X	X		X	X					AC in sample
9	TP3-7.5		10:00					X										
10	TP4-0.75		10:05															

	Signature	Print Name	Company / Title	Date / Time
1 Relinquished By:		Beth Strathern	NM/EA	04/28/21 16:58
1 Received By:		Elizabeth Ramu	EA	4/29/21 16:55
2 Relinquished By:				
2 Received By:				
3 Relinquished By:				
3 Received By:				

ENTHALPY ANALYTICAL

Chain of Custody Record

Lab No:

Page: 2 of 4

Turn Around Time (Rush must be pre-arranged)

Standard:	X	4 Day:		3 Day:	
2 Day:		1 Day:		Same Day:	(2)

Enthalpy Analytical - Orange

931 W. Barkley Avenue, Orange, CA 92868

Phone 714-771-6900

Matrix: A = Air DW = Drinking Water F = Food SD = Sediment T = Tissue PP = Pure Product S = Solid/Soil SeaW = Sea Water SW = Swab W = Water WP = Wipe O = Other

Preservatives: 1 = $Na_2S_2O_3$ 2 = HCl 3 = HNO_3 4 = H_2SO_4 5 = NaOH 6 = Other

CUSTOMER INFORMATION		PROJECT INFORMATION	
Company:	Ninyo & Moore	Name:	Strathern Park North
Report To:	Beth Abramson Beck	Number:	211894007
Email:	babramsonbeck@ninyoandmoore.com	P.O. #:	
Address:	5710 Ruffin Rd SD 92007	Address:	
Phone:	858 576 1000	Global ID:	
Fax:		Sampled By:	

	Sample ID	Sampling Date	Sampling Time	Matrix	Container No. / Size	Pres.	Analysis Request: THe 17-metals 6010B/7471A	lead only 6010B	TPH 8015	SVOCs 8270C	VOCs 8260B	OCPs	PCBs	STLC lead	TCLP lead	STLC copper	STLC Zinc	Test Instructions / Comments
1	TP4-6	04/27/21	1040	SOIL	9 oz jar													
2	TP5-0.5	04/27/21	1100					X										
3	TP5-5		1120					X										
4	TP5-7		1125					X										
5	TP6-0.75	04/27/21	1240				X											
6	TP6-3		1245				X											
7	TP6-6.5		1255				X											
8	TP7-1		1200				X											
9	TP7-3		1300				X											grab
10	TP7-4	↓	1305	↓	↓		X		X									grab

	Signature	Print Name	Company / Title	Date / Time
[1] Relinquished By:		BE Abramson Beck	N. Moore	04/28/21 5-
[1] Received By:		Elizabeth Ramirez	EA	4/28/21 16:58
[2] Relinquished By:				
[2] Received By:				
[3] Relinquished By:				
[3] Received By:				

ENTHALPY ANALYTICAL

Chain of Custody Record

Lab No:

Page: 3 of 4

Turn Around Time (Rush must be pre-arranged)

Standard: X	4 Day:	3 Day:
2 Day:	1 Day:	Same Day:

3

Enthalpy Analytical - Orange

931 W. Barkley Avenue, Orange, CA 92868

Phone 714-771-6900

Matrix: A = Air DW = Drinking Water F = Food SD = Sediment T = Tissue PP = Pure Product S = Solid/Soil SeaW = Sea Water SW = Swab W = Water WP = Wipe O = Other

Preservatives: 1 = $Na_2S_2O_3$ 2 = HCl 3 = HNO_3 4 = H_2SO_4 5 = NaOH 6 = Other

CUSTOMER INFORMATION		PROJECT INFORMATION	
Company:	Ninyo & Moore	Name:	Stratham Park North
Report To:	Beth Abramson Beck	Number:	210294007
Email:	babramsonbeck@ninyoandmoore.com	P.O. #:	
Address:	5710 Ruffin Rd SD	Address:	
Phone:	858 576-1000	Global ID:	
Fax:		Sampled By:	

	Sample ID	Sampling Date	Sampling Time	Matrix	Container No. / Size	Pres.	Title 22 Metals 6008/7471A	lead only 6010B	TPH 8015	SVOCs 8270C	VOCs 8260B	OCPs	PCBs	STLC lead	TCLP lead	STLC copper	STLC zinc	Test Instructions / Comments
1	TP7-blue	04.27.21	1:45	soil	glass jar		X											unknown cobalt/indigo blue substance
2	TP7-5.5		1:50				X		X	X	X	X	X	X	X			glass
3	TP7-7		1:55				X		X									
4	TP8-1		2:30															
5	TP8-3		2:35															
6	TP8-5		2:40															
7	TP9-1		3:—				X											
8	TP9-4		3:10				X		X	X	X							
9	TP9-6		3:15					X										
10	TP10-1		3:35				X											

	Signature	Print Name	Company / Title	Date / Time
1 Relinquished By:		F. Stamm	N. Moore	04.28.21 / 5:01
1 Received By:		Elizabeth Ramirez	EA	4/28/21 16:58
2 Relinquished By:				
2 Received By:				
3 Relinquished By:				
3 Received By:				

ENTHALPY ANALYTICAL

Chain of Custody Record

Lab No:

Page: 4 of 4

Turn Around Time (Rush must be pre-arranged)

Standard:		4 Day:		3 Day:	
2 Day:		1 Day:		Same Day:	4

Enthalpy Analytical - Orange

931 W. Barkley Avenue, Orange, CA 92868

Phone 714-771-6900

Matrix: A = Air DW = Drinking Water F = Food SD = Sediment T = Tissue PP = Pure Product S = Solid/Soil SeaW = Sea Water SW = Swab W = Water WP = Wipe O = Other

Preservatives: 1 = $Na_2S_2O_3$ 2 = HCl 3 = HNO_3 4 = H_2SO_4 5 = NaOH 6 = Other

CUSTOMER INFORMATION		PROJECT INFORMATION	
Company:	Bob Abramson Beck	Name:	Strathern Park North
Report To:	Ninyo Moore	Number:	210194007
Email:	babramsonbeck@ninyoandmoore.com	P.O. #:	
Address:	510 Ruffin Rd SD	Address:	
Phone:	858 576 1000	Global ID:	
Fax:		Sampled By:	

	Sample ID	Sampling Date	Sampling Time	Matrix	Container No. / Size	Pres.
1	TP10-3.5	04/27/21	340	SOIL	9125s jar	
2	TP10-4	↓	345	↓	↓	
3	TP10-7	↓	350	↓	↓	
4						
5						
6						
7						
8						
9						
10						

Analysis Request

Title 22 metals 6010B/7471A	lead only 6010B	SVOCs 8270C	VOCs 8260B	OCPs	PCBs	TPH 8015M	STLC lead	TCLP lead	STLC copper	STLC zinc
	X						X	X	X	
X	X	X	X	X	X	X	X	X	X	
X										

Test Instructions / Comments

Please note lab reporting order is different

	Signature	Print Name	Company / Title	Date / Time
1 Relinquished By:		Bob Abramson Beck	Ninyo Moore	04.28.21 15:58
1 Received By:		Elizabeth Ramm	EA	4/28/21 16:50
2 Relinquished By:				
2 Received By:				
3 Relinquished By:				
3 Received By:				

ENTHALPY ANALYTICAL

Chain of Custody Record

Lab No:

Page: of

Turn Around Time (Rush must be pre-arranged)

Standard:	X	4 Day:		3 Day:	5
2 Day:		1 Day:		Same Day:	

Enthalpy Analytical - Orange

931 W. Barkley Avenue, Orange, CA 92868

Phone 714-771-6900

Matrix: A = Air DW = Drinking Water F = Food SD = Sediment T = Tissue PP = Pure Product S = Solid/Soil SeaW = Sea Water SW = Swab W = Water WP = Wipe O = Other

Preservatives: 1 = $Na_2S_2O_3$ 2 = HCl 3 = HNO_3 4 = H_2SO_4 5 = NaOH 6 = Other

CUSTOMER INFORMATION		PROJECT INFORMATION	
Company:	Ninyo & Moore	Name:	Strathern Park North
Report To:	Beth Abramson Beck	Number:	211294007
Email:	babramsonbeck@ninyoandmoore.com	P.O. #:	
Address:		Address:	
Phone:	858 576 1000	Global ID:	
Fax:		Sampled By:	

Analysis Request

	Sample ID	Sampling Date	Sampling Time	Matrix	Container No. / Size	Pres.	Title 22 metals 6010B/7471A	lead only 6010B	TPH / 8015B	SVOCs 8270C	VOCs 8260B	OCPs 8081A	PCBs 8082	STLC lead	TCLP lead	STLC copper	STLC zinc
1	TP11-0.75	04.28.21	745	Soil	grass jars		X										
2	TP11-3.5						X		X	X							AC in sample
3	TP11-6		8—				X		X								
4	TP12-1		820					X									
5	TP12-4		830					X									
6	TP13-1		845														
7	TP13-4		850														
8	TP14-1		9—					X									
9	TP14-2		911					X									
10	TP15-1		925														

Test Instructions / Comments

	Signature	Print Name	Company / Title	Date / Time
1 Relinquished By:	[signature]	Beth Abramson Beck	Ninyo & Moore	04.28.21 16:58
1 Received By:	[signature]	Elizabeth Ramu	EA	4/28/21 16:58
2 Relinquished By:				
2 Received By:				
3 Relinquished By:				
3 Received By:				

(7)

ENTHALPY ANALYTICAL

Chain of Custody Record

Lab No:

Page: of

Turn Around Time (Rush must be pre-arranged)

Standard:		4 Day:		3 Day:	6
2 Day:		1 Day:		Same Day:	

Enthalpy Analytical - Orange

931 W. Barkley Avenue, Orange, CA 92868

Phone 714-771-6900

Matrix: A = Air DW = Drinking Water F = Food SD = Sediment T = Tissue PP = Pure Product S = Solid/Soil SeaW = Sea Water SW = Swab W = Water WP = Wipe O = Other

Preservatives: 1 = $Na_2S_2O_3$ 2 = HCl 3 = HNO_3 4 = H_2SO_4 5 = NaOH 6 = Other

CUSTOMER INFORMATION		PROJECT INFORMATION	
Company:	Ninyo & Moore	Name:	
Report To:		Number:	
Email:		P.O. #:	
Address:		Address:	
Phone:		Global ID:	
Fax:		Sampled By:	

Analysis Request

	Sample ID	Sampling Date	Sampling Time	Matrix	Container No. / Size	Pres.	Title 22 metals 6010B/7471A	lead only 6010B	TPH 8015	SVOCs 8270C	VOCs 8260B	OCPs 8081A	PCBs 8082	STLC lead	TCLP lead	STLC copper	STLC zinc
1	TP15-3	04 28 21	930	Soil	glass												
2	TP16-0.85	04 28 21	955		jar		X							X	X		
3	TP16-3	04 28 21	10					X									
4	TP17-1	04/28/21	1010					X									
5	TP17-4	04/28/21	1015					X									
6	TP18-1	04/28/21	1050				X		X								
7	TP18-3	04 28 21	1055				X							X			
8	TP18-6.5		1105				X										
9	TP19-1		1210				X										
10	TP19-3		1215				X		X	X	X	X	X				

Test Instructions / Comments

	Signature	Print Name	Company / Title	Date / Time
1 Relinquished By:	[signature]	Beth Sabaman Rah	Ninyo & Moore	04.28.21 16:58
1 Received By:	[signature]	Elizabeth Ramu	EA	04/28/21 16:58
2 Relinquished By:				
2 Received By:				
3 Relinquished By:				
3 Received By:				

ENTHALPY ANALYTICAL

Chain of Custody Record

Lab No:

Page: of

Turn Around Time (Rush must be pre-arranged)

Standard:	X	4 Day:		3 Day:	7
2 Day:		1 Day:		Same Day:	

Enthalpy Analytical - Orange
931 W. Barkley Avenue, Orange, CA 92868
Phone 714-771-6900

Matrix: A = Air DW = Drinking Water F = Food SD = Sediment T = Tissue PP = Pure Product S = Solid/Soil SeaW = Sea Water SW = Swab W = Water WP = Wipe O = Other

Preservatives: 1 = $Na_2S_2O_3$ 2 = HCl 3 = HNO_3 4 = H_2SO_4 5 = NaOH 6 = Other

CUSTOMER INFORMATION		PROJECT INFORMATION	
Company:	Ninyo Moore	Name:	
Report To:		Number:	
Email:		P.O. #:	
Address:		Address:	
Phone:		Global ID:	
Fax:		Sampled By:	

Analysis Request

	Sample ID	Sampling Date	Sampling Time	Matrix	Container No. / Size	Pres.	Ti Du 22 metals 6010B/7.4/7.4	Lead only 6010B	TPH 8015	SVOCs 8270C	VOCs 8260B	OCPs 8081A	PCBs 8082	STLC lead	TCLP lead	STLC copper	STLC zinc	Test Instructions / Comments
1	TP19-6	04/28/21	1225	SOIL	GLASS		X							X				
2	TP20-1		1255		JAR			X										
3	TP20-3.5		1:10				X		X	X		X	X					
4	TP20-7.5		1:00					X										
5	TP21-1		130				X											
6	TP21-3		135				X											
7	TP21-7		150				X											AllW
8	TP21-5		215				X		X	X	X	X	X	X	X		X	BW, glass
9	TP21-5.5		230				X		X									BW glass
10	TP22-0.75		230					X										

	Signature	Print Name	Company / Title	Date / Time
1 Relinquished By:	[signature]	Bob S Abramson	Ninyo & Moore	04.28.21 16:58
1 Received By:	[signature]	Elizabeth Ramos	EA	4/28/21 16:58
2 Relinquished By:				
2 Received By:				
3 Relinquished By:				
3 Received By:				

ENTHALPY ANALYTICAL

Analysis Results for 446930

Spencer Marcinek
Ninyo & Moore
475 Goddard
Suite 200
Irvine, CA 92618

Lab Job #: 446930
Location: Strathern Park North
Date Received: 04/28/21

Sample ID: TP7-5.5 **Lab ID: 446930-001** **Collected: 04/27/21 13:50**

446930-001 Analyte	Result	Qual	Units	RL	Matrix	DF	Batch	Prepared	Analyzed	Chemist
Method: EPA 6010B Prep Method: EPA 3010A										
Lead	**1.2**		mg/L	0.015	TCLP Leachate	1	269251	06/22/21	06/22/21	SBW
Method: EPA 6010B Prep Method: WET										
Lead	**7.4**		mg/L	0.15	WET Leachate	10	269323	06/23/21	06/23/21	SBW

Sample ID: TP10-4 **Lab ID: 446930-002** **Collected: 04/27/21 15:45**

446930-002 Analyte	Result	Qual	Units	RL	Matrix	DF	Batch	Prepared	Analyzed	Chemist
Method: EPA 6010B Prep Method: EPA 3010A										
Lead	**3.5**		mg/L	0.015	TCLP Leachate	1	269251	06/22/21	06/22/21	SBW
Method: EPA 6010B Prep Method: WET										
Copper	**17**		mg/L	0.30	WET Leachate	10	269323	06/23/21	06/23/21	SBW
Lead	**17**		mg/L	0.15	WET Leachate	10	269323	06/23/21	06/23/21	SBW

Sample ID: TP16-0.75 **Lab ID: 446930-003** **Collected: 04/28/21 09:55**

446930-003 Analyte	Result	Qual	Units	RL	Matrix	DF	Batch	Prepared	Analyzed	Chemist
Method: EPA 6010B Prep Method: EPA 3010A										
Lead	ND		mg/L	0.015	TCLP Leachate	1	269251	06/22/21	06/22/21	SBW
Method: EPA 6010B Prep Method: WET										
Lead	**0.28**		mg/L	0.15	WET Leachate	10	269323	06/23/21	06/23/21	SBW

Sample ID: TP18-3 **Lab ID: 446930-004** **Collected: 04/28/21 10:55**
Matrix: WET Leachate

446930-004 Analyte	Result	Qual	Units	RL	DF	Batch	Prepared	Analyzed	Chemist
Method: EPA 6010B Prep Method: WET									
Lead	**0.53**		mg/L	0.15	10	269323	06/23/21	06/23/21	SBW

Results for any subcontracted analyses are not included in this section.

Analysis Results for 446930

Sample ID: TP19-6	Lab ID: 446930-005	Collected: 04/28/21 12:25
	Matrix: WET Leachate	

446930-005 Analyte	Result	Qual	Units	RL	DF	Batch	Prepared	Analyzed	Chemist
Method: EPA 6010B Prep Method: WET									
Lead	ND		mg/L	0.15	10	269323	06/23/21	06/23/21	SBW

Sample ID: TP21-5	Lab ID: 446930-006	Collected: 04/28/21 14:15

446930-006 Analyte	Result	Qual	Units	RL	Matrix	DF	Batch	Prepared	Analyzed	Chemist
Method: EPA 6010B Prep Method: EPA 3010A										
Lead	**3.8**		mg/L	0.015	TCLP Leachate	1	269251	06/22/21	06/22/21	SBW
Method: EPA 6010B Prep Method: WET										
Lead	**18**		mg/L	0.15	WET Leachate	10	269323	06/23/21	06/23/21	SBW
Zinc	**700**		mg/L	6.0	WET Leachate	100	269323	06/23/21	06/24/21	SBW

ND Not Detected

Results for any subcontracted analyses are not included in this section.

ENTHALPY ANALYTICAL

Batch QC

Type: Blank	**Lab ID:** QC930585	**Batch:** 269251
Matrix: TCLP Leachate	**Method:** EPA 6010B	**Prep Method:** EPA 3010A

QC930585 Analyte	Result	Qual	Units	RL	Prepared	Analyzed
Lead	ND		mg/L	0.015	06/22/21	06/22/21

Type: Lab Control Sample	**Lab ID:** QC930586	**Batch:** 269251
Matrix: TCLP Leachate	**Method:** EPA 6010B	**Prep Method:** EPA 3010A

QC930586 Analyte	Result	Spiked	Units	Recovery	Qual	Limits
Lead	2.190	2.000	mg/L	109%		80-120

Type: Matrix Spike	**Lab ID:** QC930587	**Batch:** 269251
Matrix (Source ID): TCLP Leachate (446930-001)	**Method:** EPA 6010B	**Prep Method:** EPA 3010A

QC930587 Analyte	Result	Source Sample Result	Spiked	Units	Recovery	Qual	Limits	DF
Lead	3.281	1.185	2.000	mg/L	105%		75-125	1

Type: Matrix Spike Duplicate	**Lab ID:** QC930588	**Batch:** 269251
Matrix (Source ID): TCLP Leachate (446930-001)	**Method:** EPA 6010B	**Prep Method:** EPA 3010A

QC930588 Analyte	Result	Source Sample Result	Spiked	Units	Recovery	Qual	Limits	RPD	RPD Lim	DF
Lead	3.305	1.185	2.000	mg/L	106%		75-125	1	20	1

Type: Blank	**Lab ID:** QC930783	**Batch:** 269323
Matrix: WET Leachate	**Method:** EPA 6010B	**Prep Method:** WET

QC930783 Analyte	Result	Qual	Units	RL	Prepared	Analyzed
Copper	ND		mg/L	0.30	06/23/21	06/23/21
Lead	ND		mg/L	0.15	06/23/21	06/23/21
Zinc	ND		mg/L	0.60	06/23/21	06/23/21

Type: Lab Control Sample	**Lab ID:** QC930784	**Batch:** 269323
Matrix: WET Leachate	**Method:** EPA 6010B	**Prep Method:** WET

QC930784 Analyte	Result	Spiked	Units	Recovery	Qual	Limits
Copper	4.937	5.000	mg/L	99%		80-120
Lead	5.346	5.000	mg/L	107%		80-120
Zinc	4.916	5.000	mg/L	98%		80-120

ENTHALPY ANALYTICAL

Batch QC

Type:	**Lab Control Sample Duplicate**	**Lab ID:**	**QC930785**	**Batch:**	**269323**
Matrix:	**WET Leachate**	**Method:**	**EPA 6010B**	**Prep Method:**	**WET**

QC930785 Analyte	Result	Spiked	Units	Recovery	Qual	Limits	RPD	RPD Lim
Copper	4.738	5.000	mg/L	95%		80-120	4	20
Lead	5.172	5.000	mg/L	103%		80-120	3	20
Zinc	4.734	5.000	mg/L	95%		80-120	4	20

ND Not Detected

Ninyo & Moore

Geotechnical & Environmental Sciences Consultants

5710 Ruffin Road | San Diego, California 92123 | p. 858.576.1000

ARIZONA | CALIFORNIA | COLORADO | NEVADA | TEXAS | UTAH

www.ninyoandmoore.com

Draft Stormwater Pollution Prevention Plan for Construction Activities

STORM WATER POLLUTION PREVENTION PLAN

FOR

CONSTRUCTION ACTIVITIES

Risk Level 1
Order No. 2009-009-DWQ
NPDES NO. CAS000002

Strathern Park North Stormwater Capture Project

WDID No.

DRAFT

Date Updated:
4/11/2023

PROJECT INFORMATION SUMMARY

Project Location and Address:
Strathern Park North
8041 Whitsett Ave
North Hollywood, CA 91605

Land Owner Name, Address, and Phone Number:
City of Los Angeles
Department of Water and Power
111 N. Hope Street, Room 1218
Los Angeles, CA 90012
(213) 367-0436

Qualified SWPPP Developer Name, Address, Phone No and Email:
Christine Rice, PE, QSD
CDM Smith
600 Wilshire Blvd, Suite 750
Los Angeles, CA 90017
(213) 457-2151
ricetc@cdmsmith.com

SWPPP Compliance Contact:
Mike Hanson, Certified QSD #20531
(213) 367-0634

Robin Yamada
(213) 367-4230

On-site Contact Person:
QSP or designated responsible person
TBD

Contractor:
TBD

Date Notice of Intent Filed:
TBD

State Water Resources Control Board
Waste Discharge Identification (WDID) Number*:*

WDID:

TABLE OF CONTENTS

PROJECT INFORMATION SUMMARY ..... **I**
TABLE OF CONTENTS ..... **II**
1.0 PURPOSE **1**
2.0 OBJECTIVES **2**
2.1 TRAINING QUALIFICATIONS AND CERTIFICATION REQUIREMENTS **2**
3.0 LIST OF CONTRACTORS AND SUBCONTRACTORS **5**
4.0 PROJECT INFORMATION **6**
4.1 PROJECT DESCRIPTION 6
4.2 PROJECT LOCATION 6
4.3 PROJECT SCHEDULE 7
4.4 EXISTING SITE CONDITIONS 7
5.0 EFFLUENT LIMITS, POLLUTANT SOURCES,AND BMP IDENTIFICATION **8**
5.1 INTRODUCTION 8
5.2 EFFLUENT STANDARDS: NUMERIC AND NARRATIVE LIMITATIONS 8
5.3 UNAUTHORIZED NON-STORM WATER DISCHARGES 8
5.3 (a) Non-Storm Water Management *9*
5.4 AUTHORIZED NON-STORM WATER DISCHARGES 9
5.5 BEST MANAGEMENT PRACTICES 9
5.5 (a) Employee Training Program *10*
5.5(b) Good Site Management "Housekeeping" *10*
5.5 (c) Non-Storm Water Management *13*
5.5 (d) Erosion Control *13*
5.5 (e) Sediment Control *14*
5.5 (f) Run-on and Run-off Controls *15*
5.5 (g) Inspection, Maintenance and Repair *15*
5.5(h) Hazardous Waste Management and Disposal *16*
5.5(i) Spill Prevention and Control *17*
5.5(j) Materials Handling and Storage *17*
5.5 (k) Stockpile Management *17*
5.5 (l) Scheduling *18*
5.5 (m) Vehicle ingress and egress *18*
5.5(n) Concrete Truck Washing Waste *18*
6.0 RAIN EVENT ACTION PLAN (REAP) **18**
7.0 MONITORING AND REPORTING REQUIREMENTS **21**
7.1 INTRODUCTION 21
7.2 MONITORING AND REPORTING REQUIREMENTS 22
7.2 (a) Construction Site Monitoring Program (CSMP) Requirements *22*
7.2 (b) CSMP Monitoring Description *22*
7.2 (c) Objectives *23*
7.2 (d) Visual Observation and Sample Collection Exemptions *24*
7.3 VISUAL MONITORING (INSPECTION) REQUIREMENTS FOR QUALIFYING RAIN EVENTS 24

7.4 WATER QUALITY SAMPLING AND ANALYSIS 25
7.4 (a) Effluent Analysis Requirements *25*
7.4 (b)Effluent Sampling Schedule *25*
7.4 (c) Number of Effluent Samples *25*
7.4 (d) Effluent Sampling Locations *25*
7.4 (e) Storm Water Sample Collection and Handling Instructions *26*
7.4 (f)– Monitoring Methods *27*
7.4 (g) Analytical Methods *27*
7.4 (h) Non-Storm Water Discharge Monitoring Requirements *28*
7.4 (i) Non-Visible Pollutant Monitoring Requirements *29*
7.4 (j)– Watershed Monitoring Option *30*
7.5 PARTICLE SIZE ANALYSIS FOR PROJECT RISK JUSTIFICATION 30
7.6 – RECORDS 30
7.7 NAL EXCEEDANCE REPORT 31

8.0 GENERAL REQUIREMENTS 32

8.1 SWPPP CERTIFICATION 32
8.2 ANNUAL SITE COMPLIANCE EVALUATION AND CERTIFICATION 32
8.3 SWPPP AMENDMENTS 32
8.4 SWPPP AVAILABILITY 32

9.0 POST-CONSTRUCTION STANDARDS 33

10.0 CERTIFICATION STATEMENT 34

Appendices

Appendix A	**Notice of Intent**
Appendix B	**Site Maps**
Appendix C	**Combined Visual Inspection Form**
Appendix D	**Construction Site Monitoring Plan (CSMP)**
Appendix E	**Rain Event Action Plan (REAP)**
Appendix F	**Training Documentation Forms and Records**
Appendix G	**Change of Information Form and Amendments Certification**
Appendix H	**Weather Information Guide**
Appendix I	**LRP Authorization & Certification**
Appendix J	**Annual Certification**
Appendix K	**Risk Determination**
Appendix L	**Glossary and Acronyms**
Appendix M	**BMP Fact Sheets**
Appendix N	**Monitoring Records**
Appendix O	**Example Forms**
Appendix P	**Field Meter Instructions**
Appendix Q	**Construction General Permit**

1.0 PURPOSE

This Storm Water Pollution Prevention Plan (SWPPP) lists and describes Best Management Practices (BMPs) that will be used during this construction project to minimize the potential for pollutants to leave the site during construction activities. Construction BMPs can include structural devices, material storage methods, and operational procedures used to prevent, control, and treat storm water pollution emanating from the site. Construction activities can disturb large areas that result in erosion and transportation of related particulates such as sediments and dust to nearby waterways. In excess amounts, these particulates can increase water turbidity and consequently impair aquatic life and beneficial uses of the water.

Pollutants such as hydrocarbons, metals, nutrients, toxic substances, trash, and other debris can be generated from a variety of construction activities and can travel with eroded sediments. Potential pollutants traveling with the sediments may include the organic components in the top soil, plant residues, nutrient elements, organic material, deposited atmospheric pollutants, and other liquid and solid wastes.

The amended federal Clean Water Act of 1987 (CWA) added a requirement to address construction site storm water pollution. In California, construction activities consisting of one acre or more of soil are subject to the National Pollutant Discharge Elimination System (NPDES) General Permit for Discharges of Storm Water Runoff Associated with Construction Activity (General Permit). This permit requires all dischargers (i.e. landowners or developers) to prepare and implement a Storm Water Pollution Prevention Plan (SWPPP) prior to disturbing a site. This (SWPPP) is designed to meet the requirements of the General Permit. This SWPPP must also be implemented at the appropriate level to protect water quality at all times throughout the entire construction project, including both dry and wet weather. BMPs must be implemented and maintained to control erosion, sediment, other construction pollutants, and non-storm water discharges year-round. Other requirements of this SWPPP include employee training, site inspections, and proper maintenance of BMPs as necessary. Los Angeles Department of Water and Power (LADWP) construction crews and personnel, as well as its contractors and subcontractors, are required to follow the guidelines and BMPs outlined in this SWPPP. They are also required to ensure proper implementation and maintenance of such BMPs for the entire duration of this project.

A copy of this SWPPP must be maintained at the construction site. This SWPPP must be modified as necessary to reflect any changes in personnel or construction site conditions.

Amendments to this SWPPP must be documented using the forms provided in Appendix G**.**



2.0 OBJECTIVES

A. The SWPPP shall be designed to address the following objectives:

1. All pollutants and their sources, including sources of sediment associated with construction, construction site erosion and all other activities associated with construction activity are controlled;

2. Where not otherwise required to be under a Regional Water Board permit, all non-storm water discharges are identified and either eliminated, controlled, or treated;

3. Site BMPs are effective and result in the reduction or elimination of pollutants in storm water discharges and authorized non-storm water discharges from construction activity to the BAT/BCT standard;

4. Calculations and design details as well as BMP controls for site run-on are complete and correct, and

5. Stabilization BMPs installed to reduce or eliminate pollutants after construction are completed.

B. To demonstrate compliance with requirements of this General Permit, the QSD shall include information in the SWPPP that supports the conclusions, selections, use, and maintenance of BMPs.

C. The discharger shall make the SWPPP available at the construction site during working hours while construction is occurring and shall be made available upon request by a State or Municipal inspector. When the original SWPPP is retained by a crewmember in a construction vehicle and is not currently at the construction site, current copies of the BMPs and map/drawing will be left with the field crew and the original SWPPP shall be made available via a request by radio/telephone. -

2.1 TRAINING QUALIFICATIONS AND CERTIFICATION REQUIREMENTS

A. General

The discharger shall ensure that all persons responsible for implementing requirements of this General Permit shall be appropriately trained in accordance with this section 2.1.(See Section *5.5 (a) Employee Training Program* for more details). Training should be both formal and informal, occur on an ongoing basis, and should include training offered by recognized governmental agencies or professional organizations. Those responsible for preparing and amending SWPPPs shall comply with the requirements in this section.



The discharger shall provide documentation of all training for persons responsible for implementing the requirements of this General Permit in the Annual Reports.

B. SWPPP Certification Requirements

1. Qualified SWPPP Developer: The discharger shall ensure that SWPPPs are written, amended and certified by a Qualified SWPPP Developer (QSD). A QSD shall have one of the following registrations or certifications, and appropriate experience, as required for:

   a. A California registered professional civil engineer;

   b. A California registered professional geologist or engineering geologist;

   c. A California registered landscape architect;

   d. A professional hydrologist registered through the American Institute of Hydrology;

   e. A Certified Professional in Erosion and Sediment Control (CPESC) ™ registered through Enviro Cert International, Inc.;

   f. A Certified Professional in Storm Water Quality (CPSWQ) ™ registered through Enviro Cert International, Inc.; or

   g. A professional in erosion and sediment control registered through the National Institute for Certification in Engineering Technologies (NICET);

   Effective two years after the adoption date of this General Permit, a QSD shall have attended a State Water Board-sponsored or approved QSD training course.

2. The discharger shall list the name and telephone number of the currently designated Qualified SWPPP Developer(s) in the SWPPP.

3. Qualified SWPPP Practitioner: The discharger shall ensure that all BMPs required by this General Permit are implemented by a Qualified SWPPP Practitioner (QSP). A QSP is a person responsible for non-storm water and storm water visual observations, sampling and analysis. Effective two years from the date of adoption of this General Permit, a QSP shall be either a QSD or have one of the following certifications:

   a. A certified erosion, sediment and storm water inspector registered through Enviro Cert International, Inc.; or

   b. A certified inspector of sediment and erosion control registered through Certified Inspector of Sediment and Erosion Control, Inc. Effective two years

after the adoption date of this General Permit, a QSP shall have attended a State Water Board-sponsored or approved QSP training course.

4. The LRP shall list in the SWPPP, the name of any Approved Signatory, and provide a copy of the written agreement or other mechanism that provides this authority from the LRP in the SWPPP.

5. The discharger shall include, in the SWPPP, a list of names of all contractors, subcontractors, and individuals who will be directed by the Qualified SWPPP Practitioner. This list shall include telephone numbers and work addresses. Specific areas of responsibility of each subcontractor and emergency contact numbers shall also be included.

6. The discharger shall ensure that the SWPPP and each amendment will be signed by the Qualified SWPPP Developer. The discharger shall include a listing of the date of initial preparation and the date of each amendment in the SWPPP.



3.0 List of Contractors and Subcontractors

The tables below list the contractors and subcontractors conducting work at the site.
Table 1 Contractors and Subcontractors.

General Contractor: TBD			
On-site Supervisor: TBD			
Persons Responsible for BMP Implementation: TBD			
Name	**Title**	**SWPPP Responsibility (ex. BMP inspection. Training)**	**Phone, Mobile or Pager Number**

Sub-Contractor: TBD			
On-site Supervisor: TBD			
Persons Responsible for BMP Implementation: TBD			
Name	**Title**	**SWPPP Responsibility (ex. BMP inspection. Training)**	**Phone, Mobile or Pager Number**

4.0 PROJECT INFORMATION

4.1 Project Description

As part of the Stormwater Capture Parks Program with Los Angeles Department of Public Works Bureau of Engineering (LABOE) and the Los Angeles Department of Water and Power (LADWP), the Strathern Park North Stormwater Capture Project includes the construction of a subsurface infiltration gallery, storm drain diversion structure and piping, and improved park facilities. The project will divert and infiltrate stormwater to replenish the San Fernando Groundwater Basin in order to increase local water supply; alleviate localized flooding; improve water quality; attenuate peak flow at downstream water bodies (i.e. Los Angeles River); and improve park amenities, and recreational and environmental education opportunities for the local community. The stormwater capture facilities are sized to ensure full capture of the entire 85th percentile, 24-hour storm event for the tributary areas upstream of the site. The total project site boundary area is approximately 300,000 square feet (sf), with 155,000 sf having land disturbing activities. Site improvements will add approximately 27,000 sf of impervious surface.

After the installation of proposed stormwater facilities are completed in the park, the excavated areas will be backfilled and graded to provide appropriate access to and drainage from the proposed field improvements. A geotechnical investigation and limited Phase 2 Environmental Site Assessment (ESA) were conducted to evaluate the subsurface conditions at the site. During these investigations, non-hazardous waste material was encountered in the proposed infiltration gallery area. These materials generally consisted of construction debris (i.e. concrete, asphalt, brick) and other miscellaneous materials such as plastic, glass, ceramic, and tires. The excavated soil containing waste material cannot be reused for grading and the waste material cannot be sorted out of the soil. Soil that does not contain waste, however, may be reused. It is unknown, at this time, the full extent of waste material in the soil. Based on the geotechnical investigations, waste was observed up to 13 feet deep and generally covered with approximately 0.5 to 2 feet of fill soil but will need to be verified during construction.

4.2 Project Risk Level Assessment

The California State Waterboard Risk Determination Worksheet was used to assess projects potential risk from the site sediment and the receiving waterbody. Both the site sediment and receiving water risk levels were determined to be low leading to a combined risk Level 1, see Appendix K.

Summary of Risk Factors

Sediment Risk (SR) Factor:

- R Factor Value: 56
- K Factor Value: 0.24
- LS Factor: 0.96

- Watershed Erosion Estimate: 12.9024 tons/acre
- Site Sediment Risk Factor: Low

Receiving Water (RW) Risk Factor:

- Project Receiving Water Risk: Low

Project Combined Risk: Level 1

4.2 Project Location

Strathern Park North is owned by the Los Angeles Department of Recreation and Parks (RAP). The park is bordered by Whitsett Avenue to the east, Strathern Street to the south, State Route 170 (Hollywood Freeway) to the west, and residential homes to the north in the Sun Valley neighborhood of the City of Los Angeles. The park is predominately surrounded by single and multi-family residential home. Opposite the park on Strathern Street is Jamie Beth Slaven Park.

To the west of the park, there is a 150-foot-wide easement for Los Angeles Department of Water and Power (LADWP) transmission line right of way that consists of four transmission towers with high-voltage overhead power lines, three caged water production wells and booster pumps, and a 60-inch underground water transmission main. Most of this easement area is paved.

4.3 Project Schedule

A condensed list of significant construction milestones can be found in the table below.

CONSTRUCTION PHASE	ESTIMATED COMPLETION DATE
Initial Construction Support Activities	08/11/2023
Infiltration Gallery	06/28/2024
Influent Facilities to Infiltration Gallery	06/21/2024
Site Work and Amenities	12/06/2024
Startup and Testing	12/31/2024

4.4 Existing Site Conditions

The entire property at Strathern Park is approximately 560,000 square feet (sf), or approximately 13 acres. Approximately 217,000 sf of the existing site is impervious surface. The site features four baseball fields, recreation center, and batting cages. There is an existing asphalt pavement parking lot for vehicular entry/egress off Whitsett Ave in the east side of the park. The park slopes from approximate elevations of 810 to 800 feet towards Strathern St and Whitsett Ave and to 805 feet towards Potter Ave. Runoff will drain southernly away from the park.

The perimeter of the park along Whitsett Ave and Strathern St. is observed to be raised several feet above the adjacent sidewalk elevation. The potential for stormwater to run on to the construction site from surrounding areas is unlikely.

The site consists of up to approximately 13 feet of undocumented fill, underlain by granular alluvial materials. The fill and alluvium are generally comprised of moist, very loose to very dense, poorly graded sand, poorly graded sand with silt, poorly graded sand with clay, well-graded sand with silt, silty sand, clayey sand, and sandy silt, as well as variable amounts of gravel and cobbles. The fill is potentially compressible. In general, excavations and drilling in the existing fill soil and alluvium should be feasible, but difficulties should be anticipated upon encountering waste and cobbles in the alluvium and undocumented fill. Groundwater was not encountered in the total depth explored of approximately 70.5 feet. Historical high groundwater levels range from approximately 110 and 120 feet below ground surface (bgs). Monitoring wells located approximately 800 feet southeast and 2,800 feet northwest of the site indicate that the depth to groundwater ranges from approximately 194 to 307 feet.



5.0 EFFLUENT LIMITS, POLLUTANT SOURCES, AND BMP IDENTIFICATION

5.1 Introduction

The General Permit requirements must be met on a year-round basis, not just during the wet season. Therefore, this SWPPP, and prescribed Best Management Practices must be implemented at the appropriate level and in a proactive manner during all seasons until the construction project is complete. Post-construction BMPs will be implemented after the project is complete as required by the General Permit (refer to Section 9.0 POST-CONSTRUCTION STANDARDS of this Plan).

BMPs are defined as "any program, technology, process, siting criteria, operational methods or measures, or engineered systems, that when implemented, prevent, control, remove or reduce pollution."

5.2 *Effluent Standards: Numeric and Narrative Limitations*

A. Numeric – There is no Numeric Effluent Limitation (NEL) for pH or Turbidity.

B. Narrative – Risk Level 2 dischargers shall comply with the Narrative Action Levels as follows:

1. Storm water discharges and authorized non-storm water discharges regulated by this General Permit shall not contain a hazardous substance equal to or in excess of reportable quantities established in 40 C.F.R. §§ 117.3 and 302.4, unless a separate NPDES Permit has been issued to regulate those discharges.

2. Dischargers shall minimize or prevent pollutants in storm water discharges and authorized non-storm water discharges through the use of controls, structures, and management practices that achieve BAT for toxic and non-conventional pollutants and BCT for conventional pollutants.

3. The Numeric Action Level (NAL) for pH is 6.5 – 8.5. The test method is a field test with a calibrated portable instrument.

4. The NAL for turbidity is 250 NTU. The test method is EPA 180.1 and/or field test with a calibrated portable instrument.

5.3 Unauthorized Non-Storm Water Discharges

Elimination or reduction of "unauthorized non-storm water discharges" to the storm drain system or receiving waters is a major goal of the General Permit. Most non-storm water discharges are prohibited. Unauthorized non-storm water discharges can be generated from a variety of sources. Examples include, but are not limited to: waters from the rinsing or washing of vehicles, equipment, buildings and pavement; materials that have

been improperly disposed of or dumped and spilled, and leaked materials. Such discharges should be eliminated or reduced to the maximum extent practicable.

5.3 (a) Non-Storm Water Management

A. Dischargers shall implement measures to control all non-storm water discharges during construction.

B. Dischargers shall wash vehicles in such a manner as to prevent non-storm water discharges to surface waters or MS4 drainage systems.

C. Dischargers shall clean streets in such a manner as to prevent unauthorized non-storm water discharges from reaching surface water or MS4 drainage systems.

5.4 Authorized Non-Storm Water Discharges

The General Permit authorizes certain non-storm water discharges that may be necessary for the completion of construction projects. Such discharges include, but are not limited to: irrigation of vegetative erosion control measures; fire hydrant flushing; potable water sources related to the operation and maintenance of potable water systems; drinking fountain water; atmospheric condensates including refrigeration, air conditioning, and compressor condensate; irrigation drainage; springs; ground water; and foundation or footing drainage. These discharges are allowed provided they are: 1) not relied upon to clean up failed or inadequate construction or post construction BMPs designed to keep materials on site; 2) infeasible to eliminate; 3) include BMPs described herein; and 4) do not cause or contribute to a violation of water quality standards. The General Permit prohibits the discharge of sediment-laden water offsite without prior treatment (detention or filtering).

5.5 Best Management Practices

The BMPs described in this document will be implemented to minimize the potential for pollutants to leave the project area and enter the storm drain system to the maximum extent practicable. The BMPs listed below are designed to minimize non-storm water discharges, minimize pollutants in storm water drainage and minimize the release of pollutants that can eventually be carried off by runoff, wind, or tracked out into the storm drain system. BMPs also include planning and preparing for rainfall. The site should be stabilized before a storm and BMPs should be checked for correct implementation prior to storm events. Appendix H lists sources for weather forecasts. Through proactive BMP implementation and good housekeeping measures, the construction site will pose a minimum threat of polluting local waterways through storm water runoff.

BMPs must be implemented to prevent or reduce the contact of non-storm water discharges with potential pollutant sources (i.e. waste storage areas, soil piles) and minimize to the extent practicable the flow or volume of non-storm water discharges.

Detailed descriptions of various types of BMPs for construction projects are located in Appendix M.

5.5 (a) Employee Training Program

All employees working on the site shall receive a general briefing about the importance of preventing storm water pollution, potential sources of storm water pollution, and the BMPs to be implemented at the site. New employees shall be briefed prior to work. Storm water pollution control training may be integrated with other training sessions, such as those conducted for worker safety, spill prevention, or hazardous materials management. Employees are encouraged to provide suggestions/feedback to improve training sessions and implementation of control practices.

Employees responsible for implementing, inspecting, maintaining, or repairing storm water pollution control practices should receive copies of relevant portions of this SWPPP and become familiar with their responsibilities. When such responsibilities shift from one employee to another, the outgoing employee shall pass on all necessary information to ensure the continuing effectiveness of the BMPs and SWPPP compliance, including copies of this SWPPP and inspection checklists. The table provided in Section 3.0 List of Contractors and Subcontractors, may be used to identify employees and their respective SWPPP responsibilities.

For projects that start during the dry season, refresher sessions on storm water pollution control must be conducted prior to the wet season. Additional training will be provided as necessary, based on site inspections and evidence of storm water quality problems.

Documentation of training will be maintained as part of this plan. Training documentation forms are located in Appendix F. Completed training records must be kept with this SWPPP.

5.5(b) Good Site Management "Housekeeping"

A. Documentation of BMPs in SWPPP
   Dischargers shall document all housekeeping BMPs in the SWPPP and in the REAP (See Section 6.0 Rain Event Action Plan (REAP)) in accordance with the nature and phase of the construction project. Construction phases at traditional land development projects include Grading and Land Development Phase, Streets and Utilities, or Vertical Construction for traditional land development projects.

B. Housekeeping
   Dischargers shall implement good site management (i.e., "housekeeping") measures for construction materials that could potentially be a threat to water quality if discharged. At a minimum, Dischargers shall implement the following good housekeeping measures:

1. Conduct an inventory of the products used and/or expected to be used and the end products that are produced and/or expected to be produced. This does not include materials and equipment that are designed to be outdoors and exposed to environmental conditions (i.e., poles, equipment pads, cabinets, conductors, insulators, bricks, etc.).
2. Cover and berm loose stockpiled construction materials that are not actively being used (i.e. soil, spoils, aggregate, fly-ash, stucco, hydrated lime, etc.).
3. Store chemicals in watertight containers (with appropriate secondary containment to prevent any spillage or leakage) or in a storage shed (completely enclosed)
4. Minimize exposure of construction materials to precipitation. This does not include materials and equipment that are designed to be outdoors and exposed to environmental conditions (i.e. poles, equipment pads, cabinets, conductors, insulators, bricks. etc.).
5. Implement BMPs to prevent the off-site tracking of loose construction and landscape materials.

C. Waste Management

Dischargers shall implement good housekeeping measures for waste management, which, at a minimum, shall consist of the following:

1. Prevent disposal of any rinse or wash waters or materials on impervious or pervious site surfaces or into the storm drain system.
2. Ensure the containment of sanitation facilities (e.g., portable toilets) to prevent discharges of pollutants to the storm water drainage system or receiving water.
3. Clean or replace sanitation facilities and inspecting them regularly for leaks and spills.
4. Cover waste disposal containers at the end of every business day and during a rain event.
5. Prevent discharges from waste disposal containers to the storm water drainage system or receiving water.
6. Contain and securely protect stockpiled waste material from wind and rain at all times unless actively being used.
7. Implement procedures that effectively address hazardous and non-hazardous spills.
8. Develop a spill response and implementation element of the SWPPP prior to commencement of construction activities. The SWPPP shall require:
   a. Equipment and materials for cleanup of spills shall be available on site and that spills and leaks shall be cleaned up immediately and disposed of properly.
   b. Appropriate spill response personnel are assigned and trained.
   c. LADWP has spill notification phone numbers (Bulletin 2010-38), which must be included as a part of spill response training.



9. Ensure the containment of concrete washout areas and other washout areas that may contain additional pollutants so there is no discharge into the underlying soil and onto the surrounding areas.

D. Vehicle Storage and Maintenance
Dischargers shall implement good housekeeping for vehicle storage and maintenance, which, at a minimum, shall consist of the following:

Vehicles and equipment may pose a threat to storm water quality if their fluids come into contact with storm water runoff. When stored, place drip pans under vehicles or equipment. Vehicles and equipment will be inspected regularly to minimize leaks and drips. Equipment with chronic leakage problems will be returned to the yard for repair prior to continuing its use at the site. Refueling and vehicle maintenance at the construction site will be conducted only when absolutely necessary. When maintenance and repair of vehicles or equipment is required, every effort will be made to prevent any motor related fluids or wastes from leaving the designated repair area, which shall be located in designated areas away from storm drains and drainage areas. When vehicles or equipment are immobilized and need repair, drip pans and oil-absorbing mats should be placed beneath the vehicle in order to capture spilled fluids. Absorbent materials and other wastes (used oil filters, oily rags, etc.) must be disposed of properly with other hazardous wastes from the site (See Section 5.5 Best Management Practices). Vehicle washing will not be conducted onsite.

1. Prevent oil, grease, or fuel to leak into the ground, storm drains or surface waters.
2. Place all equipment or vehicles, which are to be fueled, maintained and stored in a designated area fitted with appropriate BMPs.
3. Clean leaks immediately and disposing of leaked materials properly.

E. Landscape Materials
Dischargers shall implement good housekeeping for landscape materials, which, at a minimum, shall consist of the following:

1. Contain stockpiled materials such as mulches and topsoil when they are not actively being used.
2. Contain all fertilizers and other landscape materials when they are not actively being used.
3. Discontinue the application of any erodible landscape material within 2 days before a forecasted rain event or during periods of precipitation.
4. Apply erodible landscape material at quantities and application rates according to manufacture recommendations or based on written specifications by knowledgeable and experienced field personnel.
5. Stack erodible landscape material on pallets and covering or storing such materials when not being used or applied.



F. Potential Pollutant Sources

Dischargers shall conduct an assessment and create a list of potential pollutant sources and identify any areas of the site where additional BMPs are necessary to reduce or prevent pollutants in storm water discharges and authorized non-storm water discharges. This potential pollutant list shall be kept with the SWPPP and shall identify all non-visible pollutants which are known, or should be known, to occur on the construction site. At a minimum, when developing BMPs, Risk Level 2 dischargers shall do the following:

a. Consider the quantity, physical characteristics (e.g., liquid, powder, solid), and locations of each potential pollutant source handled, produced, stored, recycled, or disposed of at the site.
b. Consider the degree to which pollutants associated with those materials may be exposed to and mobilized by contact with storm water.
c. Consider the direct and indirect pathways that pollutants may be exposed to storm water or authorized non-storm water discharges. This shall include an assessment of past spills or leaks, non-storm water discharges, and discharges from adjoining areas.
d. Ensure retention of sampling, visual observation, and inspection records.
e. Ensure effectiveness of existing BMPs to reduce or prevent pollutants in storm water discharges and authorized non-storm water discharges.

G. Aerial Deposition

Dischargers shall implement good housekeeping measures on the construction site to control the air deposition of site materials and from site operations. Such particulates can include, but are not limited to, sediment, nutrients, trash, metals, bacteria, oil and grease and organics.

5.5 (c) Non-Storm Water Management

A. Dischargers shall implement measures to control all non-storm water discharges during construction. This includes groundwater, water used for dust control, water used for washing or rinsing, water leaks, chemical leaks, solid and liquid chemicals that are exposed to the elements.

B. Vehicle washing shall be done in a manner as to prevent non-storm water discharges to surface waters or MS4 drainage systems.

5.5 (d) Erosion Control

Construction activities that include grading and soil disturbance require a concentrated effort to prevent and minimize the transport of sediments into nearby storm drain inlets. Sediment can flow into nearby storm drain inlets through storm water runoff and non-storm water runoff. When the use of water is required, every effort should be made to



contain that water and allow it to evaporate in a bermed area. Remaining sediment and debris must be swept and removed from the street.

A. Dischargers shall implement effective wind erosion control (CASQA BMP WE-1).

B. Dischargers shall provide effective soil cover for inactive[1] areas and all finished slopes, open space, utility backfill, and completed lots. One or more of the following temporary soil stabilization measures may be applied to disturbed areas that will be inactive for extended periods. These measures may be used in conjunction with temporary linear sediment barriers.

- Hydraulic Mulch (CASQA BMP EC-3)
- Hydroseeding (CASQA BMP EC-4)
- Soil binders (CASQA BMP EC-5)
- Straw mulch (CASQA BMP EC-6)
- Geotextiles and mats (CASQA BMP EC-7)
- Wood mulching (CASQA BMP EC-8)

C. Dischargers shall limit the use of plastic materials when more sustainable, environmentally friendly alternatives exist. Where plastic materials are deemed necessary, the discharger shall consider the use of plastic materials resistant to solar degradation.

5.5 (e) Sediment Control

A. Dischargers shall establish and maintain effective perimeter controls and stabilize all construction entrances and exits to sufficiently control erosion and sediment discharges from the site.

B. On sites where sediment basins are to be used, Dischargers shall, at minimum, design sediment basins according to the method provided in CASQA's Construction BMP Guidance Handbook (CASQA BMP SE-2).

C. Dischargers shall implement appropriate erosion control BMPs (runoff control and soil stabilization) in conjunction with sediment control BMPs for areas under active[2] construction.

D. Dischargers shall apply linear sediment controls along the toe of the slope, face of the slope, and at the grade breaks of exposed slopes to comply with sheet flow lengths[3] in accordance with Table 3.

[1] Inactive areas of construction are areas of construction activity that have been disturbed and area not scheduled to be re-disturbed for at least 14 days

[2] Active areas of construction are areas undergoing land surface disturbance. This includes construction activity during the preliminary stage, mass grading stage, streets and utilities stage and the vertical construction stage.

[3] Sheet flow length is the length that shallow, low velocity flow travels across a site.

Table 3. Critical Slope/Sheet Flow Length Combinations

Slope Percentage	Sheet flow length not to exceed
0-25%	20 feet
25-50%	15 feet
Over 50%	10 feet

One or more of the following sediment barriers will be used around disturbed areas that will be inactive for extended periods. These measures may be used in conjunction with temporary soil stabilization measures.

- Silt fence (CASQA BMP SE-1)
- Fiber rolls (CASQA BMP SE-5)
- Gravel bag berm (CASQA BMP SE-6)
- Sandbag barrier (CASQA BMP SE-8)
- Straw bale barrier (CASQA BMP SE-9)
- Drainage ditch

E. Dischargers shall ensure that construction activity traffic to and from the project is limited to entrances and exits that employ effective controls to prevent offsite tracking of sediment.

F. Dischargers shall ensure that all storm drain inlets and perimeter controls, runoff control BMPs, and pollutant controls at entrances and exits (e.g. tire wash off locations) are maintained and protected from activities that reduce their effectiveness.

G. Dischargers shall inspect on a daily basis all immediate access roads daily. At a minimum daily (when necessary) and prior to any rain event, the discharger shall remove any sediment or other construction activity related materials that are deposited on the roads (by vacuuming or sweeping).

5.5 (f) Run-on and Run-off Controls

Dischargers shall effectively manage all run-on, all runoff within the site and all runoff that discharges off the site. Run-on from off-site shall be directed away from all disturbed areas or shall collectively be in compliance with the effluent limitations in this General Permit.

5.5 (g) Inspection, Maintenance and Repair

A. Dischargers shall ensure that all inspection, maintenance repair and sampling activities at the project location shall be performed or supervised by a Qualified SWPPP Practitioner (QSP) representing the discharger. The QSP may delegate any or all of these activities to an employee appropriately trained to do the task(s).

B. Dischargers shall perform weekly inspections and observations, and at least once each 24-hour period during extended storm events, to identify and record BMPs that need maintenance to operate effectively, that have failed, or that could fail to operate as intended. Inspectors shall be the QSP or be trained by the QSP.

C. Upon identifying failures or other shortcomings, as directed by the QSP, Dischargers shall begin implementing repairs or design changes to BMPs within 72 hours of identification and complete the changes as soon as possible.

D. For each inspection required, Dischargers shall complete an inspection checklist, using a form provided by the State Water Board or Regional Water Board or in an alternative format.

E. Dischargers shall ensure that checklists shall remain onsite with the SWPPP and at a minimum, shall include:

1. Inspection date and date the inspection report was written.
2. Weather information, including presence or absence of precipitation, estimate of beginning of qualifying storm event, duration of event, time elapsed since last storm, and approximate amount of rainfall in inches.
3. Site information, including stage of construction, activities completed, and approximate area of the site exposed.
4. A description of any BMPs evaluated and any deficiencies noted.
5. If the construction site is safely accessible during inclement weather, list the observations of all BMPs: erosion controls, sediment controls, chemical and waste controls, and non-storm water controls. Otherwise, list the results of visual inspections at all relevant outfalls, discharge points, downstream locations and any projected maintenance activities.
6. Report the presence of noticeable odors or of any visible sheen on the surface of any discharges.
7. Any corrective actions required, including any necessary changes to the SWPPP and the associated implementation dates.
8. Photographs taken during the inspection, if any.
9. Inspector’s name, title, and signature.

5.5(h) Hazardous Waste Management and Disposal

Hazardous waste will be stored and handled in separate collection and containment areas in accordance with state and federal standards. Hazardous waste can be generated from equipment maintenance and refueling activities (e.g., anti-freeze, hydraulic fluids, gasoline, diesel fuel, waste oil). Other hazardous wastes include: pesticides, paints, cleaners, epoxies and sandblast grit. Hazardous waste will be stored in covered, labeled containers and secondary containment will be provided for liquid hazardous wastes. Different types of hazardous wastes will not be mixed so as to promote recycling and prevent undesirable chemical reactions.

5.5(i) Spill Prevention and Control

Leaks and spills from construction machinery generally contain petroleum products and heavy metals. Drip pans or some type of impermeable material will be placed under equipment that has been known to leak when such equipment is stored outdoors and not in use. Spills of any type will be cleaned up immediately. Drip pans will be cleaned as necessary to maintain their effectiveness. If absorbent is used for spills, it must be removed promptly and in a proper manner.

5.5(j) Materials Handling and Storage

The primary goal of BMPs for on-site storage of potential pollutants is to minimize the opportunity for them to come into contact with storm water. Hazardous materials, plasters, solvents, paints and other compounds must be properly handled and stored in order to reduce the risk of pollution or contamination. There will be a designated area for all hazardous materials storage, and for any filling or dispensing activity. This area must be located away from drainage paths and should not be directly on the ground (i.e. use plastic liners or containment pallets). This storage area will be covered, or at a minimum, the hazardous materials will be covered in some fashion, either by a tarp, within a covered construction tool bin, or within a storage container. The storage area should be surrounded by berms to prevent any materials from leaving the area should a spill or leak occur. Consideration should be paid to keeping only the minimum amount of hazardous materials on site. Follow manufacturer's instructions regarding storage and use of materials. If any product should come into contact with the soil, that soil will be removed immediately and properly disposed of as hazardous waste.

5.5 (k) Stockpile Management

Stockpile Management procedures and practices are designed to reduce or eliminate air and stormwater pollution from stockpiles of soil, paving materials such as Portland cement, concrete rubble, asphalt concrete, aggregate base, asphalt minder and pressure treated wood.

1. Locate stockpiles a minimum of 50 ft away from concentrated flows of stormwater, draining courses, and inlets.

2. Protect all stockpiles from stormwater runoff using a temporary perimeter sediment barrier such as berms, dikes, fiber rolls, silt fences, sandbag, gravel bags, or straw bale barriers

3. Contain stockpiled materials such as mulches and topsoil when they are not actively being used.

4. Contain fertilizers and other landscape materials when they are not actively being used.

5. Discontinue the application of any erodible landscape material within 2 days before a forecasted rain event or during periods of precipitation.

6. Apply erodible landscape material at quantities and application rates according to manufacture recommendations or based on written specifications by knowledgeable and experienced field personnel.

7. Stack erodible landscape material on pallets and cover such materials when not being used or applied.

5.5 (l) Scheduling

Work will not be conducted during storm events. Prior to finishing work before a storm event, the work area will be stabilized to reduce the potential for pollutants to leave the area and enter the storm drain system.

5.5 (m) Vehicle ingress and egress

Vehicles and equipment shall pass over metal shaker plates to loosen and remediate soil and debris from ingress/egress access points. Inspect ingress/egress access points daily and sweep tracked sediment as needed.

5.5(n) Concrete Truck Washing Waste

Concrete truck wash out will only be conducted over the open trench so that all concrete waste is captured and buried in the trench. When that is not feasible and the truck must be washed out in the work area, a containment area will be created to capture the wash water. When dry, concrete waste and residue will be swept and removed. Only as much concrete as needed will be mixed or brought on site in order to reduce the amount of concrete waste. If concrete truck rinsing must occur, it will be done in a contained area. Concrete rinse water must not enter the storm drain system. The concrete containment area must be cleaned out and maintained periodically to minimize the potential of storm water contamination.

6.0 RAIN EVENT ACTION PLAN (REAP)

Dischargers shall document all housekeeping BMPs in the SWPPP in accordance with the nature and phase of the construction project. Construction phases at traditional land development projects include Grading and Land Development Phase, Streets and Utilities, or Vertical Construction for traditional land development projects.

A. The discharger shall ensure that a Qualified SWPPP Practitioner (QSP) develops a Rain Event Action Plan (REAP) 48 hours prior to any likely precipitation event. A likely precipitation event is any weather pattern that is forecast to have a 50% or greater probability of producing precipitation in the project area. The discharger shall

ensure a QSP obtain a printed copy of precipitation forecast information from the National Weather Service Forecast Office (e.g., by entering the zip code of the project's location at http://www.srh.noaa.gov/forecast).

B. The discharger shall ensure that a QSP develops the REAPs for all phases of construction (i.e., Grading and Land Development, Streets and Utilities, Vertical Construction, Final Landscaping and Site Stabilization).

C. The discharger shall ensure that the QSP ensures that the REAP include, at a minimum, the following site information:

1. Site Address
2. Calculated Risk Level 2
3. Site Storm Water Manager Information including the name, company, and 24-hour emergency telephone number
4. Erosion and Sediment Control Provider information including the name, company, and 24-hour emergency telephone number
5. Storm Water Sampling Agent information including the name, company, and 24-hour emergency telephone number

D. The discharger shall ensure a QSP includes in the REAP, at a minimum, the following project phase information:

1. Activities associated with each construction phase
2. Trades active on the construction site during each construction phase
3. Trade contractor information
4. Suggested actions for each project phase

E. The discharger shall ensure a QSP develops additional REAPs for project sites where construction activities are indefinitely halted or postponed (Inactive Construction). At a minimum, Inactive Construction REAPs must include:

1. Site Address
2. Calculated Risk Level 2
3. Site Storm Water Manager Information including the name, company, and 24-hour emergency telephone number
4. Erosion and Sediment Control Provider information including the name, company, and 24-hour emergency telephone number
5. Storm Water Sampling Agent information including the name, company, and 24-hour emergency telephone number
6. Trades active on site during Inactive Construction
7. Trade contractor information
8. Suggested actions for inactive construction sites

F. The discharger shall ensure a QSP begins implementation and make the REAP available onsite no later than 24 hours prior to the likely precipitation event.



G. The discharger shall ensure a QSP maintains onsite a paper copy of each REAP onsite in compliance with the record retention requirements of the Special Provisions in this General Permit.

7.0 MONITORING AND REPORTING REQUIREMENTS

7.1 Introduction

This chapter addresses maintenance, inspection, and repair procedures for all construction-related BMPs to ensure that all graded surfaces, walls, berms, drainage structures, vegetation, erosion and sediment control measures, etc., are maintained in effective condition and are promptly repaired or restored. A properly trained person must be assigned the responsibility to conduct inspections. All completed inspection/ maintenance forms must be kept with this SWPPP. A written site- specific Construction Site Monitoring Program (CSMP) shall be developed and implemented prior to the commencement of construction activities, and revised as necessary to reflect project revisions. The CSMP shall include all monitoring procedures and instructions, location maps, forms, and checklists as required. Inspection forms are included in Appendix C.

The goals of the inspection program are:

1. To demonstrate that the site is in compliance with the Discharge Prohibitions;

2. To determine whether non-visible pollutants are present at the construction site and are causing or contributing to exceedances of water quality objectives;

3. To determine whether immediate corrective actions, additional BMP or SWPPP revisions are necessary to reduce pollutants in storm water discharges and authorized non-storm water discharges; and

4. To determine whether BMPs included in the SWPPP are effective in preventing or reducing pollutants in storm water discharges and authorized non-storm water discharges.

The inspector should keep in mind that construction activity that cause or contribute to an exceedance of water quality standards must be corrected immediately. If storm water runoff is visibly oily or greasy, turbid, has a strong odor, or if it is known to contain pollutants such as pesticides, debris, sediment, settleable material or suspended material (i.e. trash), then it has potentially exceeded water quality standards.

If a violation of water quality standards is suspected, or if additional guidance or information is necessary, call the LADWP Wastewater Quality and Compliance Group (WQG) as soon as possible at (213) 367-0436.



7.2 Monitoring and Reporting Requirements

Table 4. Summary of Monitoring Requirements

Risk Level	Visual Inspections					Sample Collection	
	Quarterly Non-storm water Discharge	Pre-storm Event		Daily Storm BMP	Post Storm	Storm Water Discharge	Receiving Water
		Baseline	REAP				
2	X	X	X	X	X	X	

7.2 (a) Construction Site Monitoring Program (CSMP) Requirements

A. Dischargers shall be prepared to collect samples and conduct visual observation (inspections) until the minimum requirements of Table 4 - Summary of Monitoring Requirements, are completed.

B. Pursuant to Water Code Sections 13383 and 13267, all dischargers subject to this General Permit shall develop and implement a written site-specific Construction Site Monitoring Program (CSMP) in accordance with the requirements of this Section. The CSMP shall include all monitoring procedures and instructions, location maps, forms, and checklists as required in this section. The CSMP shall be developed prior to the commencement of construction activities, and revised as necessary to reflect project revisions. The CSMP shall be a part of this Storm Water Pollution Prevention Plan (SWPPP), included in **.**

C. As stated in Section *5.5(b) Good Site Management "Housekeeping"*, Risk Level 2 dischargers shall conduct an assessment and create a list of potential pollutant sources and a potential pollutant list. The list shall be kept with the SWPPP in the CSMP and shall identify all non-visible pollutants which are known, or should be known, to occur at the construction site.

D. Existing dischargers registered under the State Water Board Order No. 99-08-DWQ shall make and implement necessary revisions to their Monitoring Program to reflect the changes in this General Permit in a timely manner. Existing dischargers shall continue to implement their existing Monitoring Programs in compliance with State Water Board Order No. 99-08-DWQ.

E. When a change of ownership occurs for all or any portion of the construction site prior to completion or final stabilization, the new discharger shall comply with these requirements as of the date the ownership change occurs.

7.2 (b) CSMP Monitoring Description

Dischargers shall include a description of the following items in the CSMP:

1. Visual observation locations, visual observation procedures, and visual observation follow-up and tracking procedures.

2. Sampling locations, and sample collection and handling procedures. This shall include detailed procedures for sample collection, storage, preservation, and shipping to the testing lab to assure that consistent quality control and quality assurance is maintained. Dischargers shall attach to the monitoring program an example Chain of Custody form used when handling and shipping samples. **Note: the pH test must be performed immediately in the field. Turbidity test may be performed in the field or shipped to a lab provided the test is performed on the same day.**

3. Identification of the analytical methods and related method detection limits (if applicable) for each parameter required in Table 5.

Table 5. Risk Level 2 Test Methods, Detection Limits, Reporting Units and Applicable NALs/NELs

Parameter	Test Method / Protocol	Discharge Type	Min. Detection Limit	Reporting Units	Numeric Action Level
pH	Field test with calibrated portable instrument	Risk Level 2 Discharges	0.2	pH units	lower NAL = 6.5 upper NAL = 8.5
Turbidity	EPA 0180.1 and/or field test with calibrated portable instrument	Risk Level 2 Discharges other than ATS	1	NTU	250 NTU
		For ATS discharges	1	NTU	N/A
Any other pollutants identified for non-visible pollutant monitoring – see CSMP					

ATS = Active Treatment System

7.2 (c) Objectives

The CSMP shall be developed and implemented to address the following objectives:

1. To demonstrate that the site is in compliance with the Discharge Prohibitions and applicable Numeric Action Levels (NALs)/Numeric Effluent Limitations (NELs) of this General Permit.

2. To determine whether non-visible pollutants are present at the construction site and are causing or contributing to exceedances of water quality objectives.

3. To determine whether immediate corrective actions, additional Best Management Practice (BMP) implementation, or SWPPP revisions are necessary to reduce pollutants in storm water discharges and authorized non-storm water discharges.



4. To determine whether BMPs included in the SWPPP/Rain Event Action Plan (REAP) are effective in preventing or reducing pollutants in storm water discharges and authorized non-storm water discharges.

7.2 (d) Visual Observation and Sample Collection Exemptions

Dischargers are not required to physically collect samples or conduct visual observation (inspections) under the following conditions:

1. During dangerous weather conditions such as flooding and electrical storms.

2. Outside of scheduled site business hours.

If no required samples or visual observation (inspections) are collected due to these exceptions, Risk Level 2 dischargers shall include an explanation in their SWPPP and in the Annual Report documenting why the sampling or visual observation (inspections) were not conducted.

7.3 Visual Monitoring (Inspection) Requirements for Qualifying Rain Events

Use form in

A. Dischargers shall visually observe (inspect) storm water discharges at all discharge locations within two business days (48 hours) after each qualifying rain event.

B. Dischargers shall visually observe (inspect) the discharge of stored or contained storm water that is derived from and discharged subsequent to a qualifying rain event producing precipitation of ½ inch or more at the time of discharge. Stored or contained storm water that will likely discharge after operating hours due to anticipated precipitation shall be observed prior to the discharge during operating hours.

C. Dischargers shall conduct visual observations (inspections) during business hours only.

D. Dischargers shall record the time, date and rain gauge reading of all qualifying rain events.

E. Within 2 business days (48 hours) prior to each qualifying rain event, Dischargers shall visually observe (inspect):

1. all storm water drainage areas to identify any spills, leaks, or uncontrolled pollutant sources. If needed, the discharger shall implement appropriate corrective actions.
2. all BMPs to identify whether they have been properly implemented in accordance with the SWPPP and REAP. If needed, the discharger shall implement appropriate corrective actions.



3. any storm water storage and containment areas to detect leaks and ensure maintenance of adequate freeboard.

F. For the visual observations (inspections) described in this Section, dischargers shall observe the presence or absence of floating and suspended materials, a sheen on the surface, discolorations, turbidity, odors, and source(s) of any observed pollutants.

G. Within two business days (48 hours) after each qualifying rain event, Dischargers shall conduct post rain event visual observations (inspections) to (1) identify whether BMPs were adequately designed, implemented, and effective, and (2) identify additional BMPs and revise the SWPPP accordingly.

H. Dischargers shall maintain on-site records of all visual observations (inspections), personnel performing the observations, observation dates, weather conditions, locations observed, and corrective actions taken in response to the observations.

7.4 Water Quality Sampling and Analysis

Dischargers shall collect storm water grab samples from sampling locations, as defined in Section 7.4 (d) Effluent Sampling Locations. The storm water grab sample(s) obtained shall be representative of the flow and characteristics of the discharge.

7.4 (a) Effluent Analysis Requirements

A. Dischargers shall analyze their effluent samples for:

1. pH and turbidity.

7.4 (b)Effluent Sampling Schedule

Dischargers shall ensure that the grab samples collected of stored or contained storm water are from discharges subsequent to a qualifying rain event (producing precipitation of ½ inch or more at the time of discharge).

7.4 (c) Number of Effluent Samples

At minimum, Dischargers shall collect **3 samples per day** of the qualifying event (1/2 inch or more of rain causing the discharge).

7.4 (d) Effluent Sampling Locations

A. Dischargers shall collect storm water grab samples from sampling locations found in Table 6. The storm water grab sample(s) obtained shall be representative of the flow and characteristics of the discharge.



B. Dischargers shall perform sampling and analysis of storm water discharges to characterize discharges associated with construction activity from the entire project disturbed area.

C. Dischargers shall collect effluent samples at all discharge points where storm water is discharged off-site.

Table 6. Sample Locations.[4]

Location ID:		
Location Description		
Coordinates	Lat:	Long:
Location ID:		
Location Description		
Coordinates	Lat:	Long:
Location ID:		
Location Description		
Coordinates	Lat:	Long:

D. Dischargers shall ensure that storm water discharge collected and observed represents[5] the effluent in each drainage area based on visual observation of the water and upstream conditions.

E. Dischargers shall monitor and report site run-on from surrounding areas if there is reason to believe run-on may contribute to an exceedance of NALs or NELs.

F. Dischargers who deploy an Active Treatment System (ATS) on their site, or a portion on their site, shall collect ATS effluent samples and measurements from the discharge pipe or another location representative of the nature of the discharge.

7.4 (e) Storm Water Sample Collection and Handling Instructions

A. Dischargers shall refer to Table 5 above for test methods, detection limits, and reporting units.

B. Dischargers shall ensure that testing laboratories will receive samples within 48 hours of the physical sampling (unless otherwise required by the laboratory), and shall use only the sample containers provided by the laboratory to collect and store samples.

[4] To be determined.

[5] For example, if there has been concrete work recently in an area, or drywall scrap is exposed to the rain, a pH sample shall be taken of drainage from the relevant work area. Similarly, if sediment laden water is flowing through some parts of a silt fence, samples shall be taken of the sediment-laden water even if most water flowing through the fence is clear.

C. Dischargers shall designate and train personnel to collect, maintain, and ship samples in accordance with the Surface Water Ambient Monitoring Program's (SWAMP) 2008 Quality Assurance Program Plan (QAPrP)[6].

7.4 (f)– Monitoring Methods

A. Dischargers shall include a description of the following items in the CSMP:

1. Visual observation locations, visual observation procedures, and visual observation follow-up and tracking procedures.

2. Sampling locations, and sample collection and handling procedures. This shall include detailed procedures for sample collection, storage, preservation, and shipping to the testing lab to assure that consistent quality control and quality assurance is maintained. Dischargers shall attach to the monitoring program an example Chain of Custody form used when handling and shipping samples.

3. Identification of the analytical methods and related method detection limits (if applicable) for each parameter required in Table 5 above.

B. Dischargers shall ensure that all sampling and sample preservation are in accordance with the current edition of "Standard Methods for the Examination of Water and Wastewater" (American Public Health Association). All monitoring instruments and equipment (including a discharger's own field instruments for measuring pH and turbidity) should be calibrated and maintained in accordance with manufacturers' specifications to ensure accurate measurements. Dischargers shall ensure that all laboratory analyses are conducted according to test procedures under 40 CFR Part 136, unless other test procedures have been specified in this General Permit or by the Regional Water Board. With the exception of field analysis conducted by the discharger for turbidity and pH, all analyses should be sent to and conducted at a laboratory certified for such analyses by the State Department of Health Services. Dischargers shall conduct their own field analysis of pH and may conduct their own field analysis of turbidity if the discharger has sufficient capability (qualified and trained employees, properly calibrated and maintained field instruments, etc.) to adequately perform the field analysis.

7.4 (g) Analytical Methods

A. Dischargers shall select analytical test methods from the list provided in Table 5 above for test methods, detection limits, and reporting units.

---

[6] Additional information regarding SWAMP's QAPrP and QAMP can be found at http://www.waterboards.ca.gov/water_issues/programs/swamp/.
QAPrP:http://www.waterboards.ca.gov/water_issues/programs/swamp/docs/qapp/swamp_qapp_master090108a.pdf.
QAMP:http://www.waterboards.ca.gov/water_issues/programs/swamp/qamp.shtml.

B. pH: Dischargers shall perform pH analysis on-site with a calibrated pH meter or a pH test kit. Risk Level 2 dischargers shall record pH monitoring results on paper and retain these records in accordance with Section 7.6 – Records below.

C. Turbidity: Dischargers shall perform turbidity analysis using a calibrated turbidity meter (turbidimeter), either on-site or at an accredited lab. Acceptable test methods include Standard Method 2130 or USEPA Method 180.1. The results will be recorded in the site log book in Nephelometric Turbidity Units (NTU).

7.4 (h) Non-Storm Water Discharge Monitoring Requirements

Visual Monitoring Requirements:

A. Dischargers shall visually observe (inspect) each drainage area for the presence of (or indications of prior) unauthorized and authorized non-storm water discharges and their sources.

B. Dischargers shall conduct one visual observation (inspection) quarterly in each of the following periods: January-March, April-June, July-September, and October-December. Visual observation (inspections) are only required during daylight hours (sunrise to sunset).

C. Dischargers shall ensure that visual observations (inspections) document the presence or evidence of any non-storm water discharge (authorized or unauthorized), pollutant characteristics (floating and suspended material, sheen, discoloration, turbidity, odor, etc.), and source. Risk Level 2 dischargers shall maintain on-site records indicating the personnel performing the visual observation (inspections), the dates and approximate time each drainage area and non-storm water discharge was observed, and the response taken to eliminate unauthorized non-storm water discharges and to reduce or prevent pollutants from contacting non-storm water discharges.

Effluent Sampling Locations:

A. Dischargers shall sample effluent at all discharge points where non-storm water and/or authorized non-storm water is discharged off-site.

B. Dischargers shall send all non-storm water sample analyses to a laboratory certified for such analyses by the State Department of Health Services.

C. Dischargers shall monitor and report run-on from surrounding areas if there is reason to believe run-on may contribute to an exceedance of NALs.



7.4 (i) Non-Visible Pollutant Monitoring Requirements

A. Dischargers shall collect one or more samples during any breach, malfunction, leakage, or spill observed during a visual inspection which could result in the discharge of pollutants to surface waters that would not be visually detectable in storm water.

B. Dischargers shall ensure that water samples are large enough to characterize the site conditions.

C Dischargers shall collect samples at all discharge locations that can be safely accessed.

D. Dischargers shall collect samples during the first two hours of discharge from rain events that occur during business hours and which generate runoff.

E. Dischargers shall analyze samples for all non-visible pollutant parameters listed in the CSMP (if applicable) - parameters indicating the presence of pollutants identified in the pollutant source assessment required (Risk Level 2 dischargers shall modify their CSMPs to address these additional parameters in accordance with any updated SWPPP pollutant source assessment).

F. Dischargers shall collect a sample of storm water that has not come in contact with the disturbed soil or the materials stored or used on-site (uncontaminated sample) for comparison with the discharge sample.

G. Dischargers shall compare the uncontaminated sample to the samples of discharge using field analysis or through laboratory analysis.[6]

[6] For laboratory analysis, all sampling, sample preservation, and analyses must be conducted according to test procedures under 40 CFR Part 136. Field discharge samples shall be collected and analyzed according to the specifications of the manufacturer of the sampling devices

H. Dischargers shall keep all field /or analytical data in the SWPPP document.



7.4 (j)– Watershed Monitoring Option

Dischargers who are part of a qualified regional watershed-based monitoring program may be eligible for relief from the requirements in *7.4 (d) Effluent Sampling Locations* (Section I.5 of Attachment D of the Permit). The Regional Water Board may approve proposals to substitute an acceptable watershed-based monitoring program by determining if the watershed-based monitoring program will provide substantially similar monitoring information in evaluating discharger compliance with the requirements of this General Permit.

7.5 Particle Size Analysis for Project Risk Justification

Dischargers justifying an alternative project risk shall report a soil particle size analysis used to determine the RUSLE K-Factor. ASTM D-422 (Standard Test Method for Particle-Size Analysis of Soils), as revised, shall be used to determine the percentages of sand, very fine sand, silt, and clay on the site.

7.6 – Records

Dischargers shall retain records of all storm water monitoring information and copies of all reports (including Annual Reports) for a period of at least three years. Dischargers shall retain all records on-site while construction is ongoing. These records include:

1. The date, place, time of facility inspections, sampling, visual observation (inspections), and/or measurements, including precipitation.

2. The individual(s) who performed the facility inspections, sampling, visual observation (inspections), and or measurements.

3. The date and approximate time of analyses.

4. The individual(s) who performed the analyses.

5. A summary of all analytical results from the last three years, the method detection limits and reporting units, the analytical techniques or methods used, and the chain of custody forms.

6 Rain gauge readings from site inspections;

7. Quality assurance/quality control records and results.

8. Non-storm water discharge inspections and visual observation (inspections) and storm water discharge visual observation records (see Sections 7.4 (h) Non-

Storm Water Discharge Monitoring Requirements and 7.4 (i) Non-Visible Pollutant Monitoring Requirements above).

9. Visual observation and sample collection exception records (see Section 7.2 (d) above).

10. The records of any corrective actions and follow-up activities that resulted from analytical results, visual observation (inspections), or inspections.

7.7 NAL Exceedance Report

A. In the event that any effluent sample exceeds an applicable NAL, Dischargers shall electronically submit all storm event sampling results to the State Water Board no later than 10 days after the conclusion of the storm event. The Regional Boards have the authority to require the submittal of an NAL Exceedance Report.

B. Dischargers shall certify each NAL Exceedance Report in accordance with the Special Provisions for Construction Activity.

C. Dischargers shall retain an electronic or paper copy of each NAL Exceedance Report for a minimum of three years after the date the annual report is filed.

D. Dischargers shall include in the NAL Exceedance Report:

1. The analytical method(s), method reporting unit(s), and method detection limit(s) of each analytical parameter (analytical results that are less than the method detection limit shall be reported as “less than the method detection limit”).

2. The date, place, time of sampling, visual observation (inspections), and/or measurements, including precipitation.

3. A description of the current BMPs associated with the effluent sample that exceeded the NAL and the proposed corrective actions taken.



8.0 GENERAL REQUIREMENTS

8.1 SWPPP Certification

This SWPPP must be certified in accordance with the signatory requirements described below. Use the Compliance Certification Form provided at the end of this section, and make additional copies as needed.

8.2 Annual Site Compliance Evaluation and Certification

This SWPPP must be certified annually to ensure that construction activities comply with the requirements of the General Construction Permit. The certification should be based upon the results of required site inspections. This certification must be completed by July 1 of each year until the construction project is completed and a Notice of Termination (NOT) has been submitted to the State Water Resources Control Board.

8.3 SWPPP Amendments

This SWPPP will be amended whenever:

A. There is a change in construction or operations which may affect the discharge of pollutants to surface waters, ground waters, or the municipal storm drain system (e.g. Additional soils will be stored onsite, or excavation outside of the project area will be necessary);

B. There is a violation of any condition of the General Permit; or

C. The SWPPP has not achieved the general objective of reducing or eliminating pollutants in storm water discharges.

Use Appendix G to document all changes made to the SWPPP. Make additional copies of Appendix G as needed. Each amendment should be signed by the site construction manager or site supervisor and include the date of initial preparation and the date of each amendment. All amendments should be directly attached to this SWPPP.

8.4 SWPPP Availability

This SWPPP must be kept on the site while the site is under construction, beginning with the initial mobilization and ending with the termination of coverage under the permit. It should be available to site employees at all times and provided upon request to the Los Angeles Regional Water Quality Control Board or local storm water agency.



9.0 POST-CONSTRUCTION STANDARDS

A. All dischargers shall comply with the following runoff reduction requirements unless they are located within an area subject to post construction standards of an active Phase I or II municipal separate storm sewer system (MS4) permit that has an approved Storm Water Management Plan.

   1. This provision shall take effect three years from the adoption date of this permit, or later at the discretion of the Executive Officer of the Regional Board.

   2. The discharger shall demonstrate compliance with the requirements of this section by submitting with their NOI a map and worksheets in accordance with the instructions in Appendix 2 of Order No. 2009-0009-DWQ.The discharger shall use non-structural controls unless the discharger demonstrates that non-structural controls are infeasible or that structural controls will produce greater reduction in water quality impacts.

   3. The discharger shall, through the use of non-structural and structural measures as described in Appendix 2, of Order No. 2009-0009-DWQ replicate the pre-project water balance (for this permit, defined as the volume of rainfall that ends up as runoff) for the smallest storms up to the 85th percentile storm event (or the smallest storm event that generates runoff, whichever is larger). Dischargers shall inform Regional Water Board staff at least 30 days prior to the use of any structural control measure used to comply with this requirement. Volume that cannot be addressed using nonstructural practices shall be captured in structural practices and approved by the Regional Water Board. When seeking Regional Board approval for the use of structural practices, dischargers shall document the infeasibility of using non-structural practices on the project site, or document that there will be fewer water quality impacts

   4. For sites whose disturbed area exceeds two acres, the discharger shall preserve the pre-construction drainage density (miles of stream length per square mile of drainage area) for all drainage areas within the area serving a first order stream[14] or larger stream and ensure that post project time of runoff concentration is equal or greater than pre-project time of concentration.

B. All dischargers shall implement BMPs to reduce pollutants in storm water discharges that are reasonably foreseeable after all construction phases have been completed at the site (Post-construction BMPs).

.



10.0 CERTIFICATION STATEMENT

This SWPPP must be evaluated and re-certified using this form annually by July 1 until the construction project is complete and a Notice of Termination has been submitted to the Regional Board. Use this form for the initial certification, annual re-certification, and re-certification following revisions. Additional blank forms can be made by copying the form included in Appendix J.

"I certify under penalty of law that this document and all attachments were prepared under my direction or supervision in accordance with a system designed to assure that qualified personnel properly gather and evaluate the information submitted. Based on my inquiry of the person or persons who manage the system, or those persons directly responsible for gathering the information, to the best of my knowledge and belief, the information submitted is, true, accurate, and complete. I am aware that there are significant penalties for submitting false information including the possibility of fine and imprisonment for knowing violations."

Annual Re-Certification:

Print Name: _____ **Title:** _____

Signature: _____ **Date:** _____

Telephone Number: _____



Appendix A

Notice of Intent

Appendix B

Site Maps

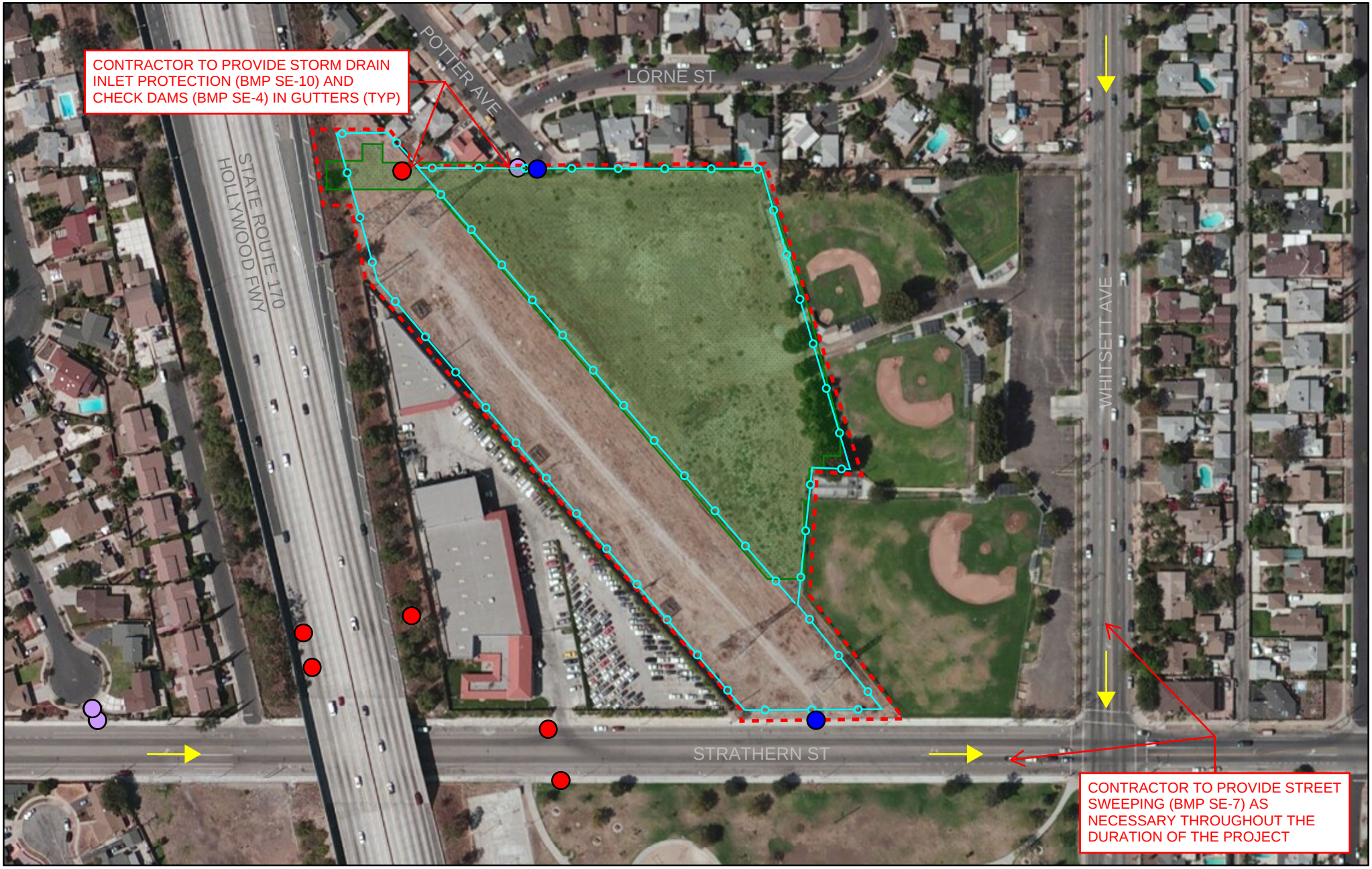

N

Legend

- Project Site Boundary
- Storm Drain Catch Basin
- Storm Drain Culvert
- Areas of Soil Disturbance
- Fiber Rolls
- Sample Location
- Runoff Flow Direction

0 125 250 500 750 1,000 Feet

STRATHERN PARK NORTH SITE MAP

Appendix C

Combined Visual Inspection Form for:

Weekly inspections for BMP effectiveness and maintenance
Daily Inspections for BMP Effectiveness and Maintenance During Extended Storms
Pre-storm Event Baseline Inspection for BMPs and Drainage Areas (within 48 hours)
Post-storm Event Baseline Inspection for BMPs and Drainage Areas (within 48 hours)
Quarterly Non-storm Water Discharges and/or Evidence of Discharges

Field Test Form

(*Make copies as needed)

BMP and Drainage Area Inspection Form Haskell Switching Station

LADWP CONSTRUCTION SWPPP BMP/ DRAINAGE AREA INSPECTION REPORT	
Check one: ☐ Weekly BMP inspection (dry weather) ☐ Pre-storm BMP and drainage area inspection (within 48 hours) ☐ Daily Storm BMP inspection (wet weather) ☐ Post-storm BMP and drainage area inspection (within 48 hours) ☐ Quarterly Non Storm Water Discharge Point Inspection (dry weather) If quarterly, circle one: Jan-Mar, Apr-Jun, Jul-Sep, Oct-Dec	
Project Observation Location*:	**Weather:**
Area of Site Exposed:	**Stage of Construction:**
Date of Inspection: **Time of Inspection:**	**Storm Start Time:**
Inspector:	**Duration of Storm:**
Name:	**Time Since Last Storm:**
Title:	**Approximate Rainfall (in):** **Rain Gauge or NOAA**
Telephone No.:	

YES	NO	
		Are the BMPs called for in the SWPPP installed in the proper location according to the specifications for the SWPPP?
		Are all operational storm drain inlets protected from sediment inflow?
		Do any structural BMPs require repair or clean out to maintain adequate function? If yes, indicate which ones:
		Is there evidence of equipment leakage/ spillage of equipment/vehicle maintenance fluids?
		Are construction on-site traffic routes, parking, and storage of equipment and supplies restricted to areas specifically designated for those uses?
		Do any seeded or landscaped areas require maintenance, irrigation, and fertilization, seeding or mulching?
		Is there any evidence that sediment is leaving the site?

BMP and Drainage Area Inspection Form for Haskell Switching Station observed on _____, continued

Yes	No	
		Is there any evidence of floating and suspended material, sheen, discoloration, turbidity, or odor?
		Is there any evidence of sediment, debris, or mud on public roads at intersections with site access roads?
		Is there any evidence of incorrect waste disposal (paints, concrete, solid wastes)?
		Is the overall housekeeping sufficiently maintained?
		Is the vehicle/ equipment maintenance and cleaning areas clean and free of oil, grease or potential pollutants?
		Is the construction area access point stabilized? Has potential for mud/ dirt tracking from the site been minimized?
		Are liquid transfer areas (equipment fueling) clean and protected from rain?
		Are there any visible non-storm water discharges? Is there evidence that non-storm water discharges occurred in the past? If so, describe the non-storm water discharge:
		Are trashcans covered?
		Are sanitary waste facilities in working order and not leaking?

Describe Corrective Actions Taken or Recommended:
Describe any necessary revisions to the SWPPP or REAP

Fill out as many forms as necessary to cover all observation locations in the entire project area.

Risk Level 2 Effluent Testing Field Log Sheets			
Construction Site Name **Haskell Switching Station**		**Date:**	**Time:**
Sampler/Tester			
Sampling event Type:	☐ **Stormwater**	☐ **Non-stormwater**	☐ **Non-visible pollutant**
Field Meter Calibration			
pH meter ID/Desc: **Calibration date/time:**		**Turbidity meter ID/Desc:** **Calibration date/time:**	
Field pH and Turbidity Measurements			
Discharge Location	**pH**	**Turbidity**	**Time**
For grab samples please include sampling notes on a Chain of Custody form.			
Additional sampling notes:			
Time End:			

Appendix D

Construction Site Monitoring Plan

Construction Site Monitoring Program

1. Purpose

This Construction Site Monitoring Program was developed to address the following objectives:

1. To demonstrate that the site is in compliance with the Discharge Prohibitions and Numeric Action Levels (NALs) of the Construction General Permit;
2. To determine whether non-visible pollutants are present at the construction site and are causing or contributing to exceedances of water quality objectives;
3. To determine whether immediate corrective actions, additional Best Management Practices (BMP) implementation, or SWPPP revisions are necessary to reduce pollutants in stormwater discharges and authorized non-stormwater discharges;
4. To determine whether BMPs included in the SWPPP and REAP are effective in preventing or reducing pollutants in stormwater discharges and authorized non-stormwater discharges.

2. Applicability of Permit Requirements

This project has been determined to be a Risk Level 2 project. The General Permit identifies the following types of monitoring as being applicable for a Risk Level 2 project.

Risk Level 2

- Visual inspections of BMPs;
- Visual monitoring of the site related to qualifying storm events;
- Visual monitoring of the site for non-stormwater discharges;
- Sampling and analysis of construction site runoff for pH and turbidity;
- Sampling and analysis of construction site runoff for non-visible pollutants when applicable; and
- Sampling and analysis of non-stormwater discharges when applicable.

3. Weather and Rain Event Tracking

Visual monitoring and inspections requirements of the General Permit are triggered by a qualifying rain event. The General Permit defines a qualifying rain event as any event that produces ½ inch of precipitation. A minimum of 48 hours of dry weather will be used to distinguish between separate qualifying storm events.

Visual monitoring, inspections, and sampling requirements of the General Permit are triggered by a qualifying rain event. The General Permit defines a qualifying rain event as any event that produces ½ inch of precipitation. A minimum of 48 hours of dry weather will be used to distinguish between separate qualifying storm events.

For the purposes of assessing exceptions to the Receiving Water Monitoring Triggers the General Permit establishes the compliance storm event at the 5-year, 24-hour event. Based on the Western Regional Climate Center, the 5-year, 24-hour event for this project is 4.5 inches.

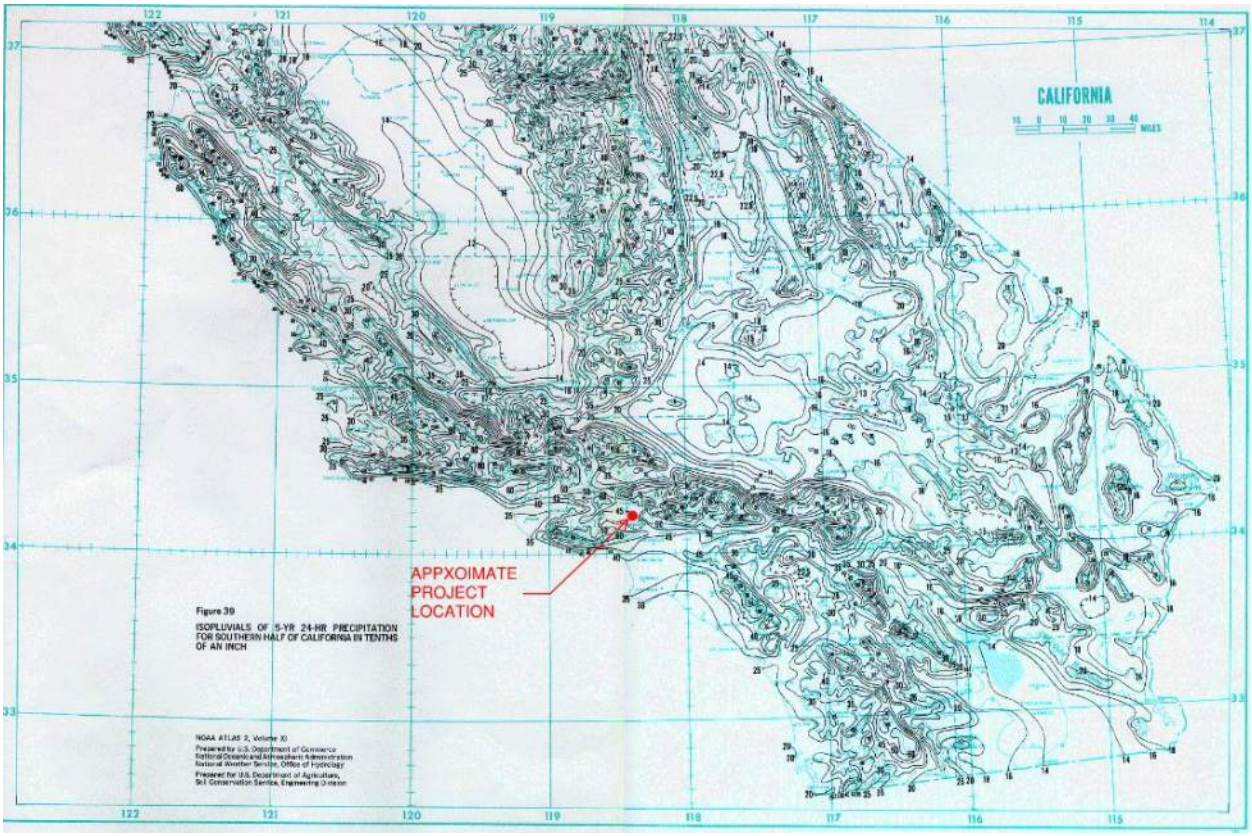

Figure 3.1 Western US Precipitation Frequency Map, Southern California

3.1. Weather Tracking

The QSP should daily consult the National Oceanographic and Atmospheric Administration (NOAA) for the Forecast Weather Table Interface. These forecasts can be obtained at http://forecast.weather.gov . Weather reports should be printed and maintained with the SWPPP in Appendix H "Weather Reports".

3.2. Rain Gauges

The QSP shall install 1 rain gauge on the project site. Locate the gauge in an open area away from obstructions such as trees or overhangs. Mount the gauge on a post at a height of 3 to 5 feet with the gauge extending several inches beyond the post. Make sure that the top of the gauge is level. Make sure the post is not in an area where rainwater can indirectly splash from sheds, equipment, trailers, etc.

The rain gauge(s) shall be read daily during normal site scheduled hours. The rain gauge should be read at approximately the same time every day and the date and time of each reading recorded. Log rain gauge readings in Appendix H "Weather Records". Follow the rain gauge instructions to obtain accurate measurements.

Once the rain gauge reading has been recorded, accumulated rain shall be emptied, and the gauge reset. Alternatively, include instructions for an automated recording rain gauge if used.

For comparison with the site rain gauge, the nearest appropriate governmental rain gauge(s) is located at Tujunga Spreading Grounds (https://dpw.lacounty.gov/wrd/rainfall/).

4. Monitoring Locations

Monitoring locations are shown on the Site Maps in Appendix B. Monitoring locations are described in the Sections 6 and 7.

Whenever changes in the construction site might affect the appropriateness of sampling locations, the sampling locations shall be revised accordingly. All such revisions shall be implemented as soon as feasible and the SWPPP amended. Temporary changes that result in a one-time additional sampling location do not require a SWPPP amendment.

5. Safety and Monitoring Exemptions

Safety practices for sample collection will be in accordance with the [ENTER TITLE AND PUBLICATION DATE OF CONTRACTOR'S HEALTH AND SAFETY PLAN FOR THE PROJECT OR PROVIDE SPECIFIC REQUIREMENTS IN THIS SECTION]. A summary of the safety requirements that apply to sampling personnel is provided below.

-
-
-
-

This project is not required to collect samples or conduct visual observations (inspections) under the following conditions:

- During dangerous weather conditions such as flooding and electrical storms.
- Outside of scheduled site business hours.

Scheduled site business hours are: [SPECIFY SITE BUSINESS DAYS AND HOURS].

If monitoring (visual monitoring or sample collection) of the site is unsafe because of the dangerous conditions noted above, then the QSP shall document the conditions for why an exception to performing the monitoring was necessary. The exemption documentation shall be filed in Appendix N "Monitoring Records".

6. Visual Monitoring

Visual monitoring includes observations and inspections. Inspections of BMPs are required to identify and record BMPs that need maintenance to operate effectively, that have failed, or that could fail to operate as intended. Visual observations of the site are required to observe storm water drainage areas to identify any spills, leaks, or uncontrolled pollutant sources.

Table 6.1 identifies the required frequency of visual observations and inspections. Inspections and observations will be conducted at the locations identified in Section 6.3.

Table 6.1 Summary of Visual Monitoring and Inspections

Type of Inspection	Frequency
Routine Inspections	
BMP Inspections	Weekly[1]
BMP Inspections – Tracking Control	Daily
[add rows for other BMPs as needed]	[Enter Frequency]

Table 6.1 Summary of Visual Monitoring and Inspections

Type of Inspection	Frequency
Non-Stormwater Discharge Observations	Quarterly during daylight hours
Rain Event Triggered Inspections	
Site Inspections Prior to a Qualifying Event	Within 48 hours of a qualifying event [2]
BMP Inspections During an Extended Storm Event	Every 24-hour period of a rain event[3]
Site Inspections Following a Qualifying Event	Within 48 hours of a qualifying event[2]

[1] Most BMPs must be inspected weekly; those identified below must be inspected more frequently.

[2] Inspections are required during scheduled site operating hours.

[3] Inspections are required during scheduled site operating hours regardless of the amount of precipitation on any given day.

6.1. Routine Observations and Inspections

Routine site inspections and visual monitoring are necessary to ensure that the project is in compliance with the requirements of the Construction General Permit.

6.1.1. Routine BMP Inspections

Inspections of BMPs are conducted to identify and record:

- BMPs that are properly installed;
- BMPs that need maintenance to operate effectively;
- BMPs that have failed; or
- BMPs that could fail to operate as intended.

6.1.2. Non-Stormwater Discharge Observations

Each drainage area will be inspected for the presence of or indications of prior unauthorized and authorized non-stormwater discharges. Inspections will record:

- Presence or evidence of any non-stormwater discharge (authorized or unauthorized);
- Pollutant characteristics (floating and suspended material, sheen, discoloration, turbidity, odor, etc.); and
- Source of discharge.

6.2. Rain-Event Triggered Observations and Inspections

Visual observations of the site and inspections of BMPs are required prior to a qualifying rain event; following a qualifying rain event, and every 24-hour period during a qualifying rain event. Pre-rain inspections will be conducted after consulting NOAA and determining that a precipitation event with a 50 percent or greater probability of precipitation has been predicted on the Forecast Weather Table Interface.

6.2.1. Visual Observations Prior to a Forecasted Qualifying Rain Event

Within 48 hours prior to a qualifying event, a stormwater visual monitoring site inspection will include observations of the following locations:

- Stormwater drainage areas to identify any spills, leaks, or uncontrolled pollutant sources;
- BMPs to identify if they have been properly implemented;
- Any stormwater storage and containment areas to detect leaks and ensure maintenance of adequate freeboard.

BMP inspections and visual monitoring will be triggered by a NOAA prediction of rain in the project area.

6.2.2. BMP Inspections During an Extended Storm Event

During an extended rain event BMP inspection will be conducted to identify and record:

- BMPs that are properly installed;
- BMPs that need maintenance to operate effectively;
- BMPs that have failed; or
- BMPs that could fail to operate as intended.

If the construction site is not accessible during the rain event, the visual inspections shall be performed at all relevant outfalls, discharge points, downstream locations. The inspections should record any projected maintenance activities.

6.2.3. Visual Observations Following a Qualifying Rain Event

Within 48 hours following a qualifying rain event (0.5 inches of rain), a stormwater visual monitoring site inspection is required to observe:

- Stormwater drainage areas to identify any spills, leaks, or uncontrolled pollutant sources;
- BMPs to identify if they have been properly designed, implemented, and effective;
- Need for additional BMPs;
- Any stormwater storage and containment areas to detect leaks and ensure maintenance of adequate freeboard; and
- Discharge of stored or contained rain water.

6.3. Visual Monitoring Procedures

Visual monitoring shall be conducted by the QSP or staff trained by and under the supervision of the QSP.

The name(s) and contact number(s) of the site visual monitoring personnel are listed below and their training qualifications are provided in Appendix F.

Assigned inspector: NAME OF INSPECTOR Contact phone: TELEPHONE NUMBER

Alternate inspector: NAME OF INSPECTOR Contact phone: TELEPHONE NUMBER

Stormwater observations shall be documented on the *Visual Inspection Field Log Sheet* (see Appendix O "Example Forms"). BMP inspections shall be documented on the site-specific BMP inspection checklist. Any photographs used to document observations will be referenced on stormwater site inspection report and maintained with the Monitoring Records in Appendix N.

The QSP shall within [Enter Number] days of the inspection submit copies of the completed inspection report to [Name].

The completed reports will be kept in Appendix N "Monitoring Records".

6.4. Visual Monitoring Follow-Up and Reporting

Correction of deficiencies identified by the observations or inspections, including required repairs or maintenance of BMPs, shall be initiated and completed as soon as possible.

If identified deficiencies require design changes, including additional BMPs, the implementation of changes will be initiated within 72 hours of identification and be completed as soon as possible. When design changes to BMPs are required, the SWPPP shall be amended to reflect the changes.

Deficiencies identified in site inspection reports and correction of deficiencies will be tracked on the *Inspection Field Log Sheet* or *BMP Inspection Report* and shall be submitted to the QSP and shall be kept in Appendix N "Monitoring Records".

The QSP shall within [Enter Number] days of the inspection submit copies of the completed *Inspection Field Log Sheet* or *BMP Inspection Report* with the corrective actions to [Name].

Results of visual monitoring must be summarized and reported in the Annual Report.

6.5. Visual Monitoring Locations

The inspections and observations identified in Sections 6.1 and 6.2 will be conducted at the locations identified in this section.

BMP locations are shown on the Site Maps in SWPPP Appendix B.

There are 3 drainage area(s) on the project site and the contractor's yard, staging areas, and storage areas. Drainage area(s) are shown on the Site Maps in Appendix B and Table 6.2 identifies each drainage area by location.

Table 6.2 Site Drainage Areas

Location No.	Location
1	Fernangeles Park
2	Fernangeles Park Southeast Swale
3	Allegheny Street
4	Morehart Avenue

There are [Enter Number] stormwater storage or containment area(s) are on the project site. Stormwater storage or containment area(s) are shown on the Site Maps in Appendix B and Table 6.3 identifies each stormwater storage or containment area by location.

Table 6.3 Stormwater Storage and Containment Areas

Location No.	Location

There are [Enter Number] discharge location(s) on the project site. Site stormwater discharge location(s) are shown on the Site Maps in Appendix B and Table 6.4 identifies each stormwater discharge location.

Table 6.4 Site Stormwater Discharge Locations

Location No.	Location

7. Water Quality Sampling and Analysis

7.1. Sampling and Analysis Plan for Non-Visible Pollutants in Stormwater Runoff Discharges

This Sampling and Analysis Plan for Non-Visible Pollutants describes the sampling and analysis strategy and schedule for monitoring non-visible pollutants in stormwater runoff discharges from the project site.

Sampling for non-visible pollutants will be conducted when (1) a breach, leakage, malfunction, or spill is observed; and (2) the leak or spill has not been cleaned up prior to the rain event; and (3) there is the potential for discharge of non-visible pollutants to surface waters or drainage system.

The following construction materials, wastes, or activities, as identified in Section 2.6, are potential sources of non-visible pollutants to stormwater discharges from the project. Storage, use, and operational locations are shown on the Site Maps in Appendix B.

- [LIST or State NONE]
- [LIST or State NONE]

The following existing site features, as identified in Section 2.6, are potential sources of non-visible pollutants to stormwater discharges from the project. Locations of existing site features contaminated with non-visible pollutants are shown on the Site Maps in Appendix B.

- NONE

The following soil amendments have the potential to change the chemical properties, engineering properties, or erosion resistance of the soil and will be used on the project site. Locations of soil amendment application are shown on the Site Maps in Appendix B.

- NONE

The project has the potential to receive stormwater run-on from the following locations with the potential to contribute non-visible pollutants to stormwater discharges from the project. Locations of such run-on to the project site are shown on the Site Maps in Appendix B.

- Caltrans Stormwater Pump Station

7.1.1. Sampling Schedule

Samples for the potential non-visible pollutant(s) and a sufficiently large unaffected background sample shall be collected during the first two hours of discharge from rain events that result in a sufficient discharge for sample collection. Samples shall be collected during the site's scheduled hours and shall be collected regardless of the time of year and phase of the construction.

Collection of discharge samples for non-visible pollutant monitoring will be triggered when any of the following conditions are observed during site inspections conducted prior to or during a rain event.

- Materials or wastes containing potential non-visible pollutants are not stored under watertight conditions. Watertight conditions are defined as (1) storage in a watertight container, (2) storage under a watertight roof or within a building, or (3) protected by temporary cover and containment that prevents stormwater contact and runoff from the storage area.
- Materials or wastes containing potential non-visible pollutants are stored under watertight conditions, but (1) a breach, malfunction, leakage, or spill is observed, (2) the leak or spill is not cleaned up prior to the rain event, and (3) there is the potential for discharge of non-visible pollutants to surface waters or a storm drain system.
- A construction activity, including but not limited to those in Section 2.6, with the potential to contribute non-visible pollutants (1) was occurring during or within 24 hours prior to the rain event, (2) BMPs were observed to be breached, malfunctioning, or improperly implemented, and (3) there is the potential for discharge of non-visible pollutants to surface waters or a storm drain system.
- Soil amendments that have the potential to change the chemical properties, engineering properties, or erosion resistance of the soil have been applied, and there is the potential for discharge of non-visible pollutants to surface waters or a storm drain system.
- Stormwater runoff from an area contaminated by historical usage of the site has been observed to combine with stormwater runoff from the site, and there is the potential for discharge of non-visible pollutants to surface waters or a storm drain system.

7.1.2. Sampling Locations

Sampling locations are based on proximity to planned non-visible pollutant storage, occurrence or use, accessibility for sampling, and personnel safety. Planned non-visible pollutant sampling locations are shown on the Site Maps in Appendix B and include the locations identified in Tables 7.5 through 7.9.

Three sampling location(s) on the project site and the contractor's yard have been identified for the collection of samples of runoff from planned material and waste storage areas and areas where non-visible pollutant producing construction activities are planned.

Table 7.5 Non-Visible Pollutant Sample Locations – Project Site

Sample Location Number	Sample Location Description	Sample Location Latitude and Longitude
2	NE corner of Alleghney Street and Remick Avenue	N 1906096.97 E 6439663.04
3	Swale outlet on Wicks Avenue	N 1905806.95 E 6440353.45
4	NW corner of Wicks Avenue and Remick Ave	N 1905578.50 E 6440107.14

[Enter number of locations] sampling locations have been identified for the collection of samples of runoff from drainage areas where soil amendments will be applied that have the potential to affect water quality.

Table 7.6 Non-Visible Pollutant Sample Locations – Soil Amendment Areas

Sample Location Number	Sample Location	Sample Location Latitude and Longitude (Decimal Degrees)
[Enter Number]	[Enter Location]	[Enter Latitude] [Enter Longitude]
[Enter Number]	[Enter Location]	[Enter Latitude] [Enter Longitude]

[Enter number of locations] sampling locations have been identified for the collection of samples of runoff from drainage areas contaminated by historical usage of the site.

Table 7.7 Non-Visible Pollutant Sample Locations – Areas of Historical Contamination

Sample Location Number	Sample Location	Sample Location Latitude and Longitude (Decimal Degrees)
[Enter Number]	[Enter Location]	[Enter Latitude] [Enter Longitude]
[Enter Number]	[Enter Location]	[Enter Latitude] [Enter Longitude]

One sampling location(s) has been identified for the collection of an uncontaminated sample of runoff as a background sample for comparison with the samples being analyzed for non-visible pollutants. This location(s) was selected such that the sample will not have come in contact with the operations, activities, or areas identified in Section 7.1 or with disturbed soils areas.

Table 7.8 Non-Visible Pollutant Sample Locations – Background (Unaffected Sample)

Sample Location Number	Sample Location	Sample Location Latitude and Longitude (Decimal Degrees)
[Enter Number]	[Enter Location]	[Enter Latitude] [Enter Longitude]

One sampling location has been identified for the collection of samples of run-on to the project site. Run-on from these locations has the potential to combine with discharges from the site being sampled for non-visible pollutants. These samples are intended to identify potential sources of non-visible pollutants that originate off the project site.

Table 7.9 Non-Visible Pollutant Sample Locations – Site Run-On

Sample Location Number	Sample Location	Sample Location Latitude and Longitude (Decimal Degrees)
1	SE corner of Alleghany Street and Laurel Canyon Boulevard	N 1906449.70 E 6440066.63

If a stormwater visual monitoring site inspection conducted prior to or during a storm event identifies the presence of a material storage, waste storage, operations area with spills, or the potential for the discharge of non-visible pollutants to surface waters or a storm drain system that is at a location not listed above and has not been identified on the Site Maps, sampling locations will be selected by the QSP using the same rationale as that used to identify planned locations. Non-visible pollutant sampling locations shall be identified by the QSP on the pre-rain event inspection form and/or Rain Event Action Plan prior to a forecasted qualifying rain event.

7.1.3. Monitoring Preparation

Non-visible pollutant samples will be collected by:

Contractor ☐ Yes ☐ No

Consultant ☐ Yes ☐ No

Laboratory ☐ Yes ☐ No

Samples on the project site will be collected by the following contractor sampling personnel:

Name/Telephone Number:

Alternate(s)/Telephone Number:

An adequate stock of monitoring supplies and equipment for monitoring non-visible pollutants will be available on the project site prior to a sampling event. Monitoring supplies and equipment will be stored in a cool temperature environment that will not come into contact with rain or direct sunlight. Sampling personnel will be available to collect samples in accordance with the sampling schedule. Supplies maintained at the project site will include, but are not limited to, clean powder-free nitrile gloves, sample collection equipment, coolers, appropriate

number and volume of sample bottles, identification labels, re-sealable storage bags, paper towels, personal rain gear, ice, and *Effluent Sampling Field Log Sheets* and Chain of Custody (CoC) forms, which are provided in Appendix O "Example Forms".

Samples on the project site will be collected by the following [specify laboratory or environmental consultant]:

Company Name:	TBD
Street Address:	
City, State Zip:	
Telephone Number:	
Point of Contact:	
Name of Sampler(s):	
Name of Alternate(s):	

The QSP or his/her designee will contact [specify name of laboratory or environmental consultant] 24 hours prior to a predicted rain event or for an unpredicted event, as soon as a rain event begins if one of the triggering conditions is identified during an inspection to ensure that adequate sample collection personnel and supplies for monitoring non-visible pollutants are available and will be mobilized to collect samples on the project site in accordance with the sampling schedule.

7.1.4. Analytical Constituents

Table 7.10 lists the specific sources and types of potential non-visible pollutants on the project site and the water quality indicator constituent(s) for that pollutant.

Table 7.10 Potential Non-Visible Pollutants and Water Quality Indicator Constituents

Pollutant Source	Pollutant	Water Quality Indicator Constituent
Asphalt Work	VOC	VOC
Concrete Work	pH	pH
Landscape Work	Pesticides/Herbicides	Product dependent, see label and check with laboratory

7.1.5. Sample Collection

Samples of discharge shall be collected at the designated non-visible pollutant sampling locations shown on the Site Maps in Appendix B or in the locations determined by observed breaches, malfunctions, leakages, spills, operational areas, soil amendment application areas, and historical site usage areas that triggered the sampling event.

Grab samples shall be collected and preserved in accordance with the methods identified in the Table 7.11, "Sample Collection, Preservation and Analysis for Monitoring Non-Visible Pollutants" provided in Section 7.1.6. Only the QSP, or personnel trained in water quality sampling under the direction of the QSP shall collect samples.

Sample collection and handling requirements are described in Section 7.7.

7.1.6. Sample Analysis

Samples shall be analyzed using the analytical methods identified in the Table 7.11.

Samples will be analyzed by:

Laboratory Name:	TBD
Street Address:	
City, State Zip:	
Telephone Number:	
Point of Contact:	
ELAP Certification Number:	

Samples will be delivered to the laboratory by:

Driven by Contractor	☐ Yes	☐ No
Picked up by Laboratory Courier	☐ Yes	☐ No
Shipped	☐ Yes	☐ No

7.1.7. Data Evaluation and Reporting

The QSP shall complete an evaluation of the water quality sample analytical results.

Runoff/downgradient results shall be compared with the associated upgradient/unaffected results and any associated run-on results. Should the runoff/downgradient sample show an increased level of the tested analyte relative to the unaffected background sample, which cannot be explained by run-on results, the BMPs, site conditions, and surrounding influences shall be assessed to determine the probable cause for the increase.

As determined by the site and data evaluation, appropriate BMPs shall be repaired or modified to mitigate discharges of non-visible pollutant concentrations. Any revisions to the BMPs shall be recorded as an amendment to the SWPPP.

Table 7.11 Sample Collection, Preservation and Analysis for Monitoring Non-Visible Pollutants

Constituent	Analytical Method	Minimum Sample Volume	Sample Containers	Sample Preservation	Reporting Limit	Maximum Holding Time
Notes:						

The General Permit prohibits the storm water discharges that contain hazardous substances equal to or in excess of reportable quantities established in 40 C.F.R. §§ 117.3 and 302.4. The results of any non-stormwater discharge results that indicate the presence of a hazardous substance in excess of established reportable quantities shall be immediately reported to the Regional Water Board and other agencies as required by 40 C.F.R. §§ 117.3 and 302.4.

Results of non-visible pollutant monitoring shall be reported in the Annual Report.

7.2. Sampling and Analysis Plan for pH and Turbidity in Stormwater Runoff Discharges

Sampling and analysis of runoff for pH and turbidity is required for this project. This Sampling and Analysis Plan describes the strategy for monitoring turbidity and pH levels of stormwater runoff discharges from the project site and run-on that may contribute to an exceedance of a Numeric Action Level (NAL) or the exceedance of a Receiving Water Monitoring Trigger.

Samples for pH and turbidity will be collected at all discharge points where stormwater is discharged off-site.

7.2.1. Sampling Schedule

Stormwater runoff samples shall be collected for pH and turbidity from each day of a qualifying rain event that results in a discharge from the project site. A minimum of three samples will be collected per day of discharge during a qualifying event. Samples should be representative of the total discharge from the project each day of discharge during the qualifying event. Typically, representative samples will be spaced in time throughout the daily discharge event.

Stored or collected water from a qualifying storm event when discharged shall be tested for turbidity and pH. Stored or collected water from a qualifying event may be sampled at the point it is released from the storage or containment area or at the site discharge location.

Run-on samples shall be collected whenever the QSP identifies that run-on has the potential to contribute to an exceedance of a NAL or the exceedance of a Receiving Water Monitoring Trigger.

7.2.2. Sampling Locations

Sampling locations are based on the site runoff discharge locations and locations where run-on enters the site, accessibility for sampling, and personnel safety. Planned pH and turbidity sampling locations are shown on the Site Maps in Appendix B and include the locations identified in Table 7.13 and Table 7-14.

[Enter Number] sampling location(s) on the project site and the contractor's yard have been identified for the collection of runoff samples. Table 7.12 also provides an estimate of the site's area that drains to each location.

Table 7.12 Turbidity and pH Runoff Sample Locations

Sample Location Number	Sample Location	Estimate of Site [Factor] (%)
3	Swale outlet on Wicks Avenue	25
4	NW corner of Wicks Avenue and Remick Ave	75

[Enter number of locations] sampling locations have been identified for the collection of run-on samples where the run-on has the potential to contribute to an exceedance of an NAL or a Receiving Water Monitoring Trigger. Table 7.13 identifies the run-on sample locations.

Table 7.13 Turbidity and pH Run-On Sample Locations

Sample Location Number	Sample Location	Sample Location Latitude and Longitude (Decimal Degrees)
[Enter Number]	[Enter Location]	[Enter Latitude] [Enter Longitude]
[Enter Number]	[Enter Location]	[Enter Latitude] [Enter Longitude]

The project does not receive run-on with the potential to exceed NALs or Receiving Water Monitoring Triggers.

7.2.3. Monitoring Preparation

Turbidity and pH samples will be collected and analyzed by:

Contractor ☐ Yes ☐ No

Consultant ☐ Yes ☐ No

Laboratory ☐ Yes ☐ No

Samples on the project site will be collected by the following contractor sampling personnel:

Name/Telephone Number:

Alternate(s)/Telephone Number:

An adequate stock of monitoring supplies and equipment for monitoring turbidity and will be available on the project site prior to a sampling event. Monitoring supplies and equipment will be stored in a cool temperature environment that will not come into contact with rain or direct sunlight. Sampling personnel will be available to collect samples in accordance with the sampling schedule. Supplies maintained at the project site will include, but are not limited to, field meters, extra batteries, clean powder-free nitrile gloves, sample collection equipment, appropriate sample containers, paper towels, personal rain gear, and *Effluent Sampling Field Log Sheets* and CoC forms provided in Appendix O "Example Forms".

The contractor will obtain and maintain the field-testing instruments, as identified in Section 7.2.6, for analyzing samples in the field by contractor sampling personnel.

Samples on the project site will be collected by the following [specify laboratory or environmental consultant]:

Company Name:

Street Address:

City, State, Zip:

Telephone Number:

Point of Contact:

Name of Sampler(s):

Name of Alternate(s):

The QSP or his/her designee will contact [specify name of laboratory or environmental consultant] 24 hours prior to a predicted rain event or for an unpredicted event, as soon as a rain event begins to ensure that adequate sample collection personnel, supplies for monitoring pH and turbidity are available and will be mobilized to collect samples on the project site in accordance with the sampling schedule.

7.2.4. Field Parameters

Samples shall be analyzed for the constituents indicated in the Table 7.14.

Table 7.14 Sample Collection and Analysis for Monitoring Turbidity and pH

Parameter	Test Method	Minimum Sample Volume [1]	Sample Collection Container Type	Detection Limit (minimum)
Turbidity	Field meter/probe with calibrated portable instrument	500 mL	Polypropylene or glass (Do not collect in meter sample cells)	1 NTU
pH	Field meter/probe with calibrated portable instrument or calibrated pH test kit	100 mL	Polypropylene	0.2 pH units

Notes: [1] Minimum sample volume recommended. Specific volume requirements will vary by instrument; check instrument manufacturer instructions.

L – Liter
mL – Milliliter
NTU – Nephelometric Turbidity Unit

7.2.5. Sample Collection

Samples of discharge shall be collected at the designated runoff and run-on sampling locations shown on the Site Maps in Appendix B. Run-on samples shall be collected within close proximity of the point of run-on to the project.

Only personnel trained in water quality sampling and field measurements working under the direction of the QSP shall collect samples.

Sample collection and handling requirements are described in Section 7.7.

7.2.6. Field Measurements

Samples collected for field analysis, collection, analysis and equipment calibration shall be in accordance with the field instrument manufacturer's specifications.

Immediately following collection, samples for field analysis shall be tested in accordance with the field instrument manufacturer's instructions and results recorded on the *Effluent Sampling Field Log Sheet*.

The field instrument(s) listed in Table 7.15 will be used to analyze the following constituents:

Table 7.15 Field Instruments

Field Instrument (Manufacturer and Model)	Constituent
	pH
	Turbidity

The manufacturers' instructions are included in Appendix P "Field Meter Instructions". Field sampling staff shall review the instructions prior to each sampling event and follow the instructions in completing measurement of the samples.

- The instrument(s) shall be maintained in accordance with manufacturer's instructions.
- The instrument(s) shall be calibrated before each sampling and analysis event.
- Maintenance and calibration records shall be maintained with the SWPPP.

The QSP may authorize alternate equipment provided that the equipment meets the Construction General Permit's requirements and the manufacturers' instructions for calibration and use are added to Appendix P "Field Meter Instructions".

7.2.7. Data Evaluation and Reporting

Immediately upon completing the measurements for the sampling event, provide the *Effluent Sampling Field Log Sheets* to the QSP for evaluation.

Numeric Action Levels

This project is subject to NALs for pH and turbidity (Table 7.16). Compliance with the NAL for pH and turbidity is based on a weighted daily average. Upon receiving the field log sheets, the QSP shall immediately calculate the weighted arithmetic average of the turbidity samples, and the weighted logarithmic average of the pH samples to determine if the NALs, shown in the table below, have been exceeded.

Table 7.16 Numeric Action Levels

Parameter	Unit	Daily Average
pH	pH units	Lower NAL = 6.5 Upper NAL = 8.5
Turbidity	NTU	250 NTU

The QSP shall within [Enter Number] days of the sample collection submit copies of the completed *Effluent Sampling Field Log Sheets* to LADWP representative.

In the event that the pH or turbidity NAL is exceeded, the QSP shall immediately notify LADWP and investigate the cause of the exceedance and identify corrective actions.

Exceedances of NALs shall be electronically reported to the State Water Board by LADWP through the SMARTs system within 10 days of the conclusion of the storm event. If requested by the Regional Board, a NAL Exceedance report will be submitted. The NAL Exceedance Report must contain the following information:

- Analytical method(s), method reporting unit(s), and MDL(s) of each parameter;
- Date, place, time of sampling, visual observation, and/or measurements, including precipitation; and
- Description of the current BMPs associated with the sample that exceeded the NAL and the proposed corrective actions taken.

Receiving Water Monitoring Triggers

This project is not subject to Receiving Water Monitoring Triggers because it does not have a direct discharge to the receiving water.

7.3. Sampling and Analysis Plan for pH, Turbidity, and SSC in Receiving Water

This project is not subject to Receiving Water Monitoring.

7.4. Sampling and Analysis Plan for Non-Stormwater Discharges

The Regional Water Board has not specified monitoring for additional pollutants.

7.5. Training of Sampling Personnel

Sampling personnel shall be trained to collect, maintain, and ship samples in accordance with the Surface Water Ambient Monitoring program (SWAMP) 2008 Quality Assurance Program Plan (QAPrP). Training records of designated contractor sampling personnel are provided in Appendix F.

The stormwater sampler(s) and alternate(s) have received the following stormwater sampling training:

Name	Training
	INSERT LIST OF TRAINING COURSES
	INSERT LIST OF TRAINING COURSES

The stormwater sampler(s) and alternates have the following stormwater sampling experience:

Name	Experience
	INSERT LIST OF STORMWATER SAMPLING EXPERIENCE
	INSERT LIST OF STORMWATER SAMPLING EXPERIENCE

7.6. Sample Collection and Handling

7.6.1. Sample Collection

Samples shall be collected at the designated sampling locations shown on the Site Maps and listed in the preceding sections. Samples shall be collected, maintained and shipped in accordance with the SWAMP 2008 Quality Assurance Program Plan (QAPrP).

Grab samples shall be collected and preserved in accordance with the methods identified in preceding sections.

To maintain sample integrity and prevent cross-contamination, sample collection personnel shall follow the protocols below.

- Collect samples (for laboratory analysis) only in analytical laboratory-provided sample containers;
- Wear clean, powder-free nitrile gloves when collecting samples;
- Change gloves whenever something not known to be clean has been touched;
- Change gloves between sites;
- Decontaminate all equipment (e.g., bucket, tubing) prior to sample collection using a trisodium phosphate water wash, distilled water rinse, and final rinse with distilled water. (Dispose of wash and rinse water appropriately [i.e., do not discharge to storm drain or receiving water]). Do not decontaminate laboratory provided sample containers;
- Do not smoke during sampling events;
- Never sample near a running vehicle;
- Do not park vehicles in the immediate sample collection area (even non-running vehicles);
- Do not eat or drink during sample collection; and
- Do not breathe, sneeze, or cough in the direction of an open sample container.

The most important aspect of grab sampling is to collect a sample that represents the entire runoff stream. Typically, samples are collected by dipping the collection container in the runoff flow paths and streams as noted below.

i. For small streams and flow paths, simply dip the bottle facing upstream until full.
ii. For larger stream that can be safely accessed, collect a sample in the middle of the flow stream by directly dipping the mouth of the bottle. Once again making sure that the opening of the bottle is facing upstream as to avoid any contamination by the sampler.
iii. For larger streams that cannot be safely waded, pole-samplers may be needed to safely access the representative flow.
iv. Avoid collecting samples from ponded, sluggish or stagnant water.
v. Avoid collecting samples directly downstream from a bridge as the samples can be affected by the bridge structure or runoff from the road surface.

Note, that depending upon the specific analytical test, some containers may contain preservatives. These containers should **never** be dipped into the stream but filled indirectly from the collection container.

SSC samples should be taken as a normal grab sample, where the bottle is submerged facing upstream and filled. SSC samples need to be collected in a separate bottle because the analysis requires the entire volume of the bottle. Do not collect in a larger container and partition into the laboratory sample container.

7.6.2. Sample Handling

Turbidity and pH measurements must be conducted immediately. Do not store turbidity or pH samples for later measurement.

Samples for laboratory analysis must be handled as follows. Immediately following sample collection:

- Cap sample containers;
- Complete sample container labels;
- Sealed containers in a re-sealable storage bag;
- Place sample containers into an ice-chilled cooler;

- Document sample information on the *Effluent Sampling Field Log Sheet*; and
- Complete the CoC.

All samples for laboratory analysis must be maintained between 0-6 degrees Celsius during delivery to the laboratory. Samples must be kept on ice, or refrigerated, from sample collection through delivery to the laboratory. Place samples to be shipped inside coolers with ice. Make sure the sample bottles are well packaged to prevent breakage and secure cooler lids with packaging tape.

Ship samples that will be laboratory analyzed to the analytical laboratory right away. Hold times are measured from the time the sample is collected to the time the sample is analyzed. The General Permit requires that samples be received by the analytical laboratory within 48 hours of the physical sampling (unless required sooner by the analytical laboratory).

Laboratory Name:	
Address:	
City, State Zip:	
Telephone Number:	
Point of Contact:	

7.6.3. Sample Documentation Procedures

All original data documented on sample bottle identification labels, *Effluent Sampling Field Log Sheet*, and CoCs shall be recorded using waterproof ink. These shall be considered accountable documents. If an error is made on an accountable document, the individual shall make corrections by lining through the error and entering the correct information. The erroneous information shall not be obliterated. All corrections shall be initialed and dated.

Duplicate samples shall be identified consistent with the numbering system for other samples to prevent the laboratory from identifying duplicate samples. Duplicate samples shall be identified in the Effluent Sampling Field Log Sheet.

Sample documentation procedures include the following:

Sample Bottle Identification Labels: Sampling personnel shall attach an identification label to each sample bottle. Sample identification shall uniquely identify each sample location.

Field Log Sheets: Sampling personnel shall complete the *Effluent Sampling Field Log Sheet* and *Receiving Water Sampling Field Log Sheet* for each sampling event, as appropriate.

Chain of Custody: Sampling personnel shall complete the CoC for each sampling event for which samples are collected for laboratory analysis. The sampler will sign the CoC when the sample(s) is turned over to the testing laboratory or courier.

8. Active Treatment System Monitoring

An Active Treatment System (ATS) will be deployed on the site?

☐ Yes ☒ No

This project does not require a project specific Sampling and Analysis Plan for an ATS because deployment of an ATS is not planned.

9. Bioassessment Monitoring

This project is not subject to bioassessment monitoring because it is not a Risk Level 3 project.

This project is Risk Level 3	☐ Yes	☒ No
This project will disturb more than 30 acres	☐ Yes	☒ No
This project directly discharges runoff to a freshwater wadable stream (or streams) that is either:	☐ Yes	☒ No
a) Listed by the State Water Board or EPA as impaired due to sediment or is tributary to any downstream waterbody that is listed for sediment impairments	☐	
or		
b) Has the beneficial uses of SPAWN and COLD and MIGRATORY	☐	

This project is not subject to bioassessment monitoring because it does not meet both of the permit specified trigger requirements.

10. Watershed Monitoring Option

This project is not participating in a watershed monitoring option.

11. Quality Assurance and Quality Control

An effective Quality Assurance and Quality Control (QA/QC) plan shall be implemented as part of the CSMP to ensure that analytical data can be used with confidence. QA/QC procedures to be initiated include the following:

- Field logs;
- Clean sampling techniques;
- CoCs;
- QA/QC Samples; and
- Data verification.

Each of these procedures is discussed in more detail in the following sections.

11.1. Field Logs

The purpose of field logs is to record sampling information and field observations during monitoring that may explain any uncharacteristic analytical results. Sampling information to be included in the field log include the date and time of water quality sample collection, sampling personnel, sample container identification numbers, and types of samples that were collected. Field observations should be noted in the field log for any abnormalities at the sampling location (color, odor, BMPs, etc.). Field measurements for pH and turbidity should also be recorded in the field log. A Visual Inspection Field Log and an Effluent Sampling Field Log Sheet are included in Appendix O “Example Forms”.

11.2. Clean Sampling Techniques

Clean sampling techniques involve the use of certified clean containers for sample collection and clean powder-free nitrile gloves during sample collection and handling. As discussed in Section 7.7, adoption of a clean sampling approach will minimize the chance of field contamination and questionable data results.

11.3. Chain of Custody

The sample CoC is an important documentation step that tracks samples from collection through analysis to ensure the validity of the sample. Sample CoC procedures include the following:

- Proper labeling of samples;
- Use of CoC forms for all samples; and
- Prompt sample delivery to the analytical laboratory.

Analytical laboratories usually provide CoC forms to be filled out for sample containers. An example CoC is included in Appendix O "Example Forms".

11.4. QA/QC Samples

QA/QC samples provide an indication of the accuracy and precision of the sample collection; sample handling; field measurements; and analytical laboratory methods. The following types of QA/QC will be conducted for this project:

☒ Field Duplicates at a frequency of 5 percent or 1 duplicate minimum per sampling event (Required for all sampling plans with field measurements or laboratory analysis)

☐ Equipment Blanks at a frequency of 1 minimum per sampling event
(Only needed if equipment used to collect samples could add the pollutants to sample)

☐ Field Blanks at a frequency of 1 minimum per sampling event (Only required if sampling method calls for field blanks)

☐ Travel Blanks at a frequency of 1 minimum per sampling event
(Required for sampling plans that include VOC laboratory analysis)

11.4.1. Field Duplicates

Field duplicates provide verification of laboratory or field analysis and sample collection. Duplicate samples shall be collected, handled, and analyzed using the same protocols as primary samples. The sample location where field duplicates are collected shall be randomly selected from the discharge locations. Duplicate samples shall be collected immediately after the primary sample has been collected. Duplicate samples must be collected in the same manner and as close in time as possible to the original sample. Duplicate samples shall not influence any evaluations or conclusion.

11.4.2. Equipment Blanks

Equipment blanks provide verification that equipment has not introduced a pollutant into the sample. Equipment blanks are typically collected when:

- New equipment is used;
- Equipment that has been cleaned after use at a contaminated site;
- Equipment that is not dedicated for surface water sampling is used; or
- Whenever a new lot of filters is used when sampling metals.

11.4.3. Field Blanks

Field blanks assess potential sample contamination levels that occur during field sampling activities. De-ionized water field blanks are taken to the field, transferred to the appropriate container, and treated the same as the corresponding sample type during the course of a sampling event.

11.4.4. Travel Blanks

Travel blanks assess the potential for cross-contamination of volatile constituents between sample containers during shipment from the field to the laboratory. De-ionized water blanks are taken along for the trip and held unopened in the same cooler with the VOC samples.

11.5. Data Verification

After results are received from the analytical laboratory, the QSP shall verify the data to ensure that it is complete, accurate, and the appropriate QA/QC requirements were met. Data must be verified as soon as the data reports are received. Data verification shall include:

- Check the CoC and laboratory reports.
  Make sure all requested analyses were performed and all samples are accounted for in the reports.
- Check laboratory reports to make sure hold times were met and that the reporting levels meet or are lower than the reporting levels agreed to in the contract.
- Check data for outlier values and follow up with the laboratory.
  Occasionally typographical errors, unit reporting errors, or incomplete results are reported and should be easily detected. These errors need to be identified, clarified, and corrected quickly by the laboratory. The QSP should especially note data that is an order of magnitude or more different than similar locations or is inconsistent with previous data from the same location.
- Check laboratory QA/QC results.
  EPA establishes QA/QC checks and acceptable criteria for laboratory analyses. These data are typically reported along with the sample results. The QSP shall evaluate the reported QA/QC data to check for contamination (method, field, and equipment blanks), precision (laboratory matrix spike duplicates), and accuracy (matrix spikes and laboratory control samples). When QA/QC checks are outside acceptable ranges, the laboratory must flag the data, and usually provides an explanation of the potential impact to the sample results.
- Check the data set for outlier values and, accordingly, confirm results and re-analyze samples where appropriate.
  Sample re-analysis should only be undertaken when it appears that some part of the QA/QC resulted in a value out of the accepted range. Sample results may not be discounted unless the analytical laboratory identifies the required QA/QC criteria were not met and confirms this in writing.

Field data including inspections and observations must be verified as soon as the field logs are received, typically at the end of the sampling event. Field data verification shall include:

- Check field logs to make sure all required measurements were completed and appropriately documented;
- Check reported values that appear out of the typical range or inconsistent;
  Follow-up immediately to identify potential reporting or equipment problems, if appropriate, recalibrate equipment after sampling;
- Verify equipment calibrations;

- Review observations noted on the field logs; and
- Review notations of any errors and actions taken to correct the equipment or recording errors.

12. Records Retention

All records of stormwater monitoring information and copies of reports (including Annual Reports) must be retained for a period of at least three years from date of submittal or longer if required by the Regional Water Board.

Results of visual monitoring, field measurements, and laboratory analyses must be kept in the SWPPP along with CoCs, and other documentation related to the monitoring.

Records are to be kept onsite while construction is ongoing. Records to be retained include:

- The date, place, and time of inspections, sampling, visual observations, and/or measurements, including precipitation;
- The individual(s) who performed the inspections, sampling, visual observation, and/or field measurements;
- The date and approximate time of field measurements and laboratory analyses;
- The individual(s) who performed the laboratory analyses;
- A summary of all analytical results, the method detection limits and reporting limits, and the analytical techniques or methods used;
- Rain gauge readings from site inspections;
- QA/QC records and results;
- Calibration records;
- Visual observation and sample collection exemption records;
- The records of any corrective actions and follow-up activities that resulted from analytical results, visual observations, or inspections; and
    - NAL Exceedance Reports.

Appendix E

Rain Event Action Plan (REAP)
File previous versions in the Project Manager's office.

Rain Event Action Plan (REAP)

Date:		**WDID Number:**	
Date Rain Predicted:		**Predicted % chance of rain:**	
NOAA Forecast Attached:		**Date of NOAA Forecast:**	

Site Information:

_____

Site Name, City and Zip Code Project Risk Level: ☐ Risk Level 2 ☐ Risk Level 3

Site Stormwater Manager Information:

_____

Name, Company, Emergency Phone Number (24/7)

Erosion and Sediment Control Contractor – Labor force contracted for the site:

_____

Name, Company, Emergency Phone Number (24/7)

Stormwater Sampling Agent:

_____

Name, Company, Emergency Phone Number (24/7)

Current Phase of Construction

(*Check ALL the boxes below that apply to the site).*

☐ Grading and Land Development ☐ Vertical Construction ☐ Inactive Site

☐ Streets and Utilities ☐ Final Landscaping/Site Stabilization ☐ Other:

Activities Associated with Current Phase(s)

Check ALL the boxes below that apply to the site (some apply to all Phases).

Grading and Land Development:

☐ Demolition	☐ Vegetation Removal	☐ Vegetation Salvage-Harvest
☐ Rough Grade	☐ Finish Grade	☐ Blasting
☐ Soil Amendment(s):	☐ Excavation (_____ ft)	☐ Soils Testing
☐ Rock Crushing	☐ Erosion and Sediment Control	☐ Surveying
☐ Equip. Maintenance/Fueling	☐ Material Delivery and Storage	☐ Other:

Streets and Utilities:

☐ Finish Grade	☐ Utility Install: water-sewer-gas	☐ Paving Operations
☐ Equip. Maintenance/Fueling	☐ Storm Drain Installation	☐ Material Delivery & Storage
☐ Curb and Gutter/Concrete Pour	☐ Masonry	☐ Trenching:
☐ Other:	☐ Other:	☐ Other:

Vertical Construction:

☐ Framing	☐ Carpentry	☐ Concrete/Forms/Foundation
☐ Masonry	☐ Electrical	☐ Painting
☐ Drywall/Interior Walls	☐ Plumbing	☐ Stucco
☐ Equip. Maintenance/Fueling	☐ HVAC	☐ Tile
☐ Exterior Siding	☐ Insulation	☐ Landscaping & Irrigation
☐ Flooring	☐ Roofing	☐ Other:

Final Landscaping & Site Stabilization:

☐ Stabilization	☐ Vegetation Establishment	☐ E&S Control BMP Removal
☐ Finish Grade	☐ Storage Yard/ Material Removal	☐ Landscape Installation
☐ Painting and Touch-Up	☐ Irrigation System Testing	☐ Removal of Temporary BMPs and Construction Waste from Site
☐ Drainage Inlet Stencils	☐ Inlet Filtration	☐ Post-Construction Runoff Mitigation BMP Installation
☐ Other:	☐ Other:	☐ Other:

Inactive Construction Site:

☐ E & S Control Installation	☐ Routine Site Inspection	☐ Trash Removal
☐ E & S Control Maintenance	☐ Street Sweeping	☐ Other:

REAP (Continued)

Active on Site during Current Phase(s)

(Check ALL the boxes below that apply to your site)

☐ Storm Drain Improvement	☐ Grading Contractor	☐ Surveyor- Soil Technician
☐ Street Improvements	☐ Water Pipe Installation	☐ Sanitary Station Provider
☐ Material Delivery	☐ Sewer Pipe Installation	☐ Electrical
☐ Trenching	☐ Gas Pipe Installation	☐ Carpentry
☐ Concrete Pouring	☐ Electrical Installation	☐ Plumbing
☐ Foundation	☐ Communication Installation	☐ Masonry
☐ Demolition	☐ Erosion and Sediment Control	☐ Water, Sewer, Electric Utilities
☐ Material Delivery	☐ Equipment Fueling/Maintenance	☐ Rock Products
☐ Tile Work- Flooring	☐ Irrigation System Installation	☐ Painters
☐ Drywall	☐ Roofers	☐ Carpenters
☐ HVAC installers	☐ Stucco	☐ Pest Control: e.g., Termites
☐ Exterior Siding	☐ Steel Systems	☐ Water Feature Installation
☐ Insulation	☐ Landscapers	☐ Utility Line Testers
☐ Fireproofing	☐ Riggers	☐ Other:

Consider breaking out trades to those doing interior work versus outdoor/exterior work

Trade Contractor Information Provided

(Check ALL the boxes below that apply to the site.)

☐ Educational Material Handout	☐ Tailgate Meetings	☐ Training Workshop
☐ Contractual Language	☐ Fines and Penalties	☐ Signage
☐ Site superintendents notified of forecasted rain via email, phone call or voicemail	☐ Other:	☐ Other:

Predicted Rain Event-Triggered Actions

Below is a list of suggested actions and items to review for this project. Each active Trade should check all material storage areas, stockpiles, waste management areas, vehicle and equipment storage and maintenance, areas of active soil disturbance, and areas of active work to ensure the proper implementation of BMPs. Project-wide BMPs should be checked and cross-referenced to the BMP progress map.

Trade or Activity	Suggested action(s) to perform / item(s) to review prior to rain event
☐ Information & Scheduling	☐ Inform trade supervisors of predicted rain
	☐ Check scheduled activities and reschedule as needed
	☐ Alert erosion/sediment control provider
	☐ Alert sample collection contractor (if applicable)
	☐ Schedule staff for extended rain inspections
	☐ Check Erosion and Sediment Control (ESC) material stock
	☐ Review BMP progress map
	☐ Hours of operation verified for upcoming storm event
	☐ Other:
☐ Material storage areas	☐ Material under cover or in sheds (e.g., treated woods and metals)
	☐ Perimeter control around stockpiles
	☐ Stockpiles covered (as applicable)
	☐ Other:
☐ Waste management areas	☐ Dumpsters closed and drain holes plugged
	☐ Recycling bins covered
	☐ Portable restrooms have secondary containment and protected from tipping over

REAP (Continued)

Trade or Activity, Continued	Suggested action(s) to perform / item(s) to review prior to rain event
☐ Trade operations	☐ Exterior operations shut down for event (e.g., no concrete pours or paving)
	☐ Soil treatments (e.g., fertilizer, soil binder) ceased within 24 hours of event
	☐ Materials and equipment (e.g., tools) properly stored and covered
	☐ Waste and debris disposed in covered dumpsters or removed from site
	☐ Trenches and excavations protected
	☐ Perimeter controls around disturbed areas
	☐ Fueling and repair areas covered and bermed
	☐ Other:
☐ Site ESC BMPs	☐ Adequate capacity in sediment basins and traps
	☐ Site perimeter and slope controls in place
	☐ Catch basin and drop inlet protection in place and cleaned
	☐ Temporary erosion controls deployed
	☐ Roads swept; site ingress and egress points stabilized
	☐ Temporary perimeter controls deployed around disturbed areas and stockpiles
	☐ Other:
☐ Concrete rinse out area	☐ Adequate capacity for rain
	☐ Wash-out bins covered
	☐ Other:
☐ Spill and drips	☐ All incident spills and drips cleaned, including paint, stucco, fuel, and oil cleaned
	☐ Drip pans emptied
	☐ Other:
☐ Other / Discussion / Diagrams	☐ _____
	☐ _____
	☐ _____

I certify under penalty of law that this Rain Event Action Plan (REAP) will be performed in accordance with the General Permit by me or under my direction or supervision in accordance with a system designed to assure that qualified personnel properly gathered and evaluated the information submitted. Based on my inquiry of the persons who manage the system, or those persons directly responsible for gathering the information, the information submitted is, to the best of my knowledge and belief, true, accurate, and complete. I am aware that there are significant penalties for submitting false information, including the possibility of fine and imprisonment for knowing violations.

_____ Date: _____

Qualified SWPPP Practitioner

Appendix F

Training Documentation Forms and Records

Training Records

Training Date: _____		
Trainer: _____		
Topics Covered: **(Check applicable topics)**		
SWPPP **BMPs** _____	**BMP** **Maintenance:** _____	**Non-Storm Water** **Discharges:** _____
Other:		

Name	*Company*	*Telephone*	*SWPPP Duties*

Appendix G

Change of Information Form

Change of Information Form and Amendments Certification

Use additional sheets if necessary.

Section Number/ Page Number	Summary of Revisions	Effective Date of Amendment	Signature, Name, Title, Phone

Appendix H
Weather Information Guide

The General Permit requires inspections of the construction site prior to anticipated storms, during prolonged storms, and after actual storm events. The following sources may be used to obtain weather forecasts:

National Weather Service:

http://www.nws.noaa.gov/

Appendix I

LRP Authorization & Certification

Appendix J

Annual Certification Statement

Fernangeles Recreation Center Stormwater Capture Project
Annual Certification Statement

"I certify under penalty of law that this document and all attachments were prepared under my direction or supervision in accordance with a system designed to assure that qualified personnel properly gather and evaluate the information submitted. Based on my inquiry of the person or persons who manage the system, or those persons directly responsible for gathering the information, to the best of my knowledge and belief, the information submitted is, true, accurate, and complete. I am aware that there are significant penalties for submitting false information including the possibility of fine and imprisonment for knowing violations."

Annual Re-Certification:

Print Name: _____ **Title:** _____

Signature: _____ **Date:** _____

Telephone Number: _____

Appendix K

Risk Determination

	A	B	C	D
1	Version 8/17/2011			
2		**Risk Determination Worksheet**		
3				
4			**Step 1**	Determine Sediment Risk via one of the options lis
5				1. GIS Map Method - EPA Rainfall Erosivity Calcu
6				2. Individual Method - EPA Rainfall Erosivity Calc
7			**Step 2**	Determine Receiving Water Risk via one of the op
8				1. GIS map of Sediment Sensitive Watersheds pr
9				2. Site Specific Analysis (support documentation r
10			**Step 3**	Determine Combined Risk Level

	E	F	G
1			
2			
3			
4	ted:		
5	lator & GIS map		
6	ulator & Individual Data		
7	tions listed:		
8	ovided		
9	equired)		
10			

	A	B	C
1	**Sediment Risk Factor Worksheet**		**Entry**
2	**A) R Factor**		
3	Analyses of data indicated that when factors other than rainfall are held constant, soil loss is directly proportional to a rainfall factor composed of total storm kinetic energy (E) times the maximum 30-min intensity (I30) (Wischmeier and Smith, 1958). The numerical value of R is the average annual sum of EI30 for storm events during a rainfall record of at least 22 years. "Isoerodent" maps were developed based on R values calculated for more than 1000 locations in the Western U.S. Refer to the link below to determine the R factor for the project site.		
4	http://cfpub.epa.gov/npdes/stormwater/LEW/lewCalculator.cfm		
5	**R Factor Value**		56
6	**B) K Factor (weighted average, by area, for all site soils)**		
7	The soil-erodibility factor K represents: (1) susceptibility of soil or surface material to erosion, (2) transportability of the sediment, and (3) the amount and rate of runoff given a particular rainfall input, as measured under a standard condition. Fine-textured soils that are high in clay have low K values (about 0.05 to 0.15) because the particles are resistant to detachment. Coarse-textured soils, such as sandy soils, also have low K values (about 0.05 to 0.2) because of high infiltration resulting in low runoff even though these particles are easily detached. Medium-textured soils, such as a silt loam, have moderate K values (about 0.25 to 0.45) because they are moderately susceptible to particle detachment and they produce runoff at moderate rates. Soils having a high silt content are especially susceptible to erosion and have high K values, which can exceed 0.45 and can be as large as 0.65. Silt-size particles are easily detached and tend to crust, producing high rates and large volumes of runoff. Use Site-specific data must be submitted.		
8	Site-specific K factor guidance		
9	**K Factor Value**		0.24
10	**C) LS Factor (weighted average, by area, for all slopes)**		
11	The effect of topography on erosion is accounted for by the LS factor, which combines the effects of a hillslope-length factor, L, and a hillslope-gradient factor, S. Generally speaking, as hillslope length and/or hillslope gradient increase, soil loss increases. As hillslope length increases, total soil loss and soil loss per unit area increase due to the progressive accumulation of runoff in the downslope direction. As the hillslope gradient increases, the velocity and erosivity of runoff increases. Use the LS table located in separate tab of this spreadsheet to determine LS factors. Estimate the weighted LS for the site prior to construction.		
12	LS Table		
13	**LS Factor Value**		0.96
14			
15	**Watershed Erosion Estimate (=RxKxLS) in tons/acre**		12.9024
16	**Site Sediment Risk Factor**		**Low**
17	Low Sediment Risk: < 15 tons/acre		
18	Medium Sediment Risk: >=15 and <75 tons/acre		
19	High Sediment Risk: >= 75 tons/acre		
20			

Receiving Water (RW) Risk Factor Worksheet	Entry	Score
A. Watershed Characteristics	**yes/no**	
A.1. Does the disturbed area discharge (either directly or indirectly) to a **303(d)-listed waterbody impaired by sediment** (For help with impaired waterbodies please visit the link below) or has a **USEPA approved TMDL implementation plan for sediment**?: http://www.waterboards.ca.gov/water_issues/programs/tmdl/integrated2010.shtml **OR** A.2. Does the disturbed area discharge to a waterbody with designated beneficial uses of SPAWN & COLD & MIGRATORY? (For help please review the appropriate Regional Board Basin Plan) http://www.waterboards.ca.gov/waterboards_map.shtml	**no**	**Low**
Region 1 Basin Plan Region 2 Basin Plan Region 3 Basin Plan Region 4 Basin Plan Region 5 Basin Plan Region 6 Basin Plan Region 7 Basin Plan Region 8 Basin Plan Region 9 Basin Plan		

Combined Risk Level Matrix

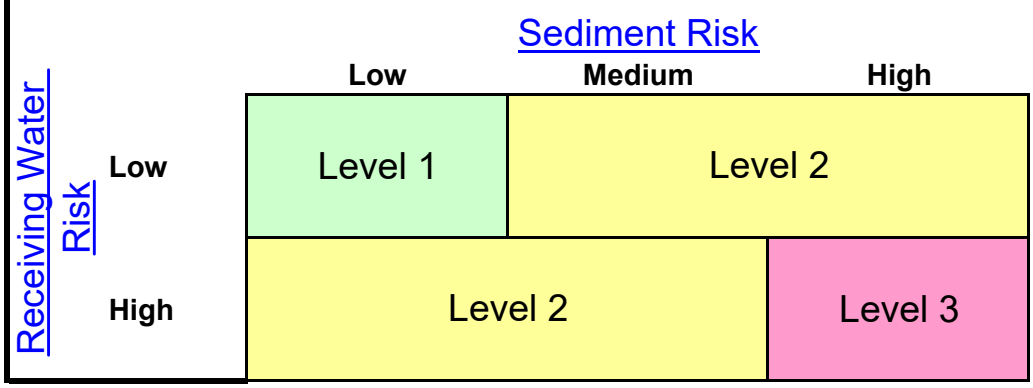

Project Sediment Risk:	**Low**
Project RW Risk:	**Low**
Project Combined Risk:	**Level 1**

Soil Erodibility Factor (K)

The K factor can be determined by using the nomograph method, which requires that a particle size analysis (ASTM D-422) be done to determine the percentages of sand, very fine sand, silt and clay. Use the figure below to determine appropriate K value.

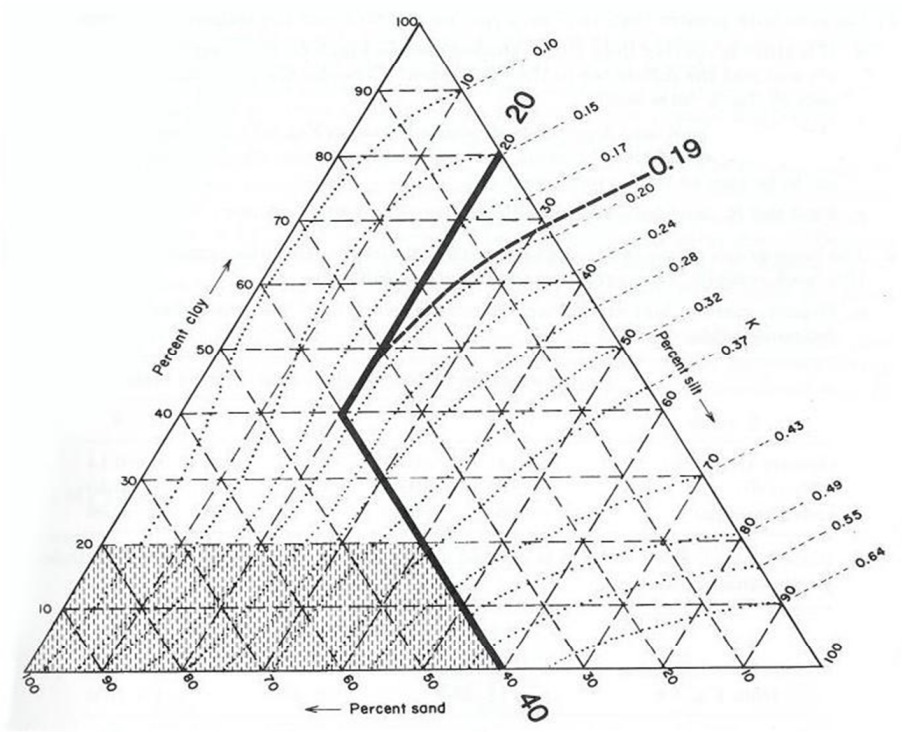

Erickson triangular nomograph used to estimate soil erodibility (K) factor.
The figure above is the USDA nomograph used to determine the K factor for a soil, based on its texture (% silt plus very fine sand, % sand, % organic matter, soil structure, and permeability). *Nomograph from Erickson 1977 as referenced in Goldman et. al., 1986.*

Sheet Flow Length (ft)	Average Watershed Slope (%)																		
	0.2	**0.5**	**1.0**	**2.0**	**3.0**	**4.0**	**5.0**	**6.0**	**8.0**	**10.0**	**12.0**	**14.0**	**16.0**	**20.0**	**25.0**	**30.0**	**40.0**	**50.0**	**60.0**
<3	0.05	0.07	0.09	0.13	0.17	0.20	0.23	0.26	0.32	0.35	0.36	0.38	0.39	0.41	0.45	0.48	0.53	0.58	0.63
6	0.05	0.07	0.09	0.13	0.17	0.20	0.23	0.26	0.32	0.37	0.41	0.45	0.49	0.56	0.64	0.72	0.85	0.97	1.07
9	0.05	0.07	0.09	0.13	0.17	0.20	0.23	0.26	0.32	0.38	0.45	0.51	0.56	0.67	0.80	0.91	1.13	1.31	1.47
12	0.05	0.07	0.09	0.13	0.17	0.20	0.23	0.26	0.32	0.39	0.47	0.55	0.62	0.76	0.93	1.08	1.37	1.62	1.84
15	0.05	0.07	0.09	0.13	0.17	0.20	0.23	0.26	0.32	0.40	0.49	0.58	0.67	0.84	1.04	1.24	1.59	1.91	2.19
25	0.05	0.07	0.10	0.16	0.21	0.26	0.31	0.36	0.45	0.57	0.71	0.85	0.98	1.24	1.56	1.86	2.41	2.91	3.36
50	0.05	0.08	0.13	0.21	0.30	0.38	0.46	0.54	0.70	0.91	1.15	1.40	1.64	2.10	2.67	3.22	4.24	5.16	5.97
75	0.05	0.08	0.14	0.25	0.36	0.47	0.58	0.69	0.91	1.20	1.54	1.87	2.21	2.86	3.67	4.44	5.89	7.20	8.37
100	0.05	0.09	0.15	0.28	0.41	0.55	0.68	0.82	1.10	1.46	1.88	2.31	2.73	3.57	4.59	5.58	7.44	9.13	10.63
150	0.05	0.09	0.17	0.33	0.50	0.68	0.86	1.05	1.43	1.92	2.51	3.09	3.68	4.85	6.30	7.70	10.35	12.75	14.89
200	0.06	0.10	0.18	0.37	0.57	0.79	1.02	1.25	1.72	2.34	3.07	3.81	4.56	6.04	7.88	9.67	13.07	16.16	18.92
250	0.06	0.10	0.19	0.40	0.64	0.89	1.16	1.43	1.99	2.72	3.60	4.48	5.37	7.16	9.38	11.55	15.67	19.42	22.78
300	0.06	0.10	0.20	0.43	0.69	0.98	1.28	1.60	2.24	3.09	4.09	5.11	6.15	8.23	10.81	13.35	18.17	22.57	26.51
400	0.06	0.11	0.22	0.48	0.80	1.14	1.51	1.90	2.70	3.75	5.01	6.30	7.60	10.24	13.53	16.77	22.95	28.60	33.67
600	0.06	0.12	0.24	0.56	0.96	1.42	1.91	2.43	3.52	4.95	6.67	8.45	10.26	13.94	18.57	23.14	31.89	39.95	47.18
800	0.06	0.12	0.26	0.63	1.10	1.65	2.25	2.89	4.24	6.03	8.17	10.40	12.69	17.35	23.24	29.07	40.29	50.63	59.93
1000	0.06	0.13	0.27	0.69	1.23	1.86	2.55	3.30	4.91	7.02	9.57	12.23	14.96	20.57	27.66	34.71	48.29	60.84	72.15

LS Factors for Construction Sites. *Table from Renard et. al., 1997.*

Appendix L
Glossary and Acronyms

Best Management Practices (BMPs):	**Any program, technology, process, siting criteria, operational methods or measures, or engineered systems, that when implemented, prevent, control, remove or reduce pollution.**
Clean Water Act:	**The Federal Water Pollution Control Act enacted by Public Law 92-500 as amended by 95-217, 95-576, 96-483, and 97-117; 33 USC. 1251 et seq. Enacted in 1977, the CWA gave EPA the authority to control point-source storm water discharges that convey pollutants to the waters of the United States. Congress amended the CWA in 1987 to create a new section devoted to storm water permitting. In accordance with the 1987 revisions, the EPA adopted regulations in 1990 that established requirements for National Pollutant Discharge Elimination System (NPDES) permits for discharge of storm water from industries and municipalities.**
Contamination:	**"An impairment of the quality of the waters of the state by waste to a degree which creates a hazard to the public health through poisoning or through the spread of disease...including any equivalent effect resulting from the disposal of waste, whether or not waters of the state are affected." [California Water Code Section 13050(k)].**
General Permit:	**The National Pollutant Discharge Elimination System General Permit for Storm Water Discharges Associated with Construction Activities, issued by the State of California Water Resources Control Board (Water Quality Order 99-08-DWQ, adopted August 1999).**
Good Housekeeping Practices:	**The act of maintaining clean, orderly site areas to prevent potential pollutants from contacting storm water.**
National Pollutant Discharge Elimination System (NPDES):	**A permitting process established pursuant to the Clean Water Act that regulates the release of pollutants to waters of the United States.**
Non-Storm Water Discharge:	**Any discharge to surface waters, to a storm drain, or to any other storm water drainage facility that is not composed entirely of storm water or landscape irrigation runoff.**
Notice of Intent (NOI):	**The NOI is the application form used to obtain the General Construction Permit. The NOI indicates the facility's intent to comply with the terms of the permit.**
Nuisance:	**"Anything which meets all of the following requirements: (1) is injurious to health, or is indecent or offensive to the senses, or an obstruction to the free use of property, so as to**

	interfere with the comfortable enjoyment of life and property; (2) affects at the same time an entire community or neighborhood, or any considerable number of persons, although the extent of the annoyance or damage inflicted upon individuals may be unequal; (3) occurs during or as a result of the treatment or disposal of wastes." [California Water Code Section 13050(m)].
Pollution:	**The "man-made or man-induced alternation of the chemical, physical, biological, and radiological integrity of water." [Clean Water Act Section 502 (19)]. Pollution also means "an alternation of the quality of the waters of the state by waste to a degree which unreasonably affects either...the waters for beneficial uses...or facilities which serve these beneficial uses." [California Water Code Section 13050(l)].**
Regional Water Quality Control Board:	**State agency responsible for administration and enforcement of the municipal and industrial NPDES storm water permits.**
Sanitary Sewer System:	**A network of pipelines carrying sewage to a wastewater treatment facility. Storm drains are separate pipeline and are not connected to sanitary sewers.**
Significant Materials:	**Includes, but is not limited to: raw materials; fuels; materials such as solvents, detergents, and plastic pellets; finished materials such as metallic products; raw materials used in food processing or production; hazardous substances designated under Section 101(14) of Comprehensive Environmental Response, Compensation, and Liability Act (CERCLA); any chemical the facility is required to report pursuant to Section 313 of Title III of Superfund Amendments and Reauthorization Act (SARA); fertilizers; pesticides; and waste products such as ashes, slag, and sludge that have the potential to be released with storm water discharges.**
Significant Quantities:	**The volume, concentrations, or mass of a pollutant in storm water discharges that can cause or threaten to cause pollution, contamination, or nuisance; adversely impact human health or the environment; and cause or contribute to a violation of any applicable water quality standards for the receiving water.**
Storm Water:	**Storm water runoff, and surface runoff and drainage. It excludes infiltration and runoff from agricultural land.**
Storm Water Discharge:	**Storm water at the point where it runs off private property onto adjacent property, the street, canals, creeks, the river, or into the municipal storm drain system.**
Storm Water Pollution Prevention Plan (SWPPP):	**The SWPPP is a document that identifies sources and activities at a particular construction site that may contribute pollutants to storm water, and commits the property owner**

	to implement specific control measures to prevent or treat such pollutants.
U.S. Environmental Protection Agency (EPA):	**The federal agency with authority for enacting and enforcing many environmental laws, including the Clean Water Act.**

Acronyms

ASTM	American Society for Testing and Materials
ATS	Active Treatment System
BAT	Best Available Technology Economically Achievable (BAT) is defined at Section 304(b)(2) of the CWA.
BCT	Best Conventional Pollutant Control Technology (BCT) is defined at Section 304(b)(4) of the CWA.
BMP	Best Management Practices
CASQA	California Storm water Quality Association
CPSWQ	Certified Professional in Storm Water Quality
CPESC	Certified Professional in Erosion and Sediment Control
CSMP	Construction Storm water Monitoring Plan
CWA	Clean Water Act
LADWP	Los Angeles Department of Water and Power
MS4	Municipal Separate Storm water Sewer Systems (separate means separate from a sewage collection system)
NAL	Numeric Action Level (there is no acronym for Narrative Action Level)
NEL	Numeric Effluent Limitation (none for Risk Level 2)
NTU	Nephelometric Turbidity Units, the units of measure for testing for turbidity.
NICET	National Institute for Certification in Engineering Technologies
QSD	Qualified SWPPP Developer
QSP	Qualified SWPPP Practitioner
REAP	Rain Event Action Plan
RUSLE	Revised Universal Soil Loss Equation
SWAMP	Surface Water Ambient Monitoring Program (a State program for monitoring)
SWPPP	Storm Water Pollution Prevention Plan (this document)

Appendix M

BMP Fact Sheets

LIST OF BMPS

EC-1	Scheduling
EC-2	Preservation of Existing Vegetation
SE-4	Check Dams
SE-5	Fiber Rolls
SE-6	Gravel Bag Berm
SE-7	Street Sweeping and Vacuuming
SE-10	Storm Drain Inlet Protection
WE-1	Wind Erosion Control
TC-1	Stabilized Construction Entrance/Exit
NS-1	Water Conservation Practices
NS-2	Dewatering Operations
NS-3	Paving and Grinding Operations
NS-6	Illicit Connection/Discharge
NS-8	Vehicle and Equipment Cleaning
NS-9	Vehicle and Equipment Fueling
NS-10	Vehicle and Equipment Maintenance
NS-11	Pile Driving Operations
NS-12	Concrete Curing
NS-13	Concrete Finishing
WM-1	Material Delivery and Storage
WM-2	Material Use
WM-3	Stockpile Management
WM-4	Spill Prevention and Control
WM-5	Solid Waste Management
WM-6	Hazardous Waste Management
WM-8	Concrete Waste Management
WM-9	Sanitary/Septic Waste Management
WM-10	Liquid Waste Management

Scheduling EC-1

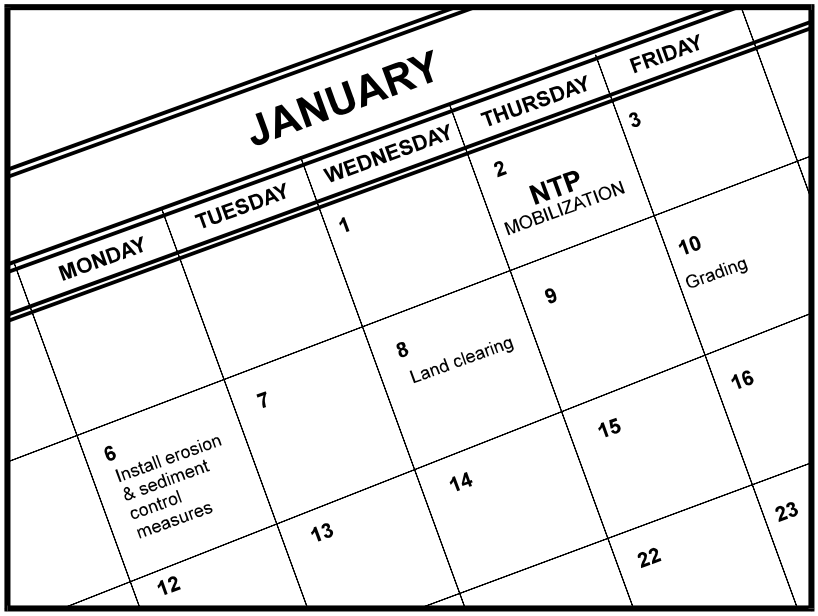

Description and Purpose

Scheduling is the development of a written plan that includes sequencing of construction activities and the implementation of BMPs such as erosion control and sediment control while taking local climate (rainfall, wind, etc.) into consideration. The purpose is to reduce the amount and duration of soil exposed to erosion by wind, rain, runoff, and vehicle tracking, and to perform the construction activities and control practices in accordance with the planned schedule.

Suitable Applications

Proper sequencing of construction activities to reduce erosion potential should be incorporated into the schedule of every construction project especially during rainy season. Use of other, more costly yet less effective, erosion and sediment control BMPs may often be reduced through proper construction sequencing.

Limitations

- Environmental constraints such as nesting season prohibitions reduce the full capabilities of this BMP.

Implementation

- Avoid rainy periods. Schedule major grading operations during dry months when practical. Allow enough time before rainfall begins to stabilize the soil with vegetation or physical means or to install sediment trapping devices.
- Plan the project and develop a schedule showing each phase of construction. Clearly show how the rainy season relates

Categories

EC	Erosion Control	☑
SE	Sediment Control	☒
TC	Tracking Control	☒
WE	Wind Erosion Control	☒
NS	Non-Stormwater Management Control	
WM	Waste Management and Materials Pollution Control	

Legend:
☑ **Primary Objective**
☒ **Secondary Objective**

Targeted Constituents

Sediment	☑
Nutrients	
Trash	
Metals	
Bacteria	
Oil and Grease	
Organics	

Potential Alternatives

None

If User/Subscriber modifies this fact sheet in any way, the CASQA name/logo and footer below must be removed from each page and not appear on the modified version.

to soil disturbing and re-stabilization activities. Incorporate the construction schedule into the SWPPP.

- Include on the schedule, details on the rainy season implementation and deployment of:
  - Erosion control BMPs
  - Sediment control BMPs
  - Tracking control BMPs
  - Wind erosion control BMPs
  - Non-stormwater BMPs
  - Waste management and materials pollution control BMPs
- Include dates for activities that may require non-stormwater discharges such as dewatering, sawcutting, grinding, drilling, boring, crushing, blasting, painting, hydro-demolition, mortar mixing, pavement cleaning, etc.
- Work out the sequencing and timetable for the start and completion of each item such as site clearing and grubbing, grading, excavation, paving, foundation pouring utilities installation, etc., to minimize the active construction area during the rainy season.
  - Sequence trenching activities so that most open portions are closed before new trenching begins.
  - Incorporate staged seeding and re-vegetation of graded slopes as work progresses.
  - Schedule establishment of permanent vegetation during appropriate planting time for specified vegetation.
- Non-active areas should be stabilized as soon as practical after the cessation of soil disturbing activities or one day prior to the onset of precipitation.
- Monitor the weather forecast for rainfall.
- When rainfall is predicted, adjust the construction schedule to allow the implementation of soil stabilization and sediment treatment controls on all disturbed areas prior to the onset of rain.
- Be prepared year-round to deploy erosion control and sediment control BMPs. Erosion may be caused during dry seasons by un-seasonal rainfall, wind, and vehicle tracking. Keep the site stabilized year-round and retain and maintain rainy season sediment trapping devices in operational condition.
- Apply permanent erosion control to areas deemed substantially complete during the project's defined seeding window.
- Avoid soil disturbance during periods with high wind velocities.

Costs

Construction scheduling to reduce erosion may increase other construction costs due to reduced economies of scale in performing site grading. The cost effectiveness of scheduling techniques

should be compared with the other less effective erosion and sedimentation controls to achieve a cost-effective balance.

Inspection and Maintenance

- Verify that work is progressing in accordance with the schedule. If progress deviates, take corrective actions.
- Amend the schedule when changes are warranted.
- Amend the schedule prior to the rainy season to show updated information on the deployment and implementation of construction site BMPs.

References

Stormwater Quality Handbooks Construction Site Best Management Practices (BMPs) Manual, State of California Department of Transportation (Caltrans), November 2000.

Stormwater Management for Construction Activities Developing Pollution Prevention Plans and Best Management Practices (EPA 832-R-92-005), U.S. Environmental Protection Agency, Office of Water, September 1992.

Preservation of Existing Vegetation EC-2

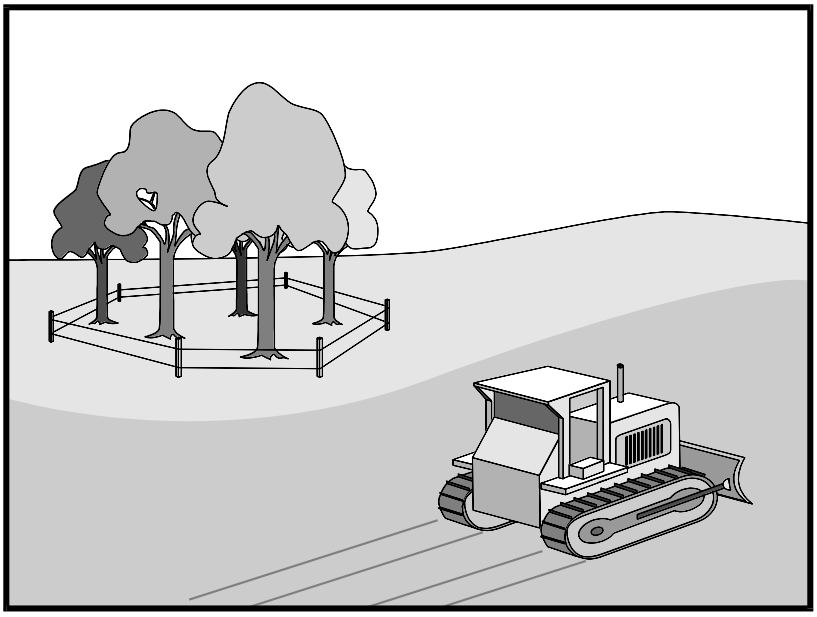

Categories		
EC	Erosion Control	☑
SE	Sediment Control	
TC	Tracking Control	
WE	Wind Erosion Control	
NS	Non-Stormwater Management Control	
WM	Waste Management and Materials Pollution Control	

Legend:

☑ **Primary Objective**

☒ **Secondary Objective**

Targeted Constituents	
Sediment	☑
Nutrients	
Trash	
Metals	
Bacteria	
Oil and Grease	
Organics	

Potential Alternatives

None

Description and Purpose

Carefully planned preservation of existing vegetation minimizes the potential of removing or injuring existing trees, vines, shrubs, and grasses that protect soil from erosion.

Suitable Applications

Preservation of existing vegetation is suitable for use on most projects. Large project sites often provide the greatest opportunity for use of this BMP. Suitable applications include the following:

- Areas within the site where no construction activity occurs or occurs at a later date. This BMP is especially suitable to multi year projects where grading can be phased.
- Areas where natural vegetation exists and is designated for preservation. Such areas often include steep slopes, watercourse, and building sites in wooded areas.
- Areas where local, state, and federal government require preservation, such as vernal pools, wetlands, marshes, certain oak trees, etc. These areas are usually designated on the plans, or in the specifications, permits, or environmental documents.
- Where vegetation designated for ultimate removal can be temporarily preserved and be utilized for erosion control and sediment control.
- Protecting existing vegetation buffers and swales.

If User/Subscriber modifies this fact sheet in any way, the CASQA name/logo and footer below must be removed from each page and not appear on the modified version.

Limitations

- Requires forward planning by the owner/developer, contractor, and design staff.
- Limited opportunities for use when project plans do not incorporate existing vegetation into the site design.
- For sites with diverse topography, it is often difficult and expensive to save existing trees while grading the site satisfactory for the planned development.

Implementation

The best way to prevent erosion is to not disturb the land. In order to reduce the impacts of new development and redevelopment, projects may be designed to avoid disturbing land in sensitive areas of the site (e.g., natural watercourses, steep slopes), and to incorporate unique or desirable existing vegetation into the site's landscaping plan. Clearly marking and leaving a buffer area around these unique areas during construction will help to preserve these areas as well as take advantage of natural erosion prevention and sediment trapping.

Existing vegetation to be preserved on the site must be protected from mechanical and other injury while the land is being developed. The purpose of protecting existing vegetation is to ensure the survival of desirable vegetation for shade, beautification, and erosion control. Mature vegetation has extensive root systems that help to hold soil in place, thus reducing erosion. In addition, vegetation helps keep soil from drying rapidly and becoming susceptible to erosion. To effectively save existing vegetation, no disturbances of any kind should be allowed within a defined area around the vegetation. For trees, no construction activity should occur within the drip line of the tree.

Timing

- Provide for preservation of existing vegetation prior to the commencement of clearing and grubbing operations or other soil disturbing activities in areas where no construction activity is planned or will occur at a later date.

Design and Layout

- Mark areas to be preserved with temporary fencing. Include sufficient setback to protect roots.
  - Orange colored plastic mesh fencing works well.
  - Use appropriate fence posts and adequate post spacing and depth to completely support the fence in an upright position.
- Locate temporary roadways, stockpiles, and layout areas to avoid stands of trees, shrubs, and grass.
- Consider the impact of grade changes to existing vegetation and the root zone.
- Maintain existing irrigation systems where feasible. Temporary irrigation may be required.
- Instruct employees and subcontractors to honor protective devices. Prohibit heavy equipment, vehicular traffic, or storage of construction materials within the protected area.

- Consider pruning or mowing vegetation instead of removing it to allow for regrowth.
- If possible, retain vegetation buffer around the site and adjacent waterways.

Costs

There is little cost associated with preserving existing vegetation if properly planned during the project design, and these costs may be offset by aesthetic benefits that enhance property values. During construction, the cost for preserving existing vegetation will likely be less than the cost of applying erosion and sediment controls to the disturbed area. Replacing vegetation inadvertently destroyed during construction can be extremely expensive, sometimes in excess of $10,000 per tree.

Inspection and Maintenance

During construction, the limits of disturbance should remain clearly marked at all times. Irrigation or maintenance of existing vegetation should be described in the landscaping plan. If damage to protected trees still occurs, maintenance guidelines described below should be followed:

- Verify that protective measures remain in place. Restore damaged protection measures immediately.
- Serious tree injuries shall be attended to by an arborist.
- Damage to the crown, trunk, or root system of a retained tree shall be repaired immediately.
- Trench as far from tree trunks as possible, usually outside of the tree drip line or canopy. Curve trenches around trees to avoid large roots or root concentrations. If roots are encountered, consider tunneling under them. When trenching or tunneling near or under trees to be retained, place tunnels at least 18 in. below the ground surface, and not below the tree center to minimize impact on the roots.
- Do not leave tree roots exposed to air. Cover exposed roots with soil as soon as possible. If soil covering is not practical, protect exposed roots with wet burlap or peat moss until the tunnel or trench is ready for backfill.
- Cleanly remove the ends of damaged roots with a smooth cut.
- Fill trenches and tunnels as soon as possible. Careful filling and tamping will eliminate air spaces in the soil, which can damage roots.
- If bark damage occurs, cut back all loosened bark into the undamaged area, with the cut tapered at the top and bottom and drainage provided at the base of the wood. Limit cutting the undamaged area as much as possible.
- Aerate soil that has been compacted over a trees root zone by punching holes 12 in. deep with an iron bar and moving the bar back and forth until the soil is loosened. Place holes 18 in. apart throughout the area of compacted soil under the tree crown.
- Fertilization:

- Fertilize trees in the late fall or early spring. Although to note, many native species do not require fertilization.

- Apply fertilizer to the soil over the feeder roots and in accordance with label instructions, but never closer than 3 ft to the trunk. Increase the fertilized area by one-fourth of the crown area for conifers that have extended root systems.

- Retain protective measures until all other construction activity is complete to avoid damage during site cleanup and stabilization.

References

County of Sacramento Tree Preservation Ordinance, September 1981.

Stormwater Quality Handbooks Construction Site Best Management Practices (BMPs) Manual, State of California Department of Transportation (Caltrans), November 2000.

Stormwater Management of the Puget Sound Basin, Technical Manual, Publication #91-75, Washington State Department of Ecology, February 1992.

Water Quality Management Plan for The Lake Tahoe Region, Volume II, Handbook of Management Practices, Tahoe Regional Planning Agency, November 1988.

Check Dams SE-4

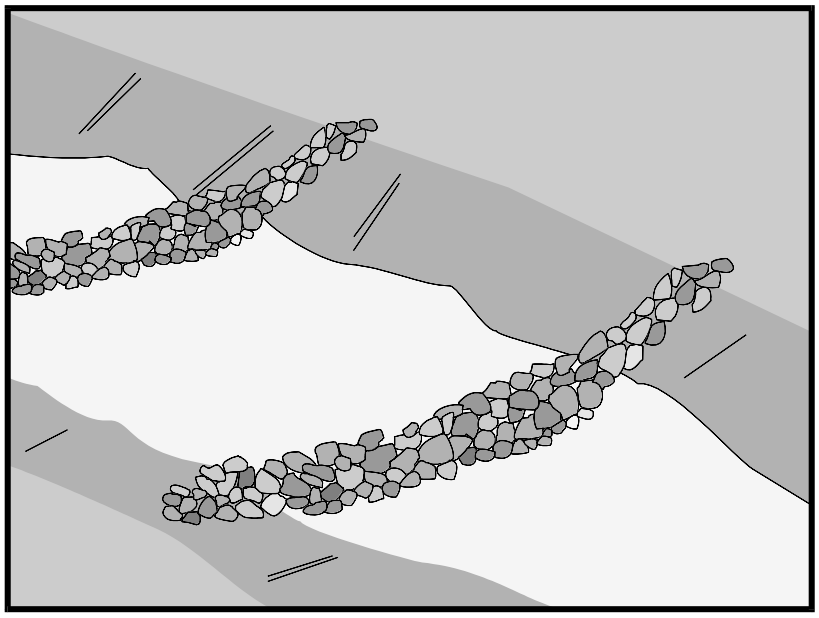

Description and Purpose

A check dam is a small barrier constructed of rock, gravel bags, sandbags, fiber rolls, or other proprietary products, placed across a constructed swale or drainage ditch. Check dams reduce the effective slope of the channel, thereby reducing scour and channel erosion by reducing flow velocity and increasing residence time within the channel, allowing sediment to settle.

Suitable Applications

Check dams may be appropriate in the following situations:

- To promote sedimentation behind the dam.
- To prevent erosion by reducing the velocity of channel flow in small intermittent channels and temporary swales.
- In small open channels that drain 10 acres or less.
- In steep channels where stormwater runoff velocities exceed 5 ft/s.
- During the establishment of grass linings in drainage ditches or channels.
- In temporary ditches where the short length of service does not warrant establishment of erosion-resistant linings.
- To act as a grade control structure.

Categories

EC	Erosion Control	☒
SE	Sediment Control	☑
TC	Tracking Control	
WE	Wind Erosion Control	
NS	Non-Stormwater Management Control	
WM	Waste Management and Materials Pollution Control	

Legend:

☑ **Primary Category**

☒ **Secondary Category**

Targeted Constituents

Sediment	☑
Nutrients	
Trash	
Metals	
Bacteria	
Oil and Grease	
Organics	

Potential Alternatives

SE-5 Fiber Rolls

SE-6 Gravel Bag Berm

SE-8 Sandbag Barrier

SE-12 Manufactured Linear Sediment Controls

SE-14 Biofilter Bags

If User/Subscriber modifies this fact sheet in any way, the CASQA name/logo and footer below must be removed from each page and not appear on the modified version.

Limitations

- Not to be used in live streams or in channels with extended base flows.
- Not appropriate in channels that drain areas greater than 10 acres.
- Not appropriate in channels that are already grass-lined unless erosion potential or sediment-laden flow is expected, as installation may damage vegetation.
- Require extensive maintenance following high velocity flows.
- Promotes sediment trapping which can be re-suspended during subsequent storms or removal of the check dam.
- Do not construct check dams with straw bales or silt fence.
- Water suitable for mosquito production may stand behind check dams, particularly if subjected to daily non-stormwater discharges.

Implementation

General

Check dams reduce the effective slope and create small pools in swales and ditches that drain 10 acres or less. Using check dams to reduce channel slope reduces the velocity of stormwater flows, thus reducing erosion of the swale or ditch and promoting sedimentation. Thus, check dams are dual-purpose and serve an important role as erosion controls as well as sediment controls. Note that use of 1-2 isolated check dams for sedimentation will likely result in little net removal of sediment because of the small detention time and probable scour during longer storms. Using a series of check dams will generally increase their effectiveness. A sediment trap (SE-3) may be placed immediately upstream of the check dam to increase sediment removal efficiency.

Design and Layout

Check dams work by decreasing the effective slope in ditches and swales. An important consequence of the reduced slope is a reduction in capacity of the ditch or swale. This reduction in capacity should be considered when using this BMP, as reduced capacity can result in overtopping of the ditch or swale and resultant consequences. In some cases, such as a "permanent" ditch or swale being constructed early and used as a "temporary" conveyance for construction flows, the ditch or swale may have sufficient capacity such that the temporary reduction in capacity due to check dams is acceptable. When check dams reduce capacities beyond acceptable limits, either:

- Don't use check dams. Consider alternative BMPs, or.
- Increase the size of the ditch or swale to restore capacity.

Maximum slope and velocity reduction is achieved when the toe of the upstream dam is at the same elevation as the top of the downstream dam (see "Spacing Between Check Dams" detail at the end of this fact sheet). The center section of the dam should be lower than the edge sections (at least 6 inches), acting as a spillway, so that the check dam will direct flows to the center of

the ditch or swale (see "Typical Rock Check Dam" detail at the end of this fact sheet). Bypass or side-cutting can occur if a sufficient spillway is not provided in the center of the dam.

Check dams are usually constructed of rock, gravel bags, sandbags, and fiber rolls. A number of products can also be used as check dams (e.g. HDPE check dams, temporary silt dikes (SE-12)), and some of these products can be removed and reused. Check dams can also be constructed of logs or lumber and have the advantage of a longer lifespan when compared to gravel bags, sandbags, and fiber rolls. Check dams should not be constructed from straw bales or silt fences, since concentrated flows quickly wash out these materials.

Rock check dams are usually constructed of 8 to 12 in. rock. The rock is placed either by hand or mechanically, but never just dumped into the channel. The dam should completely span the ditch or swale to prevent washout. The rock used should be large enough to stay in place given the expected design flow through the channel. It is recommended that abutments be extended 18 in. into the channel bank. Rock can be graded such that smaller diameter rock (e.g. 2-4 in) is located on the upstream side of larger rock (holding the smaller rock in place); increasing residence time.

Log check dams are usually constructed of 4 to 6 in. diameter logs, installed vertically. The logs should be embedded into the soil at least 18 in. Logs can be bolted or wired to vertical support logs that have been driven or buried into the soil.

See fiber rolls, SE-5, for installation of fiber roll check dams.

Gravel bag and sand bag check dams are constructed by stacking bags across the ditch or swale, shaped as shown in the drawings at the end of this fact sheet (see "Gravel Bag Check Dam" detail at the end of this fact sheet).

Manufactured products, such as temporary silt dikes (SE-12), should be installed in accordance with the manufacturer's instructions. Installation typically requires anchoring or trenching of products, as well as regular maintenance to remove accumulated sediment and debris.

If grass is planted to stabilize the ditch or swale, the check dam should be removed when the grass has matured (unless the slope of the swales is greater than 4%).

The following guidance should be followed for the design and layout of check dams:

- Install the first check dam approximately 16 ft from the outfall device and at regular intervals based on slope gradient and soil type.
- Check dams should be placed at a distance and height to allow small pools to form between each check dam.
- For multiple check dam installation, backwater from a downstream check dam should reach the toes of the upstream check dam.
- A sediment trap provided immediately upstream of the check dam will help capture sediment. Due to the potential for this sediment to be resuspended in subsequent storms, the sediment trap should be cleaned following each storm event.

- High flows (typically a 2-year storm or larger) should safely flow over the check dam without an increase in upstream flooding or damage to the check dam.
- Where grass is used to line ditches, check dams should be removed when grass has matured sufficiently to protect the ditch or swale.

Materials

- Rock used for check dams should typically be 8-12 in rock and be sufficiently sized to stay in place given expected design flows in the channel. Smaller diameter rock (e.g. 2 to 4 in) can be placed on the upstream side of larger rock to increase residence time.
- Gravel bags used for check dams should conform to the requirements of SE-6, Gravel Bag Berms.
- Sandbags used for check dams should conform to SE-8, Sandbag Barrier.
- Fiber rolls used for check dams should conform to SE-5, Fiber Rolls.
- Temporary silt dikes used for check dams should conform to SE-12, Temporary Silt Dikes.

Installation

- Rock should be placed individually by hand or by mechanical methods (no dumping of rock) to achieve complete ditch or swale coverage.
- Tightly abut bags and stack according to detail shown in the figure at the end of this section (pyramid approach). Gravel bags and sandbags should not be stacked any higher than 3 ft.
- Upper rows or gravel and sand bags shall overlap joints in lower rows.
- Fiber rolls should be trenched in, backfilled, and firmly staked in place.
- Install along a level contour.
- HDPE check dams, temporary silt dikes, and other manufactured products should be used and installed per manufacturer specifications.

Costs

Cost consists of labor costs if materials are readily available (such as gravel on-site). If material must be imported, costs will increase. For other material and installation costs, see SE-5, SE-6, SE-8, SE-12, and SE-14.

Inspection and Maintenance

- BMPs must be inspected in accordance with General Permit requirements for the associated project type and risk level. It is recommended that at a minimum, BMPs be inspected weekly, prior to forecasted rain events, daily during extended rain events, and after the conclusion of rain events.
- Replace missing rock, bags, rolls, etc. Replace bags or rolls that have degraded or have become damaged.

- If the check dam is used as a sediment capture device, sediment that accumulates behind the BMP should be periodically removed in order to maintain BMP effectiveness. Sediment should be removed when the sediment accumulation reaches one-third of the barrier height.
- If the check dam is used as a grade control structure, sediment removal is not required as long as the system continues to control the grade.
- Inspect areas behind check dams for pools of standing water, especially if subjected to daily non-stormwater discharges.
- Remove accumulated sediment prior to permanent seeding or soil stabilization.
- Remove check dam and accumulated sediment when check dams are no longer needed.

References

Draft – Sedimentation and Erosion Control, and Inventory of Current Practices, USEPA, April 1990.

Manual of Standards of Erosion and Sediment Control Measures, Association of Bay Area Governments, May 1995.

Stormwater Quality Handbooks - Construction Site Best Management Practices (BMPs) Manual, State of California Department of Transportation (Caltrans), March 2003.

Stormwater Management of the Puget Sound Basin, Technical Manual, Publication #91-75, Washington State Department of Ecology, February 1992.

Erosion and Sediment Control Manual, Oregon Department of Environmental Quality, February 2005.

Metzger, M.E. 2004. Managing mosquitoes in stormwater treatment devices. University of California Division of Agriculture and Natural Resources, Publication 8125. On-line: http://anrcatalog.ucdavis.edu/pdf/8125.pdf

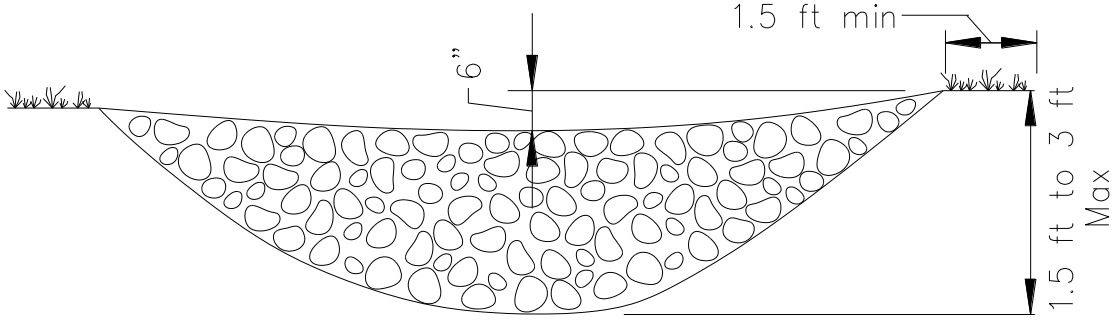

ELEVATION

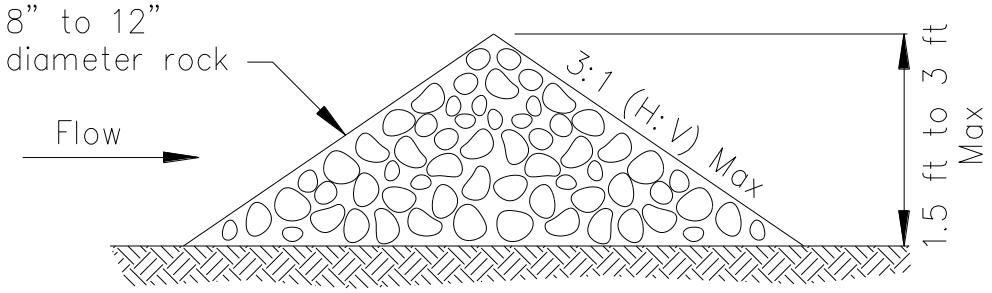

TYPICAL ROCK CHECK DAM SECTION

ROCK CHECK DAM
NOT TO SCALE

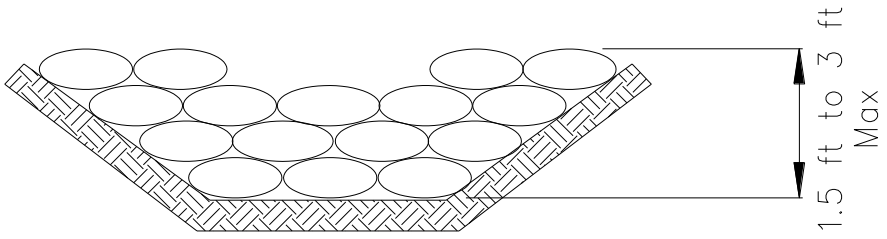

GRAVEL BAG CHECK DAM ELEVATION
NOT TO SCALE

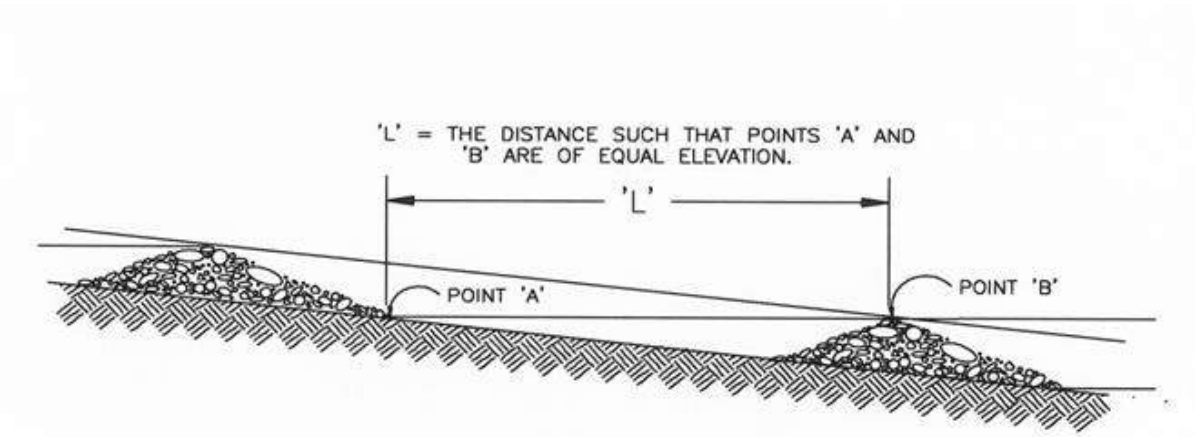

SPACING BETWEEN CHECK DAMS

Fiber Rolls SE-5

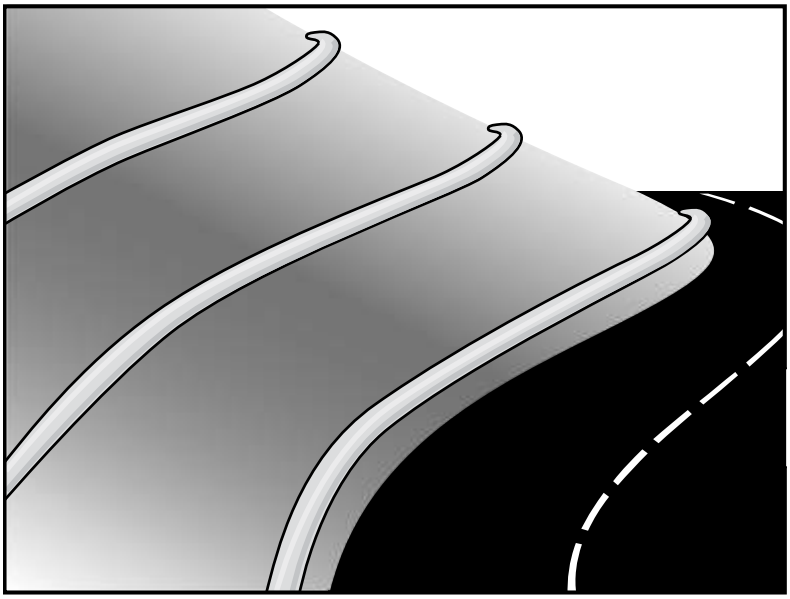

Categories

EC	Erosion Control	☒
SE	Sediment Control	☑
TC	Tracking Control	
WE	Wind Erosion Control	
NS	Non-Stormwater Management Control	
WM	Waste Management and Materials Pollution Control	

Legend:

☑ **Primary Category**

☒ **Secondary Category**

Description and Purpose

A fiber roll (also known as wattles or logs) consists of straw, coir, curled wood fiber, or other biodegradable materials bound into a tight tubular roll wrapped by plastic netting, which can be photodegradable, or natural fiber, such as jute, cotton, or sisal. Additionally, gravel core fiber rolls are available, which contain an imbedded ballast material such as gravel or sand for additional weight when staking the rolls are not feasible (such as use as inlet protection). When fiber rolls are placed at the toe and on the face of slopes along the contours, they intercept runoff, reduce its flow velocity, release the runoff as sheet flow, and provide removal of sediment from the runoff (through sedimentation). By interrupting the length of a slope, fiber rolls can also reduce sheet and rill erosion until vegetation is established.

Suitable Applications

Fiber rolls may be suitable:

- Along the toe, top, face, and at grade breaks of exposed and erodible slopes to shorten slope length and spread runoff as sheet flow.
- At the end of a downward slope where it transitions to a steeper slope.
- Along the perimeter of a project.
- As check dams in unlined ditches with minimal grade.
- Down-slope of exposed soil areas.

Targeted Constituents

Sediment	☑
Nutrients	
Trash	
Metals	
Bacteria	
Oil and Grease	
Organics	

Potential Alternatives

SE-1 Silt Fence

SE-6 Gravel Bag Berm

SE-8 Sandbag Barrier

SE-12 Manufactured Linear Sediment Controls

SE-14 Biofilter Bags

If User/Subscriber modifies this fact sheet in any way, the CASQA name/logo and footer below must be removed from each page and not appear on the modified version.

- At operational storm drains as a form of inlet protection.
- Around temporary stockpiles.

Limitations

- Fiber rolls should be used in conjunction with erosion control, such as hydroseed, RECPs, etc.
- Only biodegradable fiber rolls containing no plastic can remain on a site applying for a Notice of Termination due to plastic pollution and wildlife concerns (State Water Board, 2016). Fiber rolls containing plastic that are used on a site must be disposed of for final stabilization.
- Fiber rolls are not effective unless trenched in and staked. If not properly staked and trenched in, fiber rolls will not work as intended and could be transported by high flows.
- Not intended for use in high flow situations (i.e., for concentrated flows).
- Difficult to move once saturated.
- Fiber rolls have a limited sediment capture zone.
- Fiber rolls should not be used on slopes subject to creep, slumping, or landslide.
- Rolls typically function for 12-24 months, depending upon local conditions and roll material.

Implementation

Fiber Roll Materials

- Fiber rolls should be prefabricated.
- Fiber rolls may come manufactured containing polyacrylamide (PAM), a flocculating agent within the roll. Fiber rolls impregnated with PAM provide additional sediment removal capabilities and should be used in areas with fine, clayey or silty soils to provide additional sediment removal capabilities. Monitoring may be required for these installations.
- Fiber rolls are made from weed-free rice straw, flax, curled wood fiber, or coir bound into a tight tubular roll by netting or natural fiber (see *Limitations* above regarding plastic netting).
- Typical fiber rolls vary in diameter from 6 in. to 20 in. Larger diameter rolls are available as well. The larger the roll, the higher the sediment retention capacity.
- Typical fiber rolls lengths are 4, 10, 20 and 25 ft., although other lengths are likely available.

Installation

- Locate fiber rolls on level contours spaced as follows:
  - Slope inclination of 4:1 (H:V) or flatter: Fiber rolls should be placed at a maximum interval of 20 ft.

  - Slope inclination between 4:1 and 2:1 (H:V): Fiber Rolls should be placed at a maximum interval of 15 ft. (a closer spacing is more effective).

  - Slope inclination 2:1 (H:V) or greater: Fiber Rolls should be placed at a maximum interval of 10 ft. (a closer spacing is more effective).

- Prepare the slope before beginning installation.

- Dig small trenches across the slope on the contour. The trench depth should be ¼ to 1/3 of the thickness of the roll, and the width should equal the roll diameter, in order to provide area to backfill the trench.

- It is critical that rolls are installed perpendicular to water movement, and parallel to the slope contour.

- Start building trenches and installing rolls from the bottom of the slope and work up.

- It is recommended that pilot holes be driven through the fiber roll. Use a straight bar to drive holes through the roll and into the soil for the wooden stakes.

- Turn the ends of the fiber roll up slope to prevent runoff from going around the roll.

- Stake fiber rolls into the trench.

  - Drive stakes at the end of each fiber roll and spaced 4 ft maximum on center.

  - Use wood stakes with a nominal classification of 0.75 by 0.75 in. and minimum length of 24 in.

- If more than one fiber roll is placed in a row, the rolls should be overlapped, not abutted.

- See typical fiber roll installation details at the end of this fact sheet.

Removal

- Fiber rolls can be left in place or removed depending on the type of fiber roll and application (temporary vs. permanent installation). Fiber rolls encased with plastic netting or containing any plastic material will need to be removed from the site for final stabilization. Fiber rolls used in a permanent application are to be encased with a non-plastic material and are left in place. Removal of a fiber roll used in a permanent application can result in greater disturbance; therefore, during the BMP planning phase, the areas where fiber rolls will be used on final slopes, only fiber rolls wrapped in non-plastic material should be selected.

- Temporary installations should only be removed when up gradient areas are stabilized per General Permit requirements, and/or pollutant sources no longer present a hazard. But they should also be removed before vegetation becomes too mature so that the removal process does not disturb more soil and vegetation than is necessary.

Costs

Material costs for straw fiber rolls range from $26 - $38 per 25-ft. roll[1] and curled wood fiber rolls range from $30 - $40 per roll[2].

Material costs for PAM impregnated fiber rolls range between $9.00-$12.00 per linear foot, based upon vendor research[1] .

Inspection and Maintenance

- BMPs must be inspected in accordance with General Permit requirements for the associated project type and risk level. It is recommended that at a minimum, BMPs be inspected weekly, prior to forecasted rain events, daily during extended rain events, and after the conclusion of rain events.
- Repair or replace split, torn, unraveling, or slumping fiber rolls.
- If the fiber roll is used as a sediment capture device, or as an erosion control device to maintain sheet flows, sediment that accumulates in the BMP should be periodically removed in order to maintain BMP effectiveness. Sediment should be removed when sediment accumulation reaches one-third the designated sediment storage depth.
- If fiber rolls are used for erosion control, such as in a check dam, sediment removal should not be required as long as the system continues to control the grade. Sediment control BMPs will likely be required in conjunction with this type of application.
- Repair any rills or gullies promptly.

References

General Construction – Frequently Asked Questions, Storm Water Program website, State Water Resources Control Board, 2009 updated in 2016. Available online at: http://www.waterboards.ca.gov/water_issues/programs/stormwater/gen_const_faq.shtml.

Stormwater Quality Handbooks - Construction Site Best Management Practices (BMPs) Manual, State of California Department of Transportation (Caltrans), March 2003.

Erosion and Sediment Control Manual, Oregon Department of Environmental Quality, February 2005.

[1] Adjusted for inflation (2016 dollars) by Tetra Tech, Inc.
[2] Costs estimated based on vendor query by Tetra Tech, Inc. 2016.

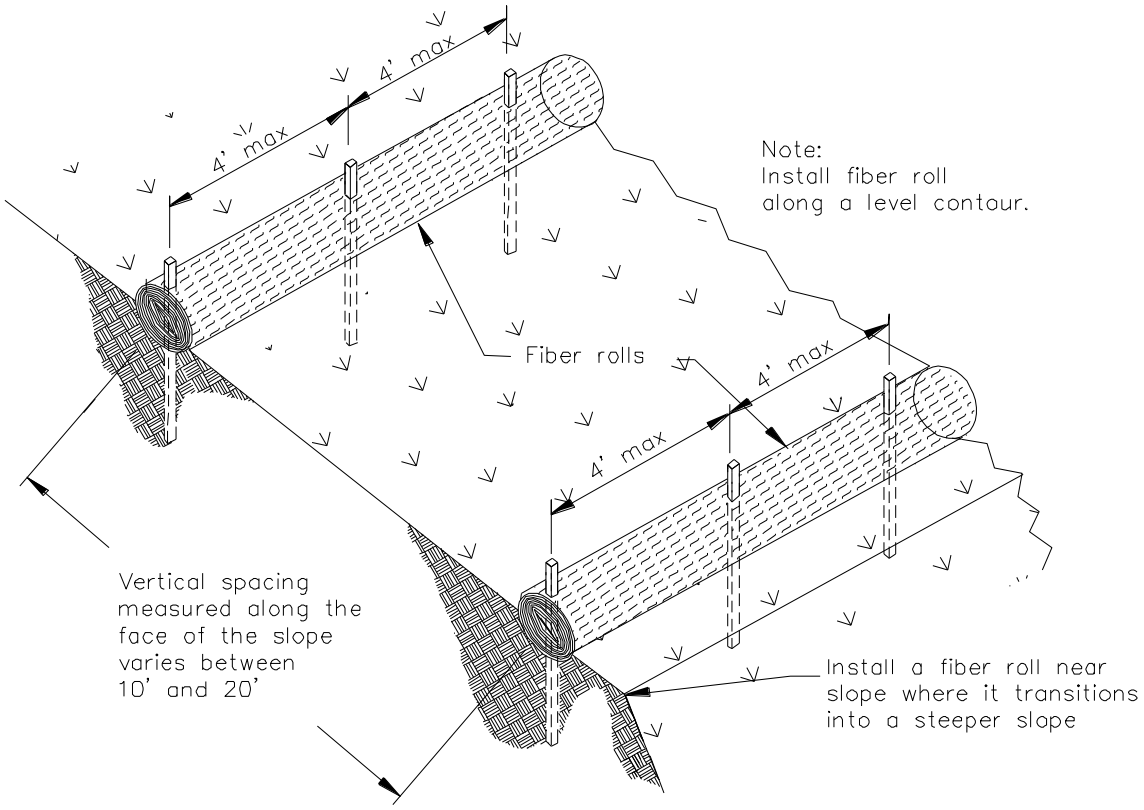

TYPICAL FIBER ROLL INSTALLATION
N.T.S.

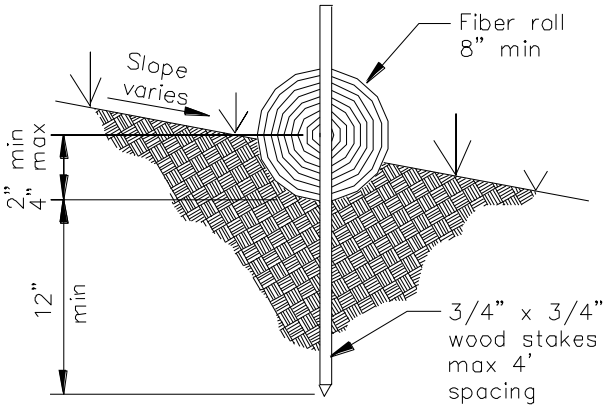

ENTRENCHMENT DETAIL
N.T.S.

Gravel Bag Berm SE-6

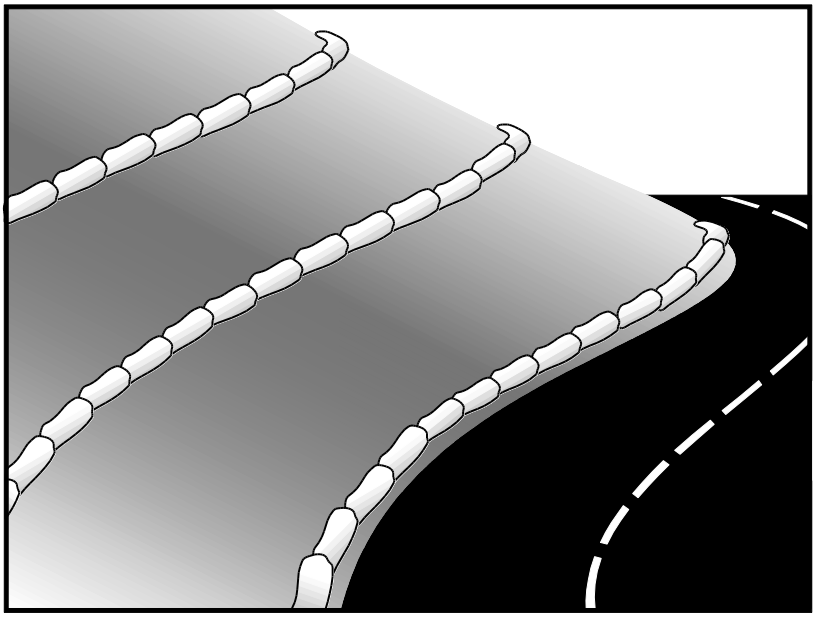

Description and Purpose

A gravel bag berm is a series of gravel-filled bags placed on a level contour to intercept sheet flows. Gravel bags pond sheet flow runoff, allowing sediment to settle out, and release runoff slowly as sheet flow, preventing erosion.

Suitable Applications

Gravel bag berms may be suitable:

- As a linear sediment control measure:
  - Below the toe of slopes and erodible slopes
  - As sediment traps at culvert/pipe outlets
  - Below other small cleared areas
  - Along the perimeter of a site
  - Down slope of exposed soil areas
  - Around temporary stockpiles and spoil areas
  - Parallel to a roadway to keep sediment off paved areas
  - Along streams and channels
- As a linear erosion control measure:
  - Along the face and at grade breaks of exposed and erodible slopes to shorten slope length and spread runoff as sheet flow.

Categories

EC	Erosion Control	☒
SE	Sediment Control	☑
TC	Tracking Control	
WE	Wind Erosion Control	
NS	Non-Stormwater Management Control	
WM	Waste Management and Materials Pollution Control	

Legend:

☑ **Primary Category**

☒ **Secondary Category**

Targeted Constituents

Sediment	☑
Nutrients	
Trash	
Metals	
Bacteria	
Oil and Grease	
Organics	

Potential Alternatives

SE-1 Silt Fence

SE-5 Fiber Roll

SE-8 Sandbag Barrier

SE-12 Temporary Silt Dike

SE-14 Biofilter Bags

If User/Subscriber modifies this fact sheet in any way, the CASQA name/logo and footer below must be removed from each page and not appear on the modified version.

- At the top of slopes to divert runoff away from disturbed slopes.
- As chevrons (small check dams) across mildly sloped construction roads. For use check dam use in channels, see SE-4, Check Dams.

Limitations

- Gravel berms may be difficult to remove.
- Removal problems limit their usefulness in landscaped areas.
- Gravel bag berm may not be appropriate for drainage areas greater than 5 acres.
- Runoff will pond upstream of the berm, possibly causing flooding if sufficient space does not exist.
- Degraded gravel bags may rupture when removed, spilling contents.
- Installation can be labor intensive.
- Durability of gravel bags is somewhat limited, and bags may need to be replaced when installation is required for longer than 6 months.
- Easily damaged by construction equipment.
- When used to detain concentrated flows, maintenance requirements increase.

Implementation

General

A gravel bag berm consists of a row of open graded gravel-filled bags placed on a level contour. When appropriately placed, a gravel bag berm intercepts and slows sheet flow runoff, causing temporary ponding. The temporary ponding allows sediment to settle. The open graded gravel in the bags is porous, which allows the ponded runoff to flow slowly through the bags, releasing the runoff as sheet flows. Gravel bag berms also interrupt the slope length and thereby reduce erosion by reducing the tendency of sheet flows to concentrate into rivulets, which erode rills, and ultimately gullies, into disturbed, sloped soils. Gravel bag berms are similar to sand bag barriers but are more porous. Generally, gravel bag berms should be used in conjunction with temporary soil stabilization controls up slope to provide effective erosion and sediment control.

Design and Layout

- Locate gravel bag berms on level contours.
- When used for slope interruption, the following slope/sheet flow length combinations apply:
  - Slope inclination of 4:1 (H:V) or flatter: Gravel bags should be placed at a maximum interval of 20 ft, with the first row near the slope toe.
  - Slope inclination between 4:1 and 2:1 (H:V): Gravel bags should be placed at a maximum interval of 15 ft. (a closer spacing is more effective), with the first row near the slope toe.

Slope inclination 2:1 (H:V) or greater: Gravel bags should be placed at a maximum interval of 10 ft. (a closer spacing is more effective), with the first row near the slope toe.

- Turn the ends of the gravel bag barriers up slope to prevent runoff from going around the berm.
- Allow sufficient space up slope from the gravel bag berm to allow ponding, and to provide room for sediment storage.
- For installation near the toe of the slope, gravel bag barriers should be set back from the slope toe to facilitate cleaning. Where specific site conditions do not allow for a set-back, the gravel bag barrier may be constructed on the toe of the slope. To prevent flows behind the barrier, bags can be placed perpendicular to a berm to serve as cross barriers.
- Drainage area should not exceed 5 acres.
- In Non-Traffic Areas:
  - Height = 18 in. maximum
  - Top width = 24 in. minimum for three or more-layer construction
  - Top width = 12 in. minimum for one- or two-layer construction
  - Side slopes = 2:1 (H:V) or flatter
- In Construction Traffic Areas:
  - Height = 12 in. maximum
  - Top width = 24 in. minimum for three or more-layer construction.
  - Top width = 12 in. minimum for one- or two-layer construction.
  - Side slopes = 2:1 (H:V) or flatter.
- Butt ends of bags tightly.
- On multiple row, or multiple layer construction, overlap butt joints of adjacent row and row beneath.
- Use a pyramid approach when stacking bags.

Materials

- ***Bag Material:*** Bags should be woven polypropylene, polyethylene or polyamide fabric or burlap, minimum unit weight of 4 ounces/yd^2, Mullen burst strength exceeding 300 lb/in^2 in conformance with the requirements in ASTM designation D3786, and ultraviolet stability exceeding 70% in conformance with the requirements in ASTM designation D4355.

- ***Bag Size:*** Each gravel-filled bag should have a length of 18 in., width of 12 in., thickness of 3 in., and mass of approximately 33 lbs. Bag dimensions are nominal and may vary based on locally available materials.

- ***Fill Material:*** Fill material should be 0.5 to 1 in. Crushed rock, clean and free from clay, organic matter, and other deleterious material, or other suitable open graded, non-cohesive, porous gravel.

Costs

Material costs for gravel bags are average and are dependent upon material availability. $3.20-$3.80 per filled gravel bag is standard based upon vendor research (Adjusted for inflation, 2016 dollars, by Tetra Tech, Inc.).

Inspection and Maintenance

- BMPs must be inspected in accordance with General Permit requirements for the associated project type and risk level. It is recommended that at a minimum, BMPs be inspected weekly, prior to forecasted rain events, daily during extended rain events, and after the conclusion of rain events.

- Gravel bags exposed to sunlight will need to be replaced every two to three months due to degrading of the bags.

- Reshape or replace gravel bags as needed.

- Repair washouts or other damage as needed.

- Sediment that accumulates in the BMP should be periodically removed in order to maintain BMP effectiveness. Sediment should be removed when the sediment accumulation reaches one-third of the barrier height.

- Remove gravel bag berms when no longer needed and recycle gravel fill whenever possible and properly dispose of bag material. Remove sediment accumulation and clean, re-grade, and stabilize the area.

References

Handbook of Steel Drainage and Highway Construction, American Iron and Steel Institute, 1983.

Stormwater Quality Handbooks - Construction Site Best Management Practices (BMPs) Manual, State of California Department of Transportation (Caltrans), March 2003.

Stormwater Pollution Plan Handbook, First Edition, State of California, Department of Transportation Division of New Technology, Materials and Research, October 1992.

Erosion and Sediment Control Manual, Oregon Department of Environmental Quality, February 2005.

Street Sweeping and Vacuuming SE-7



Categories		
EC	Erosion Control	
SE	Sediment Control	☒
TC	Tracking Control	☑
WE	Wind Erosion Control	
NS	Non-Stormwater Management Control	
WM	Waste Management and Materials Pollution Control	

Legend:
☑ **Primary Objective**
☒ **Secondary Objective**

Targeted Constituents	
Sediment	☑
Nutrients	
Trash	☑
Metals	
Bacteria	
Oil and Grease	☑
Organics	

Potential Alternatives

None

If User/Subscriber modifies this fact sheet in any way, the CASQA name/logo and footer below must be removed from each page and not appear on the modified version.

Description and Purpose

Street sweeping and vacuuming includes use of self-propelled and walk-behind equipment to remove sediment from streets and roadways and to clean paved surfaces in preparation for final paving. Sweeping and vacuuming prevents sediment from the project site from entering storm drains or receiving waters.

Suitable Applications

Sweeping and vacuuming are suitable anywhere sediment is tracked from the project site onto public or private paved streets and roads, typically at points of egress. Sweeping and vacuuming are also applicable during preparation of paved surfaces for final paving.

Limitations

- Sweeping and vacuuming may not be effective when sediment is wet or when tracked soil is caked (caked soil may need to be scraped loose).
- Sweeping may be less effective for fine particle soils (i.e., clay).

Implementation

- Controlling the number of points where vehicles can leave the site will allow sweeping and vacuuming efforts to be focused and perhaps save money.
- Inspect potential sediment tracking locations daily.

- Visible sediment tracking should be swept or vacuumed on a daily basis.
- Do not use kick brooms or sweeper attachments. These tend to spread the dirt rather than remove it.
- If not mixed with debris or trash, consider incorporating the removed sediment back into the project

Costs

Rental rates for self-propelled sweepers vary depending on hopper size and duration of rental. Expect rental rates from $ 650/day to $2,500/day[1], plus operator costs. Hourly production rates vary with the amount of area to be swept and amount of sediment. Match the hopper size to the area and expect sediment load to minimize time spent dumping.

Inspection and Maintenance

- Inspect BMPs in accordance with General Permit requirements for the associated project type and risk level. It is recommended that at a minimum, BMPs be inspected weekly, prior to forecasted rain events, daily during extended rain events, and after the conclusion of rain events.
- When actively in use, points of ingress and egress must be inspected daily.
- When tracked or spilled sediment is observed outside the construction limits, it must be removed at least daily. More frequent removal, even continuous removal, may be required in some jurisdictions.
- Be careful not to sweep up any unknown substance or any object that may be potentially hazardous.
- Adjust brooms frequently; maximize efficiency of sweeping operations.
- After sweeping is finished, properly dispose of sweeper wastes at an approved dumpsite.

References

Stormwater Quality Handbooks - Construction Site Best Management Practices (BMPs) Manual, State of California Department of Transportation (Caltrans), November 2000.

[1] Based on contractor query conducted by Tetra Tech, Inc. November 2016.

Storm Drain Inlet Protection SE-10

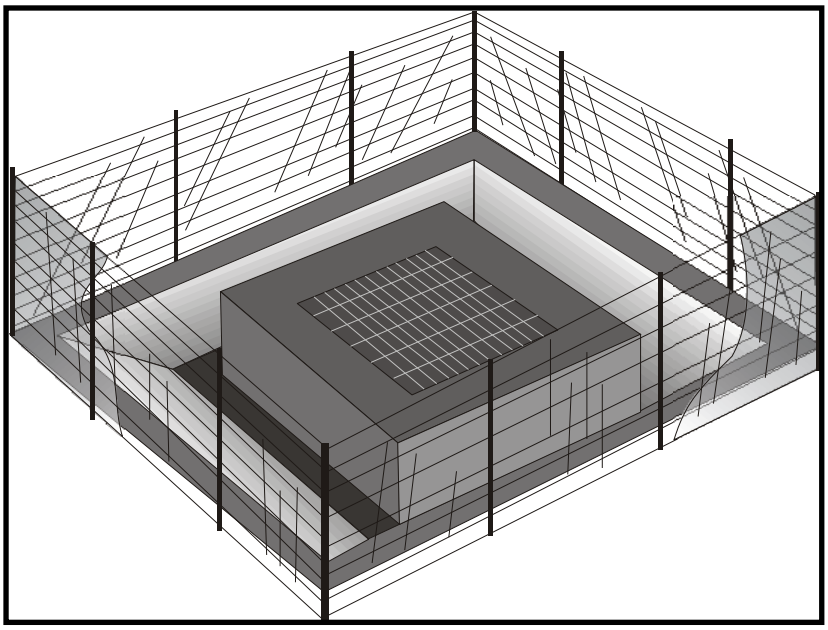

Description and Purpose

Storm drain inlet protection consists of a sediment filter or an impounding area in, around or upstream of a storm drain, drop inlet, or curb inlet. Storm drain inlet protection measures temporarily pond runoff before it enters the storm drain, allowing sediment to settle. Some filter configurations also remove sediment by filtering, but usually the ponding action results in the greatest sediment reduction. Temporary geotextile storm drain inserts attach underneath storm drain grates to capture and filter storm water.

Suitable Applications

- Every storm drain inlet receiving runoff from unstabilized or otherwise active work areas should be protected. Inlet protection should be used in conjunction with other erosion and sediment controls to prevent sediment-laden stormwater and non-stormwater discharges from entering the storm drain system.

Limitations

- Drainage area should not exceed 1 acre.
- In general straw bales should not be used as inlet protection.
- Requires an adequate area for water to pond without encroaching into portions of the roadway subject to traffic.
- Sediment removal may be inadequate to prevent sediment discharges in high flow conditions or if runoff is heavily sediment laden. If high flow conditions are expected, use

Categories

EC	Erosion Control	
SE	Sediment Control	☑
TC	Tracking Control	
WE	Wind Erosion Control	
NS	Non-Stormwater Management Control	
WM	Waste Management and Materials Pollution Control	

Legend:

☑ **Primary Category**

☒ **Secondary Category**

Targeted Constituents

Sediment	☑
Nutrients	
Trash	☒
Metals	
Bacteria	
Oil and Grease	
Organics	

Potential Alternatives

SE-1 Silt Fence

SE-5 Fiber Rolls

SE-6 Gravel Bag Berm

SE-8 Sandbag Barrier

SE-14 Biofilter Bags

SE-13 Compost Socks and Berms

If User/Subscriber modifies this fact sheet in any way, the CASQA name/logo and footer below must be removed from each page and not appear on the modified version.

other onsite sediment trapping techniques in conjunction with inlet protection.

- Frequent maintenance is required.
- Limit drainage area to 1 acre maximum. For drainage areas larger than 1 acre, runoff should be routed to a sediment-trapping device designed for larger flows. See BMPs SE-2, Sediment Basin, and SE-3, Sediment Traps.
- Excavated drop inlet sediment traps are appropriate where relatively heavy flows are expected, and overflow capability is needed.

Implementation

General

Inlet control measures presented in this handbook should not be used for inlets draining more than one acre. Runoff from larger disturbed areas should be first routed through SE-2, Sediment Basin or SE-3, Sediment Trap and/or used in conjunction with other drainage control, erosion control, and sediment control BMPs to protect the site. Different types of inlet protection are appropriate for different applications depending on site conditions and the type of inlet. Alternative methods are available in addition to the methods described/shown herein such as prefabricated inlet insert devices, or gutter protection devices.

Design and Layout

Identify existing and planned storm drain inlets that have the potential to receive sediment-laden surface runoff. Determine if storm drain inlet protection is needed and which method to use.

- The key to successful and safe use of storm drain inlet protection devices is to know where runoff that is directed toward the inlet to be protected will pond or be diverted as a result of installing the protection device.
  - Determine the acceptable location and extent of ponding in the vicinity of the drain inlet. The acceptable location and extent of ponding will influence the type and design of the storm drain inlet protection device.
  - Determine the extent of potential runoff diversion caused by the storm drain inlet protection device. Runoff ponded by inlet protection devices may flow around the device and towards the next downstream inlet. In some cases, this is acceptable; in other cases, serious erosion or downstream property damage can be caused by these diversions. The possibility of runoff diversions will influence whether or not storm drain inlet protection is suitable; and, if suitable, the type and design of the device.
- The location and extent of ponding, and the extent of diversion, can usually be controlled through appropriate placement of the inlet protection device. In some cases, moving the inlet protection device a short distance upstream of the actual inlet can provide more efficient sediment control, limit ponding to desired areas, and prevent or control diversions.
- Seven types of inlet protection are presented below. However, it is recognized that other effective methods and proprietary devices exist and may be selected.

- Silt Fence: Appropriate for drainage basins with less than a 5% slope, sheet flows, and flows under 0.5 cfs.

- Excavated Drop Inlet Sediment Trap: An excavated area around the inlet to trap sediment (SE-3).

- Gravel bag barrier: Used to create a small sediment trap upstream of inlets on sloped, paved streets. Appropriate for sheet flow or when concentrated flow may exceed 0.5 cfs, and where overtopping is required to prevent flooding.

- Block and Gravel Filter: Appropriate for flows greater than 0.5 cfs.

- Temporary Geotextile Storm drain Inserts: Different products provide different features. Refer to manufacturer details for targeted pollutants and additional features.

- Biofilter Bag Barrier: Used to create a small retention area upstream of inlets and can be located on pavement or soil. Biofilter bags slowly filter runoff allowing sediment to settle out. Appropriate for flows under 0.5 cfs.

- Compost Socks: Allow filtered run-off to pass through the compost while retaining sediment and potentially other pollutants (SE-13). Appropriate for flows under 1.0 cfs.

- Select the appropriate type of inlet protection and design as referred to or as described in this fact sheet.

- Provide area around the inlet for water to pond without flooding structures and property.

- Grates and spaces around all inlets should be sealed to prevent seepage of sediment-laden water.

- Excavate sediment sumps (where needed) 1 to 2 ft with 2:1 side slopes around the inlet.

Installation

- ***DI Protection Type 1 - Silt Fence -*** Similar to constructing a silt fence; see BMP SE-1, Silt Fence. Do not place fabric underneath the inlet grate since the collected sediment may fall into the drain inlet when the fabric is removed or replaced and water flow through the grate will be blocked resulting in flooding. See typical Type 1 installation details at the end of this fact sheet.

  1. Excavate a trench approximately 6 in. wide and 6 in. deep along the line of the silt fence inlet protection device.

  2. Place 2 in. by 2 in. wooden stakes around the perimeter of the inlet a maximum of 3 ft apart and drive them at least 18 in. into the ground or 12 in. below the bottom of the trench. The stakes should be at least 48 in.

  3. Lay fabric along bottom of trench, up side of trench, and then up stakes. See SE-1, Silt Fence, for details. The maximum silt fence height around the inlet is 24 in.

  4. Staple the filter fabric (for materials and specifications, see SE-1, Silt Fence) to wooden stakes. Use heavy-duty wire staples at least 1 in. in length.

5. Backfill the trench with gravel or compacted earth all the way around.

- ***DI Protection Type 2 - Excavated Drop Inlet Sediment Trap -*** Install filter fabric fence in accordance with DI Protection Type 1. Size excavated trap to provide a minimum storage capacity calculated at the rate 67 yd^3/acre of drainage area. See typical Type 2 installation details at the end of this fact sheet.

- ***DI Protection Type 3 - Gravel bag -*** Flow from a severe storm should not overtop the curb. In areas of high clay and silts, use filter fabric and gravel as additional filter media. Construct gravel bags in accordance with SE-6, Gravel Bag Berm. Gravel bags should be used due to their high permeability. See typical Type 3 installation details at the end of this fact sheet.

  1. Construct on gently sloping street.

  2. Leave room upstream of barrier for water to pond and sediment to settle.

  3. Place several layers of gravel bags – overlapping the bags and packing them tightly together.

  4. Leave gap of one bag on the top row to serve as a spillway. Flow from a severe storm (e.g., 10-year storm) should not overtop the curb.

- ***DI Protection Type 4 – Block and Gravel Filter -*** Block and gravel filters are suitable for curb inlets commonly used in residential, commercial, and industrial construction. See typical Type 4 installation details at the end of this fact sheet.

  1. Place hardware cloth or comparable wire mesh with 0.5 in. openings over the drop inlet so that the wire extends a minimum of 1 ft beyond each side of the inlet structure. If more than one strip is necessary, overlap the strips. Place woven geotextile over the wire mesh.

  2. Place concrete blocks lengthwise on their sides in a single row around the perimeter of the inlet, so that the open ends face outward, not upward. The ends of adjacent blocks should abut. The height of the barrier can be varied, depending on design needs, by stacking combinations of blocks that are 4 in., 8 in., and 12 in. wide. The row of blocks should be at least 12 in. but no greater than 24 in. high.

  3. Place wire mesh over the outside vertical face (open end) of the concrete blocks to prevent stone from being washed through the blocks. Use hardware cloth or comparable wire mesh with 0.5 in. opening.

  4. Pile washed stone against the wire mesh to the top of the blocks. Use 0.75 to 3 in.

- ***DI Protection Type 5 – Temporary Geotextile Insert (proprietary) –*** Many types of temporary inserts are available. Most inserts fit underneath the grate of a drop inlet or inside of a curb inlet and are fastened to the outside of the grate or curb. These inserts are removable, and many can be cleaned and reused. Installation of these inserts differs between manufacturers. Please refer to manufacturer instruction for installation of proprietary devices.

- ***DI Protection Type 6 - Biofilter bags*** – Biofilter bags may be used as a substitute for gravel bags in low-flow situations. Biofilter bags should conform to specifications detailed in SE-14, Biofilter bags.

    1. Construct in a gently sloping area.
    2. Biofilter bags should be placed around inlets to intercept runoff flows.
    3. All bag joints should overlap by 6 in.
    4. Leave room upstream for water to pond and for sediment to settle out.
    5. Stake bags to the ground as described in the following detail. Stakes may be omitted if bags are placed on a paved surface.

- ***DI Protection Type 7 – Compost Socks*** – A compost sock can be assembled on site by filling a mesh sock (e.g., with a pneumatic blower). Compost socks do not require special trenching compared to other sediment control methods (e.g., silt fence). Compost socks should conform to specification detailed in SE-13, Compost Socks and Berms.

Costs

- Average annual cost for installation and maintenance of DI Type 1-4 and 6 (one-year useful life) is $200 per inlet.
- Temporary geotextile inserts are proprietary, and cost varies by region. These inserts can often be reused and may have greater than 1 year of use if maintained and kept undamaged. Average cost per insert ranges from $50-75 plus installation, but costs can exceed $100. This cost does not include maintenance.
- See SE-13 for Compost Sock cost information.

Inspection and Maintenance

- BMPs must be inspected in accordance with General Permit requirements for the associated project type and risk level. It is recommended that at a minimum, BMPs be inspected weekly, prior to forecasted rain events, daily during extended rain events, and after the conclusion of rain events.
- Silt Fences. If the fabric becomes clogged, torn, or degrades, it should be replaced. Make sure the stakes are securely driven in the ground and are in good shape (i.e., not bent, cracked, or splintered, and are reasonably perpendicular to the ground). Replace damaged stakes. At a minimum, remove the sediment behind the fabric fence when accumulation reaches one-third the height of the fence or barrier height.
- Gravel Filters. If the gravel becomes clogged with sediment, it should be carefully removed from the inlet and either cleaned or replaced. Since cleaning gravel at a construction site may be difficult, consider using the sediment-laden stone as fill material and put fresh stone around the inlet. Inspect bags for holes, gashes, and snags, and replace bags as needed. Check gravel bags for proper arrangement and displacement.

- Sediment that accumulates in the BMP should be periodically removed in order to maintain BMP effectiveness. Sediment should be removed when the sediment accumulation reaches one-third of the barrier height.
- Inspect and maintain temporary geotextile insert devices according to manufacturer's specifications.
- Remove storm drain inlet protection once the drainage area is stabilized.
    - Clean and regrade area around the inlet and clean the inside of the storm drain inlet, as it should be free of sediment and debris at the time of final inspection.

References

Stormwater Quality Handbooks - Construction Site Best Management Practices (BMPs) Manual, State of California Department of Transportation (Caltrans), March 2003.

Stormwater Management Manual for The Puget Sound Basin, Washington State Department of Ecology, Public Review Draft, 1991.

Erosion and Sediment Control Manual, Oregon Department of Environmental Quality, February 2005.

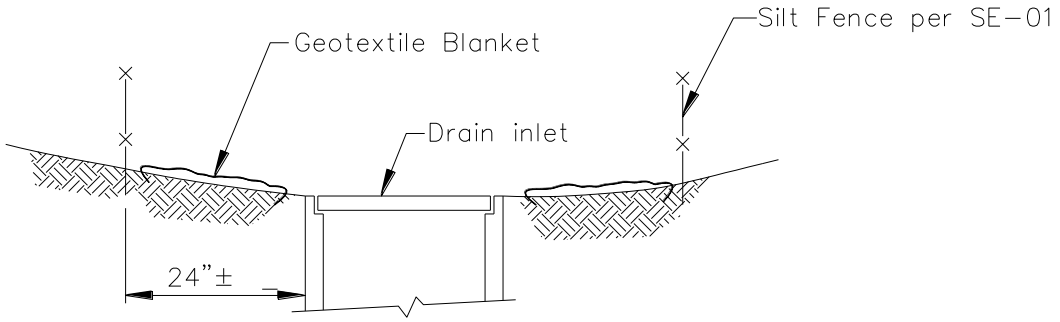

SECTION A–A

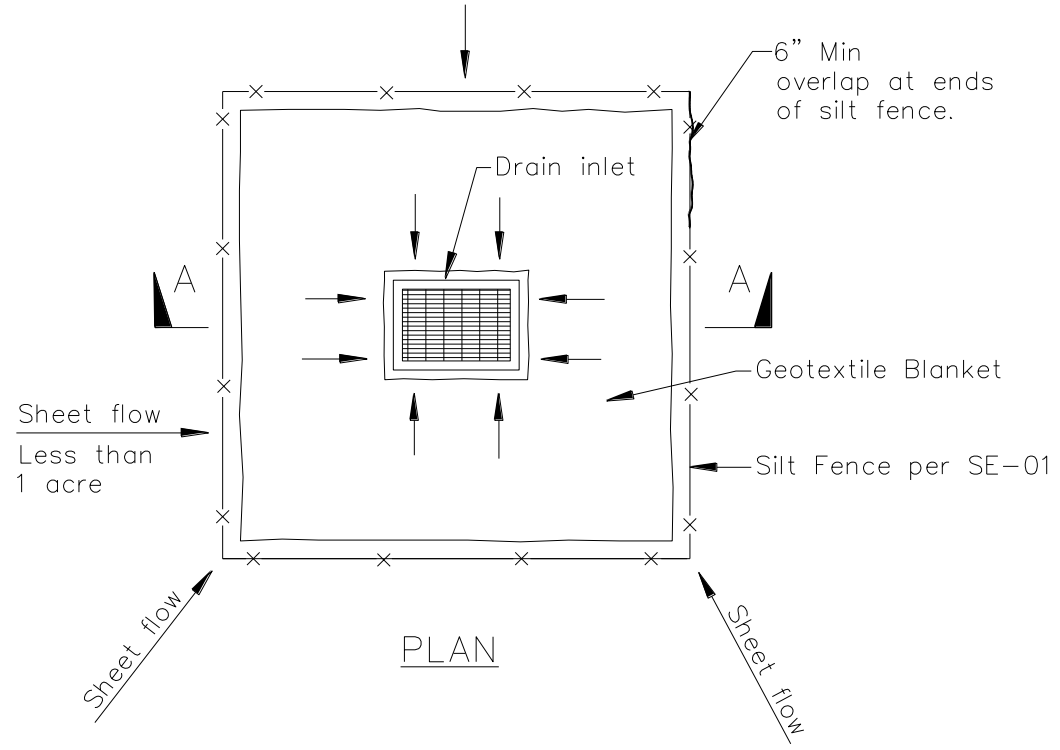

PLAN

DI PROTECTION TYPE 1
NOT TO SCALE

NOTES:

1. For use in areas where grading has been completed and final soil stabilization and seeding are pending.
2. Not applicable in paved areas.
3. Not applicable with concentrated flows.

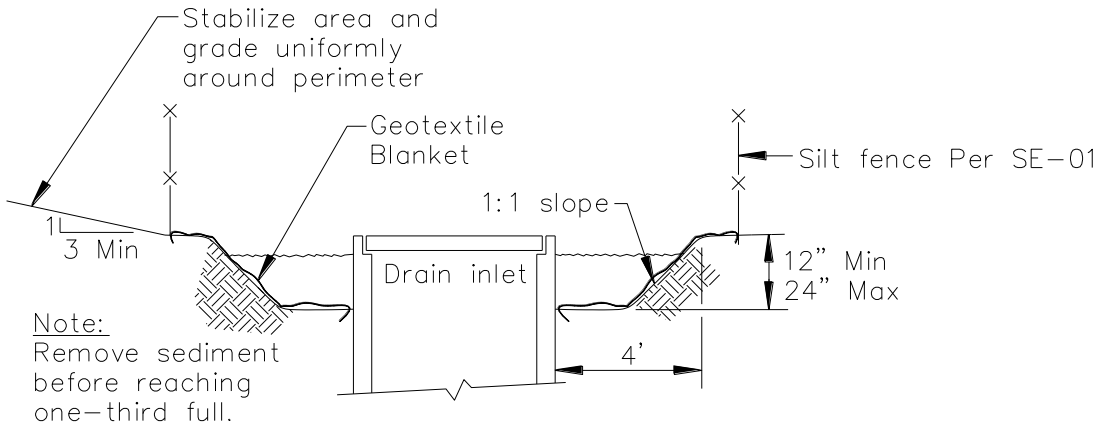

Section A–A

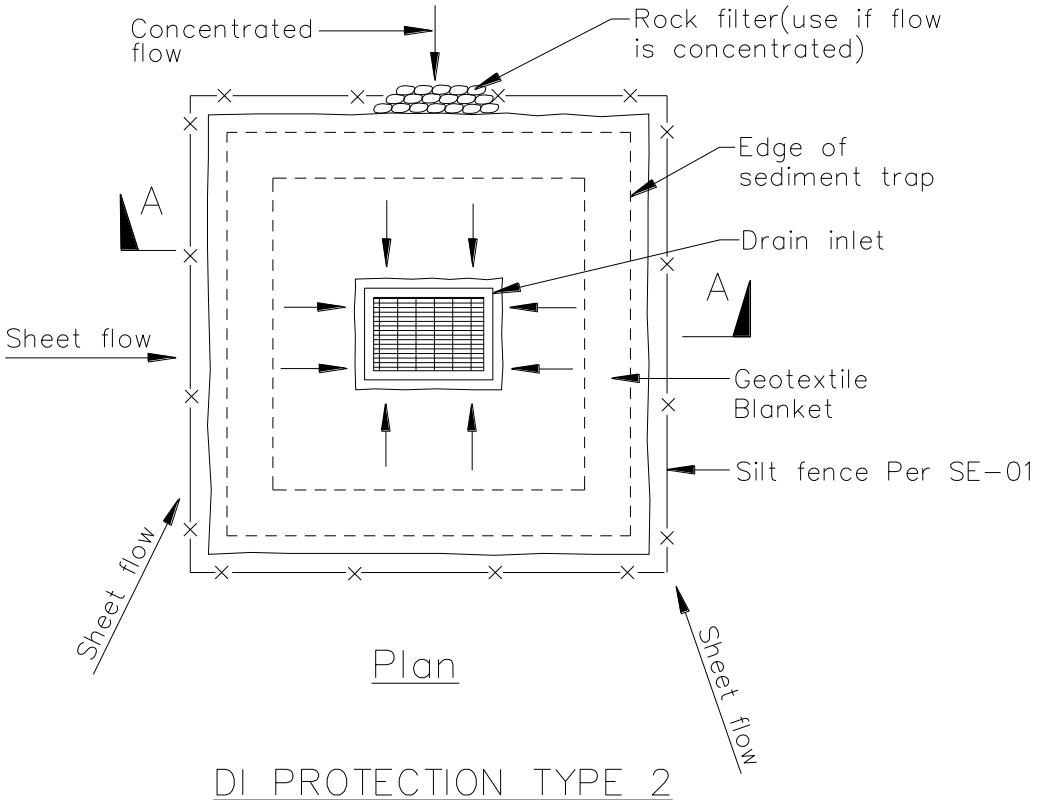

Plan

DI PROTECTION TYPE 2
NOT TO SCALE

Notes
1. For use in cleared and grubbed and in graded areas.
2. Shape basin so that longest inflow area faces longest length of trap.
3. For concentrated flows, shape basin in 2:1 ratio with length oriented towards direction of flow.

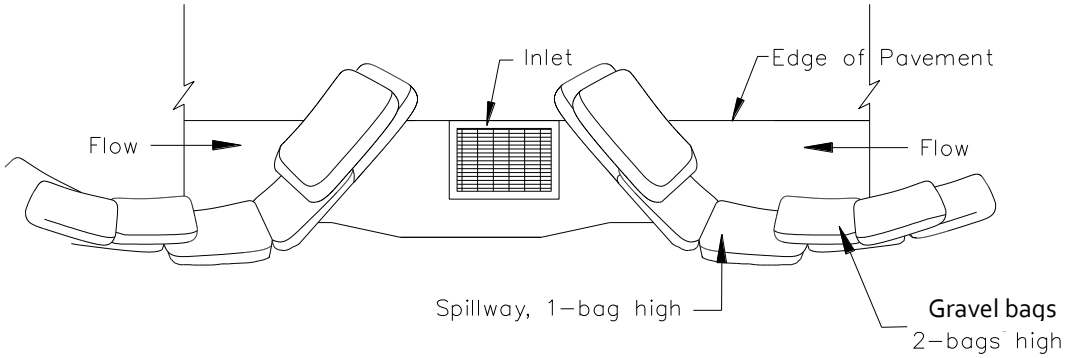

TYPICAL PROTECTION FOR INLET ON SUMP

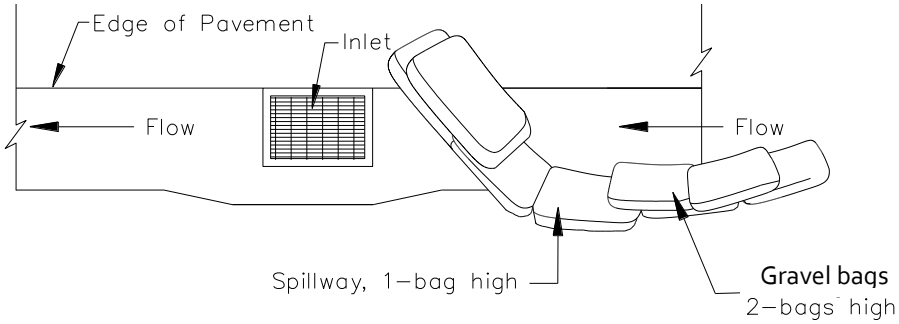

TYPICAL PROTECTION FOR INLET ON GRADE

NOTES:

1. Intended for short-term use.
2. Use to inhibit non-storm water flow.
3. Allow for proper maintenance and cleanup.
4. Bags must be removed after adjacent operation is completed
5. Not applicable in areas with high silts and clays without filter fabric.
6. Protection can be effective even if it is not immediately adjacent to the inlet provided that the inlet is protected from potential sources of pollution.

DI PROTECTION TYPE 3
NOT TO SCALE

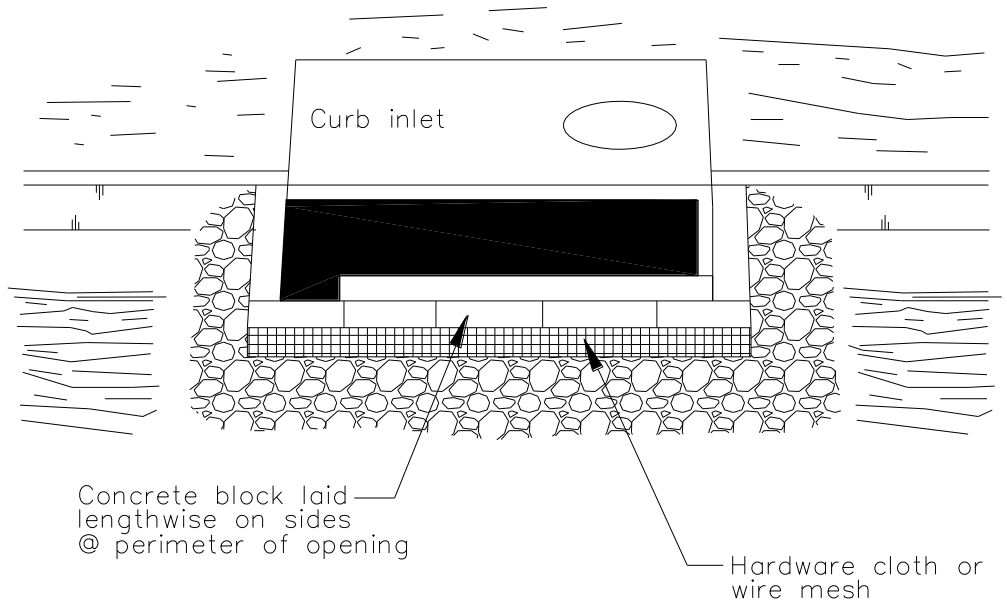

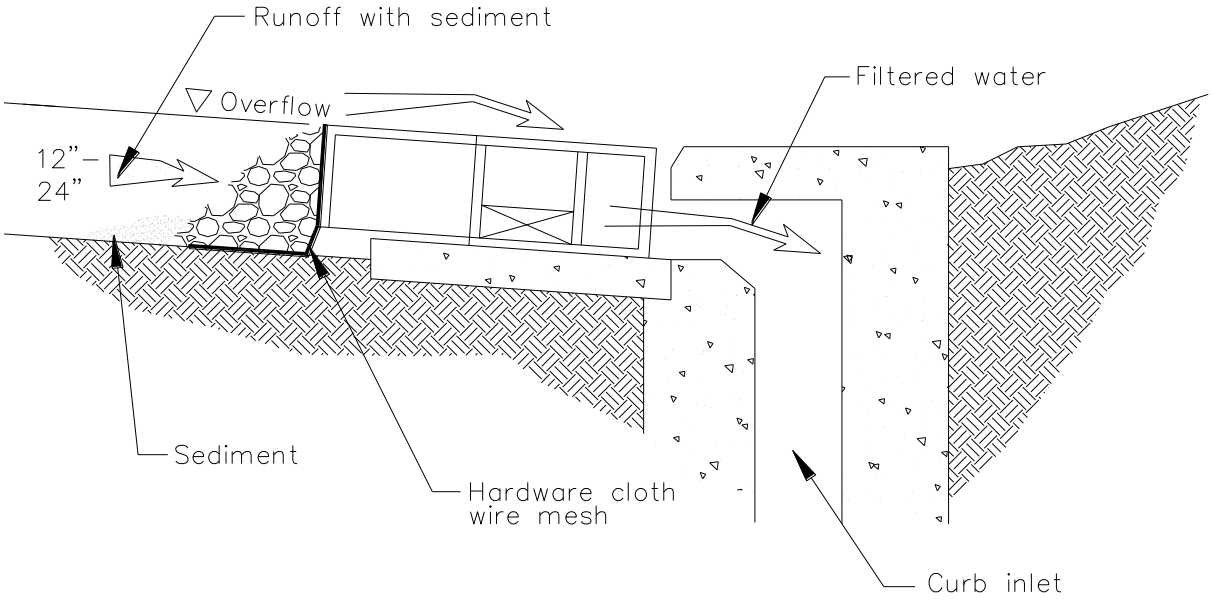

DI PROTECTION – TYPE 4

NOT TO SCALE

Wind Erosion Control WE-1

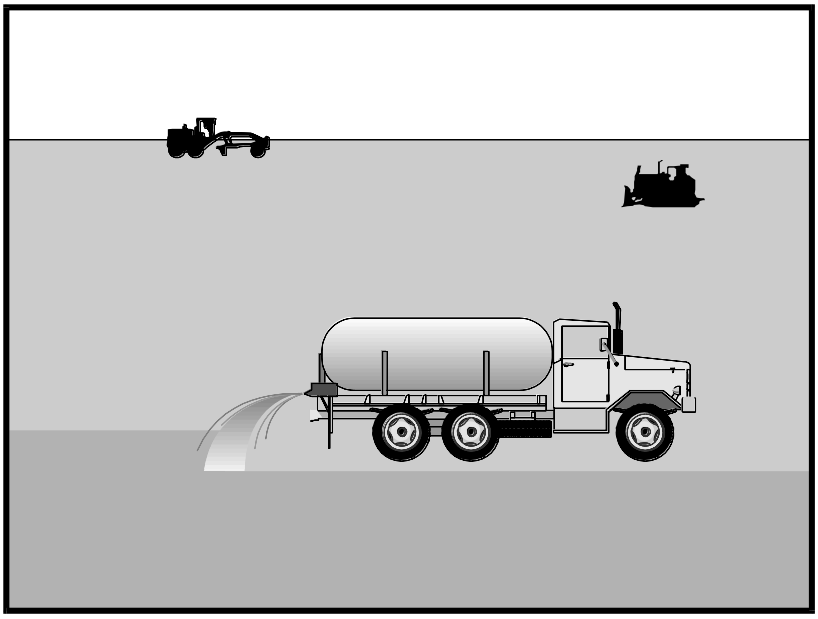

Categories

EC	Erosion Control	
SE	Sediment Control	☒
TC	Tracking Control	
WE	Wind Erosion Control	☑
NS	Non-Stormwater Management Control	
WM	Waste Management and Materials Pollution Control	

Legend:

☑ **Primary Category**

☒ **Secondary Category**

Targeted Constituents

Sediment	☑
Nutrients	
Trash	
Metals	
Bacteria	
Oil and Grease	
Organics	

Potential Alternatives

EC-5 Soil Binders

If User/Subscriber modifies this fact sheet in any way, the CASQA name/logo and footer below must be removed from each page and not appear on the modified version.

Description and Purpose

Wind erosion or dust control consists of applying water or other chemical dust suppressants as necessary to prevent or alleviate dust nuisance generated by construction activities. Covering small stockpiles or areas is an alternative to applying water or other dust palliatives.

California's Mediterranean climate, with a short "wet" season and a typically long, hot "dry" season, allows the soils to thoroughly dry out. During the dry season, construction activities are at their peak, and disturbed and exposed areas are increasingly subject to wind erosion, sediment tracking, and dust generated by construction equipment. Site conditions and climate can make dust control more of an erosion problem than water-based erosion. Additionally, many local agencies, including Air Quality Management Districts, require dust control and/or dust control permits in order to comply with local nuisance laws, opacity laws (visibility impairment) and the requirements of the Clean Air Act. Wind erosion control is required to be implemented at all construction sites greater than 1 acre by the General Permit.

Suitable Applications

Most BMPs that provide protection against water-based erosion will also protect against wind-based erosion and dust control requirements required by other agencies will generally meet wind erosion control requirements for water quality protection. Wind erosion control BMPs are suitable during the following construction activities:

CASQA
CALIFORNIA STORMWATER QUALITY ASSOCIATION

- Construction vehicle traffic on unpaved roads
- Drilling and blasting activities
- Soils and debris storage piles
- Batch drop from front-end loaders
- Areas with unstabilized soil
- Final grading/site stabilization

Limitations

- Watering prevents dust only for a short period (generally less than a few hours) and should be applied daily (or more often) to be effective.
- Over watering may cause erosion and track-out.
- Oil or oil-treated subgrade should not be used for dust control because the oil may migrate into drainageways and/or seep into the soil.
- Chemical dust suppression agents may have potential environmental impacts. Selected chemical dust control agents should be environmentally benign.
- Effectiveness of controls depends on soil, temperature, humidity, wind velocity and traffic.
- Chemical dust suppression agents should not be used within 100 feet of wetlands or water bodies.
- Chemically treated subgrades may make the soil water repellant, interfering with long-term infiltration and the vegetation/re-vegetation of the site. Some chemical dust suppressants may be subject to freezing and may contain solvents and should be handled properly.
- In compacted areas, watering and other liquid dust control measures may wash sediment or other constituents into the drainage system.
- If the soil surface has minimal natural moisture, the affected area may need to be pre-wetted so that chemical dust control agents can uniformly penetrate the soil surface.

Implementation

Dust Control Practices

Dust control BMPs generally stabilize exposed surfaces and minimize activities that suspend or track dust particles. The following table presents dust control practices that can be applied to varying site conditions that could potentially cause dust. For heavily traveled and disturbed areas, wet suppression (watering), chemical dust suppression, gravel asphalt surfacing, temporary gravel construction entrances, equipment wash-out areas, and haul truck covers can be employed as dust control applications. Permanent or temporary vegetation and mulching can be employed for areas of occasional or no construction traffic. Preventive measures include minimizing surface areas to be disturbed, limiting onsite vehicle traffic to 15 mph or less, and controlling the number and activity of vehicles on a site at any given time.

Chemical dust suppressants include: mulch and fiber based dust palliatives (e.g. paper mulch with gypsum binder), salts and brines (e.g. calcium chloride, magnesium chloride), non-petroleum based organics (e.g. vegetable oil, lignosulfonate), petroleum based organics (e.g. asphalt emulsion, dust oils, petroleum resins), synthetic polymers (e.g. polyvinyl acetate, vinyl, acrylic), clay additives (e.g. bentonite, montmorillonite) and electrochemical products (e.g. enzymes, ionic products).

Site Condition	Dust Control Practices							
	Permanent Vegetation	Mulching	Wet Suppression (Watering)	Chemical Dust Suppression	Gravel or Asphalt	Temporary Gravel Construction Entrances/Equipment Wash Down	Synthetic Covers	Minimize Extent of Disturbed Area
Disturbed Areas not Subject to Traffic	x	x	x	x	x			x
Disturbed Areas Subject to Traffic			x	x	x	x		x
Material Stockpiles		x	x	x			x	x
Demolition			x			x	x	
Clearing/ Excavation			x	x				x
Truck Traffic on Unpaved Roads			x	x	x	x	x	
Tracking					x	x		

Additional preventive measures include:

- Schedule construction activities to minimize exposed area (see EC-1, Scheduling).
- Quickly treat exposed soils using water, mulching, chemical dust suppressants, or stone/gravel layering.
- Identify and stabilize key access points prior to commencement of construction.
- Minimize the impact of dust by anticipating the direction of prevailing winds.
- Restrict construction traffic to stabilized roadways within the project site, as practicable.
- Water should be applied by means of pressure-type distributors or pipelines equipped with a spray system or hoses and nozzles that will ensure even distribution.
- All distribution equipment should be equipped with a positive means of shutoff.
- Unless water is applied by means of pipelines, at least one mobile unit should be available at all times to apply water or dust palliative to the project.
- If reclaimed waste water is used, the sources and discharge must meet California Department of Health Services water reclamation criteria and the Regional Water Quality

Control Board (RWQCB) requirements. Non-potable water should not be conveyed in tanks or drain pipes that will be used to convey potable water and there should be no connection between potable and non-potable supplies. Non-potable tanks, pipes, and other conveyances should be marked, "NON-POTABLE WATER - DO NOT DRINK."

- Pave or chemically stabilize access points where unpaved traffic surfaces adjoin paved roads.
- Provide covers for haul trucks transporting materials that contribute to dust.
- Provide for rapid clean up of sediments deposited on paved roads. Furnish stabilized construction road entrances and wheel wash areas.
- Stabilize inactive areas of construction sites using temporary vegetation or chemical stabilization methods.

For chemical stabilization, there are many products available for chemically stabilizing gravel roadways and stockpiles. If chemical stabilization is used, the chemicals should not create any adverse effects on stormwater, plant life, or groundwater and should meet all applicable regulatory requirements.

Costs

Installation costs for water and chemical dust suppression vary based on the method used and the length of effectiveness. Annual costs may be high since some of these measures are effective for only a few hours to a few days.

Inspection and Maintenance

- Inspect and verify that activity-based BMPs are in place prior to the commencement of associated activities.
- BMPs must be inspected in accordance with General Permit requirements for the associated project type and risk level. It is recommended that at a minimum, BMPs be inspected weekly, prior to forecasted rain events, daily during extended rain events, and after the conclusion of rain events.
- Check areas protected to ensure coverage.
- Most water-based dust control measures require frequent application, often daily or even multiple times per day. Obtain vendor or independent information on longevity of chemical dust suppressants.

References

Best Management Practices and Erosion Control Manual for Construction Sites, Flood Control District of Maricopa County, Arizona, September 1992.

California Air Pollution Control Laws, California Air Resources Board, updated annually.

Construction Manual, Chapter 4, Section 10, "Dust Control"; Section 17, "Watering"; and Section 18, "Dust Palliative", California Department of Transportation (Caltrans), July 2001.

Prospects for Attaining the State Ambient Air Quality Standards for Suspended Particulate Matter (PM10), Visibility Reducing Particles, Sulfates, Lead, and Hydrogen Sulfide, California Air Resources Board, April 1991.

Stormwater Quality Handbooks Construction Site Best Management Practices (BMPs) Manual, State of California Department of Transportation (Caltrans), March 2003.

Stabilized Construction Entrance/Exit TC-1

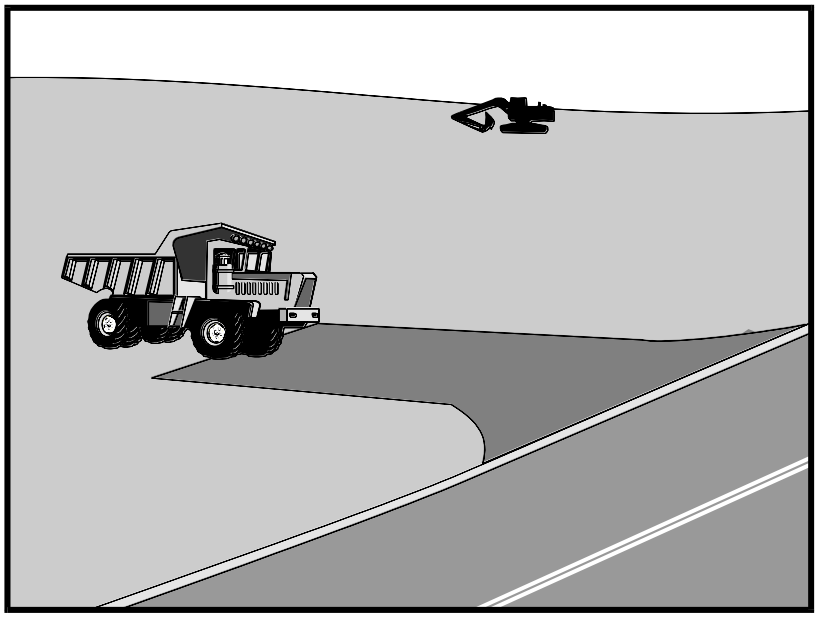

Categories		
EC	Erosion Control	☒
SE	Sediment Control	☒
TC	Tracking Control	☑
WE	Wind Erosion Control	
NS	Non-Stormwater Management Control	
WM	Waste Management and Materials Pollution Control	

Legend:

☑ **Primary Objective**

☒ **Secondary Objective**

Targeted Constituents	
Sediment	☑
Nutrients	
Trash	
Metals	
Bacteria	
Oil and Grease	
Organics	

Potential Alternatives

None

If User/Subscriber modifies this fact sheet in any way, the CASQA name/logo and footer below must be removed from each page and not appear on the modified version.

Description and Purpose

A stabilized construction access is defined by a point of entrance/exit to a construction site that is stabilized to reduce the tracking of mud and dirt onto public roads by construction vehicles.

Suitable Applications

Use at construction sites:

- Where dirt or mud can be tracked onto public roads.
- Adjacent to water bodies.
- Where poor soils are encountered.
- Where dust is a problem during dry weather conditions.

Limitations

- Entrances and exits require periodic top dressing with additional stones.
- This BMP should be used in conjunction with street sweeping on adjacent public right of way.
- Entrances and exits should be constructed on level ground only.
- Stabilized construction entrances are rather expensive to construct and when a wash rack is included, a sediment trap of some kind must also be provided to collect wash water runoff.

Implementation

General

A stabilized construction entrance is a pad of aggregate underlain with filter cloth located at any point where traffic will be entering or leaving a construction site to or from a public right of way, street, alley, sidewalk, or parking area. The purpose of a stabilized construction entrance is to reduce or eliminate the tracking of sediment onto public rights of way or streets. Reducing tracking of sediments and other pollutants onto paved roads helps prevent deposition of sediments into local storm drains and production of airborne dust.

Where traffic will be entering or leaving the construction site, a stabilized construction entrance should be used. NPDES permits require that appropriate measures be implemented to prevent tracking of sediments onto paved roadways, where a significant source of sediments is derived from mud and dirt carried out from unpaved roads and construction sites.

Stabilized construction entrances are moderately effective in removing sediment from equipment leaving a construction site. The entrance should be built on level ground. Advantages of the Stabilized Construction Entrance/Exit is that it does remove some sediment from equipment and serves to channel construction traffic in and out of the site at specified locations. Efficiency is greatly increased when a washing rack is included as part of a stabilized construction entrance/exit.

Design and Layout

- Construct on level ground where possible.
- Select 3 to 6 in. diameter stones.
- Use minimum depth of stones of 12 in. or as recommended by soils engineer.
- Construct length of 50 ft or maximum site will allow, and 10 ft minimum width or to accommodate traffic.
- Rumble racks constructed of steel panels with ridges and installed in the stabilized entrance/exit will help remove additional sediment and to keep adjacent streets clean.
- Provide ample turning radii as part of the entrance.
- Limit the points of entrance/exit to the construction site.
- Limit speed of vehicles to control dust.
- Properly grade each construction entrance/exit to prevent runoff from leaving the construction site.
- Route runoff from stabilized entrances/exits through a sediment trapping device before discharge.
- Design stabilized entrance/exit to support heaviest vehicles and equipment that will use it.

Stabilized Construction Entrance/Exit TC-1

- Select construction access stabilization (aggregate, asphaltic concrete, concrete) based on longevity, required performance, and site conditions. Do not use asphalt concrete (AC) grindings for stabilized construction access/roadway.
- If aggregate is selected, place crushed aggregate over geotextile fabric to at least 12 in. depth, or place aggregate to a depth recommended by a geotechnical engineer. A crushed aggregate greater than 3 in. but smaller than 6 in. should be used.
- Designate combination or single purpose entrances and exits to the construction site.
- Require that all employees, subcontractors, and suppliers utilize the stabilized construction access.
- Implement SE-7, Street Sweeping and Vacuuming, as needed.
- All exit locations intended to be used for more than a two-week period should have stabilized construction entrance/exit BMPs.

Inspection and Maintenance

- Inspect and verify that activity–based BMPs are in place prior to the commencement of associated activities. While activities associated with the BMPs are under way, inspect BMPs in accordance with General Permit requirements for the associated project type and risk level. It is recommended that at a minimum, BMPs be inspected weekly, prior to forecasted rain events, daily during extended rain events, and after the conclusion of rain events.
- Inspect local roads adjacent to the site daily. Sweep or vacuum to remove visible accumulated sediment.
- Remove aggregate, separate and dispose of sediment if construction entrance/exit is clogged with sediment.
- Keep all temporary roadway ditches clear.
- Check for damage and repair as needed.
- Replace gravel material when surface voids are visible.
- Remove all sediment deposited on paved roadways within 24 hours.
- Remove gravel and filter fabric at completion of construction

Costs

Average annual cost for installation and maintenance may vary from $1,500 to $6,100 each, averaging $3,100 per entrance. Costs will increase with addition of washing rack and sediment trap. With wash rack, costs range from $1,500 - $7,700 each, averaging $4,600 per entrance (All costs adjusted for inflation, 2016 dollars, by Tetra Tech Inc.

References

Manual of Standards of Erosion and Sediment Control Measures, Association of Bay Area Governments, May 1995.

National Management Measures to Control Nonpoint Source Pollution from Urban Areas, USEPA Agency, 2002.

Proposed Guidance Specifying Management Measures for Sources of Nonpoint Pollution in Coastal Waters, Work Group Working Paper, USEPA, April 1992.

Stormwater Quality Handbooks Construction Site Best Management Practices (BMPs) Manual, State of California Department of Transportation (Caltrans), November 2000.

Stormwater Management of the Puget Sound Basin, Technical Manual, Publication #91-75, Washington State Department of Ecology, February 1992.

Virginia Erosion and Sedimentation Control Handbook, Virginia Department of Conservation and Recreation, Division of Soil and Water Conservation, 1991.

Guidance Specifying Management Measures for Nonpoint Pollution in Coastal Waters, EPA 840-B-9-002, USEPA, Office of Water, Washington, DC, 1993.

Water Quality Management Plan for the Lake Tahoe Region, Volume II, Handbook of Management Practices, Tahoe Regional Planning Agency, November 1988.

Stabilized Construction Entrance/Exit TC-1

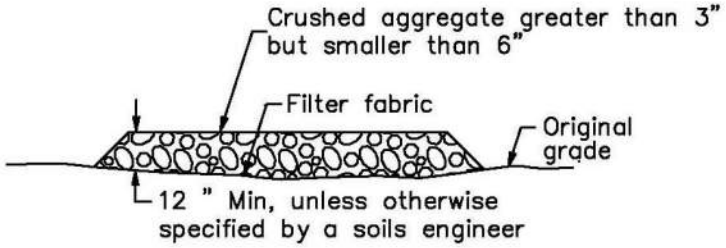

SECTION B–B
NTS

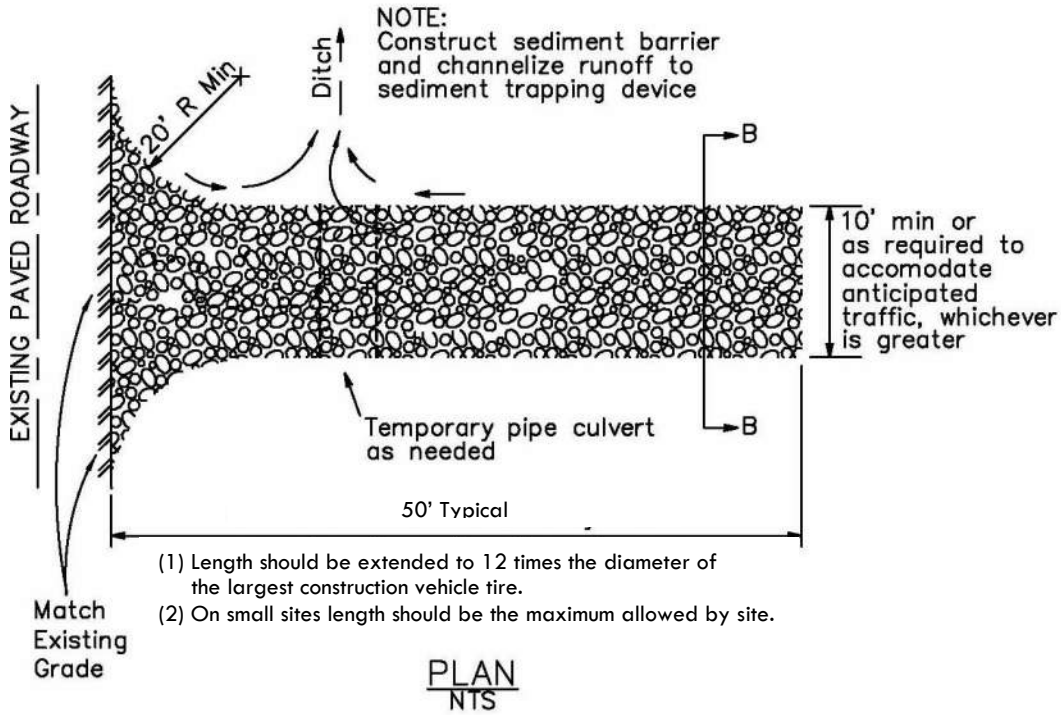

(1) Length should be extended to 12 times the diameter of the largest construction vehicle tire.
(2) On small sites length should be the maximum allowed by site.

PLAN
NTS

Stabilized Construction Entrance/Exit TC-1

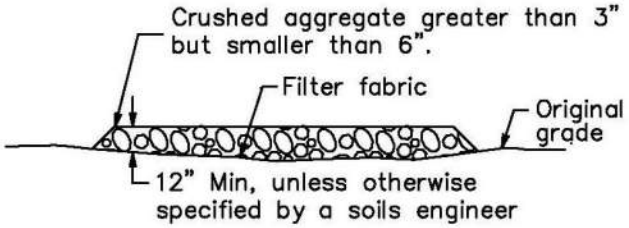

SECTION B–B
NTS

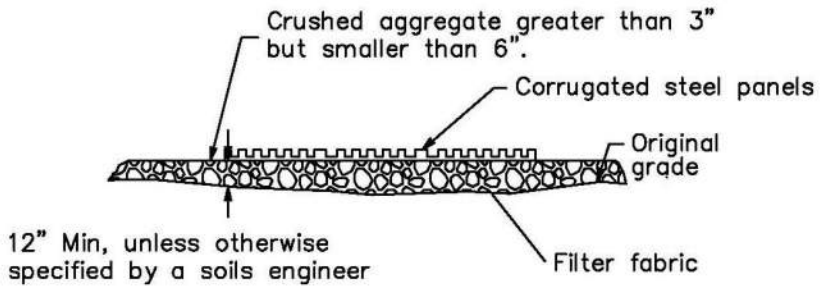

SECTION A–A
NOT TO SCALE

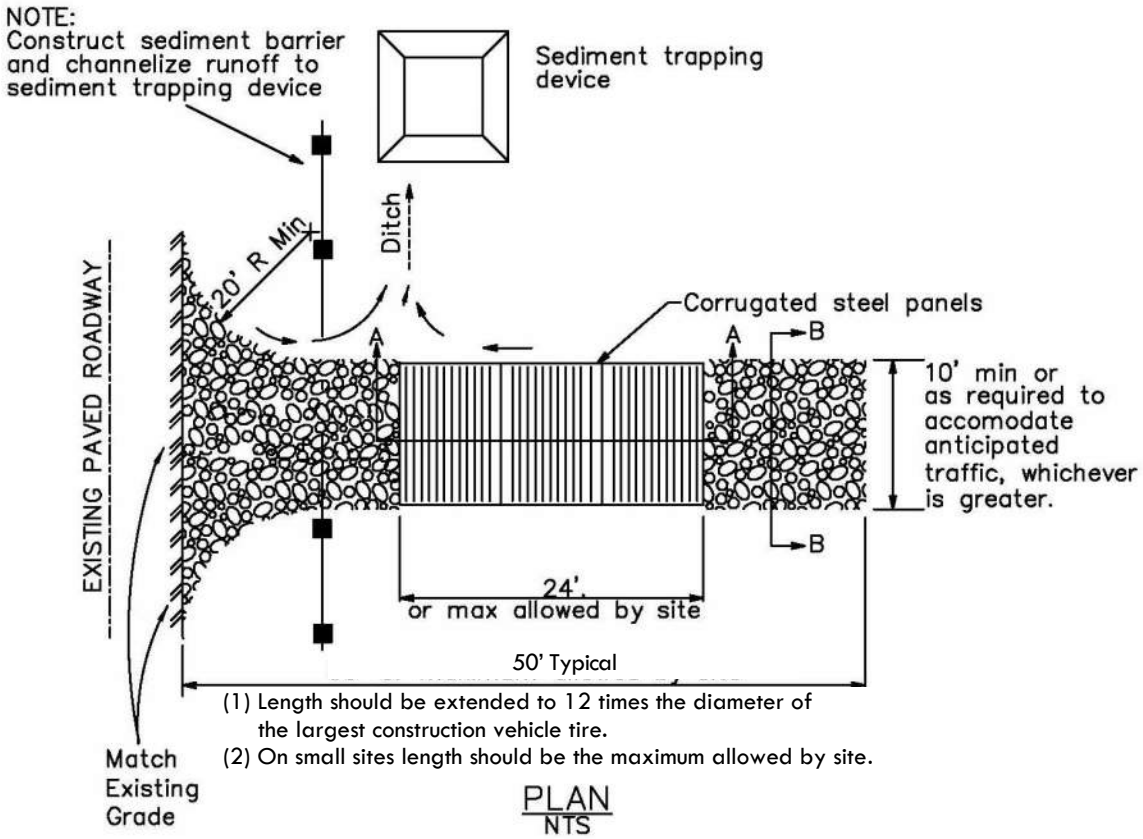

(1) Length should be extended to 12 times the diameter of the largest construction vehicle tire.
(2) On small sites length should be the maximum allowed by site.

PLAN
NTS

Water Conservation Practices NS-1

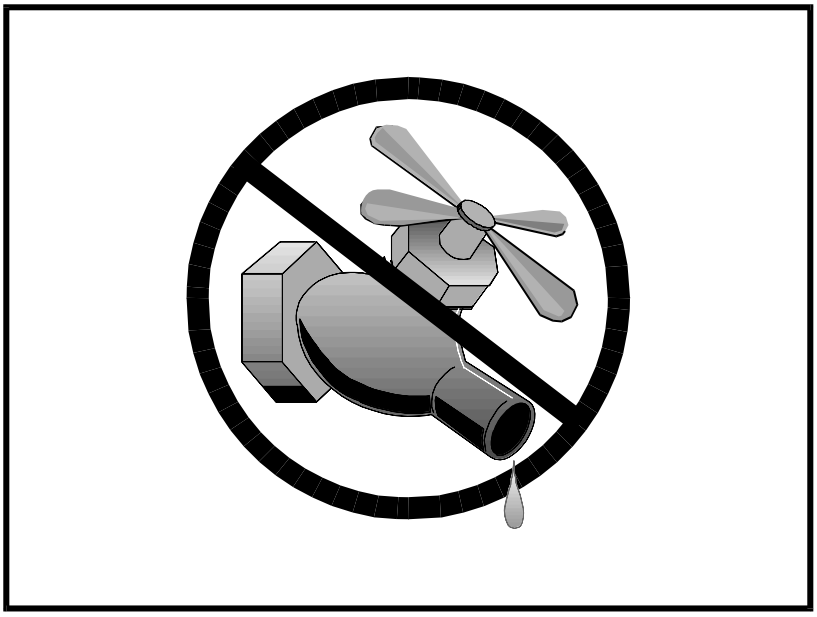

Categories		
EC	Erosion Control	☒
SE	Sediment Control	☒
TC	Tracking Control	
WE	Wind Erosion Control	
NS	Non-Stormwater Management Control	☑
WM	Waste Management and Materials Pollution Control	

Legend:
☑ **Primary Objective**
☒ **Secondary Objective**

Targeted Constituents	
Sediment	☑
Nutrients	
Trash	
Metals	
Bacteria	
Oil and Grease	
Organics	

Potential Alternatives

None

If User/Subscriber modifies this fact sheet in any way, the CASQA name/logo and footer below must be removed from each page and not appear on the modified version.

Description and Purpose

Water conservation practices are activities that use water during the construction of a project in a manner that avoids causing erosion and the transport of pollutants offsite. These practices can reduce or eliminate non-stormwater discharges.

Suitable Applications

Water conservation practices are suitable for all construction sites where water is used, including piped water, metered water, trucked water, and water from a reservoir.

Limitations

- None identified.

Implementation

- Keep water equipment in good working condition.
- Stabilize water truck filling area.
- Repair water leaks promptly.
- Washing of vehicles and equipment on the construction site is discouraged.
- Avoid using water to clean construction areas. If water must be used for cleaning or surface preparation, surface should be swept and vacuumed first to remove dirt. This will minimize amount of water required.

- Direct construction water runoff to areas where it can soak into the ground or be collected and used.
- Authorized non-stormwater discharges to the storm drain system, channels, or receiving waters are acceptable with the implementation of appropriate BMPs.
- Lock water tank valves to prevent unauthorized use.

Costs

The cost is small to none compared to the benefits of conserving water.

Inspection and Maintenance

- Inspect and verify that activity based BMPs are in place prior to the commencement of authorized non-stormwater discharges.
- Inspect BMPs in accordance with General Permit requirements for the associated project type and risk level. It is recommended that at a minimum, BMPs be inspected weekly, prior to forecasted rain events, daily during extended rain events, and after the conclusion of rain events.
- Inspect BMPs subject to non-stormwater discharges daily while non-stormwater discharges are occuring.
- Repair water equipment as needed to prevent unintended discharges.
  - Water trucks
  - Water reservoirs (water buffalos)
  - Irrigation systems
  - Hydrant connections

References

Stormwater Quality Handbooks - Construction Site Best Management Practices (BMPs) Manual, State of California Department of Transportation (Caltrans), November 2000.

Dewatering Operations NS-2

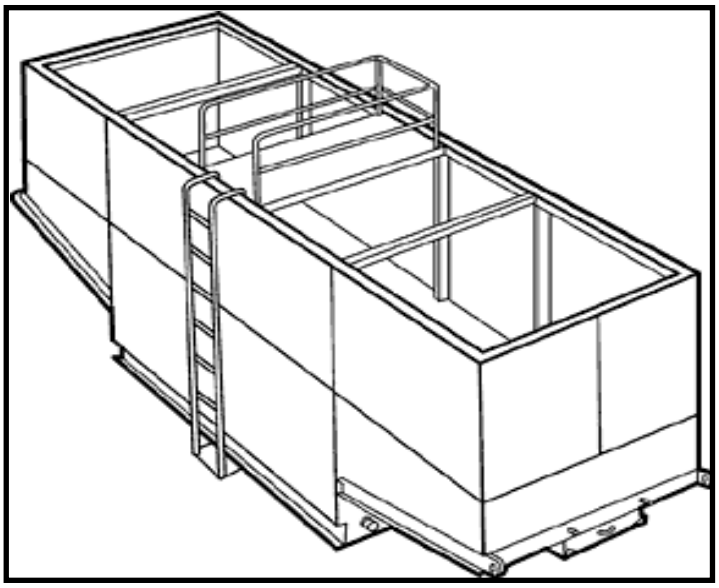

Categories		
EC	Erosion Control	
SE	Sediment Control	☒
TC	Tracking Control	
WE	Wind Erosion Control	
NS	Non-Stormwater Management Control	☑
WM	Waste Management and Materials Pollution Control	

Legend:
☑ **Primary Category**
☒ **Secondary Category**

Targeted Constituents	
Sediment	☑
Nutrients	
Trash	
Metals	
Bacteria	
Oil and Grease	☑
Organics	

Potential Alternatives

SE-5: Fiber Roll

SE-6: Gravel Bag Berm

If User/Subscriber modifies this fact sheet in any way, the CASQA name/logo and footer below must be removed from each page and not appear on the modified version.

Description and Purpose

Dewatering operations are practices that manage the discharge of pollutants when non-stormwater and accumulated precipitation (stormwater) must be removed from a work location to proceed with construction work or to provide vector control.

The General Permit incorporates Numeric Action Levels (NAL) for turbidity (see Section 2 of this handbook to determine your project's risk level and if you are subject to these requirements).

Discharges from dewatering operations can contain high levels of fine sediment that, if not properly treated, could lead to exceedances of the General Permit requirements or Basin Plan standards.

The dewatering operations described in this fact sheet are not Active Treatment Systems (ATS) and do not include the use of chemical coagulations, chemical flocculation or electrocoagulation.

Suitable Applications

These practices are implemented for discharges of non-stormwater from construction sites. Non-stormwaters include, but are not limited to, groundwater, water from cofferdams, water diversions, and waters used during construction activities that must be removed from a work area to facilitate construction.

Practices identified in this section are also appropriate for implementation when managing the removal of accumulated

CASQA
CALIFORNIA STORMWATER QUALITY ASSOCIATION

precipitation (stormwater) from depressed areas at a construction site.

Stormwater mixed with non-stormwater should be managed as non-stormwater.

Limitations

- Dewatering operations will require and should comply with applicable local and project-specific permits and regulations. In some areas, all dewatering activities, regardless of the discharge volume, require a dewatering permit.
- Site conditions will dictate design and use of dewatering operations.
- The controls discussed in this fact sheet primarily address sediment. Other secondary pollutant removal benefits are discussed where applicable.
- The controls detailed in this fact sheet only allow for minimal settling time for sediment particles. Use only when site conditions restrict the use of the other control methods.
- Avoid dewatering discharges where possible by using the water for dust control.

Implementation

- A Construction Site Monitoring Plan (CSMP) should be included in the project Stormwater Pollution Prevention Plan (SWPPP).
- Regional Water Quality Control Board (RWQCB) Regions may require notification and approval prior to any discharge of water from construction sites.
- The destination of discharge from dewatering activities will typically determine the type of permit required for the discharge. For example, when discharging to a water of the U.S., a dewatering permit may be required through the site's governing RWQCB. When discharging to a sanitary sewer or Municipal Separate Storm Sewer System (MS4), a permit may need to be obtained from the owner of the sanitary sewer or MS4 in addition to obtaining an RWQCB dewatering permit. Additional permits or permissions from other agencies may be required for dewatering cofferdams or diversions.
- Dewatering discharges should not cause erosion at the discharge point. Appropriate BMPs should be implemented to maintain compliance with all applicable permits.
- Maintain dewatering records in accordance with all local and project-specific permits and regulations.

Sediment Treatment

A variety of methods can be used to treat water during dewatering operations. Several devices are presented below and provide options to achieve sediment removal. The sediment particle size and permit or receiving water limitations on sediment or turbidity are key considerations for selecting sediment treatment option(s); in some cases, the use of multiple devices may be appropriate. Use of other enhanced treatment methods (i.e., introduction of chemicals or electric current to enhance flocculation and removal of sediment) must comply with: 1) for storm drain or surface water discharges, the requirements for Active Treatment Systems (see SE-11); or 2) for sanitary sewer discharges, the requirements of applicable sanitary sewer discharge permits.

Sediment Basin (see also SE-2)

Description:

- A sediment basin is a temporary basin with a controlled release structure that is formed by excavation or construction of an embankment to detain sediment-laden runoff and allow sediment to settle out before discharging. Sediment basins are generally larger than Sediment Traps (SE-3) and have a designed outlet structure.

Appropriate Applications:

- Effective for the removal of trash, gravel, sand, silt, some metals that settle out with the sediment.

Implementation:

- Excavation and construction of related facilities is required.
- Temporary sediment basins should be fenced if safety is a concern.
- Outlet protection is required to prevent erosion at the outfall location.

Maintenance:

- Maintenance is required for safety fencing, vegetation, embankment, inlet and outlet, as well as other features.
- Removal of sediment is required when the storage volume is reduced by one-third.

Sediment Trap (See also SE-3)

Description:

- A sediment trap is a temporary basin formed by excavation and/or construction of an earthen embankment across a waterway or low drainage area to detain sediment-laden runoff and allow sediment to settle out before discharging. Sediment traps are generally smaller than Sediment Basins (SE-2) and do not have a designed outlet (but do have a spillway or overflow).

Appropriate Applications:

Effective for the removal of large and medium sized particles (sand and gravel) and some metals that settle out with the sediment.

Implementation:

- Excavation and construction of related facilities is required.
- Trap inlets should be located to maximize the travel distance to the trap outlet.
- Use rock or vegetation to protect the trap outlets against erosion.

Maintenance:

- Maintenance is required for vegetation, embankment, inlet and outfall structures, as well as other features.
- Removal of sediment is required when the storage volume is reduced by one-third.

Weir Tanks

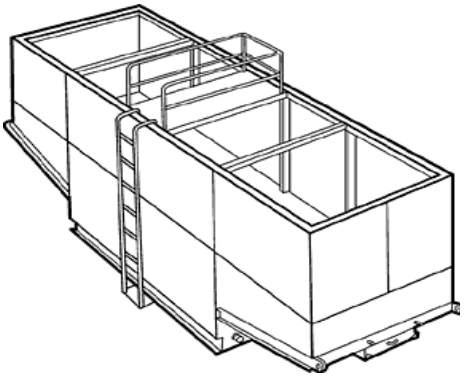

Description:

- A weir tank separates water and waste by using weirs. The configuration of the weirs (over and under weirs) maximizes the residence time in the tank and determines the waste to be removed from the water, such as oil, grease, and sediments.

Appropriate Applications:

- The tank removes trash, some settleable solids (gravel, sand, and silt), some visible oil and grease, and some metals (removed with sediment). To achieve high levels of flow, multiple tanks can be used in parallel. If additional treatment is desired, the tanks can be placed in series or as pre-treatment for other methods.

Implementation:

- Tanks are delivered to the site by the vendor, who can provide assistance with set-up and operation.
- Tank size will depend on flow volume, constituents of concern, and residency period required. Vendors should be consulted to appropriately size tank.
- Treatment capacity (i.e., volume and number of tanks) should provide at a minimum the required volume for discrete particle settling for treatment design flows.

Maintenance:

- Periodic cleaning is required based on visual inspection or reduced flow.
- Oil and grease disposal should be conducted by a licensed waste disposal company.

Dewatering Tanks



Description:

- A dewatering tank removes debris and sediment. Flow enters the tank through the top, passes through a fabric filter, and is discharged through the bottom of the tank. The filter separates the solids from the liquids.

Appropriate Applications:

- The tank removes trash, gravel, sand, and silt, some visible oil and grease, and some metals (removed with sediment). To achieve high levels of flow, multiple tanks can be used in parallel. If additional treatment is desired, the tanks can be placed in series or as pre-treatment for other methods.

Implementation:

- Tanks are delivered to the site by the vendor, who can provide assistance with set-up and operation.
- Tank size will depend on flow volume, constituents of concern, and residency period required. Vendors should be consulted to appropriately size tank.

Maintenance:

- Periodic cleaning is required based on visual inspection or reduced flow.
- Oil and grease disposal should be conducted by licensed waste disposal company.

Gravity Bag Filter



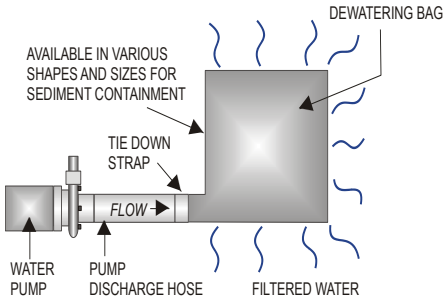

Description:

- A gravity bag filter, also referred to as a dewatering bag, is a square or rectangular bag made of non-woven geotextile fabric that collects gravel, sand, silt, and fines.

Appropriate Applications:

- Effective for the removal of sediments (gravel, sand, silt, and fines). Some metals are removed with the sediment.

Implementation:

- Water is pumped into one side of the bag and seeps through the top, bottom, and sides of the bag.
- Place filter bag on pavement or a gravel bed or paved surface. Avoid placing a dewatering bag on unprotected bare soil. If placing the bag on bare soil is unavoidable, a secondary barrier should be used, such as a rock filter bed placed beneath and beyond the edges of the bag to, prevent erosion and capture sediments that escape the bag.
- Perimeter control around the downstream end of the bag should be implemented. Secondary sediment controls are important especially in the initial stages of discharge, which tend to allow fines to pass through the bag.

Maintenance:

- Inspection of the flow conditions, bag condition, bag capacity, and the secondary barrier (as applicable) is required.
- Replace the bag when it no longer filters sediment or passes water at a reasonable rate.
- Caution should be taken when removing and disposing of the bag, to prevent the release of captured sediment
- Properly dispose of the bag offsite. If sediment is removed from the bag prior to disposal (bags can potentially be reused depending upon their condition), dispose of sediment in accordance with the general maintenance procedures described at the end of this BMP Fact Sheet.

Sand Media Particulate Filter





Description:

- Water is treated by passing it through canisters filled with sand media. Generally, sand filters provide a final level of treatment. They are often used as a secondary or higher level of treatment after a significant amount of sediment and other pollutants have been removed using other methods.

Appropriate Applications:

- Effective for the removal of trash, gravel, sand, and silt and some metals, as well as the reduction of biochemical oxygen demand (BOD) and turbidity.
- Sand filters can be used for stand-alone treatment or in conjunction with bag and cartridge filtration if further treatment is required.
- Sand filters can also be used to provide additional treatment to water treated via settling or basic filtration.

Implementation:

- The filters require delivery to the site and initial set up. The vendor can provide assistance with installation and operation.

Maintenance:

- The filters require regular service to monitor and maintain the level of the sand media. If subjected to high loading rates, filters can plug quickly.
- Venders generally provide data on maximum head loss through the filter. The filter should be monitored daily while in use and cleaned when head loss reaches target levels.
- If cleaned by backwashing, the backwash water may need to be hauled away for disposal or returned to the upper end of the treatment train for another pass through the series of dewatering BMPs.

Pressurized Bag Filter





Description:

- A pressurized bag filter is a unit composed of single filter bags made from polyester felt material. The water filters through the unit and is discharged through a header. Vendors provide bag filters in a variety of configurations. Some units include a combination of bag filters and cartridge filters for enhanced contaminant removal.

Appropriate Applications:

- Effective for the removal of sediment (sand and silt) and some metals, as well as the reduction of BOD, turbidity, and hydrocarbons. Oil absorbent bags are available for hydrocarbon removal.

- Filters can be used to provide secondary treatment to water treated via settling or basic filtration.

Implementation:

- The filters require delivery to the site and initial set up. The vendor can provide assistance with installation and operation.

Maintenance:

- The filter bags require replacement when the pressure differential equals or exceeds the manufacturer's recommendation.

Cartridge Filter



Description:

- Cartridge filters provide a high degree of pollutant removal by utilizing a number of individual cartridges as part of a larger filtering unit. They are often used as a secondary or higher (polishing) level of treatment after a significant amount of sediment and other pollutants are removed. Units come with various cartridge configurations (for use in series with bag filters) or with a larger single cartridge filtration unit (with multiple filters within).

Appropriate Applications:

- Effective for the removal of sediment (sand, silt, and some clays) and metals, as well as the reduction of BOD, turbidity, and hydrocarbons. Hydrocarbons can effectively be removed with special resin cartridges.

- Filters can be used to provide secondary treatment to water treated via settling or basic filtration.

Implementation:

- The filters require delivery to the site and initial set up. The vendor can provide assistance.

Maintenance:

- The cartridges require replacement when the pressure differential equals or exceeds the manufacturer's recommendation.

Costs

- Sediment control costs vary considerably depending on the dewatering and sediment treatment system that is selected. Pressurized filters tend to be more expensive than gravity settling but are often more effective. Simple tanks are generally rented on a long-term basis (one or more months) and can range from $460 per month for a 1,000-gallon tank to $3,400 per month for a 10,000-gallon tank (adjusted for inflation, 2016 dollars, by Tetra Tech Inc.). Mobilization and demobilization costs vary considerably.

Inspection and Maintenance

- Inspect and verify that dewatering BMPs are in place and functioning prior to the commencement of activities requiring dewatering.

- Inspect dewatering BMPs daily while dewatering activities are being conducted.

- Inspect all equipment before use. Monitor dewatering operations to ensure they do not cause offsite discharge or erosion.
- Sample dewatering discharges as required by the General Permit.
- Unit-specific maintenance requirements are included with the description of each unit.
- Sediment removed during the maintenance of a dewatering device may be either spread onsite and stabilized or disposed of at a disposal site as approved by the owner.
- Sediment that is commingled with other pollutants should be disposed of in accordance with all applicable laws and regulations and as approved by the owner.

References

Blueprint for a Clean Bay: Best Management Practices to Prevent Stormwater Pollution from Construction Related Activities; Santa Clara Valley Nonpoint Source Pollution Control Program, 1995.

Stormwater Quality Handbooks - Construction Site Best Management Practices (BMPs) Manual, State of California Department of Transportation (Caltrans), March 2003; Updated March 2004.

Stormwater Management for Construction Activities, Developing Pollution Prevention Plans and Best Management Practices, EPA 832-R-92005; USEPA, April 1992.

Labor Surcharge & Equipment Rental Rates, April 1, 2002 through March 31, 2003, California Department of Transportation (Caltrans).

Erosion and Sediment Control Manual, Oregon Department of Environmental Quality, February 2005.

Paving and Grinding Operations NS-3

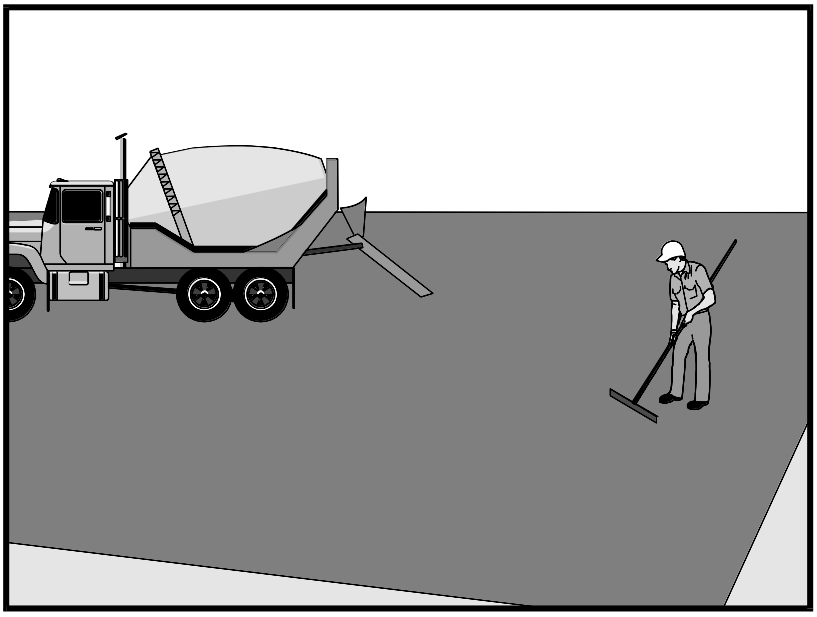

Categories		
EC	Erosion Control	
SE	Sediment Control	
TC	Tracking Control	
WE	Wind Erosion Control	
NS	Non-Stormwater Management Control	☑
WM	Waste Management and Materials Pollution Control	☒

Legend:
☑ **Primary Category**
☒ **Secondary Category**

Targeted Constituents	
Sediment	☑
Nutrients	
Trash	
Metals	
Bacteria	
Oil and Grease	☑
Organics	

Potential Alternatives

None

If User/Subscriber modifies this fact sheet in any way, the CASQA name/logo and footer below must be removed from each page and not appear on the modified version.

Description and Purpose

Prevent or reduce the discharge of pollutants from paving operations, using measures to prevent runon and runoff pollution, properly disposing of wastes, and training employees and subcontractors.

The General Permit incorporates Numeric Action Levels (NAL) for pH and turbidity (see Section 2 of this handbook to determine your project's risk level and if you are subject to these requirements).

Many types of construction materials associated with paving and grinding operations, including mortar, concrete, and cement and their associated wastes have basic chemical properties that can raise pH levels outside of the permitted range. Additional care should be taken when managing these materials to prevent them from coming into contact with stormwater flows, which could lead to exceedances of the General Permit requirements.

Suitable Applications

These procedures are implemented where paving, surfacing, resurfacing, or sawcutting, may pollute stormwater runoff or discharge to the storm drain system or watercourses.

Limitations

- Paving opportunities may be limited during wet weather.

  Discharges of freshly paved surfaces may raise pH to environmentally harmful levels and trigger permit violations.

Implementation

General

- Avoid paving during the wet season when feasible.
- Reschedule paving and grinding activities if rain is forecasted.
- Train employees and sub-contractors in pollution prevention and reduction.
- Store materials away from drainage courses to prevent stormwater runon (see WM-1, Material Delivery and Storage).
- Protect drainage courses, particularly in areas with a grade, by employing BMPs to divert runoff or to trap and filter sediment.
- Stockpile material removed from roadways away from drain inlets, drainage ditches, and watercourses. These materials should be stored consistent with WM-3, Stockpile Management.
- Disposal of PCC (Portland cement concrete) and AC (asphalt concrete) waste should be in conformance with WM-8, Concrete Waste Management.

Saw Cutting, Grinding, and Pavement Removal

- Shovel or vacuum saw-cut slurry and remove from site. Cover or barricade storm drains during saw cutting to contain slurry.
- When paving involves AC, the following steps should be implemented to prevent the discharge of grinding residue, uncompacted or loose AC, tack coats, equipment cleaners, or unrelated paving materials:
  - AC grindings, pieces, or chunks used in embankments or shoulder backing should not be allowed to enter any storm drains or watercourses. Install inlet protection and perimeter controls until area is stabilized (i.e. cutting, grinding or other removal activities are complete and loose material has been properly removed and disposed of)or permanent controls are in place. Examples of temporary perimeter controls can be found in EC-9, Earth Dikes and Drainage Swales; SE-1, Silt Fence; SE-5, Fiber Rolls, or SE-13 Compost Socks and Berms
  - Collect and remove all broken asphalt and recycle when practical. Old or spilled asphalt should be recycled or disposed of properly.
- Do not allow saw-cut slurry to enter storm drains or watercourses. Residue from grinding operations should be picked up by a vacuum attachment to the grinding machine, or by sweeping, should not be allowed to flow across the pavement, and should not be left on the surface of the pavement. See also WM-8, Concrete Waste Management, and WM-10, Liquid Waste Management.
- Pavement removal activities should not be conducted in the rain.
- Collect removed pavement material by mechanical or manual methods. This material may be recycled for use as shoulder backing or base material.

- If removed pavement material cannot be recycled, transport the material back to an approved storage site.

Asphaltic Concrete Paving

- If paving involves asphaltic cement concrete, follow these steps:

  - Do not allow sand or gravel placed over new asphalt to wash into storm drains, streets, or creeks. Vacuum or sweep loose sand and gravel and properly dispose of this waste by referring to WM-5, Solid Waste Management.

  - Old asphalt should be disposed of properly. Collect and remove all broken asphalt from the site and recycle whenever possible.

Portland Cement Concrete Paving

- Do not wash sweepings from exposed aggregate concrete into a storm drain system. Collect waste materials by dry methods, such as sweeping or shoveling, and return to aggregate base stockpile or dispose of properly. Allow aggregate rinse to settle. Then, either allow rinse water to dry in a temporary pit as described in WM-8, Concrete Waste Management, or pump the water to the sanitary sewer if authorized by the local wastewater authority.

Sealing Operations

- During chip seal application and sweeping operations, petroleum or petroleum covered aggregate should not be allowed to enter any storm drain or water courses. Apply temporary perimeter controls until structure is stabilized (i.e. all sealing operations are complete and cured and loose materials have been properly removed and disposed).

- Inlet protection (SE-10, Storm Drain Inlet Protection) should be used during application of seal coat, tack coat, slurry seal, and fog seal.

- Seal coat, tack coat, slurry seal, or fog seal should not be applied if rainfall is predicted to occur during the application or curing period.

Paving Equipment

- Leaks and spills from paving equipment can contain toxic levels of heavy metals and oil and grease. Place drip pans or absorbent materials under paving equipment when not in use. Clean up spills with absorbent materials and dispose of in accordance with the applicable regulations. See NS-10, Vehicle and Equipment Maintenance, WM-4, Spill Prevention and Control, and WM-10, Liquid Waste Management.

- Substances used to coat asphalt transport trucks and asphalt spreading equipment should not contain soap and should be non-foaming and non-toxic.

- Paving equipment parked onsite should be parked over plastic to prevent soil contamination.

- Clean asphalt coated equipment offsite whenever possible. When cleaning dry, hardened asphalt from equipment, manage hardened asphalt debris as described in WM-5, Solid Waste Management. Any cleaning onsite should follow NS-8, Vehicle and Equipment Cleaning.

Thermoplastic Striping

- Thermoplastic striper and pre-heater equipment shutoff valves should be inspected to ensure that they are working properly to prevent leaking thermoplastic from entering drain inlets, the stormwater drainage system, or watercourses.
- Pre-heaters should be filled carefully to prevent splashing or spilling of hot thermoplastic. Leave six inches of space at the top of the pre-heater container when filling thermoplastic to allow room for material to move.
- Do not pre-heat, transfer, or load thermoplastic near drain inlets or watercourses.
- Clean truck beds daily of loose debris and melted thermoplastic. When possible, recycle thermoplastic material.

Raised/Recessed Pavement Marker Application and Removal

- Do not transfer or load bituminous material near drain inlets, the stormwater drainage system, or watercourses.
- Melting tanks should be loaded with care and not filled to beyond six inches from the top to leave room for splashing.
- When servicing or filling melting tanks, ensure all pressure is released before removing lids to avoid spills.
- On large-scale projects, use mechanical or manual methods to collect excess bituminous material from the roadway after removal of markers.

Costs

- All of the above are low cost measures.

Inspection and Maintenance

- Inspect and verify that activity-based BMPs are in place prior to the commencement of paving and grinding operations.
- BMPs must be inspected in accordance with General Permit requirements for the associated project type and risk level. It is recommended that at a minimum, BMPs be inspected weekly, prior to forecasted rain events, daily during extended rain events, and after the conclusion of rain events.
- Sample stormwater runoff required by the General Permit.
- Keep ample supplies of drip pans or absorbent materials onsite.
- Inspect and maintain machinery regularly to minimize leaks and drips.

References

Blueprint for a Clean Bay: Best Management Practices to Prevent Stormwater Pollution from Construction Related Activities; Santa Clara Valley Nonpoint Source Pollution Control Program, 1995.

Hot Mix Asphalt-Paving Handbook AC 150/5370-14, Appendix I, U.S. Army Corps of Engineers, July 1991.

Stormwater Quality Handbooks - Construction Site Best Management Practices (BMPs) Manual, State of California Department of Transportation (Caltrans), March 2003.

Erosion and Sediment Control Manual, Oregon Department of Environmental Quality, February 2005.

Illicit Connection/Discharge NS-6

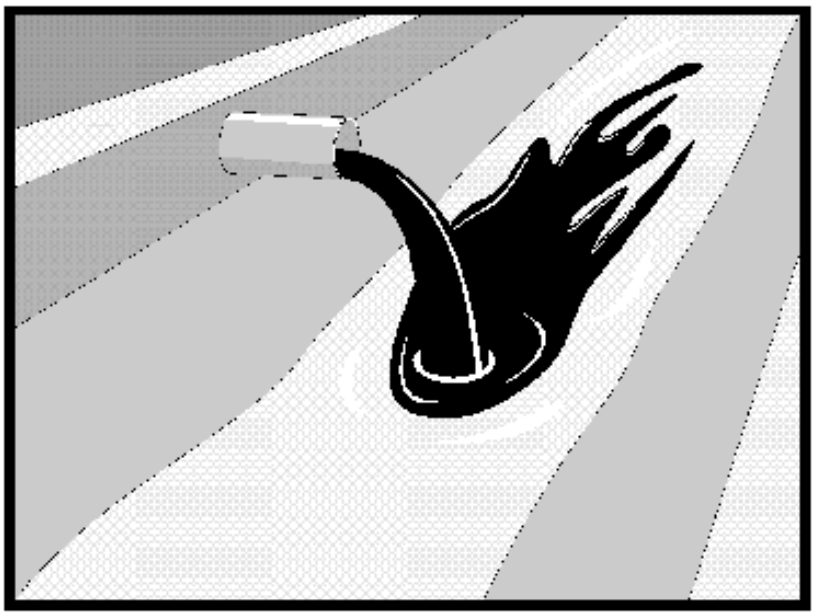

Categories		
EC	Erosion Control	
SE	Sediment Control	
TC	Tracking Control	
WE	Wind Erosion Control	
NS	Non-Stormwater Management Control	☑
WM	Waste Management and Materials Pollution Control	

Legend:
☑ **Primary Objective**
☒ **Secondary Objective**

Targeted Constituents	
Sediment	
Nutrients	☑
Trash	☑
Metals	☑
Bacteria	☑
Oil and Grease	☑
Organics	☑

Potential Alternatives

None

If User/Subscriber modifies this fact sheet in any way, the CASQA name/logo and footer below must be removed from each page and not appear on the modified version.

Description and Purpose

Procedures and practices designed for construction contractors to recognize illicit connections or illegally dumped or discharged materials on a construction site and report incidents.

Suitable Applications

This best management practice (BMP) applies to all construction projects. Illicit connection/discharge and reporting is applicable anytime an illicit connection or discharge is discovered, or illegally dumped material is found on the construction site.

Limitations

Illicit connections and illegal discharges or dumping, for the purposes of this BMP, refer to discharges and dumping caused by parties other than the contractor. If pre-existing hazardous materials or wastes are known to exist onsite, they should be identified in the SWPPP and handled as set forth in the SWPPP.

Implementation

Planning

- Review the SWPPP. Pre-existing areas of contamination should be identified and documented in the SWPPP.
- Inspect site before beginning the job for evidence of illicit connections, illegal dumping or discharges. Document any pre-existing conditions and notify the owner.

- Inspect site regularly during project execution for evidence of illicit connections, illegal dumping or discharges.
- Observe site perimeter for evidence for potential of illicitly discharged or illegally dumped material, which may enter the job site.

Identification of Illicit Connections and Illegal Dumping or Discharges

- **General –** unlabeled and unidentifiable material should be treated as hazardous.
- **Solids** - Look for debris, or rubbish piles. Solid waste dumping often occurs on roadways with light traffic loads or in areas not easily visible from the traveled way.
- **Liquids** - signs of illegal liquid dumping or discharge can include:
  - Visible signs of staining or unusual colors to the pavement or surrounding adjacent soils
  - Pungent odors coming from the drainage systems
  - Discoloration or oily substances in the water or stains and residues detained within ditches, channels or drain boxes
  - Abnormal water flow during the dry weather season
- **Urban Areas** - Evidence of illicit connections or illegal discharges is typically detected at storm drain outfall locations or at manholes. Signs of an illicit connection or illegal discharge can include:
  - Abnormal water flow during the dry weather season
  - Unusual flows in sub drain systems used for dewatering
  - Pungent odors coming from the drainage systems
  - Discoloration or oily substances in the water or stains and residues detained within ditches, channels or drain boxes
  - Excessive sediment deposits, particularly adjacent to or near active offsite construction projects
- **Rural Areas** - Illicit connections or illegal discharges involving irrigation drainage ditches are detected by visual inspections. Signs of an illicit discharge can include:
  - Abnormal water flow during the non-irrigation season
  - Non-standard junction structures
  - Broken concrete or other disturbances at or near junction structures

Reporting

Notify the owner of any illicit connections and illegal dumping or discharge incidents at the time of discovery. For illicit connections or discharges to the storm drain system, notify the local stormwater management agency. For illegal dumping, notify the local law enforcement agency.

Cleanup and Removal

The responsibility for cleanup and removal of illicit or illegal dumping or discharges will vary by location. Contact the local stormwater management agency for further information.

Costs

Costs to look for and report illicit connections and illegal discharges and dumping are low. The best way to avoid costs associated with illicit connections and illegal discharges and dumping is to keep the project perimeters secure to prevent access to the site, to observe the site for vehicles that should not be there, and to document any waste or hazardous materials that exist onsite before taking possession of the site.

Inspection and Maintenance

- Inspect and verify that activity-based BMPs are in place prior to the commencement of associated activities. While activities associated with the BMP are under way, inspect BMPs in accordance with General Permit requirements for the associated project type and risk level. It is recommended that at a minimum, BMPs be inspected weekly, prior to forecasted rain events, daily during extended rain events, and after the conclusion of rain events.
- Inspect the site regularly to check for any illegal dumping or discharge.
- Prohibit employees and subcontractors from disposing of non-job-related debris or materials at the construction site.
- Notify the owner of any illicit connections and illegal dumping or discharge incidents at the time of discovery.

References

Blueprint for a Clean Bay: Best Management Practices to Prevent Stormwater Pollution from Construction Related Activities; Santa Clara Valley Nonpoint Source Pollution Control Program, 1995.

Stormwater Quality Handbooks - Construction Site Best Management Practices (BMPs) Manual, State of California Department of Transportation (Caltrans), November 2000.

Stormwater Management for Construction Activities, Developing Pollution Prevention Plans and Best Management Practices, EPA 832-R-92005; USEPA, April 1992.

Vehicle and Equipment Cleaning NS-8

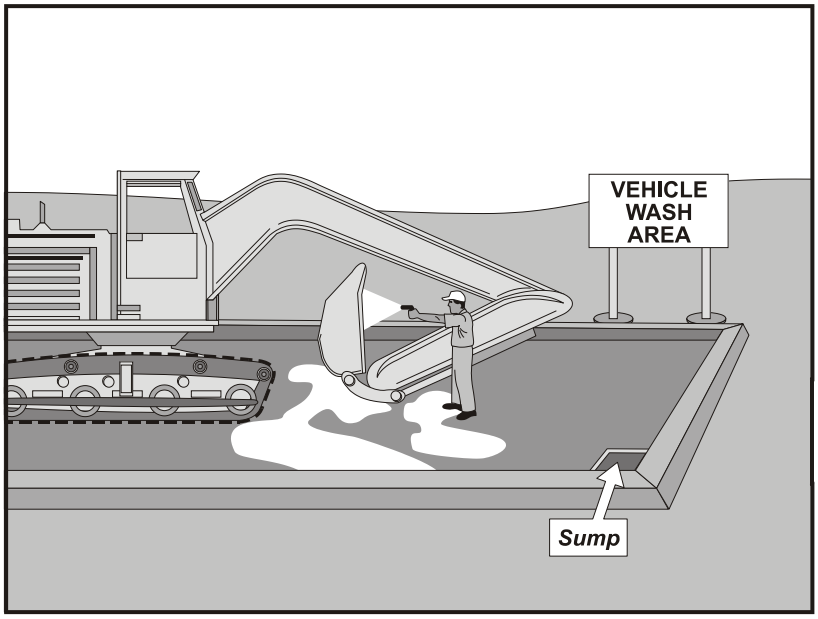

Categories

EC	Erosion Control	
SE	Sediment Control	
TC	Tracking Control	
WE	Wind Erosion Control	
NS	Non-Stormwater Management Control	☑
WM	Waste Management and Materials Pollution Control	

Legend:

☑ **Primary Objective**

☒ **Secondary Objective**

Targeted Constituents

Sediment	☑
Nutrients	☑
Trash	
Metals	
Bacteria	
Oil and Grease	☑
Organics	☑

Potential Alternatives

None

If User/Subscriber modifies this fact sheet in any way, the CASQA name/logo and footer below must be removed from each page and not appear on the modified version.

Description and Purpose

Vehicle and equipment cleaning procedures and practices eliminate or reduce the discharge of pollutants to stormwater from vehicle and equipment cleaning operations. Procedures and practices include but are not limited to: using offsite facilities; washing in designated, contained areas only; eliminating discharges to the storm drain by infiltrating the wash water; and training employees and subcontractors in proper cleaning procedures.

Suitable Applications

These procedures are suitable on all construction sites where vehicle and equipment cleaning is performed.

Limitations

Even phosphate-free, biodegradable soaps have been shown to be toxic to fish before the soap degrades. Sending vehicles/equipment offsite should be done in conjunction with TC-1, Stabilized Construction Entrance/Exit.

Implementation

Other options to washing equipment onsite include contracting with either an offsite or mobile commercial washing business. These businesses may be better equipped to handle and dispose of the wash waters properly. Performing this work offsite can also be economical by eliminating the need for a separate washing operation onsite.

If washing operations are to take place onsite, then:

CASQA
CALIFORNIA STORMWATER QUALITY ASSOCIATION

- Use phosphate-free, biodegradable soaps.
- Educate employees and subcontractors on pollution prevention measures.
- Do not permit steam cleaning onsite. Steam cleaning can generate significant pollutant concentrates.
- Cleaning of vehicles and equipment with soap, solvents or steam should not occur on the project site unless resulting wastes are fully contained and disposed of. Resulting wastes should not be discharged or buried and must be captured and recycled or disposed according to the requirements of WM-10, Liquid Waste Management or WM-6, Hazardous Waste Management, depending on the waste characteristics. Minimize use of solvents. Use of diesel for vehicle and equipment cleaning is prohibited.
- All vehicles and equipment that regularly enter and leave the construction site must be cleaned offsite.
- When vehicle and equipment washing and cleaning must occur onsite, and the operation cannot be located within a structure or building equipped with appropriate disposal facilities, the outside cleaning area should have the following characteristics:
  - Located away from storm drain inlets, drainage facilities, or watercourses
  - Paved with concrete or asphalt and bermed to contain wash waters and to prevent runon and runoff
  - Configured with a sump to allow collection and disposal of wash water
  - No discharge of wash waters to storm drains or watercourses
  - Used only when necessary
- When cleaning vehicles and equipment with water:
  - Use as little water as possible. High-pressure sprayers may use less water than a hose and should be considered
  - Use positive shutoff valve to minimize water usage
  - Facility wash racks should discharge to a sanitary sewer, recycle system or other approved discharge system and must not discharge to the storm drainage system, watercourses, or to groundwater

Costs

Cleaning vehicles and equipment at an offsite facility may reduce overall costs for vehicle and equipment cleaning by eliminating the need to provide similar services onsite. When onsite cleaning is needed, the cost to establish appropriate facilities is relatively low on larger, long-duration projects, and moderate to high on small, short-duration projects.

Inspection and Maintenance

- Inspect and verify that activity-based BMPs are in place prior to the commencement of associated activities. While activities associated with the BMP are under way, inspect BMPs in accordance with General Permit requirements for the associated project type and risk level. It is recommended that at a minimum, BMPs be inspected weekly, prior to forecasted rain events, daily during extended rain events, and after the conclusion of rain events.
- Inspect BMPs subject to non-stormwater discharges daily while non-stormwater discharges occur.
- Inspection and maintenance is minimal, although some berm repair may be necessary.
- Monitor employees and subcontractors throughout the duration of the construction project to ensure appropriate practices are being implemented.
- Inspect sump regularly and remove liquids and sediment as needed.
- Prohibit employees and subcontractors from washing personal vehicles and equipment on the construction site.

References

Stormwater Quality Handbooks - Construction Site Best Management Practices (BMPs) Manual, State of California Department of Transportation (Caltrans), November 2000.

Swisher, R.D. Surfactant Biodegradation, Marcel Decker Corporation, 1987.

Vehicle and Equipment Fueling NS-9

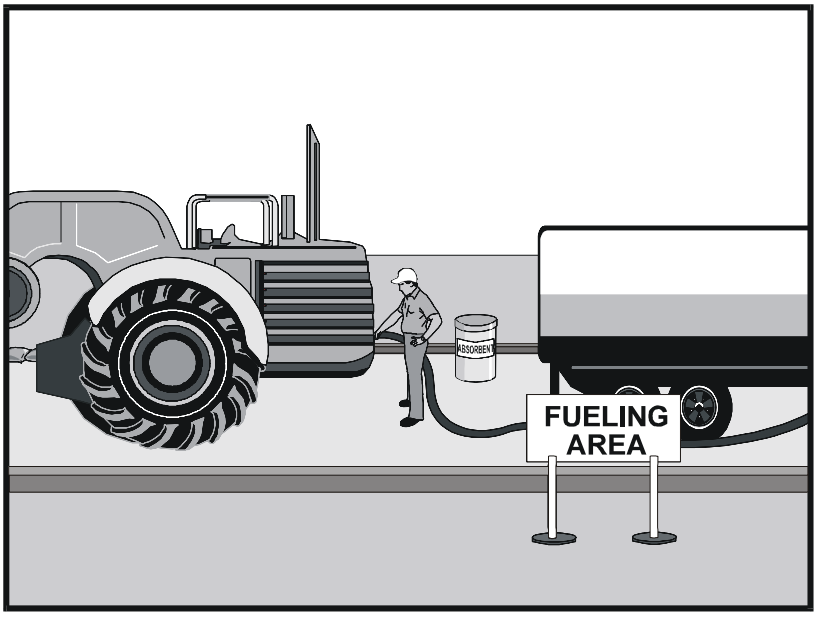

Categories

EC	Erosion Control	
SE	Sediment Control	
TC	Tracking Control	
WE	Wind Erosion Control	
NS	Non-Stormwater Management Control	☑
WM	Waste Management and Materials Pollution Control	

Legend:

☑ **Primary Objective**

☒ **Secondary Objective**

Targeted Constituents

Sediment	
Nutrients	
Trash	
Metals	
Bacteria	
Oil and Grease	☑
Organics	

Potential Alternatives

None

If User/Subscriber modifies this fact sheet in any way, the CASQA name/logo and footer below must be removed from each page and not appear on the modified version.

Description and Purpose

Vehicle equipment fueling procedures and practices are designed to prevent fuel spills and leaks and reduce or eliminate contamination of stormwater. This can be accomplished by using offsite facilities, fueling in designated areas only, enclosing or covering stored fuel, implementing spill controls, and training employees and subcontractors in proper fueling procedures.

Suitable Applications

These procedures are suitable on all construction sites where vehicle and equipment fueling takes place.

Limitations

Onsite vehicle and equipment fueling should only be used where it is impractical to send vehicles and equipment offsite for fueling. Sending vehicles and equipment offsite should be done in conjunction with TC-1, Stabilized Construction Entrance/ Exit.

Implementation

- Use offsite fueling stations as much as possible. These businesses are better equipped to handle fuel and spills properly. Performing this work offsite can also be economical by eliminating the need for a separate fueling area at a site.
- Discourage "topping-off" of fuel tanks.

CASQA
CALIFORNIA STORMWATER QUALITY ASSOCIATION

- Absorbent spill cleanup materials and spill kits should be available in fueling areas and on fueling trucks and should be disposed of properly after use.
- Drip pans or absorbent pads should be used during vehicle and equipment fueling, unless the fueling is performed over an impermeable surface in a dedicated fueling area.
- Use absorbent materials on small spills. Do not hose down or bury the spill. Remove the adsorbent materials promptly and dispose of properly.
- Avoid mobile fueling of mobile construction equipment around the site; rather, transport the equipment to designated fueling areas. With the exception of tracked equipment such as bulldozers and large excavators, most vehicles should be able to travel to a designated area with little lost time.
- Train employees and subcontractors in proper fueling and cleanup procedures.
- When fueling must take place onsite, designate an area away from drainage courses to be used. Fueling areas should be identified in the SWPPP.
- Dedicated fueling areas should be protected from stormwater runon and runoff and should be located at least 50 ft away from downstream drainage facilities and watercourses. Fueling must be performed on level-grade areas.
- Protect fueling areas with berms and dikes to prevent runon, runoff, and to contain spills.
- Nozzles used in vehicle and equipment fueling should be equipped with an automatic shutoff to control drips. Fueling operations should not be left unattended.
- Use vapor recovery nozzles to help control drips as well as air pollution where required by Air Quality Management Districts (AQMD).
- Federal, state, and local requirements should be observed for any stationary above ground storage tanks.

Costs

- All of the above measures are low cost except for the capital costs of above ground tanks that meet all local environmental, zoning, and fire codes.

Inspection and Maintenance

- Inspect BMPs in accordance with General Permit requirements for the associated project type and risk level. It is recommended that at a minimum, BMPs be inspected weekly, prior to forecasted rain events, daily during extended rain events, and after the conclusion of rain events.
- Vehicles and equipment should be inspected each day of use for leaks. Leaks should be repaired immediately, or problem vehicles or equipment should be removed from the project site.
- Keep ample supplies of spill cleanup materials onsite.

- Immediately clean up spills and properly dispose of contaminated soil and cleanup materials.

References

Blueprint for a Clean Bay: Best Management Practices to Prevent Stormwater Pollution from Construction Related Activities; Santa Clara Valley Nonpoint Source Pollution Control Program, 1995.

Coastal Nonpoint Pollution Control Program: Program Development and Approval Guidance, Working Group Working Paper; USEPA, April 1992.

Stormwater Quality Handbooks - Construction Site Best Management Practices (BMPs) Manual, State of California Department of Transportation (Caltrans), November 2000.

Stormwater Management for Construction Activities, Developing Pollution Prevention Plans and Best Management Practices, EPA 832-R-92005; USEPA, April 1992.

Vehicle & Equipment Maintenance NS-10

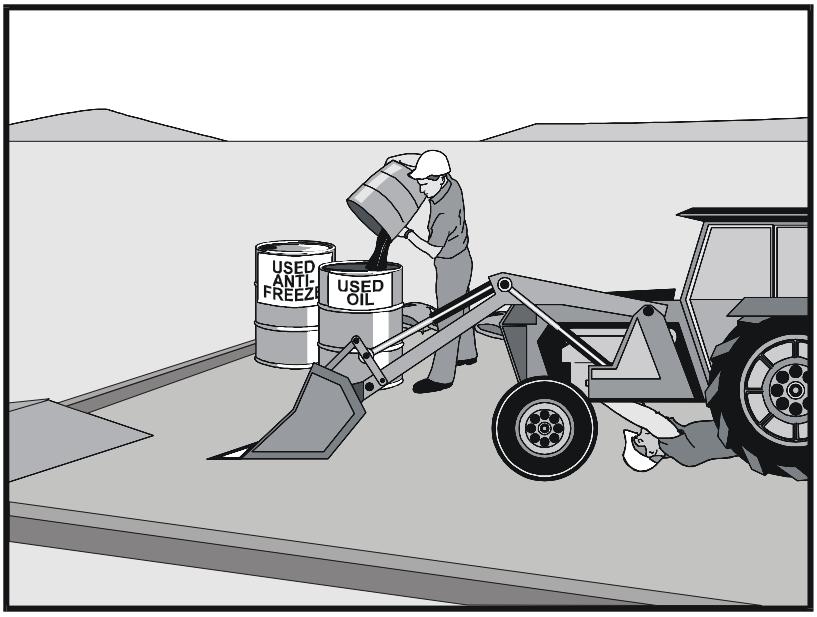

Categories

EC	Erosion Control	
SE	Sediment Control	
TC	Tracking Control	
WE	Wind Erosion Control	
NS	Non-Stormwater Management Control	☑
WM	Waste Management and Materials Pollution Control	

Legend:

☑ **Primary Objective**

☒ **Secondary Objective**

Targeted Constituents

Sediment	
Nutrients	☑
Trash	☑
Metals	
Bacteria	
Oil and Grease	☑
Organics	☑

Potential Alternatives

None

If User/Subscriber modifies this fact sheet in any way, the CASQA name/logo and footer below must be removed from each page and not appear on the modified version.

Description and Purpose

Prevent or reduce the contamination of stormwater resulting from vehicle and equipment maintenance by running a "dry and clean site". The best option would be to perform maintenance activities at an offsite facility. If this option is not available then work should be performed in designated areas only, while providing cover for materials stored outside, checking for leaks and spills, and containing and cleaning up spills immediately. Employees and subcontractors must be trained in proper procedures.

Suitable Applications

These procedures are suitable on all construction projects where an onsite yard area is necessary for storage and maintenance of heavy equipment and vehicles.

Limitations

Onsite vehicle and equipment maintenance should only be used where it is impractical to send vehicles and equipment offsite for maintenance and repair. Sending vehicles/equipment offsite should be done in conjunction with TC-1, Stabilized Construction Entrance/Exit.

Outdoor vehicle or equipment maintenance is a potentially significant source of stormwater pollution. Activities that can contaminate stormwater include engine repair and service, changing or replacement of fluids, and outdoor equipment storage and parking (engine fluid leaks). For further information on vehicle or equipment servicing, see NS-8,

CASQA
CALIFORNIA STORMWATER QUALITY ASSOCIATION

Vehicle and Equipment Cleaning, and NS-9, Vehicle and Equipment Fueling.

Implementation

- Use offsite repair shops as much as possible. These businesses are better equipped to handle vehicle fluids and spills properly. Performing this work offsite can also be economical by eliminating the need for a separate maintenance area.
- If maintenance must occur onsite, use designated areas, located away from drainage courses. Dedicated maintenance areas should be protected from stormwater runon and runoff and should be located at least 50 ft from downstream drainage facilities and watercourses.
- Drip pans or absorbent pads should be used during vehicle and equipment maintenance work that involves fluids, unless the maintenance work is performed over an impermeable surface in a dedicated maintenance area.
- Place a stockpile of spill cleanup materials where it will be readily accessible.
- All fueling trucks and fueling areas are required to have spill kits and/or use other spill protection devices.
- Use adsorbent materials on small spills. Remove the absorbent materials promptly and dispose of properly.
- Inspect onsite vehicles and equipment daily at startup for leaks, and repair immediately.
- Keep vehicles and equipment clean; do not allow excessive build-up of oil and grease.
- Segregate and recycle wastes, such as greases, used oil or oil filters, antifreeze, cleaning solutions, automotive batteries, hydraulic and transmission fluids. Provide secondary containment and covers for these materials if stored onsite.
- Train employees and subcontractors in proper maintenance and spill cleanup procedures.
- Drip pans or plastic sheeting should be placed under all vehicles and equipment placed on docks, barges, or other structures over water bodies when the vehicle or equipment is planned to be idle for more than 1 hour.
- For long-term projects, consider using portable tents or covers over maintenance areas if maintenance cannot be performed offsite.
- Consider use of new, alternative greases and lubricants, such as adhesive greases, for chassis lubrication and fifth-wheel lubrication.
- Properly dispose of used oils, fluids, lubricants, and spill cleanup materials.
- Do not place used oil in a dumpster or pour into a storm drain or watercourse.
- Properly dispose of or recycle used batteries.
- Do not bury used tires.

- Repair leaks of fluids and oil immediately.

Listed below is further information if you must perform vehicle or equipment maintenance onsite.

Safer Alternative Products

- Consider products that are less toxic or hazardous than regular products. These products are often sold under an "environmentally friendly" label.
- Consider use of grease substitutes for lubrication of truck fifth-wheels. Follow manufacturers label for details on specific uses.
- Consider use of plastic friction plates on truck fifth-wheels in lieu of grease. Follow manufacturers label for details on specific uses.

Waste Reduction

Parts are often cleaned using solvents such as trichloroethylene, trichloroethane, or methylene chloride. Many of these cleaners are listed in California Toxic Rule as priority pollutants. These materials are harmful and must not contaminate stormwater. They must be disposed of as a hazardous waste. Reducing the number of solvents makes recycling easier and reduces hazardous waste management costs. Often, one solvent can perform a job as well as two different solvents. Also, if possible, eliminate or reduce the amount of hazardous materials and waste by substituting non-hazardous or less hazardous materials. For example, replace chlorinated organic solvents with non-chlorinated solvents. Non-chlorinated solvents like kerosene or mineral spirits are less toxic and less expensive to dispose of properly. Check the list of active ingredients to see whether it contains chlorinated solvents. The "chlor" term indicates that the solvent is chlorinated. Also, try substituting a wire brush for solvents to clean parts.

Recycling and Disposal

Separating wastes allows for easier recycling and may reduce disposal costs. Keep hazardous wastes separate, do not mix used oil solvents, and keep chlorinated solvents (like,-trichloroethane) separate from non-chlorinated solvents (like kerosene and mineral spirits). Promptly transfer used fluids to the proper waste or recycling drums. Don't leave full drip pans or other open containers lying around. Provide cover and secondary containment until these materials can be removed from the site.

Oil filters can be recycled. Ask your oil supplier or recycler about recycling oil filters.

Do not dispose of extra paints and coatings by dumping liquid onto the ground or throwing it into dumpsters. Allow coatings to dry or harden before disposal into covered dumpsters.

Store cracked batteries in a non-leaking secondary container. Do this with all cracked batteries, even if you think all the acid has drained out. If you drop a battery, treat it as if it is cracked. Put it into the containment area until you are sure it is not leaking.

Costs

All of the above are low cost measures. Higher costs are incurred to setup and maintain onsite maintenance areas.

Vehicle & Equipment Maintenance NS-10

Inspection and Maintenance

- Inspect and verify that activity-based BMPs are in place prior to the commencement of associated activities. While activities associated with the BMP are under way, inspect BMPs in accordance with General Permit requirements for the associated project type and risk level. It is recommended that at a minimum, BMPs be inspected weekly, prior to forecasted rain events, daily during extended rain events, and after the conclusion of rain events.
- Inspect BMPs subject to non-stormwater discharges daily while non-stormwater discharges occur.
- Keep ample supplies of spill cleanup materials onsite.
- Maintain waste fluid containers in leak proof condition.
- Vehicles and equipment should be inspected on each day of use. Leaks should be repaired immediately, or the problem vehicle(s) or equipment should be removed from the project site.
- Inspect equipment for damaged hoses and leaky gaskets routinely. Repair or replace as needed.

References

Blueprint for a Clean Bay: Best Management Practices to Prevent Stormwater Pollution from Construction Related Activities; Santa Clara Valley Nonpoint Source Pollution Control Program, 1995.

Coastal Nonpoint Pollution Control Program; Program Development and Approval Guidance, Working Group, Working Paper; USEPA, April 1992.

Stormwater Quality Handbooks - Construction Site Best Management Practices (BMPs) Manual, State of California Department of Transportation (Caltrans), November 2000.

Pile Driving Operations NS-11

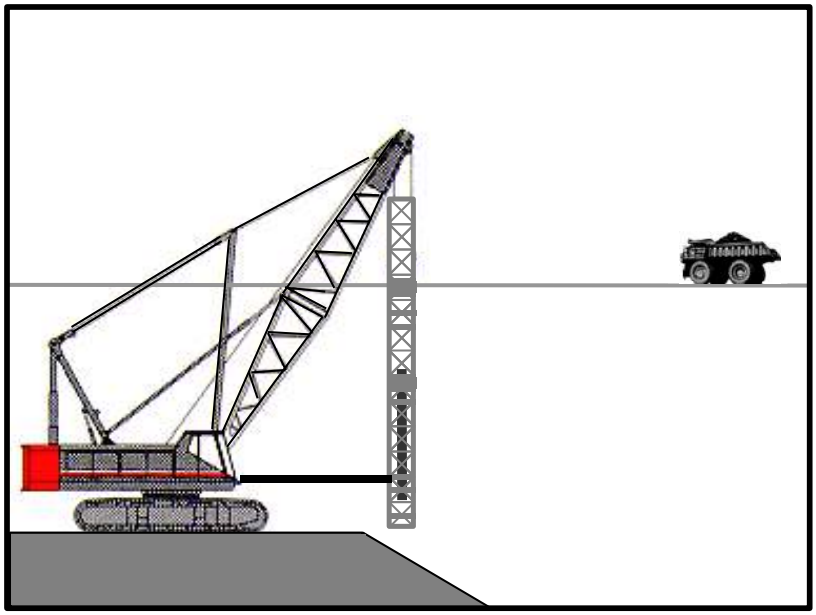

Categories		
EC	Erosion Control	
SE	Sediment Control	
TC	Tracking Control	
WE	Wind Erosion Control	
NS	Non-Stormwater Management Control	☑
WM	Waste Management and Materials Pollution Control	

Legend:
☑ **Primary Objective**
☒ **Secondary Objective**

Targeted Constituents	
Sediment	☑
Nutrients	
Trash	
Metals	
Bacteria	
Oil and Grease	☑
Organics	

Potential Alternatives

None

If User/Subscriber modifies this fact sheet in any way, the CASQA name/logo and footer below must be removed from each page and not appear on the modified version.

Description and Purpose

The construction and retrofit of bridges and retaining walls often include driving piles for foundation support and shoring operations. Driven piles are typically constructed of precast concrete, steel, or timber. Driven sheet piles are also used for shoring and cofferdam construction. Proper control and use of equipment, materials, and waste products from pile driving operations will reduce or eliminate the discharge of potential pollutants to the storm drain system, watercourses, and waters of the United States.

Suitable Applications

These procedures apply to all construction sites near or adjacent to a watercourse or groundwater where permanent and temporary pile driving (impact and vibratory) takes place, including operations using pile shells as well as construction of cast-in-steel-shell and cast-in-drilled-hole piles.

Limitations

None identified.

Implementation

- Use drip pans or absorbent pads during vehicle and equipment operation, maintenance, cleaning, fueling, and storage. Refer to NS-8, Vehicle and Equipment Cleaning, NS-9, Vehicle and Equipment Fueling, and NS-10, Vehicle and Equipment Maintenance.

- Have spill kits and cleanup materials available at all locations of pile driving. Refer to WM-4, Spill Prevention and Control.
- Equipment that is stored or in use in streambeds, or on docks, barges, or other structures over water bodies should be kept leak free.
- Park equipment over plastic sheeting or equivalent where possible. Plastic is not a substitute for drip pans or absorbent pads. The storage or use of equipment in streambeds or other bodies of water must comply with all applicable permits.
- Implement other BMPs as applicable, such as NS-2, Dewatering Operations, WM-5, Solid Waste Management, WM-6, Hazardous Waste Management, and WM-10, Liquid Waste Management.
- When not in use, store pile-driving equipment away from concentrated flows of stormwater, drainage courses, and inlets. Protect hammers and other hydraulic attachments from runon and runoff by placing them on plywood and covering them with plastic or a comparable material prior to the onset of rain.
- Use less hazardous products, e.g., vegetable oil, when practicable.

Costs

All of the above measures can be low cost.

Inspection and Maintenance

- Inspect and verify that activity-based BMPs are in place prior to the commencement of associated activities. While activities associated with the BMP are under way, inspect BMPs in accordance with General Permit requirements for the associated project type and risk level. It is recommended that at a minimum, BMPs be inspected weekly, prior to forecasted rain events, daily during extended rain events, and after the conclusion of rain events.
- Inspect BMPs subject to non-stormwater discharges daily while non-stormwater discharges occur.
- Inspect equipment every day at startup and repair equipment as needed (i.e., worn or damaged hoses, fittings, and gaskets). Recheck equipment at shift changes or at the end of the day and scheduled repairs as needed.

References

Stormwater Quality Handbooks - Construction Site Best Management Practices (BMPs) Manual, State of California Department of Transportation (Caltrans), November 2000.

Stormwater Management for Construction Activities, Developing Pollution Prevention Plans and Best Management Practices, EPA 832-R-92005; USEPA, April 1992.

Concrete Curing NS-12

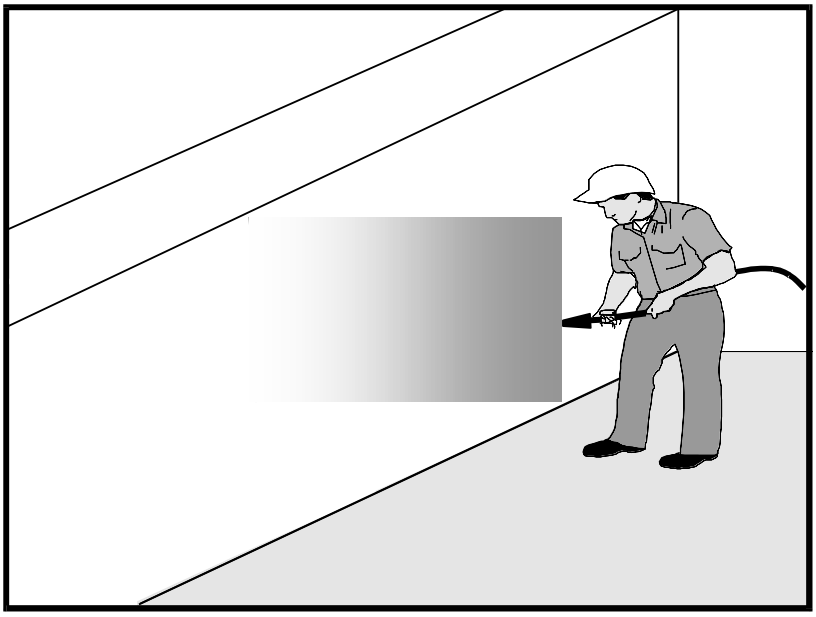

Categories		
EC	Erosion Control	
SE	Sediment Control	
TC	Tracking Control	
WE	Wind Erosion Control	
NS	Non-Stormwater Management Control	☑
WM	Waste Management and Materials Pollution Control	☑

Legend:
☑ **Primary Category**
☒ **Secondary Category**

Targeted Constituents	
Sediment	☑
Nutrients	
Trash	
Metals	☑
Bacteria	
Oil and Grease	☑
Organics	

Potential Alternatives

None

If User/Subscriber modifies this fact sheet in any way, the CASQA name/logo and footer below must be removed from each page and not appear on the modified version.

Description and Purpose

Concrete curing is used in the construction of structures such as bridges, retaining walls, pump houses, large slabs, and structured foundations. Concrete curing includes the use of both chemical and water methods.

Concrete and its associated curing materials have basic chemical properties that can raise the pH of water to levels outside of the permitted range. Discharges of stormwater and non-stormwater exposed to concrete during curing may have a high pH and may contain chemicals, metals, and fines. The General Permit incorporates Numeric Action Levels (NAL) for pH (see Section 2 of this handbook to determine your project's risk level and if you are subject to these requirements).

Proper procedures and care should be taken when managing concrete curing materials to prevent them from coming into contact with stormwater flows, which could result in a high pH discharge.

Suitable Applications

Suitable applications include all projects where Portland Cement Concrete (PCC) and concrete curing chemicals are placed where they can be exposed to rainfall, runoff from other areas, or where runoff from the PCC will leave the site.

Limitations

- Runoff contact with concrete waste can raise pH levels in the water to environmentally harmful levels and trigger permit violations.

Implementation

Chemical Curing

- Avoid over spray of curing compounds.
- Minimize the drift by applying the curing compound close to the concrete surface. Apply an amount of compound that covers the surface but does not allow any runoff of the compound.
- Use proper storage and handling techniques for concrete curing compounds. Refer to WM-1, Material Delivery and Storage.
- Protect drain inlets prior to the application of curing compounds.
- Refer to WM-4, Spill Prevention and Control.

Water Curing for Bridge Decks, Retaining Walls, and other Structures

- Direct cure water away from inlets and watercourses to collection areas for evaporation or other means of removal in accordance with all applicable permits. See WM-8 Concrete Waste Management.
- Collect cure water at the top of slopes and transport to a concrete waste management area in a non-erosive manner. See EC-9 Earth Dikes and Drainage Swales, EC-10, Velocity Dissipation Devices, and EC-11, Slope Drains.
- Utilize wet blankets or a similar method that maintains moisture while minimizing the use and possible discharge of water.

Education

- Educate employees, subcontractors, and suppliers on proper concrete curing techniques to prevent contact with discharge as described herein.
- Arrange for the QSP or the appropriately trained contractor's superintendent or representative to oversee and enforce concrete curing procedures.

Costs

All of the above measures are generally low cost.

Inspection and Maintenance

- Inspect and verify that activity-based BMPs are in place prior to the commencement of associated activities.
- BMPs must be inspected in accordance with General Permit requirements for the associated project type and risk level. It is recommended that at a minimum, BMPs be inspected weekly, prior to forecasted rain events, daily during extended rain events, and after the conclusion of rain events.
- Inspect BMPs subject to non-stormwater discharges daily while non-stormwater discharges occur.
- Sample non-stormwater discharges and stormwater runoff that contacts uncured and partially cured concrete as required by the General Permit.

- Ensure that employees and subcontractors implement appropriate measures for storage, handling, and use of curing compounds.
- Inspect cure containers and spraying equipment for leaks.

References

Blue Print for a Clean Bay-Construction-Related Industries: Best Management Practices for Stormwater Pollution Prevention; Santa Clara Valley Non-Point Source Pollution Control Program, 1992.

Stormwater Quality Handbooks - Construction Site Best Management Practices (BMPs) Manual, State of California Department of Transportation (Caltrans), March 2003.

Stormwater Management for Construction Activities, Developing Pollution Prevention Plans and Best Management Practices, EPA 832-R-92005; USEPA, April 1992.

Erosion and Sediment Control Manual, Oregon Department of Environmental Quality, February 2005.

Concrete Finishing NS-13

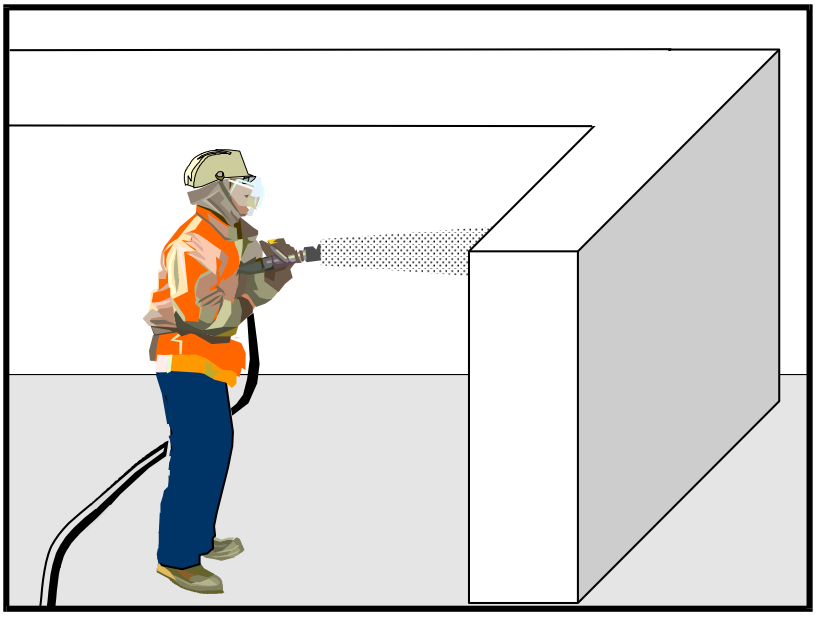

Categories

EC	Erosion Control	
SE	Sediment Control	
TC	Tracking Control	
WE	Wind Erosion Control	
NS	Non-Stormwater Management Control	☑
WM	Waste Management and Materials Pollution Control	☑

Legend:

☑ **Primary Category**

☒ **Secondary Category**

Targeted Constituents

Sediment	☑
Nutrients	
Trash	
Metals	☑
Bacteria	
Oil and Grease	
Organics	☑

Potential Alternatives

None

If User/Subscriber modifies this fact sheet in any way, the CASQA name/logo and footer below must be removed from each page and not appear on the modified version.

Description and Purpose

Concrete finishing methods are used for bridge deck rehabilitation, paint removal, curing compound removal, and final surface finish appearances. Methods include sand blasting, shot blasting, grinding, or high-pressure water blasting. Stormwater and non-stormwater exposed to concrete finishing by-products may have a high pH and may contain chemicals, metals, and fines. Proper procedures and implementation of appropriate BMPs can minimize the impact that concrete-finishing methods may have on stormwater and non-stormwater discharges.

The General Permit incorporates Numeric Action Levels (NAL) for pH (see Section 2 of this handbook to determine your project's risk level and if you are subject to these requirements).

Concrete and its associated curing materials have basic chemical properties that can raise pH levels outside of the permitted range. Additional care should be taken when managing these materials to prevent them from coming into contact with stormwater flows, which could lead to exceedances of the General Permit requirements.

Suitable Applications

These procedures apply to all construction locations where concrete finishing operations are performed.

Limitations

- Runoff contact with concrete waste can raise pH levels in the water to environmentally harmful levels and trigger permit violations.

Implementation

- Collect and properly dispose of water from high-pressure water blasting operations.
- Collect contaminated water from blasting operations at the top of slopes. Transport or dispose of contaminated water while using BMPs such as those for erosion control. Refer to EC-9, Earth Dikes and Drainage Swales, EC-10, Velocity Dissipation Devices, and EC-11, Slope Drains.
- Direct water from blasting operations away from inlets and watercourses to collection areas for infiltration or other means of removal (dewatering). Refer to NS-2 Dewatering Operations.
- Protect inlets during sandblasting operations. Refer to SE-10, Storm Drain Inlet Protection.
- Refer to WM-8, Concrete Waste Management for disposal of concrete debris.
- Minimize the drift of dust and blast material as much as possible by keeping the blasting nozzle close to the surface.
- When blast residue contains a potentially hazardous waste, refer to WM-6, Hazardous Waste Management.

Education

- Educate employees, subcontractors, and suppliers on proper concrete finishing techniques to prevent contact with discharge as described herein.
- Arrange for the QSP or the appropriately trained contractor's superintendent or representative to oversee and enforce concrete finishing procedures.

Costs

These measures are generally of low cost.

Inspection and Maintenance

- Inspect and verify that activity-based BMPs are in place prior to the commencement of associated activities.
- BMPs must be inspected in accordance with General Permit requirements for the associated project type and risk level. It is recommended that at a minimum, BMPs be inspected weekly, prior to forecasted rain events, daily during extended rain events, and after the conclusion of rain events.
- Inspect BMPs subject to non-stormwater discharges daily while non-stormwater discharges occur.
- Sample non-stormwater discharges and stormwater runoff that contacts concrete dust and debris as required by the General Permit.

- Sweep or vacuum up debris from sandblasting at the end of each shift.
- At the end of each work shift, remove and contain liquid and solid waste from containment structures, if any, and from the general work area.
- Inspect containment structures for damage prior to use and prior to onset of forecasted rain.

References

Blueprint for a Clean Bay: Best Management Practices to Prevent Stormwater Pollution from Construction Related Activities; Santa Clara Valley Nonpoint Source Pollution Control Program, 1995.

Stormwater Quality Handbooks - Construction Site Best Management Practices (BMPs) Manual, State of California Department of Transportation (Caltrans), March 2003.

Stormwater Management for Construction Activities, Developing Pollution Prevention Plans and Best Management Practices, EPA 832-R-92005; USEPA, April 1992.

Material Delivery and Storage WM-1

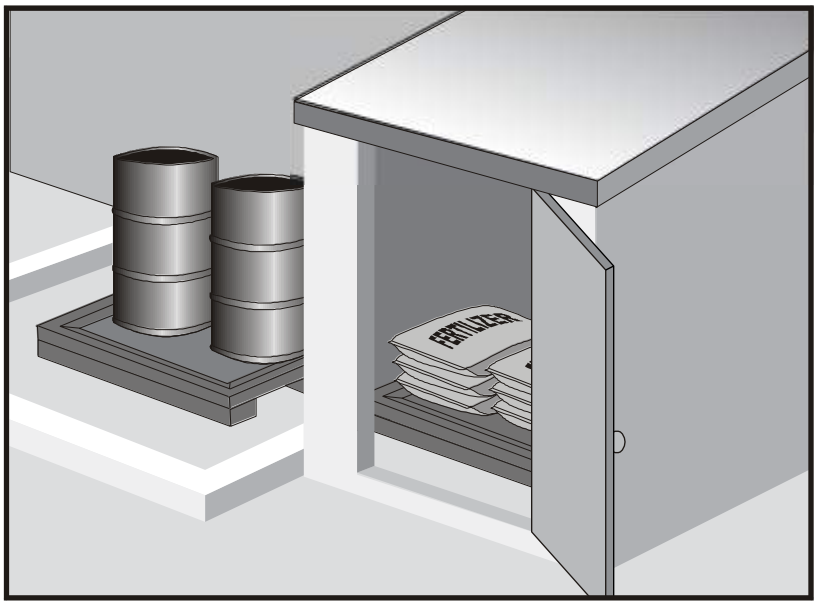

Categories		
EC	Erosion Control	
SE	Sediment Control	
TC	Tracking Control	
WE	Wind Erosion Control	
NS	Non-Stormwater Management Control	
WM	Waste Management and Materials Pollution Control	☑

Legend:
☑ **Primary Category**
☒ **Secondary Category**

Description and Purpose

Prevent, reduce, or eliminate the discharge of pollutants from material delivery and storage to the stormwater system or watercourses by minimizing the storage of hazardous materials onsite, storing materials in watertight containers and/or a completely enclosed designated area, installing secondary containment, conducting regular inspections, and training employees and subcontractors.

This best management practice covers only material delivery and storage. For other information on materials, see WM-2, Material Use, or WM-4, Spill Prevention and Control. For information on wastes, see the waste management BMPs in this section.

Suitable Applications

These procedures are suitable for use at all construction sites with delivery and storage of the following materials:

- Soil stabilizers and binders
- Pesticides and herbicides
- Fertilizers
- Detergents
- Plaster
- Petroleum products such as fuel, oil, and grease

Targeted Constituents	
Sediment	☑
Nutrients	☑
Trash	☑
Metals	☑
Bacteria	
Oil and Grease	☑
Organics	☑

Potential Alternatives

None

If User/Subscriber modifies this fact sheet in any way, the CASQA name/logo and footer below must be removed from each page and not appear on the modified version.

- Asphalt and concrete components
- Hazardous chemicals such as acids, lime, glues, adhesives, paints, solvents, and curing compounds
- Concrete compounds
- Other materials that may be detrimental if released to the environment

Limitations

- Space limitation may preclude indoor storage.
- Storage sheds often must meet building and fire code requirements.

Implementation

The following steps should be taken to minimize risk:

- Chemicals must be stored in water tight containers with appropriate secondary containment or in a storage shed.
- When a material storage area is located on bare soil, the area should be lined and bermed.
- Use containment pallets or other practical and available solutions, such as storing materials within newly constructed buildings or garages, to meet material storage requirements.
- Stack erodible landscape material on pallets and cover when not in use.
- Contain all fertilizers and other landscape materials when not in use.
- Temporary storage areas should be located away from vehicular traffic.
- Material Safety Data Sheets (MSDS) should be available on-site for all materials stored that have the potential to effect water quality.
- Construction site areas should be designated for material delivery and storage.
- Material delivery and storage areas should be located away from waterways, if possible.
    - Avoid transport near drainage paths or waterways.
    - Surround with earth berms or other appropriate containment BMP. See EC-9, Earth Dikes and Drainage Swales.
    - Place in an area that will be paved.
- Storage of reactive, ignitable, or flammable liquids must comply with the fire codes of your area. Contact the local Fire Marshal to review site materials, quantities, and proposed storage area to determine specific requirements. See the Flammable and Combustible Liquid Code, NFPA30.
- An up to date inventory of materials delivered and stored onsite should be kept.

- Hazardous materials storage onsite should be minimized.
- Hazardous materials should be handled as infrequently as possible.
- Keep ample spill cleanup supplies appropriate for the materials being stored. Ensure that cleanup supplies are in a conspicuous, labeled area.
- Employees and subcontractors should be trained on the proper material delivery and storage practices.
- Employees trained in emergency spill cleanup procedures must be present when dangerous materials or liquid chemicals are unloaded.
- If significant residual materials remain on the ground after construction is complete, properly remove and dispose of materials and any contaminated soil. See WM-7, Contaminated Soil Management. If the area is to be paved, pave as soon as materials are removed to stabilize the soil.

Material Storage Areas and Practices

- Liquids, petroleum products, and substances listed in 40 CFR Parts 110, 117, or 302 should be stored in approved containers and drums and should not be overfilled. Containers and drums should be placed in temporary containment facilities for storage.
- A temporary containment facility should provide for a spill containment volume able to contain precipitation from a 25-year storm event, plus the greater of 10% of the aggregate volume of all containers or 100% of the capacity of the largest container within its boundary, whichever is greater.
- A temporary containment facility should be impervious to the materials stored therein for a minimum contact time of 72 hours.
- A temporary containment facility should be maintained free of accumulated rainwater and spills. In the event of spills or leaks, accumulated rainwater and spills should be collected and placed into drums. These liquids should be handled as a hazardous waste unless testing determines them to be non-hazardous. All collected liquids or non-hazardous liquids should be sent to an approved disposal site.
- Sufficient separation should be provided between stored containers to allow for spill cleanup and emergency response access.
- Incompatible materials, such as chlorine and ammonia, should not be stored in the same temporary containment facility.
- Materials should be covered prior to, and during rain events.
- Materials should be stored in their original containers and the original product labels should be maintained in place in a legible condition. Damaged or otherwise illegible labels should be replaced immediately.

- Bagged and boxed materials should be stored on pallets and should not be allowed to accumulate on the ground. To provide protection from wind and rain throughout the rainy season, bagged and boxed materials should be covered during non-working days and prior to and during rain events.
- Stockpiles should be protected in accordance with WM-3, Stockpile Management.
- Materials should be stored indoors within existing structures or completely enclosed storage sheds when available.
- Proper storage instructions should be posted at all times in an open and conspicuous location.
- An ample supply of appropriate spill clean up material should be kept near storage areas.
- Also see WM-6, Hazardous Waste Management, for storing of hazardous wastes.

Material Delivery Practices

- Keep an accurate, up-to-date inventory of material delivered and stored onsite.
- Arrange for employees trained in emergency spill cleanup procedures to be present when dangerous materials or liquid chemicals are unloaded.

Spill Cleanup

- Contain and clean up any spill immediately.
- Properly remove and dispose of any hazardous materials or contaminated soil if significant residual materials remain on the ground after construction is complete. See WM-7, Contaminated Soil Management.
- See WM-4, Spill Prevention and Control, for spills of chemicals and/or hazardous materials.
- If spills or leaks of materials occur that are not contained and could discharge to surface waters, non-visible sampling of site discharge may be required. Refer to the General Permit or to your project specific Construction Site Monitoring Plan to determine if and where sampling is required.

Cost

- The largest cost of implementation may be in the construction of a materials storage area that is covered and provides secondary containment.

Inspection and Maintenance

- BMPs must be inspected in accordance with General Permit requirements for the associated project type and risk level. It is recommended that at a minimum, BMPs be inspected weekly, prior to forecasted rain events, daily during extended rain events, and after the conclusion of rain events.
- Keep storage areas clean and well organized, including a current list of all materials onsite.
- Inspect labels on containers for legibility and accuracy.

- Repair or replace perimeter controls, containment structures, covers, and liners as needed to maintain proper function.

References

Blueprint for a Clean Bay: Best Management Practices to Prevent Stormwater Pollution from Construction Related Activities; Santa Clara Valley Nonpoint Source Pollution Control Program, 1995.

Coastal Nonpoint Pollution Control Program: Program Development and Approval Guidance, Working Group Working Paper; USEPA, April 1992.

Stormwater Quality Handbooks - Construction Site Best Management Practices (BMPs) Manual, State of California Department of Transportation (Caltrans), March 2003.

Stormwater Management for Construction Activities; Developing Pollution Prevention Plans and Best Management Practice, EPA 832-R-92005; USEPA, April 1992.

Material Use WM-2

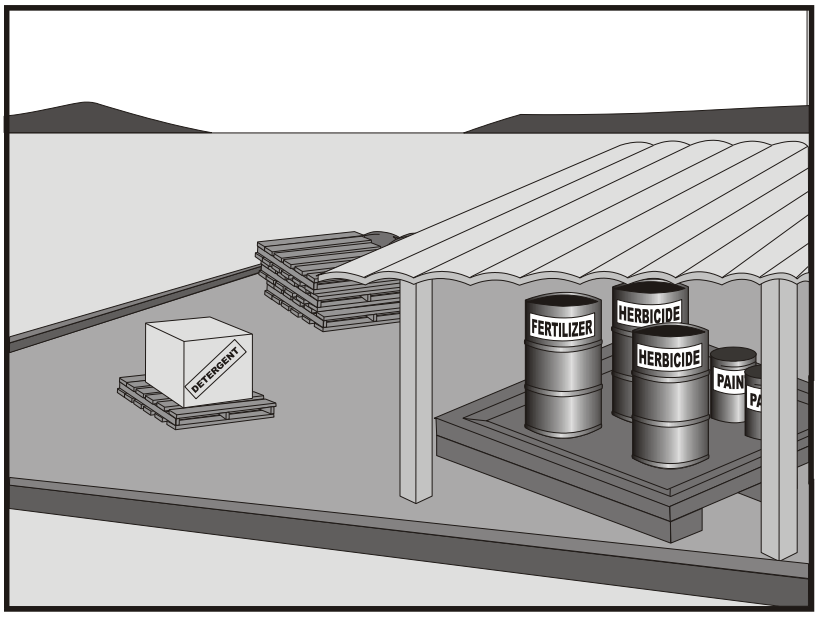

Description and Purpose

Prevent or reduce the discharge of pollutants to the storm drain system or watercourses from material use by using alternative products, minimizing hazardous material use onsite, and training employees and subcontractors.

Suitable Applications

This BMP is suitable for use at all construction projects. These procedures apply when the following materials are used or prepared onsite:

- Pesticides and herbicides
- Fertilizers
- Detergents
- Petroleum products such as fuel, oil, and grease
- Asphalt and other concrete components
- Other hazardous chemicals such as acids, lime, glues, adhesives, paints, solvents, and curing compounds
- Other materials that may be detrimental if released to the environment

Categories

EC	Erosion Control	
SE	Sediment Control	
TC	Tracking Control	
WE	Wind Erosion Control	
NS	Non-Stormwater Management Control	
WM	Waste Management and Materials Pollution Control	☑

Legend:

☑ **Primary Category**

☒ **Secondary Category**

Targeted Constituents

Sediment	☑
Nutrients	☑
Trash	☑
Metals	☑
Bacteria	
Oil and Grease	☑
Organics	☑

Potential Alternatives

None

If User/Subscriber modifies this fact sheet in any way, the CASQA name/logo and footer below must be removed from each page and not appear on the modified version.

Limitations

Safer alternative building and construction products may not be available or suitable in every instance.

Implementation

The following steps should be taken to minimize risk:

- Minimize use of hazardous materials onsite.
- Follow manufacturer instructions regarding uses, protective equipment, ventilation, flammability, and mixing of chemicals.
- Train personnel who use pesticides. The California Department of Pesticide Regulation and county agricultural commissioners license pesticide dealers, certify pesticide applicators, and conduct onsite inspections.
- The preferred method of termiticide application is soil injection near the existing or proposed structure foundation/slab; however, if not feasible, soil drench application of termiticides should follow EPA label guidelines and the following recommendations (most of which are applicable to most pesticide applications):
  - Do not treat soil that is water-saturated or frozen.
  - Application shall not commence within 24-hours of a predicted precipitation event with a 40% or greater probability. Weather tracking must be performed on a daily basis prior to termiticide application and during the period of termiticide application.
  - Do not allow treatment chemicals to runoff from the target area. Apply proper quantity to prevent excess runoff. Provide containment for and divert stormwater from application areas using berms or diversion ditches during application.
  - Dry season: Do not apply within 10 feet of storm drains. Do not apply within 25 feet of aquatic habitats (such as, but not limited to, lakes; reservoirs; rivers; permanent streams; marshes or ponds; estuaries; and commercial fish farm ponds).
  - Wet season: Do not apply within 50 feet of storm drains or aquatic habitats (such as, but not limited to, lakes; reservoirs; rivers; permanent streams; marshes or ponds; estuaries; and commercial fish farm ponds) unless a vegetative buffer is present (if so, refer to dry season requirements).
  - Do not make on-grade applications when sustained wind speeds are above 10 mph (at application site) at nozzle end height.
  - Cover treatment site prior to a rain event in order to prevent run-off of the pesticide into non-target areas. The treated area should be limited to a size that can be backfilled and/or covered by the end of the work shift. Backfilling or covering of the treated area shall be done by the end of the same work shift in which the application is made.
  - The applicator must either cover the soil him/herself or provide written notification of the above requirement to the contractor on site and to the person commissioning the

application (if different than the contractor). If notice is provided to the contractor or the person commissioning the application, then they are responsible under the Federal Insecticide Fungicide, and Rodenticide Act (FIFRA) to ensure that: 1) if the concrete slab cannot be poured over the treated soil within 24 hours of application, the treated soil is covered with a waterproof covering (such as polyethylene sheeting), and 2) the treated soil is covered if precipitation is predicted to occur before the concrete slab is scheduled to be poured.

- Do not over-apply fertilizers, herbicides, and pesticides. Prepare only the amount needed. Follow the recommended usage instructions. Over-application is expensive and environmentally harmful. Unless on steep slopes, till fertilizers into the soil rather than hydraulic application. Apply surface dressings in several smaller applications, as opposed to one large application, to allow time for infiltration and to avoid excess material being carried offsite by runoff. Do not apply these chemicals before predicted rainfall.
- Train employees and subcontractors in proper material use.
- Supply Material Safety Data Sheets (MSDS) for all materials.
- Dispose of latex paint and paint cans, used brushes, rags, absorbent materials, and drop cloths, when thoroughly dry and are no longer hazardous, with other construction debris.
- Do not remove the original product label; it contains important safety and disposal information. Use the entire product before disposing of the container.
- Mix paint indoors or in a containment area. Never clean paintbrushes or rinse paint containers into a street, gutter, storm drain, or watercourse. Dispose of any paint thinners, residue, and sludge(s) that cannot be recycled, as hazardous waste.
- For water-based paint, clean brushes to the extent practicable, and rinse to a drain leading to a sanitary sewer where permitted or contain for proper disposal off site. For oil-based paints, clean brushes to the extent practicable, and filter and reuse thinners and solvents.
- Use recycled and less hazardous products when practical. Recycle residual paints, solvents, non-treated lumber, and other materials.
- Use materials only where and when needed to complete the construction activity. Use safer alternative materials as much as possible. Reduce or eliminate use of hazardous materials onsite when practical.
- Document the location, time, chemicals applied, and applicator's name and qualifications.
- Keep an ample supply of spill clean up material near use areas. Train employees in spill clean up procedures.
- Avoid exposing applied materials to rainfall and runoff unless sufficient time has been allowed for them to dry.
- Discontinue use of erodible landscape material within 2 days prior to a forecasted rain event and materials should be covered and/or bermed.

- Provide containment for material use areas such as masons' areas or paint mixing/preparation areas to prevent materials/pollutants from entering stormwater.

Costs

All of the above are low cost measures.

Inspection and Maintenance

- Inspect and verify that activity-based BMPs are in place prior to the commencement of associated activities.
- BMPs must be inspected in accordance with General Permit requirements for the associated project type and risk level. It is recommended that at a minimum, BMPs be inspected weekly, prior to forecasted rain events, daily during extended rain events, and after the conclusion of rain events.
- Ensure employees and subcontractors throughout the job are using appropriate practices.

References

Blueprint for a Clean Bay: Best Management Practices to Prevent Stormwater Pollution from Construction Related Activities; Santa Clara Valley Nonpoint Source Pollution Control Program, 1995.

Coastal Nonpoint Pollution Control Program: Program Development and Approval Guidance, Working Group Working Paper; USEPA, April 1992.

Comments on Risk Assessments Risk Reduction Options for Cypermethrin: Docket No. OPP–2005–0293; California Stormwater Quality Association (CASQA) letter to USEPA, 2006.Environmental Hazard and General Labeling for Pyrethroid Non-Agricultural Outdoor Products, EPA-HQ-OPP-2008-0331-0021; USEPA, 2008.

Stormwater Quality Handbooks - Construction Site Best Management Practices (BMPs) Manual, State of California Department of Transportation (Caltrans), March 2003.

Stormwater Management for Construction Activities; Developing Pollution Prevention Plans and Best Management Practice, EPA 832-R-92005; USEPA, April 1992.

Stockpile Management WM-3

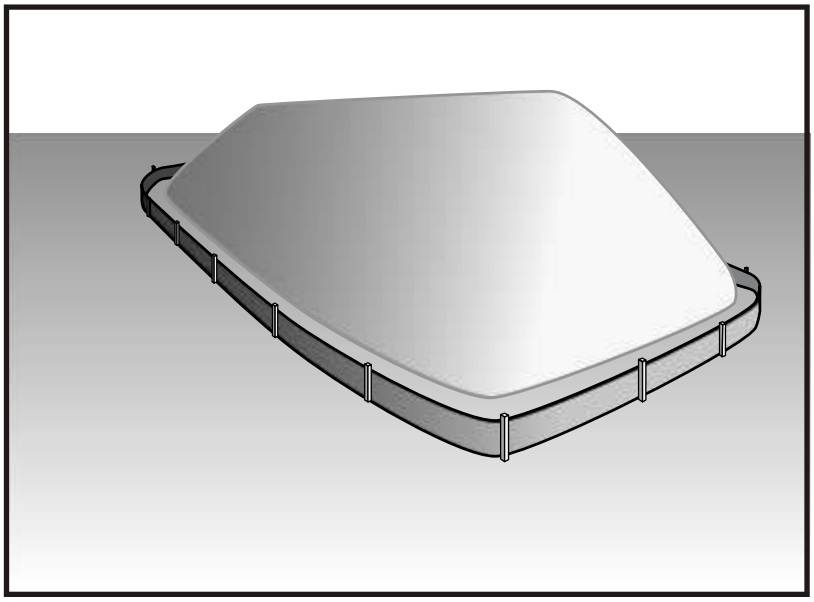

Treat Categories		
EC	Erosion Control	
SE	Sediment Control	☒
TC	Tracking Control	
WE	Wind Erosion Control	
NS	Non-Stormwater Management Control	☒
WM	Waste Management and Materials Pollution Control	☑

Legend:
☑ **Primary Category**
☒ **Secondary Category**

Description and Purpose

Stockpile management procedures and practices are designed to reduce or eliminate air and stormwater pollution from stockpiles of soil, soil amendments, sand, paving materials such as Portland cement concrete (PCC) rubble, asphalt concrete (AC), asphalt concrete rubble, aggregate base, aggregate sub base or pre-mixed aggregate, asphalt minder (so called "cold mix" asphalt), and pressure treated wood.

Suitable Applications

Implement in all projects that stockpile soil and other loose materials.

Limitations

- Plastic sheeting as a stockpile protection is temporary and hard to manage in windy conditions. Where plastic is used, consider use of plastic tarps with nylon reinforcement which may be more durable than standard sheeting.
- Plastic sheeting can increase runoff volume due to lack of infiltration and potentially cause perimeter control failure.
- Plastic sheeting breaks down faster in sunlight.
- The use of Plastic materials and photodegradable plastics should be avoided.

Implementation

Protection of stockpiles is a year-round requirement. To properly manage stockpiles:

Targeted Constituents	
Sediment	☑
Nutrients	☑
Trash	☑
Metals	☑
Bacteria	
Oil and Grease	☑
Organics	☑

Potential Alternatives

None

If User/Subscriber modifies this fact sheet in any way, the CASQA name/logo and footer below must be removed from each page and not appear on the modified version.

- On larger sites, a minimum of 50 ft separation from concentrated flows of stormwater, drainage courses, and inlets is recommended.
- After 14 days of inactivity, a stockpile is non-active and requires further protection described below. All stockpiles are required to be protected as non-active stockpiles immediately if they are not scheduled to be used within 14 days.
- Protect all stockpiles from stormwater run-on using temporary perimeter sediment barriers such as compost berms (SE-13), temporary silt dikes (SE-12), fiber rolls (SE-5), silt fences (SE-1), sandbags (SE-8), gravel bags (SE-6), or biofilter bags (SE-14). Refer to the individual fact sheet for each of these controls for installation information.
- Implement wind erosion control practices as appropriate on all stockpiled material. For specific information, see WE-1, Wind Erosion Control.
- Manage stockpiles of contaminated soil in accordance with WM-7, Contaminated Soil Management.
- Place bagged materials on pallets and under cover.
- Ensure that stockpile coverings are installed securely to protect from wind and rain.
- Some plastic covers withstand weather and sunlight better than others. Select cover materials or methods based on anticipated duration of use.

Protection of Non-Active Stockpiles

A stockpile is considered non-active if it either is not used for 14 days or if it is scheduled not to be used for 14 days or more. Stockpiles need to be protected immediately if they are not scheduled to be used within 14 days. Non-active stockpiles of the identified materials should be protected as follows:

Soil stockpiles

- Soil stockpiles should be covered or protected with soil stabilization measures and a temporary perimeter sediment barrier at all times.
- Temporary vegetation should be considered for topsoil piles that will be stockpiled for extended periods.

Stockpiles of Portland cement concrete rubble, asphalt concrete, asphalt concrete rubble, aggregate base, or aggregate sub base

- Stockpiles should be covered and protected with a temporary perimeter sediment barrier at all times.

Stockpiles of "cold mix"

- Cold mix stockpiles should be placed on and covered with plastic sheeting or comparable material at all times and surrounded by a berm.

Stockpiles of fly ash, stucco, hydrated lime

- Stockpiles of materials that may raise the pH of runoff (i.e., basic materials) should be covered with plastic and surrounded by a berm.

Stockpiles/Storage of treated wood

- Treated wood should be covered with plastic sheeting or comparable material at all times and surrounded by a berm.

Protection of Active Stockpiles

A stockpile is active when it is being used or is scheduled to be used within 14 days of the previous use. Active stockpiles of the identified materials should be protected as follows:

- All stockpiles should be covered and protected with a temporary linear sediment barrier prior to the onset of precipitation.
- Stockpiles of "cold mix" and treated wood, and basic materials should be placed on and covered with plastic sheeting or comparable material and surrounded by a berm prior to the onset of precipitation.
- The downstream perimeter of an active stockpile should be protected with a linear sediment barrier or berm and runoff should be diverted around or away from the stockpile on the upstream perimeter.

Costs

For cost information associated with stockpile protection refer to the individual erosion or sediment control BMP fact sheet considered for implementation (For example, refer to SE-1 Silt Fence for installation of silt fence around the perimeter of a stockpile.)

Inspection and Maintenance

- Stockpiles must be inspected in accordance with General Permit requirements for the associated project type and risk level. It is recommended that at a minimum, BMPs be inspected weekly, prior to forecasted rain events, daily during extended rain events, and after the conclusion of rain events.
- It may be necessary to inspect stockpiles covered with plastic sheeting more frequently during certain conditions (for example, high winds or extreme heat).
- Repair and/or replace perimeter controls and covers as needed to keep them functioning properly.
- Sediment shall be removed when it reaches one-third of the barrier height.

References

Stormwater Quality Handbooks - Construction Site Best Management Practices (BMPs) Manual, State of California Department of Transportation (Caltrans), March 2003.

Spill Prevention and Control WM-4

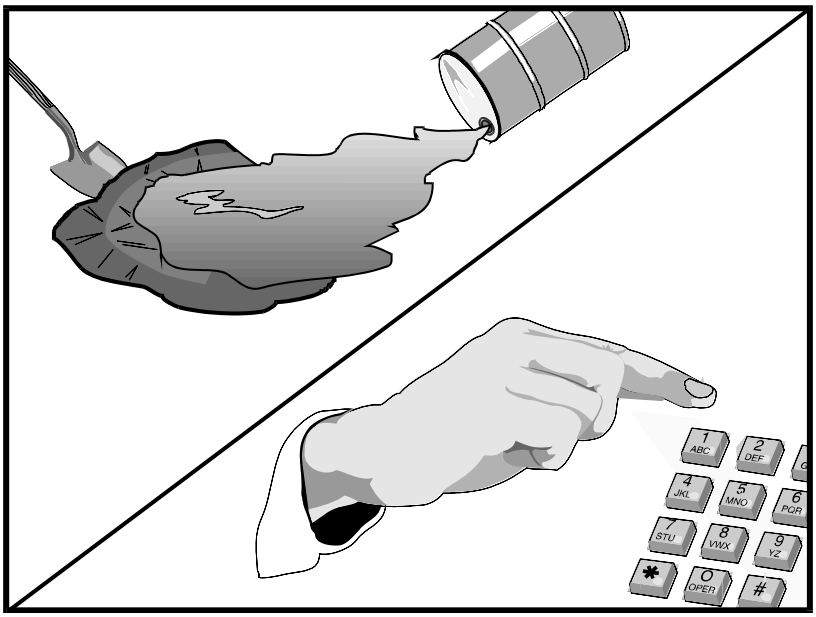

Description and Purpose

Prevent or reduce the discharge of pollutants to drainage systems or watercourses from leaks and spills by reducing the chance for spills, stopping the source of spills, containing and cleaning up spills, properly disposing of spill materials, and training employees.

This best management practice covers only spill prevention and control. However, WM-1, Materials Delivery and Storage, and WM-2, Material Use, also contain useful information, particularly on spill prevention. For information on wastes, see the waste management BMPs in this section.

Suitable Applications

This BMP is suitable for all construction projects. Spill control procedures are implemented anytime chemicals or hazardous substances are stored on the construction site, including the following materials:

- Soil stabilizers/binders
- Dust palliatives
- Herbicides
- Growth inhibitors
- Fertilizers
- Deicing/anti-icing chemicals

Categories

EC	Erosion Control	
SE	Sediment Control	
TC	Tracking Control	
WE	Wind Erosion Control	
NS	Non-Stormwater Management Control	
WM	Waste Management and Materials Pollution Control	☑

Legend:

☑ **Primary Objective**

☒ **Secondary Objective**

Targeted Constituents

Sediment	☑
Nutrients	☑
Trash	☑
Metals	☑
Bacteria	
Oil and Grease	☑
Organics	☑

Potential Alternatives

None

If User/Subscriber modifies this fact sheet in any way, the CASQA name/logo and footer below must be removed from each page and not appear on the modified version.

- Fuels
- Lubricants
- Other petroleum distillates

Limitations

- In some cases, it may be necessary to use a private spill cleanup company.
- This BMP applies to spills caused by the contractor and subcontractors.
- Procedures and practices presented in this BMP are general. Contractor should identify appropriate practices for the specific materials used or stored onsite

Implementation

The following steps will help reduce the stormwater impacts of leaks and spills:

Education

- Be aware that different materials pollute in different amounts. Make sure that each employee knows what a "significant spill" is for each material they use, and what is the appropriate response for "significant" and "insignificant" spills.
- Educate employees and subcontractors on potential dangers to humans and the environment from spills and leaks.
- Hold regular meetings to discuss and reinforce appropriate disposal procedures (incorporate into regular safety meetings).
- Establish a continuing education program to indoctrinate new employees.
- Have contractor's superintendent or representative oversee and enforce proper spill prevention and control measures.

General Measures

- To the extent that the work can be accomplished safely, spills of oil, petroleum products, substances listed under 40 CFR parts 110,117, and 302, and sanitary and septic wastes should be contained and cleaned up immediately.
- Store hazardous materials and wastes in covered containers and protect from vandalism.
- Place a stockpile of spill cleanup materials where it will be readily accessible.
- Train employees in spill prevention and cleanup.
- Designate responsible individuals to oversee and enforce control measures.
- Spills should be covered and protected from stormwater runon during rainfall to the extent that it doesn't compromise clean up activities.
- Do not bury or wash spills with water.

- Store and dispose of used clean up materials, contaminated materials, and recovered spill material that is no longer suitable for the intended purpose in conformance with the provisions in applicable BMPs.
- Do not allow water used for cleaning and decontamination to enter storm drains or watercourses. Collect and dispose of contaminated water in accordance with WM-10, Liquid Waste Management.
- Contain water overflow or minor water spillage and do not allow it to discharge into drainage facilities or watercourses.
- Place proper storage, cleanup, and spill reporting instructions for hazardous materials stored or used on the project site in an open, conspicuous, and accessible location.
- Keep waste storage areas clean, well organized, and equipped with ample cleanup supplies as appropriate for the materials being stored. Perimeter controls, containment structures, covers, and liners should be repaired or replaced as needed to maintain proper function.

Cleanup

- Clean up leaks and spills immediately.
- Use a rag for small spills on paved surfaces, a damp mop for general cleanup, and absorbent material for larger spills. If the spilled material is hazardous, then the used cleanup materials are also hazardous and must be sent to either a certified laundry (rags) or disposed of as hazardous waste.
- Never hose down or bury dry material spills. Clean up as much of the material as possible and dispose of properly. See the waste management BMPs in this section for specific information.

Minor Spills

- Minor spills typically involve small quantities of oil, gasoline, paint, etc. which can be controlled by the first responder at the discovery of the spill.
- Use absorbent materials on small spills rather than hosing down or burying the spill.
- Absorbent materials should be promptly removed and disposed of properly.
- Follow the practice below for a minor spill:
  - Contain the spread of the spill.
  - Recover spilled materials.
  - Clean the contaminated area and properly dispose of contaminated materials.

Semi-Significant Spills

- Semi-significant spills still can be controlled by the first responder along with the aid of other personnel such as laborers and the foreman, etc. This response may require the cessation of all other activities.

- Spills should be cleaned up immediately:
  - Contain spread of the spill.
  - Notify the project foreman immediately.
  - If the spill occurs on paved or impermeable surfaces, clean up using "dry" methods (absorbent materials, cat litter and/or rags). Contain the spill by encircling with absorbent materials and do not let the spill spread widely.
  - If the spill occurs in dirt areas, immediately contain the spill by constructing an earthen dike. Dig up and properly dispose of contaminated soil.
  - If the spill occurs during rain, cover spill with tarps or other material to prevent contaminating runoff.

Significant/Hazardous Spills

- For significant or hazardous spills that cannot be controlled by personnel in the immediate vicinity, the following steps should be taken:
  - Notify the local emergency response by dialing 911. In addition to 911, the contractor will notify the proper county officials. It is the contractor's responsibility to have all emergency phone numbers at the construction site.
  - Notify the Governor's Office of Emergency Services Warning Center, (916) 845-8911.
  - For spills of federal reportable quantities, in conformance with the requirements in 40 CFR parts 110,119, and 302, the contractor should notify the National Response Center at (800) 424-8802.
  - Notification should first be made by telephone and followed up with a written report.
  - The services of a spill's contractor or a Haz-Mat team should be obtained immediately. Construction personnel should not attempt to clean up until the appropriate and qualified staffs have arrived at the job site.
  - Other agencies which may need to be consulted include, but are not limited to, the Fire Department, the Public Works Department, the Coast Guard, the Highway Patrol, the City/County Police Department, Department of Toxic Substances, California Division of Oil and Gas, Cal/OSHA, etc.

Reporting

- Report significant spills to local agencies, such as the Fire Department; they can assist in cleanup.
- Federal regulations require that any significant oil spill into a water body or onto an adjoining shoreline be reported to the National Response Center (NRC) at 800-424-8802 (24 hours).

Use the following measures related to specific activities:

Vehicle and Equipment Maintenance

- If maintenance must occur onsite, use a designated area and a secondary containment, located away from drainage courses, to prevent the runon of stormwater and the runoff of spills.
- Regularly inspect onsite vehicles and equipment for leaks and repair immediately
- Check incoming vehicles and equipment (including delivery trucks, and employee and subcontractor vehicles) for leaking oil and fluids. Do not allow leaking vehicles or equipment onsite.
- Always use secondary containment, such as a drain pan or drop cloth, to catch spills or leaks when removing or changing fluids.
- Place drip pans or absorbent materials under paving equipment when not in use.
- Use absorbent materials on small spills rather than hosing down or burying the spill. Remove the absorbent materials promptly and dispose of properly.
- Promptly transfer used fluids to the proper waste or recycling drums. Don't leave full drip pans or other open containers lying around
- Oil filters disposed of in trashcans or dumpsters can leak oil and pollute stormwater. Place the oil filter in a funnel over a waste oil-recycling drum to drain excess oil before disposal. Oil filters can also be recycled. Ask the oil supplier or recycler about recycling oil filters.
- Store cracked batteries in a non-leaking secondary container. Do this with all cracked batteries even if you think all the acid has drained out. If you drop a battery, treat it as if it is cracked. Put it into the containment area until you are sure it is not leaking.

Vehicle and Equipment Fueling

- If fueling must occur onsite, use designate areas, located away from drainage courses, to prevent the runon of stormwater and the runoff of spills.
- Discourage "topping off" of fuel tanks.
- Always use secondary containment, such as a drain pan, when fueling to catch spills/ leaks.

Costs

Prevention of leaks and spills is inexpensive. Treatment and/ or disposal of contaminated soil or water can be quite expensive.

Inspection and Maintenance

- Inspect and verify that activity–based BMPs are in place prior to the commencement of associated activities. While activities associated with the BMP are under way, inspect BMPs in accordance with General Permit requirements for the associated project type and risk level. It is recommended that at a minimum, BMPs be inspected weekly, prior to forecasted rain events, daily during extended rain events, and after the conclusion of rain events.

- Inspect BMPs subject to non-stormwater discharge daily while non-stormwater discharges occur.
- Keep ample supplies of spill control and cleanup materials onsite, near storage, unloading, and maintenance areas.
- Update your spill prevention and control plan and stock cleanup materials as changes occur in the types of chemicals onsite.

References

Blueprint for a Clean Bay: Best Management Practices to Prevent Stormwater Pollution from Construction Related Activities; Santa Clara Valley Nonpoint Source Pollution Control Program, 1995.

Stormwater Quality Handbooks - Construction Site Best Management Practices (BMPs) Manual, State of California Department of Transportation (Caltrans), November 2000.

Stormwater Management for Construction Activities; Developing Pollution Prevention Plans and Best Management Practice, EPA 832-R-92005; USEPA, April 1992.

Solid Waste Management WM-5

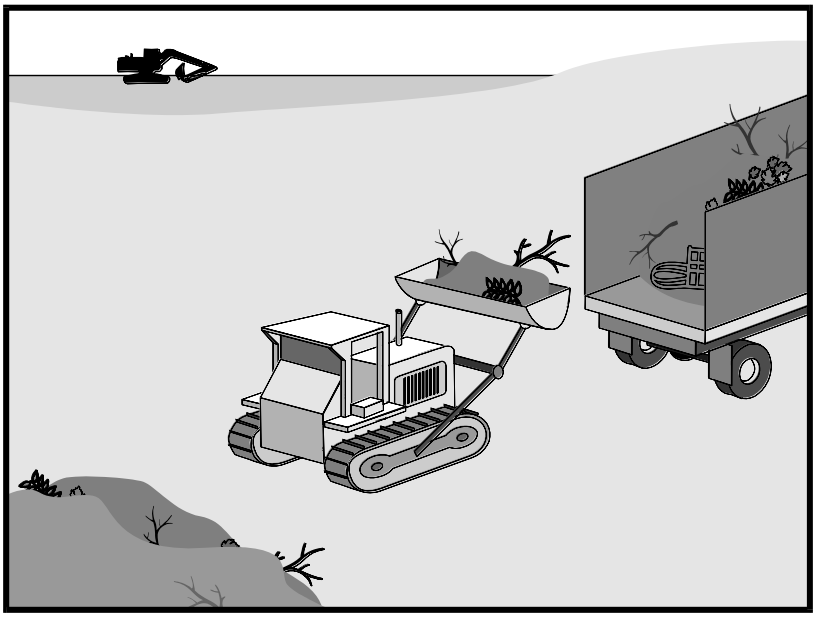

Categories		
EC	Erosion Control	
SE	Sediment Control	
TC	Tracking Control	
WE	Wind Erosion Control	
NS	Non-Stormwater Management Control	
WM	Waste Management and Materials Pollution Control	☑

Legend:
☑ **Primary Objective**
☒ **Secondary Objective**

Targeted Constituents	
Sediment	☑
Nutrients	☑
Trash	☑
Metals	☑
Bacteria	
Oil and Grease	☑
Organics	☑

Potential Alternatives

None

If User/Subscriber modifies this fact sheet in any way, the CASQA name/logo and footer below must be removed from each page and not appear on the modified version.

Description and Purpose

Solid waste management procedures and practices are designed to prevent or reduce the discharge of pollutants to stormwater from solid or construction waste by providing designated waste collection areas and containers, arranging for regular disposal, and training employees and subcontractors.

Suitable Applications

This BMP is suitable for construction sites where the following wastes are generated or stored:

- Solid waste generated from trees and shrubs removed during land clearing, demolition of existing structures (rubble), and building construction
- Packaging materials including wood, paper, and plastic
- Scrap or surplus building materials including scrap metals, rubber, plastic, glass pieces, and masonry products
- Domestic wastes including food containers such as beverage cans, coffee cups, paper bags, plastic wrappers, and cigarettes
- Construction wastes including brick, mortar, timber, steel and metal scraps, pipe and electrical cuttings, non-hazardous equipment parts, styrofoam and other materials used to transport and package construction materials

CASQA
CALIFORNIA STORMWATER QUALITY ASSOCIATION

- Highway planting wastes, including vegetative material, plant containers, and packaging materials

Limitations

Temporary stockpiling of certain construction wastes may not necessitate stringent drainage related controls during the non-rainy season or in desert areas with low rainfall.

Implementation

The following steps will help keep a clean site and reduce stormwater pollution:

- Select designated waste collection areas onsite.
- Inform trash-hauling contractors that you will accept only watertight dumpsters for onsite use. Inspect dumpsters for leaks and repair any dumpster that is not watertight.
- Locate containers in a covered area or in a secondary containment.
- Provide an adequate number of containers with lids or covers that can be placed over the container to keep rain out or to prevent loss of wastes when it is windy.
- Cover waste containers at the end of each work day and when it is raining.
- Plan for additional containers and more frequent pickup during the demolition phase of construction.
- Collect site trash daily, especially during rainy and windy conditions.
- Remove this solid waste promptly since erosion and sediment control devices tend to collect litter.
- Make sure that toxic liquid wastes (used oils, solvents, and paints) and chemicals (acids, pesticides, additives, curing compounds) are not disposed of in dumpsters designated for construction debris.
- Do not hose out dumpsters on the construction site. Leave dumpster cleaning to the trash hauling contractor.
- Arrange for regular waste collection before containers overflow.
- Clean up immediately if a container does spill.
- Make sure that construction waste is collected, removed, and disposed of only at authorized disposal areas.

Education

- Have the contractor's superintendent or representative oversee and enforce proper solid waste management procedures and practices.
- Instruct employees and subcontractors on identification of solid waste and hazardous waste.
- Educate employees and subcontractors on solid waste storage and disposal procedures.

- Hold regular meetings to discuss and reinforce disposal procedures (incorporate into regular safety meetings).
- Require that employees and subcontractors follow solid waste handling and storage procedures.
- Prohibit littering by employees, subcontractors, and visitors.
- Minimize production of solid waste materials wherever possible.

Collection, Storage, and Disposal

- Littering on the project site should be prohibited.
- To prevent clogging of the storm drainage system, litter and debris removal from drainage grates, trash racks, and ditch lines should be a priority.
- Trash receptacles should be provided in the contractor's yard, field trailer areas, and at locations where workers congregate for lunch and break periods.
- Litter from work areas within the construction limits of the project site should be collected and placed in watertight dumpsters at least weekly, regardless of whether the litter was generated by the contractor, the public, or others. Collected litter and debris should not be placed in or next to drain inlets, stormwater drainage systems, or watercourses.
- Dumpsters of sufficient size and number should be provided to contain the solid waste generated by the project.
- Full dumpsters should be removed from the project site and the contents should be disposed of by the trash hauling contractor.
- Construction debris and waste should be removed from the site biweekly or more frequently as needed.
- Construction material visible to the public should be stored or stacked in an orderly manner.
- Stormwater runon should be prevented from contacting stored solid waste through the use of berms, dikes, or other temporary diversion structures or through the use of measures to elevate waste from site surfaces.
- Solid waste storage areas should be located at least 50 ft from drainage facilities and watercourses and should not be located in areas prone to flooding or ponding.
- Except during fair weather, construction and highway planting waste not stored in watertight dumpsters should be securely covered from wind and rain by covering the waste with tarps or plastic.
- Segregate potentially hazardous waste from non-hazardous construction site waste.
- Make sure that toxic liquid wastes (used oils, solvents, and paints) and chemicals (acids, pesticides, additives, curing compounds) are not disposed of in dumpsters designated for construction debris.

- For disposal of hazardous waste, see WM-6, Hazardous Waste Management. Have hazardous waste hauled to an appropriate disposal and/or recycling facility.
- Salvage or recycle useful vegetation debris, packaging and surplus building materials when practical. For example, trees and shrubs from land clearing can be used as a brush barrier, or converted into wood chips, then used as mulch on graded areas. Wood pallets, cardboard boxes, and construction scraps can also be recycled.

Costs

All of the above are low cost measures.

Inspection and Maintenance

- Inspect and verify that activity–based BMPs are in place prior to the commencement of associated activities. While activities associated with the BMP are under way, inspect BMPs in accordance with General Permit requirements for the associated project type and risk level. It is recommended that at a minimum, BMPs be inspected weekly, prior to forecasted rain events, daily during extended rain events, and after the conclusion of rain events.
- Inspect BMPs subject to non-stormwater discharge daily while non-stormwater discharges occur
- Inspect construction waste area regularly.
- Arrange for regular waste collection.

References

Processes, Procedures and Methods to Control Pollution Resulting from All Construction Activity, 430/9-73-007, USEPA, 1973.

Stormwater Quality Handbooks - Construction Site Best Management Practices (BMPs) Manual, State of California Department of Transportation (Caltrans), November 2000.

Stormwater Management for Construction Activities; Developing Pollution Prevention Plans and Best Management Practice, EPA 832-R-92005; USEPA, April 1992.

Hazardous Waste Management WM-6

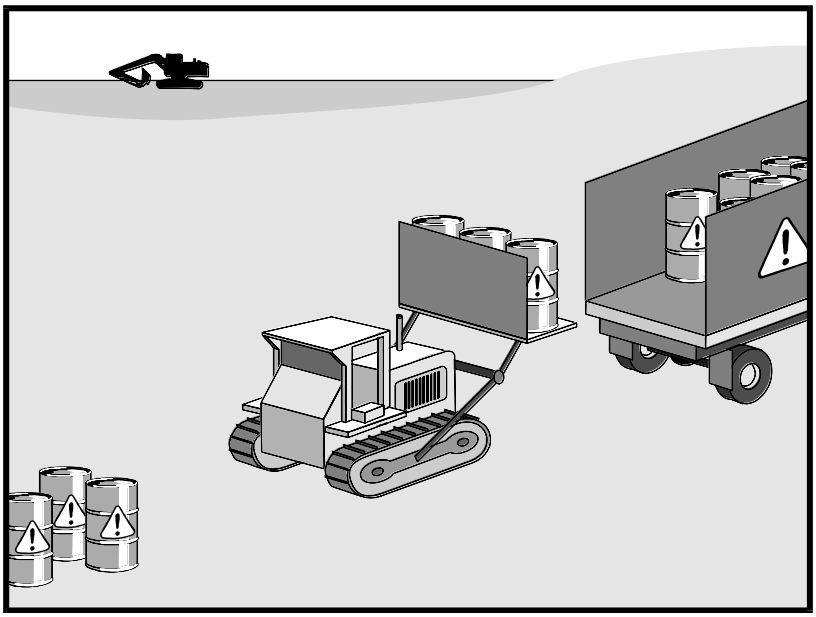

Categories		
EC	Erosion Control	
SE	Sediment Control	
TC	Tracking Control	
WE	Wind Erosion Control	
NS	Non-Stormwater Management Control	
WM	Waste Management and Materials Pollution Control	☑

Legend:
☑ **Primary Objective**
☒ **Secondary Objective**

Targeted Constituents	
Sediment	
Nutrients	☑
Trash	☑
Metals	☑
Bacteria	☑
Oil and Grease	☑
Organics	☑

Potential Alternatives

None

If User/Subscriber modifies this fact sheet in any way, the CASQA name/logo and footer below must be removed from each page and not appear on the modified version.

Description and Purpose

Prevent or reduce the discharge of pollutants to stormwater from hazardous waste through proper material use, waste disposal, and training of employees and subcontractors.

Suitable Applications

This best management practice (BMP) applies to all construction projects. Hazardous waste management practices are implemented on construction projects that generate waste from the use of:

- Petroleum Products
- Asphalt Products
- Concrete Curing Compounds
- Pesticides
- Palliatives
- Acids
- Septic Wastes
- Paints
- Stains
- Solvents
- Wood Preservatives
- Roofing Tar
- Any materials deemed a hazardous waste in California, Title 22 Division 4.5, or listed in 40 CFR Parts 110, 117, 261, or 302

In addition, sites with existing structures may contain wastes, which must be disposed of in accordance with federal, state, and local regulations. These wastes include:

- Sandblasting grit mixed with lead-, cadmium-, or chromium-based paints
- Asbestos
- PCBs (particularly in older transformers)

Limitations

- Hazardous waste that cannot be reused or recycled must be disposed of by a licensed hazardous waste hauler.
- Nothing in this BMP relieves the contractor from responsibility for compliance with federal, state, and local laws regarding storage, handling, transportation, and disposal of hazardous wastes.
- This BMP does not cover aerially deposited lead (ADL) soils. For ADL soils refer to WM-7, Contaminated Soil Management.

Implementation

The following steps will help reduce stormwater pollution from hazardous wastes:

Material Use

- Wastes should be stored in sealed containers constructed of a suitable material and should be labeled as required by Title 22 CCR, Division 4.5 and 49 CFR Parts 172, 173, 178, and 179.
- All hazardous waste should be stored, transported, and disposed as required in Title 22 CCR, Division 4.5 and 49 CFR 261-263.
- Waste containers should be stored in temporary containment facilities that should comply with the following requirements:
    - Temporary containment facility should provide for a spill containment volume equal to 1.5 times the volume of all containers able to contain precipitation from a 25-year storm event, plus the greater of 10% of the aggregate volume of all containers or 100% of the capacity of the largest tank within its boundary, whichever is greater.
    - Temporary containment facility should be impervious to the materials stored there for a minimum contact time of 72 hours.
    - Temporary containment facilities should be maintained free of accumulated rainwater and spills. In the event of spills or leaks, accumulated rainwater and spills should be placed into drums after each rainfall. These liquids should be handled as a hazardous waste unless testing determines them to be non-hazardous. Non-hazardous liquids should be sent to an approved disposal site.
    - Sufficient separation should be provided between stored containers to allow for spill cleanup and emergency response access.

  - Incompatible materials, such as chlorine and ammonia, should not be stored in the same temporary containment facility.

  - Throughout the rainy season, temporary containment facilities should be covered during non-working days, and prior to rain events. Covered facilities may include use of plastic tarps for small facilities or constructed roofs with overhangs.

- Drums should not be overfilled, and wastes should not be mixed.

- Unless watertight, containers of dry waste should be stored on pallets.

- Do not over-apply herbicides and pesticides. Prepare only the amount needed. Follow the recommended usage instructions. Over application is expensive and environmentally harmful. Apply surface dressings in several smaller applications, as opposed to one large application. Allow time for infiltration and avoid excess material being carried offsite by runoff. Do not apply these chemicals just before it rains. People applying pesticides must be certified in accordance with federal and state regulations.

- Paint brushes and equipment for water and oil-based paints should be cleaned within a contained area and should not be allowed to contaminate site soils, watercourses, or drainage systems. Waste paints, thinners, solvents, residues, and sludges that cannot be recycled or reused should be disposed of as hazardous waste. When thoroughly dry, latex paint and paint cans, used brushes, rags, absorbent materials, and drop cloths should be disposed of as solid waste.

- Do not clean out brushes or rinse paint containers into the dirt, street, gutter, storm drain, or stream. “Paint out” brushes as much as possible. Rinse water-based paints to the sanitary sewer. Filter and reuse thinners and solvents. Dispose of excess oil-based paints and sludge as hazardous waste.

- The following actions should be taken with respect to temporary contaminant:

  - Ensure that adequate hazardous waste storage volume is available.

  - Ensure that hazardous waste collection containers are conveniently located.

  - Designate hazardous waste storage areas onsite away from storm drains or watercourses and away from moving vehicles and equipment to prevent accidental spills.

  - Minimize production or generation of hazardous materials and hazardous waste on the job site.

  - Use containment berms in fueling and maintenance areas and where the potential for spills is high.

  - Segregate potentially hazardous waste from non-hazardous construction site debris.

  - Keep liquid or semi-liquid hazardous waste in appropriate containers (closed drums or similar) and under cover.

- Clearly label all hazardous waste containers with the waste being stored and the date of accumulation.
- Place hazardous waste containers in secondary containment.
- Do not allow potentially hazardous waste materials to accumulate on the ground.
- Do not mix wastes.
- Use all of the product before disposing of the container.
- Do not remove the original product label; it contains important safety and disposal information.

Waste Recycling Disposal

- Select designated hazardous waste collection areas onsite.
- Hazardous materials and wastes should be stored in covered containers and protected from vandalism.
- Place hazardous waste containers in secondary containment.
- Do not mix wastes, this can cause chemical reactions, making recycling impossible and complicating disposal.
- Recycle any useful materials such as used oil or water-based paint.
- Make sure that toxic liquid wastes (used oils, solvents, and paints) and chemicals (acids, pesticides, additives, curing compounds) are not disposed of in dumpsters designated for construction debris.
- Arrange for regular waste collection before containers overflow.
- Make sure that hazardous waste (e.g., excess oil-based paint and sludge) is collected, removed, and disposed of only at authorized disposal areas.

Disposal Procedures

- Waste should be disposed of by a licensed hazardous waste transporter at an authorized and licensed disposal facility or recycling facility utilizing properly completed Uniform Hazardous Waste Manifest forms.
- A Department of Health Services certified laboratory should sample waste to determine the appropriate disposal facility.
- Properly dispose of rainwater in secondary containment that may have mixed with hazardous waste.
- Attention is directed to "Hazardous Material", "Contaminated Material", and "Aerially Deposited Lead" of the contract documents regarding the handling and disposal of hazardous materials.

Education

- Educate employees and subcontractors on hazardous waste storage and disposal procedures.
- Educate employees and subcontractors on potential dangers to humans and the environment from hazardous wastes.
- Instruct employees and subcontractors on safety procedures for common construction site hazardous wastes.
- Instruct employees and subcontractors in identification of hazardous and solid waste.
- Hold regular meetings to discuss and reinforce hazardous waste management procedures (incorporate into regular safety meetings).
- The contractor's superintendent or representative should oversee and enforce proper hazardous waste management procedures and practices.
- Make sure that hazardous waste is collected, removed, and disposed of only at authorized disposal areas.
- Warning signs should be placed in areas recently treated with chemicals.
- Place a stockpile of spill cleanup materials where it will be readily accessible.
- If a container does spill, clean up immediately.

Costs

All of the above are low cost measures.

Inspection and Maintenance

- Inspect and verify that activity–based BMPs are in place prior to the commencement of associated activities. While activities associated with the BMP are under way, inspect BMPs in accordance with General Permit requirements for the associated project type and risk level. It is recommended that at a minimum, BMPs be inspected weekly, prior to forecasted rain events, daily during extended rain events, and after the conclusion of rain events.
- Inspect BMPs subject to non-stormwater discharge daily while non-stormwater discharges occur
- Hazardous waste should be regularly collected.
- A foreman or construction supervisor should monitor onsite hazardous waste storage and disposal procedures.
- Waste storage areas should be kept clean, well organized, and equipped with ample cleanup supplies as appropriate for the materials being stored.
- Perimeter controls, containment structures, covers, and liners should be repaired or replaced as needed to maintain proper function.

- Hazardous spills should be cleaned up and reported in conformance with the applicable Material Safety Data Sheet (MSDS) and the instructions posted at the project site.
- The National Response Center, at (800) 424-8802, should be notified of spills of federal reportable quantities in conformance with the requirements in 40 CFR parts 110, 117, and 302. Also notify the Governors Office of Emergency Services Warning Center at (916) 845-8911.
- A copy of the hazardous waste manifests should be provided.

References

Blueprint for a Clean Bay: Best Management Practices to Prevent Stormwater Pollution from Construction Related Activities; Santa Clara Valley Nonpoint Source Pollution Control Program, 1995.

Processes, Procedures and Methods to Control Pollution Resulting from All Construction Activity, 430/9-73-007, USEPA, 1973.

Stormwater Quality Handbooks - Construction Site Best Management Practices (BMPs) Manual, State of California Department of Transportation (Caltrans), November 2000.

Stormwater Management for Construction Activities; Developing Pollution Prevention Plans and Best Management Practice, EPA 832-R-92005; USEPA, April 1992.

Concrete Waste Management WM-8

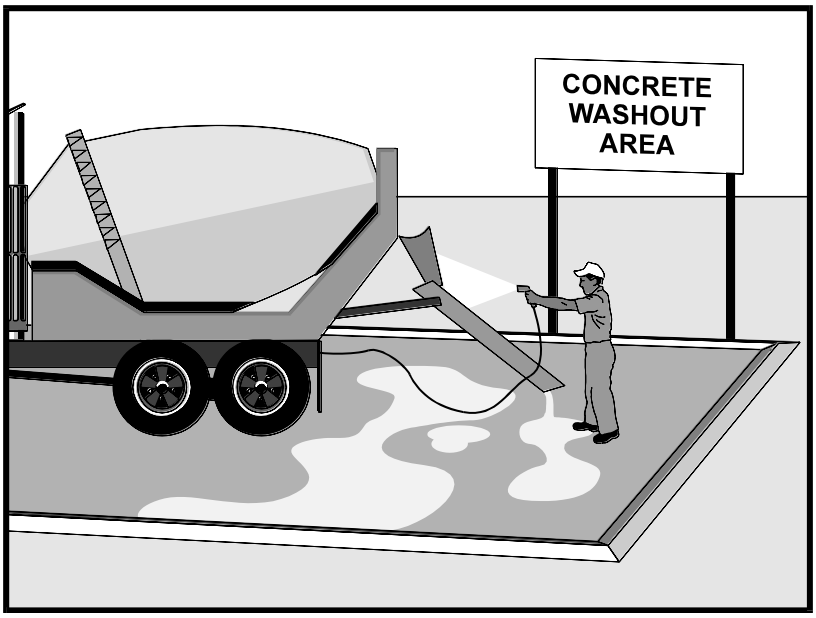

Categories		
EC	Erosion Control	
SE	Sediment Control	
TC	Tracking Control	
WE	Wind Erosion Control	
NS	Non-Stormwater Management Control	☒
WM	Waste Management and Materials Pollution Control	☑

Legend:
☑ **Primary Category**
☒ **Secondary Category**

Targeted Constituents	
Sediment	☑
Nutrients	
Trash	
Metals	☑
Bacteria	
Oil and Grease	
Organics	

Potential Alternatives

None

If User/Subscriber modifies this fact sheet in any way, the CASQA name/logo and footer below must be removed from each page and not appear on the modified version.

Description and Purpose

Prevent the discharge of pollutants to stormwater from concrete waste by conducting washout onsite or offsite in a designated area, and by employee and subcontractor training.

The General Permit incorporates Numeric Action Levels (NAL) for pH (see Section 2 of this handbook to determine your project's risk level and if you are subject to these requirements).

Many types of construction materials, including mortar, concrete, stucco, cement and block and their associated wastes have basic chemical properties that can raise pH levels outside of the permitted range. Additional care should be taken when managing these materials to prevent them from coming into contact with stormwater flows and raising pH to levels outside the accepted range.

Suitable Applications

Concrete waste management procedures and practices are implemented on construction projects where:

- Concrete is used as a construction material or where concrete dust and debris result from demolition activities.
- Slurries containing Portland cement concrete (PCC) are generated, such as from saw cutting, coring, grinding, grooving, and hydro-concrete demolition.
- Concrete trucks and other concrete-coated equipment are washed onsite.

CASQA
CALIFORNIA STORMWATER QUALITY ASSOCIATION

- Mortar-mixing stations exist.
- Stucco mixing and spraying.
- See also NS-8, Vehicle and Equipment Cleaning.

Limitations

- Offsite washout of concrete wastes may not always be possible.
- Multiple washouts may be needed to assure adequate capacity and to allow for evaporation.

Implementation

The following steps will help reduce stormwater pollution from concrete wastes:

- Incorporate requirements for concrete waste management into material supplier and subcontractor agreements.
- Store dry and wet materials under cover, away from drainage areas. Refer to WM-1, Material Delivery and Storage for more information.
- Avoid mixing excess amounts of concrete.
- Perform washout of concrete trucks in designated areas only, where washout will not reach stormwater.
- Do not wash out concrete trucks into storm drains, open ditches, streets, streams or onto the ground. Trucks should always be washed out into designated facilities.
- Do not allow excess concrete to be dumped onsite, except in designated areas.
- For onsite washout:
  - On larger sites, it is recommended to locate washout areas at least 50 feet from storm drains, open ditches, or water bodies. Do not allow runoff from this area by constructing a temporary pit or bermed area large enough for liquid and solid waste.
  - Washout wastes into the temporary washout where the concrete can set, be broken up, and then disposed properly.
  - Washouts shall be implemented in a manner that prevents leaching to underlying soils. Washout containers must be water tight and washouts on or in the ground must be lined with a suitable impervious liner, typically a plastic type material.
- Do not wash sweepings from exposed aggregate concrete into the street or storm drain. Collect and return sweepings to aggregate base stockpile or dispose in the trash.
- See typical concrete washout installation details at the end of this fact sheet.

Education

- Educate employees, subcontractors, and suppliers on the concrete waste management techniques described herein.

- Arrange for contractor's superintendent or representative to oversee and enforce concrete waste management procedures.
- Discuss the concrete management techniques described in this BMP (such as handling of concrete waste and washout) with the ready-mix concrete supplier before any deliveries are made.

Concrete Demolition Wastes

- Stockpile concrete demolition waste in accordance with BMP WM-3, Stockpile Management.
- Dispose of or recycle hardened concrete waste in accordance with applicable federal, state or local regulations.

Concrete Slurry Wastes

- PCC and AC waste should not be allowed to enter storm drains or watercourses.
- PCC and AC waste should be collected and disposed of or placed in a temporary concrete washout facility (as described in Onsite Temporary Concrete Washout Facility, Concrete Transit Truck Washout Procedures, below).
- A foreman or construction supervisor should monitor onsite concrete working tasks, such as saw cutting, coring, grinding and grooving to ensure proper methods are implemented.
- Saw-cut concrete slurry should not be allowed to enter storm drains or watercourses. Residue from grinding operations should be picked up by means of a vacuum attachment to the grinding machine or by sweeping. Saw cutting residue should not be allowed to flow across the pavement and should not be left on the surface of the pavement. See also NS-3, Paving and Grinding Operations; and WM-10, Liquid Waste Management.
- Concrete slurry residue should be disposed in a temporary washout facility (as described in Onsite Temporary Concrete Washout Facility, Concrete Transit Truck Washout Procedures, below) and allowed to dry. Dispose of dry slurry residue in accordance with WM-5, Solid Waste Management.

Onsite Temporary Concrete Washout Facility, Transit Truck Washout Procedures

- Temporary concrete washout facilities should be located a minimum of 50 ft from storm drain inlets, open drainage facilities, and watercourses. Each facility should be located away from construction traffic or access areas to prevent disturbance or tracking.
- A sign should be installed adjacent to each washout facility to inform concrete equipment operators to utilize the proper facilities.
- Temporary concrete washout facilities should be constructed above grade or below grade at the option of the contractor. Temporary concrete washout facilities should be constructed and maintained in sufficient quantity and size to contain all liquid and concrete waste generated by washout operations.

- Temporary washout facilities should have a temporary pit or bermed areas of sufficient volume to completely contain all liquid and waste concrete materials generated during washout procedures.
- Temporary washout facilities should be lined to prevent discharge to the underlying ground or surrounding area.
- Washout of concrete trucks should be performed in designated areas only.
- Only concrete from mixer truck chutes should be washed into concrete wash out.
- Concrete washout from concrete pumper bins can be washed into concrete pumper trucks and discharged into designated washout area or properly disposed of or recycled offsite.
- Once concrete wastes are washed into the designated area and allowed to harden, the concrete should be broken up, removed, and disposed of per WM-5, Solid Waste Management. Dispose of or recycle hardened concrete on a regular basis.
- Temporary Concrete Washout Facility (Type Above Grade)
    - Temporary concrete washout facility (type above grade) should be constructed as shown on the details at the end of this BMP, with a recommended minimum length and minimum width of 10 ft; however, smaller sites or jobs may only need a smaller washout facility. With any washout, always maintain a sufficient quantity and volume to contain all liquid and concrete waste generated by washout operations.
    - Materials used to construct the washout area should conform to the provisions detailed in their respective BMPs (e.g., SE-8 Sandbag Barrier).
    - Plastic lining material should be a minimum of 10 mil in polyethylene sheeting and should be free of holes, tears, or other defects that compromise the impermeability of the material.
    - Alternatively, portable removable containers can be used as above grade concrete washouts. Also called a “roll-off”; this concrete washout facility should be properly sealed to prevent leakage and should be removed from the site and replaced when the container reaches 75% capacity.
- Temporary Concrete Washout Facility (Type Below Grade)
    - Temporary concrete washout facilities (type below grade) should be constructed as shown on the details at the end of this BMP, with a recommended minimum length and minimum width of 10 ft. The quantity and volume should be sufficient to contain all liquid and concrete waste generated by washout operations.
    - Lath and flagging should be commercial type.
    - Plastic lining material should be a minimum of 10 mil polyethylene sheeting and should be free of holes, tears, or other defects that compromise the impermeability of the material.

- The base of a washout facility should be free of rock or debris that may damage a plastic liner.

Removal of Temporary Concrete Washout Facilities

- When temporary concrete washout facilities are no longer required for the work, the hardened concrete should be removed and properly disposed or recycled in accordance with federal, state or local regulations. Materials used to construct temporary concrete washout facilities should be removed from the site of the work and properly disposed or recycled in accordance with federal, state or local regulations.

- Holes, depressions or other ground disturbance caused by the removal of the temporary concrete washout facilities should be backfilled and repaired.

Costs

All of the above are low cost measures. Roll-off concrete washout facilities can be more costly than other measures due to removal and replacement; however, provide a cleaner alternative to traditional washouts. The type of washout facility, size, and availability of materials will determine the cost of the washout.

Inspection and Maintenance

- BMPs must be inspected in accordance with General Permit requirements for the associated project type and risk level. It is recommended that at a minimum, BMPs be inspected weekly, prior to forecasted rain events, daily during extended rain events, and after the conclusion of rain events.

- Temporary concrete washout facilities should be maintained to provide adequate holding capacity with a minimum freeboard of 4 in. for above grade facilities and 12 in. for below grade facilities. Maintaining temporary concrete washout facilities should include removing and disposing of hardened concrete and returning the facilities to a functional condition. Hardened concrete materials should be removed and properly disposed or recycled in accordance with federal, state or local regulations.

- Washout facilities must be cleaned, or new facilities must be constructed and ready for use once the washout is 75% full.

- Inspect washout facilities for damage (e.g. torn liner, evidence of leaks, signage, etc.). Repair all identified damage.

References

Blueprint for a Clean Bay: Best Management Practices to Prevent Stormwater Pollution from Construction Related Activities; Santa Clara Valley Nonpoint Source Pollution Control Program, 1995.

Stormwater Quality Handbooks - Construction Site Best Management Practices (BMPs) Manual, State of California Department of Transportation (Caltrans), November 2000, Updated March 2003.

Stormwater Management for Construction Activities; Developing Pollution Prevention Plans and Best Management Practice, EPA 832-R-92005; USEPA, April 1992.

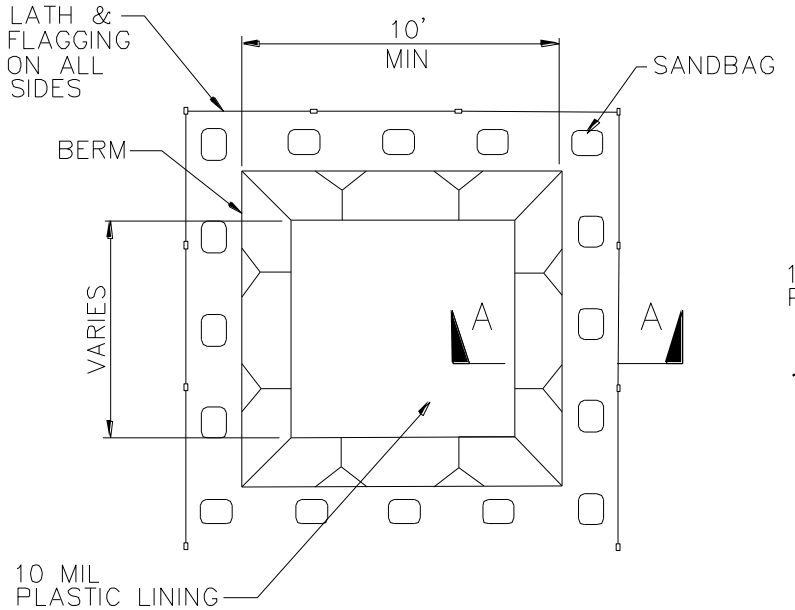

PLAN
NOT TO SCALE
TYPE "BELOW GRADE"

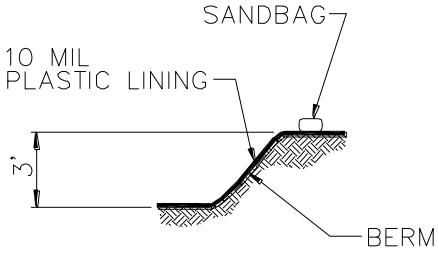

SECTION A–A
NOT TO SCALE

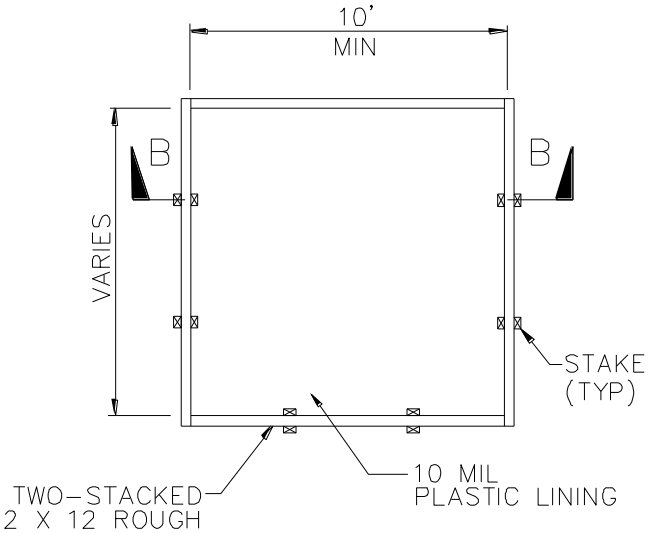

PLAN
NOT TO SCALE
TYPE "ABOVE GRADE"

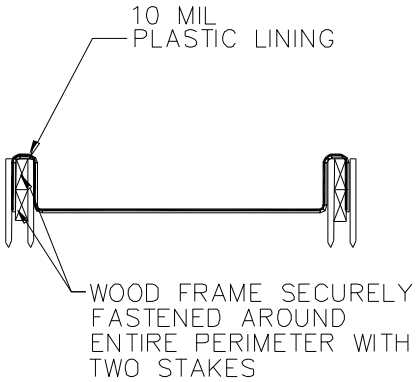

SECTION B–B
NOT TO SCALE

NOTES

1. ACTUAL LAYOUT DETERMINED IN FIELD.
2. THE CONCRETE WASHOUT SIGN SHALL BE INSTALLED WITHIN 30 FT. OF THE TEMPORARY CONCRETE WASHOUT FACILITY.

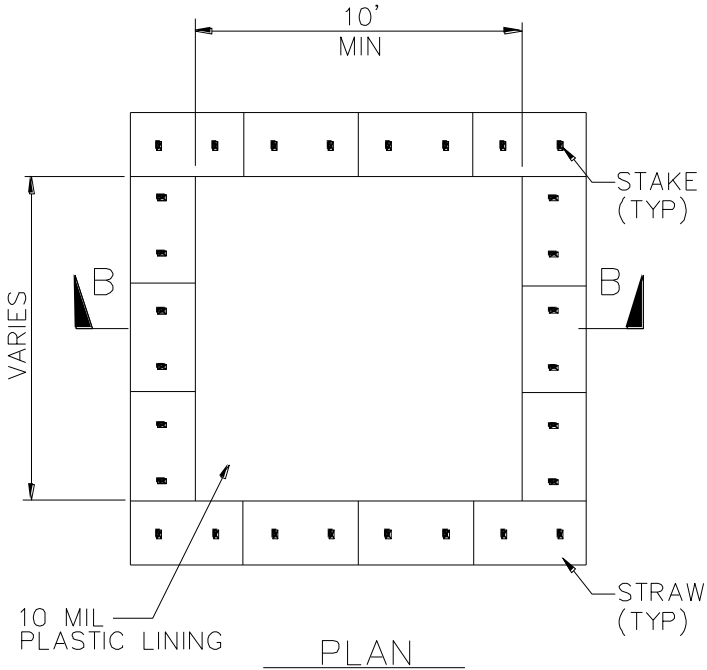

PLAN
NOT TO SCALE
TYPE "ABOVE GRADE"
WITH STRAW BALES

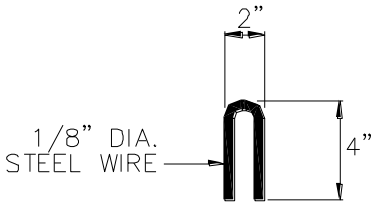

STAPLE DETAIL

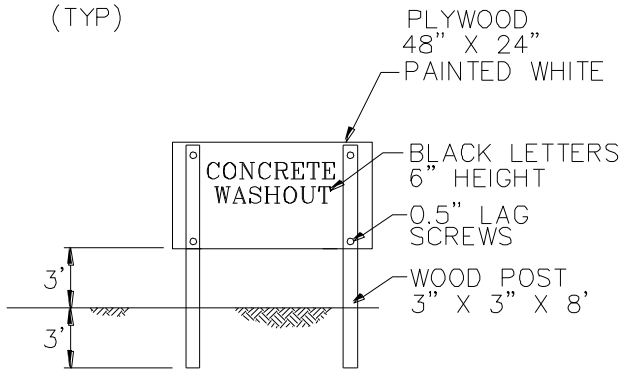

CONCRETE WASHOUT
SIGN DETAIL
(OR EQUIVALENT)

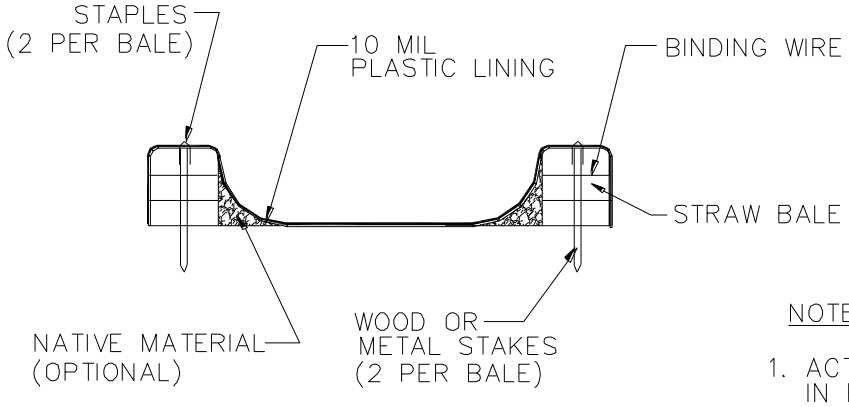

SECTION B–B
NOT TO SCALE

NOTES

1. ACTUAL LAYOUT DETERMINED IN FIELD.
2. THE CONCRETE WASHOUT SIGN SHALL BE INSTALLED WITHIN 30 FT. OF THE TEMPORARY CONCRETE WASHOUT FACILITY.

Sanitary/Septic Waste Management WM-9

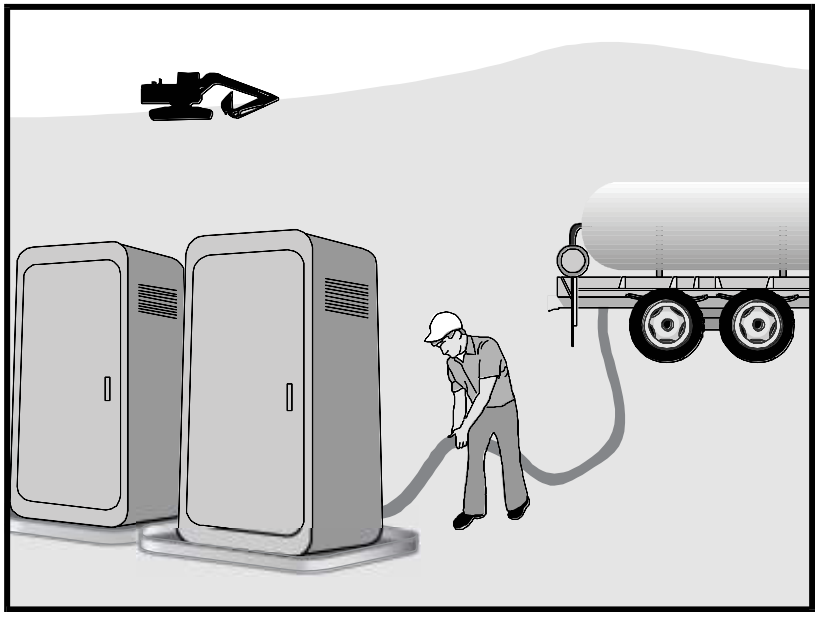

Categories		
EC	Erosion Control	
SE	Sediment Control	
TC	Tracking Control	
WE	Wind Erosion Control	
NS	Non-Stormwater Management Control	
WM	Waste Management and Materials Pollution Control	☑

Legend:
☑ **Primary Category**
☒ **Secondary Category**

Targeted Constituents	
Sediment	
Nutrients	☑
Trash	☑
Metals	
Bacteria	☑
Oil and Grease	
Organics	☑

Potential Alternatives

None

If User/Subscriber modifies this fact sheet in any way, the CASQA name/logo and footer below must be removed from each page and not appear on the modified version.

Description and Purpose

Proper sanitary and septic waste management prevent the discharge of pollutants to stormwater from sanitary and septic waste by providing convenient, well-maintained facilities, and arranging for regular service and disposal.

Suitable Applications

Sanitary septic waste management practices are suitable for use at all construction sites that use temporary or portable sanitary and septic waste systems.

Limitations

None identified.

Implementation

Sanitary or septic wastes should be treated or disposed of in accordance with state and local requirements. In many cases, one contract with a local facility supplier will be all that it takes to make sure sanitary wastes are properly disposed.

Storage and Disposal Procedures

- Temporary sanitary facilities should be located away from drainage facilities, watercourses, and from traffic circulation. If site conditions allow, place portable facilities a minimum of 50 feet from drainage conveyances and traffic areas. When subjected to high winds or risk of high winds, temporary sanitary facilities should be secured to prevent overturning.

CASQA
CALIFORNIA STORMWATER QUALITY ASSOCIATION

- Temporary sanitary facilities must be equipped with containment to prevent discharge of pollutants to the stormwater drainage system of the receiving water.
- Consider safety as well as environmental implications before placing temporary sanitary facilities.
- Wastewater should not be discharged or buried within the project site.
- Sanitary and septic systems that discharge directly into sanitary sewer systems, where permissible, should comply with the local health agency, city, county, and sewer district requirements.
- Only reputable, licensed sanitary and septic waste haulers should be used.
- Sanitary facilities should be located in a convenient location.
- Temporary septic systems should treat wastes to appropriate levels before discharging.
- If using an onsite disposal system (OSDS), such as a septic system, local health agency requirements must be followed.
- Temporary sanitary facilities that discharge to the sanitary sewer system should be properly connected to avoid illicit discharges.
- Sanitary and septic facilities should be maintained in good working order by a licensed service.
- Regular waste collection by a licensed hauler should be arranged before facilities overflow.
- If a spill does occur from a temporary sanitary facility, follow federal, state and local regulations for containment and clean-up.

Education

- Educate employees, subcontractors, and suppliers on sanitary and septic waste storage and disposal procedures.
- Educate employees, subcontractors, and suppliers of potential dangers to humans and the environment from sanitary and septic wastes.
- Instruct employees, subcontractors, and suppliers in identification of sanitary and septic waste.
- Hold regular meetings to discuss and reinforce the use of sanitary facilities (incorporate into regular safety meetings).
- Establish a continuing education program to indoctrinate new employees.

Costs

All of the above are low cost measures.

Sanitary/Septic Waste Management WM-9

Inspection and Maintenance

- BMPs must be inspected in accordance with General Permit requirements for the associated project type and risk level. It is recommended that at a minimum, BMPs be inspected weekly, prior to forecasted rain events, daily during extended rain events, and after the conclusion of rain events.
- Arrange for regular waste collection.
- If high winds are expected, portable sanitary facilities must be secured with spikes or weighed down to prevent over turning.
- If spills or leaks from sanitary or septic facilities occur that are not contained and discharge from the site, non-visible sampling of site discharge may be required. Refer to the General Permit or to your project specific Construction Site Monitoring Plan to determine if and where sampling is required.

References

Stormwater Quality Handbooks - Construction Site Best Management Practices (BMPs) Manual, State of California Department of Transportation (Caltrans), March 2003.

Stormwater Management for Construction Activities; Developing Pollution Prevention Plans and Best Management Practice, EPA 832-R-92005; USEPA, April 1992.

Liquid Waste Management WM-10

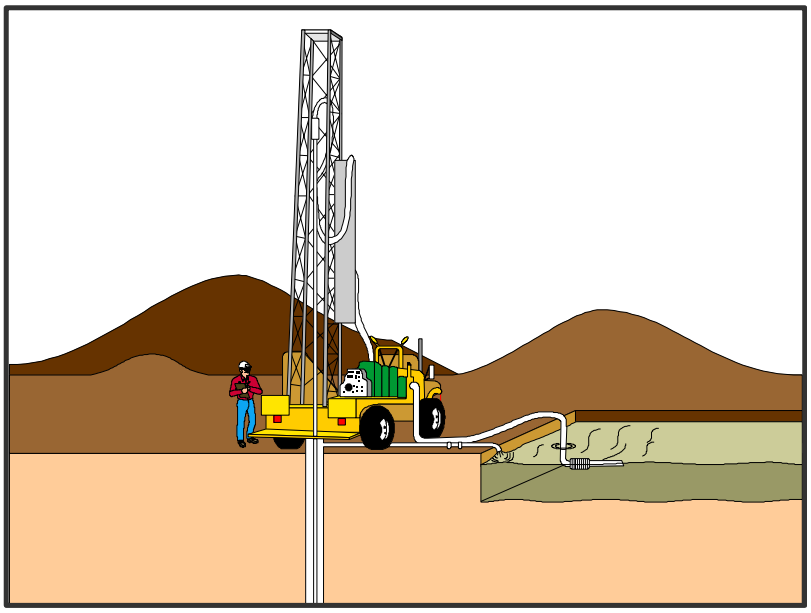

Description and Purpose

Liquid waste management includes procedures and practices to prevent discharge of pollutants to the storm drain system or to watercourses as a result of the creation, collection, and disposal of non-hazardous liquid wastes.

Suitable Applications

Liquid waste management is applicable to construction projects that generate any of the following non-hazardous by-products, residuals, or wastes:

- Drilling slurries and drilling fluids
- Grease-free and oil-free wastewater and rinse water
- Dredgings
- Other non-stormwater liquid discharges not permitted by separate permits

Limitations

- Disposal of some liquid wastes may be subject to specific laws and regulations or to requirements of other permits secured for the construction project (e.g., NPDES permits, Army Corps permits, Coastal Commission permits, etc.).
- Liquid waste management does not apply to dewatering operations (NS-2 Dewatering Operations), solid waste management (WM-5, Solid Waste Management), hazardous wastes (WM-6, Hazardous Waste Management), or

Categories

EC	Erosion Control	
SE	Sediment Control	
TC	Tracking Control	
WE	Wind Erosion Control	
NS	Non-Stormwater Management Control	
WM	Waste Management and Materials Pollution Control	☑

Legend:

☑ **Primary Objective**

☒ **Secondary Objective**

Targeted Constituents

Sediment	☑
Nutrients	☑
Trash	☑
Metals	☑
Bacteria	
Oil and Grease	☑
Organics	

Potential Alternatives

None

If User/Subscriber modifies this fact sheet in any way, the CASQA name/logo and footer below must be removed from each page and not appear on the modified version.

concrete slurry residue (WM-8, Concrete Waste Management).

- Typical permitted non-stormwater discharges can include: water line flushing; landscape irrigation; diverted stream flows; rising ground waters; uncontaminated pumped ground water; discharges from potable water sources; foundation drains; irrigation water; springs; water from crawl space pumps; footing drains; lawn watering; flows from riparian habitats and wetlands; and discharges or flows from emergency fire fighting activities.

Implementation

General Practices

- Instruct employees and subcontractors how to safely differentiate between non-hazardous liquid waste and potential or known hazardous liquid waste.
- Instruct employees, subcontractors, and suppliers that it is unacceptable for any liquid waste to enter any storm drainage device, waterway, or receiving water.
- Educate employees and subcontractors on liquid waste generating activities and liquid waste storage and disposal procedures.
- Hold regular meetings to discuss and reinforce disposal procedures (incorporate into regular safety meetings).
- Verify which non-stormwater discharges are permitted by the statewide NPDES permit; different regions might have different requirements not outlined in this permit.
- Apply NS-8, Vehicle and Equipment Cleaning for managing wash water and rinse water from vehicle and equipment cleaning operations.

Containing Liquid Wastes

- Drilling residue and drilling fluids should not be allowed to enter storm drains and watercourses and should be disposed of.
- If an appropriate location is available, drilling residue and drilling fluids that are exempt under Title 23, CCR § 2511(g) may be dried by infiltration and evaporation in a containment facility constructed in conformance with the provisions concerning the Temporary Concrete Washout Facilities detailed in WM-8, Concrete Waste Management.
- Liquid wastes generated as part of an operational procedure, such as water-laden dredged material and drilling mud, should be contained and not allowed to flow into drainage channels or receiving waters prior to treatment.
- Liquid wastes should be contained in a controlled area such as a holding pit, sediment basin, roll-off bin, or portable tank.
- Containment devices must be structurally sound and leak free.
- Containment devices must be of sufficient quantity or volume to completely contain the liquid wastes generated.

- Precautions should be taken to avoid spills or accidental releases of contained liquid wastes. Apply the education measures and spill response procedures outlined in WM-4, Spill Prevention and Control.

- Containment areas or devices should not be located where accidental release of the contained liquid can threaten health or safety or discharge to water bodies, channels, or storm drains.

Capturing Liquid Wastes

- Capture all liquid wastes that have the potential to affect the storm drainage system (such as wash water and rinse water from cleaning walls or pavement), before they run off a surface.

- Do not allow liquid wastes to flow or discharge uncontrolled. Use temporary dikes or berms to intercept flows and direct them to a containment area or device for capture.

- Use a sediment trap (SE-3, Sediment Trap) for capturing and treating sediment laden liquid waste or capture in a containment device and allow sediment to settle.

Disposing of Liquid Wastes

- A typical method to handle liquid waste is to dewater the contained liquid waste, using procedures such as described in NS-2, Dewatering Operations, and SE-2, Sediment Basin, and dispose of resulting solids per WM-5, Solid Waste Management.

- Methods of disposal for some liquid wastes may be prescribed in Water Quality Reports, NPDES permits, Environmental Impact Reports, 401 or 404 permits, and local agency discharge permits, etc. Review the SWPPP to see if disposal methods are identified.

- Liquid wastes, such as from dredged material, may require testing and certification whether it is hazardous or not before a disposal method can be determined.

- For disposal of hazardous waste, see WM-6, Hazardous Waste Management.

- If necessary, further treat liquid wastes prior to disposal. Treatment may include, though is not limited to, sedimentation, filtration, and chemical neutralization.

Costs

Prevention costs for liquid waste management are minimal. Costs increase if cleanup or fines are involved.

Inspection and Maintenance

- Inspect and verify that activity–based BMPs are in place prior to the commencement of associated activities. While activities associated with the BMP are under way, inspect weekly during the rainy season and of two-week intervals in the non-rainy season to verify continued BMP implementation.

- Inspect BMPs subject to non-stormwater discharge daily while non-stormwater discharges occur.

- Remove deposited solids in containment areas and capturing devices as needed and at the completion of the task. Dispose of any solids as described in WM-5, Solid Waste Management.
- Inspect containment areas and capturing devices and repair as needed.

References

Stormwater Quality Handbooks - Construction Site Best Management Practices (BMPs) Manual, State of California Department of Transportation (Caltrans), November 2000.

Appendix N

Monitoring Records

Appendix O

Example Forms

Rain Gauge Log Sheet				
Construction Site Name:				
WDID #:				
Date (mm/dd/yy)	Time (24-hr)	Initials	Rainfall Depth (Inches)	Notes:

Risk Level 1, 2, 3 ***Visual Inspection Field Log Sheet***						
Date and Time of Inspection:				Report Date:		
Inspection Type:	☐ Weekly	☐ Before predicted rain	☐ During rain event	☐ Following qualifying rain event	☐ Contained stormwater release	☐ Quarterly non-stormwater
Site Information						
Construction Site Name:						
Construction stage and completed activities:				Approximate area of exposed site:		
Weather and Observations						
Date Rain Predicted to Occur:				Predicted % chance of rain:		
Estimate storm beginning: _____ (date and time)		Estimate storm duration:_____ (hours)		Estimate time since last storm: _____ (days or hours)	Rain gauge reading:_____ (inches)	
Observations: If yes identify location						
Odors	Yes ☐	No ☐				
Floating material	Yes ☐	No ☐				
Suspended Material	Yes ☐	No ☐				
Sheen	Yes ☐	No ☐				
Discolorations	Yes ☐	No ☐				
Turbidity	Yes ☐	No ☐				
Site Inspections						
Outfalls or BMPs Evaluated			**Deficiencies Noted**			
(add additional sheets or attached detailed BMP Inspection Checklists)						
Photos Taken:	Yes ☐	No ☐	Photo Reference IDs:			
Corrective Actions Identified (note if SWPPP/REAP change is needed)						
Inspector Information						
Inspector Name:				Inspector Title:		
Signature:					Date:	
Risk Level 2						

Effluent Sampling Field Log Sheets			
Construction Site Name:		Date:	Time Start:
Sampler:			
Sampling Event Type:	☐ Stormwater	☐ Non-stormwater	☐ Non-visible pollutant

Field Meter Calibration	
pH Meter ID No./Desc.: Calibration Date/Time:	Turbidity Meter ID No./Desc.: Calibration Date/Time:

Field pH and Turbidity Measurements			
Discharge Location Description	pH	Turbidity	Time

Grab Samples Collected		
Discharge Location Description	Sample Type	Time

Additional Sampling Notes:
Time End:

NAL Exceedance Evaluation Summary Report	Page __ of __
Project Name	
Project WDID	
Project Location	
Date of Exceedance	
Type of Exceedance	**NAL Daily Average ☐ pH ☐ Turbidity** **☐ Other (specify) _____**
Measurement or Analytical Method	**☐ Field meter** **(Sensitivity: _____)** **☐ Lab method (specify) _____** **(Reporting Limit: _____)** **(MDL: _____)**
Calculated Daily Average	**☐ pH _____ pH units** **☐ Turbidity _____ NTU**
Rain Gauge Measurement	**_____ inches**
Compliance Storm Event	**_____ inches (5-year, 24-hour event)**
Visual Observations on Day of Exceedance	

NAL Exceedance Evaluation Summary Report	Page __ of __
Description of BMPs in Place at Time of Event	
Initial Assessment of Cause	
Corrective Actions Taken (deployed after exceedance)	
Additional Corrective Actions Proposed	
Report Completed By	_____ **(Print Name, Title)**
Signature	_____

CHAIN-OF-CUSTODY **DATE:** **Lab ID:**

DESTINATION LAB: ATTN: **ADDRESS:** **Office Phone:** **Cell Phone:**							REQUESTED ANALYSIS				Notes:
SAMPLED BY:											
Contact:											
Project Name											
Client Sample ID	**Sample Date**	**Sample Time**	**Sample Matrix**	**Container #**	**Container Type**	**Container Pres.**					

SENDER COMMENTS:	**RELINQUISHED BY**	
	Signature:	
	Print:	
	Company:	
	Date:	TIME:
LABORATORY COMMENTS:	**RECEIVED BY**	
	Signature:	
	Print:	
	Company:	
	Date:	TIME:

Appendix P

Field Meter Instructions

Appendix Q

Construction General Permit

State Water Resources Control Board
Division of Water Quality
1001 I Street • Sacramento, California 95814 • (916) 341-5455
Mailing Address: P.O. Box 100 • Sacramento, California • 95812-0100
Fax (916) 341-5463 • http://www.waterboards.ca.gov

Linda S. Adams
Secretary for
Environmental Protection

Arnold Schwarzenegger
Governor

CONSTRUCTION GENERAL PERMIT FACT SHEET TABLE OF CONTENTS

I. BACKGROUND 1

A. History 1

B. Legal Challenges and Court Decisions 1

C. Blue Ribbon Panel of Experts and Feasibility of Numeric Effluent Limitations 4

D. Summary of Panel Findings on Construction Activities 4

E. How the Panel's Findings are Used in this General Permit 5

F. Summary of Significant Changes in This General Permit 5

II. RATIONALE 7

A. General Permit Approach 7

B. Construction Activities Covered 7

C. Construction Activities Not Covered 9

D. Obtaining and Terminating Permit Coverage 12

E. Discharge Prohibitions 12

F. Effluent Standards for All Types of Discharges 13

G. Receiving Water Limitations 20

H. Training Qualifications and Requirements 20

I. Sampling, Monitoring, Reporting and Record Keeping 21

J. Risk Determination 27

K. ATS Requirements 35

L. Post-Construction Requirements 37

M. Storm Water Pollution Prevention Plans 46

N. Regional Water Board Authorities 48

LIST OF TABLES

Table 1 - Regional Water Board Basin Plans, Water Quality Objectives for Turbidity 16
Table 2 - Results of Ecoregion Analysis 16
Table 3 – ACL Sampling Data taken by Regional Water Board Staff 17
Table 4 - Required Monitoring Elements for Risk Levels 21
Table 5 - Storm Water Effluent Monitoring Requirements by Risk Level 23
Table 6 - Receiving Water Monitoring Requirements 26
Table 7 - Combined Risk Level Matrix 29
Table 8 -National Oceanic and Atmospheric Administration (NOAA) Definition of Probability of Precipitation (PoP) 31
Table 9 - Qualified SWPPP Developer/ Qualified SWPPP Practitioner Certification Criteria 47

LIST OF FIGURES

Figure 1 -Statewide Map of K * LS 28
Figure 2 - Suite of Storm Events 37
Figure 3 - Northern CA (2009) Counties / Cities With SUSMP-Plus Coverage 39
Figure 4 - Southern CA (2009) Counties / Cities With SUSMP-Plus Coverage 40
Figure 5 - Schematic of the Lane Relationship 42
Figure 6 - Channel Changes Associated with Urbanization 43

I. BACKGROUND

A. History

In 1972, the Federal Water Pollution Control Act (also referred to as the Clean Water Act [CWA]) was amended to provide that the discharge of pollutants to waters of the United States from any point source is unlawful unless the discharge is in compliance with a National Pollutant Discharge Elimination System (NPDES) permit. The 1987 amendments to the CWA added Section 402(p), which establishes a framework for regulating municipal and industrial storm water discharges under the NPDES Program. On November 16, 1990, the U.S. Environmental Protection Agency (USEPA) published final regulations that established storm water permit application requirements for specified categories of industries. The regulations provide that discharges of storm water to waters of the United States from construction projects that encompass five or more acres of soil disturbance are effectively prohibited unless the discharge is in compliance with an NPDES Permit. Regulations (Phase II Rule) that became final on December 8, 1999 lowered the permitting threshold from five acres to one acre.

While federal regulations allow two permitting options for storm water discharges (Individual Permits and General Permits), the State Water Board has elected to adopt only one statewide General Permit at this time that will apply to most storm water discharges associated with construction activity.

On August 19, 1999, the State Water Board reissued the General Construction Storm Water Permit (Water Quality Order 99-08-DWQ). On December 8, 1999 the State Water Board amended Order 99-08-DWQ to apply to sites as small as one acre.

The General Permit accompanying this fact sheet regulates storm water runoff from construction sites. Regulating many storm water discharges under one permit will greatly reduce the administrative burden associated with permitting individual storm water discharges. To obtain coverage under this General Permit, dischargers shall electronically file the Permit Registration Documents (PRDs), which includes a Notice of Intent (NOI), Storm Water Pollution Prevention Plan (SWPPP), and other compliance related documents required by this General Permit and mail the appropriate permit fee to the State Water Board. It is expected that as the storm water program develops, the Regional Water Quality Control Boards (Regional Water Boards) may issue General Permits or Individual Permits containing more specific permit provisions. When this occurs, this General Permit will no longer regulate those dischargers.

B. Legal Challenges and Court Decisions

1. Early Court Decisions

Shortly after the passage of the CWA, the USEPA promulgated regulations exempting most storm water discharges from the NPDES permit requirements. (See 40 C.F.R. § 125.4 (1975); see also *Natural Resources Defense Council v. Costle* (D.C. Cir. 1977) 568 F.2d 1369, 1372 (*Costle*); *Defenders of Wildlife v. Browner* (9th Cir. 1999) 191 F.3d 1159, 1163 (*Defenders of Wildlife*).) When environmental groups challenged this exemption in federal court, the District of Columbia Court of Appeals invalidated the regulation, holding that the USEPA "does not have authority to exempt categories of point sources from the permit requirements of [CWA] § 402." (*Costle*, 568 F.2d at 1377.) The *Costle* court rejected the USEPA's argument that effluent-based storm sewer regulation was administratively infeasible because of the variable nature of storm water pollution and the number of affected storm sewers throughout the country. (*Id.* at 1377-82.) Although the court acknowledged the practical problems relating to storm sewer regulation, the court found the USEPA had the flexibility under the CWA to design regulations that would overcome these problems. (*Id.* at 1379-83.) In particular, the court pointed to general permits and permits based on requiring best management practices (BMPs).

During the next 15 years, the USEPA made numerous attempts to reconcile the statutory requirement of point source regulation with the practical problem of regulating possibly millions of diverse point source discharges of storm water. (See *Defenders of Wildlife*, 191 F.3d at 1163; see also Gallagher, Clean Water Act in Environmental Law Handbook (Sullivan, edit., 2003)
p. 300 (Environmental Law Handbook); Eisen, *Toward a Sustainable Urbanism: Lessons from Federal Regulation of Urban Storm Water Runoff* (1995) 48 Wash. U.J. Urb. & Contemp. L.1, 40-41 [Regulation of Urban Storm Water Runoff].)

In 1987, Congress amended the CWA to require NPDES permits for storm water discharges. (See CWA § 402(p), 33 U.S.C. § 1342(p); *Defenders of Wildlife,* 191 F.3d at 1163; *Natural Resources Defense Council v. USEPA* (9th Cir. 1992) 966 F.2d 1292, 1296.) In these amendments, enacted as part of the Water Quality Act of 1987, Congress distinguished between industrial and municipal storm water discharges. With respect to industrial storm water discharges, Congress provided that NPDES permits "shall meet all applicable provisions of this section and section 1311 [requiring the USEPA to establish effluent limitations under specific timetables]." (CWA § 402(p)(3)(A), 33 U.S.C. § 1342(p)(3)(A); see also *Defenders of Wildlife,* 191 F.3d at 1163-64.)

In 1990, USEPA adopted regulations specifying what activities were considered “industrial” and thus required discharges of storm water associated with those activities to obtain coverage under NPDES permits. (55 Fed. Reg. 47,990 (1990); 40 C.F.R. § 122.26(b)(14).) Construction activities, deemed a subset of the industrial activities category, must also be regulated by an NPDES permit. (40 C.F.R. § 122.26(b)(14)(x)). In 1999, USEPA issued regulations for “Phase II” of storm water regulation, which required most small construction sites (1-5 acres) to be regulated under the NPDES program. (64 Fed. Reg. 68,722; 40 C.F.R. § 122.26(b)(15)(i).)

2. Court Decisions on Public Participation

Two recent federal court opinions have vacated USEPA rules that denied meaningful public review of NPDES permit conditions. On January 14, 2003, the Ninth Circuit Court of Appeals held that certain aspects of USEPA’s Phase II regulations governing MS4s were invalid primarily because the general permit did not contain express requirements for public participation. (*Environmental Defense Center v. USEPA* (9th Cir. 2003) 344 F.3d 832.) Specifically, the court determined that applications for general permit coverage (including the Notice of Intent (NOI) and Storm Water Management Program (SWMP)) must be made available to the public, the applications must be reviewed and determined to meet the applicable standard by the permitting authority before coverage commences, and there must be a process to accommodate public hearings. (*Id.* at 852-54.) Similarly, on February 28, 2005, the Second Circuit Court of Appeals held that the USEPA's confined animal feeding operation (CAFO) rule violated the CWA because it allowed dischargers to write their own nutrient management plans without public review. (*Waterkeeper Alliance v. USEPA* (2d Cir. 2005) 399 F.3d 486.) Although neither decision involved the issuance of construction storm water permits, the State Water Board’s Office of Chief Counsel has recommended that the new General Permit address the courts’ rulings where feasible[1].

[1] In *Texas Independent Producers and Royalty Owners Assn. v. USEPA* (7th Cir. 2005) 410 F.3d 964, the Seventh Circuit Court of Appeals held that the USEPA’s construction general permit was not required to provide the public with the opportunity for a public hearing on the Notice of Intent or Storm Water Pollution Prevention Plan. The Seventh Circuit briefly discussed why it agreed with the Ninth Circuit’s dissent in *Environmental Defense Center*, but

The CWA and the USEPA's regulations provide states with the discretion to formulate permit terms, including specifying best management practices (BMPs), to achieve strict compliance with federal technology-based and water quality-based standards. (*Natural Resources Defense Council v. USEPA* (9th Cir. 1992) 966 F.2d 1292, 1308.) Accordingly, this General Permit has developed specific BMPs as well as numeric action levels (NALs) in order to achieve these minimum federal standards. In addition, the General Permit requires a SWPPP and REAP (another dynamic, site-specific plan) to be developed but has removed all language requiring the discharger to implement these plans – instead, the discharger is required to comply with specific requirements. By requiring the dischargers to implement these specific BMPs and NALs, this General Permit ensures that the dischargers do not "write their own permits." As a result this General Permit does not require each discharger's SWPPP and REAP to be reviewed and approved by the Regional Water Boards.

This General Permit also requires dischargers to electronically file all permit-related compliance documents. These documents include, but are not limited to, NOIs, SWPPPs, annual reports, Notice of Terminations (NOTs), and numeric action level (NAL) exceedance reports. Electronically submitted compliance information is immediately available to the public, as well as the Regional Water Quality Control Board (Regional Water Board) offices, via the Internet. In addition, this General Permit enables public review and hearings on permit applications when appropriate. Under this General Permit, the public clearly has a meaningful opportunity to participate in the permitting process.

---

generally did not discuss the substantive holdings in *Environmental Defense Center* and *Waterkeeper Alliance*, because neither court addressed the initial question of whether the plaintiffs had standing to challenge the permits at issue. However, notwithstanding the Seventh Circuit's decision, it is not binding or controlling on the State Water Board because California is located within the Ninth Circuit.

C. Blue Ribbon Panel of Experts and Feasibility of Numeric Effluent Limitations

In 2005 and 2006, the State Water Board convened an expert panel (panel) to address the feasibility of numeric effluent limitations (NELs) in California's storm water permits. Specifically, the panel was asked to address:

"Is it technically feasible to establish numeric effluent limitations, or some other quantifiable limit, for inclusion in storm water permits? How would such limitations or criteria be established, and what information and data would be required?"

"The answers should address industrial general permits, construction general permits, and area-wide municipal permits. The answers should also address both technology-based limitations or criteria and water quality-based limitations or criteria. In evaluating establishment of any objective criteria, the panel should address all of the following:

The ability of the State Water Board to establish appropriate objective limitations or criteria;

How compliance determinations would be made;

The ability of dischargers and inspectors to monitor for compliance; and

The technical and financial ability of dischargers to comply with the limitations or criteria."

Through a series of public participation processes (State Water Board meetings, State Water Board workshops, and the solicitation of written comments), a number of water quality, public process and overall program effectiveness problems were identified. Some of these problems are addressed through this General Permit.

D. Summary of Panel Findings on Construction Activities

The panel's final report can be downloaded and viewed through links at www.waterboards.ca.gov or by clicking here[2].

The panel made the following observations:

"Limited field studies indicate that traditional erosion and sediment controls are highly variable in performance, resulting in highly variable turbidity levels in the site discharge."

"Site-to-site variability in runoff turbidity from undeveloped sites can also be quite large in many areas of California, particularly in more arid regions with less natural vegetative cover and steep slopes."

---

[2] http://www.waterboards.ca.gov/stormwtr/docs/numeric/swpanel_final_report.pdf

"Active treatment technologies involving the use of polymers with relatively large storage systems now exist that can provide much more consistent and very low discharge turbidity. However, these technologies have as yet only been applied to larger construction sites, generally five acres or greater. Furthermore, toxicity has been observed at some locations, although at the vast majority of sites, toxicity has not occurred. There is also the potential for an accidental large release of such chemicals with their use."

"To date most of the construction permits have focused on TSS and turbidity, but have not addressed other, potentially significant pollutants such as phosphorus and an assortment of chemicals used at construction sites."

"Currently, there is no required training or certification program for contractors, preparers of soil erosion and sediment control Storm Water Pollution Prevention Plans, or field inspectors."

"The quality of storm water discharges from construction sites that effectively employ BMPs likely varies due to site conditions such as climate, soil, and topography."

"The States of Oregon and Washington have recently adopted similar concepts to the Action Levels described earlier."

In addition, the panel made the following conclusions:

"It is the consensus of the Panel that active treatment technologies make Numeric Limits technically feasible for pollutants commonly associated with storm water discharges from construction sites (e.g. TSS and turbidity) for larger construction sites. Technical practicalities and cost-effectiveness may make these technologies less feasible for smaller sites, including small drainages within a larger site, as these technologies have seen limited use at small construction sites. If chemical addition is not permitted, then Numeric Limits are not likely feasible."

"The Board should consider Numeric Limits or Action Levels for other pollutants of relevance to construction sites, but in particular pH. It is of particular concern where fresh concrete or wash water from cement mixers/equipment is exposed to storm water."

"The Board should consider the phased implementation of Numeric Limits and Action Levels, commensurate with the capacity of the dischargers and support industry to respond."

E. How the Panel's Findings are Used in this General Permit

The State Water Board carefully considered the findings of the panel and related public comments. The State Water Board also reviewed and considered the comments regarding statewide storm water policy and the reissuance of the Industrial General Permit. From the input received the State Water Board identified some permit and program performance gaps that are addressed in this General Permit. The Summary of Significant Changes (below) in this General Permit are a direct result of this process.

F. Summary of Significant Changes in This General Permit

The State Water Board has significant changes to Order 99-08-DWQ. This General Permit differs from Order 99-08-DWQ in the following significant ways:

Rainfall Erosivity Waiver: this General Permit includes the option allowing a small construction site (>1 and <5 acres) to self-certify if the rainfall erosivity value (R value) for their site's given location and time frame compute to be less than or equal to 5.

Technology-Based Numeric Action Levels: this General Permit includes NALs for pH and turbidity.

Risk-Based Permitting Approach: this General Permit establishes three levels of risk possible for a construction site. Risk is calculated in two parts: 1) Project Sediment Risk, and 2) Receiving Water Risk.

Minimum Requirements Specified: this General Permit imposes more minimum BMPs and requirements that were previously only required as elements of the SWPPP or were suggested by guidance.

Project Site Soil Characteristics Monitoring and Reporting: this General Permit provides the option for dischargers to monitor and report the soil characteristics at their project location. The primary purpose of this requirement is to provide better risk determination and eventually better program evaluation.

Effluent Monitoring and Reporting: this General Permit requires effluent monitoring and reporting for pH and turbidity in storm water discharges. The purpose of this monitoring is to evaluate whether NALs and NELs for Active Treatment Systems included in this General Permit are exceeded.

Receiving Water Monitoring and Reporting: this General Permit requires some Risk Level 3 and LUP Type 3 dischargers to monitor receiving waters and conduct bioassessments.

Post-Construction Storm Water Performance Standards: this General Permit specifies runoff reduction requirements for all sites not covered by a Phase I or Phase II MS4 NPDES permit, to avoid, minimize and/or mitigate post-construction storm water runoff impacts.

Rain Event Action Plan: this General Permit requires certain sites to develop and implement a Rain Event Action Plan (REAP) that must be designed to protect all exposed portions of the site within 48 hours prior to any likely precipitation event.

Annual Reporting: this General Permit requires all projects that are enrolled for more than one continuous three-month period to submit information and annually certify that their site is in compliance with these requirements. The primary purpose of this requirement is to provide information needed for overall program evaluation and pubic information.

Certification/Training Requirements for Key Project Personnel: this General Permit requires that key personnel (e.g., SWPPP preparers, inspectors, etc.) have specific training or certifications to ensure their level of knowledge and skills are adequate to ensure their ability to design and evaluate project specifications that will comply with General Permit requirements.

Linear Underground/Overhead Projects: this General Permit includes requirements for all Linear Underground/Overhead Projects (LUPs).

II. RATIONALE

A. General Permit Approach

A general permit for construction activities is an appropriate permitting approach for the following reasons:

1. A general permit is an efficient method to establish the essential regulatory requirements for a broad range of construction activities under differing site conditions;

2. A general permit is the most efficient method to handle the large number of construction storm water permit applications;

3. The application process for coverage under a general permit is far less onerous than that for individual permit and hence more cost effective;

4. A general permit is consistent with USEPA's four-tier permitting strategy, the purpose of which is to use the flexibility provided by the CWA in designing a workable and efficient permitting system; and

5. A general permit is designed to provide coverage for a group of related facilities or operations of a specific industry type or group of industries. It is appropriate when the discharge characteristics are sufficiently similar, and a standard set of permit requirements can effectively provide environmental protection and comply with water quality standards for discharges. In most cases, the general permit will provide sufficient and appropriate management requirements to protect the quality of receiving waters from discharges of storm water from construction sites.

There may be instances where a general permit is not appropriate for a specific construction project. A Regional Water Board may require any discharger otherwise covered under the General Permit to apply for and obtain an Individual Permit or apply for coverage under a more specific General Permit. The Regional Water Board must determine that this General Permit does not provide adequate assurance that water quality will be protected, or that there is a site-specific reason why an individual permit should be required.

B. Construction Activities Covered

1. **Construction activity subject to this General Permit:**

Any construction or demolition activity, including, but not limited to, clearing, grading, grubbing, or excavation, or any other activity that results in a land disturbance of equal to or greater than one acre.

Construction activity that results in land surface disturbances of less than one acre if the construction activity is part of a larger common plan of development or sale of one or more acres of disturbed land surface.

Construction activity related to residential, commercial, or industrial development on lands currently used for agriculture including, but not limited to, the construction of buildings related to agriculture that are considered industrial pursuant to USEPA regulations, such as dairy barns or food processing facilities.

Construction activity associated with LUPs including, but not limited to, those activities necessary for the installation of underground and overhead linear facilities (e.g., conduits, substructures, pipelines, towers, poles, cables, wires, connectors, switching, regulating and transforming equipment and associated ancillary facilities) and include, but are not limited to, underground utility mark-out, potholing, concrete

and asphalt cutting and removal, trenching, excavation, boring and drilling, access road and pole/tower pad and cable/wire pull station, substation construction, substructure installation, construction of tower footings and/or foundations, pole and tower installations, pipeline installations, welding, concrete and/or pavement repair or replacement, and stockpile/borrow locations.

Discharges of sediment from construction activities associated with oil and gas exploration, production, processing, or treatment operations or transmission facilities.[3]

Storm water discharges from dredge spoil placement that occur outside of U.S. Army Corps of Engineers jurisdiction[4] (upland sites) and that disturb one or more acres of land surface from construction activity are covered by this General Permit. Construction projects that intend to disturb one or more acres of land within the jurisdictional boundaries of a CWA § 404 permit should contact the appropriate Regional Water Board to determine whether this permit applies to the project.

2. Linear Underground/Overhead Projects (LUPs) subject to this General Permit:

Underground/overhead facilities typically constructed as LUPs include, but are not limited to, any conveyance, pipe, or pipeline for the transportation of any gaseous, liquid (including water, wastewater for domestic municipal services), liquescent, or slurry substance; any cable line or wire for the transmission of electrical energy; any cable line or wire for communications (e.g., telephone, telegraph, radio or television messages); and associated ancillary facilities. Construction activities associated with LUPs include, but are not limited to, those activities necessary for the installation of underground and overhead linear facilities (e.g., conduits, substructures, pipelines, towers, poles, cables, wires, connectors, switching, regulating and transforming equipment and associated ancillary facilities) and include, but are not limited to, underground utility mark-out, potholing, concrete and asphalt cutting and removal, trenching, excavation, boring and drilling, access road and pole/tower pad and cable/wire pull station, substation construction, substructure installation, construction of tower footings and/or foundations, pole and tower installations, pipeline installations, welding, concrete and/or pavement repair or replacement, and stockpile/borrow locations.

Water Quality Order 2003-0007-DWQ regulated construction activities associated with small LUPs that resulted in land disturbances greater than one acre, but less than five acres. These projects were considered non-traditional construction projects. Attachment A of this Order now regulates all construction activities from LUPs resulting in land disturbances greater than one acre.

3. Common Plan of Development or Sale

USEPA regulations include the term “common plan of development or sale” to ensure that acreage within a common project does not artificially escape the permit requirements because construction activities are phased, split among smaller parcels, or completed by different owners/developers. In the absence of an

---

[3] Pursuant to the Ninth Circuit Court of Appeals’ decision in *NRDC v. EPA* (9th Cir. 2008) 526 F.3d 591, and subsequent denial of the USEPA’s petition for reconsideration in November 2008, oil and gas construction activities discharging storm water contaminated only with sediment are no longer exempt from the NPDES program.

[4] A construction site that includes a dredge and/or fill discharge to any water of the United States (e.g., wetland, channel, pond, or marine water) requires a CWA Section 404 permit from the U.S. Army Corps of Engineers and a CWA Section 401 Water Quality Certification from the Regional Water Board or State Water Board.

exact definition of “common plan of development or sale,” the State Water Board is required to exercise its regulatory discretion in providing a common sense interpretation of the term as it applies to construction projects and permit coverage. An overbroad interpretation of the term would render meaningless the clear “one acre” federal permitting threshold and would potentially trigger permitting of almost any construction activity that occurs within an area that had previously received area-wide utility or road improvements.

Construction projects generally receive grading and/or building permits (Local Permits) from local authorities prior to initiating construction activity. These Local Permits spell out the scope of the project, the parcels involved, the type of construction approved, etc. Referring to the Local Permit helps define “common plan of development or sale.” In cases such as tract home development, a Local Permit will include all phases of the construction project including rough grading, utility and road installation, and vertical construction. All construction activities approved in the Local Permit are part of the common plan and must remain under the General Permit until construction is completed. For custom home construction, Local Permits typically only approve vertical construction as the rough grading, utilities, and road improvements were already independently completed under the a previous Local Permit. In the case of a custom home site, the homeowner must submit plans and obtain a distinct and separate Local Permit from the local authority in order to proceed. It is not the intent of the State Water Board to require permitting for an individual homeowner building a custom home on a private lot of less than one acre if it is subject to a separate Local Permit. Similarly, the installation of a swimming pool, deck, or landscaping that disturbs less than one acre that was not part of any previous Local Permit are not required to be permitted.

The following are several examples of construction activity of less than one acre that would require permit coverage:

a. A landowner receives a building permit(s) to build tract homes on a 100-acre site split into 200 one-third acre parcels, (the remaining acreage consists of streets and parkways) which are sold to individual homeowners as they are completed. The landowner completes and sells all the parcels except for two. Although the remaining two parcels combined are less than one acre, the landowner must continue permit coverage for the two parcels.

b. One of the parcels discussed above is sold to another owner who intends to complete the construction as already approved in the Local Permit. The new landowner must file Permit Registration Documents (PRDs) to complete the construction even if the new landowner is required to obtain a separate Local Permit.

c. Landowner in (1) above purchases 50 additional one half-acre parcels adjacent to the original 200-acre project. The landowner seeks a Local Permit (or amendment to existing Local permit) to build on 20 parcels while leaving the remaining 30 parcels for future development. The landowner must amend PRDs to include the 20 parcels 14 days prior to commencement of construction activity on those parcels.

C. Construction Activities Not Covered

1. Traditional Construction Projects Not Covered

This General Permit does not apply to the following construction activity:

a. Routine maintenance to maintain original line and grade, hydraulic capacity, or original purpose of the facility.

b. Disturbances to land surfaces solely related to agricultural operations such as disking, harrowing, terracing and leveling, and soil preparation.

c. Discharges of storm water from areas on tribal lands; construction on tribal lands is regulated by a federal permit.

d. Discharges of storm water within the Lake Tahoe Hydrologic Unit. The Lahontan Regional Water Board has adopted its own permit to regulate storm water discharges from construction activity in the Lake Tahoe Hydrologic Unit (Regional Water Board 6SLT). Owners of construction projects in this watershed must apply for the Lahontan Regional Water Board permit rather than the statewide Construction General Permit. Construction projects within the Lahontan region must also comply with the Lahontan Region Project Guideline for Erosion Control (R6T-2005-0007 Section), which can be found at **http://www.waterboards.ca.gov/lahontan/Adopted_Orders/2005/r6t_2005_0007.pdf**

e. Construction activity that disturbs less than one acre of land surface, unless part of a larger common plan of development or the sale of one or more acres of disturbed land surface.

f. Construction activity covered by an individual NPDES Permit for storm water discharges.

g. Landfill construction activity that is subject to the Industrial General Permit.

h. Construction activity that discharges to Combined Sewer Systems.

i. Conveyances that discharge storm water runoff combined with municipal sewage.

j. Discharges of storm water identified in CWA § 402(*l*)(2), 33 U.S.C. § 1342(*l*)(2).

2. **Linear Projects Not Covered**

a. LUP construction activity does not include linear routine maintenance projects. Routine maintenance projects are projects associated with operations and maintenance activities that are conducted on existing lines and facilities and within existing right-of-way, easements, franchise agreements, or other legally binding agreements of the discharger. Routine maintenance projects include, but are not limited to projects that are conducted to:

i. Maintain the original purpose of the facility or hydraulic capacity.

ii. Update existing lines[5] and facilities to comply with applicable codes, standards, and regulations regardless if such projects result in increased capacity.

iii. Repairing leaks.

[5]Update existing lines includes replacing existing lines with new materials or pipes.

Routine maintenance does not include construction of new[6] lines or facilities resulting from compliance with applicable codes, standards, and regulations.

Routine maintenance projects do not include those areas of maintenance projects that are outside of an existing right-of-way, franchise, easements, or agreements. When a project must secure new areas, those areas may be subject to this General Permit based on the area of disturbed land outside the original right-of-way, easement, or agreement.

b. LUP construction activity does not include field activities associated with the planning and design of a project (e.g., activities associated with route selection).

c. Tie-ins conducted immediately adjacent to "energized" or "pressurized" facilities by the discharger are not considered construction activities where all other LUP construction activities associated with the tie-in are covered by an NOI and SWPPP of a third party or municipal agency.

3. **EPA's Small Construction Rainfall Erosivity Waiver**

EPA's Storm Water Phase II Final Rule provides the option for a Small Construction Rainfall Erosivity Waiver. This waiver applies to small construction sites between 1 and 5 acres, and allows permitting authorities to waive those sites that do not have adverse water quality impacts.

Dischargers eligible for this waiver are exempt from Construction General Permit Coverage. In order to obtain the waiver, the discharger must certify to the State Water Board that small construction activity will occur only when the rainfall erosivity factor is less than 5 ("R" in the Revised Universal Soil Loss Equation). The period of construction activity begins at initial earth disturbance and ends with final stabilization. Where vegetation will be used for final stabilization, the date of installation of a practice that provides interim non-vegetative stabilization can be used for the end of the construction period. The operator must agree (as a condition waiver eligibility) to periodically inspect and properly maintain the area until the criteria for final stabilization as defined in the General Permit have been met. If use of this interim stabilization eligibility condition was relied on to qualify for the waiver, signature on the waiver with a certification statement constitutes acceptance of and commitment to complete the final stabilization process. The discharger must submit a waiver certification to the State Board prior to commencing construction activities.

USEPA funded a cooperative agreement with Texas A&M University to develop an online rainfall erosivity calculator. Dischargers can access the calculator from EPA's website at: www.epa.gov/npdes/stormwater/cgp. Use of the calculator allows the discharger to determine potential eligibility for the rainfall erosivity waiver. It may also be useful in determining the time periods during which construction activity could be waived from permit coverage.

[6]New lines are those that are not associated with existing facilities and are not part of a project to update or replace existing lines.

D. Obtaining and Terminating Permit Coverage

The appropriate Legally Responsible Person (LRP) must obtain coverage under this General Permit. To obtain coverage, the LRP or the LRP's Approved Signatory must file Permit Registration Documents (PRDs) prior to the commencement of construction activity. Failure to obtain coverage under this General Permit for storm water discharges to waters of the United States is a violation of the CWA and the California Water Code.

To obtain coverage under this General Permit, LRPs must electronically file the PRDs, which include a Notice of Intent (NOI), Storm Water Pollution Prevention Plan (SWPPP), and other documents required by this General Permit, and mail the appropriate permit fee to the State Water Board. It is expected that as the storm water program develops, the Regional Water Boards may issue General Permits or Individual Permits that contain more specific permit provisions. When this occurs, this General Permit will no longer regulate those dischargers that obtain coverage under Individual Permits.

Any information provided to the Regional Water Board shall comply with the Homeland Security Act and any other federal law that concerns security in the United States; any information that does not comply should not be submitted.

The application requirements of the General Permit establish a mechanism to clearly identify the responsible parties, locations, and scope of operations of dischargers covered by the General Permit and to document the discharger's knowledge of the General Permit's requirements.

This General Permit provides a grandfathering exception to existing dischargers subject to Water Quality Order No. 99-08-DWQ. Construction projects covered under Water Quality Order No. 99-08-DWQ shall obtain permit coverage at Risk Level 1. LUP projects covered under Water Quality Order No. 2003-0007-DWQ shall obtain permit coverage at LUP Type 1. The Regional Water Boards have the authority to require Risk Determination to be performed on projects currently covered under Water Quality Order No. 99-08-DWQ and 2003-0007-DWQ where they deem necessary.

LRPs must file a Notice of Termination (NOT) with the Regional Water Board when construction is complete and final stabilization has been reached or ownership has been transferred. The discharger must certify that all State and local requirements have been met in accordance with this General Permit. In order for construction to be found complete, the discharger must install post-construction storm water management measures and establish a long-term maintenance plan. This requirement is intended to ensure that the post-construction conditions at the project site do not cause or contribute to direct or indirect water quality impacts (i.e., pollution and/or hydromodification) upstream and downstream. Specifically, the discharger must demonstrate compliance with the post-construction standards set forth in this General Permit (Section XIII). The discharger is responsible for all compliance issues including all annual fees until the NOT has been filed and approved by the local Regional Water Board.

E. Discharge Prohibitions

This General Permit authorizes the discharge of storm water to surface waters from construction activities that result in the disturbance of one or more acres of land, provided that the discharger satisfies all permit conditions set forth in the Order. This General Permit prohibits the discharge of pollutants other than storm water and non-storm water discharges authorized by this General Permit or another NPDES permit. This General Permit also prohibits all discharges which contain a hazardous substance in excess of reportable quantities established in 40 C.F.R. §§ 117.3 and 302.4, unless a separate NPDES Permit has been issued to regulate those discharges. In addition, this General Permit incorporates discharge prohibitions contained in water quality control plans, as implemented by the nine Regional Water Boards. Discharges to Areas of Special Biological Significance (ASBS) are prohibited unless covered by an exception that the State Water Board has approved.

Non-storm water discharges include a wide variety of sources, including improper dumping, spills, or leakage from storage tanks or transfer areas. Non-storm water discharges may contribute significant pollutant loads to receiving waters. Measures to control spills, leakage, and dumping, and to prevent illicit connections during construction must be addressed through structural as well as non-structural BMPs. The State Water Board recognizes, however, that certain non-storm water discharges may be necessary for the completion of construction projects. Authorized non-storm water discharges may include those from de-chlorinated potable water sources such as: fire hydrant flushing, irrigation of vegetative erosion control measures, pipe flushing and testing, water to control dust, uncontaminated ground water dewatering, and other discharges not subject to a separate general NPDES permit adopted by a region. Therefore this General Permit authorizes such discharges provided they meet the following conditions.

These authorized non-storm water discharges must:

1. be infeasible to eliminate;
2. comply with BMPs as described in the SWPPP;
3. filter or treat, using appropriate technology, all dewatering discharges from sedimentation basins;
4. meet the NALs for pH and turbidity; and
5. not cause or contribute to a violation of water quality standards.

Additionally, authorized non-storm water discharges must not be used to clean up failed or inadequate construction or post-construction BMPs designed to keep materials onsite. Authorized non-storm water dewatering discharges may require a permit because some Regional Water Boards have adopted General Permits for dewatering discharges.

This General Permit prohibits the discharge of storm water that causes or threatens to cause pollution, contamination, or nuisance.

F. Effluent Standards for All Types of Discharges

1. Technology-Based Effluent Limitations

Permits for storm water discharges associated with construction activity must meet all applicable provisions of Sections 301 and 402 of the CWA. These provisions require controls of pollutant discharges that utilize best available technology economically achievable (BAT) for toxic pollutants and non conventional pollutants and best conventional pollutant control technology (BCT) for conventional pollutants. Additionally, these provisions require controls of pollutant discharges to reduce pollutants and any more stringent controls necessary to meet water quality standards. The USEPA has already established such limitations, known as effluent limitation guidelines (ELGs), for some industrial categories. This is not the case with construction discharges. In instances where there are no ELGs the permit writer is to use best professional judgment (BPJ) to establish requirements that the discharger must meet using BAT/BCT technology. This General Permit contains only narrative effluent limitations and does not contain numeric effluent limitations, except for Active Treatment Systems (ATS).

Order No. 2009-0009-DWQ, as originally adopted by the State Water Board on September 2, 2009, contained numeric effluent limitations for pH (within the range of 6.0 and 9.0 pH units) and turbidity (500 NTU) that applied only to Risk Level 3 and LUP Type 3 construction sites. The State Water Board adopted the numeric effluent limitations as technology-based effluent limitations based upon its best professional judgment. The California Building Industry Association, the Building Industry Legal Defense

Foundation, and the California Business Properties Association (petitioners) challenged Order No. 2009-0009-DWQ in *California Building Industry Association et al. v. State Water Resources Control Board*. On December 27, 2011, the Superior Court issued a judgment and writ of mandamus. The Superior Court ruled in favor of the State Water Board on almost all of the issues the petitioners raised, but the Superior Court invalidated the numeric effluent limitations for pH and turbidity for Risk Level 3 and LUP Type 3 sites because it determined that the State Water Board did not have sufficient BMP performance data to support those numeric effluent limitations. Therefore, the Superior Court concluded that the State Water Board did not comply with the federal regulations that apply to the use of best professional judgment. In invalidating the numeric effluent limitations, the Superior Court also suspended two ancillary requirements (a compliance storm event provision and receiving water monitoring at Risk Level 3 and LUP Type 3 sites that violated the numeric effluent limitations) that related solely to the invalidated numeric effluent limitations.

As a result of the Superior Court's writ of mandamus, this Order no longer contains numeric effluent limitations for pH and turbidity, except for ATS. In addition, as a result of the Superior Court's writ of mandamus, the receiving water monitoring requirements for Risk Level 3 and LUP Type 3 sites were suspended until the State Water Board amended this Order to restore the receiving water monitoring requirements. As amended, this Order now requires Risk Level 3 and LUP Type 3 Dischargers with direct discharges to surface waters to conduct receiving water monitoring whenever their effluent exceeds specified receiving water monitoring triggers. The receiving water monitoring triggers were established at the same levels as the previous numeric effluent limitations (effluent pH outside the range of 6.0 and 9.0 pH units or turbidity exceeding 500 NTU). In restoring the receiving water monitoring requirements, the State Water Board determined that it was appropriate to require receiving water monitoring for these types of sites with direct discharges to surface waters that exceeded the receiving water monitoring triggers under any storm event scenarios, because these sites represent the highest threat to receiving water quality. An exceedance of a receiving water monitoring trigger does not constitute a violation of this General Permit. These receiving water monitoring requirements take effect on the effective date of the amendment to this Order.

BAT/BCT technologies not only include passive systems such as conventional runoff and sediment control, but also treatment systems such as coagulation/flocculation using sand filtration, when appropriate. Such technologies allow for effective treatment of soil particles less 0.02 mm (medium silt) in diameter. The discharger must install structural controls, as necessary, such as erosion and sediment controls that meet BAT and BCT to achieve compliance with water quality standards. The narrative effluent limitations constitute compliance with the requirements of the CWA.

Because the permit is an NPDES permit, there is no legal requirement to address the factors set forth in Water Code sections 13241 and 13263, unless the permit is more stringent than what federal law requires. (See *City of Burbank v. State Water Resources Control Bd.* (2005) 35 Cal.4th 613, 618, 627.) None of the requirements in this permit are more stringent than the minimum federal requirements, which include technology-based requirements achieving BAT/BCT and strict compliance with water quality standards. The inclusion of numeric effluent limitations (NELs) in the permit for Active Treatment Systems does not cause the permit to be more stringent than current federal law. NELs and best management practices are simply two different methods of achieving the same federal requirement: strict compliance with state water quality standards. Federal law authorizes both narrative and numeric effluent limitations to meet state water quality standards. The use of NELs to achieve compliance with water quality standards is not a more stringent requirement than the use of BMPs. (State Water Board Order No. WQ 2006-0012 (*Boeing*).) Accordingly, the State Water Board does not need to take into account the factors in Water Code sections 13241 and 13263.

The State Water Board has concluded that the establishment of BAT/BCT will not create or aggravate other environmental problems through increases in air pollution, solid waste generation, or energy consumption. While there may be a slight increase in non-water quality impacts due to the implementation of additional monitoring or the construction of additional BMPs, these impacts will be negligible in comparison with the construction activities taking place on site and would be justified by the water quality benefits associated with compliance.

pH Receiving Water Monitoring Trigger

Given the potential contaminants, the minimum standard method for control of pH in runoff requires the use of preventive measures such as avoiding concrete pours during rainy weather, covering concrete and directing flow away from fresh concrete if a pour occurs during rain, covering scrap drywall and stucco materials when stored outside and potentially exposed to rain, and other housekeeping measures. If necessary, pH-impaired storm water from construction sites can be treated in a filter or settling pond or basin, with additional natural or chemical treatment required to meet pH limits set forth in this permit. The basin or pond acts as a collection point and holds storm water for a sufficient period for the contaminants to be settled out, either naturally or artificially, and allows any additional treatment to take place. The State Water Board considers these techniques to be equivalent to BCT. In determining the pH concentration trigger for discharges, the State Water Board used BPJ to set these limitations.

The chosen trigger was established by calculating three standard deviations above and below the mean pH of runoff from highway construction sites[7] in California. Proper implementation of BMPs should result in discharges that are within the range of 6.0 to 9.0 pH Units.

Turbidity Receiving Water Monitoring Trigger

The Turbidity receiving water monitoring trigger of 500 NTU is a technology-based trigger and was developed using three different analyses aimed at finding the appropriate threshold to set the technology-based limit to ensure environmental protection, effluent quality and cost-effectiveness. The analyses fell into three, main types: (1) an ecoregion-specific dataset developed by Simon et. al. (2004) [8]; (2) Statewide Regional Water Quality Control Board enforcement data; and (3) published, peer-reviewed studies and reports on in-situ performance of best management practices in terms of erosion and sediment control on active construction sites.

A 1:3 relationship between turbidity (expressed as NTU) and suspended sediment concentration (expressed as mg/L) is assumed based on a review of suspended sediment and turbidity data from three gages used in the USGS National Water Quality Assessment Program:

USGS 11074000 SANTA ANA R BL PRADO DAM CA
USGS 11447650 SACRAMENTO R A FREEPORT CA
USGS 11303500 SAN JOAQUIN R NR VERNALIS CA

The receiving water monitoring trigger represents staff determination that the trigger value is the most practicable based on available data. The turbidity receiving water monitoring trigger represents a bridge between the narrative effluent limitations and receiving water limitations. To support this receiving water monitoring trigger, State Water Board staff analyzed construction site discharge information (monitoring data, estimates) and receiving water monitoring information.

Since the turbidity receiving water monitoring trigger represents an appropriate threshold level expected at a site, compliance with this value does not necessarily represent compliance with either the narrative effluent limitations (as enforced through the BAT/BCT standard) or the receiving water limitations. In the San Diego region, some inland surface waters have a receiving water objective for turbidity equal to 20 NTU. Obviously a discharge up to, but not exceeding, the turbidity receiving water monitoring trigger of

[7] Caltrans Construction Sites Runoff Characterization Study, 2002. Available at: http://www.dot.ca.gov/hq/env/stormwater/pdf/CTSW-RT-02-055.pdf.

500 NTU may still cause or contribute to the exceedance of the 20 NTU standard. Most of the waters of the State are protected by turbidity objectives based on background conditions.

Table 1 - Regional Water Board Basin Plans, Water Quality Objectives for Turbidity

REGIONAL WATER BOARD	WQ Objective	Background/Natural Turbidity	Maximum Increase
1	Based on background	All levels	20%
2	Based on background	> 50 NTU	10%
3	Based on background	0-50 JTU 50-100 JTU > 100 JTU	20% 10 NTU 10%
4	Based on background	0-50 NTU > 50 NTU	20% 10%
5	Based on background	0-5 NTU 5-50 NTU 50-100 NTU >100 NTU	1 NTU 20% 10 NTU 10%
6	Based on background	All levels	10%
7	Based on background	N/A	N/A
8	Based on background	0-50 NTU 50-100 NTU >100 NTU	20% 10 NTU 10%
9	Inland Surface Waters, 20 NTU All others, based on background	 0-50 NTU 50-100 NTU >100 NTU	 20% 10 NTU 10%

Table 2 shows the suspended sediment concentrations at the 1.5 year flow recurrence interval for the 12 ecoregions in California from Simon et. al (2004).

Table 2 - Results of Ecoregion Analysis

Ecoregion	Percent of California Land Area	Median Suspended Sediment Concentration (mg/L)
1	9.1	874
4	0.2	120
5	8.8	35.6
6	20.7	1530
7	7.7	122
8	3.0	47.4
9	9.4	284
13	5.2	143
14	21.7	5150
78	8.1	581
80	2.4	199
81	3.7	503
Area-weighted average		1633

If a 1:3 relationship between turbidity and suspended sediment is assumed, the median turbidity is 544 NTU.

The following table is composed of turbidity readings measured in NTUs from administrative civil liability (ACL) actions for construction sites from 2003 - 2009. This data was derived from the complete listing of construction-related ACLs for the six year period. All ACLs were reviewed and those that included turbidimeter readings at the point of storm water discharge were selected for this dataset.

Table 3 – ACL Sampling Data taken by Regional Water Board Staff

WDID#	Region	Discharger	Turbidity (NTU)
5S34C331884	5S	Bradshaw Interceptor Section 6B	1800
5S05C325110	5S	Bridalwood Subdivision	1670
5S48C336297	5S	Cheyenne at Browns Valley	1629
5R32C314271	5R	Grizzly Ranch Construction	1400
6A090406008	6T	El Dorado County Department of Transportation, Angora Creek	97.4
5S03C346861	5S	TML Development, LLC	1600
6A31C325917	6T	Northstar Village	See Subdata Set

Subdata Set - Turbidity for point of storm water runoff discharge at Northstar Village

Date	Turbidity (NTU)	Location
10/5/2006	900	Middle Martis Creek
11/2/2006	190	Middle Martis Creek
01/04/2007	36	West Fork, West Martis Creek
02/08/2007	180	Middle Martis Creek
02/09/2007	130	Middle Martis Creek
02/09/2007	290	Middle Martis Creek
02/09/2007	100	West Fork, West Martis Creek
02/10/2007	28	Middle Martis Creek
02/10/2007	23	Middle Martis Creek
02/10/2007	32	Middle Martis Creek
02/10/2007	12	Middle Martis Creek
02/10/2007	60	West Fork, West Martis Creek
02/10/2007	34	West Fork, West Martis Creek

A 95% confidence interval for mean turbidity in an ACL order was constructed. The data set used was a small sample size, so the 500 NTU (the value derived as the receiving water monitoring trigger for this General Permit) needed to be verified as a possible population mean. In this case, the population refers to a hypothetical population of turbidity measurements of which our sample of 20 represents. A t-distribution was assumed due to the small sample size:

Mean: 512.23 NTU
Standard Deviation: 686.85
Margin of Error: 321.45
Confidence Interval: 190.78 NTU (Low)
833.68 NTU (High)

Based on a constructed 95% confidence interval, an ACL order turbidity measurement will be between 190.78 – 833.68 NTU. 500 NTU falls within this range. Using the same data set, a small-sample hypothesis test was also performed to test if the ACL turbidity data set contains enough information to cast doubt on choosing a 500 NTU as a mean. 500 NTU was again chosen due to its proposed use as an acceptable value. The test was carried out using a 95% confidence interval. Results indicated that the ACL turbidity data set *does not* contain significant sample evidence to reject the claim of 500 NTU as an acceptable mean for the ACL turbidity population.

There are not many published, peer-reviewed studies and reports on in-situ performance of best management practices in terms of erosion and sediment control on active construction sites. The most often cited study is a report titled, "Improving the Cost Effectiveness of Highway Construction Site Erosion and Pollution Control" (Horner, Guedry, and Kortenhof 1990, http://www.wsdot.wa.gov/Research/Reports/200/200.1.htm). In a comment letter summarizing this report sent to the State Water Board, the primary author, Dr. Horner, states:

"The most effective erosion control product was wood fiber mulch applied at two different rates along with a bonding agent and grass seed in sufficient time before the tests to achieve germination. Plots treated in this way reduced influent turbidity by more than 97 percent and discharged effluent exhibiting mean and maximum turbidity values of 21 and 73 NTU, respectively. Some other mulch and blanket materials performed nearly as well. These tests demonstrated the control ability of widely available BMPs over a very broad range of erosion potential."

Other technologies studied in this report produced effluent quality at or near 100 NTU. It is the BPJ of the State Water Board staff that erosion control, while preferred, is not always an option on construction sites and that technology performance in a controlled study showing effluent quality directly leaving a BMP is always easier and cheaper to control than effluent being discharged from the project (edge of property, etc.). As a result, it is the BPJ of the State Water Board staff that it is not cost effective or feasible, at this time, for all risk level and type 3 sites in California to achieve effluent discharges with turbidity values that are less than 100 NTU.

To summarize, the analysis showed that: (1) results of the Simon et. al dataset reveals turbidity values in background receiving water in California's ecoregions range from 16 NTU to 1716 NTU (with a mean of 544 NTU); (2) based on a constructed 95% confidence interval, construction sites will be subject to administrative civil liability (ACL) when their turbidity measurement falls between 190.78 – 833.68 NTU; and (3) sites with highly controlled discharges employing and maintaining good erosion control practices can discharge effluent from the BMP with turbidity values less than 100 NTU. State Water Board staff has determined, using its BPJ, that it is most cost effective to set the receiving water monitoring trigger for turbidity at 500 NTU.

i. *Compliance Storm Event*

While this General Permit no longer contains "compliance storm event" exceptions from technology-based NELs, the "compliance storm event" exception from the ATS NELs remain in effect. See Section K of this Fact Sheet, and Attachment F of this General Permit for more information.

a. TMDLs and Waste Load Allocations

Dischargers located within the watershed of a CWA § 303(d) impaired water body, for which a TMDL for sediment has been adopted by the Regional Water Board or USEPA, must comply with the approved TMDL if it identifies "construction activity" or land disturbance as a source of sediment. If it does, the

TMDL should include a specific waste load allocation for this activity/source. The discharger, in this case, may be required by a separate Regional Water Board order to implement additional BMPs, conduct additional monitoring activities, and/or comply with an applicable waste load allocation and implementation schedule. If a specific waste load allocation has been established that would apply to a specific discharge, the Regional Water Board may adopt an order requiring specific implementation actions necessary to meet that allocation. In the instance where an approved TMDL has specified a general waste load allocation to construction storm water discharges, but no specific requirements for construction sites have been identified in the TMDL, dischargers must consult with the state TMDL authority[9] to confirm that adherence to a SWPPP that meets the requirements of the General Permit will be consistent with the approved TMDL.

2. Determining Compliance with Effluent Standards

a. Technology-Based Numeric Action Levels (NALs)

This General Permit contains technology-based NALs for pH and turbidity, and requirements for effluent monitoring at all Risk level 2 & 3, and LUP Type 2 & 3 sites. Numeric action levels are essentially numeric benchmark values for certain parameters that, if exceeded in effluent sampling, trigger the discharger to take actions. Exceedance of an NAL does not itself constitute a violation of the General Permit. If the discharger fails to take the corrective action required by the General Permit, though, that may consititute a violation.

The primary purpose of NALs is to assist dischargers in evaluating the effectiveness of their on-site measures. Construction sites need to employ many different systems that must work together to achieve compliance with the permit's requirements. The NALs chosen should indicate whether the systems are working as intended.

Another purpose of NALs is to provide information regarding construction activities and water quality impacts. This data will provide the State and Regional Water Boards and the rest of the storm water community with more information about levels and types of pollutants present in runoff and how effective the dischargers BMPs are at reducing pollutants in effluent. The State Water Board also hopes to learn more about the linkage between effluent and receiving water quality. In addition, these requirements will provide information on the mechanics needed to establish compliance monitoring programs at construction sites in future permit deliberations.

i. *pH*

The chosen limits were established by calculating one standard deviation above and below the mean pH of runoff from highway construction sites[10] in California. Proper implementation of BMPs should result in discharges that are within the range of 6.5 to 8.5 pH Units.

---

[9] http://www.waterboards.ca.gov/tmdl/tmdl.html.
[10] Caltrans Construction Sites Runoff Characterization Study, 2002. Available at: http://www.dot.ca.gov/hq/env/stormwater/pdf/CTSW-RT-02-055.pdf.

The Caltrans study included 33 highway construction sites throughout California over a period of four years, which included 120 storm events. All of these sites had BMPs in place that would be generally implemented at all types of construction sites in California.

ii. ***Turbidity***

BPJ was used to develop an NAL that can be used as a learning tool to help dischargers improve their site controls, and to provide meaningful information on the effectiveness of storm water controls. A statewide turbidity NAL has been set at 250 NTU.

G. Receiving Water Limitations

Construction-related activities that cause or contribute to an exceedance of water quality standards must be addressed. The dynamic nature of construction activity gives the discharger the ability to quickly identify and monitor the source of the exceedances. This is because when storm water mobilizes sediment, it provides visual cues as to where corrective actions should take place and how effective they are once implemented.

This General Permit requires that storm water discharges and authorized non-storm water discharges must not contain pollutants that cause or contribute to an exceedance of any applicable water quality objective or water quality standards. The monitoring requirements in this General Permit for sampling and analysis procedures will help determine whether BMPs installed and maintained are preventing pollutants in discharges from the construction site that may cause or contribute to an exceedance of water quality standards.

Water quality standards consist of designated beneficial uses of surface waters and the adoption of ambient criteria necessary to protect those uses. When adopted by the State Water Board or a Regional Water Board, the ambient criteria are termed "water quality objectives." If storm water runoff from construction sites contains pollutants, there is a risk that those pollutants could enter surface waters and cause or contribute to an exceedance of water quality standards. For that reason, dischargers should be aware of the applicable water quality standards in their receiving waters. (The best method to ensure compliance with receiving water limitations is to implement BMPs that prevent pollutants from contact with storm water or from leaving the construction site in runoff.)

In California, water quality standards are published in the Basin Plans adopted by each Regional Water Board, the California Toxics Rule (CTR), the National Toxics Rule (NTR), and the Ocean Plan.

Dischargers can determine the applicable water quality standards by contacting Regional Water Board staff or by consulting one of the following sources. The actual Basin Plans that contain the water quality standards can be viewed at the website of the appropriate Regional Water Board. (http://www.waterboards.ca.gov/regions.html), the State Water Board site for statewide plans (http://www.waterboards.ca.gov/plnspols/index.html), or the USEPA regulations for the NTR and CTR (40 C.F.R. §§ 131.36-38). Basin Plans and statewide plans are also available by mail from the appropriate Regional Water Board or the State Water Board. The USEPA regulations are available at http://www.epa.gov/. Additional information concerning water quality standards can be accessed through http://www.waterboards.ca.gov/stormwtr/gen_const.html.

H. Training Qualifications and Requirements

The Blue Ribbon Panel (BRP) made the following observation about the lack of industry-specific training requirements:

"Currently, there is no required training or certification program for contractors, preparers of soil erosion and sediment control Storm Water Pollution Prevention Plans, or field inspectors."

Order 99-08-DWQ required that all dischargers train their employees on how to comply with the permit, but it did not specificy a curriculum or certification program. This has resulted in inconsistent implementation by all affected parties - the dischargers, the local governments where the construction activity occurs, and the regulators required to enforce 99-08-DWQ. This General Permit requires Qualified SWPPP Developers and practitioners to obtain appropriate training, and makes this curriculum mandatory two years after adoption, to allow time for course completion. The State and Regional Water Board are working with many stakeholders to develop the curriculum and mechanisms needed to develop and deliver the courses.

To ensure that the preparation, implementation, and oversight of the SWPPP is sufficient for effective pollution prevention, the Qualified SWPPP Developer and Qualified SWPPP Practitioners responsible for creating, revising, overseeing, and implementing the SWPPP must attend a State Water Board-sponsored or approved Qualified SWPPP Developer and Qualified SWPPP Practitioner training course.

I. Sampling, Monitoring, Reporting and Record Keeping

1. Traditional Construction Monitoring Requirements

This General Permit requires visual monitoring at all sites, and effluent water quality at all Risk Level 2 & 3 sites. It requires receiving water monitoring at some Risk Level 3 sites. All sites are required to submit annual reports, which contain various types of information, depending on the site characteristics and events. A summary of the monitoring and reporting requirements is found in Table 4.

Table 4 - Required Monitoring Elements for Risk Levels

	Visual	Non-visible Pollutant	Effluent	Receiving Water
Risk Level 1	three types required for all Risk Levels: non-storm water, pre-rain and post-rain	As needed for all Risk Levels (see below)	where applicable	not required
Risk Level 2			pH, turbidity	not required
Risk Level 3			pH, turbidity	(if Receiving Water Monitoring Trigger exceeded) pH, turbidity and SSC. Bioassessment for sites 30 acres or larger.

a. Visual

All dischargers are required to conduct quarterly, non-storm water visual inspections. For these inspections, the discharger must visually observe each drainage area for the presence of (or indications of prior) unauthorized and authorized non-storm water discharges and their sources. For storm-related inspections, dischargers must visually observe storm water discharges at all discharge locations within two business days after a qualifying event. For this requirement, a qualifying rain event is one producing precipitation of ½ inch or more of discharge. Dischargers must conduct a post-storm event inspection to (1) identify whether BMPs were adequately designed, implemented, and effective, and (2) identify any additional BMPs necessary and revise the SWPPP accordingly. Dischargers must maintain on-site records of all visual observations, personnel performing the observations, observation dates, weather conditions, locations observed, and corrective actions taken in response to the observations.

b. Non-Visible Pollutant Monitoring

This General Permit requires that all dischargers develop a sampling and analysis strategy for monitoring pollutants that are not visually detectable in storm water. Monitoring for non-visible pollutants must be required at any construction site when the exposure of construction materials occurs and where a discharge can cause or contribute to an exceedance of a water quality objective.

Of significant concern for construction discharges are the pollutants found in materials used in large quantities at construction sites throughout California and exposed throughout the rainy season, such as cement, flyash, and other recycled materials or by-products of combustion. The water quality standards that apply to these materials will depend on their composition. Some of the more common storm water pollutants from construction activity are not CTR pollutants. Examples of non-visible pollutants include glyphosate (herbicides), diazinon and chlorpyrifos (pesticides), nutrients (fertilizers), and molybdenum (lubricants). The use of diazinon and chlorpyrifos is a common practice among landscaping professionals and may trigger sampling and analysis requirements if these materials come into contact with storm water. High pH values from cement and gypsum, high pH and SSC from wash waters, and chemical/fecal contamination from portable toilets, also are not CTR pollutants. Although some of these constituents do have numeric water quality objectives in individual Basin Plans, many do not and are subject only to narrative water quality standards (i.e. not causing toxicity). Dischargers are encouraged to discuss these issues with Regional Water Board staff and other storm water quality professionals.

The most effective way to avoid the sampling and analysis requirements, and to ensure permit compliance, is to avoid the exposure of construction materials to precipitation and storm water runoff. Materials that are not exposed do not have the potential to enter storm water runoff, and therefore receiving waters sampling is not required. Preventing contact between storm water and construction materials is one of the most important BMPs at any construction site.

Preventing or eliminating the exposure of pollutants at construction sites is not always possible. Some materials, such as soil amendments, are designed to be used in a manner that will result in exposure to storm water. In these cases, it is important to make sure that these materials are applied according to the manufacturer's instructions and at a time when they are unlikely to be washed away. Other construction materials can be exposed when storage, waste disposal or the application of the material is done in a manner not protective of water quality. For these situations, sampling is required unless there is capture and containment of all storm water that has been exposed. In cases where construction materials may be exposed to storm water, but the storm water is contained and is not allowed to run off the site, sampling will only be required when inspections show that the containment failed or is breached, resulting in potential exposure or discharge to receiving waters.

The discharger must develop a list of potential pollutants based on a review of potential sources, which will include construction materials soil amendments, soil treatments, and historic contamination at the site. The discharger must review existing environmental and real estate documentation to determine the potential for pollutants that could be present on the construction site as a result of past land use activities.

Good sources of information on previously existing pollution and past land uses include:

i. Environmental Assessments;

ii. Initial Studies;

iii. Phase 1 Assessments prepared for property transfers; and

iv. Environmental Impact Reports or Environmental Impact Statements prepared under the requirements of the National Environmental Policy Act or the California Environmental Quality Act.

In some instances, the results of soil chemical analyses may be available and can provide additional information on potential contamination.

The potential pollutant list must include all non-visible pollutants that are known or should be known to occur on the construction site including, but not limited to, materials that:

i. are being used in construction activities;

ii. are stored on the construction site;

iii. were spilled during construction operations and not cleaned up;

iv. were stored (or used) in a manner that created the potential for a release of the materials during past land use activities;

v. were spilled during previous land use activities and not cleaned up; or

vi. were applied to the soil as part of past land use activities.

C. Effluent Monitoring

Federal regulations[11] require effluent monitoring for discharges subject to NALs. Subsequently, all Risk Level 2 and 3 dischargers must perform sampling and analysis of effluent discharges to characterize discharges associated with construction activity from the entire area disturbed by the project. Dischargers must collect samples of stored or contained storm water that is discharged subsequent to a storm event producing precipitation of ½ inch or more at the time of discharge.

Table 5 - Storm Water Effluent Monitoring Requirements by Risk Level

	Frequency	Effluent Monitoring (Section E, below)
Risk Level 1	when applicable	non-visible pollutant parameters (if applicable)
Risk Level 2	Minimum of 3 samples per day during qualifying rain event characterizing discharges associated with construction activity from the entire project disturbed area.	pH, turbidity, and non-visible pollutant parameters (if applicable)
Risk Level 3	Minimum of 3 samples per day during qualifying rain event characterizing discharges associated with construction activity from the entire project disturbed area.	pH, turbidity, and non-visible pollutant parameters if applicable

Risk Level 1 dischargers must analyze samples for:

i. any parameters indicating the presence of pollutants identified in the pollutant source assessment required in Attachment C contained in the General Permit.

[11] 40 C.F.R. § 122.44.

Risk Level 2 dischargers must analyze samples for:

i. pH and turbidity;

ii. any parameters indicating the presence of pollutants identified in the pollutant source assessment required in Attachment D contained in the General Permit, and

iii. any additional parameters for which monitoring is required by the Regional Water Board.

Risk Level 3 dischargers must analyze samples for:

i. pH, turbidity;

ii. any parameters indicating the presence of pollutants identified in the pollutant source assessment required in Attachment E contained in the General Permit, and

iii. any additional parameters for which monitoring is required by the Regional Water Board.

2. Linear Monitoring and Sampling Requirements

Attachment A, establishes minimum monitoring and reporting requirements for all LUPs. It establishes different monitoring requirements depending on project complexity and risk to water quality. The monitoring requirements for Type 1 LUPs are less than Type 2 & 3 projects because Type 1 projects have a lower potential to impact water quality.

A discharger shall prepare a monitoring program prior to the start of construction and immediately implement the program at the start of construction for LUPs. The monitoring program must be implemented at the appropriate level to protect water quality at all times throughout the life of the project.

a. Type 1 LUP Monitoring Requirements

A discharger must conduct daily visual inspections of Type 1 LUPs during working hours while construction activities are occurring. Inspections are to be conducted by qualified personnel and can be conducted in conjunction with other daily activities. Inspections will be conducted to ensure the BMPs are adequate, maintained, and in place at the end of the construction day. The discharger will revise the SWPPP, as appropriate, based on the results of the daily inspections. Inspections can be discontinued in non-active construction areas where soil disturbing activities have been completed and final stabilization has been achieved (e.g., trench has been paved, substructures have been installed, and successful final vegetative cover or other stabilization criteria have been met).

A discharger shall implement the monitoring program for inspecting Type 1 LUPs. This program requires temporary and permanent stabilization BMPs after active construction is completed. Inspection activities will continue until adequate permanent stabilization has been established and will continue in areas where re-vegetation is chosen until minimum vegetative coverage has been established. Photographs shall be taken during site inspections and submitted to the State Water Board.

b. Type 2 & 3 LUP Monitoring Requirements

A discharger must conduct daily visual inspections of Type 2 & 3 LUPs during working hours while construction activities are occurring. Inspections are to be conducted by qualified personnel and can be in conjunction with other daily activities.

All dischargers of Type 2 & 3 LUPs are required to conduct inspections by qualified personnel of the construction site during normal working hours prior to all anticipated storm events and after actual storm events. During extended storm events, the discharger shall conduct inspections during normal working hours for each 24-hour period. Inspections can be discontinued in non-active construction areas where soil disturbing activities have been completed and final stabilization has been achieved (e.g., trench has been paved, substructures installed, and successful vegetative cover or other stabilization criteria have been met).

The goals of these inspections are (1) to identify areas contributing to a storm water discharge; (2) to evaluate whether measures to reduce pollutant loadings identified in the SWPPP are adequate and properly installed and functioning in accordance with the terms of the General Permit; and (3) to determine whether additional control practices or corrective maintenance activities are needed. Equipment, materials, and workers must be available for rapid response to failures and emergencies. All corrective maintenance to BMPs shall be performed as soon as possible, depending upon worker safety.

All dischargers shall develop and implement a monitoring program for inspecting Type 2 & 3 LUPs that require temporary and permanent stabilization BMPs after active construction is completed. Inspections will be conducted to ensure the BMPs are adequate and maintained. Inspection activities will continue until adequate permanent stabilization has been established and will continue in areas where revegetation is chosen until minimum vegetative coverage has been established.

A log of inspections conducted before, during, and after the storm events must be maintained in the SWPPP. The log will provide the date and time of the inspection and who conducted the inspection. Photographs must be taken during site inspections and submitted to the State Water Board.

C. Sampling Requirements for all LUP Project Types

LUPs are also subject to sampling and analysis requirements for visible pollutants (i.e., sedimentation/siltation, turbidity) and for non-visible pollutants.

Sampling for visible pollutants is required for Type 2 & 3 LUPs.

Non-visible pollutant monitoring is required for pollutants associated with construction sites and activities that (1) are not visually detectable in storm water discharges, and (2) are known or should be known to occur on the construction site, and (3) could cause or contribute to an exceedance of water quality objectives in the receiving waters. Sample collection for non-visible pollutants must only be required (1) during a storm event when pollutants associated with construction activities may be discharged with storm water runoff due to a spill, or in the event there was a breach, malfunction, failure, and/or leak of any BMP, and (2) when the discharger has failed to adequately clean the area of material and pollutants. Failure to implement appropriate BMPs will trigger the same sampling requirements as those required for a breach, malfunction and/or leak, or when the discharger has failed to implement appropriate BMPs prior to the next storm event.

Additional monitoring parameters may be required by the Regional Water Boards.

It is not anticipated that many LUPs will be required to collect samples for pollutants not visually detected in runoff due to the nature and character of the construction site and activities as previously described in this fact sheet. Most LUPs are constructed in urban areas with public access (e.g., existing roadways, road shoulders, parking areas, etc.). This raises a concern regarding the potential contribution of pollutants from vehicle use and/or from normal activities of the public (e.g., vehicle washing, landscape fertilization, pest spraying, etc.) in runoff from the project site. Since the dischargers are not the land owners of the project area and are not able to control the presence of these pollutants in the storm water that runs through their projects, it is not the intent of this General Permit to require dischargers to sample for these pollutants. This General Permit does not require the discharger to sample for these types of pollutants except where the discharger has brought materials onsite that contain these pollutants and when a condition (e.g., breach, failure, etc.) described above occurs.

3. Receiving Water Monitoring

In order to ensure that receiving water limitations are met, discharges subject to receiving water monitoring triggers (i.e., Risk Level 3 and LUP Type 3 sites) or numeric effluent limitations (i.e., Risk Level 3 and LUP Type 3 sites utilizing ATS with direct discharges into receiving waters) must also monitor the downstream receiving water(s) for turbidity, SSC, and pH (if applicable) when a receiving water monitoring trigger or NEL is exceeded.

a. Bioassessment Monitoring

This General Permit requires a bioassessment of receiving waters for dischargers of Risk Level 3 or LUP Type 3 construction projects equal to or larger than 30 acres with direct discharges into receiving waters. Benthic macroinvertebrate samples will be taken upstream and downstream of the site's discharge point in the receiving water. Bioassessments measure the quality of the stream by analyzing the aquatic life present. Higher levels of appropriate aquatic species tend to indicate a healthy stream; whereas low levels of organisms can indicate stream degradation. Active construction sites have the potential to discharge large amounts of sediment and pollutants into receiving waters. Requiring a bioassessment for large project sites, with the most potential to impact water quality, provides a snapshot of the health of the receiving water prior to initiation of construction activities. This snapshot can be used in comparison to the health of the receiving water after construction has commenced.

Each ecoregion (biologically and geographically related area) in the State has a specific yearly peak time where stream biota is in a stable and abundant state. This time of year is called an Index Period. The bioassessment requirements in this General Permit, requires benthic macroinvertebrate sampling within a sites index period. The State Water Board has developed a map designating index periods for the ecoregions in the State (see State Water Board Website).

This General Permit requires the bioassessment methods to be in accordance with the Surface Water Ambient Monitoring Program (SWAMP) in order to provide data consistency within the state as well as generate useable biological stream data.

Table 6 - Receiving Water Monitoring Requirements

	Receiving Water Monitoring Parameters
Risk Level 1 /LUP Type 1	not required
Risk Level 2 / LUP Type 2	not required
Risk Level 3 / LUP Type 3	If Receiving Water Monitoring Trigger exceeded: pH (if applicable), turbidity, and SSC. Bioassessment for sites 30 acres or larger.

4. Reporting Requirements

a. NAL Exceedance Report

All Risk Level 3 and LUP Type 3 dischargers must electronically submit all storm event sampling results to the State And Regional Boards, via the electronic data system, no later than 10 days after the conclusion of the storm event.

b. Annual Report

All dischargers must prepare and electronically submit an annual report no later than September 1 of each year using the Storm water Multi-Application Reporting and Tracking System (SMARTS). The

Annual Report must include a summary and evaluation of all sampling and analysis results, original laboratory reports, chain of custody forms, a summary of all corrective actions taken during the compliance year, and identification of any compliance activities or corrective actions that were not implemented.

5. Record Keeping

According to 40 C.F.R. Parts 122.21(p) and 122.41(j), the discharger is required to retain paper or electronic copies of all records required by this General Permit for a period of at least three years from the date generated or the date submitted to the State Water Board or Regional Water Boards. A discharger must retain records for a period beyond three years as directed by Regional Water Board.

J. Risk Determination

1. Traditional Projects

a. Overall Risk Determination

There are two major requirements related to site planning and risk determination in this General Permit. The project's overall risk is broken up into two elements – (1) project sediment risk (the relative amount of sediment that can be discharged, given the project and location details) and (2) receiving water risk (the risk sediment discharges pose to the receiving waters).

Project Sediment Risk:
Project Sediment Risk is determined by multiplying the R, K, and LS factors from the Revised Universal Soil Loss Equation (RUSLE) to obtain an estimate of project-related bare ground soil loss expressed in tons/acre. The RUSLE equation is as follows:

A = (R)(K)(LS)(C)(P)

Where: A = the rate of sheet and rill erosion
R = rainfall-runoff erosivity factor
K = soil erodibility factor
LS = length-slope factor
C = cover factor (erosion controls)
P = management operations and support practices (sediment controls)

The C and P factors are given values of 1.0 to simulate bare ground conditions.

There is a map option and a manual calculation option for determining soil loss. For the map option, the R factor for the project is calculated using the online calculator at http://cfpub.epa.gov/npdes/stormwater/LEW/lewCalculator.cfm. The product of K and LS are shown on Figure 1. To determine soil loss in tons per acre, the discharger multiplies the R factor times the value for K times LS from the map.

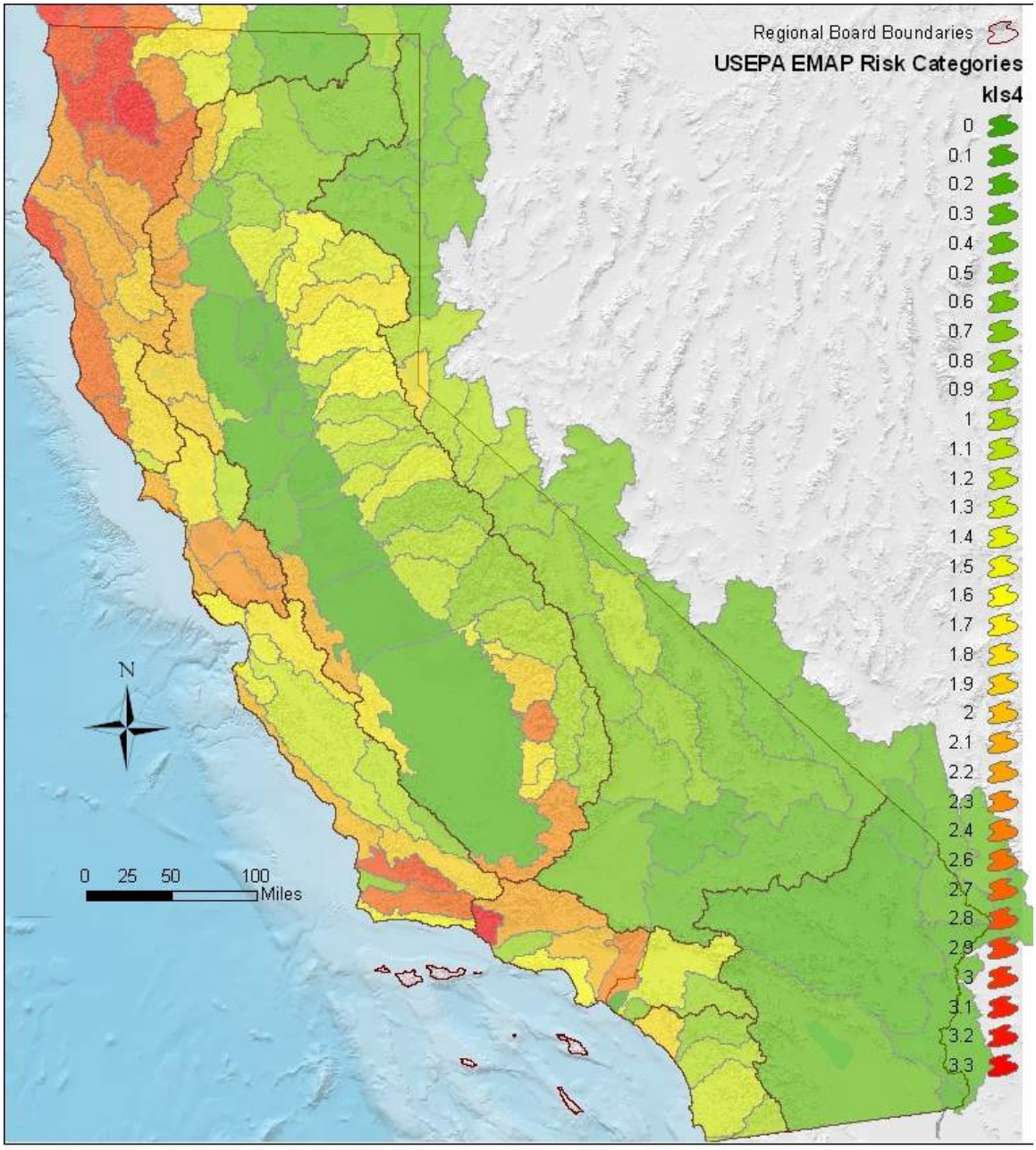

Figure 1 -Statewide Map of K * LS

For the manual calculation option, the R factor for the project is calculated using the online calculator at http://cfpub.epa.gov/npdes/stormwater/LEW/lewCalculator.cfm. The K and LS factors are determined using Appendix 1.

Soil loss of less than 15 tons/acre is considered **low** sediment risk.
Soil loss between 15 and 75 tons/acre is **medium** sediment risk.
Soil loss over 75 tons/acre is considered **high** sediment risk.

The soil loss values and risk categories were obtained from mean and standard deviation RKLS values from the USEPA EMAP program. High risk is the mean RKLS value plus two standard deviations. Low risk is the mean RKLS value minus two standard deviations.

Receiving Water Risk:
Receiving water risk is based on whether a project drains to a sediment-sensitive waterbody. A sediment-sensitive waterbody is either

on the most recent 303d list for waterbodies impaired for sediment;
has a USEPA-approved Total Maximum Daily Load implementation plan for sediment; **or**
has the beneficial uses of COLD, SPAWN, and MIGRATORY.

A project that meets at least one of the three criteria has a high receiving water risk. A list of sediment-sensitive waterbodies will be posted on the State Water Board's website. It is anticipated that an interactive map of sediment sensitive water bodies in California will be available in the future.

The Risk Levels have been altered by eliminating the possibility of a Risk Level 4, and expanding the constraints for Risk Levels 1, 2, and 3. Therefore, projects with high receiving water risk and high sediment risk will be considered a Risk Level 3 risk to water quality.

In response to public comments, the Risk Level requirements have also been changed such that Risk Level 1 projects will be subject to minimum BMP and visual monitoring requirements, Risk Level 2 projects will be subject to NALs and some additional monitoring requirements, and Risk Level 3 projects will be subject to NALs, and more rigorous monitoring requirements such as receiving water monitoring and in some cases bioassessment.

Table 7 - Combined Risk Level Matrix

Combined Risk Level Matrix				
Receiving Water Risk		Sediment Risk		
		Low	Medium	High
	Low	Level 1	Level 2	
	High	Level 2		Level 3

b. **Effluent Standards**

All dischargers are subject to the narrative effluent limitations specified in the General Permit. The narrative effluent limitations require storm water discharges associated with construction activity to meet all applicable provisions of Sections 301 and 402 of the CWA. These provisions require controls of pollutant discharges that utilize BAT and BCT to reduce pollutants and any more stringent controls necessary to meet water quality standards.

Risk Level 2 dischargers that pose a medium risk to water quality are subject to technology-based NALs for pH and turbidity. Risk Level 3 dischargers that pose a high risk to water quality are also subject to technology-based NALs for pH and turbidity.

c. Good Housekeeping

Proper handling and managing of construction materials can help minimize threats to water quality. The discharger must consider good housekeeping measures for: construction materials, waste management, vehicle storage & maintenance, landscape materials, and potential pollutant sources. Examples include; conducting an inventory of products used, implementing proper storage & containment, and properly cleaning all leaks from equipment and vehicles.

d. Non-Storm Water Management

Non-storm water discharges directly connected to receiving waters or the storm drain system have the potential to negatively impact water quality. The discharger must implement measures to control all non-storm water discharges during construction, and from dewatering activities associated with construction. Examples include; properly washing vehicles in contained areas, cleaning streets, and minimizing irrigation runoff.

e. Erosion Control

The best way to minimize the risk of creating erosion and sedimentation problems during construction is to disturb as little of the land surface as possible by fitting the development to the terrain. When development is tailored to the natural contours of the land, little grading is necessary and, consequently, erosion potential is lower.[14] Other effective erosion control measures include: preserving existing vegetation where feasible, limiting disturbance, and stabilizing and re-vegetating disturbed areas as soon as possible after grading or construction activities. Particular attention must be paid to large, mass-graded sites where the potential for soil exposure to the erosive effects of rainfall and wind is great and where there is potential for significant sediment discharge from the site to surface waters. Until permanent vegetation is established, soil cover is the most cost-effective and expeditious method to protect soil particles from detachment and transport by rainfall. Temporary soil stabilization can be the single most important factor in reducing erosion at construction sites. The discharger is required to consider measures such as: covering disturbed areas with mulch, temporary seeding, soil stabilizers, binders, fiber rolls or blankets, temporary vegetation, and permanent seeding. These erosion control measures are only examples of what should be considered and should not preclude new or innovative approaches currently available or being developed. Erosion control BMPs should be the primary means of preventing storm water contamination, and sediment control techniques should be used to capture any soil that becomes eroded.[12]

Risk Level 3 dischargers pose a higher risk to water quality and are therefore additionally required to ensure that post-construction soil loss is equivalent to or less than the pre-construction levels.

f. Sediment Control

Sediment control BMPs should be the secondary means of preventing storm water contamination. When erosion control techniques are ineffective, sediment control techniques should be used to capture any soil that becomes eroded. The discharger is required to consider perimeter control measures such as: installing silt fences or placing straw wattles below slopes. These sediment control measures are only

---

[12] U.S. Environmental Protection Agency. 2007. Developing Your Storm Water Pollution Prevention Plan: A Guide for Construction Sites.

examples of what should be considered and should not preclude new or innovative approaches currently available or being developed.

Because Risk Level 2 and 3 dischargers pose a higher risk to water quality, additional requirements for the application of sediment controls are imposed on these projects. This General Permit also authorizes the Regional Water Boards to require Risk Level 3 dischargers to implement additional site-specific sediment control requirements if the implementation of other erosion or sediment controls are not adequately protecting the receiving waters.

g. Run-on and Runoff Control

Inappropriate management of run-on and runoff can result in excessive physical impacts to receiving waters from sediment and increased flows. The discharger is required to manage all run-on and runoff from a project site. Examples include: installing berms and other temporary run-on and runoff diversions.

Risk Level 1 dischargers with lower risks to impact water quality are not subject to the run-on and runoff control requirements unless an evaluation deems them necessary or visual inspections show that such controls are required.

h. Inspection, Maintenance and Repair

All measures must be periodically inspected, maintained and repaired to ensure that receiving water quality is protected. Frequent inspections coupled with thorough documentation and timely repair is necessary to ensure that all measures are functioning as intended.

i. Rain Event Action Plan (REAP)

A Rain Event Action Plan (REAP) is a written document, specific for each rain event. A REAP should be designed that when implemented it protects all exposed portions of the site within 48 hours of any likely precipitation event forecast of 50% or greater probability.

This General Permit requires Risk Level 2 and 3 dischargers to develop and implement a REAP designed to protect all exposed portions of their sites within 48 hours prior to any likely precipitation event. The REAP requirement is designed to ensure that the discharger has adequate materials, staff, and time to implement erosion and sediment control measures that are intended to reduce the amount of sediment and other pollutants generated from the active site. A REAP must be developed when there is likely a forecast of 50% or greater probability of precipitation in the project area. (The National Oceanic and Atmospheric Administration (NOAA) defines a chance of precipitation as a probability of precipitation of 30% to 50% chance of producing precipitation in the project area.[13] NOAA defines the probability of precipitation (PoP) as the likelihood of occurrence (expressed as a percent) of a measurable amount (0.01 inch or more) of liquid precipitation (or the water equivalent of frozen precipitation) during a specified period of time at any given point in the forecast area.) Forecasts are normally issued for 12-hour time periods. Descriptive terms for uncertainty and aerial coverage are used as follows:

Table 8 -National Oceanic and Atmospheric Administration (NOAA) Definition of Probability of Precipitation (PoP)

[13] http://www.crh.noaa.gov/lot/severe/wxterms.php.

PoP	Expressions of Uncertainty	Aerial Coverage
0%	none used	none used
10%	none used	isolated
20%	slight chance	isolated
30-50%	chance	scattered
60-70%	likely	numerous
80-100%	none used	none used

The discharger must obtain the precipitation forecast information from the National Weather Service Forecast Office (http://www.srh.noaa.gov/).

2. **Linear Projects**

a. **Linear Risk Determination**

LUPs vary in complexity and water quality concerns based on the type of project. This General Permit has varying application requirements based on the project's risk to water quality. Factors that lead to the characterization of the project include location, sediment risk, and receiving water risk.

Based on the location and complexity of a project area or project section area, LUPs are separated into project types. As described below, LUPs have been categorized into three project types.

i. ***Type 1 LUPs***

Type 1 LUPs are those construction projects where:

(1) 70 percent or more of the construction activity occurs on a paved surface and where areas disturbed during construction will be returned to preconstruction conditions or equivalent protection established at the end of the construction activities for the day, or

(2) greater than 30 percent of construction activities occur within the non-paved shoulders or land immediately adjacent to paved surfaces, or where construction occurs on unpaved improved roads, including their shoulders or land immediately adjacent to them where:

Areas disturbed during construction will be returned to pre-construction conditions or equivalent protection established at the end of the construction activities for the day to minimize the potential for erosion and sediment deposition, and

Areas where established vegetation was disturbed during construction will be stabilized and re-vegetated by the end of project. When required, adequate temporary stabilization Best Management Practices (BMPs) will be installed and maintained until vegetation is established to meet minimum cover requirements established in this General Permit for final stabilization.

Type 1 LUPs typically do not have a high potential to impact storm water quality because (1) these construction activities are not typically conducted during a rain event, (2) these projects are normally constructed over a short period of time[14], minimizing the duration that pollutants could potentially be exposed to rainfall; and (3) disturbed soils such as those from trench excavation are required to be hauled away, backfilled into the trench, and/or covered (e.g., metal plates, pavement, plastic covers over spoil piles) at the end of the construction day.

Type 1 LUPs are determined during the risk assessment found in Attachment A.1 to be 1) low sediment risk and low receiving water risk; 2) low sediment risk and medium receiving water risk; and 3) medium sediment risk and low receiving water risk.

This General Permit requires the discharger to ensure a SWPPP is developed for these construction activities that is specific to project type, location and characteristics.

ii. ***Type 2 LUPs:***

Type 2 projects are determined to have a combination of High, Medium, and Low project sediment risk along with High, Medium, and Low receiving water risk. Like Type 1 projects, Type 2 projects are typically constructed over a short period of time. However, these projects have a higher potential to impact water quality because they:

(1) typically occur outside the more urban/developed areas;

(2) have larger areas of soil disturbance that are not closed or restored at the end of the day;

(3) may have onsite stockpiles of soil, spoil and other materials;

(4) cross or occur in close proximity to a wide variety of sensitive resources that may include, but are not limited to, steep topography and/or water bodies; and

(5) have larger areas of disturbed soils that may be exposed for a longer time interval before final stabilization, cleanup and/or reclamation occurs.

This General Permit requires the discharger to develop and implement a SWPPP for these construction activities that are specific for project type, location and characteristics.

iii. ***Type 3 LUPs:***

[14] Short period of time refers to a project duration of weeks to months, but typically less than one year in duration.

Type 3 projects are determined to have a combination of High and Medium project sediment risk along with High and Medium receiving water risk. Similar to Type 2 projects, Type 3 projects have a higher potential to impact water quality because they:

(1) typically occur outside of the more urban/developed areas;

(2) have larger areas of soil disturbance that are not closed or restored at the end of the day;

(3) may have onsite stockpiles of soil, spoil and other materials;

(4) cross or occur in close proximity to a wide variety of sensitive resources that may include, but are not limited to, steep topography and/or water bodies; and

(5) have larger areas of disturbed soils that may be exposed for a longer time interval before final stabilization, cleanup and/or reclamation occurs.

This General Permit requires the discharger to develop and implement a SWPPP for these construction activities that are specific for project type, location, and characteristics.

b. Linear Effluent Standards

All LUPs are subject to the narrative effluent limitations specified in the General Permit.

Type 2 and Type 3 projects are subject to technology-based NALs for pH and turbidity.

c. Linear Good Housekeeping

Improper use and handling of construction materials could potentially cause a threat to water quality. In order to ensure proper site management of these construction materials, all LUP dischargers must comply with a minimum set of Good Housekeeping measures specified in Attachment A of this General Permit.

d. Linear Non-Storm Water Management

In order to ensure control of all non-storm water discharges during construction, all LUP dischargers must comply with the Non-Storm Water Management measures specified in Attachment A of this General Permit.

e. Linear Erosion Control

This General Permit requires all LUP dischargers to implement effective wind erosion control measures, and soil cover for inactive areas. Type 3 LUPs posing a higher risk to water quality are additionally required to ensure the post-construction soil loss is equivalent to or less than the pre-construction levels.

f. Linear Sediment Control

In order to ensure control and containment of all sediment discharges, all LUP dischargers must comply with the general Sediment Control measures specified in Attachment A or this General Permit. Additional requirements for sediment controls are imposed on Type 2 & 3 LUPs due to their higher risk to water quality.

g. Linear Run-on and Runoff Control

Discharges originating outside of a project's perimeter and flowing onto the property can adversely affect the quantity and quality of discharges originating from a project site. In order to ensure proper management of run-on and runoff, all LUPs must comply with the run-on and runoff control measures specified in Attachment A of this General Permit. Due to the lower risk of impacting water quality, Type 1 LUPs are not required to implement run-on and runoff controls unless deemed necessary by the discharger.

h. Linear Inspection, Maintenance and Repair

Proper inspection, maintenance, and repair activities are important to ensure the effectiveness of on-site measures to control water quality. In order to ensure that inspection, maintenance, and repair activities are adequately performed, the all LUP dischargers a re required to comply with the Inspection, Maintenance, and Repair requirements specified in Attachment A of this General Permit.

K. ATS[15] Requirements

There are instances on construction sites where traditional erosion and sediment controls do not effectively control accelerated erosion. Under such circumstances, or under circumstances where storm water discharges leaving the site may cause or contribute to an exceedance of a water quality standard, the use of an Active Treatment System (ATS) may be necessary. Additionally, it may be appropriate to use an ATS when site constraints inhibit the ability to construct a correctly sized sediment basin, when clay and/or highly erosive soils are present, or when the site has very steep or long slope lengths.[16]

Although treatment systems have been in use in some form since the mid-1990s, the ATS industry in California is relatively young, and detailed regulatory standards have not yet been developed. Many developers are using these systems to treat storm water discharges from their construction sites. The new ATS requirements set forth in this General Permit are based on those in place for small wastewater treatment systems, ATS regulations from the Central Valley Regional Water Quality Control Board (September 2005 memorandum "2005/2006 Rainy Season – Monitoring Requirements for Storm Water Treatment Systems that Utilize Chemical Additives to Enhance Sedimentation"), the Construction Storm Water Program at the State of Washington's Department of Ecology, as well as recent advances in technology and knowledge of coagulant performance and aquatic safety.

The effective design of an ATS requires a detailed survey and analysis of site conditions. With proper planning, ATS performance can provide exceptional water quality discharge and prevent significant impacts to surface water quality, even under extreme environmental conditions.

These systems can be very effective in reducing the sediment in storm water runoff, but the systems that use additives/polymers to enhance sedimentation also pose a potential risk to water quality (e.g., operational failure, equipment failure, additive/polymer release, etc.). The State Water Board is concerned about the potential acute and chronic impacts that the polymers and other chemical additives may have on fish and aquatic organisms if released in sufficient quantities or concentrations. In addition

[15] An ATS is a treatment system that employs chemical coagulation, chemical flocculation, or electrocoagulation in order to reduce turbidity caused by fine suspended sediment.
[16] Pitt, R., S. Clark, and D. Lake. 2006. Construction Site Erosion and Sediment Controls: Planning, Design, and Performance. DEStech Publications. Lancaster, PA. 370pp.

to anecdotal evidence of polymer releases causing aquatic toxicity in California, the literature supports this concern.[17] For example, cationic polymers have been shown to bind with the negatively charged gills of fish, resulting in mechanical suffocation.[18] Due to the potential toxicity impacts, which may be caused by the release of additives/polymers into receiving waters, this General Permit establishes residual polymer monitoring and toxicity testing requirements have been established in this General Permit for discharges from construction sites that utilize an ATS in order to protect receiving water quality and beneficial uses.

The primary treatment process in an ATS is coagulation/flocculation. ATS's operate on the principle that the added coagulant is bound to suspended sediment, forming floc, which is gravitationally settled in tanks or a basin, or removed by sand filters. A typical installation utilizes an injection pump upstream from the clarifier tank, basin, or sand filters, which is electronically metered to both flow rate and suspended solids level of the influent, assuring a constant dose. The coagulant mixes and reacts with the influent, forming a dense floc. The floc may be removed by gravitational setting in a clarifier tank or basin, or by filtration. Water from the clarifier tank, basin, or sand filters may be routed through cartridge(s) and/or bag filters for final polishing. Vendor-specific systems use various methods of dose control, sediment/floc removal, filtration, etc., that are detailed in project-specific documentation. The particular coagulant/flocculant to be used for a given project is determined based on the water chemistry of the site because the coagulants are specific in their reactions with various types of sediments. Appropriate selection of dosage must be carefully matched to the characteristics of each site.

ATS's are operated in two differing modes, either Batch or Flow-Through. Batch treatment can be defined as Pump-Treat-Hold-Test-Release. In Batch treatment, water is held in a basin or tank, and is not discharged until treatment is complete. Batch treatment involves holding or recirculating the treated water in a holding basin or tank(s) until treatment is complete or the basin or storage tank(s) is full. In Flow-Through treatment, water is pumped into the ATS directly from the runoff collection system or storm water holding pond, where it is treated and filtered as it flows through the system, and is then directly discharged. "Flow-Through Treatment" is also referred to as "Continuous Treatment."

1. Effluent Standards

This General Permit establishes NELs for discharges from construction sites that utilize an ATS. These systems lend themselves to NELs for turbidity and pH because of their known reliable treatment. Advanced systems have been in use in some form since the mid-1990s. An ATS is considered reliable, can consistently produce a discharge of less than 10 NTU, and has been used successfully at many sites in several states since 1995 to reduce turbidity to very low levels.[19]

This General Permit contains "compliance storm event" exceptions from the technology-based NELs for ATS discharges. The rationale is that technology-based requirements are developed assuming a certain design storm. In the case of ATS the industry-standard design storm is 10-year, 24-hour (as stated in

---

[17] RomØen, K., B. Thu, and Ø. Evensen. 2002. Immersion delivery of plasmid DNA II. A study of the potentials of a chitosan based delivery system in rainbow trout (*Oncorhynchus mykiss*) fry. *Journal of Controlled Release* **85**: 215-225.

[18] Bullock, G., V. Blazer, S. Tsukuda, and S. Summerfelt. 2000. Toxicity of acidified chitosan for cultured rainbow trout (*Oncorhynchus mykiss*). *Aquaculture* **185**:273-280.

[19] Currier, B., G. Minton, R. Pitt, L. Roesner, K. Schiff, M. Stenstrom, E. Strassler, and E. Strecker. 2006. The Feasibility of Numeric Effluent Limits Applicable to Discharges of Storm Water Associated with Municipal, Industrial and Construction Activities.

Attachment F of this General Permit), so the compliance storm event has been established as the 10-year 24-hour event as well to provide consistency.

2. **Training**

Operator training is critical to the safe and efficient operation and maintenance of the ATS, and to ensure that all State Water Board monitoring and sampling requirements are met. The General Permit requires that all ATS operators have training specific to using ATS's liquid coagulants.

L. Post-Construction Requirements

Under past practices, new and redevelopment construction activities have resulted in modified natural watershed and stream processes. This is caused by altering the terrain, modifying the vegetation and soil characteristics, introducing impervious surfaces such as pavement and buildings, increasing drainage density through pipes and channels, and altering the condition of stream channels through straightening, deepening, and armoring. These changes result in a drainage system where sediment transport capacity is increased and sediment supply is decreased. A receiving channel's response is dependent on dominant channel materials and its stage of adjustment.

Construction activity can lead to impairment of beneficial uses in two main ways. First, during the actual construction process, storm water discharges can negatively affect the chemical, biological, and physical properties of downstream receiving waters. Due to the disturbance of the landscape, the most likely pollutant is sediment, however pH and other non-visible pollutants are also of great concern. Second, after most construction activities are completed at a construction site, the finished project may result in significant modification of the site's response to precipitation. New development and redevelopment projects have almost always resulted in permanent post-construction water quality impacts because more precipitation ends up as runoff and less precipitation is intercepted, evapotranspired, and infiltrated.

General Permit 99-08-DWQ required the SWPPP to include a description of all post-construction BMPs on a site and a maintenance schedule. An effective storm water management strategy must address the full suite of storm events (water quality, channel protection, overbank flood protection, extreme flood protection) (Figure 2).

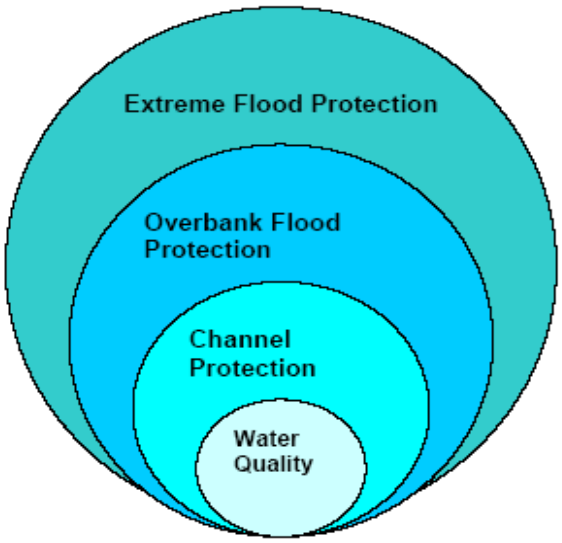

Figure 2 - Suite of Storm Events

The post-construction storm water performance standards in this General Permit specifically address water quality and channel protection events. Overbank flood protection and extreme flood protection events are traditionally dealt with in local drainage and flood protection ordinances. However, measures in this General Permit to address water quality and channel protection also reduce overbank and extreme flooding impacts. This General Permit aims to match post-construction runoff to pre-construction runoff for the 85th percentile storm event, which not only reduces the risk of impact to the receiving water's channel morphology but also provides some protection of water quality.

This General Permit clarifies that its runoff reduction requirements only apply to projects that lie outside of jurisdictions covered by a Standard Urban Storm water Management Plan (SUSMP) (or other more protective) post-construction requirements in either Phase I or Phase II permits.

Figures 3 and 4, below, show the General Permit enrollees (to Order 99-08-DWQ, as of March 10, 2008) overlaid upon a map with SUSMP (or more protective) areas in blue and purple. Areas without blue or purple indicate where the General Permit's runoff reduction requirements would actually apply.

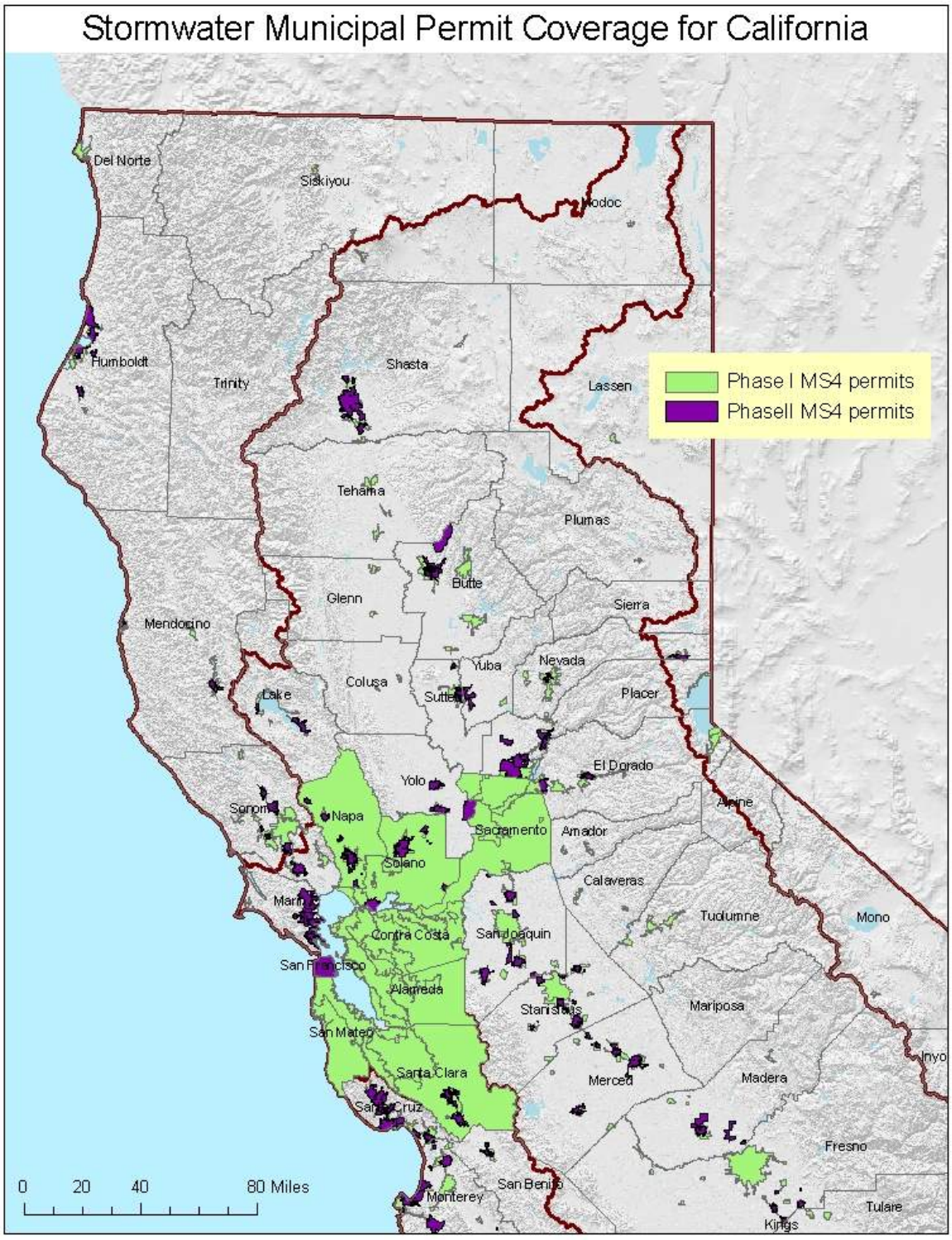

Figure 3 - Northern CA (2009) Counties / Cities With SUSMP-Plus Coverage



Stormwater Municipal Permit Coverage for California

Figure 4 - Southern CA (2009) Counties / Cities With SUSMP-Plus Coverage

Water Quality:
This General Permit requires dischargers to replicate the pre-project runoff water balance (defined as the amount of rainfall that ends up as runoff) for the smallest storms up to the 85th percentile storm event, or the smallest storm event that generates runoff, whichever is larger. Contemporary storm water management generally routes these flows directly to the drainage system, increasing pollutant loads and potentially causing adverse effects on receiving waters. These smaller water quality events happen much more frequently than larger events and generate much higher pollutant loads on an annual basis. There are other adverse hydrological impacts that result from not designing according to the site's pre-construction water balance. In Maryland, Klein[20] noted that baseflow decreases as the extent of urbanization increases. Ferguson and Suckling[21] noted a similar relation in watersheds in Georgia. On Long Island, Spinello and Simmons[22] noted substantial decreases in base flow in intensely urbanized watersheds.

The permit emphasizes runoff reduction through on-site storm water reuse, interception, evapo-transpiration and infiltration through non-structural controls and conservation design measures (e.g., downspout disconnection, soil quality preservation/enhancement, interceptor trees). Employing these measures close to the source of runoff generation is the easiest and most cost-effective way to comply with the pre-construction water balance standard. Using low-tech runoff reduction techniques close to the source is consistent with a number of recommendations in the literature.[23] In many cases, BMPs implemented close to the source of runoff generation cost less than end-of the pipe measures.[24] Dischargers are given the option of using Appendix 2 to calculate the required runoff volume or a watershed process-based, continuous simulation model such as the EPA's Storm Water Management Model (SWMMM) or Hydrologic Simulation Program Fortran (HSPF). Such methods used by the discharger will be reviewed by the Regional Water Board upon NOT application.

Channel Protection:
In order to address channel protection, a basic understanding of fluvial geomorphic concepts is necessary. A dominant paradigm in fluvial geomorphology holds that streams adjust their channel dimensions (width and depth) in response to long-term changes in sediment supply and bankfull discharge (1.5 to 2 year recurrence interval). The bankfull stage corresponds to the discharge at which channel maintenance is the most effective, that is, the discharge at which the moving sediment, forming or removing bars, forming or changing bends and meanders, and generally doing work that results in the average morphologic characteristics of channels.[25] Lane (1955 as cited in Rosgen 1996[26]) showed the generalized relationship between sediment load, sediment size, stream discharge and stream slope in

---

[20] Klein 1979 as cited in Delaware Department of Natural Resources (DDNR). 2004. Green Technology: The Delaware Urban Runoff Management Approach. Dover, DE. 117 pp.
[21] Ferguson and Suckling 1990 as cited Delaware Department of Natural Resources (DDNR). 2004. Green Technology: The Delaware Urban Runoff Management Approach. Dover, DE. 117 pp.
[22] Center for Watershed Protection (CWP). 2000. The Practice of Watershed Protection: Techniques for protecting our nation's streams, lakes, rivers, and estuaries. Ellicott City, MD. 741 pp.
[23] Bay Area Storm Water Management Agencies Association (BASMAA). 1997. Start at the Source: Residential Site Planning and Design Guidance Manual for Storm Water Quality Protection. Palo Alto, CA;
McCuen, R.H. 2003 Smart Growth: hydrologic perspective. Journal of Professional Issues in Engineering Education and Practice. Vol (129), pp.151-154;
Moglen, G.E. and S. Kim. 2007. Impervious imperviousness-are threshold based policies a good idea? Journal of the American Planning Association, Vol 73 No. 2. pp 161-171.
[24] Delaware Department of natural Resources (DDNR). 2004. Green technology: The Delaware urban Runoff Management Approcah. Dover, DE. 117 pp.
[25] Dunne, T and L.B. Leopold. 1978. Water in Environmental Planning. San Francisco W.H. Freeman and Company
[26] Rosgen. D.L. 1996. Applied River Morphology. Pagosa Springs. Wildland Hydrology

Figure 5. A change in any one of these variables sets up a series of mutual adjustments in the companion variables with a resulting direct change in the physical characteristics of the stream channel.

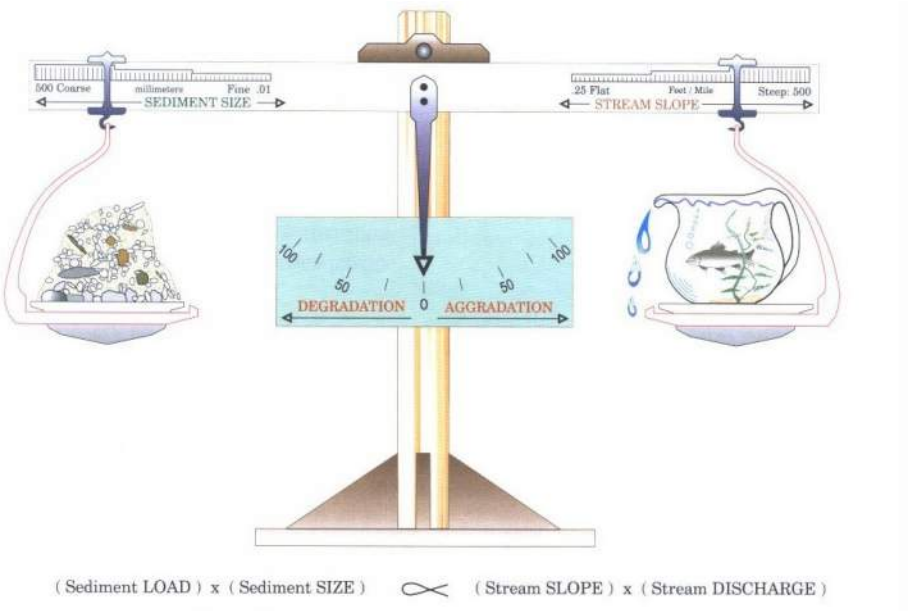

Figure 5 - Schematic of the Lane Relationship

After Lane (1955) as cited in Rosgen (1996)

Stream slope multiplied by stream discharge (the right side of the scale) is essentially an approximation of stream power, a unifying concept in fluvial geomorphology (Bledsoe 1999). Urbanization generally increases stream power and affects the resisting forces in a channel (sediment load and sediment size represented on the left side of the scale).

During construction, sediment loads can increase from 2 to 40,000 times over pre-construction levels.[27] Most of this sediment is delivered to stream channels during large, episodic rain events.[28] This increased sediment load leads to an initial aggradation phase where stream depths may decrease as sediment fills the channel, leading to a decrease in channel capacity and increase in flooding and overbank deposition. A degradation phase initiates after construction is completed.

Schumm et. al (1984) developed a channel evolution model that describes the series of adjustments from initial downcutting, to widening, to establishing new floodplains at lower elevations (Figure 6).

[27] Goldman S.J., K. Jackson, and T.A. Bursztynsky. 1986. Erosion and Sediment Control Handbook. McGraw Hill. San Francisco.
[28] Wolman 1967 as cited in Paul, M.P. and J.L. Meyer. 2001. Streams in the Urban Landscape. *Annu. Rev.Ecol. Syst.* 32: 333-365.

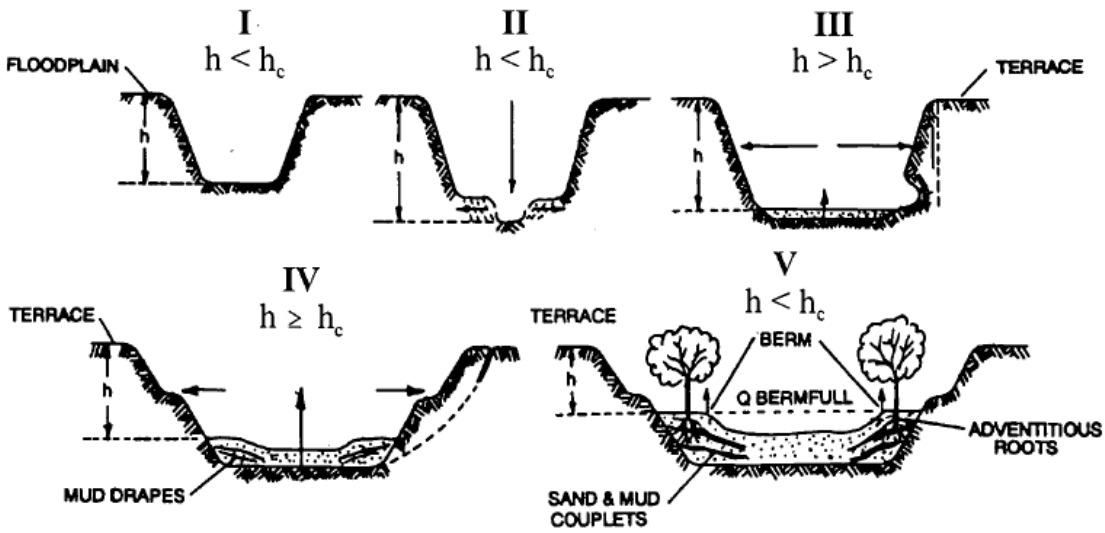

Figure 6 - Channel Changes Associated with Urbanization

After Incised Channel Evolution Sequence in Schumm et. al 1984

Channel incision (Stage II) and widening (Stages III and to a lesser degree, Stage IV) are due to a number of fundamental changes on the landscape. Connected impervious area and compaction of pervious surfaces increase the frequency and volume of bankfull discharges.[29] Increased drainage density (miles of stream length per square mile of watershed) also negatively impacts receiving stream channels.[30] Increased drainage density and hydraulic efficiency leads to an increase in the frequency and volume of bankfull discharges because the time of concentration is shortened. Flows from engineered pipes and channels are also often "sediment starved" and seek to replenish their sediment supply from the channel.

Encroachment of stream channels can also lead to an increase in stream slope, which leads to an increase in stream power. In addition, watershed sediment loads and sediment size (with size generally represented as the median bed and bank particle size, or d_{50}) decrease during urbanization.[31] This means

[29] Booth, D. B. and C. R. Jackson. 1997. Urbanization of Aquatic Systems: Degradation Thresholds, Storm Water Detection, and the Limits of Mitigation. Journal of the American Water Resources Association Vol. 33, No.5, pp. 1077-1089.

[30] May, C.W. 1998. Cumulative effects of urbanization on small streams in the Puget Sound Lowland ecoregion. Conference proceedings from Puget Sound Research '98 held March 12, 13 1998 in Seattle, WA;
Santa Clara Valley Urban Runoff Pollution Prevention Program. 2002. Hydromodification Management Plan Literature Review. 80 pp.

[31] Finkenbine, J.K., D.S. Atwater, and D.S. Mavinic. 2000. Stream health after urbanization. *J. Am. Water Resour. Assoc.* 36:1149-60;

that even if pre- and post-development stream power are the same, more erosion will occur in the post-development stage because the smaller particles are less resistant (provided they are non-cohesive).

As shown in Stages II and III, the channel deepens and widens to accommodate the increased stream power [32]and decrease in sediment load and sediment size. Channels may actually narrow as entrained sediment from incision is deposited laterally in the channel. After incised channels begin to migrate laterally (Stage III), bank erosion begins, which leads to general channel widening.[33] At this point, a majority of the sediment that leaves a drainage area comes from within the channel, as opposed to the background and construction related hillslope contribution. Stage IV is characterized by more aggradation and localized bank instability. Stage V represents a new quasi-equilibrium channel morphology in balance with the new flow and sediment supply regime. In other words, stream power is in balance with sediment load and sediment size.

The magnitude of the channel morphology changes discussed above varies along a stream network as well as with the age of development, slope, geology (sand-bedded channels may cycle through the evolution sequence in a matter of decades whereas clay-dominated channels may take much longer), watershed sediment load and size, type of urbanization, and land use history. It is also dependent on a channel's stage in the channel evolution sequence when urbanization occurs. Management strategies

---

Pizzuto, J.E. W.S. Hession, and M. McBride. 2000. Comparing gravel-bed rivers in paired urban and rural catchments of southeastern Pennsylvania. *Geology* 28:79-82.

[32] Hammer 1973 as cited in Delaware Department of Natural Resources (DDNR). 2004. Green Technology: The Delaware Urban Runoff Management Approach. Dover, DE. 117 pp;
Booth, D.B. 1990. Stream Channel Incision Following Drainage Basin Urbanization. *Water Resour. Bull.* 26:407-417.

[33] Trimble, S.W. 1997. Contribution of Stream Channel Erosion to Sediment Yield from an Urbanizing Watershed. *Science*: Vol. 278 (21), pp. 1442-1444.

must take into account a channel's stage of adjustment and account for future changes in the evolution of channel form (Stein and Zaleski 2005). [34]

Traditional structural water quality BMPs (e.g. detention basins and other devices used to store volumes of runoff) unless they are highly engineered to provide adequate flow duration control, do not adequately protect receiving waters from accelerated channel bed and bank erosion, do not address post-development increases in runoff volume, and do not mitigate the decline in benthic macroinvertebrate communities in the receiving waters[35] suggest that structural BMPs are not as effective in protecting aquatic communities as a continuous riparian buffer of native vegetation. This is supported by the findings of Zucker and White[36], where instream biological metrics were correlated with the extent of forested buffers.

This General Permit requires dischargers to maintain pre-development drainage densities and times of concentration in order to protect channels and encourages dischargers to implement setbacks to reduce channel slope and velocity changes that can lead to aquatic habitat degradation.

There are a number of other approaches for modeling fluvial systems, including statistical and physical models and simpler stream power models.[37] The use of these models in California is described in Stein and Zaleski (2005).[38] Rather than prescribe a specific one-size-fits-all modeling method in this permit, the State Water Board intends to develop a stream power and channel evolution model-based framework to assess channels and develop a hierarchy of suitable analysis methods and management strategies. In time, this framework may become a State Water Board water quality control policy.

Permit Linkage to Overbank and Extreme Flood Protection
Site design BMPs (e.g. rooftop and impervious disconnection, vegetated swales, setbacks and buffers) filter and settle out pollutants and provide for more infiltration than is possible for traditional centralized structural BMPs placed at the lowest point in a site. They provide source control for runoff and lead to a reduction in pollutant loads. When implemented, they also help reduce the magnitude and volume of larger, less frequent storm events (e.g., 10-yr, 24-hour storm and larger), thereby reducing the need for expensive flood control infrastructure. Nonstructural BMPs can also be a landscape amenity, instead of a large isolated structure requiring substantial area for ancillary access, buffering, screening and maintenance facilities.[25] The multiple benefits of using non-structural benefits will be critically important as the state's population increases and imposes strains upon our existing water resources.

Maintaining predevelopment drainage densities and times of concentration will help reduce post-development peak flows and volumes in areas not covered under a municipal permit. The most effective way to preserve drainage areas and maximize time of concentration is to implement landform grading,

---

[34] Stein, E.S. and S. Zaleski. 2005.Managing runoff to protect natural stream: the latest developments on investigation and management of hydromodification in California. Southern California Coastal Water Research Project Technical Report 475. 26 pp.
[35] Horner, R.R. 2006. Investigation of the Feasibility and Benefits of Low-Impact Site Design Practices (LID) for the San Diego Region. Available at: http://www.projectcleanwater.org/pdf/permit/case-study_lid.pdf.
[36] Delaware Department of Natural Resources (DDNR). 2004. Green Technology: The Delaware Urban Runoff Management Approach. Dover, DE. 117 pp.
[37] Finlayson, D.P. and D.R. Montgomery. 2003. Modeling large-scale fluvial erosion in geographic information systems. Geomorphology (53), pp. 147-164).
[38] Stein, E.S. and S. Zaleski. 2005.Managing runoff to protect natural stream: the latest developments on investigation and management of hydromodification in California. Southern California Coastal Water Research Project Technical Report 475. 26 pp.

incorporate site design BMPs and implement distributed structural BMPs (e.g., bioretention cells, rain gardens, rain cisterns).

M. Storm Water Pollution Prevention Plans

USEPA's Construction General Permit requires that qualified personnel conduct inspections. USEPA defines qualified personnel as "a person knowledgeable in the principles and practice of erosion and sediment controls who possesses the skills to assess conditions at the construction site that could impact storm water quality and to assess the effectiveness of any sediment and erosion control measures selected to control the quality of storm water discharges from the construction activity."[39] USEPA also suggests that qualified personnel prepare SWPPPs and points to numerous states that require certified professionals to be on construction sites at all times. States that currently have certification programs are Washington, Georgia, Florida, Delaware, Maryland, and New Jersey. The Permit 99-08-DWQ did not require that qualified personnel prepare SWPPPs or conduct inspections. However, to ensure that water quality is being protected, this General Permit requires that all SWPPPs be written, amended, and certified by a Qualified SWPPP Developer. A Qualified SWPPP Developer must possess one of the eight certifications and or registrations specified in this General Permit and effective two years after the adoption date of this General Permit, must have attended a State Water Board-sponsored or approved Qualified SWPPP Developer training course. Table 9 provides an overview of the criteria used in determining qualified certification titles for a QSD and QSP.

39 US Environmental Protection Agency. Stormwater Pollution Prevention Plans for Construction Activities. <http://cfpub.epa.gov/npdes/stormwater/swppp.cfm> and <http://www.epa.gov/npdes/pubs/sw_swppp_guide.pdf>.

Table 9 - Qualified SWPPP Developer/ Qualified SWPPP Practitioner Certification Criteria

Certification/ Title	Registered By	QSD/QSP	Certification Criteria
Professional Civil Engineer	California	Both	1. Approval Process 2. Code of Ethics 3. Accountability 4. Pre-requisites
Professional Geologist or Engineering Geologist	California	Both	1. Approval Process 2. Code of Ethics 3. Accountability 4. Pre-requisites
Landscape Architect	California	Both	1. Approval Process 2. Code of Ethics 3. Accountability 4. Pre-requisites
Professional Hydrologist	American Institute of Hydrology	Both	1. Approval Process 2. Code of Ethics 3. Accountability 4. Pre-requisites
Certified Professional in Erosion and Sediment Control™ (CPESC)	Enviro Cert International Inc.	Both	1. Approval Process 2. Code of Ethics 3. Accountability 4. Pre-requisites 5. Continuing Education
Certified Inspector of Sediment and Erosion Control™ (CISEC)	Certified Inspector of Sediment and Erosion Control, Inc.	QSP	1. Approval Process 2. Code of Ethics 3. Accountability 4. Pre-requisites 5. Continuing Education
Certified Erosion, Sediment and Storm Water Inspector™ (CESSWI)	Enviro Cert International Inc.	QSP	1. Approval Process 2. Code of Ethics 3. Accountability 4. Pre-requisites 5. Continuing Education
Certified Professional in Storm Water Quality™ (CPSWQ)	Enviro Cert International Inc.	Both	1. Approval Process 2. Code of Ethics 3. Accountability 4. Pre-requisites 5. Continuing Education

The previous versions of the General Permit required development and implementation of a SWPPP as the primary compliance mechanism. The SWPPP has two major objectives: (1) to help identify the sources of sediment and other pollutants that affect the quality of storm water discharges; and (2) to describe and ensure the implementation of BMPs to reduce or eliminate sediment and other pollutants in storm water and non-storm water discharges. The SWPPP must include BMPs that address source control, BMPs that address pollutant control, and BMPs that address treatment control.

This General Permit shifts some of the measures that were covered by this general requirement to specific permit requirements, each individually enforceable as a permit term. This General Permit emphasizes the use of appropriately selected, correctly installed and maintained pollution reduction BMPs. This approach provides the flexibility necessary to establish BMPs that can effectively address source control of pollutants during changing construction activities. These specific requirements also improve both the clarity and the enforceability of the General Permit so that the dischargers understand, and the public can determine whether the discharges are in compliance with, permit requirements.

The SWPPP must be implemented at the appropriate level to protect water quality at all times throughout the life of the project. The SWPPP must remain on the site during construction activities, commencing with the initial mobilization and ending with the termination of coverage under the General Permit. For LUPs the discharger shall make the SWPPP available at the construction site during working hours while construction is occurring and shall be made available upon request by a State or Municipal inspector. When the original SWPPP is retained by a crewmember in a construction vehicle and is not currently at the construction site, current copies of the BMPs and map/drawing will be left with the field crew and the original SWPPP shall be made available via a request by radio or telephone. Once construction activities are complete, until stabilization is achieved, the SWPPP shall be available from the SWPPP contact listed in the PRDs

A SWPPP must be appropriate for the type and complexity of a project and will be developed and implemented to address project specific conditions. Some projects may have similarities or complexities, yet each project is unique in its progressive state that requires specific description and selection of BMPs needed to address all possible generated pollutants

N. Regional Water Board Authorities

Because this General Permit will be issued to thousands of construction sites across the State, the Regional Water Boards retain discretionary authority over certain issues that may arise from the discharges in their respective regions. This General Permit does not grant the Regional Water Boards any authority they do not otherwise have; rather, it merely emphasizes that the Regional Water Boards can take specific actions related to this General Permit. For example, the Regional Water Boards will be enforcing this General Permit and may need to adjust some requirements for a discharger based on the discharger’s compliance history.

Linda S. Adams
Secretary for
Environmental Protection

State Water Resources Control Board

Division of Water Quality
1001 I Street • Sacramento, California 95814 • (916) 341-5455
Mailing Address: P.O. Box 100 • Sacramento, California • 95812-0100
Fax (916) 341-5463 • http://www.waterboards.ca.gov

Arnold Schwarzenegger
Governor

NATIONAL POLLUTANT DISCHARGE ELIMINATION SYSTEM (NPDES)
GENERAL PERMIT FOR
STORM WATER DISCHARGES
ASSOCIATED WITH CONSTRUCTION AND LAND DISTURBANCE
ACTIVITIES

ORDER NO. 2009-0009-DWQ
NPDES NO. **CAS000002**

This Order was adopted by the State Water Resources Control Board on:	**September 2, 2009**
This Order shall become effective on:	**July 1, 2010**
This Order shall expire on:	**September 2, 2014**

IT IS HEREBY ORDERED, that this Order supersedes Order No. 99-08-DWQ [as amended by Order No. 2010-0014-DWQ] except for enforcement purposes. The Discharger shall comply with the requirements in this Order to meet the provisions contained in Division 7 of the California Water Code (commencing with section 13000) and regulations adopted thereunder, and the provisions of the federal Clean Water Act and regulations and guidelines adopted thereunder.

I, Jeanine Townsend, Clerk to the Board, do hereby certify that this Order with all attachments is a full, true, and correct copy of an Order adopted by the State Water Resources Control Board, on September 2, 2009.

AYE: Vice Chair Frances Spivy-Weber
Board Member Arthur G. Baggett, Jr.
Board Member Tam M. Doduc

NAY: Chairman Charles R. Hoppin

ABSENT: None

ABSTAIN: None

Jeanine Townsend
Clerk to the Board

Linda S. Adams
Secretary for
Environmental Protection

State Water Resources Control Board

Division of Water Quality
1001 I Street • Sacramento, California 95814 • (916) 341-5455
Mailing Address: P.O. Box 100 • Sacramento, California • 95812-0100
Fax (916) 341-5463 • http://www.waterboards.ca.gov

Arnold Schwarzenegger
Governor

NATIONAL POLLUTANT DISCHARGE ELIMINATION SYSTEM (NPDES) GENERAL PERMIT FOR STORM WATER DISCHARGES ASSOCIATED WITH CONSTRUCTION AND LAND DISTURBANCE ACTIVITIES

ORDER NO. 2010-0014-DWQ
NPDES NO. CAS000002

Order No. 2009-0009-DWQ was adopted by the State Water Resources Control Board on:	**September 2, 2009**
Order No. 2009-0009-DWQ became effective on:	**July 1, 2010**
Order No. 2009-0009-DWQ shall expire on:	**September 2, 2014**
This Order, which amends Order No. 2009-0009-DWQ, was adopted by the State Water Resources Control Board on:	**November 16, 2010**
This Order shall become effective on:	**February 14, 2011**

IT IS HEREBY ORDERED that this Order amends Order No. 2009-0009-DWQ. Additions to Order No. 2009-0009-DWQ are reflected in blue-underline text and deletions are reflected in red-strikeout text.

IT IS FURTHER ORDERED that staff are directed to prepare and post a conformed copy of Order No. 2009-0009-DWQ incorporating the revisions made by this Order.

I, Jeanine Townsend, Clerk to the Board, do hereby certify that this Order with all attachments is a full, true, and correct copy of an Order adopted by the State Water Resources Control Board, on **November 16, 2010.**

AYE: Chairman Charles R. Hoppin
Vice Chair Frances Spivy-Weber
Board Member Arthur G. Baggett, Jr.
Board Member Tam M. Doduc

NAY: None

ABSENT: None

ABSTAIN: None

Jeanine Townsend
Clerk to the Board

CALIFORNIA
Water Boards

EDMUND G. BROWN JR.
GOVERNOR

MATTHEW RODRIQUEZ
SECRETARY FOR
ENVIRONMENTAL PROTECTION

State Water Resources Control Board

NATIONAL POLLUTANT DISCHARGE ELIMINATION SYSTEM (NPDES) GENERAL PERMIT FOR STORM WATER DISCHARGES ASSOCIATED WITH CONSTRUCTION AND LAND DISTURBANCE ACTIVITIES

ORDER NO. 2012-0006-DWQ
NPDES NO**. CAS000002**

Order No. 2009-0009-DWQ was adopted by the State Water Resources Control Board on:	**September 2, 2009**
Order No. 2009-0009-DWQ became effective on:	**July 1, 2010**
Order No. 2010-0014-DWQ became effective on:	**February 14, 2011**
Order No. 2009-0009-DWQ as amended by 2010-0014-DWQ shall expire on:	**September 2, 2014**
This Order, which amends Order No. 2009-0009-DWQ as amended by 2010-0014-DWQ, was adopted by the State Water Resources Control Board on:	**July 17, 2012**
This Order No. 2012-0006-DWQ shall become effective on:	**July 17, 2012**

IT IS HEREBY ORDERED that this Order amends Order No. 2009-0009-DWQ. Additions to Order No. 2009-0009-DWQ are reflected in blue-underline text and deletions are reflected in red-strikeout text.

IT IS FURTHER ORDERED that staff are directed to prepare and post a conformed copy of Order No. 2009-000-DWQ incorporating the revisions made by this Order.

I, Jeanine Townsend, Clerk to the Board, do hereby certify that this Order with all attachments is a full, true, and correct copy of an Order adopted by the State Water Resources Control Board, on July 17, 2012.

AYE:	Chairman Charles R. Hoppin Vice Chair Frances Spivy-Weber Board Member Tam M. Doduc Board Member Steven Moore Board Member Felicia Marcus
NAY:	None
ABSENT:	None
ABSTAIN:	None

Jeanine Townsend
Clerk to the Board

TABLE OF CONTENTS

I.	FINDINGS	1
II.	CONDITIONS FOR PERMIT COVERAGE	14
III.	DISCHARGE PROHIBITIONS	20
IV.	SPECIAL PROVISIONS	22
V.	EFFLUENT STANDARDS & RECEIVING WATER MONITORING	28
VI.	RECEIVING WATER LIMITATIONS	31
VII.	TRAINING QUALIFICATIONS AND CERTIFICATION REQUIREMENTS	32
VIII.	RISK DETERMINATION	33
IX.	RISK LEVEL 1 REQUIREMENTS	34
X.	RISK LEVEL 2 REQUIREMENTS	34
XI.	RISK LEVEL 3 REQUIREMENTS	34
XII.	ACTIVE TREATMENT SYSTEMS (ATS)	34
XIII.	POST-CONSTRUCTION STANDARDS	35
XIV.	SWPPP REQUIREMENTS	37
XV.	REGIONAL WATER BOARD AUTHORITIES	38
XVI.	ANNUAL REPORTING REQUIREMENTS	39

LIST OF ATTACHMENTS

Attachment A – Linear Underground/Overhead Requirements
Attachment A.1 – LUP Type Determination
Attachment A.2 – LUP Permit Registration Documents
Attachment B – Permit Registration Documents
Attachment C – Risk Level 1 Requirements
Attachment D – Risk Level 2 Requirements
Attachment E – Risk Level 3 Requirements
Attachment F – Active Treatment System (ATS) Requirements

LIST OF APPENDICES

Appendix 1 – Risk Determination Worksheet
Appendix 2 – Post-Construction Water Balance Performance Standard
Appendix 2.1 – Post-Construction Water Balance Performance Standard Spreadsheet
Appendix 3 – Bioassessment Monitoring Guidelines
Appendix 4 – Adopted/Implemented Sediment TMDLs
Appendix 5 – Glossary
Appendix 6 – Acronyms
Appendix 7 – State and Regional Water Resources Control Board Contacts

STATE WATER RESOURCES CONTROL BOARD
ORDER NO. 2009-0009-DWQ
[AS AMENDED BY ORDER NO. 2010-0014-DWQ]
NATIONAL POLLUTANT DISCHARGE ELIMINATION SYSTEM
GENERAL PERMIT NO. CAS000002

WASTE DISCHARGE REQUIREMENTS
FOR
DISCHARGES OF STORM WATER RUNOFF ASSOCIATED WITH CONSTRUCTION AND LAND DISTURBANCE ACTIVITIES

I. FINDINGS

A. General Findings

The State Water Resources Control Board (State Water Board) finds that:

1. The federal Clean Water Act (CWA) prohibits certain discharges of storm water containing pollutants except in compliance with a National Pollutant Discharge Elimination System (NPDES) permit (Title 33 United States Code (U.S.C.) §§ 1311 and 1342(p); also referred to as Clean Water Act (CWA) §§ 301 and 402(p)). The U.S. Environmental Protection Agency (U.S. EPA) promulgates federal regulations to implement the CWA's mandate to control pollutants in storm water runoff discharges. (Title 40 Code of Federal Regulations (C.F.R.) Parts 122, 123, and 124). The federal statutes and regulations require discharges to surface waters comprised of storm water associated with construction activity, including demolition, clearing, grading, and excavation, and other land disturbance activities (except operations that result in disturbance of less than one acre of total land area and which are not part of a larger common plan of development or sale), to obtain coverage under an NPDES permit. The NPDES permit must require implementation of Best Available Technology Economically Achievable (BAT) and Best Conventional Pollutant Control Technology (BCT) to reduce or eliminate pollutants in storm water runoff. The NPDES permit must also include additional requirements necessary to implement applicable water quality standards.

2. This General Permit authorizes discharges of storm water associated with construction activity so long as the dischargers comply with all requirements, provisions, limitations and prohibitions in the permit. In addition, this General Permit regulates the discharges of storm water associated with construction activities from all Linear

Underground/Overhead Projects resulting in the disturbance of greater than or equal to one acre (Attachment A).

3. This General Permit regulates discharges of pollutants in storm water associated with construction activity (storm water discharges) to waters of the United States from construction sites that disturb one or more acres of land surface, or that are part of a common plan of development or sale that disturbs more than one acre of land surface.

4. This General Permit does not preempt or supersede the authority of local storm water management agencies to prohibit, restrict, or control storm water discharges to municipal separate storm sewer systems or other watercourses within their jurisdictions.

5. This action to adopt a general NPDES permit is exempt from the provisions of Chapter 3 of the California Environmental Quality Act (CEQA) (Public Resources Code Section 21100, et seq.), pursuant to Section 13389 of the California Water Code.

6. Pursuant to 40 C.F.R. § 131.12 and State Water Board Resolution No. 68-16,[1] which incorporates the requirements of § 131.12 where applicable, the State Water Board finds that discharges in compliance with this General Permit will not result in the lowering of water quality standards, and are therefore consistent with those provisions. Compliance with this General Permit will result in improvements in water quality.

7. This General Permit serves as an NPDES permit in compliance with CWA § 402 and will take effect on July 1, 2010 by the State Water Board provided the Regional Administrator of the U.S. EPA has no objection. If the U.S. EPA Regional Administrator objects to its issuance, the General Permit will not become effective until such objection is withdrawn.

8. Following adoption and upon the effective date of this General Permit, the Regional Water Quality Control Boards (Regional Water Boards) shall enforce the provisions herein.

9. Regional Water Boards establish water quality standards in Basin Plans. The State Water Board establishes water quality standards in various statewide plans, including the California Ocean Plan. U.S. EPA establishes water quality standards in the National Toxic Rule (NTR) and the California Toxic Rule (CTR).

[1] Resolution No. 68-16 generally requires that existing water quality be maintained unless degradation is justified based on specific findings.

10. This General Permit does not authorize discharges of fill or dredged material regulated by the U.S. Army Corps of Engineers under CWA § 404 and does not constitute a waiver of water quality certification under CWA § 401.

11. The primary storm water pollutant at construction sites is excess sediment. Excess sediment can cloud the water, which reduces the amount of sunlight reaching aquatic plants, clog fish gills, smother aquatic habitat and spawning areas, and impede navigation in our waterways. Sediment also transports other pollutants such as nutrients, metals, and oils and greases.

12. Construction activities can impact a construction site's runoff sediment supply and transport characteristics. These modifications, which can occur both during and after the construction phase, are a significant cause of degradation of the beneficial uses established for water bodies in California. Dischargers can avoid these effects through better construction site design and activity practices.

13. This General Permit recognizes four distinct phases of construction activities. The phases are Grading and Land Development Phase, Streets and Utilities Phase, Vertical Construction Phase, and Final Landscaping and Site Stabilization Phase. Each phase has activities that can result in different water quality effects from different water quality pollutants. This General Permit also recognizes inactive construction as a category of construction site type.

14. Compliance with any specific limits or requirements contained in this General Permit does not constitute compliance with any other applicable requirements.

15. Following public notice in accordance with State and Federal laws and regulations, the State Water Board heard and considered all comments and testimony in a public hearing on 06/03/2009. The State Water Board has prepared written responses to all significant comments.

16. Construction activities obtaining coverage under the General Permit may have multiple discharges subject to requirements that are specific to general, linear, and/or active treatment system discharge types.

17. The State Water Board may reopen the permit if the U.S. EPA adopts a final effluent limitation guideline for construction activities.

B. Activities Covered Under the General Permit

18. Any construction or demolition activity, including, but not limited to, clearing, grading, grubbing, or excavation, or any other activity that results in a land disturbance of equal to or greater than one acre.

19. Construction activity that results in land surface disturbances of less than one acre if the construction activity is part of a larger common plan of development or the sale of one or more acres of disturbed land surface.

20. Construction activity related to residential, commercial, or industrial development on lands currently used for agriculture including, but not limited to, the construction of buildings related to agriculture that are considered industrial pursuant to U.S. EPA regulations, such as dairy barns or food processing facilities.

21. Construction activity associated with Linear Underground/Overhead Utility Projects (LUPs) including, but not limited to, those activities necessary for the installation of underground and overhead linear facilities (e.g., conduits, substructures, pipelines, towers, poles, cables, wires, connectors, switching, regulating and transforming equipment and associated ancillary facilities) and include, but are not limited to, underground utility mark-out, potholing, concrete and asphalt cutting and removal, trenching, excavation, boring and drilling, access road and pole/tower pad and cable/wire pull station, substation construction, substructure installation, construction of tower footings and/or foundations, pole and tower installations, pipeline installations, welding, concrete and/or pavement repair or replacement, and stockpile/borrow locations.

22. Discharges of sediment from construction activities associated with oil and gas exploration, production, processing, or treatment operations or transmission facilities.[2]

23. Storm water discharges from dredge spoil placement that occur outside of U.S. Army Corps of Engineers jurisdiction (upland sites) and that disturb one or more acres of land surface from construction activity are covered by this General Permit. Construction sites that intend to disturb one or more acres of land within the jurisdictional boundaries of

[2] Pursuant to the Ninth Circuit Court of Appeals' decision in *NRDC v. EPA* (9th Cir. 2008) 526 F.3d 591, and subsequent denial of the U.S. EPA's petition for reconsideration in November 2008, oil and gas construction activities discharging storm water contaminated only with sediment are no longer exempt from the NPDES program.

a CWA § 404 permit should contact the appropriate Regional Water Board to determine whether this permit applies to the site.

C. Activities Not Covered Under the General Permit

24. Routine maintenance to maintain original line and grade, hydraulic capacity, or original purpose of the facility.

25. Disturbances to land surfaces solely related to agricultural operations such as disking, harrowing, terracing and leveling, and soil preparation.

26. Discharges of storm water from areas on tribal lands; construction on tribal lands is regulated by a federal permit.

27. Construction activity and land disturbance involving discharges of storm water within the Lake Tahoe Hydrologic Unit. The Lahontan Regional Water Board has adopted its own permit to regulate storm water discharges from construction activity in the Lake Tahoe Hydrologic Unit (Regional Water Board 6SLT). Owners of construction sites in this watershed must apply for the Lahontan Regional Water Board permit rather than the statewide Construction General Permit.

28. Construction activity that disturbs less than one acre of land surface, and that is not part of a larger common plan of development or the sale of one or more acres of disturbed land surface.

29. Construction activity covered by an individual NPDES Permit for storm water discharges.

30. Discharges from small (1 to 5 acre) construction activities with an approved Rainfall Erosivity Waiver authorized by U.S. EPA Phase II regulations certifying to the State Board that small construction activity will occur only when the Rainfall Erosivity Factor is less than 5 (“R” in the Revised Universal Soil Loss Equation).

31. Landfill construction activity that is subject to the Industrial General Permit.

32. Construction activity that discharges to Combined Sewer Systems.

33. Conveyances that discharge storm water runoff combined with municipal sewage.

34. Discharges of storm water identified in CWA § 402(*l*)(2), 33 U.S.C. § 1342(*l*)(2).

35. Discharges occurring in basins that are not tributary or hydrologically connected to waters of the United States (for more information contact your Regional Water Board).

D. Obtaining and Modifying General Permit Coverage

36. This General Permit requires all dischargers to electronically file all Permit Registration Documents (PRDs), Notices of Termination (NOT), changes of information, annual reporting, and other compliance documents required by this General Permit through the State Water Board's Storm water Multi-Application and Report Tracking System (SMARTS) website.

37. Any information provided to the Regional Water Board shall comply with the Homeland Security Act and any other federal law that concerns security in the United States; any information that does not comply should not be submitted.

38. This General Permit grants an exception from the Risk Determination requirements for existing sites covered under Water Quality Orders No. 99-08-DWQ, and No. 2003-0007-DWQ. For certain sites, adding additional requirements may not be cost effective. Construction sites covered under Water Quality Order No. 99-08-DWQ shall obtain permit coverage at the Risk Level 1. LUPs covered under Water Quality Order No. 2003-0007-DWQ shall obtain permit coverage as a Type 1 LUP. The Regional Water Boards have the authority to require Risk Determination to be performed on sites currently covered under Water Quality Orders No. 99-08-DWQ and No. 2003-0007-DWQ where they deem it necessary. The State Water Board finds that there are two circumstances when it may be appropriate for the Regional Water Boards to require a discharger that had filed an NOI under State Water Board Order No. 99-08-DWQ to recalculate the site's risk level. These circumstances are: (1) when the discharger has a demonstrated history of noncompliance with State Water Board Order No. 99-08-DWQ or; (2) when the discharger's site poses a significant risk of causing or contributing to an exceedance of a water quality standard without the implementation of the additional Risk Level 2 or 3 requirements.

E. Prohibitions

39. All discharges are prohibited except for the storm water and non-storm water discharges specifically authorized by this General Permit or another NPDES permit. Non-storm water discharges include a wide variety of sources, including improper dumping, spills, or leakage from storage tanks or transfer areas. Non-storm water discharges may

contribute significant pollutant loads to receiving waters. Measures to control spills, leakage, and dumping, and to prevent illicit connections during construction must be addressed through structural as well as non-structural Best Management Practices (BMPs)[3]. The State Water Board recognizes, however, that certain non-storm water discharges may be necessary for the completion of construction.

40. This General Permit prohibits all discharges which contain a hazardous substance in excess of reportable quantities established in 40 C.F.R. §§ 117.3 and 302.4, unless a separate NPDES Permit has been issued to regulate those discharges.

41. This General Permit incorporates discharge prohibitions contained in water quality control plans, as implemented by the State Water Board and the nine Regional Water Boards.

42. Pursuant to the Ocean Plan, discharges to Areas of Special Biological Significance (ASBS) are prohibited unless covered by an exception that the State Water Board has approved.

43. This General Permit prohibits the discharge of any debris[4] from construction sites. Plastic and other trash materials can cause negative impacts to receiving water beneficial uses. The State Water Board encourages the use of more environmentally safe, biodegradable materials on construction sites to minimize the potential risk to water quality.

F. Training

44. In order to improve compliance with and to maintain consistent enforcement of this General Permit, all dischargers are required to appoint two positions - the Qualified SWPPP Developer (QSD) and the Qualified SWPPP Practitioner (QSP) - who must obtain appropriate training. Together with the key stakeholders, the State and Regional Water Boards are leading the development of this curriculum through a collaborative organization called The Construction General Permit (CGP) Training Team.

45. The Professional Engineers Act (Bus. & Prof. Code section 6700, et seq.) requires that all engineering work must be performed by a California licensed engineer.

[3] BMPs are scheduling of activities, prohibitions of practices, maintenance procedures, and other management practices to prevent or reduce the discharge of pollutants to waters of the United States. BMPs also include treatment requirements, operating procedures, and practice to control site runoff, spillage or leaks, sludge or waste disposal, or drainage from raw material storage.

[4] Litter, rubble, discarded refuse, and remains of destroyed inorganic anthropogenic waste.

G. Determining and Reducing Risk

46. The risk of accelerated erosion and sedimentation from wind and water depends on a number of factors, including proximity to receiving water bodies, climate, topography, and soil type.

47. This General Permit requires dischargers to assess the risk level of a site based on both sediment transport and receiving water risk. This General Permit contains requirements for Risk Levels 1, 2 and 3, and LUP Risk Type 1, 2, and 3 (Attachment A). Risk levels are established by determining two factors: first, calculating the site's sediment risk; and second, receiving water risk during periods of soil exposure (i.e. grading and site stabilization). Both factors are used to determine the site-specific Risk Level(s). LUPs can be determined to be Type 1 based on the flowchart in Attachment A.1.

48. Although this General Permit does not mandate specific setback distances, dischargers are encouraged to set back their construction activities from streams and wetlands whenever feasible to reduce the risk of impacting water quality (e.g., natural stream stability and habitat function). Because there is a reduced risk to receiving waters when setbacks are used, this General Permit gives credit to setbacks in the risk determination and post-construction storm water performance standards. The risk calculation and runoff reduction mechanisms in this General Permit are expected to facilitate compliance with any Regional Water Board and local agency setback requirements, and to encourage voluntary setbacks wherever practicable.

49. Rain events can occur at any time of the year in California. Therefore, a Rain Event Action Plan (REAP) is necessary for Risk Level 2 and 3 traditional construction projects (LUPs exempt) to ensure that active construction sites have adequate erosion and sediment controls implemented prior to the onset of a storm event, even if construction is planned only during the dry season.

50. Soil particles smaller than 0.02 millimeters (mm) (i.e., finer than medium silt) do not settle easily using conventional measures for sediment control (i.e., sediment basins). Given their long settling time, dislodging these soils results in a significant risk that fine particles will be released into surface waters and cause unacceptable downstream impacts. If operated correctly, an Active Treatment System (ATS[5]) can prevent or reduce the release of fine particles from construction sites.

[5] An ATS is a treatment system that employs chemical coagulation, chemical flocculation, or electro coagulation in order to reduce turbidity caused by fine suspended sediment.

Use of an ATS can effectively reduce a site's risk of impacting receiving waters.

51. Dischargers located in a watershed area where a Total Maximum Daily Load (TMDL) has been adopted or approved by the Regional Water Board or U.S. EPA may be required by a separate Regional Water Board action to implement additional BMPs, conduct additional monitoring activities, and/or comply with an applicable waste load allocation and implementation schedule. Such dischargers may also be required to obtain an individual Regional Water Board permit specific to the area.

H. Effluent Standards

52. The State Water Board convened a blue ribbon panel of storm water experts that submitted a report entitled, “The Feasibility of Numeric Effluent Limits Applicable to Discharges of Storm Water Associated with Municipal, Industrial and Construction Activities,” dated June 19, 2006. The panel concluded that numeric limits or action levels are technically feasible to control construction storm water discharges, provided that certain conditions are considered. The panel also concluded that numeric effluent limitations (NELs) are feasible for discharges from construction sites that utilize an ATS. The State Water Board has incorporated the expert panel’s suggestions into this General Permit, which includes numeric action levels (NALs) for pH and turbidity, and special numeric limits for ATS discharges.

Determining Compliance with Numeric Limitations

53. This General Permit sets a pH NAL of 6.5 to 8.5, and a turbidity NAL of 250 NTU. The purpose of the NAL and its associated monitoring requirement is to provide operational information regarding the performance of the measures used at the site to minimize the discharge of pollutants and to protect beneficial uses and receiving waters from the adverse effects of construction-related storm water discharges. An exceedance of a NAL does not constitute a violation of this General Permit.

54. This General Permit requires dischargers with NAL exceedances to immediately implement additional BMPs and revise their Storm Water Pollution Prevention Plans (SWPPPs) accordingly to either prevent pollutants and authorized non-storm water discharges from contaminating storm water, or to substantially reduce the pollutants to levels consistently below the NALs. NAL exceedances are reported in the State Water Boards SMARTS system, and the discharger is

required to provide an NAL Exceedance Report when requested by a Regional Water Board.

I. Receiving Water Limitations

55. This General Permit requires all enrolled dischargers to determine the receiving waters potentially affected by their discharges and to comply with all applicable water quality standards, including any more stringent standards applicable to a water body.

J. Sampling, Monitoring, Reporting and Record Keeping

56. Visual monitoring of storm water and non-storm water discharges is required for all sites subject to this General Permit.

57. Records of all visual monitoring inspections are required to remain on-site during the construction period and for a minimum of three years.

58. For all Risk Level 3/LUP Type 3 and Risk Level 2/LUP Type 2 sites, this General Permit requires effluent monitoring for pH and turbidity. Sampling, analysis and monitoring requirements for effluent monitoring for pH and turbidity are contained in this General Permit.

59. Risk Level 3 and LUP Type 3 sites with effluent that exceeds the Receiving Water Monitoring Triggers contained in this General Permit and with direct discharges to receiving water are required to conduct receiving water monitoring. An exceedance of a Receiving Water Monitoring Trigger does not constitute a violation of this General Permit.

60. This General Permit establishes a 5 year, 24 hour (expressed in inches of rainfall) as an exemptions to the receiving water monitoring requirements for Risk Level 3 and LUP Type 3 dischargers.

61. If run-on is caused by a forest fire or any other natural disaster, then receiving water monitoring triggers do not apply.

62. For Risk Level 3 and LUP Type 3 sites larger than 30 acres and with direct discharges to receiving waters, this General Permit requires bioassessment sampling before and after site completion to determine if significant degradation to the receiving water's biota has occurred. Bioassessment sampling guidelines are contained in this General Permit.

63. A summary and evaluation of the sampling and analysis results will be submitted in the Annual Reports.

64. This General Permit contains sampling, analysis and monitoring requirements for non-visible pollutants at all sites subject to this General Permit.

65. Compliance with the General Permit relies upon dischargers to electronically self-report any discharge violations and to comply with any Regional Water Board enforcement actions.

66. This General Permit requires that all dischargers maintain a paper or electronic copy of all required records for three years from the date generated or date submitted, whichever is last. These records must be available at the construction site until construction is completed. For LUPs, these documents may be retained in a crew member's vehicle and made available upon request.

K. Active Treatment System (ATS) Requirements

67. Active treatment systems add chemicals to facilitate flocculation, coagulation and filtration of suspended sediment particles. The uncontrolled release of these chemicals to the environment can negatively affect the beneficial uses of receiving waters and/or degrade water quality (e.g., acute and chronic toxicity). Additionally, the batch storage and treatment of storm water through an ATS' can potentially cause physical impacts on receiving waters if storage volume is inadequate or due to sudden releases of the ATS batches and improperly designed outfalls.

68. If designed, operated and maintained properly an ATS can achieve very high removal rates of suspended sediment (measured as turbidity), albeit at sometimes significantly higher costs than traditional erosion/sediment control practices. As a result, this General Permit establishes NELs consistent with the expected level of typical ATS performance.

69. This General Permit requires discharges of storm water associated with construction activity that undergo active treatment to comply with special operational and effluent limitations to ensure that these discharges do not adversely affect the beneficial uses of the receiving waters or cause degradation of their water quality.

70. For ATS discharges, this General Permit establishes technology-based NELs for turbidity.

71. This General Permit establishes a 10 year, 24 hour (expressed in inches of rainfall) Compliance Storm Event exemption from the technology-based numeric effluent limitations for ATS discharges. Exceedances of the ATS turbidity NEL constitutes a violation of this General Permit.

L. Post-Construction Requirements

72. This General Permit includes performance standards for post-construction that are consistent with State Water Board Resolution No. 2005-0006, "Resolution Adopting the Concept of Sustainability as a Core Value for State Water Board Programs and Directing Its Incorporation," and 2008-0030, "Requiring Sustainable Water Resources Management." The requirement for all construction sites to match pre-project hydrology will help ensure that the physical and biological integrity of aquatic ecosystems are sustained. This "runoff reduction" approach is analogous in principle to Low Impact Development (LID) and will serve to protect related watersheds and waterbodies from both hydrologic-based and pollution impacts associated with the post-construction landscape.

73. LUP projects are not subject to post-construction requirements due to the nature of their construction to return project sites to pre-construction conditions.

M. Storm Water Pollution Prevention Plan Requirements

74. This General Permit requires the development of a site-specific SWPPP. The SWPPP must include the information needed to demonstrate compliance with all requirements of this General Permit, and must be kept on the construction site and be available for review. The discharger shall ensure that a QSD develops the SWPPP.

75. To ensure proper site oversight, this General Permit requires a Qualified SWPPP Practitioner to oversee implementation of the BMPs required to comply with this General Permit.

N. Regional Water Board Authorities

76. Regional Water Boards are responsible for implementation and enforcement of this General Permit. A general approach to permitting is not always suitable for every construction site and environmental circumstances. Therefore, this General Permit recognizes that Regional Water Boards must have some flexibility and authority to alter, approve, exempt, or rescind permit authority granted under this

General Permit in order to protect the beneficial uses of our receiving waters and prevent degradation of water quality.

IT IS HEREBY ORDERED that all dischargers subject to this General Permit shall comply with the following conditions and requirements (including all conditions and requirements as set forth in Attachments A, B, C, D, E and F)[6]:

II. CONDITIONS FOR PERMIT COVERAGE

A. Linear Underground/Overhead Projects (LUPs)

1. Linear Underground/Overhead Projects (LUPs) include, but are not limited to, any conveyance, pipe, or pipeline for the transportation of any gaseous, liquid (including water and wastewater for domestic municipal services), liquescent, or slurry substance; any cable line or wire for the transmission of electrical energy; any cable line or wire for communications (e.g. telephone, telegraph, radio or television messages); and associated ancillary facilities. Construction activities associated with LUPs include, but are not limited to, (a) those activities necessary for the installation of underground and overhead linear facilities (e.g., conduits, substructures, pipelines, towers, poles, cables, wires, connectors, switching, regulating and transforming equipment, and associated ancillary facilities); and include, but are not limited to, (b) underground utility mark-out, potholing, concrete and asphalt cutting and removal, trenching, excavation, boring and drilling, access road and pole/tower pad and cable/wire pull station, substation construction, substructure installation, construction of tower footings and/or foundations, pole and tower installations, pipeline installations, welding, concrete and/ or pavement repair or replacement, and stockpile/borrow locations.

2. The Legally Responsible Person is responsible for obtaining coverage under the General Permit where the construction of pipelines, utility lines, fiber-optic cables, or other linear underground/overhead projects will occur across several properties unless the LUP construction activities are covered under another construction storm water permit.

3. Only LUPs shall comply with the conditions and requirements in Attachment A, A.1 & A.2 of this Order. The balance of this Order is not applicable to LUPs except as indicated in Attachment A.

[6] These attachments are part of the General Permit itself and are not separate documents that are capable of being updated independently by the State Water Board.

B. Obtaining Permit Coverage Traditional Construction Sites

1. The Legally Responsible Person (LRP) (see Special Provisions, Electronic Signature and Certification Requirements, Section IV.I.1) must obtain coverage under this General Permit.

2. To obtain coverage, the LRP must electronically file Permit Registration Documents (PRDs) prior to the commencement of construction activity. Failure to obtain coverage under this General Permit for storm water discharges to waters of the United States is a violation of the CWA and the California Water Code.

3. PRDs shall consist of:

   a. Notice of Intent (NOI)
   b. Risk Assessment (Section VIII)
   c. Site Map
   d. Storm Water Pollution Prevention Plan (Section XIV)
   e. Annual Fee
   f. Signed Certification Statement

   Any information provided to the Regional Water Board shall comply with the Homeland Security Act and any other federal law that concerns security in the United States; any information that does not comply should not be submitted.

   Attachment B contains additional PRD information. Dischargers must electronically file the PRDs, and mail the appropriate annual fee to the State Water Board.

4. This permit is effective on July 1, 2010.

   a. **Dischargers Obtaining Coverage On or After July 1, 2010:** All dischargers requiring coverage on or after July 1, 2010, shall electronically file their PRDs prior to the commencement of construction activities, and mail the appropriate annual fee no later than seven days prior to the commencement of construction activities. Permit coverage shall not commence until the PRDs and the annual fee are received by the State Water Board, and a WDID number is assigned and sent by SMARTS.

   b. **Dischargers Covered Under 99-08-DWQ and 2003-0007-DWQ:** Existing dischargers subject to State Water Board Order No. 99-08-DWQ (existing dischargers) will continue coverage under 99-08-DWQ until July 1, 2010. After July 1, 2010, all NOIs subject to State Water Board Order No. 99-08-DWQ will be terminated.

Existing dischargers shall electronically file their PRDs no later than July 1, 2010. If an existing discharger's site acreage subject to the annual fee has changed, it shall mail a revised annual fee no less than seven days after receiving the revised annual fee notification, **or else lose permit coverage**. All existing dischargers shall be exempt from the risk determination requirements in Section VIII of this General Permit until two years after permit adoption. All existing dischargers are therefore subject to Risk Level 1 requirements regardless of their site's sediment and receiving water risks. However, a Regional Board retains the authority to require an existing discharger to comply with the Section VIII risk determination requirements.

5. The discharger is only considered covered by this General Permit upon receipt of a Waste Discharger Identification (WDID) number assigned and sent by the State Water Board Storm water Multi-Application and Report Tracking System (SMARTS). In order to demonstrate compliance with this General Permit, the discharger must obtain a WDID number and must present documentation of a valid WDID upon demand.

6. During the period this permit is subject to review by the U.S. EPA, the prior permit (State Water Board Order No. 99-08-DWQ) remains in effect. Existing dischargers under the prior permit will continue to have coverage under State Water Board Order No. 99-08-DWQ until this General Permit takes effect on July 1, 2010. Dischargers who complete their projects and electronically file an NOT prior to July 1, 2010, are not required to obtain coverage under this General Permit.

7. Small Construction Rainfall Erosivity Waiver

   EPA's Small Construction Erosivity Waiver applies to sites between one and five acres demonstrating that there are no adverse water quality impacts.

   Dischargers eligible for a Rainfall Erosivity Waiver based on low erosivity potential shall complete the electronic Notice of Intent (NOI) and Sediment Risk form through the State Water Board's SMARTS system, certifying that the construction activity will take place during a period when the value of the rainfall erosivity factor is less than five. Where the LRP changes or another LRP is added during construction, the new LRP must also submit a waiver certification through the SMARTS system.

   If a small construction site continues beyond the projected completion date given on the waiver certification, the LRP shall recalculate the

rainfall erosivity factor for the new project duration and submit this information through the SMARTS system. If the new R factor is below five (5), the discharger shall update through SMARTS all applicable information on the waiver certification and retain a copy of the revised waiver onsite. The LRP shall submit the new waiver certification 30 days prior to the projected completion date listed on the original waiver form to assure exemption from permitting requirements is uninterrupted. If the new R factor is five (5) or above, the LRP shall be required to apply for coverage under this Order.

8. In the case of a public emergency that requires immediate construction activities, a discharger shall submit a brief description of the emergency construction activity within five days of the onset of construction, and then shall submit all PRDs within thirty days.

C. Revising Permit Coverage for Change of Acreage or New Ownership

1. The discharger may reduce or increase the total acreage covered under this General Permit when a portion of the site is complete and/or conditions for termination of coverage have been met (See Section II.D Conditions for Termination of Coverage); when ownership of a portion of the site is sold to a different entity; or when new acreage, subject to this General Permit, is added to the site.

2. Within 30 days of a reduction or increase in total disturbed acreage, the discharger shall electronically file revisions to the PRDs that include:

   a. A revised NOI indicating the new project size;

   b. A revised site map showing the acreage of the site completed, acreage currently under construction, acreage sold/transferred or added, and acreage currently stabilized in accordance with the Conditions for Termination of Coverage in Section II.D below.

   c. SWPPP revisions, as appropriate; and

   d. Certification that any new landowners have been notified of applicable requirements to obtain General Permit coverage. The certification shall include the name, address, telephone number, and e-mail address of the new landowner.

   e. If the project acreage has increased, dischargers shall mail payment of revised annual fees within 14 days of receiving the revised annual fee notification.

3. The discharger shall continue coverage under the General Permit for any parcel that has not achieved "Final Stabilization" as defined in Section II.D.

4. When an LRP with active General Permit coverage transfers its LRP status to another person or entity that qualifies as an LRP, the existing LRP shall inform the new LRP of the General Permit's requirements. In order for the new LRP to continue the construction activity on its parcel of property, the new LRP, or the new LRP's approved signatory, must submit PRDs in accordance with this General Permit's requirements.

D. Conditions for Termination of Coverage

1. Within 90 days of when construction is complete or ownership has been transferred, the discharger shall electronically file a Notice of Termination (NOT), a final site map, and photos through the State Water Boards SMARTS system. Filing a NOT certifies that all General Permit requirements have been met. The Regional Water Board will consider a construction site complete only when all portions of the site have been transferred to a new owner, or all of the following conditions have been met:

   a. For purposes of "final stabilization," the site will not pose any additional sediment discharge risk than it did prior to the commencement of construction activity;

   b. There is no potential for construction-related storm water pollutants to be discharged into site runoff;

   c. Final stabilization has been reached;

   d. Construction materials and wastes have been disposed of properly;

   e. Compliance with the Post-Construction Standards in Section XIII of this General Permit has been demonstrated;

   f. Post-construction storm water management measures have been installed and a long-term maintenance plan[7] has been established; and

   g. All construction-related equipment, materials and any temporary BMPs no longer needed are removed from the site.

[7] For the purposes of this requirement a long-term maintenance plan will be designed for a minimum of five years, and will describe the procedures to ensure that the post-construction storm water management measures are adequately maintained.

2. The discharger shall certify that final stabilization conditions are satisfied in their NOT. Failure to certify shall result in continuation of permit coverage and annual billing.

3. The NOT must demonstrate through photos, RUSLE or RUSLE2, or results of testing and analysis that the site meets all of the conditions above (Section II.D.1) and the final stabilization condition (Section II.D.1.a) is attained by one of the following methods:

   a. "70% final cover method," no computational proof required

      OR:

   b. "RUSLE or RUSLE2 method," computational proof required

      OR:

   c. "Custom method", the discharger shall demonstrate in some other manner than a or b, above, that the site complies with the "final stabilization" requirement in Section II.D.1.a.

III. DISCHARGE PROHIBITIONS

A. Dischargers shall not violate any discharge prohibitions contained in applicable Basin Plans or statewide water quality control plans. Waste discharges to Areas of Special Biological Significance (ASBS) are prohibited by the California Ocean Plan, unless granted an exception issued by the State Water Board.

B. All discharges are prohibited except for the storm water and non-storm water discharges specifically authorized by this General Permit or another NPDES permit.

C. Authorized non-storm water discharges may include those from de-chlorinated potable water sources such as: fire hydrant flushing, irrigation of vegetative erosion control measures, pipe flushing and testing, water to control dust, uncontaminated ground water from dewatering, and other discharges not subject to a separate general NPDES permit adopted by a Regional Water Board. The discharge of non-storm water is authorized under the following conditions:

1. The discharge does not cause or contribute to a violation of any water quality standard;

2. The discharge does not violate any other provision of this General Permit;

3. The discharge is not prohibited by the applicable Basin Plan;

4. The discharger has included and implemented specific BMPs required by this General Permit to prevent or reduce the contact of the non-storm water discharge with construction materials or equipment.

5. The discharge does not contain toxic constituents in toxic amounts or (other) significant quantities of pollutants;

6. The discharge is monitored and meets the applicable NALs; and

7. The discharger reports the sampling information in the Annual Report.

If any of the above conditions are not satisfied, the discharge is not authorized by this General Permit. The discharger shall notify the Regional Water Board of any anticipated non-storm water discharges not already authorized by this General Permit or another NPDES permit, to determine whether a separate NPDES permit is necessary.

D. Debris resulting from construction activities are prohibited from being discharged from construction sites.

E. When soil contamination is found or suspected and a responsible party is not identified, or the responsible party fails to promptly take the appropriate action, the discharger shall have those soils sampled and tested to ensure proper handling and public safety measures are implemented. The discharger shall notify the appropriate local, State, and federal agency(ies) when contaminated soil is found at a construction site, and will notify the appropriate Regional Water Board.

IV. SPECIAL PROVISIONS

A. Duty to Comply

1. The discharger shall comply with all of the conditions of this General Permit. Any permit noncompliance constitutes a violation of the Clean Water Act (CWA) and the Porter-Cologne Water Quality Control Act and is grounds for enforcement action and/or removal from General Permit coverage.

2. The discharger shall comply with effluent standards or prohibitions established under Section 307(a) of the CWA for toxic pollutants within the time provided in the regulations that establish these standards or prohibitions, even if this General Permit has not yet been modified to incorporate the requirement.

B. General Permit Actions

1. This General Permit may be modified, revoked and reissued, or terminated for cause. The filing of a request by the discharger for a General Permit modification, revocation and reissuance, or termination, or a notification of planned changes or anticipated noncompliance does not annul any General Permit condition.

2. If any toxic effluent standard or prohibition (including any schedule of compliance specified in such effluent standard or prohibition) is promulgated under Section 307(a) of the CWA for a toxic pollutant which is present in the discharge and that standard or prohibition is more stringent than any limitation on the pollutant in this General Permit, this General Permit shall be modified or revoked and reissued to conform to the toxic effluent standard or prohibition and the dischargers so notified.

C. Need to Halt or Reduce Activity Not a Defense

It shall not be a defense for a discharger in an enforcement action that it would have been necessary to halt or reduce the permitted activity in order to maintain compliance with the conditions of this General Permit.

D. Duty to Mitigate

The discharger shall take all responsible steps to minimize or prevent any discharge in violation of this General Permit, which has a reasonable likelihood of adversely affecting human health or the environment.

E. Proper Operation and Maintenance

The discharger shall at all times properly operate and maintain any facilities and systems of treatment and control (and related appurtenances) which are installed or used by the discharger to achieve compliance with the conditions of this General Permit. Proper operation and maintenance also includes adequate laboratory controls and appropriate quality assurance procedures. Proper operation and maintenance may require the operation of backup or auxiliary facilities or similar systems installed by a discharger when necessary to achieve compliance with the conditions of this General Permit.

F. Property Rights

This General Permit does not convey any property rights of any sort or any exclusive privileges, nor does it authorize any injury to private property or any invasion of personal rights, nor does it authorize any infringement of Federal, State, or local laws or regulations.

G. Duty to Maintain Records and Provide Information

1. The discharger shall maintain a paper or electronic copy of all required records, including a copy of this General Permit, for three years from the date generated or date submitted, whichever is last. These records shall be available at the construction site until construction is completed.

2. The discharger shall furnish the Regional Water Board, State Water Board, or U.S. EPA, within a reasonable time, any requested information to determine compliance with this General Permit. The discharger shall also furnish, upon request, copies of records that are required to be kept by this General Permit.

H. Inspection and Entry

The discharger shall allow the Regional Water Board, State Water Board, U.S. EPA, and/or, in the case of construction sites which discharge through a municipal separate storm sewer, an authorized representative of the municipal operator of the separate storm sewer system receiving the discharge, upon the presentation of credentials and other documents as may be required by law, to:

1. Enter upon the discharger's premises at reasonable times where a regulated construction activity is being conducted or where records must be kept under the conditions of this General Permit;

2. Access and copy at reasonable times any records that must be kept under the conditions of this General Permit;

3. Inspect at reasonable times the complete construction site, including any off-site staging areas or material storage areas, and the erosion/sediment controls; and

4. Sample or monitor at reasonable times for the purpose of ensuring General Permit compliance.

I. Electronic Signature and Certification Requirements

1. All Permit Registration Documents (PRDs) and Notices of Termination (NOTs) shall be electronically signed, certified, and submitted via SMARTS to the State Water Board. Either the Legally Responsible Person (LRP), as defined in Appendix 5 – Glossary, or a person legally authorized to sign and certify PRDs and NOTs on behalf of the LRP (the LRP's Approved Signatory, as defined in Appendix 5 - Glossary) must submit all information electronically via SMARTS.

2. Changes to Authorization. If an Approved Signatory's authorization is no longer accurate, a new authorization satisfying the requirements of paragraph (a) of this section must be submitted via SMARTS prior to or together with any reports, information or applications to be signed by an Approved Signatory.

3. All Annual Reports, or other information required by the General Permit (other than PRDs and NOTs) or requested by the Regional Water Board, State Water Board, U.S. EPA, or local storm water management agency shall be certified and submitted by the LRP or the LRP's Approved Signatory.

J. Certification

Any person signing documents under Section IV.I above, shall make the following certification:

"I certify under penalty of law that this document and all attachments were prepared under my direction or supervision in accordance with a system designed to assure that qualified personnel properly gather and evaluate the information submitted. Based on my inquiry of the person or persons who manage the system or those persons directly responsible for gathering the information, to the best of my knowledge and belief, the information submitted is, true, accurate, and complete. I am aware that there are significant penalties for submitting false information, including the possibility of fine and imprisonment for knowing violations."

K. Anticipated Noncompliance

The discharger shall give advance notice to the Regional Water Board and local storm water management agency of any planned changes in the construction activity, which may result in noncompliance with General Permit requirements.

L. Bypass

Bypass[8] is prohibited. The Regional Water Board may take enforcement action against the discharger for bypass unless:

1. Bypass was unavoidable to prevent loss of life, personal injury or severe property damage;[9]

2. There were no feasible alternatives to bypass, such as the use of auxiliary treatment facilities, retention of untreated waste, or maintenance during normal periods of equipment downtime. This condition is not satisfied if adequate back-up equipment should have been installed in the exercise of reasonable engineering judgment to prevent a bypass that could occur during normal periods of equipment downtime or preventative maintenance;

3. The discharger submitted a notice at least ten days in advance of the need for a bypass to the Regional Water Board; or

4. The discharger may allow a bypass to occur that does not cause effluent limitations to be exceeded, but only if it is for essential maintenance to assure efficient operation. In such a case, the above bypass conditions are not applicable. The discharger shall submit notice of an unanticipated bypass as required.

M. Upset

1. A discharger that wishes to establish the affirmative defense of an upset[10] in an action brought for noncompliance shall demonstrate,

[8] The intentional diversion of waste streams from any portion of a treatment facility

[9] Severe property damage means substantial physical damage to property, damage to the treatment facilities that causes them to become inoperable, or substantial and permanent loss of natural resources that can reasonably be expected to occur in the absence of a bypass. Severe property damage does not mean economic loss caused by delays in production.

[10] An exceptional incident in which there is unintentional and temporary noncompliance the technology based numeric effluent limitations because of factors beyond the reasonable control of the discharger. An upset does not include noncompliance to the extent caused by operational error, improperly designed treatment facilities, inadequate treatment facilities, lack of preventative maintenance, or careless or improper operation.

through properly signed, contemporaneous operating logs, or other relevant evidence that:

a. An upset occurred and that the discharger can identify the cause(s) of the upset

b. The treatment facility was being properly operated by the time of the upset

c. The discharger submitted notice of the upset as required; and

d. The discharger complied with any remedial measures required

2. No determination made before an action of noncompliance occurs, such as during administrative review of claims that noncompliance was caused by an upset, is final administrative action subject to judicial review.

3. In any enforcement proceeding, the discharger seeking to establish the occurrence of an upset has the burden of proof

N. Penalties for Falsification of Reports

Section 309(c)(4) of the CWA provides that any person who knowingly makes any false material statement, representation, or certification in any record or other document submitted or required to be maintained under this General Permit, including reports of compliance or noncompliance shall upon conviction, be punished by a fine of not more than $10,000 or by imprisonment for not more than two years or by both.

O. Oil and Hazardous Substance Liability

Nothing in this General Permit shall be construed to preclude the institution of any legal action or relieve the discharger from any responsibilities, liabilities, or penalties to which the discharger is or may be subject to under Section 311 of the CWA.

P. Severability

The provisions of this General Permit are severable; and, if any provision of this General Permit or the application of any provision of this General Permit to any circumstance is held invalid, the application of such provision to other circumstances and the remainder of this General Permit shall not be affected thereby.

Q. Reopener Clause

This General Permit may be modified, revoked and reissued, or terminated for cause due to promulgation of amended regulations, receipt of U.S. EPA guidance concerning regulated activities, judicial decision, or in accordance with 40 Code of Federal Regulations (CFR) 122.62, 122.63, 122.64, and 124.5.

R. Penalties for Violations of Permit Conditions

1. Section 309 of the CWA provides significant penalties for any person who violates a permit condition implementing Sections 301, 302, 306, 307, 308, 318, or 405 of the CWA or any permit condition or limitation implementing any such section in a permit issued under Section 402. Any person who violates any permit condition of this General Permit is subject to a civil penalty not to exceed $37,500[11] per calendar day of such violation, as well as any other appropriate sanction provided by Section 309 of the CWA.

2. The Porter-Cologne Water Quality Control Act also provides for civil and criminal penalties, which in some cases are greater than those under the CWA.

S. Transfers

This General Permit is not transferable.

T. Continuation of Expired Permit

This General Permit continues in force and effect until a new General Permit is issued or the SWRCB rescinds this General Permit. Only those dischargers authorized to discharge under the expiring General Permit are covered by the continued General Permit.

[11] May be further adjusted in accordance with the Federal Civil Penalties Inflation Adjustment Act.

V. EFFLUENT STANDARDS & RECEIVING WATER MONITORING

A. Narrative Effluent Limitations

1. Storm water discharges and authorized non-storm water discharges regulated by this General Permit shall not contain a hazardous substance equal to or in excess of reportable quantities established in 40 C.F.R. §§ 117.3 and 302.4, unless a separate NPDES Permit has been issued to regulate those discharges.

2. Dischargers shall minimize or prevent pollutants in storm water discharges and authorized non-storm water discharges through the use of controls, structures, and management practices that achieve BAT for toxic and non-conventional pollutants and BCT for conventional pollutants.

Table 1- Numeric Action Levels, Test Methods, Detection Limits, and Reporting Units

Parameter	Test Method	Discharge Type	Min. Detection Limit	Units	Numeric Action Level
pH	Field test with calibrated portable instrument	Risk Level 2	0.2	pH units	lower NAL = 6.5 upper NAL = 8.5
		Risk Level 3			lower NAL = 6.5 upper NAL = 8.5
Turbidity	EPA 0180.1 and/or field test with calibrated portable instrument	Risk Level 2	1	NTU	250 NTU
		Risk Level 3			250 NTU

B. Numeric Action Levels (NALs)

1. For Risk Level 2 and 3 dischargers, the lower storm event average NAL for pH is 6.5 pH units and the upper storm event average NAL for

pH is 8.5 pH units. The discharger shall take actions as described below if the discharge is outside of this range of pH values.

2. For Risk Level 2 and 3 dischargers, the NAL storm event daily average for turbidity is 250 NTU. The discharger shall take actions as described below if the discharge is outside of this range of turbidity values.

3. Whenever the results from a storm event daily average indicate that the discharge is below the lower NAL for pH, exceeds the upper NAL for pH, or exceeds the turbidity NAL (as listed in Table 1), the discharger shall conduct a construction site and run-on evaluation to determine whether pollutant source(s) associated with the site's construction activity may have caused or contributed to the NAL exceedance and shall immediately implement corrective actions if they are needed.

4. The site evaluation shall be documented in the SWPPP and specifically address whether the source(s) of the pollutants causing the exceedance of the NAL:

   a. Are related to the construction activities and whether additional BMPs are required to (1) meet BAT/BCT requirements; (2) reduce or prevent pollutants in storm water discharges from causing exceedances of receiving water objectives; and (3) determine what corrective action(s) were taken or will be taken and with a description of the schedule for completion.

      AND/OR:

   b. Are related to the run-on associated with the construction site location and whether additional BMPs measures are required to (1) meet BAT/BCT requirements; (2) reduce or prevent pollutants in storm water discharges from causing exceedances of receiving water objectives; and (3) what corrective action(s) were taken or will be taken with a description of the schedule for completion.

C. Receiving Water Monitoring Triggers

1. The receiving water monitoring triggers for Risk Level 3 dischargers with direct discharges to surface waters are triggered when the daily average effluent pH values during any site phase when there is a high risk of pH discharge[12] fall outside of the range of 6.0 and 9.0 pH units, or when the daily average effluent turbidity exceeds 500 NTU.

2. Risk Level 3 dischargers with with direct discharges to surface waters shall conduct receiving water monitoring whenever their effluent monitoring results exceed the receiving water monitoring triggers. If the pH trigger is exceeded, the receiving water shall be monitored for pH for the duration of coverage under this General Permit. If the turbidity trigger is exceeded, the receiving water shall be monitored for turbidity and SSC for the duration of coverage under this general permit.

3. Risk Level 3 dischargers with direct discharges to surfaces waters shall initiate receiving water monitoring when the triggers are exceeded unless the storm event causing the exceedance is determined after the fact to equal to or greater than the 5-year 24-hour storm (expressed in inches of rainfall) as determined by using these maps:

   http://www.wrcc.dri.edu/pcpnfreq/nca5y24.gif
   http://www.wrcc.dri.edu/pcpnfreq/sca5y24.gif

   Verification of the 5-year 24-hour storm event shall be done by reporting on-site rain gauge readings as well as nearby governmental rain gauge readings.

4. If run-on is caused by a forest fire or any other natural disaster, then receiving water monitoring triggers do not apply.

[12] A period of high risk of pH discharge is defined as a project's complete utilities phase, complete vertical build phase, and any portion of any phase where significant amounts of materials are placed directly on the land at the site in a manner that could result in significant alterations of the background pH of the discharges.

VI. RECEIVING WATER LIMITATIONS

A. The discharger shall ensure that storm water discharges and authorized non-storm water discharges to any surface or ground water will not adversely affect human health or the environment.

B. The discharger shall ensure that storm water discharges and authorized non-storm water discharges will not contain pollutants in quantities that threaten to cause pollution or a public nuisance.

C. The discharger shall ensure that storm water discharges and authorized non-storm water discharges will not contain pollutants that cause or contribute to an exceedance of any applicable water quality objectives or water quality standards (collectively, WQS) contained in a Statewide Water Quality Control Plan, the California Toxics Rule, the National Toxics Rule, or the applicable Regional Water Board's Water Quality Control Plan (Basin Plan).

D. Dischargers located within the watershed of a CWA § 303(d) impaired water body, for which a TMDL has been approved by the U.S. EPA, shall comply with the approved TMDL if it identifies "construction activity" or land disturbance as a source of the pollution.

VII. TRAINING QUALIFICATIONS AND CERTIFICATION REQUIREMENTS

A. General

The discharger shall ensure that all persons responsible for implementing requirements of this General Permit shall be appropriately trained in accordance with this Section. Training should be both formal and informal, occur on an ongoing basis, and should include training offered by recognized governmental agencies or professional organizations. Those responsible for preparing and amending SWPPPs shall comply with the requirements in this Section VII.

The discharger shall provide documentation of all training for persons responsible for implementing the requirements of this General Permit in the Annual Reports.

B. SWPPP Certification Requirements

1. **Qualified SWPPP Developer:** The discharger shall ensure that SWPPPs are written, amended and certified by a Qualified SWPPP Developer (QSD). A QSD shall have one of the following registrations or certifications, and appropriate experience, as required for:

   a. A California registered professional civil engineer;

   b. A California registered professional geologist or engineering geologist;

   c. A California registered landscape architect;

   d. A professional hydrologist registered through the American Institute of Hydrology;

   e. A Certified Professional in Erosion and Sediment Control (CPESC) ™ registered through Enviro Cert International, Inc.;

   f. A Certified Professional in Storm Water Quality (CPSWQ) ™ registered through Enviro Cert International, Inc.; or

   g. A professional in erosion and sediment control registered through the National Institute for Certification in Engineering Technologies (NICET).

Effective two years after the adoption date of this General Permit, a QSD shall have attended a State Water Board-sponsored or approved QSD training course.

2. The discharger shall list the name and telephone number of the currently designated Qualified SWPPP Developer(s) in the SWPPP.

3. **Qualified SWPPP Practitioner:** The discharger shall ensure that all BMPs required by this General Permit are implemented by a Qualified SWPPP Practitioner (QSP). A QSP is a person responsible for non-storm water and storm water visual observations, sampling and analysis. Effective two years from the date of adoption of this General Permit, a QSP shall be either a QSD or have one of the following certifications:

   a. A certified erosion, sediment and storm water inspector registered through Enviro Cert International, Inc.; or

   b. A certified inspector of sediment and erosion control registered through Certified Inspector of Sediment and Erosion Control, Inc.

   Effective two years after the adoption date of this General Permit, a QSP shall have attended a State Water Board-sponsored or approved QSP training course.

4. The LRP shall list in the SWPPP, the name of any Approved Signatory, and provide a copy of the written agreement or other mechanism that provides this authority from the LRP in the SWPPP.

5. The discharger shall include, in the SWPPP, a list of names of all contractors, subcontractors, and individuals who will be directed by the Qualified SWPPP Practitioner. This list shall include telephone numbers and work addresses. Specific areas of responsibility of each subcontractor and emergency contact numbers shall also be included.

6. The discharger shall ensure that the SWPPP and each amendment will be signed by the Qualified SWPPP Developer. The discharger shall include a listing of the date of initial preparation and the date of each amendment in the SWPPP.

VIII. RISK DETERMINATION

The discharger shall calculate the site's sediment risk and receiving water risk during periods of soil exposure (i.e. grading and site stabilization) and use the calculated risks to determine a Risk Level(s) using the methodology in

Appendix 1. For any site that spans two or more planning watersheds,[13] the discharger shall calculate a separate Risk Level for each planning watershed. The discharger shall notify the State Water Board of the site's Risk Level determination(s) and shall include this determination as a part of submitting the PRDs. If a discharger ends up with more than one Risk Level determination, the Regional Water Board may choose to break the project into separate levels of implementation.

IX. RISK LEVEL 1 REQUIREMENTS

Risk Level 1 Dischargers shall comply with the requirements included in Attachment C of this General Permit.

X. RISK LEVEL 2 REQUIREMENTS

Risk Level 2 Dischargers shall comply with the requirements included in Attachment D of this General Permit.

XI. RISK LEVEL 3 REQUIREMENTS

Risk Level 3 Dischargers shall comply with the requirements included in Attachment E of this General Permit.

XII. ACTIVE TREATMENT SYSTEMS (ATS)

Dischargers choosing to implement an ATS on their site shall comply with all of the requirements in Attachment F of this General Permit.

[13] Planning watershed: defined by the Calwater Watershed documents as a watershed that ranges in size from approximately 3,000 to 10,000 acres http://cain.ice.ucdavis.edu/calwater/calwfaq.html, http://gis.ca.gov/catalog/BrowseRecord.epl?id=22175 .

XIII. POST-CONSTRUCTION STANDARDS

A. All dischargers shall comply with the following runoff reduction requirements unless they are located within an area subject to post-construction standards of an active Phase I or II municipal separate storm sewer system (MS4) permit that has an approved Storm Water Management Plan.

1. This provision shall take effect three years from the adoption date of this permit, or later at the discretion of the Executive Officer of the Regional Board.

2. The discharger shall demonstrate compliance with the requirements of this section by submitting with their NOI a map and worksheets in accordance with the instructions in Appendix 2. The discharger shall use non-structural controls unless the discharger demonstrates that non-structural controls are infeasible or that structural controls will produce greater reduction in water quality impacts.

3. The discharger shall, through the use of non-structural and structural measures as described in Appendix 2, replicate the pre-project water balance (for this permit, defined as the volume of rainfall that ends up as runoff) for the smallest storms up to the 85th percentile storm event (or the smallest storm event that generates runoff, whichever is larger). Dischargers shall inform Regional Water Board staff at least 30 days prior to the use of any structural control measure used to comply with this requirement. Volume that cannot be addressed using non-structural practices shall be captured in structural practices and approved by the Regional Water Board. When seeking Regional Board approval for the use of structural practices, dischargers shall document the infeasibility of using non-structural practices on the project site, or document that there will be fewer water quality impacts through the use of structural practices.

4. For sites whose disturbed area exceeds two acres, the discharger shall preserve the pre-construction drainage density (miles of stream length per square mile of drainage area) for all drainage areas within the area serving a first order stream[14] or larger stream and ensure that post-project time of runoff concentration is equal or greater than pre-project time of concentration.

[14] A first order stream is defined as a stream with no tributaries.

B. All dischargers shall implement BMPs to reduce pollutants in storm water discharges that are reasonably foreseeable after all construction phases have been completed at the site (Post-construction BMPs).

XIV. SWPPP REQUIREMENTS

A. The discharger shall ensure that the Storm Water Pollution Prevention Plans (SWPPPs) for all traditional project sites are developed and amended or revised by a QSD. The SWPPP shall be designed to address the following objectives:

1. All pollutants and their sources, including sources of sediment associated with construction, construction site erosion and all other activities associated with construction activity are controlled;

2. Where not otherwise required to be under a Regional Water Board permit, all non-storm water discharges are identified and either eliminated, controlled, or treated;

3. Site BMPs are effective and result in the reduction or elimination of pollutants in storm water discharges and authorized non-storm water discharges from construction activity to the BAT/BCT standard;

4. Calculations and design details as well as BMP controls for site run-on are complete and correct, and

5. Stabilization BMPs installed to reduce or eliminate pollutants after construction are completed.

B. To demonstrate compliance with requirements of this General Permit, the QSD shall include information in the SWPPP that supports the conclusions, selections, use, and maintenance of BMPs.

C. The discharger shall make the SWPPP available at the construction site during working hours while construction is occurring and shall be made available upon request by a State or Municipal inspector. When the original SWPPP is retained by a crewmember in a construction vehicle and is not currently at the construction site, current copies of the BMPs and map/drawing will be left with the field crew and the original SWPPP shall be made available via a request by radio/telephone.

XV. REGIONAL WATER BOARD AUTHORITIES

A. In the case where the Regional Water Board does not agree with the discharger's self-reported risk level (e.g., they determine themselves to be a Level 1 Risk when they are actually a Level 2 Risk site), Regional Water Boards may either direct the discharger to reevaluate the Risk Level(s) for their site or terminate coverage under this General Permit.

B. Regional Water Boards may terminate coverage under this General Permit for dischargers who fail to comply with its requirements or where they determine that an individual NPDES permit is appropriate.

C. Regional Water Boards may require dischargers to submit a Report of Waste Discharge / NPDES permit application for Regional Water Board consideration of individual requirements.

D. Regional Water Boards may require additional Monitoring and Reporting Program Requirements, including sampling and analysis of discharges to sediment-impaired water bodies.

E. Regional Water Boards may require dischargers to retain records for more than the three years required by this General Permit.

XVI. ANNUAL REPORTING REQUIREMENTS

A. All dischargers shall prepare and electronically submit an Annual Report no later than September 1 of each year.

B. The discharger shall certify each Annual Report in accordance with the Special Provisions.

C. The discharger shall retain an electronic or paper copy of each Annual Report for a minimum of three years after the date the annual report is filed.

D. The discharger shall include storm water monitoring information in the Annual Report consisting of:

1. a summary and evaluation of all sampling and analysis results, including copies of laboratory reports;

2. the analytical method(s), method reporting unit(s), and method detection limit(s) of each analytical parameter (analytical results that are less than the method detection limit shall be reported as "less than the method detection limit");

3. a summary of all corrective actions taken during the compliance year;

4. identification of any compliance activities or corrective actions that were not implemented;

5. a summary of all violations of the General Permit;

6. the names of individual(s) who performed the facility inspections, sampling, visual observation (inspections), and/or measurements;

7. the date, place, time of facility inspections, sampling, visual observation (inspections), and/or measurements, including precipitation (rain gauge); and

8. the visual observation and sample collection exception records and reports specified in Attachments C, D, and E.

E. The discharger shall provide training information in the Annual Report consisting of:

1. documentation of all training for individuals responsible for all activities associated with compliance with this General Permit;

2. documentation of all training for individuals responsible for BMP installation, inspection, maintenance, and repair; and

3. documentation of all training for individuals responsible for overseeing, revising, and amending the SWPPP.

ATTACHMENT A
Linear Underground/ Overhead Requirements

A. DEFINITION OF LINEAR UNDERGROUND/OVERHEAD PROJECTS 1
B. LINEAR PROJECT PERMIT REGISTRATION DOCUMENTS (PRDs) 3
C. LINEAR PROJECT TERMINATION OF COVERAGE REQUIREMENTS..4
D. DISCHARGE PROHIBITIONS 6
E. SPECIAL PROVISIONS.....8
F. EFFLUENT STANDARDS & RECEIVING WATER MONITORING 13
G. RECEIVING WATER LIMITATIONS 16
H. TRAINING QUALIFICATIONS 17
I. TYPES OF LINEAR PROJECTS 19
J. LUP TYPE-SPECIFIC REQUIREMENTS 20
K. STORM WATER POLLUTION PREVENTION PLAN (SWPPP) REQUIREMENTS 28
L. REGIONAL WATER BOARD AUTHORITIES.....29
M. MONITORING AND REPORTING REQUIREMENTS 31

All Linear Underground/Overhead project dischargers who submit permit registration documents (PRDs) indicating their intention to be regulated under the provisions of this General Permit shall comply with the following:

A. DEFINITION OF LINEAR UNDERGROUND/OVERHEAD PROJECTS

1. Linear Underground/Overhead Projects (LUPs) include, but are not limited to, any conveyance, pipe, or pipeline for the transportation of any gaseous, liquid (including water and wastewater for domestic municipal services), liquiescent, or slurry substance; any cable line or wire for the transmission of electrical energy; any cable line or wire for communications (e.g., telephone, telegraph, radio, or television messages); and associated ancillary facilities. Construction activities associated with LUPs include, but are not limited to, (a) those activities necessary for the installation of underground and overhead linear facilities (e.g., conduits, substructures, pipelines, towers, poles, cables, wires, connectors, switching, regulating and transforming equipment, and associated ancillary facilities); and include, but are not limited to, (b) underground utility mark-out, potholing, concrete and asphalt cutting and removal, trenching, excavation, boring and drilling, access road and pole/tower pad and cable/wire pull station, substation construction, substructure installation, construction of tower footings and/or foundations, pole and tower installations, pipeline installations, welding, concrete and/ or pavement repair or replacement, and stockpile/borrow locations.

2. LUP evaluation shall consist of two tasks:

a. Confirm that the project or project section(s) qualifies as an LUP. The State Water Board website contains a project determination guidance flowchart. http://www.waterboards.ca.gov/water_issues/programs/stormwater/constpermits.shtml

b. Identify which Type(s) (1, 2 or 3 described in Section I below) are applicable to the project or project sections based on project sediment and receiving water risk. (See Attachment A.1)

3. A Legally Responsible Person (LRP) for a Linear Underground/Overhead project is required to obtain CGP coverage under one or more permit registration document (PRD) electronic submittals to the State Water Board's Storm Water Multi-Application and Report Tracking (SMARTs) system. Attachment A.1 contains a flow chart to be used when determining if a linear project qualifies for coverage and to determine LUP Types. Since a LUP may be constructed within both developed and undeveloped locations and portions of LUPs may be constructed by different contractors, LUPs may be broken into logical permit sections. Sections may be determined based on portions of a project conducted by one contractor. Other situations may also occur, such as the time period in which the sections of a project will be constructed (e.g. project phases), for which separate permit coverage is possible. For projects that are broken into separate sections, a description of how each section relates to the overall project and the definition of the boundaries between sections shall be clearly stated.

4. Where construction activities transverse or enter into different Regional Water Board jurisdictions, LRPs shall obtain permit coverage for each Regional Water Board area involved prior to the commencement of construction activities.

5. Small Construction Rainfall Erosivity Waiver

EPA's Small Construction Erosivity Waiver applies to sites between one and five acres demonstrating that there are no adverse water quality impacts.

Dischargers eligible for a Rainfall Erosivity Waiver based on low erosivity potential shall complete the electronic Notice of Intent (NOI) and Sediment Risk form through the State Water Board's SMARTS system, certifying that the construction activity will take place during a period when the value of the rainfall erosivity factor is less than five. Where the LRP changes or another LRP is added during construction, the new LRP must also submit a waiver certification through the SMARTS system.

If a small linear construction site continues beyond the projected completion date given on the waiver certification, the LRP shall recalculate the rainfall erosivity factor for the new project duration and submit this information through the SMARTS system. If the new R factor is below five (5), the discharger shall update through SMARTS all applicable information on the waiver certification and retain a copy of the revised waiver onsite. The LRP shall submit the new waiver certification 30 days prior to the projected completion date listed on the original waiver form to assure exemption from permitting requirements is uninterrupted. If the new R factor is five (5) or above, the LRP shall be required to apply for coverage under this Order.

B. LINEAR PROJECT PERMIT REGISTRATION DOCUMENTS (PRDs)

Any information provided to the Regional Water Board shall comply with the Homeland Security Act and any other federal law that concerns security in the United States; any information that does not comply should not be submitted. PRDs shall consist of the following:

1. Notice of Intent (NOI)

Prior to construction activities, the LRP of a proposed linear underground/overhead project shall utilize the processes and methods provided in Attachment A.2, Permit Registration Documents (PRDs) – General Instructions for Linear Underground/Overhead Projects to comply with the Construction General Permit.

2. Site Maps

LRPs submitting PRDs shall include at least 3 maps. The first map will be a zoomed[1] 1000-1500 ft vicinity map that shows the starting point of the project. The second will be a zoomed map of 1000-1500 ft showing the ending location of the project. The third will be a larger view vicinity map, 1000 ft to 2000 ft, displaying the entire project location depending on the project size, and indicating the LUP type (1, 2 or 3) areas within the total project footprint.

3. Drawings

LRPs submitting PRDs shall include a construction drawing(s) or other appropriate drawing(s) or map(s) that shows the locations of storm drain

[1] An image with a close-up/enhanced detailed view of site features that show minute details such as streets and neighboring structures.
Or: An image with a close-up/enhanced detailed view of the site's surrounding infrastructure.
Or: An image with a close up detailed view of the project and its surroundings.

inlets and waterbodies[2] that may receive discharges from the construction activities and that shows the locations of BMPs to be installed for all those BMPs that can be illustrated on the revisable drawing(s) or map(s). If storm drain inlets, waterbodies, and/or BMPs cannot be adequately shown on the drawing(s) or map(s) they should be described in detail within the SWPPP.

4. Storm Water Pollution Prevention Plan (SWPPP)

LUP dischargers shall comply with the SWPPP Preparation, Implementation, and Oversight requirements in Section K of this Attachment.

5. Contact information

LUP dischargers shall include contact information for all contractors (or subcontractors) responsible for each area of an LUP project. This should include the names, telephone numbers, and addresses of contact personnel. Specific areas of responsibility of each contact, and emergency contact numbers should also be included.

6. In the case of a public emergency that requires immediate construction activities, a discharger shall submit a brief description of the emergency construction activity within five days of the onset of construction, and then shall submit all PRDs within thirty days.

C. LINEAR PROJECT TERMINATION OF COVERAGE REQUIREMENTS

The LRP may terminate coverage of an LUP when construction activities are completed by submitting an electronic notice of termination (NOT) through the State Water Board's SMARTS system. Termination requirements are different depending on the complexity of the LUP. An LUP is considered complete when: (a) there is no potential for construction-related storm water pollution; (b) all elements of the SWPPP have been completed; (c) construction materials and waste have been disposed of properly; (d) the site is in compliance with all local storm water management requirements; and (e) the LRP submits a notice of termination (NOT) and has received approval for termination from the appropriate Regional Water Board office.

1. LUP Stabilization Requirements

The LUP discharger shall ensure that all disturbed areas of the construction site are stabilized prior to termination of coverage under this General Permit. Final stabilization for the purposes of submitting an NOT

[2] Includes basin(s) that the MS4 storm sewer systems may drain to for Hydromodification or Hydrological Conditional of Concerns under the MS4 permits.

is satisfied when all soil disturbing activities are completed and one of the following criteria is met:

a. In disturbed areas that were vegetated prior to construction activities of the LUP, the area disturbed must be re-established to a uniform vegetative cover equivalent to 70 percent coverage of the preconstruction vegetative conditions. Where preconstruction vegetation covers less than 100 percent of the surface, such as in arid areas, the 70 percent coverage criteria is adjusted as follows: if the preconstruction vegetation covers 50 percent of the ground surface, 70 percent of 50 percent (.70 X .50=.35) would require 35 percent total uniform surface coverage; or

b. Where no vegetation is present prior to construction, the site is returned to its original line and grade and/or compacted to achieve stabilization; or

c. Equivalent stabilization measures have been employed. These measures include, but are not limited to, the use of such BMPs as blankets, reinforced channel liners, soil cement, fiber matrices, geotextiles, or other erosion resistant soil coverings or treatments.

2. LUP Termination of Coverage Requirements

The LRP shall file an NOT through the State Water Board's SMARTS system. By submitting an NOT, the LRP is certifying that construction activities for an LUP are complete and that the project is in full compliance with requirements of this General Permit and that it is now compliant with soil stabilization requirements where appropriate. Upon approval by the appropriate Regional Water Board office, permit coverage will be terminated.

3. Revising Coverage for Change of Acreage

When the LRP of a portion of an LUP construction project changes, or when a phase within a multi-phase project is completed, the LRP may reduce the total acreage covered by this General Permit. In reducing the acreage covered by this General Permit, the LRP shall electronically file revisions to the PRDs that include:

a. a revised NOI indicating the new project size;

b. a revised site map showing the acreage of the project completed, acreage currently under construction, acreage sold, transferred or added, and acreage currently stabilized.

c. SWPPP revisions, as appropriate; and

d. certification that any new LRPs have been notified of applicable requirements to obtain General Permit coverage. The certification shall include the name, address, telephone number, and e-mail address (if known) of the new LRP.

If the project acreage has increased, dischargers shall mail payment of revised annual fees within 14 days of receiving the revised annual fee notification.

D. DISCHARGE PROHIBITIONS

1. LUP dischargers shall not violate any discharge prohibitions contained in applicable Basin Plans or statewide water quality control plans. Waste discharges to Areas of Special Biological Significance (ASBS) are prohibited by the California Ocean Plan, unless granted an exception issued by the State Water Board.

2. LUP dischargers are prohibited from discharging non-storm water that is not otherwise authorized by this General Permit. Non-storm water discharges authorized by this General Permit[3] may include, fire hydrant flushing, irrigation of vegetative erosion control measures, pipe flushing and testing, water to control dust, street cleaning, dewatering,[4] uncontaminated groundwater from dewatering, and other discharges not subject to a separate general NPDES permit adopted by a Regional Water Board. Such discharges are allowed by this General Permit provided they are not relied upon to clean up failed or inadequate construction or post-construction BMPs designed to keep materials on site. These authorized non-storm water discharges:

[3] Dischargers must identify all authorized non-storm water discharges in the LUP's SWPPP and identify BMPs that will be implemented to either eliminate or reduce pollutants in non-storm water discharges. Regional Water Boards may direct the discharger to discontinue discharging such non-storm water discharges if determined that such discharges discharge significant pollutants or threaten water quality.
[4] Dewatering activities may be prohibited or need coverage under a separate permit issued by the Regional Water Boards. Dischargers shall check with the appropriate Regional Water Boards for any required permit or basin plan conditions prior to initial dewatering activities to land, storm drains, or waterbodies.

a. Shall not cause or contribute to a violation of any water quality standard;

b. Shall not violate any other provision of this General Permit;

c. Shall not violate any applicable Basin Plan;

d. Shall comply with BMPs as described in the SWPPP;

e. Shall not contain toxic constituents in toxic amounts or (other) significant quantities of pollutants;

f. Shall be monitored and meets the applicable NALs; and

g. Shall be reported by the discharger in the Annual Report.

If any of the above conditions are not satisfied, the discharge is not authorized by this General Permit. The discharger shall notify the Regional Water Board of any anticipated non-storm water discharges not authorized by this General Permit to determine the need for a separate NPDES permit.

Additionally, some LUP dischargers may be required to obtain a separate permit if the applicable Regional Water Board has adopted a General Permit for dewatering discharges. Wherever feasible, alternatives, that do not result in the discharge of non-storm water, shall be implemented in accordance with this Attachment's Section K.2 - SWPPP Implementation Schedule.

3. LUP dischargers shall ensure that trench spoils or any other soils disturbed during construction activities that are contaminated[5] are not discharged with storm water or non-storm water discharges into any storm drain or water body except pursuant to an NPDES permit.

When soil contamination is found or suspected and a responsible party is not identified, or the responsible party fails to promptly take the appropriate action, the LUP discharger shall have those soils sampled and tested to ensure that proper handling and public safety measures are

[5] Contaminated soil contains pollutants in concentrations that exceed the appropriate thresholds that various regulatory agencies set for those substances. Preliminary testing of potentially contaminated soils will be based on odor, soil discoloration, or prior history of the site's chemical use and storage and other similar factors. When soil contamination is found or suspected and a responsible party is not identified, or the responsible party fails to promptly take the appropriate action, the discharger shall have those soils sampled and tested to ensure proper handling and public safety measures are implemented. The legally responsible person will notify the appropriate local, State, or federal agency(ies) when contaminated soil is found at a construction site, and will notify the Regional Water Board by submitting an NOT at the completion of the project.

implemented. The LUP discharger shall notify the appropriate local, State, and federal agency(ies) when contaminated soil is found at a construction site, and will notify the appropriate Regional Water Board.

4. Discharging any pollutant-laden water that will cause or contribute to an exceedance of the applicable Regional Water Board's Basin Plan from a dewatering site or sediment basin into any receiving water or storm drain is prohibited.

5. Debris[6] resulting from construction activities are prohibited from being discharged from construction project sites.

E. SPECIAL PROVISIONS

1. Duty to Comply

a. The LUP discharger must comply with all of the conditions of this General Permit. Any permit noncompliance constitutes a violation of the Clean Water Act (CWA) and the Porter-Cologne Water Quality Control Act and is grounds for enforcement action and/or removal from General Permit coverage.

b. The LUP discharger shall comply with effluent standards or prohibitions established under Section 307(a) of the CWA for toxic pollutants within the time provided in the regulations that establish these standards or prohibitions, even if this General Permit has not yet been modified to incorporate the requirement.

2. General Permit Actions

a. This General Permit may be modified, revoked and reissued, or terminated for cause. The filing of a request by the discharger for a General Permit modification, revocation and reissuance, or termination, or a notification of planned changes or anticipated noncompliance does not annul any General Permit condition.

[6] Litter, rubble, discarded refuse, and remains of something destroyed.

b. If any toxic effluent standard or prohibition (including any schedule of compliance specified in such effluent standard or prohibition) is promulgated under Section 307(a) of the CWA for a toxic pollutant which is present in the discharge and that standard or prohibition is more stringent than any limitation on the pollutant in this General Permit, this General Permit shall be modified or revoked and reissued to conform to the toxic effluent standard or prohibition and the dischargers so notified.

3. Need to Halt or Reduce Activity Not a Defense

It shall not be a defense for an LUP discharger in an enforcement action that it would have been necessary to halt or reduce the permitted activity in order to maintain compliance with the conditions of this General Permit.

4. Duty to Mitigate

The LUP discharger shall take all responsible steps to minimize or prevent any discharge in violation of this General Permit, which has a reasonable likelihood of adversely affecting human health or the environment.

5. Proper Operation and Maintenance

The LUP discharger shall at all times properly operate and maintain any facilities and systems of treatment and control (and related appurtenances) which are installed or used by the discharger to achieve compliance with the conditions of this General Permit and with the requirements of the Storm Water Pollution Prevention Plan (SWPPP). Proper operation and maintenance also includes adequate laboratory controls and appropriate quality assurance procedures. Proper operation and maintenance may require the operation of backup or auxiliary facilities or similar systems installed by a discharger when necessary to achieve compliance with the conditions of this General Permit.

6. Property Rights

This General Permit does not convey any property rights of any sort or any exclusive privileges, nor does it authorize any injury to private property or any invasion of personal rights, nor does it authorize any infringement of Federal, State, or local laws or regulations.

7. Duty to Maintain Records and Provide Information

a. The LUP discharger shall maintain a paper or electronic copy of all required records, including a copy of this General Permit, for three years from the date generated or date submitted, whichever is last. These records shall be kept at the construction site or in a crew

member's vehicle until construction is completed, and shall be made available upon request.

b. The LUP discharger shall furnish the Regional Water Board, State Water Board, or USEPA, within a reasonable time, any requested information to determine compliance with this General Permit. The LUP discharger shall also furnish, upon request, copies of records that are required to be kept by this General Permit.

8. Inspection and Entry

The LUP discharger shall allow the Regional Water Board, State Water Board, USEPA, and/or, in the case of construction sites which discharge through a municipal separate storm sewer, an authorized representative of the municipal operator of the separate storm sewer system receiving the discharge, upon the presentation of credentials and other documents as may be required by law, to:

a. Enter upon the discharger's premises at reasonable times where a regulated construction activity is being conducted or where records must be kept under the conditions of this General Permit;

b. Access and copy at reasonable times any records that must be kept under the conditions of this General Permit;

c. Inspect at reasonable times the complete construction site, including any off-site staging areas or material storage areas, and the erosion/sediment controls; and

d. Sample or monitor at reasonable times for the purpose of ensuring General Permit compliance.

9. Electronic Signature and Certification Requirements

a. All Permit Registration Documents (PRDs) and Notices of Termination (NOTs) shall be electronically signed, certified, and submitted via SMARTS to the State Water Board. Either the Legally Responsible Person (LRP), as defined in Appendix 5 – Glossary, or a person legally authorized to sign and certify PRDs and NOTs on behalf of the LRP (the LRP's Approved Signatory, as defined in Appendix 5 - Glossary) must submit all information electronically via SMARTS.

b. Changes to Authorization. If an Approved Signatory's authorization is no longer accurate, a new authorization satisfying the requirements of paragraph (a) of this section must be submitted via SMARTS prior to or

together with any reports, information or applications to be signed by an Approved Signatory.

c. All SWPPP revisions, annual reports, or other information required by the General Permit (other than PRDs and NOTs) or requested by the Regional Water Board, State Water Board, USEPA, or local storm water management agency shall be certified and submitted by the LRP or the LRP's Approved Signatory.

10. Certification

Any person signing documents under Section E.9 above, shall make the following certification:

"I certify under penalty of law that this document and all attachments were prepared under my direction or supervision in accordance with a system designed to assure that qualified personnel properly gather and evaluate the information submitted. Based on my inquiry of the person or persons who manage the system or those persons directly responsible for gathering the information, to the best of my knowledge and belief, the information submitted is, true, accurate, and complete. I am aware that there are significant penalties for submitting false information, including the possibility of fine and imprisonment for knowing violations."

11. Anticipated Noncompliance

The LUP discharger shall give advance notice to the Regional Water Board and local storm water management agency of any planned changes in the construction activity, which may result in noncompliance with General Permit requirements.

12. Penalties for Falsification of Reports

Section 309(c)(4) of the CWA provides that any person who knowingly makes any false material statement, representation, or certification in any record or other document submitted or required to be maintained under this General Permit, including reports of compliance or noncompliance shall upon conviction, be punished by a fine of not more than $10,000 or by imprisonment for not more than two years or by both.

13. Oil and Hazardous Substance Liability

Nothing in this General Permit shall be construed to preclude the institution of any legal action or relieve the discharger from any responsibilities, liabilities, or penalties to which the LUP discharger is or may be subject to under Section 311 of the CWA.

14. Severability

The provisions of this General Permit are severable; and, if any provision of this General Permit or the application of any provision of this General Permit to any circumstance is held invalid, the application of such provision to other circumstances and the remainder of this General Permit shall not be affected thereby.

15. Reopener Clause

This General Permit may be modified, revoked and reissued, or terminated for cause due to promulgation of amended regulations, receipt of USEPA guidance concerning regulated activities, judicial decision, or in accordance with 40 Code of Federal Regulations (CFR) 122.62, 122.63, 122.64, and 124.5.

16. Penalties for Violations of Permit Conditions

a. Section 309 of the CWA provides significant penalties for any person who violates a permit condition implementing Sections 301, 302, 306, 307, 308, 318, or 405 of the CWA or any permit condition or limitation implementing any such section in a permit issued under Section 402. Any person who violates any permit condition of this General Permit is subject to a civil penalty not to exceed $37,500[7] per calendar day of such violation, as well as any other appropriate sanction provided by Section 309 of the CWA.

b. The Porter-Cologne Water Quality Control Act also provides for civil and criminal penalties, which in some cases are greater than those under the CWA.

17. Transfers

This General Permit is not transferable. A new LRP of an ongoing construction activity must submit PRDs in accordance with the requirements of this General Permit to be authorized to discharge under this General Permit. An LRP who is a property owner with active General Permit coverage who sells a fraction or all the land shall inform the new property owner(s) of the requirements of this General Permit.

18. Continuation of Expired Permit

This General Permit continues in force and effect until a new General Permit is issued or the SWRCB rescinds this General Permit. Only those

[7] May be further adjusted in accordance with the Federal Civil Penalties Inflation Adjustment Act

dischargers authorized to discharge under the expiring General Permit are covered by the continued General Permit.

F. EFFLUENT STANDARDS & RECEIVING WATER MONITORING

1. Narrative Effluent Limitations

a. LUP dischargers shall ensure that storm water discharges and authorized non-storm water discharges regulated by this General Permit do not contain a hazardous substance equal to or in excess of reportable quantities established in 40 C.F.R. §§ 117.3 and 302.4, unless a separate NPDES Permit has been issued to regulate those discharges.

b. LUP dischargers shall minimize or prevent pollutants in storm water discharges and authorized non-storm water discharges through the use of structural or non-structural controls, structures, and management practices that achieve BAT for toxic and non-conventional pollutants and BCT for conventional pollutants.

Table 1. Numeric Action Levels, Test Methods, Detection Limits, and Reporting Units

Parameter	Test Method	Discharge Type	Min. Detection Limit	Units	Numeric Action Level
pH	Field test with calibrated portable instrument	LUP Type 2	0.2	pH units	lower NAL = 6.5 upper NAL = 8.5
		LUP Type 3			lower NAL = 6.5 upper NAL = 8.5
Turbidity	EPA 0180.1 and/or field test with calibrated portable instrument	LUP Type 2	1	NTU	250 NTU
		LUP Type 3			250 NTU

2. Numeric Action Levels (NALs)

a. For LUP Type 2 and 3 dischargers, the lower storm event daily average NAL for pH is 6.5 pH units and the upper storm event daily average NAL for pH is 8.5 pH units. The LUP discharger shall take actions as described below if the storm event daily average discharge is outside of this range of pH values.

b. For LUP Type 2 and 3 dischargers, the storm event daily average NAL for turbidity is 250 NTU. The discharger shall take actions as described below if the storm event daily average discharge is outside of this range of turbidity values.

c. Whenever daily average analytical effluent monitoring results indicate that the discharge is below the lower NAL for pH, exceeds the upper NAL for pH, or exceeds the turbidity NAL (as listed in Table 1), the LUP discharger shall conduct a construction site and run-on evaluation to determine whether pollutant source(s) associated with the site's construction activity may have caused or contributed to the NAL exceedance and shall immediately implement corrective actions if they are needed.

d. The site evaluation will be documented in the SWPPP and specifically address whether the source(s) of the pollutants causing the exceedance of the NAL:

i Are related to the construction activities and whether additional BMPs or SWPPP implementation measures are required to (1) meet BAT/BCT requirements; (2) reduce or prevent pollutants in storm water discharges from causing exceedances of receiving water objectives; and (3) determine what corrective action(s) were taken or will be taken and with a description of the schedule for completion.

AND/OR:

ii Are related to the run-on associated with the construction site location and whether additional BMPs or SWPPP implementation measures are required to (1) meet BAT/BCT requirements; (2) reduce or prevent pollutants in storm water discharges from causing exceedances of receiving water objectives; and (3) decide what corrective action(s) were taken or will be taken, including a description of the schedule for completion.

3. Receiving Water Monitoring Triggers

a. The receiving water monitoring triggers for LUP Type 3 dischargers with direct discharges to surface waters are triggered when the daily average effluent pH values during any site phase when there is a high risk of pH discharge[8] fall outside of the range of 6.0 and 9.0 pH units, or when the daily average effluent turbidity exceeds 500 NTU.

b. LUP Type 3 dischargers with direct discharges to surface waters shall conduct receiving water monitoring whenever their effluent monitoring results exceed the receiving water monitoring triggers. If the pH trigger is exceeded, the receiving water shall be monitored for pH for the duration of coverage under this General Permit. If the turbidity trigger is exceeded, the receiving water shall be monitored for turbidity and SSC for the duration of coverage under this General Permit.

c. LUP Type 3 dischargers with direct discharges to surfaces waters shall initiate receiving water monitoring when the triggers are exceeded unless the storm event causing the exceedance is determined after the fact to equal to or greater than the 5-year 24-hour storm (expressed in inches of rainfall) as determined by using these maps:

   http://www.wrcc.dri.edu/pcpnfreq/nca5y24.gif
   http://www.wrcc.dri.edu/pcpnfreq/sca5y24.gif

   Verification of the 5-year 24-hour storm event shall be done by reporting on-site rain gauge readings as well as nearby governmental rain gauge readings.

d. If run-on is caused by a forest fire or any other natural disaster, then receiving water monitoring triggers do not apply.

G. RECEIVING WATER LIMITATIONS

1. LUP dischargers shall ensure that storm water discharges and authorized non-storm water discharges to any surface or ground water will not adversely affect human health or the environment.

2. LUP dischargers shall ensure that storm water discharges and authorized non-storm water discharges will not contain pollutants in quantities that threaten to cause pollution or a public nuisance.

3. LUP dischargers shall ensure that storm water discharges and authorized non-storm water discharges will not contain pollutants that cause or

[8] A period of high risk of pH discharge is defined as a project's complete utilities phase, complete vertical build phase, and any portion of any phase where significant amounts of materials are placed directly on the land at the site in a manner that could result in significant alterations of the background pH of the discharges.

contribute to an exceedance of any applicable water quality objectives or water quality standards (collectively, WQS) contained in a Statewide Water Quality Control Plan, the California Toxics Rule, the National Toxics Rule, or the applicable Regional Water Board's Water Quality Control Plan (Basin Plan).

H. TRAINING QUALIFICATIONS

1. General

All persons responsible for implementing requirements of this General Permit shall be appropriately trained. Training should be both formal and informal, occur on an ongoing basis, and should include training offered by recognized governmental agencies or professional organizations. Persons responsible for preparing, amending and certifying SWPPPs shall comply with the requirements in this Section H.

2. SWPPP Certification Requirements

a. **Qualified SWPPP Developer:** The LUP discharger shall ensure that all SWPPPs be written, amended and certified by a Qualified SWPPP Developer (QSD). A QSD shall have one of the following registrations or certifications, and appropriate experience, as required for:

i A California registered professional civil engineer;

ii A California registered professional geologist or engineering geologist;

iii A California registered landscape architect;

iv A professional hydrologist registered through the American Institute of Hydrology;

v A certified professional in erosion and sediment control (CPESC) ™ registered through Enviro Cert International, Inc;

vi A certified professional in storm water quality (CPSWQ)™ registered through Enviro Cert International, Inc.; or

vii A certified professional in erosion and sediment control registered through the National Institute for Certification in Engineering Technologies (NICET).

Effective two years after the adoption date of this General Permit, a QSD shall have attended a State Water Board-sponsored or approved QSD training course.

b. The LUP discharger shall ensure that the SWPPP is written and amended, as needed, to address the specific circumstances for each construction site covered by this General Permit prior to commencement of construction activity for any stage.

c. The LUP discharger shall list the name and telephone number of the currently designated Qualified SWPPP Developer(s) in the SWPPP.

d. **Qualified SWPPP Practitioner:** The LUP discharger shall ensure that all elements of any SWPPP for each project will be implemented by a Qualified SWPPP Practitioner (QSP). A QSP is a person responsible for non-storm water and storm water visual observations, sampling and analysis, and for ensuring full compliance with the permit and implementation of all elements of the SWPPP. Effective two years from the date of adoption of this General Permit, a QSP shall be either a QSD or have one of the following certifications:

   i A certified erosion, sediment and storm water inspector registered through Certified Professional in Erosion and Sediment Control, Inc.; or

   ii A certified inspector of sediment and erosion control registered through Certified Inspector of Sediment and Erosion Control, Inc.

   Effective two years after the adoption date of this General Permit, a QSP shall have attended a State Water Board-sponsored or approved QSP training course.

e. The LUP discharger shall ensure that the SWPPP include a list of names of all contractors, subcontractors, and individuals who will be directed by the Qualified SWPPP Practitioner, and who is ultimately responsible for implementation of the SWPPP. This list shall include telephone numbers and work addresses. Specific areas of responsibility of each subcontractor and emergency contact numbers shall also be included.

f. The LUP discharger shall ensure that the SWPPP and each amendment be signed by the Qualified SWPPP Developer. The LUP discharger shall include a listing of the date of initial preparation and the dates of each amendment in the SWPPP.

I. TYPES OF LINEAR PROJECTS

This attachment establishes three types (Type 1, 2 & 3) of complexity for areas within an LUP or project section based on threat to water quality. Project area Types are determined through Attachment A.1.

The Type 1 requirements below establish the baseline requirements for all LUPs subject to this General Permit. Additional requirements for Type 2 and Type 3 LUPs are labeled.

1. Type 1 LUPs*:*

LUP dischargers with areas of a LUP designated as Type 1 shall comply with the requirements in this Attachment. Type 1 LUPs are:

a. Those construction areas where 70 percent or more of the construction activity occurs on a paved surface and where areas disturbed during construction will be returned to preconstruction conditions or equivalent protection established at the end of the construction activities for the day; or

b. Where greater than 30 percent of construction activities occur within the non-paved shoulders or land immediately adjacent to paved surfaces, or where construction occurs on unpaved improved roads, including their shoulders or land immediately adjacent to them where:

   i Areas disturbed during construction will be returned to preconstruction conditions or equivalent protection is established at the end of the construction activities for the day to minimize the potential for erosion and sediment deposition, and

   ii Areas where established vegetation was disturbed during construction will be stabilized and re-vegetated by the end of project. When required, adequate temporary stabilization BMPs will be installed and maintained until vegetation is established to meet minimum cover requirements established in this General Permit for final stabilization.

c. Where the risk determination is as follows:

   i Low sediment risk, low receiving water risk, or

   ii Low sediment risk, medium receiving water risk, or

   iii Medium sediment risk, low receiving water risk

2. Type 2 LUPs:

Type 2 LUPs are determined by the Combined Risk Matrix in Attachment A.1. Type 2 LUPs have the specified combination of risk:

d. High sediment risk, low receiving water risk, or

e. Medium sediment risk, medium receiving water risk, or

f. Low sediment risk, high receiving water risk

Receiving water risk is either considered "Low" for those areas of the project that are not in close proximity to a sensitive receiving watershed, "Medium" for those areas of the project within a sensitive receiving watershed yet outside of the flood plain of a sensitive receiving water body, and "High" where the soil disturbance is within close proximity to a sensitive receiving water body. Project sediment risk is calculated based on the Risk Factor Worksheet in Attachment C of this General Permit.

3. Type 3 LUPs:

Type 3 LUPs are determined by the Combined Risk Matrix in Attachment A.1. Type 3 LUPs have the specified combination of risk:

a. High sediment risk, high receiving water risk, or

b. High sediment risk, medium receiving water risk, or

c. Medium sediment risk, high receiving water risk

Receiving water risk is either considered "Medium" for those areas of the project within a sensitive receiving watershed yet outside of the flood plain of a sensitive receiving water body, or "High" where the soil disturbance is within close proximity to a sensitive receiving water body. Project sediment risk is calculated based on the Risk Factor Worksheet in Attachment C.

J. LUP TYPE-SPECIFIC REQUIREMENTS

1. Effluent Standards

a. Narrative – LUP dischargers shall comply with the narrative effluent standards below.

i Storm water discharges and authorized non-storm water discharges regulated by this General Permit shall not contain a hazardous substance equal to or in excess of reportable quantities established in 40 C.F.R. §§ 117.3 and 302.4, unless a separate NPDES Permit has been issued to regulate those discharges.

ii LUP dischargers shall minimize or prevent pollutants in storm water discharges and authorized non-storm water discharges through the use of controls, structures, and management practices that achieve BAT for toxic and non-conventional pollutants and BCT for conventional pollutants.

b. Numeric – LUP Type 1 dischargers are not subject to a numeric effluent standard

c. Numeric –LUP Type 2 dischargers are subject to a pH NAL of 6.5-8.5, and a turbidity NAL of 250 NTU.

d. Numeric – LUP Type 3 dischargers are subject to a pH NAL of 6.5-8.5, and a turbidity NAL of 250 NTU.

2. Good Site Management "Housekeeping"

a. LUP dischargers shall implement good site management (i.e., "housekeeping") measures for construction materials that could potentially be a threat to water quality if discharged. At a minimum, the good housekeeping measures shall consist of the following:

i Identify the products used and/or expected to be used and the end products that are produced and/or expected to be produced. This does not include materials and equipment that are designed to be outdoors and exposed to environmental conditions (i.e. poles, equipment pads, cabinets, conductors, insulators, bricks, etc.).

ii Cover and berm loose stockpiled construction materials that are not actively being used (i.e. soil, spoils, aggregate, fly-ash, stucco, hydrated lime, etc.).

iii Store chemicals in watertight containers (with appropriate secondary containment to prevent any spillage or leakage) or in a storage shed (completely enclosed).

iv Minimize exposure of construction materials to precipitation (not applicable to materials designed to be outdoors and exposed to the environment).

v Implement BMPs to control the off-site tracking of loose construction and landscape materials.

b. LUP dischargers shall implement good housekeeping measures for waste management, which, at a minimum, shall consist of the following:

i Prevent disposal of any rinse or wash waters or materials on impervious or pervious site surfaces or into the storm drain system.

ii Ensure the containment of sanitation facilities (e.g., portable toilets) to prevent discharges of pollutants to the storm water drainage system or receiving water.

iii Clean or replace sanitation facilities and inspecting them regularly for leaks and spills.

iv Cover waste disposal containers at the end of every business day and during a rain event.

v Prevent discharges from waste disposal containers to the storm water drainage system or receiving water.

vi Contain and securely protect stockpiled waste material from wind and rain at all times unless actively being used.

vii Implement procedures that effectively address hazardous and non-hazardous spills.

viii Develop a spill response and implementation element of the SWPPP prior to commencement of construction activities. The SWPPP shall require that:

(1) Equipment and materials for cleanup of spills shall be available on site and that spills and leaks shall be cleaned up immediately and disposed of properly; and

(2) Appropriate spill response personnel are assigned and trained.

ix Ensure the containment of concrete washout areas and other washout areas that may contain additional pollutants so there is no discharge into the underlying soil and onto the surrounding areas.

c. LUP dischargers shall implement good housekeeping for vehicle storage and maintenance, which, at a minimum, shall consist of the following:

   i Prevent oil, grease, or fuel from leaking into the ground, storm drains or surface waters.

   ii Implement appropriate BMPs whenever equipment or vehicles are fueled, maintained or stored.

   iii Clean leaks immediately and disposing of leaked materials properly.

d. LUP dischargers shall implement good housekeeping for landscape materials, which, at a minimum, shall consist of the following:

   i Contain stockpiled materials such as mulches and topsoil when they are not actively being used.

   ii Contain fertilizers and other landscape materials when they are not actively being used.

   iii Discontinue the application of any erodible landscape material at least 2 days before a forecasted rain event[9] or during periods of precipitation.

   iv Applying erodible landscape material at quantities and application rates according to manufacture recommendations or based on written specifications by knowledgeable and experienced field personnel.

   v Stacking erodible landscape material on pallets and covering or storing such materials when not being used or applied.

e. LUP dischargers shall conduct an assessment and create a list of potential pollutant sources and identify any areas of the site where additional BMPs are necessary to reduce or prevent pollutants in storm water discharges and authorized non-storm water discharges. This potential pollutant list shall be kept with the SWPPP and shall identify all non-visible pollutants which are known, or should be known, to occur on the construction site. At a minimum, when developing BMPs, LUP dischargers shall do the following:

[9] 50% or greater chance of producing precipitation.

i Consider the quantity, physical characteristics (e.g., liquid, powder, solid), and locations of each potential pollutant source handled, produced, stored, recycled, or disposed of at the site.

ii Consider the degree to which pollutants associated with those materials may be exposed to and mobilized by contact with storm water.

iii Consider the direct and indirect pathways that pollutants may be exposed to storm water or authorized non-storm water discharges. This shall include an assessment of past spills or leaks, non-storm water discharges, and discharges from adjoining areas.

iv Ensure retention of sampling, visual observation, and inspection records.

v Ensure effectiveness of existing BMPs to reduce or prevent pollutants in storm water discharges and authorized non-storm water discharges.

f. LUP dischargers shall implement good housekeeping measures on the construction site to control the air deposition of site materials and from site operations.

3. Non-Storm Water Management

a. LUP dischargers shall implement measures to control all non-storm water discharges during construction.

b. LUP dischargers shall wash vehicles in such a manner as to prevent non-storm water discharges to surface waters or MS4 drainage systems.

c. LUP dischargers shall clean streets in such a manner as to prevent unauthorized non-storm water discharges from reaching surface water or MS4 drainage systems.

4. Erosion Control

a. LUP dischargers shall implement effective wind erosion control.

b. LUP dischargers shall provide effective soil cover for inactive[10] areas and all finished slopes, and utility backfill.

[10] Areas of construction activity that have been disturbed and are not scheduled to be re-disturbed for at least 14 days

c. LUP dischargers shall limit the use of plastic materials when more sustainable, environmentally friendly alternatives exist. Where plastic materials are deemed necessary, the discharger shall consider the use of plastic materials resistant to solar degradation.

5. Sediment Controls

a. LUP dischargers shall establish and maintain effective perimeter controls as needed, and implement effective BMPs for all construction entrances and exits to sufficiently control erosion and sediment discharges from the site.

b. On sites where sediment basins are to be used, LUP dischargers shall, at minimum, design sediment basins according to the guidance provided in CASQA's Construction BMP Handbook.

c. **Additional LUP Type 2 & 3 Requirement:** LUP Type 2 & 3 dischargers shall apply linear sediment controls along the toe of the slope, face of the slope, and at the grade breaks of exposed slopes to comply with sheet flow lengths[11] in accordance with Table 2 below.

Table 2 – Critical Slope/Sheet Flow Length Combinations

Slope Percentage	Sheet flow length not to exceed
0-25%	20 feet
25-50%	15 feet
Over 50%	10 feet

d. **Additional LUP Type 2 & 3 Requirement:** LUP Type 2 & 3 dischargers shall ensure that construction activity traffic to and from the project is limited to entrances and exits that employ effective controls to prevent off-site tracking of sediment.

e. **Additional LUP Type 2 & 3 Requirement:** LUP Type 2 & 3 dischargers shall ensure that all storm drain inlets and perimeter controls, runoff control BMPs, and pollutant controls at entrances and exits (e.g. tire washoff locations) are maintained and protected from activities that reduce their effectiveness.

f. **Additional LUP Type 2 & 3 Requirement:** LUP Type 2 & 3 dischargers shall inspect all immediate access roads. At a minimum daily and prior to any rain event, the discharger shall remove any

[11] Sheet flow length is the length that shallow, low velocity flow travels across a site.

sediment or other construction activity-related materials that are deposited on the roads (by vacuuming or sweeping).

g. **Additional LUP Type 3 Requirement:** The Regional Water Board may require LUP Type 3 dischargers to implement additional site-specific sediment control requirements if the implementation of the other requirements in this section are not adequately protecting the receiving waters.

6. Run-on and Run-off Controls

a. LUP dischargers shall effectively manage all run-on, all runoff within the site and all runoff that discharges off the site. Run-on from off site-shall be directed away from all disturbed areas or shall collectively be in compliance with the effluent limitations in this Attachment.

b. Run-on and runoff controls are not required for Type 1 LUPs unless the evaluation of quantity and quality of run-on and runoff deems them necessary or visual inspections show that the site requires such controls.

7. Inspection, Maintenance and Repair

a. All inspection, maintenance repair and sampling activities at the discharger's LUP location shall be performed or supervised by a QSP representing the discharger. The QSP may delegate any or all of these activities to an employee trained to do the task(s) appropriately, but shall ensure adequate deployment.

b. LUP dischargers shall conduct visual inspections and observations daily during working hours (not recorded). At least once each 24-hour period during extended storm events, **LUP Type 2 & 3 dischargers** shall conduct visual inspections to identify and record BMPs that need maintenance to operate effectively, that have failed, or that could fail to operate as intended. Inspectors shall be the QSP or be trained by the QSP.

c. Upon identifying failures or other shortcomings, as directed by the QSP, LUP dischargers shall begin implementing repairs or design changes to BMPs within 72 hours of identification and complete the changes as soon as possible.

d. For each pre- and post-rain event inspection required, LUP dischargers shall complete an inspection checklist, using a form provided by the State Water Board or Regional Water Board or in an alternative format that includes the information described below.

e. The LUP discharger shall ensure that the checklist remains on-site or with the SWPPP. At a minimum, an inspection checklist should include:

i Inspection date and date the inspection report was written.

ii Weather information, including presence or absence of precipitation, estimate of beginning of qualifying storm event, duration of event, time elapsed since last storm, and approximate amount of rainfall in inches.

iii Site information, including stage of construction, activities completed, and approximate area of the site exposed.

iv A description of any BMPs evaluated and any deficiencies noted.

v If the construction site is safely accessible during inclement weather, list the observations of all BMPs: erosion controls, sediment controls, chemical and waste controls, and non-storm water controls. Otherwise, list the results of visual inspections at all relevant outfalls, discharge points, downstream locations and any projected maintenance activities.

vi Report the presence of noticeable odors or of any visible sheen on the surface of any discharges.

vii Any corrective actions required, including any necessary changes to the SWPPP and the associated implementation dates.

viii Photographs taken during the inspection, if any.

ix Inspector’s name, title, and signature.

K. STORM WATER POLLUTION PREVENTION PLAN (SWPPP) REQUIREMENTS

1. Objectives

SWPPPs for all LUPs shall be developed and amended or revised by a QSD. The SWPPP shall be designed to address the following objectives:

a. All pollutants and their sources, including sources of sediment, associated with construction activities associated with LUP activity are controlled;

b. All non-storm water discharges are identified and either eliminated, controlled, or treated;

c. BMPs are effective and result in the reduction or elimination of pollutants in storm water discharges and authorized non-storm water discharges from LUPs during construction; and

d. Stabilization BMPs installed to reduce or eliminate pollutants after construction is completed are effective and maintained.

2. SWPPP Implementation Schedule

a. LUPs for which PRDs have been submitted to the State Water Board shall develop a site/project location SWPPP prior to the start of land-disturbing activity in accordance with this Section and shall implement the SWPPP concurrently with commencement of soil-disturbing activities.

b. For an ongoing LUP involving a change in the LRP, the new LRP shall review the existing SWPPP and amend it, if necessary, or develop a new SWPPP within 15 calendar days to conform to the requirements set forth in this General Permit.

3. Availability

The SWPPP shall be available at the construction site during working hours while construction is occurring and shall be made available upon request by a State or Municipal inspector. When the original SWPPP is retained by a crewmember in a construction vehicle and is not currently at the construction site, copies of the BMPs and map/drawing will be left with the field crew and the original SWPPP shall be made available via a request by radio/telephone.

L. REGIONAL WATER BOARD AUTHORITIES

1. Regional Water Boards shall administer the provisions of this General Permit. Administration of this General Permit may include, but is not limited to, requesting the submittal of SWPPPs, reviewing SWPPPs, reviewing monitoring and sampling and analysis reports, conducting compliance inspections, gathering site information by any medium including sampling, photo and video documentation, and taking enforcement actions.

2. Regional Water Boards may terminate coverage under this General Permit for dischargers who fail to comply with its requirements or where they determine that an individual NPDES permit is appropriate.

3. Regional Water Boards may issue separate permits for discharges of storm water associated with construction activity to individual dischargers, categories of dischargers, or dischargers in a geographic area. Upon issuance of such permits by a Regional Water Board, dischargers subject to those permits shall no longer be regulated by this General Permit.

4. Regional Water Boards may direct the discharger to reevaluate the LUP Type(s) for the project (or elements/areas of the project) and impose the appropriate level of requirements.

5. Regional Water Boards may terminate coverage under this General Permit for dischargers who negligently or with willful intent incorrectly determine or report their LUP Type (e.g., they determine themselves to be a LUP Type 1 when they are actually a Type 2).

6. Regional Water Boards may review PRDs and reject or accept applications for permit coverage or may require dischargers to submit a Report of Waste Discharge / NPDES permit application for Regional Water Board consideration of individual requirements.

7. Regional Water Boards may impose additional requirements on dischargers to satisfy TMDL implementation requirements or to satisfy provisions in their Basin Plans.

8. Regional Water Boards may require additional Monitoring and Reporting Program Requirements, including sampling and analysis of discharges to sediment-impaired water bodies.

9. Regional Water Boards may require dischargers to retain records for more than the three years required by this General Permit.

10. Based on an LUP's threat to water quality and complexity, the Regional Water Board may determine on a case-by-case basis that an LUP, or a portion of an LUP, is not eligible for the linear project requirements contained in this Attachment, and require that the discharger comply with all standard requirements in this General Permit.

11. The Regional Water Board may require additional monitoring and reporting program requirements including sampling and analysis of discharges to CWA § 303(d)-listed water bodies. Additional requirements imposed by the Regional Water Board shall be consistent with the overall monitoring effort in the receiving waters.

M. MONITORING AND REPORTING REQUIREMENTS

Table 3. LUP Summary of Monitoring Requirements

LUP Type	Visual Inspections				Sample Collection		
	Daily Site BMP	Pre-storm Event: Baseline	Daily Storm BMP	Post Storm	Storm Water Discharge	Receiving Water	Non-Visible (when applicable)
1	X						X
2	X	X	X	X	X		X
3	X	X	X	X	X	X	X

1. Objectives

LUP dischargers shall prepare a monitoring and reporting program (M&RP) prior to the start of construction and immediately implement the program at the start of construction for LUPs. The monitoring program must be implemented at the appropriate level to protect water quality at all times throughout the life of the project. The M&RP must be a part of the SWPPP, included as an appendix or separate SWPPP chapter.

2. M&RP Implementation Schedule

a. LUP dischargers shall implement the requirements of this Section at the time of commencement of construction activity. LUP dischargers are responsible for implementing these requirements until construction activity is complete and the site is stabilized.

b. LUP dischargers shall revise the M&RP when:

i Site conditions or construction activities change such that a change in monitoring is required to comply with the requirements and intent of this General Permit.

ii The Regional Water Board requires the discharger to revise its M&RP based on its review of the document. Revisions may include, but not be limited to, conducting additional site inspections, submitting reports, and certifications. Revisions shall be submitted via postal mail or electronic e-mail.

iii The Regional Water Board may require additional monitoring and reporting program requirements including sampling and analysis of discharges to CWA § 303(d)-listed water bodies. Additional requirements imposed by the Regional Water Board shall be consistent with the overall monitoring effort in the receiving waters.

3. LUP Type 1 Monitoring and Reporting Requirements

a. LUP Type 1 Inspection Requirements

i LUP Type 1 dischargers shall ensure that all inspections are conducted by trained personnel. The name(s) and contact number(s) of the assigned inspection personnel should be listed in the SWPPP.

ii LUP Type 1 dischargers shall ensure that all visual inspections are conducted daily during working hours and in conjunction with other daily activities in areas where active construction is occurring.

iii LUP Type 1 dischargers shall ensure that photographs of the site taken before, during, and after storm events are taken during inspections, and submitted through the State Water Board's SMARTS website once every three rain events.

iv LUP Type 1 dischargers shall conduct daily visual inspections to verify that:

(1) Appropriate BMPs for storm water and non-storm water are being implemented in areas where active construction is occurring (including staging areas);

(2) Project excavations are closed, with properly protected spoils, and that road surfaces are cleaned of excavated material and construction materials such as chemicals by either removing or storing the material in protective storage containers at the end of every construction day;

(3) Land areas disturbed during construction are returned to pre-construction conditions or an equivalent protection is used at the end of each workday to eliminate or minimize erosion and the possible discharge of sediment or other pollutants during a rain event.

v Inspections may be discontinued in non-active construction areas where soil-disturbing activities are completed and final soil stabilization is achieved (e.g., paving is completed, substructures

are installed, vegetation meets minimum cover requirements for final stabilization, or other stabilization requirements are met).

vi Inspection programs are required for LUP Type 1 projects where temporary and permanent stabilization BMPs are installed and are to be monitored after active construction is completed. Inspection activities shall continue until adequate permanent stabilization is established and, in areas where re-vegetation is chosen, until minimum vegetative coverage is established in accordance with Section C.1 of this Attachment.

b. LUP Type 1 Monitoring Requirements for Non-Visible Pollutants

LUP Type 1 dischargers shall implement sampling and analysis requirements to monitor non-visible pollutants associated with (1) construction sites; (2) activities producing pollutants that are not visually detectable in storm water discharges; and (3) activities which could cause or contribute to an exceedance of water quality objectives in the receiving waters.

i Sampling and analysis for non-visible pollutants is only required where the LUP Type 1 discharger believes pollutants associated with construction activities have the potential to be discharged with storm water runoff due to a spill or in the event there was a breach, malfunction, failure and/or leak of any BMP. Also, failure to implement BMPs may require sample collection.

(1) Visual observations made during the monitoring program described above will help the LUP Type 1 discharger determine when to collect samples.

(2) The LUP Type 1 discharger is not required to sample if one of the conditions described above (e.g., breach or spill) occurs and the site is cleaned of material and pollutants and/or BMPs are implemented prior to the next storm event.

ii LUP Type 1 dischargers shall collect samples down-gradient from all discharge locations where the visual observations were made triggering the monitoring, and which can be safely accessed. For sites where sampling and analysis is required, personnel trained in water quality sampling procedures shall collect storm water samples.

iii If sampling for non-visible pollutant parameters is required, LUP Type 1 dischargers shall ensure that samples be analyzed for parameters indicating the presence of pollutants identified in the pollutant source assessment required in Section J.2.a.i.

iv LUP Type 1 dischargers shall collect samples during the first two hours of discharge from rain events that occur during business hours and which generate runoff.

v LUP Type 1 dischargers shall ensure that a sufficiently large sample of storm water that has not come into contact with the disturbed soil or the materials stored or used on-site (uncontaminated sample[12]) will be collected for comparison with the discharge sample. Samples shall be collected during the first two hours of discharge from rain events that occur during daylight hours and which generate runoff.

vi LUP Type 1 dischargers shall compare the uncontaminated sample to the samples of discharge using field analysis or through laboratory analysis. Analyses may include, but are not limited to, indicator parameters such as: pH, specific conductance, dissolved oxygen, conductivity, salinity, and Total Dissolved Solids (TDS).

vii For laboratory analyses, all sampling, sample preservation, and other analyses must be conducted according to test procedures pursuant to 40 C.F.R. Part 136. LUP Type 1 dischargers shall ensure that field samples are collected and analyzed according to manufacturer specifications of the sampling devices employed. Portable meters shall be calibrated according to manufacturer's specification.

viii LUP Type 1 dischargers shall ensure that all field and/or analytical data are kept in the SWPPP document.

c. LUP Type 1 Visual Observation Exceptions

i LUP Type 1 dischargers shall be prepared to collect samples and conduct visual observation (inspections) to meet the minimum visual observation requirements of this Attachment. The Type 1 LUP discharger is not required to physically collect samples or conduct visual observation (inspections) under the following conditions:

(1) During dangerous weather conditions such as flooding and electrical storms;

(2) Outside of scheduled site business hours.

(3) When access to the site is unsafe due to storm events.

[12] Sample collected at a location unaffected by contruction activities.

ii If the LUP Type 1 discharger does not collect the required samples or visual observation (inspections) due to these exceptions, an explanation why the sampling or visual observation (inspections) were not conducted shall be included in both the SWPPP and the Annual Report.

d. Particle Size Analysis for Risk Justification

LUP Type 1 dischargers utilizing justifying an alternative project risk shall report a soil particle size analysis used to determine the RUSLE K-Factor. ASTM D-422 (Standard Test Method for Particle-Size Analysis of Soils), as revised, shall be used to determine the percentages of sand, very fine sand, silt, and clay on the site.

4. LUP Type 2 & 3 Monitoring and Reporting Requirements

a. LUP Type 2 & 3 Inspection Requirements

i LUP Type 2 & 3 dischargers shall ensure that all inspections are conducted by trained personnel. The name(s) and contact number(s) of the assigned inspection personnel should be listed in the SWPPP.

ii LUP Type 2 & 3 dischargers shall ensure that all visual inspections are conducted daily during working hours and in conjunction with other daily activities in areas where active construction is occurring.

iii LUP Type 2 & 3 dischargers shall ensure that photographs of the site taken before, during, and after storm events are taken during inspections, and submitted through the State Water Board's SMARTS website once every three rain events.

iv LUP Type 2 & 3 dischargers shall conduct daily visual inspections to verify that appropriate BMPs for storm water and non-storm water are being implemented and in place in areas where active construction is occurring (including staging areas).

v LUP Type 2 & 3 dischargers shall conduct inspections of the construction site prior to anticipated storm events, during extended storm events, and after actual storm events to identify areas contributing to a discharge of storm water associated with construction activity. Pre-storm inspections are to ensure that BMPs are properly installed and maintained; post-storm inspections are to assure that BMPs have functioned adequately. During

extended storm events, inspections shall be required during normal working hours for each 24-hour period.

vi Inspections may be discontinued in non-active construction areas where soil-disturbing activities are completed and final soil stabilization is achieved (e.g., paving is completed, substructures are installed, vegetation meets minimum cover requirements for final stabilization, or other stabilization requirements are met).

vii LUP Type 2 & 3 dischargers shall implement a monitoring program for inspecting projects that require temporary and permanent stabilization BMPs after active construction is complete. Inspections shall ensure that the BMPs are adequate and maintained. Inspection activities shall continue until adequate permanent stabilization is established and, in vegetated areas, until minimum vegetative coverage is established in accordance with Section C.1 of this Attachment.

viii If possible, LUP Type 2 & 3 dischargers shall install a rain gauge on-site at an accessible and secure location with readings made during all storm event inspections. When readings are unavailable, data from the closest rain gauge with publically available data may be used.

ix LUP Type 2 & 3 dischargers shall Include and maintain a log of the inspections conducted in the SWPPP. The log will provide the date and time of the inspection and who conducted the inspection.

b. LUP Type 2 & 3 Storm Water Effluent Monitoring Requirements

Table 4. LUP Type 2 & 3 Effluent Monitoring Requirements

LUP Type	Frequency	Effluent Monitoring
2	Minimum of 3 samples per day characterizing discharges associated with construction activity from the project active areas of construction.	Turbidity, pH, and non-visible pollutant parameters (if applicable)
3	Minimum of 3 samples per day characterizing discharges associated with construction activity from the project active areas of construction.	turbidity, pH, and non-visible pollutant parameters (if applicable)

i LUP Type 2 & 3 dischargers shall collect storm water grab samples from sampling locations characterizing discharges associated with activity from the LUP active areas of construction. At a minimum, 3 samples shall be collected per day of discharge.

ii LUP Type 2 & 3 dischargers shall collect samples of stored or contained storm water that is discharged subsequent to a storm event producing precipitation of ½ inch or more at the time of discharge.

iii LUP Type 2 & 3 dischargers shall ensure that storm water grab sample(s) obtained be representative of the flow and characteristics of the discharge.

iv LUP Type 2 & 3 dischargers shall analyze their effluent samples for:

(1) pH and turbidity
(2) Any additional parameter for which monitoring is required by the Regional Water Board.

c. LUP Type 2 & 3 Storm Water Effluent Sampling Locations

i LUP Type 2 & 3 dischargers shall perform sampling and analysis of storm water discharges to characterize discharges associated with construction activity from the entire disturbed project or area.

ii LUP Type 2 & 3 dischargers may monitor and report run-on from surrounding areas if there is reason to believe run-on may contribute to exceedance of NALs.

iii LUP Type 2 & 3 dischargers shall select analytical test methods from the list provided in Table 5 below.

iv LUP Type 2 & 3 dischargers shall ensure that all storm water sample collection preservation and handling shall be conducted in accordance with the “Storm Water Sample Collection and Handling Instructions” below.

d. LUP Type 3 Receiving Water Monitoring Requirements

i In the event that an LUP Type 3 discharger’s effluent exceeds the receiving water monitoring triggers of 500 NTU turbidity or pH range of 6.0-9.0, contained in this General Permit and has a direct discharge to receiving waters, the LUP discharger shall subsequently sample Receiving Waters (RWs) for turbidity, pH (if applicable) and SSC for the duration of coverage under this General Permit. In the event that an LUP Tupe 3 discharger utilizing ATS with direct discharges into receiving waters discharges effluent that exceeds the NELs in this permit, the discharger shall

subsequently sample RWs for turbidity, pH (if applicable), and SSC for the duration of coverage under this General Permit.

ii LUP Type 3 dischargers that meet the project criteria in Appendix 3 of this General Permit and have more than 30 acres of soil disturbance in the project area or project section area designated as Type 3, shall comply with the Bioassessment requirements prior to commencement of construction activity.

iii LUP Type 3 dischargers shall obtain RW samples in accordance with the requirements of the Receiving Water Sampling Locations section (Section M.4.c. of this Attachment).

e. LUP Type 3 Receiving Water Sampling Locations

i **Upstream/up-gradient RW samples**: LUP Type 3 dischargers shall obtain any required upstream/up-gradient receiving water samples from a representative and accessible location as close as possible to and upstream from the effluent discharge point.

ii **Downstream/down-gradient RW samples**: LUP Type 3 dischargers shall obtain any required downstream/down-gradient receiving water samples from a representative and accessible location as close as possible to and downstream from the effluent discharge point.

iii If two or more discharge locations discharge to the same receiving water, LUP Type 3 dischargers may sample the receiving water at a single upstream and downstream location.

f. LUP Type 2 & 3 Monitoring Requirements for Non-Visible Pollutants

LUP Type 2 & 3 dischargers shall implement sampling and analysis requirements to monitor non-visible pollutants associated with (1) construction sites; (2) activities producing pollutants that are not visually detectable in storm water discharges; and (3) activities which could cause or contribute to an exceedance of water quality objectives in the receiving waters.

i Sampling and analysis for non-visible pollutants is only required where LUP Type 2 & 3 dischargers believe pollutants associated with construction activities have the potential to be discharged with storm water runoff due to a spill or in the event there was a breach, malfunction, failure and/or leak of any BMP. Also, failure to implement BMPs may require sample collection.

(1) Visual observations made during the monitoring program described above will help LUP Type 2 & 3 dischargers determine when to collect samples.

(2) LUP Type 2 & 3 dischargers are not required to sample if one of the conditions described above (e.g., breach or spill) occurs and the site is cleaned of material and pollutants and/or BMPs are implemented prior to the next storm event.

ii LUP Type 2 & 3 dischargers shall collect samples down-gradient from the discharge locations where the visual observations were made triggering the monitoring and which can be safely accessed. For sites where sampling and analysis is required, personnel trained in water quality sampling procedures shall collect storm water samples.

iii If sampling for non-visible pollutant parameters is required, LUP Type 2 & 3 dischargers shall ensure that samples be analyzed for parameters indicating the presence of pollutants identified in the pollutant source assessment required in Section J.2.a.i.

iv LUP Type 2 & 3 dischargers shall collect samples during the first two hours of discharge from rain events that occur during business hours and which generate runoff.

v LUP Type 2 & 3 dischargers shall ensure that a sufficiently large sample of storm water that has not come into contact with the disturbed soil or the materials stored or used on-site (uncontaminated sample[13]) will be collected for comparison with the discharge sample. Samples shall be collected during the first two hours of discharge from rain events that occur during daylight hours and which generate runoff.

vi LUP Type 2 & 3 dischargers shall compare the uncontaminated sample to the samples of discharge using field analysis or through laboratory analysis. Analyses may include, but are not limited to, indicator parameters such as: pH, specific conductance, dissolved oxygen, conductivity, salinity, and Total Dissolved Solids (TDS).

vii For laboratory analyses, all sampling, sample preservation, and other analyses must be conducted according to test procedures pursuant to 40 C.F.R. Part 136. LUP Type 2 & 3 dischargers shall ensure that field samples are collected and analyzed according to manufacturer specifications of the sampling devices employed.

[13] Sample collected at a location unaffected by construction activities

Portable meters shall be calibrated according to manufacturer's specification.

viii LUP Type 2 & 3 dischargers shall ensure that all field and/or analytical data are kept in the SWPPP document.

g. LUP Type 2 & 3 Visual Observation and Sample Collection Exceptions

i LUP Type 2 & 3 dischargers shall be prepared to collect samples and conduct visual observation (inspections) to meet the minimum visual observation requirements of this Attachment. Type 2 & 3 LUP dischargers are not required to physically collect samples or conduct visual observation (inspections) under the following conditions:

(1) During dangerous weather conditions such as flooding and electrical storms;

(2) Outside of scheduled site business hours.

(3) When access to the site is unsafe due to storm events.

ii If the LUP Type 2 or 3 discharger does not collect the required samples or visual observation (inspections) due to these exceptions, an explanation why the sampling or visual observation (inspections) were not conducted shall be included in both the SWPPP and the Annual Report.

h. LUP Type 2 & 3 Storm Water Sample Collection and Handling Instructions

LUP Type 2 & 3 dischargers shall refer to Table 5 below for test Methods, detection Limits, and reporting Units. During storm water sample collection and handling, the LUP Type 2 & 3 discharger shall:

i Identify the parameters required for testing and the number of storm water discharge points that will be sampled. Request the laboratory to provide the appropriate number of sample containers, types of containers, sample container labels, blank chain of custody forms, and sample preservation instructions.

ii Determine how to ship the samples to the laboratory. The testing laboratory should receive samples within 48 hours of the physical sampling (unless otherwise required by the laboratory). The options are to either deliver the samples to the laboratory, arrange to have the laboratory pick them up, or ship them overnight to the laboratory.

iii Use only the sample containers provided by the laboratory to collect and store samples. Use of any other type of containers could contaminate your samples.

iv Prevent sample contamination, by not touching, or putting anything into the sample containers before collecting storm water samples.

v Not overfilling sample containers. Overfilling can change the analytical results.

vi Tightly screw the cap of each sample container without stripping the threads of the cap.

vii Complete and attach a label to each sample container. The label shall identify the date and time of sample collection, the person taking the sample, and the sample collection location or discharge point. The label should also identify any sample containers that have been preserved.

viii Carefully pack sample containers into an ice chest or refrigerator to prevent breakage and maintain temperature during shipment. Remember to place frozen ice packs into the shipping container. Samples should be kept as close to 4° C (39° F) as possible until arriving at the laboratory. Do not freeze samples.

ix Complete a Chain of Custody form for each set of samples. The Chain of Custody form shall include the discharger's name, address, and phone number, identification of each sample container and sample collection point, person collecting the samples, the date and time each sample container was filled, and the analysis that is required for each sample container.

x Upon shipping/delivering the sample containers, obtain both the signatures of the persons relinquishing and receiving the sample containers.

xi Designate and train personnel to collect, maintain, and ship samples in accordance with the above sample protocols and good laboratory practices.

xii Refer to the Surface Water Ambient Monitoring Program's (SWAMP) 2008 Quality Assurance Program Plan (QAPrP) for more

information on sampling collection and analysis. See http://www.waterboards.ca.gov/water_issues/programs/swamp/[14]

Table 5. Test Methods, Detection Limits, Reporting Units and Applicable NALs

Parameter	Test Method	Discharge Type	Min. Detection Limit	Reporting Units	Numeric Action Levels	(LUP Type 3) Receiving Water Monitoring Trigger
pH	Field test with calibrated portable instrument	Type 2 & 3	0.2	pH units	Lower = 6.5 upper = 8.5	Lower = 6.0 upper = 9.0
Turbidity	EPA 0180.1 and/or field test with calibrated portable instrument	Type 2 & 3	1	NTU	250 NTU	500 NTU
SSC	ASTM Method D 3977-97[15]	Type 3 if Receiving Water Monitoring Trigger is exceeded	5	Mg/L	N/A	N/A
Bioassessment	(STE) Level I of (SAFIT),[16] fixed-count of 600 org/sample	Type 3 LUPs > 30 acres	N/A	N/A	N/A	N/A

i. LUP Type 2 & 3 Monitoring Methods

i The LUP Type 2 or 3 discharger's project M&RP shall include a description of the following items:

(1) Visual observation locations, visual observation procedures, and visual observation follow-up and tracking procedures.

[14] Additional information regarding SWAMP's QAPrP can be found at: http://www.waterboards.ca.gov/water_issues/programs/swamp/.

[15] ASTM, 1999, Standard Test Method for Determining Sediment Concentration in Water Samples: American Society of Testing and Materials, D 3977-97, Vol. 11.02, pp. 389-394

[16] The current SAFIT STEs (28 November 2006) list requirements for both the Level I and Level II taxonomic effort, and are located at: http://www.swrcb.ca.gov/swamp/docs/safit/ste_list.pdf. When new editions are published by SAFIT, they will supersede all previous editions. All editions will be posted at the State Water Board's SWAMP website.

(2) Sampling locations, and sample collection and handling procedures. This shall include detailed procedures for sample collection, storage, preservation, and shipping to the testing lab to assure that consistent quality control and quality assurance is maintained. Dischargers shall attach to the monitoring program a copy of the Chain of Custody form used when handling and shipping samples.

(3) Identification of the analytical methods and related method detection limits (if applicable) for each parameter required in Section M.4.f above.

ii LUP Type 2 & 3 dischargers shall ensure that all sampling and sample preservation be in accordance with the current edition of "Standard Methods for the Examination of Water and Wastewater" (American Public Health Association). All monitoring instruments and equipment (including a discharger's own field instruments for measuring pH and turbidity) shall be calibrated and maintained in accordance with manufacturers' specifications to ensure accurate measurements. All laboratory analyses shall be conducted according to test procedures under 40 CFR Part 136, unless other test procedures have been specified in this General Permit or by the Regional Water Board. With the exception of field analysis conducted by the discharger for turbidity and pH, all analyses shall be sent to and conducted at a laboratory certified for such analyses by the State Department of Health Services (SSC exception). The LUP discharger shall conduct its own field analysis of pH and may conduct its own field analysis of turbidity if the discharger has sufficient capability (qualified and trained employees, properly calibrated and maintained field instruments, etc.) to adequately perform the field analysis.

j. LUP Type 2 & 3 Analytical Methods

LUP Type 2 & 3 dischargers shall refer to Table 5 above for test Methods, detection Limits, and reporting Units.

i **pH**: LUP Type 2 & 3 dischargers shall perform pH analysis on-site with a calibrated pH meter or pH test kit. The LUP discharger shall record pH monitoring results on paper and retain these records in accordance with Section M.4.o, below.

ii **Turbidity**: LUP Type 2 & 3 dischargers shall perform turbidity analysis using a calibrated turbidity meter (turbidimeter), either on-site or at an accredited lab. Acceptable test methods include Standard Method 2130 or USEPA Method 180.1. The results shall

be recorded in the site log book in Nephelometric Turbidity Units (NTU).

iii **Suspended sediment concentration (SSC)**: LUP Type 3 dischargers exceeding the turbidity Receiving Water Monitoring Trigger, shall perform SSC analysis using ASTM Method D3977-97.

iv **Bioassessment**: LUP Type 3 dischargers shall perform bioassessment sampling and analysis according to Appendix 3 of this General Permit.

k. Watershed Monitoring Option

If an LUP Type 2 or 3 discharger is part of a qualified regional watershed-based monitoring program the LUP Type 2 or 3 discharger may be eligible for relief from the monitoring requirements in this Attachment. The Regional Water Board may approve proposals to substitute an acceptable watershed-based monitoring program if it determines that the watershed-based monitoring program will provide information to determine each discharger's compliance with the requirements of this General Permit.

l. Particle Size Analysis for Risk Justification

LUP Type 2 & 3 dischargers justifying an alternative project risk shall report a soil particle size analysis used to determine the RUSLE K-Factor. ASTM D-422 (Standard Test Method for Particle-Size Analysis of Soils), as revised, shall be used to determine the percentages of sand, very fine sand, silt, and clay on the site.

m. NAL Exceedance Report

i In the event that any effluent sample exceeds an applicable NAL, the Regional Water Boards may require LUP Type 2 & 3 dischargers to submit NAL Exceedance Reports.

ii LUP Type 2 & 3 dischargers shall certify each NAL Exceedance Report in accordance with the Special Provisions for Construction Activity.

iii LUP Type 2 & 3 dischargers shall retain an electronic or paper copy of each NAL Exceedance Report for a minimum of three years after the date the exceedance report is filed.

iv LUP Type 2 & 3 dischargers shall include in the NAL Exceedance Report:

(1) the analytical method(s), method reporting unit(s), and method detection limit(s) of each analytical parameter (analytical results that are less than the method detection limit shall be reported as "less than the method detection limit"); and
(2) the date, place, time of sampling, visual observation (inspections), and/or measurements, including precipitation.
(3) Description of the current BMPs associated with the effluent sample that exceeded the NAL and the proposed corrective actions taken.

n. Monitoring Records

LUP Type 2 & 3 dischargers shall ensure that records of all storm water monitoring information and copies of all reports (including Annual Reports) required by this General Permit be retained for a period of at least three years. LUP Type 2 & 3 dischargers may retain records off-site and make them available upon request. These records shall include:

i The date, place, time of facility inspections, sampling, visual observation (inspections), and/or measurements, including precipitation (rain gauge);

ii The individual(s) who performed the facility inspections, sampling, visual observation (inspections), and or measurements;

iii The date and approximate time of analyses;

iv The individual(s) who performed the analyses;

v A summary of all analytical results from the last three years, the method detection limits and reporting units, the analytical techniques or methods used, and all chain of custody forms;

vi Quality assurance/quality control records and results;

vii Non-storm water discharge inspections and visual observation (inspections) and storm water discharge visual observation records (see Section M.4.a above);

viii Visual observation and sample collection exception records (see Section M.4.g above); and

ix The records of any corrective actions and follow-up activities that resulted from analytical results, visual observation (inspections), or inspections.

ATTACHMENT A.1
LUP Project Area or Project Section Area Type Determination

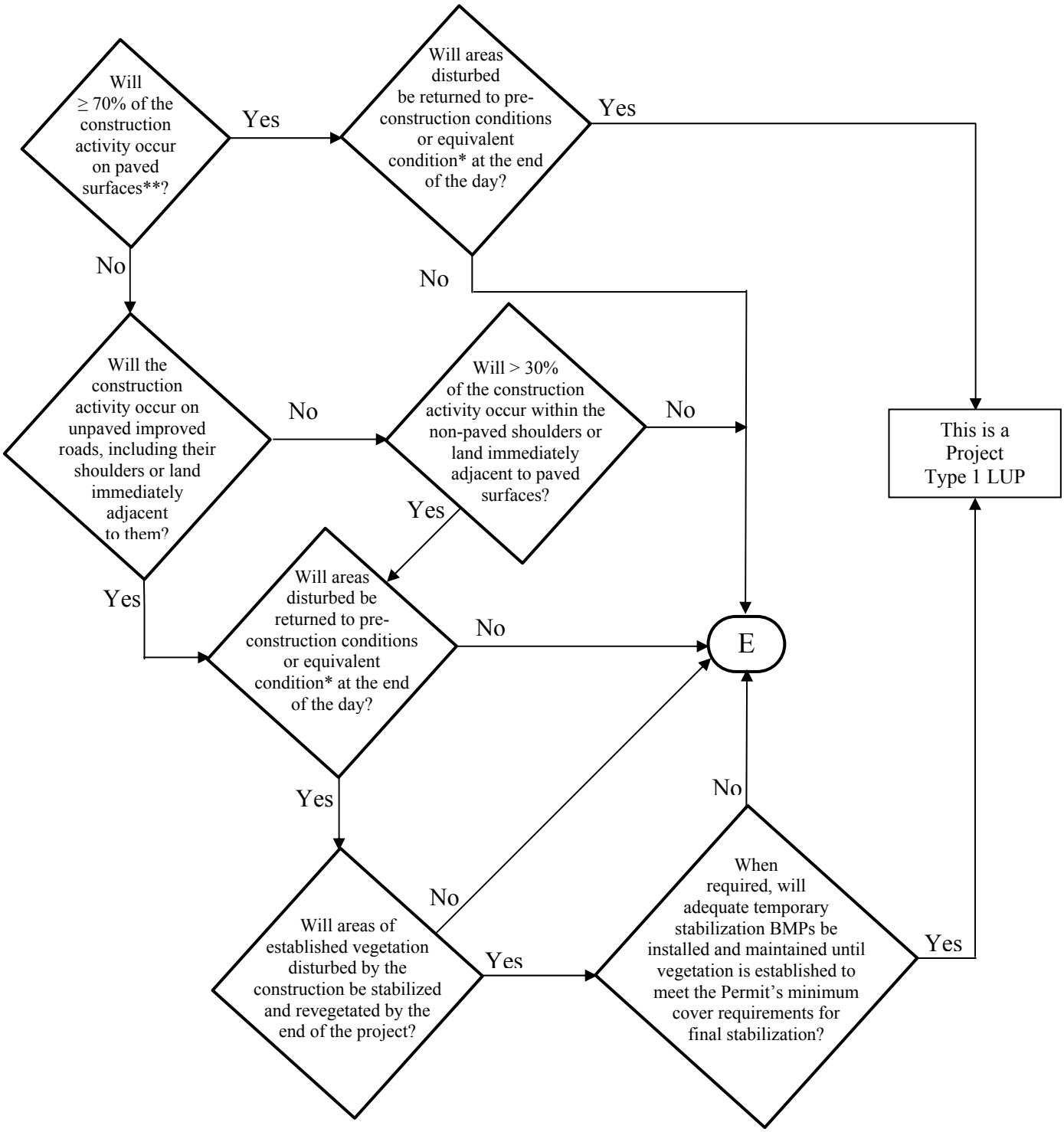

*See Definition of Terms
** Or: "Will < 30% of the soil disturbance occur on unpaved surfaces?

ATTACHMENT A.1
LUP Project Area or Project Section Area Type Determination

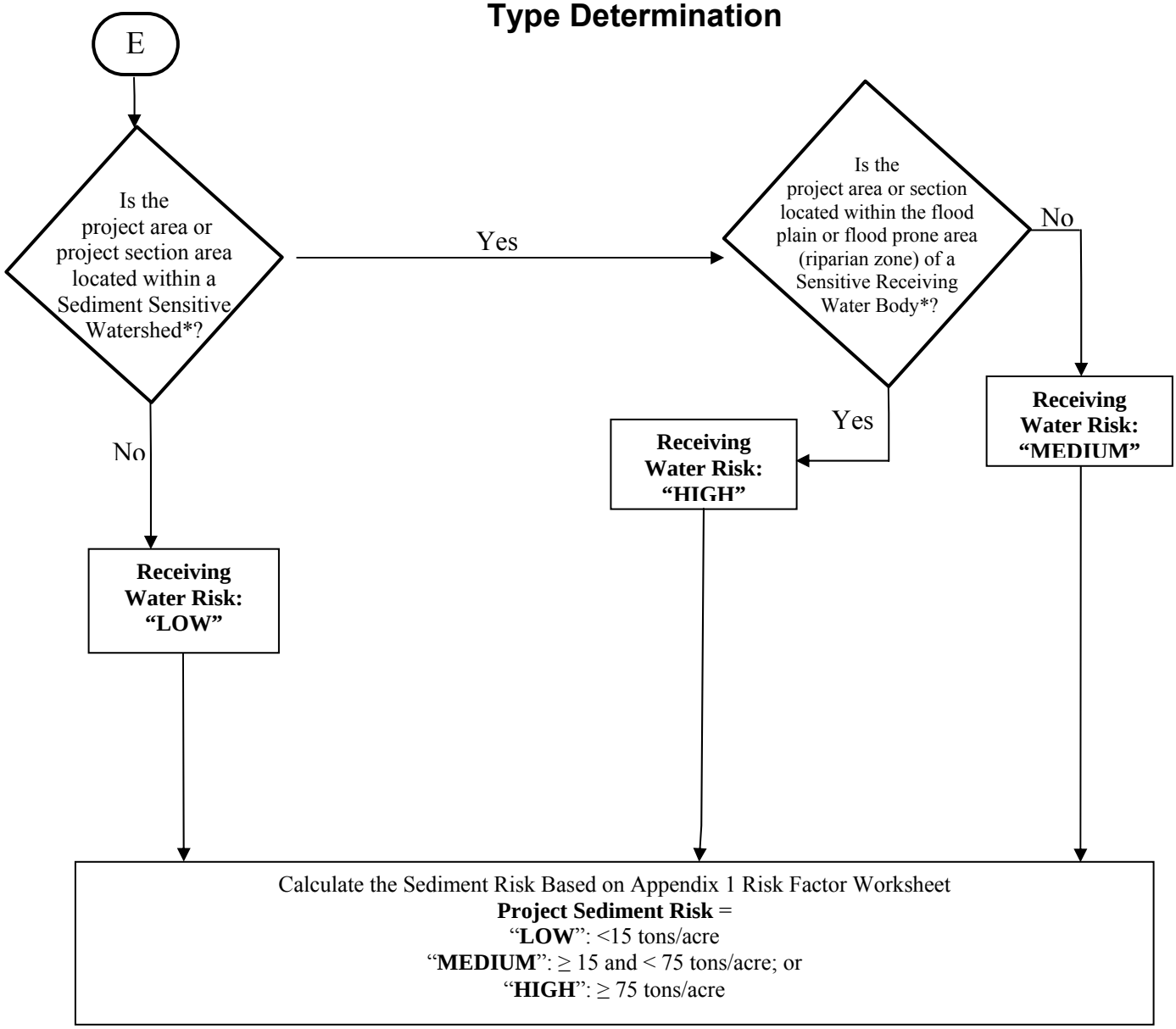

* See Definition of Terms

PROJECT SEDIMENT RISK

RECEIVING WATER RISK	**LOW**	**MEDIUM**	**HIGH**
LOW	Type 1	Type 1	Type 2
MEDIUM	Type 1	Type 2	Type 3
HIGH	Type 2	Type 3	Type 3

ATTACHMENT A.1
Definition of Terms

1. **Equivalent Condition** – Means disturbed soils such as those from trench excavation are required to be hauled away, backfilled into the trench, and/or covered (e.g., metal plates, pavement, plastic covers over spoil piles) at the end of the construction day.
2. **Linear Construction Activity** – Linear construction activity consists of underground/ overhead facilities that typically include, but are not limited to, any conveyance, pipe or pipeline for the transportation of any gaseous, liquid (including water, wastewater for domestic municipal services), liquescent, or slurry substance; any cable line or wire for the transmission of electrical energy; any cable line or wire for communications (e.g., telephone, telegraph, radio or television messages); and associated ancillary facilities. Construction activities associated with LUPs include, but are not limited to those activities necessary for the installation of underground and overhead linear facilities (e.g., conduits, substructures, pipelines, towers, poles, cables, wires, connectors, switching, regulating and transforming equipment and associated ancillary facilities) and include, but are not limited to, underground utility mark-out, potholing, concrete and asphalt cutting and removal, trenching, excavation, boring and drilling, access road and pole/ tower pad and cable/ wire pull station, substation construction, substructure installation, construction of tower footings and/or foundations, pole and tower installations, pipeline installations, welding, concrete and/or pavement repair or replacement, and stockpile/ borrow locations.
3. **Sediment Sensitive Receiving Water Body –** Defined as a water body segment that is listed on EPA's approved CWA 303(d) list for sedimentation/siltation, turbidity, or is designated with beneficial uses of SPAWN, MIGRATORY, and COLD.
4. **Sediment Sensitive Watershed –** Defined as a watershed draining into a receiving water body listed on EPA's approved CWA 303(d) list for sedimentation/siltation, turbidity, or a water body designated with beneficial uses of SPAWN, MIGRATORY, and COLD.

ATTACHMENT A.2
PERMIT REGISTRATION DOCUMENTS (PRDs)
GENERAL INSTRUCTIONS FOR LINEAR UNDERGROUND/OVERHEAD PROJECTS TO COMPLY WITH THE CONSTRUCTION GENERAL PERMIT

GENERAL INSTRUCTIONS

Who Must Submit

This permit is effective on July 1, 2010.

The Legally Responsible Person (LRP) for construction activities associated with linear underground/overhead project (LUP) must electronically apply for coverage under this General Permit on or after July 1, 2010. If it is determined that the LUP construction activities require an NPDES permit, the Legally Responsible Person[1] (LRP) shall submit PRDs for this General Permit in accordance with the following:

LUPs associated with Private or Municipal Development Projects

1. For LUPs associated with pre-development and pre-redevelopment construction activities:

   The LRP must obtain coverage[2] under this General Permit for its pre-development and pre-redevelopment construction activities where the total disturbed land area of these construction activities is greater than 1 acre.

2. For LUPs associated with new development and redevelopment construction projects:

   The LRP must obtain coverage under this General Permit for LUP construction activities associated with new development and redevelopment projects where the total disturbed land area of the LUP is greater than 1 acre. Coverage under this permit is not required where the same LUP construction activities are covered by another NPDES permit.

LUPs not associated with private or municipal new development or redevelopment projects:

The LRP must obtain coverage under this General Permit on or after July 1, 2010 for its LUP construction activities where the total disturbed land area is greater than 1 acre.

PRD Submittal Requirements

Prior to the start of construction activities a LRP must submit PRDs and fees to the State Water Board for each LUP.

New and Ongoing LUPs

Dischargers of new LUPs that commence construction activities after the adoption date of this General Permit shall file PRDs prior to the commencement of construction and implement the SWPPP upon the start of construction.

[1] person possessing the title of the land on which the construction activities will occur for the regulated site
[2] obtain coverage means filing PRDs for the project.

PERMIT REGISTRATION DOCUMENTS (PRDs)
GENERAL INSTRUCTIONS (CONTINUED)

Dischargers of ongoing LUPs that are currently covered under State Water Board Order No. 2003-0007 (Small LUP General Permit) shall electronically file Permit Registration Documents no later than July 1, 2010. After July 1, 2010, all NOIs subject to State Water Board Order No. 2003-0007-DWQ will be terminated. All existing dischargers shall be exempt from the risk determination requirements in Attachment A. All existing dischargers are therefore subject to LUP Type 1 requirements regardless of their project's sediment and receiving water risks. However, a Regional Board retains the authority to require an existing discharger to comply with the risk determination requirements in Attachment A.

Where to Apply

The Permit Registration Documents (PRDs) can be found at www.waterboards.ca.gov/water_issues/programs/stormwater/

Fees

The annual fee for storm water permits are established through the State of California Code of Regulations.

When Permit Coverage Commences

To obtain coverage under the General Permit, the LRP must include the complete PRDs and the annual fee. All PRDs deemed incomplete will be rejected with an explanation as to what is required to complete submittal. Upon receipt of complete PRDs and associated fee, each discharger will be sent a waste discharger's identification (WDID) number.

Projects and Activities Not Defined As Construction Activity

1. LUP construction activity does not include routine maintenance projects to maintain original line and grade, hydraulic capacity, or original purpose of the facility. Routine maintenance projects are projects associated with operations and maintenance activities that are conducted on existing lines and facilities and within existing right-of-way, easements, franchise agreements or other legally binding agreements of the discharger. Routine maintenance projects include, but are not limited to projects that are conducted to:

    - Maintain the original purpose of the facility, or hydraulic capacity.
    - Update existing lines[3] and facilities to comply with applicable codes, standards and regulations regardless if such projects result in increased capacity.
    - Repairing leaks.

    Routine maintenance does not include construction of new[4] lines or facilities resulting from compliance with applicable codes, standards and regulations.

[3] Update existing lines includes replacing existing lines with new materials or pipes.
[4] New lines are those that are not associated with existing facilities and are not part of a project to update or replace existing lines.

PERMIT REGISTRATION DOCUMENTS (PRDs)
GENERAL INSTRUCTIONS (CONTINUED)

Routine maintenance projects do not include those areas of maintenance projects that are outside of an existing right-of-way, franchise, easements, or agreements. When a project must acquire new areas, those areas may be subject to this General Permit based on the area of disturbed land outside the original right-of-way, easement, or agreement.

2. LUP construction activity does not include field activities associated with the planning and design of a project (e.g., activities associated with route selection).

3. Tie-ins conducted immediately adjacent to "energized" or "pressurized" facilities by the discharger are not considered small construction activities where all other LUP construction activities associated with the tie-in are covered by a NOI and SWPPP of a third party or municipal agency.

Calculating Land Disturbance Areas of LUPs

The total land area disturbed for LUPs is the sum of the:

- Surface areas of trenches, laterals and ancillary facilities, plus
- Area of the base of stockpiles on unpaved surfaces, plus
- Surface area of the borrow area, plus
- Areas of paved surfaces constructed for the project, plus
- Areas of new roads constructed or areas of major reconstruction to existing roads (e.g. improvements to two-track surfaces or road widening) for the sole purpose of accessing construction activities or as part of the final project, plus
- Equipment and material storage, staging, and preparation areas (laydown areas) not on paved surfaces, plus
- Soil areas outside the surface area of trenches, laterals and ancillary facilities that will be graded, and/or disturbed by the use of construction equipment, vehicles and machinery during construction activities.

Stockpiling Areas

Stockpiling areas, borrow areas and the removal of soils from a construction site may or may not be included when calculating the area of disturbed soil for a site depending on the following conditions:

- For stockpiling of soils onsite or immediately adjacent to a LUP site and the stockpile is not on a paved surface, the area of the base of the stockpile is to be included in the disturbed area calculation.

- The surface area of borrow areas that are onsite or immediately adjacent to a project site are to be included in the disturbed area calculation.

- For soil that is hauled offsite to a location owned or operated by the discharger that is not a paved surface, the area of the base of the stockpile is to be included in the disturbed area calculation except when the offsite location is already subject to a separate storm water permit.

PERMIT REGISTRATION DOCUMENTS (PRDs)
GENERAL INSTRUCTIONS (CONTINUED)

- For soil that is brought to the project from an off-site location owned or operated by the discharger the surface area of the borrow pit is to be included in the disturbed area calculation except when the offsite location is already subject to a separate storm water permit.

- Trench spoils on a paved surface that are either returned to the trench or excavation or hauled away from the project daily for disposal or reuse will not be included in the disturbed area calculation.

If you have any questions concerning submittal of PRDs, please call the State Water Board at (866) 563-3107.

ATTACHMENT B
PERMIT REGISTRATION DOCUMENTS (PRDs) TO COMPLY WITH THE TERMS OF THE GENERAL PERMIT TO DISCHARGE STORM WATER ASSOCIATED WITH CONSTRUCTION ACTIVITY

GENERAL INSTRUCTIONS

A. All Linear Construction Projects shall comply with the PRD requirements in Attachment A.2 of this Order.

B. Who Must Submit

Discharges of storm water associated with construction that results in the disturbance of one acre or more of land must apply for coverage under the General Construction Storm Water Permit (General Permit). Any construction activity that is a part of a larger common plan of development or sale must also be permitted, regardless of size. (For example, if 0.5 acre of a 20-acre subdivision is disturbed by the construction activities of discharger A and the remaining 19.5 acres is to be developed by discharger B, discharger A must obtain a General Storm Water Permit for the 0.5 acre project).

Other discharges from construction activities that are covered under this General Permit can be found in the General Permit Section II.B.

It is the LRP's responsibility to obtain coverage under this General Permit by electronically submitting complete PRDs (Permit Registration Documents).

In all cases, the proper procedures for submitting the PRDs must be completed before construction can commence.

C. Construction Activity Not Covered By This General Permit

Discharges from construction that are not covered under this General Permit can be found in the General Permit Sections II.A &B..

D. Annual Fees and Fee Calculation

Annual fees are calculated based upon the total area of land to be disturbed not the total size of the acreage owned. However, the calculation includes all acres to be disturbed during the duration of the project. For example, if 10 acres are scheduled to be disturbed the first year and 10 in each subsequent year for 5 years, the annual fees would be based upon 50 acres of disturbance. The State Water Board will evaluate adding acreage to an existing Permit Waste Discharge Identification (WDID) number on a case-by-case basis. In general, any acreage to be considered must be contiguous to the permitted land area and the existing

SWPPP must be appropriate for the construction activity and topography of the acreage under consideration. As acreage is built out and stabilized or sold, the Change of Information (COI) form enables the applicant to remove those acres from inclusion in the annual fee calculation. Checks should be made payable to: State Water Board.

The Annual fees are established through regulations adopted by the State Water Board. The total annual fee is the current base fee plus applicable surcharges for all construction sites submitting an NOI, based on the total acreage to be disturbed during the life of the project. Annual fees are subject to change by regulation.

Dischargers that apply for and satisfy the Small Construction Erosivity Wavier requirements shall pay a fee of $200.00 plus an applicable surcharge, see the General Permit Section II.B.7.

E. When to Apply

LRP's proposing to conduct construction activities subject to this General Permit must submit their PRDs prior to the commencement of construction activity.

F. Requirements for Completing Permit Registration Documents (PRDs)

All dischargers required to comply with this General Permit shall electronically submit the required PRDs for their type of construction as defined below.

G. Standard PRD Requirements (All Dischargers)

1. Notice of Intent
2. Risk Assessment (Standard or Site-Specific)
3. Site Map
4. SWPPP
5. Annual Fee
6. Certification

H. Additional PRD Requirements Related to Construction Type

1. Discharger in unincorporated areas of the State (not covered under an adopted Phase I or II SUSMP requirements) and that are not a linear project shall also submit a completed:
   a. Post-Construction Water Balance Calculator (Appendix 2).

2. Dischargers who are proposing to implement ATS shall submit:
   a. Complete ATS Plan in accordance with Attachment F at least 14 days prior to the planned operation of the ATS and a paper copy shall be available onsite during ATS operation.

b. Certification proof that design done by a professional in accordance with Attachment F.

3. Dischargers who are proposing an alternate Risk Justification:
   a. Particle Size Analysis.

I. Exceptions to Standard PRD Requirements

Construction sites with an R value less than 5 as determined in the Risk Assessment are not required to submit a SWPPP.

J. Description of PRDs

1. Notice of Intent (NOI)

2. Site Map(s) Includes:
   a. The project's surrounding area (vicinity)
   b. Site layout
   c. Construction site boundaries
   d. Drainage areas
   e. Discharge locations
   f. Sampling locations
   g. Areas of soil disturbance (temporary or permanent)
   h. Active areas of soil disturbance (cut or fill)
   i. Locations of all runoff BMPs
   j. Locations of all erosion control BMPs
   k. Locations of all sediment control BMPs
   l. ATS location (if applicable)
   m. Locations of sensitive habitats, watercourses, or other features which are not to be disturbed
   n. Locations of all post-construction BMPs
   o. Locations of storage areas for waste, vehicles, service, loading/unloading of materials, access (entrance/exits) points to construction site, fueling, and water storage, water transfer for dust control and compaction practices

3. **SWPPPs**
   A site-specific SWPPP shall be developed by each discharger and shall be submitted with the PRDs.

4. **Risk Assessment**
   All dischargers shall use the Risk Assessment procedure as describe in the General Permit Appendix 1.

   a. The Standard Risk Assessment includes utilization of the following:
      i. Receiving water Risk Assessment interactive map

ii. EPA Rainfall Erosivity Factor Calculator Website
iii. Sediment Risk interactive map
iv. Sediment sensitive water bodies list

b. The Site-Specific Risk Assessment includes the completion of the hand calculated R value Risk Calculator

5. **Post-Construction Water Balance Calculator**
All dischargers subject to this requirement shall complete the Water Balance Calculator (in Appendix 2) in accordance with the instructions.

6. **ATS Design Document and Certification**
All dischargers using ATS must submit electronically their system design (as well as any supporting documentation) and proof that the system was designed by a qualified ATS design professional (See Attachment F).

To obtain coverage under the General Permit PRDs must be included and completed. If any of the required items are missing, the PRD submittal is considered incomplete and will be rejected. Upon receipt of a complete PRD submittal, the State Water Board will process the application package in the order received and assign a (WDID) number.

Questions?

If you have any questions on completing the PRDs please email stormwater@waterboards.ca.gov or call (866) 563-3107.

ATTACHMENT C
RISK LEVEL 1 REQUIREMENTS

A. Effluent Standards

[These requirements are the same as those in the General Permit order.]

1. Narrative – Risk Level 1 dischargers shall comply with the narrative effluent standards listed below:

   a. Storm water discharges and authorized non-storm water discharges regulated by this General Permit shall not contain a hazardous substance equal to or in excess of reportable quantities established in 40 C.F.R. §§ 117.3 and 302.4, unless a separate NPDES Permit has been issued to regulate those discharges.

   b. Dischargers shall minimize or prevent pollutants in storm water discharges and authorized non-storm water discharges through the use of controls, structures, and management practices that achieve BAT for toxic and non-conventional pollutants and BCT for conventional pollutants.

2. Numeric – Risk Level 1 dischargers are not subject to a numeric effluent standard.

B. Good Site Management "Housekeeping"

1. Risk Level 1 dischargers shall implement good site management (i.e., "housekeeping") measures for construction materials that could potentially be a threat to water quality if discharged. At a minimum, Risk Level 1 dischargers shall implement the following good housekeeping measures:

   a. Conduct an inventory of the products used and/or expected to be used and the end products that are produced and/or expected to be produced. This does not include materials and equipment that are designed to be outdoors and exposed to environmental conditions (i.e. poles, equipment pads, cabinets, conductors, insulators, bricks, etc.).

   b. Cover and berm loose stockpiled construction materials that are not actively being used (i.e. soil, spoils, aggregate, fly-ash, stucco, hydrated lime, etc.).

c. Store chemicals in watertight containers (with appropriate secondary containment to prevent any spillage or leakage) or in a storage shed (completely enclosed).

d. Minimize exposure of construction materials to precipitation. This does not include materials and equipment that are designed to be outdoors and exposed to environmental conditions (i.e. poles, equipment pads, cabinets, conductors, insulators, bricks, etc.).

e. Implement BMPs to prevent the off-site tracking of loose construction and landscape materials.

2. Risk Level 1 dischargers shall implement good housekeeping measures for waste management, which, at a minimum, shall consist of the following:

a. Prevent disposal of any rinse or wash waters or materials on impervious or pervious site surfaces or into the storm drain system.

b. Ensure the containment of sanitation facilities (e.g., portable toilets) to prevent discharges of pollutants to the storm water drainage system or receiving water.

c. Clean or replace sanitation facilities and inspecting them regularly for leaks and spills.

d. Cover waste disposal containers at the end of every business day and during a rain event.

e. Prevent discharges from waste disposal containers to the storm water drainage system or receiving water.

f. Contain and securely protect stockpiled waste material from wind and rain at all times unless actively being used.

g. Implement procedures that effectively address hazardous and non-hazardous spills.

h. Develop a spill response and implementation element of the SWPPP prior to commencement of construction activities. The SWPPP shall require that:

i. Equipment and materials for cleanup of spills shall be available on site and that spills and leaks shall be cleaned up immediately and disposed of properly; and

ii. Appropriate spill response personnel are assigned and trained.

i. Ensure the containment of concrete washout areas and other washout areas that may contain additional pollutants so there is no discharge into the underlying soil and onto the surrounding areas.

3. Risk Level 1 dischargers shall implement good housekeeping for vehicle storage and maintenance, which, at a minimum, shall consist of the following:

   a. Prevent oil, grease, or fuel to leak in to the ground, storm drains or surface waters.

   b. Place all equipment or vehicles, which are to be fueled, maintained and stored in a designated area fitted with appropriate BMPs.

   c. Clean leaks immediately and disposing of leaked materials properly.

4. Risk Level 1 dischargers shall implement good housekeeping for landscape materials, which, at a minimum, shall consist of the following:

   a. Contain stockpiled materials such as mulches and topsoil when they are not actively being used.

   b. Contain fertilizers and other landscape materials when they are not actively being used.

   c. Discontinue the application of any erodible landscape material within 2 days before a forecasted rain event or during periods of precipitation.

   d. Apply erodible landscape material at quantities and application rates according to manufacture recommendations or based on written specifications by knowledgeable and experienced field personnel.

   e. Stack erodible landscape material on pallets and covering or storing such materials when not being used or applied.

5. Risk Level 1 dischargers shall conduct an assessment and create a list of potential pollutant sources and identify any areas of the site where additional BMPs are necessary to reduce or prevent pollutants in storm water discharges and authorized non-storm water discharges. This potential pollutant list shall be kept with the SWPPP and shall identify

all non-visible pollutants which are known, or should be known, to occur on the construction site. At a minimum, when developing BMPs, Risk Level 1 dischargers shall do the following:

a. Consider the quantity, physical characteristics (e.g., liquid, powder, solid), and locations of each potential pollutant source handled, produced, stored, recycled, or disposed of at the site.

b. Consider the degree to which pollutants associated with those materials may be exposed to and mobilized by contact with storm water.

c. Consider the direct and indirect pathways that pollutants may be exposed to storm water or authorized non-storm water discharges. This shall include an assessment of past spills or leaks, non-storm water discharges, and discharges from adjoining areas.

d. Ensure retention of sampling, visual observation, and inspection records.

e. Ensure effectiveness of existing BMPs to reduce or prevent pollutants in storm water discharges and authorized non-storm water discharges.

6. Risk Level 1 dischargers shall implement good housekeeping measures on the construction site to control the air deposition of site materials and from site operations. Such particulates can include, but are not limited to, sediment, nutrients, trash, metals, bacteria, oil and grease and organics.

C. Non-Storm Water Management

1. Risk Level 1 dischargers shall implement measures to control all non-storm water discharges during construction.

2. Risk Level 1 dischargers shall wash vehicles in such a manner as to prevent non-storm water discharges to surface waters or MS4 drainage systems.

3. Risk Level 1 dischargers shall clean streets in such a manner as to prevent unauthorized non-storm water discharges from reaching surface water or MS4 drainage systems.

D. Erosion Control

1. Risk Level 1 dischargers shall implement effective wind erosion control.

2. Risk Level 1 dischargers shall provide effective soil cover for inactive[1] areas and all finished slopes, open space, utility backfill, and completed lots.

3. Risk Level 1 dischargers shall limit the use of plastic materials when more sustainable, environmentally friendly alternatives exist. Where plastic materials are deemed necessary, the discharger shall consider the use of plastic materials resistant to solar degradation.

E. Sediment Controls

1. Risk Level 1 dischargers shall establish and maintain effective perimeter controls and stabilize all construction entrances and exits to sufficiently control erosion and sediment discharges from the site.

2. On sites where sediment basins are to be used, Risk Level 1 dischargers shall, at minimum, design sediment basins according to the method provided in CASQA's Construction BMP Guidance Handbook.

F. Run-on and Runoff Controls

Risk Level 1 dischargers shall effectively manage all run-on, all runoff within the site and all runoff that discharges off the site. Run-on from off site shall be directed away from all disturbed areas or shall collectively be in compliance with the effluent limitations in this General Permit.

G. Inspection, Maintenance and Repair

1. Risk Level 1 dischargers shall ensure that all inspection, maintenance repair and sampling activities at the project location shall be performed or supervised by a Qualified SWPPP Practitioner (QSP) representing the discharger. The QSP may delegate any or all of these activities to an employee trained to do the task(s) appropriately, but shall ensure adequate deployment.

2. Risk Level 1 dischargers shall perform weekly inspections and observations, and at least once each 24-hour period during extended

[1] Inactive areas of construction are areas of construction activity that have been disturbed and are not scheduled to be re-disturbed for at least 14 days.

storm events, to identify and record BMPs that need maintenance to operate effectively, that have failed, or that could fail to operate as intended. Inspectors shall be the QSP or be trained by the QSP.

3. Upon identifying failures or other shortcomings, as directed by the QSP, Risk Level 1 dischargers shall begin implementing repairs or design changes to BMPs within 72 hours of identification and complete the changes as soon as possible.

4. For each inspection required, Risk Level 1 dischargers shall complete an inspection checklist, using a form provided by the State Water Board or Regional Water Board or in an alternative format.

5. Risk Level 1 dischargers shall ensure that checklists shall remain onsite with the SWPPP and at a minimum, shall include:

    a. Inspection date and date the inspection report was written.

    b. Weather information, including presence or absence of precipitation, estimate of beginning of qualifying storm event, duration of event, time elapsed since last storm, and approximate amount of rainfall in inches.

    c. Site information, including stage of construction, activities completed, and approximate area of the site exposed.

    d. A description of any BMPs evaluated and any deficiencies noted.

    e. If the construction site is safely accessible during inclement weather, list the observations of all BMPs: erosion controls, sediment controls, chemical and waste controls, and non-storm water controls. Otherwise, list the results of visual inspections at all relevant outfalls, discharge points, downstream locations and any projected maintenance activities.

    f. Report the presence of noticeable odors or of any visible sheen on the surface of any discharges.

    g. Any corrective actions required, including any necessary changes to the SWPPP and the associated implementation dates.

    h. Photographs taken during the inspection, if any.

    i. Inspector’s name, title, and signature.

H. Rain Event Action Plan

Not required for Risk Level 1 dischargers.

I. Risk Level 1 Monitoring and Reporting Requirements

Table 1- Summary of Monitoring Requirements

Risk Level	Visual Inspections					Sample Collection	
	Quarterly Non-storm Water Discharge	Pre-storm Event		Daily Storm BMP	Post Storm	Storm Water Discharge	Receiving Water
		Baseline	REAP				
1	X	X		X	X		

1. **Construction Site Monitoring Program Requirements**

   a. Pursuant to Water Code Sections 13383 and 13267, all dischargers subject to this General Permit shall develop and implement a written site-specific Construction Site Monitoring Program (CSMP) in accordance with the requirements of this Section. The CSMP shall include all monitoring procedures and instructions, location maps, forms, and checklists as required in this section. The CSMP shall be developed prior to the commencement of construction activities, and revised as necessary to reflect project revisions. The CSMP shall be a part of the Storm Water Pollution Prevention Plan (SWPPP), included as an appendix or separate SWPPP chapter.

   b. Existing dischargers registered under the State Water Board Order No. 99-08-DWQ shall make and implement necessary revisions to their Monitoring Programs to reflect the changes in this General Permit in a timely manner, but no later than July 1, 2010. Existing dischargers shall continue to implement their existing Monitoring Programs in compliance with State Water Board Order No. 99-08-DWQ until the necessary revisions are completed according to the schedule above.

   c. When a change of ownership occurs for all or any portion of the construction site prior to completion or final stabilization, the new discharger shall comply with these requirements as of the date the ownership change occurs.

2. **Objectives**

   The CSMP shall be developed and implemented to address the following objectives:

   a. To demonstrate that the site is in compliance with the Discharge Prohibitions;

b. To determine whether non-visible pollutants are present at the construction site and are causing or contributing to exceedances of water quality objectives;

c. To determine whether immediate corrective actions, additional Best Management Practice (BMP) implementation, or SWPPP revisions are necessary to reduce pollutants in storm water discharges and authorized non-storm water discharges; and

d. To determine whether BMPs included in the SWPPP are effective in preventing or reducing pollutants in storm water discharges and authorized non-storm water discharges.

3. **Risk Level 1 - Visual Monitoring (Inspection) Requirements for Qualifying Rain Events**

a. Risk Level 1 dischargers shall visually observe (inspect) storm water discharges at all discharge locations within two business days (48 hours) after each qualifying rain event.

b. Risk Level 1 dischargers shall visually observe (inspect) the discharge of stored or contained storm water that is derived from and discharged subsequent to a qualifying rain event producing precipitation of ½ inch or more at the time of discharge. Stored or contained storm water that will likely discharge after operating hours due to anticipated precipitation shall be observed prior to the discharge during operating hours.

c. Risk Level 1 dischargers shall conduct visual observations (inspections) during business hours only.

d. Risk Level 1 dischargers shall record the time, date and rain gauge reading of all qualifying rain events.

e. Within 2 business days (48 hours) prior to each qualifying rain event, Risk Level 1 dischargers shall visually observe (inspect):

i. All storm water drainage areas to identify any spills, leaks, or uncontrolled pollutant sources. If needed, the discharger shall implement appropriate corrective actions.

ii. All BMPs to identify whether they have been properly implemented in accordance with the SWPPP. If needed, the discharger shall implement appropriate corrective actions.

iii. Any storm water storage and containment areas to detect leaks and ensure maintenance of adequate freeboard.

f. For the visual observations (inspections) described in e.i and e.iii above, Risk Level 1 dischargers shall observe the presence or absence of floating and suspended materials, a sheen on the surface, discolorations, turbidity, odors, and source(s) of any observed pollutants.

g. Within two business days (48 hours) after each qualifying rain event, Risk Level 1 dischargers shall conduct post rain event visual observations (inspections) to (1) identify whether BMPs were adequately designed, implemented, and effective, and (2) identify additional BMPs and revise the SWPPP accordingly.

h. Risk Level 1 dischargers shall maintain on-site records of all visual observations (inspections), personnel performing the observations, observation dates, weather conditions, locations observed, and corrective actions taken in response to the observations.

4. **Risk Level 1 – Visual Observation Exemptions**

a. Risk Level 1 dischargers shall be prepared to conduct visual observation (inspections) until the minimum requirements of Section I.3 above are completed. Risk Level 1 dischargers are not required to conduct visual observation (inspections) under the following conditions:

i. During dangerous weather conditions such as flooding and electrical storms.

ii. Outside of scheduled site business hours.

b. If no required visual observations (inspections) are collected due to these exceptions, Risk Level 1 dischargers shall include an explanation in their SWPPP and in the Annual Report documenting why the visual observations (inspections) were not conducted.

5. **Risk Level 1 – Monitoring Methods**

Risk Level 1 dischargers shall include a description of the visual observation locations, visual observation procedures, and visual observation follow-up and tracking procedures in the CSMP.

6. **Risk Level 1 – Non-Storm Water Discharge Monitoring Requirements**

a. Visual Monitoring Requirements:

   i. Risk Level 1 dischargers shall visually observe (inspect) each drainage area for the presence of (or indications of prior) unauthorized and authorized non-storm water discharges and their sources.

   ii. Risk Level 1 dischargers shall conduct one visual observation (inspection) quarterly in each of the following periods: January-March, April-June, July-September, and October-December. Visual observation (inspections) are only required during daylight hours (sunrise to sunset).

   iii. Risk Level 1 dischargers shall ensure that visual observations (inspections) document the presence or evidence of any non-storm water discharge (authorized or unauthorized), pollutant characteristics (floating and suspended material, sheen, discoloration, turbidity, odor, etc.), and source. Risk Level 1 dischargers shall maintain on-site records indicating the personnel performing the visual observation (inspections), the dates and approximate time each drainage area and non-storm water discharge was observed, and the response taken to eliminate unauthorized non-storm water discharges and to reduce or prevent pollutants from contacting non-storm water discharges.

7. **Risk Level 1 – Non-Visible Pollutant Monitoring Requirements**

   a. Risk Level 1 dischargers shall collect one or more samples during any breach, malfunction, leakage, or spill observed during a visual inspection which could result in the discharge of pollutants to surface waters that would not be visually detectable in storm water.

   b. Risk Level 1 dischargers shall ensure that water samples are large enough to characterize the site conditions.

   c. Risk Level 1 dischargers shall collect samples at all discharge locations that can be safely accessed.

   d. Risk Level 1 dischargers shall collect samples during the first two hours of discharge from rain events that occur during business hours and which generate runoff.

   e. Risk Level 1 dischargers shall analyze samples for all non-visible pollutant parameters (if applicable) - parameters indicating the

presence of pollutants identified in the pollutant source assessment required (Risk Level 1 dischargers shall modify their CSMPs to address these additional parameters in accordance with any updated SWPPP pollutant source assessment).

f. Risk Level 1 dischargers shall collect a sample of storm water that has not come in contact with the disturbed soil or the materials stored or used on-site (uncontaminated sample) for comparison with the discharge sample.

g. Risk Level 1 dischargers shall compare the uncontaminated sample to the samples of discharge using field analysis or through laboratory analysis.[2]

h. Risk Level 1 dischargers shall keep all field /or analytical data in the SWPPP document.

8. **Risk Level 1 – Particle Size Analysis for Project Risk Justification**

Risk Level 1 dischargers justifying an alternative project risk shall report a soil particle size analysis used to determine the RUSLE K-Factor. ASTM D-422 (Standard Test Method for Particle-Size Analysis of Soils), as revised, shall be used to determine the percentages of sand, very fine sand, silt, and clay on the site.

9. **Risk Level 1 – Records**

Risk Level 1 dischargers shall retain records of all storm water monitoring information and copies of all reports (including Annual Reports) for a period of at least three years. Risk Level 1 dischargers shall retain all records on-site while construction is ongoing. These records include:

a. The date, place, time of facility inspections, sampling, visual observation (inspections), and/or measurements, including precipitation.

b. The individual(s) who performed the facility inspections, sampling, visual observation (inspections), and or measurements.

c. The date and approximate time of analyses.

d. The individual(s) who performed the analyses.

[2] For laboratory analysis, all sampling, sample preservation, and analyses must be conducted according to test procedures under 40 CFR Part 136. Field discharge samples shall be collected and analyzed according to the specifications of the manufacturer of the sampling devices employed.

e. A summary of all analytical results from the last three years, the method detection limits and reporting units, and the analytical techniques or methods used.

f. Rain gauge readings from site inspections.

g. Quality assurance/quality control records and results.

h. Non-storm water discharge inspections and visual observation (inspections) and storm water discharge visual observation records (see Sections I.3 and I.6 above).

i. Visual observation and sample collection exception records (see Section I.4 above).

j. The records of any corrective actions and follow-up activities that resulted from analytical results, visual observation (inspections), or inspections.

ATTACHMENT D
RISK LEVEL 2 REQUIREMENTS

A. Effluent Standards

[These requirements are the same as those in the General Permit order.]

1. Narrative – Risk Level 2 dischargers shall comply with the narrative effluent standards listed below:

   a. Storm water discharges and authorized non-storm water discharges regulated by this General Permit shall not contain a hazardous substance equal to or in excess of reportable quantities established in 40 C.F.R. §§ 117.3 and 302.4, unless a separate NPDES Permit has been issued to regulate those discharges.

   b. Dischargers shall minimize or prevent pollutants in storm water discharges and authorized non-storm water discharges through the use of controls, structures, and management practices that achieve BAT for toxic and non-conventional pollutants and BCT for conventional pollutants.

2. Numeric – Risk level 2 dischargers are subject to a pH NAL of 6.5-8.5, and a turbidity NAL of 250 NTU.

B. Good Site Management "Housekeeping"

1. Risk Level 2 dischargers shall implement good site management (i.e., "housekeeping") measures for construction materials that could potentially be a threat to water quality if discharged. At a minimum, Risk Level 2 dischargers shall implement the following good housekeeping measures:

   a. Conduct an inventory of the products used and/or expected to be used and the end products that are produced and/or expected to be produced. This does not include materials and equipment that are designed to be outdoors and exposed to environmental conditions (i.e. poles, equipment pads, cabinets, conductors, insulators, bricks, etc.).

   b. Cover and berm loose stockpiled construction materials that are not actively being used (i.e. soil, spoils, aggregate, fly-ash, stucco, hydrated lime, etc.).

c. Store chemicals in watertight containers (with appropriate secondary containment to prevent any spillage or leakage) or in a storage shed (completely enclosed).

d. Minimize exposure of construction materials to precipitation. This does not include materials and equipment that are designed to be outdoors and exposed to environmental conditions (i.e. poles, equipment pads, cabinets, conductors, insulators, bricks, etc.).

e. Implement BMPs to prevent the off-site tracking of loose construction and landscape materials.

2. Risk Level 2 dischargers shall implement good housekeeping measures for waste management, which, at a minimum, shall consist of the following:

a. Prevent disposal of any rinse or wash waters or materials on impervious or pervious site surfaces or into the storm drain system.

b. Ensure the containment of sanitation facilities (e.g., portable toilets) to prevent discharges of pollutants to the storm water drainage system or receiving water.

c. Clean or replace sanitation facilities and inspecting them regularly for leaks and spills.

d. Cover waste disposal containers at the end of every business day and during a rain event.

e. Prevent discharges from waste disposal containers to the storm water drainage system or receiving water.

f. Contain and securely protect stockpiled waste material from wind and rain at all times unless actively being used.

g. Implement procedures that effectively address hazardous and non-hazardous spills.

h. Develop a spill response and implementation element of the SWPPP prior to commencement of construction activities. The SWPPP shall require:

i. Equipment and materials for cleanup of spills shall be available on site and that spills and leaks shall be cleaned up immediately and disposed of properly.

ii. Appropriate spill response personnel are assigned and trained.

i. Ensure the containment of concrete washout areas and other washout areas that may contain additional pollutants so there is no discharge into the underlying soil and onto the surrounding areas.

3. Risk Level 2 dischargers shall implement good housekeeping for vehicle storage and maintenance, which, at a minimum, shall consist of the following:

   a. Prevent oil, grease, or fuel to leak in to the ground, storm drains or surface waters.

   b. Place all equipment or vehicles, which are to be fueled, maintained and stored in a designated area fitted with appropriate BMPs.

   c. Clean leaks immediately and disposing of leaked materials properly.

4. Risk Level 2 dischargers shall implement good housekeeping for landscape materials, which, at a minimum, shall consist of the following:

   a. Contain stockpiled materials such as mulches and topsoil when they are not actively being used.

   b. Contain all fertilizers and other landscape materials when they are not actively being used.

   c. Discontinue the application of any erodible landscape material within 2 days before a forecasted rain event or during periods of precipitation.

   d. Apply erodible landscape material at quantities and application rates according to manufacture recommendations or based on written specifications by knowledgeable and experienced field personnel.

   e. Stack erodible landscape material on pallets and covering or storing such materials when not being used or applied.

5. Risk Level 2 dischargers shall conduct an assessment and create a list of potential pollutant sources and identify any areas of the site where additional BMPs are necessary to reduce or prevent pollutants in storm water discharges and authorized non-storm water discharges. This potential pollutant list shall be kept with the SWPPP and shall identify

all non-visible pollutants which are known, or should be known, to occur on the construction site. At a minimum, when developing BMPs, Risk Level 2 dischargers shall do the following:

a. Consider the quantity, physical characteristics (e.g., liquid, powder, solid), and locations of each potential pollutant source handled, produced, stored, recycled, or disposed of at the site.

b. Consider the degree to which pollutants associated with those materials may be exposed to and mobilized by contact with storm water.

c. Consider the direct and indirect pathways that pollutants may be exposed to storm water or authorized non-storm water discharges. This shall include an assessment of past spills or leaks, non-storm water discharges, and discharges from adjoining areas.

d. Ensure retention of sampling, visual observation, and inspection records.

e. Ensure effectiveness of existing BMPs to reduce or prevent pollutants in storm water discharges and authorized non-storm water discharges.

6. Risk Level 2 dischargers shall implement good housekeeping measures on the construction site to control the air deposition of site materials and from site operations. Such particulates can include, but are not limited to, sediment, nutrients, trash, metals, bacteria, oil and grease and organics.

7. **Additional Risk Level 2 Requirement:** Risk Level 2 dischargers shall document all housekeeping BMPs in the SWPPP and REAP(s) in accordance with the nature and phase of the construction project. Construction phases at traditional land development projects include Grading and Land Development Phase, Streets and Utilities, or Vertical Construction for traditional land development projects.

C. Non-Storm Water Management

1. Risk Level 2 dischargers shall implement measures to control all non-storm water discharges during construction.

2. Risk Level 2 dischargers shall wash vehicles in such a manner as to prevent non-storm water discharges to surface waters or MS4 drainage systems.

3. Risk Level 2 dischargers shall clean streets in such a manner as to prevent unauthorized non-storm water discharges from reaching surface water or MS4 drainage systems.

D. Erosion Control

1. Risk Level 2 dischargers shall implement effective wind erosion control.

2. Risk Level 2 dischargers shall provide effective soil cover for inactive[1] areas and all finished slopes, open space, utility backfill, and completed lots.

3. Risk Level 2 dischargers shall limit the use of plastic materials when more sustainable, environmentally friendly alternatives exist. Where plastic materials are deemed necessary, the discharger shall consider the use of plastic materials resistant to solar degradation.

E. Sediment Controls

1. Risk Level 2 dischargers shall establish and maintain effective perimeter controls and stabilize all construction entrances and exits to sufficiently control erosion and sediment discharges from the site.

2. On sites where sediment basins are to be used, Risk Level 2 dischargers shall, at minimum, design sediment basins according to the method provided in CASQA's Construction BMP Guidance Handbook.

3. **Additional Risk Level 2 Requirement:** Risk Level 2 dischargers shall implement appropriate erosion control BMPs (runoff control and soil stabilization) in conjunction with sediment control BMPs for areas under active[2] construction.

4. **Additional Risk Level 2 Requirement:** Risk Level 2 dischargers shall apply linear sediment controls along the toe of the slope, face of the slope, and at the grade breaks of exposed slopes to comply with sheet flow lengths[3] in accordance with Table 1.

[1] Inactive areas of construction are areas of construction activity that have been disturbed and are not scheduled to be re-disturbed for at least 14 days.
[2] Active areas of construction are areas undergoing land surface disturbance. This includes construction activity during the preliminary stage, mass grading stage, streets and utilities stage and the vertical construction stage.
[3] Sheet flow length is the length that shallow, low velocity flow travels across a site.

Table 1 - Critical Slope/Sheet Flow Length Combinations

Slope Percentage	Sheet flow length not to exceed
0-25%	20 feet
25-50%	15 feet
Over 50%	10 feet

5. **Additional Risk Level 2 Requirement:** Risk Level 2 dischargers shall ensure that construction activity traffic to and from the project is limited to entrances and exits that employ effective controls to prevent offsite tracking of sediment.

6. **Additional Risk Level 2 Requirement:** Risk Level 2 dischargers shall ensure that all storm drain inlets and perimeter controls, runoff control BMPs, and pollutant controls at entrances and exits (e.g. tire washoff locations) are maintained and protected from activities that reduce their effectiveness.

7. **Additional Risk Level 2 Requirement:** Risk Level 2 dischargers shall inspect on a daily basis all immediate access roads daily. At a minimum daily (when necessary) and prior to any rain event, the discharger shall remove any sediment or other construction activity-related materials that are deposited on the roads (by vacuuming or sweeping).

F. Run-on and Run-off Controls

Risk Level 2 dischargers shall effectively manage all run-on, all runoff within the site and all runoff that discharges off the site. Run-on from off site shall be directed away from all disturbed areas or shall collectively be in compliance with the effluent limitations in this General Permit.

G. Inspection, Maintenance and Repair

1. Risk Level 2 dischargers shall ensure that all inspection, maintenance repair and sampling activities at the project location shall be performed or supervised by a Qualified SWPPP Practitioner (QSP) representing the discharger. The QSP may delegate any or all of these activities to an employee appropriately trained to do the task(s).

2. Risk Level 2 dischargers shall perform weekly inspections and observations, and at least once each 24-hour period during extended storm events, to identify and record BMPs that need maintenance to operate effectively, that have failed, or that could fail to operate as intended. Inspectors shall be the QSP or be trained by the QSP.

3. Upon identifying failures or other shortcomings, as directed by the QSP, Risk Level 2 dischargers shall begin implementing repairs or design changes to BMPs within 72 hours of identification and complete the changes as soon as possible.

4. For each inspection required, Risk Level 2 dischargers shall complete an inspection checklist, using a form provided by the State Water Board or Regional Water Board or in an alternative format.

5. Risk Level 2 dischargers shall ensure that checklists shall remain onsite with the SWPPP and at a minimum, shall include:

   a. Inspection date and date the inspection report was written.

   b. Weather information, including presence or absence of precipitation, estimate of beginning of qualifying storm event, duration of event, time elapsed since last storm, and approximate amount of rainfall in inches.

   c. Site information, including stage of construction, activities completed, and approximate area of the site exposed.

   d. A description of any BMPs evaluated and any deficiencies noted.

   e. If the construction site is safely accessible during inclement weather, list the observations of all BMPs: erosion controls, sediment controls, chemical and waste controls, and non-storm water controls. Otherwise, list the results of visual inspections at all relevant outfalls, discharge points, downstream locations and any projected maintenance activities.

   f. Report the presence of noticeable odors or of any visible sheen on the surface of any discharges.

   g. Any corrective actions required, including any necessary changes to the SWPPP and the associated implementation dates.

   h. Photographs taken during the inspection, if any.

   i. Inspector's name, title, and signature.

H. Rain Event Action Plan

1. **Additional Risk Level 2 Requirement:** The discharger shall ensure a QSP develop a Rain Event Action Plan (REAP) 48 hours prior to any

likely precipitation event. A likely precipitation event is any weather pattern that is forecast to have a 50% or greater probability of producing precipitation in the project area. The discharger shall ensure a QSP obtain a printed copy of precipitation forecast information from the National Weather Service Forecast Office (e.g., by entering the zip code of the project's location at http://www.srh.noaa.gov/forecast).

2. **Additional Risk Level 2 Requirement:** The discharger shall ensure a QSP develop the REAPs for all phases of construction (i.e., Grading and Land Development, Streets and Utilities, Vertical Construction, Final Landscaping and Site Stabilization).

3. **Additional Risk Level 2 Requirement:** The discharger shall ensure a QSP ensure that the REAP include, at a minimum, the following site information:

   a. Site Address
   b. Calculated Risk Level (2 or 3)
   c. Site Storm Water Manager Information including the name, company, and 24-hour emergency telephone number
   d. Erosion and Sediment Control Provider information including the name, company, and 24-hour emergency telephone number
   e. Storm Water Sampling Agent information including the name, company, and 24-hour emergency telephone number

4. **Additional Risk Level 2 Requirement:** The discharger shall ensure a QSP include in the REAP, at a minimum, the following project phase information:

   a. Activities associated with each construction phase
   b. Trades active on the construction site during each construction phase
   c. Trade contractor information
   d. Suggested actions for each project phase

5. **Additional Risk Level 2 Requirement:** The discharger shall ensure a QSP develop additional REAPs for project sites where construction activities are indefinitely halted or postponed (Inactive Construction). At a minimum, Inactive Construction REAPs must include:

   a. Site Address
   b. Calculated Risk Level (2 or 3)
   c. Site Storm Water Manager Information including the name, company, and 24-hour emergency telephone number

d. Erosion and Sediment Control Provider information including the name, company, and 24-hour emergency telephone number
e. Storm Water Sampling Agent information including the name, company, and 24-hour emergency telephone number
f. Trades active on site during Inactive Construction
g. Trade contractor information
h. Suggested actions for inactive construction sites

6. **Additional Risk Level 2 Requirement:** The discharger shall ensure a QSP begin implementation and make the REAP available onsite no later than 24 hours prior to the likely precipitation event.

7. **Additional Risk Level 2 Requirement:** The discharger shall ensure a QSP maintain onsite a paper copy of each REAP onsite in compliance with the record retention requirements of the Special Provisions in this General Permit.

I. Risk Level 2 Monitoring and Reporting Requirements

Table 2- Summary of Monitoring Requirements

Risk Level	Visual Inspections					Sample Collection	
	Quarterly Non-storm Water Discharge	Pre-storm Event		Daily Storm BMP	Post Storm	Storm Water Discharge	Receiving Water
		Baseline	REAP				
2	X	X	X	X	X	X	

1. Construction Site Monitoring Program Requirements

   a. Pursuant to Water Code Sections 13383 and 13267, all dischargers subject to this General Permit shall develop and implement a written site-specific Construction Site Monitoring Program (CSMP) in accordance with the requirements of this Section. The CSMP shall include all monitoring procedures and instructions, location maps, forms, and checklists as required in this section. The CSMP shall be developed prior to the commencement of construction activities, and revised as necessary to reflect project revisions. The CSMP shall be a part of the Storm Water Pollution Prevention Plan (SWPPP), included as an appendix or separate SWPPP chapter.

   b. Existing dischargers registered under the State Water Board Order No. 99-08-DWQ shall make and implement necessary revisions to their Monitoring Program to reflect the changes in this General Permit in a timely manner, but no later than July 1, 2010. Existing dischargers shall continue to implement their existing Monitoring Programs in compliance with State Water Board Order No. 99-08-DWQ until the necessary revisions are completed according to the schedule above.

   c. When a change of ownership occurs for all or any portion of the construction site prior to completion or final stabilization, the new discharger shall comply with these requirements as of the date the ownership change occurs.

2. **Objectives**

   The CSMP shall be developed and implemented to address the following objectives:

   a. To demonstrate that the site is in compliance with the Discharge Prohibitions and applicable Numeric Action Levels (NALs).

b. To determine whether non-visible pollutants are present at the construction site and are causing or contributing to exceedances of water quality objectives.

c. To determine whether immediate corrective actions, additional Best Management Practice (BMP) implementation, or SWPPP revisions are necessary to reduce pollutants in storm water discharges and authorized non-storm water discharges.

d. To determine whether BMPs included in the SWPPP/Rain Event Action Plan (REAP) are effective in preventing or reducing pollutants in storm water discharges and authorized non-storm water discharges.

3. **Risk Level 2 – Visual Monitoring (Inspection) Requirements for Qualifying Rain Events**

a. Risk Level 2 dischargers shall visually observe (inspect) storm water discharges at all discharge locations within two business days (48 hours) after each qualifying rain event.

b. Risk Level 2 dischargers shall visually observe (inspect) the discharge of stored or contained storm water that is derived from and discharged subsequent to a qualifying rain event producing precipitation of ½ inch or more at the time of discharge. Stored or contained storm water that will likely discharge after operating hours due to anticipated precipitation shall be observed prior to the discharge during operating hours.

c. Risk Level 2 dischargers shall conduct visual observations (inspections) during business hours only.

d. Risk Level 2 dischargers shall record the time, date and rain gauge reading of all qualifying rain events.

e. Within 2 business days (48 hours) prior to each qualifying rain event, Risk Level 2 dischargers shall visually observe (inspect):

i. all storm water drainage areas to identify any spills, leaks, or uncontrolled pollutant sources. If needed, the discharger shall implement appropriate corrective actions.

ii. all BMPs to identify whether they have been properly implemented in accordance with the SWPPP/REAP. If needed, the discharger shall implement appropriate corrective actions.

iii. any storm water storage and containment areas to detect leaks and ensure maintenance of adequate freeboard.

f. For the visual observations (inspections) described in c.i and c.iii above, Risk Level 2 dischargers shall observe the presence or absence of floating and suspended materials, a sheen on the surface, discolorations, turbidity, odors, and source(s) of any observed pollutants.

g. Within two business days (48 hours) after each qualifying rain event, Risk Level 2 dischargers shall conduct post rain event visual observations (inspections) to (1) identify whether BMPs were adequately designed, implemented, and effective, and (2) identify additional BMPs and revise the SWPPP accordingly.

h. Risk Level 2 dischargers shall maintain on-site records of all visual observations (inspections), personnel performing the observations, observation dates, weather conditions, locations observed, and corrective actions taken in response to the observations.

4. **Risk Level 2 – Water Quality Sampling and Analysis**

a. Risk Level 2 dischargers shall collect storm water grab samples from sampling locations, as defined in Section I.5. The storm water grab sample(s) obtained shall be representative of the flow and characteristics of the discharge.

b. At minimum, Risk Level 2 dischargers shall collect 3 samples per day of the qualifying event.

c. Risk Level 2 dischargers shall ensure that the grab samples collected of stored or contained storm water are from discharges subsequent to a qualifying rain event (producing precipitation of ½ inch or more at the time of discharge).

<u>Storm Water Effluent Monitoring Requirements</u>

d. Risk Level 2 dischargers shall analyze their effluent samples for:

i. pH and turbidity.

ii. Any additional parameters for which monitoring is required by the Regional Water Board.

5. **Risk Level 2 – Storm Water Discharge Water Quality Sampling Locations**

Effluent Sampling Locations

a. Risk Level 2 dischargers shall perform sampling and analysis of storm water discharges to characterize discharges associated with construction activity from the entire project disturbed area.

b. Risk Level 2 dischargers shall collect effluent samples at all discharge points where storm water is discharged off-site.

c. Risk Level 2 dischargers shall ensure that storm water discharge collected and observed represent[4] the effluent in each drainage area based on visual observation of the water and upstream conditions.

d. Risk Level 2 dischargers shall monitor and report site run-on from surrounding areas if there is reason to believe run-on may contribute to an exceedance of NALs.

e. Risk Level 2 dischargers who deploy an ATS on their site, or a portion on their site, shall collect ATS effluent samples and measurements from the discharge pipe or another location representative of the nature of the discharge.

f. Risk Level 2 dischargers shall select analytical test methods from the list provided in Table 3 below.

g. All storm water sample collection preservation and handling shall be conducted in accordance with Section I.7 “Storm Water Sample Collection and Handling Instructions” below.

6. **Risk Level 2 – Visual Observation and Sample Collection Exemptions**

a. Risk Level 2 dischargers shall be prepared to collect samples and conduct visual observation (inspections) until the minimum requirements of Sections I.3 and I.4 above are completed. Risk Level 2 dischargers are not required to physically collect samples or conduct visual observation (inspections) under the following conditions:

[4] For example, if there has been concrete work recently in an area, or drywall scrap is exposed to the rain, a pH sample shall be taken of drainage from the relevant work area. Similarly, if sediment laden water is flowing through some parts of a silt fence, samples shall be taken of the sediment-laden water even if most water flowing through the fence is clear.

i. During dangerous weather conditions such as flooding and electrical storms.

ii. Outside of scheduled site business hours.

b. If no required samples or visual observation (inspections) are collected due to these exceptions, Risk Level 2 dischargers shall include an explanation in their SWPPP and in the Annual Report documenting why the sampling or visual observation (inspections) were not conducted.

7. **Risk Level 2 – Storm Water Sample Collection and Handling Instructions**

a. Risk Level 2 dischargers shall refer to Table 3 below for test methods, detection limits, and reporting units.

b. Risk Level 2 dischargers shall ensure that testing laboratories will receive samples within 48 hours of the physical sampling (unless otherwise required by the laboratory), and shall use only the sample containers provided by the laboratory to collect and store samples.

c. Risk Level 2 dischargers shall designate and train personnel to collect, maintain, and ship samples in accordance with the Surface Water Ambient Monitoring Program's (SWAMP) 2008 Quality Assurance Program Plan (QAPrP).[5]

8. **Risk Level 2 – Monitoring Methods**

a. Risk Level 2 dischargers shall include a description of the following items in the CSMP:

i. Visual observation locations, visual observation procedures, and visual observation follow-up and tracking procedures.

ii. Sampling locations, and sample collection and handling procedures. This shall include detailed procedures for sample collection, storage, preservation, and shipping to the testing lab to assure that consistent quality control and quality assurance is maintained. Dischargers shall attach to the monitoring program

[5] Additional information regarding SWAMP's QAPrP can be found at http://www.waterboards.ca.gov/water_issues/programs/swamp/. QAPrP:http://www.waterboards.ca.gov/water_issues/programs/swamp/docs/qapp/swamp_qapp_master090108a.pdf.

an example Chain of Custody form used when handling and shipping samples.

iii. Identification of the analytical methods and related method detection limits (if applicable) for each parameter required in Section I.4 above.

b. Risk Level 2 dischargers shall ensure that all sampling and sample preservation are in accordance with the current edition of "Standard Methods for the Examination of Water and Wastewater" (American Public Health Association). All monitoring instruments and equipment (including a discharger's own field instruments for measuring pH and turbidity) should be calibrated and maintained in accordance with manufacturers' specifications to ensure accurate measurements. Risk Level 2 dischargers shall ensure that all laboratory analyses are conducted according to test procedures under 40 CFR Part 136, unless other test procedures have been specified in this General Permit or by the Regional Water Board. With the exception of field analysis conducted by the discharger for turbidity and pH, all analyses should be sent to and conducted at a laboratory certified for such analyses by the State Department of Health Services. Risk Level 2 dischargers shall conduct their own field analysis of pH and may conduct their own field analysis of turbidity if the discharger has sufficient capability (qualified and trained employees, properly calibrated and maintained field instruments, etc.) to adequately perform the field analysis.

9. **Risk Level 2 – Analytical Methods**

a. Risk Level 2 dischargers shall refer to Table 3 below for test methods, detection limits, and reporting units.

b. **pH**: Risk Level 2 dischargers shall perform pH analysis on-site with a calibrated pH meter or a pH test kit. Risk Level 2 dischargers shall record pH monitoring results on paper and retain these records in accordance with Section I.14, below.

c. **Turbidity**: Risk Level 2 dischargers shall perform turbidity analysis using a calibrated turbidity meter (turbidimeter), either on-site or at an accredited lab. Acceptable test methods include Standard Method 2130 or USEPA Method 180.1. The results will be recorded in the site log book in Nephelometric Turbidity Units (NTU).

10. **Risk Level 2 - Non-Storm Water Discharge Monitoring Requirements**

a. Visual Monitoring Requirements:

   i. Risk Level 2 dischargers shall visually observe (inspect) each drainage area for the presence of (or indications of prior) unauthorized and authorized non-storm water discharges and their sources.

   ii. Risk Level 2 dischargers shall conduct one visual observation (inspection) quarterly in each of the following periods: January-March, April-June, July-September, and October-December. Visual observation (inspections) are only required during daylight hours (sunrise to sunset).

   iii. Risk Level 2 dischargers shall ensure that visual observations (inspections) document the presence or evidence of any non-storm water discharge (authorized or unauthorized), pollutant characteristics (floating and suspended material, sheen, discoloration, turbidity, odor, etc.), and source. Risk Level 2 dischargers shall maintain on-site records indicating the personnel performing the visual observation (inspections), the dates and approximate time each drainage area and non-storm water discharge was observed, and the response taken to eliminate unauthorized non-storm water discharges and to reduce or prevent pollutants from contacting non-storm water discharges.

b. Effluent Sampling Locations:

   i. Risk Level 2 dischargers shall sample effluent at all discharge points where non-storm water and/or authorized non-storm water is discharged off-site.

   ii. Risk Level 2 dischargers shall send all non-storm water sample analyses to a laboratory certified for such analyses by the State Department of Health Services.

   iii. Risk Level 2 dischargers shall monitor and report run-on from surrounding areas if there is reason to believe run-on may contribute to an exceedance of NALs.

11. **Risk Level 2 – Non-Visible Pollutant Monitoring Requirements**

a. Risk Level 2 dischargers shall collect one or more samples during any breach, malfunction, leakage, or spill observed during a visual

inspection which could result in the discharge of pollutants to surface waters that would not be visually detectable in storm water.

b. Risk Level 2 dischargers shall ensure that water samples are large enough to characterize the site conditions.

c. Risk Level 2 dischargers shall collect samples at all discharge locations that can be safely accessed.

d. Risk Level 2 dischargers shall collect samples during the first two hours of discharge from rain events that occur during business hours and which generate runoff.

e. Risk Level 2 dischargers shall analyze samples for all non-visible pollutant parameters (if applicable) - parameters indicating the presence of pollutants identified in the pollutant source assessment required (Risk Level 2 dischargers shall modify their CSMPs to address these additional parameters in accordance with any updated SWPPP pollutant source assessment).

f. Risk Level 2 dischargers shall collect a sample of storm water that has not come in contact with the disturbed soil or the materials stored or used on-site (uncontaminated sample) for comparison with the discharge sample.

g. Risk Level 2 dischargers shall compare the uncontaminated sample to the samples of discharge using field analysis or through laboratory analysis.[6]

h. Risk Level 2 dischargers shall keep all field /or analytical data in the SWPPP document.

12. **Risk Level 2 – Watershed Monitoring Option**

Risk Level 2 dischargers who are part of a qualified regional watershed-based monitoring program may be eligible for relief from the requirements in Sections I.5. The Regional Water Board may approve proposals to substitute an acceptable watershed-based monitoring program by determining if the watershed-based monitoring program will provide substantially similar monitoring information in evaluating discharger compliance with the requirements of this General Permit.

[6] For laboratory analysis, all sampling, sample preservation, and analyses must be conducted according to test procedures under 40 CFR Part 136. Field discharge samples shall be collected and analyzed according to the specifications of the manufacturer of the sampling devices employed.

13. **Risk Level 2 – Particle Size Analysis for Project Risk Justification**

    Risk Level 2 dischargers justifying an alternative project risk shall report a soil particle size analysis used to determine the RUSLE K-Factor. ASTM D-422 (Standard Test Method for Particle-Size Analysis of Soils), as revised, shall be used to determine the percentages of sand, very fine sand, silt, and clay on the site.

14. **Risk Level 2 – Records**

    Risk Level 2 dischargers shall retain records of all storm water monitoring information and copies of all reports (including Annual Reports) for a period of at least three years. Risk Level 2 dischargers shall retain all records on-site while construction is ongoing. These records include:

    a. The date, place, time of facility inspections, sampling, visual observation (inspections), and/or measurements, including precipitation.

    b. The individual(s) who performed the facility inspections, sampling, visual observation (inspections), and or measurements.

    c. The date and approximate time of analyses.

    d. The individual(s) who performed the analyses.

    e. A summary of all analytical results from the last three years, the method detection limits and reporting units, the analytical techniques or methods used, and the chain of custody forms.

    f. Rain gauge readings from site inspections;

    g. Quality assurance/quality control records and results.

    h. Non-storm water discharge inspections and visual observation (inspections) and storm water discharge visual observation records (see Sections I.3 and I.10 above).

    i. Visual observation and sample collection exception records (see Section I.6 above).

    j. The records of any corrective actions and follow-up activities that resulted from analytical results, visual observation (inspections), or inspections.

15. **Risk Level 2 – NAL Exceedance Report**

a. In the event that any effluent sample exceeds an applicable NAL, Risk Level 2 dischargers shall electronically submit all storm event sampling results to the State Water Board no later than 10 days after the conclusion of the storm event. The Regional Boards have the authority to require the submittal of an NAL Exceedance Report.

b. Risk Level 2 dischargers shall certify each NAL Exceedance Report in accordance with the Special Provisions for Construction Activity.

c. Risk Level 2 dischargers shall retain an electronic or paper copy of each NAL Exceedance Report for a minimum of three years after the date the annual report is filed.

d. Risk Level 2 dischargers shall include in the NAL Exceedance Report:

i. The analytical method(s), method reporting unit(s), and method detection limit(s) of each analytical parameter (analytical results that are less than the method detection limit shall be reported as “less than the method detection limit”).

ii. The date, place, time of sampling, visual observation (inspections), and/or measurements, including precipitation.

iii. A description of the current BMPs associated with the effluent sample that exceeded the NAL and the proposed corrective actions taken.

Table 3 – Risk Level 2 Test Methods, Detection Limits, Reporting Units and Applicable NALs/NELs

Parameter	Test Method / Protocol	Discharge Type	Min. Detection Limit	Reporting Units	Numeric Action Level
pH	Field test with calibrated portable instrument	Risk Level 2 Discharges	0.2	pH units	lower NAL = 6.5 upper NAL = 8.5
Turbidity	EPA 0180.1 and/or field test with calibrated portable instrument	Risk Level 2 Discharges other than ATS	1	NTU	250 NTU
		For ATS discharges	1	NTU	N/A

ATTACHMENT E
RISK LEVEL 3 REQUIREMENTS

A. Effluent Standards

[These requirements are the same as those in the General Permit order.]

1. Narrative – Risk Level 3 dischargers shall comply with the narrative effluent standards listed below:

   a. Storm water discharges and authorized non-storm water discharges regulated by this General Permit shall not contain a hazardous substance equal to or in excess of reportable quantities established in 40 C.F.R. §§ 117.3 and 302.4, unless a separate NPDES Permit has been issued to regulate those discharges.

   b. Dischargers shall minimize or prevent pollutants in storm water discharges and authorized non-storm water discharges through the use of controls, structures, and management practices that achieve BAT for toxic and non-conventional pollutants and BCT for conventional pollutants.

2. Numeric –Risk Level 3 dischargers are subject to a pH NAL of 6.5-8.5, and a turbidity NAL of 250 NTU.

B. Good Site Management "Housekeeping"

1. Risk Level 3 dischargers shall implement good site management (i.e., "housekeeping") measures for construction materials that could potentially be a threat to water quality if discharged. At a minimum, Risk Level 3 dischargers shall implement the following good housekeeping measures:

   a. Conduct an inventory of the products used and/or expected to be used and the end products that are produced and/or expected to be produced. This does not include materials and equipment that are designed to be outdoors and exposed to environmental conditions (i.e. poles, equipment pads, cabinets, conductors, insulators, bricks, etc.).

   b. Cover and berm loose stockpiled construction materials that are not actively being used (i.e. soil, spoils, aggregate, fly-ash, stucco, hydrated lime, etc.).

c. Store chemicals in watertight containers (with appropriate secondary containment to prevent any spillage or leakage) or in a storage shed (completely enclosed).

d. Minimize exposure of construction materials to precipitation. This does not include materials and equipment that are designed to be outdoors and exposed to environmental conditions (i.e. poles, equipment pads, cabinets, conductors, insulators, bricks, etc.).

e. Implement BMPs to prevent the off-site tracking of loose construction and landscape materials.

2. Risk Level 3 dischargers shall implement good housekeeping measures for waste management, which, at a minimum, shall consist of the following:

a. Prevent disposal of any rinse or wash waters or materials on impervious or pervious site surfaces or into the storm drain system.

b. Ensure the containment of sanitation facilities (e.g., portable toilets) to prevent discharges of pollutants to the storm water drainage system or receiving water.

c. Clean or replace sanitation facilities and inspecting them regularly for leaks and spills.

d. Cover waste disposal containers at the end of every business day and during a rain event.

e. Prevent discharges from waste disposal containers to the storm water drainage system or receiving water.

f. Contain and securely protecting stockpiled waste material from wind and rain at all times unless actively being used.

g. Implement procedures that effectively address hazardous and non-hazardous spills.

h. Develop a spill response and implementation element of the SWPPP prior to commencement of construction activities. The SWPPP shall require that:

i. Equipment and materials for cleanup of spills shall be available on site and that spills and leaks shall be cleaned up immediately and disposed of properly; and

ii. Appropriate spill response personnel are assigned and trained.

i. Ensure the containment of concrete washout areas and other washout areas that may contain additional pollutants so there is no discharge into the underlying soil and onto the surrounding areas.

3. Risk Level 3 dischargers shall implement good housekeeping for vehicle storage and maintenance, which, at a minimum, shall consist of the following:

   a. Prevent oil, grease, or fuel to leak in to the ground, storm drains or surface waters.

   b. Place all equipment or vehicles, which are to be fueled, maintained and stored in a designated area fitted with appropriate BMPs.

   c. Clean leaks immediately and disposing of leaked materials properly.

4. Risk Level 3 dischargers shall implement good housekeeping for landscape materials, which, at a minimum, shall consist of the following:

   a. Contain stockpiled materials such as mulches and topsoil when they are not actively being used.

   b. Contain fertilizers and other landscape materials when they are not actively being used.

   c. Discontinuing the application of any erodible landscape material within 2 days before a forecasted rain event or during periods of precipitation.

   d. Applying erodible landscape material at quantities and application rates according to manufacture recommendations or based on written specifications by knowledgeable and experienced field personnel.

   e. Stacking erodible landscape material on pallets and covering or storing such materials when not being used or applied.

5. Risk Level 3 dischargers shall conduct an assessment and create a list of potential pollutant sources and identify any areas of the site where additional BMPs are necessary to reduce or prevent pollutants in storm water discharges and authorized non-storm water discharges. This potential pollutant list shall be kept with the SWPPP and shall identify

all non-visible pollutants which are known, or should be known, to occur on the construction site. At a minimum, when developing BMPs, Risk Level 3 dischargers shall do the following:

a. Consider the quantity, physical characteristics (e.g., liquid, powder, solid), and locations of each potential pollutant source handled, produced, stored, recycled, or disposed of at the site.

b. Consider the degree to which pollutants associated with those materials may be exposed to and mobilized by contact with storm water.

c. Consider the direct and indirect pathways that pollutants may be exposed to storm water or authorized non-storm water discharges. This shall include an assessment of past spills or leaks, non-storm water discharges, and discharges from adjoining areas.

d. Ensure retention of sampling, visual observation, and inspection records.

e. Ensure effectiveness of existing BMPs to reduce or prevent pollutants in storm water discharges and authorized non-storm water discharges.

6. Risk Level 3 dischargers shall implement good housekeeping measures on the construction site to control the air deposition of site materials and from site operations. Such particulates can include, but are not limited to, sediment, nutrients, trash, metals, bacteria, oil and grease and organics.

7. **Additional Risk Level 3 Requirement:** Risk Level 3 dischargers shall document all housekeeping BMPs in the SWPPP and REAP(s) in accordance with the nature and phase of the construction project. Construction phases at traditional land development projects include Grading and Land Development Phase, Streets and Utilities, or Vertical Construction for traditional land development projects.

C. Non-Storm Water Management

1. Risk Level 3 dischargers shall implement measures to control all non-storm water discharges during construction.

2. Risk Level 3 dischargers shall wash vehicles in such a manner as to prevent non-storm water discharges to surface waters or MS4 drainage systems.

3. Risk Level 3 dischargers shall clean streets in such a manner as to prevent unauthorized non-storm water discharges from reaching surface water or MS4 drainage systems.

D. Erosion Control

1. Risk Level 3 dischargers shall implement effective wind erosion control.

2. Risk Level 3 dischargers shall provide effective soil cover for inactive[1] areas and all finished slopes, open space, utility backfill, and completed lots.

3. Dischargers shall limit the use of plastic materials when more sustainable, environmentally friendly alternatives exist. Where plastic materials are deemed necessary, the discharger shall consider the use of plastic materials resistant to solar degradation.

E. Sediment Controls

1. Risk Level 3 dischargers shall establish and maintain effective perimeter controls and stabilize all construction entrances and exits to sufficiently control erosion and sediment discharges from the site.

2. On sites where sediment basins are to be used, Risk Level 3 dischargers shall, at minimum, design sediment basins according to the method provided in CASQA's Construction BMP Guidance Handbook.

3. **Additional Risk Level 3 Requirement:** Risk Level 3 dischargers shall implement appropriate erosion control BMPs (runoff control and soil stabilization) in conjunction with sediment control BMPs for areas under active[2] construction.

4. **Additional Risk Level 3 Requirement:** Risk Level 3 dischargers shall apply linear sediment controls along the toe of the slope, face of the slope, and at the grade breaks of exposed slopes to comply with sheet flow lengths[3] in accordance with Table 1.

[1] Inactive areas of construction are areas of construction activity that have been disturbed and are not scheduled to be re-disturbed for at least 14 days.
[2] Active areas of construction are areas undergoing land surface disturbance. This includes construction activity during the preliminary stage, mass grading stage, streets and utilities stage and the vertical construction stage
[3] Sheet flow length is the length that shallow, low velocity flow travels across a site.

Table 1 - Critical Slope/Sheet Flow Length Combinations

Slope Percentage	Sheet flow length not to exceed
0-25%	20 feet
25-50%	15 feet
Over 50%	10 feet

5. **Additional Risk Level 3 Requirement:** Risk Level 3 dischargers shall ensure that construction activity traffic to and from the project is limited to entrances and exits that employ effective controls to prevent offsite tracking of sediment.

6. **Additional Risk Level 3 Requirement:** Risk Level 3 dischargers shall ensure that all storm drain inlets and perimeter controls, runoff control BMPs, and pollutant controls at entrances and exits (e.g. tire washoff locations) are maintained and protected from activities that reduce their effectiveness.

7. **Additional Risk Level 3 Requirement:** Risk Level 3 dischargers shall inspect on a daily basis all immediate access roads daily. At a minimum daily (when necessary) and prior to any rain event, the discharger shall remove any sediment or other construction activity-related materials that are deposited on the roads (by vacuuming or sweeping).

8. **Additional Risk Level 3 Requirement:** The Regional Water Board may require Risk Level 3 dischargers to implement additional site-specific sediment control requirements if the implementation of the other requirements in this section are not adequately protecting the receiving waters.

F. Run-on and Run-off Controls

Risk Level 3 dischargers shall effectively manage all run-on, all runoff within the site and all runoff that discharges off the site. Run-on from off site shall be directed away from all disturbed areas or shall collectively be in compliance with the effluent limitations in this General Permit.

G. Inspection, Maintenance and Repair

1. Risk Level 3 dischargers shall ensure that all inspection, maintenance repair and sampling activities at the project location shall be performed or supervised by a Qualified SWPPP Practitioner (QSP) representing the discharger. The QSP may delegate any or all of these activities to an employee appropriately trained to do the task(s).

2. Risk Level 3 dischargers shall perform weekly inspections and observations, and at least once each 24-hour period during extended storm events, to identify and record BMPs that need maintenance to operate effectively, that have failed, or that could fail to operate as intended. Inspectors shall be the QSP or be trained by the QSP.

3. Upon identifying failures or other shortcomings, as directed by the QSP, Risk Level 3 dischargers shall begin implementing repairs or design changes to BMPs within 72 hours of identification and complete the changes as soon as possible.

4. For each inspection required, Risk Level 3 dischargers shall complete an inspection checklist, using a form provided by the State Water Board or Regional Water Board or in an alternative format.

5. Risk Level 3 dischargers shall ensure that checklists shall remain onsite with the SWPPP and at a minimum, shall include:

    a. Inspection date and date the inspection report was written.

    b. Weather information, including presence or absence of precipitation, estimate of beginning of qualifying storm event, duration of event, time elapsed since last storm, and approximate amount of rainfall in inches.

    c. Site information, including stage of construction, activities completed, and approximate area of the site exposed.

    d. A description of any BMPs evaluated and any deficiencies noted.

    e. If the construction site is safely accessible during inclement weather, list the observations of all BMPs: erosion controls, sediment controls, chemical and waste controls, and non-storm water controls. Otherwise, list the results of visual inspections at all relevant outfalls, discharge points, downstream locations and any projected maintenance activities.

    f. Report the presence of noticeable odors or of any visible sheen on the surface of any discharges.

    g. Any corrective actions required, including any necessary changes to the SWPPP and the associated implementation dates.

    h. Photographs taken during the inspection, if any.

i. Inspector's name, title, and signature.

H. Rain Event Action Plan

1. **Additional Risk Level 3 Requirement:** The discharger shall ensure a QSP develop a Rain Event Action Plan (REAP) 48 hours prior to any likely precipitation event. A likely precipitation event is any weather pattern that is forecast to have a 50% or greater probability of producing precipitation in the project area. The QSP shall obtain a printed copy of precipitation forecast information from the National Weather Service Forecast Office (e.g., by entering the zip code of the project's location at http://www.srh.noaa.gov/forecast).

2. **Additional Risk Level 3 Requirement:** The discharger shall ensure a QSP develop the REAPs for all phases of construction (i.e., Grading and Land Development, Streets and Utilities, Vertical Construction, Final Landscaping and Site Stabilization).

3. **Additional Risk Level 3 Requirement:** The discharger shall ensure a QSP ensure that the REAP include, at a minimum, the following site information:

   a. Site Address.
   b. Calculated Risk Level (2 or 3).
   c. Site Storm Water Manager Information including the name, company, and 24-hour emergency telephone number.
   d. Erosion and Sediment Control Provider information including the name, company, and 24-hour emergency telephone number.
   e. Storm Water Sampling Agent information including the name, company, and 24-hour emergency telephone number.

4. **Additional Risk Level 3 Requirement:** The QSP shall include in the REAP, at a minimum, the following project phase information:

   a. Activities associated with each construction phase.
   b. Trades active on the construction site during each construction phase.
   c. Trade contractor information.
   d. Suggested actions for each project phase.

5. **Additional Risk Level 3 Requirement:** The QSP shall develop additional REAPs for project sites where construction activities are indefinitely halted or postponed (Inactive Construction). At a minimum, Inactive Construction REAPs must include:

a. Site Address.
b. Calculated Risk Level (2 or 3).
c. Site Storm Water Manager Information including the name, company, and 24-hour emergency telephone number.
d. Erosion and Sediment Control Provider information including the name, company, and 24-hour emergency telephone number.
e. Storm Water Sampling Agent information including the name, company, and 24-hour emergency telephone number.
f. Trades active on site during Inactive Construction.
g. Trade contractor information.
h. Suggested actions for inactive construction sites.

6. **Additional Risk Level 3 Requirement:** The discharger shall ensure a QSP begin implementation and make the REAP available onsite no later than 24 hours prior to the likely precipitation event.

7. **Additional Risk Level 3 Requirement:** The discharger shall ensure a QSP maintain onsite a paper copy of each REAP onsite in compliance with the record retention requirements of the Special Provisions in this General Permit.

I. Risk Level 3 Monitoring and Reporting Requirements

Table 2- Summary of Monitoring Requirements

Risk Level	Visual Inspections					Sample Collection	
	Quarterly Non-storm Water Discharge	Pre-storm Event		Daily Storm BMP	Post Storm	Storm Water Discharge	Receiving Water
		Baseline	REAP				
3	X	X	X	X	X	X	X[4]

1. Construction Site Monitoring Program Requirements

   a. Pursuant to Water Code Sections 13383 and 13267, all dischargers subject to this General Permit shall develop and implement a written site-specific Construction Site Monitoring Program (CSMP) in accordance with the requirements of this Section. The CSMP shall include all monitoring procedures and instructions, location maps, forms, and checklists as required in this section. The CSMP shall be developed prior to the commencement of construction activities, and revised as necessary to reflect project revisions. The CSMP shall be a part of the Storm Water Pollution Prevention Plan (SWPPP), included as an appendix or separate SWPPP chapter.

   b. Existing dischargers registered under the State Water Board Order No. 99-08-DWQ shall make and implement necessary revisions to their Monitoring Program to reflect the changes in this General Permit in a timely manner, but no later than July 1, 2010. Existing dischargers shall continue to implement their existing Monitoring Program in compliance with State Water Board Order No. 99-08-DWQ until the necessary revisions are completed according to the schedule above.

   c. When a change of ownership occurs for all or any portion of the construction site prior to completion or final stabilization, the new discharger shall comply with these requirements as of the date the ownership change occurs.

2. **Objectives**

   The CSMP shall be developed and implemented to address the following objectives:

[4] When receiving water monitoring trigger is exceeded

a. To demonstrate that the site is in compliance with the Discharge Prohibitions and applicable Numeric Action Levels (NALs) of this General Permit.

b. To determine whether non-visible pollutants are present at the construction site and are causing or contributing to exceedances of water quality objectives.

c. To determine whether immediate corrective actions, additional Best Management Practice (BMP) implementation, or SWPPP revisions are necessary to reduce pollutants in storm water discharges and authorized non-storm water discharges.

d. To determine whether BMPs included in the SWPPP/Rain Event Action Plan (REAP) are effective in preventing or reducing pollutants in storm water discharges and authorized non-storm water discharges.

3. **Risk Level 3 – Visual Monitoring (Inspection) Requirements for Qualifying Rain Events**

a. Risk Level 3 dischargers shall visually observe (inspect) storm water discharges at all discharge locations within two business days (48 hours) after each qualifying rain event.

b. Risk Level 3 dischargers shall visually observe (inspect) the discharge of stored or contained storm water that is derived from and discharged subsequent to a qualifying rain event producing precipitation of ½ inch or more at the time of discharge. Stored or contained storm water that will likely discharge after operating hours due to anticipated precipitation shall be observed prior to the discharge during operating hours.

c. Risk Level 3 dischargers shall conduct visual observations (inspections) during business hours only.

d. Risk Level 3 dischargers shall record the time, date and rain gauge reading of all qualifying rain events.

e. Within 2 business days (48 hours) prior to each qualifying rain event, Risk Level 3 dischargers shall visually observe (inspect):

i. all storm water drainage areas to identify any spills, leaks, or uncontrolled pollutant sources. If needed, the discharger shall implement appropriate corrective actions.

ii. all BMPs to identify whether they have been properly implemented in accordance with the SWPPP/REAP. If needed, the discharger shall implement appropriate corrective actions.

iii. any storm water storage and containment areas to detect leaks and ensure maintenance of adequate freeboard.

f. For the visual observations (inspections) described in c.i. and c.iii above, Risk Level 3 dischargers shall observe the presence or absence of floating and suspended materials, a sheen on the surface, discolorations, turbidity, odors, and source(s) of any observed pollutants.

g. Within two business days (48 hours) after each qualifying rain event, Risk Level 3 dischargers shall conduct post rain event visual observations (inspections) to (1) identify whether BMPs were adequately designed, implemented, and effective, and (2) identify additional BMPs and revise the SWPPP accordingly.

h. Risk Level 3 dischargers shall maintain on-site records of all visual observations (inspections), personnel performing the observations, observation dates, weather conditions, locations observed, and corrective actions taken in response to the observations.

4. **Risk Level 3 – Water Quality Sampling and Analysis**

a. Risk Level 3 dischargers shall collect storm water grab samples from sampling locations, as defined in Section I.5. The storm water grab sample(s) obtained shall be representative of the flow and characteristics of the discharge.

b. At minimum, Risk Level 3 dischargers shall collect 3 samples per day of the qualifying event.

c. Risk Level 3 dischargers shall ensure that the grab samples collected of stored or contained storm water are from discharges subsequent to a qualifying rain event (producing precipitation of ½ inch or more at the time of discharge).

<u>Storm Water Effluent Monitoring Requirements</u>

d. Risk Level 3 dischargers shall analyze their effluent samples for:

i. pH and turbidity.

ii. Any additional parameters for which monitoring is required by the Regional Water Board.

e. Risk 3 dischargers shall electronically submit all storm event sampling results to the State Water Board no later than 10 days after the conclusion of the storm event.

Receiving Water Monitoring Requirements

f. In the event that a Risk Level 3 discharger's effluent exceeds the daily average receiving water monitoring trigger of 500 NTU turbidity or the daily average pH range 6.0-9.0 contained in this General Permit and has a direct discharge into receiving waters, the Risk Level 3 discharger shall subsequently sample receiving waters (RWs) for turbidity, pH (if applicable), and SSC for the duration of coverage under this General Permit. If a Risk Level 3 discharger utilizing ATS with direct discharges into receiving waters discharges effluent that exceeds the NELs in this permit, the discharger shall subsequently sample RWs for turbidity, pH (if applicable), and SSC for the duration of coverage under this General Permit.

g. Risk Level 3 dischargers disturbing 30 acres or more of the landscape and with direct discharges into receiving waters shall conduct or participate in benthic macroinvertebrate bioassessment of RWs prior to commencement of construction activity (See Appendix 3).

h. Risk Level 3 dischargers shall obtain RW samples in accordance with the Receiving Water sampling location section (Section I.5), below.

5. **Risk Level 3 – Storm Water Discharge Water Quality Sampling Locations**

Effluent Sampling Locations

a. Risk Level 3 dischargers shall perform sampling and analysis of storm water discharges to characterize discharges associated with construction activity from the entire project disturbed area.

b. Risk Level 3 dischargers shall collect effluent samples at all discharge points where storm water is discharged off-site.

c. Risk Level 3 dischargers shall ensure that storm water discharge collected and observed represent[5] the effluent in each drainage area based on visual observation of the water and upstream conditions.

d. Risk Level 3 dischargers shall monitor and report site run-on from surrounding areas if there is reason to believe run-on may contribute to an exceedance of NALs.

e. Risk Level 3 dischargers who deploy an ATS on their site, or a portion on their site, shall collect ATS effluent samples and measurements from the discharge pipe or another location representative of the nature of the discharge.

f. Risk Level 3 dischargers shall select analytical test methods from the list provided in Table 3 below.

g. All storm water sample collection preservation and handling shall be conducted in accordance with Section I.7 “Storm Water Sample Collection and Handling Instructions” below.

Receiving Water Sampling Locations

h. **Upstream/up-gradient RW samples**: Risk Level 3 dischargers shall obtain any required upstream/up-gradient receiving water samples from a representative and accessible location as close as possible and upstream from the effluent discharge point.

i. **Downstream/down-gradient RW samples**: Risk Level 3 dischargers shall obtain any required downstream/down-gradient receiving water samples from a representative and accessible location as close as possible and downstream from the effluent discharge point.

j. If two or more discharge locations discharge to the same receiving water, Risk Level 3 dischargers may sample the receiving water at a single upstream and downstream location.

[5] For example, if there has been concrete work recently in an area, or drywall scrap is exposed to the rain, a pH sample shall be taken of drainage from the relevant work area. Similarly, if sediment-laden water is flowing through some parts of a silt fence, samples shall be taken of the sediment laden water even if most water flowing through the fence is clear.

6. **Risk Level 3 – Visual Observation and Sample Collection Exemptions**

   a. Risk Level 3 dischargers shall be prepared to collect samples and conduct visual observation (inspections) until the minimum requirements of Sections I.3 and I.4 above are completed. Risk Level 3 dischargers are not required to physically collect samples or conduct visual observation (inspections) under the following conditions:

      i. During dangerous weather conditions such as flooding and electrical storms.

      ii. Outside of scheduled site business hours.

   b. If no required samples or visual observation (inspections) are collected due to these exceptions, Risk Level 3 dischargers shall include an explanation in their SWPPP and in the Annual Report documenting why the sampling or visual observation (inspections) were not conducted.

7. **Risk Level 3 – Storm Water Sample Collection and Handling Instructions**

   a. Risk Level 3 dischargers shall refer to Table 3 below for test methods, detection limits, and reporting units.

   b. Risk Level 3 dischargers shall ensure that testing laboratories will receive samples within 48 hours of the physical sampling (unless otherwise required by the laboratory), and shall use only the sample containers provided by the laboratory to collect and store samples.

   c. Risk Level 3 dischargers shall designate and train personnel to collect, maintain, and ship samples in accordance with the Surface Water Ambient Monitoring Program's (SWAMP) 2008 Quality Assurance Program Plan (QAPrP).[6]

[6] Additional information regarding SWAMP's QAPrP can be found at http://www.waterboards.ca.gov/water_issues/programs/swamp/.
QAPrP:http://www.waterboards.ca.gov/water_issues/programs/swamp/docs/qapp/swamp_qapp_master090108a.pdf

8. **Risk Level 3 – Monitoring Methods**

   a. Risk Level 3 dischargers shall include a description of the following items in the CSMP:

      i. Visual observation locations, visual observation procedures, and visual observation follow-up and tracking procedures.

      ii. Sampling locations, and sample collection and handling procedures. This shall include detailed procedures for sample collection, storage, preservation, and shipping to the testing lab to assure that consistent quality control and quality assurance is maintained. Dischargers shall attach to the monitoring program an example Chain of Custody form used when handling and shipping samples.

      iii. Identification of the analytical methods and related method detection limits (if applicable) for each parameter required in Section I.4 above.

   b. Risk Level 3 dischargers shall ensure that all sampling and sample preservation are in accordance with the current edition of "Standard Methods for the Examination of Water and Wastewater" (American Public Health Association). All monitoring instruments and equipment (including a discharger's own field instruments for measuring pH and turbidity) should be calibrated and maintained in accordance with manufacturers' specifications to ensure accurate measurements. Risk Level 3 dischargers shall ensure that all laboratory analyses are conducted according to test procedures under 40 CFR Part 136, unless other test procedures have been specified in this General Permit or by the Regional Water Board. With the exception of field analysis conducted by the discharger for turbidity and pH, all analyses should be sent to and conducted at a laboratory certified for such analyses by the State Department of Health Services (SSC exception). Risk Level 3 dischargers shall conduct their own field analysis of pH and may conduct their own field analysis of turbidity if the discharger has sufficient capability (qualified and trained employees, properly calibrated and maintained field instruments, etc.) to adequately perform the field analysis.

9. **Risk Level 3 – Analytical Methods**

   a. Risk Level 3 dischargers shall refer to Table 3 below for test methods, detection limits, and reporting units.

b. **pH**: Risk Level 3 dischargers shall perform pH analysis on-site with a calibrated pH meter or a pH test kit. Risk Level 3 dischargers shall record pH monitoring results on paper and retain these records in accordance with Section I.14, below.

c. **Turbidity**: Risk Level 3 dischargers shall perform turbidity analysis using a calibrated turbidity meter (turbidimeter), either on-site or at an accredited lab. Acceptable test methods include Standard Method 2130 or USEPA Method 180.1. The results will be recorded in the site log book in Nephelometric Turbidity Units (NTU).

d. **Suspended sediment concentration (SSC)**: Risk Level 3 dischargers that exceed the turbidity Receiving Water Monitoring Trigger shall perform SSC analysis using ASTM Method D3977-97.

e. **Bioassessment**: Risk Level 3 dischargers shall perform bioassessment sampling and analysis according to Appendix 3 of this General Permit.

10. **Risk Level 3 - Non-Storm Water Discharge Monitoring Requirements**

a. Visual Monitoring Requirements:

i. Risk Level 3 dischargers shall visually observe (inspect) each drainage area for the presence of (or indications of prior) unauthorized and authorized non-storm water discharges and their sources.

ii. Risk Level 3 dischargers shall conduct one visual observation (inspection) quarterly in each of the following periods: January-March, April-June, July-September, and October-December. Visual observation (inspections) are only required during daylight hours (sunrise to sunset).

iii. Risk Level 3 dischargers shall ensure that visual observations (inspections) document the presence or evidence of any non-storm water discharge (authorized or unauthorized), pollutant characteristics (floating and suspended material, sheen, discoloration, turbidity, odor, etc.), and source. Risk Level 3 dischargers shall maintain on-site records indicating the personnel performing the visual observation (inspections), the dates and approximate time each drainage area and non-storm water discharge was observed, and the response taken to eliminate unauthorized non-storm water discharges and to

reduce or prevent pollutants from contacting non-storm water discharges.

b. Effluent Sampling Locations:

i. Risk Level 3 dischargers shall sample effluent at all discharge points where non-storm water and/or authorized non-storm water is discharged off-site.

ii. Risk Level 3 dischargers shall send all non-storm water sample analyses to a laboratory certified for such analyses by the State Department of Health Services.

iii. Risk Level 3 dischargers shall monitor and report run-on from surrounding areas if there is reason to believe run-on may contribute to an exceedance of NALs.

11. **Risk Level 3 – Non-Visible Pollutant Monitoring Requirements**

a. Risk Level 3 dischargers shall collect one or more samples during any breach, malfunction, leakage, or spill observed during a visual inspection which could result in the discharge of pollutants to surface waters that would not be visually detectable in storm water.

b. Risk Level 3 dischargers shall ensure that water samples are large enough to characterize the site conditions.

c. Risk Level 3 dischargers shall collect samples at all discharge locations that can be safely accessed.

d. Risk Level 3 dischargers shall collect samples during the first two hours of discharge from rain events that occur during business hours and which generate runoff.

e. Risk Level 3 dischargers shall analyze samples for all non-visible pollutant parameters (if applicable) - parameters indicating the presence of pollutants identified in the pollutant source assessment required (Risk Level 3 dischargers shall modify their CSMPs to address these additional parameters in accordance with any updated SWPPP pollutant source assessment).

f. Risk Level 3 dischargers shall collect a sample of storm water that has not come in contact with the disturbed soil or the materials stored or used on-site (uncontaminated sample) for comparison with the discharge sample.

g. Risk Level 3 dischargers shall compare the uncontaminated sample to the samples of discharge using field analysis or through laboratory analysis.[7]

h. Risk Level 3 dischargers shall keep all field /or analytical data in the SWPPP document.

12. **Risk Level 3 – Watershed Monitoring Option**

Risk Level 3 dischargers who are part of a qualified regional watershed-based monitoring program may be eligible for relief from the requirements in Sections I.5. The Regional Water Board may approve proposals to substitute an acceptable watershed-based monitoring program by determining if the watershed-based monitoring program will provide substantially similar monitoring information in evaluating discharger compliance with the requirements of this General Permit.

13. **Risk Level 3 – Particle Size Analysis for Project Risk Justification**

Risk Level 3 dischargers justifying an alternative project risk shall report a soil particle size analysis used to determine the RUSLE K-Factor. ASTM D-422 (Standard Test Method for Particle-Size Analysis of Soils), as revised, shall be used to determine the percentages of sand, very fine sand, silt, and clay on the site.

14. **Risk Level 3 – Records**

Risk Level 3 dischargers shall retain records of all storm water monitoring information and copies of all reports (including Annual Reports) for a period of at least three years. Risk Level 3 dischargers shall retain all records on-site while construction is ongoing. These records include:

a. The date, place, time of facility inspections, sampling, visual observation (inspections), and/or measurements, including precipitation.

b. The individual(s) who performed the facility inspections, sampling, visual observation (inspections), and or measurements.

c. The date and approximate time of analyses.

[7] For laboratory analysis, all sampling, sample preservation, and analyses must be conducted according to test procedures under 40 CFR Part 136. Field discharge samples shall be collected and analyzed according to the specifications of the manufacturer of the sampling devices employed.

d. The individual(s) who performed the analyses.

e. A summary of all analytical results from the last three years, the method detection limits and reporting units, the analytical techniques or methods used, and the chain of custody forms.

f. Rain gauge readings from site inspections.

g. Quality assurance/quality control records and results.

h. Non-storm water discharge inspections and visual observation (inspections) and storm water discharge visual observation records (see Sections I.3 and I.10 above).

i. Visual observation and sample collection exception records (see Section I.6 above).

j. The records of any corrective actions and follow-up activities that resulted from analytical results, visual observation (inspections), or inspections.

15. **Risk Level 3 – NAL Exceedance Report**

a. Risk Level 3 dischargers shall electronically submit all storm event sampling results to the State Water Board no later than 10 days after the conclusion of the storm event. The Regional Boards have the authority to require the submittal of an NAL Exceedance Report.

b. Risk Level 3 dischargers shall certify each NAL Exceedance Report in accordance with the Special Provisions for Construction Activity In this General Permit.

c. Risk Level 3 dischargers shall retain an electronic or paper copy of each NAL Exceedance Report for a minimum of three years after the date the annual report is filed.

d. Risk Level 3 dischargers shall include in the NAL Exceedance Report:

i. The analytical method(s), method reporting unit(s), and method detection limit(s) of each analytical parameter (analytical results that are less than the method detection limit shall be reported as “less than the method detection limit”).

ii. The date, place, time of sampling, visual observation (inspections), and/or measurements, including precipitation.

iii. A description of the current BMPs associated with the effluent sample that exceeded the NAL and the proposed corrective actions taken.

16. **Risk Level 3 – Bioassessment**

a. Risk Level 3 dischargers with a total project-related ground disturbance exceeding 30 acres shall:

i. Conduct bioassessment monitoring, as described in Appendix 3.

ii. Include the collection and reporting of specified in stream biological data and physical habitat.

iii. Use the bioassessment sample collection and Quality Assurance & Quality Control (QA/QC) protocols developed by the State of California's Surface Water Ambient Monitoring Program (SWAMP).[8]

b. Risk Level 3 dischargers qualifying for bioassessment, where construction commences out of an index period for the site location shall:

i. Receive Regional Board approval for the sampling exception.

ii. Conduct bioassessment monitoring, as described in Appendix 3.

iii. Include the collection and reporting of specified instream biological data and physical habitat.

iv. Use the bioassessment sample collection and Quality Assurance & Quality Control (QA/QC) protocols developed by the State of California's Surface Water Ambient Monitoring Program (SWAMP).

OR

v. Make a check payable to: Cal State Chico Foundation (SWAMP Bank Account) or San Jose State Foundation (SWAMP Bank Account) and include the WDID# on the check for the amount calculated for the exempted project.

[8] http://www.waterboards.ca.gov/water_issues/programs/swamp/.

vi. Send a copy of the check to the Regional Water Board office for the site's region.

vii. Invest $**7,500.00 X The number of samples required** into the SWAMP program as compensation (upon regional board approval).

Table 3 – Risk Level 3 Test Methods, Detection Limits, Reporting Units and Applicable NALs

Parameter	Test Method / Protocol	Discharge Type	Min. Detection Limit	Reporting Units	Numeric Action Level	Numeric Effluent Limitation	Receiving Water Monitoring Trigger
pH	Field test with calibrated portable instrument	Risk Level 3 Discharges	0.2	pH units	lower NAL = 6.5 upper NAL = 8.5	N/A	lower limit = 6.0 upper limit = 9.0
Turbidity	EPA 0180.1 and/or field test with calibrated portable instrument	Risk Level 3 Discharges other than ATS	1	NTU	250 NTU	N/A	500 NTU
		For ATS discharges	1	NTU	N/A	10 NTU for Daily Weighted Average & 20 NTU for Any Single Sample	10 NTU for Daily Weighted Average & 20 NTU for Any Single Sample
SSC	ASTM Method D 3977-97[9]	Risk Level 3 (if Receiving Water Monitoring Trigger exceeded)	5	mg/L	N/A	N/A	N/A
Bioassessment	(STE) Level I of (SAFIT),[10] fixed-count of 600 org/sample	Risk Level 3 projects> 30 acres	N/A	N/A	N/A	N/A	N/A

[9] ASTM, 1999, Standard Test Method for Determining Sediment Concentration in Water Samples: American Society of Testing and Materials, D 3977-97, Vol. 11.02, pp. 389-394.

[10] The current SAFIT STEs (28 November 2006) list requirements for both the Level I and Level II taxonomic effort, and are located at: http://www.swrcb.ca.gov/swamp/docs/safit/ste_list.pdf. When new editions are published by SAFIT, they will supersede all previous editions. All editions will be posted at the State Water Board's SWAMP website.

ATTACHMENT F:
Active Treatment System (ATS) Requirements

Table 1 – Numeric Effluent Limitations, Numeric Action Levels, Test Methods, Detection Limits, and Reporting Units

Parameter	Test Method	Discharge Type	Min. Detection Limit	Units	Numeric Action Level	Numeric Effluent Limitation
Turbidity	EPA 0180.1 and/or field test with a calibrated portable instrument	For ATS discharges	1	NTU	N/A	10 NTU for Daily Flow-Weighted Average & 20 NTU for Any Single Sample

A. Dischargers choosing to implement an Active Treatment System (ATS) on their site shall comply with all of the requirements in this Attachment.

B. The discharger shall maintain a paper copy of each ATS specification onsite in compliance with the record retention requirements in the Special Provisions of this General Permit.

C. ATS Design, Operation and Submittals

1. The ATS shall be designed and approved by a Certified Professional in Erosion and Sediment Control (CPESC), a Certified Professional in Storm Water Quality (CPSWQ); a California registered civil engineer; or any other California registered engineer.

2. The discharger shall ensure that the ATS is designed in a manner to preclude the accidental discharge of settled floc[1] during floc pumping or related operations.

3. The discharger shall design outlets to dissipate energy from concentrated flows.

4. The discharger shall install and operate an ATS by assigning a lead person (or project manager) who has either a minimum of five years construction storm

[1] Floc is defined as a clump of solids formed by the chemical action in ATS systems.

water experience or who is a licensed contractors specifically holding a California Class A Contractors license.[2]

5. The discharger shall prepare an ATS Plan that combines the site-specific data and treatment system information required to safely and efficiently operate an ATS. The ATS Plan shall be electronically submitted to the State Water Board at least 14 days prior to the planned operation of the ATS and a paper copy shall be available onsite during ATS operation. At a minimum, the ATS Plan shall include:

   a. ATS Operation and Maintenance Manual for All Equipment.

   b. ATS Monitoring, Sampling & Reporting Plan, including Quality Assurance/Quality Control (QA/QC).

   c. ATS Health and Safety Plan.

   d. ATS Spill Prevention Plan.

6. The ATS shall be designed to capture and treat (within a 72-hour period) a volume equivalent to the runoff from a 10-year, 24-hour storm event using a watershed runoff coefficient of 1.0.

D. Treatment – Chemical Coagulation/Flocculation

1. Jar tests shall be conducted using water samples selected to represent typical site conditions and in accordance with ASTM D2035-08 (2003).

2. The discharger shall conduct, at minimum, six site-specific jar tests (per polymer with one test serving as a control) for each project to determine the proper polymer and dosage levels for their ATS.

3. Single field jar tests may also be conducted during a project if conditions warrant, for example if construction activities disturb changing types of soils, which consequently cause change in storm water and runoff characteristics.

E. Residual Chemical and Toxicity Requirements

1. The discharger shall utilize a residual chemical test method that has a method detection limit (MDL) of 10% or less than the maximum allowable threshold

[2] Business and Professions Code Division 3, Chapter 9, Article 4, Class A Contractor: A general engineering contractor is a contractor whose principal contracting business is in connection with fixed works requiring specialized engineering knowledge and skill. [http://www.cslb.ca.gov/General-Information/library/licensing-classifications.asp].

concentration[3] (MATC) for the specific coagulant in use and for the most sensitive species of the chemical used.

2. The discharger shall utilize a residual chemical test method that produces a result within one hour of sampling.

3. The discharger shall have a California State certified laboratory validate the selected residual chemical test. Specifically the lab will review the test protocol, test parameters, and the detection limit of the coagulant. The discharger shall electronically submit this documentation as part of the ATS Plan.

4. If the discharger cannot utilize a residual chemical test method that meets the requirements above, the discharger shall operate the ATS in Batch Treatment[4] mode.

5. A discharger planning to operate in Batch Treatment mode shall perform toxicity testing in accordance with the following:

   a. The discharger shall initiate acute toxicity testing on effluent samples representing effluent from each batch prior to discharge[5]. All bioassays shall be sent to a laboratory certified by the Department of Health Services (DHS) Environmental Laboratory Accreditation Program (ELAP). The required field of testing number for Whole Effluent Toxicity (WET) testing is E113.[6]

   b. Acute toxicity tests shall be conducted with the following species and protocols. The methods to be used in the acute toxicity testing shall be those outlined for a 96-hour acute test in "Methods for Measuring the Acute Toxicity of Effluents and Receiving Water to Freshwater and Marine Organisms, USEPA-841-R-02-012" for Fathead minnow, *Pimephales promelas* (fathead minnow). Acute toxicity for *Oncorhynchus mykiss* (Rainbow Trout) may be used as a substitute for testing fathead minnows.

   c. All toxicity tests shall meet quality assurance criteria and test acceptability criteria in the most recent versions of the EPA test method for WET testing.

   d. The discharger shall electronically report all acute toxicity testing.

[3] The Maximum Allowable Threshold Concentration (MATC) is the allowable concentration of residual, or dissolved, coagulant/flocculant in effluent. The MATC shall be coagulant/flocculant-specific, and based on toxicity testing conducted by an independent, third-party laboratory. A typical MATC would be:
The MATC is equal to the geometric mean of the NOEC (No Observed Effect Concentration) and LOEC (Lowest Observed Effect Concentration) Acute and Chronic toxicity results for most sensitive species determined for the specific coagulant. The most sensitive species test shall be used to determine the MATC.
[4] Batch Treatment mode is defined as holding or recirculating the treated water in a holding basin or tank(s) until treatment is complete or the basin or storage tank(s) is full.
[5] This requirement only requires that the test be initiated prior to discharge.
[6] http://www.dhs.ca.gov/ps/ls/elap/pdf/FOT_Desc.pdf.

F. Filtration

1. The ATS shall include a filtration step between the coagulant treatment train and the effluent discharge. This is commonly provided by sand, bag, or cartridge filters, which are sized to capture suspended material that might pass through the clarifier tanks.

2. Differential pressure measurements shall be taken to monitor filter loading and confirm that the final filter stage is functioning properly.

G. Residuals Management

1. Sediment shall be removed from the storage or treatment cells as necessary to ensure that the cells maintain their required water storage (i.e., volume) capability.

2. Handling and disposal of all solids generated during ATS operations shall be done in accordance with all local, state, and federal laws and regulations.

H. ATS Instrumentation

1. The ATS shall be equipped with instrumentation that automatically measures and records effluent water quality data and flow rate.

2. The minimum data recorded shall be consistent with the Monitoring and Reporting requirements below, and shall include:

    a. Influent Turbidity

    b. Effluent Turbidity

    c. Influent pH

    d. Effluent pH

    e. Residual Chemical

    f. Effluent Flow rate

    g. Effluent Flow volume

3. Systems shall be equipped with a data recording system, such as data loggers or webserver-based systems, which records each measurement on a frequency no longer than once every 15 minutes.

4. Cumulative flow volume shall be recorded daily. The data recording system shall have the capacity to record a minimum of seven days continuous data.

5. Instrumentation systems shall be interfaced with system control to provide auto shutoff or recirculation in the event that effluent measurements exceed turbidity or pH.

6. The system shall also assure that upon system upset, power failure, or other catastrophic event, the ATS will default to a recirculation mode or safe shut down.

7. Instrumentation (flow meters, probes, valves, streaming current detectors, controlling computers, etc.) shall be installed and maintained per manufacturer's recommendations, which shall be included in the QA/QC plan.

8. The QA/QC plan shall also specify calibration procedures and frequencies, instrument method detection limit or sensitivity verification, laboratory duplicate procedures, and other pertinent procedures.

9. The instrumentation system shall include a method for controlling coagulant dose, to prevent potential overdosing. Available technologies include flow/turbidity proportional metering, periodic jar testing and metering pump adjustment, and ionic charge measurement controlling the metering pump.

I. ATS Effluent Discharge

1. ATS effluent shall comply with all provisions and prohibitions in this General Permit, specifically the NELs.

2. NELs for discharges from an ATS:

   a. Turbidity of all ATS discharges shall be less than 10 NTU for daily flow-weighted average of all samples and 20 NTU for any single sample.

   b. Residual Chemical shall be < 10% of MATC[7] for the most sensitive species of the chemical used.

[7] The Maximum Allowable Threshold Concentration (MATC) is the allowable concentration of residual, or dissolved, coagulant/flocculant in effluent. The MATC shall be coagulant/flocculant-specific, and based on toxicity testing conducted by an independent, third-party laboratory. The MATC is equal to the geometric mean of the NOEC (No Observed Effect Concentration) and LOEC (Lowest Observed Effect Concentration) Acute and Chronic toxicity results for most sensitive species determined for the specific coagulant. The most sensitive species test shall be used to determine the MATC.

3. If an analytical effluent sampling result exceeds the turbidity NEL (as listed in Table 1), the discharger is in violation of this General Permit and shall electronically file the results in violation within 24-hours of obtaining the results.

4. If ATS effluent is authorized to discharge into a sanitary sewer system, the discharger shall comply with any pre-treatment requirements applicable for that system. The discharger shall include any specific criteria required by the municipality in the ATS Plan.

5. Compliance Storm Event:

   Discharges of storm water from ATS shall comply with applicable NELs (above) unless the storm event causing the discharges is determined after the fact to be equal to or larger than the Compliance Storm Event (expressed in inches of rainfall). The Compliance Storm Event for ATS discharges is the 10 year, 24 hour storm, as determined using these maps:

   http://www.wrcc.dri.edu/pcpnfreq/nca10y24.gif
   http://www.wrcc.dri.edu/pcpnfreq/sca10y24.gif

   This exemption is dependent on the submission of rain gauge data verifying the storm event is equal to or larger than the Compliance Storm.

J. Operation and Maintenance Plan

1. Each Project shall have a site-specific Operation and Maintenance (O&M) Manual covering the procedures required to install, operate and maintain the ATS.[8]

2. The O&M Manual shall only be used in conjunction with appropriate project-specific design specifications that describe the system configuration and operating parameters.

3. The O&M Manual shall have operating manuals for specific pumps, generators, control systems,and other equipment.

K. Sampling and Reporting Quality Assurance/ Quality Check (QA/QC) Plan

4. A project-specific QA/QC Plan shall be developed for each project. The QA/QC Plan shall include at a minimum:

   a. Calibration – Calibration methods and frequencies for all system and field instruments shall be specified.

[8] The manual is typically in a modular format covering generalized procedures for each component that is utilized in a particular system.

b. Method Detection Limits (MDLs) – The methods for determining MDLs shall be specified for each residual coagulant measurement method. Acceptable minimum MDLs for each method, specific to individual coagulants, shall be specified.

c. Laboratory Duplicates – Requirements for monthly laboratory duplicates for residual coagulant analysis shall be specified.

L. Personnel Training

1. Operators shall have training specific to using an ATS and liquid coagulants for storm water discharges in California.

2. The training shall be in the form of a formal class with a certificate and requirements for testing and certificate renewal.

3. Training shall include a minimum of eight hours classroom and 32 hours field training. The course shall cover the following topics:

   a. Coagulation Basics –Chemistry and physical processes

   b. ATS System Design and Operating Principles

   c. ATS Control Systems

   d. Coagulant Selection – Jar testing, dose determination, etc.

   e. Aquatic Safety/Toxicity of Coagulants, proper handling and safety

   f. Monitoring, Sampling, and Analysis

   g. Reporting and Recordkeeping

   h. Emergency Response

M. Active Treatment System (ATS) Monitoring Requirements

Any discharger who deploys an ATS on their site shall conduct the following:

1. Visual Monitoring

   a. A designated responsible person shall be on site daily at all times during treatment operations.

b. Daily on-site visual monitoring of the system for proper performance shall be conducted and recorded in the project data log.

   i. The log shall include the name and phone number of the person responsible for system operation and monitoring.

   ii. The log shall include documentation of the responsible person's training.

2. Operational and Compliance Monitoring

   a. Flow shall be continuously monitored and recorded at not greater than 15-minute intervals for total volume treated and discharged.

   b. Influent and effluent pH must be continuously monitored and recorded at not greater than 15-minute intervals.

   c. Influent and effluent turbidity (expressed in NTU) must be continuously monitored and recorded at not greater than 15-minute intervals.

   d. The type and amount of chemical used for pH adjustment, if any, shall be monitored and recorded.

   e. Dose rate of chemical used in the ATS system (expressed in mg/L) shall be monitored and reported 15-minutes after startup and every 8 hours of operation.

   f. Laboratory duplicates – monthly laboratory duplicates for residual coagulant analysis must be performed and records shall be maintained onsite.

   g. Effluent shall be monitored and recorded for residual chemical/additive levels.

   h. If a residual chemical/additive test does not exist and the ATS is operating in a batch treatment mode of operation refer to the toxicity monitoring requirements below.

3. Toxicity Monitoring

   A discharger operating in batch treatment mode shall perform toxicity testing in accordance with the following:

   a. The discharger shall initiate acute toxicity testing on effluent samples representing effluent from each batch prior to discharge.[9] All bioassays shall be sent to a laboratory certified by the Department of Health Services (DHS)

[9] This requirement only requires that the test be initiated prior to discharge.

Environmental Laboratory Accreditation Program (ELAP). The required field of testing number for Whole Effluent Toxicity (WET) testing is E113.[10]

b. Acute toxicity tests shall be conducted with the following species and protocols. The methods to be used in the acute toxicity testing shall be those outlined for a 96-hour acute test in "Methods for Measuring the Acute Toxicity of Effluents and Receiving Water to Freshwater and Marine Organisms, USEPA-841-R-02-012" for Fathead minnow, *Pimephales promelas or* Rainbow trout *Oncorhynchus mykiss* may be used as a substitute for fathead minnow.

c. All toxicity tests shall meet quality assurance criteria and test acceptability criteria in the most recent versions of the EPA test method for WET testing.[11]

4. Reporting and Recordkeeping

At a minimum, every 30 days a LRP representing the discharger shall access the State Water Boards Storm Water Mulit-Application and Report Tracking system (SMARTS) and electronically upload field data from the ATS. Records must be kept for three years after the project is completed .

5. Non-compliance Reporting

a. Any indications of toxicity or other violations of water quality objectives shall be reported to the appropriate regulatory agency as required by this General Permit.

b. Upon any measurements that exceed water quality standards, the system operator shall immediately notify his supervisor or other responsible parties, who shall notify the Regional Water Board.

c. If any monitoring data exceeds any applicable NEL in this General Permit, the discharger shall electronically submit a NEL Violation Report to the State Water Board within 24 hours after the NEL exceedance has been identified.

i. ATS dischargers shall certify each NEL Violation Report in accordance with the Special Provisions for Construction Activity in this General Permit.

ii. ATS dischargers shall retain an electronic or paper copy of each NEL Violation Report for a minimum of three years after the date the annual report is filed.

iii. ATS dischargers shall include in the NEL Violation Report:

[10] http://www.dhs.ca.gov/ps/ls/elap/pdf/FOT_Desc.pdf.
[11] http://www.epa.gov/waterscience/methods/wet/.

(1) The analytical method(s), method reporting unit(s), and method detection limit(s) of each analytical parameter (analytical results that are less than the method detection limit shall be reported as “less than the method detection limit”);

(2) The date, place, time of sampling, visual observation (inspections), and/or measurements, including precipitation; and

(3) A description of the current onsite BMPs, and the proposed corrective actions taken to manage the NEL exceedance.

iv. Compliance Storm Exemption - In the event that an applicable NEL has been exceeded during a storm event equal to or larger than the Compliance Storm Event, ATS dischargers shall report the on-site rain gauge reading and nearby governmental rain gauge readings for verification.

	A	B	C	D	E	F	G	H	I	J	K	L	M
1	Version 8/17/2011												
2		**Risk Determination Worksheet**											
3													
4			**Step 1**	Determine Sediment Risk via one of the options listed:									
5				1. GIS Map Method - EPA Rainfall Erosivity Calculator & GIS map									
6				2. Individual Method - EPA Rainfall Erosivity Calculator & Individual Data									
7			**Step 2**	Determine Receiving Water Risk via one of the options listed:									
8				1. GIS map of Sediment Sensitive Watersheds provided									
9				2. Site Specific Analysis (support documentation required)									
10			**Step 3**	Determine Combined Risk Level									
11													
12													
13													
14													
15													
16													
17													
18													
19													
20													

	A	B	C
1	**Sediment Risk Factor Worksheet**		**Entry**
2	**A) R Factor**		
3	Analyses of data indicated that when factors other than rainfall are held constant, soil loss is directly proportional to a rainfall factor composed of total storm kinetic energy (E) times the maximum 30-min intensity (I30) (Wischmeier and Smith, 1958). The numerical value of R is the average annual sum of EI30 for storm events during a rainfall record of at least 22 years. "Isoerodent" maps were developed based on R values calculated for more than 1000 locations in the Western U.S. Refer to the link below to determine the R factor for the project site.		
4	http://cfpub.epa.gov/npdes/stormwater/LEW/lewCalculator.cfm		
5	**R Factor Value**		0
6	**B) K Factor (weighted average, by area, for all site soils)**		
7	The soil-erodibility factor K represents: (1) susceptibility of soil or surface material to erosion, (2) transportability of the sediment, and (3) the amount and rate of runoff given a particular rainfall input, as measured under a standard condition Fine-textured soils that are high in clay have low K values (about 0.05 to 0.15) because the particles are resistant to detachment. Coarse-textured soils, such as sandy soils, also have low K values (about 0.05 to 0.2) because of high infiltration resulting in low runoff even though these particles are easily detached. Medium-textured soils, such as a silt loam, have moderate K values (about 0.25 to 0.45) because they are moderately susceptible to particle detachment and they produce runoff at moderate rates. Soils having a high silt content are especially susceptible to erosion and have high K values, which can exceed 0.45 and can be as large as 0.65. Silt-size particles are easily detached and tend to crust, producing high rates and large volumes of runoff. Use Site-specific data must be submitted.		
8	Site-specific K factor guidance		
9	**K Factor Value**		0
10	**C) LS Factor (weighted average, by area, for all slopes)**		
11	The effect of topography on erosion is accounted for by the LS factor, which combines the effects of a hillslope-length factor, L, and a hillslope-gradient factor, S. Generally speaking, as hillslope length and/or hillslope gradient increase, soil loss increases. As hillslope length increases, total soil loss and soil loss per unit area increase due to the progressive accumulation of runoff in the downslope direction. As the hillslope gradient increases, the velocity and erosivity of runoff increases. Use the LS table located in separate tab of this spreadsheet to determine LS factors. Estimate the weighted LS for the site prior to construction.		
12	LS Table		
13	**LS Factor Value**		0
14			
15	**Watershed Erosion Estimate (=RxKxLS) in tons/acre**		0
16	**Site Sediment Risk Factor**		**Low**
17	Low Sediment Risk: < 15 tons/acre		
18	Medium Sediment Risk: >=15 and <75 tons/acre		
19	High Sediment Risk: >= 75 tons/acre		
20			
21			
22			
23	**GIS Map Method:**		
24	**1.** The R factor for the project is calculated using the online calculator at:		
25	http://cfpub.epa.gov/npdes/stormwater/LEW/lewCalculator.cfm		
26			
27	**2.** The K and LS factors may be obtained by accessing the GIS maps located on the State Water Board FTP website at:		
28	ftp://swrcb2a.waterboards.ca.gov/pub/swrcb/dwq/cgp/Risk/		
29			

Receiving Water (RW) Risk Factor Worksheet	Entry	Score
A. Watershed Characteristics	**yes/no**	
A.1. Does the disturbed area discharge (either directly or indirectly) to a **303(d)-listed waterbody impaired by sediment** (For help with impaired waterbodies please visit the link below) or has a **USEPA approved TMDL implementation plan for sediment**?:	**no**	**Low**
http://www.waterboards.ca.gov/water_issues/programs/tmdl/integrated2010.shtml		
OR		
A.2. Does the disturbed area discharge to a waterbody with designated beneficial uses of SPAWN & COLD & MIGRATORY? (For help please review the appropriate Regional Board Basin Plan)		
http://www.waterboards.ca.gov/waterboards_map.shtml		
Region 1 Basin Plan		
Region 2 Basin Plan		
Region 3 Basin Plan		
Region 4 Basin Plan		
Region 5 Basin Plan		
Region 6 Basin Plan		
Region 7 Basin Plan		
Region 8 Basin Plan		
Region 9 Basin Plan		

Combined Risk Level Matrix

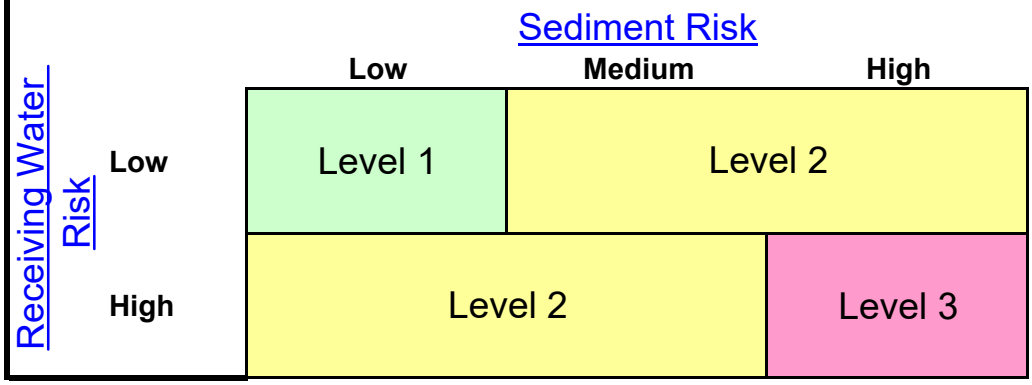

Project Sediment Risk:	**Low**
Project RW Risk:	**Low**
Project Combined Risk:	**Level 1**

Soil Erodibility Factor (K)

The K factor can be determined by using the nomograph method, which requires that a particle size analysis (ASTM D-422) be done to determine the percentages of sand, very fine sand, silt and clay. Use the figure below to determine appropriate K value.

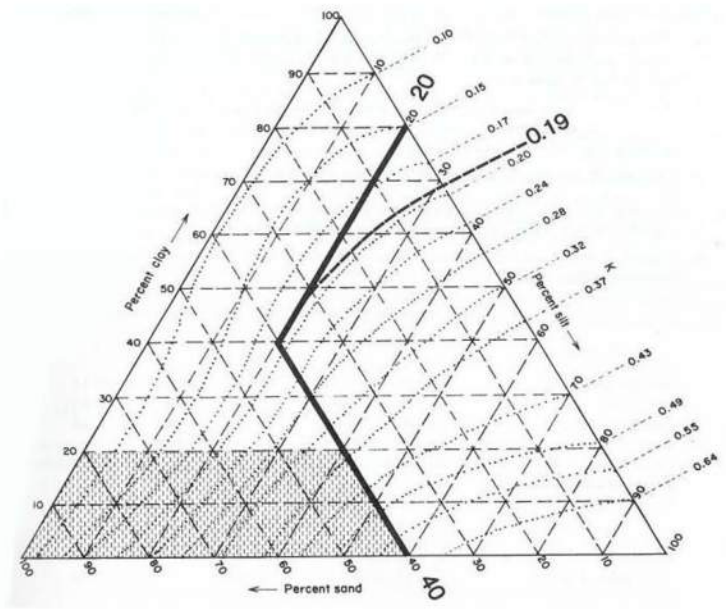

Erickson triangular nomograph used to estimate soil erodibility (K) factor.
The figure above is the USDA nomograph used to determine the K factor for a soil, based on its texture (% silt plus very fine sand, % sand, % organic matter, soil structure, and permeability). *Nomograph from Erickson 1977 as referenced in Goldman et. al., 1986.*

Sheet Flow Length (ft)	Average Watershed Slope (%)																		
	0.2	**0.5**	**1.0**	**2.0**	**3.0**	**4.0**	**5.0**	**6.0**	**8.0**	**10.0**	**12.0**	**14.0**	**16.0**	**20.0**	**25.0**	**30.0**	**40.0**	**50.0**	**60.0**
<3	0.05	0.07	0.09	0.13	0.17	0.20	0.23	0.26	0.32	0.35	0.36	0.38	0.39	0.41	0.45	0.48	0.53	0.58	0.63
6	0.05	0.07	0.09	0.13	0.17	0.20	0.23	0.26	0.32	0.37	0.41	0.45	0.49	0.56	0.64	0.72	0.85	0.97	1.07
9	0.05	0.07	0.09	0.13	0.17	0.20	0.23	0.26	0.32	0.38	0.45	0.51	0.56	0.67	0.80	0.91	1.13	1.31	1.47
12	0.05	0.07	0.09	0.13	0.17	0.20	0.23	0.26	0.32	0.39	0.47	0.55	0.62	0.76	0.93	1.08	1.37	1.62	1.84
15	0.05	0.07	0.09	0.13	0.17	0.20	0.23	0.26	0.32	0.40	0.49	0.58	0.67	0.84	1.04	1.24	1.59	1.91	2.19
25	0.05	0.07	0.10	0.16	0.21	0.26	0.31	0.36	0.45	0.57	0.71	0.85	0.98	1.24	1.56	1.86	2.41	2.91	3.36
50	0.05	0.08	0.13	0.21	0.30	0.38	0.46	0.54	0.70	0.91	1.15	1.40	1.64	2.10	2.67	3.22	4.24	5.16	5.97
75	0.05	0.08	0.14	0.25	0.36	0.47	0.58	0.69	0.91	1.20	1.54	1.87	2.21	2.86	3.67	4.44	5.89	7.20	8.37
100	0.05	0.09	0.15	0.28	0.41	0.55	0.68	0.82	1.10	1.46	1.88	2.31	2.73	3.57	4.59	5.58	7.44	9.13	10.63
150	0.05	0.09	0.17	0.33	0.50	0.68	0.86	1.05	1.43	1.92	2.51	3.09	3.68	4.85	6.30	7.70	10.35	12.75	14.89
200	0.06	0.10	0.18	0.37	0.57	0.79	1.02	1.25	1.72	2.34	3.07	3.81	4.56	6.04	7.88	9.67	13.07	16.16	18.92
250	0.06	0.10	0.19	0.40	0.64	0.89	1.16	1.43	1.99	2.72	3.60	4.48	5.37	7.16	9.38	11.55	15.67	19.42	22.78
300	0.06	0.10	0.20	0.43	0.69	0.98	1.28	1.60	2.24	3.09	4.09	5.11	6.15	8.23	10.81	13.35	18.17	22.57	26.51
400	0.06	0.11	0.22	0.48	0.80	1.14	1.51	1.90	2.70	3.75	5.01	6.30	7.60	10.24	13.53	16.77	22.95	28.60	33.67
600	0.06	0.12	0.24	0.56	0.96	1.42	1.91	2.43	3.52	4.95	6.67	8.45	10.26	13.94	18.57	23.14	31.89	39.95	47.18
800	0.06	0.12	0.26	0.63	1.10	1.65	2.25	2.89	4.24	6.03	8.17	10.40	12.69	17.35	23.24	29.07	40.29	50.63	59.93
1000	0.06	0.13	0.27	0.69	1.23	1.86	2.55	3.30	4.91	7.02	9.57	12.23	14.96	20.57	27.66	34.71	48.29	60.84	72.15

LS Factors for Construction Sites. *Table from Renard et. al., 1997.*

APPENDIX 2:
Post-Construction Water Balance Performance Standard Spreadsheet

The discharger shall submit with their Notice of Intent (NOI) the following information to demonstrate compliance with the New and Re-Development Water Balance Performance Standard.

Map Instructions

The discharger must submit a small-scale topographic map of the site to show the existing contour elevations, pre- and post-construction drainage divides, and the total length of stream in each watershed area. Recommended scales include 1 in. = 20 ft., 1 in. = 30 ft., 1 in. = 40 ft., or 1 in = 50 ft. The suggested contour interval is usually 1 to 5 feet, depending upon the slope of the terrain. The contour interval may be increased on steep slopes. Other contour intervals and scales may be appropriate given the magnitude of land disturbance.

Spreadsheet Instructions

The intent of the spreadsheet is to help dischargers calculate the project-related increase in runoff volume and select impervious area and runoff reduction credits to reduce the project-related increase in runoff volume to pre-project levels.

The discharger has the option of using the spreadsheet (**Appendix 2.1)** or a more sophisticated, watershed process-based model (e.g. Storm Water Management Model, Hydrological Simulation Program Fortran) to determine the project-related increase in runoff volume.

In* Appendix 4.1**, ***you must complete the worksheet for each land use/soil type combination for each project sub-watershed.

Steps 1 through 9 pertain specifically to the Runoff Volume Calculator:

Step 1: Enter the county where the project is located in cell H3.

Step 2: Enter the soil type in cell H6.

Step 3: Enter the existing pervious (dominant) land use type in cell H7.

Step 4: Enter the proposed pervious (dominant) land use type in cell H8.

Step 5: Enter the total project site area in cell H11 or J11.

Step 6: Enter the sub-watershed area in cell H12 or J12.

Step 7: Enter the existing rooftop area in cell H17 or J17, the existing non-rooftop impervious area in cell H18 or J18, the proposed rooftop area in cell H19 or J19, and the proposed non-rooftop impervious area in cell H20 or J20

Step 8: Work through each of the impervious area reduction credits and claim credits where applicable. Volume that cannot be addressed using non-structural practices must be captured in structural practices and approved by the Regional Water Board.

Step 9: Work through each of the impervious volume reduction credits and claim credits where applicable. Volume that cannot be addressed using non-structural practices must be captured in structural practices and approved by the Regional Water Board.

Non-structural Practices Available for Crediting

- ***Porous Pavement***
- ***Tree Planting***
- ***Downspout Disconnection***
- ***Impervious Area Disconnection***
- ***Green Roof***
- ***Stream Buffer***
- ***Vegetated Swales***
- ***Rain Barrels and Cisterns***
- ***Landscaping Soil Quality***

Post-Construction Water Balance Calculator

User may make changes from any cell that is orange or brown in color (similar to the cells to the immediate right). Cells in green are calculated for you.		(Step 1a) If you know the 85th percentile storm event for your location enter it in the box below	(Step 1b) If you can not answer 1a then select the county where the project is located (click on the cell to the right for drop-down): This will determine the average 85th percentile 24 hr. storm event for your site, which will appear under precipitation to left.	*SACRAMENTO*	
			(Step 1c) If you would like a more percise value select the location closest to your site. If you do not recgonize any of these locations, leave this drop-down menu at location. The average value for the County will be used.	SACRAMENTO FAA ARPT	
Project Information			***Runoff Calculations***		
Project Name:	***Optional***		(Step 2) Indicate the Soil Type (dropdown menu to right):	***Group C Soils***	**Low infiltration. Sandy clay loam. Infiltration rate 0.05 to 0.15 inch/hr when wet.**
Waste Discharge Identification (WDID):	***Optional***		(Step 3) Indicate the existing **dominant** non-built land Use Type (dropdown menu to right):	***Wood & Grass: <50% ground cover***	
Date:	***Optional***		(Step 4) Indicate the proposed **dominant** non-built land Use Type (dropdown menu to right):	***Lawn, Grass, or Pasture covering more than 75% of the open space***	
Sub Drainage Area Name (from map):	***Optional***			**Complete Either**	
Runoff Curve Numbers				**Sq Ft** / **Acres**	**Acres**
Existing Pervious Runoff Curve Number		**82**	*(Step 5) Total Project Site Area:*	**5.00**	**5.00**
Proposed Development Pervious Runoff Curve Number		**74**	*(Step 6) Sub-watershed Area:*	**5.00**	**5.00**
Design Storm			*Percent of total project :*	**100%**	
Based on the County you indicated above, we have included the 85 percentile average 24 hr event - P85 (in)^ for your area.	**0.62**	**in**			
The Amount of rainfall needed for runoff to occur (Existing runoff curve number -P from existing RCN (in)^)	**0.44**	**In**	***(Step 7) Sub-watershed Conditions***	**Complete Either**	**Calculated Acres**
P used for calculations (in) (the greater of the above two criteria)	**0.62**	**In**	Sub-watershed Area (acres)	**Sq Ft** / **Acres**	**5.00**
^Available at www.cabmphandbooks.com			Existing Rooftop Impervious Coverage	**0**	**0.00**
			Existing Non-Rooftop Impervious Coverage	**0**	**0.00**
			Proposed Rooftop Impervious Coverage	**0**	**0.00**
			Proposed Non-Rooftop Impervious Coverage	**0**	**0.00**
			Credits	**Acres**	**Square Feet**
			Porous Pavement	**0.00**	**0**
			Tree Planting	**0.00**	**0**
Pre-Project Runoff Volume (cu ft)	**247**	**Cu.Ft.**	Downspout Disconnection	**0.00**	**0**
Project-Related Runoff Volume Increase w/o credits (cu ft)	**0**	**Cu.Ft.**	Impervious Area Disconnection	**0.00**	**0**
			Green Roof	**0.00**	**0**
			Stream Buffer	**0.00**	**0**
Project-Related Volume Increase with Credits (cu ft)	**0**	**Cu.Ft.**	Vegetated Swales	**0.00**	**0**
			Subtotal	**0.00**	**0**
			Subtotal Runoff Volume Reduction Credit	**0 Cu. Ft.**	
You have achieved your minimum requirements			***(Step 9) Impervious Volume Reduction Credits***	**Volume (cubic feet)**	
			Rain Barrels/Cisterns	**0 Cu. Ft.**	
			Soil Quality	**0 Cu. Ft.**	
			Subtotal Runoff Volume Reduction	**0 Cu. Ft.**	
			Total Runoff Volume Reduction Credit	**0 Cu. Ft.**	

Porous Pavement Credit Worksheet

Please fill out a porous pavement credit worksheet for each project sub-watershed.

For the PROPOSED Development:

Proposed Porous Pavement	Runoff Reduction*	Fill in either Acres or SqFt		Equivalent Acres
		In SqFt.	In Acres	
Area of **Brick without Grout** on less than 12 inches of base with at least 20% void space over soil	0.45			0.00
Area of **Brick without Grout** on more than 12 inches of base with at least 20% void space over soil	0.90			0.00
Area of **Cobbles** less than 12 inches deep and over soil	0.30			0.00
Area of **Cobbles** less than 12 inches deep and over soil	0.60			0.00
Area of **Reinforced Grass Pavement** on less than 12 inches of base with at least 20% void space over soil	0.45			0.00
Area of **Reinforced Grass Pavement** on at least 12 inches of base with at least 20% void space over soil	0.90			0.00
Area of **Porous Gravel Pavement** on less than 12 inches of base with at least 20% void space over soil	0.38			0.00
Area of **Porous Gravel Pavement** on at least 12 inches of base with at least 20% void space over soil	0.75			0.00
Area of **Poured Porous Concrete or Asphalt Pavement** with less than 4 inches of gravel base (washed stone)	0.40			0.00
Area of **Poured Porous Concrete or Asphalt Pavement** with 4 to 8 inches of gravel base (washed stone)	0.60			0.00
Area of **Poured Porous Concrete or Asphalt Pavement** with 8 to 12 inches of gravel base (washed stone)	0.80			0.00
Area of **Poured Porous Concrete or Asphalt Pavement** with 12 or more inches of gravel base (washed stone)	1.00			0.00

*=1-Rv**

Return to Calculator

**Using Site Design Techniques to meet Development Standards for Stormwater Quality (BASMAA 2003)

**NCDENR Stormwater BMP Manual (2007)

Tree Planting Credit Worksheet
Please fill out a tree canopy credit worksheet for each project sub-watershed.

Tree Canopy Credit Criteria	Number of Trees Planted	Credit (acres)
Number of proposed evergreen trees to be planted (credit = number of trees x 0.005)*	0	0.00
Number of proposed deciduous trees to be planted (credit = number of trees x 0.0025)*		0.00
	Square feet Under Canopy	
Square feet under an existing tree canopy, that will remain on the property, with an average diameter at 4.5 ft above grade (i.e., diameter at breast height or DBH) is LESS than 12 in diameter.		0.00
Square feet under an existing tree canopy that will remain on the property, with an average diameter at 4.5 ft above grade (i.e., diameter at breast height or DBH) is 12 in diameter or GREATER.		0.00
Please describe below how the project will ensure that these trees will be maintained.		

0

Return to Calculator

* credit amount based on credits from Stormwater Quality Design Manual for the Sacramento and South Placer Regions

Downspout Disconnection Credit Worksheet

Please fill out a downspout disconnection credit worksheet for each project subwatershed. If you answer yes to all questions, all rooftop area draining to each downspout will be subtracted from your proposed rooftop impervious coverage.

Downspout Disconnection Credit Criteria					
Do downspouts and any extensions extend at least six feet from a basement and two feet from a crawl space or concrete slab?				○ Yes	◉ No
Is the area of rooftop connecting to each disconnected downspout 600 square feet or less?				○ Yes	◉ No
Is the roof runoff from the design storm event fully contained in a raised bed or planter box or does it drain as sheet flow to a landscaped area large enough to contain the roof runoff from the design storm event?				○ Yes	◉ No
The Stream Buffer and/or Vegetated Swale credits **will not** be taken in this sub-watershed area?				○ Yes	◉ No
Percentage of existing	0.00	Acres	of rooftop surface has disconnected downspouts		
Percentage of the proposed	0.00	Acres	of rooftop surface has disconnected downspouts	50	
				Return to Calculator	

Impervious Area Disconnection Credit Worksheet

Please fill out an impervious area disconnection credit worksheet for each project sub-watershed. If you answer yes to all questions, all non-rooftop impervious surface area will be subtracted from your proposed non-rooftop impervious coverage.

Non-Rooftop Disconnection Credit Criteria	Response
Is the maximum contributing impervious flow path length less than 75 feet or, if equal or greater than 75 feet, is a storage device (e.g. French drain, bioretention area, gravel trench) implemented to achieve the required disconnection length?	◉ Yes ○ No
Is the impervious area to any one discharge location less than 5,000 square feet?	◉ Yes ○ No
The Stream Buffer credit **will not** be taken in this sub-watershed area?	◉ Yes ○ No

Percentage of existing	0.00	Acres non-rooftop surface area disconnected	
Percentage of the proposed	0.00	Acres non-rooftop surface area disconnected	70

Return to Calculator

Green Roof Credit Worksheet

Please fill out a greenroof credit worksheet for each project sub-watershed. If you answer yes to all questions, 70% of the greenroof area will be subtracted from your proposed rooftop impervious coverage.

Green Roof Credit Criteria				Response
Is the roof slope less than 15% or does it have a grid to hold the substrate in place until it forms a thick vegetation mat?				◉ Yes ○ No
Has a professional engineer assessed the necessary load reserves and designed a roof structure to meet state and local codes?				◉ Yes ○ No
Is the irrigation needed for plant establishment and/or to sustain the green roof during extended dry periods, is the source from stored, recycled, reclaimed, or reused water?				◉ Yes ○ No
Percentage of existing	0.00	Acres	rooftop surface area in greenroof	
Percentage of the proposed	0.00	Acres	rooftop surface area in greenroof	

Return to Calculator

Stream Buffer Credit Worksheet

Please fill out a stream buffer credit worksheet for each project sub-watershed. If you answer yes to all questions, you may subtract all impervious surface draining to each stream buffer that has not been addressed using the Downspout and/or Impervious Area Disconnection credits.

Stream Buffer Credit Criteria				Response
Does runoff enter the floodprone width* or within 500 feet (whichever is larger) of a stream channel as sheet flow**?				○ Yes ◉ No
Is the contributing overland slope 5% or less, or if greater than 5%, is a level spreader used?				○ Yes ◉ No
Is the buffer area protected from vehicle or other traffic barriers to reduce compaction?				○ Yes ◉ No
Will the stream buffer be maintained in an ungraded and uncompacted condition and will the vegetation be maintained in a natural condition?				○ Yes ◉ No
Percentage of existing	0.00	Acres	impervious surface area draining into a stream buffer:	
Percentage of the proposed	0.00	Acres	impervious surface area that will drain into a stream buffer:	
Please describe below how the project will ensure that the buffer areas will remain in ungraded and uncompacted condition and that the vegetation will be maintained in a natural condition.				

Return to Calculator

* floodprone width is the width at twice the bankfull depth.
** the maximum contributing length shall be 75 feet for impervious area

Vegetated Swale Credit Worksheet

Please fill out a vegetated swale worksheet for each project subwatershed. If you answer yes to all questions, you may subtract all impervious surface draining to each stream buffer that has not been addressed using the Downspout Disconnection credit.

Vegetated Swale Credit Criteria

Have all vegetated swales been designed in accordance with Treatment Control BMP 30 (TC-30 - Vegetated Swale) from the California Stormwater BMP Handbook, New Development and Redevelopment (available at www.cabmphandbooks.com)?	○ Yes ◉ No
Is the maximum flow velocity for runoff from the design storm event less than or equal to 1.0 foot per second?	○ Yes ◉ No

Percentage of existing	0.00	Acres of impervious area draining to a vegetated swale	
Percentage of the proposed	0.00	Acres of impervious area draining to a vegetated swale	

Return to Calculator

Rain Barrel/Cistern Credit Worksheet

Please fill out a rain barrel/cistern worksheet for each project sub-watershed.

Rain Barrel/Cistern Credit Criteria	Response
Total number of rain barrel(s)/cisterns	
Average capacity of rain barrel(s)/cistern(s) (in gallons)	
Total capacity rain barrel(s)/cistern(s) (in cu ft) [1]	0

[1] accounts for 10% loss

Return to Calculator

Please fill out a soil quality worksheet for each project sub-watershed.

	Response
Will the landscaped area be lined with an impervious membrane?	
Will the soils used for landscaping meet the ideal bulk densities listed in Table 1 below? [1]	○ Yes ◉ No
If you answered yes to the question above, and you know the area-weighted bulk density within the top 12 inches for soils used for landscaping (in g/cm^3)* , fill in the cell to the right and skip to cell G11. If not select from the drop-down menu in G10.	1.3
If you answered yes to the question above, but you do not know the exact bulk density, which of the soil types in the drop down menu to the right best describes the top 12 inches for soils used for landscaping (in g/cm^3).	Sandy loams, loams
What is the average depth of your landscaped soil media meeting the above criteria (inches)?	12
What is the total area of the landscaped areas meeting the above criteria (in acres)?	2.97

Return to Calculator

Table 1

Sands, loamy sands	<1.6
Sandy loams, loams	<1.4
Sandy clay loams, loams, clay loams	<1.4
Silts, silt loams	<1.3
Silt loams, silty clay loams	<1.1
Sandy clays, silty clays, some clay loams (35-45% clay)	<1.1
Clays (>45% clay)	<1.1

Porosity (%) 50.94%

Mineral grains in many soils are mainly quartz and feldspar, so 2.65 a good average for particle density. To determine percent porosity, use the formula: Porosity (%) = (1-Bulk Density/2.65) X 100

[1] USDA NRCS. "Soil Quality Urban Technical Note No.2-Urban Soil Compaction". March 2000. http://soils.usda.gov/sqi/management/files/sq_utn_2.pdf

* To determine how to calculate density see: http://www.globe.gov/tctg/bulkden.pdf?sectionID=94

APPENDIX 3
Bioassessment Monitoring Guidelines

Bioassessment monitoring is required for projects that meet all of the following criteria:

1. The project is rated Risk Level 3 or LUP Type 3
2. The project directly discharges runoff to a freshwater wadeable stream (or streams) that is either: (a) listed by the State Water Board or USEPA as impaired due to sediment, and/or (b) tributary to any downstream water body that is listed for sediment; and/or have the beneficial use SPAWN & COLD & MIGRATORY
3. Total project-related ground disturbance exceeds 30 acres.

For all such projects, the discharger shall conduct bioassessment monitoring, as described in this section, to assess the effect of the project on the biological integrity of receiving waters.
Bioassessment shall include:

1. The collection and reporting of specified instream biological data
2. The collection and reporting of specified instream physical habitat data

<u>Bioassessment Exception</u>
If a site qualifies for bioassessment, but construction commences out of an index period for the site location, the discharger shall:

1. Receive Regional Water Board approval for the sampling exception
2. Make a check payable to: Cal State Chico Foundation (SWAMP Bank Account) or San Jose State Foundation (SWAMP Bank Account) and include the WDID# on the check for the amount calculated for the exempted project.
3. Send a copy of the check to the Regional Water Board office for the site's region
4. Invest **7,500.00 X The number of samples required** into the SWAMP program as compensation (upon Regional Water Board approval).
5. Conduct bioassessment monitoring, as described in Appendix 4
6. Include the collection and reporting of specified instream biological data and physical habitat
7. Use the bioassessment sample collection and Quality Assurance & Quality Control (QA/QC) protocols developed by the State of California's Surface Water Ambient Monitoring Program (SWAMP)

<u>Site Locations and Frequency</u>
Macroinvertebrate samples shall be collected both before ground disturbance is initiated and after the project is completed. The "after" sample(s) shall be collected after at least one winter season resulting in surface runoff has transpired after project-related ground disturbance has ceased. "Before" and "after" samples shall be collected both upstream and downstream of the project's

discharge. Upstream samples should be taken immediately before the sites outfall and downstream samples should be taken immediately after the outfall (when safe to collect the samples). Samples should be collected for each freshwater wadeable stream that is listed as impaired due to sediment, or tributary to a water body that is listed for sediment. Habitat assessment data shall be collected concurrently with all required macroinvertebrate samples.

Index Period (Timing of Sample Collection)
Macroinvertebrate sampling shall be conducted during the time of year (i.e., the "index period") most appropriate for bioassessment sampling, depending on ecoregion. This map is posted on the State Water Board's Website: http://www.waterboards.ca.gov/water_issues/programs/stormwater/construction.shtml

Field Methods for Macroinvertebrate Collections
In collecting macroinvertebrate samples, the discharger shall use the "Reachwide Benthos (Multi-habitat) Procedure" specified in *Standard Operating Procedures for Collecting Benthic Macroinvertebrate Samples and Associated Physical and Chemical Data for Ambient Bioassessments in California* (Ode 2007).[1]

Physical - Habitat Assessment Methods
The discharger shall conduct, concurrently with all required macroinvertebrate collections, the "Full" suite of physical habitat characterization measurements as specified in *Standard Operating Procedures for Collecting Benthic Macroinvertebrate Samples and Associated Physical and Chemical Data for Ambient Bioassessments in California* (Ode 2007), and as summarized in the Surface Water Ambient Monitoring Program's *Stream Habitat Characterization Form — Full Version*.

Laboratory Methods
Macroinvertebrates shall be identified and classified according to the Standard Taxonomic Effort (STE) Level I of the Southwestern Association of Freshwater Invertebrate Taxonomists (SAFIT),[2] and using a fixed-count of 600 organisms per sample.

Quality Assurance
The discharger or its consultant(s) shall have and follow a quality assurance (QA) plan that covers the required bioassessment monitoring. The QA plan shall include, or be supplemented to include, a specific requirement for external QA checks (i.e., verification of taxonomic identifications and correction of data where

[1] This document is available on the Internet at: ~~http://www.swrcb.ca.gov/swamp/docs/phab_sopr6.pdf~~. http://swamp.mpsl.mlml.calstate.edu/wp-content/uploads/2009/04/swamp_sop_bioassessment_collection_020107.pdf.

[2] The current SAFIT STEs (28 November 2006) list requirements for both the Level I and Level II taxonomic effort, and are located at: ~~http://www.swrcb.ca.gov/swamp/docs/safit/ste_list.pdf~~ http://www.safit.org/Docs/ste_list.pdf. When new editions are published by SAFIT, they will supersede all previous editions. All editions will be posted at the State Water Board's SWAMP website.

errors are identified). External QA checks shall be performed on one of the discharger's macroinvertebrate samples collected per calendar year, or ten percent of the samples per year (whichever is greater). QA samples shall be randomly selected. The external QA checks shall be paid for by the discharger, and performed by the California Department of Fish and Game's Aquatic Bioassessment Laboratory. An alternate laboratory with equivalent or better expertise and performance may be used if approved in writing by State Water Board staff.

Sample Preservation and Archiving

The original sample material shall be stored in 70 percent ethanol and retained by the discharger until: 1) all QA analyses specified herein and in the relevant QA plan are completed; and 2) any data corrections and/or re-analyses recommended by the external QA laboratory have been implemented. The remaining subsampled material shall be stored in 70 percent ethanol and retained until completeness checks have been performed according to the relevant QA plan. The identified organisms shall be stored in 70 percent ethanol, in separate glass vials for each final ID taxon. (For example, a sample with 45 identified taxa would be archived in a minimum of 45 vials, each containing all individuals of the identified taxon.) Each of the vials containing identified organisms shall be labeled with taxonomic information (i.e., taxon name, organism count) and collection information (i.e., site name/site code, waterbody name, date collected, method of collection). The identified organisms shall be archived (i.e., retained) by the discharger for a period of not less than three years from the date that all QA steps are completed, and shall be checked at least once per year and "topped off" with ethanol to prevent desiccation. The identified organisms shall be relinquished to the State Water Board upon request by any State Water Board staff.

Data Submittal

The macroinvertebrate results (i.e., taxonomic identifications consistent with the specified SAFIT STEs, and number of organisms within each taxa) shall be submitted to the State Water Board in electronic format. The State Water Board's Surface Water Ambient Monitoring Program (SWAMP) is currently developing standardized formats for reporting bioassessment data. All bioassessment data collected after those formats become available shall be submitted using the SWAMP formats. Until those formats are available, the biological data shall be submitted in MS-Excel (or equivalent) format.[3]

The physical/habitat data shall be reported using the standard format titled *SWAMP Stream Habitat Characterization Form — Full Version*.[4]

[3] Any version of Excel, 2000 or later, may be used.
[4] Available at: http://www.waterboards.ca.gov/water_issues/programs/swamp/docs/reports/fieldforms_fullversion052908.pdf

Invasive Species Prevention

In conducting the required bioassessment monitoring, the discharger and its consultants shall take precautions to prevent the introduction or spread of aquatic invasive species. At minimum, the discharger and its consultants shall follow the recommendations of the California Department of Fish and Game to minimize the introduction or spread of the New Zealand mudsnail.[5]

[5] Instructions for controlling the spread of NZ mudsnails, including decontamination methods, can be found at: http://www.dfg.ca.gov/invasives/mudsnail/
More information on AIS More information on AIS
http://www.waterboards.ca.gov/water_issues/programs/swamp/ais/

Appendix 4 Non Sediment TMDLs

Region 1 Lost River-DIN and CBOD

Region 1 Source: Cal Trans Construction TMDL Completion Date: 12 30 2008 TMDL Type: River, Lake Watershed Area= 2996 mi^2	**Pollutant Stressors/WLA**	
	Dissolved inorganic nitrogen (DIN) (metric tons/yr)	**Carbonaceous biochemical oxygen demand (CBOD) (metric tons/yr)**
Lost River from the Oregon border to Tule Lake	.1	.2
Tule Lake Refuge	.1	.2
Lower Klamath Refuge	.1	.2

Region 2 San Francisco Bay-Mercury

Region 2 Source:Non-Urban Stormwater Runoff TMDL Type: Bay	**Name**	**Pollutant Stressor/WLA**	**TMDL Completion Date**
	San Francisco Bay	Mercury 25 kg/year	08 09 2006

Region 4 Ballona Creek-Metals and Selenium

Region 4 Source: NPDES General Construction TMDL Completion Date: 12 22 2005 TMDL Type: Creek	**Pollutant Stressors/WLA**							
	Copper (Cu)		**Lead (Pb)**		**Selenium (Se)**		**Zinc (Zn)**	
	g/day	g/day/acre	g/day	g/day/acre	g/day	g/day/acre	g/day	g/day/acre
Ballona Creek	4.94E-07 x Daily storm volume (L)	2.20E-10 x Daily storm volume (L)	1.62E-06 x Daily storm volume (L)	7.20E-10 x Daily storm volume (L)	1.37E-07 x Daily storm volume (L)	6.10E-11 x Daily storm volume (L)	3.27E-06 x Daily storm volume (L)	1.45E-09 x Daily storm volume (L)

General Construction Storm Water Permits:
Waste load allocations will be incorporated into the State Board general permit upon renewal or into a watershed-specific general permit developed by the Regional Board.

- Dry-weather Implementation Non-storm water flows authorized by the General Permit for Storm Water Discharges Associated with Construction Activity (Water Quality Order No. 99-08 DWQ), or any successor order, are exempt from the dry-weather waste load allocation equal to zero as long as they comply with the provisions of sections C.3 and A.9 of the Order No. 99-08 DWQ, which state that these authorized non-storm discharges shall be:
  (1) infeasible to eliminate
  (2) comply with BMPs as described in the Storm Water Pollution Prevention Plan prepared by the permittee, and
  (3) not cause or contribute to a violation of water quality standards, or comparable provisions in any successor order.
  Unauthorized non-storm water flows are already prohibited by Order No. 99-08 DWQ.
- Wet-weather Implementation Within seven years of the effective date of the TMDL, the construction industry will submit the results of BMP effectiveness studies to determine BMPs that will achieve compliance with the final waste load allocations assigned to construction storm water permittees.
- Regional Board staff will bring the recommended BMPs before the Regional Board for consideration within eight years of the effective date of the TMDL.
- General construction storm water permittees will be considered in compliance with final waste load allocations if they implement these Regional Board approved BMPs. All permittees must implement the approved BMPs within nine years of the effective date of the TMDL. If no effectiveness studies are conducted and no BMPs are approved by the Regional Board within eight years of the effective date of the TMDL, each general construction storm water permit holder will be subject to site-specific BMPs and monitoring requirements to demonstrate compliance with final waste load allocations.

Region 4 Calleaguas Creek-OC Pesticides, PCBs, and Siltation

Interim Requirements

Region 4 Calleaguas Creek Source: Minor NPDES point sources/WDRs TMDL Completion Date: 3 14 2006 TMDL Type:Creek	**Pollutant Stressor**	**WLA Daily Max (µg/L)**	**WLA Monthly Ave (µg/L)**
	Chlordane	1.2	0.59
	4,4-DDD	1.7	0.84
	4,4-DDE	1.2	0.59
	4,4-DDT	1.2	0.59
	Dieldrin	0.28	0.14
	PCB’s	0.34	0.17
	Toxaphene	0.33	0.16

Final WLA (ng/g)							
Region 4 Calleaguas Creek Source: Stormwater Permittees TMDL Completion Date: 3 14 2006 TMDL Type:Creek	Chlordane	4,4-DDD	4,4-DDE	4,4-DDT	Dieldrin	PCB's	Toxaphene
Mugu Lagoon*	3.3	2.0	2.2	0.3	4.3	180.0	360.0
Callegaus Creek	3.3	2.0	1.4	0.3	0.2	120.0	0.6
Revolon Slough (SW)*	0.9	2.0	1.4	0.3	0.1	130.0	1.0
Arroyo Las posas(SW)*	3.3	2.0	1.4	0.3	0.2	120.0	0.6
Arroyo Simi	3.3	2.0	1.4	0.3	0.2	120.0	0.6
Conejo Creek	3.3	2.0	1.4	0.3	0.2	120.0	0.6
Interim Requirements (ng/g)							
Mugu Lagoon*	25.0	69.0	300.0	39.0	19.0	180.	22900.0
Callegaus Creek	17.0	66.0	470.0	110.0	3.0	3800.0	260.0
Revolon Slough (SW)*	48.0	400.0	1600.0	690.0	5.7	7600.0	790.0
Arroyo Las posas(SW)*	3.3	290.0	950.0	670.0	1.1	25700.0	230.0
Arroyo Simi	3.3	14.0	170.0	25.0	1.1	25700.0	230.0
Conejo Creek	3.4	5.3	20.0	2.0	3.0	3800.0	260.0

*(SW)=Subwatershed

*Mugu Lagoon includes Duck pond/Agricultural Drain/Mugu/Oxnard Drain #2

Compliance with sediment based WLAs is measured as an instream annual average at the base of each subwatershed where the discharges are located.

Region 4 Calleguas Creek-Salts

Final Dry Weather Pollutant WLA (mg/L)					
Region 4 Calleaguas Creek Source Permitted Stormwater Dischargers TMDL Completion Date: 12 2 2008 TMDL Type:Creek	**Critical Condition Flow Rate (mgd)**	**Chloride (lb/day)**	**TDS (lb/day)**	**Sulfate (lb/day)**	**Boron (lb/day)**
Simi	1.39	1738.0	9849.0	2897.0	12.0
Las Posas	0.13	157.0	887.0	261.0	N/A
Conejo	1.26	1576.0	8931.0	2627.0	N/A

Camarillo	0.06	72.0	406.0	119.0	N/A
Pleasant Valley (Calleguas)	0.12	150.0	850.0	250.0	N/A
Pleasant Valley (Revolon)	0.25	314.0	1778.0	523.0	2.0

Dry Weather Interim Pollutant WLA (mg/L)				
	Chloride (mg/L)	**TDS (mg/L)**	**Sulfate (mg/L)**	**Boron (mg/L)**
Simi	230.0	1720.0	1289.0	1.3
Las Posas	230.0	1720.0	1289.0	1.3
Conejo	230.0	1720.0	1289.0	1.3
Camarillo	230.0	1720.0	1289.0	1.3
Pleasant Valley (Calleguas)	230.0	1720.0	1289.0	1.3
Pleasant Valley (Revolon)	230.0	1720.0	1289.0	1.3

- General Construction permittees are assigned a dry weather wasteload allocation equal to the average dry weather critical condition flow rate multiplied by the numeric target for each constituent. Waste load allocations apply in the receiving water at the base of each subwatershed. Dry weather allocations apply when instream flow rates are below the 86th percentile flow and there has been no measurable precipitation in the previous 24 hours.
- Because wet weather flows transport a large mass of salts at low concentrations, these dischargers meet water quality objectives during wet weather.
- Interim limits are assigned for dry weather discharges from areas covered by NPDES stormwater permits to allow time to implement appropriate actions. The interim limits are assigned as concentration based receiving water limits set to the 95th percentile of the discharger data as a monthly average limit except for chloride. The 95th percentile for chloride was 267 mg/L which is higher than the recommended criteria set forth in the Basin Plan for protection of sensitive beneficial uses including aquatic life. Therefore, the interim limit for chloride for Permitted Stormwater Dischargers is set equal to 230 mg/L to ensure protection of sensitive beneficial uses in the Calleguas Creek watershed.

Region 4 San Gabriel River and Tributaries-Metals and Selenium

Region 4 San Gabriel River and Tributaries Source: Construction Stormwater Dischargers TMDL Completion Date: 3 2007 TMDL Type: Creek	**Pollutant Stressor**	**Wet weather Allocations**	**Dry Weather Allocations**	**% of Watershed**

San Gabriel Reach 2	Lead (Pb)	0.7% * 166 µg/l * Daily Storm Vol	N/A	0.7%
San Gabriel Reach 2	Lead (Pb) Mass based	0.8 kg/d	N/A	0.7%
Coyote Creek	Copper (Cu)	0.285 kg/d	0	5.0%
Coyote Creek	Lead (Pb)	1.70 kg/d	N/A	5.0%
Coyote Creek	Zinc (Zn)	2.4 kg/d	N/A	5.0%
San Jose Creek Reach 1 and 2	Selenium	5 µg/L	5 µg/L	5.0%

Wet-weather allocations for lead in San Gabriel River Reach 2. Concentration-based allocations apply to non-stormwater NPDES discharges. Stormwater allocations are expressed as a percent of load duration curve. Mass-based values presented in table are based on a flow of 260 cfs (daily storm volume = 6.4 $x10^{8}$ liters).

There are 1555 acres of water in the entire watershed, 37.4 acres of water in the Reach 1 subwatershed (2.4%), and 269 acres in the Coyote Creek subwatershed (17%).

General Construction Storm Water Permits

Waste load allocations for the general construction storm water permits may be incorporated into the State Board general permit upon renewal or into a watershed-specific general permit developed by the Regional Board. An estimate of direct atmospheric deposition is developed based on the percent area of surface water in the watershed. Approximately 0.4% of the watershed area draining to San Gabriel River Reach 2 is comprised of water and approximately 0.2% of the watershed area draining to Coyote Creek is comprised of water.

Region 4 The Harbor Beaches of Ventura County-Bacteria

The TMDL has a multi-part numeric target based on the bacteriological water quality objectives for marine water to protect the water contact recreation use. These targets are the most appropriate indicators of public health risk in recreational waters. Bacteriological objectives are set forth in Chapter 3 of the Basin Plan. The objectives are based on four bacteria indicators and include both geometric mean limits and single sample limits. The Basin Plan objectives that serve as the numeric targets for this TMDL are:

The General NPDES Construction permit is seen as a minor contributor and is given no allocation

General NPDES permits, individual NPDES permits, the Statewide Industrial Storm Water General Permit, the Statewide Construction Activity Storm Water General Permit, and WDR permittees in the Channel Islands Harbor subwatershed are assigned WLAs of zero (0) days of allowable exceedances for all three time periods and for the single sample limits and the rolling 30-day geometric mean. Any future enrollees under a general NPDES permit, individual NPDES permit, the Statewide Industrial Storm Water General Permit, the Statewide Construction Activity Storm Water General Permit, and WDR will also be subject to a WLA of zero (0) days of allowable exceedances.

Region 4 Resolution No. 03-009 Los Angeles River and Tributaries-Nutrients

Minor Point Sources
Waste loads are allocated to minor point sources enrolled under NPDES or WDR permits including but not limited to Tapia WRP, Whittier Narrows WRP, Los Angeles Zoo WRP, industrial and construction stormwater, and municipal storm water and urban runoff from municipal separate storm sewer systems (MS4s)

Region 4 Minor Point Sources for NPDES/WDR Permits TMDL Completion Date: 7 10 2003 TMDL Type: River	Pollutant Stressor/WLA				
	Total Ammonia (NH_3)		**Nitrate-nitrogen (NO_3-N)**	**Nitrite-nitrogen (NO_2-N)**	**NO_3-N + NO_3-N**
	1 Hr Ave mg/l	30 Day Ave mg/l	30 Day Ave mg/l		30 Day Ave mg/l
LA River Above Los Angeles-Glendale WRP (LAG)	4.7	1.6	8.0	1.0	8.0
LA River Below LAG	8.7	2.4	8.0	1.0	8.0
Los Angeles Tributaries	10.1	2.3	8.0	1.0	8.0

Malibu Creek Attachment A to Resolution No. 2004-019R-Bacteria

12 13 2004 The WLAs for permittees under the NPDES General Stormwater Construction Permit are zero (0) days of allowable exceedances for all three time periods and for the single sample limits and the rolling 30-day geometric mean.

Region 4 Marina del Rey Harbor, Mothers' Beach and Back Basins

Attachment A to Resolution No. 2003-012-Bacteria

8 7 2003 As discussed in "Source Analysis", discharges from general NPDES permits, general industrial storm water permits and general construction storm water permits are not expected to be a significant source of bacteria. Therefore, the WLAs for these discharges are zero (0) days of allowable exceedances for all three time periods and for the single sample limits and the rolling 30-day geometric mean. Any future enrollees under a general NPDES permit, general industrial storm water permit or general construction storm water permit within the MdR Watershed will also be subject to a WLA of zero days of allowable exceedances.

Region 4 San Gabriel River and Tributaries-Metals and Selenium

Dry Weather Selenium WLA
A zero WLA is assigned to the industrial and construction stormwater permits during dry weather. Non-storm water discharges are already prohibited or restricted by existing general permits.

Region 4 General Construction Permittees TMDL Completion Date: 7 13 2006 TMDL Type: River	**Total Recoverable Metals (kg/day)**		
	Copper (Cu) Kg/day	**Lead (Pb) Kg/day**	**Zinc (Zn) Kg/day**
San Gabriel River Reach 2 and upstream reaches/tributaries	**XXXX**	Daily storm volume x 1.24 µg/L	**XXXX**
Coyote Creek and Tributaries	Daily storm volume x 0.7 µg/L	Daily storm volume x 4.3 µg/L	Daily storm volume x 6.2 µg/L

Each enrollee under the general construction stormwater permit receives a WLA on a per acre basis

Region 4 General Construction Permittees TMDL Completion Date: 7 13 2006 TMDL Type: River	**Total Recoverable Metals (kg/day/acre)**		
	Copper (Cu) Kg/acre/day	**Lead (Pb) Kg/acre/day**	**Zinc (Zn) Kg/acre/day**
San Gabriel River Reach 2 and upstream reaches/tributaries	**XXXX**	Daily storm volume x 0.56 µg/L	**XXXX**

Coyote Creek and Tributaries	Daily storm volume x 0.12 µg/L	Daily storm volume x 0.70 µg/L	Daily storm volume x 1.01 µg/L

For the general industrial and construction storm water permits, the daily storm volume is measured at USGS station 11085000 for discharges to Reach 2 and above and at LACDPW flow gauge station F354-R for discharges to Coyote Creek.

General construction storm water permits
WLAs will be incorporated into the State Board general permit upon renewal or into a watershed-specific general permit developed by the Regional Board.

Dry-weather implementation
Non-storm water flows authorized by the General Permit for Storm Water Discharges Associated with Construction Activity (NPDES Permit No. CAS000002), or any successor permit, are exempt from the dry-weather WLA equal to zero as long as they comply with the provisions of sections C.3.and A.9 of the Order No. 99-08 DWQ, which state that these authorized non-storm discharges shall be (1) infeasible to eliminate (2) comply with BMPs as described in the Storm Water Pollution Prevention Plan prepared by the permittee, and (3) not cause or contribute to a violation of water quality standards, or comparable provisions in any successor order. Unauthorized non-storm water flows are already prohibited by Permit No. CAS000002.

Upon permit issuance, renewal, or re-opener
Non-storm water flows not authorized by Order No. 99-08 DWQ, or any successor order, shall achieve dry-weather WLAs. WLAs shall be expressed as NPDES water quality-based effluent limitations specified in accordance with federal regulations and state policy on water quality control. Effluent limitations may be expressed as permit conditions, such as the installation, maintenance, and monitoring of Regional Board-approved BMPs.

Six years from the effective date of the TMDL
The construction industry will submit the results of wet-weather BMP effectiveness studies to the Los Angeles Regional Board for consideration. In the event that no effectiveness studies are conducted and no BMPs are approved, permittees shall be subject to site-specific BMPs and monitoring to demonstrate BMP effectiveness.

Seven years from the effective date of the TMDL
The Los Angeles Regional Board will consider results of the wet weather BMP effectiveness studies and consider approval of BMPs.

Eight years from the effective date of the TMDL
All general construction storm water permittees shall implement Regional Board-approved BMPs.

Total Maximum Daily Loads (TMDLs) for San Diego Creek,
Upper and Lower Newport Bay, Orange County, California

Region 8 NPDES Construction Permit TMDL Completion Date: 1 24 1995 TMDL Type: River. Cr, Bay	Organochlorine Compounds							
	Total DDT		**Chlordane**		**Total PCBs**		**Toxaphene**	
	g/day	g/yr	g/day	g/yr	g/day	g/yr	g/day	g/yr
San Diego Creek	.27	99.8	**.18***	**64.3***	**.09***	**31.5***	.004	1.5
Upper Newport Bay	.11	40.3	.06	23.4	.06	23.2	**X**	**X**
Lower Newport Bay	.04	14.9	.02	8.6	.17	60.7	**X**	**X**

*Red= Informational WLA only, not for enforcement purposes

Organochlorine Compounds TMDLs Implementation Tasks and Schedule

Regional Board staff shall develop a SWPPP Improvement Program that identifies the Regional Board's expectations with respect to the content of SWPPPs, including documentation regarding the selection and implementation of BMPs, and a sampling and analysis plan. The Improvement Program shall include specific guidance regarding the development and implementation of monitoring plans, including the constituents to be monitored, sampling frequency and analytical protocols. The SWPPP Improvement Program shall be completed by (*the date of OAL approval of this BPA*). ***No later than two months*** from completion of the Improvement Program, Board staff shall assure that the requirements of the Program are communicated to interested parties, including dischargers with existing authorizations under the General Construction Permit. Existing, authorized dischargers shall revise their project SWPPPs as needed to address the Program requirements as soon as possible but ***no later than (three months of completion of the SWPPP Improvement Program)***. Applicable SWPPPs that do not adequately address the Program requirements shall be considered inadequate and enforcement by the Regional Board shall proceed accordingly. The Caltrans and Orange County MS4 permits shall be revised as needed to assure that the permittees communicate the Regional Board's SWPPP expectations, based on the SWPPP Improvement Program, with the Standard Conditions of Approval.

Appendix 4 Sediment TMDLs

Implemented Sediment TMDLs in California. Construction was listed as a source in all fo these TMDLs in relation to road construction. Although construction was mentioned as a source, it was not given a specific allocation amount. The closest allocation amount would be for the road activity management WLA. **Implementation Phase** – Adoption process by the Regional Board, the State Water Resources Control Board, the Office of Administrative Law, and the US Environmental Protection Agency completed and TMDL being implemented.

A. Region	**Type**	**Name**	**Pollutant Stressor**	**Potential Sources**	**TMDL Completion Date**	**Watershed Acres**	**WLA** tons mi^2 yr
1 R1.epa.albionfinaltmdl	R	Albion River	Sedimentation	Road Construction	2001	43 acres	See A (table 6)

B Region	**Type**	**Name**	**Pollutant Stressor**	**Potential Sources**	**TMDL Completion Date**	**Watershed Acres**	**WLA** tons mi^2 yr
1 R1.epa.EelR-middle.mainSed.temp	R	Middle Main Eel River and Tributaries (from Dos Rios to the South Fork)	Sedimentation	Road Construction	2005-2006	521 mi^2	100

C Region	**Type**	**Name**	**Pollutant Stressor**	**Potential Sources**	**TMDL Completion Date**	**Watershed Acres**	**WLA** tons mi^2 yr
1 R1.epa.EelRsouth.sed.temp	R	South Fork Eel River	Sedimentation	Road Construction	12 1999	See chart	473

D Region	**Type**	**Name**	**Pollutant Stressor**	**Potential Sources**	**TMDL Completion Date**	**Watershed Acres**	**WLA** tons mi^2 yr
1 R1.epa.bigfinaltmdl	R	Big River	Sedimentation	Road Construction	12 2001	181 mi^2 watershed drainage	TMDL = loading capacity = nonpoint sources + background =

							393 t mi2 yr

E Region	**Type**	**Name**	**Pollutant Stressor**	**Potential Sources**	**TMDL Completion Date**	**Watershed Acres**	**WLA** tons mi^2 yr
1 R1.epa.EelR-lower.Sed.temp-121807-signed	R	Lower Eel River	Sedimentation	Road Construction	12 2007	300 square-mile watershed	898

F Region	**Type**	**Name**	**Pollutant Stressor**	**Potential Sources**	**TMDL Completion Date**	**Watershed Acres**	**WLA** tons mi^2 yr
1 R1.epa.EelR-middle.Sed.temp-	R	Middle Fork Eel River	Sedimentation	Road Construction	12 2003	753 mi^2 (approx. 482,000 acres)	82

G Region	**Type**	**Name**	**Pollutant Stressor**	**Potential Sources**	**TMDL Completion Date**	**Watershed Acres** Mi^2	**WLA** tons mi^2 yr
1 R1.epa.EelRnorth-Sed.temp.final-121807-signed	R	North Fork Eel River	Sedimentation	Road Construction	12 30 2002	289 (180,020 acres)	20

H Region	**Type**	**Name**	**Pollutant Stressor**	**Potential Sources**	**TMDL Completion Date**	**Watershed Acres** Mi^2	**WLA** tons mi^2 yr
1 R1.epa.EelR-upper.mainSed.temp-	R	Upper Main Eel River and Tributaries (including Tomki Creek, Outlet Creek and Lake Pillsbury)	Sedimentation	Road Construction	12 29 2004	688 (approx. 440,384 acres)	14

I Region	Type	Name	Pollutant Stressor	Potential Sources	TMDL Completion Date	Watershed Acres	WLA tons mi^2 yr
1 R1.epa.gualalafinaltmdl	R	Gualala River	Sedimentation	Road Construction	Not sure	300 (191,145 acres)	7

J Region	Type	Name	Pollutant Stressor	Potential Sources	TMDL Completion Date	Watershed Acres mi^2	WLA tons mi^2 yr
1 R1.epa.Mad-sed.turbidity	R	Mad River	Sedimentation	Road Construction	12 21 2007	480	174

K Region	Type	Name	Pollutant Stressor	Potential Sources	TMDL Completion Date	Watershed Acres mi^2	WLA tons mi^2 yr
1 R1.epa.mattole.sediment	R	Mattole River	Sedimentation	Road Construction	12 30 2003	296	27 or 520+27 = 547

L Region	Type	Name	Pollutant Stressor	Potential Sources	TMDL Completion Date	Watershed Acres mi^2	WLA tons mi^2 yr
1 R1.epa.navarro.sed.temp	R	Navarro River	Sedimentation	Road Construction	Not sure	315 (201,600 acres).	50

M Region	Type	Name	Pollutant Stressor	Potential Sources	TMDL Completion Date	Watershed Acres mi^2	WLA tons mi^2 yr
1 R1.epa.noyo.sediment	R	Noyo River	Sedimentation	Road Construction	12 16 1999	113 (72,323 acres)	68 (three areas measured) Table 16 in the TMDL

N Region	**Type**	**Name**	**Pollutant Stressor**	**Potential Sources**	**TMDL Completion Date**	**Watershed Acres** mi^2	**WLA** tons mi^2 yr
1 R1.epa.RedwoodCk.sed	Cr	Redwood Creek	Sedimentation	Road Construction	12 30 1998	278	1900 Total allocation

O Region	**Type**	**Name**	**Pollutant Stressor**	**Potential Sources**	**TMDL Completion Date**	**Watershed Acres** mi^2	**WLA – Roads** tons mi^2 yr
1 R1.epa.tenmile.sed	R	Ten Mile River	Sedimentation	Road Construction	2000	120	9

P Region	**Type**	**Name**	**Pollutant Stressor**	**Potential Sources**	**TMDL Completion Date**	**Watershed Acres** mi^2	**WLA management** tons mi^2 yr
1 R1.epa.trinity.sed	R	Trinity River	Sedimentation	Road Construction	12 20 2001	2000 of 3000 covered in this TMDL	See rows below
1	Cr	Horse Linto Creek	Sedimentation	Road Construction	12 20 2001	64	528
1	Cr	Mill creek and Tish Tang	Sedimentation	Road Construction	12 20 2001	39	210
1	Cr	Willow Creek	Sedimentation	Road Construction	12 20 2001	43	94
1	Cr	Campbell Creek and Supply Creek	Sedimentation	Road Construction	12 20 2001	11	1961
1	Cr	Lower Mainstem and Coon Creek	Sedimentation	Road Construction	12 20 2001	32	63
1	R	Reference	Sedimentation	Road	12 20 2001	434	24

		Subwatershed [1]		Construction			
1	Cr	Canyon Creek	Sedimentation	Road Construction	12 20 2001	64	326
1	R	Upper Tributaries[2]	Sedimentation	Road Construction	12 20 2001	72	67
1	R	Middle Tributaries[3]	Sedimentation	Road Construction	12 20 2001	54	53
1	R	Lower Tributaries[4]	Sedimentation	Road Construction	12 20 2001	96	55
1	Cr	Weaver and Rush Creeks	Sedimentation	Road Construction	12 20 2001	72	169
1	Cr	Deadwood Creek Hoadley Gulch Poker Bar	Sedimentation	Road Construction	12 20 2001	47	68
1	L	Lewiston Lake	Sedimentation	Road Construction	12 20 2001	25	49
1	Cr	Grassvalley Creek	Sedimentation	Road Construction	12 20 2001	37	44
1	Cr	Indian Creek	Sedimentation	Road Construction	12 20 2001	34	81
1	Cr	Reading and Browns Creek	Sedimentation	Road Construction	12 20 2001	104	66
1	Cr	Reference Subwatersheds[5]	Sedimentation	Road Construction	12 20 2001	235	281
1	L, Cr	Westside tributaries[6]	Sedimentation	Road Construction	12 20 2001	93	105
1	R, Cr, G	Upper trinity[7]	Sedimentation	Road Construction	12 20 2001	161	690
1	R, Cr, G	East Fork Tributaries[8]	Sedimentation	Road Construction	12 20 2001	115	65

1
2
3
4
5
6
7
8

1	R, L	Eastside Tributaries[9]	Sedimentation	Road Construction	12 20 2001	89	60

1 New River, Big French, Manzanita, North Fork, East Fork, North Fork
2 Dutch, Soldier, Oregon gulch, Conner Creek
3 Big Bar, Prairie Creek, Little French Creek
4 Swede, Italian, Canadian, Cedar Flat, Mill, McDonald, Hennessy, Quimby, Hawkins, Sharber
5 Stuarts Fork, Swift Creek, Coffee Creek
6 Stuart Arm, Stoney Creek, Mule Creek, East Fork, Stuart Fork, West Side Trinity Lake, Hatchet Creek, Buckeye Creek,
7 Upper Trinity River, Tangle Blue, Sunflower, Graves, Bear Upper Trinity Mainstream, Ramshorn Creek, Ripple Creek, Minnehaha Creek, Snowslide Gulch, Scorpion Creek
8 East Fork Trinity, Cedar Creek, Squirrel Gulch
9 East Side Tributaries, Trinity Lake

Q Region	**Type**	**Name**	**Pollutant Stressor**	**Potential Sources**	**TMDL Completion Date**	**Watershed Acres** mi^2	**WLA** tons mi^2 yr
1 R1.epa.trinity.so.sed	R, Cr	South Fork Trinity River and Hayfork Creek	Sedimentation	Road Construction	12 1998	Not given, 19 miles long	33 (road total)

R Region	**Type**	**Name**	**Pollutant Stressor**	**Potential Sources**	**TMDL Completion Date**	**Watershed Acres** mi^2	**WLA** tons mi^2 yr
1 R1.epa.vanduzen.sed	R, Cr	Van Duzen River and Yager Creek	Sedimentation	Various	12 16 1999	429	1353 total allocation
1		Upper Basin	Sedimentation	Road Construction			7
1		Middle Basin	Sedimentation	Road Construction			22
1		Lower Basin	Sedimentation	Road Construction			20

S Region	**Type**	**Name**	**Pollutant Stressor**	**Potential**	**TMDL**	**Watershed**	**WLA** tons mi^2

[9] 2009-0009-DWQ as amended by 2010-0014-DWQ & 2012-0006-DWQ

				Sources	**Completion Date**	**Acres** mi^2	yr
6 R6.blackwood.sed	Cr	Blackwood Creek (Placer County)	Bedded Sediment	Various	9 2007	11	17272 total

T Region	**Type**	**Name**	**Pollutant Stressor**	**Potential Sources**	**TMDL Completion Date**	**Watershed Acres** mi^2	**WLA** tons mi^2 yr
6 R6.SquawCk.sed	R	Squaw Creek (Placer County)	Sedimentation /controllable sources	Various – basin plan amendment	4 13 2006	8.2	10,900

Adopted TMDLs for Construction Sediment Sources

Region	Type	Name	Pollutant Stressor	Potential Sources	**TMDL Completion Date**	**Watershed Area** mi^2	Waste load Allocation tons mi^2 yr
8	R	Newport Bay San Diego Creek Watershed	Sedimentation	Construction Land Development	1999	2.24 (1432 acres)	125,000 tons per Year (no more than 13,000 tons per year from construction sites)

APPENDIX 5:
Glossary

Active Areas of Construction
All areas subject to land surface disturbance activities related to the project including, but not limited to, project staging areas, immediate access areas and storage areas. All previously active areas are still considered active areas until final stabilization is complete. [The construction activity Phases used in this General Permit are the Preliminary Phase, Grading and Land Development Phase, Streets and Utilities Phase, and the Vertical Construction Phase.]

Active Treatment System (ATS)
A treatment system that employs chemical coagulation, chemical flocculation, or electrocoagulation to aid in the reduction of turbidity caused by fine suspended sediment.

Acute Toxicity Test
A chemical stimulus severe enough to rapidly induce a negative effect; in aquatic toxicity tests, an effect observed within 96 hours or less is considered acute.

Air Deposition
Airborne particulates from construction activities.

Approved Signatory
A person who has been authorized by the Legally Responsible Person to sign, certify, and electronically submit Permit Registration Documents, Notices of Termination, and any other documents, reports, or information required by the General Permit, the State or Regional Water Board, or U.S. EPA. The Approved Signatory must be one of the following:

1. For a corporation or limited liability company: a responsible corporate officer. For the purpose of this section, a responsible corporate officer means: (a) a president, secretary, treasurer, or vice-president of the corporation in charge of a principal business function, or any other person who performs similar policy or decision-making functions for the corporation or limited liability company; or (b) the manager of the facility if authority to sign documents has been assigned or delegated to the manager in accordance with corporate procedures;

2. For a partnership or sole proprietorship: a general partner or the proprietor, respectively;

3. For a municipality, State, Federal, or other public agency: a principal executive officer, ranking elected official, city manager, council president, or any other authorized public employee with managerial responsibility over the

construction or land disturbance project (including, but not limited to, project manager, project superintendent, or resident engineer);

4. For the military: any military officer or Department of Defense civilian, acting in an equivalent capacity to a military officer, who has been designated;

5. For a public university: an authorized university official;

6. For an individual: the individual, because the individual acts as both the Legally Responsible Person and the Approved Signatory; or

7. For any type of entity not listed above (e.g. trusts, estates, receivers): an authorized person with managerial authority over the construction or land disturbance project.

Beneficial Uses
As defined in the California Water Code, beneficial uses of the waters of the state that may be protected against quality degradation include, but are not limited to, domestic, municipal, agricultural and industrial supply; power generation; recreation; aesthetic enjoyment; navigation; and preservation and enhancement of fish, wildlife, and other aquatic resources or preserves.

Best Available Technology Economically Achievable (BAT)
As defined by USEPA, BAT is a technology-based standard established by the Clean Water Act (CWA) as the most appropriate means available on a national basis for controlling the direct discharge of toxic and nonconventional pollutants to navigable waters. The BAT effluent limitations guidelines, in general, represent the best existing performance of treatment technologies that are economically achievable within an industrial point source category or subcategory.

Best Conventional Pollutant Control Technology (BCT)
As defined by USEPA, BCT is a technology-based standard for the discharge from existing industrial point sources of conventional pollutants including biochemical oxygen demand (BOD), total suspended sediment (TSS), fecal coliform, pH, oil and grease.

Best Professional Judgment (BPJ)
The method used by permit writers to develop technology-based NPDES permit conditions on a case-by-case basis using all reasonably available and relevant data.

Best Management Practices (BMPs)
BMPs are scheduling of activities, prohibitions of practices, maintenance procedures, and other management practices to prevent or reduce the discharge of pollutants. BMPs also include treatment requirements, operating procedures,

and practices to control site runoff, spillage or leaks, sludge or waste disposal, or drainage from raw material storage.

Chain of Custody (COC)
Form used to track sample handling as samples progress from sample collection to the analytical laboratory. The COC is then used to track the resulting analytical data from the laboratory to the client. COC forms can be obtained from an analytical laboratory upon request.

Coagulation
The clumping of particles in a discharge to settle out impurities, often induced by chemicals such as lime, alum, and iron salts.

Common Plan of Development
Generally a contiguous area where multiple, distinct construction activities may be taking place at different times under one plan. A plan is generally defined as any piece of documentation or physical demarcation that indicates that construction activities may occur on a common plot. Such documentation could consist of a tract map, parcel map, demolition plans, grading plans or contract documents. Any of these documents could delineate the boundaries of a common plan area. However, broad planning documents, such as land use master plans, conceptual master plans, or broad-based CEQA or NEPA documents that identify potential projects for an agency or facility are not considered common plans of development.

Daily Average Discharge
The discharge of a pollutant measured during any 24-hour period that reasonably represents a calendar day for purposes of sampling. For pollutants with limitations expressed in units of mass, the daily discharge is calculated as the total mass of the pollutant discharged during the day. For pollutants with limitations expressed in other units of measurement (e.g., concentration) the daily discharge is calculated as the average measurement of the pollutant throughout the day (40 CFR 122.2). In the case of pH, the pH must first be converted from a log scale.

Debris
Litter, rubble, discarded refuse, and remains of destroyed inorganic anthropogenic waste.

Direct Discharge
A discharge that is routed directly to waters of the United States by means of a pipe, channel, or ditch (including a municipal storm sewer system), or through surface runoff.

Discharger
The Legally Responsible Person (see definition) or entity subject to this General Permit.

Dose Rate (for ATS)
In exposure assessment, dose (e.g. of a chemical) per time unit (e.g. mg/day), sometimes also called dosage.

Drainage Area
The area of land that drains water, sediment, pollutants, and dissolved materials to a common outlet.

Effluent
Any discharge of water by a discharger either to the receiving water or beyond the property boundary controlled by the discharger.

Effluent Limitation
Any numeric or narrative restriction imposed on quantities, discharge rates, and concentrations of pollutants which are discharged from point sources into waters of the United States, the waters of the contiguous zone, or the ocean.

Erosion
The process, by which soil particles are detached and transported by the actions of wind, water, or gravity.

Erosion Control BMPs
Vegetation, such as grasses and wildflowers, and other materials, such as straw, fiber, stabilizing emulsion, protective blankets, etc., placed to stabilize areas of disturbed soils, reduce loss of soil due to the action of water or wind, and prevent water pollution.

Field Measurements
Testing procedures performed in the field with portable field-testing kits or meters.

Final Stabilization
All soil disturbing activities at each individual parcel within the site have been completed in a manner consistent with the requirements in this General Permit.

First Order Stream
Stream with no tributaries.

Flocculants
Substances that interact with suspended particles and bind them together to form flocs.

Good Housekeeping BMPs
BMPs designed to reduce or eliminate the addition of pollutants to construction site runoff through analysis of pollutant sources, implementation of proper handling/disposal practices, employee education, and other actions.

Grading Phase (part of the Grading and Land Development Phase)
Includes reconfiguring the topography and slope including; alluvium removals; canyon cleanouts; rock undercuts; keyway excavations; land form grading; and stockpiling of select material for capping operations.

Hydromodification
Hydromodification is the alteration of the hydrologic characteristics of coastal and non-coastal waters, which in turn could cause degradation of water resources. Hydromodification can cause excessive erosion and/or sedimentation rates, causing excessive turbidity, channel aggradation and/or degradation.

Identified Organisms
Organisms within a sub-sample that is specifically identified and counted.

Inactive Areas of Construction
Areas of construction activity that are not active and those that have been active and are not scheduled to be re-disturbed for at least 14 days.

Index Period
The period of time during which bioassessment samples must be collected to produce results suitable for assessing the biological integrity of streams and rivers. Instream communities naturally vary over the course of a year,and sampling during the index period ensures that samples are collected during a time frame when communities are stable so that year-to-year consistency is obtained. The index period approach provides a cost-effective alternative to year-round sampling. Furthermore, sampling within the appropriate index period will yield results that are comparable to the assessment thresholds or criteria for a given region, which are established for the same index period. Because index periods differ for different parts of the state, it is essential to know the index period for your area.

K Factor
The soil erodibility factor used in the Revised Universal Soil Loss Equation (RUSLE). It represents the combination of detachability of the soil, runoff potential of the soil, and the transportability of the sediment eroded from the soil.

Legally Responsible Person
The Legally Responsible Person (LRP) will typically be the project proponent. The categories of persons or entities that are eligible to serve as the LRP are set forth below. For any construction or land disturbance project where multiple persons or entities are eligible to serve as the LRP, those persons or entities

shall select a single LRP. In exceptional circumstances, a person or entity that qualifies as the LRP may provide written authorization to another person or entity to serve as the LRP. In such a circumstance, the person or entity that provides the authorization retains all responsibility for compliance with the General Permit. Except as provided in category 2(d), a contractor who does not satisfy the requirements of any of the categories below is not qualified to be an LRP.

The following persons or entities may serve as an LRP:

1. A person, company, agency, or other entity that possesses a real property interest (including, but not limited to, fee simple ownership, easement, leasehold, or other rights of way) in the land upon which the construction or land disturbance activities will occur for the regulated site.

2. In addition to the above, the following persons or entities may also serve as an LRP:

    a. For linear underground/overhead projects, the utility company, municipality, or other public or private company or agency that owns or operates the LUP;

    b. For land controlled by an estate or similar entity, the person who has day-to-day control over the land (including, but not limited to, a bankruptcy trustee, receiver, or conservator);

    c. For pollution investigation and remediation projects, any potentially responsible party that has received permission to conduct the project from the holder of a real property interest in the land; or

    d. For U.S. Army Corp of Engineers projects, the U.S. Army Corps of Engineers may provide written authorization to its bonded contractor to serve as the LRP, provided, however, that the U.S. Army Corps of Engineers is also responsible for compliance with the general permit, as authorized by the Clean Water Act or the Federal Facilities Compliance Act.

Likely Precipitation Event
Any weather pattern that is forecasted to have a 50% or greater chance of producing precipitation in the project area. The discharger shall obtain likely precipitation forecast information from the National Weather Service Forecast Office (e.g., by entering the zip code of the project's location at http://www.srh.noaa.gov/forecast).

Maximum Allowable Threshold Concentration (MATC)
The allowable concentration of residual, or dissolved, coagulant/flocculant in effluent. The MATC shall be coagulant/flocculant-specific, and based on toxicity

testing conducted by an independent, third-party laboratory. A typical MATC would be:

The MATC is equal to the geometric mean of the NOEC (No Observed Effect Concentration) and LOEC (Lowest Observed Effect Concentration) Acute and Chronic toxicity results for most sensitive species determined for the specific coagulant. The most sensitive species test shall be used to determine the MATC.

Natural Channel Evolution
The physical trend in channel adjustments following a disturbance that causes the river to have more energy and degrade or aggrade more sediment. Channels have been observed to pass through 5 to 9 evolution types. Once they pass though the suite of evolution stages, they will rest in a new state of equilibrium.

Non-Storm Water Discharges
Discharges are discharges that do not originate from precipitation events. They can include, but are not limited to, discharges of process water, air conditioner condensate, non-contact cooling water, vehicle wash water, sanitary wastes, concrete washout water, paint wash water, irrigation water, or pipe testing water.

Non-Visible Pollutants
Pollutants associated with a specific site or activity that can have a negative impact on water quality, but cannot be seen though observation (ex: chlorine). Such pollutants being discharged are not authorized.

Numeric Action Level (NAL)
Level is used as a warning to evaluate if best management practices are effective and take necessary corrective actions. Not an effluent limit.

Original Sample Material
The material (i.e., macroinvertebrates, organic material, gravel, etc.) remaining after the subsample has been removed for identification.

pH
Unit universally used to express the intensity of the acid or alkaline condition of a water sample. The pH of natural waters tends to range between 6 and 9, with neutral being 7. Extremes of pH can have deleterious effects on aquatic systems.

Post-Construction BMPs
Structural and non-structural controls which detain, retain, or filter the release of pollutants to receiving waters after final stabilization is attained.

Preliminary Phase (Pre-Construction Phase - Part of the Grading and Land Development Phase)
Construction stage including rough grading and/or disking, clearing and grubbing operations, or any soil disturbance prior to mass grading.

Project

Qualified SWPPP Developer
Individual who is authorized to develop and revise SWPPPs.

Qualified SWPPP Practitioner
Individual assigned responsibility for non-storm water and storm water visual observations, sampling and analysis, and responsibility to ensure full compliance with the permit and implementation of all elements of the SWPPP, including the preparation of the annual compliance evaluation and the elimination of all unauthorized discharges.

Qualifying Rain Event
Any event that produces 0.5 inches or more precipitation with a 48 hour or greater period between rain events.

R Factor
Erosivity factor used in the Revised Universal Soil Loss Equation (RUSLE). The R factor represents the erosivity of the climate at a particular location. An average annual value of R is determined from historical weather records using erosivity values determined for individual storms. The erosivity of an individual storm is computed as the product of the storm's total energy, which is closely related to storm amount, and the storm's maximum 30-minute intensity.

Rain Event Action Plan (REAP)
Written document, specific for each rain event, that when implemented is designed to protect all exposed portions of the site within 48 hours of any likely precipitation event.

Remaining Sub sampled Material
The material (e.g., organic material, gravel, etc.) that remains after the organisms to be identified have been removed from the subsample for identification. (Generally, no macroinvertebrates are present in the remaining subsampled material, but the sample needs to be checked and verified using a complete Quality Assurance (QA) plan)

Routine Maintenance
Activities intended to maintain the original line and grade, hydraulic capacity, or original purpose of a facility.

Runoff Control BMPs
Measures used to divert runon from offsite and runoff within the site.

Run-on
Discharges that originate offsite and flow onto the property of a separate project site.

Revised Universal Soil Loss Equation (RUSLE)
Empirical model that calculates average annual soil loss as a function of rainfall and runoff erosivity, soil erodibility, topography, erosion controls, and sediment controls.

Sampling and Analysis Plan
Document that describes how the samples will be collected, under what conditions, where and when the samples will be collected, what the sample will be tested for, what test methods and detection limits will be used, and what methods/procedures will be maintained to ensure the integrity of the sample during collection, storage, shipping and testing (i.e., quality assurance/quality control protocols).

Sediment
Solid particulate matter, both mineral and organic, that is in suspension, is being transported, or has been moved from its site of origin by air, water, gravity, or ice and has come to rest on the earth's surface either above or below sea level.

Sedimentation
Process of deposition of suspended matter carried by water, wastewater, or other liquids, by gravity. It is usually accomplished by reducing the velocity of the liquid below the point at which it can transport the suspended material.

Sediment Control BMPs
Practices that trap soil particles after they have been eroded by rain, flowing water, or wind. They include those practices that intercept and slow or detain the flow of storm water to allow sediment to settle and be trapped (e.g., silt fence, sediment basin, fiber rolls, etc.).

Settleable Solids (SS)
Solid material that can be settled within a water column during a specified time frame. It is typically tested by placing a water sample into an Imhoff settling cone and then allowing the solids to settle by gravity for a given length of time. Results are reported either as a volume (mL/L) or a mass (mg/L) concentration.

Sheet Flow
Flow of water that occurs overland in areas where there are no defined channels where the water spreads out over a large area at a uniform depth.

Site

Soil Amendment
Any material that is added to the soil to change its chemical properties, engineering properties, or erosion resistance that could become mobilized by storm water.

Streets and Utilities Phase
Construction stage including excavation and street paving, lot grading, curbs, gutters and sidewalks, public utilities, public water facilities including fire hydrants, public sanitary sewer systems, storm sewer system and/or other drainage improvements.

Structural Controls
Any structural facility designed and constructed to mitigate the adverse impacts of storm water and urban runoff pollution

Suspended Sediment Concentration (SSC)
The measure of the concentration of suspended solid material in a water sample by measuring the dry weight of all of the solid material from a known volume of a collected water sample. Results are reported in mg/L.

Total Suspended Solids (TSS)
The measure of the suspended solids in a water sample includes inorganic substances, such as soil particles and organic substances, such as algae, aquatic plant/animal waste, particles related to industrial/sewage waste, etc. The TSS test measures the concentration of suspended solids in water by measuring the dry weight of a solid material contained in a known volume of a sub-sample of a collected water sample. Results are reported in mg/L.

Toxicity
The adverse response(s) of organisms to chemicals or physical agents ranging from mortality to physiological responses such as impaired reproduction or growth anomalies.

Turbidity
The cloudiness of water quantified by the degree to which light traveling through a water column is scattered by the suspended organic and inorganic particles it contains. The turbidity test is reported in Nephelometric Turbidity Units (NTU) or Jackson Turbidity Units (JTU).

Vertical Construction Phase
The Build out of structures from foundations to roofing, including rough landscaping.

Waters of the United States
Generally refers to surface waters, as defined by the federal Environmental Protection Agency in 40 C.F.R. § 122.2.[1]

Water Quality Objectives (WQO)
Water quality objectives are defined in the California Water Code as limits or levels of water quality constituents or characteristics, which are established for the reasonable protection of beneficial uses of water or the prevention of nuisance within a specific area.

[1] The application of the definition of "waters of the United States" may be difficult to determine; there are currently several judicial decisions that create some confusion. If a landowner is unsure whether the discharge must be covered by this General Permit, the landowner may wish to seek legal advice.

APPENDIX 6:
Acronym List

ASBS	Areas of Special Biological Significance
ASTM	American Society of Testing and Materials; Standard Test Method for Particle-Size Analysis of Soils
ATS	Active Treatment System
BASMAA	Bay Area Storm water Management Agencies Association
BAT	Best Available Technology Economically Achievable
BCT	Best Conventional Pollutant Control Technology
BMP	Best Management Practices
BOD	Biochemical Oxygen Demand
BPJ	Best Professional Judgment
CAFO	Confined Animal Feeding Operation
CCR	California Code of Regulations
CEQA	California Environmental Quality Act
CFR	Code of Federal Regulations
CGP	NPDES General Permit for Storm Water Discharges Associated with Construction Activities
CIWQS	California Integrated Water Quality System
CKD	Cement Kiln Dust
COC	Chain of Custody
CPESC	Certified Professional in Erosion and Sediment Control
CPSWQ	Certified Professional in Storm Water Quality
CSMP	Construction Site Monitoring Program
CTB	Cement Treated Base
CTR	California Toxics Rule
CWA	Clean Water Act
CWC	California Water Code
CWP	Center for Watershed Protection
DADMAC	Diallyldimethyl-ammonium chloride
DDNR	Delaware Department of Natural Resources
DFG	Department of Fish and Game
DHS	Department of Health Services
DWQ	Division of Water Quality
EC	Electrical Conductivity
ELAP	Environmental Laboratory Accreditation Program
EPA	Environmental Protection Agency
ESA	Environmentally Sensitive Area
ESC	Erosion and Sediment Control
HSPF	Hydrologic Simulation Program Fortran
JTU	Jackson Turbidity Units
LID	Low Impact Development
LOEC	Lowest Observed Effect Concentration
LRP	Legally Responsible Person
LUP	Linear Underground/Overhead Projects

MATC	Maximum Allowable Threshold Concentration
MDL	Method Detection Limits
MRR	Monitoring and Reporting Requirements
MS4	Municipal Separate Storm Sewer System
MUSLE	Modified Universal Soil Loss Equation
NAL	Numeric Action Level
NEL	Numeric Effluent Limitation
NICET	National Institute for Certification in Engineering Technologies
NOAA	National Oceanic and Atmospheric Administration
NOEC	No Observed Effect Concentration
NOI	Notice of Intent
NOT	Notice of Termination
NPDES	National Pollutant Discharge Elimination System
NRCS	Natural Resources Conservation Service
NTR	National Toxics Rule
NTU	Nephelometric Turbidity Units
O&M	Operation and Maintenance
PAC	Polyaluminum chloride
PAM	Polyacrylamide
PASS	Polyaluminum chloride Silica/sulfate
POC	Pollutants of Concern
PoP	Probability of Precipitation
POTW	Publicly Owned Treatment Works
PRDs	Permit Registration Documents
PWS	Planning Watershed
QAMP	Quality Assurance Management Plan
QA/QC	Quality Assurance/Quality Control
REAP	Rain Event Action Plan
Regional Board	Regional Water Quality Control Board
ROWD	Report of Waste Discharge
RUSLE	Revised Universal Soil Loss Equation
RW	Receiving Water
SMARTS	Storm water Multi Application Reporting and Tracking System
SS	Settleable Solids
SSC	Suspended Sediment Concentration
SUSMP	Standard Urban Storm Water Mitigation Plan
SW	Storm Water
SWARM	Storm Water Annual Report Module
SWAMP	Surface Water Ambient Monitoring Program
SWMM	Storm Water Management Model
SWMP	Storm Water Management Program
SWPPP	Storm Water Pollution Prevention Plan
TC	Treatment Control
TDS	Total Dissolved Solids

TMDL	Total Maximum Daily Load
TSS	Total Suspended Solids
USACOE	U.S. Army Corps of Engineers
USC	United States Code
USEPA	United States Environmental Protection Agency
USGS	United States Geological Survey
WDID	Waste Discharge Identification Number
WDR	Waste Discharge Requirements
WLA	Waste Load Allocation
WET	Whole Effluent Toxicity
WRCC	Western Regional Climate Center
WQBEL	Water Quality Based Effluent Limitation
WQO	Water Quality Objective
WQS	Water Quality Standard

APPENDIX 7:
State and Regional Water Resources Control Board Contacts

NORTH COAST REGION (1)
5550 Skylane Blvd, Ste. A
Santa Rose, CA 95403
(707) 576-2220 FAX: (707)523-0135

SAN FRANCISCO BAY REGION (2)
1515 Clay Street, Ste. 1400
Oakland, CA 94612
(510) 622-2300 FAX: (510) 622-2640

CENTRAL COAST REGION (3)
895 Aerovista Place, Ste 101
San Luis Obispo, CA 93401
(805) 549-3147 FAX: (805) 543-0397

LOS ANGELES REGION (4)
320 W. 4th Street, Ste. 200
Los Angeles, CA 90013
(213) 576-6600 FAX: (213) 576-6640

CENTRAL VALLEY REGION (5S)
11020 Sun Center Dr., #200
Rancho Cordova, CA 95670-6114
(916) 464-3291 FAX: (916) 464-4645

FRESNO BRANCH OFFICE (5F)
1685 E St.
Fresno, CA 93706
(559) 445-5116 FAX: (559) 445-5910

REDDING BRANCH OFFICE (5R)
364 Knollcrest Drive, Ste. 205
Redding, CA 96002
(530) 224-4845 FAX: (530) 224-4857

LAHONTAN REGION (6 SLT)
2501 Lake Tahoe Blvd.
South Lake Tahoe, CA 96150
(530) 542-5400 FAX: (530) 544-2271

VICTORVILLE OFFICE (6V)
14440 Civic Drive, Ste. 200
Victorville, CA 92392-2383
(760) 241-6583 FAX: (760) 241-7308

COLORADO RIVER BASIN REGION (7)
73-720 Fred Waring Dr., Ste. 100
Palm Desert, CA 92260
(760) 346-7491 FAX: (760) 341-6820

SANTA ANA REGION (8)
3737 Main Street, Ste. 500
Riverside, CA 92501-3339
Phone (951) 782-4130 FAX: (951) 781-6288

SAN DIEGO REGION (9)
9174 Sky Park Court, Ste. 100
San Diego, CA 92123-4340
(858) 467-2952 FAX: (858) 571-6972

STATE WATER BOARD
PO Box 1977
Sacramento, CA 95812-1977
stormwater@waterboards.ca.gov

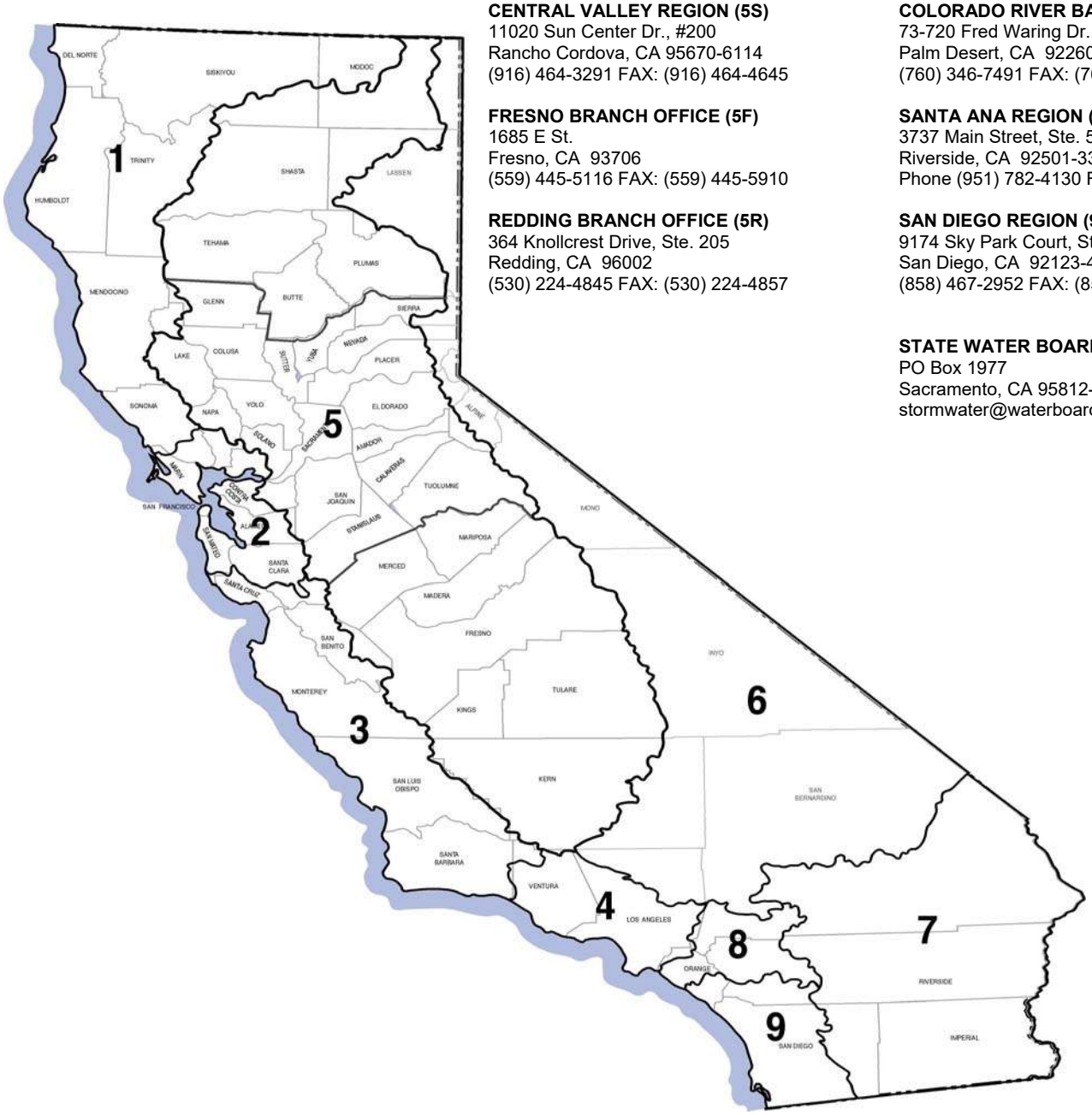

Utility Location Report

SafeProbe, Inc.
"The Safest and Most Cost Effective Potholing Method Available."

3303 Wilshire Blvd. Suite 1250
Los Angeles, Ca 90010
Tel: 213 251-5960 Fax: 213 251-5966

Utility Location Report

Project Number:
Project Description: **Storm Water Conveyance**
Client: **CDM Smith Inc**
Project Location: **City of Pacoima**
Thomas Guide Grid:

Pothole Number: **PH-4 Storm Drain**
Date Located: **7/21/2021**
Client Plan Sheet:
Marker: **Wood Hub**
Crew: **Jayson, Dio, Richard**
Truck Number: **Phoenix Truck**

VISUAL UTILITY INFORMATION

SIZE: **45"**
UTILITY TYPE: **Storm Drain**
MATERIAL OF UTILITY: **RCP**
Structure:

MEASURED DISTANCE FROM SURFACE

TOP: **3' 8"**
BOTTOM: **7' 5"**
STATION/DIRECTION:

SWING TIE INFORMATION

DISTANCE DERECTION FROM PERMAMENT EXISTING FEATURE:

1
2
3

PAVEMENT & SOILS INFORMATION

SURFACE MATERIAL: **Dirt**
AGGREGATE BASE:
UPPER:
LOWER:
SOIL:

SURVEY INFORMATION

NORTHING:
EASTING:
ELEVATION:

SKETCH: NOT TO SCALE

PLAN VIEW

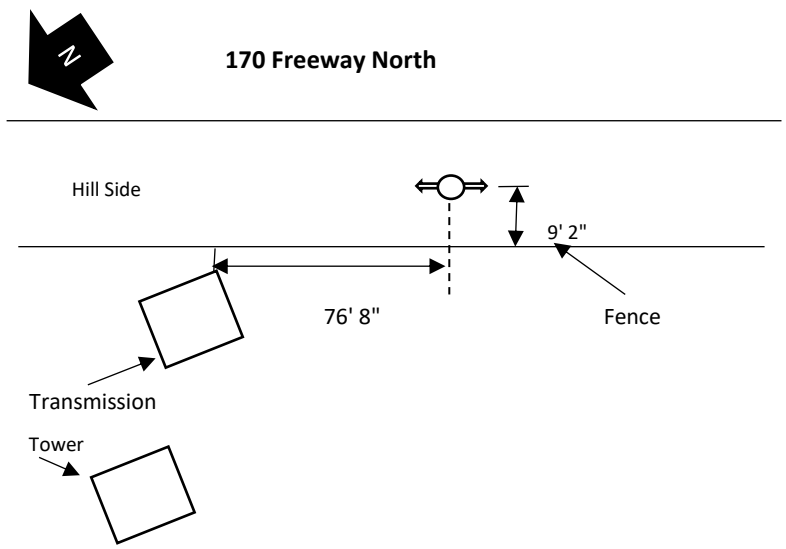

PROFILE VIEW

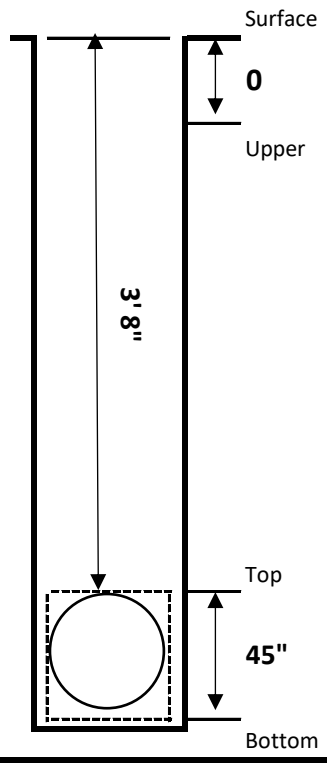

ABBREVIATIONS:

AB - aggregate base
AC - asphalt concrete
ACP - asbestos cement pipe
ASRP - aluminum spiral rib pipe
CAP - corrugated aluminum pipe arch
CAP - cast iron pipe

Draft Final Mitigated Negative Declaration
Stormwater Capture Parks Program

DRAFT
Final Mitigated Negative Declaration
Stormwater Capture Parks Program

Los Angeles Department of Water and Power
Environmental Affairs
111 North Hope Street, Room 1044
Los Angeles, California 90012

July 2021

CEQA Initial Study and Mitigated Negative Declaration

Stormwater Capture Parks Program

July 2021

General Manager

Marty L. Adams

Senior Assistant General Manager
Water System

Richard F. Harasick

Senior Assistant General Manager
External and Regulatory Affairs and Chief Sustainability Officer

Nancy H. Sutley

Director of Environmental Affairs

Mark J. Sedlacek

Manager of Environmental Planning and Assessment

Charles C. Holloway

Prepared by

Los Angeles Department of Water and Power

111 North Hope Street, Room 1044
Los Angeles, CA 90012

Technical Assistance Provided by

ESA

626 Wilshire Blvd., Suite 1100
Los Angeles, CA 90017

TABLE OF CONTENTS

Final Initial Study and Mitigated Negative Declaration for Stormwater Capture Parks Program

Page

Section 3: Comment Letters **3-1**

Comment Letter 1: California Department of Transportation
Comment Letter 2: Luis Suarez
Comment Letter 3: Marie Gordon
Comment Letter 4: Brenda Dalusong
Comment Letter 5: California Department of Fish and Wildlife
Comment Letter 6: Diana Nicole, Sunshine Hills Residents Association
Comment Letter 7: County of Los Angeles Fire Department
Comment Letter 8: Joanne D'Antonio

Section 4: Response to Comments **4-1**

Comment Letter 1: California Department of Transportation
Comment Letter 2: Luis Suarez
Comment Letter 3: Marie Gordon
Comment Letter 4: Brenda Dalusong
Comment Letter 5: California Department of Fish and Wildlife
Comment Letter 6: Diana Nicole, Sunshine Hills Residents Association
Comment Letter 7: County of Los Angeles Fire Department
Comment Letter 8: Joanne D'Antonio

Section 5: Mitigation Monitoring and Reporting Program **5-1**

Appendix AA (not included)

Previously published in the Draft IS/MND

Section 1: Project Description

Section 2: Initial Study/Environmental Checklist

SECTION 3
Comment Letters

The City of Los Angeles Department of Water and Power (LADWP), Department of Public Works Bureau of Engineering (BOE) and Bureau of Sanitation (LASAN), and Department of Recreation and Parks (RAP), are collectively referred to herein as the "City." LADWP acting as Lead Agency circulated the Draft Initial Study/Mitigated Negative Declaration (Draft IS/MND) for the Stormwater Capture Parks Program (Program) for public review for 30 days (January 7, 2021 through February 7, 2021) in accordance with the requirements of the California Environmental Quality Act (CEQA) Guidelines Section 15072(a). BOE, LASAN, and RAP will act as Responsible Agencies. The City received a total of eight comment letters during the public review period, which are listed in **Table 3-1** and are included within this chapter. The letters have been marked with brackets that delineate comments pertaining to environmental issues and the information and analysis contained in the Draft IS/MND. Responses to such comments are provided in Section 4.

TABLE 3-1
COMMENT LETTERS RECEIVED

Comment Letter No.	Commenter	Date of Comment
1	California Department of Transportation	January 13, 2021
2	Luis Suarez	January 15, 2021
3	Marie Gordon	January 22, 2021
4	Brenda Dalusong	February 2, 2021
5	California Department of Fish and Wildlife	February 5, 2021
6	Diana Nicole, Sunshine Hills Residents Association	February 8, 2021
7	County of Los Angeles Fire Department	February 9, 2021
8	Joanne D'Antonio	February 8, 2021

SECTION 4
Response to Comments

4.1 Comments on the Draft IS/MND and Response to Comments

The responses to comments included in this section correspond to each comment letter outlined in Section 3.

Letter 1: Miya Edmonson (California Department of Transportation)

Comment 1-A

The commenter summarizes the project description.

Response 1-A

The comment is noted and will be included in the project record.

Comment 1-B

The commenter states that an encroachment permit would likely be required for any project work, including road closures, done on or near California Department of Transportation's (Caltrans) right of way.

Response 1-B

As noted on page 33 of the Draft IS/MND, the City and/or its contractors will coordinate with Caltrans and will obtain all necessary permits prior to construction activities. In addition, Caltrans is an active partner in the Program, providing some funding and assisting with project level designs.

Comment 1-C

The commenter states that a Caltrans transportation permit is required for transporting any heavy construction equipment and/or materials with oversized-transport vehicles on State Highways.

Response 1-C

The City and/or its contractors will coordinate with Caltrans and will obtain all necessary permits prior to construction activities.

Comment 1-D

The commenter recommends that project construction traffic is limited to off-peak periods to minimize potential impacts on State facilities.

Response 1-D

As outlined in Mitigation Measure TR-1, the City and/or its contractors will coordinate with Los Angeles Department of Transportation (LADOT) in order to prepare a construction traffic management plan (CTMP) for the Program which will include time of day restrictions, and time limitations for construction traffic.

Comment 1-E

The commenter requests submission of a construction traffic management plan to Caltrans for review if State facilities are expected to have delays. The commenter request that the traffic management plan includes details on any traffic delays that would occur on State facilities during construction, and alternate bicycle and pedestrian routes for any routes that would be affected during construction.

Response 1-E

The City will submit the CTMP to Caltrans for review if delays are expected on State facilities.

Comment 1-F

The commenter expresses support for Transportation Demand Management (TDM) strategies which the City has incorporated into the Program and recommends additional options to further reduce Vehicle Miles Traveled (VMT) and greenhouse gas emissions impacts.

Response 1-F

The Draft IS/MND concluded that Program impacts to VMT and greenhouse gas emissions would occur at levels that are below CEQA significance thresholds, without implementation of any mitigation measures.

Letter 2: Luis Suarez

Comment 2-A

The commenter requests more information regarding the environmental impacts that would occur on homes surrounding Fernangeles Park.

Response 2-A

Residents in the vicinity of Program sites may experience temporary impacts related to construction. The City and its construction contractors are required to implement mitigation measures to ensure that nearby residents are notified of tentative construction schedules and that Program impacts remain below the specific impact thresholds identified in Appendix G of the

CEQA Guidelines. For a detailed discussion of anticipated environmental impacts, please refer to the Draft IS/MND. With respect to neighborhood impacts, the IS/MND describes effects to aesthetics on page 46, air quality on page 51, biological resources on page 72, noise on page 122, recreational resources on page 138, and traffic on page 140.

Comment 2-B

The commenter expresses concern regarding the potential for groundwater saturation in surrounding neighborhoods as a result of the proposed infiltration galleries at Fernangeles Park.

Response 2-B

The Program would include construction of underground infiltration galleries, which would capture surface flow and divert stormwater runoff from the Caltrans pump discharge to recharge the San Fernando Groundwater Basin. The infiltration galleries will be constructed of concrete and are designed to retain flows for percolation into the San Fernando Groundwater Basin. The ground surface surrounding the park would be restored to support recreational uses similar to current conditions. The Draft IS/MND evaluates the potential for groundwater mounding to occur that could affect surface infrastructure. A technical analysis prepared by Todd Groundwater Consultants is included as Appendix E. As noted in Table 1 of Appendix E, the infiltration galleries would range from 16 to 29 feet below ground surface and the groundwater levels in the area range from 105 to 335 feet below the ground surface. Mitigation measure GEO-1 has been included to monitor groundwater levels and reduce flow diversions when groundwater is within 50 feet of the surface. With mitigation implemented, the Draft IS/MND concludes that the potential for elevated groundwater levels would be minimized.

Letter 3: Marie Gordon

Comment 3-A

The commenter requests information regarding start and end dates for Program construction activities that would occur near two senior citizen apartment buildings located along Vanowen Street, between Whitsett Avenue and Rhodes Avenue, just south of Whitsett Fields Park North.

Response 3-A

As noted in Table 1-6 on page 40 of the Draft IS/MND, construction activities at Whitsett Fields Park North are expected to take approximately 18 months, starting in June 2025 and ending in November 2026. Construction at Valley Plaza Park North, located east of I-170 on Vanowen Street, is expected to take approximately 17 months, starting in November 2023 and ending in March 2025. Construction work hours would generally be restricted to times between 7 A.M. and 7 P.M., Monday through Friday.

Comment 3-B

The commenter expresses concern regarding construction mitigation measures and their potential to minimize environmental impacts on senior citizens living in nearby apartments. The commenter states that the environmental impacts of prior projects were not effectively mitigated.

Response 3-B

Residents in the vicinity of Program sites may experience temporary impacts related to construction. The City and its construction contractors are required to implement mitigation measures to ensure that nearby residents are notified of tentative construction schedules, and that Program impact levels remain below the specific thresholds identified in Appendix G of the CEQA Guidelines. For a detailed discussion of anticipated environmental impacts, please refer to the Draft IS/MND. With respect to neighborhood impacts, the IS/MND describes effects to aesthetics on page 46, air quality on page 51, biological resources on page 72, noise on page 122, recreational resources on page 138, and traffic on page 140.

Comment 3-C

Commenter states that the Notice of Intent (NOI) for the Program is dated January 7, 2021 but was not received until January 20, 2021.

Response 3-C

The comment is noted and will be included in the project record. The public review period for the Draft IS/MND was from January 7, 2021, to February 7, 2021. The commenter received the NOI within the public review period of the Draft IS/MND in compliance with CEQA.

Letter 4: Brenda Dalusong

Comment 4-A

The commenter requests that the City consider construction of sidewalks around the perimeter of Fernangeles Park as part of the Program's proposed recreational facilities enhancements. The commenter states concern for pedestrian/motor vehicle safety around the park due to the lack of sidewalks available for pedestrian use.

Response 4-A

Figures 1-4 through 1-12 provide architectural drawings for each of the proposed parks that include public access and pedestrian circulation to support existing recreational uses.

Letter 5: Erinn Wilson-Olgin (California Department of Fish and Wildlife)

Comment 5-A

The comment acknowledges that California Department of Fish and Wildlife (CDFW) received the Draft IS/MND for review and to provide comments.

Response 5-A

Comment noted.

Comment 5-B

CDFW disagrees with the City's impact analysis, which finds that the Project's diversion of water would not impact biological resources

The Project would divert dry season flow and stormwater totaling 3,010 acre-feet per year (AFY). The water would otherwise proceed downstream via concrete channels to the Los Angeles River. The Draft IS/MND concluded that "no beneficial uses would be impacted." However, flow reduction could have a significant impact on downstream biological resources, especially during the dry season proceeding after a below-average water year.

Response 5-B

The Draft IS/MND on pages 74 and 77 describes that the Program would reduce dry season flows from the Tujunga Central Branch channel that would reduce water in the Los Angeles River. In response to the comment the sentence on page 77 of the Draft IS/MND has been revised as follows:

> The Los Angeles River currently discharges an average of over 100 cubic feet per second (cfs) to the ocean during dry weather (City of Los Angeles 2018). The volume of water diverted during dry weather flow by the proposed Program would be a small percentage of the current downstream flows (1.4 percent of total annual flow or approximately 4 percent of dry weather flow), and as a result no beneficial uses, including biological resources, would be significantly impacted.

As noted in the comment, the reduction of dry weather flows is itself an impact. Therefore, the changes to the text provided above as requested in the comment are appropriate. The Draft IS/MND identifies the reduced flow impact on page 74, but concludes that no riparian or aquatic habitat would be removed or adversely affected within the downstream reaches of the Los Angeles River. Therefore, since no habitat would be lost or stressed, the flow reduction would be a less than significant impact. The analysis relies on a de minimis impact conclusion. That is, the reduction of 1.4 percent of total flow and approximately 4 percent of dry weather flow in the river would not result in loss of habitat or result in reduced habitat quality. Rather, diverting dry-weather urban runoff would benefit water quality. The Draft IS/MND describes on pages 74 and 77 how beneficial uses are well supported by the remaining dry season flows. This evidence is outlined further below.

The Draft IS/MND describes in Section 1.5 that six of the nine Program sites (see table below) would require insertion of diversion structures within underground storm drain pipes. No habitat values exist within the buried storm drain pipes. The remaining four Program sites would require installation of diversion structures within existing Tujunga Central Branch concrete box channel or reinforced concrete box culvert. The watershed drained by this Tujunga Central Branch

channel is a small portion of the San Fernando Valley adjacent to but outside of the Tujunga Wash drainage area, representing 1.7 percent of the total Los Angeles River watershed.

Infiltration Gallery Location	Diversion Structure Installation
David M. Gonzales Recreation Center	Underground Storm Drain Pipe
FernAngeles Park	Underground Storm Drain Pipe
Whitsett Fields Park North	Underground Storm Drain Pipe
Strathern Park North	Underground Storm Drain Pipe
Valley Plaza Park North	Underground Reinforced Concrete Box Culvert
Valley Plaza Park South	Concrete Channel
Alexandria Park	Concrete Channel
North Hollywood Park	Concrete Channel
Valley Village Park	Underground Storm Drain Pipe

The Draft IS/MND describes on page 74 that the Tujunga Central Branch channel is concrete-lined with no ecological value. As a result, direct impacts to habitat values from installing diversion structures would not adversely affect biological resources. Furthermore, the Draft IS/MND concludes on pages 74 and 77 that the proposed diversions would result in a small reduction of the flow in the Los Angeles River compared to the current flow, including in the dry season, and would not result in measurable effects to biological resources. The Draft IS/MND references the hydrological analysis conducted by the City for the One Water LA Program and cites that currently an average of 100 cubic feet per second (cfs) reaches the ocean in the concrete channel of the Los Angeles River during dry weather (City of Los Angeles 2018). The Program diversions represent an annual average flow of approximately 4 cfs or 4 percent of the dry weather flows to the ocean. The Draft IS/MND concludes on page 77 that the reduction caused by the project would represent 1.4 percent of the total flow in the river on an annual average. Since the river discharges substantial flow to the ocean in the dry season (>100 cfs), the Draft IS/MND concludes that the proposed project's 1.4 percent diversion of total flows and 4 percent of dry season flows would not result in significant impacts to biological resources.

The Draft IS/MND also concludes on page 153 that the flow reductions would not result in a cumulatively significant reduction, including in the dry season. This conclusion is consistent with the One Water LA Study, which provides an overview of stormwater flows in Chapter 3and the Los Angeles River in Chapter 4. (City of Los Angeles 2018).

In addition to the published One Water LA study, the City has been participating in the Los Angeles River Flows Project, a comprehensive new hydrologic study of the river led by the Southern California Coastal Watershed Research Project (SCCWRP) in partnership with the State Water Resources Control Board (SWRCB). This new study is called the Los Angeles River Flows Project and is sponsored by the City of Los Angeles (by and through LADWP and LASAN), Los Angeles Regional Water Quality Control Board (LARWQCB), and the Los Angeles County Sanitation Districts (LACSD). SCCWRP is a quasi-public agency established to

support Southern California governmental agencies with third-party, science-based analysis. The Los Angeles River Flows Project was initiated in 2019 expressly to evaluate potential effects of cumulative flow reductions in the Los Angeles River, including reductions in WRP discharges and future stormwater capture projects such as the proposed Project. CDFW has been actively participating in the Project as a member of the Technical Advisory Committee (TAC).

In May 2021, SCCWRP published a report titled Process and Decision Support Tools for Evaluating Flow Management Targets to Support Aquatic Life and Recreational Beneficial Uses of the Los Angeles River as part of the Los Angeles River Flows Project (LA River Flows Project Final Report) (SCCWRP, 2021b). This new Final report, included by reference with this Final IS/MND, characterizes the environmental attributes of the river channel and evaluates flows that support those attributes, providing flow-ecology relationships helpful in understanding dry season flow reduction impacts on ecological values. The report develops a set of tools to evaluate future flow management scenarios. One of the three objectives noted in the report is to:

> "Produce tools and approaches to help evaluate how potential modified flow regimes in the LA River may affect the likelihood of supporting aquatic life and recreational beneficial uses" (SCCWRP, 2021b)

The results of this study directly confirm the conclusions outlined in the IS/MND, including an evaluation of the effects to focal species of reduced storm flows during the dry season. See response to comment 5-I for more discussion on the new study and the conclusions regarding impacts to ecological values from reduced dry weather flow.

Comment 5-C

The Draft IS/MND does not provide sufficient analysis of the Project's potential biological impacts to allow CDFW to determine the Project's significance or need for mitigation.

Data Source: The Draft IS/MND uses data from the 2015 *Los Angeles River Ecosystem Restoration Integrated Feasibility Report* (USACE 2015). The U.S. Army Corp of Engineers (USACE) report analyzes the feasibility of restoring an 11-mile stretch of the Los Angeles River from Pollywog Park to Downtown Los Angeles, referred to in the report as the ARBOR reach (Area with Restoration Benefits and Opportunities for Revitalization) (USACE 2015). Citing the USACE report, page 77 of the Draft IS/MND states, "USACE estimated that existing water sources provide 211,348 AFY of flow within the Los Angeles River watershed on an annual basis. The proposed diversion would be approximately 1.4 percent of the existing water source […]. The volume of water diverted during dry weather flow by the proposed Program would be a small percentage of the current downstream flows (1.4 percent), and no beneficial uses would be impacted.

The Draft IS/MND may have underestimated the percentage of water diverted from the Los Angeles River in using 211,348 AFY as the basis for deriving 1.4 percent. After factoring in water demand (e.g., infiltration, evaporation, evapotranspiration), the USACE estimated that flow would be reduced from 211,348 AFY to 143,793 AFY annually and 29,166 AFY in the summer

(April through September) (USACE 2015). Based on reduced volumes, the Project's proposed diversion would be approximately 2.2 percent annually, an increase from 1.4 percent. During the summer, diversion would be approximately 10.3 percent. Based on the above, the Draft IS/MND's impact analysis may not have accurately estimated the proportion of water the Project would divert from the Los Angeles River.

Response 5-C

The calculation in the comment asserting a 10.3 percent reduction is inaccurate in that it assumes the entire diversion estimate of the proposed Program (3,010 AFY) will occur between April and September. It would be more appropriate when calculating the six-month dry season percentage from the 29,166 AFY flow assumption to compare half the annual anticipated diversion, which would be 1,505 AFY, calculated as 5.14 percent of the total dry season flow. A different way of calculating the contribution of flows attributed to the Tujunga Central Branch channel is to compare the project's diversion estimates with flow estimates at the ocean. The One Water LA Report (City of Los Angeles 2018) estimates that the river discharges 100 cfs to the ocean during summer months. The Program's proposed diversion of 3,010 AFY would constitute approximately 4 percent of the existing flow to the ocean during the summer months. This would be a conservative assumption since it does not attribute any stormwater capture to the proposed Program. The Draft IS/MND concludes that the contribution of flow to the Los Angeles River from the Tujunga Central Branch channel during the dry season is small (1.4 percent of the total volume and 4 percent of dry weather flow) compared to other sources. Furthermore, the watershed represents only 1.7 percent of the total watershed feeding stormwater to the Los Angeles River. Based on these flow estimates, the Draft IS/MND concludes that the proposed project would not significantly affect the ecology of the river.

The City, including LADWP, is participating in the Los Angeles River Flows Project in partnership with the SWRCB, and in close coordination with CDFW. The Los Angeles River Flows Project has been initiated by SWRCB to better understand the water demands of beneficial uses in the river, and to support future flow management priorities with science-based demand characterizations. See response to comment 5-I for more discussion on the new study.

Comment 5-D

Seasonality: The Draft IS/MND does not thoroughly analyze the potential significance of water diversion depending on the season. During the dry season, typically April through September in southern California, the Los Angeles River is largely maintained by urban runoff and discharge from WRPs. Diverting water could be significant during the dry season and could either significantly reduce water flow or result in complete loss of water flow from the Tujunga Central Branch channel to the Los Angeles River.

Response 5-D

The Draft IS/MND does evaluate the seasonality of the potential effects of the Program on page 74. The assessment describes the effects of the proposed Program on both dry weather flows and

wet weather flows. The Draft IS/MND notes on pages 74 and 77 that dry weather flows would be reduced slightly but would not result in loss of habitat. This is substantiated by the fact that 100 cfs currently discharges to the ocean in dry weather indicating a surplus of flow. Furthermore, the Draft IS/MND also points out that the ecological values of the river would be enhanced with the reduction of pollutant daily loads conveyed in dry weather flow. The water quality benefits of stormwater capture on downstream habitat values are described further in One Water LA, Chapter 4 Los Angeles River Study (City of Los Angeles 2018), as a fundamental benefit of the City's Program, and supports the water quality objectives of the regional Municipal Separate Storm Sewer System (MS4) stormwater NPDES permit of which the City is a participating permittee. See response to comments 5-C and 5-G.

Comment 5-E

Drought: The Draft IS/MND does not analyze the potential significance of water diversion during a below-normal water year. Since 2000, the longest duration of drought in California lasted between 2011 and 2019 (USGS 2021) and in southern California, between 2012 through 2016 (Los Angeles Almanac 2021). The 2017-2018 rainfall season was below normal and the driest for Los Angeles since 2006-2007 (Los Angeles Almanac 2021). Diverting water during a below normal rainfall year may significantly reduce water flow or result in complete loss of water flow.

Response 5-E

Annual rainfall amounts vary in the Los Angeles River watershed, with multi-year droughts likely becoming more common. The City's Stormwater Capture Master Plan states that "although the average annual precipitation in downtown Los Angeles is 15.3 inches, it ranges from a low of 4.69 inches (2007) to a high of 30.6 (1998). The mountains that surround the coastal plain, and are tributary to the City, experience considerably more rainfall than downtown Los Angeles. For example, in Big Tujunga Canyon, annual rainfall ranged from 9.62 inches in 1989 to 53.93 in 1998." (LADWP Stormwater Capture Master Plan, 2015; p. 3) The watershed represents only 1.7 percent of the total LA River watershed. The reduction would not significantly reduce dry season flows. The comment does not provide any additional information not already considered in the Draft IS/MND. See response to comment 5-I.

Comment 5-F

Beneficial Uses: The concrete lined portions of the Los Angeles River support wildlife. These portions of the Los Angeles River are regionally significant, especially in a dense urban environment with substantial loss or alteration of the natural hydrologic regime and river ecosystems. A reduction of flow, especially dry season flow, could directly or indirectly impact biological resources through habitat modifications. Where the Los Angeles River overtops the concrete-lined channel, the resulting sheet flows allow phytoplankton (algae and cyanobacteria), microorganisms, and herbaceous vegetation to establish. The algae provide habitat and a food source for benthic invertebrates, a vital food source for wading birds. The Los Angeles River provides habitat for hundreds of bird species, making these areas birding hotspots. The least Bell's vireo (*Vireo bellii pusillus*), an Endangered Species Act and CESA-listed endangered

species, has been documented within the Glendale Narrows area. Least Bell's vireo depends on willow (*Salix* genus) riparian habitat. The ARBOR reach examined in the USACE report contains soft-bottom channels that support herbaceous and woody vegetation. Dominant species include black willow (*Salix gooddingii*), Fremont cottonwood (*Populus fremontii*), and arroyo willow (*Salix laevigata*) (USACE 2015). The middle reach of the Los Angeles River, specifically Glendale Narrows, supports anadromous fish that includes the Pacific lamprey (*Entosphenus tridentatus*), a California Species of Special Concern.

The Draft IS/MND concludes that "no beneficial uses would be impacted." The Draft IS/MND does not offer a quantitative analysis as to how it determined no impacts would occur. Moreover, the Draft IS/MND does not define what it considered to be "beneficial uses." Diverting water during the dry season could reduce the availability and extent of shallow water sheet flow downstream. This could potentially impact algae, benthic invertebrates, and birds. Willow riparian habitat may be impacted if reduction in flow leads to receding shoreline or lower water depth. Preliminary work of the Los Angeles River Flows Project show that black willow (*Salix gooddingii*) seedling mortality increases as water depth decreases (SWRCB 2019). Loss of suitable habitat may impact sensitive species such as least Bell's vireo. Anadromous fish have specific habitat requirements including water depth, velocity, and vegetation.

Response 5-F

The Draft IS/MND on pages 74-78 describes the valuable biological resources existing in the Los Angeles River that are supported by consistent surface flow. The Draft IS/MND cites the One Water LA Program to substantiate the values found in the river, including all the species described in the comment. The 4 percent reduction of the current 100 cfs in the lower river channel would not reduce habitat from sheet flow in the lower reaches of the river since the flows would continue to be greater than the low flow channel and would continue to overflow and maintain the sheetflow condition. Phytoplankton and herbaceous vegetation would continue to provide a food source for benthic invertebrates, and for wading birds, as noted in the comment. The Draft IS/MND does provide a quantitative assessment of the potential effect of the proposed Program by estimating a 1.4 percent flow reduction. This small average flow reduction would not result in measurable effects to habitat values in the concrete-lined Los Angeles River either in the Arbor Reach or in the concrete-lined portion of the lower river. Furthermore, the Draft IS/MND cites the One Water LA Study that states that far more water exits the Arbor Reach under current conditions than is proposed to be diverted by the proposed Program. That is to say, since more water exits the system than is contributed by stormwater, there would be sufficient quantity of flow to meet the existing ecological demand. The Draft IS/MND concludes that the calculated flow reductions would not impact beneficial uses.

The comment cites information from a report published for the Los Angeles River Flows Project in January 2021 that provides a habitat suitability assessment for species known to occur in the Los Angeles River. The citation notes that black willow seedling mortality increases with water depth reduction. This information is extracted from a life stage suitability curve provided in the report. The Assessment Report does not provide a conclusion on the optimal water flow depth in

the Los Angeles River. Rather, the Habitat Assessment Report (SCCWRP 2021a) provides suitability curves that show a relationship with water depth and different life cycle stages for various species.

The figure below taken from that report shows that willow seedling mortality is more complex than stated in the comment: mortality is at a minimum at mean depths of around 5 cm and then increases with both reductions and increases in flow depth. In other words, germination occurs within a specific range of flow depth.

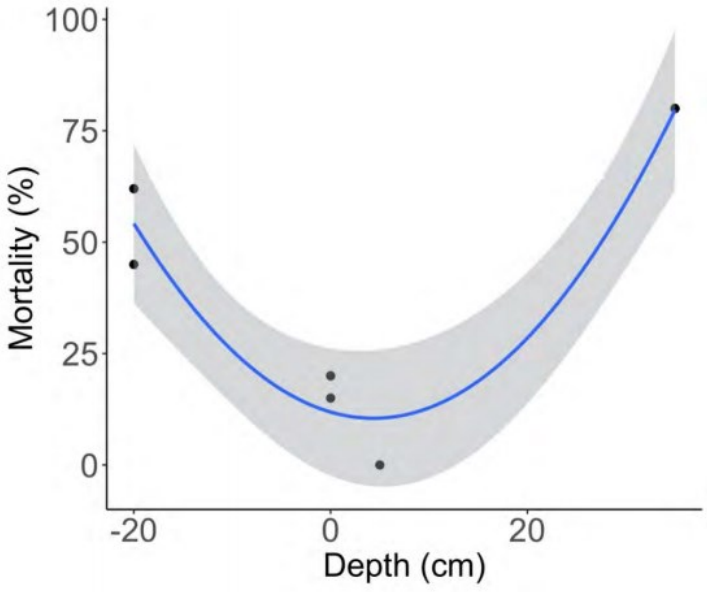

Figure 35. Habitat suitability curve of seedling mortality as a function of inundation/depth from water surface of Salix Gooddingii calculated through quadratic linear regression. Depth is defined as depth from surface i.e., -20 cm = 20 cm below surface, 20 cm = 20 cm above surface. Mean = 5 cm, p = 0.002, n=5.

The second figure, taken from the recently published SCCWRP flow study (SCCWRP 2021b) shows that willow in the Glendale Narrows area of the Los Angeles River can sustain a wide range of flow conditions. The graph shown below from the study shows that WRP discharges could be reduced by 80 percent and still support the existing willow. The WRP flow reduction of 80 percent illustrated, from 75 cfs to 15 cfs, is an order of magnitude greater than the proposed flow reduction from the proposed Program. The graph also shows that if all urban baseflows were captured, WRP discharges could be reduced by up to 68 percent and the existing willow habitat would be maintained. That is to say, a 100 percent reduction in urban baseflow across the Los Angeles River watershed (of which the proposed Program watershed comprises 1.7 percent by area) would still allow for a 68 percent reduction in WRP flow and continue to support willow habitat. This substantiates the conclusion that the proposed Program dry weather flow reductions would not affect downstream beneficial uses significantly, and that it would be unreasonable to assume otherwise.

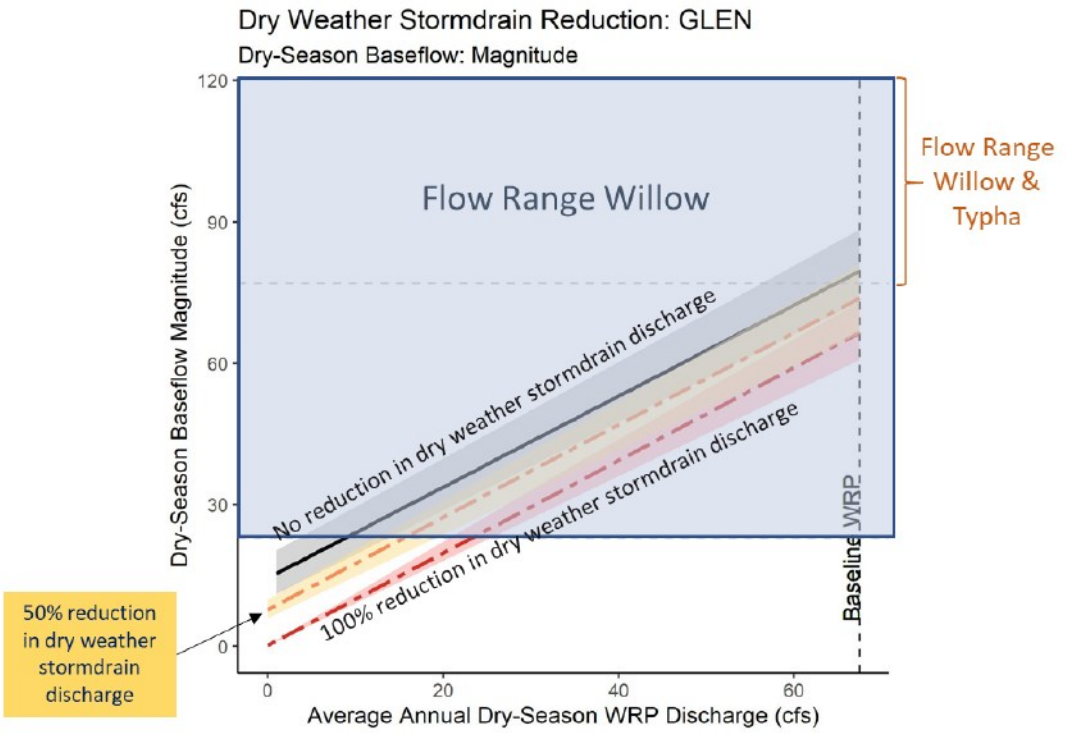

The effect of stormwater diversion would reduce Los Angeles River flows less than 4 cfs in the dry season, compared to the current dry season average of 75 cfs in the Arbor Reach and 100 cfs where the Los Angeles River confluences with the Pacific Ocean. The remaining flow would provide for the needs of willow and other riparian vegetation. The conclusions illustrated in the SCCWRP study for black willow show that surface water depth is not a driving factor in the suitability of black willow habitat in the Los Angeles River. The comment does not identify any other citation supporting water needs for the riparian habitats See response to comment 5-I.

Comment 5-G

Cumulative Flow Reductions: The Draft IS/MND does not analyze whether the Program would result in significant impacts when considered with other existing or proposed water diversion projects in the Los Angeles River watershed. The cities of Burbank, Glendale, and Los Angeles plan to recycle more wastewater and reduce their discharges to the Los Angeles River for this purpose (SWRCB 2019).

Response 5-G

The Draft IS/MND concludes on page 153 that the proposed Program would not result in cumulatively significant effects to the environment. This conclusion is based on the quantitative analysis that 4 percent of dry weather flow (1.4 percent of total annual flow) is too small an amount to result in an appreciable, or measurable change in the habitat values currently exhibited in the Los Angeles River. Furthermore, the City has acknowledged that cumulative flow reductions in the future may include potential reductions in WRP discharges to support regional

recycled water program objectives. To evaluate the effects of cumulative reductions in future flows that may include future diversions of WRP discharges, the SWRCB has conducted the Los Angeles River Flows Project. The study published by SCCWRP through the Los Angeles River Flows Project (SCCWRP 2021b) provides tools to all the river stakeholders to best manage the resource's beneficial uses. Future projects that may propose further diversions in dry weather flow may rely on this study to assess potential direct and cumulative effects of WRP discharge diversions. These future WRP diversions will be subject to Water Code Section 1211 Petitions, approved by the SWRCB.

In January 2021, SCCWRP published a report titled the Assessment of Aquatic Life Use Needs for the Los Angeles River Report (Assessment of Aquatic Life Report) (SCCWRP 2021a). This report characterizes habitat values in the river, and evaluates water demands of riparian and aquatic species known to occur in the river system. Habitat suitability curves have been developed for certain focal species based on the assessment. Habitat suitability curves were developed as part of a technical tool to assist the SWRCB in assessing potential WRP flow reductions in the Los Angeles River, but are not themselves flow recommendations.

The Assessment of Aquatic Life Report outlines habitat suitability criteria for three species: black willow, cattails (*Typha sp*.), and algae (*Cladophora sp*.). The study provides an overview of the cumulative effects of stormwater diversions to the overall flow in the Los Angeles River. The graphic provided in response to comment 5-F above summarizing the relationship between flow in the river and ecological water demands of willow substantiates the conclusion that the proposed Program dry weather flow reductions would not affect downstream beneficial uses significantly, and that it would be unreasonable to assume otherwise.

The City, including LADWP, is committed to maintaining a supportive role in the Los Angeles River Flows Project. See response to comment 5-I.

Comment 5-H

Diverting water from the Los Angeles River may impact biological resources downstream, especially during the dry season proceeding after a below-average water year. Impacts to any sensitive or special status species should be considered significant under CEQA unless they are clearly mitigated below a level of significance. Inadequate avoidance, minimization, and mitigation measures for impacts to sensitive or special status species will result in the Project continuing to have a substantial adverse direct, indirect, and cumulative effect, either directly or through habitat modifications, on any species identified as a candidate, sensitive, or special-status species by CDFW or U.S. Fish and Wildlife Service.

Response 5-H

See responses to comments 5-G and 5-I.

Comment 5-I

Mitigation Measure #1: CDFW recommends LADWP provide additional analysis and evaluation of potential impacts on biological resources as part of the final environmental document. At a minimum, an additional analysis and report should provide the following:

Study Reach

1. CDFW recommends LADWP define the study area as a 15-mile reach of the Los Angeles River, bounded by the Los Angeles River's confluence with the Tujunga Wash tributary and proceeding downstream to the river's confluence with the Arroyo Seco tributary. LADWP should identify all sources of flow input within the study area to estimate the total annual and dry season flow. LADWP should assess potential Project related impacts on biological resources within this study reach.

Changes to Hydrology and Hydraulics

1. Under pre-Project (i.e., baseline) conditions, the volume of water flow from the Tujunga Central Branch channel into the 15-mile study reach during a) the wet (November through March); b) the dry season (April through October); and c) above-average and below-average water year (i.e., wet season/above-average water year, wet season/below-average water year, dry season/above-average water year, and dry season/below-average water year). LADWP should clearly define what it would consider to be above-average or below-average rainfall year.

2. Under proposed Project conditions, the percent reduction in flow from 1) the Tujunga Central Branch channel tributary and 2) 15-mile study reach for a wet season/above-average water year, wet season/below-average water year, dry season/above-average water year, and dry season/below-average water year.

3. An analysis of potential Project-related changes to river hydraulics in both concrete and soft-bottom reaches. This includes water depth (percent change), wetted perimeter (acres gained/lost), and velocity (percent change). CDFW requests a map modeling potential changes to channel hydraulics overlain on a map of plant communities and habitat for sensitive wildlife species and birds.

4. A quantitative analysis comparing the flow from the Tujunga Wash, Burbank Wastewater Reclamation Plant (WRP), Tillman WRP, Verdugo Wash, and Glendale WRP, and their relative contribution to the hydrograph of the 15-mile study reach.

Biological Resources Impact Assessment

5. A map of plant communities and important bird foraging and nesting habitat occurring in the 15-mile study reach. Plant communities should be mapped at the alliance/association level using the Manual of California Vegetation, second edition (Sawyer et al. 2009). Also, CDFW recommends an updated and thorough floristic-based assessment of plant communities, following CDFW's Protocols for Surveying and Evaluating Impacts to Special Status Native Plant Populations and Sensitive Natural Communities (CDFW 2018).

6. A comprehensive list of sensitive and special status plant and wildlife species, and sensitive plant communities, occurring in the 15-mile study reach. CDFW recommends a nine-quad

search of the California Natural Diversity Database (CNDDB) for sensitive and special status biological resources that could occur downstream. For each biological resource, provide:

a. A summary of species-specific habitat requirements;

b. A discussion as to how the species or plant community may be significantly impacted directly or indirectly through habitat modification, as result of changes to hydrology (reduced flow) and hydraulics (water depth, wetted perimeter, velocity); and,

c. A quantitative analysis and/or adequate discussion to evaluate whether the Project would result in those significant impacts.

7. A discussion of whether diversion devices such as rubber dams would have direct and/or indirect impact on biological resources.

8. An adequate discussion to address how the Project may potentially affect on-going habitat recovery and restoration efforts.

9. An adequate discussion of Project-related impacts on biological resources in relation to cumulative flow reductions.

Response 5-I

The IS/MND concludes that based on the evidence provided in the existing literature, the proposed Program would not result in significant impacts to biological resources in the Los Angeles River considering the small contribution of flow provided by the Tujunga Central Branch channel, and that it would be unreasonable to assume otherwise. The IS/MND concludes that since the Program's effects would not result in a significant impact directly or cumulatively, no mitigation is required. However, in response to the comment and request for mitigation, the Los Angeles River Flows Project Final report (LA River Flows Project Final Report), published after the Draft IS/MND was published is incorporated by reference into this Final IS/MND. This robust hydrological, hydraulic, and ecological study of the Los Angeles River conducted by SCCWRP for SWRCB is designed to develop a set of tools and approaches to help evaluate future flow management scenarios. The Project applies the California Environmental Flow Framework (CEFF) approach to evaluating ecological flow relationships in California streams. The City is participating in the Los Angeles River Flows Project to assess how future flow diversions from WRPs may be best managed to support beneficial uses and management priorities in the river.

The LA River Flows Project Final Report is presented in this Final IS/MND to respond to this detailed comment. The Report was conducted over a two-year period, including input from numerous stakeholders including both LADWP and CDFW. The Report assists in evaluating the potential significance of the impacts of stormwater capture projects, such as the proposed Project, and includes all of the elements proposed in the comment and recommended mitigation measure. The following responses address each point in the comment:

Comment 5-Ia: Study Reach

1. CDFW recommends LADWP define the study area as a 15-mile reach of the Los Angeles River, bounded by the Los Angeles River's confluence with the Tujunga Wash tributary and proceeding downstream to the river's confluence with the Arroyo Seco tributary. LADWP should identify all sources of flow input within the study area to estimate the total annual and dry season flow. LADWP should assess potential Project related impacts on biological resources within this study reach.

Response to Comment 5-Ia

With respect to the Study Reach, the Los Angeles River Flows Project includes assessments of habitat values in the entire Los Angeles River from the Sepulveda Dam to the Pacific Ocean. This study area is larger than requested in the comment. The model domain included as Figure 5 in the study is included below. The Tujunga Central Branch channel confluences with the Los Angeles River at approximately node F300 shown in in the figure.

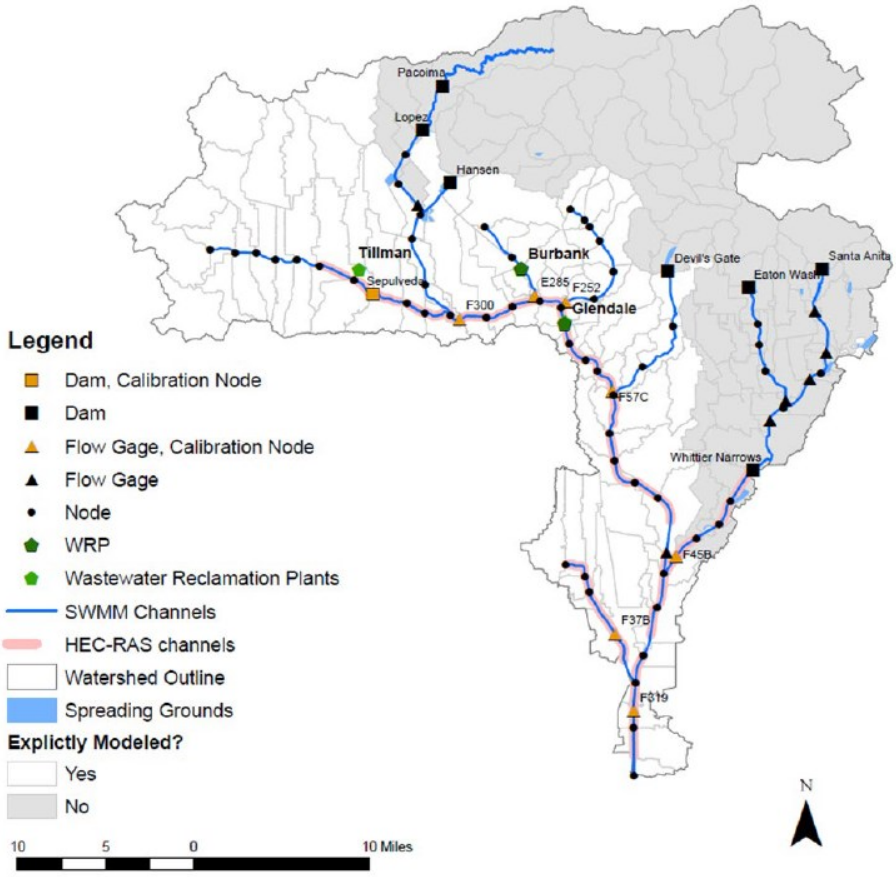

Comment 5-Ib: Hydrology and Hydraulics

2. Under pre-Project (i.e., baseline) conditions, the volume of water flow from the Tujunga Central Branch channel into the 15-mile study reach during a) the wet (November through March); b) the dry season (April through October); and c) above-average and below-average water year (i.e., wet season/above-average water year, wet season/below-average water year, dry season/above-average water year, and dry season/below-average water year). LADWP should clearly define what it would consider to be above-average or below-average rainfall year.

Response to Comment 5-Ib

With respect to Changes to Hydrology and Hydraulics, the Los Angeles River Flows Project includes results from a comprehensive modelling effort that meets all the parameters in the comment. As noted on pages 7 through 9 of the study, estimated flow conditions were modeled using a coupled hydrologic-hydraulic model created in EPA's Storm Water Management Model (SWMM) and the Hydrology Engineering Center's River Analysis System (HEC-RAS). The hydrologic model simulates discharge on the mainstem of the LA River, Compton Creek, and Rio Hondo at an hourly time step from WY 2011 through 2017. The model includes wet season and dry season discharges and uses a dry period to represent conservative flow estimates as shown in the figure below taken from Figure 3 of the study.

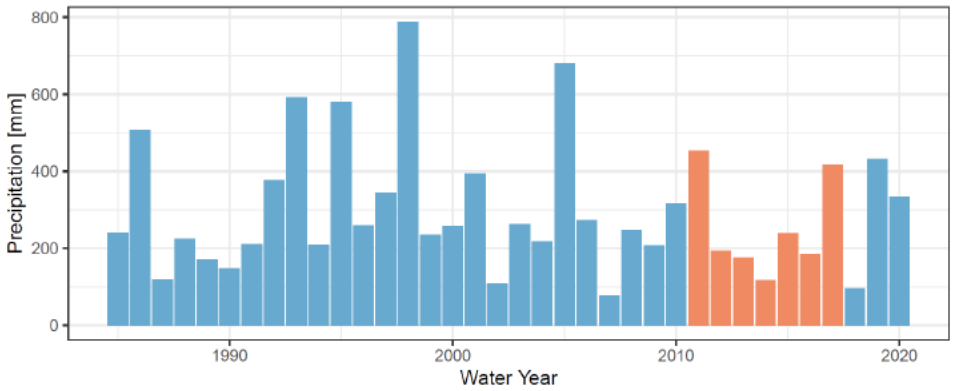

The one-dimensional hydraulic model was created by combining existing HEC-RAS models for the LA River and updating channel geometry and Manning's roughness based on field observations and calibration. The hydraulic model was run under steady-state conditions, which were used to develop rating curves to apply to the simulated hydrographs, producing time series hydraulic data for velocity, maximum channel depth, and shear stress.

Some excerpts from the SCCWRP 2021 report that describes the Flows Project are included here:

> *"We estimated current flow condition in the study area using a coupled hydrologic-hydraulic model created in EPA SWMM and HEC-RAS (ES-2). Current hydrologic conditions are defined as the flows and operations that occurred during water year (WY) 2011 to 2017." (SCCWRP, 2021; p ii)*

"Calculated ranges for the wet season and dry season baseflow metrics increase downstream of the three water reclamation plants, illustrating the contributions of discharges from the water reclamation plants…. The wet season metrics, baseflows from the start of the storm season to the start of the dry season, and dry season metrics, base flows from the start of the dry season to the start of the following wet season, are calculated on an annual basis. Typically, the start of the wet season is between November to January and the start of the dry season is between May to July depending on the climatic conditions for a given water year. The broader ranges and higher values of wet season baseflow metrics reflects the contribution of residual stormdrain discharge following storm events. Rio Hondo and Compton Creek both have the lowest wet season and dry season baseflow magnitudes compared to all other reporting nodes on the mainstem." (SCCWRP, 2021; p iv.)

Comment 5-Ic: Hydrology and Hydraulics

3. Under proposed Project conditions, the percent reduction in flow from 1) the Tujunga Central Branch channel tributary and 2) 15-mile study reach for a wet season/above-average water year, wet season/below-average water year, dry season/above-average water year, and dry season/below-average water year.

Response to Comment 5-Ic

As noted Figure ES-5 of the LA River Flows Project Final Report and excerpted below, dry weather storm flow contributions are a key consideration in the study. The graph illustrates average baseline flows with the black line accompanied by a grey band that indicates the 10 percent and 90 percent percentiles. This grey shading following the black line accounts for extremely dry years. In other words, the analysis represented by this graph takes dry year and wet year flows into consideration.

The graph compares potential future combined flow reductions of both dry weather runoff and WRP reductions with habitat value impacts. The large grey box represents habitat suitability for black willow habitat. The graph shows that a small percentage decline in dry weather storm channel flows (even in very dry years) would not reduce flows in the river below suitability thresholds for willow habitat, resulting in no reductions in habitat acreage or habitat quality. (The flow range for typha [cattails] is also included in the graph to show flow requirements for typha across the entire channel width. The flow rate is needed due to the wide channel width. Less flow could support typha within a narrower side channel such as shown in the HEC-RAS cross section provided in response to comment 5-!d below)As a result, the impact would be less than significant from a direct, indirect and cumulative perspective.

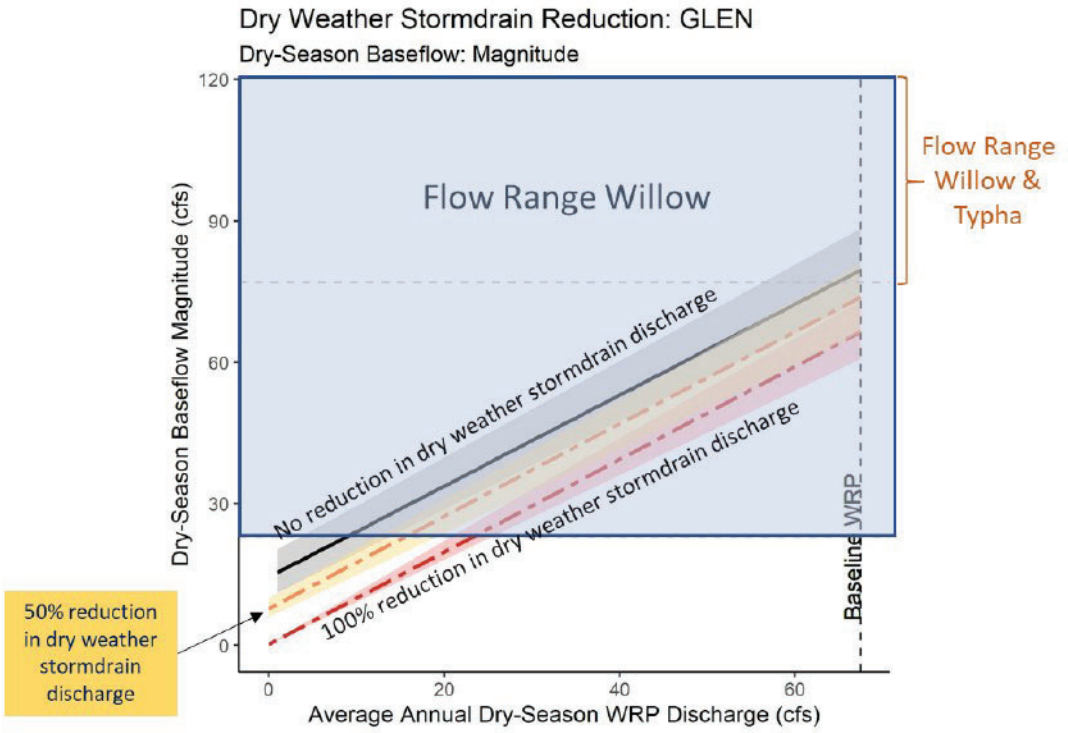

Figure ES-5. Flow-based sensitivity curves illustrating the combined effects of change in WRP discharge and 50% (yellow) and 100% reduction (red) in dry weather stormdrain discharge at GLEN reporting node. Solid and dashed lines represent median values; bounds of the gray and colored bands are the 10th and 90th percentile dry-season instream flows across the modeled period. Optimal flow range in this example is based on a 50% (medium) probability of occurrence of Willow and Typha.

Comment 5-Id: Hydrology and Hydraulics

4. An analysis of potential Project-related changes to river hydraulics in both concrete and soft-bottom reaches. This includes water depth (percent change), wetted perimeter (acres gained/lost), and velocity (percent change). CDFW requests a map modeling potential changes to channel hydraulics overlain on a map of plant communities and habitat for sensitive wildlife species and birds.

Response to Comment 5-Id

The Los Angeles River Flows Project published the "Assessment of Aquatic Life Use Needs for the Los Angeles River" (Assessment of Aquatic Life Report) in February 2021 (Stein, 2021). This document provides a detailed summary of hydraulic HEC-RAS modeling done to support the overall program objectives. Over 1,000 cross sections were generated by the HEC-RAS model in the river that show impacts of flow reductions to depth and wetted perimeter (as requested in the comment). Since the roughness of the Los Angeles river changes over time and greatly influences depth and wetted perimeter in specific locations, the model characterized typical channel dimensions and roughnesses to provide meaningful ecological-flow relationships. An excerpt from page 15 of this study is included below:

"Channel hydraulics (i.e., maximum channel depth, velocity, and shear stress) can vastly differ across different sections of the channel at a single site. For every soft-bottom output node in the HEC-RAS model, three output locations were selected at the three most significant morphological zones to capture the variability in hydraulics for each node and were designated as left overbank (LOB), center channel (Main), and right overbank (ROB)"

The figure below provided on page 15 of the Assessment of Aquatic Life Report shows how channel characteristics were accommodated in the ecological-flow relationship analysis provided in the report. Habitat suitability curves were developed to reflect water depth and velocity requirements of existing habitat within these three different parts of the channel: side channel, main channel, and high floodplain. Although the Assessment of Aquatic Life Report does not provide a map of the habitat within the Los Angeles River associated with each of these cross sections, it does inventory the species and habitat values that occur within the soft-bottom portion of the river (the 15-mile segment highlighted in the comment) and presents a detailed HEC-RAS model that provides depth and width impacts associated with flow reductions at specific cross section locations that were also measured in the field for model calibration purposes. The evaluation of habitat suitability within this segment of the river (see graph provided in response to comment 5-F) is then expressed in cubic feet per second (cfs) impacts rather than depth and width in order to provide a meaningful model for the total 15 miles of the soft-bottom segment.

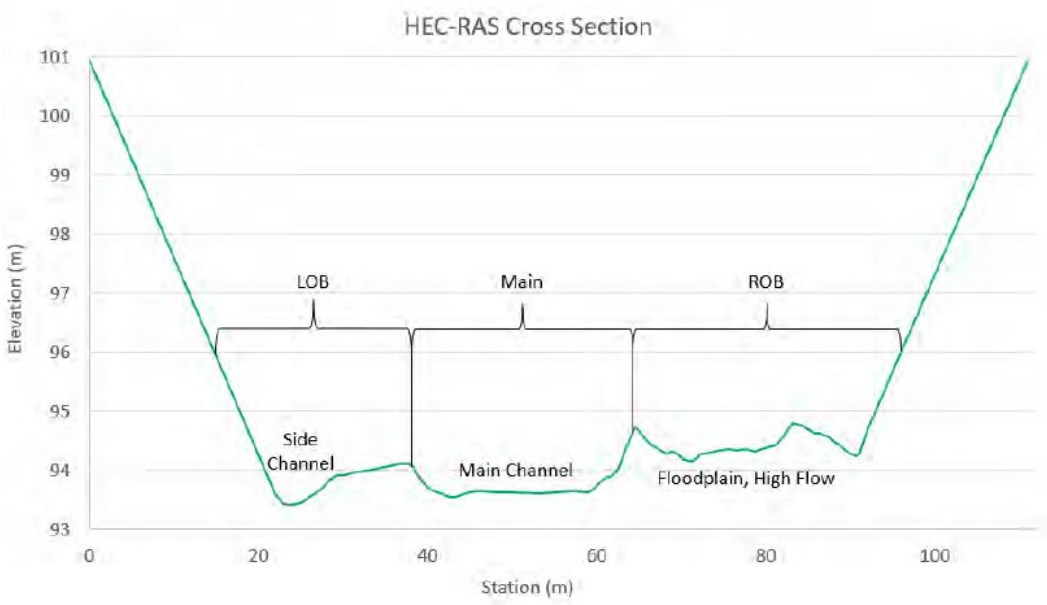

Comment 5-Ie: Hydrology and Hydraulics

5. A quantitative analysis comparing the flow from the Tujunga Wash, Burbank Wastewater Reclamation Plant (WRP), Tillman WRP, Verdugo Wash, and Glendale WRP, and their relative contribution to the hydrograph of the 15-mile study reach.

Response to Comment 5-Ie

As described in responses above, the Assessment of Aquatic Life Report as well as the LA River Flows Project Final Report provide a comprehensive assessment of flow in the Los Angeles River including each of the flow sources noted in the comment. The Assessment of Aquatic Life Report describes average dry season river flows in each segment of the river accounting for contributions from WRPs, groundwater, and storm drain channel inputs.

Comment 5-If: Biological Resources Impact Assessment

1. A map of plant communities and important bird foraging and nesting habitat occurring in the 15-mile study reach. Plant communities should be mapped at the alliance/association level using the Manual of California Vegetation, second edition (Sawyer et al. 2009). Also, CDFW recommends an updated and thorough floristic-based assessment of plant communities, following CDFW's Protocols for Surveying and Evaluating Impacts to Special Status Native Plant Populations and Sensitive Natural Communities (CDFW 2018).

Response to Comment 5-If

The Assessment of Aquatic Life Report provides an inventory of habitat and species occurrences within the 15-mile segment mentioned in the comment. Figure 34 of the Assessment of Aquatic Life Report reproduced below illustrates which reaches exhibit aquatic and riparian habitat values. Habitat mapping was not conducted as part of the study. Rather, flow ranges supporting habitat suitability for all aquatic values were developed, assuming that the entire 15-mile river segment may exhibit habitat values.

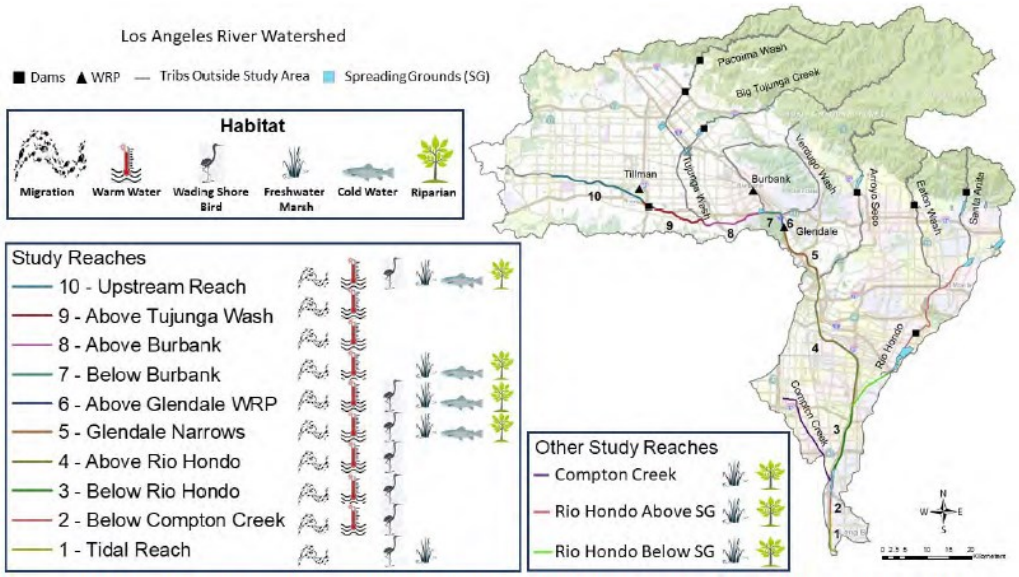

Figure 34. Map of study reaches with identified habitats that could potentially be supported in each reach.

Comment 5-Ig: Biological Resources Impact Assessment

2. A comprehensive list of sensitive and special status plant and wildlife species, and sensitive plant communities, occurring in the 15-mile study reach. CDFW recommends a nine-quad search of the California Natural Diversity Database (CNDDB) for sensitive and special status biological resources that could occur downstream. For each biological resource, provide:

    d. A summary of species-specific habitat requirements;

    e. A discussion as to how the species or plant community may be significantly impacted directly or indirectly through habitat modification, as result of changes to hydrology (reduced flow) and hydraulics (water depth, wetted perimeter, velocity); and,

    f. A quantitative analysis and/or adequate discussion to evaluate whether the Project would result in those significant impacts.

Response to Comment 5-Ig

The Los Angeles River Flows Project Final Report includes a comprehensive inventory and assessment of biological habitat values in the Los Angeles River:

> *"The overarching goal of this project is to consider potential effects of reduced WRP discharge and increased stormwater capture on existing and potential future beneficial uses. Therefore, our analysis included characterizing species and habitats that current occur and those that could reasonably occur in the future (based on a comparison to similar southern California watersheds). "(SCCWRP, 2021; p vii)*
>
> *"The aquatic life use assessment began with a compilation of observational data from the LA River and surrounding watersheds which was used to identify priority focal habitats and endmember species that represent a range of tolerances for each habitat. We then determined the flow conditions necessary to support the life history needs of each species and used those to create "flow-ecology" curves or models relating key hydrologic, hydraulic, and temperature conditions to the probability of occurrence for each focal species, or the probably of being able to complete specific life-history requirements." (SCCWRP, 2021; p vii)*

The Assessment of Aquatic Life Report provides the CNDDB listed species of concern in a concise map excerpted below. Beginning on page 38, the Assessment of Aquatic Life Report provides a summary of "life history needs" for key species within the habitat types. Habitat suitability curves are prepared based on the target vegetation's needs for water as measured by flow in the river (ie., cfs). This analysis defines future water flow reductions as the impact, and provides suitability curves to evaluate significance of the impact. The graph included in response to comment 5-F summarizes the relationship of flow in the river with habitat suitability for willow habitat. Since willow habitat (the key indicator species for riparian values in Southern California) is sustained with substantially less flow than currently exists or is projected to exist with future flow reductions, the contribution of 4 percent flow reduction resulting from the proposed project is considered cumulatively less than significant. That is to say, the scientific analysis contained in the LA Rivers Flows Project Final Report and companion study Assessment of Aquatic Life Report provide the information requested in this comment and support the conclusions of the IS/MND.

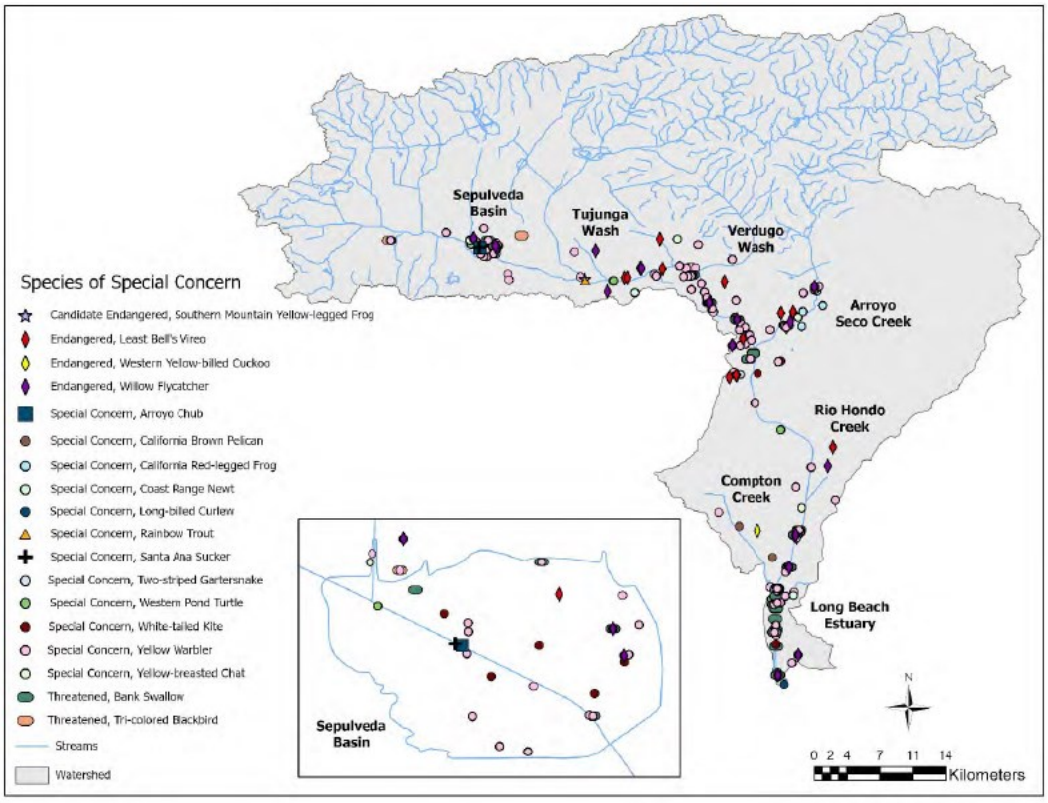

Figure 33. Species observations along the mainstem of the LA River and tributaries included in this study.

Comment 5-Ii: Biological Resources Impact Assessment

3. A discussion of whether diversion devices such as rubber dams would have direct and/or indirect impact on biological resources.

Response to Comment 5-Ii

As described on page 74 of the IS/MND, the proposed diversion structures would not impact any biological resources since they would be installed within either underground storm drain pipes or concrete box channels. The only effect to biological resources that could occur would result from reduced flow to downstream resources. No habitat would be removed as a result of the Project. As described in detail in this response to comment 5-I those effects are determined to be less than significant.

Comment 5-Ij: Biological Resources Impact Assessment

4. An adequate discussion to address how the Project may potentially affect on-going habitat recovery and restoration efforts.

Response to Comment 5-Ij

As described in this response to comment 5-I, the proposed Project would not significantly affect the habitat values within the Los Angeles River. No restoration projects are currently occurring within the river channel that would be adversely affected by the proposed Project.

Comment 5-Ik: Biological Resources Impact Assessment

5. An adequate discussion of Project-related impacts on biological resources in relation to cumulative flow reductions.

Response to Comment 5-Ik

As described in responses to comments 5-F and 5-I, the proposed Project would not significantly affect the habitat values within the Los Angeles River. The LA Flows Project Final Report provides ecology-flow relationship analysis for cumulative reductions including incremental storm flow and WRP reductions. The Project would not contribute to a cumulative reduction in habitat acreage or quality.

Comment 5-J

Mitigation Measure #2: CDFW recommends LADWP develop a discharge operation plan that would always allow sufficient water to pass downstream. CDFW also recommends LADWP develop an Adaptive Management Plan that would direct LADWP to reduce or suspend water diversion if at any point the Project may impact biological resources downstream exceeding a defined threshold/trigger.

Response 5-J

The IS/MND concludes that based on the evidence provided in the existing literature, the proposed Program would not result in significant impacts to biological resources in the Los Angeles River considering the small contribution of flow provided by the Tujunga Central Branch channel. Downstream ecological values would not be measurably affected by the Project. The IS/MND concludes that since the Program's effects would not result in a significant impact directly or cumulatively, no mitigation is required.

LADWP recognizes that the placement of diversion structures within streams and drainages must comply with Fish and Game Code Section 5901 which prohibits installing "any device or contrivance that prevents, impedes, or tends to prevent or impede, the passing of fish up and down stream." Fish and Game Code 5937 requires that operators of dams "allow sufficient water to pass over, around or through the dam, to keep in good condition any fish that may be planted or exist below the dam." Currently, no fish exist within the underground urban storm collection system or concrete box channel. The Tujunga Central Branch channel does not lead to natural stream resources at higher elevation. As a result, the channel would not provide a migratory route for steelhead spawning grounds now or in the future. The entire watershed area is urbanized, mostly within underground storm drain pipes with no ecological values. Future fish migration in the channel is highly unlikely. Furthermore, the instream diversion structures have been designed and operated to allow for storm flows to bypass the diversion mechanism. Each of the diversion structures would include a slide gate. If fish re-colonized the channel in the future these slide gates would be able to allow bypass flows. Therefore, based on the ability to allow for storm flows, the diversion structures would also be able to accommodate fish passage during periods of receding flow when migration opportunities exist, if fish were present. The project would not prevent future habitat restoration or fish occupation in the drainage. The proposed designs would

be compliant with California Fish and Game Code 5901 and 5937. Since no fish are currently in the concrete channel and dry weather flow depths do not accommodate ponding sufficient for fish to survive, there is no reason to prepare a discharge operation plan or adaptive management plan at this time.

See responses to comments 5-G and 5-I.

Comment 5-K

Mitigation Measure #3: CDFW recommends LADWP provide compensatory mitigation at no less than 3:1 for permanent impacts to the concrete-lined Tujunga Central Branch channel due to the installation of diversion structures including (but not limited to) rubber dams and channel drop inlets. CDFW also recommends LADWP provide compensatory mitigation commensurate with the permanent diversion of discharge from Los Angeles River.

Response 5-K

The IS/MND concludes that based on the evidence provided in the existing literature, the proposed Program would not result in significant impacts to biological resources in the Los Angeles River considering the small contribution of flow provided by the Tujunga Central Branch channel. The IS/MND concludes that since the Program's effects would not result in a significant impact directly or cumulatively, no mitigation is required.

The purpose of compensatory mitigation for impacts to waters of the State is to ensure that habitat values and hydrologic functions are maintained at least at the level of the system prior to the initiation of the project. The current concrete channel into which the diversion structures will be placed currently provides no habitat value. Six of the diversion structures will be placed in underground reinforced concrete pipe. The City does not believe that compensation is required for placing diversion structures in underground concrete pipes or concrete channels. As noted on page 74 of the Draft IS/MND, the City will be required to obtain a Lake and Streambed Alteration Agreement (LSAA) from CDFW for the three park projects that will place diversion structures within concrete channels. See response to comment 5-N.

Comment 5-L

Recommendation #1: CDFW recommends the following data and information sources:

- Stream gage data available from Los Angeles County Public Works (LADPW 2021);
- Los Angeles River Master Plan (Geosyntec et al. 2020); and,
- Los Angeles River Flows Project (SWRCB 2019).

Response 5-L

The IS/MND (on page 74) includes annual flow estimates for the Los Angeles River provided by USACE. The data provided in the Draft IS/MND regarding flows is consistent with the river flow data provided in the references cited in the comment. The City is participating in the Los

Angeles River Flows Project which has compiled hydrologic and hydraulic data for the river. The data mentioned in the comment from the County are continuously collected and are indicative of the flow data used by the USACE to ensure flood protection for the City of Los Angeles. The recently published Los Angeles River Master Plan compiles historic river flow data consistent with the USACE and County data. All of this data is consistent with the annual flow totals cited in the IS/MND that document the percentage of flow from the Tujunga Central Branch channel. See response to comments 5-C and 5-G.

Comment 5-M

Recommendation #2: Based on the inadequacy of the Draft IS/MND as elaborated in our preceding comments, CDFW recommends that LADWP revise and recirculate the Draft IS/MND so CDFW may provide more appropriate comments on avoidance, minimization, and mitigation measures (CEQA Guidelines, § 15073.5).

Response 5-M

The comment provides no new information supporting the inadequacy of the analysis in the Draft IS/MND. Re-circulation of the Draft IS/MND is not necessary since existing evidence supports a conclusion that impacts would be less than significant, and that it would be unreasonable to assume otherwise. Furthermore, the study recently published by SCCWRP (SCCWRP 2021b) provides all of the hydrology and hydraulics data and analysis requested in the comment. The study substantiates the conclusions made in the Draft IS/MND, and satisfies CDFW's request for additional information.

Comment 5-N

The Project would potentially alter streams. The Project would divert dry season flow and stormwater. In addition, the Project proposes to install devices within and adjacent to a stream to facilitate water diversion.

The Project would divert water from the Tujunga Central Branch channel and Los Angeles River. The Project proposes to install water diversion structures within or adjacent to the Tujunga Central Branch channel. This includes inflatable rubber dams. Accordingly, the Project may obstruct water flow and change the bed and channel of a stream (confinement).

Fish and Game Code section 1602 requires any person, state or local governmental agency, or public utility to notify CDFW prior to beginning any activity that may do one or more of the following:

- Divert or obstruct the natural flow of any river, stream, or lake;
- Change the bed, channel, or bank of any river, stream, or lake;
- Use material from any river, stream, or lake; or,
- Deposit or dispose of material into any river, stream, or lake.

Response 5-N

The Draft IS/MND states on page 74 that the City would be required to obtain a Streambed Alteration Agreement pursuant to the California Fish and Game Code section 1602. The City will consult with CDFW to obtain a 1602 LSAA for the Program sites that include construction of diversions structures at the Tujunga Central Branch channel. Installation of diversion structures into underground storm drain pipes may require notification, but would not likely result in the need for a full LSAA. The table below identifies LADWP's assumptions of which Program sites may require a LSAA LADWP understands that CDFW will ultimately determine which of these sites will require a LSAA based on information in the initial notification.

Infiltration Gallery Location	Diversion Structure Installation	LSAA Required?
David M. Gonzales Recreation Center	Underground Storm Drain Pipe	No
FernAngeles Park	Underground Storm Drain Pipe	No
Whitsett Fields Park North	Underground Storm Drain Pipe	No
Strathern Park North	Underground Storm Drain Pipe	No
Valley Plaza Park North	Underground Reinforced Concrete Box Culvert	No
Valley Plaza Park South	Concrete Channel	Yes
Alexandria Park	Concrete Channel	Yes
North Hollywood Park	Concrete Channel	Yes
Valley Village Park	Underground Storm Drain Pipe	No

Comment 5-O

Mitigation Measure #1: CDFW has concluded that the [Program] may result in the alteration of streams. As such, the applicant (or "entity") must provide notification to CDFW pursuant to Fish and Game Code, section 1600 *et seq*. Based on this notification and other information, CDFW determines whether an LSAA with the applicant is required prior to conducting the proposed activities. Please visit CDFW's Lake and Streambed Alteration Program webpage to for information about LSAA Notification and online submittal through the Environmental Permit Information Management System Permitting Portal (CDFW 2021a).

Response 5-O

The Draft IS/MND states on page 74 that the City would be required to obtain a LSAA pursuant to the California Fish and Game Code section 1602. A new mitigation measure requiring compliance with regulations is not needed. The City will consult with CDFW to obtain a 1602 LSAA for the Program sites that include construction of diversions structures at the Tujunga Central Branch channel (see table in response 5-N).

Comment 5-P

Mitigation Measure #2: CDFW recommends the LSAA Notification include a hydrological evaluation of the 200, 100, 50, 25, 10, 5, and 2-year frequency storm event for existing and proposed conditions.

Recommendation: CDFW's issuance of an LSAA for a Project that is subject to CEQA will require CEQA compliance actions by CDFW as a Responsible Agency. As a Responsible Agency, CDFW may consider the CEQA document from LADWP for the Project. To minimize additional requirements by CDFW pursuant to Fish and Game Code section 1600 *et seq*. and/or under CEQA, the CEQA document should fully identify the potential impacts to the stream or riparian resources and provide adequate avoidance, mitigation, monitoring, and reporting commitments for issuance of the LSAA. As such, CDFW recommends LADWP consider CDFW's comments and revise the Draft IS/MND. To compensate for any on- and off-site impacts to aquatic and riparian resources, additional mitigation conditioned in any LSAA may include the following: erosion and pollution control measures, avoidance of resources, protective measures for downstream resources, on and/or off-site habitat creation, enhancement or restoration, and/or protection, and management of mitigation lands in perpetuity.

Response 5-P

The Draft IS/MND states on page 74 that the City would be required to obtain a LSAA pursuant to the California Fish and Game Code section 1602(See response to comment 5-N). Hydrologic assessments have been conducted for each of these park projects to determine the capacity of the infiltration galleries and the quantity of feasible wet weather diversions. The rubber dam diversion structures would be lowered when flow rates exceeded the diversion capacity, allowing most of the storm flows in larger storms (including the 2, 5, 10, 25, 50, 100, and 200 year storms) to bypass the diversions. Additional modeling is not necessary to make this conclusion.

Comment 5-Q

CDFW is concerned that the Program may result in significant impacts to bats, including hoary bat (*Lasiurus cinereus*) and silver haired bat (*Lasionycteris Octavian's*).

The Program may result in direct and indirect impacts to bats. Direct impacts include removal of trees and that may provide roosting habitat. Indirect impacts to bats and roosts could result from increased human activity, noise disturbances, dust, vegetation clearing, ground-disturbing activities (e.g., staging, mobilizing, excavating, and grading), and vibrations caused by heavy equipment.

Native and non-native ornamental trees at each park could provide potential roosting habitat for bats. Bats can fit into very small seams, as small as a ¼ inch. Therefore, crevices in buildings and other man-made structures within and adjacent to each park could provide roosting habitat for bats. Despite the availability of potential roosting habitat, the Program concludes that there would not be significant impacts to bats.

Page 60 of Appendix B concludes that while bats "may use western sycamore trees to roost, special-status bat species including hoary bat and silver-haired bat have low potential to occur within all of the project locations, since they are situated in an urban environment with constant ambient nighttime lighting (e.g., street lights, baseball field lights)." The presence of constant ambient lighting may be insufficient to conclude that bats do not occur. Bat response to artificial lighting could vary between species and not all bat species are repelled by light (Longcore and Rich 2004; Opéra et al. 2009). Faster-flying species of bats are attracted to insects that congregate around light sources (Longcore and Rich 2004). Foraging is still possible in the presence of ambient lighting, although forging may be reduced. Also, based on Program site photos in Appendix B, it appears that not all areas within certain parks are illuminated, for instance Valley Plaza North and Valley Plaza South. Based on the above, the probability of bats occurring within each park could be higher than previously concluded.

Accordingly, if bats are present, extra noise, vibration, or the reconfiguration of large objects can lead to the disturbance of roosting bats. Human disturbance can also lead to a change in humidity, temperatures, or the approach to a roost that could force the animals to change their mode of egress and/or ingress to a roost. Modifications to roost sites can have significant impacts on the bats' usability of the roost and can impact the bats' fitness and survivability (Johnston et al. 2004). Although temporary, such disturbances can lead to the abandonment of a maternity roost (Johnston et al. 2004).

Response 5-Q

The Draft IS/MND identifies on page 73 that removal of trees may affect wildlife commonly found in the parks, including bat species, although the Draft IS/MND concludes that the potential for encountering bat roosts in the affected trees is low. Nonetheless, in response to this comment, Mitigation Measure BIO-1 has been modified to require that bat surveys be conducted at each of the Program sites to ascertain whether bats are utilizing the trees to be removed by the Program. With this modification to the BIO-1 mitigation measure, impacts to bats would remain less than significant.

The following text is added to Mitigation Measure BIO-1:

- Prior to removal of trees in any of the Program sites, the City shall retain a qualified bat specialist to conduct bat surveys to confirm whether bats are using the trees as roosting sites. The surveys should encompass a minimum buffer area of 100 feet around the Program sites. The results of the surveys will be provided to CDFW. In the event that bat roosts are identified, an additional bat species survey will be conducted using acoustic survey techniques necessary to confirm the species of bat using the area. If the species survey concludes that sensitive bat species are present, the City shall consult with CDFW pursuant to the California Fish and Game Code section 2081. Removal of special status bats would not be conducted without prior approval from CDFW.

Comment 5-R

Bats are considered non-game mammals and are afforded protection by State law from take and/or harassment (Fish & G. Code, § 4150; Cal. Code of Regs, § 251.1). Additionally, several bat species are considered Species of Special Concern and meet the CEQA definition of rare, threatened, or endangered species (CEQA Guidelines, § 15380). Take of SSC could require a mandatory finding of significance by the Lead Agency (CEQA Guidelines, § 15065).

Response 5-R

See response to comment 5-Q.

Comment 5-S

Mitigation Measure #1: Where Program-related implementation, construction, and activities would occur near potential roosting habitat for bats, CDFW recommends a qualified bat specialist conduct bat surveys within these areas (plus a 100-foot buffer as access allows) in order to identify potential habitat that could provide daytime and/or nighttime roost sites, and any maternity roosts. CDFW recommends using acoustic recognition technology to maximize detection of bats. A discussion of survey results, including negative findings should be provided to LADWP. Depending on the survey results, a qualified bat specialist should discuss potentially significant effects of the Project on bats and include species specific mitigation measures to reduce impacts to below a level of significance (CEQA Guidelines, § 15125). Surveys, reporting, and preparation of robust mitigation measures by a qualified bat specialist should be completed and submitted to the LADWP prior to any Project-related ground-disturbing activities or vegetation removal at or near locations of roosting habitat for bats.

Response 5-S

Mitigation Measure BIO-1 has been modified to accommodate CDFW suggested mitigation requirements. See response to comment 5-Q.

Comment 5-T

Mitigation Measure #2: If bats are not detected, but the bat specialist determines that roosting bats may be present at any time of year and could roost in trees at a given location, during tree removal, trees should be pushed down using heavy machinery rather than felling with a chainsaw. To ensure the optimum warning for any roosting bats that may still be present, trees should be pushed lightly two or three times, with a pause of approximately 30 seconds between each nudge to allow bats to become active. The tree should then be pushed to the ground slowly and remain in place until it is inspected by a bat specialist. Trees that are known to be bat roosts should not be bucked or mulched immediately. A period of at least 24 hours, and preferable 48 hours, should elapse prior to such operations to allow bats to escape.

Response 5-T

Mitigation Measure BIO-1 provides for bat surveys to confirm that bats are not using the trees. If bats are encountered the City will consult with CDFW to ensure an effective bat removal effort in compliance with the California Fish and Game Code. Bats will not be removed from the Program sites without prior CDFW approval. No additional tree removal techniques would be required. No new mitigation is required.

Comment 5-U

Mitigation Measure #3: If maternity roosts are found, to the extent feasible, work should be scheduled between October 1 and February 28, outside of the maternity roosting season when young bats are present but are yet ready to fly out of the roost (March 1 to September 30).

Response 5-U

Mitigation measure BIO-1 has been modified to require approval from CDFW if bats are found to be using the affected trees. As part of any bat removal effort that may be necessary, seasonality of the removal will be a consideration. No additional mitigation measure is required.

Comment 5-V

Mitigation Measure #4: If maternity roosts are found and LADWP determines that impacts are unavoidable, a qualified bat specialist should conduct a preconstruction survey to identify those trees proposed for disturbance that could provide hibernacula or nursery colony roosting habitat. Acoustic recognition technology should be used to maximize the detection of bats. Each tree identified as potentially supporting an active maternity roost should be closely inspected by the bat specialist no more than 7 days prior to tree disturbance to determine the presence or absence of roost bats more precisely. If maternity roosts are detected, trees determined to be maternity roosts should be left in place until the end of the maternity season. Work should not occur within 100 feet of or directly under or adjacent to an active roost. Work should also not occur between 30 minutes before subset and 30 minutes after sunrise.

Response 5-V

As noted in response to comment 5-Q, mitigation measure BIO-1 has been modified to include bat presence surveys. If bats are found, the mitigation measure would require that the City implement a bat removal program in consultation with CDFW.

Comment 5-W

Devices Impeding Fish. The Program includes installation of rubber dams in the stream channel. Per California Fish and Game Code section 5901, it is unlawful to construct or maintain in any stream any device or contrivance the prevents, impedes, or tends to prevent or impeded, the passing of fish up and downstream. Accordingly, LADWP should coordinate with CDFW prior to commencing the Program to ensure that the Program would comply with Fish and Game Code section 5901.

Response 5-W

The concrete pipeline and channel do not support fish species. The Program would not install any devices that would impede fish migration since fish do not occur in the concrete channel and underground pipeline associated with the Tujunga Central Branch channel. The primary impediment for migrating fish under existing conditions is the velocity of the fast-moving storm water in confined pipelines and channels and the lack of refugia habitat at the channel edges. Nonetheless, the in-channel devices for four of the Program sites will require an LSAA from CDFW. The City will consult with CDFW to ensure diversion structures are compliant with Fish and Game Code section 5901.

Comment 5-X

Southern California Black Walnut Tree (*Juglans californica*). According to page 73 in the Draft IS/MND, one Southern California black walnut tree may be removed at North Hollywood Park. Southern California black walnut is a California Rare Plant Rank 4.2 species. If removal of Southern California black walnut is required, CDFW recommends LADWP replace each tree at no less than 3:1 in consideration of the species rarity, temporal loss of black walnut tree canopy and structure while the tree grows, and potential attrition associated with transplanting. Southern California black walnut trees should be replaced with trees of the same species.

Response 5-X

As noted on pages 78-80 of the Draft IS/MND, any protected tree required to be removed would be replaced with 24-inch box size specimens of the same tree species at a ratio of 4:1 in accordance with the City's Tree Protection Ordinance (No.177404) and the RAP's Tree Preservation Policy.

Comment 5-Y

Tree Replacement. In the greater Los Angeles, urban forests and street trees, both native and some non-native species, provide habitat for a high diversity of birds (Wood and Esaian 2020). Some species of raptors have adapted to and exploited urban areas for breeding and nesting (Cooper et al. 2020). For example, raptors (Accipitridae, Falconidae) such as red-tailed hawks (*Buteo jamaicensis*) and Cooper's hawks (*Accipiter cooperii*) can nest successfully in urban sites. Red-tailed hawks commonly nest in ornamental vegetation such as eucalyptus (Cooper et al. 2020). CDFW recommends planting native tree species preferred by birds. This includes coast live oak (*Quercus agrifolia*) and California sycamore (*Platanus racemosa*) (Wood and Esaian 2020). CDFW recommends Audubon Society's Plants for Birds for more information (Audubon Society 2020).

Response 5-Y

The proposed Program would require the removal of existing trees; however, the removal of trees would be replaced on a trunk caliper size basis, 1-inch replaced to 1-inch removed. As noted on pages 78-80 of the Draft IS/MND, any protected tree required to be removed would be replaced

with 24-inch box size specimens at a ratio of 4:1 in accordance with the City's Tree Protection Ordinance (No.177404) and RAP's Tree Preservation Policy. The replacement trees would be planted near the original tree's location, but if there is not adequate space, the City would coordinate with RAP to identify the closest appropriate locations for new plantings. Mitigation Measure BIO-1 is included in the Draft IS/MND to ensure construction activities do not disturb nesting birds. The requirement to replace mature trees would encourage future nesting opportunities for raptors.

Comment 5-Z

Landscaping. CDFW strongly recommends avoiding non-native, invasive plants. CDFW recommends LADWP restrict use of any species, particularly 'Moderate' or 'High' listed by the California Invasive Plant Council (Cal-IPC 2020a). CDFW recommends LADWP use native species found in naturally occurring vegetation communities within or adjacent to the Program sites. Information on alternatives for invasive, non-native, or landscaping plants may be found on the California Invasive Plant Council's, Don't Plant a Pest webpage for southern California (CalIPC 2020b). The California Native Plant Society's Gardening and Xerces Society's PollinatorFriendly Native Plant Lists webpage has information on native plant species that invite insects and pollinators (CNPS 2020; Xerces Society 2020).

Response 5-Z

As noted in the project description, each of the Program sites will be re-landscaped following the installation of the stormwater capture infrastructure. The landscaping plans will use primarily native species to the extent feasible, per RAP landscaping guidelines.

Comment 5-AA

Move Out of Harm's Way. The proposed Program is anticipated to result in clearing of habitats that support wildlife species common in developed areas. CDFW recommends a qualified biological monitor be on site during initial ground disturbing activities and vegetation removal. The qualified biological monitor should move wildlife of low mobility out of harm's way to avoid wildlife injury or mortality.

Response 5-AA

Mitigation Measure BIO-1 would ensure that impacts to any avian species currently utilizing the Program sites would be avoided. As required in mitigation measure BIO-1, contractors will be encouraged to remove vegetation outside of the affected avian or bat nesting seasons. If nesting season cannot be avoided, the mitigation measure provides for measures to ensure impacts to nesting birds is avoided, including delaying activities if necessary. Since the Program sites do not support any native habitat values, a biological monitor is not recommended other than for nesting birds as required in mitigation measure BIO-1.

Comment 5-AB

Data. CEQA requires that information developed in environmental impact reports and negative declarations be incorporated into a database (i.e., California Natural Diversity Database) which may be used to make subsequent or supplemental environmental determinations [Pub. Resources Code, § 21003, subd. (e)]. Accordingly, please report any special status species detected by completing and submitting CNDDB Field Survey Forms (CDFW 2020b). LADWP should ensure the data has been properly submitted, with all data fields applicable filled out, prior to finalizing/adopting the environmental document. LADWP should provide CDFW with confirmation of data submittal.

Response 5-AB

The City acknowledges that survey data identifying special status species should be provided to the CDFW. Appendix B of the Draft IS/MND includes a Biological Technical Report prepared for the Program.

Comment 5-AC

Mitigation and Monitoring Reporting Plan. CDFW recommends LADWP update the Program's proposed Biological Resources Mitigation Measures and condition the environmental document to include mitigation measures recommended in this letter. CDFW provides comments to assist LADWP in developing mitigation measures that are specific, detailed (i.e., responsible party, timing, specific actions, location), and clear in order for a measure to be fully enforceable and implemented successfully via a mitigation monitoring and/or reporting program (CEQA Guidelines, § 15097; Pub. Resources Code, § 21081.6). LADWP is welcome to coordinate with CDFW to further review and refine the Program's mitigation measures. Per Public Resources Code section 21081.6(a)(1), CDFW has provided LADWP with a summary of our suggested mitigation measures and recommendations in the form of an attached Draft Mitigation and Monitoring Reporting Plan (MMRP; Attachment A).

Response 5-AC

The City will adopt the MMRP when approving the Final IS/MND that will include implementation of Mitigation Measure BIO-1.

Comment 5-AD

The Project, as proposed, would have an impact on fish and/or wildlife, and assessment of filing fees is necessary. Fees are payable upon filing of the Notice of Determination by LADWP and serve to help defray the cost of environmental review by CDFW. Payment of the fee is required for the underlying Project approval to be operative, vested, and final (Cal. Code Regs., tit. 14, § 753.5; Fish & G. Code, § 711.4; Pub. Resources Code, § 21089).

Response 5-AD

The City recognizes that the CDFW filing fee for this IS/MND is applicable and the appropriate funds will be included with the Notice of Determination (NOD) when filed with the County Clerk as required by the CEQA Guidelines Section 15094.

Comment 5-AE

The comment includes a table with all of the CDFW proposed Mitigation Measures outlined in the letter.

Response 5-AE

As discussed in the responses to comments 5-A through 5-AE, no new mitigation measures are needed to ensure less than significant effects to biological resources. The MMRP will include the modified Mitigation Measure BIO-1 that reflects CDFW's comments on bat species.

Letter 6: Diana Nicole (Sunshine Hills Residents Association)

Comment 6-A

The commenter expresses concern regarding the diversion of City plans, codes, and funds from parks and tree-oriented initiatives toward green infrastructure.

Response 6-A

The comment does not state a specific concern about the adequacy of the Draft IS/MND or otherwise comment on the contents of the Draft IS/MND analysis. The comment is noted and will be included in the Program record, but a response is not required pursuant to CEQA.

Comment 6-B

The commenter expresses concern regarding the depletion of existing trees/urban forest resources as a result of the Program.

Response 6-B

Once the stormwater capture infiltration galleries are installed, the Program sites will be returned to preconstruction condition with park improvements. The park improvements will include but are not limited to, the addition of green infrastructure elements such as landscape areas with California native drought-tolerant plant material, new irrigation system, shade trees, new lighting. The proposed Program would require the removal of existing trees; however, the removal of trees would be replaced on a trunk caliper size basis, 1-inch replaced to 1-inch removed. Any protected tree required to be removed would be replaced with 24-inch box trees at a ratio of 4:1 in accordance with the City's Tree Protection Ordinance (No.177404) and the RAP's Tree Preservation Policy. The replacement trees would be planted near the original tree's location, but if there is not adequate space, the City would coordinate with RAP to identify the closest appropriate locations for new plantings.

Comment 6-C

The commenter states that the City's protected trees, groves, and related habitat should be subject to higher conservation standards than those that are provided in the Draft IS/MND.

Response 6-C

The City would comply with the existing tree ordinance. See response to 6-B above.

Letter 7: County of Los Angeles Fire Department

Comment 7-A

The commenter provides introduction of the County of Los Angeles Fire Department.

Response 7-A

The comment is noted and will be included in the Program record.

Comment 7-B

The commenter states that since the Program is within the City, the Program would not impact the County of Los Angeles Fire Department.

Response 7-B

The comment is noted and will be included in the Program record.

Comment 7-C

The commenter states that the Program would not have an impact on the County Fire Department Land Development Unit.

Response 7-C

The comment is noted and will be included in the Program record.

Comment 7-D

The comment states that under the Los Angeles County Oak Tree Ordinance, a permit is required to cut, destroy, remove, relocate, inflict damage or encroach into the protected zone of any tree of the Oak genus which is 25 inches or more in circumference (eight inches in diameter), as measured 4 1/2 feet above mean natural grade.

Response 7-D

The Draft IS/MND describes the Oak Tree Ordinance in detail on pages 78-81. The Draft IS/MND concludes that compliance with the ordinance and RAP's Tree Preservation Policy would ensure that impacts to mature trees would not result in significant impacts.

Comment 7-E

The commenter states that the Program would not impact the Health Hazardous Materials Division.

Response 7-E

The comment is noted and will be included in the project record.

Letter 8: Joanne D'Antonio

Comment 8-A

The commenter raises objection to the proposed removal of any mature and healthy trees, most notably the eucalyptus grove at North Hollywood Park. The commenter states that this park has experienced great tree loss during the drought and that all parks are important for the physical and psychological health of residents. They provide much needed shade in the heat-island-effect-plagued San Fernando Valley. The commenters asks where the wildlife will go during construction and how disruptive construction noise may be.

Commenter would like to see the project redesigned to not remove any trees and references several reports on biodiversity and the loss of trees and tree canopy by the City of Los Angeles and Tree People.

Response 8-A

All nine project sites are currently located within developed City parks containing active recreational facilities or open disturbed areas. All nine park project sites will undergo some enhancements and improvements to the park aesthetic and recreational facilities after the installation of the projects. As stated in the IS/MND page 7, park enhancements and improvements are being designed with input from RAP and the community. The City has been coordinating the design effort with RAP and has engaged the local community through several community meetings to solicit input. Conceptual design drawings were included in the IS/MND as Figures 1-4 through 1-12 to depict the current preliminary design associated with each park project site. The stormwater capture facilities are mainly being placed beneath existing ball fields, where feasible, to minimize impacts to landscaped areas within the park. The designs for each park attempt to minimize tree removal where feasible, but as stated in section 2.4, Biological Resources, some trees will be removed in compliance with the City of Los Angeles Tree Protection Ordinance and the RAP Tree Preservation Policy for protection of native and non-native trees. The City has been in coordination with the RAP Forestry Division and none of the parks' mature or healthy trees will be removed without their approval. Revisions to the park designs are being made in coordination with RAP in order to preserve mature trees and any other trees deemed sacred by RAP. RAP has identified two eucalyptus trees at North Hollywood Park that have died and have requested these be removed as part of the project. Tree surveys will be conducted at each part project site prior to tree removal to determine which trees are protected and which trees would need replacement under the RAP Tree Preservation Policy. Further, Mitigation Measure BIO-1was included to protect wildlife species from impacts during

construction. This mitigation measure will require construction activities to occur outside of the nesting bird season or to avoid or minimize impacts to nesting birds and raptors by requiring preconstruction surveys and nest avoidance and/or monitoring during construction.

The City acknowledges that the City of Los Angeles is considered a biodiversity hotspot. As stated in the 2020 Biodiversity Report prepared by the City of Los Angeles and referenced by the commenter, the Program area would fall primarily within Ecotope 20: Los Angeles River Alluvial Plain. As shown in Appendix B, page 428 of the report, only 0.5 percent of the natural vegetation remains across the ecotope, mostly within the Sepulveda Basin. Riparian vegetation is the dominant remaining type of vegetation and provides nesting habitat for the federally endangered least Bell's vireo (*Vireo bellii pusillus*) and potentially the southwestern willow flycatcher (*Empidonax traillii extimus*). The Program site does not include riparian vegetation and is located in an area that is surrounded by a vegetation alliance characterized by urban/developed, and falls mostly within areas characterized by non-native alliances. In addition, the program site is not located within an area characterized as a natural area by the study, and it is located within areas with higher pollution and population percentiles and a lower habitat quality score due to the urban nature of its location. (City of Los Angeles 2020, pages 436 through 442) As such, although the City of Los Angeles is rich in biodiversity, construction within the Program area would not add to the decline of biodiversity in the area.

Comment 8-B

The commenter requests that all trees in the vicinity of construction be protected with orange fencing and no construction material placed under the drip line.

Response 8-B

The construction impact areas will be clearly delineated and trees to be retained will be clearly marked to avoid any impacts to them. As stated in Response 8-A, the City will comply with the City of Los Angeles Tree Protection Ordinance and the RAP Tree Preservation Policy for protection of native and non-native trees that are being retained onsite and/or are being removed.

The RAP Tree Preservation Policy is the primary regulatory tool that gives direction for orderly protection of specified trees, maintains their value, and avoids significant negative effects to the ecosystem. By assuring preservation and protection through regulation and standards of care, these resources will remain significant contributions to the environment and landscape, and continue to add to the unique character of Los Angeles City Parks. (RAP 2004).

As outlined in the Policies for the Installation and Preservation of Landscaping Trees on Public Property of Recreation and Parks Department, included as Appendix M of the City of Los Angeles RAP Urban Forest Program (RAP 2004), "whenever trees are removed, the existing trees' aggregate diameter, measured at breast height (DBH [diameter at breast height], or 4.5-feet above the ground; multi-trunk trees are to be measured immediately below the lowest trunk) shall be replaced at an equal or greater rate of caliper of new trees. Each one-inch DBH of existing tree shall be replaced with a minimum one-inch caliper new tree." For example, if an existing tree with a DBH of 24 inches is removed, the City would need to replace that tree with a newly

planted trees with a total DBH of 24 inches. The replacement tree can have a DBH of 24 inches or if smaller trees are planted, with a DBH of 2 inches, then 12 trees would be planted, or any combination that equates to the 24-inch DBH being replaced.

Comment 8-C

The commenter is concerned about imported soil and improper soil being substituted for naturally occurring soil which create the best environment for replanting. The commenter asks if there is a plan for replanting at the parks to be done with viable new trees. The commenter states that ideally construction projects such as these would not be happening in our parks.

Response 8-C

As stated on page 38 of the IS/MND, once installation of the stormwater system is complete, soils excavated from the site that are stockpiled on-site would be used to backfill the impact areas. Additional imported soils would be used to regrade as needed to return the project impact areas to pre-project conditions. The City will ensure that the soil to backfill the impacted areas would be suitable for the required design elements as shown on preliminary Figures 1-4 through 1-12 of the IS/MND including landscape planting. The City is coordinating with RAP to ensure compliance with park requirements.

Comment 8-D

The commenter states that a one-month comment period is too short to get input from neighborhood councils.

Response 8-D

The comment is noted and will be included in the project record. The CEQA Guidelines require that MNDs be circulated for a total of 30 days per Section 15105(b).

4.2 Changes Made to the Draft IS/MND

The City has made the following changes to the Draft IS/MND and has incorporated them into the Final IS/MND. These modifications clarify, amplify, or make minor changes to the Draft IS/MND. Revisions to the Draft IS/MND have not resulted in new significant impacts or increased the severity of an impact.

Where the responses indicate additions or deletions to the text of the Draft IS/MND, additions are included as <u>underlined text</u>, deletions as ~~stricken text~~. The changes are listed by section and page number.

4.2.1 Changes Made in Response to Comments

Clarification/Revision

The following modifications have been made to page 75 of the Draft IS/MND to augment Mitigation Measure BIO-1 for the inclusion of bat surveys.

Section 2.4, Biological Resources – Page 75

Mitigation Measure

BIO-1: Special-Status Wildlife Species. Construction activities at any of the nine park project sites could result in impacts to the Cooper's hawk (*Accipiter cooperii*), a California Species of Special Concern, where mature trees are present. Similarly, construction activities may also impact other nesting bird species that may nest in a variety of vegetation as well as man-made structures. Construction activities should occur outside of the avian nesting season. If the avian nesting season cannot be avoided and construction or vegetation removal occurs from February 1 to September 1, the City ~~project~~ shall implement the following to avoid and minimize impacts to nesting birds and raptors:

- During the avian breeding season, a qualified biologist shall conduct a preconstruction avian nesting survey no more than 7 days prior to vegetation disturbance or ground-disturbing activities. If construction begins in the non-breeding season and proceeds continuously into the avian nesting season, no surveys are required. However, if there is a break of 7 days or more in construction activities during the nesting season, a new nesting bird survey shall be conducted before construction begins again.
- The preconstruction survey shall cover all reasonably potential nesting locations on and within 100 feet of the construction areas. A 300-foot radius shall be surveyed in areas containing suitable habitat for nesting raptors, such as trees and utility poles.
- If an active nest is found during the preconstruction avian nesting survey, a qualified biologist shall designate a suitable buffer for all passerine birds and raptor species. The nest site area shall not be disturbed until the nest becomes inactive, the young have fledged, the young are no longer being fed by the parents, the young have left the area, and the young will no longer be impacted by the project. Buffer areas may be increased upon recommendation of a qualified biologist if any endangered, threatened, California Fully Protected, or California Species of Special Concern are identified during preconstruction surveys.
- If the nest(s) are found in an area where ground disturbance is scheduled to occur, the City or its contractor shall avoid the area by delaying ground disturbance in the area until a qualified biologist has determined that the birds have fledged and are no longer reliant upon the nest or parental care for survival.
- Prior to removal of trees in any of the Program sites, the City shall retain a qualified bat specialist to conduct bat surveys to confirm whether bats are using the trees as roosting sites. The surveys should encompass a minimum buffer area of 100 feet around the Program sites. The results of the surveys will be provided to CDFW. In the event that bat roosts are identified, an additional bat species survey will be conducted using acoustic survey techniques necessary to confirm the species of bat using the area. If the species survey concludes that sensitive bat species are present, the City shall consult with CDFW pursuant to the California Fish and Game Code section 2081. Removal of special status bats would not be conducted without prior approval from CDFW.

4.2.2 Changes Made by the Lead Agency

Clarification/Revision

The following modifications have been made to page 1 of the Draft IS/MND to include The Metropolitan Water District of Southern California (Metropolitan) as a Responsible Agency of the Program.

Section 1.0, Project Description – Page 1

1.1 Introduction

The City of Los Angeles Department of Water and Power (LADWP), Department of Public Works (Bureau of Engineering [BOE]), Los Angeles Sanitation and Environment (LASAN), and City of Los Angeles Department of Recreation and Parks (RAP), collectively referred to herein as the City, propose to implement the Stormwater Capture Parks Program (Program). The Program would include construction of stormwater capture facilities at nine City-owned parks to help capture surface flow and divert stormwater runoff from the Tujunga Wash Central Branch storm drain to recharge the San Fernando Groundwater Basin. All nine parks are located in the east San Fernando Valley along State Route (SR) 170 (**Figure 1-1**); these parks include: David M. Gonzales Recreation Center; Fernangeles Park; Strathern Park North; Whitsett Fields Park North; Valley Plaza Park North; Valley Plaza Park South; Alexandria Park; North Hollywood Park; and Valley Village Park (**Figure 1-2**).

The City is proposing to obtain financial assistance for the park projects through the Stormwater for Recharge Pilot Program (Recharge Pilot) that is administered by The Metropolitan Water District of Southern California (Metropolitan). The Recharge Pilot encourages development and monitoring of new and existing stormwater recharge projects by providing financial incentives for construction and/or monitoring equipment installation of project and supplemental reporting costs.

Metropolitan offers different incentive amounts for the Recharge Pilot based on project type (New Construction or Monitoring Equipment Installation):

<table>
<tr><td>PROJECT TYPE</td><td colspan="2">FUNDING COMPONENTS</td></tr>
<tr><td></td><td>Construction/Installation</td><td>Monitoring & Reporting</td></tr>
<tr><td rowspan="2">Monitoring Equipment Installation</td><td>Up to $350,000 reimbursement for eligible costs</td><td>$50,000/report</td></tr>
<tr><td colspan="2">Maximum of $500,000</td></tr>
<tr><td rowspan="2">New Construction</td><td>Up to 50% reimbursement of eligible costs, max of $850,000</td><td>$50,000/report</td></tr>
<tr><td colspan="2">Maximum of $1 million</td></tr>
</table>

The City has chosen the New Construction Project Type.

As a Responsible Agency, Metropolitan's Board of Directors will review and consider the proposal and environmental documentation prepared by the City in determining whether or not to approve financial assistance for the Program within the Recharge Pilot administrative process.

The Program would be consistent with Metropolitan's commitment to develop Recharge Pilot activities that would provide a better understanding of the connection between captured stormwater and water supply yield.

Clarification/Revision

The following modifications have been made to pages 82 and 83 of the Draft IS/MND to update the name of the library.

Section 2.5, Cultural Resources – Pages 82 and 83

Page 82

Less than Significant Impact with Mitigation. The cultural resources assessment identified three historic architectural resources within the Program area. These resources include: the David M. Gonzales Recreation Center featuring a clubhouse building dating to the park's period of significance of 1950 located approximately 65 feet from the Program construction footprint; North Hollywood Park featuring a maintenance building and pool house (65 feet and 100 feet from the Program construction footprint, respectively) and the North Hollywood Amelia Earhart Regional ~~Branch~~ Library (located 100 feet from the Program construction footprint) dating to the park's period of significance of 1928–1931; and the 170 Freeway Pedestrian Overpass connecting Valley Plaza Park North and Whitsett Fields Park North located approximately 90 feet from a proposed diversion structure in Valley Plaza Park North. The North Hollywood Amelia Earhart Regional ~~Branch~~ Library is National Register of Historic Places (NRHP)-listed and, therefore qualifies as a historical resource.

Page 83

Mitigation Measures

CUL-1: In the event Program designs are further refined and individual Program site components change to encroach more closely than 50 feet to the North Hollywood Amelia Earhart Regional ~~Branch~~ Library (P-19-167303), the pool house and maintenance building associated with North Hollywood Park, the clubhouse associated with the David M. Gonzales Recreation Center, and/or the 170 Freeway Pedestrian Overpass, the City shall retain a qualified architectural historian meeting the Secretary of the Interior's Standards for Architectural History to review design plans for conformance with the Secretary of the Interior's Standards for the Treatment of Historic Properties (Standards). Should potential Program redesign not conform to the Standards, the City shall work with the qualified architectural historian to mitigate impacts to these resources. Should Program redesign place Program components within 50 feet of these resources, the qualified architectural historian shall also assess potential construction-related impacts resulting from ground-borne vibration. Should ground-borne vibrations have the potential to impact the historical resources, the City and the qualified architectural historian shall develop a plan to monitor ground-borne vibration during construction to ensure it does not exceed thresholds that could damage, or otherwise alter the historical resources.

SECTION 5
Mitigation Monitoring and Reporting Program

The Mitigation Monitoring and Reporting Program (MMRP) for the proposed Program has been prepared in accordance with Public Resources Code section 21081.6 and State CEQA Guidelines section 15091(d). The City will use this MMRP to track compliance with the Program mitigation measures. The City will consider the MMRP during the certification hearing for the Final IS/MND. The MMRP will incorporate all mitigation measures adopted for the proposed Program.

This MMRP summarizes potentially significant impacts and mitigation commitments identified in the Stormwater Capture Parks Program IS/MND. Table 5-1 provides the MMRP which includes all mitigation measures, monitoring/reporting action, monitoring timing, and responsible person(s) for implementation. Impacts and mitigation measures are presented in the same order as in the IS/MND. The columns in the table provide the following information:

- **Mitigation Measures:** The action(s) that will be taken to reduce the impact to a less-than-significant level.
- **Monitoring /Reporting Action:** This column outlines the appropriate steps to implement and verify compliance with the mitigation measures.
- **Monitoring Timing:** This column indicates the general schedule for conducting each monitoring task, either prior to construction, during construction, and/or after construction.
- **Responsible Person(s):** This column lists the agency responsible for ensuring implementation of the mitigation measure.

TABLE 5-1
MITIGATION MONITORING AND REPORTING PROGRAM - STORMWATER CAPTURE PARKS PROGRAM

Mitigation Measure	Monitoring / Reporting Action	Monitoring Timing	Responsible Person(s)
Air Quality			
AQ-1: Construction of the Program shall incorporate the following conditions: a. For all Program sites: The Program shall use off-road diesel-powered construction equipment that meets or exceeds the CARB and USEPA Tier 4 off-road emissions standards for equipment rated at 50 horsepower or greater and not identified under b or c. below. Such equipment will be outfitted with Best Available Control Technology (BACT) devices, including a CARB-certified Level 3 Diesel Particulate Filter or equivalent. These requirements shall be included in applicable bid documents and successful contractor(s) must demonstrate the ability to supply such equipment. b. All dumpers/tenders used on-site shall either be certified Tier 3 with a CARB-certified Level 3 Diesel Particulate Filter or equivalent; certified Tier 4 with a CARB-certified Level 3 Diesel Particulate Filter or equivalent, or alternatively fueled (e.g., gasoline, electric, CNG). c. At a minimum, the following equipment shall be electric: air compressors, cement and mortar mixers, concrete saws, forklifts, pumps. Diesel generators shall be replaced with electricity from the grid either permanent or temporary, or replaced with alternative (non-diesel) fuels. d. Equipment requirements identified under a, b, and c above shall be included in applicable bid documents and successful contractor(s) must demonstrate the ability to supply such equipment. A copy of each unit's certified tier specification or model year specification and CARB or SCAQMD operating permit (if applicable) shall be available upon request at the time of mobilization of each applicable unit of equipment. e. During the site clearing and preparation, grading and excavation, and soil filling, revegetation, and park improvement phases, watering must be conducted a minimum of 4 times per day during dry weather. f. For Valley Plaza Park North only 2 dozers are allowed to operate on any portion of the site at one time. g. The City shall ensure: i. On-road haul trucks including delivery and those conveying excavated material do not exceed the following daily truck limits: 1. 185 trucks when 2 parks are concurrently under construction; 2. 180 trucks when 3 parks are currently under construction; 3. 170 trucks when 4 parks are concurrently under construction; 4. 160 trucks when 5 parks are concurrently under construction; 5. 150 trucks when 6 parks are concurrently under construction; 6. 140 trucks when 7 parks are concurrently under construction. Or;	Site Monitoring	Prior to Construction During Construction	The City Construction Contractor

Mitigation Measure	Monitoring / Reporting Action	Monitoring Timing	Responsible Person(s)
ii. If the fleet is composed of a mix of 2014 or newer trucks, the City shall ensure that on-road haul trucks including delivery and those conveying excavated material do not exceed the following daily truck limits: 1. 240 trucks when 2 parks are concurrently under construction; 2. 230 trucks when 3 parks are concurrently under construction; 3. 220 trucks when 4 parks are concurrently under construction; 4. 210 trucks when 5 parks are concurrently under construction; 5. 200 trucks when 6 parks are concurrently under construction; 6. 190 trucks when 7 parks are concurrently under construction.			
Biological Resources			
BIO-1: Special-Status Wildlife Species. Construction activities at any of the nine park project sites could result in impacts to the Cooper's hawk (*Accipiter cooperii*), a California Species of Special Concern, where mature trees are present. Similarly, construction activities may also impact other nesting bird species that may nest in a variety of vegetation as well as man-made structures. Construction activities should occur outside of the avian nesting season. If the avian nesting season cannot be avoided and construction or vegetation removal occurs from February 1 to September 1, the City shall implement the following to avoid and minimize impacts to nesting birds and raptors: ● During the avian breeding season, a qualified biologist shall conduct a preconstruction avian nesting survey no more than 7 days prior to vegetation disturbance or ground-disturbing activities. If construction begins in the non-breeding season and proceeds continuously into the avian nesting season, no surveys are required. However, if there is a break of 7 days or more in construction activities during the nesting season, a new nesting bird survey shall be conducted before construction begins again. ● The preconstruction survey shall cover all reasonably potential nesting locations on and within 100 feet of the construction areas. A 300-foot radius shall be surveyed in areas containing suitable habitat for nesting raptors, such as trees and utility poles. ● If an active nest is found during the preconstruction avian nesting survey, a qualified biologist shall designate a suitable buffer for all passerine birds and raptor species. The nest site area shall not be disturbed until the nest becomes inactive, the young have fledged, the young are no longer being fed by the parents, the young have left the area, and the young will no longer be impacted by the Program. Buffer areas may be increased upon recommendation of a qualified biologist if any endangered, threatened, California Fully Protected, or California Species of Special Concern are identified during preconstruction surveys. ● If the nest(s) are found in an area where ground disturbance is scheduled to occur, the City or its contractor shall avoid the area by delaying ground disturbance in the area until a qualified biologist has determined that the birds have fledged and are no longer reliant upon the nest or parental care for survival. ● Prior to removal of trees in any of the parks, the City shall retain a qualified bat specialist to conduct bat surveys to confirm whether bats are using the trees as roosting sites. The	Site Survey by a Qualified Biologist	Prior to Construction During Construction	The City

Mitigation Measure	Monitoring / Reporting Action	Monitoring Timing	Responsible Person(s)
surveys should encompass a minimum buffer area of 100 feet around the parks. The results of the surveys will be provided to CDFW. In the event that bat roosts are identified, an additional bat species survey will be conducted using acoustic survey techniques necessary to confirm the species of bat using the area. If the species survey concludes that sensitive bat species are present, the City shall consult with CDFW pursuant to the California Fish and Game Code section 2081. Removal of special status bats would not be conducted without prior approval from CDFW.			
Cultural Resources			
CUL-1: In the event Program designs are further refined and individual park project components change to encroach more closely than 50 feet to the North Hollywood Amelia Earhart Regional Library (P-19-167303), the pool house and maintenance building associated with North Hollywood Park, the clubhouse associated with the David M. Gonzales Recreation Center, and/or the 170 Freeway Pedestrian Overpass, the City shall retain a qualified architectural historian meeting the Secretary of the Interior's Standards for Architectural History to review design plans for conformance with the Secretary of the Interior's Standards for the Treatment of Historic Properties (Standards). Should potential Program redesign not conform to the Standards, the City shall work with the qualified architectural historian to mitigate impacts to these resources. Should Program redesign place Program components within 50 feet of these resources, the qualified architectural historian shall also assess potential construction-related impacts resulting from ground-borne vibration. Should ground-borne vibrations have the potential to impact the historical resources, the City and the qualified architectural historian shall develop a plan to monitor ground-borne vibration during construction to ensure it does not exceed thresholds that could damage, or otherwise alter the historical resources.	Plan Preparation Site Monitoring by a Qualified Archeologist Historian	Prior to Construction During Construction	The City
CUL-2: Prior to the start of ground-disturbing activities, the City shall retain a qualified archaeologist meeting the Secretary of the Interior's Professional Qualifications Standards for archaeology (U.S. Department of the Interior, 2008) to carry out the following cultural resources mitigation measures.	Site Monitoring by a Qualified Archeologist	Prior to Construction During Construction	The City
CUL-3: Prior to start of ground-disturbing activities, the qualified archaeologist shall prepare a cultural resources sensitivity training module to be used as part of the City's Worker Environmental Awareness Program (WEAP) training. All construction personnel shall receive sensitivity training prior to beginning work onsite. Construction personnel should be informed of the types of archaeological resources that may be encountered, and of the proper procedures to be enacted in the event of an inadvertent discovery of archaeological resources or human remains. The City should ensure that construction personnel are made available for and attend the training and retain documentation demonstrating attendance.	Personnel Training by a Qualified Archeologist	Prior to Construction During Construction	The City Construction Contractor
CUL-4: Prior to the start of any project-related ground-disturbing activities, the qualified archaeologist shall prepare a Cultural Resources Monitoring Plan (CRMP) in consultation with Tribes that requested consultation under AB52. The CRMP shall stipulate the location and timing of archaeological and Native American monitoring, which shall include all ground-disturbing activities in each of the nine parks that exceed the depths of undocumented fill as documented by geotechnical testing. The qualified archaeologist shall review engineering plans for each of the nine parks to determine where ground-disturbing activities will exceed the depths of undocumented fill at each park to determine the timing and locations of monitoring to be included in the CRMP. The CRMP shall include monitoring protocols to be carried out during Program-related construction. The CRMP shall stipulate that Native	Plan Preparation Site Monitoring by a Qualified Archeologist	Prior to Construction During Construction Post Construction	The City

Mitigation Measure	Monitoring / Reporting Action	Monitoring Timing	Responsible Person(s)
American monitors associated with any of the Tribes that have been consulted with under AB52 be retained to monitor Program-related ground disturbance stipulated in the CRMP. The CRMP shall contain an allowance that the Qualified Archaeologist, based on observations of subsurface soil stratigraphy or other factors during initial grading, and in coordination with the Native American monitor(s) and the City, may reduce or discontinue monitoring as warranted if it is determined that the possibility of encountering archaeological deposits is low. The CRMP shall outline the appropriate measures to be followed in the event of unanticipated discovery of cultural resources during Program implementation, including that all ground disturbance within 100 feet of an unanticipated discovery shall cease until a treatment plan is developed by the qualified archaeologist in coordination with the City and the Native American monitor(s) and which will consider the resources archaeological and tribal value. The CRMP shall identify avoidance as the preferred manner of mitigating impacts to cultural resources. The CRMP shall establish the criteria utilized to evaluate the significance (per CEQA) of the discoveries, methods of avoidance consistent with CEQA Guidelines Section 15126.4(b)(3), as well as identify the appropriate treatment to mitigate the effect of the Program if avoidance of a significant resource is determined to be infeasible. The CRMP will also include provisions for the treatment of archaeological sites that qualify as unique archaeological resources pursuant to Public Resources Code Section 21083.2, which places limits on the costs of mitigation for unique archaeological resources. The plan shall also require the preparation of a monitoring report following the completion. The monitoring report will be submitted to the City for review and comment and a final copy will be filed at the SCCIC. The CRMP shall be submitted to the City and the appropriate Native American representatives who have been consulted with under AB52 for review prior to the start of Program-related ground disturbance.			
CUL-5: In the event of the unanticipated discovery of archaeological materials during Program implementation, all work shall immediately cease in the area (within approximately 100 feet) of the discovery until it can be evaluated by the qualified archaeologist. Construction shall not resume until the qualified archaeologist has conferred with the City and the Native American monitors on the significance of the resource. If it is determined that the discovered archaeological resource constitutes a significant resource, avoidance and preservation in place is the preferred manner of mitigation. Preservation in place may be accomplished by, but is not limited to, avoidance, incorporating the resource into open space, capping, or deeding the site into a permanent conservation easement. In the event that preservation in place is demonstrated to be infeasible and data recovery through excavation is the only feasible mitigation available, a Cultural Resources Treatment Plan shall be prepared and implemented by the qualified archaeologist in consultation with the City and Native American monitors that provides for the adequate recovery of the scientifically consequential information contained in the archaeological resource. The City shall consult the appropriate Native American representatives in determining treatment and disposition for prehistoric or Native American resources to ensure cultural values ascribed to the resource beyond those that are scientifically important are considered.	Site Monitoring by a Qualified Archeologist	During Construction	The City Construction Contractor
CUL-6: If human remains are encountered, all work shall halt in the vicinity (within 100 feet) of the find and the Los Angeles County Coroner shall be contacted in accordance with PRC Section 5097.98 and Health and Safety Code Section 7050.5. If the County Coroner determines that the remains are Native American, the NAHC will be notified in accordance with Health and Safety Code Section 7050.5, subdivision (c), and PRC Section 5097.98 (as amended by Assembly Bill 2641). The NAHC will designate a Most Likely Descendent (MLD) for the remains per PRC Section 5097.98. Until the landowner has conferred with the MLD, the City shall ensure that the immediate vicinity where the discovery occurred is not disturbed by further activity, is adequately protected according to generally	Site Inspection	During Construction	The City

Mitigation Measure	Monitoring / Reporting Action	Monitoring Timing	Responsible Person(s)
accepted cultural or archaeological standards or practices, and that further activities take into account the possibility of multiple burials.			
Geology and Soils			
GEO-1: The City shall implement the recommendations provided in the geotechnical investigations for each of the park project sites. In the event that the depth to groundwater rises to less than 50 feet bgs as measured in nearby wells, the stormwater infiltration process shall be stopped and the stormwater routed to the surface storm drain system until groundwater depths decrease to below 50 bgs.	Site Monitoring	During Construction Post Construction	The City
GEO-2: Prior to the start of construction activities, the City shall retain a Qualified Paleontologist that meets the standards of the Society of Vertebrate Paleontology (2010) to carry out all mitigation measures related to paleontological resources.	Site Monitoring	Prior to Construction During Construction	The City
GEO-3: Prior to start of any ground-disturbing activities, the Qualified Paleontologist shall contribute to any construction worker cultural resources sensitivity WEAP training materials outlined in Mitigation Measure CUL-2, either in person or via a training module provided to the Qualified Archaeologist. This training shall include information on what types of paleontological resources could be encountered during excavations, what to do in case an unanticipated discovery is made by a worker, and laws protecting paleontological resources. All construction personnel shall be informed of the possibility of encountering fossils and instructed to immediately inform the construction foreman or supervisor if any fossils are unexpectedly unearthed in an area where a paleontological monitor is not present. The City shall ensure that construction personnel are made available for and attend the training and retain documentation demonstrating attendance.	Personnel Training by a Qualified Paleontologist	Prior to Construction During Construction	The City
GEO-4: The Qualified Paleontologist shall supervise a paleontological monitor meeting the Society for Vertebrate Paleontology standards (2010) who shall be present during all excavations exceeding 15 feet. Monitoring shall consist of visually inspecting fresh exposures of rock for larger fossil remains and, where appropriate, collecting wet or dry screened sediment samples of promising horizons for smaller fossil remains. Monitoring can be reduced to part-time inspections or ceased entirely if determined adequate by the Qualified Paleontologist in consultation with the City. Monitoring activities shall be documented in a Paleontological Resources Monitoring Report to be prepared by the Qualified Paleontologist at the completion of construction and shall be provided to the City and filed with the Natural History Museum of Los Angeles County within 6 months of Program completion.	Site Monitoring by a Qualified Paleontologist	During Construction	The City
GEO-5: If a unique geologic feature or paleontological resource is discovered during construction, the paleontological monitor shall be empowered to temporarily divert or redirect grading and excavation activities in the area of the exposed fossil to facilitate evaluation of the discovery. An appropriate buffer area shall be established by the Qualified Paleontologist around the find where construction activities shall not be allowed to continue. Work shall be allowed to continue outside of the buffer area. At the Qualified Paleontologist's discretion and to reduce any construction delay, the grading and excavation contractor shall assist in removing rock samples for initial processing and evaluation of the find. All significant fossils shall be collected by the paleontological monitor and/or the Qualified Paleontologist. Collected fossils shall be prepared to the point of identification and catalogued before they are submitted to their final repository. Any fossils collected shall be curated at a public, non-profit institution with a research interest in the materials, such as the Los Angeles County Natural History	Site Monitoring by a Qualified Paleontologist	During Construction	The City

Mitigation Measure	Monitoring / Reporting Action	Monitoring Timing	Responsible Person(s)
Museum, if such an institution agrees to accept the fossils. If no institution accepts the fossil collection, they shall be donated to a local school in the area for educational purposes. Accompanying notes, maps, and photographs shall also be filed at the repository and/or school.			
Hazards and Hazardous Materials			
HAZ-1: The City or its construction contractor shall ensure that fueling of vehicles or storage of fuel or other chemicals would occur at the furthest extent possible from an existing school site.	Site Monitoring	During Construction	The City Construction Contractor
HAZ-2: For all schools located adjacent to a proposed work area, the City shall coordinate school safety routes, which should include, but not be limited to: ● Maintaining in place all crosswalks along the safe routes to and from the school (for Pacoima Charter School these would include Norris Avenue, Van Nuys Boulevard, Pierce Street, and Herrick Avenue). ● Designating a safe location for school buses and parents to drop off and pick up students. ● Designating a safe parking area for parents to wait for/pick up school children. ● Maintaining sidewalks open to pedestrian traffic during construction. ● Additional safety measures must be adopted during construction to protect the students and the public, including k-railing, secured fencing with screen, clear signing, temporary striping, and a flagger for trucks entering and existing the construction zone. Flaggers should also be considered at crosswalks while students are present. ● Close coordination with the impacted school and the Los Angeles Unified School District for input on the school safety route design and frequent communication during construction. ● Extensive outreach program for the school and the community describing safety measures and construction schedules. ● Restrict construction times to avoid before and after school timeframes while children may be walking to and from school, and while school is in session, as feasible.	Safety Planning Notification Site Monitoring	During Construction	The City Construction Contractor
HAZ-3: The City and its contractor shall conduct further investigation of the nature and extent of landfill materials and contaminated soil at the Strathern Park North site, under the oversight of the City of Los Angeles Local Enforcement Agency (LEA). Undocumented waste shall be delineated and sampled for chemicals of concern related to waste materials. The project shall avoid construction within the delineated waste mass, as feasible. If avoidance of the waste mass is not feasible, the City shall submit a work plan to the LEA that documents the results of the waste delineation, details the specifics of the construction project and how it relates to the onsite waste, describes the procedures for dealing with the waste, and outlines the environmental monitoring procedures that would be implemented during construction. Upon approval of the work plan, the City and its contractor shall remove the landfill materials and any soil with chemical concentrations above regulatory action levels to the satisfaction of the LEA and properly dispose of it at a permitted facility. An as-built report shall be submitted to the LEA after completion of the project.	Site Survey Plan Preparation	Prior to Construction During Construction Post Construction	The City

Mitigation Measure	Monitoring / Reporting Action	Monitoring Timing	Responsible Person(s)
Noise			
NOI-1: For construction activities adjacent to noise-sensitive receptors (e.g., residences and schools), the contractor shall ensure that all construction equipment, fixed or mobile, are equipped with properly operating and maintained noise shielding and muffling devices, consistent with manufacturers' standards. The contractor shall use muffler systems (e.g., absorptive mufflers) that provide a minimum reduction of 5 dBA compared to the same equipment without an installed muffler system, reducing maximum construction noise levels. The contractor shall keep documentation on-site demonstrating that the equipment has been maintained in accordance with the manufacturers' specifications. The contractor shall also keep documentation on-site verifying compliance with this measure.	Site Monitoring	During Construction	The City Construction Contractor
NOI-2: For construction activities adjacent to noise-sensitive receptors (e.g., residences and schools), where physically and technically feasible, the contractor shall provide an 8-foot-tall to 20-foot-tall temporary fence or other barrier placed between the project construction area and the sensitive receptor with a performance standard of achieving a 15 dBA noise level reduction at the sensitive receptors. The temporary fence or barrier shall be used during peak noise-generating construction phases when the use of heavy equipment is prevalent. A noise barrier is not required if it would pose a safety risk or unreasonably prevent access to the construction area as deemed by the on-site construction manager, such as in areas that have limited equipment maneuvering space or access.	Temporary Fence/Barrier Site Monitoring	During Construction	The City Construction Contractor
NOI-3: Limit engine idling of construction equipment (e.g., haul trucks, loaders) to a minimum of 200 feet from any boundary of the nearest sensitive receptors.	Site Monitoring	During Construction	The City Construction Contractor
NOI-4: Prior to commencement of construction activities, the City shall notify in writing adjacent residents, schools and businesses near the various park project sites, of proposed construction activities and the tentative schedule. The notices shall also provide a contact person and hotline where local residents, schools, or business owners can call during active construction with questions or comments. The City shall respond to inquiries regarding construction noise and vibration. Notices and construction signs will include a website address which will be updated quarterly and will include Program-related information.	Notification	Prior to Construction	The City
NOI-5: The operation of construction equipment that generates high levels of vibration, such as large bulldozers and loaded trucks, shall be prohibited within 45 feet of the property lines of existing residential and school uses adjacent to the various park project sites. Instead, rubber-tired equipment not exceeding 247 horsepower shall be used in these areas during construction within 45 feet from the sensitive receptor locations.	Site Monitoring	During Construction	The City Construction Contractor
Transportation			
TR-1: For parks where construction would occur outside of park facilities or that may impact roadways surrounding park areas, a CTMP shall be developed by the City or its contractor and approved by LADOT prior to the start of construction. The CTMP may include, but is not limited to the following:	Plan Preparation Site Survey Notification	Prior to Construction During Construction	The City Construction Contractor

Mitigation Measure	Monitoring / Reporting Action	Monitoring Timing	Responsible Person(s)
● Work area traffic control plans for all in-street construction sites to the satisfaction of LADOT, as appropriate prior to the start of any construction work. The plans shall include such elements as the location of any lane closures, restricted hours during which lane closures would not be allowed, local traffic detours, protective devices and traffic controls (such as pavement markings, barricades, cones, flagmen, lights, warning beacons, temporary traffic signals, turning movement restrictions, warning signs), access to abutting properties, and provisions to maintain emergency access through construction work areas. ● The dates and locations where in-street and off-street construction activities are planned. ● If any street segments will be limited to one-way traffic, prepare detour plans over parallel routes. ● Require signage indicated alternative routes where construction will occur. ● Identify and consolidate staging areas for equipment and materials, as feasible. ● Consolidate truck trips, such that multiple worksites can be served, as feasible. ● Promote carpooling among workers. ● Contact emergency service providers in the project vicinity to notify of the location, hours, and duration of in-street construction. Provide advance notice of any lane closures and changes to local access and identity alternative routes where appropriate.			

References

City of Los Angeles, 2015. Stormwater Capture Master Plan. August 2015.

City of Los Angeles, 2018. One Water LA 2040 Plan. Chapters 3 and 4. April 2018.

City of Los Angeles Recreation and Parks Department (RAP), 2004. Urban Forest Program. October 2004.

County of Los Angeles, 2021. LA River Master Plan, January 2021.

Southern California Coastal Water Research Project (SCCWRP), 2021a. Biological Needs Assessment.

SCCWRP, 2021b, Process and Decision Support Tools for Evaluating Flow Management Targets to Support Aquatic Life and Recreational Beneficial Uses of the Los Angeles River *Los Angeles River Environmental Flows Project;* Technical Report #1196

Draft Final Mitigated Negative Declaration
Stormwater Capture Parks Program

DRAFT
Final Mitigated Negative Declaration
Stormwater Capture Parks Program

Los Angeles Department of Water & Power

Los Angeles Department of Water and Power
Environmental Affairs
111 North Hope Street, Room 1044
Los Angeles, California 90012

July 2021

CEQA Initial Study and Mitigated Negative Declaration

Stormwater Capture Parks Program

July 2021

General Manager

Marty L. Adams

Senior Assistant General Manager
Water System

Richard F. Harasick

Senior Assistant General Manager
External and Regulatory Affairs and Chief Sustainability Officer

Nancy H. Sutley

Director of Environmental Affairs

Mark J. Sedlacek

Manager of Environmental Planning and Assessment

Charles C. Holloway

Prepared by

Los Angeles Department of Water and Power

111 North Hope Street, Room 1044
Los Angeles, CA 90012

Technical Assistance Provided by

ESA

626 Wilshire Blvd., Suite 1100
Los Angeles, CA 90017

TABLE OF CONTENTS

Final Initial Study and Mitigated Negative Declaration for Stormwater Capture Parks Program

Page

Section 3: Comment Letters 3-1

Comment Letter 1: California Department of Transportation
Comment Letter 2: Luis Suarez
Comment Letter 3: Marie Gordon
Comment Letter 4: Brenda Dalusong
Comment Letter 5: California Department of Fish and Wildlife
Comment Letter 6: Diana Nicole, Sunshine Hills Residents Association
Comment Letter 7: County of Los Angeles Fire Department
Comment Letter 8: Joanne D'Antonio

Section 4: Response to Comments 4-1

Comment Letter 1: California Department of Transportation
Comment Letter 2: Luis Suarez
Comment Letter 3: Marie Gordon
Comment Letter 4: Brenda Dalusong
Comment Letter 5: California Department of Fish and Wildlife
Comment Letter 6: Diana Nicole, Sunshine Hills Residents Association
Comment Letter 7: County of Los Angeles Fire Department
Comment Letter 8: Joanne D'Antonio

Section 5: Mitigation Monitoring and Reporting Program 5-1

Appendix AA (not included)

Previously published in the Draft IS/MND

Section 1: Project Description

Section 2: Initial Study/Environmental Checklist

SECTION 3
Comment Letters

The City of Los Angeles Department of Water and Power (LADWP), Department of Public Works Bureau of Engineering (BOE) and Bureau of Sanitation (LASAN), and Department of Recreation and Parks (RAP), are collectively referred to herein as the "City." LADWP acting as Lead Agency circulated the Draft Initial Study/Mitigated Negative Declaration (Draft IS/MND) for the Stormwater Capture Parks Program (Program) for public review for 30 days (January 7, 2021 through February 7, 2021) in accordance with the requirements of the California Environmental Quality Act (CEQA) Guidelines Section 15072(a). BOE, LASAN, and RAP will act as Responsible Agencies. The City received a total of eight comment letters during the public review period, which are listed in **Table 3-1** and are included within this chapter. The letters have been marked with brackets that delineate comments pertaining to environmental issues and the information and analysis contained in the Draft IS/MND. Responses to such comments are provided in Section 4.

TABLE 3-1
COMMENT LETTERS RECEIVED

Comment Letter No.	Commenter	Date of Comment
1	California Department of Transportation	January 13, 2021
2	Luis Suarez	January 15, 2021
3	Marie Gordon	January 22, 2021
4	Brenda Dalusong	February 2, 2021
5	California Department of Fish and Wildlife	February 5, 2021
6	Diana Nicole, Sunshine Hills Residents Association	February 8, 2021
7	County of Los Angeles Fire Department	February 9, 2021
8	Joanne D'Antonio	February 8, 2021

SECTION 4
Response to Comments

4.1 Comments on the Draft IS/MND and Response to Comments

The responses to comments included in this section correspond to each comment letter outlined in Section 3.

Letter 1: Miya Edmonson (California Department of Transportation)

Comment 1-A

The commenter summarizes the project description.

Response 1-A

The comment is noted and will be included in the project record.

Comment 1-B

The commenter states that an encroachment permit would likely be required for any project work, including road closures, done on or near California Department of Transportation's (Caltrans) right of way.

Response 1-B

As noted on page 33 of the Draft IS/MND, the City and/or its contractors will coordinate with Caltrans and will obtain all necessary permits prior to construction activities. In addition, Caltrans is an active partner in the Program, providing some funding and assisting with project level designs.

Comment 1-C

The commenter states that a Caltrans transportation permit is required for transporting any heavy construction equipment and/or materials with oversized-transport vehicles on State Highways.

Response 1-C

The City and/or its contractors will coordinate with Caltrans and will obtain all necessary permits prior to construction activities.

Comment 1-D

The commenter recommends that project construction traffic is limited to off-peak periods to minimize potential impacts on State facilities.

Response 1-D

As outlined in Mitigation Measure TR-1, the City and/or its contractors will coordinate with Los Angeles Department of Transportation (LADOT) in order to prepare a construction traffic management plan (CTMP) for the Program which will include time of day restrictions, and time limitations for construction traffic.

Comment 1-E

The commenter requests submission of a construction traffic management plan to Caltrans for review if State facilities are expected to have delays. The commenter request that the traffic management plan includes details on any traffic delays that would occur on State facilities during construction, and alternate bicycle and pedestrian routes for any routes that would be affected during construction.

Response 1-E

The City will submit the CTMP to Caltrans for review if delays are expected on State facilities.

Comment 1-F

The commenter expresses support for Transportation Demand Management (TDM) strategies which the City has incorporated into the Program and recommends additional options to further reduce Vehicle Miles Traveled (VMT) and greenhouse gas emissions impacts.

Response 1-F

The Draft IS/MND concluded that Program impacts to VMT and greenhouse gas emissions would occur at levels that are below CEQA significance thresholds, without implementation of any mitigation measures.

Letter 2: Luis Suarez

Comment 2-A

The commenter requests more information regarding the environmental impacts that would occur on homes surrounding Fernangeles Park.

Response 2-A

Residents in the vicinity of Program sites may experience temporary impacts related to construction. The City and its construction contractors are required to implement mitigation measures to ensure that nearby residents are notified of tentative construction schedules and that Program impacts remain below the specific impact thresholds identified in Appendix G of the

CEQA Guidelines. For a detailed discussion of anticipated environmental impacts, please refer to the Draft IS/MND. With respect to neighborhood impacts, the IS/MND describes effects to aesthetics on page 46, air quality on page 51, biological resources on page 72, noise on page 122, recreational resources on page 138, and traffic on page 140.

Comment 2-B

The commenter expresses concern regarding the potential for groundwater saturation in surrounding neighborhoods as a result of the proposed infiltration galleries at Fernangeles Park.

Response 2-B

The Program would include construction of underground infiltration galleries, which would capture surface flow and divert stormwater runoff from the Caltrans pump discharge to recharge the San Fernando Groundwater Basin. The infiltration galleries will be constructed of concrete and are designed to retain flows for percolation into the San Fernando Groundwater Basin. The ground surface surrounding the park would be restored to support recreational uses similar to current conditions . The Draft IS/MND evaluates the potential for groundwater mounding to occur that could affect surface infrastructure. A technical analysis prepared by Todd Groundwater Consultants is included as Appendix E. As noted in Table 1 of Appendix E, the infiltration galleries would range from 16 to 29 feet below ground surface and the groundwater levels in the area range from 105 to 335 feet below the ground surface. Mitigation measure GEO-1 has been included to monitor groundwater levels and reduce flow diversions when groundwater is within 50 feet of the surface. With mitigation implemented, the Draft IS/MND concludes that the potential for ele vated groundwater levels would be minimized.

Letter 3: Marie Gordon

Comment 3-A

The commenter requests information regarding start and end dates for Program construction activities that would occur near two senior citizen apartment buildings located along Vanowen Street, between Whitsett Avenue and Rhodes Avenue, just south of Whitsett Fields Park North.

Response 3-A

As noted in Table 1-6 on page 40 of the Draft IS/MND, construction activities at Whitsett Fields Park North are expected to take approximately 18 months, starting in June 2025 and ending in November 2026. Construction at Valley Plaza Park North, located east of I-170 on Vanowen Street, is expected to take approximately 17 months, starting in November 2023 and ending in March 2025. Construction work hours would generally be restricted to times between 7 A.M. and 7 P.M., Monday through Friday.

Comment 3-B

The commenter expresses concern regarding construction mitigation measures and their potential to minimize environmental impacts on senior citizens living in nearby apartments. The commenter states that the environmental impacts of prior projects were not effectively mitigated.

Response 3-B

Residents in the vicinity of Program sites may experience temporary impacts related to construction. The City and its construction contractors are required to implement mitigation measures to ensure that nearby residents are notified of tentative construction schedules, and that Program impact levels remain below the specific thresholds identified in Appendix G of the CEQA Guidelines. For a detailed discussion of anticipated environmental impacts, please refer to the Draft IS/MND. With respect to neighborhood impacts, the IS/MND describes effects to aesthetics on page 46, air quality on page 51, biological resources on page 72, noise on page 122, recreational resources on page 138, and traffic on page 140.

Comment 3-C

Commenter states that the Notice of Intent (NOI) for the Program is dated January 7, 2021 but was not received until January 20, 2021.

Response 3-C

The comment is noted and will be included in the project record. The public review period for the Draft IS/MND was from January 7, 2021, to February 7, 2021. The commenter received the NOI within the public review period of the Draft IS/MND in compliance with CEQA.

Letter 4: Brenda Dalusong

Comment 4-A

The commenter requests that the City consider construction of sidewalks around the perimeter of Fernangeles Park as part of the Program's proposed recreational facilities enhancements. The commenter states concern for pedestrian/motor vehicle safety around the park due to the lack of sidewalks available for pedestrian use.

Response 4-A

Figures 1-4 through 1-12 provide architectural drawings for each of the proposed parks that include public access and pedestrian circulation to support existing recreational uses.

Letter 5: Erinn Wilson-Olgin (California Department of Fish and Wildlife)

Comment 5-A

The comment acknowledges that California Department of Fish and Wildlife (CDFW) received the Draft IS/MND for review and to provide comments.

Response 5-A

Comment noted.

Comment 5-B

CDFW disagrees with the City's impact analysis, which finds that the Project's diversion of water would not impact biological resources

The Project would divert dry season flow and stormwater totaling 3,010 acre-feet per year (AFY). The water would otherwise proceed downstream via concrete channels to the Los Angeles River. The Draft IS/MND concluded that "no beneficial uses would be impacted." However, flow reduction could have a significant impact on downstream biological resources, especially during the dry season proceeding after a below-average water year.

Response 5-B

The Draft IS/MND on pages 74 and 77 describes that the Program would reduce dry season flows from the Tujunga Central Branch channel that would reduce water in the Los Angeles River. In response to the comment the sentence on page 77 of the Draft IS/MND has been revised as follows:

> The Los Angeles River currently discharges an average of over 100 cubic feet per second (cfs) to the ocean during dry weather (City of Los Angeles 2018). The volume of water diverted during dry weather flow by the proposed Program would be a small percentage of the current downstream flows (1.4 percent of total annual flow or approximately 4 percent of dry weather flow), and as a result no beneficial uses, including biological resources, would be significantly impacted.

As noted in the comment, the reduction of dry weather flows is itself an impact. Therefore, the changes to the text provided above as requested in the comment are appropriate. The Draft IS/MND identifies the reduced flow impact on page 74, but concludes that no riparian or aquatic habitat would be removed or adversely affected within the downstream reaches of the Los Angeles River. Therefore, since no habitat would be lost or stressed, the flow reduction would be a less than significant impact. The analysis relies on a de minimis impact conclusion. That is, the reduction of 1.4 percent of total flow and approximately 4 percent of dry weather flow in the river would not result in loss of habitat or result in reduced habitat quality. Rather, diverting dry-weather urban runoff would benefit water quality. The Draft IS/MND describes on pages 74 and 77 how beneficial uses are well supported by the remaining dry season flows. This evidence is outlined further below.

The Draft IS/MND describes in Section 1.5 that six of the nine Program sites (see table below) would require insertion of diversion structures within underground storm drain pipes. No habitat values exist within the buried storm drain pipes. The remaining four Program sites would require installation of diversion structures within existing Tujunga Central Branch concrete box channel or reinforced concrete box culvert. The watershed drained by this Tujunga Central Branch

channel is a small portion of the San Fernando Valley adjacent to but outside of the Tujunga Wash drainage area, representing 1.7 percent of the total Los Angeles River watershed.

Infiltration Gallery Location	Diversion Structure Installation
David M. Gonzales Recreation Center	Underground Storm Drain Pipe
FernAngeles Park	Underground Storm Drain Pipe
Whitsett Fields Park North	Underground Storm Drain Pipe
Strathern Park North	Underground Storm Drain Pipe
Valley Plaza Park North	Underground Reinforced Concrete Box Culvert
Valley Plaza Park South	Concrete Channel
Alexandria Park	Concrete Channel
North Hollywood Park	Concrete Channel
Valley Village Park	Underground Storm Drain Pipe

The Draft IS/MND describes on page 74 that the Tujunga Central Branch channel is concrete-lined with no ecological value. As a result, direct impacts to habitat values from installing diversion structures would not adversely affect biological resources. Furthermore, the Draft IS/MND concludes on pages 74 and 77 that the proposed diversions would result in a small reduction of the flow in the Los Angeles River compared to the current flow, including in the dry season, and would not result in measurable effects to biological resources. The Draft IS/MND references the hydrological analysis conducted by the City for the One Water LA Program and cites that currently an average of 100 cubic feet per second (cfs) reaches the ocean in the concrete channel of the Los Angeles River during dry weather (City of Los Angeles 2018). The Program diversions represent an annual average flow of approximately 4 cfs or 4 percent of the dry weather flows to the ocean. The Draft IS/MND concludes on page 77 that the reduction caused by the project would represent 1.4 percent of the total flow in the river on an annual average. Since the river discharges substantial flow to the ocean in the dry season (>100 cfs), the Draft IS/MND concludes that the proposed project's 1.4 percent diversion of total flows and 4 percent of dry season flows would not result in significant impacts to biological resources.

The Draft IS/MND also concludes on page 153 that the flow reductions would not result in a cumulatively significant reduction, including in the dry season. This conclusion is consistent with the One Water LA Study, which provides an overview of stormwater flows in Chapter 3and the Los Angeles River in Chapter 4. (City of Los Angeles 2018).

In addition to the published One Water LA study, the City has been participating in the Los Angeles River Flows Project, a comprehensive new hydrologic study of the river led by the Southern California Coastal Watershed Research Project (SCCWRP) in partnership with the State Water Resources Control Board (SWRCB). This new study is called the Los Angeles River Flows Project and is sponsored by the City of Los Angeles (by and through LADWP and LASAN), Los Angeles Regional Water Quality Control Board (LARWQCB), and the Los

Angeles County Sanitation Districts (LACSD). SCCWRP is a quasi-public agency established to support Southern California governmental agencies with third-party, science-based analysis. The Los Angeles River Flows Project was initiated in 2019 expressly to evaluate potential effects of cumulative flow reductions in the Los Angeles River, including reductions in WRP discharges and future stormwater capture projects such as the proposed Project. CDFW has been actively participating in the Project as a member of the Technical Advisory Committee (TAC).

In May 2021, SCCWRP published a report titled Process and Decision Support Tools for Evaluating Flow Management Targets to Support Aquatic Life and Recreational Beneficial Uses of the Los Angeles River as part of the Los Angeles River Flows Project (LA River Flows Project Final Report) (SCCWRP, 2021b). This new Final report, included by reference with this Final IS/MND, characterizes the environmental attributes of the river channel and evaluates flows that support those attributes, providing flow-ecology relationships helpful in understanding dry season flow reduction impacts on ecological values. The report develops a set of tools to evaluate future flow management scenarios. One of the three objectives noted in the report is to:

> "Produce tools and approaches to help evaluate how potential modified flow regimes in the LA River may affect the likelihood of supporting aquatic life and recreational beneficial uses" (SCCWRP, 2021b)

The results of this study directly confirm the conclusions outlined in the IS/MND, including an evaluation of the effects to focal species of reduced storm flows during the dry season. See response to comment 5-I for more discussion on the new study and the conclusions regarding impacts to ecological values from reduced dry weather flow.

Comment 5-C

The Draft IS/MND does not provide sufficient analysis of the Project's potential biological impacts to allow CDFW to determine the Project's significance or need for mitigation.

Data Source: The Draft IS/MND uses data from the 2015 *Los Angeles River Ecosystem Restoration Integrated Feasibility Report* (USACE 2015). The U.S. Army Corp of Engineers (USACE) report analyzes the feasibility of restoring an 11-mile stretch of the Los Angeles River from Pollywog Park to Downtown Los Angeles, referred to in the report as the ARBOR reach (Area with Restoration Benefits and Opportunities for Revitalization) (USACE 2015). Citing the USACE report, page 77 of the Draft IS/MND states, "USACE estimated that existing water sources provide 211,348 AFY of flow within the Los Angeles River watershed on an annual basis. The proposed diversion would be approximately 1.4 percent of the existing water source [...]. The volume of water diverted during dry weather flow by the proposed Program would be a small percentage of the current downstream flows (1.4 percent), and no beneficial uses would be impacted.

The Draft IS/MND may have underestimated the percentage of water diverted from the Los Angeles River in using 211,348 AFY as the basis for deriving 1.4 percent. After factoring in water demand (e.g., infiltration, evaporation, evapotranspiration), the USACE estimated that flow

would be reduced from 211,348 AFY to 143,793 AFY annually and 29,166 AFY in the summer (April through September) (USACE 2015). Based on reduced volumes, the Project's proposed diversion would be approximately 2.2 percent annually, an increase from 1.4 percent. During the summer, diversion would be approximately 10.3 percent. Based on the above, the Draft IS/MND's impact analysis may not have accurately estimated the proportion of water the Project would divert from the Los Angeles River.

Response 5-C

The calculation in the comment asserting a 10.3 percent reduction is inaccurate in that it assumes the entire diversion estimate of the proposed Program (3,010 AFY) will occur between April and September. It would be more appropriate when calculating the six-month dry season percentage from the 29,166 AFY flow assumption to compare half the annual anticipated diversion, which would be 1,505 AFY, calculated as 5.14 percent of the total dry season flow. A different way of calculating the contribution of flows attributed to the Tujunga Central Branch channel is to compare the project's diversion estimates with flow estimates at the ocean. The One Water LA Report (City of Los Angeles 2018) estimates that the river discharges 100 cfs to the ocean during summer months. The Program's proposed diversion of 3,010 AFY would constitute approximately 4 percent of the existing flow to the ocean during the summer months. This would be a conservative assumption since it does not attribute any stormwater capture to the proposed Program. The Draft IS/MND concludes that the contribution of flow to the Los Angeles River from the Tujunga Central Branch channel during the dry season is small (1.4 percent of the total volume and 4 percent of dry weather flow) compared to other sources. Furthermore, the watershed represents only 1.7 percent of the total watershed feeding stormwater to the Los Angeles River. Based on these flow estimates, the Draft IS/MND concludes that the proposed project would not significantly affect the ecology of the river.

The City, including LADWP, is participating in the Los Angeles River Flows Project in partnership with the SWRCB, and in close coordination with CDFW. The Los Angeles River Flows Project has been initiated by SWRCB to better understand the water demands of beneficial uses in the river, and to support future flow management priorities with science-based demand characterizations. See response to comment 5-I for more discussion on the new study.

Comment 5-D

Seasonality: The Draft IS/MND does not thoroughly analyze the potential significance of water diversion depending on the season. During the dry season, typically April through September in southern California, the Los Angeles River is largely maintained by urban runoff and discharge from WRPs. Diverting water could be significant during the dry season and could either significantly reduce water flow or result in complete loss of water flow from the Tujunga Central Branch channel to the Los Angeles River.

Response 5-D

The Draft IS/MND does evaluate the seasonality of the potential effects of the Program on page 74. The assessment describes the effects of the proposed Program on both dry weather flows and wet weather flows. The Draft IS/MND notes on pages 74 and 77 that dry weather flows would be reduced slightly but would not result in loss of habitat. This is substantiated by the fact that 100 cfs currently discharges to the ocean in dry weather indicating a surplus of flow. Furthermore, the Draft IS/MND also points out that the ecological values of the river would be enhanced with the reduction of pollutant daily loads conveyed in dry weather flow. The water quality benefits of stormwater capture on downstream habitat values are described further in One Water LA, Chapter 4 Los Angeles River Study (City of Los Angeles 2018), as a fundamental benefit of the City's Program, and supports the water quality objectives of the regional Municipal Separate Storm Sewer System (MS4) stormwater NPDES permit of which the City is a participating permittee. See response to comments 5-C and 5-G.

Comment 5-E

Drought: The Draft IS/MND does not analyze the potential significance of water diversion during a below-normal water year. Since 2000, the longest duration of drought in California lasted between 2011 and 2019 (USGS 2021) and in southern California, between 2012 through 2016 (Los Angeles Almanac 2021). The 2017-2018 rainfall season was below normal and the driest for Los Angeles since 2006-2007 (Los Angeles Almanac 2021). Diverting water during a below normal rainfall year may significantly reduce water flow or result in complete loss of water flow.

Response 5-E

Annual rainfall amounts vary in the Los Angeles River watershed, with multi-year droughts likely becoming more common. The City's Stormwater Capture Master Plan states that "although the average annual precipitation in downtown Los Angeles is 15.3 inches, it ranges from a low of 4.69 inches (2007) to a high of 30.6 (1998). The mountains that surround the coastal plain, and are tributary to the City, experience considerably more rainfall than downtown Los Angeles. For example, in Big Tujunga Canyon, annual rainfall ranged from 9.62 inches in 1989 to 53.93 in 1998." (LADWP Stormwater Capture Master Plan, 2015; p. 3) The watershed represents only 1.7 percent of the total LA River watershed. The reduction would not significantly reduce dry season flows. The comment does not provide any additional information not already considered in the Draft IS/MND. See response to comment 5-I.

Comment 5-F

Beneficial Uses: The concrete lined portions of the Los Angeles River support wildlife. These portions of the Los Angeles River are regionally significant, especially in a dense urban environment with substantial loss or alteration of the natural hydrologic regime and river ecosystems. A reduction of flow, especially dry season flow, could directly or indirectly impact biological resources through habitat modifications. Where the Los Angeles River overtops the concrete-lined channel, the resulting sheet flows allow phytoplankton (algae and cyanobacteria),

microorganisms, and herbaceous vegetation to establish. The algae provide habitat and a food source for benthic invertebrates, a vital food source for wading birds. The Los Angeles River provides habitat for hundreds of bird species, making these areas birding hotspots. The least Bell's vireo (*Vireo bellii pusillus*), an Endangered Species Act and CESA-listed endangered species, has been documented within the Glendale Narrows area. Least Bell's vireo depends on willow (*Salix* genus) riparian habitat. The ARBOR reach examined in the USACE report contains soft-bottom channels that support herbaceous and woody vegetation. Dominant species include black willow (*Salix gooddingii*), Fremont cottonwood (*Populus fremontii*), and arroyo willow (*Salix laevigata*) (USACE 2015). The middle reach of the Los Angeles River, specifically Glendale Narrows, supports anadromous fish that includes the Pacific lamprey (*Entosphenus tridentatus*), a California Species of Special Concern.

The Draft IS/MND concludes that "no beneficial uses would be impacted." The Draft IS/MND does not offer a quantitative analysis as to how it determined no impacts would occur. Moreover, the Draft IS/MND does not define what it considered to be "beneficial uses." Diverting water during the dry season could reduce the availability and extent of shallow water sheet flow downstream. This could potentially impact algae, benthic invertebrates, and birds. Willow riparian habitat may be impacted if reduction in flow leads to receding shoreline or lower water depth. Preliminary work of the Los Angeles River Flows Project show that black willow (*Salix gooddingii*) seedling mortality increases as water depth decreases (SWRCB 2019). Loss of suitable habitat may impact sensitive species such as least Bell's vireo. Anadromous fish have specific habitat requirements including water depth, velocity, and vegetation.

Response 5-F

The Draft IS/MND on pages 74-78 describes the valuable biological resources existing in the Los Angeles River that are supported by consistent surface flow. The Draft IS/MND cites the One Water LA Program to substantiate the values found in the river, including all the species described in the comment. The 4 percent reduction of the current 100 cfs in the lower river channel would not reduce habitat from sheet flow in the lower reaches of the river since the flows would continue to be greater than the low flow channel and would continue to overflow and maintain the sheetflow condition. Phytoplankton and herbaceous vegetation would continue to provide a food source for benthic invertebrates, and for wading birds, as noted in the comment. The Draft IS/MND does provide a quantitative assessment of the potential effect of the proposed Program by estimating a 1.4 percent flow reduction. This small average flow reduction would not result in measurable effects to habitat values in the concrete-lined Los Angeles River either in the Arbor Reach or in the concrete-lined portion of the lower river. Furthermore, the Draft IS/MND cites the One Water LA Study that states that far more water exits the Arbor Reach under current conditions than is proposed to be diverted by the proposed Program. That is to say, since more water exits the system than is contributed by stormwater, there would be sufficient quantity of flow to meet the existing ecological demand. The Draft IS/MND concludes that the calculated flow reductions would not impact beneficial uses.

The comment cites information from a report published for the Los Angeles River Flows Project in January 2021 that provides a habitat suitability assessment for species known to occur in the Los Angeles River. The citation notes that black willow seedling mortality increases with water depth reduction. This information is extracted from a life stage suitability curve provided in the report. The Assessment Report does not provide a conclusion on the optimal water flow depth in the Los Angeles River. Rather, the Habitat Assessment Report (SCCWRP 2021a) provides suitability curves that show a relationship with water depth and different life cycle stages for various species.

The figure below taken from that report shows that willow seedling mortality is more complex than stated in the comment: mortality is at a minimum at mean depths of around 5 cm and then increases with both reductions and increases in flow depth. In other words, germination occurs within a specific range of flow depth. .

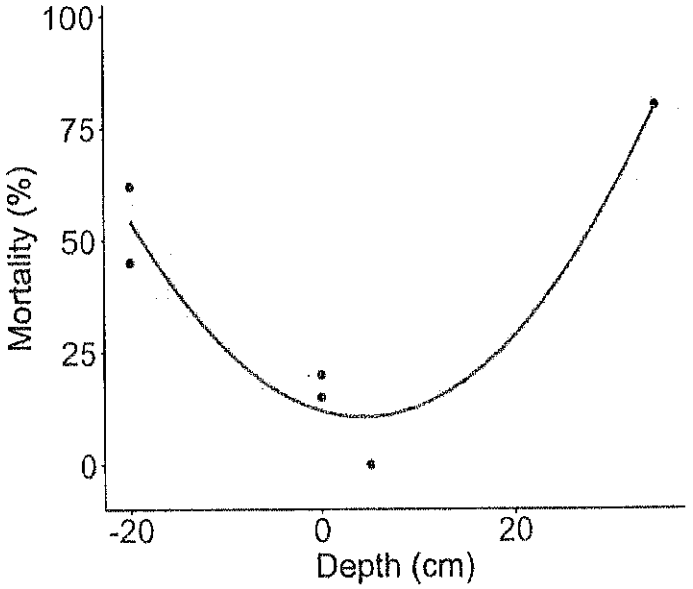

Figure 35. Habitat suitability curve of seedling mortality as a function of inundation/depth from water surface of Salix Gooddingii calculated through quadratic linear regression. Depth is defined as depth from surface i.e., -20 cm = 20 cm below surface, 20 cm = 20 cm above surface. Mean = 5 cm, p = 0.002, n=5.

The second figure, taken from the recently published SCCWRP flow study (SCCWRP 2021b) shows that willow in the Glendale Narrows area of the Los Angeles River can sustain a wide range of flow conditions. The graph shown below from the study shows that WRP discharges could be reduced by 80 percent and still support the existing willow. The WRP flow reduction of 80 percent illustrated, from 75 cfs to 15 cfs, is an order of magnitude greater than the proposed flow reduction from the proposed Program. The graph also shows that if all urban baseflows were captured, WRP discharges could be reduced by up to 68 percent and the existing willow habitat would be maintained. That is to say, a 100 percent reduction in urban baseflow across the Los Angeles River watershed (of which the proposed Program watershed comprises 1.7 percent by

area) would still allow for a 68 percent reduction in WRP flow and continue to support willow habitat. This substantiates the conclusion that the proposed Program dry weather flow reductions would not affect downstream beneficial uses significantly, and that it would be unreasonable to assume otherwise.

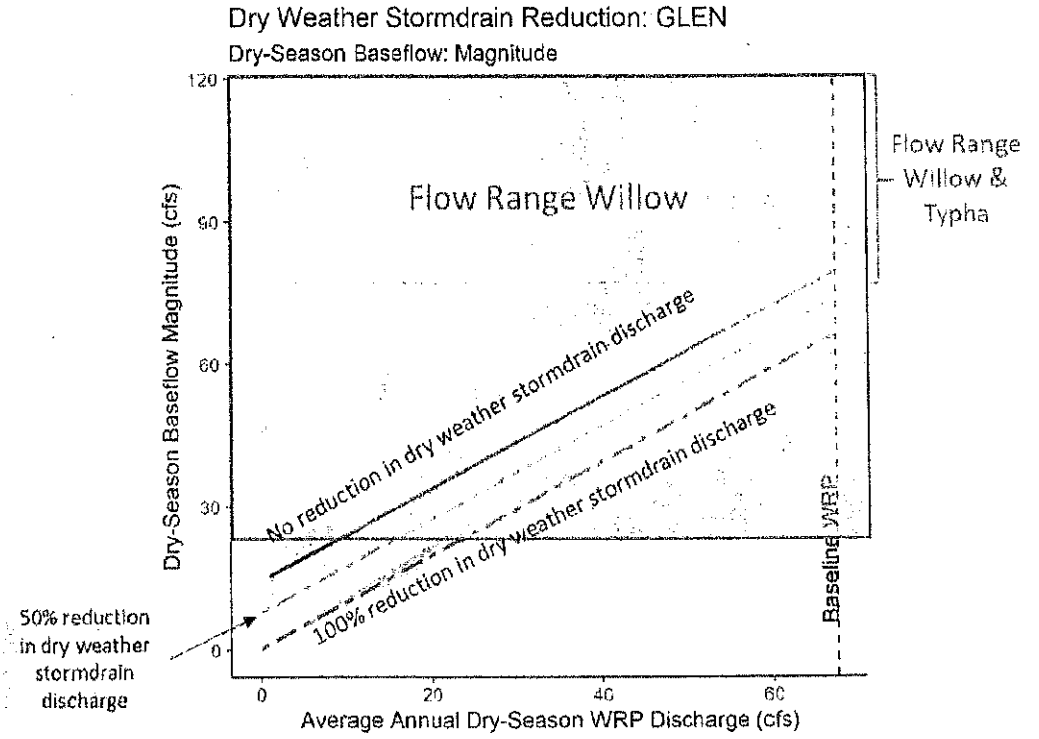

The effect of stormwater diversion would reduce Los Angeles River flows less than 4 cfs in the dry season, compared to the current dry season average of 75 cfs in the Arbor Reach and 100 cfs where the Los Angeles River confluences with the Pacific Ocean. The remaining flow would provide for the needs of willow and other riparian vegetation. The conclusions illustrated in the SCCWRP study for black willow show that surface water depth is not a driving factor in the suitability of black willow habitat in the Los Angeles River. The comment does not identify any other citation supporting water needs for the riparian habitats See response to comment 5-I.

Comment 5-G

Cumulative Flow Reductions: The Draft IS/MND does not analyze whether the Program would result in significant impacts when considered with other existing or proposed water diversion projects in the Los Angeles River watershed. The cities of Burbank, Glendale, and Los Angeles plan to recycle more wastewater and reduce their discharges to the Los Angeles River for this purpose (SWRCB 2019).

Response 5-G

The Draft IS/MND concludes on page 153 that the proposed Program would not result in cumulatively significant effects to the environment. This conclusion is based on the quantitative analysis that 4 percent of dry weather flow (1.4 percent of total annual flow) is too small an amount to result in an appreciable, or measurable change in the habitat values currently exhibited in the Los Angeles River. Furthermore, the City has acknowledged that cumulative flow reductions in the future may include potential reductions in WRP discharges to support regional recycled water program objectives. To evaluate the effects of cumulative reductions in future flows that may include future diversions of WRP discharges, the SWRCB has conducted the Los Angeles River Flows Project. The study published by SCCWRP through the Los Angeles River Flows Project (SCCWRP 2021b) provides tools to all the river stakeholders to best manage the resource's beneficial uses. Future projects that may propose further diversions in dry weather flow may rely on this study to assess potential direct and cumulative effects of WRP discharge diversions. These future WRP diversions will be subject to Water Code Section 1211 Petitions, approved by the SWRCB.

In January 2021, SCCWRP published a report titled the Assessment of Aquatic Life Use Needs for the Los Angeles River Report (Assessment of Aquatic Life Report) (SCCWRP 2021a). This report characterizes habitat values in the river, and evaluates water demands of riparian and aquatic species known to occur in the river system. Habitat suitability curves have been developed for certain focal species based on the assessment. Habitat suitability curves were developed as part of a technical tool to assist the SWRCB in assessing potential WRP flow reductions in the Los Angeles River, but are not themselves flow recommendations.

The Assessment of Aquatic Life Report outlines habitat suitability criteria for three species: black willow, cattails (*Typha sp.*), and algae (*Cladophora sp.*). The study provides an overview of the cumulative effects of stormwater diversions to the overall flow in the Los Angeles River. The graphic provided in response to comment 5-F above summarizing the relationship between flow in the river and ecological water demands of willow substantiates the conclusion that the proposed Program dry weather flow reductions would not affect downstream beneficial uses significantly, and that it would be unreasonable to assume otherwise.

The City, including LADWP, is committed to maintaining a supportive role in the Los Angeles River Flows Project. See response to comment 5-I.

Comment 5-H

Diverting water from the Los Angeles River may impact biological resources downstream, especially during the dry season proceeding after a below-average water year. Impacts to any sensitive or special status species should be considered significant under CEQA unless they are clearly mitigated below a level of significance. Inadequate avoidance, minimization, and mitigation measures for impacts to sensitive or special status species will result in the Project continuing to have a substantial adverse direct, indirect, and cumulative effect, either directly or

through habitat modifications, on any species identified as a candidate, sensitive, or special-status species by CDFW or U.S. Fish and Wildlife Service.

Response 5-H

See responses to comments 5-G and 5-I.

Comment 5-I

Mitigation Measure #1: CDFW recommends LADWP provide additional analysis and evaluation of potential impacts on biological resources as part of the final environmental document. At a minimum, an additional analysis and report should provide the following:

Study Reach

1. CDFW recommends LADWP define the study area as a 15-mile reach of the Los Angeles River, bounded by the Los Angeles River's confluence with the Tujunga Wash tributary and proceeding downstream to the river's confluence with the Arroyo Seco tributary. LADWP should identify all sources of flow input within the study area to estimate the total annual and dry season flow. LADWP should assess potential Project related impacts on biological resources within this study reach.

Changes to Hydrology and Hydraulics

1. Under pre-Project (i.e., baseline) conditions, the volume of water flow from the Tujunga Central Branch channel into the 15-mile study reach during a) the wet (November through March); b) the dry season (April through October); and c) above-average and below-average water year (i.e., wet season/above-average water year, wet season/below-average water year, dry season/above-average water year, and dry season/below-average water year). LADWP should clearly define what it would consider to be above-average or below-average rainfall year.

2. Under proposed Project conditions, the percent reduction in flow from 1) the Tujunga Central Branch channel tributary and 2) 15-mile study reach for a wet season/above-average water year, wet season/below-average water year, dry season/above-average water year, and dry season/below-average water year.

3. An analysis of potential Project-related changes to river hydraulics in both concrete and soft-bottom reaches. This includes water depth (percent change), wetted perimeter (acres gained/lost), and velocity (percent change). CDFW requests a map modeling potential changes to channel hydraulics overlain on a map of plant communities and habitat for sensitive wildlife species and birds.

4. A quantitative analysis comparing the flow from the Tujunga Wash, Burbank Wastewater Reclamation Plant (WRP), Tillman WRP, Verdugo Wash, and Glendale WRP, and their relative contribution to the hydrograph of the 15-mile study reach.

Biological Resources Impact Assessment

5. A map of plant communities and important bird foraging and nesting habitat occurring in the 15-mile study reach. Plant communities should be mapped at the alliance/association level using the Manual of California Vegetation, second edition (Sawyer et al. 2009). Also, CDFW

recommends an updated and thorough floristic-based assessment of plant communities, following CDFW's Protocols for Surveying and Evaluating Impacts to Special Status Native Plant Populations and Sensitive Natural Communities (CDFW 2018).

6. A comprehensive list of sensitive and special status plant and wildlife species, and sensitive plant communities, occurring in the 15-mile study reach. CDFW recommends a nine-quad search of the California Natural Diversity Database (CNDDB) for sensitive and special status biological resources that could occur downstream. For each biological resource, provide:

   a. A summary of species-specific habitat requirements;

   b. A discussion as to how the species or plant community may be significantly impacted directly or indirectly through habitat modification, as result of changes to hydrology (reduced flow) and hydraulics (water depth, wetted perimeter, velocity); and,

   c. A quantitative analysis and/or adequate discussion to evaluate whether the Project would result in those significant impacts.

7. A discussion of whether diversion devices such as rubber dams would have direct and/or indirect impact on biological resources.

8. An adequate discussion to address how the Project may potentially affect on-going habitat recovery and restoration efforts.

9. An adequate discussion of Project-related impacts on biological resources in relation to cumulative flow reductions.

Response 5-I

The IS/MND concludes that based on the evidence provided in the existing literature, the proposed Program would not result in significant impacts to biological resources in the Los Angeles River considering the small contribution of flow provided by the Tujunga Central Branch channel, and that it would be unreasonable to assume otherwise. The IS/MND concludes that since the Program's effects would not result in a significant impact directly or cumulatively, no mitigation is required. However, in response to the comment and request for mitigation, the Los Angeles River Flows Project Final report (LA River Flows Project Final Report), published after the Draft IS/MND was published is incorporated by reference into this Final IS/MND. This robust hydrological, hydraulic, and ecological study of the Los Angeles River conducted by SCCWRP for SWRCB is designed to develop a set of tools and approaches to help evaluate future flow management scenarios. The Project applies the California Environmental Flow Framework (CEFF) approach to evaluating ecological flow relationships in California streams. The City is participating in the Los Angeles River Flows Project to assess how future flow diversions from WRPs may be best managed to support beneficial uses and management priorities in the river.

The LA River Flows Project Final Report is presented in this Final IS/MND to respond to this detailed comment. The Report was conducted over a two-year period, including input from numerous stakeholders including both LADWP and CDFW. The Report assists in evaluating the

potential significance of the impacts of stormwater capture projects, such as the proposed Project, and includes all of the elements proposed in the comment and recommended mitigation measure. The following responses address each point in the comment:

Comment 5-Ia: Study Reach

1. CDFW recommends LADWP define the study area as a 15-mile reach of the Los Angeles River, bounded by the Los Angeles River's confluence with the Tujunga Wash tributary and proceeding downstream to the river's confluence with the Arroyo Seco tributary. LADWP should identify all sources of flow input within the study area to estimate the total annual and dry season flow. LADWP should assess potential Project related impacts on biological resources within this study reach.

Response to Comment 5-Ia

With respect to the Study Reach, the Los Angeles River Flows Project includes assessments of habitat values in the entire Los Angeles River from the Sepulveda Dam to the Pacific Ocean. This study area is larger than requested in the comment. The model domain included as Figure 5 in the study is included below. The Tujunga Central Branch channel confluences with the Los Angeles River at approximately node F300 shown in in the figure.

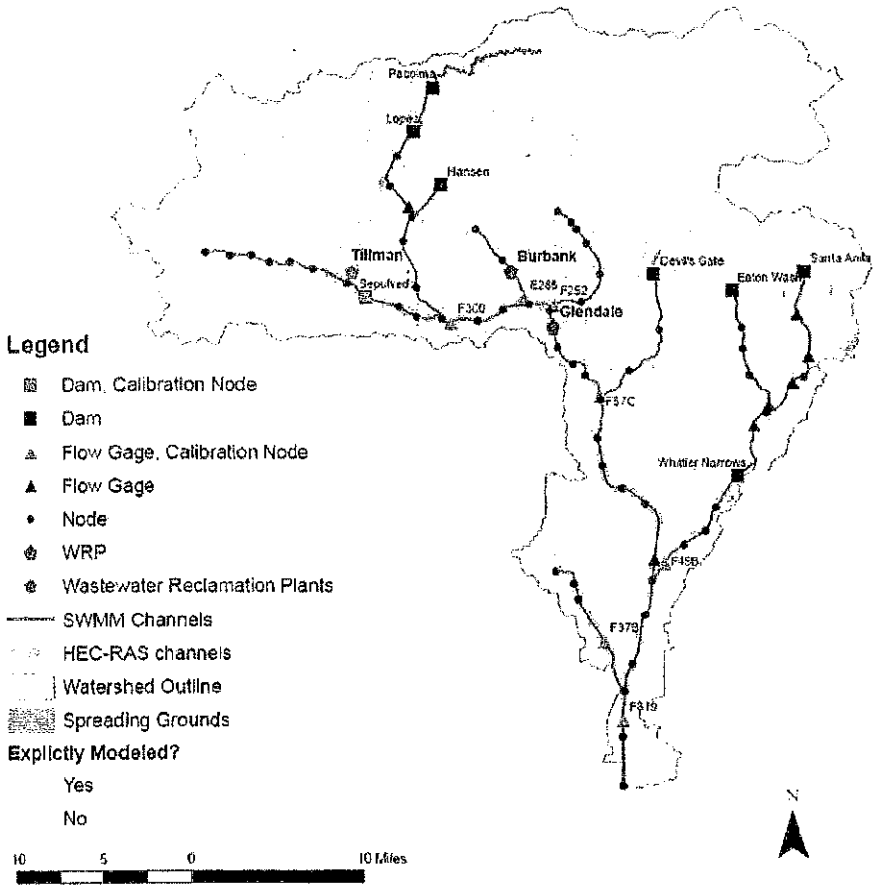

Comment 5-Ib: Hydrology and Hydraulics

2. Under pre-Project (i.e., baseline) conditions, the volume of water flow from the Tujunga Central Branch channel into the 15-mile study reach during a) the wet (November through March); b) the dry season (April through October); and c) above-average and below-average water year (i.e., wet season/above-average water year, wet season/below-average water year, dry season/above-average water year, and dry season/below-average water year). LADWP should clearly define what it would consider to be above-average or below-average rainfall year.

Response to Comment 5-Ib

With respect to Changes to Hydrology and Hydraulics, the Los Angeles River Flows Project includes results from a comprehensive modelling effort that meets all the parameters in the comment. As noted on pages 7 through 9 of the study, estimated flow conditions were modeled using a coupled hydrologic-hydraulic model created in EPA's Storm Water Management Model (SWMM) and the Hydrology Engineering Center's River Analysis System (HEC-RAS). The hydrologic model simulates discharge on the mainstem of the LA River, Compton Creek, and Rio Hondo at an hourly time step from WY 2011 through 2017. The model includes wet season and dry season discharges and uses a dry period to represent conservative flow estimates as shown in the figure below taken from Figure 3 of the study.

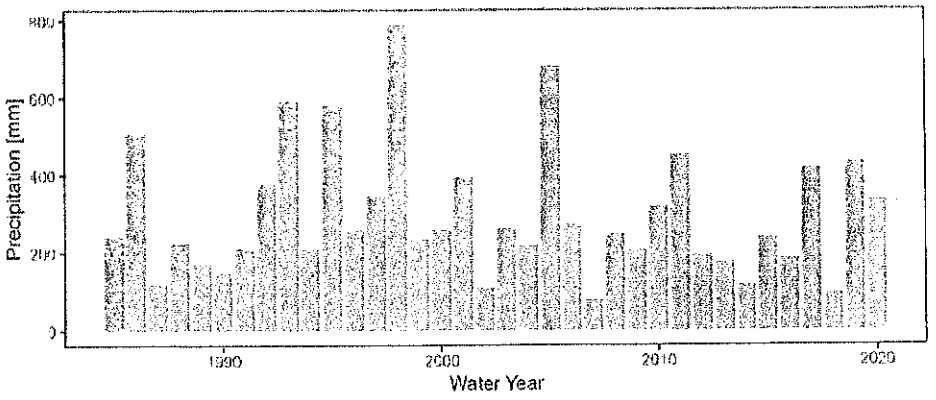

The one-dimensional hydraulic model was created by combining existing HEC-RAS models for the LA River and updating channel geometry and Manning's roughness based on field observations and calibration. The hydraulic model was run under steady-state conditions, which were used to develop rating curves to apply to the simulated hydrographs, producing time series hydraulic data for velocity, maximum channel depth, and shear stress.

Some excerpts from the SCCWRP 2021 report that describes the Flows Project are included here:

> *"We estimated current flow condition in the study area using a coupled hydrologic-hydraulic model created in EPA SWMM and HEC-RAS (ES-2). Current hydrologic conditions are defined as the flows and operations that occurred during water year (WY) 2011 to 2017." (SCCWRP, 2021; p ii)*

"Calculated ranges for the wet season and dry season baseflow metrics increase downstream of the three water reclamation plants, illustrating the contributions of discharges from the water reclamation plants.... The wet season metrics, baseflows from the start of the storm season to the start of the dry season, and dry season metrics, base flows from the start of the dry season to the start of the following wet season, are calculated on an annual basis. Typically, the start of the wet season is between November to January and the start of the dry season is between May to July depending on the climatic conditions for a given water year. The broader ranges and higher values of wet season baseflow metrics reflects the contribution of residual stormdrain discharge following storm events. Rio Hondo and Compton Creek both have the lowest wet season and dry season baseflow magnitudes compared to all other reporting nodes on the mainstem." (SCCWRP, 2021; p iv.)

Comment 5-Ic: Hydrology and Hydraulics

3. Under proposed Project conditions, the percent reduction in flow from 1) the Tujunga Central Branch channel tributary and 2) 15-mile study reach for a wet season/above-average water year, wet season/below-average water year, dry season/above-average water year, and dry season/below-average water year.

Response to Comment 5-Ic

As noted Figure ES-5 of the LA River Flows Project Final Report and excerpted below, dry weather storm flow contributions are a key consideration in the study. The graph illustrates average baseline flows with the black line accompanied by a grey band that indicates the 10 percent and 90 percent percentiles. This grey shading following the black line accounts for extremely dry years. In other words, the analysis represented by this graph takes dry year and wet year flows into consideration.

The graph compares potential future combined flow reductions of both dry weather runoff and WRP reductions with habitat value impacts. The large grey box represents habitat suitability for black willow habitat. The graph shows that a small percentage decline in dry weather storm channel flows (even in very dry years) would not reduce flows in the river below suitability thresholds for willow habitat, resulting in no reductions in habitat acreage or habitat quality. (The flow range for typha [cattails] is also included in the graph to show flow requirements for typha across the entire channel width. The flow rate is needed due to the wide channel width. Less flow could support typha within a narrower side channel such as shown in the HEC-RAS cross section provided in response to comment 5-!d below)As a result, the impact would be less than significant from a direct, indirect and cumulative perspective.

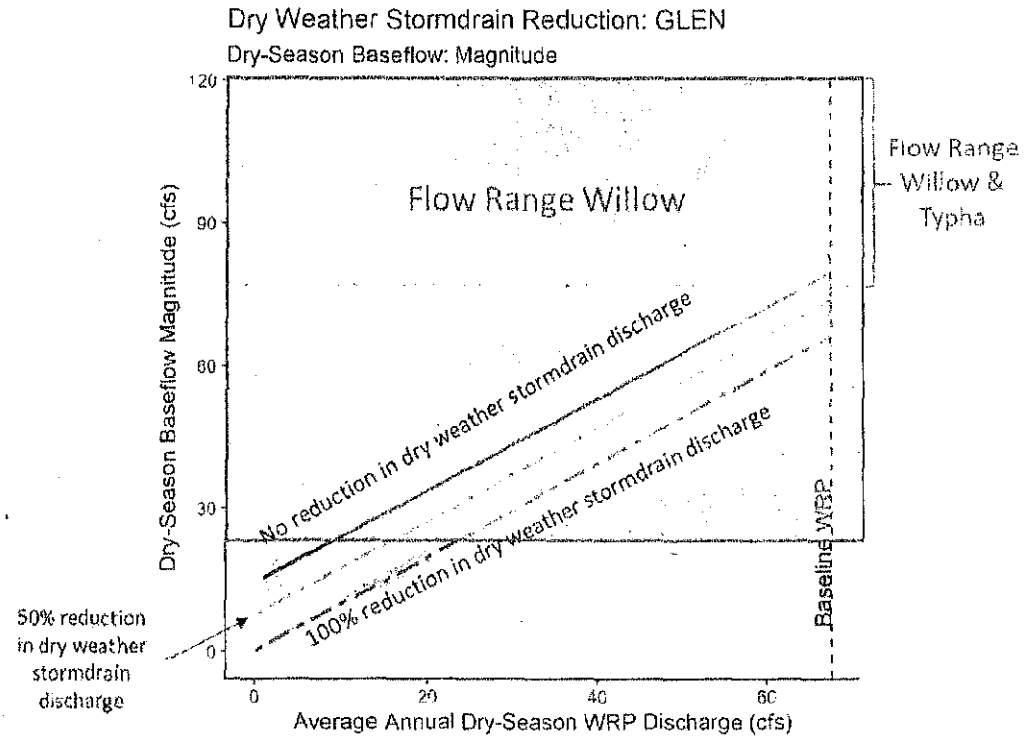

Figure ES-5. Flow-based sensitivity curves illustrating the combined effects of change in WRP discharge and 50% (yellow) and 100% reduction (red) in dry weather stormdrain discharge at GLEN reporting node. Solid and dashed lines represent median values; bounds of the gray and colored bands are the 10th and 90th percentile dry-season instream flows across the modeled period. Optimal flow range in this example is based on a 50% (medium) probability of occurrence of Willow and Typha.

Comment 5-Id: Hydrology and Hydraulics

4. An analysis of potential Project-related changes to river hydraulics in both concrete and soft-bottom reaches. This includes water depth (percent change), wetted perimeter (acres gained/lost), and velocity (percent change). CDFW requests a map modeling potential changes to channel hydraulics overlain on a map of plant communities and habitat for sensitive wildlife species and birds.

Response to Comment 5-Id

The Los Angeles River Flows Project published the "Assessment of Aquatic Life Use Needs for the Los Angeles River" (Assessment of Aquatic Life Report) in February 2021 (Stein, 2021). This document provides a detailed summary of hydraulic HEC-RAS modeling done to support the overall program objectives. Over 1,000 cross sections were generated by the HEC-RAS model in the river that show impacts of flow reductions to depth and wetted perimeter (as requested in the comment). Since the roughness of the Los Angeles river changes over time and greatly influences depth and wetted perimeter in specific locations, the model characterized typical channel dimensions and roughnesses to provide meaningful ecological-flow relationships. An excerpt from page 15 of this study is included below:

"Channel hydraulics (i.e., maximum channel depth, velocity, and shear stress) can vastly differ across different sections of the channel at a single site. For every soft-bottom output node in the HEC-RAS model, three output locations were selected at the three most significant morphological zones to capture the variability in hydraulics for each node and were designated as left overbank (LOB), center channel (Main), and right overbank (ROB)"

The figure below provided on page 15 of the Assessment of Aquatic Life Report shows how channel characteristics were accommodated in the ecological-flow relationship analysis provided in the report. Habitat suitability curves were developed to reflect water depth and velocity requirements of existing habitat within these three different parts of the channel: side channel, main channel, and high floodplain. Although the Assessment of Aquatic Life Report does not provide a map of the habitat within the Los Angeles River associated with each of these cross sections, it does inventory the species and habitat values that occur within the soft-bottom portion of the river (the 15-mile segment highlighted in the comment) and presents a detailed HEC-RAS model that provides depth and width impacts associated with flow reductions at specific cross section locations that were also measured in the field for model calibration purposes. The evaluation of habitat suitability within this segment of the river (see graph provided in response to comment 5-F) is then expressed in cubic feet per second (cfs) impacts rather than depth and width in order to provide a meaningful model for the total 15 miles of the soft-bottom segment.

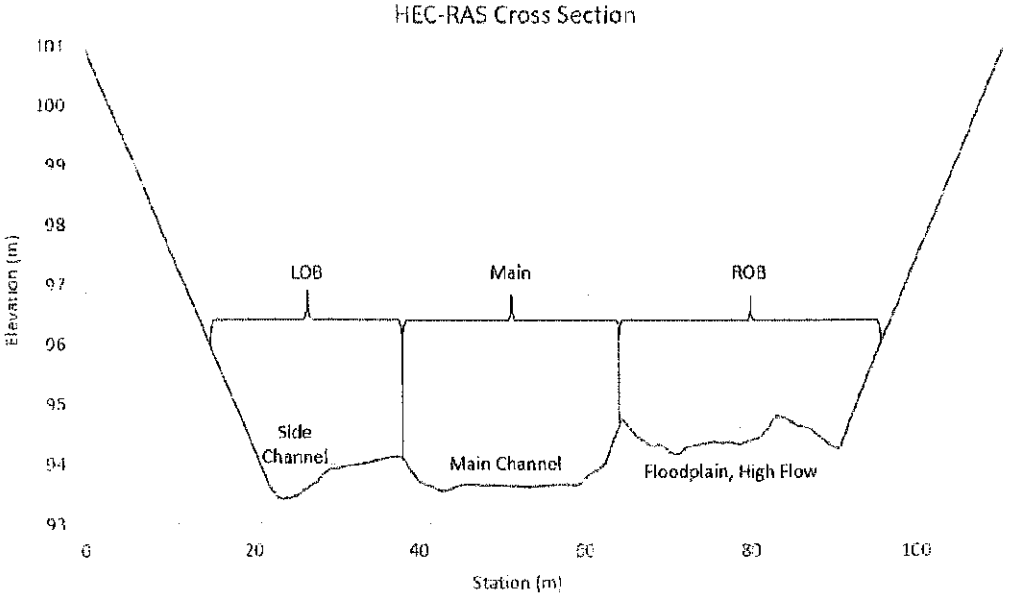

Comment 5-Ie: Hydrology and Hydraulics

5. A quantitative analysis comparing the flow from the Tujunga Wash, Burbank Wastewater Reclamation Plant (WRP), Tillman WRP, Verdugo Wash, and Glendale WRP, and their relative contribution to the hydrograph of the 15-mile study reach.

Response to Comment 5-Ie

As described in responses above, the Assessment of Aquatic Life Report as well as the LA River Flows Project Final Report provide a comprehensive assessment of flow in the Los Angeles River including each of the flow sources noted in the comment. The Assessment of Aquatic Life Report describes average dry season river flows in each segment of the river accounting for contributions from WRPs, groundwater, and storm drain channel inputs.

Comment 5-If: Biological Resources Impact Assessment

1. A map of plant communities and important bird foraging and nesting habitat occurring in the 15-mile study reach. Plant communities should be mapped at the alliance/association level using the Manual of California Vegetation, second edition (Sawyer et al. 2009). Also, CDFW recommends an updated and thorough floristic-based assessment of plant communities, following CDFW's Protocols for Surveying and Evaluating Impacts to Special Status Native Plant Populations and Sensitive Natural Communities (CDFW 2018).

Response to Comment 5-If

The Assessment of Aquatic Life Report provides an inventory of habitat and species occurrences within the 15-mile segment mentioned in the comment. Figure 34 of the Assessment of Aquatic Life Report reproduced below illustrates which reaches exhibit aquatic and riparian habitat values. Habitat mapping was not conducted as part of the study. Rather, flow ranges supporting habitat suitability for all aquatic values were developed, assuming that the entire 15-mile river segment may exhibit habitat values.

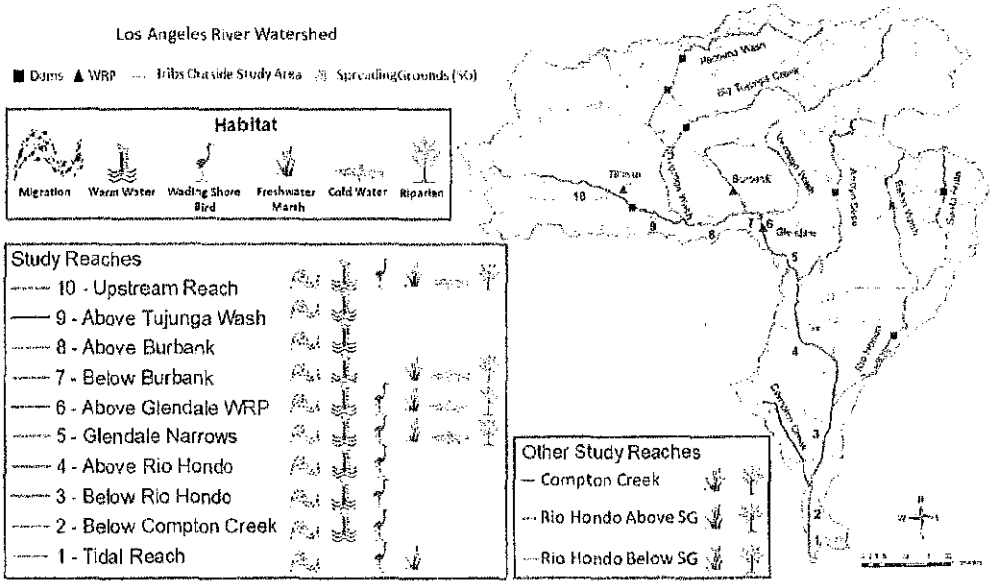

Figure 34. Map of study reaches with identified habitats that could potentially be supported in each reach.

Comment 5-Ig: Biological Resources Impact Assessment

2. A comprehensive list of sensitive and special status plant and wildlife species, and sensitive plant communities, occurring in the 15-mile study reach. CDFW recommends a nine-quad

search of the California Natural Diversity Database (CNDDB) for sensitive and special status biological resources that could occur downstream. For each biological resource, provide:

d. A summary of species-specific habitat requirements;

e. A discussion as to how the species or plant community may be significantly impacted directly or indirectly through habitat modification, as result of changes to hydrology (reduced flow) and hydraulics (water depth, wetted perimeter, velocity); and,

f. A quantitative analysis and/or adequate discussion to evaluate whether the Project would result in those significant impacts.

Response to Comment 5-Ig

The Los Angeles River Flows Project Final Report includes a comprehensive inventory and assessment of biological habitat values in the Los Angeles River:

> *"The overarching goal of this project is to consider potential effects of reduced WRP discharge and increased stormwater capture on existing and potential future beneficial uses. Therefore, our analysis included characterizing species and habitats that current occur and those that could reasonably occur in the future (based on a comparison to similar southern California watersheds). "(SCCWRP, 2021; p vii)*

> *"The aquatic life use assessment began with a compilation of observational data from the LA River and surrounding watersheds which was used to identify priority focal habitats and endmember species that represent a range of tolerances for each habitat. We then determined the flow conditions necessary to support the life history needs of each species and used those to create "flow-ecology" curves or models relating key hydrologic, hydraulic, and temperature conditions to the probability of occurrence for each focal species, or the probably of being able to complete specific life-history requirements." (SCCWRP, 2021; p vii)*

The Assessment of Aquatic Life Report provides the CNDDB listed species of concern in a concise map excerpted below. Beginning on page 38, the Assessment of Aquatic Life Report provides a summary of "life history needs" for key species within the habitat types. Habitat suitability curves are prepared based on the target vegetation's needs for water as measured by flow in the river (ie., cfs). This analysis defines future water flow reductions as the impact, and provides suitability curves to evaluate significance of the impact. The graph included in response to comment 5-F summarizes the relationship of flow in the river with habitat suitability for willow habitat. Since willow habitat (the key indicator species for riparian values in Southern California) is sustained with substantially less flow than currently exists or is projected to exist with future flow reductions, the contribution of 4 percent flow reduction resulting from the proposed project is considered cumulatively less than significant. That is to say, the scientific analysis contained in the LA Rivers Flows Project Final Report and companion study Assessment of Aquatic Life Report provide the information requested in this comment and support the conclusions of the IS/MND.

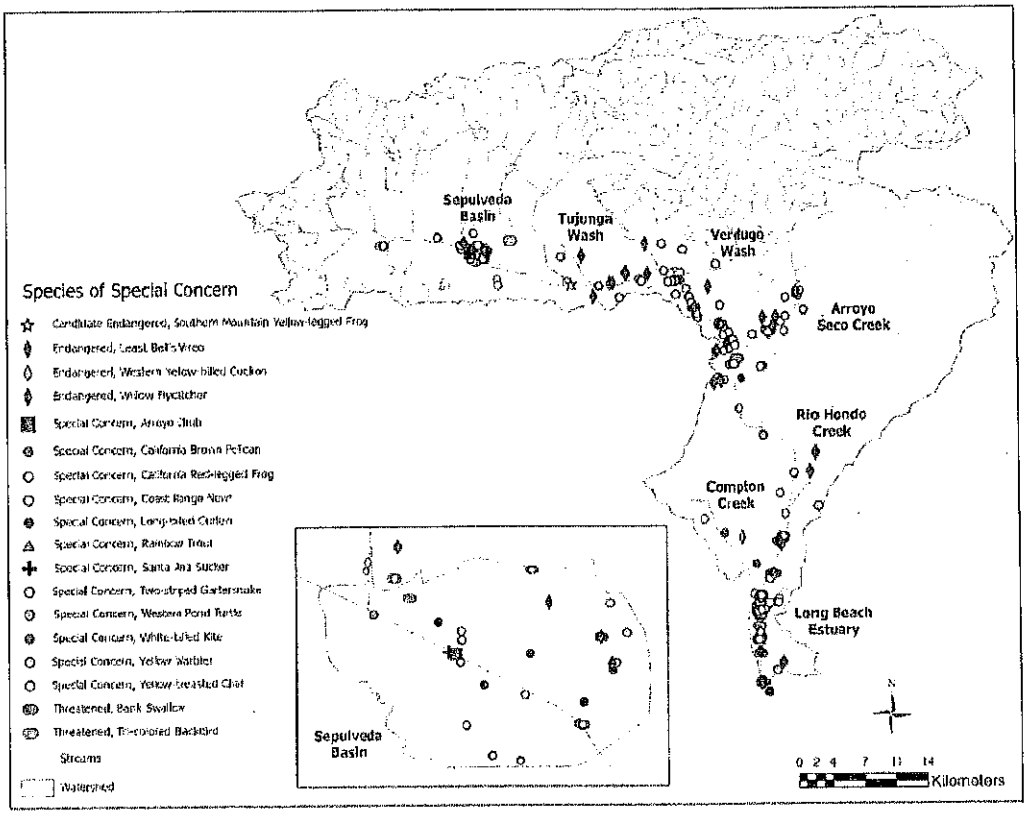

Figure 33. Species observations along the mainstem of the LA River and tributaries included in this study.

Comment 5-Ii: Biological Resources Impact Assessment

3. A discussion of whether diversion devices such as rubber dams would have direct and/or indirect impact on biological resources.

Response to Comment 5-Ii

As described on page 74 of the IS/MND, the proposed diversion structures would not impact any biological resources since they would be installed within either underground storm drain pipes or concrete box channels. The only effect to biological resources that could occur would result from reduced flow to downstream resources. No habitat would be removed as a result of the Project. As described in detail in this response to comment 5-I those effects are determined to be less than significant.

Comment 5-Ij: Biological Resources Impact Assessment

4. An adequate discussion to address how the Project may potentially affect on-going habitat recovery and restoration efforts.

Response to Comment 5-Ij

As described in this response to comment 5-I, the proposed Project would not significantly affect the habitat values within the Los Angeles River. No restoration projects are currently occurring within the river channel that would be adversely affected by the proposed Project.

Comment 5-Ik: Biological Resources Impact Assessment

5. An adequate discussion of Project-related impacts on biological resources in relation to cumulative flow reductions.

Response to Comment 5-Ik

As described in responses to comments 5-F and 5-I, the proposed Project would not significantly affect the habitat values within the Los Angeles River. The LA Flows Project Final Report provides ecology-flow relationship analysis for cumulative reductions including incremental storm flow and WRP reductions. The Project would not contribute to a cumulative reduction in habitat acreage or quality.

Comment 5-J

Mitigation Measure #2: CDFW recommends LADWP develop a discharge operation plan that would always allow sufficient water to pass downstream. CDFW also recommends LADWP develop an Adaptive Management Plan that would direct LADWP to reduce or suspend water diversion if at any point the Project may impact biological resources downstream exceeding a defined threshold/trigger.

Response 5-J

The IS/MND concludes that based on the evidence provided in the existing literature, the proposed Program would not result in significant impacts to biological resources in the Los Angeles River considering the small contribution of flow provided by the Tujunga Central Branch channel. Downstream ecological values would not be measurably affected by the Project. The IS/MND concludes that since the Program's effects would not result in a significant impact directly or cumulatively, no mitigation is required.

LADWP recognizes that the placement of diversion structures within streams and drainages must comply with Fish and Game Code Section 5901 which prohibits installing "any device or contrivance that prevents, impedes, or tends to prevent or impede, the passing of fish up and down stream." Fish and Game Code 5937 requires that operators of dams "allow sufficient water to pass over, around or through the dam, to keep in good condition any fish that may be planted or exist below the dam." Currently, no fish exist within the underground urban storm collection system or concrete box channel. The Tujunga Central Branch channel does not lead to natural stream resources at higher elevation. As a result, the channel would not provide a migratory route for steelhead spawning grounds now or in the future. The entire watershed area is urbanized, mostly within underground storm drain pipes with no ecological values. Future fish migration in the channel is highly unlikely. Furthermore, the instream diversion structures have been designed and operated to allow for storm flows to bypass the diversion mechanism. Each of the diversion

structures would include a slide gate. If fish re-colonized the channel in the future these slide gates would be able to allow bypass flows. Therefore, based on the ability to allow for storm flows, the diversion structures would also be able to accommodate fish passage during periods of receding flow when migration opportunities exist, if fish were present. The project would not prevent future habitat restoration or fish occupation in the drainage. The proposed designs would be compliant with California Fish and Game Code 5901 and 5937. Since no fish are currently in the concrete channel and dry weather flow depths do not accommodate ponding sufficient for fish to survive, there is no reason to prepare a discharge operation plan or adaptive management plan at this time.

See responses to comments 5-G and 5-I.

Comment 5-K

Mitigation Measure #3: CDFW recommends LADWP provide compensatory mitigation at no less than 3:1 for permanent impacts to the concrete-lined Tujunga Central Branch channel due to the installation of diversion structures including (but not limited to) rubber dams and channel drop inlets. CDFW also recommends LADWP provide compensatory mitigation commensurate with the permanent diversion of discharge from Los Angeles River.

Response 5-K

The IS/MND concludes that based on the evidence provided in the existing literature, the proposed Program would not result in significant impacts to biological resources in the Los Angeles River considering the small contribution of flow provided by the Tujunga Central Branch channel. The IS/MND concludes that since the Program's effects would not result in a significant impact directly or cumulatively, no mitigation is required.

The purpose of compensatory mitigation for impacts to waters of the State is to ensure that habitat values and hydrologic functions are maintained at least at the level of the system prior to the initiation of the project. The current concrete channel into which the diversion structures will be placed currently provides no habitat value. Six of the diversion structures will be placed in underground reinforced concrete pipe. The City does not believe that compensation is required for placing diversion structures in underground concrete pipes or concrete channels. As noted on page 74 of the Draft IS/MND, the City will be required to obtain a Lake and Streambed Alteration Agreement (LSAA) from CDFW for the three park projects that will place diversion structures within concrete channels. See response to comment 5-N.

Comment 5-L

Recommendation #1: CDFW recommends the following data and information sources:

- Stream gage data available from Los Angeles County Public Works (LADPW 2021);
- Los Angeles River Master Plan (Geosyntec et al. 2020); and,
- Los Angeles River Flows Project (SWRCB 2019).

Response 5-L

The IS/MND (on page 74) includes annual flow estimates for the Los Angeles River provided by USACE. The data provided in the Draft IS/MND regarding flows is consistent with the river flow data provided in the references cited in the comment. The City is participating in the Los Angeles River Flows Project which has compiled hydrologic and hydraulic data for the river. The data mentioned in the comment from the County are continuously collected and are indicative of the flow data used by the USACE to ensure flood protection for the City of Los Angeles. The recently published Los Angeles River Master Plan compiles historic river flow data consistent with the USACE and County data. All of this data is consistent with the annual flow totals cited in the IS/MND that document the percentage of flow from the Tujunga Central Branch channel. See response to comments 5-C and 5-G.

Comment 5-M

Recommendation #2: Based on the inadequacy of the Draft IS/MND as elaborated in our preceding comments, CDFW recommends that LADWP revise and recirculate the Draft IS/MND so CDFW may provide more appropriate comments on avoidance, minimization, and mitigation measures (CEQA Guidelines, § 15073.5).

Response 5-M

The comment provides no new information supporting the inadequacy of the analysis in the Draft IS/MND. Re-circulation of the Draft IS/MND is not necessary since existing evidence supports a conclusion that impacts would be less than significant, and that it would be unreasonable to assume otherwise. Furthermore, the study recently published by SCCWRP (SCCWRP 2021b) provides all of the hydrology and hydraulics data and analysis requested in the comment. The study substantiates the conclusions made in the Draft IS/MND, and satisfies CDFW's request for additional information.

Comment 5-N

The Project would potentially alter streams. The Project would divert dry season flow and stormwater. In addition, the Project proposes to install devices within and adjacent to a stream to facilitate water diversion.

The Project would divert water from the Tujunga Central Branch channel and Los Angeles River. The Project proposes to install water diversion structures within or adjacent to the Tujunga Central Branch channel. This includes inflatable rubber dams. Accordingly, the Project may obstruct water flow and change the bed and channel of a stream (confinement).

Fish and Game Code section 1602 requires any person, state or local governmental agency, or public utility to notify CDFW prior to beginning any activity that may do one or more of the following:

- Divert or obstruct the natural flow of any river, stream, or lake;

- Change the bed, channel, or bank of any river, stream, or lake;
- Use material from any river, stream, or lake; or,
- Deposit or dispose of material into any river, stream, or lake.

Response 5-N

The Draft IS/MND states on page 74 that the City would be required to obtain a Streambed Alteration Agreement pursuant to the California Fish and Game Code section 1602. The City will consult with CDFW to obtain a 1602 LSAA for the Program sites that include construction of diversions structures at the Tujunga Central Branch channel. Installation of diversion structures into underground storm drain pipes may require notification, but would not likely result in the need for a full LSAA. The table below identifies LADWP's assumptions of which Program sites may require a LSAA LADWP understands that CDFW will ultimately determine which of these sites will require a LSAA based on information in the initial notification.

Infiltration Gallery Location	Diversion Structure Installation	LSAA Required?
David M. Gonzales Recreation Center	Underground Storm Drain Pipe	No
FernAngeles Park	Underground Storm Drain Pipe	No
Whitsett Fields Park North	Underground Storm Drain Pipe	No
Strathern Park North	Underground Storm Drain Pipe	No
Valley Plaza Park North	Underground Reinforced Concrete Box Culvert	No
Valley Plaza Park South	Concrete Channel	Yes
Alexandria Park	Concrete Channel	Yes
North Hollywood Park	Concrete Channel	Yes
Valley Village Park	Underground Storm Drain Pipe	No

Comment 5-O

Mitigation Measure #1: CDFW has concluded that the [Program] may result in the alteration of streams. As such, the applicant (or "entity") must provide notification to CDFW pursuant to Fish and Game Code, section 1600 *et seq*. Based on this notification and other information, CDFW determines whether an LSAA with the applicant is required prior to conducting the proposed activities. Please visit CDFW's Lake and Streambed Alteration Program webpage to for information about LSAA Notification and online submittal through the Environmental Permit Information Management System Permitting Portal (CDFW 2021a).

Response 5-O

The Draft IS/MND states on page 74 that the City would be required to obtain a LSAA pursuant to the California Fish and Game Code section 1602. A new mitigation measure requiring compliance with regulations is not needed. The City will consult with CDFW to obtain a 1602

LSAA for the Program sites that include construction of diversions structures at the Tujunga Central Branch channel (see table in response 5-N).

Comment 5-P

Mitigation Measure #2: CDFW recommends the LSAA Notification include a hydrological evaluation of the 200, 100, 50, 25, 10, 5, and 2-year frequency storm event for existing and proposed conditions.

Recommendation: CDFW's issuance of an LSAA for a Project that is subject to CEQA will require CEQA compliance actions by CDFW as a Responsible Agency. As a Responsible Agency, CDFW may consider the CEQA document from LADWP for the Project. To minimize additional requirements by CDFW pursuant to Fish and Game Code section 1600 *et seq.* and/or under CEQA, the CEQA document should fully identify the potential impacts to the stream or riparian resources and provide adequate avoidance, mitigation, monitoring, and reporting commitments for issuance of the LSAA. As such, CDFW recommends LADWP consider CDFW's comments and revise the Draft IS/MND. To compensate for any on- and off-site impacts to aquatic and riparian resources, additional mitigation conditioned in any LSAA may include the following: erosion and pollution control measures, avoidance of resources, protective measures for downstream resources, on and/or off-site habitat creation, enhancement or restoration, and/or protection, and management of mitigation lands in perpetuity.

Response 5-P

The Draft IS/MND states on page 74 that the City would be required to obtain a LSAA pursuant to the California Fish and Game Code section 1602(See response to comment 5-N). Hydrologic assessments have been conducted for each of these park projects to determine the capacity of the infiltration galleries and the quantity of feasible wet weather diversions. The rubber dam diversion structures would be lowered when flow rates exceeded the diversion capacity, allowing most of the storm flows in larger storms (including the 2, 5, 10, 25, 50, 100, and 200 year storms) to bypass the diversions. Additional modeling is not necessary to make this conclusion.

Comment 5-Q

CDFW is concerned that the Program may result in significant impacts to bats, including hoary bat (*Lasiurus cinereus*) and silver haired bat (*Lasionycteris Octavian's*).

The Program may result in direct and indirect impacts to bats. Direct impacts include removal of trees and that may provide roosting habitat. Indirect impacts to bats and roosts could result from increased human activity, noise disturbances, dust, vegetation clearing, ground-disturbing activities (e.g., staging, mobilizing, excavating, and grading), and vibrations caused by heavy equipment.

Native and non-native ornamental trees at each park could provide potential roosting habitat for bats. Bats can fit into very small seams, as small as a ¼ inch. Therefore, crevices in buildings and

other man-made structures within and adjacent to each park could provide roosting habitat for bats. Despite the availability of potential roosting habitat, the Program concludes that there would not be significant impacts to bats.

Page 60 of Appendix B concludes that while bats "may use western sycamore trees to roost, special-status bat species including hoary bat and silver-haired bat have low potential to occur within all of the project locations, since they are situated in an urban environment with constant ambient nighttime lighting (e.g., street lights, baseball field lights)." The presence of constant ambient lighting may be insufficient to conclude that bats do not occur. Bat response to artificial lighting could vary between species and not all bat species are repelled by light (Longcore and Rich 2004; Opéra et al. 2009). Faster-flying species of bats are attracted to insects that congregate around light sources (Longcore and Rich 2004). Foraging is still possible in the presence of ambient lighting, although forging may be reduced. Also, based on Program site photos in Appendix B, it appears that not all areas within certain parks are illuminated, for instance Valley Plaza North and Valley Plaza South. Based on the above, the probability of bats occurring within each park could be higher than previously concluded.

Accordingly, if bats are present, extra noise, vibration, or the reconfiguration of large objects can lead to the disturbance of roosting bats. Human disturbance can also lead to a change in humidity, temperatures, or the approach to a roost that could force the animals to change their mode of egress and/or ingress to a roost. Modifications to roost sites can have significant impacts on the bats' usability of the roost and can impact the bats' fitness and survivability (Johnston et al. 2004). Although temporary, such disturbances can lead to the abandonment of a maternity roost (Johnston et al. 2004).

Response 5-Q

The Draft IS/MND identifies on page 73 that removal of trees may affect wildlife commonly found in the parks, including bat species, although the Draft IS/MND concludes that the potential for encountering bat roosts in the affected trees is low. Nonetheless, in response to this comment, Mitigation Measure BIO-1 has been modified to require that bat surveys be conducted at each of the Program sites to ascertain whether bats are utilizing the trees to be removed by the Program. With this modification to the BIO-1 mitigation measure, impacts to bats would remain less than significant.

The following text is added to Mitigation Measure BIO-1:

- Prior to removal of trees in any of the Program sites, the City shall retain a qualified bat specialist to conduct bat surveys to confirm whether bats are using the trees as roosting sites. The surveys should encompass a minimum buffer area of 100 feet around the Program sites. The results of the surveys will be provided to CDFW. In the event that bat roosts are identified, an additional bat species survey will be conducted using acoustic survey techniques necessary to confirm the species of bat using the area. If the species survey concludes that sensitive bat species are present, the City shall consult with

CDFW pursuant to the California Fish and Game Code section 2081. Removal of special status bats would not be conducted without prior approval from CDFW.

Comment 5-R

Bats are considered non-game mammals and are afforded protection by State law from take and/or harassment (Fish & G. Code, § 4150; Cal. Code of Regs, § 251.1). Additionally, several bat species are considered Species of Special Concern and meet the CEQA definition of rare, threatened, or endangered species (CEQA Guidelines, § 15380). Take of SSC could require a mandatory finding of significance by the Lead Agency (CEQA Guidelines, § 15065).

Response 5-R

See response to comment 5-Q.

Comment 5-S

Mitigation Measure #1: Where Program-related implementation, construction, and activities would occur near potential roosting habitat for bats, CDFW recommends a qualified bat specialist conduct bat surveys within these areas (plus a 100-foot buffer as access allows) in order to identify potential habitat that could provide daytime and/or nighttime roost sites, and any maternity roosts. CDFW recommends using acoustic recognition technology to maximize detection of bats. A discussion of survey results, including negative findings should be provided to LADWP. Depending on the survey results, a qualified bat specialist should discuss potentially significant effects of the Project on bats and include species specific mitigation measures to reduce impacts to below a level of significance (CEQA Guidelines, § 15125). Surveys, reporting, and preparation of robust mitigation measures by a qualified bat specialist should be completed and submitted to the LADWP prior to any Project-related ground-disturbing activities or vegetation removal at or near locations of roosting habitat for bats.

Response 5-S

Mitigation Measure BIO-1 has been modified to accommodate CDFW suggested mitigation requirements. See response to comment 5-Q.

Comment 5-T

Mitigation Measure #2: If bats are not detected, but the bat specialist determines that roosting bats may be present at any time of year and could roost in trees at a given location, during tree removal, trees should be pushed down using heavy machinery rather than felling with a chainsaw. To ensure the optimum warning for any roosting bats that may still be present, trees should be pushed lightly two or three times, with a pause of approximately 30 seconds between each nudge to allow bats to become active. The tree should then be pushed to the ground slowly and remain in place until it is inspected by a bat specialist. Trees that are known to be bat roosts should not be bucked or mulched immediately. A period of at least 24 hours, and preferable 48 hours, should elapse prior to such operations to allow bats to escape.

Response 5-T

Mitigation Measure BIO-1 provides for bat surveys to confirm that bats are not using the trees. If bats are encountered the City will consult with CDFW to ensure an effective bat removal effort in compliance with the California Fish and Game Code. Bats will not be removed from the Program sites without prior CDFW approval. No additional tree removal techniques would be required. No new mitigation is required.

Comment 5-U

Mitigation Measure #3: If maternity roosts are found, to the extent feasible, work should be scheduled between October 1 and February 28, outside of the maternity roosting season when young bats are present but are yet ready to fly out of the roost (March 1 to September 30).

Response 5-U

Mitigation measure BIO-1 has been modified to require approval from CDFW if bats are found to be using the affected trees. As part of any bat removal effort that may be necessary, seasonality of the removal will be a consideration. No additional mitigation measure is required.

Comment 5-V

Mitigation Measure #4: If maternity roosts are found and LADWP determines that impacts are unavoidable, a qualified bat specialist should conduct a preconstruction survey to identify those trees proposed for disturbance that could provide hibernacula or nursery colony roosting habitat. Acoustic recognition technology should be used to maximize the detection of bats. Each tree identified as potentially supporting an active maternity roost should be closely inspected by the bat specialist no more than 7 days prior to tree disturbance to determine the presence or absence of roost bats more precisely. If maternity roosts are detected, trees determined to be maternity roosts should be left in place until the end of the maternity season. Work should not occur within 100 feet of or directly under or adjacent to an active roost. Work should also not occur between 30 minutes before subset and 30 minutes after sunrise.

Response 5-V

As noted in response to comment 5-Q, mitigation measure BIO-1 has been modified to include bat presence surveys. If bats are found, the mitigation measure would require that the City implement a bat removal program in consultation with CDFW.

Comment 5-W

Devices Impeding Fish. The Program includes installation of rubber dams in the stream channel. Per California Fish and Game Code section 5901, it is unlawful to construct or maintain in any stream any device or contrivance the prevents, impedes, or tends to prevent or impeded, the passing of fish up and downstream. Accordingly, LADWP should coordinate with CDFW prior to commencing the Program to ensure that the Program would comply with Fish and Game Code section 5901.

Response 5-W

The concrete pipeline and channel do not support fish species. The Program would not install any devices that would impede fish migration since fish do not occur in the concrete channel and underground pipeline associated with the Tujunga Central Branch channel. The primary impediment for migrating fish under existing conditions is the velocity of the fast-moving storm water in confined pipelines and channels and the lack of refugia habitat at the channel edges. Nonetheless, the in-channel devices for four of the Program sites will require an LSAA from CDFW. The City will consult with CDFW to ensure diversion structures are compliant with Fish and Game Code section 5901.

Comment 5-X

Southern California Black Walnut Tree (*Juglans californica*). According to page 73 in the Draft IS/MND, one Southern California black walnut tree may be removed at North Hollywood Park. Southern California black walnut is a California Rare Plant Rank 4.2 species. If removal of Southern California black walnut is required, CDFW recommends LADWP replace each tree at no less than 3:1 in consideration of the species rarity, temporal loss of black walnut tree canopy and structure while the tree grows, and potential attrition associated with transplanting. Southern California black walnut trees should be replaced with trees of the same species.

Response 5-X

As noted on pages 78-80 of the Draft IS/MND, any protected tree required to be removed would be replaced with 24-inch box size specimens of the same tree species at a ratio of 4:1 in accordance with the City's Tree Protection Ordinance (No.177404) and the RAP's Tree Preservation Policy.

Comment 5-Y

Tree Replacement. In the greater Los Angeles, urban forests and street trees, both native and some non-native species, provide habitat for a high diversity of birds (Wood and Esaian 2020). Some species of raptors have adapted to and exploited urban areas for breeding and nesting (Cooper et al. 2020). For example, raptors (Accipitridae, Falconidae) such as red-tailed hawks (*Buteo jamaicensis*) and Cooper's hawks (*Accipiter cooperii*) can nest successfully in urban sites. Red-tailed hawks commonly nest in ornamental vegetation such as eucalyptus (Cooper et al. 2020). CDFW recommends planting native tree species preferred by birds. This includes coast live oak (*Quercus agrifolia*) and California sycamore (*Platanus racemosa*) (Wood and Esaian 2020). CDFW recommends Audubon Society's Plants for Birds for more information (Audubon Society 2020).

Response 5-Y

The proposed Program would require the removal of existing trees; however, the removal of trees would be replaced on a trunk caliper size basis, 1-inch replaced to 1-inch removed. As noted on pages 78-80 of the Draft IS/MND, any protected tree required to be removed would be replaced

with 24-inch box size specimens at a ratio of 4:1 in accordance with the City's Tree Protection Ordinance (No.177404) and RAP's Tree Preservation Policy. The replacement trees would be planted near the original tree's location, but if there is not adequate space, the City would coordinate with RAP to identify the closest appropriate locations for new plantings. Mitigation Measure BIO-1 is included in the Draft IS/MND to ensure construction activities do not disturb nesting birds. The requirement to replace mature trees would encourage future nesting opportunities for raptors.

Comment 5-Z

Landscaping. CDFW strongly recommends avoiding non-native, invasive plants. CDFW recommends LADWP restrict use of any species, particularly 'Moderate' or 'High' listed by the California Invasive Plant Council (Cal-IPC 2020a). CDFW recommends LADWP use native species found in naturally occurring vegetation communities within or adjacent to the Program sites. Information on alternatives for invasive, non-native, or landscaping plants may be found on the California Invasive Plant Council's, Don't Plant a Pest webpage for southern California (CalIPC 2020b). The California Native Plant Society's Gardening and Xerces Society's PollinatorFriendly Native Plant Lists webpage has information on native plant species that invite insects and pollinators (CNPS 2020; Xerces Society 2020).

Response 5-Z

As noted in the project description, each of the Program sites will be re-landscaped following the installation of the stormwater capture infrastructure. The landscaping plans will use primarily native species to the extent feasible, per RAP landscaping guidelines.

Comment 5-AA

Move Out of Harm's Way. The proposed Program is anticipated to result in clearing of habitats that support wildlife species common in developed areas. CDFW recommends a qualified biological monitor be on site during initial ground disturbing activities and vegetation removal. The qualified biological monitor should move wildlife of low mobility out of harm's way to avoid wildlife injury or mortality.

Response 5-AA

Mitigation Measure BIO-1 would ensure that impacts to any avian species currently utilizing the Program sites would be avoided. As required in mitigation measure BIO-1, contractors will be encouraged to remove vegetation outside of the affected avian or bat nesting seasons. If nesting season cannot be avoided, the mitigation measure provides for measures to ensure impacts to nesting birds is avoided, including delaying activities if necessary. Since the Program sites do not support any native habitat values, a biological monitor is not recommended other than for nesting birds as required in mitigation measure BIO-1.

Comment 5-AB

Data. CEQA requires that information developed in environmental impact reports and negative declarations be incorporated into a database (i.e., California Natural Diversity Database) which may be used to make subsequent or supplemental environmental determinations [Pub. Resources Code, § 21003, subd. (e)]. Accordingly, please report any special status species detected by completing and submitting CNDDB Field Survey Forms (CDFW 2020b). LADWP should ensure the data has been properly submitted, with all data fields applicable filled out, prior to finalizing/adopting the environmental document. LADWP should provide CDFW with confirmation of data submittal.

Response 5-AB

The City acknowledges that survey data identifying special status species should be provided to the CDFW. Appendix B of the Draft IS/MND includes a Biological Technical Report prepared for the Program.

Comment 5-AC

Mitigation and Monitoring Reporting Plan. CDFW recommends LADWP update the Program's proposed Biological Resources Mitigation Measures and condition the environmental document to include mitigation measures recommended in this letter. CDFW provides comments to assist LADWP in developing mitigation measures that are specific, detailed (i.e., responsible party, timing, specific actions, location), and clear in order for a measure to be fully enforceable and implemented successfully via a mitigation monitoring and/or reporting program (CEQA Guidelines, § 15097; Pub. Resources Code, § 21081.6). LADWP is welcome to coordinate with CDFW to further review and refine the Program's mitigation measures. Per Public Resources Code section 21081.6(a)(1), CDFW has provided LADWP with a summary of our suggested mitigation measures and recommendations in the form of an attached Draft Mitigation and Monitoring Reporting Plan (MMRP; Attachment A).

Response 5-AC

The City will adopt the MMRP when approving the Final IS/MND that will include implementation of Mitigation Measure BIO-1.

Comment 5-AD

The Project, as proposed, would have an impact on fish and/or wildlife, and assessment of filing fees is necessary. Fees are payable upon filing of the Notice of Determination by LADWP and serve to help defray the cost of environmental review by CDFW. Payment of the fee is required for the underlying Project approval to be operative, vested, and final (Cal. Code Regs., tit. 14, § 753.5; Fish & G. Code, § 711.4; Pub. Resources Code, § 21089).

Response 5-AD

The City recognizes that the CDFW filing fee for this IS/MND is applicable and the appropriate funds will be included with the Notice of Determination (NOD) when filed with the County Clerk as required by the CEQA Guidelines Section 15094.

Comment 5-AE

The comment includes a table with all of the CDFW proposed Mitigation Measures outlined in the letter.

Response 5-AE

As discussed in the responses to comments 5-A through 5-AE, no new mitigation measures are needed to ensure less than significant effects to biological resources. The MMRP will include the modified Mitigation Measure BIO-1 that reflects CDFW's comments on bat species.

Letter 6: Diana Nicole (Sunshine Hills Residents Association)

Comment 6-A

The commenter expresses concern regarding the diversion of City plans, codes, and funds from parks and tree-oriented initiatives toward green infrastructure.

Response 6-A

The comment does not state a specific concern about the adequacy of the Draft IS/MND or otherwise comment on the contents of the Draft IS/MND analysis. The comment is noted and will be included in the Program record, but a response is not required pursuant to CEQA.

Comment 6-B

The commenter expresses concern regarding the depletion of existing trees/urban forest resources as a result of the Program.

Response 6-B

Once the stormwater capture infiltration galleries are installed, the Program sites will be returned to preconstruction condition with park improvements. The park improvements will include but are not limited to, the addition of green infrastructure elements such as landscape areas with California native drought-tolerant plant material, new irrigation system, shade trees, new lighting. The proposed Program would require the removal of existing trees; however, the removal of trees would be replaced on a trunk caliper size basis, 1-inch replaced to 1-inch removed. Any protected tree required to be removed would be replaced with 24-inch box trees at a ratio of 4:1 in accordance with the City's Tree Protection Ordinance (No.177404) and the RAP's Tree Preservation Policy. The replacement trees would be planted near the original tree's location, but if there is not adequate space, the City would coordinate with RAP to identify the closest appropriate locations for new plantings.

Comment 6-C

The commenter states that the City's protected trees, groves, and related habitat should be subject to higher conservation standards than those that are provided in the Draft IS/MND.

Response 6-C

The City would comply with the existing tree ordinance. See response to 6-B above.

Letter 7: County of Los Angeles Fire Department

Comment 7-A

The commenter provides introduction of the County of Los Angeles Fire Department.

Response 7-A

The comment is noted and will be included in the Program record.

Comment 7-B

The commenter states that since the Program is within the City, the Program would not impact the County of Los Angeles Fire Department.

Response 7-B

The comment is noted and will be included in the Program record.

Comment 7-C

The commenter states that the Program would not have an impact on the County Fire Department Land Development Unit.

Response 7-C

The comment is noted and will be included in the Program record.

Comment 7-D

The comment states that under the Los Angeles County Oak Tree Ordinance, a permit is required to cut, destroy, remove, relocate, inflict damage or encroach into the protected zone of any tree of the Oak genus which is 25 inches or more in circumference (eight inches in diameter), as measured 4 1/2 feet above mean natural grade.

Response 7-D

The Draft IS/MND describes the Oak Tree Ordinance in detail on pages 78-81. The Draft IS/MND concludes that compliance with the ordinance and RAP's Tree Preservation Policy would ensure that impacts to mature trees would not result in significant impacts.

Comment 7-E

The commenter states that the Program would not impact the Health Hazardous Materials Division.

Response 7-E

The comment is noted and will be included in the project record.

Letter 8: Joanne D'Antonio

Comment 8-A

The commenter raises objection to the proposed removal of any mature and healthy trees, most notably the eucalyptus grove at North Hollywood Park. The commenter states that this park has experienced great tree loss during the drought and that all parks are important for the physical and psychological health of residents. They provide much needed shade in the heat-island-effect-plagued San Fernando Valley. The commenters asks where the wildlife will go during construction and how disruptive construction noise may be.

Commenter would like to see the project redesigned to not remove any trees and references several reports on biodiversity and the loss of trees and tree canopy by the City of Los Angeles and Tree People.

Response 8-A

All nine project sites are currently located within developed City parks containing active recreational facilities or open disturbed areas. All nine park project sites will undergo some enhancements and improvements to the park aesthetic and recreational facilities after the installation of the projects. As stated in the IS/MND page 7, park enhancements and improvements are being designed with input from RAP and the community. The City has been coordinating the design effort with RAP and has engaged the local community through several community meetings to solicit input. Conceptual design drawings were included in the IS/MND as Figures 1-4 through 1-12 to depict the current preliminary design associated with each park project site. The stormwater capture facilities are mainly being placed beneath existing ball fields, where feasible, to minimize impacts to landscaped areas within the park. The designs for each park attempt to minimize tree removal where feasible, but as stated in section 2.4, Biological Resources, some trees will be removed in compliance with the City of Los Angeles Tree Protection Ordinance and the RAP Tree Preservation Policy for protection of native and non-native trees. The City has been in coordination with the RAP Forestry Division and none of the parks' mature or healthy trees will be removed without their approval. Revisions to the park designs are being made in coordination with RAP in order to preserve mature trees and any other trees deemed sacred by RAP. RAP has identified two eucalyptus trees at North Hollywood Park that have died and have requested these be removed as part of the project. Tree surveys will be conducted at each part project site prior to tree removal to determine which trees are protected and which trees would need replacement under the RAP Tree Preservation Policy. Further, Mitigation Measure BIO-1was included to protect wildlife species from impacts during

construction. This mitigation measure will require construction activities to occur outside of the nesting bird season or to avoid or minimize impacts to nesting birds and raptors by requiring preconstruction surveys and nest avoidance and/or monitoring during construction.

The City acknowledges that the City of Los Angeles is considered a biodiversity hotspot. As stated in the 2020 Biodiversity Report prepared by the City of Los Angeles and referenced by the commenter, the Program area would fall primarily within Ecotope 20: Los Angeles River Alluvial Plain. As shown in Appendix B, page 428 of the report, only 0.5 percent of the natural vegetation remains across the ecotope, mostly within the Sepulveda Basin. Riparian vegetation is the dominant remaining type of vegetation and provides nesting habitat for the federally endangered least Bell's vireo (*Vireo bellii pusillus*) and potentially the southwestern willow flycatcher (*Empidonax traillii extimus*). The Program site does not include riparian vegetation and is located in an area that is surrounded by a vegetation alliance characterized by urban/developed, and falls mostly within areas characterized by non-native alliances. In addition, the program site is not located within an area characterized as a natural area by the study, and it is located within areas with higher pollution and population percentiles and a lower habitat quality score due to the urban nature of its location. (City of Los Angeles 2020, pages 436 through 442) As such, although the City of Los Angeles is rich in biodiversity, construction within the Program area would not add to the decline of biodiversity in the area.

Comment 8-B

The commenter requests that all trees in the vicinity of construction be protected with orange fencing and no construction material placed under the drip line.

Response 8-B

The construction impact areas will be clearly delineated and trees to be retained will be clearly marked to avoid any impacts to them. As stated in Response 8-A, the City will comply with the City of Los Angeles Tree Protection Ordinance and the RAP Tree Preservation Policy for protection of native and non-native trees that are being retained onsite and/or are being removed.

The RAP Tree Preservation Policy is the primary regulatory tool that gives direction for orderly protection of specified trees, maintains their value, and avoids significant negative effects to the ecosystem. By assuring preservation and protection through regulation and standards of care, these resources will remain significant contributions to the environment and landscape, and continue to add to the unique character of Los Angeles City Parks. (RAP 2004).

As outlined in the Policies for the Installation and Preservation of Landscaping Trees on Public Property of Recreation and Parks Department, included as Appendix M of the City of Los Angeles RAP Urban Forest Program (RAP 2004), "whenever trees are removed, the existing trees' aggregate diameter, measured at breast height (DBH [diameter at breast height], or 4.5-feet above the ground; multi-trunk trees are to be measured immediately below the lowest trunk) shall be replaced at an equal or greater rate of caliper of new trees. Each one-inch DBH of existing tree shall be replaced with a minimum one-inch caliper new tree." For example, if an existing tree with a DBH of 24 inches is removed, the City would need to replace that tree with a newly

planted trees with a total DBH of 24 inches. The replacement tree can have a DBH of 24 inches or if smaller trees are planted, with a DBH of 2 inches, then 12 trees would be planted, or any combination that equates to the 24-inch DBH being replaced.

Comment 8-C

The commenter is concerned about imported soil and improper soil being substituted for naturally occurring soil which create the best environment for replanting. The commenter asks if there is a plan for replanting at the parks to be done with viable new trees. The commenter states that ideally construction projects such as these would not be happening in our parks.

Response 8-C

As stated on page 38 of the IS/MND, once installation of the stormwater system is complete, soils excavated from the site that are stockpiled on-site would be used to backfill the impact areas. Additional imported soils would be used to regrade as needed to return the project impact areas to pre-project conditions. The City will ensure that the soil to backfill the impacted areas would be suitable for the required design elements as shown on preliminary Figures 1-4 through 1-12 of the IS/MND including landscape planting. The City is coordinating with RAP to ensure compliance with park requirements.

Comment 8-D

The commenter states that a one-month comment period is too short to get input from neighborhood councils.

Response 8-D

The comment is noted and will be included in the project record. The CEQA Guidelines require that MNDs be circulated for a total of 30 days per Section 15105(b).

4.2 Changes Made to the Draft IS/MND

The City has made the following changes to the Draft IS/MND and has incorporated them into the Final IS/MND. These modifications clarify, amplify, or make minor changes to the Draft IS/MND. Revisions to the Draft IS/MND have not resulted in new significant impacts or increased the severity of an impact.

Where the responses indicate additions or deletions to the text of the Draft IS/MND, additions are included as <u>underlined text</u>, deletions as ~~stricken text~~. The changes are listed by section and page number.

4.2.1 Changes Made in Response to Comments

Clarification/Revision

The following modifications have been made to page 75 of the Draft IS/MND to augment Mitigation Measure BIO-1 for the inclusion of bat surveys.

Section 2.4, Biological Resources – Page 75

Mitigation Measure

BIO-1: Special-Status Wildlife Species. Construction activities at any of the nine park project sites could result in impacts to the Cooper's hawk *(Accipiter cooperii)*, a California Species of Special Concern, where mature trees are present. Similarly, construction activities may also impact other nesting bird species that may nest in a variety of vegetation as well as man-made structures. Construction activities should occur outside of the avian nesting season. If the avian nesting season cannot be avoided and construction or vegetation removal occurs from February 1 to September 1, the City ~~project~~ shall implement the following to avoid and minimize impacts to nesting birds and raptors:

- During the avian breeding season, a qualified biologist shall conduct a preconstruction avian nesting survey no more than 7 days prior to vegetation disturbance or ground-disturbing activities. If construction begins in the non-breeding season and proceeds continuously into the avian nesting season, no surveys are required. However, if there is a break of 7 days or more in construction activities during the nesting season, a new nesting bird survey shall be conducted before construction begins again.
- The preconstruction survey shall cover all reasonably potential nesting locations on and within 100 feet of the construction areas. A 300-foot radius shall be surveyed in areas containing suitable habitat for nesting raptors, such as trees and utility poles.
- If an active nest is found during the preconstruction avian nesting survey, a qualified biologist shall designate a suitable buffer for all passerine birds and raptor species. The nest site area shall not be disturbed until the nest becomes inactive, the young have fledged, the young are no longer being fed by the parents, the young have left the area, and the young will no longer be impacted by the project. Buffer areas may be increased upon recommendation of a qualified biologist if any endangered, threatened, California Fully Protected, or California Species of Special Concern are identified during preconstruction surveys.
- If the nest(s) are found in an area where ground disturbance is scheduled to occur, the City or its contractor shall avoid the area by delaying ground disturbance in the area until a qualified biologist has determined that the birds have fledged and are no longer reliant upon the nest or parental care for survival.
- Prior to removal of trees in any of the Program sites, the City shall retain a qualified bat specialist to conduct bat surveys to confirm whether bats are using the trees as roosting sites. The surveys should encompass a minimum buffer area of 100 feet around the Program sites. The results of the surveys will be provided to CDFW. In the event that bat roosts are identified, an additional bat species survey will be conducted using acoustic survey techniques necessary to confirm the species of bat using the area. If the species survey concludes that sensitive bat species are present, the City shall consult with CDFW pursuant to the California Fish and Game Code section 2081. Removal of special status bats would not be conducted without prior approval from CDFW.

4.2.2 Changes Made by the Lead Agency

Clarification/Revision

The following modifications have been made to page 1 of the Draft IS/MND to include The Metropolitan Water District of Southern California (Metropolitan) as a Responsible Agency of the Program.

Section 1.0, Project Description – Page 1

1.1 Introduction

The City of Los Angeles Department of Water and Power (LADWP), Department of Public Works (Bureau of Engineering [BOE]), Los Angeles Sanitation and Environment (LASAN), and City of Los Angeles Department of Recreation and Parks (RAP), collectively referred to herein as the City, propose to implement the Stormwater Capture Parks Program (Program). The Program would include construction of stormwater capture facilities at nine City-owned parks to help capture surface flow and divert stormwater runoff from the Tujunga Wash Central Branch storm drain to recharge the San Fernando Groundwater Basin. All nine parks are located in the east San Fernando Valley along State Route (SR) 170 (**Figure 1-1**); these parks include: David M. Gonzales Recreation Center; Fernangeles Park; Strathern Park North; Whitsett Fields Park North; Valley Plaza Park North; Valley Plaza Park South; Alexandria Park; North Hollywood Park; and Valley Village Park (**Figure 1-2**).

The City is proposing to obtain financial assistance for the park projects through the Stormwater for Recharge Pilot Program (Recharge Pilot) that is administered by The Metropolitan Water District of Southern California (Metropolitan). The Recharge Pilot encourages development and monitoring of new and existing stormwater recharge projects by providing financial incentives for construction and/or monitoring equipment installation of project and supplemental reporting costs.

Metropolitan offers different incentive amounts for the Recharge Pilot based on project type (New Construction or Monitoring Equipment Installation):

<table>
<tr><td>PROJECT TYPE</td><td colspan="2">FUNDING COMPONENTS</td></tr>
<tr><td></td><td>Construction/Installation</td><td>Monitoring & Reporting</td></tr>
<tr><td rowspan="2">Monitoring Equipment Installation</td><td>Up to $350,000 reimbursement for eligible costs</td><td>$50,000/report</td></tr>
<tr><td colspan="2">Maximum of $500,000</td></tr>
<tr><td rowspan="2">New Construction</td><td>Up to 50% reimbursement of eligible costs, max of $850,000</td><td>$50,000/report</td></tr>
<tr><td colspan="2">Maximum of $1 million</td></tr>
</table>

The City has chosen the New Construction Project Type.

As a Responsible Agency, Metropolitan's Board of Directors will review and consider the proposal and environmental documentation prepared by the City in determining whether or not to approve financial assistance for the Program within the Recharge Pilot administrative process.

The Program would be consistent with Metropolitan's commitment to develop Recharge Pilot activities that would provide a better understanding of the connection between captured stormwater and water supply yield.

Clarification/Revision

The following modifications have been made to pages 82 and 83 of the Draft IS/MND to update the name of the library.

Section 2.5, Cultural Resources – Pages 82 and 83

Page 82

Less than Significant Impact with Mitigation. The cultural resources assessment identified three historic architectural resources within the Program area. These resources include: the David M. Gonzales Recreation Center featuring a clubhouse building dating to the park's period of significance of 1950 located approximately 65 feet from the Program construction footprint; North Hollywood Park featuring a maintenance building and pool house (65 feet and 100 feet from the Program construction footprint, respectively) and the North Hollywood Amelia Earhart Regional ~~Branch~~ Library (located 100 feet from the Program construction footprint) dating to the park's period of significance of 1928–1931; and the 170 Freeway Pedestrian Overpass connecting Valley Plaza Park North and Whitsett Fields Park North located approximately 90 feet from a proposed diversion structure in Valley Plaza Park North. The North Hollywood Amelia Earhart Regional ~~Branch~~ Library is National Register of Historic Places (NRHP)-listed and, therefore qualifies as a historical resource.

Page 83

Mitigation Measures

CUL-1: In the event Program designs are further refined and individual Program site components change to encroach more closely than 50 feet to the North Hollywood Amelia Earhart Regional ~~Branch~~ Library (P-19-167303), the pool house and maintenance building associated with North Hollywood Park, the clubhouse associated with the David M. Gonzales Recreation Center, and/or the 170 Freeway Pedestrian Overpass, the City shall retain a qualified architectural historian meeting the Secretary of the Interior's Standards for Architectural History to review design plans for conformance with the Secretary of the Interior's Standards for the Treatment of Historic Properties (Standards). Should potential Program redesign not conform to the Standards, the City shall work with the qualified architectural historian to mitigate impacts to these resources. Should Program redesign place Program components within 50 feet of these resources, the qualified architectural

historian shall also assess potential construction-related impacts resulting from ground-borne vibration. Should ground-borne vibrations have the potential to impact the historical resources, the City and the qualified architectural historian shall develop a plan to monitor ground-borne vibration during construction to ensure it does not exceed thresholds that could damage, or otherwise alter the historical resources.

SECTION 5
Mitigation Monitoring and Reporting Program

The Mitigation Monitoring and Reporting Program (MMRP) for the proposed Program has been prepared in accordance with Public Resources Code section 21081.6 and State CEQA Guidelines section 15091(d). The City will use this MMRP to track compliance with the Program mitigation measures. The City will consider the MMRP during the certification hearing for the Final IS/MND. The MMRP will incorporate all mitigation measures adopted for the proposed Program.

This MMRP summarizes potentially significant impacts and mitigation commitments identified in the Stormwater Capture Parks Program IS/MND. Table 5-1 provides the MMRP which includes all mitigation measures, monitoring/reporting action, monitoring timing, and responsible person(s) for implementation. Impacts and mitigation measures are presented in the same order as in the IS/MND. The columns in the table provide the following information:

- **Mitigation Measures:** The action(s) that will be taken to reduce the impact to a less-than-significant level.
- **Monitoring /Reporting Action:** This column outlines the appropriate steps to implement and verify compliance with the mitigation measures.
- **Monitoring Timing:** This column indicates the general schedule for conducting each monitoring task, either prior to construction, during construction, and/or after construction.
- **Responsible Person(s):** This column lists the agency responsible for ensuring implementation of the mitigation measure.

TABLE 5-1

MITIGATION MONITORING AND REPORTING PROGRAM – CSTORMWATER CAPTURE PARKS PROGRAM

	Monitoring / Reporting Action	Monitoring Timing	Responsible Person(s)
incorporate the following conditions:	Site Monitoring	Prior to Construction	The City
rogram shall use off-road diesel-powered construction :eeds the CARB and USEPA Tier 4 off-road emissions ɔd at 50 horsepower or greater and not identified under b or ill be outfitted with Best Available Control Technology (BACT) :ertified Level 3 Diesel Particulate Filter or equivalent. These ed in applicable bid documents and successful contractor(s) to supply such equipment.		During Construction	Construction Contractor
ı-site shall either be certified Tier 3 with a CARB-certified lter or equivalent; certified Tier 4 with a CARB-certified Level equivalent, or alternatively fueled (e.g., gasoline, electric,			
equipment shall be electric: air compressors, cement and 's, forklifts, pumps. Diesel generators shall be replaced with r permanent or temporary, or replaced with alternative (non-			
ntified under a, b, and c above shall be included in applicable ful contractor(s) must demonstrate the ability to supply such ınit's certified tier specification or model year specification rating permit (if applicable) shall be available upon request at ıch applicable unit of equipment.			
preparation, grading and excavation, and soil filling, ›vement phases, watering must be conducted a minimum of 4 ather.			
only 2 dozers are allowed to operate on any portion of the			
:luding delivery and those conveying excavated material do g daily truck limits:			
parks are concurrently under construction;			
parks are currently under construction;			
parks are concurrently under construction;			
parks are concurrently under construction;			
parks are concurrently under construction;			
parks are concurrently under construction. Or;			

	Monitoring / Reporting Action	Monitoring Timing	Responsible Person(s)
of a mix of 2014 or newer trucks, the City shall ensure that luding delivery and those conveying excavated material do g daily truck limits: parks are concurrently under construction; parks are concurrently under construction; parks are concurrently under construction; parks are concurrently under construction; parks are concurrently under construction; parks are concurrently under construction.			
onstruction activities at any of the nine park project sites awk (*Accipiter cooperii*), a California Species of Special t. Similarly, construction activities may also impact other ariety of vegetation as well as man-made structures. de of the avian nesting season. If the avian nesting season egetation removal occurs from February 1 to September 1, avoid and minimize impacts to nesting birds and raptors: son, a qualified biologist shall conduct a preconstruction avian days prior to vegetation disturbance or ground-disturbing s in the non-breeding season and proceeds continuously into urveys are required. However, if there is a break of 7 days or during the nesting season, a new nesting bird survey shall be begins again. all cover all reasonably potential nesting locations on and ion areas. A 300-foot radius shall be surveyed in areas nesting raptors, such as trees and utility poles. g the preconstruction avian nesting survey, a qualified able buffer for all passerine birds and raptor species. The nest until the nest becomes inactive, the young have fledged, the by the parents, the young have left the area, and the young he Program. Buffer areas may be increased upon biologist if any endangered, threatened, California Fully s of Special Concern are identified during preconstruction ea where ground disturbance is scheduled to occur, the City area by delaying ground disturbance in the area until a ed that the birds have fledged and are no longer reliant upon rvival. of the parks, the City shall retain a qualified bat specialist to whether bats are using the trees as roosting sites. The	Site Survey by a Qualified Biologist	Prior to Construction During Construction	The City

	Monitoring / Reporting Action	Monitoring Timing	Responsible Person(s)
ninimum buffer area of 100 feet around the parks. The results to CDFW. In the event that bat roosts are identified, an /ill be conducted using acoustic survey techniques necessary ;ing the area. If the species survey concludes that sensitive ty shall consult with CDFW pursuant to the California Fish Removal of special status bats would not be conducted FW.			
; further refined and individual park project components) feet to the North Hollywood Amelia Earhart Regional Library tenance building associated with North Hollywood Park, the Gonzales Recreation Center, and/or the 170 Freeway ı a qualified architectural historian meeting the Secretary of -listory to review design plans for conformance with the he Treatment of Historic Properties (Standards). Should o the Standards, the City shall work with the qualified to these resources. Should Program redesign place Program ırces, the qualified architectural historian shall also assess ;ulting from ground-borne vibration. Should ground-borne ə historical resources, the City and the qualified architectural ground-borne vibration during construction to ensure it does ›, or otherwise alter the historical resources.	Plan Preparation Site Monitoring by a Qualified Archeologist Historian	Prior to Construction During Construction	The City
bing activities, the City shall retain a qualified archaeologist ofessional Qualifications Standards for archaeology (U.S. out the following cultural resources mitigation measures.	Site Monitoring by a Qualified Archeologist	Prior to Construction During Construction	The City
ı activities, the qualified archaeologist shall prepare a cultural e used as part of the City's Worker Environmental Awareness n personnel shall receive sensitivity training prior to beginning ıld be informed of the types of archaeological resources that rocedures to be enacted in the event of an inadvertent human remains. The City should ensure that construction ənd the training and retain documentation demonstrating	Personnel Training by a Qualified Archeologist	Prior to Construction During Construction	The City Construction Contractor
lated ground-disturbing activities, the qualified archaeologist oring Plan (CRMP) in consultation with Tribes that requested ıll stipulate the location and timing of archaeological and include all ground-disturbing activities in each of the nine ıented fill as documented by geotechnical testing. The eering plans for each of the nine parks to determine where e depths of undocumented fill at each park to determine the ıcluded in the CRMP. The CRMP shall include monitoring n-related construction. The CRMP shall stipulate that Native	Plan Preparation Site Monitoring by a Qualified Archeologist	Prior to Construction During Construction Post Construction	The City

	Monitoring / Reporting Action	Monitoring Timing	Responsible Person(s)
f the Tribes that have been consulted with under AB52 be nd disturbance stipulated in the CRMP. at the Qualified Archaeologist, based on observations of ɔrs during initial grading, and in coordination with the Native ıduce or discontinue monitoring as warranted if it is ɛring archaeological deposits is low. The CRMP shall outline in the event of unanticipated discovery of cultural resources ɡ that all ground disturbance within 100 feet of an a treatment plan is developed by the qualified archaeologist ve American monitor(s) and which will consider the resources IP shall identify avoidance as the preferred manner of The CRMP shall establish the criteria utilized to evaluate the ıs, methods of avoidance consistent with CEQA Guidelines the appropriate treatment to mitigate the effect of the ɔurce is determined to be infeasible. The CRMP will also ɔhaeological sites that qualify as unique archaeological Code Section 21083.2, which places limits on the costs of urces. The plan shall also require the preparation of a ɲ. The monitoring report will be submitted to the City for be filed at the SCCIC. The CRMP shall be submitted to the ı representatives who have been consulted with under AB52 lated ground disturbance.			
discovery of archaeological materials during Program ly cease in the area (within approximately 100 feet) of the qualified archaeologist. Construction shall not resume until with the City and the Native American monitors on the haeological resource constitutes a significant resource, e preferred manner of mitigation. Preservation in place may avoidance, incorporating the resource into open space, nent conservation easement. In the event that preservation in d data recovery through excavation is the only feasible ɜ Treatment Plan shall be prepared and implemented by the h the City and Native American monitors that provides for the nsequential information contained in the archaeological ɔpriate Native American representatives in determining ɔr Native American resources to ensure cultural values at are scientifically important are considered.	Site Monitoring by a Qualified Archeologist	During Construction	The City Construction Contractor
ıd, all work shall halt in the vicinity (within 100 feet) of the find ıll be contacted in accordance with PRC Section 5097.98 and If the County Coroner determines that the remains are Native ɔordance with Health and Safety Code Section 7050.5, 8 (as amended by Assembly Bill 2641). The NAHC will D) for the remains per PRC Section 5097.98. Until the he City shall ensure that the immediate vicinity where the ther activity, is adequately protected according to generally	Site Inspection	During Construction	The City

	Monitoring / Reporting Action	Monitoring Timing	Responsible Person(s)
lards or practices, and that further activities take into account			
ommendations provided in the geotechnical investigations for it that the depth to groundwater rises to less than 50 feet bgs ater infiltration process shall be stopped and the stormwater until groundwater depths decrease to below 50 bgs.	Site Monitoring	During Construction Post Construction	The City
activities, the City shall retain a Qualified Paleontologist that rtebrate Paleontology (2010) to carry out all mitigation urces.	Site Monitoring	Prior to Construction During Construction	The City
rbing activities, the Qualified Paleontologist shall contribute to is sensitivity WEAP training materials outlined in Mitigation training module provided to the Qualified Archaeologist. This types of paleontological resources could be encountered unanticipated discovery is made by a worker, and laws construction personnel shall be informed of the possibility of nediately inform the construction foreman or supervisor if any area where a paleontological monitor is not present. The City are made available for and attend the training and retain	Personnel Training by a Qualified Paleontologist	Prior to Construction During Construction	The City
ll supervise a paleontological monitor meeting the Society for l) who shall be present during all excavations exceeding 15 ispecting fresh exposures of rock for larger fossil remains dry screened sediment samples of promising horizons for reduced to part-time inspections or ceased entirely if leontologist in consultation with the City. Monitoring activities l Resources Monitoring Report to be prepared by the of construction and shall be provided to the City and filed ngeles County within 6 months of Program completion.	Site Monitoring by a Qualified Paleontologist	During Construction	The City
leontological resource is discovered during construction, the red to temporarily divert or redirect grading and excavation l to facilitate evaluation of the discovery. An appropriate ualified Paleontologist around the find where construction . Work shall be allowed to continue outside of the buffer area. n and to reduce any construction delay, the grading and ving rock samples for initial processing and evaluation of the ed by the paleontological monitor and/or the Qualified prepared to the point of identification and catalogued before . Any fossils collected shall be curated at a public, non-profit naterials, such as the Los Angeles County Natural History	Site Monitoring by a Qualified Paleontologist	During Construction	The City

	Monitoring / Reporting Action	Monitoring Timing	Responsible Person(s)
ıccept the fossils. If no institution accepts the fossil collection, the area for educational purposes. Accompanying notes, ł at the repository and/or school.			
ıctor shall ensure that fueling of vehicles or storage of fuel or ıst extent possible from an existing school site.	Site Monitoring	During Construction	The City Construction Contractor
o a proposed work area, the City shall coordinate school ıot be limited to: alks along the safe routes to and from the school (for would include Norris Avenue, Van Nuys Boulevard, Pierce school buses and parents to drop off and pick up students. a for parents to wait for/pick up school children. pedestrian traffic during construction. st be adopted during construction to protect the students and ecured fencing with screen, clear signing, temporary striping, g and existing the construction zone. Flaggers should also be ı students are present. ıacted school and the Los Angeles Unified School District for ı design and frequent communication during construction. r the school and the community describing safety measures void before and after school timeframes while children may and while school is in session, as feasible.	Safety Planning Notification Site Monitoring	During Construction	The City Construction Contractor
;onduct further investigation of the nature and extent of t the Strathern Park North site, under the oversight of the City ;y (LEA). Undocumented waste shall be delineated and l to waste materials. The project shall avoid construction sible. If avoidance of the waste mass is not feasible, the City locuments the results of the waste delineation, details the ıow it relates to the onsite waste, describes the procedures ıe environmental monitoring procedures that would be ıpproval of the work plan, the City and its contractor shall with chemical concentrations above regulatory action levels y dispose of it at a permitted facility. An as-built report shall of the project.	Site Survey Plan Preparation	Prior to Construction During Construction Post Construction	The City

	Monitoring / Reporting Action	Monitoring Timing	Responsible Person(s)
ıt to noise-sensitive receptors (e.g., residences and schools), uction equipment, fixed or mobile, are equipped with properly ı and muffling devices, consistent with manufacturers' er systems (e.g., absorptive mufflers) that provide a minimum ɜ equipment without an installed muffler system, reducing contractor shall keep documentation on-site demonstrating in accordance with the manufacturers' specifications. The on-site verifying compliance with this measure.	Site Monitoring	During Construction	The City Construction Contractor
ıt to noise-sensitive receptors (e.g., residences and schools), , the contractor shall provide an 8-foot-tall to 20-foot-tall ietween the project construction area and the sensitive achieving a 15 dBA noise level reduction at the sensitive ' shall be used during peak noise-generating construction t is prevalent. A noise barrier is not required if it would pose a ss to the construction area as deemed by the on-site hat have limited equipment maneuvering space or access.	Temporary Fence/Barrier Site Monitoring	During Construction	The City Construction Contractor
equipment (e.g., haul trucks, loaders) to a minimum of 200 nsitive receptors.	Site Monitoring	During Construction	The City Construction Contractor
uction activities, the City shall notify in writing adjacent he various park project sites, of proposed construction)erson and hotline where local residents, schools, or business n with questions or comments. The City shall respond to d vibration. Notices and construction signs will include a ıarterly and will include Program-related information.	Notification	Prior to Construction	The City
ıipment that generates high levels of vibration, such as large)hibited within 45 feet of the property lines of existing ıe various park project sites. Instead, rubber-tired equipment ısed in these areas during construction within 45 feet from the	Site Monitoring	During Construction	The City Construction Contractor
d occur outside of park facilities or that may impact roadways ı developed by the City or its contractor and approved by The CTMP may include, but is not limited to the following:	Plan Preparation Site Survey Notification	Prior to Construction During Construction	The City Construction Contractor

	Monitoring / Reporting Action	Monitoring Timing	Responsible Person(s)
for all in-street construction sites to the satisfaction of the start of any construction work. The plans shall include of any lane closures, restricted hours during which lane local traffic detours, protective devices and traffic controls barricades, cones, flagmen, lights, warning beacons, g movement restrictions, warning signs), access to abutting aintain emergency access through construction work areas. in-street and off-street construction activities are planned. mited to one-way traffic, prepare detour plans over parallel rnative routes where construction will occur. g areas for equipment and materials, as feasible. at multiple worksites can be served, as feasible. rkers. oviders in the project vicinity to notify of the location, hours, uction. Provide advance notice of any lane closures and entity alternative routes where appropriate.			

References

City of Los Angeles, 2015. Stormwater Capture Master Plan. August 2015.

City of Los Angeles, 2018. One Water LA 2040 Plan. Chapters 3 and 4. April 2018.

City of Los Angeles Recreation and Parks Department (RAP), 2004. Urban Forest Program. October 2004.

County of Los Angeles, 2021. LA River Master Plan, January 2021.

Southern California Coastal Water Research Project (SCCWRP), 2021a. Biological Needs Assessment.

SCCWRP, 2021b, Process and Decision Support Tools for Evaluating Flow Management Targets to Support Aquatic Life and Recreational Beneficial Uses of the Los Angeles River *Los Angeles River Environmental Flows Project;* Technical Report #1196

Notice of Proposed Project

First Notice

NOTICE OF PROPOSED PROJECT

City of Los Angeles
Department of Water and Power - WDEU
Water Distribution Engineering East Valley District

FIRST NOTICE

CITY OF LOS ANGELES
DEPARTMENT OF PUBLIC WORKS
BUREAU OF ENGINEERING

Date: November 3, 2021

The Department of Public Works is scheduling the following improvements:

Project Title: **STRATHERN PARK NORTH STORMWATER CAPTURE PROJECT**
Work Order No.: **EW40080D** **Job ID:** **1457**

Work to Be Performed: The proposed project consists of installing a 1.4-acre underground infiltration gallery to capture and infiltrate stormwater. Construction of the underground infiltration gallery will include installation of a storm drain diversion structure, storm pipe, pretreatment device, desilting basin, flow measuring device, level sensors, and education signage. Runoff will be collected from approximately a 445-acre tributary area and diverted into the infiltration gallery. The galleries shall be sized to store approximately 740,400 cf.

The project will include new park improvements such as two (2) baseball fields with the following amenities: backstops, dugouts, player benches, batting cage, bullpens, sports lighting, bleachers, and outfield fencing. Other improvements include additional parking, hydration stations, new landscaping, and a new irrigation system.

Please fill out the following and return one copy to the Utility Coordination Group by **December 3, 2021**.
PLEASE UPLOAD A COPY OF YOUR AS-BUILT PLANS, IN THE LINK PROVIDED IN THE EMAIL, SHOWING THE LOCATION OF YOUR FACILITIES (IN OR AROUND THE PROJECT AREA).

Your replies will be transmitted to prospective bidders and used in coordinating this project. Please note proper location of any facilities, live or abandoned, that are not shown or are shown incorrectly on the attached plans. The City will not be responsible for any damage to facilities that are not shown or are shown incorrectly on the plans. Failure to reply may deprive you of the protection provided for in the Standard Specifications. Construction delays and/or expenses due to failure in providing accurate information shall result in an assessment of costs to you, per Los Angeles Municipal Code (LAMC) 62.01 or your Franchise Agreement with the City.

Upon receipt and review of your response(s), the City will contact you to formalize your utility relocation (or protect-in-place) plan, with a utility relocation agreement if necessary.

For questions, please contact the **Project Manager Bryan Powell** at (213) 485-5908 or **bryan.powell**@lacity.org.

Thomas Guide Page: 532 Grids: E2, F2

Thank you,

Reynaldo Sison, PE
Project Award and Control Division
Bureau of Engineering

☐ (1) Have prior rights. (Submit proof to our office within 30 days.)
☐ (2) Do not have facilities within the proposed project area.
☑ (3) Have facilities that will **not require relocation/adjustment** but will mark them upon request.
  (a) ☐ The accompanying recorded plans show facilities not delineated on the project plans.
  (b) ☑ The project plans correctly show our present utility locations.
☐ (4) Have facilities that will **require relocation/adjustment**. The facilities are delineated on the enclosed plan.
  (a) ☐ The following work is contemplated: _____
  (b) ☐ Estimated working days required for construction: _____
  (c) ☐ Construction may begin on _____ and conclude on _____
  (d) ☐ Work will **require** coordination with the contractor. (**EXPLAIN FULLY**).

For Paving Clearance, call: _____ Phone: _____ Station: _____

Return one copy of this First Notice to
Attn: Vishal Mandalia
Department of Public Works
Bureau of Engineering,
Project Award and Control Division
Utility Coordination Group (Mail Stop 501)
1149 S. Broadway, Suite 140
Los Angeles, CA 90015-2213
Tel. (213) 485-4506
Email: **vishal.mandalia**@lacity.org

City of Los Angeles
Department of Water and Power - WDEU
Water Distribution Engineering East Valley District

Company Name | Phone No.

Lyndon Tat

Representative (Print Name)

Lyndon.Tat@ladwp.com

E-mail Address

Lyndon Tat

Signature

1.27.22

Date

Vishal Mandalia <vishal.mandalia@lacity.org>

First Notice: WO # EW40080D - STRATHERN PARK NORTH STORMWATER CAPTURE PROJECT

Tat, Lyndon <Lyndon.Tat@ladwp.com> Thu, Jan 27, 2022 at 7:18 AM
To: Vishal Mandalia <vishal.mandalia@lacity.org>

Hello,

Please find the filled Notice. Please note that all DWP infrastructure is to be protected in place. I have attached our complete Water Service Maps for your reference (please note that these maps are not for release to the public).

Regards,

Lyndon Tat
East Valley Civil Engineering Associate | Water Distribution Engineering
Los Angeles Department of Water and Power
Lyndon.Tat@ladwp.com

From: Vishal Mandalia <vishal.mandalia@lacity.org>
Sent: Monday, January 3, 2022 8:01 AM
To: Tat, Lyndon <Lyndon.Tat@ladwp.com>
Subject: Re: [EXTERNAL] First Notice: WO # EW40080D - STRATHERN PARK NORTH STORMWATER CAPTURE PROJECT

Here you go.

90_Design_Drawings_Strathern_Park_North_0823202...

First Notice_EW40080D RS.pdf

Vishal Mandalia, EIT

Project Award and Control Division | Civil Engineering Associate I

Bureau of Engineering | Department of Public Works

1149 S. Broadway, Suite 140

Los Angeles, CA 90015

Mail Stop 501

Work: 213-485-4506

Vishal.Mandalia@lacity.org

[Quoted text hidden]

[Quoted text hidden]
[Quoted text hidden]

Best,

Vishal Mandalia, EIT
[Quoted text hidden]
[Quoted text hidden]



90_Design_Drawings_Strathern_Park_North_0823202...

First Notice_EW40080D RS.pdf

----------Confidentiality Notice----------
This electronic message transmission contains information from the Los Angeles Department of Water and Power, which may be confidential. If you are not the intended recipient, be aware that any disclosure, copying, distribution or use of the content of this information is prohibited. If you have received this communication in error, please notify us immediately by e-mail and delete the original message and any attachment without reading or saving in any manner.

[Quoted text hidden]

3 attachments

filled_First Notice_EW40080D RS-1.pdf
685K

W190-162.pdf
2304K

W190-165.pdf
1843K

Summary of First Notice Replies

Date: December 6, 2021

CITY OF LOS ANGELES
DEPARTMENT OF PUBLIC WORKS
BUREAU OF ENGINEERING

SUMMARY OF FIRST NOTICE REPLIES

W.O. No.:	Job ID.:	Project Title:
EW40080D	**1457**	**STRATHERN PARK NORTH STORMWATER CAPTURE PROJECT**

Bidders are advised that project plans usually depict the location of substructures as they existed when the project was designed. Present-day information may indicate that new facilities may have been added or are going to be added. Some of those substructures may now be or will be relocated, abandoned, removed, lowered, raised, blanketed, encased, enlarged, protected, or altered in some other way. Bidders are urged to carefully examine the proposed construction site for any evidence of recent surfacing of excavations, or the possible conflict with surface or aerial installations. Contractor should use the latest substructure maps and prepare their bid accordingly. If further information or clarification is desired, bidders are urged to immediately contact the appropriate utility company or the appropriate District Office of the Bureau of Engineering. Contractors may also contact the Utility Coordination Group, 1149 S. Broadway Street, Suite 140, Los Angeles, CA 90015, naajia.jaml@lacity.org. The contractor will need to coordinate work with utility companies during construction if necessary.

Based on the confirmation from the following utility companies, they have facilities within the improvement area that will definitely be affected.

NONE

Based on the confirmation from the following utility companies, they have facilities within the improvement area that may not require relocation but will mark them upon request. Notify Underground Service Alert at 1-800-227-2600 two working days prior to excavation to have facilities marked:

BUREAU OF STREET LIGHTING	Daniel Ordonia	(213) 847 – 1568
SOUTHERN CALIFORNIA GAS – DISTRIBUTION	Art Alfaro	(213) 231 – 7808
CHARTER COMMUNICATIONS	Robert Reihs	(661) 483 – 3030
DWP – POWER	Gibson Phan	(213) 367 – 2715
SCE	Anthony Devestern	(661) 775 – 1040

Based on the confirmation from the following utility companies, there are no facilities within the improvement area that will be affected:

INFORMATION TECHNOLOGY AGENCY	Frank Gonzalez	(213) 978 – 4032

SOUTHERN CALIFORNIA GAS – TRANSMISSION	Ron Silver	(818) 701 – 4536

The following utility companies have not responded to the First Utility Notice, but they may have facilities within the improvement area.

AT&T CALIFORNIA	Cathy Hurtado	(626) 817 – 4263
LADWP – WATER – EAST VALLEY	Glenn Micko	(213) 367 – 1211

Gregg Vandergriff, PE
Division Engineer
Project Award and Control Division
Bureau of Engineering
Department of Public Works

CITY OF LOS ANGELES
DEPARTMENT OF PUBLIC WORKS
BUREAU OF ENGINEERING

Date: November 3, 2021

The Department of Public Works is scheduling the following improvements:

Project Title: **STRATHERN PARK NORTH STORMWATER CAPTURE PROJECT**
Work Order No.: **EW40080D** **Job ID:** **1457**

Work to Be Performed: The proposed project consists of installing a 1.4-acre underground infiltration gallery to capture and infiltrate stormwater. Construction of the underground infiltration gallery will include installation of a storm drain diversion structure, storm pipe, pretreatment device, desilting basin, flow measuring device, level sensors, and education signage. Runoff will be collected from approximately a 445-acre tributary area and diverted into the infiltration gallery. The galleries shall be sized to store approximately 740,400 cf.

The project will include new park improvements such as two (2) baseball fields with the following amenities: backstops, dugouts, player benches, batting cage, bullpens, sports lighting, bleachers, and outfield fencing. Other improvements include additional parking, hydration stations, new landscaping, and a new irrigation system.

Please fill out the following and return one copy to the Utility Coordination Group by **December 3, 2021**.
PLEASE UPLOAD A COPY OF YOUR AS-BUILT PLANS, IN THE LINK PROVIDED IN THE EMAIL, SHOWING THE LOCATION OF YOUR FACILITIES (IN OR AROUND THE PROJECT AREA).

Your replies will be transmitted to prospective bidders and used in coordinating this project. Please note proper location of any facilities, live or abandoned, that are not shown or are shown incorrectly on the attached plans. The City will not be responsible for any damage to facilities that are not shown or are shown incorrectly on the plans. Failure to reply may deprive you of the protection provided for in the Standard Specifications. Construction delays and/or expenses due to failure in providing accurate information shall result in an assessment of costs to you, per Los Angeles Municipal Code (LAMC) 62.01 or your Franchise Agreement with the City.

Upon receipt and review of your response(s), the City will contact you to formalize your utility relocation (or protect-in-place) plan, with a utility relocation agreement if necessary.

For questions, please contact the **Project Manager Bryan Powell** at (213) 485-5908 or **bryan.powell**@lacity.org.

Thomas Guide Page: 532 Grids: E2, F2

Thank you,

Reynaldo Sison, PE
Project Award and Control Division
Bureau of Engineering

☐ (1) Have prior rights. (Submit proof to our office within 30 days.)
☐ (2) Do not have facilities within the proposed project area.
☒ (3) Have facilities that will **not require relocation/adjustment** but will mark them upon request. Protect in place existing facilities
  (a) ☐ The accompanying recorded plans show facilities not delineated on the project plans.
  (b) ☐ The project plans correctly show our present utility locations.
☐ (4) Have facilities that will **require relocation/adjustment**. The facilities are delineated on the enclosed plan.
  (a) ☐ The following work is contemplated: _____
  (b) ☐ Estimated working days required for construction: _____
  (c) ☐ Construction may begin on _____ and conclude on _____
  (d) ☐ Work will **require** coordination with the contractor. (**EXPLAIN FULLY**).

For Paving Clearance, call: _____ Phone: _____ Station: _____

Return one copy of this First Notice to
Attn: Vishal Mandalia
Department of Public Works
Bureau of Engineering,
Project Award and Control Division
Utility Coordination Group (Mail Stop 501)
1149 S. Broadway, Suite 140
Los Angeles, CA 90015-2213
Tel. (213) 485-4506
Email: **vishal.mandalia**@lacity.org

LADWP Power	213-367-2715
Company Name	Phone No.
Gibson Phan	
Representative (Print Name)	
DWPPS.Coordination@ladwp.com	
E-mail Address	
Gibson Phan	11/17/21
Signature	Date

SOUTHERN CALIFORNIA EDISON
An EDISON INTERNATIONAL Company

SCE FACILITIES CHECK

Please Return to Design Support/UND, Whittier S/C, **Please note new address**

Date: 11/5/2021

To: JOHNSON NGUYEN

Region: North Coast

From: Gail Gardner

Notice Type:	First Utility Notice
Notice Version:	New
Database Filing Number:	10774
Requesting Agency Project Number:	EW40080D
Requestor:	CITY OF LOS ANGELES
Response to previous version of Utility Notice for this project:	

A response to this Utility Notice is required even if a response was provided to an earlier version for the same project.

1. Complete and SIGN this form by indicating your response below with a checkmark next to the appropriate choice.
2. Complete and SIGN the enclosed Utility Notice. (if indicated)
3. Return both originals via inter-office mail by: **11/20/2021**

Incomplete, unsigned or electronically delivered forms will not be accepted.

SCE PLANNER RESPONSE:

_____ Unable to determine



_____ No Telecom Facilities in the project area

_____ Telecom Facilities in the project area affected

_____ Telecom Facilities in the project area not affected

Planner Name (print): Franklin Portin Phone 1: (626) 407-9148

Email: Franklin.B.Portin@sce.com Phone 2: _____

Signature: Franklin Portin Date: 11/12/2021

SOUTHERN CALIFORNIA EDISON
An EDISON INTERNATIONAL Company

SCE FACILITIES CHECK

Please Return to Design Support/UND, Whittier S/C, **Please note new address**

Date: 11/5/2021

To: Bernardo Ochoa

Region: North Coast

From: Gail Gardner

Notice Type:	First Utility Notice
Notice Version:	New
Database Filing Number:	10774
Requesting Agency Project Number:	EW40080D
Requestor:	CITY OF LOS ANGELES
Response to previous version of Utility Notice for this project:	

A response to this Utility Notice is required even if a response was provided to an earlier version for the same project.

1. Complete and SIGN this form by indicating your response below with a checkmark next to the appropriate choice.
2. Complete and SIGN the enclosed Utility Notice. (if indicated)
3. Return both originals via inter-office mail by: **11/20/2021**

Incomplete, unsigned or electronically delivered forms will not be accepted.

SCE PLANNER RESPONSE:

_____ Unable to determine

_____ No Transmission Facilities in the project area

_____ Transmission Facilities in the project area affected

[X] Transmission Facilities in the project area not affected

Planner Name (print): Anthony Devestern Phone 1: 661-775-1040

Email: anthony.devestern@sce.com Phone 2: _____

Signature: _____ Date: 11-9-2021

Vishal Mandalia <vishal.mandalia@lacity.org>

First Notice: WO # EW40080D - STRATHERN PARK NORTH STORMWATER CAPTURE PROJECT

SCG-ComptonUtilityRequest <SCG-ComptonUtilityRequest@semprautilities.com> Tue, Nov 9, 2021 at 10:27 AM
To: Vishal Mandalia <vishal.mandalia@lacity.org>

Plan File 44-21-0702 Branford

From: Vishal Mandalia <vishal.mandalia@lacity.org>
Sent: Wednesday, November 3, 2021 11:36 AM
To: Sum, Jason <JSum@socalgas.com>; NorthwestDistributionUtilityRequest <NorthwestDistributionUtilityRequest@semprautilities.com>; SCG-ComptonUtilityRequest <SCG-ComptonUtilityRequest@semprautilities.com>
Subject: [EXTERNAL] First Notice: WO # EW40080D - STRATHERN PARK NORTH STORMWATER CAPTURE PROJECT

*** EXTERNAL EMAIL - Be cautious of attachments, web links, and requests for information ***

Hello SCG-Distribution,

Please find the proposed project above with the link below and download the Notice and plans. Please investigate your utility in the vicinity of this project and mark up the Notice accordingly. Access the link **using only the email address at which you are receiving this link, and according to the directions in the attached PDF. Be sure to sign out of any Microsoft accounts as well as out of any email addresses other than the one to which the link was sent for OneDrive to work properly.**

https://engsvcs.sharepoint.com/:f:/s/UtilityNotices/EjgVxGXXNOxPoqpGFsw0BQgBqbQ3kgZ_XXVCgDo1gTmxDQ?e=1u4Zqg [engsvcs.sharepoint.com]

The next link below directs you to a folder to upload the marked-up Notice and any additional correspondence, plans, etc. Access the link **using only the email address at which you are receiving this link, and according to the directions in the attached PDF. Be sure to sign out of any Microsoft accounts as well as out of any email addresses other than the one to which the link was sent.**

https://engsvcs.sharepoint.com/:f:/s/UtilityNotices/EpsJICu-PNZFiFz-KVUgJ3sBolx2k8W-8Ss1NEWD9LLSJA?e=L3D74s [engsvcs.sharepoint.com]

After clicking on the above links, a new tab will open and will ask to email you the code to access the folder. The code will be sent to the same utility email used here. After clicking "Send Code" and receiving the code via email, enter this code to gain access. It is possible the code number may go to your spam folder so please check this folder as well if you do not see the email in your inbox for a few seconds.

The links above will only be effective for 30 days. Do not forward the links to anyone, as they do not have permission to access the folders for which the links are created.

Thank you

Vishal Mandalia, EIT

Project Award and Control Division | Civil Engineering Associate I

Bureau of Engineering | Department of Public Works

1149 S. Broadway, Suite 140

Los Angeles, CA 90015

Mail Stop 501

Work: 213-485-4506

Vishal.Mandalia@lacity.org

ENGINEERING
CITY OF LOS ANGELES

This email originated outside of Sempra. Be cautious of attachments, web links, or requests for information.

Map Print.pdf
3562K



100 0 100 200 300 400 Feet

Map Number: 12120-124240

Map Type: Gas Asset Map

Printed By: Sum, Jason

Printed Date: 11/9/2021

LIABILITY STATEMENT
The facilities and their depiction on these maps are believed to be reasonably accurate, but the maps are not to be used in lieu of field verification or calling USA at 800-422-4133. NO WARRANTY expressed or implied (including of merchantability or of fitness for particular purpose) is made as to any matter, including but not imited to, the design, size, type or location of the facilities, their presence of absence, the accuracy of the maps, the means used to transmit the data, absence of viruses (if transmitted electronically, by disk or diskette), data translation or transmission errors or omissions, compatibility with the user's system or its ability to interpret the data correctly or at all, or any other matter. The Gas Company has no liability for damages (direct, indirect, consequential, incidental or punitive) arising from the transmission, receipt or use by others of the maps or information contained in the maps.

SoCalGas
A Sempra Energy utility

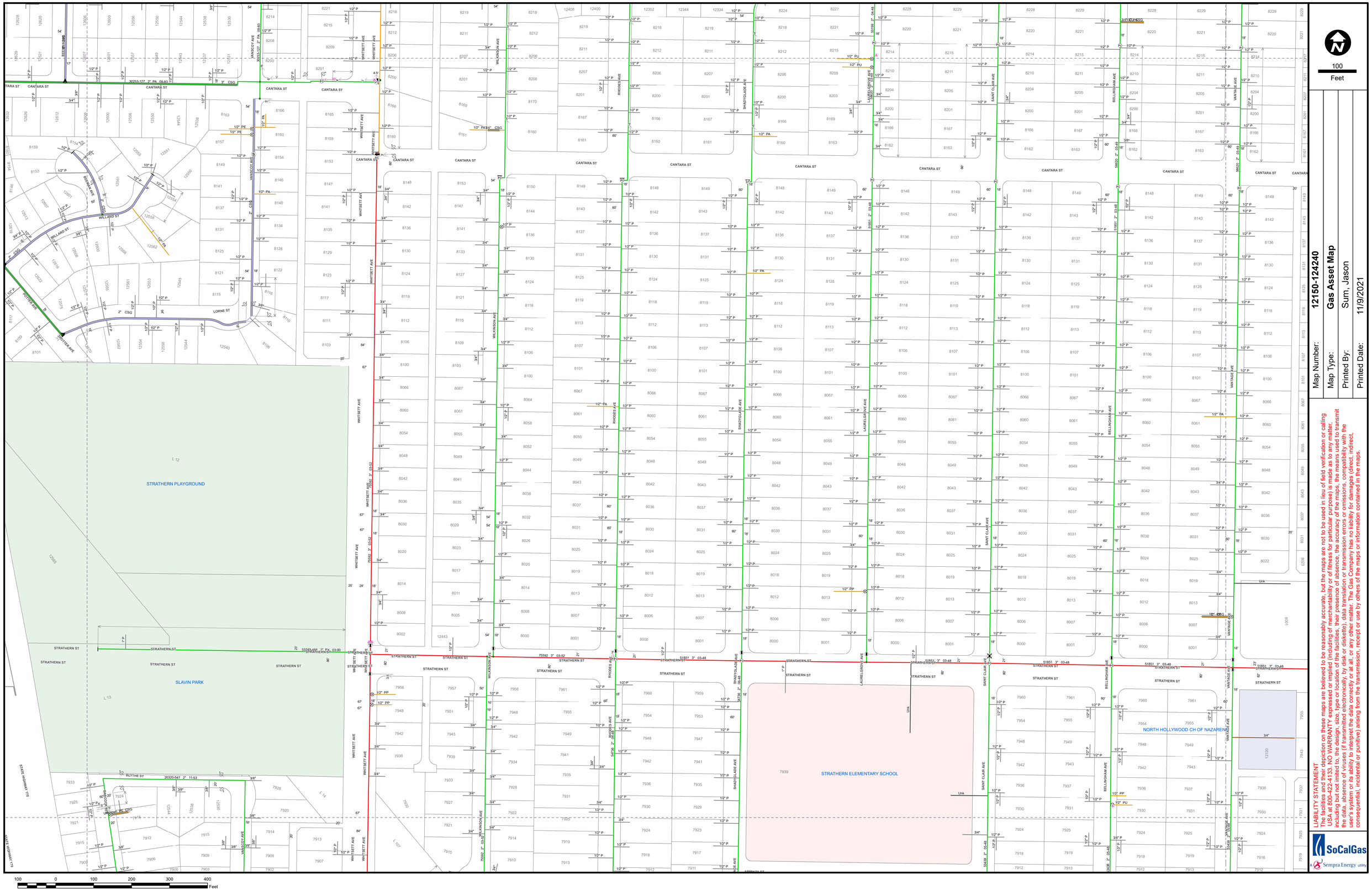

100
Feet

Map Number: 12150-124240

Map Type: Gas Asset Map

Printed By: Sum, Jason

Printed Date: 11/9/2021

LIABILITY STATEMENT
The facilities and their depiction on these maps are believed to be reasonably accurate, but the maps are not to be used in lieu of field verification or calling USA at 800-422-4133. NO WARRANTY expressed or implied (including of merchantability or of fitness for particular purpose) is made as to any matter, including but not limited to, the design, size, type or location of the facilities, their presence of absence, the accuracy of the maps, the means used to transmit the data, absence of viruses (if transmitted electronically, by disk or diskette), data translation or transmission errors or omissions, compatibility with the user's system or its ability to interpret the data correctly or at all, or any other matter. The Gas Company has no liability for damages (direct, indirect, consequential, incidental or punitive) arising from the transmission, receipt or use by others of the maps or information contained in the maps.

SoCalGas
A Sempra Energy utility

CITY OF LOS ANGELES
DEPARTMENT OF PUBLIC WORKS
BUREAU OF ENGINEERING

Date: November 3, 2021

The Department of Public Works is scheduling the following improvements:

Project Title: **STRATHERN PARK NORTH STORMWATER CAPTURE PROJECT**
Work Order No.: **EW40080D** **Job ID:** **1457**

Work to Be Performed: The proposed project consists of installing a 1.4-acre underground infiltration gallery to capture and infiltrate stormwater. Construction of the underground infiltration gallery will include installation of a storm drain diversion structure, storm pipe, pretreatment device, desilting basin, flow measuring device, level sensors, and education signage. Runoff will be collected from approximately a 445-acre tributary area and diverted into the infiltration gallery. The galleries shall be sized to store approximately 740,400 cf.

The project will include new park improvements such as two (2) baseball fields with the following amenities: backstops, dugouts, player benches, batting cage, bullpens, sports lighting, bleachers, and outfield fencing. Other improvements include additional parking, hydration stations, new landscaping, and a new irrigation system.

Please fill out the following and return one copy to the Utility Coordination Group by **December 3, 2021**.
PLEASE UPLOAD A COPY OF YOUR AS-BUILT PLANS, IN THE LINK PROVIDED IN THE EMAIL, SHOWING THE LOCATION OF YOUR FACILITIES (IN OR AROUND THE PROJECT AREA).

Your replies will be transmitted to prospective bidders and used in coordinating this project. Please note proper location of any facilities, live or abandoned, that are not shown or are shown incorrectly on the attached plans. The City will not be responsible for any damage to facilities that are not shown or are shown incorrectly on the plans. Failure to reply may deprive you of the protection provided for in the Standard Specifications. Construction delays and/or expenses due to failure in providing accurate information shall result in an assessment of costs to you, per Los Angeles Municipal Code (LAMC) 62.01 or your Franchise Agreement with the City.

Upon receipt and review of your response(s), the City will contact you to formalize your utility relocation (or protect-in-place) plan, with a utility relocation agreement if necessary.

For questions, please contact the **Project Manager Bryan Powell** at (213) 485-5908 or **bryan.powell**@lacity.org.

Thomas Guide Page: 532 Grids: E2, F2

Thank you,

Reynaldo Sison, PE
Project Award and Control Division
Bureau of Engineering

☐ (1) Have prior rights. (Submit proof to our office within 30 days.)
☐ (2) Do not have facilities within the proposed project area.
☒ (3) Have facilities that will **not require relocation/adjustment** but will mark them upon request.
  (a) ☐ The accompanying recorded plans show facilities not delineated on the project plans.
  (b) ☐ The project plans correctly show our present utility locations.
☐ (4) Have facilities that will **require relocation/adjustment**. The facilities are delineated on the enclosed plan.
  (a) ☐ The following work is contemplated: _____
  (b) ☐ Estimated working days required for construction: _____
  (c) ☐ Construction may begin on _____ and conclude on _____
  (d) ☐ Work will **require** coordination with the contractor. (**EXPLAIN FULLY**).

For Paving Clearance, call: _____ Phone: _____ Station: _____

Return one copy of this First Notice to
Attn: Vishal Mandalia
Department of Public Works
Bureau of Engineering,
Project Award and Control Division
Utility Coordination Group (Mail Stop 501)
1149 S. Broadway, Suite 140
Los Angeles, CA 90015-2213
Tel. (213) 485-4506
Email: **vishal.mandalia**@lacity.org

Socalgas.com	213-231-7808
Company Name	Phone No.
Art Alfaro	
Representative (Print Name)	
AAlfaro3@Socalgas.Com	
E-mail Address	
Art Alfaro	12/1/21
Signature	Date

ANY RELOCATION OR REPLACEMENT OF SOCALGAS FACILITIES WILL BE COLLECTIBLE TO THE DEVELOPER, CONTRACTOR OR OWNER. PROTECT IN PLACE ALL SOCALGAS FACILITES.

Transmission Technical
Services Department

9400 Oakdale Ave
Chatsworth, CA 91311
SC9314

November 8, 2021

Vishal Mandalia
City of Los Angeles Department of Public Works
vishal.mandalia@lacity.org

Subject: **WO # EW40080D - STRATHERN PARK NORTH STORMWATER CAPTURE PROJECT**

DCF: **2052-21NC**

The Transmission Department of SoCalGas does not operate any facilities within your proposed improvement. However, the Distribution Department of SoCalGas may maintain and operate facilities within your project scope.

To assure no conflict with the Distribution's pipeline system, please e-mail them at:

NorthwestDistributionUtilityRequest@semprautilities.com

Best Regards,

SoCalGas Transmission Technical Services
SoCalGasTransmissionUtilityRequest@semprautilities.com

11/8/2021

Vishal Mandalia
Los Angeles Department of Public Works
1149 South Broadway, Suite 140
Los Angeles, CA 90015

Requester Project:	Map Request
Project Name	Strathern Street and Hollywood Freeway
DOCK/PRISM Project Name:	Strathern Street and Hollywood Freeway
Conflict:	YES

Thank you for your recent Utility Request to Charter Communications for: Strathern Street and Hollywood Freeway

Please review the attached maps for any possible conflicts with Charter facilities.
There ***ARE*** existing Charter aerial/or underground facilities within the project limits.

We have provided maps showing where our services are located but cannot make any comment on how to deal with possible conflicts during construction. This type of information should come from the Construction Manager, Supervisor or Construction Coordinator for the area in question.

If you should require any field meet or any further coordination of the project with Charter please contact the Construction Manager listed below.

Construction Manager Contact:
Reihs, Robert J
Construction Manager - Zones 1 and 4
14221 Covello St
Van Nuys, CA 91405
661-483-3030
Robert.Reihs@charter.com

If you have any questions about the maps provided, please contact DL-socal-charter-engineering@charter.com.
This communication is for a project being handled by Charter Communications or Spectrum, a Charter Communications brand name, or Legacy Time Warner Cable.

Sincerely,

Dave Dolney

Dave Dolney
Sr. Manager, PACWEST Construction
Charter Communications
12051 Industry Street
Garden Grove, CA 92841


Lorne St
Target Area
Whitsett Ave
170
10
Dana Pl
Strathern St

Strathern Street
Map
North Hollywood, CA 91605

Red-existing Charter aerial facilities within project limits.

Green-existing Charter underground facilities within project limits.

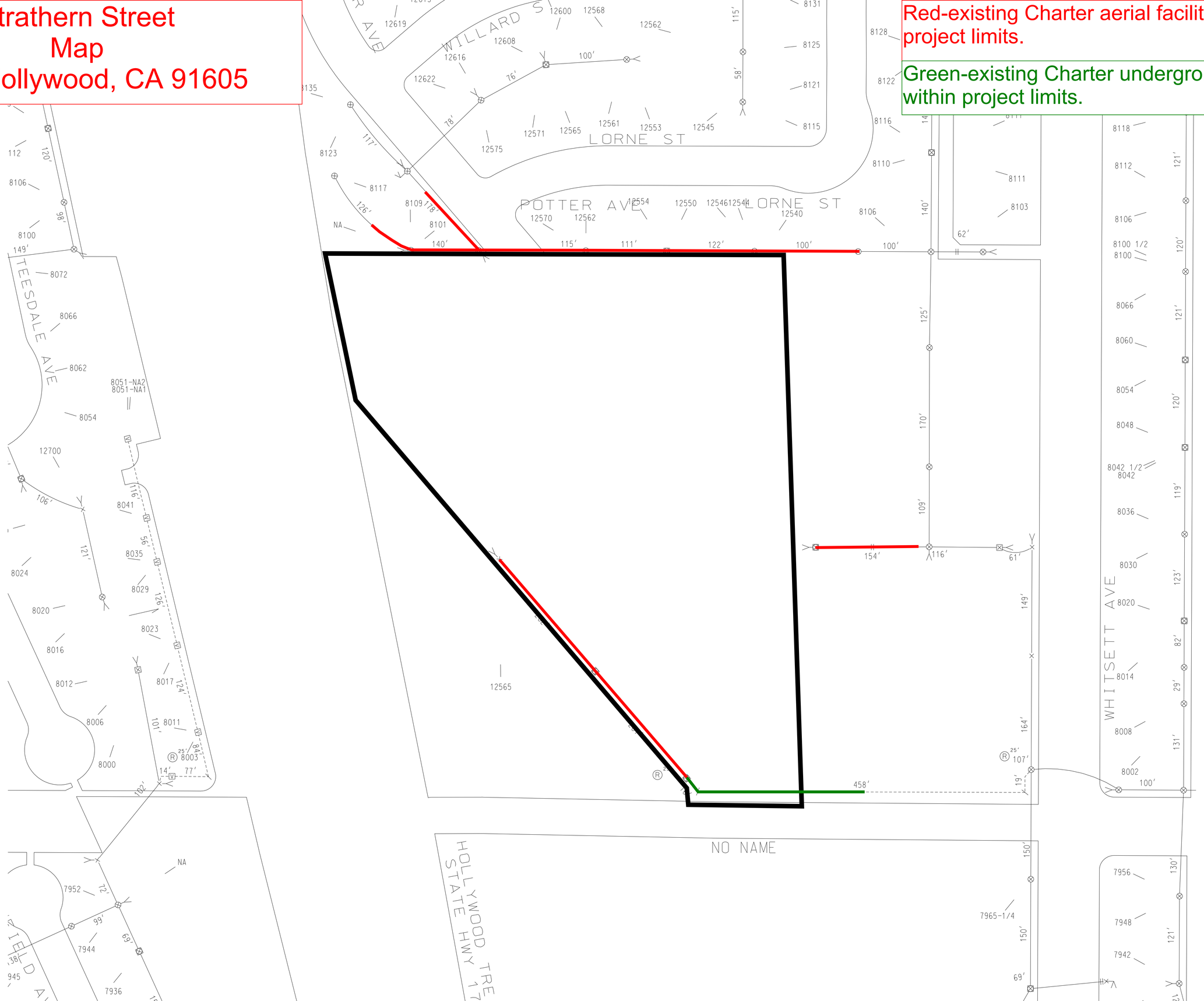

192-162

190-159

190-165

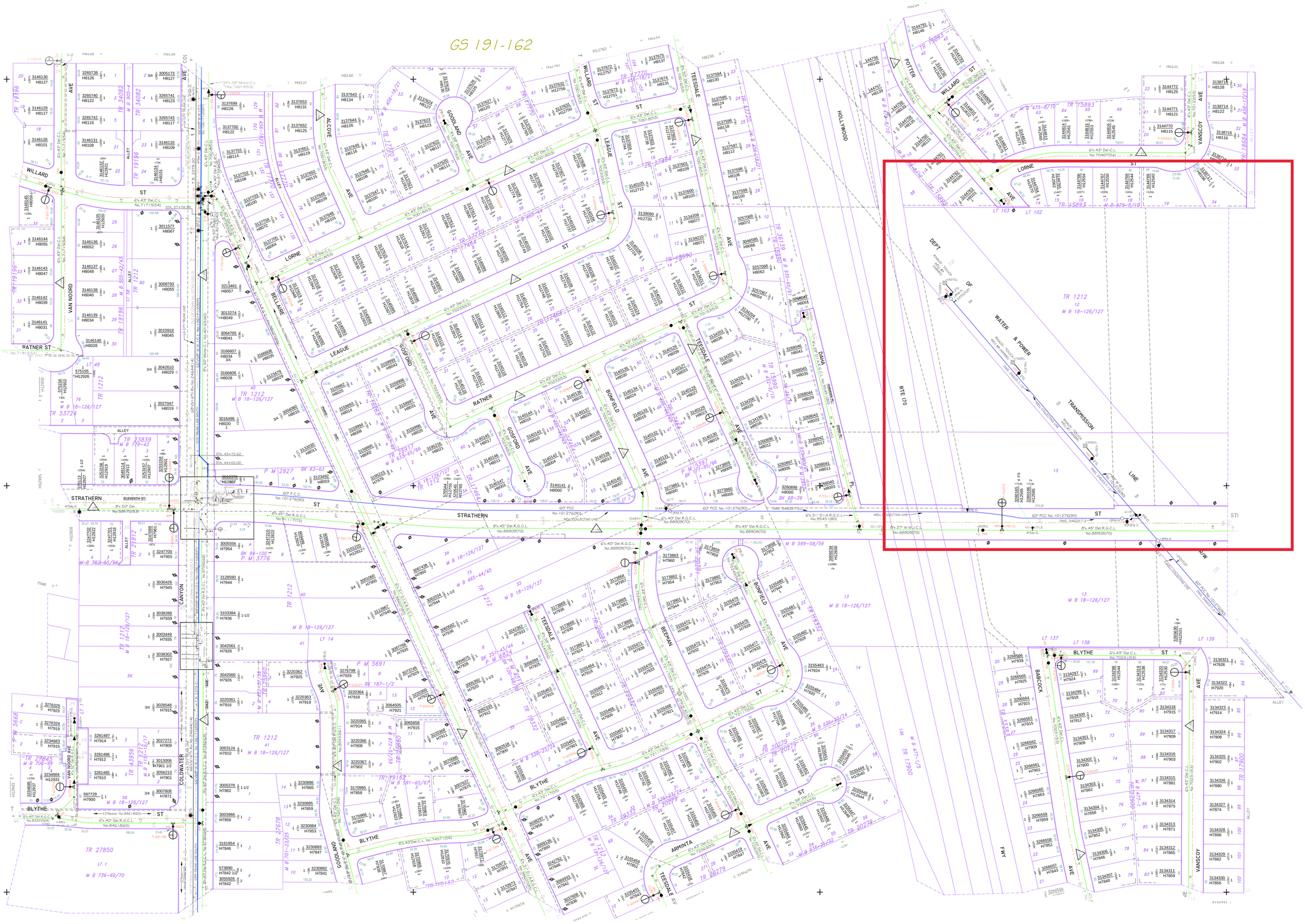

N.1,900,230

E.6,435,922

188-162

LEGEND MAP SCALE 1" = 1500'	SYMBOLS AND NOTATIONS	SCALE: 1" = 100'	PLOTTED	DATE	CHK'D.	DATE	FIRE HYDRANTS	REFERENCES	
	AS SHOWN	MAP	NAME	xx-xx-xxxx	NAME	xx-xx-xxxx	2 1/2" SINGLE	MAPS REPLACED	GATE BK.:
		CONVERTED MAINS	NAME	xx-xx-xxxx	NAME	xx-xx-xxxx	2 1/2" S. BUILT UP	885 OS , 821 OS	191-162
		CONVERTED SERVICES	R.EUSEBIO	04-27-2006	NAME	xx-xx-xxxx	2 1/2" DOUBLE	886 OS , 884 OS	
		MISC	NAME	xx-xx-xxxx	NAME	xx-xx-xxxx	4" SINGLE		LANDBASE:
							4" S. BUILT UP		1898161
							4" DOUBLE	DATUM N.A. 1983, ZONE 5	
		APPROVED					2 1/2" x 4" DOUBLE	LEVELS: U.S.G.S	

WATER GEOGRAPHIC INFORMATION SYSTEMS & GRAPHICS GROUP
DEPARTMENT OF WATER AND POWER
CITY OF LOS ANGELES

WATER SERVICE MAP

SERVICE ZONE ELEVATION: 1134, 0000, 0000, 0000, 0000, 0000

DISTRICT: EAST VALLEY

190-162

8/7/2019 1:14:09 PM, rpegler

Questions or Comments, contact: Water GIS Group, Room 1439, JFB

192-165

190-162

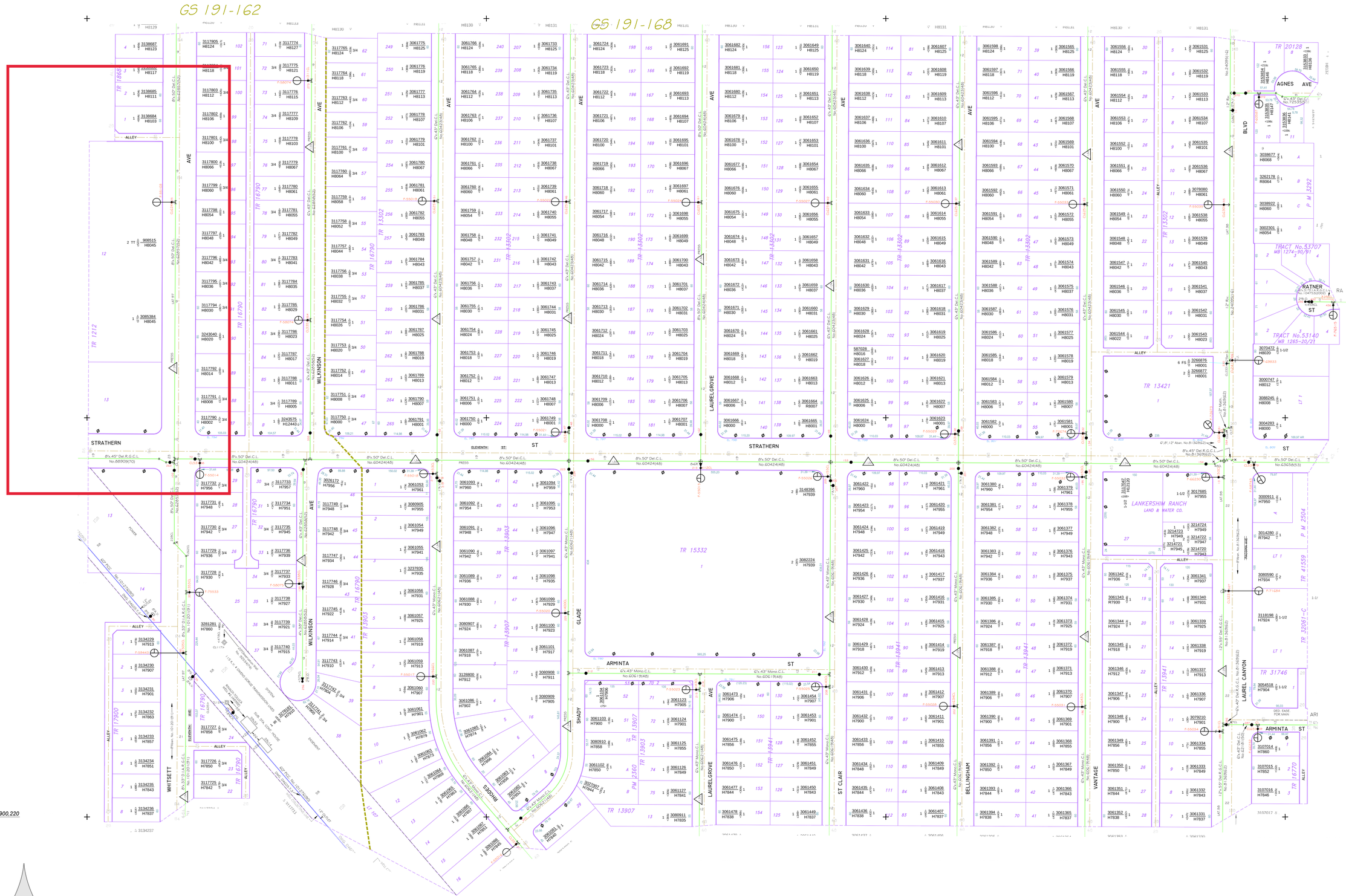

190-168

188-165

WaterGIS

LEGEND MAP SCALE 1" = 1500'	SYMBOLS AND NOTATIONS	SCALE: 1" = 100'	PLOTTED	DATE	CHK'D.	DATE
	AS SHOWN	MAP	NAME	xx-xx-xxxx	NAME	xx-xx-xxxx
		CONVERTED MAINS	NAME	xx-xx-xxxx	NAME	xx-xx-xxxx
		CONVERTED SERVICES	R.EUSEBIO	03-24-2006	NAME	xx-xx-xxxx
		MISC	NAME	xx-xx-xxxx	NAME	xx-xx-xxxx
		APPROVED				

FIRE HYDRANTS
- 2 1/2" SINGLE
- 2 1/2" S. BUILT UP
- 2 1/2" DOUBLE
- 4" SINGLE
- 4" S. BUILT UP
- 4" DOUBLE
- 2 1/2" x 4" DOUBLE

REFERENCES

MAPS REPLACED	GATE BK.:
821 , 1612 , 1611	191-162 , 191-168
884 , 1623 , 1622	
	LANDBASE:
	1898165
DATUM N.A. 1983, ZONE 5	
LEVELS: U.S.G.S	

WATER GEOGRAPHIC INFORMATION SYSTEMS & GRAPHICS GROUP
DEPARTMENT OF WATER AND POWER
CITY OF LOS ANGELES

WATER SERVICE MAP

SERVICE ZONE ELEVATION
1134
0000
0000
0000
11
00
00
00

DISTRICT: EAST VALLEY

190-165

8/7/2019 1:22:57 PM, rpegler

Questions or Comments, contact: Water GIS Group, Room 1439, JFB

Memorandum of Agreement
By and Among the Los Angeles Department of Water and Power,
the Los Angeles Department of Public Works Bureau of Engineering,
and the Los Angeles Department of Recreation and Parks
for the Implementation of the Stormwater Capture Parks Program

AGREEMENT

This Memorandum of Agreement (Agreement) is made and entered into by and among the Los Angeles Department of Water and Power (LADWP), Los Angeles Department of Public Works Bureau of Engineering (BOE), and Los Angeles Department of Recreation and Parks (RAP) (collectively referred to as "Parties" or individually as "Party"), for the implementation of the Stormwater Capture Parks Program (Program).

WITNESSETH

WHEREAS, the City of Los Angeles (City) is home to approximately four (4) million residents who depend on reliable sources of water; and

WHEREAS, local water supply is a key resource that LADWP has historically utilized, and currently makes up about ten percent (10%) of the City's total water supply; and

WHEREAS, capturing additional stormwater for groundwater recharge is vital to sustain the long-term reliability of the City's local groundwater supply; and

WHEREAS, the City holds water rights in several local groundwater basins, with the San Fernando Groundwater Basin (SFB) groundwater rights being the most significant; and

WHEREAS, the City's groundwater rights in the SFB, as well as its pueblo rights to the surface waters of the Los Angeles River, were recognized and adjudicated by the California Supreme Court in *The City of Los Angeles v. City of San Fernando*, 14 Cal. 3d 199 (1975), and the subsequent judgment in *The City of Los Angeles v. City of San Fernando*, Los Angeles Superior Court Case No. 650079 (January 26, 1979); and

WHEREAS, LADWP is a municipally owned utility responsible for delivering water and power to the residents of the City; and

WHEREAS, BOE is responsible for the design and construction of capital improvement projects within the City's rights-of-way; and

WHEREAS, RAP is responsible for managing, operating, and maintaining parkland, public recreation facilities, and programs in the City to enhance the safety and enjoyment of park patrons, and holds property rights to certain properties in the City dedicated to such uses, which may be modified to allow capture of additional stormwater for groundwater recharge while still allowing for ongoing operation of parkland and public recreation facilities and programs; and

WHEREAS, the Parties are committed to the Program to pursue integrated opportunities to enhance recreational space; provide social, economic, and environmental benefits; increase stormwater capture for water supply reliability; and improve water quality; and

WHEREAS, LADWP and BOE entered into a prior agreement (Resolution No. 019075) to complete the Program design, under which LADWP agreed to finance the Program design costs, up to a maximum of nineteen million, one hundred thousand dollars ($19,100,000) and BOE agreed to facilitate project management, planning, and design efforts of the Program; and

WHEREAS, LADWP intends to pay the Program implementation costs through a combination of LADWP's funds, grant funds, and funding partnerships up to a maximum of two hundred and ninety-eight million dollars ($298,000,000); and

WHEREAS, LADWP has been awarded seventy-five million dollars ($75,000,000) by the Los Angeles County's Safe Clean Water Regional Program (SCWP), one million, eight hundred thousand dollars ($1,800,000) by the Integrated Regional Water Management Proposition 1 Rounds 1 and 2, and three million dollars ($3,000,000) by Storm Water Grant Program Proposition 1; and

WHEREAS, LADWP will continue to pursue other eligible grants and cost-sharing partnerships to help fund the remaining Program's costs with assistance from BOE and RAP, as appropriate; and

WHEREAS, LADWP agrees to own, operate, and maintain all stormwater capture infrastructure associated with the Program for the life of the Program; and

WHEREAS, LADWP's agreement to own, operate, and maintain all stormwater capture infrastructure associated with the Program extends to its agreement to be responsible, at its sole cost, for any and all impacts and damages to RAP properties and facilities resulting from its activities related to ownership, operation or maintenance of that stormwater capture infrastructure; and to restore the RAP properties and facilities to conditions as shown in the 100% design plan sets; and

WHEREAS, LADWP agrees that, at the end of the useful life of the stormwater capture infrastructure at each RAP property, LADWP shall be responsible, at its sole cost, to remove all such infrastructure. Subject to reaching an agreement with RAP at the end of the useful life of each project, LADWP may refurbish the Program to extend the useful life of each project, abandon-in-place, or a combination of the above, in lieu of removal. Any impacts or damages to RAP properties and facilities shall be restored to pre-existing conditions within eighteen (18) months; and

WHEREAS, BOE agrees to facilitate project management and delivery of the Program; and

WHEREAS, the Board of Recreation and Park Commissioners for the City of Los Angeles, by resolution dated _____, 2024, has agreed to DWP's use, in coordination with BOE and RAP, of RAP properties for these integrated opportunities to enhance recreational space, provide social, economic, and environmental benefits, increase stormwater capture for water supply reliability, and improve water quality, all as more fully described herein; and

WHEREAS, RAP agrees to the implementation of the Program at RAP properties; and

WHEREAS, subject to reaching agreement with LADWP, RAP agrees to maintain all new park improvements, including landscaping and recreational improvements, and access roads, at its cost, upon completion of each project within the Program.

NOW, THEREFORE, in consideration of the mutual benefits to be derived by the Parties, it is hereby agreed as follows:

1. PROGRAM INFORMATION

   a. Background

      The Program is a partnership among LADWP, BOE, and RAP. The Program consists of seven (7) projects to divert and capture approximately one thousand, eight hundred (1,800) acre-feet per year (AFY) of stormwater and urban runoff from a combined three thousand, four hundred (3,400) acre drainage area for infiltration at seven (7) City parks to replenish the underlying SFB.

      The proposed stormwater capture infrastructure will consist of infiltration galleries, hydrodynamic separators, pumps, permeable pavements, bioswales, catch basins, storm drains, and other green street elements. Underground galleries have been strategically sized and placed within the parks to maximize above-ground uses. In addition, the Program is intended to help to alleviate localized flooding; improve downstream water quality; and provide recreational, social, economic, and environmental benefits for underserved communities.

      LADWP and BOE entered into a prior agreement (Resolution No. 019075) to complete the Program design, under which LADWP agreed to finance the Program design costs, up to a maximum of nineteen million, one hundred thousand dollars ($19,100,000) and BOE agreed to facilitate project management, planning, and design efforts of the Program. This subsequent Agreement is a continuing partnership for the bid and award, construction, and post-construction phases of the Program.

b. Location

The Program's projects are located at parks in the eastern San Fernando Valley in Council Districts 2, 6, and 7. See **Attachment 1, Program Map**. The Program's seven projects include:

i. David M. Gonzales Recreation Center Stormwater Capture Project (David Gonzales Park);
ii. Fernangeles Park Stormwater Capture Project (Fernangeles Park);
iii. Strathern Park North Stormwater Capture Project (Strathern Park);
iv. Whitsett Fields Park North Stormwater Capture Project (Whitsett Park);
v. Valley Plaza Park North Stormwater Capture Project (Valley Plaza Park North);
vi. Valley Plaza Park South Stormwater Capture Project (Valley Plaza Park South); and
vii. Valley Village Park Stormwater Capture Project (Valley Village Park).

c. Scope

This Agreement governs the Program's bid and award, construction, and post-construction phases, which include, but are not limited to, the preparation and approval of bid documents, advertisement and award of construction contracts, outreach, design support during bid and award, design support during construction, securing outstanding permits for phases 1 and 2 construction projects, construction, construction management, and post-construction tasks including, but not limited to, as-built plans, contract close-out, and project acceptance by the Board of Public Works, Board of Recreation and Parks, and Board of Water and Power Commissioners.

Under the Program, the Parties intend to divert and capture stormwater for infiltration at various City parks to increase replenishment of the SFB. The proposed stormwater capture infrastructure consists of infiltration galleries, hydrodynamic separators, pumps, permeable pavements, catch basins, storm drains, and other green street elements, as shown in **Attachment 4**.

d. Budget and Funding

The Program's estimated cost for bid and award, construction, construction management, and post-construction phases, as well as RAP's additional staff to perform tasks related to the Program and lost permit revenue, is approximately two hundred and ninety-eight million dollars ($298,000,000). LADWP secured seventy-nine million, and eight hundred thousand dollars

($79,800,000) through Measure W Safe Clean Water Program, Prop 1 Integrated Regional Water Management Rounds 1 and 2, and Prop 1 Stormwater Grant Program Round 2. LADWP continues to seek additional state and federal funds.

Each project within the Program will be evaluated individually and only proceed with implementation once LADWP determines the project has secured full funding. Any project bids exceeding the project costs provided in this Agreement shall require a written amendment to this Agreement signed by all Parties. If LADWP deems, in its sole discretion, that a project is no longer feasible to award a construction contract, LADWP will provide BOE and RAP with written notification to terminate work on the project. BOE shall only invoice LADWP for costs incurred subsequent to execution of this Agreement and prior to the Agreement termination date consistent with Section 6.a. If terminated, provisions in Section 6.I shall apply on an individual project basis.

The following tables show the total estimated Program costs:

Project	Estimated Project Cost[1]
Fernangeles Park	$42,900,000
Strathern Park	$41,900,000
Valley Village Park	$20,200,000
David Gonzales Park	$65,200,000
Valley Plaza Park North	$62,700,000
Valley Plaza Park South	$32,300,000
Whitsett Park	$32,500,000
Total:	**$297,700,000**

[1] Design cost not included

RAP	Estimated Cost[2]
Additional RAP staffing cost	$238,913
Lost permit revenue	$38,462
Storage bins	$22,625
Total:	**$300,000**

[2] RAP compensation amount per project is provided in **Attachment 2**

e. Schedule

Attachment 3 shows the anticipated construction schedule for each project within the Program. Bid and award and post-construction are not accounted for in the table below. The Program is separated into two (2) construction phases

to comply with California Environmental Quality Act (CEQA) mitigation measures and to minimize impacts to stakeholders and the community during construction. The Parties agree that this construction schedule shall be updated at least annually, by June 30th of each year, to reflect the actual current schedule for these activities.

2. LADWP AGREES TO:

   a. Provide written authorization to BOE to commence work related to bid preparation and advertisement of the specified project(s) within the Program after this Agreement becomes effective and upon identifying and securing full project funding. LADWP will provide a subsequent written authorization to BOE to either award a construction contract or terminate the specified project(s) within the Program.

   b. Provide funding for the Program implementation costs, which includes the Program bid and award, construction, and post-construction phases, up to a maximum of two hundred and ninety-seven million, seven hundred thousand dollars ($297,700,000), through a combination of LADWP's funds, grant funds, and funding partnerships, solely for service costs in accordance with Section 5.

   c. Reimburse RAP up to three hundred thousand dollars ($300,000) for additional staff costs related to the Program and lost permit revenue during construction. Any increase in reimbursement to RAP shall be agreed upon by LADWP and RAP through an amendment.

   d. In accordance with Section 5 of this Agreement, reimburse BOE, and BOE's suppliers and contractors, up to two hundred and ninety-seven million, seven hundred thousand dollars ($297,700,000) for all eligible costs related to the Program, including the application of the appropriate full Cost Allocation Plan overhead rates.

   e. Authorize BOE to represent LADWP in all negotiations including, but not limited to, permit acquisition in accordance with Section 3.c, relocation of non-LADWP utilities, construction, bid and award, and construction contract administration. LADWP shall have the right to make final decisions and approve all work related to the Program.

   f. Participate in Program meetings, make decisions, provide technical assistance, and provide direction to BOE regarding the Program in a timely manner.

   g. Lead community outreach on updates and milestones involving the Program.

h. Provide BOE, at LADWP's sole discretion, a temporary right-of-way, license, right-of-entry or other access across property owned or controlled by LADWP, as necessary for the Program's construction.

i. If necessary, collaborate with RAP after construction of the Program and enter into a separate contract to identify locations and complete any unfulfilled tree mitigation requirements at LADWP's cost, as set by RAP.

j. Advise BOE and RAP regarding grant agreements and requirements from State of California Proposition 1 and County of Los Angeles SCWP.

k. Acknowledge BOE and RAP as Program partners in all LADWP approved materials, publications, press releases, signage, and communications related to the Program.

l. Own, operate, and maintain all stormwater capture infrastructure associated with the Program, as shown in **Attachment 4**, for the life of the Program, which includes, but is not limited to: diversion structures, catch basins, conveyance pipes, hydrodynamic separators, permeable pavements, pumps, baffle boxes, sedimentation basins, underground infiltration galleries, Supervisory Control and Data Acquisition systems or other instrumentation and control systems to the extent applicable, control panels, flow meters, levels, and prefabricated utility structures. Costs associated with operation and maintenance of LADWP's stormwater capture infrastructure shall be LADWP's responsibility; costs associated with operation and maintenance of RAP's facilities shall be RAP's responsibility.

m. Accept sole and full responsibility for management, regulatory compliance, permitting, maintenance, and operation of the stormwater capture infrastructure upon completion.

n. Be responsible, at its sole cost, for any and all impacts and damages to RAP properties and facilities resulting from its activities related to ownership, operation, or maintenance of that stormwater capture infrastructure, including in the event that LADWP's stormwater capture infrastructure is cancelled or is only partially completed, and to restore the RAP properties and facilities to pre-existing conditions within eighteen (18) months of RAP providing LADWP written notice of such impacts or damages.

o. Be responsible, at its sole cost, at the end of the useful life of the stormwater capture infrastructure at each RAP property, to remove all such infrastructure. Subject to reaching an agreement with RAP at the end of the useful life of each project, in lieu of removal, LADWP may refurbish the stormwater capture infrastructure to extend the useful life of each project, abandon-in-place, or a combination of the above for all such infrastructure. RAP properties and facilities shall be restored to pre-existing conditions within eighteen (18) months thereafter.

p. Finalize all operation and maintenance (O&M) agreements related to stormwater capture infrastructure prior to the completion of construction for each project, either with LADWP's workforces or through a third-party contractor or agency.

q. Provide RAP advance notice, as indicated in the O&M Manual created pursuant to Section 3.n, to coordinate O&M of the stormwater capture facilities. Advance notice will be provided by LADWP to enter the Program sites to perform maintenance of the facilities. Notice must include the date, location, and duration of the maintenance and will be subject to RAP approval, which shall not be unreasonably denied. Maintenance conducted by LADWP shall not impede or interfere with any recreational activities or programming.

r. The O&M related provisions in Section 2, including Sections 2.k. though 2.p., shall survive termination of this Agreement and remain in effect until the end of the useful life of the project.

s. In the event that LADWP finds significant contamination or other site conditions that make a project infeasible, LADWP may decide to cancel that project. LADWP shall be responsible for all costs associated with any actions it undertook up to the point of its decision to cancel, including removal and disposal of any excavated soil found to be contaminated. In the event that LADWP decides to proceed with the stormwater capture infrastructure project notwithstanding the contamination or other condition, LADWP shall be responsible for all costs associated with removal of any contaminated soil.

3. BOE AGREES TO:

a. Commence work only upon issuance of written authorizations as stated in Section 2.a of the specified project(s) within the Program from LADWP.

b. Advertise the Program for construction bids, award and administer the construction contract(s), and cause the Program to be constructed in accordance with the said plans, specifications, scope, budget and schedule. Construction contracts will be awarded by the Board of Public Works.

c. Use LADWP funds solely for costs of services rendered for work performed in accordance with this Agreement. These funds shall be used to acquire or renew necessary permits, prepare bid documents, advertise and award construction contracts, provide design support during bid and award, provide design support during construction, construct the Program, and perform post-construction tasks including, but not limited to, as-built plans, contract close-out, and project acceptance by the Board of Public Works, Board of Recreation and Parks, and Board of Water and Power Commissioners.

d. Instruct and require BOE's suppliers and contractors to copy LADWP on all invoices submitted to Los Angeles Department of Public Works, Bureau of Contract Administration (BCA) for payment in accordance with the terms of the contracts awarded by BOE pursuant to Section 3.b. of this Agreement. Prior to the awarding of bid packages, BOE shall instruct and require all suppliers and contractors to submit a Supplier/Contractor Data Form, as shown in **Attachment 6**, directly to LADWP to create vendor codes for same.

e. BOE, and BOE's suppliers and contractors, shall only invoice LADWP for costs incurred during the term of this Agreement and prior to the Program termination date; LADWP is not responsible for costs incurred by BOE or BOE's suppliers and contractors outside that term.

f. Propose changes or modifications to the plans and specifications of the Program, including as may be necessitated by unforeseen, or unforeseeable, conditions encountered during construction, and consult with LADWP and RAP on any fundamental design changes. Subject to its consideration of RAP's right to provide input as to impacts on RAP's recreational facilities, LADWP shall have the right to make final decisions on all fundamental design changes for the Program and each individual project therein.

g. Develop Program milestones and report at each milestone consistent with BOE's and LADWP's project delivery processes.

h. Provide a minimum seven (7) day notice to LADWP and RAP to participate in meetings.

i. Upon full execution of this Agreement, prepare and send, and instruct its suppliers and contractors to send invoice(s) to LADWP in accordance with Section 5.

j. Use Generally Accepted Accounting Principles and comply with any and all other requirements of the City Controller to account for, transfer, and receive reimbursement funds for the Program.

k. Keep LADWP and RAP apprised of information, of which BOE becomes aware, pertaining to the status of the Program.

l. Provide construction documents and specifications to LADWP and RAP staff for review upon request.

m. Perform repairs and adjustments for all projects identified by LADWP prior to issuance of Statement of Completion.

n. Prepare and provide O&M plans and manuals and trainings to the satisfaction and requirements of LADWP.

o. Turn each project over to LADWP after witness testing, signoff of operational tests to confirm functionality of facility as designed, and final acceptance and turnover checklists per operator procedures.

p. Participate in community outreach on updates and milestones involving the Program.

q. Obtain approval from the Board of Recreation and Parks of the final plans and specifications for all portions of each project within the Program to be constructed on RAP property prior to the advertisement and award of a project by the Board of Public Works.

r. Support LADWP in grant applications and all grant-related documentation, including, but not limited to, providing labor hours, cost, schedule, and Program expenses, as needed for grant applications or reporting.

s. For Program projects awarded grant funds, such as from the State of California's Proposition 1 and County of Los Angeles SCWP, adhere to all grant requirements specified in the project's grant agreement, including incorporating grant requirements in all contracts BOE awards pursuant to this Agreement. Grant requirements include but are not limited to: retention of records, audits, and reports (minimum of thirty-six (36) years); insurance; contractor responsibility ordinance; project access; bonding; labor compliance; and signage.

t. Acknowledge LADWP and RAP as Program partners in all LADWP-approved material, publications, press releases, signage, and communications related to the Program.

u. Acknowledge LADWP's Power System Transmission Vegetation Management Group Contractor is currently occupying the Transmission Line Right of Way (TLRW) easement at Strathern Park. BOE shall allow the Contractor to continue with the occupancy and unfettered access of the LADWP TLRW through the construction of the project at Strathern Park. BOE shall coordinate these efforts with Mr. Juan Pelayo (Juan.Pelayo@ladwp.com).

4. RAP AGREES TO:

a. Participate in Program meetings and community outreach on updates and milestones involving the Program.

b. Grant BOE and LADWP, at no cost, any temporary rights-of-way, easements, right-of-entry, or grant of right for any real property that RAP owns, or has easements for, that are necessary for the Program's construction and that are consistent with the Charter of the City of Los Angeles.

c. Support LADWP in grant applications and all grant-related documentation, including, but not limited to, providing labor hours, cost, schedule, and Program expenses, as needed for grant applications and reporting.

d. RAP will have sole and full responsibility for overall park management, regulatory compliance, permitting, maintenance, and operation.

e. Finalize all O&M agreements related to RAP facilities prior to the completion of construction for each project, either with RAP's workforces or through a third-party contractor or agency.

f. Following RAP acceptance of each individual project, issue right-of-entry permits upon request for the post-construction phase and long-term post-construction O&M to identify repairs and adjustments to all civil, architectural, structural, mechanical, electrical, and instrumentation stormwater capture infrastructure installed as part of the Program, which includes, but is not limited to: diversion structures, catch basins, conveyance pipes, hydrodynamic separators, pumps, baffle boxes, sedimentation basins, underground infiltration galleries, Supervisory Control and Data Acquisition or other instrumentation and control systems as applicable, control panels, flow meters, levels, and prefabricated utility structures. The template form of the right of entry that RAP will provide to LADWP and its contractors to perform these activities is attached hereto as **Attachment 5**.

g. Subject to agreement with LADWP, perform the O&M of the Program's landscaping and irrigation components as to those elements for which LADWP is not responsible for O&M pursuant to Section 2 above.

h. Maintain the park trails, access roads, fencing, signage, trash receptacles, sports lighting, related electrical control panels, any electric vehicle station infrastructures, and recreational features of for each Program project.

i. Collaborate with LADWP to reach agreement to resolve situations where LADWP's activities related to ownership, operation or maintenance of its stormwater capture infrastructure result in impacts and damages to RAP properties and facilities.

j. Collaborate with LADWP to reach agreement to resolve the refurbishment, abandon-in-place, or removal and remediation of the stormwater capture infrastructure at each RAP property at the end of its useful life.

k. Continue to have sole and full responsibility for overall park management, permitting, maintenance, and operation. LADWP will have sole and full responsibility for management, regulatory compliance, permitting, maintenance, and operation of the stormwater capture infrastructure. Costs

associated with operation and maintenance of LADWP's stormwater capture infrastructure shall be LADWP's responsibility; costs associated with operation and maintenance of RAP's facilities shall be RAP's responsibility.

l. Acknowledge BOE and LADWP as Program partners in all LADWP approved material, publications, press releases, signage, and communications related to the Program.

5. INVOICES AND REIMBURSEMENT

a. BOE shall invoice LADWP for costs it incurs related to the Program, including BOE labor and BOE non-labor costs. LADWP shall pay BOE's approved invoices directly to BOE Accounting within thirty (30) calendar days of receipt of those invoices.

b. BOE's suppliers and contractors shall submit their invoices to the Los Angeles Department of Public Works Bureau of Contract Administration (BCA), BOE and LADWP simultaneously. Upon subsequent receipt of reviewed and undisputed invoices approved by BCA, BOE shall provide supplier and contractor invoice approval notices to LADWP within five (5) days of receipt. Concurrently, upon receipt of reviewed and undisputed invoices approved by BCA, LADWP shall have thirty (30) days to review, approve, and pay the invoices directly to BOE's suppliers and contractors. LADWP will not unreasonably withhold payment of the invoices to BOE's suppliers and contractors in order to comply with the City's vendor payment policy.

c. RAP shall invoice LADWP for Program costs associated with additional staff and lost permit revenues up to three hundred thousand dollars ($300,000) upon the issuance of the applicable Statement of Completion for each site. Any increase in reimbursement to RAP shall be agreed upon by LADWP and RAP through an amendment.

d. Invoice documentation shall state such services as were performed under this Agreement and comply with all City invoicing policies.

e. Subject to LADWP approval of contractor change order request, payment of construction change orders shall be included in regular invoices for payment. The total compensation by LADWP to BOE, and BOE's suppliers and contractors, including change orders for complete and satisfactory performance of services under this Agreement shall not exceed two hundred and ninety-seven million, seven hundred thousand dollars ($297,700,000) per Section 1.d. All construction change order requests are subject to consultation with and payment approval by LADWP.

f. Of the total amount of compensation included in Section 1.d above, LADWP shall only pay BOE, and BOE's suppliers and contractors, for services

performed, tasks implemented, and deliverables provided as specified in the Agreement. LADWP shall not be liable for monetary payments unless there is a document outlining performed services, completed tasks, and provided deliverables that are approved by LADWP's authorized representative(s) identified in this Agreement.

g. LADWP shall not be obligated to pay for work performed by BOE, and BOE's suppliers and contractors, for any such changes made in violation of this Agreement.

h. BOE shall provide quarterly progress reports throughout the term of this Agreement that will include schedule, budget, and work completed during the previous quarter and an estimate of the percentage completed. Progress reports shall be submitted to LADWP and RAP within forty-five (45) calendar days of the end of each respective quarter. Quarters shall be defined as the periods from January 1 to March 31, April 1 to June 30, July 1 to September 30, and October 1 to December 31.

6. IT IS MUTUALLY UNDERSTOOD AND AGREED:

a. This Agreement shall become effective upon execution by all Parties and terminate fifty-four (54) months thereafter. All work described in Section 1 shall be completed within the term of this Agreement. Any Party may terminate this Agreement for any reason by giving the other Parties thirty (30) calendar days written notice. In the event of termination by any Party prior to the date of completion of all of the projects in the Program: (i) the Parties agree to take all reasonable measures to prevent further costs under Agreement; (ii) LADWP will provide payment for any outstanding invoices for work performed up to the termination date, and will have no further financial obligations beyond the date of termination; (iii) BOE shall provide LADWP a final progress report that summarizes the total expenditure incurred under this Agreement with a copy of any completed or work-in-progress documents stated in Section
1.c and shall have no further obligation or liability to LADWP or City in regard to the performance of this Agreement; and (iv) any unspent funds will be transferred from BOE and/ or RAP to LADWP.

b. Subject to LADWP's obligations under this Agreement, including its O & M-related obligations under Section 2 (e.g., Section 2.k. through 2.p.), RAP and BOE recognize and agree that LADWP may reduce the scope and cost of the Program if LADWP determines, in its sole discretion, that any portion of the Program scope is technically infeasible to construct within the available budget.

c. The project management for the Program will be performed in accordance with the latest BOE standards and practices.

d. Each Party shall have no financial obligation to the other Parties under this Agreement, except as herein expressly provided.

e. No amendment or waiver of any provision of this Agreement, nor consent to any departure, shall be effective unless in writing and signed by each Party, and then such waiver or consent shall be effective only in the specific instances and for the specific purpose given.

f. This Agreement shall be governed, interpreted under, construed, and enforced in accordance with the laws of the State of California.

g. LADWP shall have the opportunity to participate, provide input, and approve the work mentioned in Section 1.c that is to be performed by the other Parties.

h. The Parties shall be required to make staff reasonably available, if requested, to participate and provide input at scheduled meetings, community meetings, workshops so as to not impact the Program schedule.

i. Notwithstanding any other provision of this Agreement, LADWP may determine not to implement the Program, or any portion thereof, if its environmental review pursuant to the CEQA discloses that the Program, or portion thereof, will have significant environmental impacts. In the event LADWP determines not to implement the Program, and so communicates to the Parties in writing, this Agreement shall be deemed terminated and the Parties shall have no further obligations to each other under this Agreement. In the event LADWP, determines not to implement a portion of the Program, and so communicates to the Parties in writing, this Agreement shall be deemed terminated as to that portion of the Program only, and the Parties shall have no further obligations to each other under this Agreement as to that portion of the Program.

j. To make all reasonable efforts to keep costs within the budgeted amounts, no Party shall be obligated to provide additional funding toward the completion of work called for by this Agreement, unless otherwise mutually agreed to by the Parties and reflected in a written amendment to this Agreement.

k. Cost performance shall be evaluated at regular intervals to ensure the cost-effectiveness of the Program is maintained.

l. In the event that performance on the part of any Party hereto is delayed or suspended as a result of circumstances beyond the reasonable control and without the fault and negligence of said Party, none of the Parties shall incur any liability to the other Parties as a result of such delay or suspension. Circumstances deemed to be beyond the control of the Parties hereunder include, but are not limited to, acts of God or of the public enemy; insurrection; acts of the federal government or any unit of state or local government in either sovereign or contractual capacity; fires; floods; earthquakes; epidemics;

pandemics; quarantine restrictions; strikes; freight embargoes or delays in transportation, to the extent that they are not caused by the Parties willful or negligent acts or omission.

m. As it relates to the management and oversight of all of the services associated with a Party's obligations under this Agreement, each Party shall retain all liability for its contractors, agents or invitees and each of the contractor's officers, agents, employees, or subcontractors of any tier. With respect to any liability or damage incurred on RAP property, except to the extent attributable to the sole or active negligence or willful misconduct of RAP, LADWP undertakes and agrees to promptly pay, reimburse, cover, and/or otherwise be financially responsible to RAP for, any and all costs arising in any manner by reason of, or incidental to, the actions of LADWP and/or their contractor or subcontractor of any tier in connection with this Agreement ("Costs"). Such Costs shall include, without limitation, all costs of litigation, claims, losses, demands, expenses, damage or liability of any nature whatsoever (including for death or injury to any person, including LADWP's employees, contractors and agents), or damage or destruction of any property.

7. RIGHT TO AUDIT

BOE shall maintain, and shall cause BOE's consultants and suppliers to maintain, all records pertaining to this Agreement, and related subcontracts, in their original form, including but not limited to, reports, documents, deliverables, employee time sheets, accounting procedures and practices, records of financial transactions, and other evidence, regardless of form (e.g., machine readable media such as disk, tape, etc.) or type (e.g., databases, applications software, database management software, utilities, etc.), sufficient to properly reflect all costs claimed to have been incurred and services performed pursuant to Agreement. If BOE or its contractors, consultants, or suppliers are required to submit cost or pricing data in connection with Agreement, BOE shall maintain all records and documents necessary to permit adequate evaluation of the cost or pricing data submitted, along with the computations and projections used. All records shall be retained, and shall be subject to examination and audit by LADWP personnel or by LADWP's agents (herein after referred to as Authorized Auditors), for a period of not less than thirty-six (36) years following payment made by LADWP hereunder or the expiration date of Agreement, whichever is later. BOE shall make said records or to the extent accepted by the Authorized Auditors, photographs, microphotographs, etc. or other authentic reproductions thereof, available to the Authorized Auditors at BOE's offices at all reasonable times and without charge. Authorized Auditors will have the right to reproduce, photocopy, download, transcribe, and the like any such records. Any information provided by BOE on machine-readable media shall be provided in a format accessible and readable by the Authorized Auditors. BOE shall not, however, be required to furnish the Authorized Auditors with commonly available software.

BOE and its contractors, consultants, and suppliers, as applicable to the services provided under Agreement, shall be subject at any time within sixty (60) calendar days, prior written notice to audits or examinations by Authorized Auditors, relating to all billings and to verify compliance with all Agreement requirements relative to practices, methods, procedures, performance, compensation, and documentation.

Examinations and audits will be performed using generally accepted auditing practices and principles and applicable City, County, State and Federal government audit standards. For consultants, subconsultants, and suppliers that utilize or are subject to Federal Acquisition Regulation (FAR), Parts 30 and 31, et seq. accounting procedures, or a portion thereof, examinations and audits will utilize

To the extent that the Authorized Auditor's examination or audit reveals inaccurate, incomplete, or noncurrent records, or records are unavailable, the records shall be considered defective.

Consistent with standard auditing procedures, BOE will be provided sixty (60) calendar days to review the Authorized Auditor's examination results or audit and respond to LADWP prior to the examination's or audit's finalization and public release.

If the Authorized Auditors' examination or audit indicates BOE, or BOE's suppliers and contractors, have been overpaid under a previous payment application, the identified overpayment amount shall be paid by BOE, or BOE's suppliers and contractors, to LADWP within ninety (90) calendar days of notice to BOE.

If applicable, having received written notice by LADWP in advance of contract bid and award, BOE shall contractually require all contractors, consultants and suppliers performing services under Agreement to comply with the provisions of this section by inserting this provision GC-18 in each contractor's contract and by contractually requiring each subcontractor to insert this provision GC-18 in any of its subcontractor contracts related to services under Agreement. In addition, BOE, their contractors, consultants, and/or suppliers, shall also include the following language in each contract:

> The Los Angeles Department of Water and Power (LADWP) is a third-party beneficiary of the foregoing audit provision. The benefits of the audit provision shall inure solely for the benefit of LADWP. The designation of LADWP as a third-party beneficiary of the audit provision shall not confer any rights or privileges on BOE, BOE's contractors, suppliers, or consultants, or any other person or entity.

If an examination or audit undertaken pursuant to the Retention of Records, Audit, and Reports provision of the General Conditions GC-18 for LADWP Professional Service Contracts reveals that LADWP overpayment to the consultant is more than five percent (5%) of the billings reviewed, the consultant shall pay all expenses and costs incurred by the Authorized Auditors arising out of or related to the examination or audit. Such examination or audit expenses and costs shall be paid by the consultant to LADWP within ninety (90) calendar days of notice to the consultant of the costs and expenses.

The provisions of this section shall survive expiration or termination of Agreement.

8. NOTICES

All notices provided under this Agreement must be in writing and, unless otherwise provided herein, shall be deemed validly given on the date either: (1) personally delivered to the address indicated below; or (2) on the third business day following deposit, postage prepaid, using certified mail, return receipt requested, in any United States Postal mailbox or at any United States Post Office. All notices, demands, or requests shall be addressed to the following:

LADWP: Mr. David R. Pettijohn
Director of Water Resources
Los Angeles Department of Water and Power
111 North Hope Street, Room 1460
Los Angeles, California 90012
Phone: (213) 367-0899

and

Mr. Art Castro
Manager of Watershed Management
Los Angeles Department of Water and Power
111 North Hope Street, Room 308
Los Angeles, California 90012
Phone: (213) 367-2966

RAP: Ms. Cathie Santo Domingo
Assistant General Manager
Los Angeles Department of Recreation and Parks
221 N. Figueroa St 3rd Floor
Los Angeles, California 90012
Phone: (213) 202-2633

BOE: Mr. Alfred Mata
Deputy City Engineer
Los Angeles Department of Public Works
Bureau of Engineering
1149 South Broadway Street, 7th Floor
Los Angeles, California 90015
Phone: (213) 485-4920

9. AMENDMENTS AND WAIVER

No amendment or waiver of any provision of this Agreement, nor consent to any departure, shall be effective unless in writing and signed by each Party, and then such waiver or consent shall be effective only in the specific instances and for the specific purpose given.

10. NO THIRD-PARTY BENEFICIARIES

There are no third-party beneficiaries of this Agreement and nothing in this Agreement, express or implied, is intended to confer on any person other than the Parties hereto any rights, remedies, obligations or liabilities.

11. COMPLETE AGREEMENT

This Agreement supersedes any prior agreement, oral or written and contains the entire agreement of the Parties on the subject matter hereof. No subsequent agreement, representation, or promise made by a Party, or its officers, employees, agents, or representatives, shall be of any effect unless it is in writing and executed by the Party to be bound.

12. EXECUTION IN COUNTERPARTS

This Agreement may be executed in one or more counterparts, and by the Parties in separate counterparts, each of when so executed shall be deemed an original and all of which taken together shall constitute one and the same agreement. The Parties further agree that facsimile signatures or signatures scanned into .pdf and sent by e-mail shall be deemed original signatures.

IN WITNESS WHEREOF, each Party hereto has caused this Agreement to be executed by its duly authorized representatives.

DEPARTMENT OF WATER AND POWER
OF THE CITY OF LOS ANGELES BY
BOARD OF WATER AND POWER COMMISSIONERS

By signing below, the signatories attest that they have no personal, financial, beneficial, or familial interest in this contract.

By: _____
JANISSE QUIÑONES
Chief Executive Officer and Chief Engineer

Date: Aug 15, 2024

And: _____
CHANTE L. MITCHELL
Board Secretary

APPROVED AS TO FORM AND LEGALITY
HYDEE FELDSTEIN SOTO, CITY ATTORNEY
MAY 22 2024

BY _____
JOHN A. CARVALHO
DEPUTY CITY ATTORNEY

IN WITNESS WHEREOF, each Party hereto has caused this Agreement to be executed by its duly authorized representative.

DEPARTMENT OF PUBLIC WORKS
BUREAU OF ENGINEERING

By: _____ Date: 12/31/2024

Ted Allen, PE
City Engineer

ATTEST:
Holly L. Wolcott, City Clerk

_____

Deputy City Clerk Date

IN WITNESS WHEREOF, each Party hereto has caused this Agreement to be executed by its duly authorized representatives.

DEPARTMENT OF RECREATION AND PARKS
OF THE CITY OF LOS ANGELES BY
BOARD OF RECREATION AND PARK COMMISSIONERS

By: _____
Renata Simril
Board President

Date: 1/21/25

By: _____
Board Secretary

Date: 1/22/25

ATTEST:
Holly L. Wolcott, City Clerk

_____
Deputy City Clerk Date

ATTACHMENT 1
Program Map

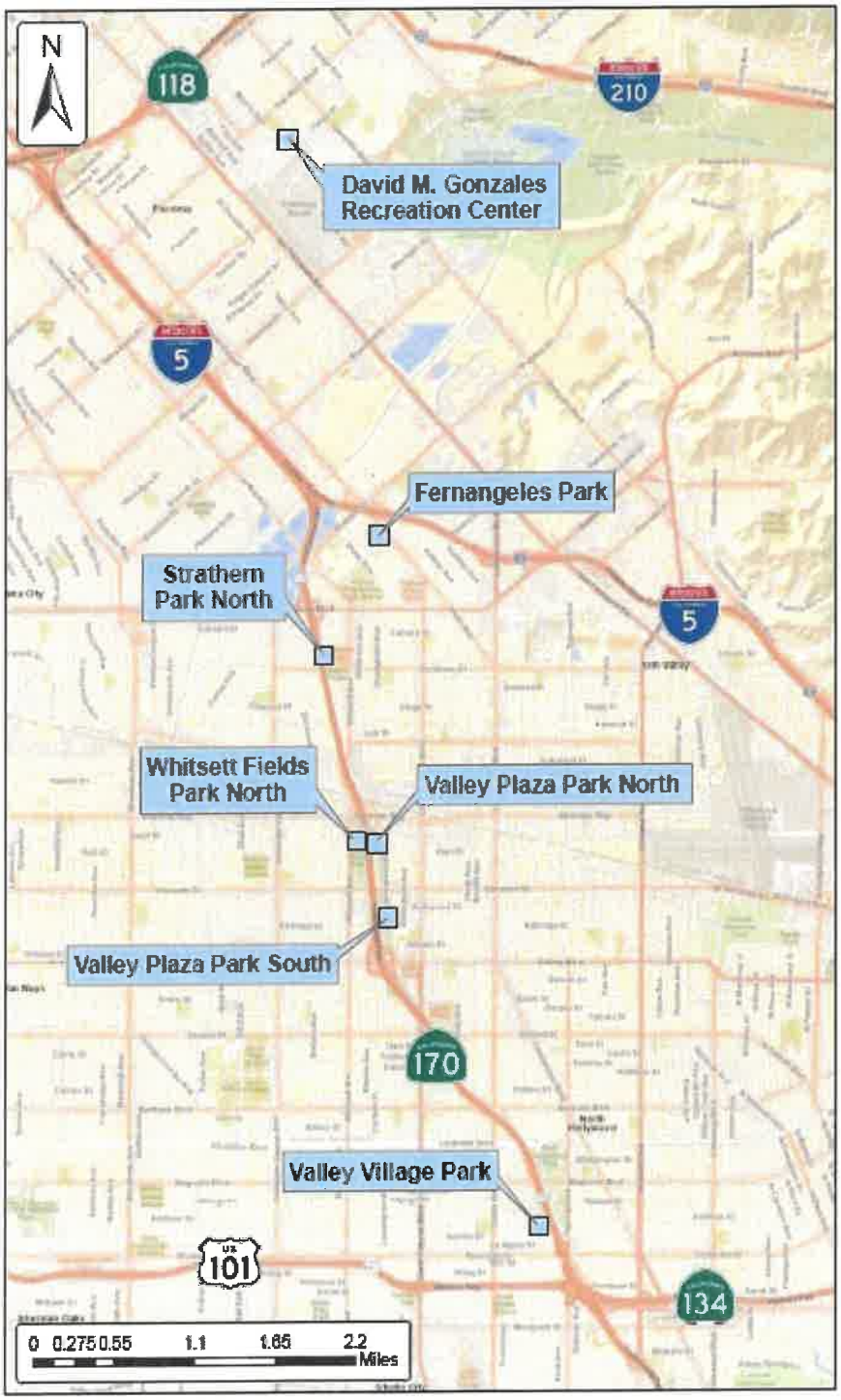

ATTACHMENT 2

RAP Compensation Amount per Project

STORMWATER CAPTURE PARKS PROGRAM - PROGRAMMING PLAN

FACILITY	PROGRAMS	SEASON(S)	TYPE OF PROGRAM	AFFECTED?	MOST FEASIBLE SOLUTIONS	ADDITIONAL COSTS	$ VALUE	# SEASONS IN PHASE	TOTAL ADD. STAFFING	STORAGE BINS(8'x2 0')	TOTAL LOST PERMIT REVENUE IN PHASE
Phase 1 - July 2023 to December 2025											
David M. Gonzales	Youth Soccer	Fall	Sports League	YES	Relocate to Stonehurst RC	Need more Staff (2nd location); need storage of equipment at new location	Staff: $10,860 per season; Storage Bin: $7,542	3	$ 32,579	$ 7,542	
David M. Gonzales	Youth Baseball	Spring	Sports League	YES	Relocate to Stonehurst RC	Need more Staff (2nd location); need storage of equipment at new location	Staff: $10,860 per season	2	$ 21,719		
David M. Gonzales	Girls Softball	Spring	Sports League	YES	Relocate to Stonehurst RC	Need more Staff (2nd location); need storage of equipment at new location	Staff: $10,860 per season	2	$ 21,719		
David M. Gonzales	Archery	Year-Round	Class/Clinic	YES	Probable Cancellation due to low enrollment	N/A	N/A				
David M. Gonzales	Track & Field	Year-Round	Class/Clinic	YES	Probable Cancellation due to low enrollment	N/A	N/A				
David M. Gonzales	Softball/Baseball	Fall, Winter	Class/Clinic	YES	Probable Cancellation due to low enrollment	N/A	N/A				
David M. Gonzales	Flag Football	Spring/ Summer	Class/Clinic	YES	Probable Cancellation due to low enrollment	N/A	N/A				
David M. Gonzales	After School Program	Fall, Winter, Spring	ASP	NO	N/A	Negligible	Negligible				
David M. Gonzales	Summer Camp	Summer	Day Camp	MAYBE	Will use remaining space; Capacity may be slightly affected.	Negligible	Negligible				
David M. Gonzales	Special Events	Year-Round	Special Event	YES	Community events are popular and would have to be cancelled/postponed.	Unknown	Unknown				

David M. Gonzales	CBA Adult Baseball	Year-Round	Muni Field Permit	YES	Cancel Permits (Possibly relocate to another field)						$33,937
Fernangeles	Youth Soccer	Fall & Spring	Sports League	YES	In Fall: Practices relocate to Branford, Stonehurst, or Sun Valley; games at Sheldon/Arleta. In Spring: relocate to Sheldon/Arleta (no lights)	Need more Staff (2nd location); need storage of equipment at new location and Sheldon/Arleta	Staff: $10860 per season; 2 Storage Bins: $15,083	5	$ 54,299	$ 15,083	
Fernangeles	Girls Softball	Spring & Summer	Sports League	YES	In Spring & Summer: relocate to Sheldon/Arleta (no lights)	Need more Staff (2nd location); need storage of equipment at new location	Staff: $10,860 per season	5	$ 54,299		
Fernangeles	Youth Baseball	Spring	Sports League	YES	In Spring: relocate to Sheldon/Arleta (no lights)	Need more Staff (2nd location); need storage of equipment at new location	Staff: $10,860 per season	2	$ 21,719		
Fernangeles	Soccer	Summer	Class/Clinic	YES	In Summer: relocate to Sheldon/Arleta (no lights)	Use Storage Bin from League Play	N/A				
Fernangeles	Softball	Fall & Winter	Class/Clinic	YES	In Fall & Winter: Relocate to Branford, Stonehurst, or Sun Valley	Use Storage Bin from League Play	N/A				
Fernangeles	Baseball	Fall & Winter	Class/Clinic	YES	In Fall & Winter: Relocate to Branford, Stonehurst, or Sun Valley	Use Storage Bin from League Play	N/A				
Fernangeles	Summer Camp	Summer	Day Camp	YES	For outdoor field play, walk campers to Sheldon/Arleta	Need more staff to walk campers to and from alternate site	Staff: $10,860 per season	3	$ 32,579		
Fernangeles	Sporadic Groups	Year-Round	Muni Field Permit	YES	Cancel Permits (Possibly relocate to another field)						$4,529
Valley Village	No Recreation Programming (Passive Park)			NO	N/A	N/A	N/A				N/A
Stratherm	Undeveloped Portion of Park			NO	N/A	N/A	N/A				N/A
								Phase 1 Totals:	$ 238,9	$ 22,625	$ 38,462

Phase 2: January 2025 to February 2027											
Valley Plaza North	No Recreation Programming (Passive Park)			NO	N/A	N/A	N/A				N/A
Whitsett	No Recreation Programming Negligible permits			NO	N/A	N/A	N/A				N/A
								Phase 2 Totals:	$ -	$ -	$ -
Phase 3: July to June 2030											
Valley Plaza South	Small Portion of deep outfield of Diamond #2: Negligible affect			NO	N/A	N/A	N/A				N/A

		TOTAL ADD. STAFFING	STORAGE BINS(8'x20')	TOTAL LOST PERMIT REVENUE IN PHASE
	Phase 1-3 Totals:	$238,9	$22,62	$ 38,462

ATTACHMENT 3
Schedule

Project	Construction Phase	Start Date	End Date
David Gonzales Recreation Center	1	January 2025	June 2027
Valley Village Park		March 2025	August 2027
Fernangeles Park		May 2025	October 2027
Strathern Park		July 2025	December 2027
Valley Plaza Park North		July 2025	December 2027
Valley Plaza Park South		July 2025	December 2027
Whitsett Park	2	March 2026	August 2028

ATTACHMENT 4
Project Exhibits

EXHIBIT 1

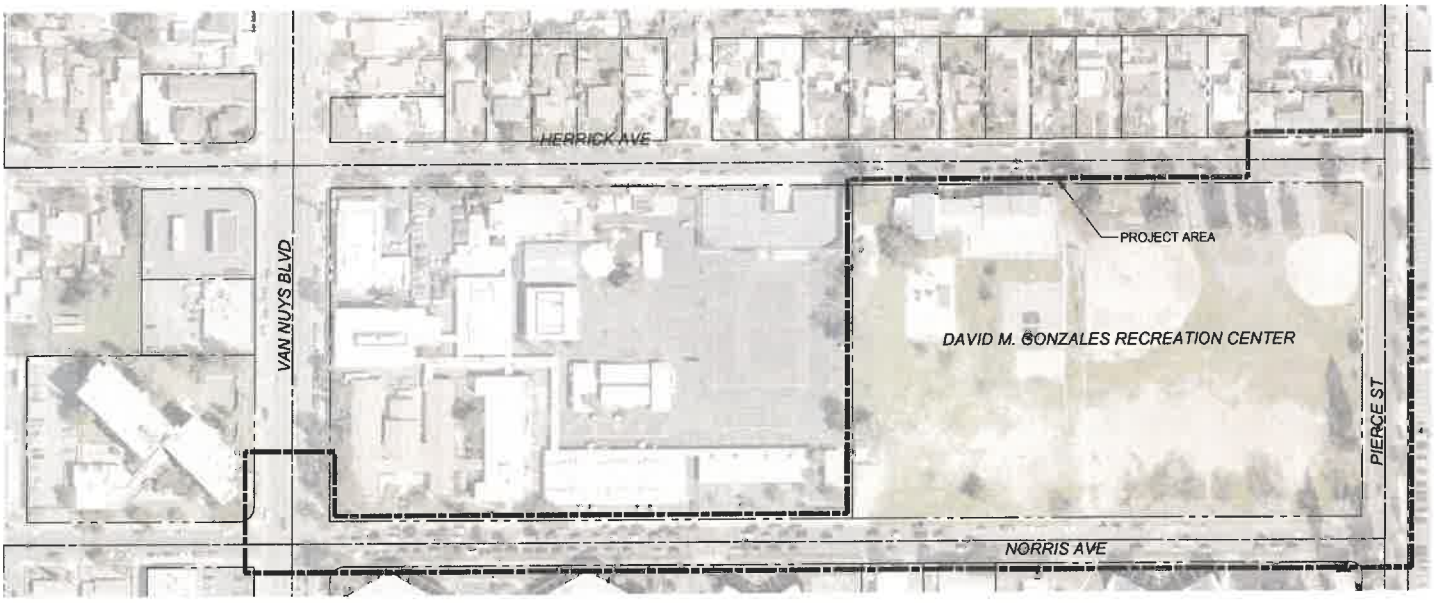

SITE PLAN

NOT TO SCALE

DAVID M. GONZALES RECREATION CENTER

DAVID M. GONZALES RECREATION CENTER

EXHIBIT 2

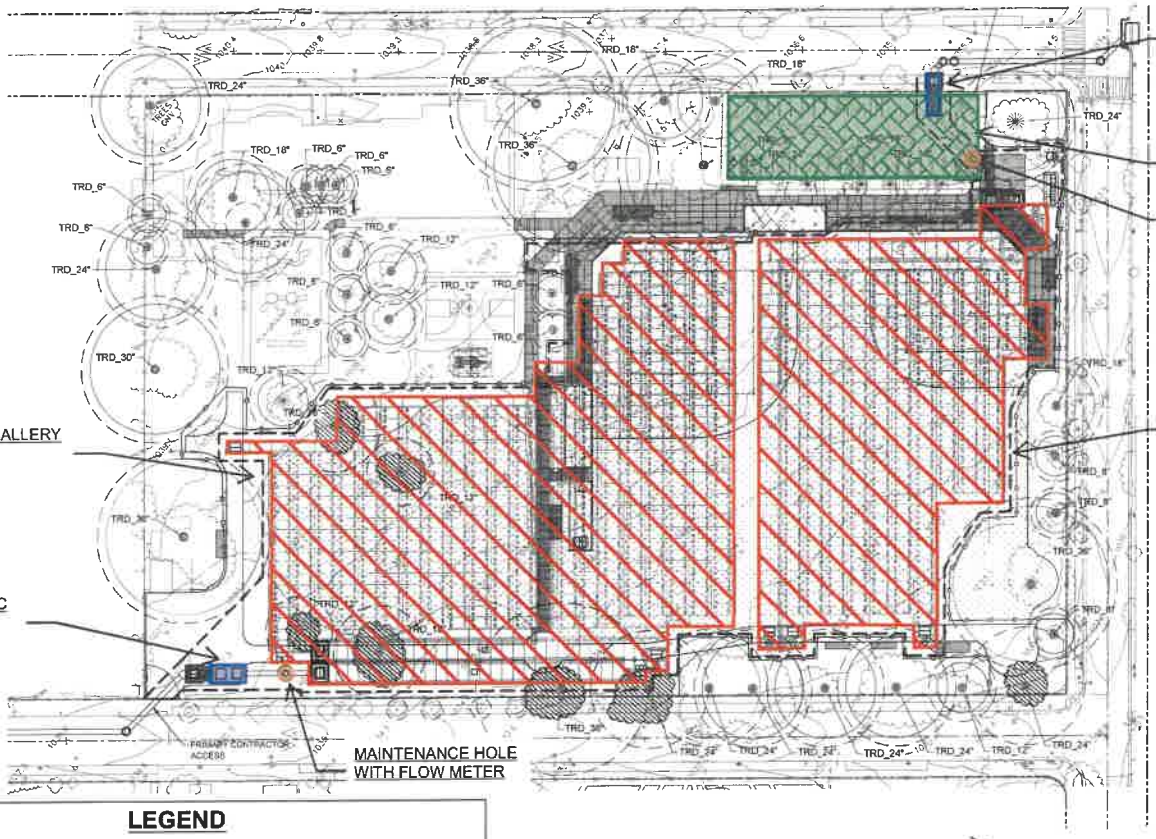

LEGEND

- PERMEABLE PARKING LOT (12,160 sf)
- HYDRODYNAMIC SEPARATORS (400 sf)
- INFILTRATION GALLERIES (102,857 sf)
- MAINTENANCE HOLE WITH FLOW METER

PLAN
1" = 40'

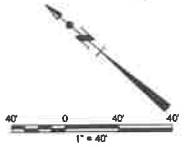

DAVID M. GONZALES RECREATION CENTER

EXHIBIT 3

LEGEND

- MAINTENANCE HOLE
- 36" RCP STORM DRAIN
- DIVERSION STRUCTURE
- MAINTENANCE HOLE WITH FLOW METER
- HYDRODYNAMIC SEPARATOR
- GATE VAULT

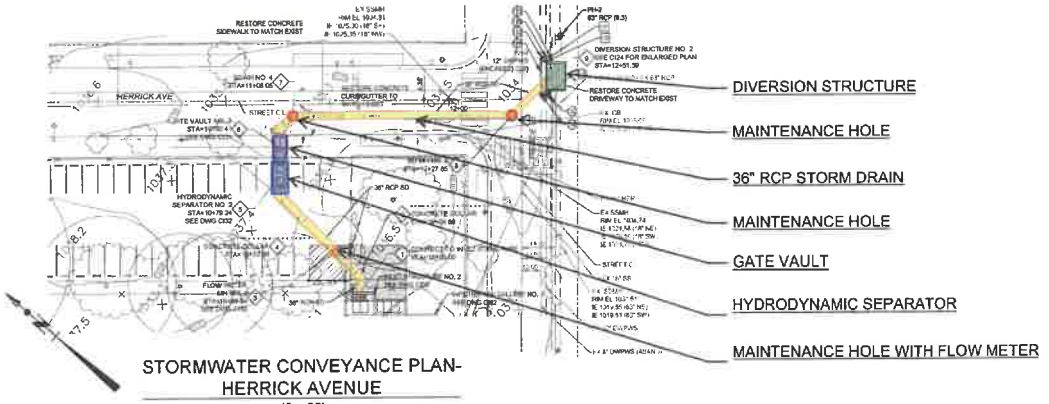

STORMWATER CONVEYANCE PLAN-
HERRICK AVENUE
1" = 20'

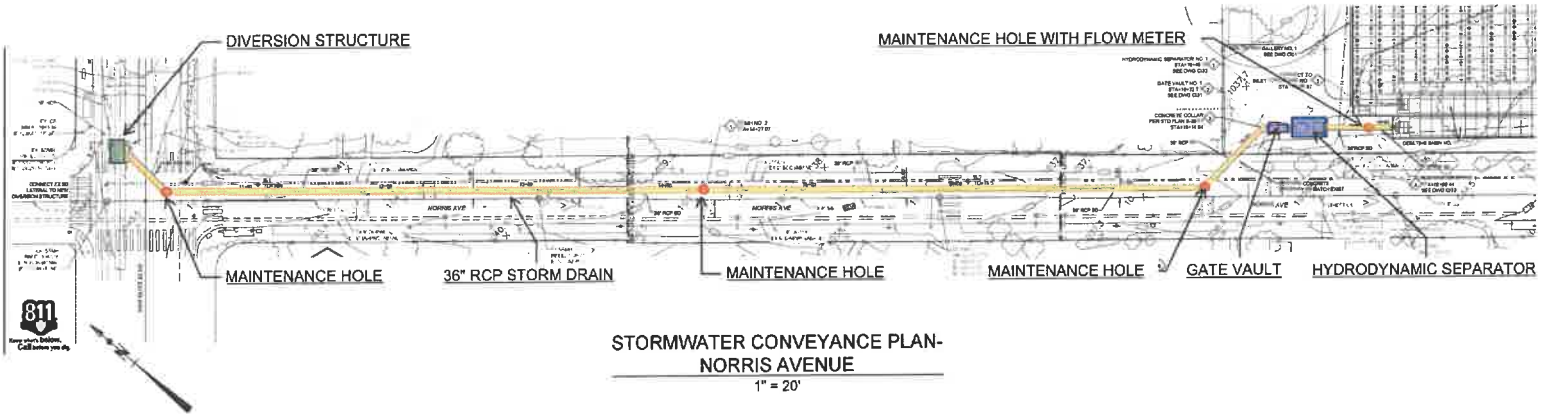

STORMWATER CONVEYANCE PLAN-
NORRIS AVENUE
1" = 20'

EXHIBIT 1

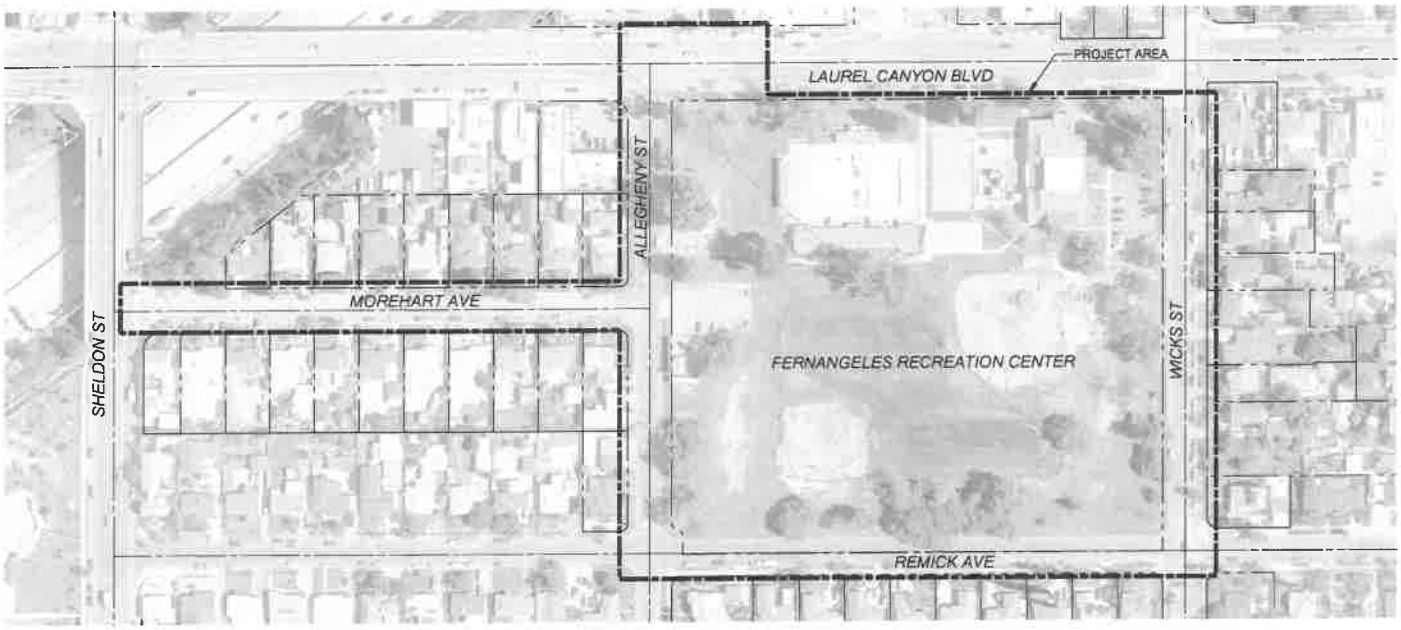

SITE PLAN

NOT TO SCALE

FERNANGELES PARK

EXHIBIT 2

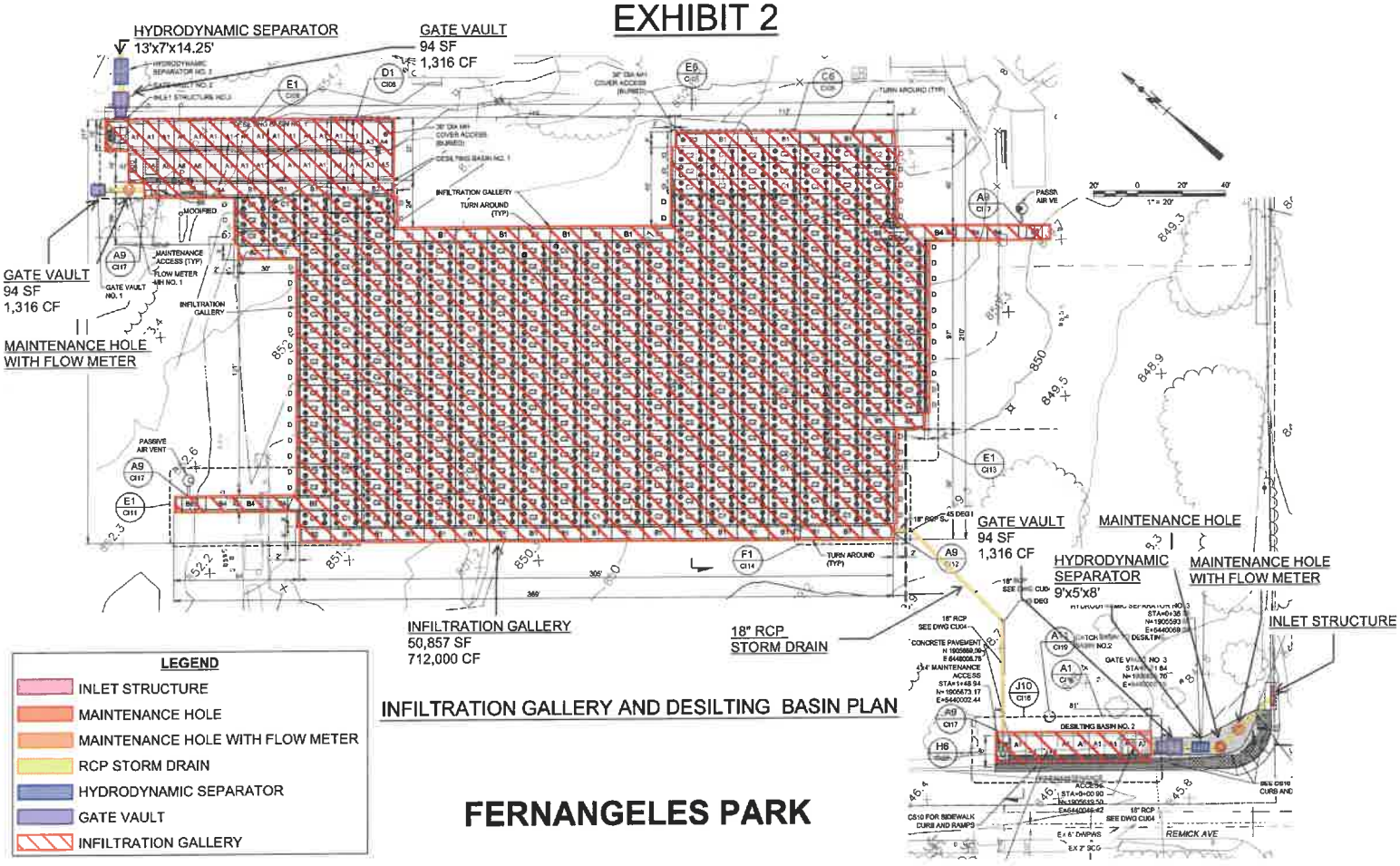

LEGEND

- INLET STRUCTURE
- MAINTENANCE HOLE
- MAINTENANCE HOLE WITH FLOW METER
- RCP STORM DRAIN
- HYDRODYNAMIC SEPARATOR
- GATE VAULT
- INFILTRATION GALLERY

INFILTRATION GALLERY AND DESILTING BASIN PLAN

FERNANGELES PARK

FERNANGELES PARK

EXHIBIT 3

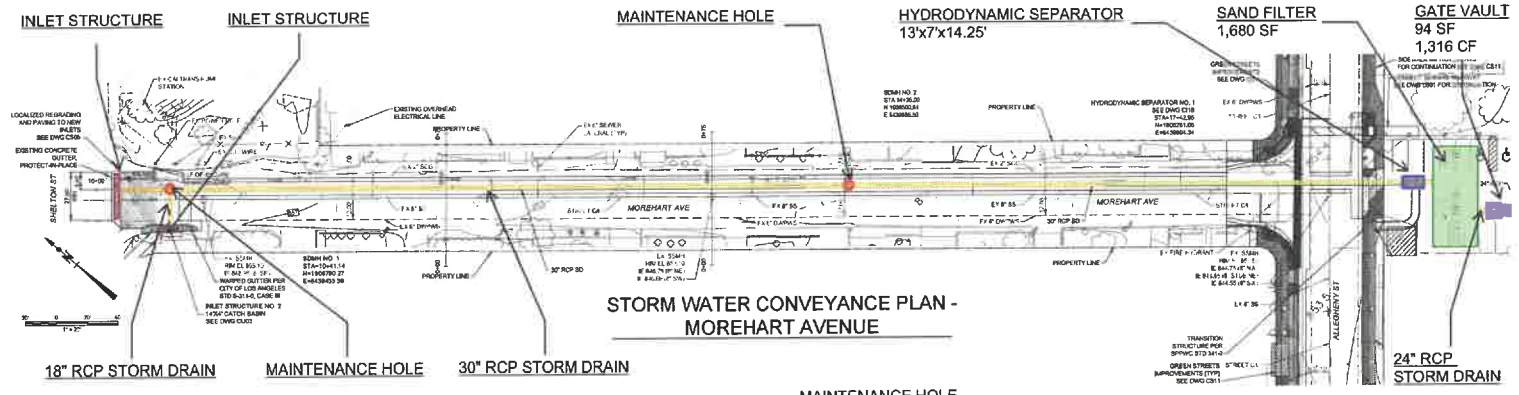

STORM WATER CONVEYANCE PLAN -
MOREHART AVENUE

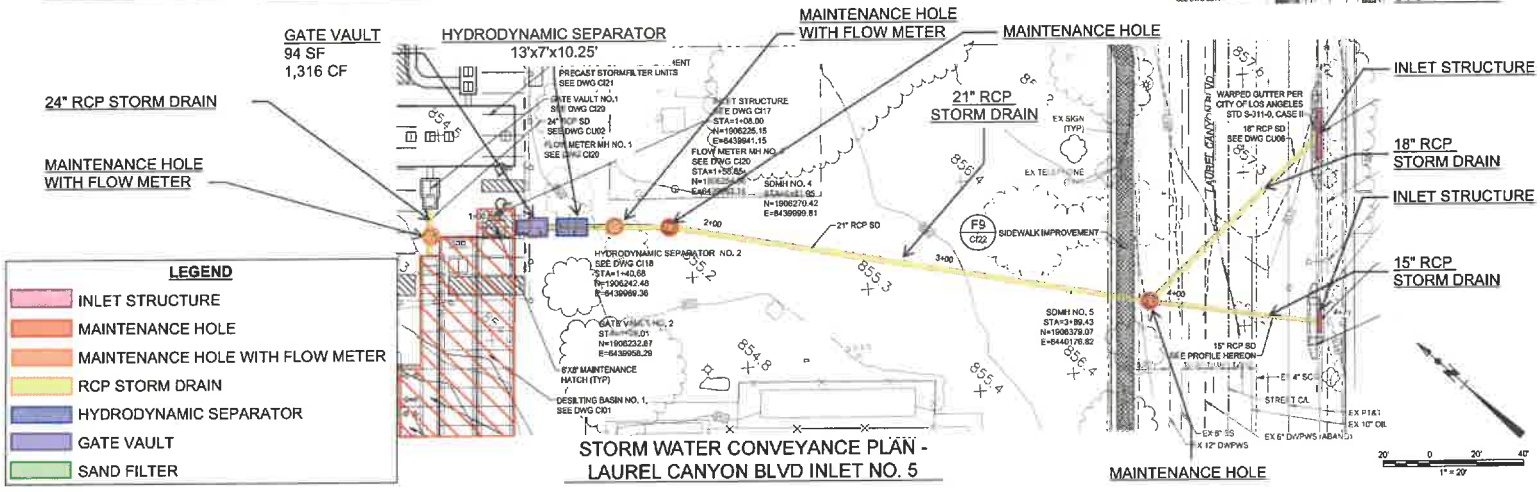

STORM WATER CONVEYANCE PLAN -
LAUREL CANYON BLVD INLET NO. 5

FERNANGELES PARK

EXHIBIT 4

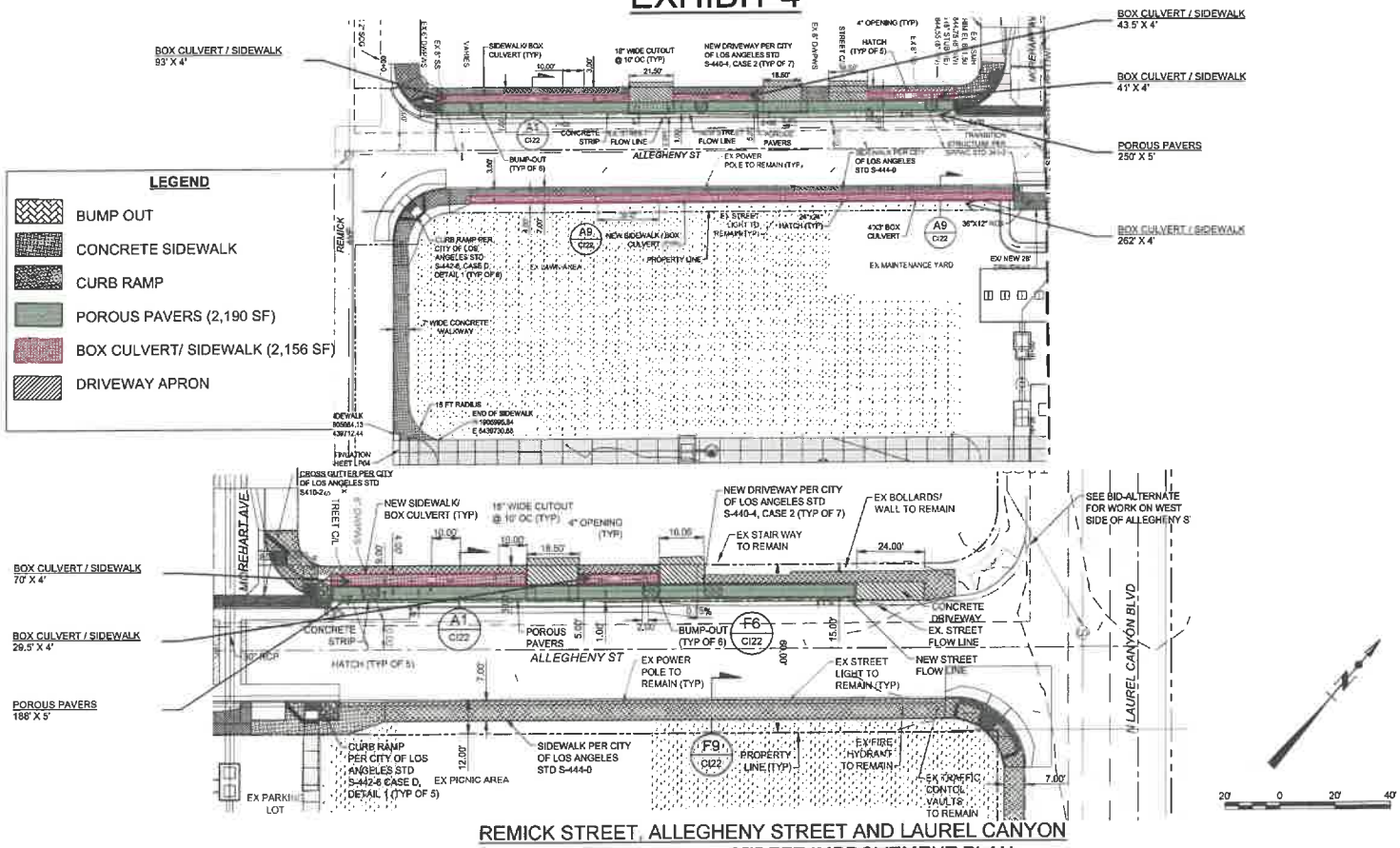

REMICK STREET, ALLEGHENY STREET AND LAUREL CANYON BOULEVARD GREEN STREET IMPROVEMENT PLAN

EXHIBIT 1

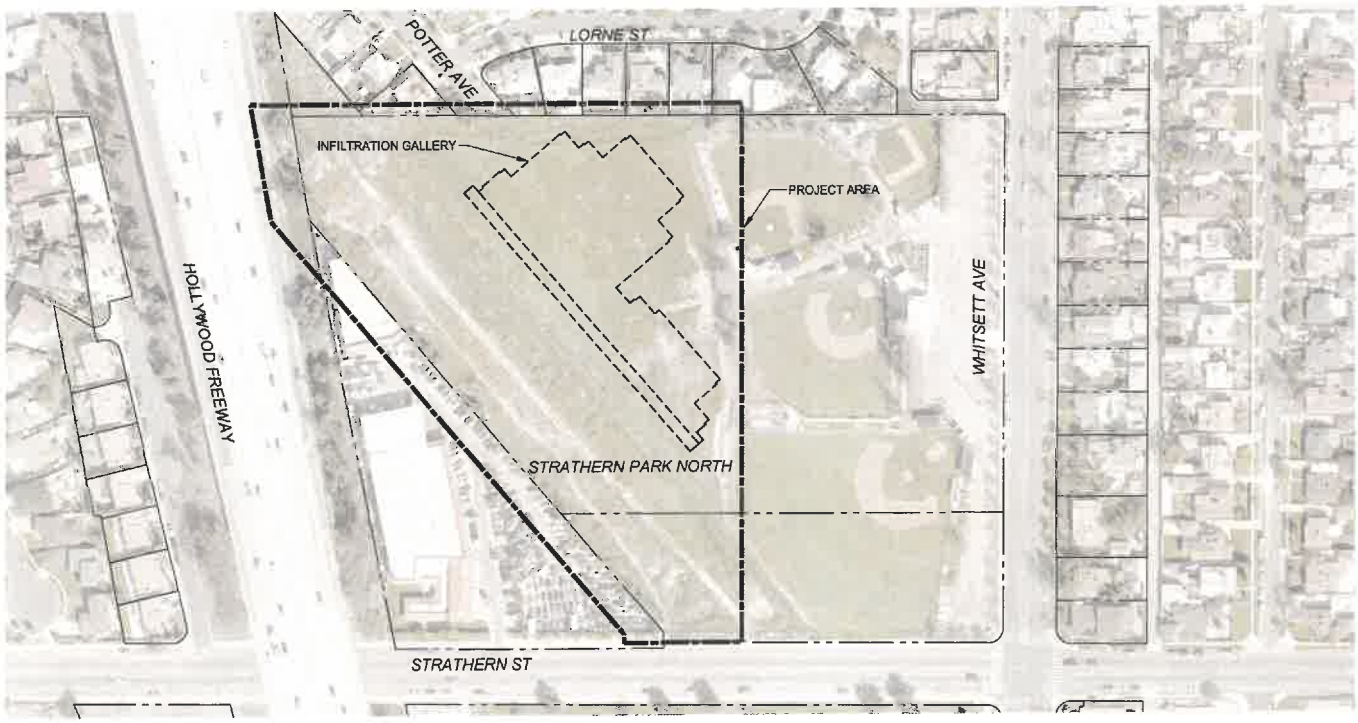

SITE PLAN

NOT TO SCALE

STRATHERN PARK NORTH

EXHIBIT 2

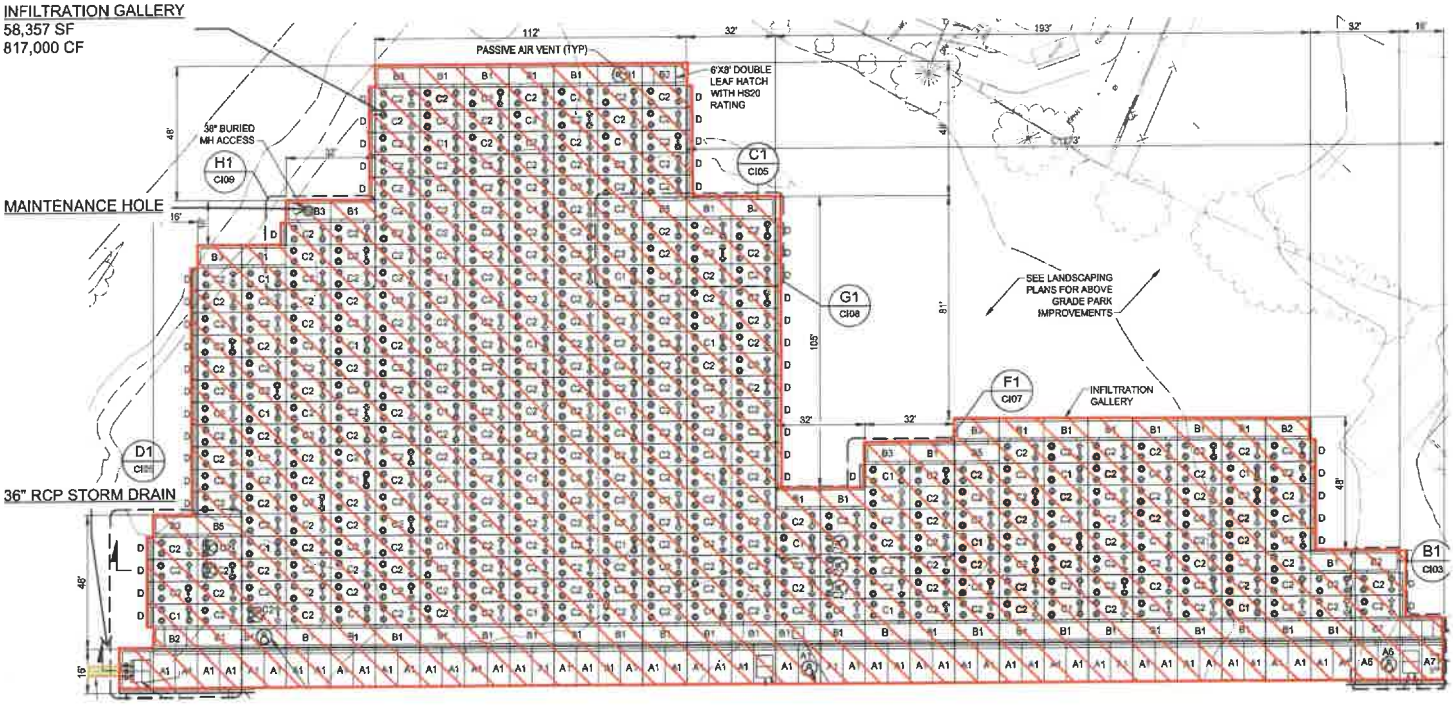

LEGEND

- INFILTRATION GALLERY
- MAINTENANCE HOLE
- 36" RCP STORM DRAIN

INFILTRATION GALLERY PLAN

20' 0 20' 40'
1" = 20'

STRATHERN PARK NORTH

EXHIBIT 3

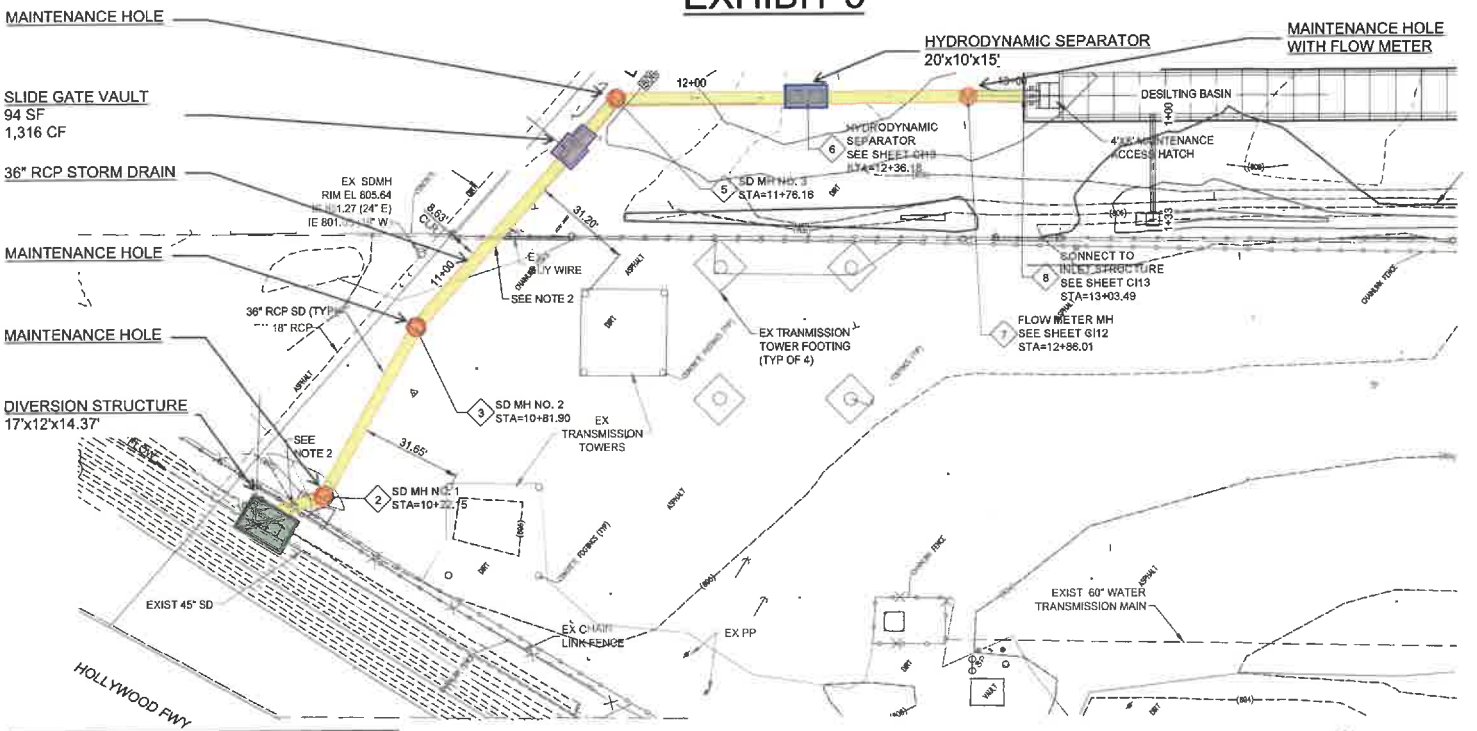

LEGEND

- MAINTENANCE HOLE
- 36" RCP STORM DRAIN
- DIVERSION STRUCTURE (204 SF)
- MAINTENANCE HOLE WITH FLOW METER
- HYDRODYNAMIC SEPARATOR (200 SF)
- GATE VAULT (94 SF)

STORMWATER CONVEYANCE PLAN

STRATHERN PARK NORTH

Exhibit 1



SITE PLAN

NOT TO SCALE

VALLEY PLAZA PARK SOUTH

Exhibit 2

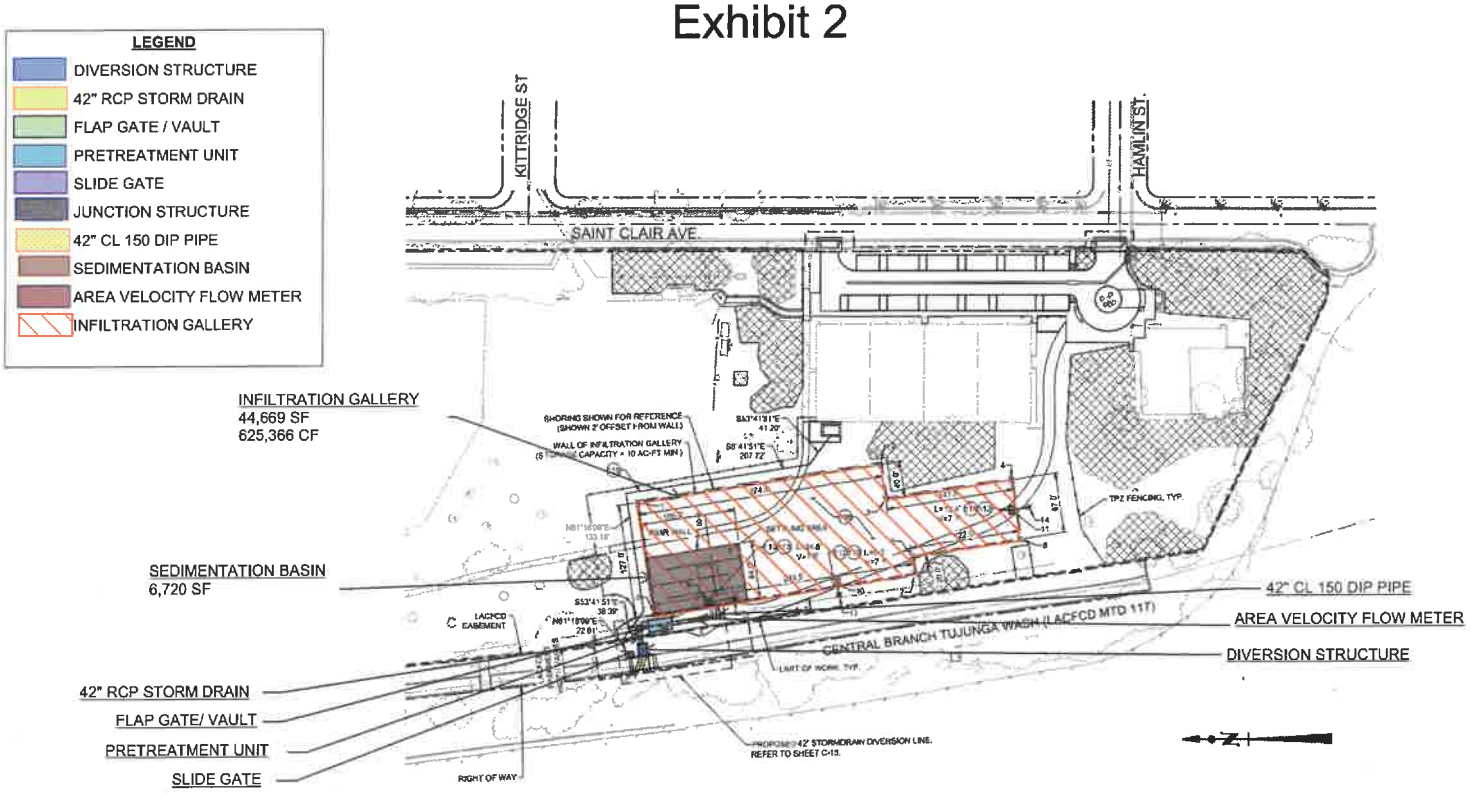

INFILTRATION GALLERY PLANS

VALLEY PLAZA PARK SOUTH

NOT TO SCALE

Exhibit3

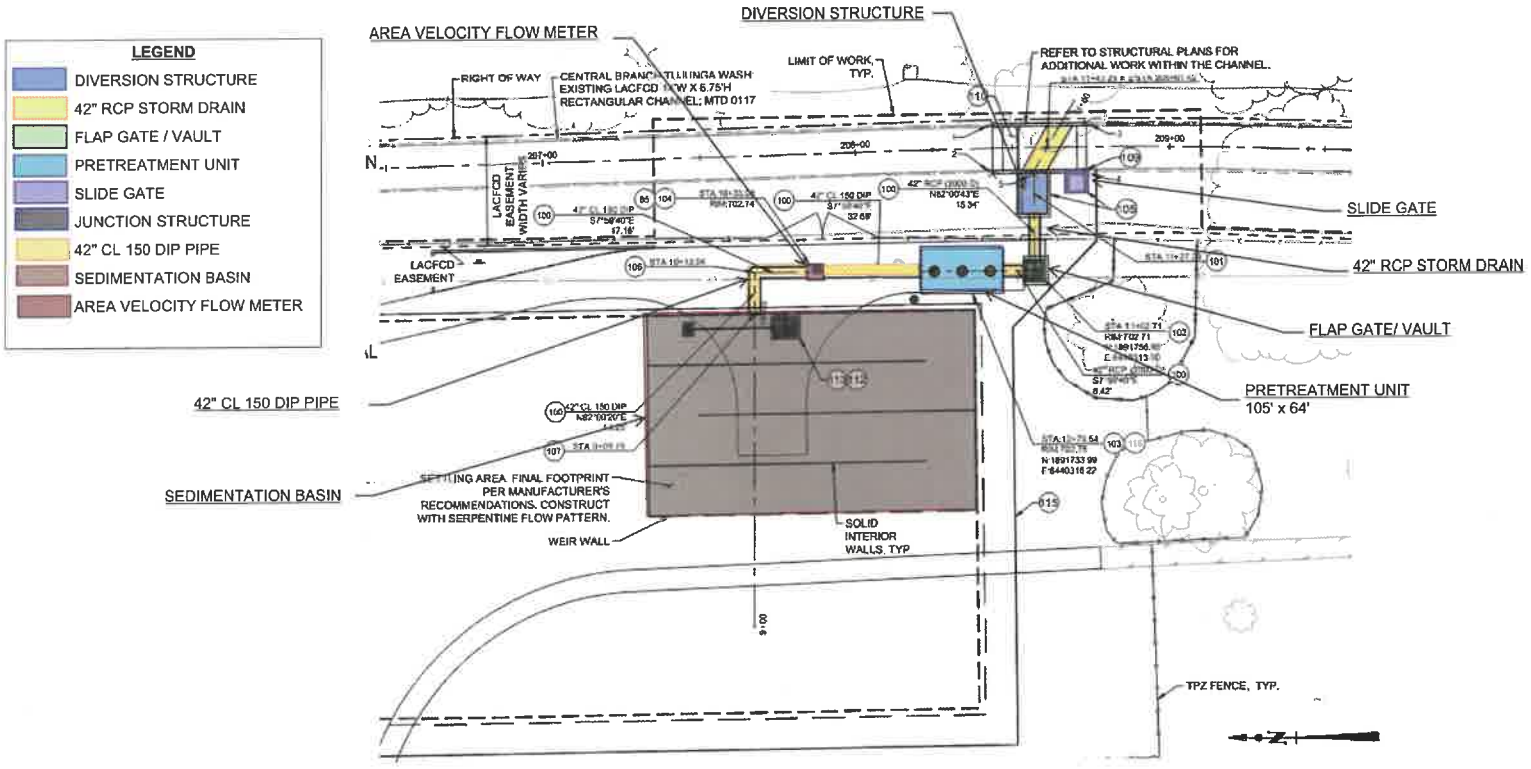

STORM WATER COVEYANCE AND WIER PLANS

VALLEY PLAZA PARK SOUTH

NOT TO SCALE

Exhibit 1



SITE PLAN
NOT TO SCALE

VALLEY PLAZA PARK NORTH

Exhibit 2

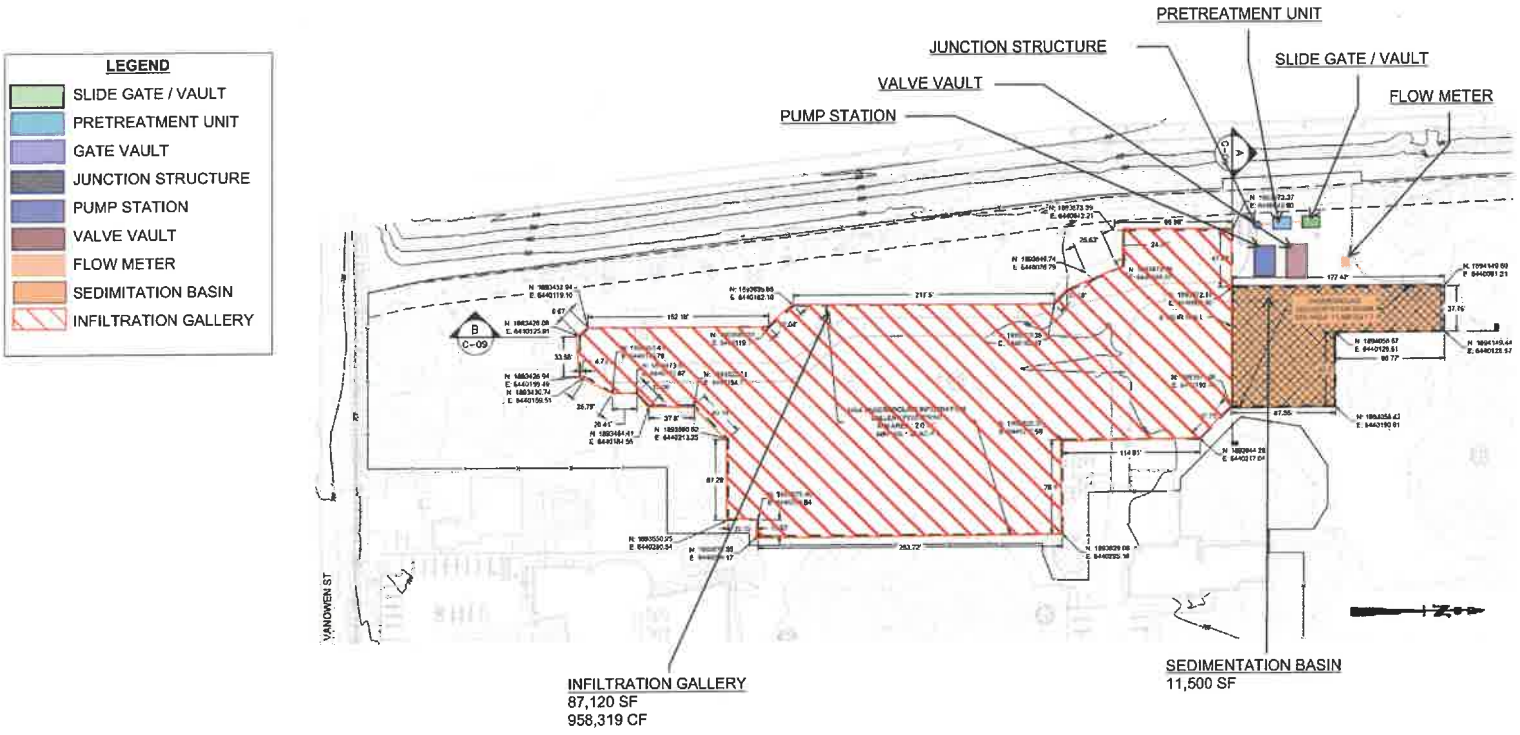

INFILTRATION GALLERY AND SEDIMENTATION BASIN PLANS

VALLEY PLAZA PARK NORTH

NOT TO SCALE

Exhibit 3

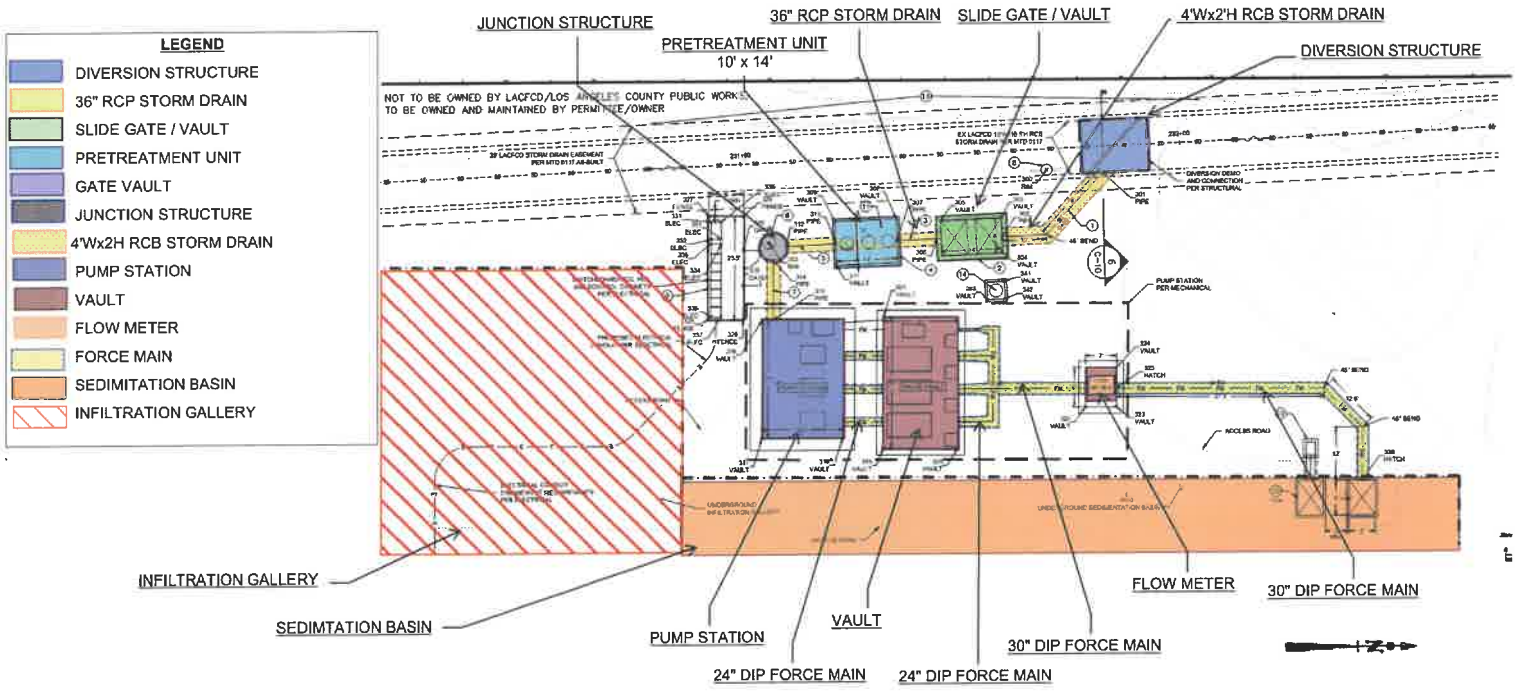

PUMP STATION PLANS

VALLEY PLAZA PARK NORTH

NOT TO SCALE

VALLEY VILLAGE PARK

EXHIBIT 1

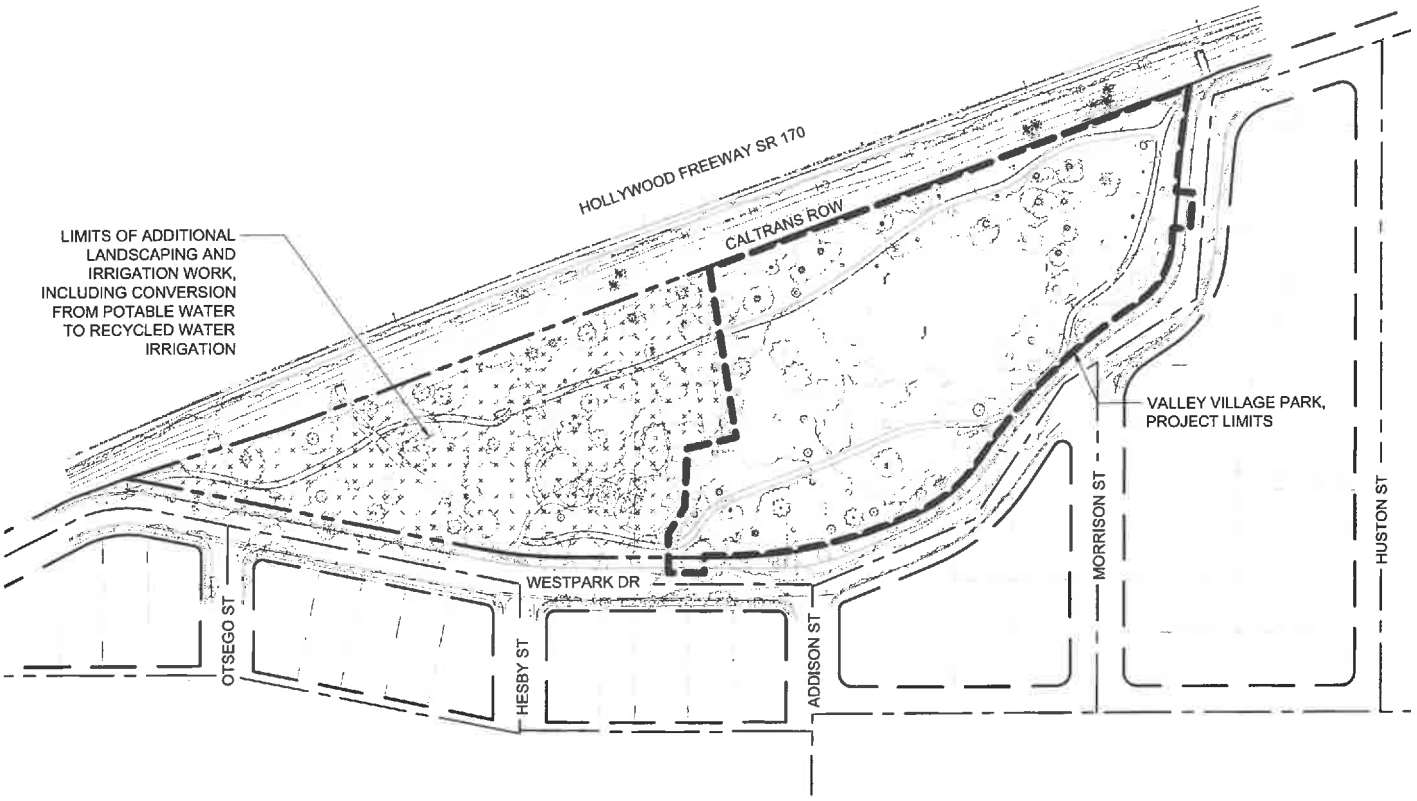

LOCATION PLAN

NOT TO SCALE

VALLEY VILLAGE PARK

EXHIBIT 2

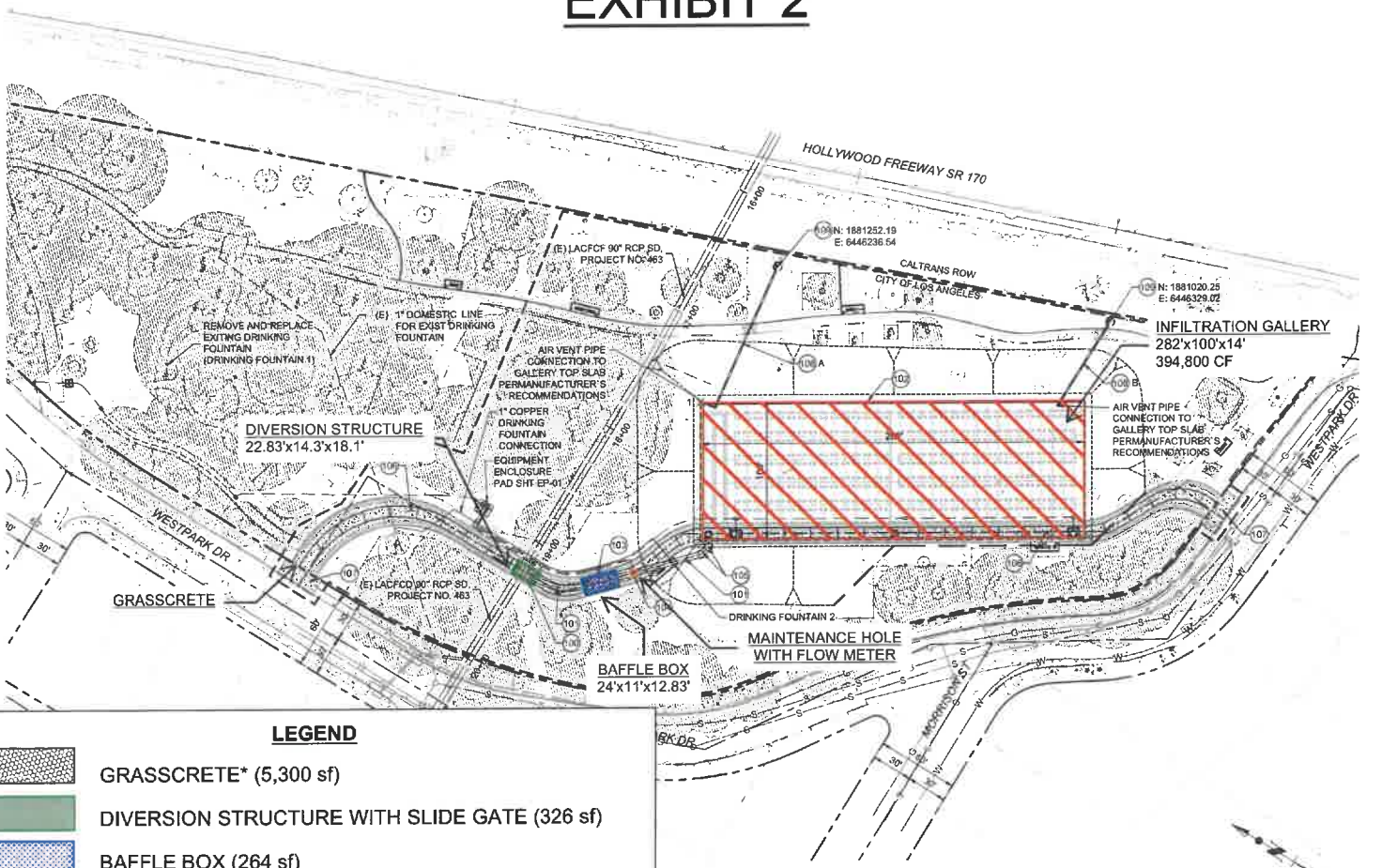

LEGEND

- GRASSCRETE* (5,300 sf)
- DIVERSION STRUCTURE WITH SLIDE GATE (326 sf)
- BAFFLE BOX (264 sf)
- MAINTENANCE HOLE WITH FLOW METER
- INFILTRATION GALLERY (28,200 sf)

* GRASSCRETE TO BE MAINTAINED BY THE RECREATION AND PARKS DEPARTMENT

Exhibit 1

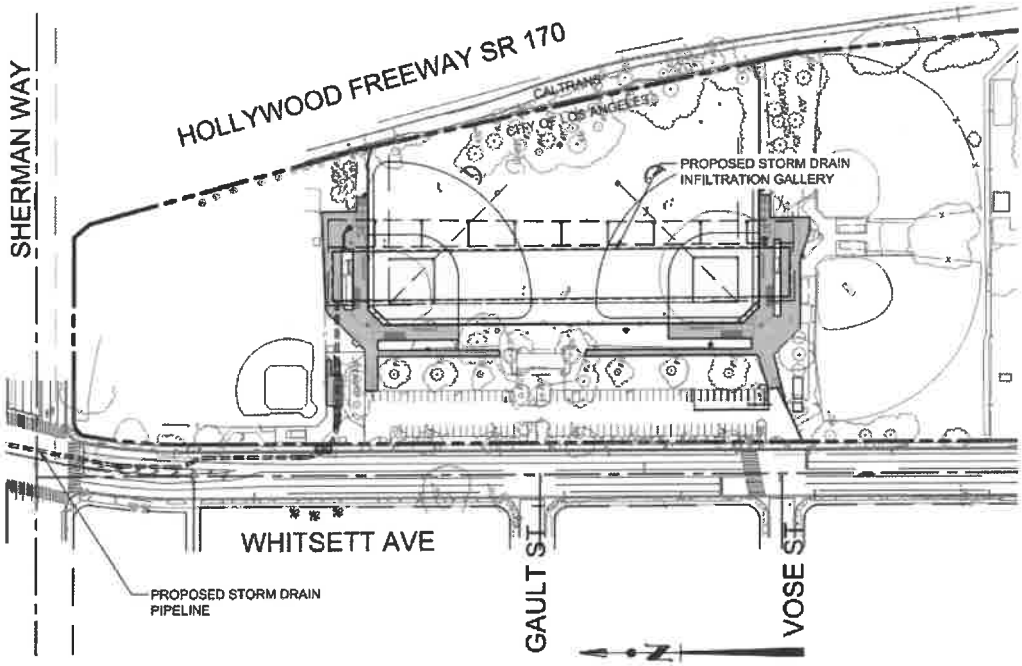

SITE PLAN

NOT TO SCALE

WHITSETT FIELDS PARK NORTH

Exhibit 2

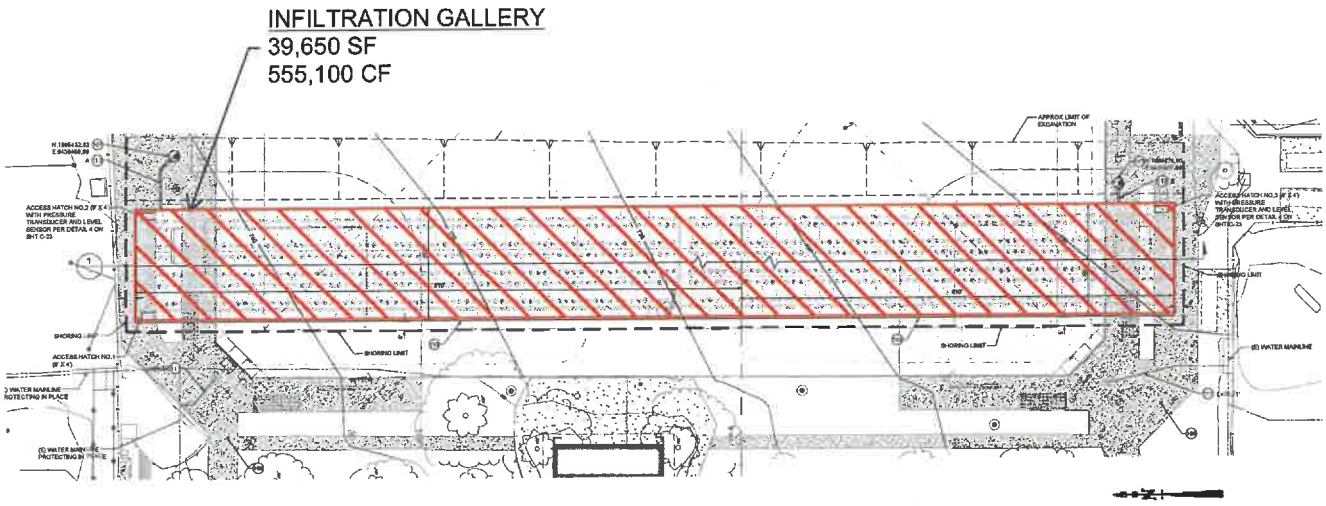

INFILTRATION GALLERY PLANS

WHITSETT FIELDS PARK NORTH

NOT TO SCALE

Exhibit 3



STORMWATER CONVEYANCE PLAN- WHITSETT AVE & RAYMER ST

WHITSETT FIELDS PARK NORTH

NOT TO SCALE

ATTACHMENT 5

RAP's Right of Entry Template Form

_____ 2023

Los Angeles Department of Water and Power
Name
Title
221 North Figueroa Street, Suite 1620
Los Angeles, CA 90012

_____ PARK – 12345 _____ STREET, _____, CA ZIP CODE: MEMORANDUM OF UNDERSTANDING OF RIGHT-OF-ENTRY (MOU-ROE) AUTHORIZING LOS ANGELES DEPARTMENT OF WATER AND POWER (LADWP) TO _____ – MOU-ROE NO. _____

Dear Name

The City of Los Angeles, Department of Recreation and Parks (hereinafter referred to as **RAP**) hereby issues revocable MOU-ROE No. _____, to LADWP and its contractors (hereinafter referred to as **PERMITTEE**) for temporary access to _____ Park. This MOU-ROE is granted between **RAP** and **PERMITTEE**. Said MOU-ROE will not become effective until proof of insurance is provided and MOU-ROE is properly executed and returned to **RAP** as noted.

MOU-ROE No. _____, is issued subject to the following conditions:

1. **MEMORANDUM OF UNDERSTANDING OF RIGHT-OF-ENTRY AREA DEFINED**

   The area covered under this MOU-ROE is **RAP** property known as _____ Park. The property is located at _____ Street, _____ CA ZIP. Please see attached maps for reference of permitted areas.

2. **PERMISSION GRANTED**

   Permission is granted to the **PERMITTEE** and/or its contractor(s) to enter the permit area (see attached maps) to conduct at the permit area the following scope of work and other project related work as approved by **RAP** staff: [DESCRIBE SCOPE]

3. **TERM**

   The term of this MOU-ROE shall be from DATE to DATE. A request to extend the term or conditions of this MOU-ROE shall be made in writing to the person named in Condition No. 8 below and coordinated with Region staff.

This MOU-ROE can be terminated by **RAP** as listed in Condition No. 12.

4. HOURS OF OPERATION

In accordance with this MOU-ROE, the approved operating hours for the permitted work by **PERMITTEE** should be in accordance with scheduled hours of operation as designated and approved by Region staff. Any change or request regarding hours of operation must be requested per Condition No. 8 and approved by **RAP** staff.

5. DEPARTMENT AUTHORITY

PERMITTEE shall at all times abide by the rules and regulations heretofore adopted or that may hereafter be adopted by **RAP** and cooperate fully with **RAP** employees in the performance of their duties.

NAME Pr. Grounds Maintenance Supervisor II, or his designee is the **RAP** ### Region Maintenance representative for the permitted activities at the subject property.

NAME may be reached at: PHONE, email: _____. **PERMITTEE** shall coordinate all work with Mr. Calloway or his designee upon receipt of this MOU-ROE.

NAME Pr. Recreation Supervisor I, or his designee is the **RAP** ### Region Recreation representative for the permitted activities at the subject property.

NAME may be reached at: PHONE, email: _____. **PERMITTEE** shall coordinate all work with NAME or his designee upon receipt of this MOU-ROE.

6. RIGHT OF INSPECTION

Authorized representatives, agents, and employees of **RAP** shall have the right to enter the premises at any time in case of emergency, and upon reasonable notice for purposes of property inspection.

7. MAINTENANCE OF PROPERTY

A. **PERMITTEE** will be responsible for any damages or repairs caused during the permitted period.

B. Upon completion of the work, it is understood that the **PERMITTEE** agrees to notify **RAP** of such work. Notification shall be made to the **RAP** representative designated in Condition No. 5.

C. The **PERMITTEE** shall maintain the permitted premises in an orderly condition during the work period or term of agreement, including the protection of those existing facilities at the park that will not be impacted by this project.

D. Work will not be permitted until **RAP** staff is present at the indicated hours of operation.

E. Contractor shall take all necessary steps to ensure safety and abide by any/all Federal, State and/or Local regulations governing the use and operation of equipment, in the

performance of approved work and ensure the protection and warning of any park user that could be in the area.

8. MEMORANDUM OF UNDERSTANDING OF RIGHT-OF-ENTRY NOTIFICATIONS

Should the **PERMITTEE** desire modifications to this MOU-ROE, time extensions of the MOU-ROE, or additional work to be performed, etc., request for said modifications and/or additions shall be submitted, in writing, to:

Attention: Rick Tonthat, Sr. Management Analyst II
City of Los Angeles, Department of Recreation and Parks
Planning Maintenance & Construction Branch
221 N. Figueroa Street, Suite 400
Los Angeles, CA 90012

Telephone: (213) 202-2608
Fax: (213) 202-2612

Or via email to: rick.tonthat@lacity.org

9. RESTORATION AND FINAL INSPECTION

PERMITTEE shall restore all **RAP** property that is damaged, moved or altered as a result of the permitted work at the permitted area to its original condition. Said restoration shall take place immediately upon the conclusion of said work and shall be performed to the satisfaction of **RAP**. Upon completion of the permitted work, **PERMITTEE** shall contact the **RAP** coordinator in Condition No. 5 to arrange a final **RAP** inspection of the completed project.

10. PERMITTEE CONTACT

PERMITTEE contact will be:

Name: Name of Permittee, Position
Phone No.: (###) ###_####
Cell No.: (###) ###-####
Email:

11. FINANCIAL RESPONSIBILITY AND INSURANCE

It is hereby understood that **PERMITTEE** is self-insured concerning any claims that may arise as a result of the approved work and use of the permitted area. **PERMITTEE** and its contractors shall insure that any of its contractors obtain and keep in force during the term of this MOU-ROE, insurance coverages from insurers acceptable to **RAP**.

Except to the extent attributable to the active negligence or willful misconduct of **RAP**, **PERMITTEE** undertakes and agrees to promptly pay, reimburse, cover, and/or otherwise be financially responsible to **RAP** for, any and all costs arising in any manner by reason of, or incidental to, the performance or this MOU-ROE on part of **PERMITTEE** and/or their contractor or subcontractor of any tier ("Costs"). Such Costs shall include, without limitation, all costs of litigation, claims, losses, demands, expenses, damage or liability of any nature whatsoever

(including for death or injury to any person, including **PERMITTEE'S** employees, contractors and agents), or damage or destruction of any property of either party hereto or of third parties.

PERMITTEE shall maintain, during the term of this MOU-ROE, evidence of insurance acceptable to CAO, Risk Management prior to **PERMITTEE'S** occupancy of the premises.

12. REVOCATION OF MEMORANDUM OF UNDERSTANDING OF RIGHT-OF-ENTRY

RAP may revoke this MOU-ROE at any time or if **PERMITTEE** does not comply with the conditions contained herein. Upon receipt of the written notice of revocation, **PERMITTEE** shall return the property to its original condition and discontinue all work permitted under this MOU-ROE.

13. ACCEPTANCE

Please indicate your acceptance of the foregoing in the signature block of this letter, and return the signed original copy to the **RAP** office noted in the letterhead.

Sincerely,

JIMMY KIM
General Manager

DARRYL FORD
Superintendent
Planning, Maintenance, and Construction Branch

DF/RT/BDM:

Attachment

cc: Darryl Ford, Superintendent, PMC Branch
Rick Tonthat, Director, Real Estate and Asset Management Unit
Joe Losorelli, Chief Park Ranger (MS 664)

[SIGNATURE PAGE FOLLOWS]
SIGNATURE EXECUTION

Los Angeles Department of Water and Power, hereby accepts this Memorandum of Understanding of Right-of-Entry No. _____, and all conditions therein.

Date _____

APPROVED:

DEPARTMENT OF WATER AND POWER OF
THE CITY OF LOS ANGELES BY
MARTIN L. ADAMS
General Manager and Chief Engineer

_____
ANDREW LINARD
Director of Water
Engineering & Technical Services

By_____
ADRIANA RUBALCAVA
Director of Real Estate

COMMENCEMENT DATE and DEPARTMENT MEMORANDUM OF UNDERSTANDING OF RIGHT-OF-ENTRY validation:

_____
Commencement Date

_____ _____
Signature Date

_____ _____
Printed Name Title

ATTACHMENT 6

LADWP's Supplier/Contractor Data Form

D W P

SUPPLIER/CONTRACTOR DATA

DWP USE ONLY
VC#

Please type or print

SEE REVERSE SIDE FOR INSTRUCTIONS

5a) FIRM NAME (Exactly as it appears on your invoice) **FIRM NAME** (Full, legal or Corporate) **CHECK ONE:** ___ Division of: ___ Subsidiary of:	(Please attach a copy of your invoice)	1) BTRC/TRC NO. 2) FED. TAX I.D. NO. 3) STANDARD INDUSTRIAL CODE NO. 4) CONTRACTOR LIC. # Expires:

5b) BUSINESS TYPE: ___CORPORATION ___PARTNERSHIP ___SOLE PROPRIETOR ___OTHER (please specify)

6) BID/MAILING ADDRESS INFORMATION	NUMBER	STREET		TELEPHONE NUMBER
	CITY	STATE	ZIP	FAX NUMBER
	LOCAL CONTACT NAME			CONTACT NUMBER
	E-MAIL ADDRESS/WEBSITE ADDRESS			
7) BUSINESS LOCATION (If No. 6 is a PO Box)	NUMBER	STREET		
	CITY	STATE	ZIP	
8) AGENT OR MANUFACTURER INFORMATION	C/O FIRM NAME		E-MAIL ADDRESS	
	NUMBER	STREET		
	CITY	STATE	ZIP	TELEPHONE NUMBER
9) REMITTANCE ADDRESS	NUMBER	STREET		
	CITY	STATE	ZIP	

10) BUSINESS SIZE STATUS: ___Small ___Large ___Certified Small Local Business (SLB) ___Non-Profit

11a) MINORITY-OWNED BUSINESS ENTERPRISE? ___YES ___NO

WOMAN-OWNED BUSINESS ENTERPRISE? ___YES ___NO

11b) IF ANSWER IS YES, PLEASE INCLUDE OWNERSHIP DATA:

NAME(S):_____ % of Ownership_____

NAME(S):_____ % of Ownership_____

NAME(S):_____ % of Ownership_____

___AMERICAN INDIAN ___HISPANIC ___ASIAN-PACIFIC AMERICAN ___AFRICAN AMERICAN

12) CERTIFIED AS MINORITY-OWNED OR WOMAN OWNED BY:

13) IMPORTANT! The undersigned or an authorized representative of the firm must notify the Department of Water and Power of any changes to the information contained herein. Failure to do so may result in lost opportunities of receiving bids.

_____ Signature (Officer, Principal or Owner)

_____ Title

_____ Date

Please return Supplier/Contractor Data Form to: **DEPARTMENT OF WATER AND POWER**
FEED-IN TARIFF PROGRAM
111 N. HOPE ST., ROOM L43
LOS ANGELES, CA 90012

INSTRUCTIONS FOR COMPLETING THE SUPPLIER/CONTRACTOR DATA FORM

1) **TRC NO.** – Enter your (Business) Tax Registration Certificate Number. Firm's current Tax Registration Certificate Number or Business Tax Exemption Number must be shown on all invoices submitted for payment. Failure to do so may delay payment. For additional information regarding the applicability of the City Business Tax Registration, vendor shall contact the City Clerk's Office at (213) 978-1521.

2) **FEDERAL TAX ID NUMBER** – For purposes of 1099 Reporting, the name and Tax ID may result in delay of payment and may subject you to 31% backup withholding to comply with Sec. 3406 of the Internal Revenue Code.

3) **STANDARD INDUSTRIAL CODE** – Enter SIC number.

4) **CONTRACTOR LICENSE NUMBER AND EXPIRATION DATE** – Enter license number and date contractor license expires.

5a) **FIRM NAME** – Enter complete legal name(s) of owner(s) or corporate name entered on the Corporate Charter. **Division of Subsidiary of** – Check if you are a division or subsidiary and give the firm's affiliation name.

5b) **BUSINESS TYPE** – Check one; if "OTHER" is checked, please specify what type of business organization (e.g. Joint Venture, LLC, etc.)

6) **BID/MAILING ADDRESS** – Enter where you want bids and correspondence mailed.

7) **BUSINESS LOCATION** – Enter your business street address, if mailing address is a P.O. Box address.

8) **C/O FIRM NAME** – If bids are to be mailed in "**c/o (care of)**" agent or manufacturer's representative, enter appropriate name and address.

9) **REMITTANCE ADDRESS** – Enter where you want payments mailed to, if different than bid/mailing address.

10) **BUSINESS SIZE STATUS** – Indicate size of business based on the following guidelines:
SMALL – Less than $3 million aggregate receipts for the previous fiscal year.
LARGE – More than $3 million in aggregate receipts for the previous fiscal year.
CERTIFIED SMALL LOCAL BUSINESS (SLB) – Only businesses certified as a SLB should check this box.
NON-PROFIT – Your business is listed as a non-profit organization.

11a) **MINORITY OR WOMAN-OWNED BUSINESS** – Must be at least 51% owned by minority or minorities (MBE), or a woman or women (WBE), who exercise the power to make policy decisions and who are actively involved in the day-to-day management of business.

11b) **OWNERSHIP DATA** – Enter name(s) and percentage(s) of ownership.

12) **CERTIFIED AS MINORITY-OWNED OR WOMAN-OWNED** – Enter the agency that certified your business. Mail or transmit a copy of your certification.

13) **DECLARATION** – Please sign and date.